ELECTROHOME

CHASSIS
G02

54-7255-01 Issue 1
THIS INFORMATION IS UP TO DATE AS OF MARCH 1978.

G02 COLOR DATA MONITOR CHASSIS MANUAL

TECHNICAL SERVICE DATA

ELECTROHOME LIMITED - KITCHENER - ONTARIO - CANADA

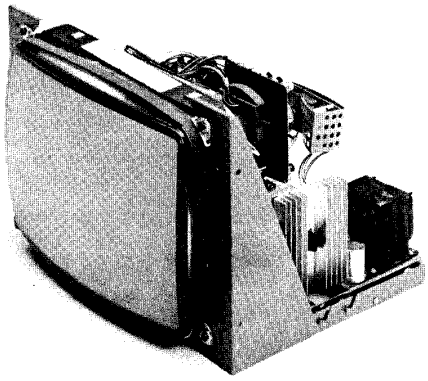

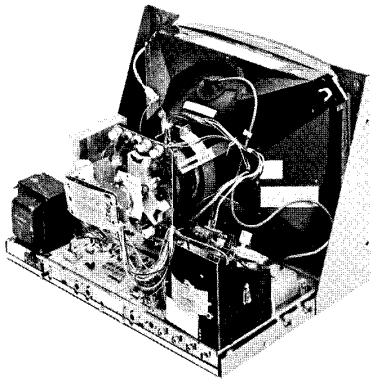

SERVICE DATA REFERENCE

100-110-120 Volts, 50/60 Hz., 1.5 Amps.

A.C. operated 90° color data monitor chassis.

For individual model information, see model data sheets.

When writing for Service Information, please quote chassis type number and model code. See chassis type number and model code located on the back skirt of the chassis.

This information is correct as of May 1978.

MEASUREMENT, X-RAY, HIGH VOLTAGE AND CRT WARNINGS

1. X-RADIATION

All color television pix tubes emit some x-rays. This chassis has been designed for minimal x-radiation. However, to avoid possible exposure to soft x-radiation, ensure that EHT value is correctly set in accordance with procedures under EHT Hold-Down and EHT Adjustments.

2. HIGH VOLTAGE

This color data monitor contains HIGH VOLTAGES derived from power supplies capable of delivering LETHAL quantities of energy. To avoid DANGER TO LIFE, do not attempt to service the chassis until all precautions necessary for working on HIGH VOLTAGE equipment have been observed. In order to prevent damage to solid state devices, do not arc pix tube anode lead to chassis or earth ground.

CAUTION: This chassis employs a high EHT (31KV) pix tube.

3. CRT HANDLING

The picture tube encloses a high vacuum and due to the large surface area is subject to extreme force. Care must be taken not to bump or scratch the picture tube as this may cause the tube to implode resulting in personal injury and property damage. Shatter-proof goggles must always be worn by individuals while handling the CRT or installing it in the monitor. Do not handle the CRT by the neck.

FILE SUPPLEMENTARY MODEL DATA WITH THIS G02 CHASSIS MANUAL

PRODUCT SAFETY SERVICING GUIDELINES

CAUTION

No modification of any circuit should be attempted. Service work should be performed only after you are thoroughly familiar with all of the following safety checks and service guidelines. To do otherwise increases the risk of potential hazards and injury to the user.

SAFETY CHECKS

Subject: Fire and Shock Hazard

1. Do not install, remove, or handle the picture tube in any manner unless shatter-proof goggles are worn. People not so equipped should be kept away while picture tubes are handled. Keep the picture tube away from the body while handling.
2. When service is required, observe the original lead dress. Extra precaution should be given to assure correct lead dress in the high voltage circuitry area. Where a short circuit has occurred, replace these components that indicate evidence of overheating. Always use the manufacturer's replacement component.
3. Always check high voltage for proper value and at all times use an accurate high voltage meter. The calibration of this meter should be checked periodically.
4. After re-assembly of the set, always perform an A.C. leakage test on the exposed metallic chassis to be sure the set is safe to operate without danger of electrical shock. Do not use a line isolation transformer during the test. Use an A.C. voltmeter having 1000 ohms per volt or more sensitivity in the following manner:— Connect a 1500 ohm 10 watt resistor, paralleled by a .15 mfd, AC-type capacitor between a known good earth ground (water pipe, conduit, etc.) and the exposed metallic chassis. Measure the A.C. voltage across the combination 1500 ohm resistor and .15 uf capacitor. Reverse the AC plug on the set and repeat AC voltage measurements for each exposed metallic part. Voltage measured must not exceed .3 volts RMS. This corresponds to 0.5 milliamp AC. Any value exceeding this limit constitutes a potential shock hazard and must be corrected immediately.
5. Check for frayed insulation on wires including AC cord.
6. Check across-the-line components for damage and replace if necessary.

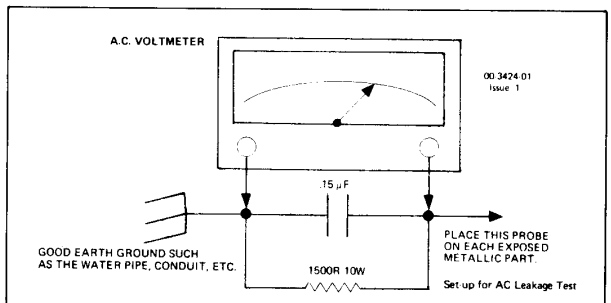

Figure 1 — Set-up for AC Leakage Test

ACCESS INFORMATION

1. INSTALLATION OF NEW COLOR MONITOR

a) Allow monitor to reach operating temperature and set controls for normal picture. Observe vertical centering, vertical height and focus and make corrections if mis-adjustment is readily seen. Color temperature, purity and convergence should be critically checked, since these can be affected during normal handling of monitor.

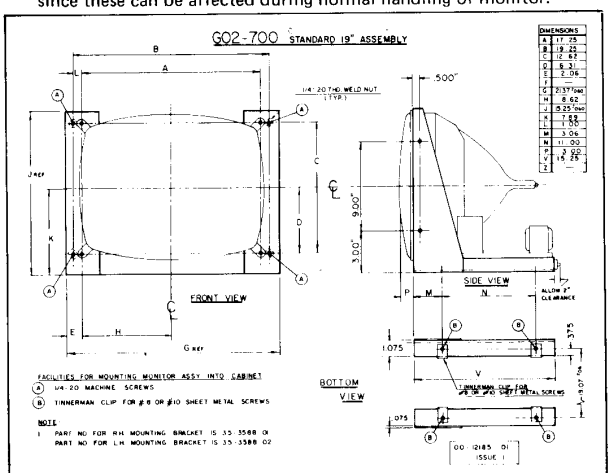

Figure 2

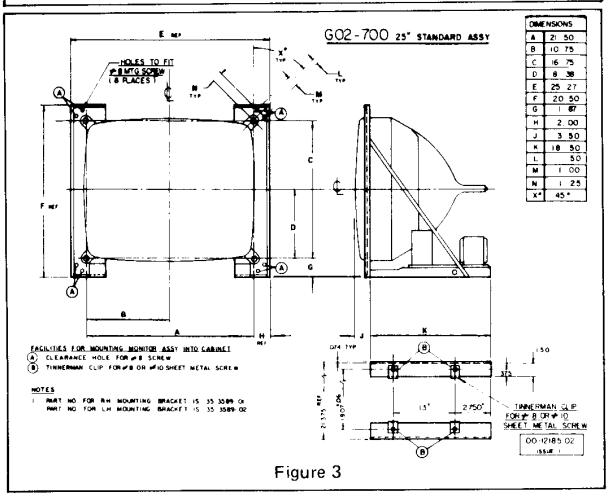

Figure 3

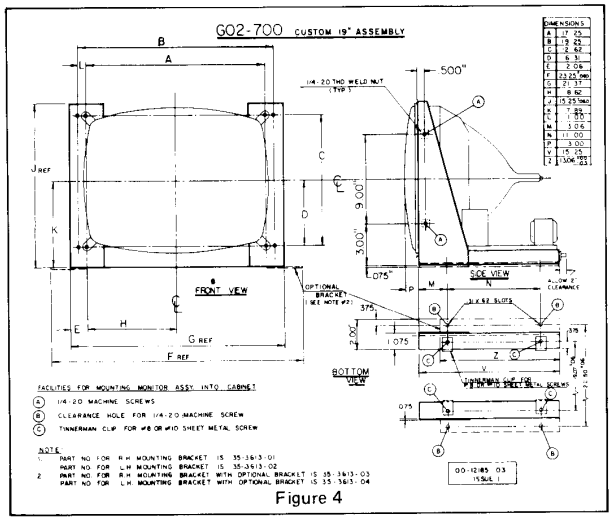

Figure 4

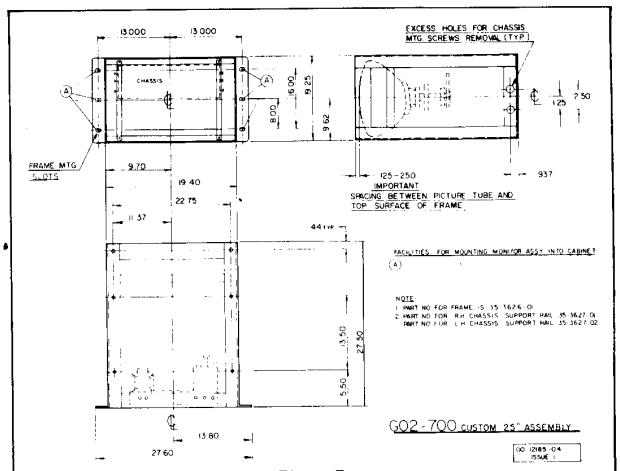

Figure 5

b) There are various models of the G02 color data monitor determined by their mechanical and/or electrical differences. Some of the mechanical configurations are shown in:
Figure 2 standard 19" configuration
Figure 3 standard 25" configuration
Figure 4 custom 19" configuration
Figure 5 custom 25" configuration
Each monitor configuration can be mounted into customer designed enclosured by using mounting facilities provided as described in Figures 2, 3, 4 and 5.

c) Adequate ventilation must be provided in order to have the monitor function properly. The maximum ambient temperature in which the monitor can operate is 66°C. Special attention should be given to keep the underside of monitor chassis clear of any obstruction that will hinder air flow to and from power dissipating components.

2. AUTOMATIC DEGAUSSING

All monitors are equipped with automatic degaussing coils which effectively demagnetize the picture tube each time the monitor is turned on. The degaussing coils will operate any time the monitor is turned on after having been off for at least five minutes.
The degaussing effect is confined to the picture tube since the coils are mounted on the ferrous tube shield. Should any part of the chassis become magnetized, it will be necessary to degauss the affected area by means of a manual degaussing coil. Move the coil slowly around the CRT face area, then slowly withdraw for a distance of six feet before disconnecting the coil from the AC power supply.

3. SERVICE CONTROLS

There are 8 service controls located on the rear skirt. For functions and location see Figure 6.
The horizontal width control is located on the rear panel of the flyback transformer enclosure (right hand side).

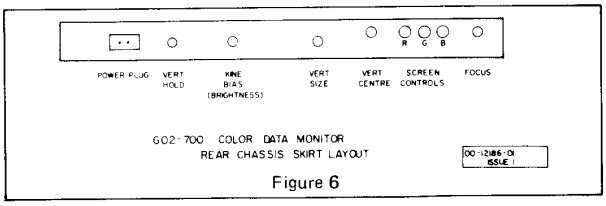

Figure 6

4. CHASSIS REMOVAL FOR SERVICE

To remove the chassis from the tube assembly.
1) Disconnect Video Output PC Board Assembly.
2) Remove two hold-down screws on the side of chassis skirt.
3) Disconnect picture tube anode lead and ground connector yoke plug convergence plug, degaussing connection and two harness plugs on interface PCB.
4) Pull chassis back and then up until it clears slots in mounting rails.

5. PICTURE TUBE REMOVAL

CAUTION: Wear safety goggles, handle CRT gently, do not lift by neck.

– Short second anode to aquadag ground to discharge tube.

driver.
In order for the EHT to reappear, it will be necessary to cut off power to the monitor and remove the fault or adjustment condition that triggered the EHT collapse or subsequent collapses will occur.

2) EHT Hold-Down and EHT Adjustments
In order to stay within government specified guidelines regarding x-ray radiation, the flyback tertiary coil, EHT hold-down control (R930), and EHT preset control (R422) have been Factory Sealed. If at any time any of the parts listed in figure 9a are changed, it will be mandatory to perform the associated procedures also listed in figure 9a.
Example:–
1. R430 is replaced – procedure C is to be followed
2. T901 is replaced – procedures A, B and C are to be followed.

The equipment required to perform procedures A, B and C are listed in figure 9b.

Parts	Procedure to be followed
R430, R422, C951, D430 D420, R947, R428, C942 VT901, R423, C950, R943, V944, R939, R949, R963	C
R948, Q926, R927 D925, R930, R928	
C940, R945	B
Tertiary Coil	A & B
Flyback T901, C943	A, B & C

Figure 9a

Equipment required for EHT hold-down and EHT adjustment
1. Variac 0 140VAC General Radio W5MT3VM or equiv.
2. Line voltage monitor Fluke 8000A (.5%) or equiv.
3. Mod-tronic beam current meter 1% FSD or equiv.
4. Mod-tronic EHT meter 1% FSD or equiv.
5. 12K ohm resistor .5W.
6. Electrohome RGB color data monitor test generator or equiv.
7. Hex tool, non inductive for tertiary coil adjustment.
8. Sealing compount Lepages epoxy No.354 or equiv.

Figure 9b

a) Adjustment Procedure for Flyback Tertiary Coil
1. Turn R930, hold down trim pot, to minimum resistance, fully cw.
2. Turn R422, EHT adjust to minimum resistance, fully ccw.
3. Apply 120VAC to power up chassis and monitor EHT at 0 beam current.
4. Adjust tertiary coil on flyback for minimum EHT. If there are several dips in the EHT as the slug is adjusted, choose the dip producing minimum EHT.
5. Connect signal generator to video input, switch generator to field and touch up tertiary coil for minimum ringing bars on screen.
6. Turn the set off and seal* tertiary coil with epoxy (Lepages No.354 or equivalent) in such a manner that neither tune slug can be moved, or tune wand inserted into the coil.

b) Adjustment Procedure for EHT Hold-Down Pot (R930)
1. Turn R930, hold down trip pot, to minimum resistance, fully cw.
2. Turn R422, EHT adjust, to minimum resistance, fully ccw.
3. Apply 132VAC to power up chassis, and set R422 for an EHT of 32.0KV at 0 beam current. If 32KV cannot be obtained within range of R422, jumper R423 with a 12K ohm resistor to facilitate adjustment.
4. Advance hold down trip pot, R930 slowly towards high resistance (c.w.) just until EHT drops down towards 0. Note that it may be necessary to clip out R928B to facilitate this adjustment.
5. Turn R422 fully ccw (min. resistance) and reset EHT trip circuitry by momentarily shorting our C954 (.1uf).
6. Slowly turn R422 cw and verify that EHT trips at between 32.0 and 32.5 KV. If it does not go towards 0 within these limits repeat this set up procedure (1-4) or reject and repair the set.
7. Once EHT trips within acceptable limits, remove line voltage and seal* R930 with epoxy (Lepages No.354 or equivalent). If it was necessary to jumper R423 with a 12K resistor, remove this resistor.

c) Adjustment Procedure for EHT Preset (R422)
1. Turn R422 fully ccw and apply 120V line to set.
2. Slowly adjust R422 to where EHT = 30.0 KV at 0 beam current.
3. Remove power and seal *R422 with epoxy (Lepages No.354 or equivalent).

*In all steps where an item must be sealed, it must be done in such a manner that the seal cannot be broken without damaging the item.

9. CONVERGENCE

General Information – The dot movement pattern is illustrated in figure 10a. The dots move approximately the same angle as the convergence magnets are offset from the vertical plane. Blue, since it is mounted in a vertical plane, moves the blue dot up and down vertically; red and green moves the respective dots on at about a 60% angle from the vertical. The blue lateral assembly moves all three dots in a horizontal plane, the blue dot in one direction and the red and green dots in the opposite direction in a 5/1 ratio. Blue has the greatest lateral shift.

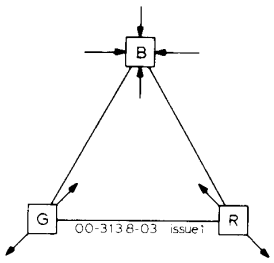

Figure 10a – Dot Movement Pattern

The thumbscrew adjustment of red, blue and green centre convergence magnets can be rotated in either direction continuously. Flux change is accomplished by changing the pole position of the magnets, not by moving the magnets nearer or further from the respective guns.
The blue lateral magnet is adjusted by means of the knurled knob located on the blue lateral assembly.

10. PURITY AND CONVERGENCE

Turn kine bias control and R, G and B screen controls to min. (c.c.w.).

Pre-Conv. Setup (North/South)
1. Switch to white crosshatch and do rough static and dynamic convergence ensuring that all convergence controls are operatable.
2. Adjust vertical size, vertical centering and horizontal centering roughly.
3. Set up top and bottom pincushion as follows:
   a) Turn PIN AMP control (R664) fully counterclockwise.
   b) Adjust the PIN phase control (L661) to move the curvature to the center of the screen.
   c) Adjust R664 pin amp for straight horizontal lines on top and bottom of crosshatch pattern.
   d) Repeat because of interaction.
4. Set focus if focus appears very bad (this is only initial focus adjustment).

Purity Setup (must be North/South Direction)
1. Switch to red field with kine bias control minimum (c.c.w.).
2. Set up purity as follows:
   a) Move yoke back against convergence assembly to get a three to four inch red spot on the CRT face (when spot is not small enough move convergence assembly temporarily backwards).
   b) Adjust purity magnets (rings with tabs located on blue lateral assembly figure 7) to center red area on CRT face.
   c) Move yoke forwards for best overall red purity.
   d) Check blue and green fields for purity by switching appropriate signals.
   e) Switch to white crosshatch. Check yoke level and centering, tighten yoke clamp, locate convergence assembly and tighten up clamp. Make sure mounting is solid.
   f) Switch low level white field and check white field for purity and white uniformity. If no low level signals are available low level white can be obtained by turning the kine bias control c.c.w.
3. Check color temperature as follows:
   a) If interface PCB used has video drive controls, adjust these controls (red, green and blue) for good high level white.
   b) Adjust screen controls up to achieve good low level whites.

Final Convergence Setup (North/South Direction)
1. Switch to yellow crosshatch (R + G).
2. Set static convergence as follows:
   a) Converge red and green bars at center by adjusting red and green convergence magnets.
   b) With blue signal on, converge the blue bars onto red and green by using the blue magnets for horizontal (lateral magnet holder may be rotated slightly to minimum vertical effect).

   Note: Use minimum blue lateral adjustment required. Excessive blue lateral adjustment causes slight defocusing of other guns. Repeat steps if necessary because of interaction.
   Location of blue lateral important.
   Static Convergence must be as accurate as possible.
3. Adjust dynamic convergence as follows (see figure 11) with yellow cross-hatch test pattern (red + green)
   a) Adjust control R4 for best convergence at the bottom of the screen.
   b) Adjust control R3 for best convergence at the top of the screen.
   c) Adjust control R8 for best convergence at the left of the screen.
   d) Adjust coil L3 for best convergence at the right of the screen.
4. **Red/Green Horizontal Bars**
   a) Adjust control R1 for best convergence at the bottom of the

screen.

b) Adjust control R2 for best convergence at the top of the screen.
c) Adjust control R9 for best convergence at the left of the screen.
d) Adjust coil L4 for best convergence at the right of the screen.

Note: Yoke balance adjustment may be used to improve red horizontal "S"ing. To check yoke balance adjustment, remove convergence plug and adjust L961 for R and G line coincidence.
Later monitors do not have yoke balance adjustment.

5. **Blue Horizontal Bars**
   a) Adjust control R6 for best convergence at the bottom of the screen.
   b) Adjust control R5 for best convergence at the top of the screen.
   c) Adjust control R7 for best convergence at the left of the screen.
   d) Adjust coil L2 for best convergence at the right of the screen.

   If necessary, repeat static and dynamic convergence operations concentrating first on red and green fields, then on blue until convergence is in full spec.
   Note: Convergence tolerances only apply if best possible convergence has been achieved. Set should be converged well within allowable tolerances.

6. Adjust focus very critically to the point where vertical lines have no blooming and horizontal lines have no smearing.

Note: A mirror, preferably surface plated, placed in front of the monitor will provide a good reproduction of the CRT display while allowing the service technician complete access to the rear of the monitor to do his convergence and purity set-up.

11. BLUE HORIZONTAL SHAPING COIL (see figure 10b)

The Blue Horizontal Shaping Coil L801 is not part of the convergence set-up adjustments. Misadjustment of this coil will cause horizontal distortion and eventual failure. If for any reason, L801 becomes misadjusted, it can be reset as follows:
Connect an oscilloscope to the junction of L801 and R804. Adjust L801 until the horizontal harmonic "bump" is at the 50% point on the sine wave slope. Waveform should be approximately 45 v P-P.

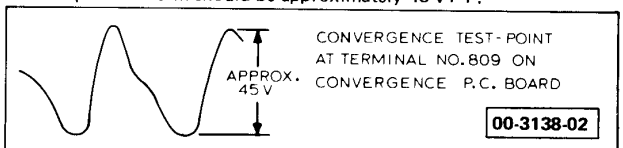

Figure 10b — Blue Horizontal Waveshape

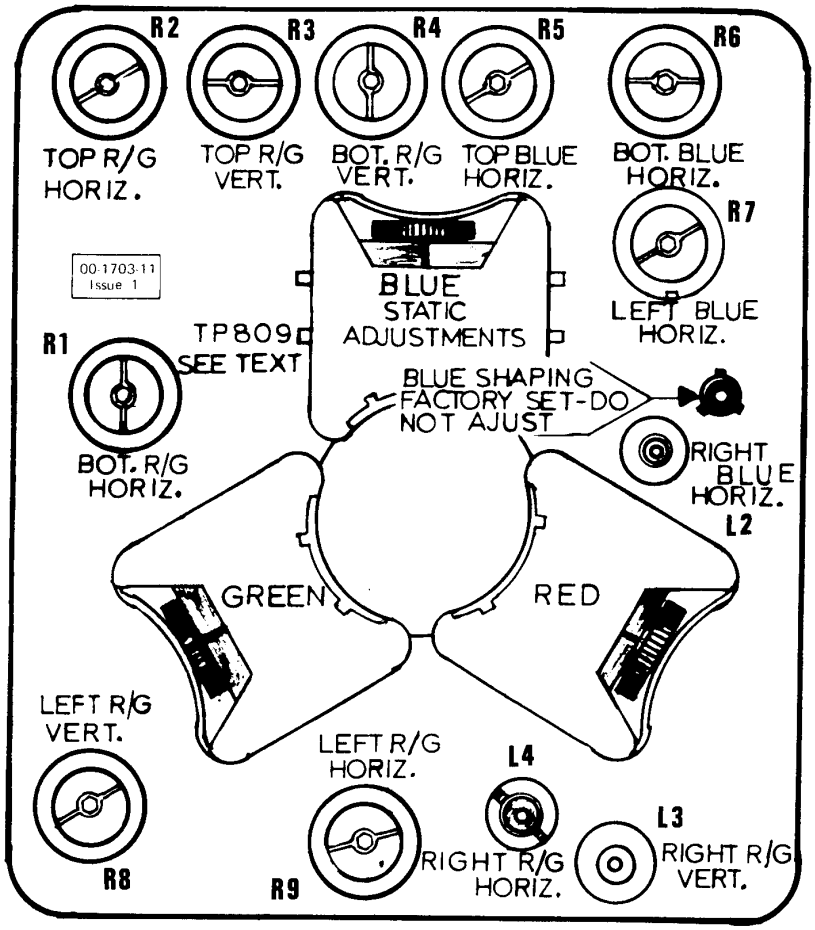

Figure 11 — Dynamic Convergence Panel

TOP CHASSIS VIEW SERVICE CONTROL LOCATION

Figure 12

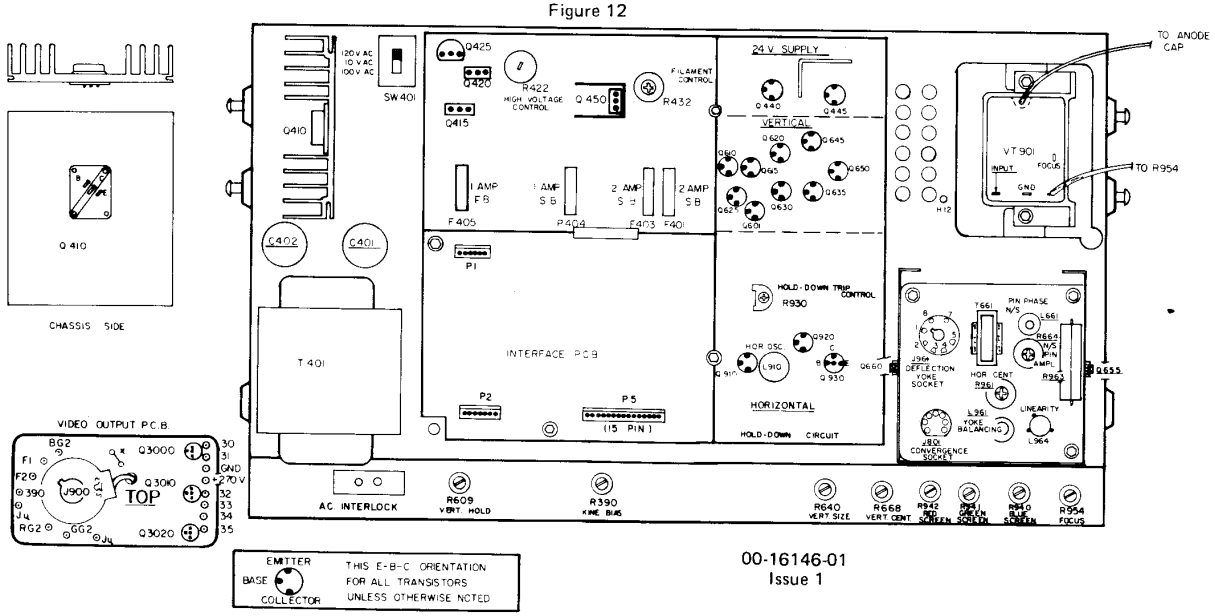

00-16146-01
Issue 1

TRANSISTOR LEAD CONFIGURATION CONVENTION

The suffix or last two digit dash numbers of the new Electrohome transistor part numbers serve to identify lead configuration.

EMITTER = 1
BASE = 2
COLLECTOR = 3

The two digit suffix specifies the first two leads reading from left to right when the transistor is held with leads directed toward you and with the:

a) transistor case flat down (in line leads).
b) large side of triangular lead formation down, or
c) collector heat tap down for plastic power units.

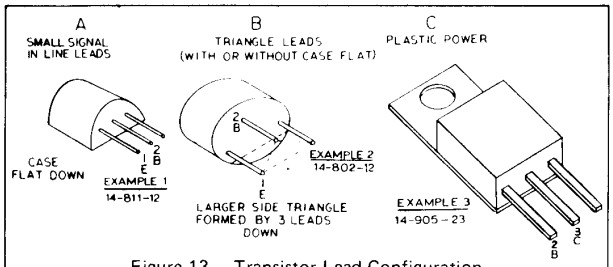

Figure 13 — Transistor Lead Configuration

00-1688-17

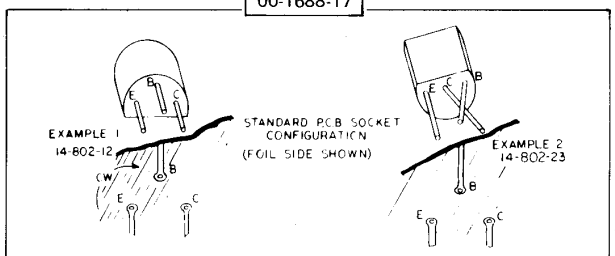

Figure 14 — PCB Standard Socket Configuration

On the printed circuit boards in the monitor solder pads are provided for small signal transistors in a configuration that is consistently CLOCKWISE emitter-base-collector WHEN VIEWED FROM THE FOIL SIDE OF THE PRINTED CIRCUIT BOARD. (This is the same view as the bottom of the transistor itself). This knowledge then allows one to form any small signal transistor's leads to fit the standard socket arrangement and alternate transistors need only be known by their suffix or dash number.

Plastic power transistor configurations vary and generally have been left in-line with individual sockets adapted to the transistor leads (no provision for lead forming). Consequently, there will be no alternate units of differing lead configuration (or suffix number).

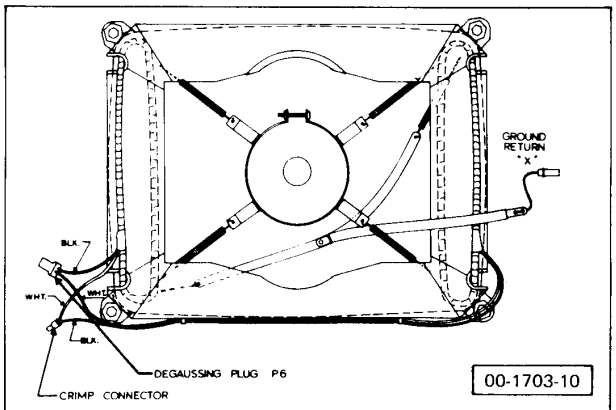

00-1703-10

Figure 15 — Degaussing Coil Mounting Layout

NOTE: To obtain correct degaussing action it is important to regard the polarity of the coils. If the series connected coils are positioned around pix tube as shown with leads pointing down and toward picture tube center. The fields will aid one another resulting in good degaussing. This can be checked by artificially creating an impurity pattern by touching faceplate of picture tube with a relatively strong permanent magnet; and then after thermistor has cooled to normal ambient temperature switch set on. Practically all traces of impurity should disappear provided the purity of the picture tube was correctly adjusted.

TEST EQUIPMENT

1. COLOR GENERATOR (with field/crosshatch/color bar pattern provision).
   NOTE: Electrohome has developed a color service generator that is specifically designed for use with the G02 monitor. This product may be ordered from:
   OEM Contracts Manager
   Electrohome Limited
   809 Wellington St. N.
   Kitchener, Ontario, Canada
   N2G 4J6
   Telephone (519) 744-7111
2. EHT METER, calibrated 0-35KV., or 35KV HIGH VOLTAGE PROBE for voltmeter - high accuracy.
3. VTVM, with capability of reading as low as 0.5V D.C. with resolution 0.1V. (or 20,000 ohm/v VOM).
4. OSCILLOSCOPE — If used in video checks must have frequency response up to 10 MHz.

MONITOR BLOCK DIAGRAM

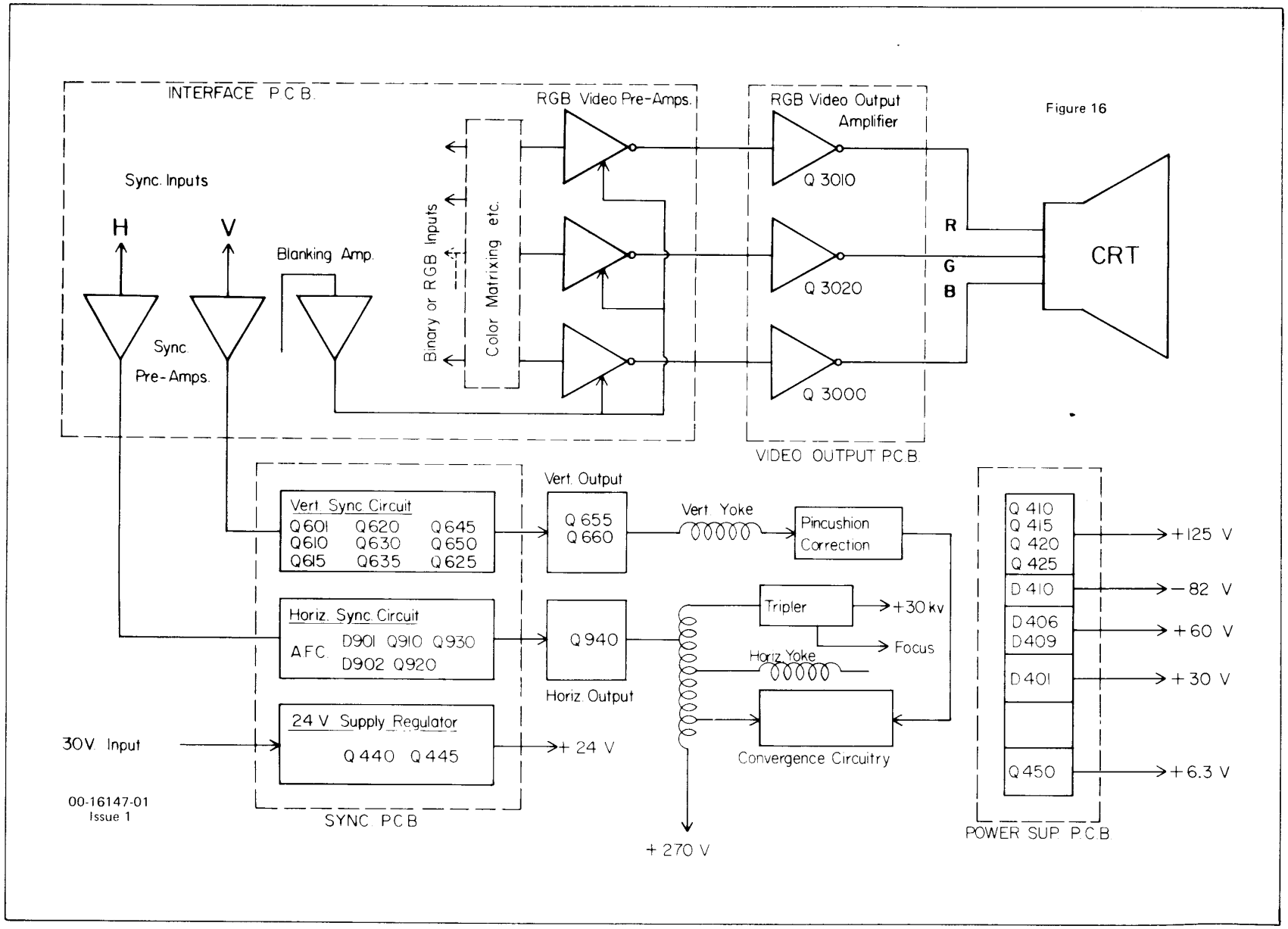

Figure 16

00-16147-01
Issue 1

DEFLECTION P.C. BOARD (TOP VIEW)

50-1073-01 sheet 4 of 7
50-1073-02 sheet 2 of 6
MODIFIED

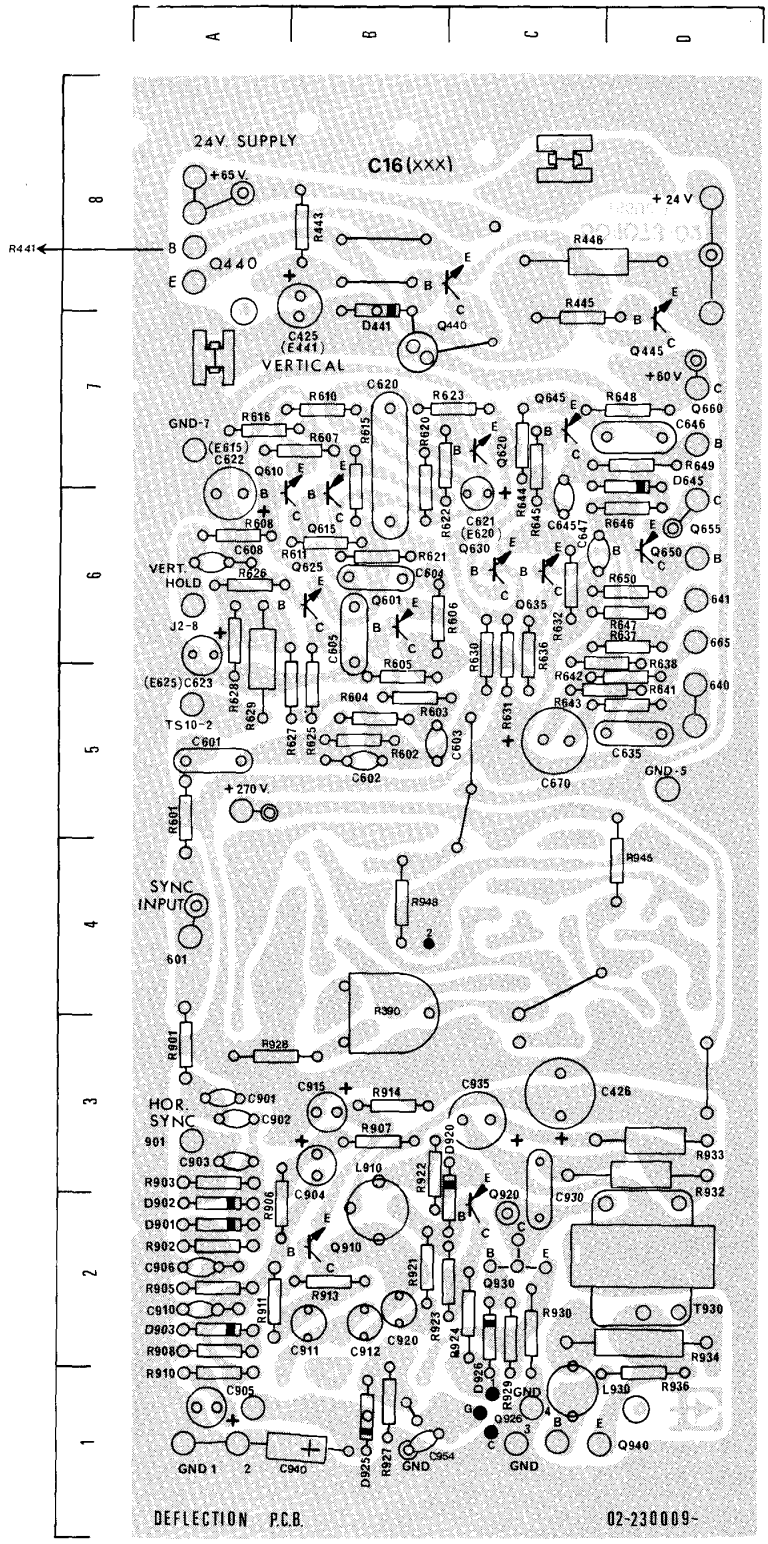

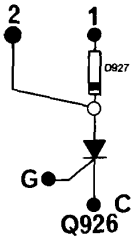

Figure 17

CONVERGENCE P.C. BOARD (TOP VIEW)

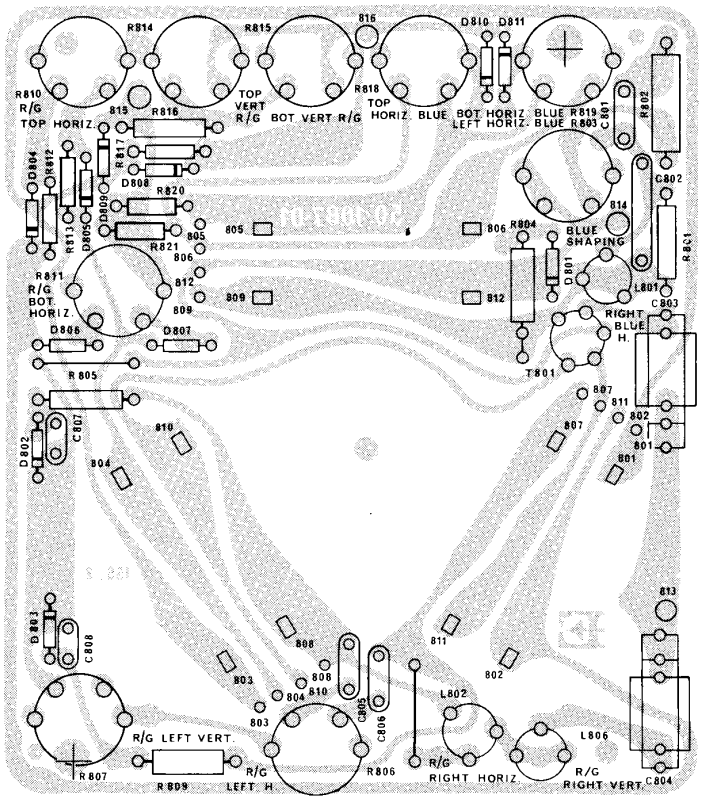

Figure 18

50-1087-01
sheet 2of5 Issue 2
sheet 4of5 Issue 1

GEOMETRY CORRECTION P.C. BOARD (TOP VIEW)

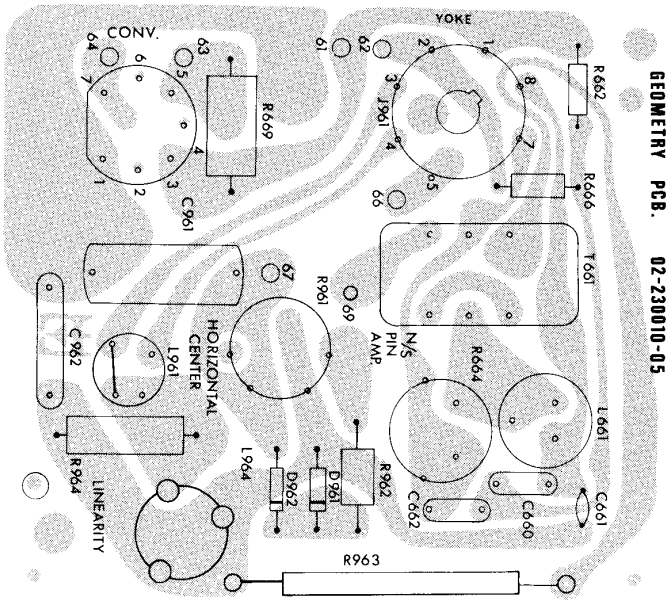

Figure 19

50-1075-03
sheet 2of5
sheet 4of5

VIDEO OUTPUT P.C. BOARD

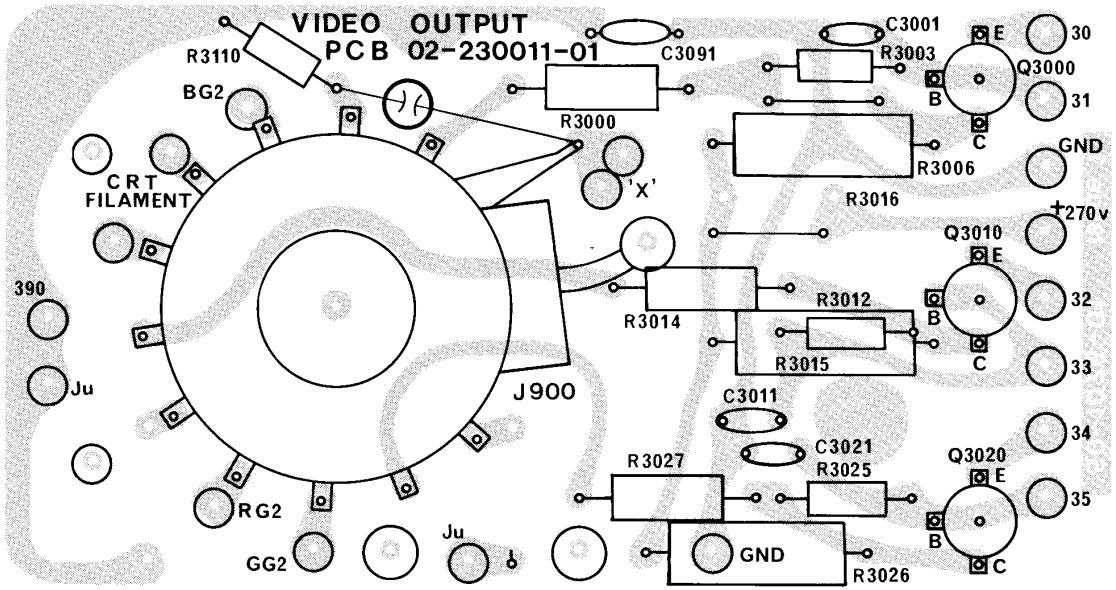

Figure 20

50-1076-01
MODIFIED

POWER SUPPLY P.C. BOARD

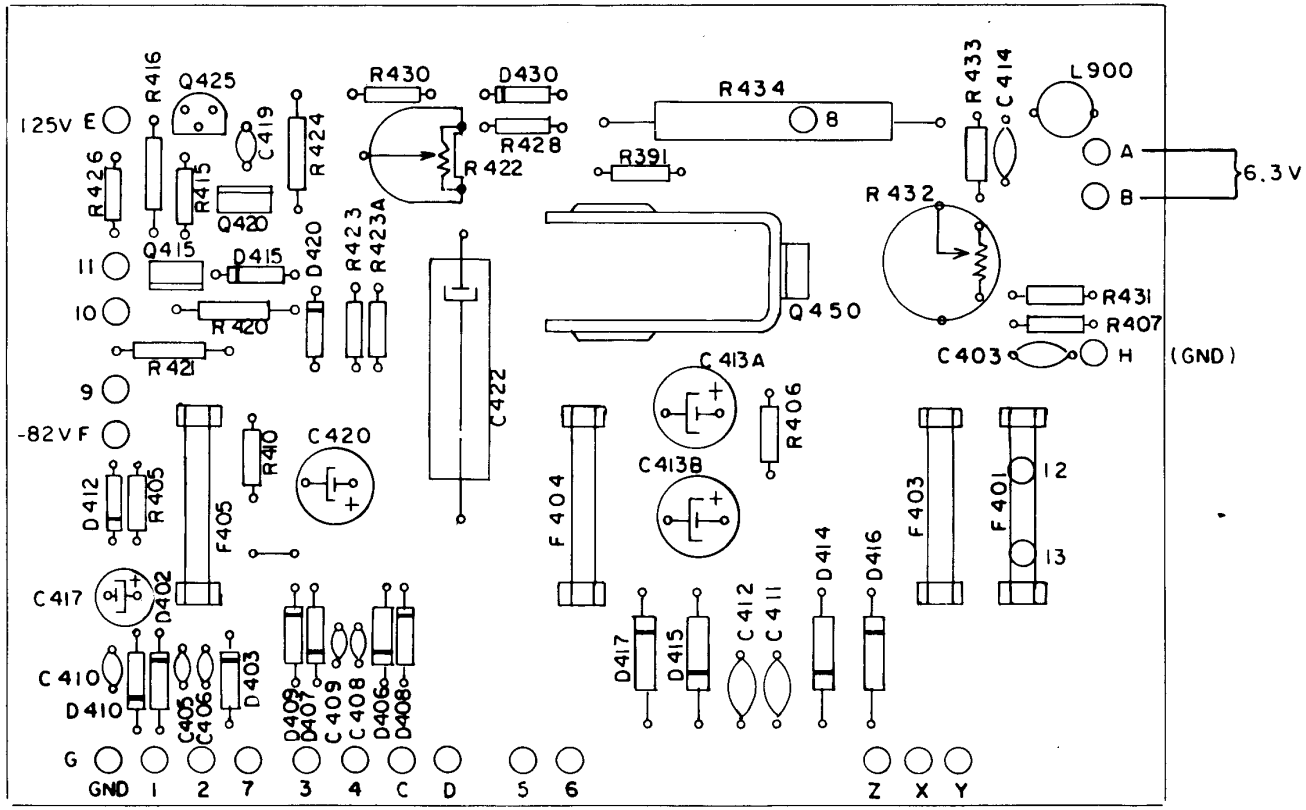

Figure 21

G02 MONITOR CIRCUIT DRAWING

Electrohome's Model G02 color data monitor has been developed specifically to meet stringent color display requirements of the video games industry.

In order to meet the various input signal requirements of our customers, this monitor has been produced with a chassis containing interchangeable interface circuitry capability. The following circuitry drawing package reflects this capability in that it contains circuits for six of the interface combinations that have been produced to date.

As additional circuits are developed their schematics will be made available through Electrohome's parts distribution facilities.

Customer inquiries concerning additional interface capabilities should be directed to Electrohome's OEM Contracts Manager at the following address.

ELECTROHOME Limited
809 Wellington Street, North
Kitchener, Ontario
Canada N2G 4J6

ALWAYS ORDER PARTS BY PART NUMBER, TO ENSURE FAST DELIVERY AND CORRECT REPLACEMENT

U.S.A. CUSTOMERS: Service (U.S.A.) Electrohome
192 Wales Avenue
Tonawanda, New York 14150
Telephone: (716) 694-3332

CANADIAN CUSTOMERS: Service Electrohome
809 Wellington Street North
Kitchener, Ontario N2G 4J6
Telephone: (519) 744-7111
Telex: 069-5120

IMPORTANT SAFETY NOTICE

Components identified by the shaded areas in the parts list and the ⚠ symbol on the schematic have special characteristics for safety.
These critical safety components are designed to "fail safe" under abnormal conditions. The failure of any one component often causes stress in other components which could lead to smoke or fire or other hazards. Because of this, components are selected and tested under actual fault conditions to ensure safe operation. Replacement with anything other than the identical Electrohome part may present a hazard.

COLOR SERVICE GENERATOR FOR G02 MONITOR

Electrohome has developed a color service generator that is specifically designed for use with the G02 color data monitor. The generator derives its power to operate directly from the monitor. It provides the monitor with both horizontal and vertical sync, as well as the following test patterns:

1) Fine cross-hatch pattern
2) Broad bar cross-hatch pattern
3) Complete field

Three color selection switches red, green and blue provide the ability to display the above patterns in the three primary colors as well as the three secondary colors.

This product may be ordered from:
OEM Contracts Manager
ELECTROHOME Limited
809 Wellington St. North
Kitchener, Ontario
Canada N2G 4J6
Telephone: (519) 744-7111

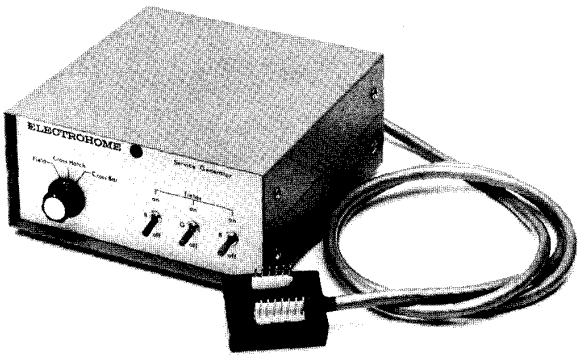

STANDARD T.T.L. BINERY INPUT P.C.B.

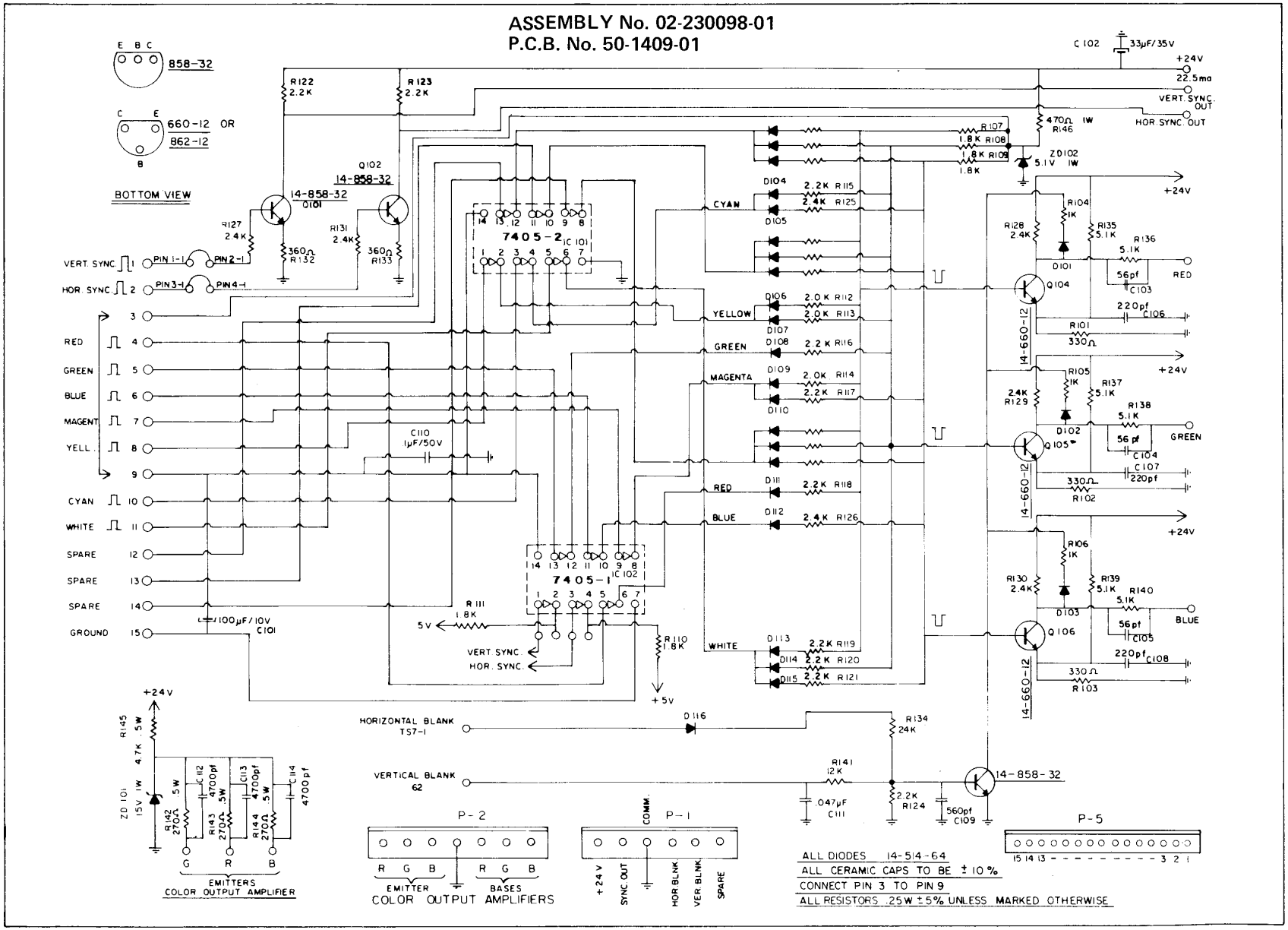

SERVICE REPLACEMENT PARTS LIST

SYMBOL	DESCRIPTION	PART NUMBER	REMARKS
C101	100uF 10V Elect.	44-110104-05	
C102	33uF 35V Elect.	44-333005-12	
C103	56pF Z5P 10% 500V	46-356013-01	
C104	56pF Z5P 10% 500V	46-356013-01	
C105	56pF Z5P 10% 500V	46-356013-01	
C106	220pF Z5P 10% 500V	46-322113-01	
C107	220pF Z5P 10% 500V	46-322113-01	
C108	220pF Z5P 10% 500V	46-322113-01	
C109	560pF 10% 1000V	46-556111-30	
C110	100nF Z5V 20+80% 50V	46-310468-57	
C111	47nF 10% 200V	48-174732-62	
C112	4.7nF 10% 100V	48-174721-62	
C113	4.7nF 10% 100V	48-174721-62	
C114	4.7nF 10% 100V	48-174721-62	
D101	Diode Signal	14-000514-64	T1 1N4148-1N914
D102	Diode Signal	14-000514-64	T1 1N4148-1N914
D103	Diode Signal	14-000514-64	T1 1N4148-1N914
D104	Diode Signal	14-000514-64	T1 1N4148-1N914
D105	Diode Signal	14-000514-64	T1 1N4148-1N914
D106	Diode Signal	14-000514-64	T1 1N4148-1N914
D107	Diode Signal	14-000514-64	T1 1N4148-1N914
D108	Diode Signal	14-000514-64	T1 1N4148-1N914
D109	Diode Signal	14-000514-64	T1 1N4148-1N914
D110	Diode Signal	14-000514-64	T1 1N4148-1N914
D111	Diode Signal	14-000514-64	T1 1N4148-1N914
D112	Diode Signal	14-000514-64	T1 1N4148-1N914
D113	Diode Signal	14-000514-64	T1 1N4148-1N914
D114	Diode Signal	14-000514-64	T1 1N4148-1N914
D115	Diode Signal	14-000514-64	T1 1N4148-1N914
D116	Diode Signal	14-000514-64	T1 1N4148-1N914
Q101	Small Sig. Trans. 200MW 50V	14-000858-32	
Q102	Small Sig. Trans. 200MW 50V	14-000585-32	
Q103	Small Sig. Trans. 300MW 50V	14-000585-32	
Q104	High Freq. Trans. 250MW 30V	14-000660-12	
Q105	High Freq. Trans. 250MW 30V	14-000660-12	
Q106	High Freq. Trans. 250MW 30V	14-000660-12	
R101	330R .25W 5% Resistor	40-123315-11	
R102	330R .25W 5% Resistor	40-123315-11	
R103	330R .25W 5% Resistor	40-123315-11	
R104	1K .25W 5% Resistor	40-121025-11	
R105	1K .25W 5% Resistor	40-121025-11	
R106	1K .25W 5% Resistor	40-121025-11	
R107	1K8 .25W 5% Resistor	40-121825-11	
R108	1K8 .25W 5% Resistor	40-121825-11	
R109	1K8 .25W 5% Resistor	40-121825-11	
R110	1K8 .25W 5% Resistor	40-121825-11	
R111	1K8 .25W 5% Resistor	40-121825-11	
R112	2K .25W 5% Resistor	40-122025-11	
R113	2K .25W 5% Resistor	40-122025-11	
R114	2K .25W 5% Resistor	40-122025-11	
R115	2K2 .25W 5% Resistor	40-122225-11	
R116	2K2 .25W 5% Resistor	40-122225-11	
R117	2K2 .25W 5% Resistor	40-122225-11	
R118	2K2 .25W 5% Resistor	40-122225-11	
R119	2K2 .25W 5% Resistor	40-122225-11	
R120	2K2 .25W 5% Resistor	40-122225-11	
R121	2K2 .25W 5% Resistor	40-122225-11	
R122	2K2 .25W 5% Resistor	40-122225-11	
R123	2K2 .25W 5% Resistor	40-122225-11	
R124	2K2 .25W 5% Resistor	40-122225-11	
R125	2K4 .25W 5% Resistor	40-122425-11	
R126	2K4 .25W 5% Resistor	40-122425-11	
R127	2K4 .25W 5% Resistor	40-122425-11	
R128	2K4 .25W 5% Resistor	40-122425-11	
R129	2K4 .25W 5% Resistor	40-122425-11	
R130	2K4 .25W 5% Resistor	40-122425-11	
R131	2K4 .25W 5% Resistor	40-122425-11	
R132	360R .25W 5% Resistor	40-123615-11	
R133	360R .25W 5% Resistor	40-123615-11	
R134	24K .25W 5% Resistor	40-122535-11	
R135	5K1 .25W 5% Resistor	40-125125-11	
R136	5K1 .25W 5% Resistor	40-125125-11	
R137	5K1 .25W 5% Resistor	40-125125-11	
R138	5K1 .25W 5% Resistor	40-125125-11	
R139	5K1 .25W 5% Resistor	40-125125-11	
R140	5K1 .25W 5% Resistor	40-125125-11	
R141	12K .25W 5% Resistor	40-121235-11	
R142	270R .5W 5% Resistor	40-222715-11	
R143	270R .5W 5% Resistor	40-222715-11	
R144	270R .5W 5% Resistor	40-222715-11	
R145	4K7 .5W 5% Resistor	40-224725-11	
R146	470R 1W 5% Resistor	40-424715-11	
IC101	7404 Hex Inverter	14-002031-01	7407
IC102	7404 Hex Inverter	14-002031-01	7404
ZD101	Zener Diode 15V .5W 5%	14-000515-53	
ZD102	Zener Diode 5.1V .4W 5%	14-000515-44	

FORTUNE COIN CO. INTERFACE T.T.L. P.C.B.

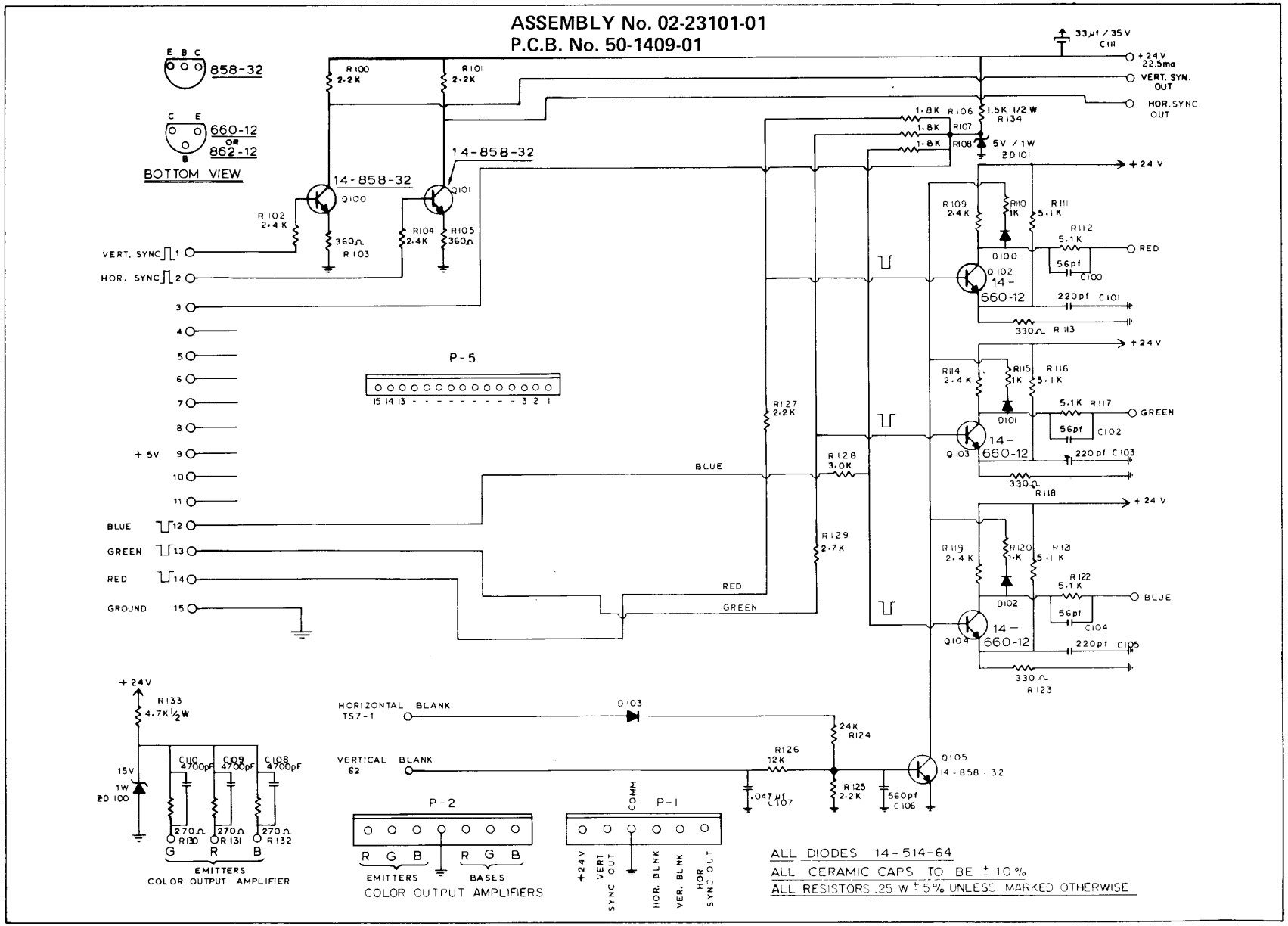

SERVICE REPLACEMENT PARTS LIST

SYMBOL	DESCRIPTION	PART NUMBER	REMARKS
C100	56pF Z5P 10% 500V	46-356013-01	
C101	220pF Z5P 10% 500V	46-322113-01	
C102	56pF Z5P 10% 500V	46-356013-01	
C103	220pF Z5P 10% 500V	46-322113-01	
C104	56pF Z5P 10% 500V	46-356013-01	
C105	220pF Z5P 10% 500V	46-322113-01	
C106	560pF 10% 1000V	46-556111-30	
C107	47nF 10% 200V	48-174732-62	
C108	4700pF	48-174721-62	
C109	4700pF	48-174721-62	
C110	4700pF	48-174721-62	
C111	33uF 35V Elect.	44-333005-12	
D100	Diode Signal	14-000514-64	T1 1N4148-1N914
D101	Diode Signal	14-000514-64	T1 1N4148-1N914
D102	Diode Signal	14-000514-64	T1 1N4148-1N914
D103	Diode Signal	14-000514-64	T1 1N4148-1N914
Q100	Small Sig. Trans 300MW 50V	14-000858-32	
Q101	Small Sig. Trans 300MW 50V	14-000858-32	
Q102	High Freq. Trans. 250MW 30V	14-000660-12	
Q103	High Freq. Trans. 250MW 30V	14-000660-12	
Q104	High Freq. Trans. 250MW 30V	14-000660-12	
Q105	Small Sig. Trans. 300MW 50V	14-000858-32	
R100	2K2 .25W 5% Resistor	40-122225-11	
R101	2K2 .25W 5% Resistor	40-122225-11	
R102	2K4 .25W 5% Resistor	40-122425-11	
R103	360R .25W 5% Resistor	40-123615-11	
R104	2K4 .25W 5% Resistor	40-122425-11	
R105	360R .25W 5% Resistor	40-123615-11	
R106	1K8 .25W 5% Resistor	40-121825-11	
R107	1K8 .25W 5% Resistor	40-121825-11	
R108	1K8 .25W 5% Resistor	40-121825-11	
R109	2K4 .25W 5% Resistor	40-122425-11	
R110	1K .25W 5% Resistor	40-121025-11	
R111	5K1 .25W 5% Resistor	40-125125-11	
R112	5K1 .25W 5% Resistor	40-125125-11	
R113	330R .25W 5% Resistor	40-123315-11	
R114	2K4 .25W 5% Resistor	40-122425-11	
R115	1K .25W 5% Resistor	40-121025-11	
R116	5K1 .25W 5% Resistor	40-125125-11	
R117	5K1 .25W 5% Resistor	40-125125-11	
R118	330R .25W 5% Resistor	40-123315-11	
R119	2K4 .25W 5% Resistor	40-122425-11	
R120	1K .25W 5% Resistor	40-121025-11	
R121	5K1 .25W 5% Resistor	40-125125-11	
R122	5K1 .25W 5% Resistor	40-125125-11	
R123	330R .25W 5% Resistor	40-123315-11	
R124	24K .25W 5% Resistor	40-122435-11	
R125	2K2 .25W 5% Resistor	40-122225-11	
R126	12K .25W 5% Resistor	40-121235-11	
R127	2K2 .25W 5% Resistor	40-122225-11	
R128	3K .25W 5% Resistor	40-123025-11	
R129	2K7 .25W 5% Resistor	40-122725-11	
R130	270R .5W 5% Resistor	40-222715-11	
R131	270R .5W 5% Resistor	40-222715-11	
R132	270R .5W 5% Resistor	40-222715-11	
R133	4K7 .5W 5% Resistor	40-224725-11	
R134	1K5 .5W 5% Resistor	40-221525-11	
ZD100	Zener Diode 15V 1W 5%	14-000515-53	
ZD101	Zener Diode 5.1V .4W 5%	14-000514-44	

SYMBOL	DESCRIPTION	PART NUMBER	REMARKS

COLOR MONITOR INTERFACE P.C.B. - EXIDY

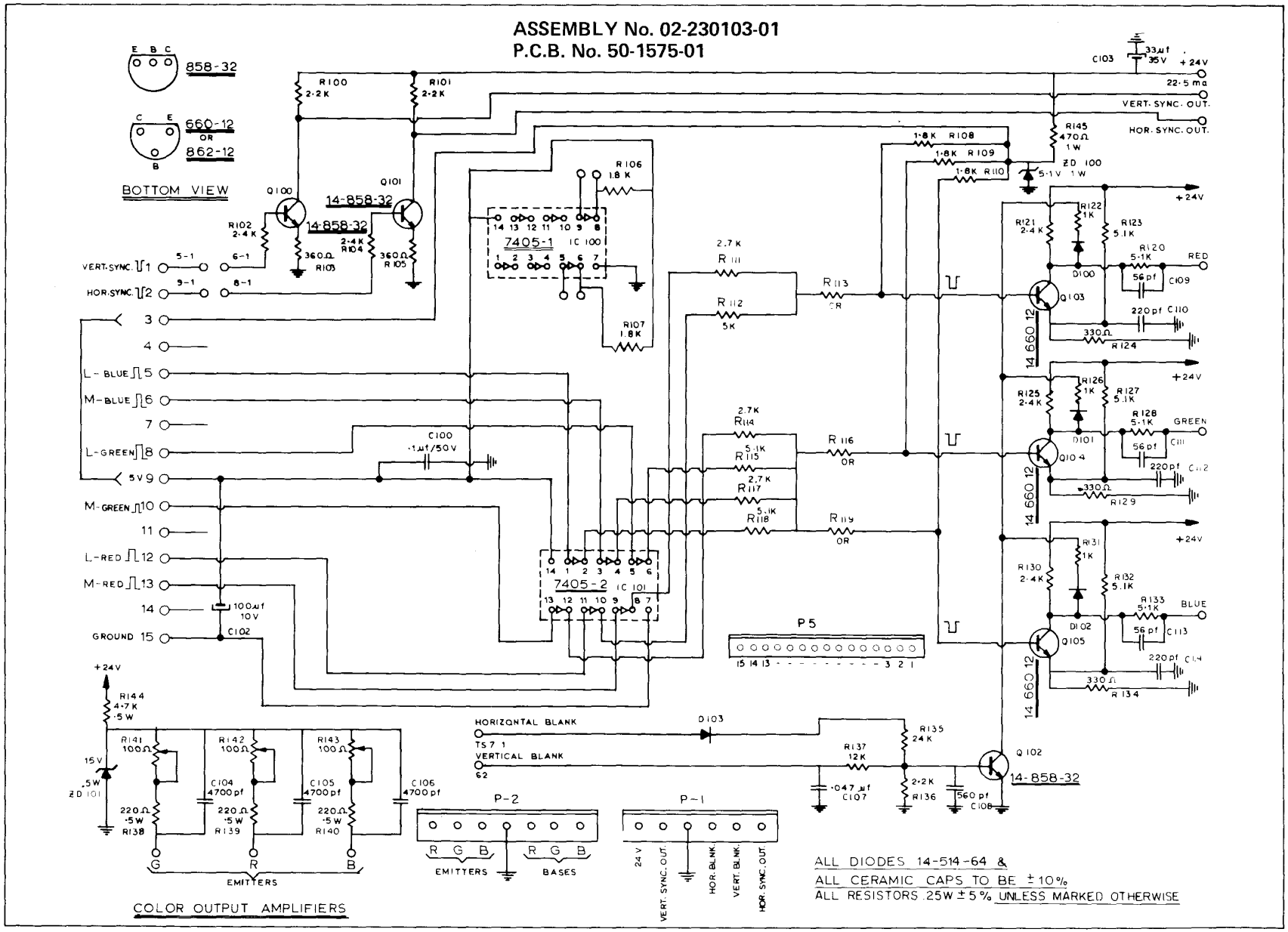

SERVICE REPLACEMENT PARTS LIST

SYMBOL	DESCRIPTION	PART NUMBER	REMARKS
C100	100nF Z5V 20+80% 50V	46-310468-57	
C101			
C102	100uF 10V Elect.	44-110104-05	
C103	33uF 35V Elect.	44-333005-12	
C104	4.7nF 10% 100V	48-174721-62	
C105	4.7nF 10% 100V	48-174721-62	
C106	4.7nF 10% 100V	48-174721-62	
C107	47nF 10% 200V	48-174732-62	
C108	560pF 10% 1000V	46-556111-30	
C109	56pF Z5P 10% 500V	46-356013-01	
C110	220pF Z5P 10% 500V	46-322113-01	
C111	56pF Z5P 10% 500V	46-356013-01	
C112	220pF Z5P 10% 500V	46-322113-01	
C113	56pF Z5P 10% 500V	46-356013-01	
C114	220pF Z5P 10% 500V	46-322113-01	
D100	Diode Signal	14-000514-64	
D101	Diode Signal	14-000514-64	
D102	Diode Signal	14-000514-64	
D103	Diode Signal	14-000514-64	
IC100	7405 Hex Inverter	14-002031-01	7405
IC101	7405 Hex Inverter	14-002031-01	7405
Q100	Small Sig. Trans. 300MW 50V	14-000858-32	
Q101	Small Sig. Trans. 300MW 50V	14-000858-32	
Q102	Small Sig. Trans. 300MW 50V	14-000858-32	
Q103	High Freq. Trans. 250MW 30V	14-000660-12	
Q104	High Freq. Trans. 250MW 30V	14-000660-12	
Q105	High Freq. Trans. 250MW 30V	14-000660-12	
R100	2K2 .25W 5% Resistor	40-122225-11	
R101	2K2 .25W 5% Resistor	40-122225-11	
R102	2K4 .25W 5% Resistor	40-122425-11	
R103	360R .25W 5% Resistor	40-123615-11	
R104	2K4 .25W 5% Resistor	40-122425-11	
R105	360R .25W 5% Resistor	40-123615-11	
R106	1K8 .25W 5% Resistor	40-121825-11	
R107	1K8 .25W 5% Resistor	40-121825-11	
R108	1K8 .25W 5% Resistor	40-121825-11	
R109	1K8 .25W 5% Resistor	40-121825-11	
R110	1K8 .25W 5% Resistor	40-121825-11	
R111	2K7 .25W 5% Resistor	40-122725-11	
R112	5K1 .25W 5% Resistor	40-125125-11	
R113	OR		
R114	2K7 .25W 5% Resistor	40-122725-11	
R115	5K1 .25W 5% Resistor	40-125125-11	
R116	OR		
R117	2K7 .25W 5% Resistor	40-122725-11	
R118	5K1 .25W 5% Resistor	40-125125-11	
R119	OR		
R120	5K1 .25W 5% Resistor	40-125125-11	
R121	2K4 .25W 5% Resistor	40-122425-11	
R122	1K .25W 5% Resistor	40-121025-11	
R123	5K1 .25W 5% Resistor	40-125125-11	
R124	330R .25W 5% Resistor	40-123315-11	
R125	2K4 .25W 5% Resistor	40-122425-11	
R126	1K .25W 5% Resistor	40-121025-11	
R127	5K1 .25W 5% Resistor	40-125125-11	
R128	5K1 .25W 5% Resistor	40-125125-11	
R129	330R .25W 5% Resistor	40-123315-11	
R130	2K4 .25W 5% Resistor	40-122425-11	
R131	1K .25W 5% Resistor	40-121025-11	
R132	5K1 .25W 5% Resistor	40-125125-11	
R133	5K1 .25W 5% Resistor	40-125125-11	
R134	330R .25W 5% Resistor	40-123315-11	
R135	24K .25W 5% Resistor	40-122435-11	
R136	2K2 .25W 5% Resistor	40-122225-11	
R137	12K .25W 5% Resistor	40-121235-11	
R138	220R .5W 5% Resistor	40-222215-11	
R139	220R .5W 5% Resistor	40-222215-11	
R140	220R .5W 5% Resistor	40-222215-11	
R141	Carbon Trim Pot 100R 20%	41-000265-17	
R142	Carbon Trim Pot 100R 20%	41-000265-17	
R143	Carbon Trim Pot 100R 20%	41-000265-17	
R144	4K7 .5W 5% Resistor	40-224725-11	
R145	470R 1W 5% Resistor	40-424715-11	
ZD100	Zener Diode 5.1V .4W	14-000515-44	
ZD101	Zener Diode 15V .5W	14-000515-53	

MIDWAY ANALOG COLOR MONITOR INTERFACE

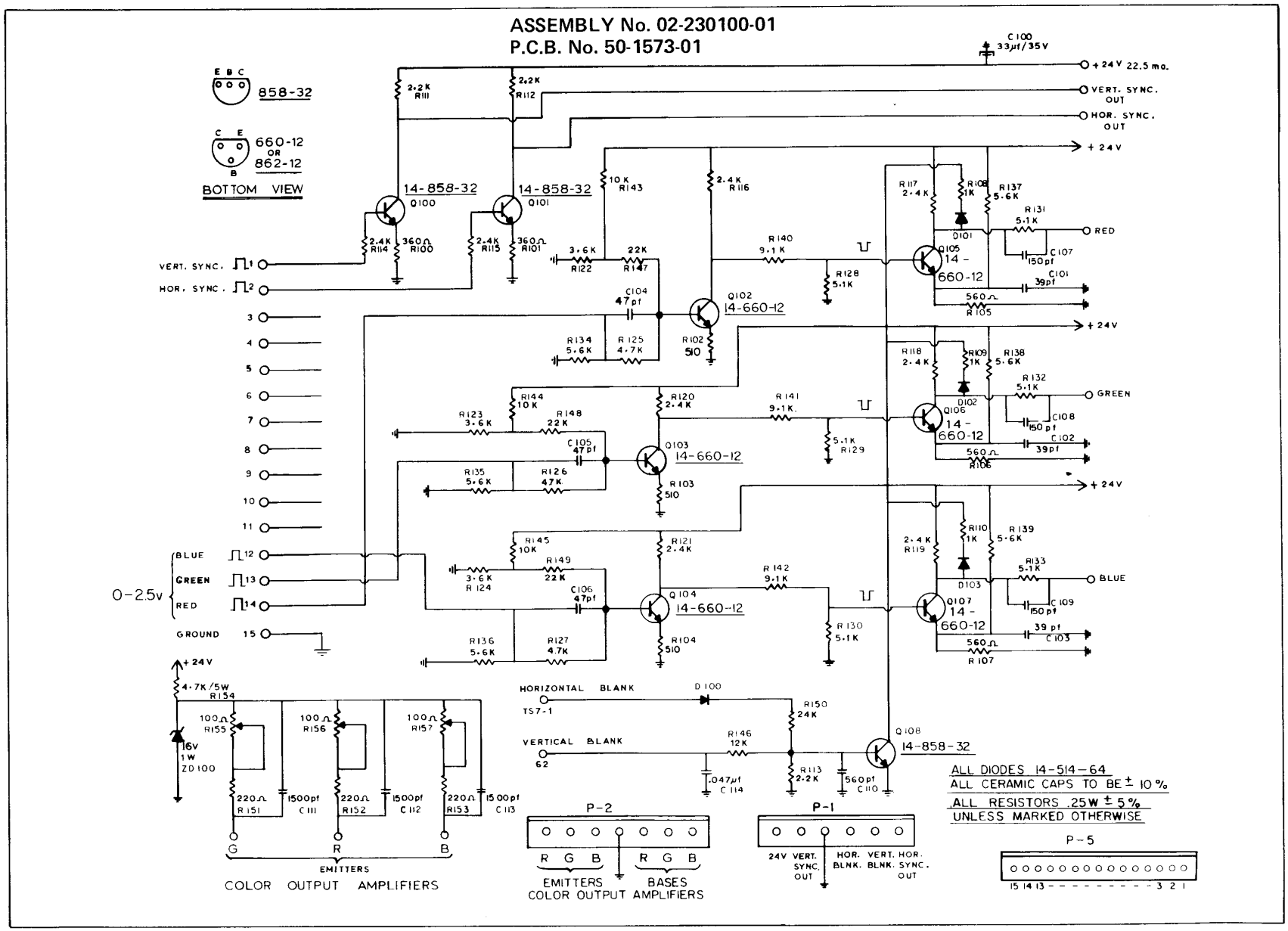

SERVICE REPLACEMENT PARTS LIST

SYMBOL	DESCRIPTION	PART NUMBER	REMARKS
C100	33uF 35V Elect.	44-333005-12	
C101	39pF 10% N150 50V	46-439011-05	
C102	39pF 10% N150 50V	46-439011-05	
C103	39pF 10% N150 50V	46-439011-05	
C104	47pF Z5P 10% 500V	46-347013-02	
C105	47pF Z5P 10% 500V	46-347013-02	
C106	47pF Z5P 10% 500V	46-347013-02	
C107	150pF Z5P 10% 500V	46-315113-02	
C108	150-F Z5P 10% 500V	46-315113-02	
C109	150pF Z5P 10% 500V	46-315113-02	
C110	560pF Z5P 10% 500V	46-356113-02	
C111	1.5nF Z5P 10% 50V	46-315213-51	
C112	1.5nF Z5P 10% 50V	46-315213-51	
C113	1.5nF Z5P 10% 50V	46-315213-51	
C114	47nF 10% 200V	48-174732-62	
D100	Diode Signal	14-000514-64	
D101	Diode Signal	14-000514-64	
D102	Diode Signal	14-000514-64	
D103	Diode Signal	14-000514-64	
Q100	High Freq. Trans. 250MW 30W	14-000660-12	
Q101	High Freq. Trans. 250MW 30W	14-000660-12	
Q102	High Freq. Trans. 250MW 30W	14-000660-12	
Q103	High Freq. Trans. 250MW 30W	14-000660-12	
Q104	High Freq. Trans. 250MW 30W	14-000660-12	
Q105	High Freq. Trans. 250MW 30W	14-000660-12	
Q106	Small Sig. Trans. 300MW 50V	14-000858-32	
Q107	Small Sig. Trans. 300MW 50V	14-000858-32	
Q108	Small Sig. Trans. 300MW 50V	14-000858-32	
R100	360R .25W 5% Resistor	40-123615-11	
R101	360R .25W 5% Resistor	40-123615-11	
R102	510R .25W 5% Resistor	40-125115-11	
R103	510R .25W 5% Resistor	40-125115-11	
R104	510R .25W 5% Resistor	40-125115-11	
R105	560R .25W 5% Resistor	40-125615-11	
R106	560R .25W 5% Resistor	40-125615-11	
R107	560R .25W 5% Resistor	40-125615-11	
R108	1K .25W 5% Resistor	40-121025-11	
R109	1K .25W 5% Resistor	40-121025-11	
R110	1K .25W 5% Resistor	40-121025-11	
R111	2K2 .25W 5% Resistor	40-122225-11	
R112	2K2 .25W 5% Resistor	40-122225-11	
R113	2K2 .25W 5% Resistor	40-122225-11	
R114	2K4 .25W 5% Resistor	40-122425-11	
R115	2K4 .25W 5% Resistor	40-122425-11	
R116	2K4 .25W 5% Resistor	40-122425-11	
R117	2K4 .25W 5% Resistor	40-122425-11	
R118	2K4 .25W 5% Resistor	40-122425-11	
R119	2K4 .25W 5% Resistor	40-122425-11	
R120	2K4 .25W 5% Resistor	40-122425-11	
R121	2K4 .25W 5% Resistor	40-122425-11	
R122	3K6 .25W 5% Resistor	40-123625-11	
R123	3K6 .25W 5% Resistor	40-123625-11	
R124	3K6 .25W 5% Resistor	40-123625-11	
R125	4K7 .25W 5% Resistor	40-124725-11	
R126	4K7 .25W 5% Resistor	40-124725-11	
R127	4K7 .25W 5% Resistor	40-124725-11	
R128	5K1 .25W 5% Resistor	40-125125-11	
R129	5K1 .25W 5% Resistor	40-125125-11	
R130	5K1 .25W 5% Resistor	40-125125-11	
R131	5K1 .25W 5% Resistor	40-125125-11	
R132	5K1 .25W 5% Resistor	40-125125-11	
R133	5K1 .25W 5% Resistor	40-125125-11	
R134	5K6 .25W 5% Resistor	40-125625-11	
R135	5K6 .25W 5% Resistor	40-125625-11	
R136	5K6 .25W 5% Resistor	40-125625-11	
R137	5K6 .25W 5% Resistor	40-125625-11	
R138	5K6 .25W 5% Resistor	40-125625-11	
R139	5K6 .25W 5% Resistor	40-125625-11	
R140	9K1 .25W 5% Resistor	40-129125-11	
R141	9K1 .25W 5% Resistor	40-129125-11	
R142	9K1 .25W 5% Resistor	40-129125-11	
R143	10K .25W 5% Resistor	40-121035-11	
R144	10K .25W 5% Resistor	40-121035-11	
R145	10K .25W 5% Resistor	40-121035-11	
R146	12K .25W 5% Resistor	40-121235-11	
R147	22K .25W 5% Resistor	40-122235-11	
R148	22K .25W 5% Resistor	40-122235-11	
R149	22K .25W 5% Resistor	40-122235-11	
R150	24K .25W 5% Resistor	40-122435-11	
R151	220R .5W 5% Resistor	40-222215-11	
R152	220R .5W 5% Resistor	40-222215-11	
R153	220R .5W 5% Resistor	40-222215-11	
R154	4K7 .5W 5% Resistor	40-224725-11	
R155	Carbon Trim Pot 100R 20%	41-000265-17	
R156	Carbon Trim Pot 100R 20%	41-000265-17	
R157	Carbon Trim Pot 100R 20%	41-000265-17	
ZD100	Zener Diode 16V .5W	14-000515-65	

MIDWAY COLOR DIFFERENCE INTERFACE

ASSEMBLY No. 02-230104-01
P.C.B. No. 50-1577-01

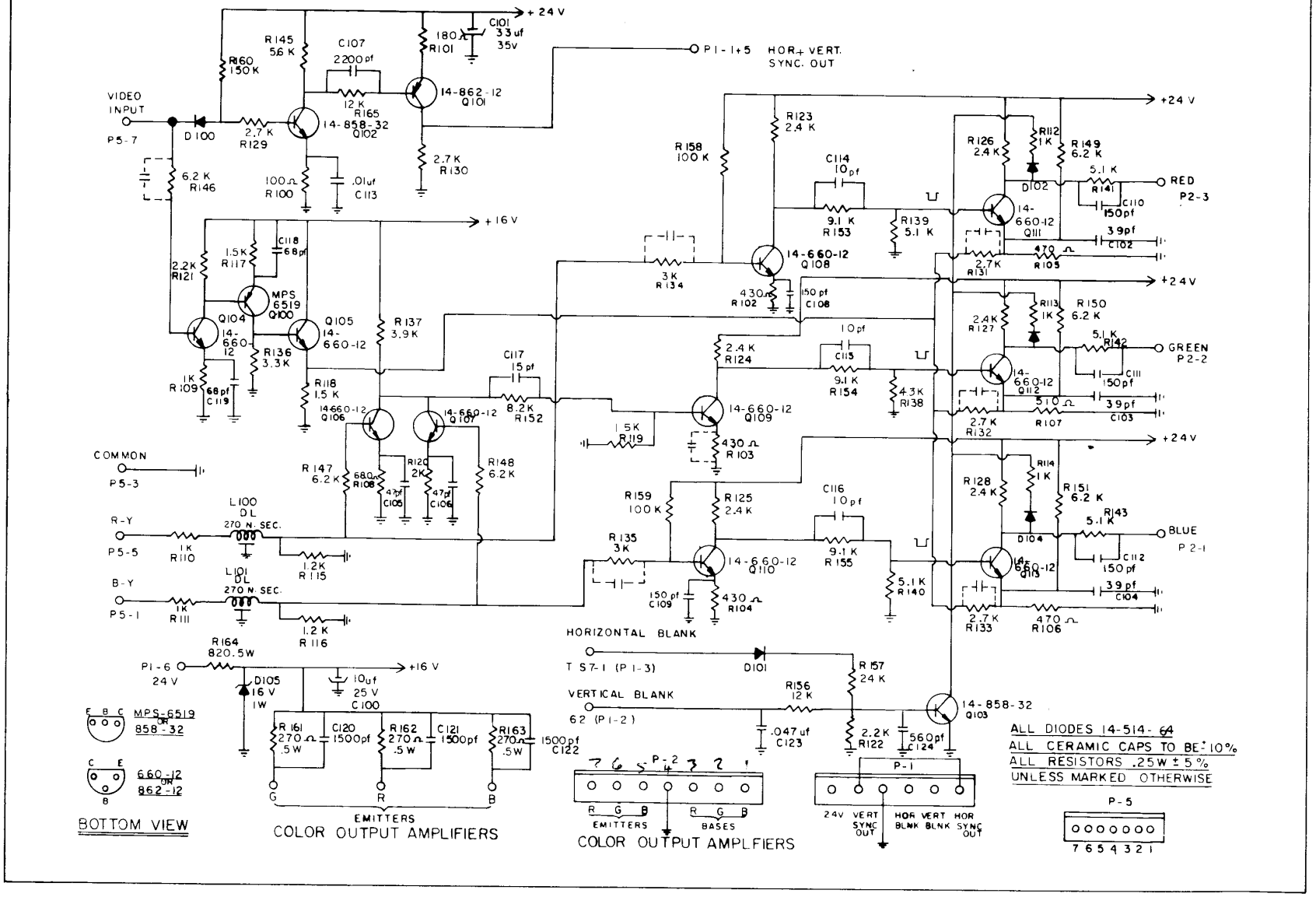

SERVICE REPLACEMENT PARTS LIST

SYMBOL	DESCRIPTION	PART NUMBER	REMARKS
C100	10uF 25V Elect.	44-110006-03	
C101	33uF 35V Elect.	44-333005-12	
C102	39pF N150 10% 50V	46-439011-05	
C103	39pF N150 10% 50V	46-439011-05	
C104	39pF N150 10% 50V	46-439011-05	
C105	47pF Z5P 10% 500V	46-347013-02	
C106	47pF Z5P 10% 500V	46-347013-02	
C107	2200pF Z5P 10% 50V	46-322213-59	
C108	150pF Z5P 10% 500V	46-315113-02	
C109	150pF Z5P 10% 500V	46-315113-02	
C110	150pF Z5P 10% 500V	46-315113-02	
C111	150pF Z5P 10% 500V	46-315113-02	
C112	150pF Z5P 10% 500V	46-315113-02	
C113	100nF Z5V 20+80% 50V	46-310468-57	
C114	10pF NPO 20% 500V	46-410010-11	
C115	10pF NPO 10% 500V	46-410010-11	
C116	10pF NPO 10% 500V	46-410010-11	
C117	17pF NPO 10% 50V	46-422010-03	
C118	68pF NPO 10% 50V	46-468010-08	
C119	68pF NPO 10% 50V	46-468010-08	
C120	1.5nF Z5P 10% 50V	46-315213-51	
C121	1.5nF Z5P 10% 50V	46-315213-51	
C122	1.5nF Z5P 10% 50V	46-315213-51	
C123	47nF 10% 200V	48-174732-62	
C124	560pF 10% 1000V	46-556111-30	
D100	Diode Signal	14-000514-64	T1 1N4148-1N914
D101	Diode Signal	14-000514-64	T1 1N4148-1N914
D102	Diode Signal	14-000514-64	T1 1N4148-1N914
D103	Diode Signal	14-000514-64	T1 1N4148-1N914
D104	Diode Signal	14-000514-64	T1 1N4148-1N914
D105	Zener Diode 16V .5W	14-000515-65	
Q100	Transistor	14-000824-32	MPS 6519
Q101	Small Sig. Trans. 600MW 50V	14-000862-12	
Q102	Small Sig. Trans. 300MW 50V	14-000858-32	
Q103	Small Sig. Trans. 300MW 50V	14-000858-32	
Q104	High Freq. Trans. 250MW 30V	14-000660-12	
Q105	High Freq. Trans. 250MW 30V	14-000660-12	
Q106	High Freq. Trans. 250MW 30V	14-000660-12	
Q107	High Freq. Trans. 250MW 30V	14-000660-12	
Q108	High Freq. Trans. 250MW 30V	14-000660-12	
Q109	High Freq. Trans. 250MW 30V	14-000660-12	
Q110	High Freq. Trans. 250MW 30V	14-000660-12	
Q111	High Freq. Trans. 250MW 30V	14-000660-12	
Q112	High Freq. Trans. 250MW 30V	14-000660-12	
Q113	High Freq. Trans. 250MW 30V	14-000660-12	
R100	100R .25W 5% Resistor	40-121015-11	
R101	180R .25W 5% Resistor	40-121815-11	
R102	430R .25W 5% Resistor	40-124315-11	
R103	430R .25W 5% Resistor	40-124315-11	
R104	430R .25W 5% Resistor	40-124315-11	
R105	470R .25W 5% Resistor	40-124715-11	
R106	470R .25W 5% Resistor	40-124715-11	
R107	510R .25W 5% Resistor	40-125115-11	
R108	680R .25W 5% Resistor	40-126815-11	
R109	1K0 .25W 5% Resistor	40-121025-11	
R110	1K0 .25W 5% Resistor	40-121025-11	
R111	1K0 .25W 5% Resistor	40-121025-11	
R112	1K0 .25W 5% Resistor	40-121025-11	
R113	1K0 .25W 5% Resistor	40-121025-11	
R114	1K0 .25W 5% Resistor	40-121025-11	
R115	1K2 .25W 5% Resistor	40-121225-11	
R116	1K2 .25W 5% Resistor	40-121225-11	

SYMBOL	DESCRIPTION	PART NUMBER	REMARKS
R117	1K5 .25W 5% Resistor	40-121525-11	
R118	1K5 .25W 5% Resistor	40-121525-11	
R119	1K5 .25W 5% Resistor	40-121525-11	
R120	2K0 .25W 5% Resistor	40-122025-11	
R121	2K2 .25W 5% Resistor	40-122225-11	
R122	2K2 .25W 5% Resistor	40-122225-11	
R123	2K4 .25W 5% Resistor	40-122425-11	
R124	2K4 .25W 5% Resistor	40-122425-11	
R125	2K4 .25W 5% Resistor	40-122425-11	
R126	2K4 .25W 5% Resistor	40-122425-11	
R127	2K4 .25W 5% Resistor	40-122425-11	
R128	2K4 .25W 5% Resistor	40-122425-11	
R129	2K7 .25W 5% Resistor	40-122725-11	
R130	2K7 .25W 5% Resistor	40-122725-11	
R131	2K7 .25W 5% Resistor	40-122725-11	
R132	2K7 .25W 5% Resistor	40-122725-11	
R133	2K7 .25W 5% Resistor	40-122725-11	
R134	3K0 .25W 5% Resistor	40-123025-11	
R135	3K0 .25W 5% Resistor	40-123025-11	
R136	3K3 .25W 5% Resistor	40-123325-11	
R137	3K9 .25W 5% Resistor	40-123925-11	
R138	4K3 .25W 5% Resistor	40-124325-11	
R139	5K1 .25W 5% Resistor	40-125125-11	
R140	5K1 .25W 5% Resistor	40-125125-11	
R141	2K1 .25W 5% Resistor	40-125125-11	
R142	5K1 .25W 5% Resistor	40-125125-11	
R143	5K1 .25W 5% Resistor	40-125125-11	
R144			
R145	5K6 .25W 5% Resistor	40-125625-11	
R146	6K2 .25W 5% Resistor	40-126225-11	
R147	6K2 .25W 5% Resistor	40-126225-11	
R148	6K2 .25W 5% Resistor	40-126225-11	
R149	6K2 .25W 5% Resistor	40-126225-11	
R150	6K2 .25W 5% Resistor	40-126225-11	
R151	6K2 .25W 5% Resistor	40-126225-11	
R152	8K2 .25W 5% Resistor	40-128225-11	
R153	9K1 .25W 5% Resistor	40-129125-11	
R154	9K1 .25W 5% Resistor	40-129125-11	
R155	9K1 .25W 5% Resistor	40-129125-11	
R156	12K .25W 5% Resistor	40-121235-11	
R157	24K .25W 5% Resistor	40-122435-11	
R158	100K .25W 5% Resistor	40-121045-11	
R159	100K .25W 5% Resistor	40-121045-11	
R160	150K .25W 5% Resistor	40-121545-11	
R161	270R .5W 5% Resistor	40-222715-11	
R162	270R .5W 5% Resistor	40-222715-11	
R163	270R .5W 5% Resistor	40-222715-11	
R164	820R .5W 5% Resistor	40-228215-11	
R165	24K .25W 5% Resistor	40-122435-11	
L100	Delay Line	21-001163-01	
L101	Delay Line	21-001163-11	

ATARI TANK T.T.L. BINERY INPUT P.C.B.

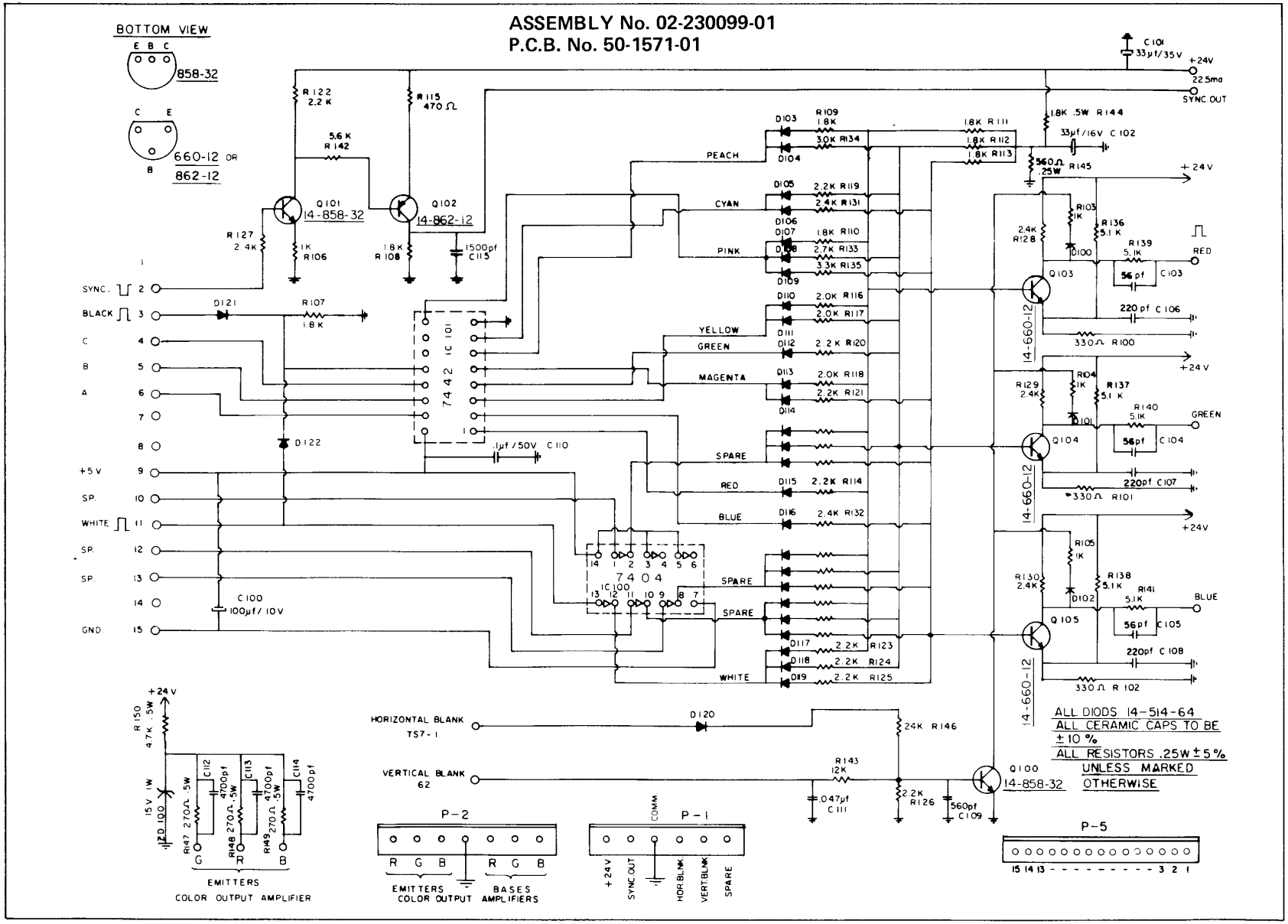

SERVICE REPLACEMENT PARTS LIST

SYMBOL	DESCRIPTION	PART NUMBER	REMARKS
C100	100uF 10V Elect.	44-110104-05	
C101	33uF 35V Elect.	44-333005-12	
C102	33uF 16V Elect.	44-133005-27	
C103	56pF Z5P 10% 500V	46-356013-01	
C104	56pF Z5P 10% 500V	46-356013-01	
C105	56pF Z5P 10% 500V	46-356013-01	
C106	220pF Z5P 10% 500V	46-322113-01	
C107	220pF Z5P 10% 500V	46-322113-01	
C108	220pF Z5P 10% 500V	46-322113-01	
C109	560pF Z5P 10% 1000V	46-556111-30	
C110	100nF Z5V 20+80% 50V	46-310468-57	
C111	47nF 10% 200V	48-174732-62	
C112	4.7nF 10% 100V	48-174721-62	
C113	4.7nF 10% 100V	48-174721-62	
C114	4.7nF 10% 100V	48-174721-62	
C115	1500pF Z5U 10%	46-315217-05	
D100	Signal Diode	14-000514-64	T1 1N4148-1N914
D101	Signal Diode	14-000514-64	T1 1N4148-1N914
D102	Signal Diode	14-000514-64	T1 1N4148-1N914
D103	Signal Diode	14-000514-64	T1 1N4148-1N914
D104	Signal Diode	14-000514-64	T1 1N4148-1N914
D105	Signal Diode	14-000514-64	T1 1N4148-1N914
D106	Signal Diode	14-000514-64	T1 1N4148-1N914
D107	Signal Diode	14-000514-64	T1 1N4148-1N914
D108	Signal Diode	14-000514-64	T1 1N4148-1N914
D109	Signal Diode	14-000514-64	T1 1N4148-1N914
D110	Signal Diode	14-000514-64	T1 1N4148-1N914
D111	Signal Diode	14-000514-64	T1 1N4148-1N914
D112	Signal Diode	14-000514-64	T1 1N4148-1N914
D113	Signal Diode	14-000514-64	T1 1N4148-1N914
D114	Signal Diode	14-000514-64	T1 1N4148-1N914
D115	Signal Diode	14-000514-64	T1 1N4148-1N914
D116	Signal Diode	14-000514-64	T1 1N4148-1N914
D117	Signal Diode	14-000514-64	T1 1N4148-1N914
D118	Signal Diode	14-000514-64	T1 1N4148-1N914
D119	Signal Diode	14-000514-64	T1 1N4148-1N914
D120	Signal Diode	14-000514-64	T1 1N4148-1N914
D121	Signal Diode	14-000514-64	T1 1N4148-1N914
D122	Signal Diode	14-000514-64	T1 1N4148-1N914
C100	Hex Inverter	14-002033-01	7404
C101	Decoder	14-002034-01	7442
Q100	Small Sig. Trans. 300MW 50V	14-000858-32	
Q101	Small Sig. Trans. 300MW 50V	14-000858-32	
Q102	Small Sig. Trans. 600MW 50V	14-000862-12	
Q103	High Freq. Trans. 250MW 30V	14-000660-12	
Q104	High Freq. Trans. 250MW 30V	14-000660-12	
Q105	High Freq. Trans. 250MW 30V	14-000660-12	
R100	330R .25W 5% Resistor	40-123315-11	
R101	330R .25W 5% Resistor	40-123315-11	
R102	330R .25W 5% Resistor	40-123315-11	
R103	1K0 .25W 5% Resistor	40-121025-11	
R104	1K0 .25W 5% Resistor	40-121025-11	
R105	1K0 .25W 5% Resistor	40-121025-11	
R106	1K0 .25W 5% Resistor	40-121025-11	
R107	1K8 .25W 5% Resistor	40-121825-11	
R108	1K8 .25W 5% Resistor	40-121825-11	
R109	1K8 .25W 5% Resistor	40-121825-11	
R110	1K8 .25W 5% Resistor	40-121825-11	
R111	1K8 .25W 5% Resistor	40-121825-11	
R112	1K8 .25W 5% Resistor	40-121825-11	
R113	1K8 .25W 5% Resistor	40-121825-11	
R114	2K2 .25W 5% Resistor	40-122225-11	
R115	470R .25W 5% Resistor	40-124715-11	
R116	2K0 .25W 5% Resistor	40-122025-11	
R117	2K0 .25W 5% Resistor	40-122025-11	
R118	2K0 .25W 5% Resistor	40-122025-11	
R119	2K2 .25W 5% Resistor	40-122225-11	
R120	2K2 .25W 5% Resistor	40-122225-11	
R121	2K2 .25W 5% Resistor	40-122225-11	
R122	2K2 .25W 5% Resistor	40-122225-11	
R123	2K2 .25W 5% Resistor	40-122225-11	
R124	2K2 .25W 5% Resistor	40-122225-11	
R125	2K2 .25W 5% Resistor	40-122225-11	
R126	2K2 .25W 5% Resistor	40-122225-11	
R127	2K4 .25W 5% Resistor	40-122425-11	
R128	2K4 .25W 5% Resistor	40-122425-11	
R129	2K4 .25W 5% Resistor	40-122425-11	
R130	2K4 .25W 5% Resistor	40-122425-11	
R131	2K4 .25W 5% Resistor	40-122425-11	
R132	2K4 .25W 5% Resistor	40-122425-11	
R133	2K7 .25W 5% Resistor	40-122725-11	
R134	3K0 .25W 5% Resistor	40-123025-11	
R135	3K3 .25W 5% Resistor	40-123325-11	
R136	5K1 .25W 5% Resistor	40-125125-11	
R137	5K1 .25W 5% Resistor	40-125125-11	
R138	5K1 .25W 5% Resistor	40-125125-11	
R139	5K1 .25W 5% Resistor	40-125125-11	
R140	5K1 .25W 5% Resistor	40-125125-11	
R141	5K1 .25W 5% Resistor	40-125125-11	
R142	5K6 .25W 5% Resistor	40-125625-11	
R143	12K .25W 5% Resistor	40-121235-11	
R144	1K8 .5W 5% Resistor	40-221825-11	
R145	560R .25W 5% Resistor	40-125615-11	
R146	24K .25W 5% Resistor	40-122435-11	
R147	270R .5W 5% Resistor	40-222715-11	
R148	270R .5W 5% Resistor	40-222715-11	
R149	270R .5W 5% Resistor	40-222715-11	
R150	4K7 .5W 5% Resistor	40-224725-11	
P001	6 Pin Terminal	34-000548-06	
P002	7 Pin Terminal	34-000548-07	
P005	15 Pin Terminal	34-000548-15	
ZD100	Zener Diode 15V .5W 5%	14-000515-53	

ATARI INDY 800 INTERFACE T.T.L. P.C.B.

ASSEMBLY No. 02-230102-01
P.C.B. No. 50-1574-01

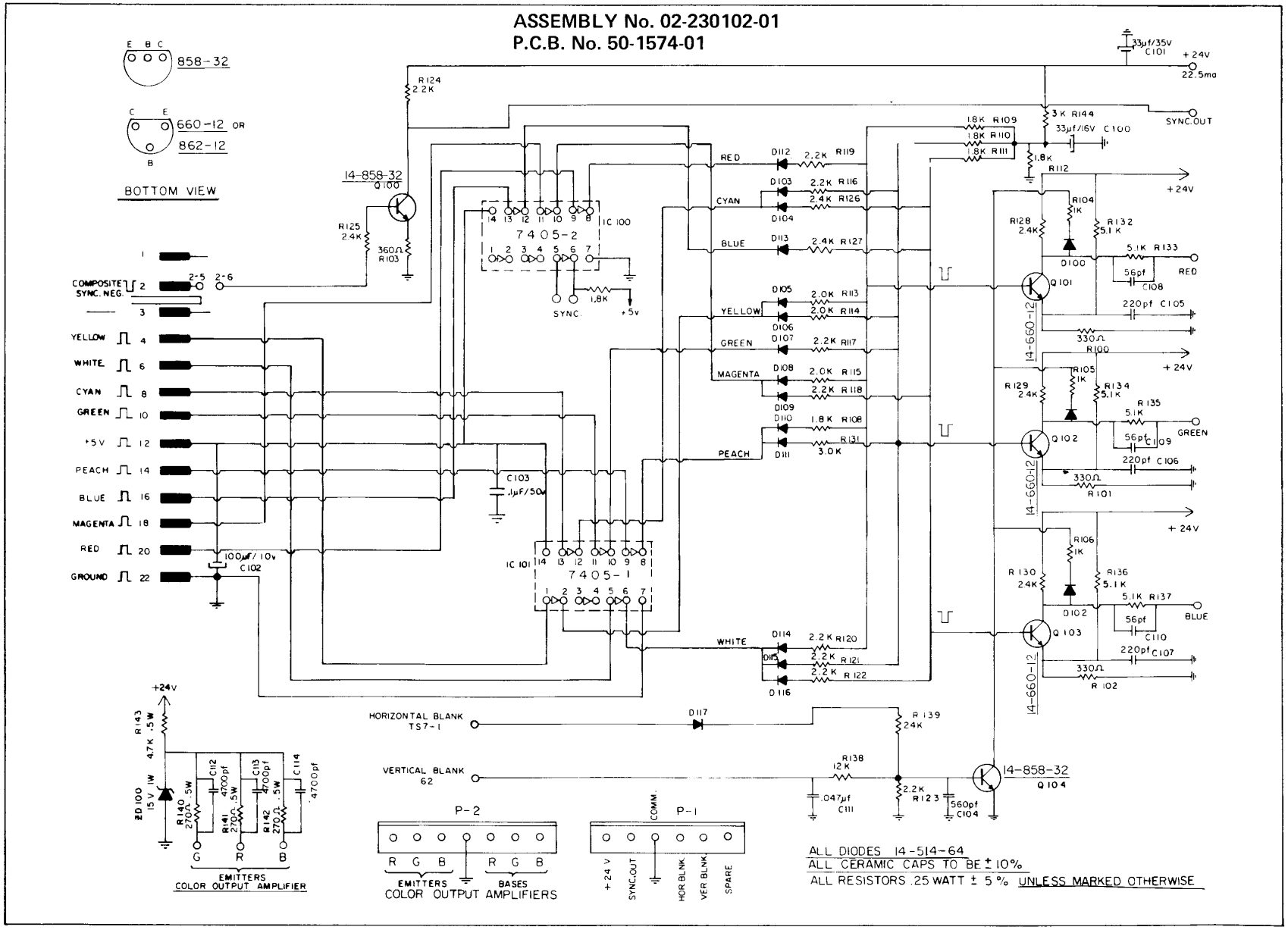

SERVICE REPLACEMENT PARTS LIST

SYMBOL	DESCRIPTION	PART NUMBER	REMARKS
C100	33uF 16V Elect.	44-133005-27	
C101	33uF 35V Elect.	44-333005-12	
C102	100uF 10V Elect.	44-110104-05	
C103	100nF Z5V 20+80% 50V	46-310468-57	
C104	560pF 10% 1000V	46-556111-30	
C105	220pF Z5P 10% 500V	46-322113-01	
C106	220pF Z5P 10% 500V	46-322113-01	
C107	220pF Z5P 10% 500V	46-322113-01	
C108	56pF Z5P 10% 500V	46-356013-01	
C109	56pF Z5P 10% 500V	46-356013-01	
C110	56pF Z5P 10% 500V	46-356013-01	
C111	47nF 10% 200V	48-174732-62	
C112	4.7nF 10% 100V	48-174721-62	
C113	4.7nF 10% 100V	48-174721-62	
C114	4.7nF 10% 100V	48-174721-62	
D100	Signal Diode	14-000514-64	T1 1N4148-1N914
D101	Signal Diode	14-000514-64	T1 1N4148-1N914
D102	Signal Diode	14-000514-64	T1 1N4148-1N914
D103	Signal Diode	14-000514-64	T1 1N4148-1N914
D104	Signal Diode	14-000514-64	T1 1N4148-1N914
D105	Signal Diode	14-000514-64	T1 1N4148-1N914
D106	Signal Diode	14-000514-64	T1 1N4148-1N914
D107	Signal Diode	14-000514-64	T1 1N4148-1N914
D108	Signal Diode	14-000514-64	T1 1N4148-1N914
D109	Signal Diode	14-000514-64	T1 1N4148-1N914
D110	Signal Diode	14-000514-64	T1 1N4148-1N914
D111	Signal Diode	14-000514-64	T1 1N4148-1N914
D112	Signal Diode	14-000514-64	T1 1N4148-1N914
D113	Signal Diode	14-000514-64	T1 1N4148-1N914
D114	Signal Diode	14-000514-64	T1 1N4148-1N914
D115	Signal Diode	14-000514-64	T1 1N4148-1N914
D116	Signal Diode	14-000514-64	T1 1N4148-1N914
D117	Signal Diode	14-000514-64	T1 1N4148-1N914
IC100	Hex Inverter	14-002031-02	7405
IC101	Hex Inverter	14-002031-02	7405
Q100	Small Sig. Trans. 300MW 50V	14-000858-32	
Q101	Small Sig. Trans. 300MW 50V	14-000858-32	
Q102	High Freq. Trans. 250MW 30V	14-000660-12	
Q103	High Freq. Trans. 250MW 30V	14-000660-12	
Q104	High Freq. Trans. 250MW 30V	14-000660-12	
R100	330R .25W 5% Resistor	40-123315-11	
R101	330R .25W 5% Resistor	40-123315-11	
R102	330R .25W 5% Resistor	40-123315-11	
R103	360R .25W 5% Resistor	40-123615-11	
R104	1K0 .25W 5% Resistor	40-121025-11	
R105	1K0 .25W 5% Resistor	40-121025-11	
R106	1K0 .25W 5% Resistor	40-121025-11	
R107	1K8 .25W 5% Resistor	40-121825-11	
R108	1K8 .25W 5% Resistor	40-121825-11	
R109	1K8 .25W 5% Resistor	40-121825-11	
R110	1K8 .25W 5% Resistor	40-121825-11	
R111	1K8 .25W 5% Resistor	40-121825-11	
R112	1K8 .25W 5% Resistor	40-121825-11	
R113	2K0 .25W 5% Resistor	40-122025-11	
R114	2K0 .25W 5% Resistor	40-122025-11	
R115	2K0 .25W 5% Resistor	40-122025-11	
R116	2K2 .25W 5% Resistor	40-122225-11	
R117	2K2 .25W 5% Resistor	40-122225-11	
R118	2K2 .25W 5% Resistor	40-122225-11	
R119	2K2 .25W 5% Resistor	40-122225-11	
R120	2K2 .25W 5% Resistor	40-122225-11	
R121	2K2 .25W 5% Resistor	40-122225-11	

SYMBOL	DESCRIPTION	PART NUMBER	REMARKS
R122	2K2 .25W 5% Resistor	40-122225-11	
R123	2K2 .25W 5% Resistor	40-122225-11	
R124	2K2 .25W 5% Resistor	40-122225-11	
R125	2K4 .25W 5% Resistor	40-122425-11	
R126	2K4 .25W 5% Resistor	40-122425-11	
R127	2K4 .25W 5% Resistor	40-122425-11	
R128	2K4 .25W 5% Resistor	40-122425-11	
R129	2K4 .25W 5% Resistor	40-122425-11	
R130	2K4 .25W 5% Resistor	40-122425-11	
R131	3K0 .25W 5% Resistor	40-123025-11	
R132	5K1 .25W 5% Resistor	40-125125-11	
R133	5K1 .25W 5% Resistor	40-125125-11	
R134	5K1 .25W 5% Resistor	40-125125-11	
R135	5K1 .25W 5% Resistor	40-125125-11	
R136	5K1 .25W 5% Resistor	40-125125-11	
R137	5K1 .25W 5% Resistor	40-125125-11	
R138	12K .25W 5% Resistor	40-121235-11	
R139	24K .25W 5% Resistor	40-122435-11	
R140	270R .5W 5% Resistor	40-222715-11	
R141	270R .5W 5% Resistor	40-222715-11	
R142	270R .5W 5% Resistor	40-222715-11	
R143	4K7 .5W 5% Resistor	40-224725-11	
R144	3K0 .5W 5% Resistor	40-223025-11	
ZD100	Zener Diode 15V .5W 5%	14-000515-53	
P001	6 Pin Terminal	34-000548-06	
P002	7 Pin Terminal	34-000548-07	

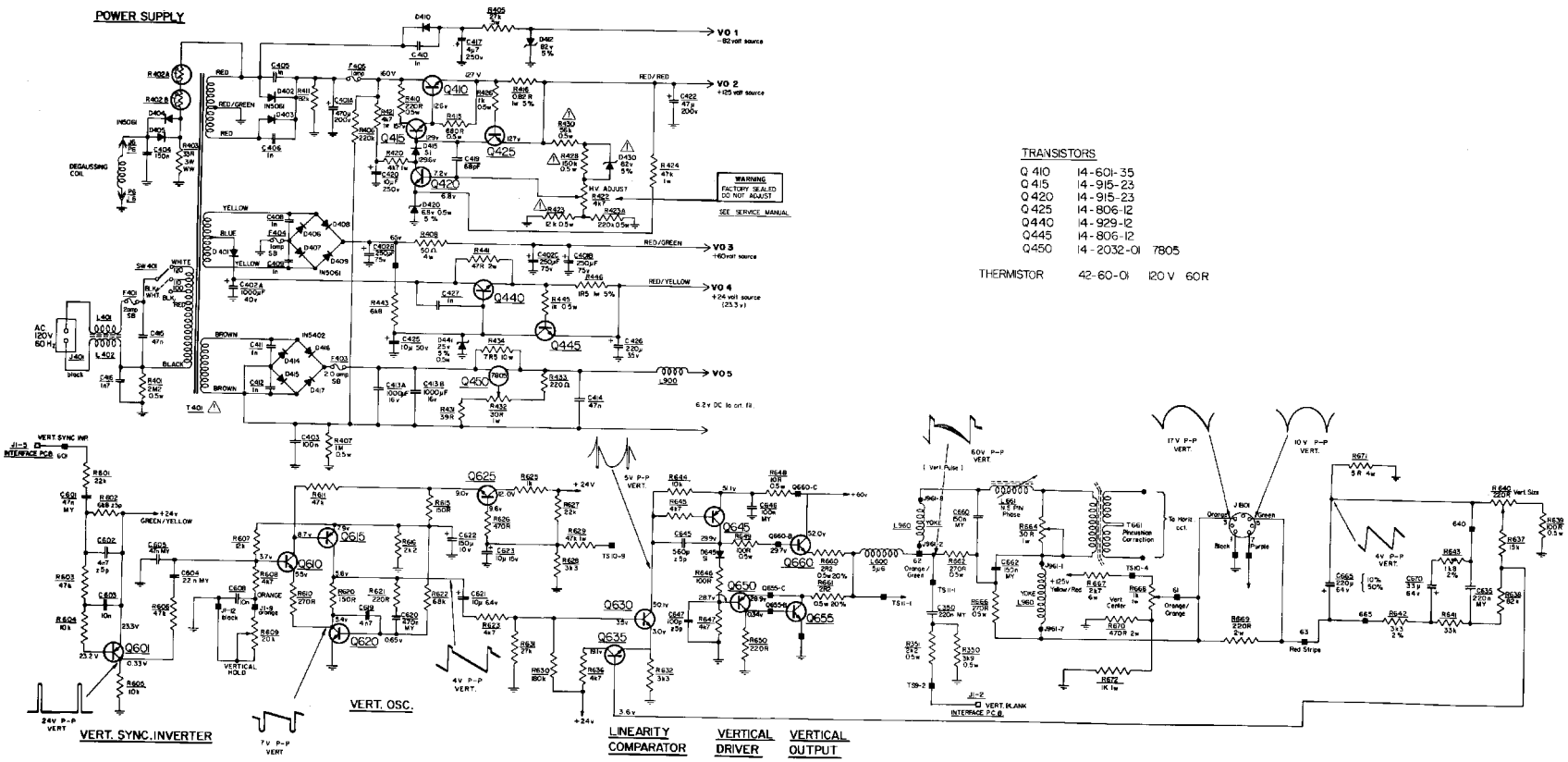

TRANSISTORS

Q 410	14-601-35	
Q 415	14-915-23	
Q 420	14-915-23	
Q 425	14-806-12	
Q 440	14-929-12	
Q 445	14-806-12	
Q 450	14-2032-01	7805

THERMISTOR 42-60-01 120 V 60 R

Figure 10 Schematic of Electrohome Model GO2 25-Inch Color Raster-Scan Monitor (as used in Tank® 8 and Sprint™ 4)

Figure 10, continued
Schematic of Electrohome Model G02
25-Inch Color Raster-Scan Monitor
(as used in Tank® 8 and Sprint™ 4)