16-3036-101
December 15, 1988

Service Manual

Programmed Chip Summary

(Continued from Inside-Front Cover)

IC	DESCRIPTION	TYPE	BOARD LOC.	PART NO.
Image ROM	ROM	27512	ROM Board U55	A-5343-3036-43
Image ROM	ROM	27512	ROM Board U56	A-5343-3036-44
Image ROM	ROM	27512	ROM Board U57	A-5343-3036-45
Image ROM	ROM	27512	ROM Board U58	A-5343-3036-46
Program ROM	ROM	27512	ROM Board U59	A-5343-3036-11
Program ROM	ROM	27512	ROM Board U60	A-5343-3036-12
Image ROM	ROM	27512	ROM Board U61	A-5343-3036-47
Image ROM	ROM	27512	ROM Board U62	A-5343-3036-48
Image ROM	ROM	27512	ROM Board U63	A-5343-3036-49
Image ROM	ROM	27512	ROM Board U64	A-5343-3036-50
Image ROM	ROM	27512	ROM Board U65	A-5343-3036-51
Image ROM	ROM	27512	ROM Board U66	A-5343-3036-52
Image ROM	ROM	27512	ROM Board U67	A-5343-3036-53
Image ROM	ROM	27512	ROM Board U68	A-5343-3036-54
Image ROM	ROM	27512	ROM Board U69	A-5343-3036-55
Image ROM	ROM	27512	ROM Board U70	A-5343-3036-56
Image ROM	ROM	27512	ROM Board U71	A-5343-3036-57
Image ROM	ROM	27512	ROM Board U72	A-5343-3036-58
Image ROM	ROM	27512	ROM Board U73	A-5343-3036-59
Image ROM	ROM	27512	ROM Board U74	A-5343-3036-60
Image ROM	ROM	27512	ROM Board U75	A-5343-3036-61
Image ROM	ROM	27512	ROM Board U76	A-5343-3036-62
Program ROM	ROM	27512	ROM Board U77	A-5343-3036-13
Program ROM	ROM	27512	ROM Board U78	A-5343-3036-14
Image ROM	ROM	27512	ROM Board U79	A-5343-3036-63
Image ROM	ROM	27512	ROM Board U80	A-5343-3036-64
Image ROM	ROM	27512	ROM Board U81	A-5343-3036-65
Image ROM	ROM	27512	ROM Board U82	A-5343-3036-66
Image ROM	ROM	27512	ROM Board U83	A-5343-3036-67
Image ROM	ROM	27512	ROM Board U84	A-5343-3036-68
Image ROM	ROM	27512	ROM Board U85	A-5343-3036-69
Image ROM	ROM	27512	ROM Board U86	A-5343-3036-70
Image ROM	ROM	27512	ROM Board U87	A-5343-3036-71
Image ROM	ROM	27512	ROM Board U88	A-5343-3036-72
Image ROM	ROM	27512	ROM Board U89	A-5343-3036-73
Image ROM	ROM	27512	ROM Board U90	A-5343-3036-74
Image ROM	ROM	27512	ROM Board U91	A-5343-3036-75
Image ROM	ROM	27512	ROM Board U92	A-5343-3036-76
Image ROM	ROM	27512	ROM Board U93	A-5343-3036-77
Image ROM	ROM	27512	ROM Board U94	A-5343-3036-78

Service Manual

Programmed Chip Summary

(Continued on Inside-Back Cover)

IC	DESCRIPTION	TYPE	BOARD LOC.	PART NO.
CRAM Controller	PLD	EP153A	CPU Board U28	A-5346-3036-1
Local Ctlr	PLD	EP153A	CPU Board U78	A-5346-3036-2
Video RAM Ctlr	PLD	EP153A	CPU Board U79	A-5346-3036-3
Address Decoder	PLD	EP153A	CPU Board U80	A-5346-3036-4
Image ROM Ctlr	PLD	EP153A	CPU Board U83	A-5346-3036-5
Video RAM Seq.	PLD	EP600	CPU Board U12	A-5346-3036-6
Autoerase Ctlr	PLD	EP900	CPU Board U20	A-5346-3036-7
Program ROM	ROM	27512	ROM Board U23	A-5343-3036-7
Program ROM	ROM	27512	ROM Board U24	A-5343-3036-8
Image ROM	ROM	27512	ROM Board U25	A-5343-3036-15
Image ROM	ROM	27512	ROM Board U26	A-5343-3036-16
Image ROM	ROM	27512	ROM Board U27	A-5343-3036-17
Image ROM	ROM	27512	ROM Board U28	A-5343-3036-18
Image ROM	ROM	27512	ROM Board U29	A-5343-3036-19
Image ROM	ROM	27512	ROM Board U30	A-5343-3036-20
Image ROM	ROM	27512	ROM Board U31	A-5343-3036-21
Image ROM	ROM	27512	ROM Board U32	A-5343-3036-22
Image ROM	ROM	27512	ROM Board U33	A-5343-3036-23
Image ROM	ROM	27512	ROM Board U34	A-5343-3036-24
Image ROM	ROM	27512	ROM Board U35	A-5343-3036-25
Image ROM	ROM	27512	ROM Board U36	A-5343-3036-26
Image ROM	ROM	27512	ROM Board U37	A-5343-3036-27
Image ROM	ROM	27512	ROM Board U38	A-5343-3036-28
Image ROM	ROM	27512	ROM Board U39	A-5343-3036-29
Image ROM	ROM	27512	ROM Board U40	A-5343-3036-30
Program ROM	ROM	27512	ROM Board U41	A-5343-3036-9
Program ROM	ROM	27512	ROM Board U42	A-5343-3036-10
Image ROM	ROM	27512	ROM Board U43	A-5343-3036-31
Image ROM	ROM	27512	ROM Board U44	A-5343-3036-32
Image ROM	ROM	27512	ROM Board U45	A-5343-3036-33
Image ROM	ROM	27512	ROM Board U46	A-5343-3036-34
Image ROM	ROM	27512	ROM Board U47	A-5343-3036-35
Image ROM	ROM	27512	ROM Board U48	A-5343-3036-36
Image ROM	ROM	27512	ROM Board U49	A-5343-3036-37
Image ROM	ROM	27512	ROM Board U50	A-5343-3036-38
Image ROM	ROM	27512	ROM Board U51	A-5343-3036-39
Image ROM	ROM	27512	ROM Board U52	A-5343-3036-40
Image ROM	ROM	27512	ROM Board U53	A-5343-3036-41
Image ROM	ROM	27512	ROM Board U54	A-5343-3036-42

16-3036-101
December 15, 1988

SERVICE MANUAL

- operation
- adjustment
- unique parts
- bookkeeping
- diagnostics

NARC and *Z-UNIT* are trademarks of *WILLIAMS ELECTRONICS GAMES, INC.*

Programmed Chips on the Sound Board

IC	DESCRIPTION	TYPE	BOARD LOC.	PART NO.
Sound ROM	ROM	27512	Sound Board U3	Not Used
Sound ROM	ROM	27512	Sound Board U4	A-5343-3036-1
Sound ROM	ROM	27512	Sound Board U5	A-5343-3036-2
Sound ROM	ROM	27512	Sound Board U35	A-5343-3036-3
Sound ROM	ROM	27512	Sound Board U36	A-5343-3036-4
Sound ROM	ROM	27512	Sound Board U37	A-5343-3036-5
Sound ROM	ROM	27512	Sound Board U38	A-5343-3036-6

Jumper Table

CPU Board	Connected	Not Used
	W3 W4 W6	W1 W2 W5
	W9 W10 W11	W7 W8 W12
	W14	W13
ROM Board	1/2 3/4	(None)
	5/6 7/8 9/10	
	11/12 13/14 R1	
CPU Board	W3 W4 W6	W1 W2 W5
	W9 W10 W11	W7 W8 W12
	W14	W13
Sound Board	W1 W9 W4 W15	W2 W13 W3 W14
	W5 W17 W7 W18 W8 W20	W6 W16 W10 W19 W11 W21
		W12

Table of Contents

Chapter 1. Operating Procedures.....1-5
Programmed Chip Summary--Part 1.....1-2
Programmed Chips on the Sound Board.....1-3

Jumper Table.....1-4
Warnings and Notices.....1-8
Examine Your Game.....1-9

Control Locations.....1-10
Power Turn-On.....1-11
Game Operation.....1-12

Player Panel *(Illustration)*.....1-13
Game Adjustments, Bookkeeping, Diagnostics.....1-15
Main Test Menu *(Illustration)*.....1-16

Typical Audits Screen, Page 1 *(Illustration)*.....1-17
Typical Audits Screen, Page 2 *(Illustration)*.....1-18
Typical Game Adjustments Screen *(Illustration)*.....1-19

Electronic Drawings.....1-21

Notes...

Chapter 1. Operating Procedures

Warnings and Notices
Examine Your Game
Control Locations
Power Turn-On

Game Operation
Player Panel *(Illustration)*
Game Adjustments, Bookkeeping, Diagnostics
Main Test Menu *(Illustration)*

Typical Audits Screen, Page 1 *(Illustration)*
Typical Audits Screen, Page 2 *(Illustration)*
Typical Game Adjustments Screen *(Illustration)*

Pricing Table

Warnings and Notices

WARNING

FOR SAFETY AND RELIABILITY, substitute parts or modifications are not recommended.

USE OF NON-*WILLIAMS* PARTS or circuit modifications may cause injuries or equipment damage.

SUBSTITUTE PARTS OR MODIFICATIONS may void FCC Type Acceptance.

SINCE THIS GAME IS PROTECTED by Federal copyright, trademark and patent laws. Unauthotized software or hardware modifications may be illegal under Federal law.

THIS "MODIFICATION" PRINCIPLE ALSO APPLIES to unauthorized facsimiles of ***WILLIAMS*** logos, designs, publications and assemblies. Moreover, facsimiles of ***WILLIAMS*** equipment *(or any feature thereof)* may be illegal under Federal law. Whether or not such facsimiles are manufactured with ***WILLIAMS*** components, this rule applies.

WARNING

This equipment generates, uses and can radiate radio frequency energy, and if not installed and used in accordance with the instructions manual, may cause interference to radio communications. It has been tested and found to comply with the limits for a Class A computing device pursuant to Subpart J of Part 15 of FCC Rules, which are designed to provide reasonable protection against such interference when operated in a commercial environment. Operation of this

equipment in a residential area is likely to cause intereference in which case the user at his own expense will be required to take whatever measures may be required to correct the interference.

WARNING

FCC STICKER. Check the back of your game for an FCC sticker. When ***WILLIAMS*** ships a game, the game has been found to comply with FCC Rules. *The sticker is proof.* If the sticker is missing, *legal repercussions to the owner and distrubutor of the game* may result. If your game (manufactured after December 1982) has no FCC sticker, call ***WILLIAMS*** for advice. Or write us a note on your game-registration card. *Be sure the card bears your game's serial number.*

WARNING

THREE-WIRE PLUG. Prevent shock hazard and assure proper game operation! Only plug this game into a properly grounded outlet. DO NOT use a "cheater" plug to defeat the power cord's ground pin. DO NOT cut off the ground pin.

RF-INTERFERENCE NOTICE

YOUR GAME'S CABLE-HARNESS PLACEMENT and ground-strap routing are very important. They are designed to keep RF radiation and conduction within levels accepted by FCC Regulations.

MAINTAIN THESE LEVELS. Servicing may require that you disconnect harnesses or gound straps. When you're finished, reposition and reconnect them as they were.

Examine Your Game

• **INSPECT THE OUTSIDE** of the carton or game cabinet for shipping damage.

• **UNLOCK AND OPEN** the bottom-rear door. Now check circuitry.

• **ARE CONNECTORS SECURELY ATTACHED?** Reconnect any found loose. *Don't force connectors!* They're keyed and only fit one way.

• **ARE PLUG-IN CHIPS FIRMLY SEATED** in their sockets?

• **UNWRAP THE POWER CORD** coiled inside the cabinet. *Don't plug it in yet!*

• **SCRUTINIZE MAJOR SUBASSEMBLIES,** such as the monitor, player panel, transformer chassis and power supply. Make sure they're securely mounted.

• **UNDO THE CONTROL-PANEL LATCHES.** You can reach these from the coin door by extending your arm upward and to either side. Now check connectors and circuitry as above.

Control Locations

THE ON-OFF SWITCH is above the back *(monitor)* door. Standing before the game, you'll find the switch at the game's top-left corner.

POWER INTERLOCK SWITCH. Your game has two power-interlock switches. These are located at the back of the game, behind the top and middle panels. Imagine that you're standing behind the game. An interlock is in the upper-right corner of each panel. Each interlock is a spring-loaded DPDT switch. It turns off the game when you remove the panel. For servicing purposes, pull the switch out and the game will power up.

THE VOLUME CONTROL is inside the coin door and to your right.

THREE DIAGNOSTIC SWITCHES are mounted together on a bracket behind the coin door. *These switches are useful for many purposes: Accessing Diagnostic Mode Tests, reading the bookkeeping totals or making game adjustments.* See relevant discussions later in this chapter.

THE MEMORY-PROTECT INTERLOCK SWITCH is behind the coin door. This switch must be open when you clear bookkeeping totals or make game adjustments. It automatically opens when the coin door is open.

THE CPU-BOARD RESET SWITCH is on the CPU Board near the +5VDC indicator LED.

Power Turn-On

WHEN THE GAME IS FIRST TURNED ON general illumination should light. In a correctly running game, tests will be followed by the message "INITIAL CHECKS INDICATE: THIS GAME IS BITCHIN'." If failure messages come up on the screen instead, refer to **Built-In Test Procedures.**

DEMAGNETIZE THE GAME with a television degaussing coil. Besides the monitor, remember to degauss large steel parts (for example, the backdoor hinge). Do this whenever you move the game, and also as a regular, monthly procedure. Otherwise residual magnetism may cause color imputities that adversely affect your collections.

Game Operation

GAME START

INSERT COINS. The game allocates an adjustable number of credits per coin. This number appears on the CRT. For example, assume that your settings specify one credit for a quarter *(U.S. factory pricing)*. A player deposits a quarter and presses 1-PLAYER START. On its screen, the game posts one credit. Then a one-player game begins.

Using player-2 controls for a one-player game is also possible: With one credit displayed, press 2-PLAYER START.

For a two-player game, at least two credits must be displayed. To initiate this two-player game, press the 2-PLAYER START button.

PLAYER CONTROLS

On its player panel, your ***NARC™*** game has four pushbuttons and a joystick. Players can...

- **FIRE** at evil pushers with the machine pistol.
- **PRESS ROCKET BOMB!** Eliminate several pushers in one blast!
- **JUMP** over broken sidewalks and other obstacles!
- **CROUCH** to duck bullets and garbage cans!
- **MOVE** in eight directions with the joystick.

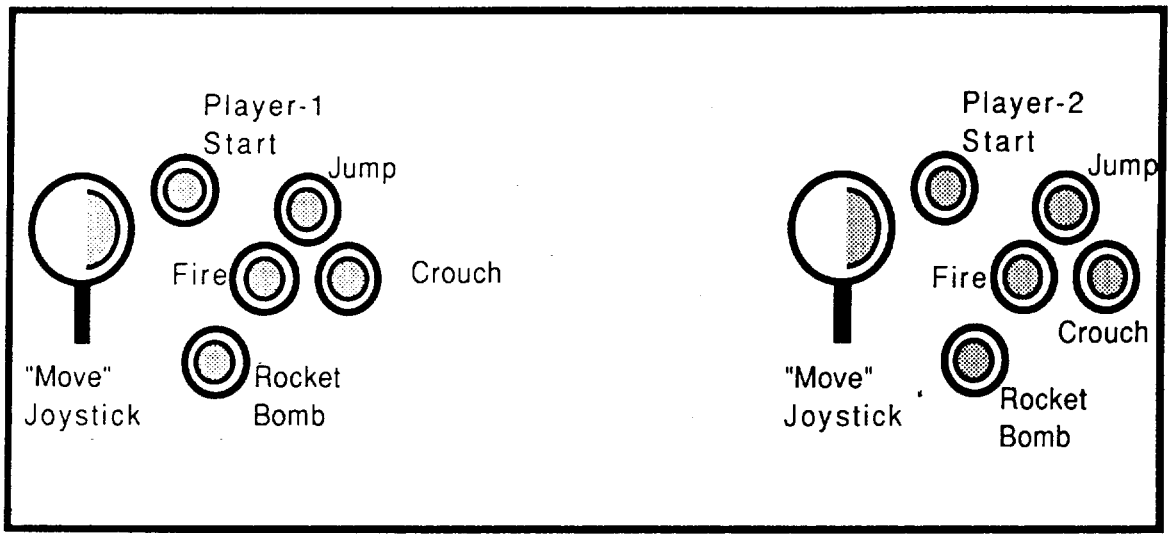

Player Panel

GAMEPLAY

THE CITY'S OVERRUN! Slashers! Gangsters! Pimps! The punks are everywhere! The scum of the earth! And only the player can restore law and order! Trigger finger spraying hot metal before him... ROCKET BOMB at the ready... The player is a macho urban guerilla, defending our city from the ultimate urban scourge! This is his neighborhood too. He's committed. He says NO to inner city decadence. He carries a badge and a moral code. And he backs them both with screaming lead.

FEARLESS, ALOOF... He blazes away with his machine pistol. Then he launches a devastating ROCKET BOMB to trap several baddies in simultaneous ambush! With JUMP and SQUAT buttons, he dodges bullets, dynamite and other missiles. But the lurking Loaf, death-dealing Dumpster Man, patronizing Pimp and horrible Hypoman are everywhere. And these mangy marauders stop at nothing. This is their turf. So they'll hurl more bombs and deal more

corruption. Because they're forever preparing another rendevous with death. Here's a list of the nefarious gangmembers...

- Loaf
- Gangster
- Pimp
- Hypoman
- Psychotic
- Slasher
- Dumpster Man
- Mr. Big *(Public Enemy Number 1)*

THIS JOB DEMANDS GRITTY DETERMINATION, FAST THINKING! The city is a *jungle.* Pushers may lurk in manholes... They may dart by in a heavily armed, pink Cadillac... Or they might even buzz the player with their preemptive pushercopter! But the player laughs at danger. He scores bonus points by seizing contraband *(evidence!)* hidden in the Cadillac. And by busting these parasites on society. Then he blows that manhole. And he downs that pushercopter. Because no pimp is too high... And no gangster's too low to eat hot justice!

ENTER BUILDINGS. The player must seek out and investigate gang strongholds. When enemies darts out of a tenement, the player must enter. If psycho fiends slither in the subway, the player relentlessly pursues them. Not bullets, not bombs, not even mad dogs can deter him. For our hero's sworn duty is to case the hideouts and seize the evidence. Then he can bust another offender!

THE PLAYER STARTS WITH 100 ENERGY UNITS. Busts and evidence win points. For every 25,000 points earned, the player receives 20 energy units. But there's a penalty whenever our hero's hit or if an innocent bystander's injured. Here are some of the major penalties...

- Hit by hypo, player loses16 energy units

- Attacked by Slasher, player sacrifices10 energy units
- Struck by a bullet, player's penalized five units

THE BIG TARGET. Ultimately the player pursues Public Enemy Number One, Mr. Big. Mr. Big is the shimmering, super slug king of the sleazy, slimy underworld empire. His glitzy, cosmopolitan crib is brimming with evidence. And he's the inevitable prospect for a megabust. But he's wily. He's quick. And he's amply equipped with the latest Hyper-Crimewave Technology. But the player must not permit him to escape! The dragnet must not fail!

Game Adjustments, Bookkeeping, Diagnostics

MENU CONCEPT. For your convenience, game adjustment, bookkeeping, audit totals and diagnostics are *menu-driven* features. Each *menu* is a list of several choices that you may act upon as desired.

LEVELS OF MENUS. Your game has several levels of menus. That is, one menu selection will send the game to another menu. The menus are arranged in outline fashion. That is, a menu of general options selects menus of more specific options.

PRESS ADVANCE. Adjustments, bookkeeping and diagnostics are available from the main test menu. Enter the main test menu by pressing the ADVANCE button inside the coin door. ADVANCE is mounted on a bracket bolted to the inside of the door. Besides initiating diagnostics and other modes, ADVANCE permits you to browse through and alter menus. When you press ADVANCE, the game steps through the options of one menu.

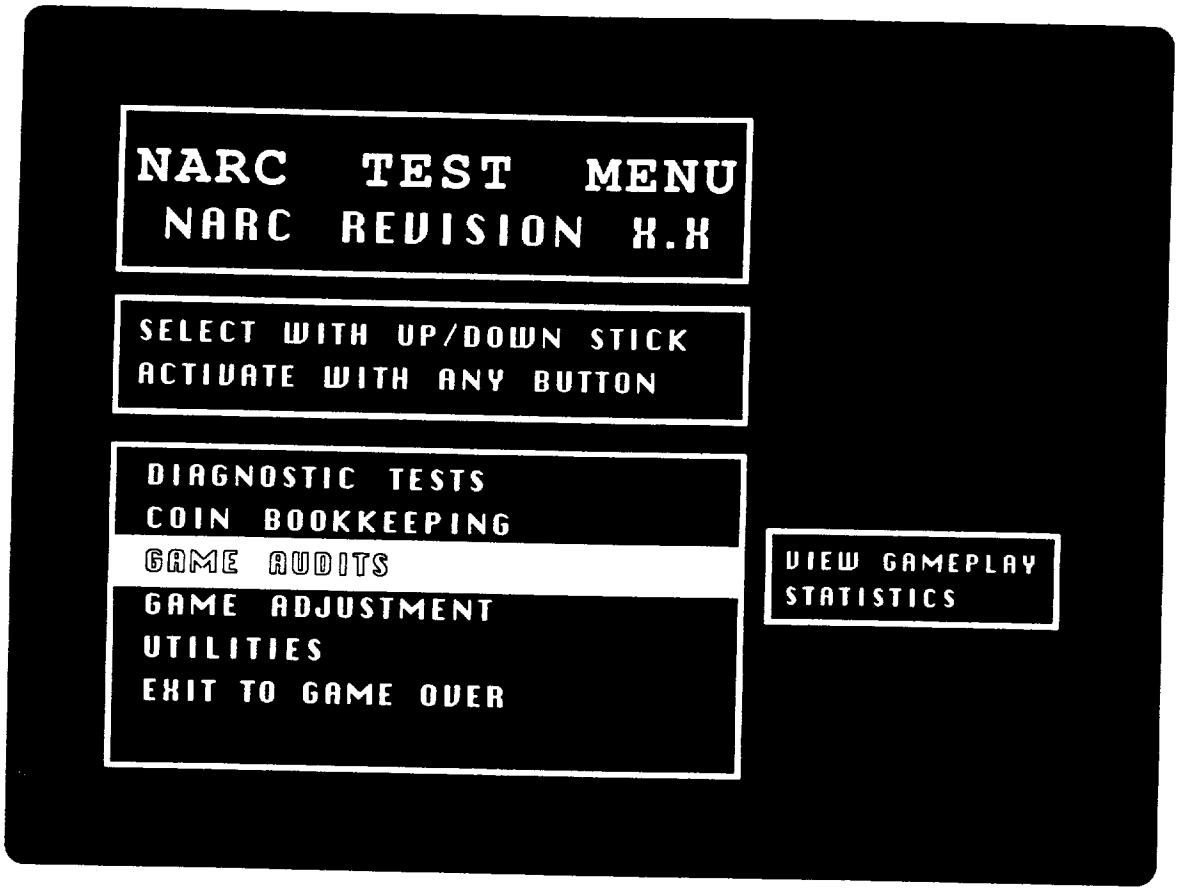

Main Test Menu

Normally you may exit the menu you're inspecting and return to the previous menu. In fact, "RETURN TO MAIN MENU" and "EXIT TO GAME OVER" are typical menu options. Suppose that you select "RETURN TO MAIN MENU": *The game returns to the option where it was before on the previous menu.*

Pressing and holding ADVANCE also causes the game to exit from a menu.

However when you press and hold ADVANCE, the game exits to the next lower option on the previous menu. This capability of the ADVANCE button allows you to access menu features even when player panel controls malfunction.

GAME AUDITS

GAME AUDITS SHOW YOU AT A GLANCE if game settings are bringing you a satisfactory return on your investment! *Only games by **WILLIAMS ELECTRONICS** have this menu-driven feature.* Think of it as a unique way to keep your ***NARC*** game the *leader of the pack when it comes to earnings*...location after location, week in and week out!

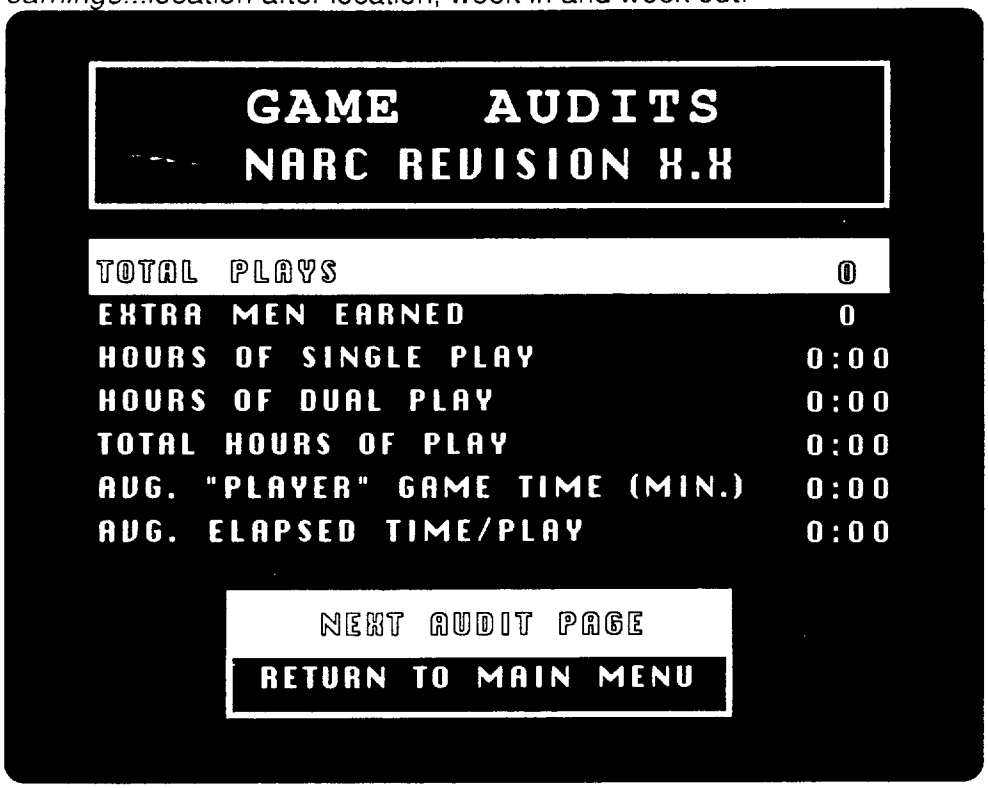

Typical Audits Screen, Page 1

ENTERING AUDIT MODE. Open the coin door and press ADVANCE. You'll see the main test menu on the CRT screen. Use either joystick to highlight GAME AUDITS. Now select GAME AUDITS by pressing *any* player panel button.

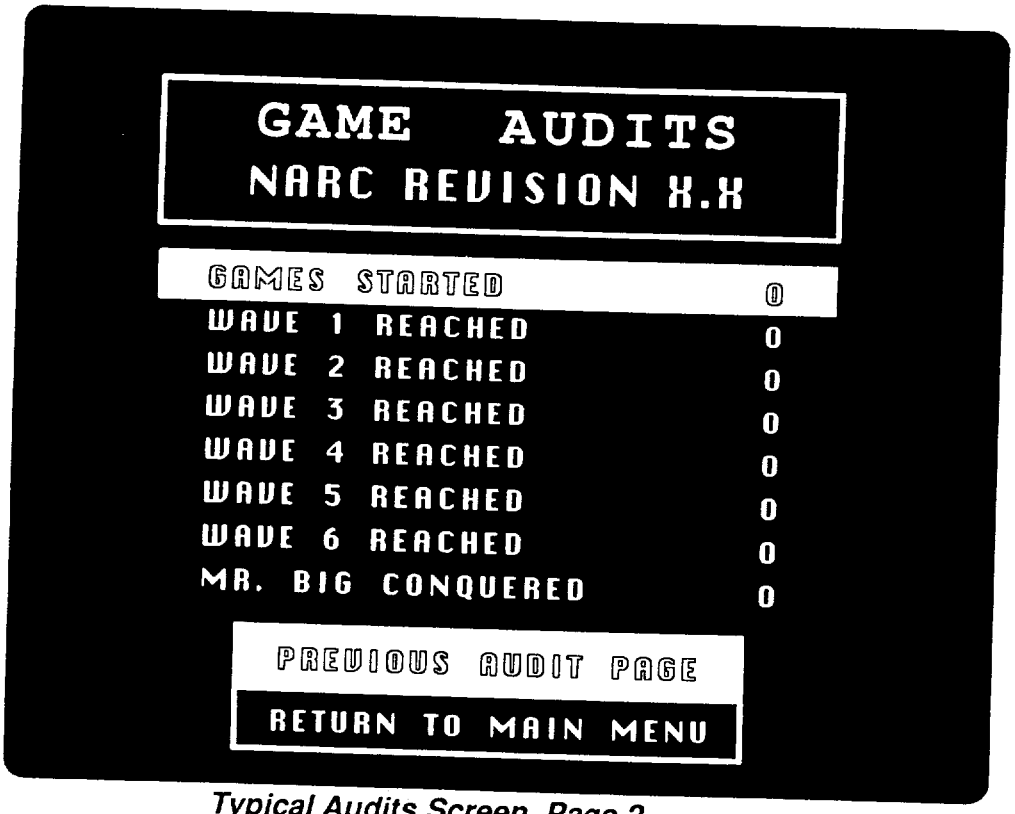

Typical Audits Screen, Page 2

The first GAME AUDITS page will appear. Total plays and the number of extra men that players earned are provided here. The remaining entries on this

page relate aspects of gameplay to time. The second audit page relates how many times players achieved each *wave*. (difficulty level). Now let's examine two audit entries...

AVERAGE TIME PER CREDIT: TWO MINUTES. Your most important figure on the first AUDITS page is AVG. PLAYER GAME TIME (MIN.). You'll want to pay special attention to this figure every day for this reason: Thorough field and factory research has shown that *two-minute games both satisfy players and also keep the quarters flowing.*

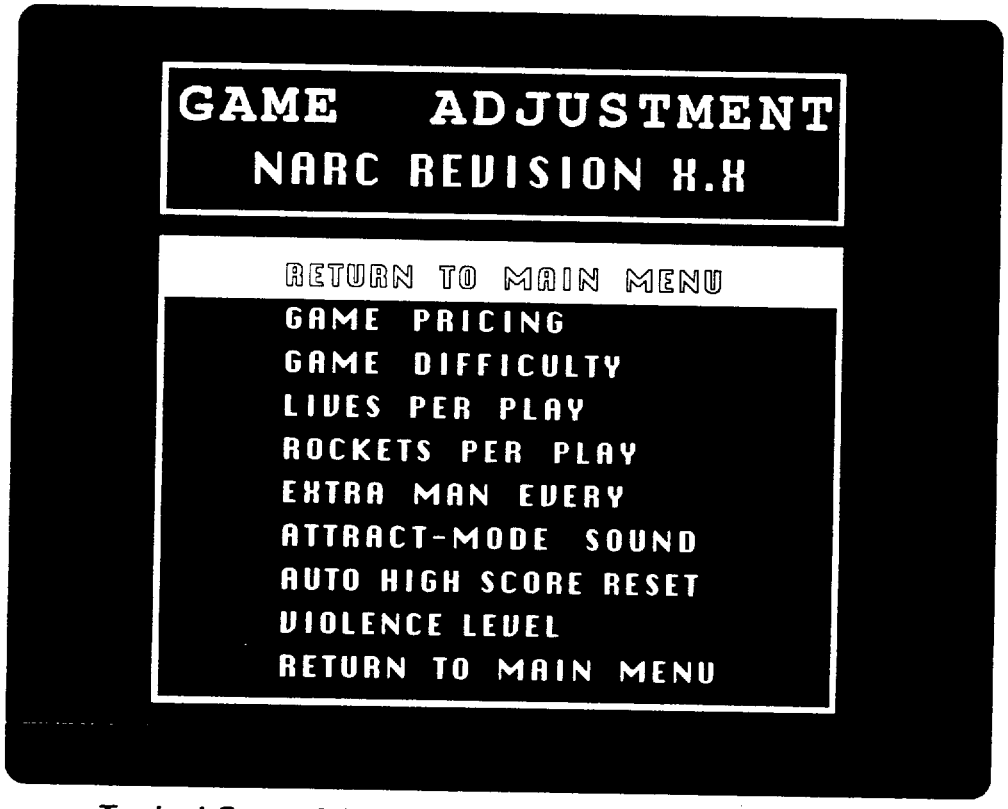

Typical Game Adjustments Screen

If games aren't running about two minutes long, then collections probably aren't at their peak. You'll want to tailor your game to your game-playing public. It's easy, and we'll talk about that subject in a moment. Meanwhile, another very useful figure is AVG. ELAPSED TIME/PLAY. This number tells you approximately how long your game must operate before earning a quarter.

Here are some tailoring suggestions...

EXCLUSIVE GAME ADJUSTMENTS

1. Press ADVANCE to enter the main test menu *(described earlier).*

2. Using either joystick, move the selection arrow down to GAME ADJUSTMENT.

3. To select GAME ADJUSTMENT, press any player panel button. Now you'll see the adjustment screen.

4. Use either joystick to highlight the feature you desire to adjust.

5. To select that feature, press any player panel button.

6. Use either joystick to alter the value of an adjustment. *(The joystick causes YES-NO settings to toggle between YES and NO.)*

7. To return to Game-Over Mode, follow menu selections on your screen.

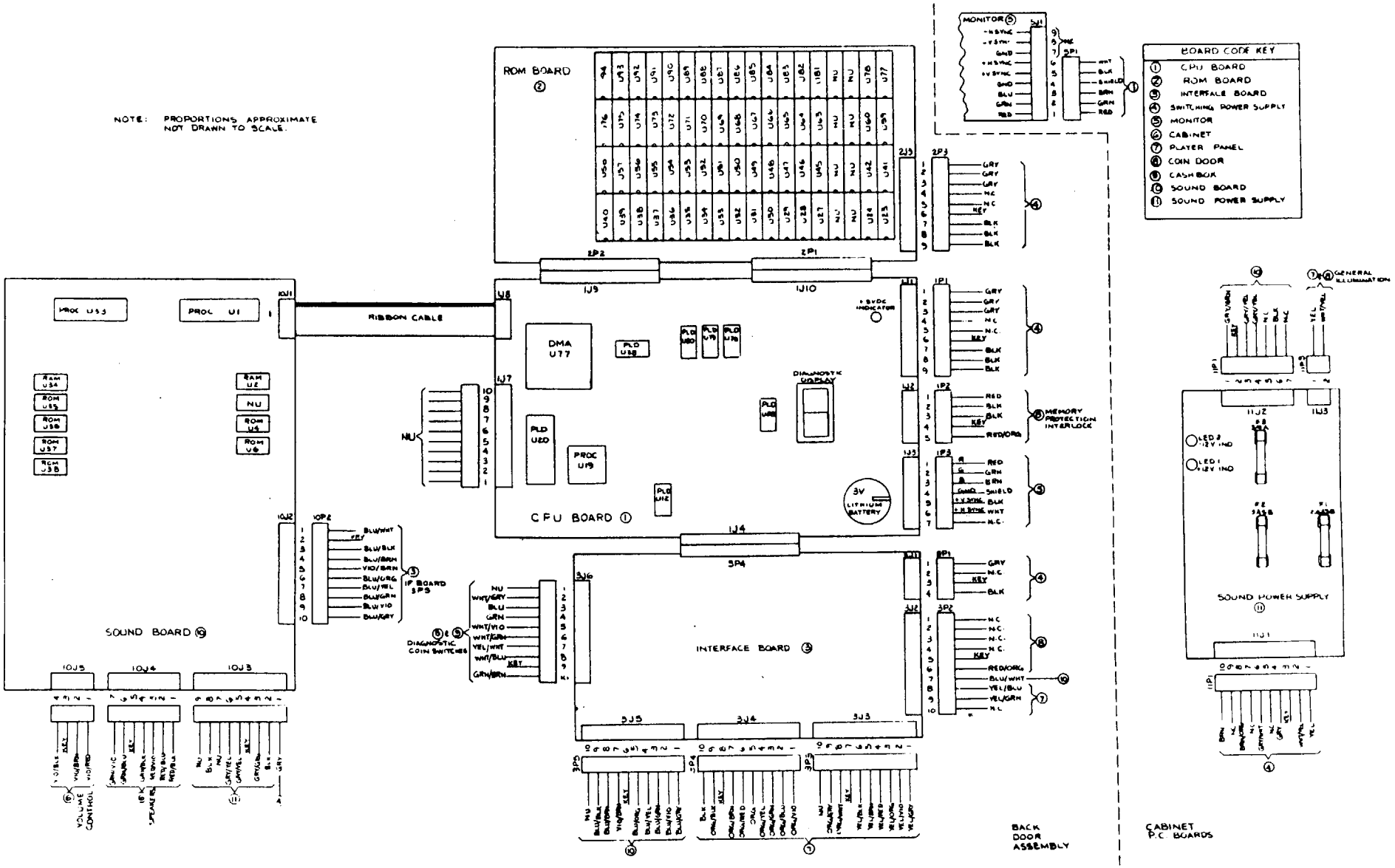
NOTE: PROPORTIONS APPROXIMATE NOT DRAWN TO SCALE.
ROM BOARD ②
CPU BOARD ①
INTERFACE BOARD ③
SOUND BOARD ⑩
SOUND POWER SUPPLY ⑪
MONITOR ⑤
RIBBON CABLE
DMA U77
PROC U19
PROC U1
PROC U33
DIAGNOSTIC DISPLAY
+5VDC INDICATOR
3V LITHIUM BATTERY
MEMORY PROTECTION INTERLOCK
GENERAL ILLUMINATION
IF BOARD 3P5
DIAGNOSTIC COIN SWITCHES
VOLUME CONTROL
SPEAKERS
BACK DOOR ASSEMBLY
CABINET P.C. BOARDS
BOARD CODE KEY
① CPU BOARD
② ROM BOARD
③ INTERFACE BOARD
④ SWITCHING POWER SUPPLY
⑤ MONITOR
⑥ CABINET
⑦ PLAYER PANEL
⑧ COIN DOOR
⑨ CASHBOX
⑩ SOUND BOARD
⑪ SOUND POWER SUPPLY

REV	DESCRIPTION OF CHANGE	ECN NO DATE
	NEW PART RELEASE	19101 5-18-88
A	SEE SHT 2 OF 2	19722 7-20-88

C-11879-

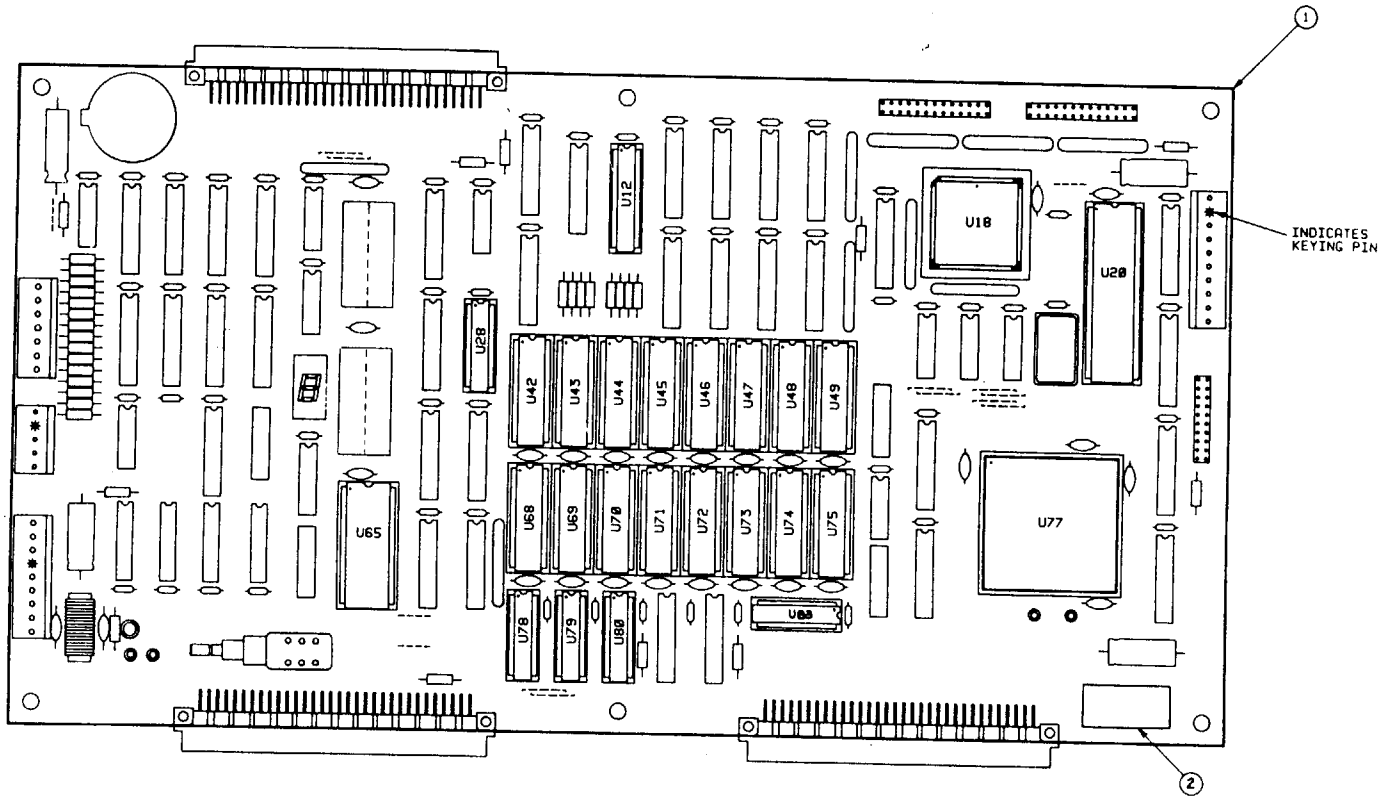

NOTE: FOR SCHEMATIC, REFER TO DRAWING NO. 16-9017.

ITEM	PART NUMBER	DESCRIPTION	QTY	ITEM	PART NUMBER	DESCRIPTION	QTY

PROJ ENGR: M. LOFFREDO
DWN BY: R. G. DATE: 3/1/88
CHECKED BY: DATE: 4/14/88
APPROVAL: DATE: 5/13/88
DO NOT SCALE WORK TO DIMENSIONS SHOWN
FIRST PROJECT NO: 3036-U
FIRST USAGE: D-12114
QTY: 1

REMOVE BURRS - BREAK SHARP CORNERS & EDGES

TOLERANCES UNLESS OTHERWISE SPECIFIED
DECIMAL — X ± .030 ANGULAR — ±1/2°
XX ± .015
XXX ± .005 FRACTIONAL ±1/64

MATERIAL: NONE

WILLIAMS ELECTRONICS, INC.
3401 N CALIFORNIA AVE CHICAGO IL 60618

NAME: SYS-Z CPU PCB ASSEMBLY

SCALE: 1/1 SHT 1 OF 2 PART NO: C-11879- REV: A

C-11879-

REV	DESCRIPTION OF CHANGE	ECN NO DATE
	NEW PART RELEASE	19101 5-12-88
A	ITEM 5 WAS 5340-12221-00 ADDED ITEM 15	19762 9-30-88

GAME NAME	3036		
ASSY. NO.	C-11879-3036		
8	A-5346-3036-7		
9	A-5346-3036-6		
10	A-5346-3036-5		
11	A-5346-3036-4		
12	A-5346-3036-3		
13	A-5346-3036-2		
14	A-5346-3036-1		
JUMPERS REMOVED	NONE		

ITEM NUMBER / PART NUMBER

ITEM	PART NO.	PART DESIGNATION	DESCRIPTION	QTY.
20				
19				
18				
17				
16				
(A) 15	5880-11056-00	B1	BATTERY - LITHIUM 3V BUTTON	1
14	SEE CHART	U28	IC, PLD-COLOR RAM CNTL	1
13	SEE CHART	U78	IC, PLD-LOCAL CONTROL	1
12	SEE CHART	U79	IC, PLD-VIDEO RAM CNTL	1
11	SEE CHART	U80	IC, PLD-ADDRESS DECODE	1

BILL OF MATERIALS

ITEM	PART NO.	PART DESIGNATION	DESCRIPTION	QTY.
10	SEE CHART	U83	IC, PLD-IMAGE ROM CNTL	1
9	SEE CHART	U12	IC, PLD-VIDEO RAM SEQ.	1
8	SEE CHART	U20	IC, PLD-AUTOERASE CNTL	1
7	5340-12019-00	U65	IC, RAM/S 5564 8K x 8	1
6	5340-12213-00	U42 - U49 U68 - U75	IC, RAM/V 4461 64K x 4	16
(A) 5				
4	5400-12220-00	U18	IC, TMS34010 G.S.P.	1
3	5410-12239-00	U77	IC, CUSTOM ASIC	1
2	16-8850-210		LABEL, PCB IDENT.	1
1	C-11878		SYS-Z CPU PCB SUB-ASSEMBLY	1

BILL OF MATERIALS

NOTE: FOR SCHEMATIC, REFER TO DRAWING NO. 16-9017.

PROJ ENGR: H. LOEFREDO
DWN BY / DATE: R.G. 4/25/88
CHECKED BY / DATE: 4/11/88
APPROVAL / DATE: 5/12/88
DO NOT SCALE — WORK TO DIMENSIONS SHOWN
FIRST PROJECT NO: 3036-U
FIRST USAGE: D-12114
QTY: 1
REMOVE BURRS - BREAK SHARP CORNERS & EDGES
TOLERANCES UNLESS OTHERWISE SPECIFIED
DECIMAL — X ± .030, XX ± .010, XXX ± .005
ANGULAR ± 1/2°
FRACTIONAL ± 1/64
MATERIAL

WILLIAMS ELECTRONICS, INC.
3401 N CALIFORNIA AVE CHICAGO IL 60618
NAME: SYS-Z CPU PCB ASSEMBLY
SCALE: 1/1 SHT 2 OF 2
PART NO: C-11879
REV: A

REV	DESCRIPTION OF CHANGE	ECN NO DATE
	NEW PART RELEASE	19101 5-18-88
A	SEE COVER SHT	19722 9-30-88

16-9017

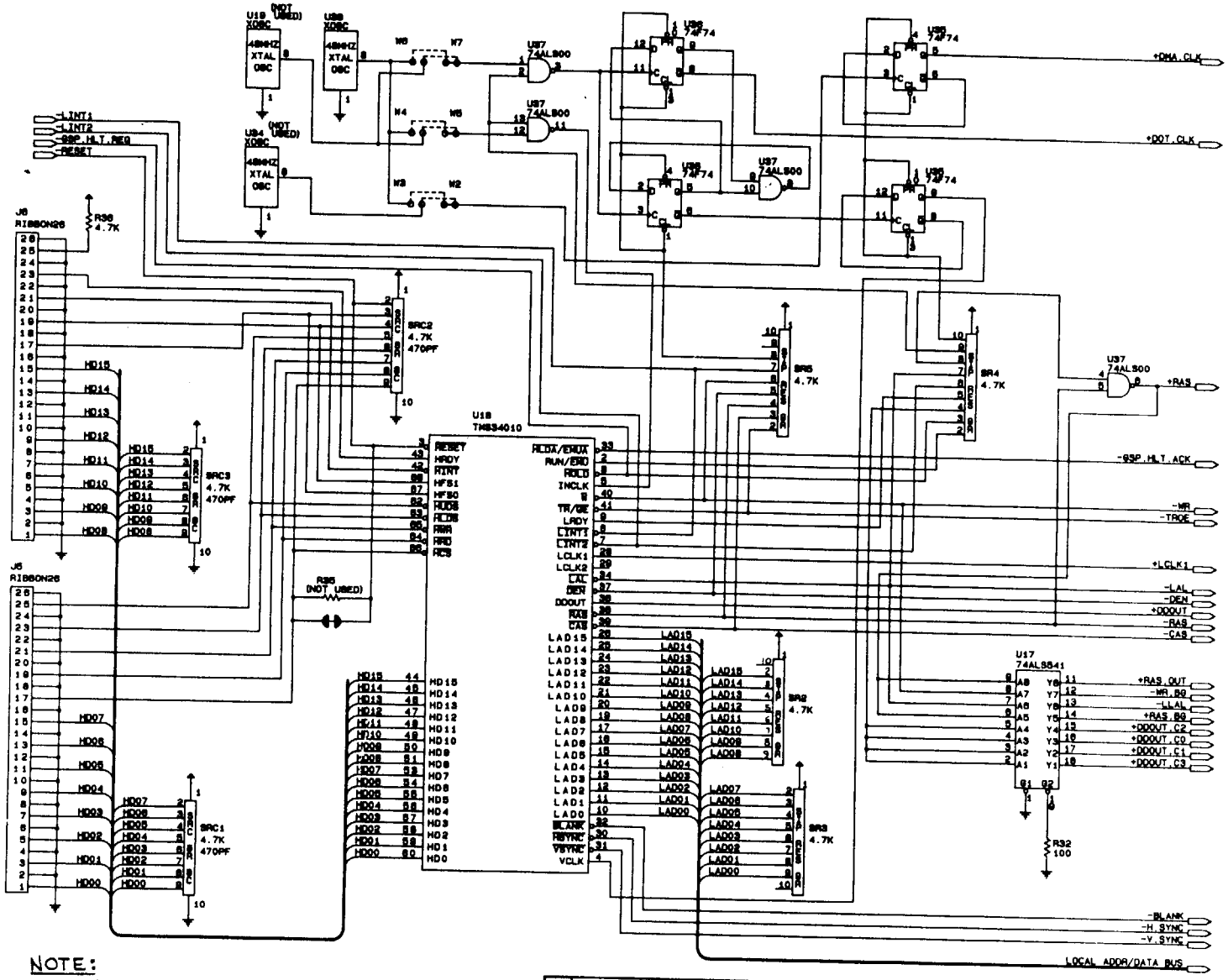

NOTE:

BUS & SIGNAL LABELS DESIGNATED WITH AN "X" SUFFIX ARE FORMED FROM ROOT SIGNALS DRIVEN THROUGH SERIES RESISTORS.

ITEM	PART NUMBER	DESCRIPTION	QTY

PROJ ENGR: M. LOFFREDO
DWN BY: G. SHIPP 5-11-88
CHECKED BY: DATE 5/11/88
APPROVAL: DATE 5/12/88
DO NOT SCALE WORK TO DIMENSIONS SHOWN
FIRST PROJECT NO: 3036-U
FIRST USAGE: C-11876
REMOVE BURRS - BREAK SHARP CORNERS & EDGES
TOLERANCES UNLESS OTHERWISE SPECIFIED
DECIMAL — X ± .030 ANGULAR ± 1/2° XX ± .015 XXX ± .005 FRACTIONAL ± 1/64
MATERIAL

WILLIAMS ELECTRONICS, INC.
3401 N. CALIFORNIA AVE CHICAGO IL 60618

NAME: SYS-Z CPU BD SCHEMATIC
SCALE: -/-
SHT 1 OF 11
PART NO: 16-9017
REV: A

C-9017

REV	DESCRIPTION OF CHANGE	ECN NO DATE
	NEW PART RELEASE	19101 5-18-88
A	SEE COVER SHT	19727 9-30-88

* NOTE: LOCAL ADDRESS BUS "X" FROM PAGE 3.

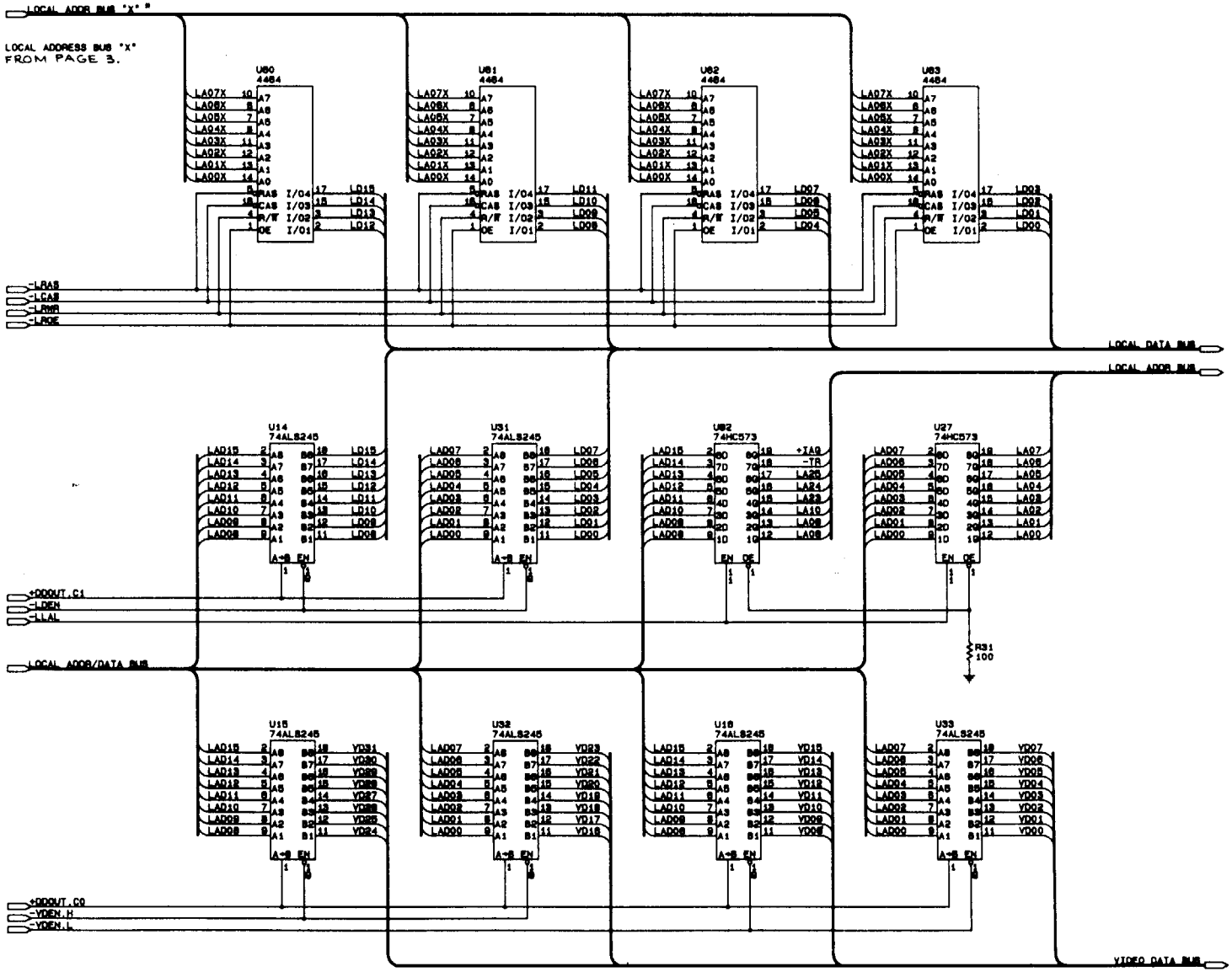

ITEM	PART NUMBER	DESCRIPTION	QTY	ITEM	PART NUMBER	DESCRIPTION	QTY

PROJ ENGR: M. LOFFREDO
DWN BY: G. SHIPP 5-11-88
CHECKED BY: DATE 5/12/88
APPROVAL: DATE 5/12/88
DO NOT SCALE WORK TO DIMENSIONS SHOWN
FIRST PROJECT NO: 3036-U
FIRST USAGE: C-11878 QTY —
REMOVE BURRS - BREAK SHARP CORNERS & EDGES
TOLERANCES UNLESS OTHERWISE SPECIFIED
DECIMAL — X ± .030 ANGULAR ± 1/2° XX ± .015 XXX ± .005 FRACTIONAL ± 1/64
MATERIAL

WILLIAMS ELECTRONICS, INC.
3401 N. CALIFORNIA AVE CHICAGO IL 60618
NAME: SYS-Z CPU BD SCHEMATIC
SCALE -/- SHT 2 OF 11 PART NO 16-9017 REV A

REV	DESCRIPTION OF CHANGE	ECN NO DATE
	NEW PART RELEASE	19101 5-18-88
A	SEE COVER SHT	19722 9-30-88

16-9017

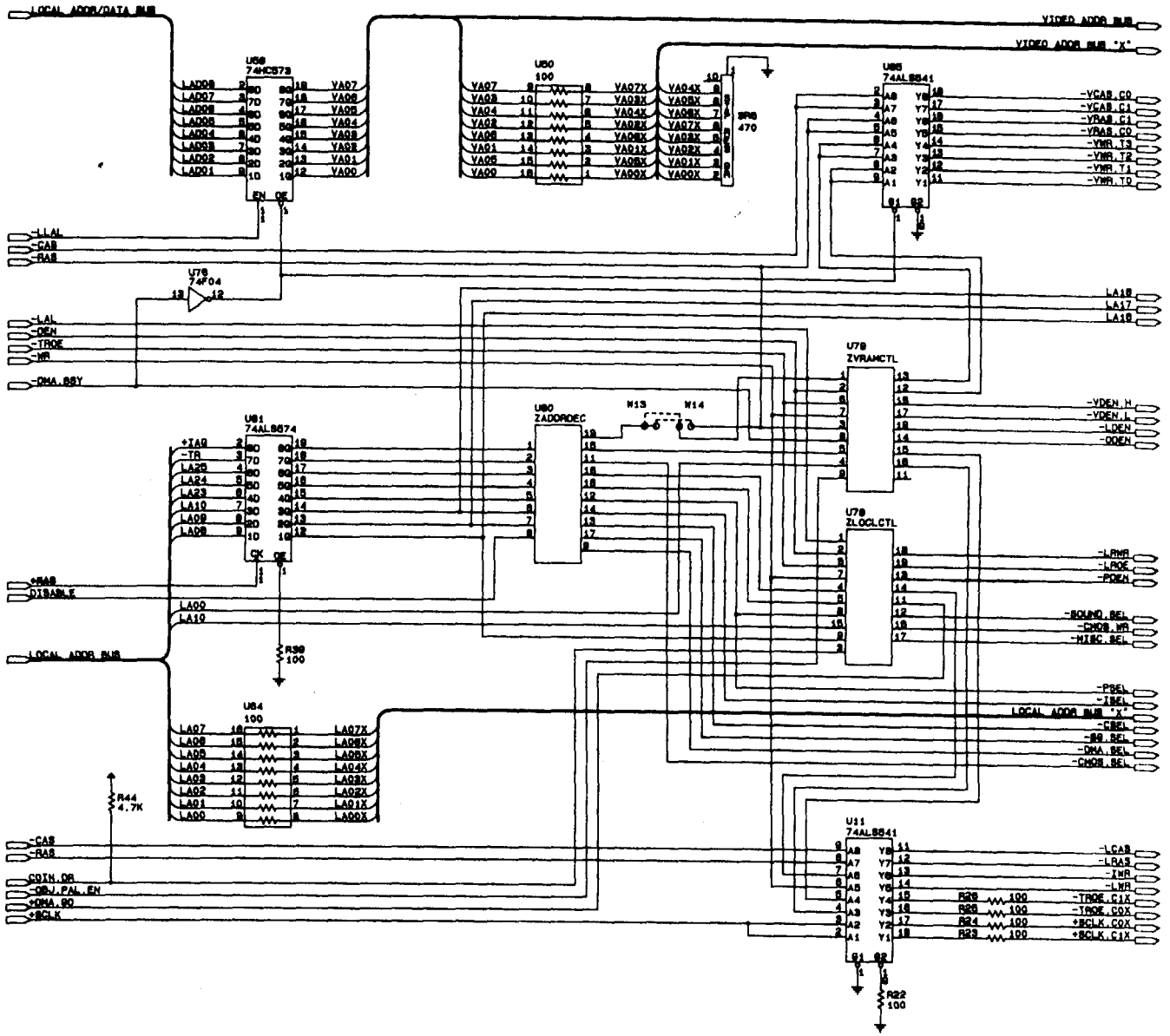

ITEM	PART NUMBER	DESCRIPTION	QTY	ITEM	PART NUMBER	DESCRIPTION	QTY

PROJ ENGR: M. LOFFREDO
DWN BY: G. SHIPP 5-10-88
CHECKED BY: DATE 5/12/88
APPROVAL: DATE 5/12/88
DO NOT SCALE WORK TO DIMENSIONS SHOWN
FIRST PROJECT NO: 3036-U
FIRST USAGE: C-11878
QTY: -
REMOVE BURRS - BREAK SHARP CORNERS & EDGES
TOLERANCES UNLESS OTHERWISE SPECIFIED
DECIMAL — X ± .030 ANGULAR ± 1/2°
XX ± .010
XXX ± .005 FRACTIONAL ± 1/64
MATERIAL

WILLIAMS ELECTRONICS, INC.
3401 N CALIFORNIA AVE CHICAGO IL 60618
NAME: SYS-Z CPU BD SCHEMATIC
SCALE: -/- SHT 2 of 11 PART NO 16-9017 REV A

16-9017

REV	DESCRIPTION OF CHANGE	ECN NO DATE
	NEW PART RELEASE	19101 6-17-88
A	SEE COVER SHT	19722 9-30-88

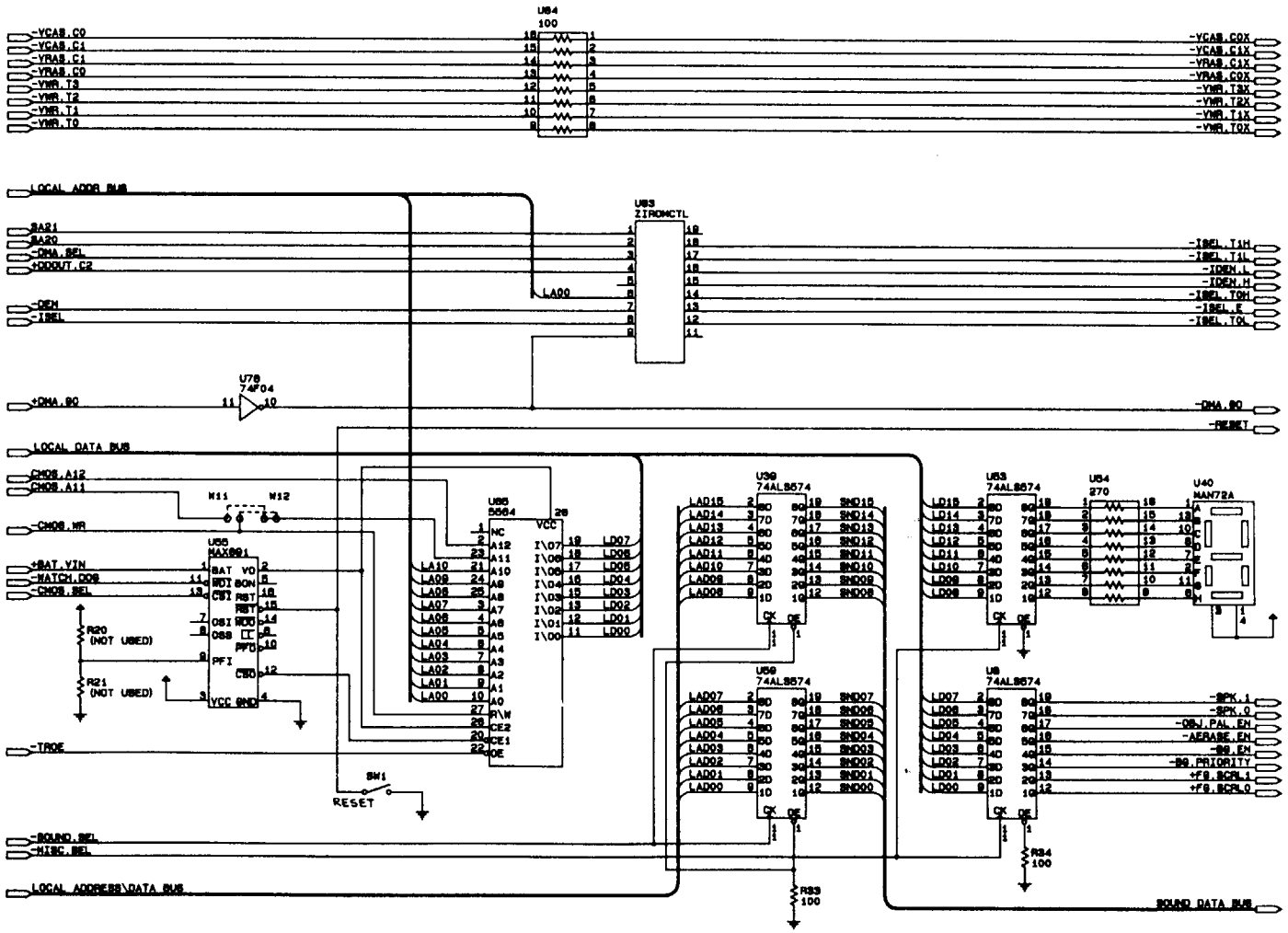

ITEM	PART NUMBER	DESCRIPTION	QTY	ITEM	PART NUMBER	DESCRIPTION	QTY

PROJ ENGR: M.LOFFREDO
DWN BY: G.SHIPP 5-11-88
CHECKED BY: DATE
APPROVAL: DATE 5/12/88
DO NOT SCALE WORK TO DIMENSIONS SHOWN
FIRST PROJECT NO: 3036-U
FIRST USAGE: C-11878
QTY: —
REMOVE BURRS-BREAK SHARP CORNERS & EDGES
TOLERANCES UNLESS OTHERWISE SPECIFIED
DECIMAL — X ± .030 ANGULAR — ±1/2°
XX ± .015
XXX ± .005 FRACTIONAL ±1/64
MATERIAL

WILLIAMS ELECTRONICS, INC.
3401 N CALIFORNIA AVE CHICAGO IL 60618
NAME: SYS-3 CPU BD SCHEMATIC
SCALE: -/-
SHT 4 OF 11
PART NO: 16-9017
REV: A

16-9017

REV	DESCRIPTION OF CHANGE	ECN NO DATE
	NEW PART RELEASE	19101 6-18-88
A	SEE COVER SHT	19722 9-30-88

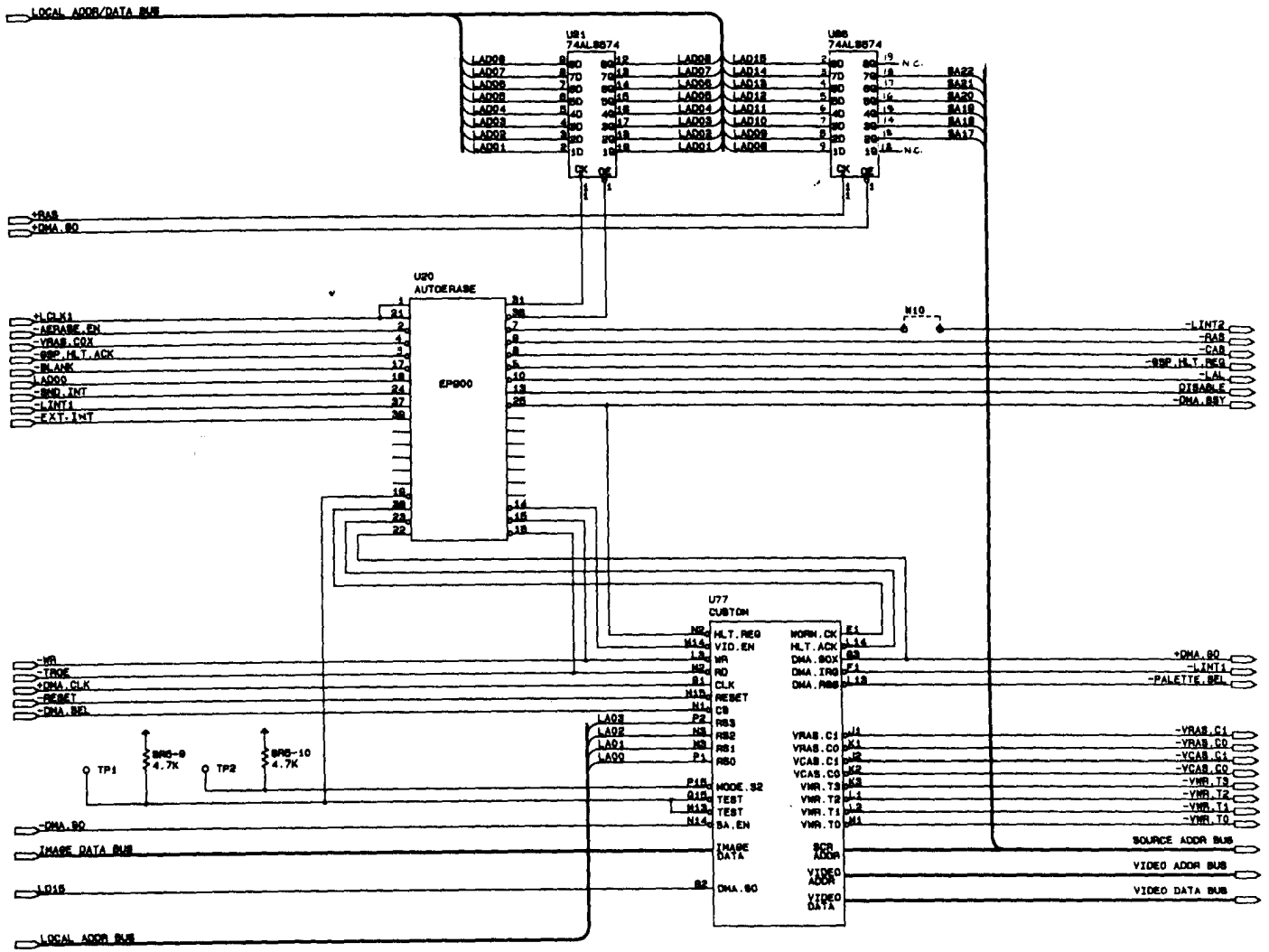

ITEM	PART NUMBER	DESCRIPTION	QTY

ITEM	PART NUMBER	DESCRIPTION	QTY

PROJ ENGR: M. LOFFREDO
DWN BY: G.SHIPP 5-11-88
CHECKED BY: DATE:
APPROVAL: DATE:

DO NOT SCALE WORK TO DIMENSIONS SHOWN

REMOVE BURRS - BREAK SHARP CORNERS & EDGES

TOLERANCES UNLESS OTHERWISE SPECIFIED
DECIMAL — X ± .030 ANGULAR ±1/2°
.XX ± .015
.XXX ± .005 FRACTIONAL ±1/64

MATERIAL

FIRST PROJECT NO: 3086-U
FIRST USAGE: C-11816
QTY:

WILLIAMS ELECTRONICS, INC.
3401 N CALIFORNIA AVE CHICAGO IL 60618

NAME: SYS-2 CPU BD SCHEMATIC

SCALE: -/- SHT 5 OF 11

PART NO: 16-9017

REV: A

16-9017

REV	DESCRIPTION OF CHANGE	ECN NO DATE
	NEW PART RELEASE	19101 5-18-88
A	SEE COVER SHT	19722 9-30-88

BIT MAP MEMORY

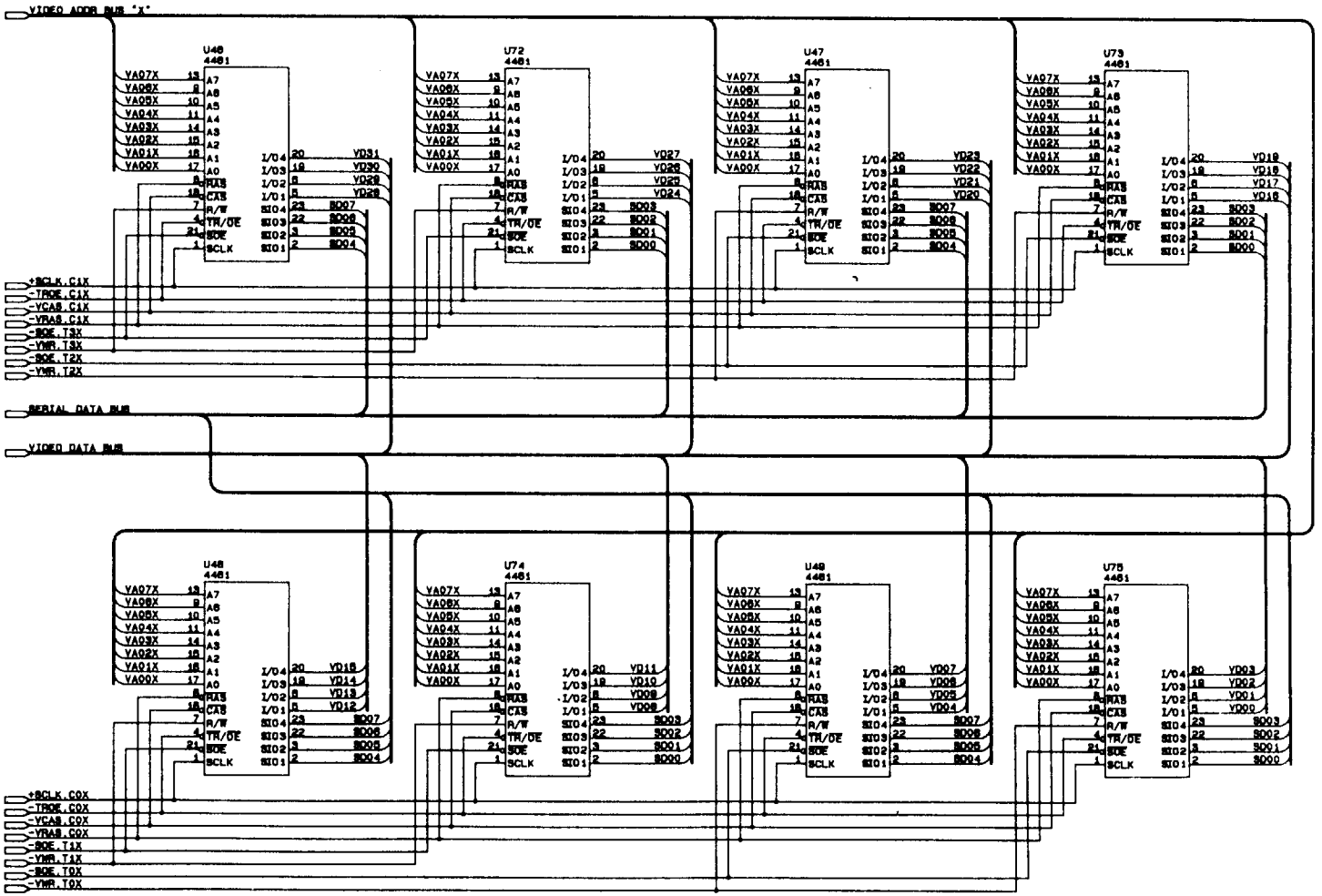

ITEM	PART NUMBER	DESCRIPTION	QTY

ITEM	PART NUMBER	DESCRIPTION	QTY

PROJ ENGR: M. LOFFREDO
DWN BY / DATE: G. SHIPP 5-11-88
CHECKED BY / DATE: 5/12/88
APPROVAL / DATE: 5/12/88
DO NOT SCALE WORK TO DIMENSIONS SHOWN
FIRST PROJECT NO: 3036-U
FIRST USAGE: C-11878
QTY: —

REMOVE BURRS - BREAK SHARP CORNERS & EDGES
TOLERANCES UNLESS OTHERWISE SPECIFIED
DECIMAL — X ± .030 ANGULAR ± 1/2°
XX ± .010
XXX ± .005 FRACTIONAL ± 1/64
MATERIAL

WILLIAMS ELECTRONICS, INC.
3401 N CALIFORNIA AVE CHICAGO IL 60618
NAME: SYS-Z CPU BD SCHEMATIC
SCALE: -/-
SHT 9 OF 11
PART NO: 16-9017
REV: A

REV	DESCRIPTION OF CHANGE	ECN NO DATE
	NEW PART RELEASE	19106 5-18-88
A	SEE COVER SHT	19722 9-30-88

16-9017

OBJECT PALETTE MEMORY

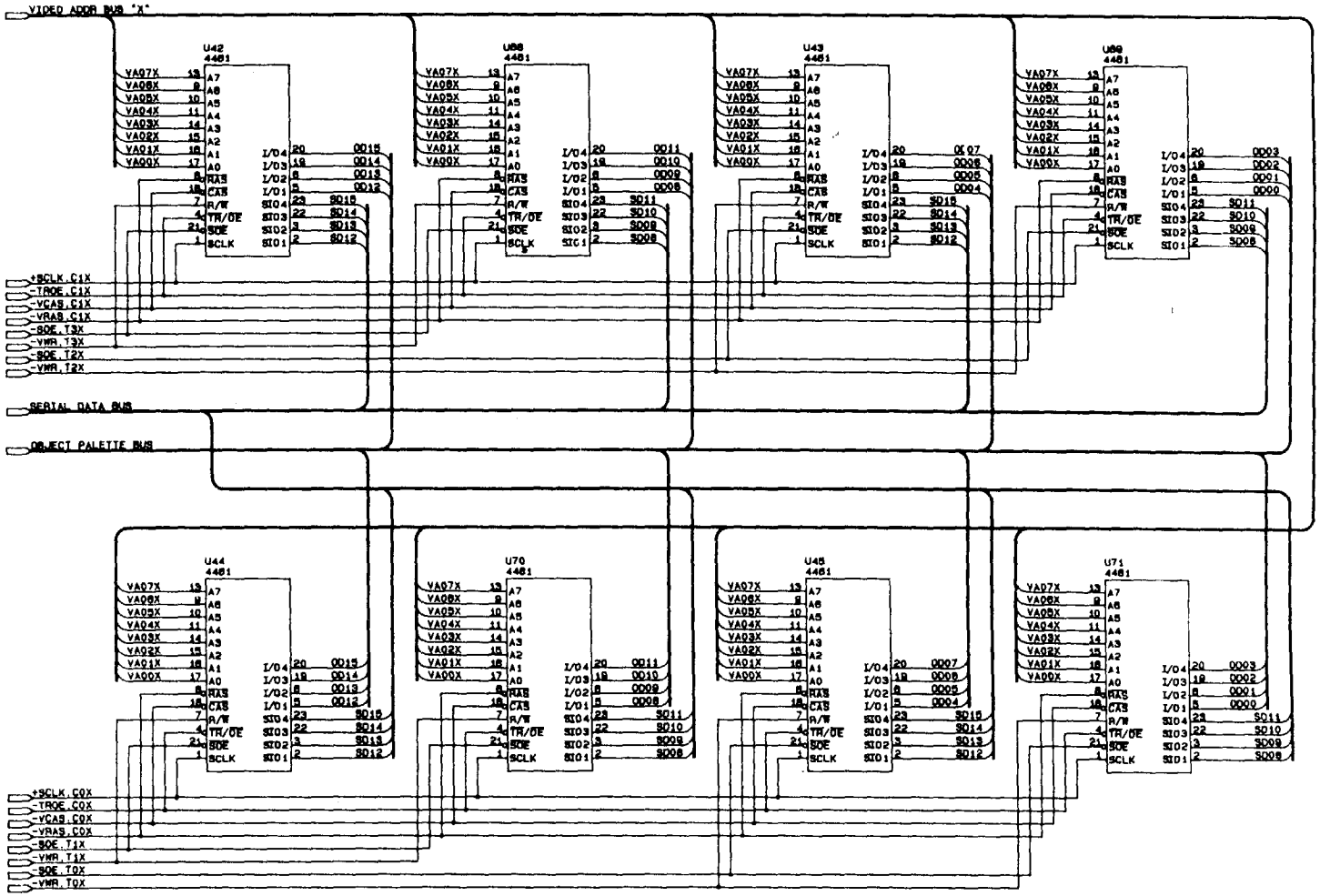

ITEM	PART NUMBER	DESCRIPTION	QTY	ITEM	PART NUMBER	DESCRIPTION	QTY

PROJ ENGR: M. LOFFREDO
DWN BY / DATE: G. SHIPP 5-11-88
CHECKED BY / DATE: 5/11/88
APPROVAL / DATE: 5/11/88

DO NOT SCALE WORK TO DIMENSIONS SHOWN

REMOVE BURRS - BREAK SHARP CORNERS & EDGES

TOLERANCES UNLESS OTHERWISE SPECIFIED
DECIMAL — X ± .030 ANGULAR ± 1/2°
XX ± .010
XXX ± .005 FRACTIONAL ± 1/64

FIRST PROJECT NO: 3036-U
FIRST USAGE: C-11878
QTY: —
MATERIAL:

WILLIAMS ELECTRONICS, INC.
3401 N. CALIFORNIA AVE CHICAGO IL 60618

NAME: SYS-Z CPU BD SCHEMATIC

SCALE: -/-
SHT 1 of 11
PART NO: 16-9017
REV: A

16-9017

REV	DESCRIPTION OF CHANGE	ECN NO DATE
	NEW PART RELEASE	19161 5-13-88
A	SEE COVER SHT	19923 9-30-88

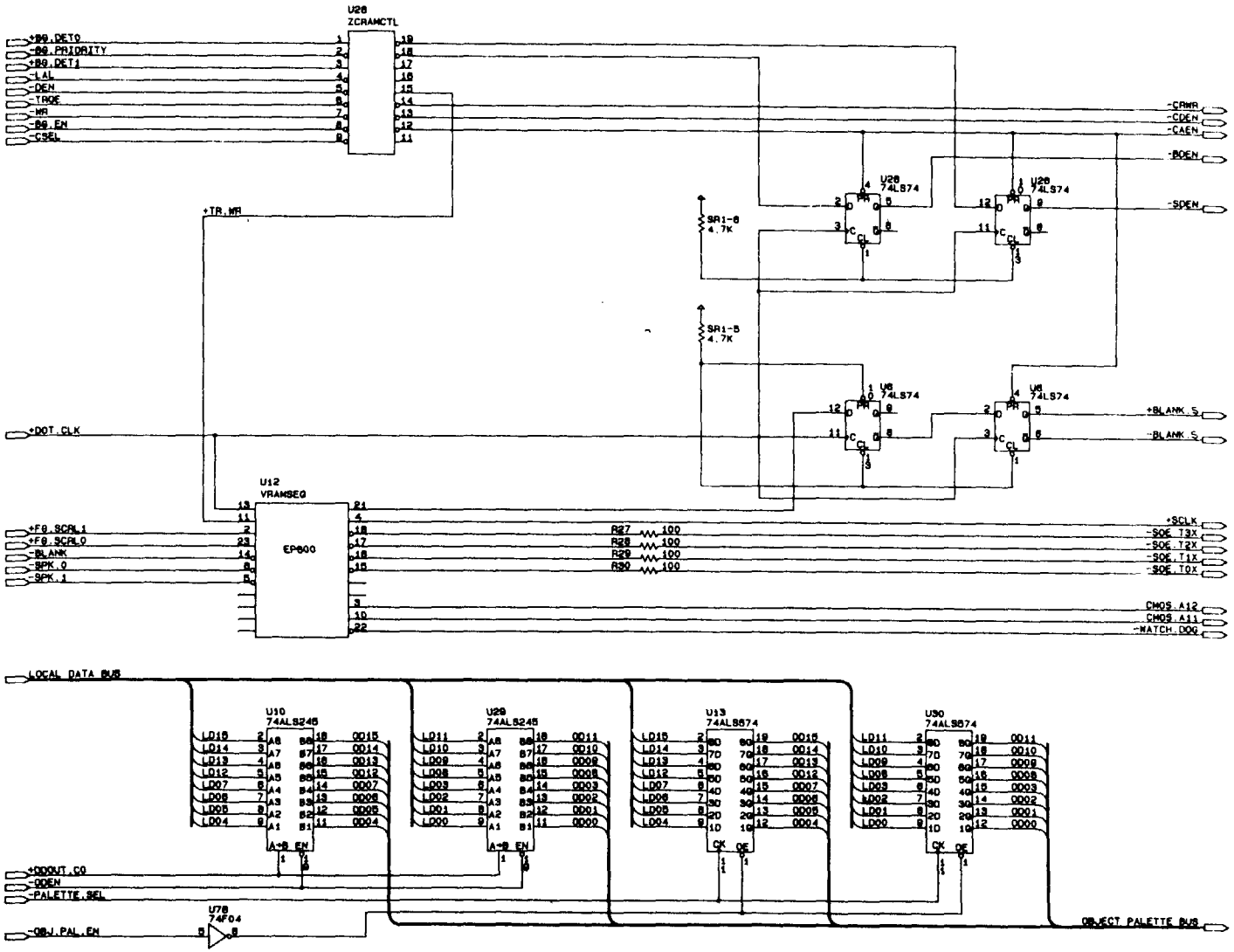

ITEM	PART NUMBER	DESCRIPTION	QTY

ITEM	PART NUMBER	DESCRIPTION	QTY

PROJ ENGR: M. LOFFREDO
DWN BY: G. SHIPP 5-11-88
CHECKED BY: DATE 5/14/88
APPROVAL: DATE 5/12/88
DO NOT SCALE WORK TO DIMENSIONS SHOWN
FIRST PROJECT NO: 3036-U
FIRST USAGE: C-11878
QTY: —

REMOVE BURRS-BREAK SHARP CORNERS & EDGES
TOLERANCES UNLESS OTHERWISE SPECIFIED
DECIMAL — X ± .030 ANGULAR — ± 1/2°
XX ± .015
XXX ± .005 FRACTIONAL ± 1/64
MATERIAL

WILLIAMS ELECTRONICS, INC.
3401 N. CALIFORNIA AVE CHICAGO IL 60618

NAME: SYS-Z CPU BD SCHEMATIC
SCALE: -/-
SHT 8 OF 11
PART NO: 16-9017
REV: A

16-9017

REV	DESCRIPTION OF CHANGE	ECN NO DATE
	NEW PART RELEASE	19101 5-18-88
A	SEE COVER SHT	19722 9-30-88

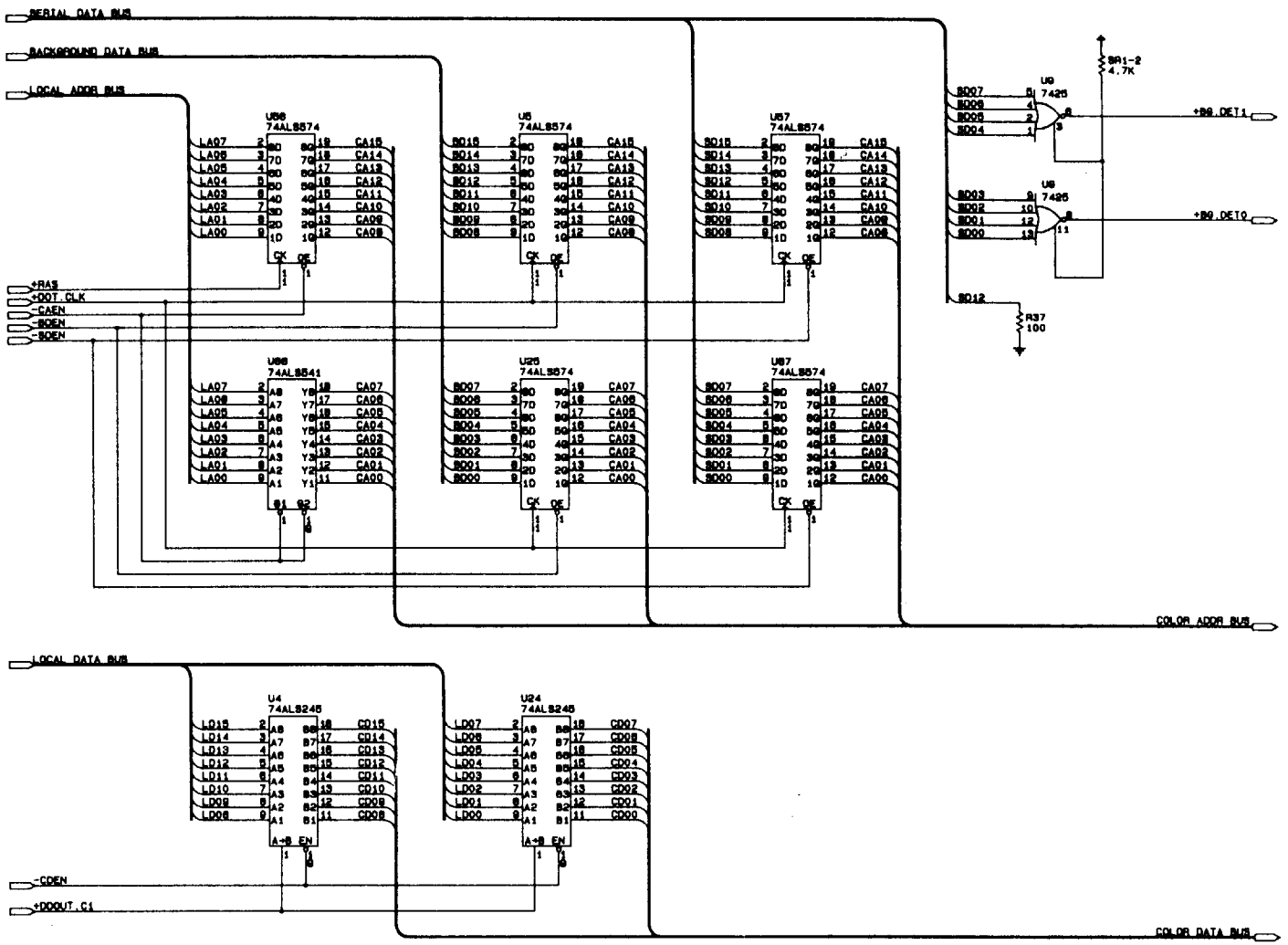

ITEM	PART NUMBER	DESCRIPTION	QTY	ITEM	PART NUMBER	DESCRIPTION	QTY

PROJ ENGR: M. LOFFREDO
DWN BY: G. SHIPP 5-11-88
CHECKED BY: DATE
APPROVAL: DATE
DO NOT SCALE WORK TO DIMENSIONS SHOWN
FIRST PROJECT NO: 3036-U
FIRST USAGE: C-11878
QTY: —
REMOVE BURRS - BREAK SHARP CORNERS & EDGES
TOLERANCES UNLESS OTHERWISE SPECIFIED
DECIMAL — X ± .030 ANGULAR ±1/2°; XX ± .010; XXX ± .005 FRACTIONAL ±1/64
MATERIAL

WILLIAMS ELECTRONICS, INC.
3401 N CALIFORNIA AVE CHICAGO IL 60618

NAME: SYS-Z CPU BD SCHEMATIC
SCALE: -/-
SHT 9 of 11
PART NO: 16-9017
REV: A

REV	DESCRIPTION OF CHANGE	ECN NO DATE
	NEW PART RELEASE	19101 5-18-88
A	SEE COVER SHT	19722 9-30-88

16-9017

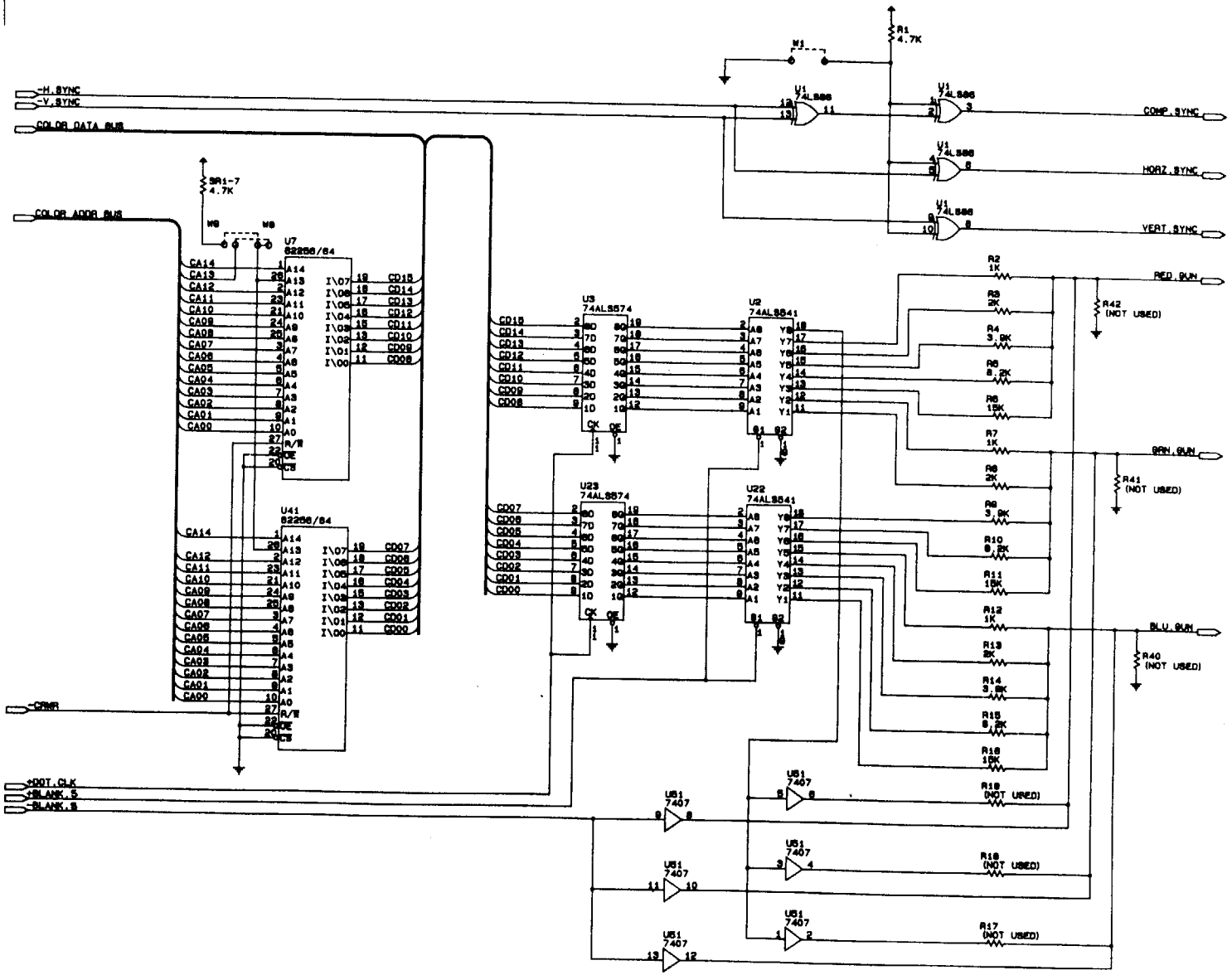

ITEM	PART NUMBER	DESCRIPTION	QTY	ITEM	PART NUMBER	DESCRIPTION	QTY

PROJ ENGR: M.LOFFREDO
DWN BY: G.SHIPP 5-11-88 DATE
CHECKED BY: DATE 5/12/88
APPROVAL: D.AW 5/12/88 DATE
DO NOT SCALE WORK TO DIMENSIONS SHOWN
FIRST PROJECT NO: 3056-U
FIRST USAGE: C-11878 QTY —
REMOVE BURRS - BREAK SHARP CORNERS & EDGES
TOLERANCES UNLESS OTHERWISE SPECIFIED
DECIMAL — X ± .050 ANGULAR ± 1/2° XX ± .015 XXX ± .005 FRACTIONAL ± 1/64
MATERIAL

WILLIAMS ELECTRONICS, INC.
3401 N CALIFORNIA AVE CHICAGO IL 60618
NAME: SYS-Z CPU BD SCHEMATIC
SCALE: -/- SHT 10 OF 11 PART NO 16-9017 REV A

16-9017

REV	DESCRIPTION OF CHANGE	ECN NO DATE
	NEW PART RELEASE	15101 5-18-88
A	SEE COVER SHT	17172 9-30-88

PROGRAM INTERFACE

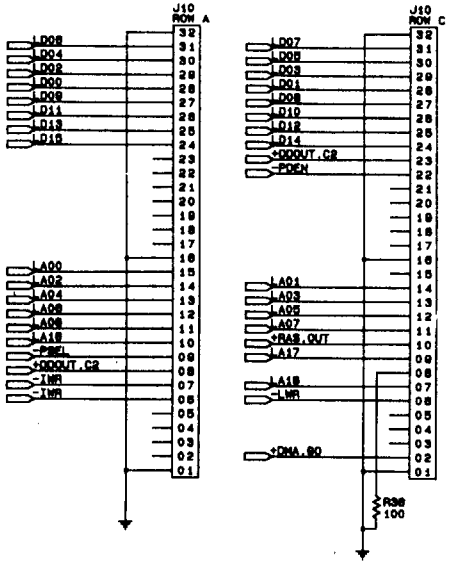

IMAGE INTERFACE

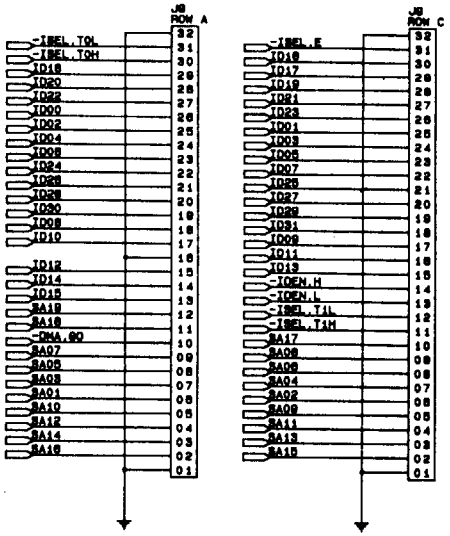

INTERRUPT INTERFACE

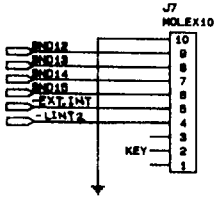

SOUND BOARD INTERFACE

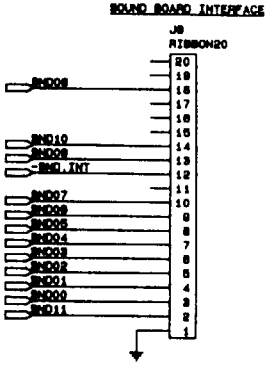

I/O INTERFACE

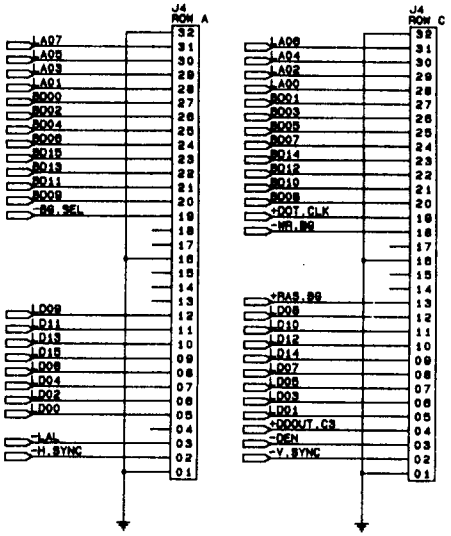

BATTERY BACKED-UP MEMORY INTERFACE

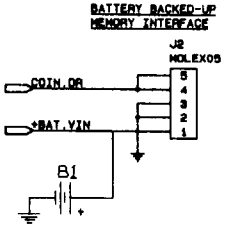

MONITOR INTERFACE

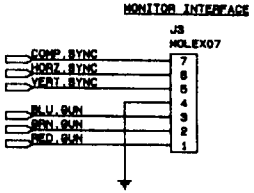

POWER INPUT

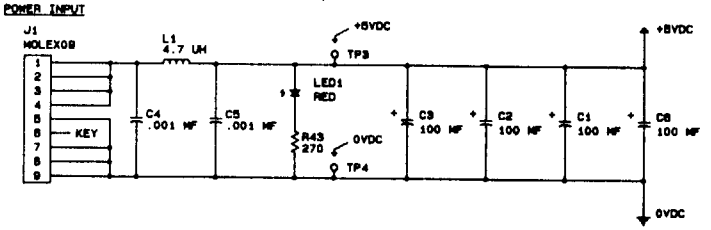

ITEM	PART NUMBER	DESCRIPTION	QTY	ITEM	PART NUMBER	DESCRIPTION	QTY

PRO/ ENGR M. LOFFREDO
DWN BY G. SHIPP DATE 5-11-88
CHECKED BY DATE
APPROVAL DATE 5/11/88
FIRST PROJECT NO 3036-U
FIRST USAGE C-11878 QTY —

DO NOT SCALE WORK TO DIMENSIONS SHOWN

REMOVE BURRS - BREAK SHARP CORNERS & EDGES

TOLERANCES UNLESS OTHERWISE SPECIFIED
DECIMAL — X ± .030 ANGULAR ± 1/2°
XX ± .015
XXX ± .005 FRACTIONAL ± 1/64

MATERIAL

WILLIAMS ELECTRONICS, INC.
3401 N CALIFORNIA AVE CHICAGO IL 60618

NAME SYS-2 CPU BD SCHEMATIC

SCALE -/- SHT 11 OF 11 PART NO 16-9017 REV A

REV	DESCRIPTION OF CHANGE	ECN NO DATE
	NEW PART RELEASE	19497 5-10-88

C-12260-

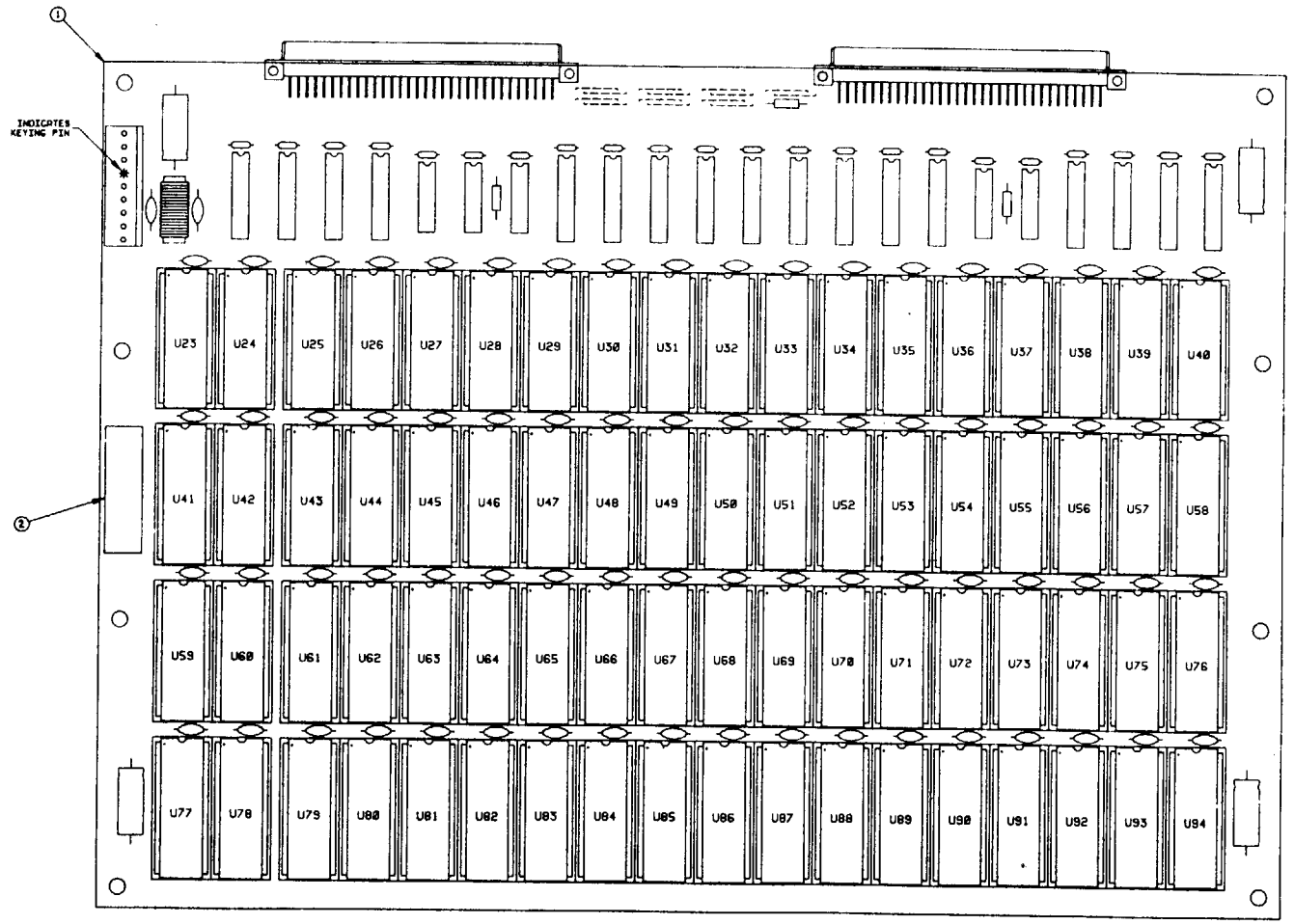

NOTES: 1. FOR SCHEMATIC, REFER TO DRAWING NO. 16-9041.
2. 28-PIN DEVICES (I.E. 27512 EPROMS) SHOULD BE BOTTOM JUSTIFIED IN SOCKETS.

ITEM	PART NUMBER	DESCRIPTION	QTY

PROJ ENGR G.SHIPP	DO NOT SCALE WORK TO DIMENSIONS SHOWN	REMOVE BURRS - BREAK SHARP CORNERS & EDGES	WILLIAMS ELECTRONICS, INC.		
DWN BY R. G. DATE 6/17/88		TOLERANCES UNLESS OTHERWISE SPECIFIED DECIMAL — X ± .030 ANGULAR ± 1/2° XX ± .015 XXX ± .005 FRACTIONAL ± 1/64	3401 N CALIFORNIA AVE CHICAGO IL 60618		
CHECKED BY DATE 7/29/88	FIRST PROJECT NO 3036-UI		NAME SYS-Z ROM-2 PCB ASSEMBLY		
APPROVAL DATE 7/29/88	FIRST USAGE D-12266	QTY 1	MATERIAL NONE	SCALE 1/1	SHT 1 OF 2
				PART NO C-12260-	REV -

C-12260-

REV	DESCRIPTION OF CHANGE	ECN NO DATE
	NEW PART RELEASE	19497 8-10-88

GAME NAME	3036		
ASSY. NO.			
U23			
U24			
U25			
U26			
U27			
U28			
U29			
U30			
U31			
U32			
U33			
U34			
U35			
U36			
U37			
U38			
U39			
U40			
U41			
U42			
U43			
U44			
U45			
U46			
U47			
U48			
U49			

PART DESIGNATION — PART NUMBER

GAME NAME	3036		
ASSY. NO.			
U50			
U51			
U52			
U53			
U54			
U55			
U56			
U57			
U58			
U59			
U60			
U61			
U62			
U63			
U64			
U65			
U66			
U67			
U68			
U69			
U70			
U71			
U72			
U73			
U74			
U75			
U76			

PART DESIGNATION — PART NUMBER

GAME NAME	3036		
ASSY. NO.			
U77			
U78			
U79			
U80			
U81			
U82			
U83			
U84			
U85			
U86			
U87			
U88			
U89			
U90			
U91			
U92			
U93			
U94			

PART DESIGNATION — PART NUMBER

ITEM	PART NO.	PART DESIGNATION	DESCRIPTION	QTY.
6				
5				
4				
3	SEE CHART	SEE CHART	GAME ROM SET	SEE CHART
2	16-8850-219		LABEL, PCB IDENT.	1
1	C-12261		SYS-Z ROM 2 SUB-ASSY	1

BILL OF MATERIALS

NOTE: FOR SCHEMATIC, REFER TO DRAWING NO. 16-9041

PROJ ENGR G. SHIPP	DO NOT SCALE WORK TO DIMENSIONS SHOWN	REMOVE BURRS-BREAK SHARP CORNERS & EDGES	WILLIAMS ELECTRONICS, INC. 3401 N CALIFORNIA AVE CHICAGO IL 60618
DWN BY G.S. DATE 6-24-88		TOLERANCES UNLESS OTHERWISE SPECIFIED DECIMAL — X ±.030 XX ±.015 XXX ±.005 ANGULAR ±1/2° FRACTIONAL ±1/64	NAME SYS-Z ROM-2 PCB ASSEMBLY
CHECKED BY [signature] DATE 7/29/88	FIRST PROJECT NO 3036-U1	MATERIAL NONE	SCALE -/- SHT 2 OF 2 PART NO C-12260- REV -
APPROVAL [signature] DATE 7/29/88	FIRST USAGE D-12266 QTY 1		

REV	DESCRIPTION OF CHANGE	ECN NO DATE
	NEW PART RELEASE	19997 5-10-88

16-9041

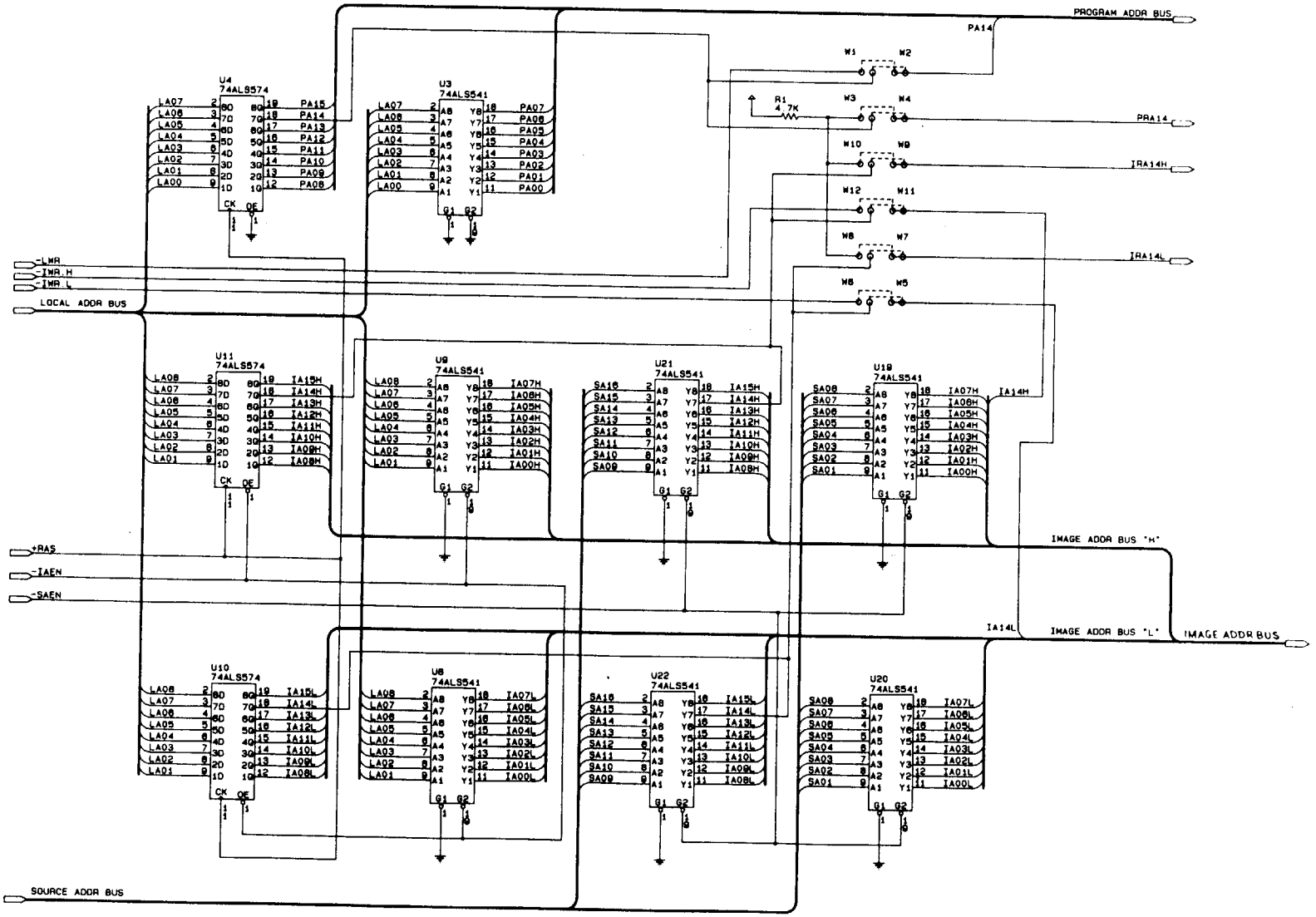

ITEM	PART NUMBER	DESCRIPTION	QTY	ITEM	PART NUMBER	DESCRIPTION	QTY

PROJ ENGR: G. SHIPP

DWN BY: G.S. 6-24-88 DATE

CHECKED BY: DATE

APPROVAL: DJW 7/29/86 DATE

DO NOT SCALE WORK TO DIMENSIONS SHOWN

FIRST PROJECT NO: 3036-01

FIRST USAGE: C-12261 QTY: 1

REMOVE BURRS - BREAK SHARP CORNERS & EDGES

TOLERANCES UNLESS OTHERWISE SPECIFIED

DECIMAL — X ± .050 ANGULAR ±1/2°; XX ± .010; XXX ± .005 FRACTIONAL ±1/64

MATERIAL

WILLIAMS ELECTRONICS, INC.

3401 N CALIFORNIA AVE CHICAGO IL 60618

NAME: SYS-Z ROM-2 SCHEMATIC

SCALE: -/- SHT 1 OF 1 PART NO: 16-9041 REV: -

REV	DESCRIPTION OF CHANGE	ECN NO DATE
	NEW PART RELEASE	19997 8-10-88

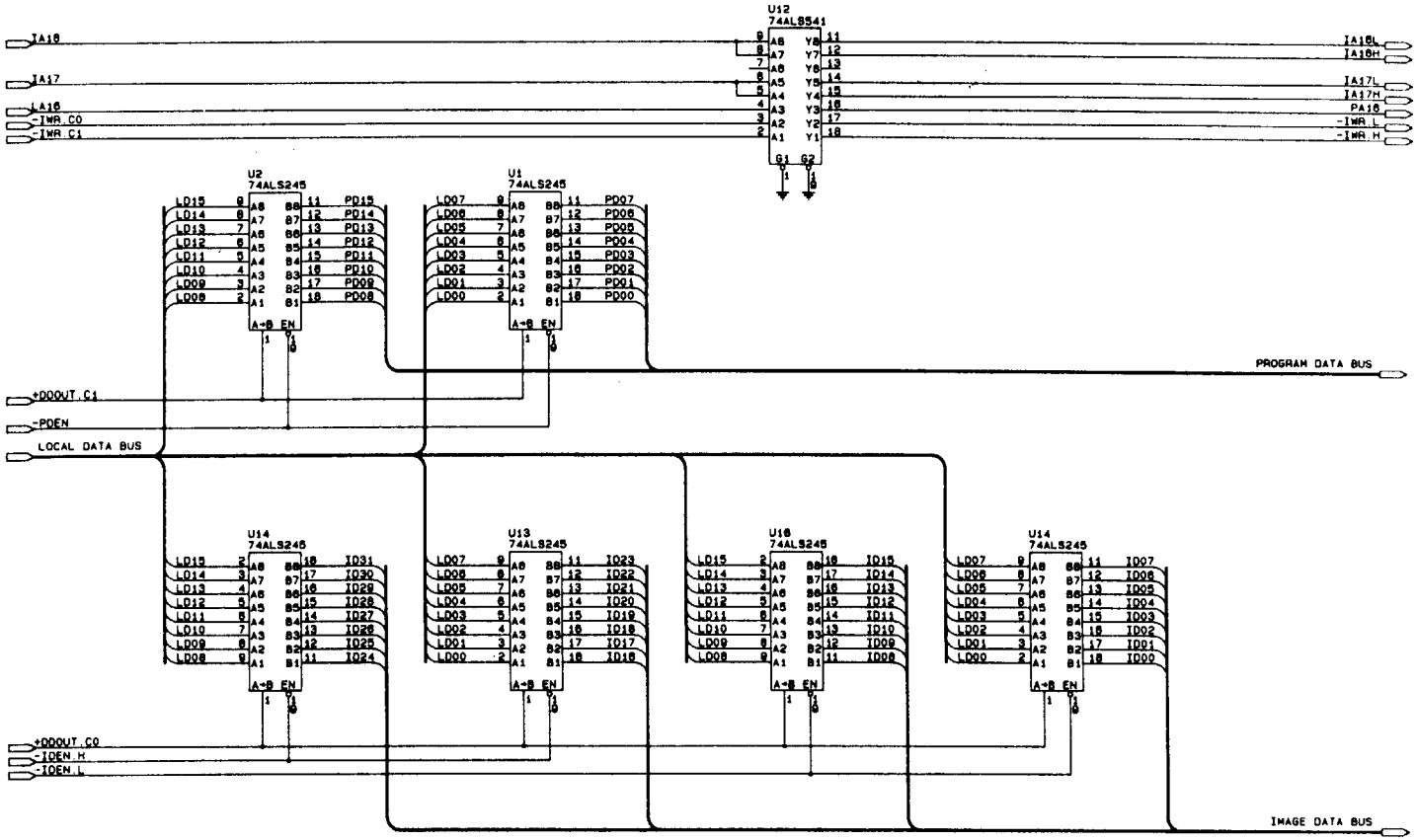

ITEM	PART NUMBER	DESCRIPTION	QTY	ITEM	PART NUMBER	DESCRIPTION	QTY

PROJ ENGR: G. SHIPP
DWN BY: G.S. 6-24-88
CHECKED BY: DATE 7/29/88
APPROVAL: DATE 7/29/88
DO NOT SCALE WORK TO DIMENSIONS SHOWN
FIRST PROJECT NO: 3036-U1
FIRST USAGE: C-12261
QTY: 1
REMOVE BURRS - BREAK SHARP CORNERS & EDGES
TOLERANCES UNLESS OTHERWISE SPECIFIED
DECIMAL — X ± .030 ANGULAR ± 1/2°
XX ± .010
XXX ± .005 FRACTIONAL ± 1/64
MATERIAL

WILLIAMS ELECTRONICS, INC.
3401 N CALIFORNIA AVE CHICAGO IL 60618
NAME: SYS-Z ROM-2 SCHEMATIC
SCALE: -/-
SHT 2 OF 7
PART NO: 16-9041
REV: -

REV	DESCRIPTION OF CHANGE	ECN NO DATE
	NEW PART RELEASE	19417 5-10-88

16-9041

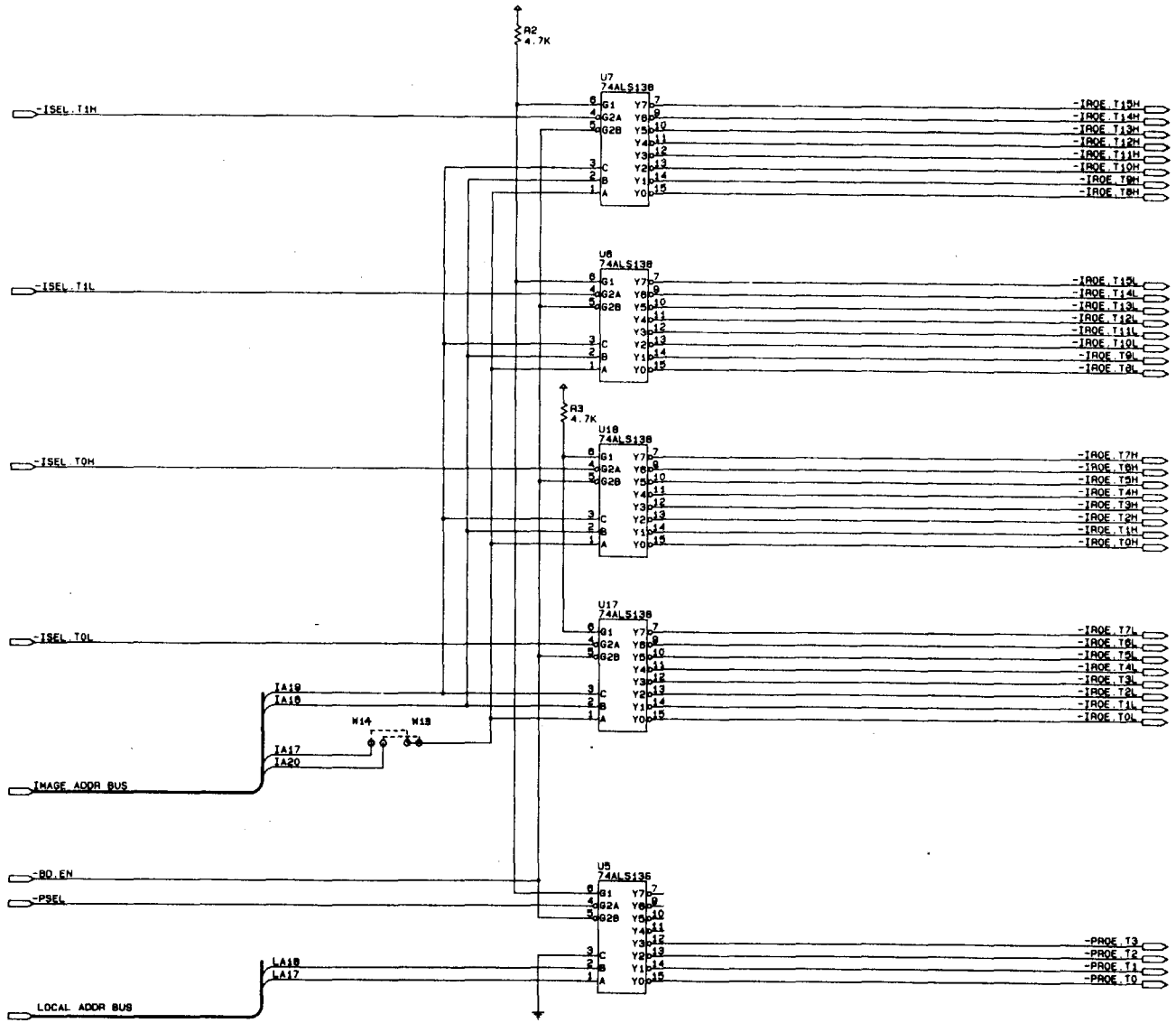

ITEM	PART NUMBER	DESCRIPTION	QTY	ITEM	PART NUMBER	DESCRIPTION	QTY

PROJ ENGR G.SHIPP	DO NOT SCALE WORK TO DIMENSIONS SHOWN	REMOVE BURRS - BREAK SHARP CORNERS & EDGES	WILLIAMS ELECTRONICS, INC.
DWN BY G.S. 6-24-88 DATE		TOLERANCES UNLESS OTHERWISE SPECIFIED DECIMAL .X ±.030 ANGULAR ±1/2° .XX ±.010 .XXX ±.005 FRACTIONAL ±1/64	3401 N CALIFORNIA AVE CHICAGO IL 60618
CHECKED BY DATE	FIRST PROJECT NO 9036-U1	MATERIAL	NAME SYS-Z ROM-2 SCHEMATIC
APPROVAL DATE 7/29/88	FIRST USAGE C-12261 QTY 1		SCALE -/- SHT 3 OF 7 PART NO 16-9041 REV -

16-9041

REV	DESCRIPTION OF CHANGE	ECN NO DATE
	NEW PART RELEASE	19997 6-10-88

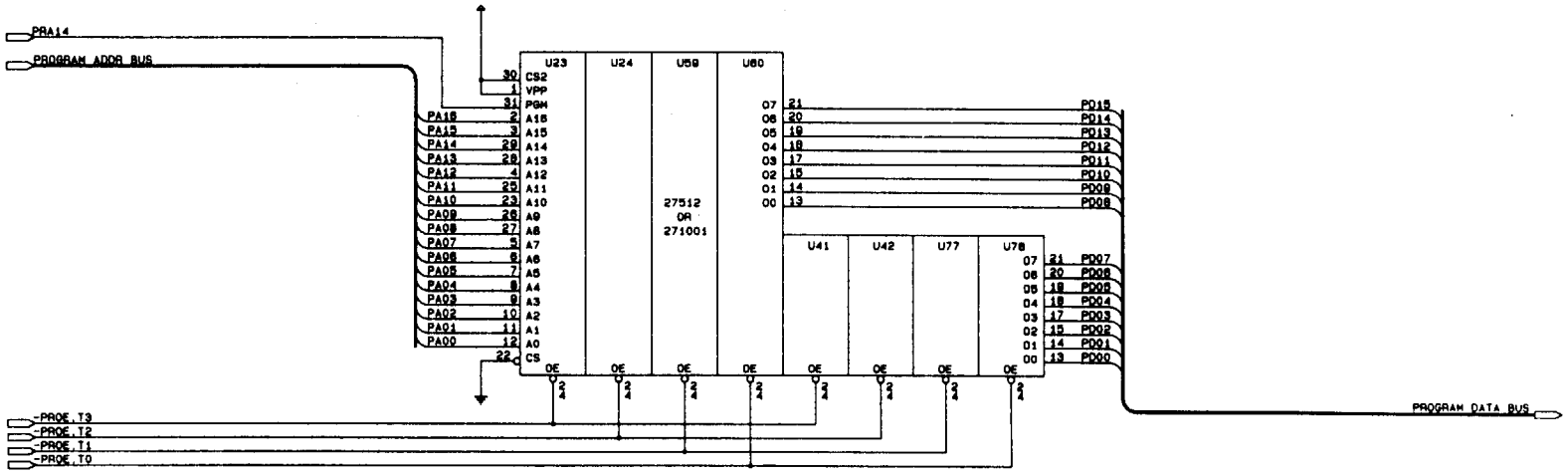

ITEM	PART NUMBER	DESCRIPTION	QTY	ITEM	PART NUMBER	DESCRIPTION	QTY

PROJ ENGR: G.SHIPP
DWN BY / DATE: G.S. 6-24-88
CHECKED BY / DATE: 7/29/88
APPROVAL / DATE: D.W 7/29/88

DO NOT SCALE WORK TO DIMENSIONS SHOWN

FIRST PROJECT NO: 5036-U1
FIRST USAGE: C-12261
QTY: 1

REMOVE BURRS - BREAK SHARP CORNERS & EDGES

TOLERANCES UNLESS OTHERWISE SPECIFIED
DECIMAL — X ± .030 ANGULAR ± 1/2°
XX ± .010
XXX ± .005 FRACTIONAL ± 1/64

MATERIAL

WILLIAMS ELECTRONICS, INC.
3401 N CALIFORNIA AVE CHICAGO IL 60618

NAME: SYS-2 ROM-2 SCHEMATIC

SCALE: -/-
SHT 4 OF 7
PART NO: 16-9041
REV: -

REV	DESCRIPTION OF CHANGE	ECN NO / DATE
	NEW PART RELEASE	19497 6-10-88

16-9041

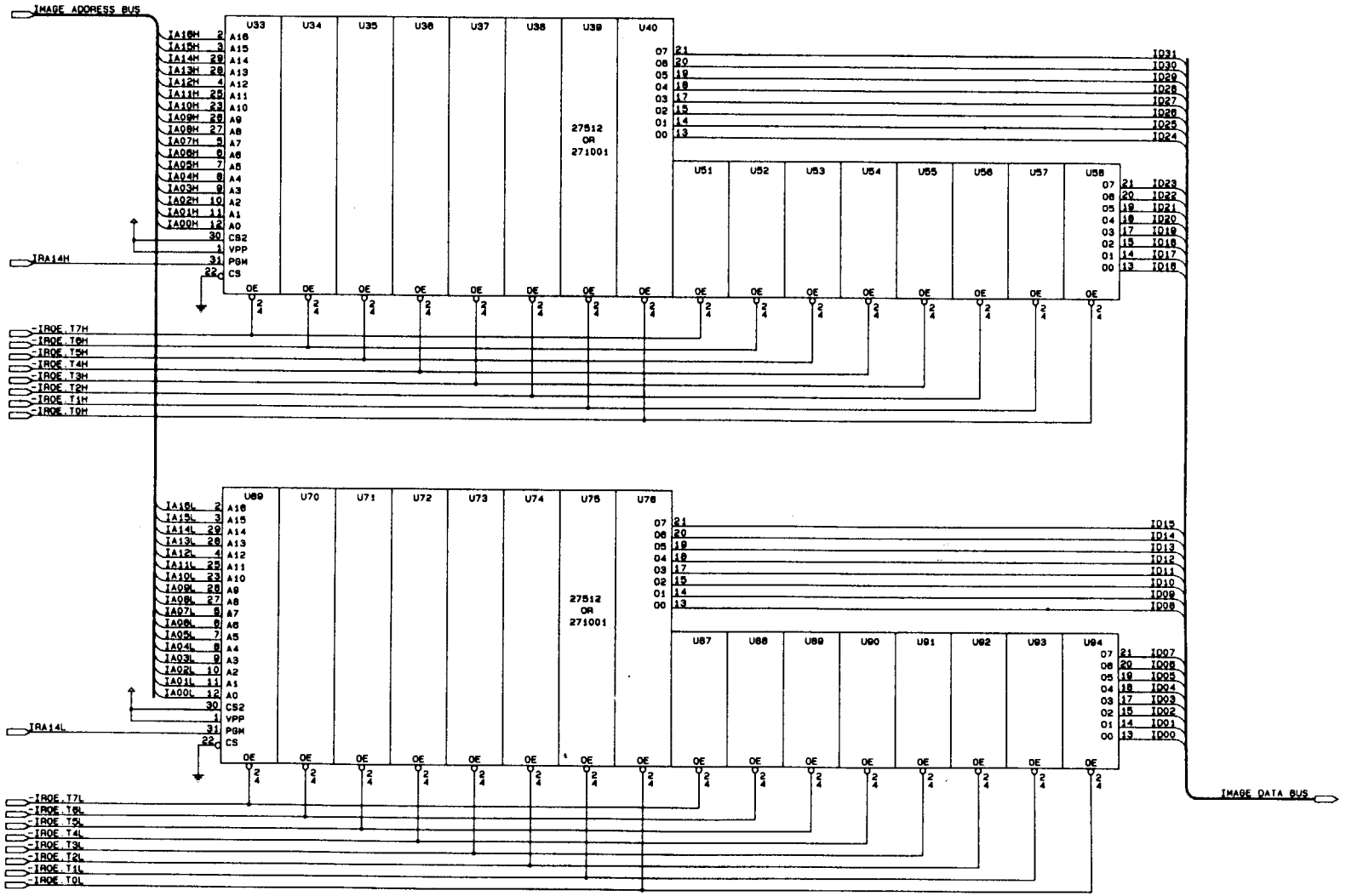

ITEM	PART NUMBER	DESCRIPTION	QTY	ITEM	PART NUMBER	DESCRIPTION	QTY

PROJ ENGR: G. SHIPP
DWN BY / DATE: G.S. 6-24-88
CHECKED BY / DATE: 7/2/88
APPROVAL / DATE: 7/20/88
DO NOT SCALE WORK TO DIMENSIONS SHOWN
FIRST PROJECT NO: B036-U1
FIRST USAGE: C-12261
QTY: 1
REMOVE BURRS - BREAK SHARP CORNERS & EDGES
TOLERANCES UNLESS OTHERWISE SPECIFIED
DECIMAL: X ±.030, XX ±.010, XXX ±.005; ANGULAR ±1/2°; FRACTIONAL ±1/64
MATERIAL

WILLIAMS ELECTRONICS, INC.
3401 N CALIFORNIA AVE CHICAGO IL 60618
NAME: SYS-3 ROM-2 SCHEMATIC
SCALE: -/-
SHT 5 OF 7
PART NO: 16-9041
REV: -

REV	DESCRIPTION OF CHANGE	ECN NO DATE
	NEW PART RELEASE	1447 5-10-88

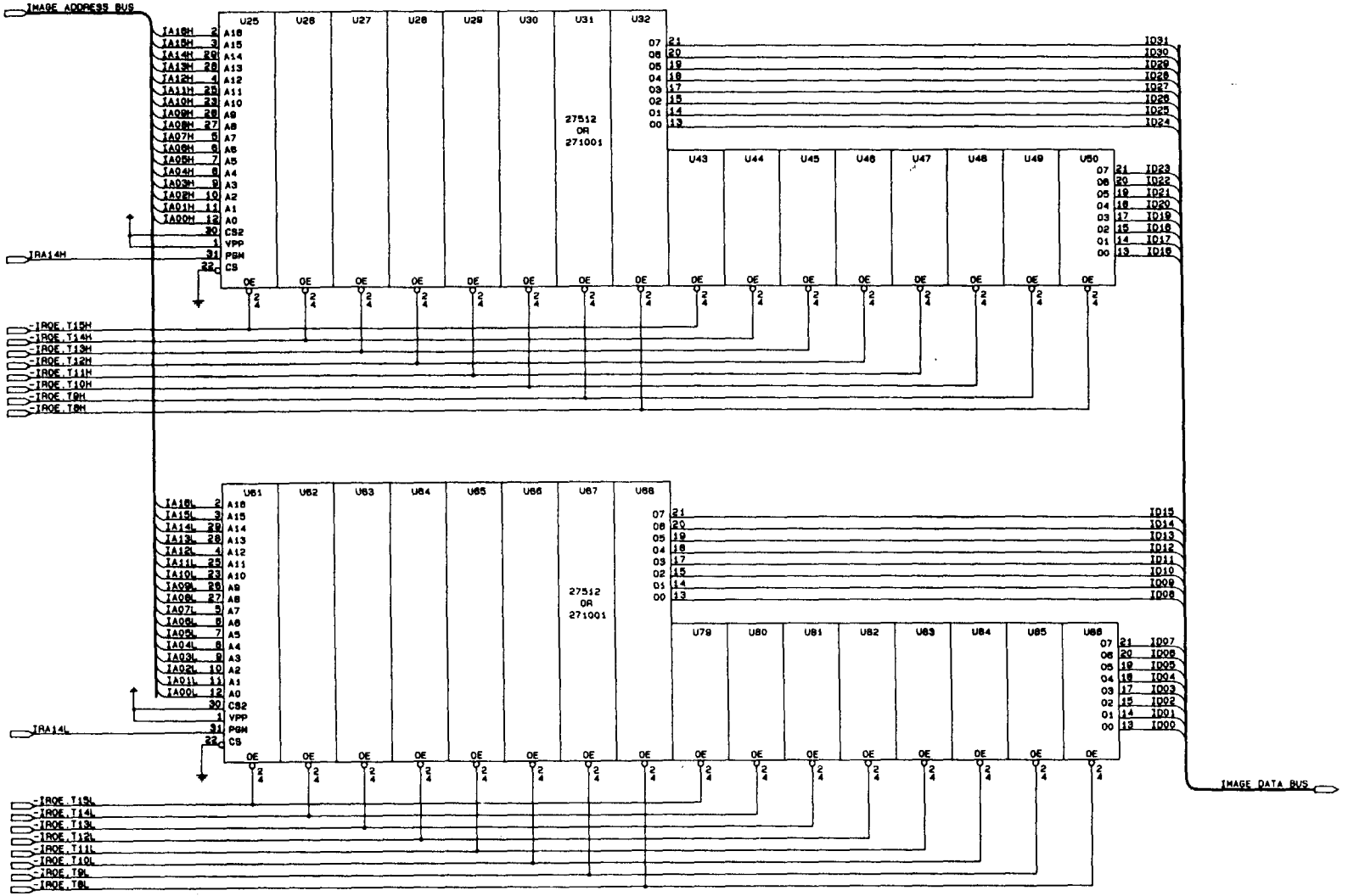

ITEM	PART NUMBER	DESCRIPTION	QTY	ITEM	PART NUMBER	DESCRIPTION	QTY

PROJ ENGR: G.SHIRP
DWN BY: G.S. 6-24-88 DATE
CHECKED BY: DATE 7/29/88
APPROVAL: DATE 7/29/88
DO NOT SCALE WORK TO DIMENSIONS SHOWN
FIRST PROJECT NO: 3036-01
FIRST USAGE: C-12261
QTY: 1
REMOVE BURRS - BREAK SHARP CORNERS & EDGES
TOLERANCES UNLESS OTHERWISE SPECIFIED
DECIMAL — X ± .030 ANGULAR ± 1/2°
XX ± .010
XXX ± .005 FRACTIONAL ± 1/64
MATERIAL

WILLIAMS ELECTRONICS, INC.
3401 N CALIFORNIA AVE CHICAGO IL 60618

NAME: SYS-2 ROM-2 SCHEMATIC
SCALE: -/-
SHT 6 OF 7
PART NO: 16-9041
REV: -

REV	DESCRIPTION OF CHANGE	BOARD DATE
	NEW PART RELEASE	5-10-89

16-9041

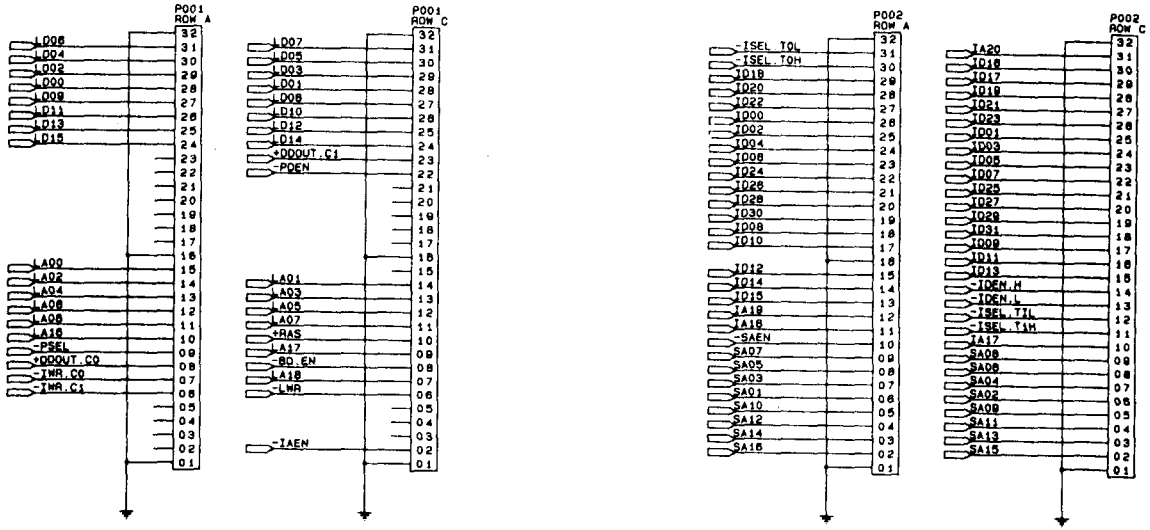

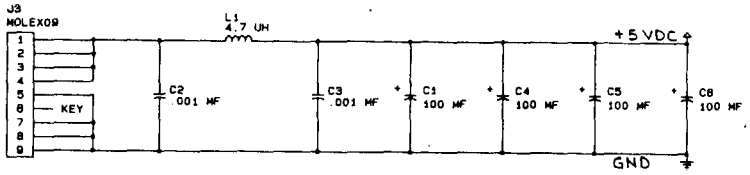

ITEM	PART NUMBER	DESCRIPTION	QTY	ITEM	PART NUMBER	DESCRIPTION	QTY

PROJ ENGR: G.SHIPP
DWN BY: G.S. 6-24-88 DATE
CHECKED BY: DATE
APPROVAL: DATE 7/29/88

DO NOT SCALE WORK TO DIMENSIONS SHOWN

FIRST PROJECT NO: 3036-U1
FIRST USAGE: C-12261 QTY: 1

REMOVE BURRS - BREAK SHARP CORNERS & EDGES

TOLERANCES UNLESS OTHERWISE SPECIFIED
DECIMAL — X ± .030 ANGULAR ± 1/2°
XX ± .01
XXX ± .005 FRACTIONAL ± 1/64

MATERIAL

WILLIAMS ELECTRONICS, INC.
3401 N. CALIFORNIA AVE CHICAGO IL 60618

NAME: SYS-2 ROM-2 SCHEMATIC

SCALE: -/- SHT 1 OF 1 PART NO: 16-9041 REV: -

C-12037

REV	DESCRIPTION OF CHANGE	ECN NO DATE
	NEW PART RELEASE	18994 4-28-88

3J2 Functions
Pin/Function
1 - NC
2 - NC
3 - NC
4 - NC
5 - Key
6 - Memory Protect
7 - T/B Strobe
8 - Player 2 Start
9 - Player 1 Start

3J4 Functions
Pin/Function
1 - Player 1 Rocket
2 - Player 1 Jump
3 - Player 1 Fire
4 - Player 1 Crouch
5 - Player 1 Right
6 - Player 1 Left
7 - Player 1 Down
8 - Key
9 - Player 1 Up
10-Ground

3J3 Functions
Pin/Function
1 - Player 2 Rocket
2 - Player 2 Jump
3 - Player 2 Fire
4 - Player 2 Crouch
5 - Player 2 Right
6 - Player 2 Left
7 - Key
8 - Player 2 Down
9 - Player 2 Up
10-Ground

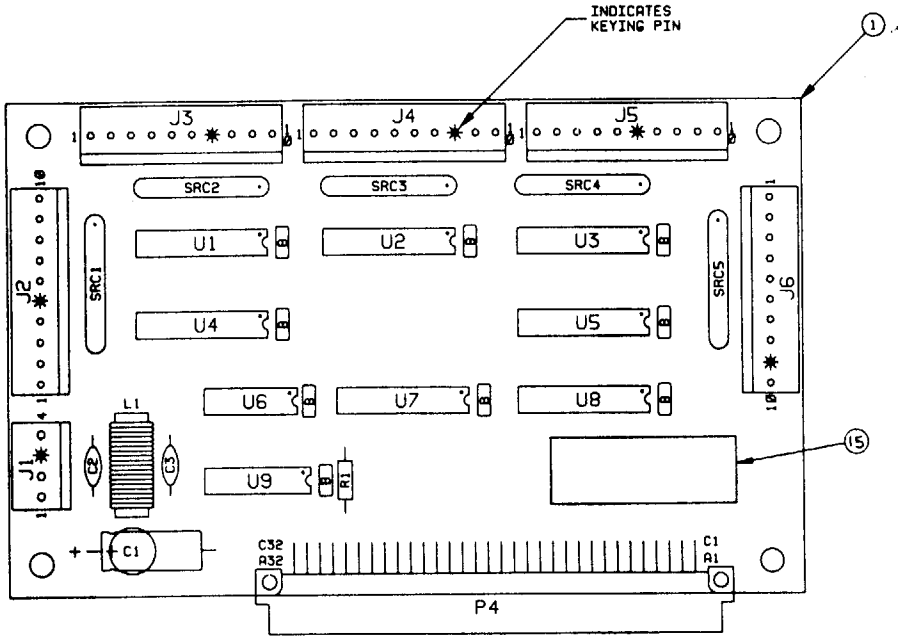

NOTE: FOR SCHEMATIC, REFER TO DRAWING NO. 16-9028.

ITEM	PART NO.	PART DESIGNATION	DESCRIPTION	QTY.
15	16-8850-212		LABEL, PCB IDENT.	1
14	5792-10026-00	P4	CONNECTOR, 64P EURO-DIN CARD CONN. FEMALE	1
13	5791-10862-10	J2, J3 J4, J5, J6	CONNECTOR, 10P MOLEX, .156" CENTER PINS	5
12	5791-10862-04	J1	CONNECTOR, 4P MOLEX, .156" CENTER PINS	1
11	5043-09845-00	C2, C3	CAPACITOR, .001 MFD.	2
10	5040-08986-00	C1	CAPACITOR, 100 MFD.	1
9	5043-08980-00	B	CAPACITOR, 0.01 MFD.	9
8	5010-08991-00	R1	RESISTOR, 4.7K, 1/4W, 5%	1
7	5060-10396-00	SCR1, SCR2, SCR3, SRC4, SRC5	SIP, 10P 8-RES/8-CAP NETWORK, 4.7K, 470 PF	5
6	5551-09822-00	L1	INDUCTOR, 4.7 UH	1
5	5311-10948-00	U9	74HC138, H-CMOS 3/8 DECODER	1
4	5317-12208-00	U7, U8	74ALS245, ALS TTL OCTAL BUS TRANSCEIVER	2
3	5311-10945-00	U6	74HC32, H-CMOS QUAD 2-INPUT OR GATE	1
2	5311-12287-00	U1, U2, U3, U4, U5	74HC541, HC TTL OCTAL BUFFER	5
1	5779-12265-00		BARE PC BOARD	1

BILL OF MATERIALS

PROJ ENGR M. LOFFREDO	DO NOT SCALE WORK TO DIMENSIONS SHOWN	REMOVE BURRS-BREAK SHARP CORNERS & EDGES	WILLIAMS ELECTRONICS, INC. 3401 N CALIFORNIA AVE CHICAGO IL 60618
DWN BY R.G. DATE 2/12/88		TOLERANCES UNLESS OTHERWISE SPECIFIED DECIMAL X ±.030 XX ±.015 XXX ±.005 ANGULAR ±1/2° FRACTIONAL ±1/64	NAME SYS-Z I/O PCB ASSEMBLY
CHECKED BY [signature] DATE 4/27/88	FIRST PROJECT NO 3036	MATERIAL NONE	SCALE 1.5/1 SHT 1 OF 1 PART NO C-12037 REV —
APPROVAL [signature] DATE 4/27/88	FIRST USAGE D-12114 QTY 1		

REV	DESCRIPTION OF CHANGE	ECN NO DATE
	NEW PART RELEASE	8994 4-28-88

16-9028

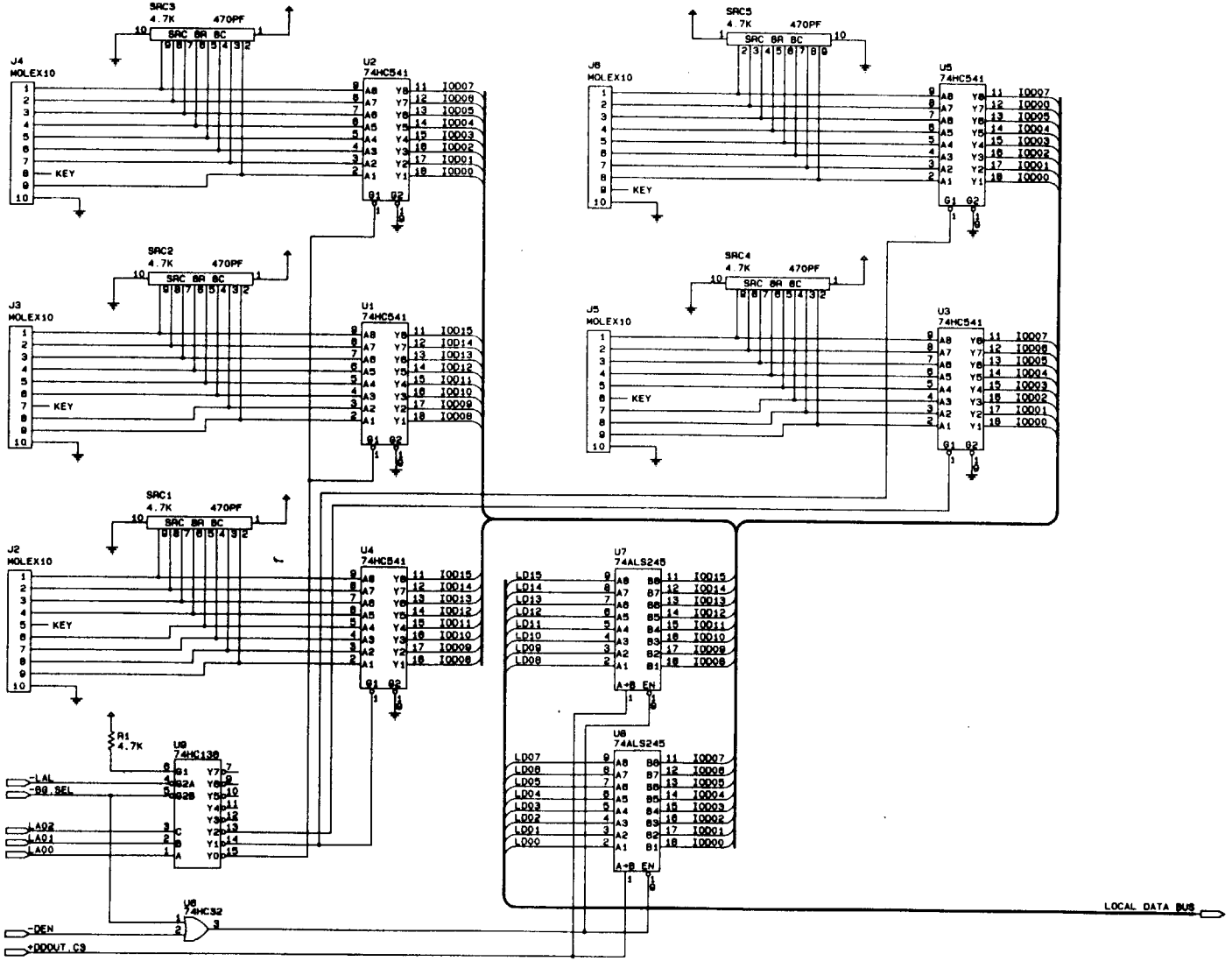

ITEM	PART NUMBER	DESCRIPTION	QTY
ITEM	PART NUMBER	DESCRIPTION	QTY

PROJ ENGR M. LOFFREDO
DWN BY G.S. 4-20-88 DATE
CHECKED BY DATE 4/27/88
APPROVAL DATE 4/29/88

DO NOT SCALE WORK TO DIMENSIONS SHOWN

FIRST PROJECT NO 3036
FIRST USAGE C-12097
QTY —

REMOVE BURRS-BREAK SHARP CORNERS & EDGES

TOLERANCES UNLESS OTHERWISE SPECIFIED
DECIMAL X ± .010 ANGULAR ± 1/2°
XX ± .005 FRACTIONAL ± 1/64
XXX ± .005

MATERIAL

WILLIAMS ELECTRONICS, INC.
3401 N. CALIFORNIA AVE CHICAGO IL 60618

NAME SYS-Z I/O SCHEMATIC

SCALE -/- SHT 1 OF 2 PART NO 16-9028 REV -

16-9028

REV	DESCRIPTION OF CHANGE	RELEASE DATE
	NEW PART RELEASE	18994 4-28-88

CPU INTERFACE

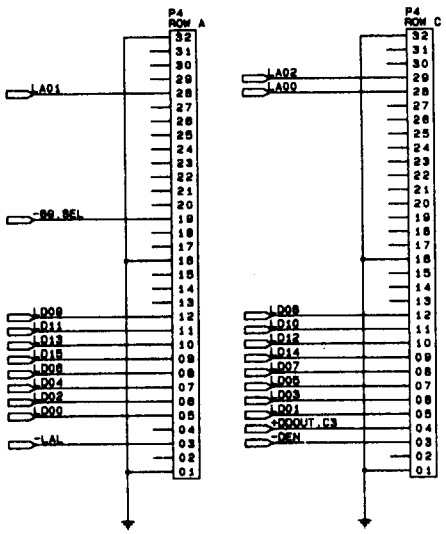

POWER

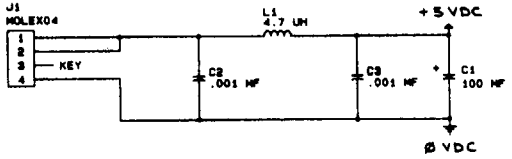

ITEM	PART NUMBER	DESCRIPTION	QTY

PROJ ENGR: M. LOFFREDO
DWN BY / DATE: G.S. 4-20-88
CHECKED BY / DATE: 4/27/88
APPROVAL / DATE: 4/27/88
DO NOT SCALE WORK TO DIMENSIONS SHOWN
FIRST PROJECT NO: 3036
FIRST USAGE: C-12037
QTY: —

REMOVE BURRS - BREAK SHARP CORNERS & EDGES
TOLERANCES UNLESS OTHERWISE SPECIFIED
DECIMAL — X ± .030 ANGULAR ± 1/2°; XX ± .010; XXX ± .005 FRACTIONAL ± 1/64
MATERIAL

WILLIAMS ELECTRONICS, INC.
3401 N CALIFORNIA AVE CHICAGO IL 60618

NAME: SYS-Z I/O SCHEMATIC
SCALE: -/-
SHT 2 OF 2
PART NO: 16-9028
REV: -

REV	DESCRIPTION OF CHANGE	ENGRG RELEASE
	N. P. R.	11778 10-19-88

C-12401

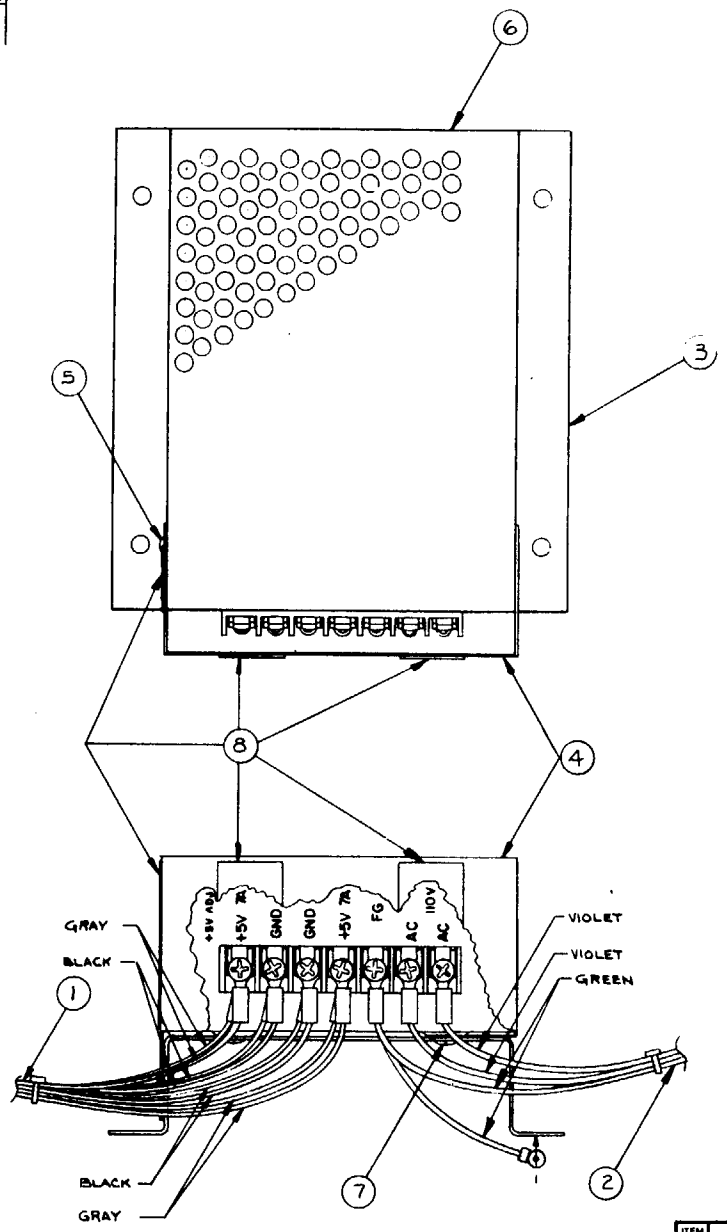

ITEM	PART NUMBER	DESCRIPTION	QTY
8	16-8587-701	LABEL-HIGH VOLTAGE	5
7	4005-01005-04	MS 5-40 x 1/4 P-PH	4
6	20-9574	P/S SWITCHER	1
5	03-8251	FASTNER BUTTON	1
4	01-9009	SHIELD-SW POWER SPLY	1
3	01-8991	BRKT - SW POWER SPLY	1
2	H-12119	POWER INTER PCB	1
1	H-10217-3	VIDEO SW/POWER CBL	1

ITEM	PART NUMBER	DESCRIPTION	QTY

PROJ ENGR: A LASKO

DWN BY: ROSS 10-11-88

CHECKED BY: DATE 10-24-88

APPROVAL: DATE 10/26/88

DO NOT SCALE WORK TO DIMENSIONS SHOWN

FIRST PROJECT NO: 5036-U1

FIRST USAGE: 5036-U1

QTY: 1

REMOVE BURRS - BREAK SHARP CORNERS & EDGES

TOLERANCES UNLESS OTHERWISE SPECIFIED

DECIMAL — X ± .030 ANGULAR ±1/2°
XX ± .010
XXX ± .005 FRACTIONAL ±1/64

MATERIAL

WILLIAMS ELECTRONICS, INC.

3401 N CALIFORNIA AVE CHICAGO IL 60618

NAME: P/S SWITCHER ASSY

SCALE: 1/1

SHT 1 OF 1

PART NO: C-12401

REV

C-12350

REV	DESCRIPTION OF CHANGE	DRAWN BY
	NEW PART RELEASE	

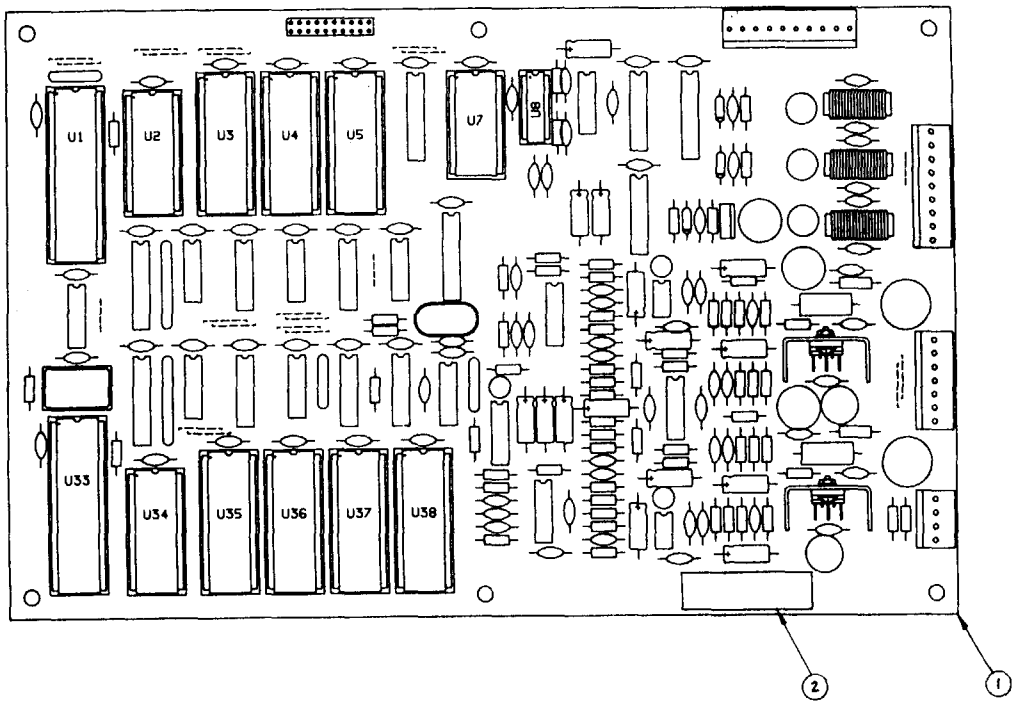

NOTE:
FOR SCHEMATIC, REFER TO DRAWING NO. 16-9044.

ITEM	PART NUMBER	DESCRIPTION	QTY	ITEM	PART NUMBER	DESCRIPTION	QTY

PROJ ENGR: M. LOFFREDO
DWN BY / DATE: R.G. 9-22-88
CHECKED BY / DATE: 11-21-88
APPROVAL / DATE: 11-22-88

DO NOT SCALE WORK TO DIMENSIONS SHOWN

FIRST PROJECT NO: 3036-U1
FIRST USAGE: D-12266 QTY 1

REMOVE BURRS - BREAK SHARP CORNERS & EDGES

TOLERANCES UNLESS OTHERWISE SPECIFIED
DECIMAL — X ± .030 ANGULAR — ±1/2°
XX ± .015
XXX ± .005 FRACTIONAL ±1/64

MATERIAL

WILLIAMS ELECTRONICS, INC.
3401 N CALIFORNIA AVE CHICAGO IL 60618

NAME: SYS-2 SOUND-2 ASSEMBLY

SCALE 1/1 SHT 1 OF 2 PART NO C-12350 REV

REV	DESCRIPTION OF CHANGE	ECN NO DATE
	NEW PART RELEASE	

C-12350

GAME NAME	3038						
ASSY. NO.							
U3							
U4							
U5							
U35							
U36							
U37							
U38							

PART DESIGNATION

PART NUMBER

ITEM	PART NO.	PART DESIGNATION	DESCRIPTION	QTY.
15				
14				
13				
12				
11				
10				
9				
8				
7	SEE CHART	U3, U4, U5, U35 U36, U37, U38	27512/1001 EPROM 250 NS	
6	5371-11087-00	U6	YM3012 DUAL SERIAL DAC	1
5	5370-11088-00	U7	YM2151 SOUND GENERATOR	1
4	5340-12278-00	U2, U34	8K X 8 STATIC RAM, 150NS	2
3	5400-10320-00	U1, U33	68B09E MICROPROCESSOR	2
2	16-8850-230		LABEL, PCB IDENT.	1
1	C-12350		SYS-2 SOUND BOARD SUB-ASSY.	1

BILL OF MATERIALS

NOTE: FOR SCHEMATIC, REFER TO DRAWING NO. 16-9044

PROJ ENGR: M. LOFFREDO	DO NOT SCALE WORK TO DIMENSIONS SHOWN	REMOVE BURRS-BREAK SHARP CORNERS & EDGES	WILLIAMS ELECTRONICS, INC.
DWN BY: RG. 9-22-88		TOLERANCES UNLESS OTHERWISE SPECIFIED	3401 N. CALIFORNIA AVE CHICAGO IL 60618
CHECKED BY: DATE: 11-23-88	FIRST PROJECT NO: 3086-U1	DECIMAL — X ± .030 ANGULAR ±1/2° XX ± .015 XXX ± .005 FRACTIONAL ±1/64	NAME: SYS-Z SOUND-2 ASSEMBLY
APPROVAL: DATE: 11-23-88	FIRST USAGE: D-12266 QTY: 1	MATERIAL	SCALE: -/- SHT 2 OF 2 PART NO: C-12350 REV: -

16-9044

REV	DESCRIPTION OF CHANGE	ENG NO DATE
	NEW PART RELEASE	

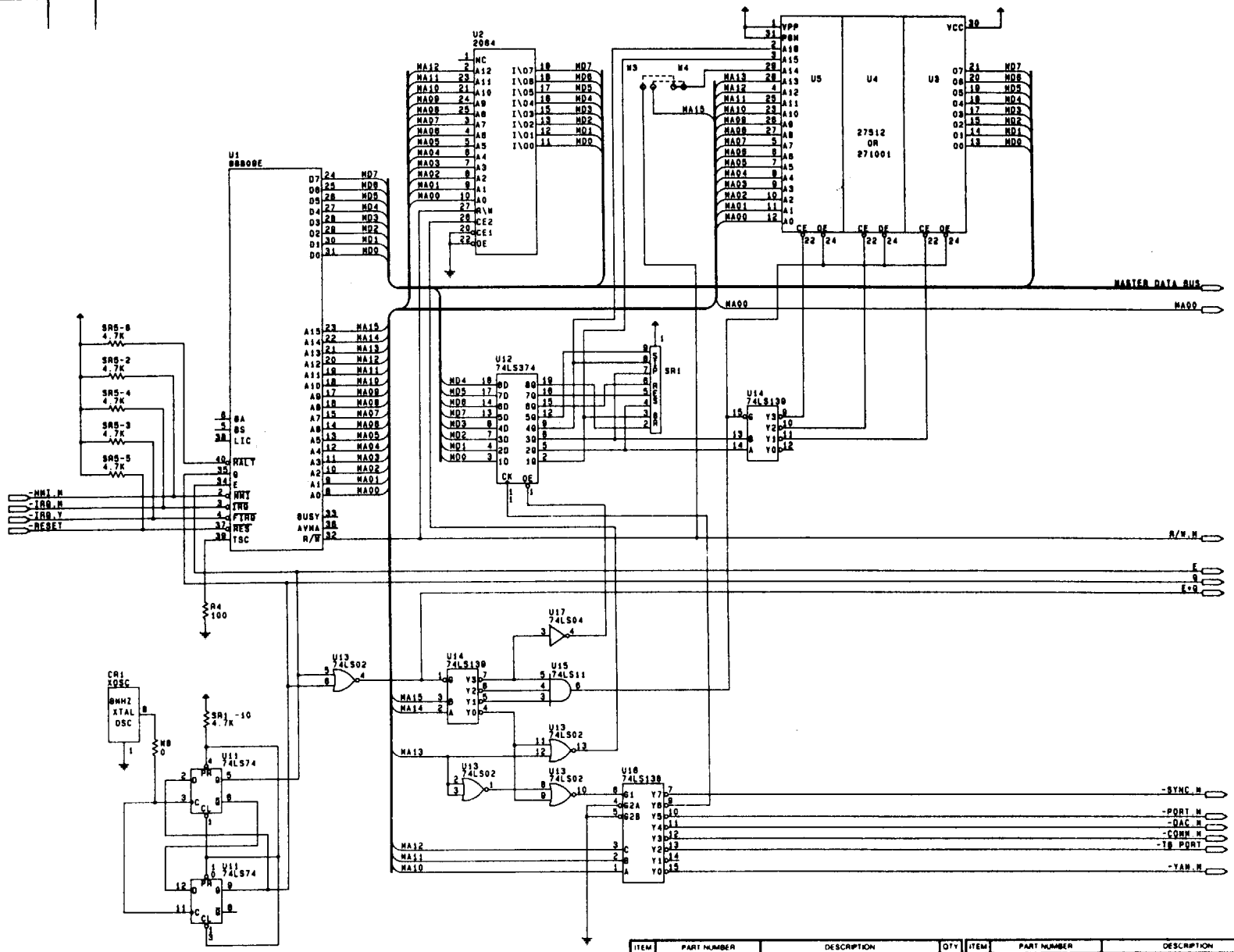

ITEM	PART NUMBER	DESCRIPTION	QTY	ITEM	PART NUMBER	DESCRIPTION	QTY

PROJ ENGR G. SHIPP	DO NOT SCALE WORK TO DIMENSIONS SHOWN	REMOVE BURRS - BREAK SHARP CORNERS & EDGES	WILLIAMS ELECTRONICS, INC.
DWN BY G. SHIPP DATE 10-19-86		TOLERANCES UNLESS OTHERWISE SPECIFIED DECIMAL — X ± .030 ANGULAR ± 1/2° XX ± .015 XXX ± .005 FRACTIONAL ± 1/64	3401 N CALIFORNIA AVE CHICAGO IL 60618
CHECKED BY DATE 11-25-86	FIRST PROJECT NO 3086-41	MATERIAL	NAME SYS-2 SOUND-2 BD. SCHEMATIC
APPROVAL DATE 11-27-86	FIRST USAGE C-12849	QTY —	SCALE -/- SHT 1 OF 1 PART NO 16-9044 REV -

REV	DESCRIPTION OF CHANGE	ECN NO	DATE
	NEW PART RELEASE		

16-9044

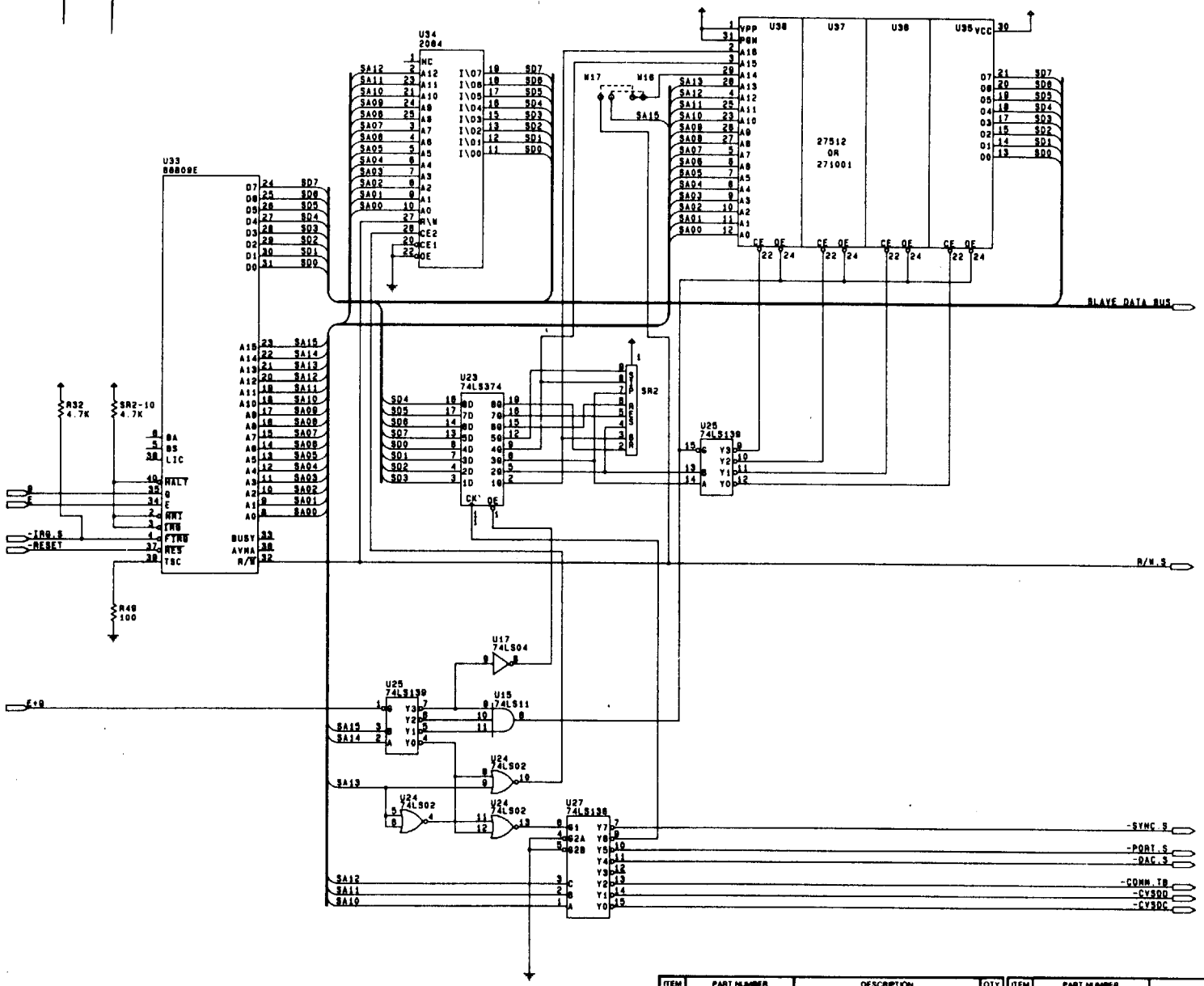

ITEM	PART NUMBER	DESCRIPTION	QTY	ITEM	PART NUMBER	DESCRIPTION	QTY

PROJ ENGR: G. SHIPP
DWN BY: G. SHIPP 10-19-88
CHECKED BY: DATE 11-23-88
APPROVAL: DATE 11-23-88
FIRST PROJECT NO: 3036-01
FIRST USAGE: C-12349
QTY: —

DO NOT SCALE WORK TO DIMENSIONS SHOWN

REMOVE BURRS - BREAK SHARP CORNERS & EDGES

TOLERANCES UNLESS OTHERWISE SPECIFIED
DECIMAL — X ± .030 ANGULAR ± 1/2°
.XX ± .015 FRACTIONAL ± 1/64
.XXX ± .005

MATERIAL

WILLIAMS ELECTRONICS, INC.
3401 N CALIFORNIA AVE CHICAGO IL 60618

NAME: SYS-2 SOUND-2 BD. SCHEMATIC

SCALE: -/-
SHT 1 OF 1
PART NO: 16-9044
REV: —

16-9044

REV	DESCRIPTION OF CHANGE	ECN NO DATE
	NEW PART RELEASE.	

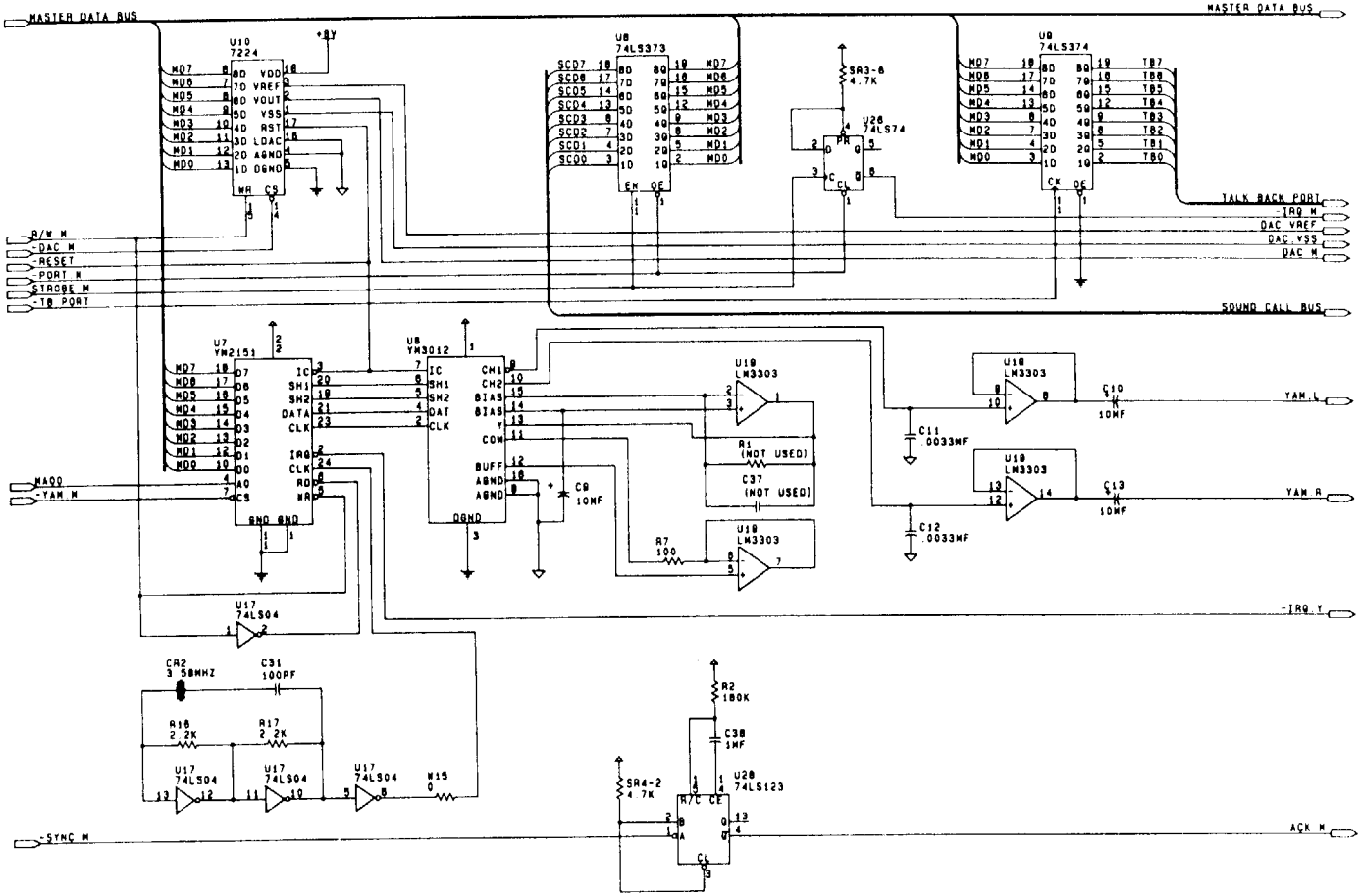

ITEM	PART NUMBER	DESCRIPTION	QTY
ITEM	PART NUMBER	DESCRIPTION	QTY

PROJ ENGR: G.SHIPP
DWN BY DATE: G.SHIPP 10-13-88
CHECKED BY DATE: BJ 11-23-88
APPROVAL DATE: DJW 11-23-88

DO NOT SCALE WORK TO DIMENSIONS SHOWN

FIRST PROJECT NO: 8086-U1
FIRST USAGE: C-12349
QTY: —

REMOVE BURRS - BREAK SHARP CORNERS & EDGES

TOLERANCES UNLESS OTHERWISE SPECIFIED
DECIMAL — X ± .030 ANGULAR ± 1/2°
XX ± .010
XXX ± .005 FRACTIONAL ± 1/64

MATERIAL

WILLIAMS ELECTRONICS, INC.
3401 N. CALIFORNIA AVE CHICAGO IL 60618

NAME: SYS-2 SOUND-2 BD SCHEMATIC

SCALE: -/-
SHT 1 OF 1
PART NO: 16-9044
REV: —

REV	DESCRIPTION OF CHANGE	ECN NO DATE
	NEW PART RELEASE.	

16-9044

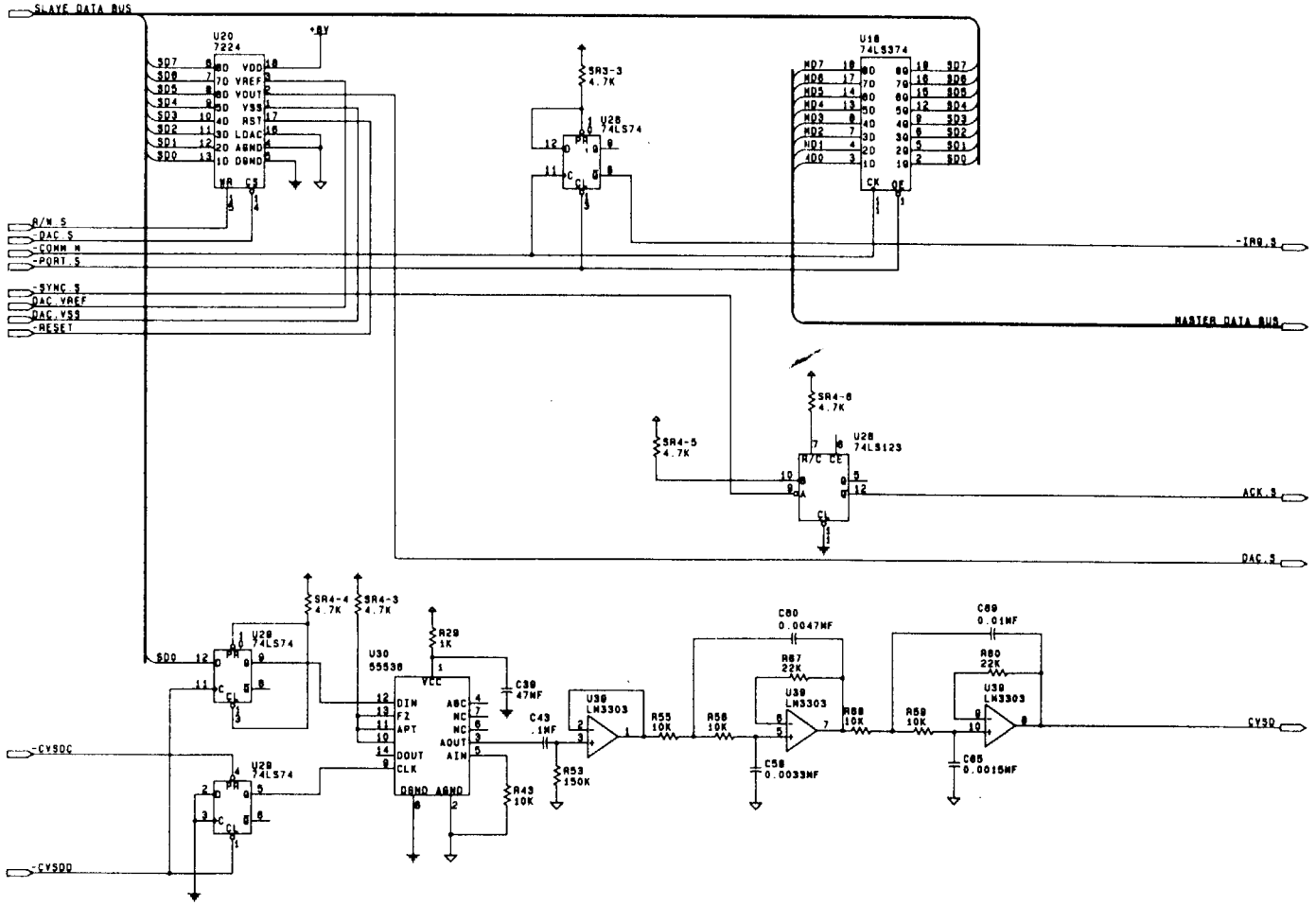

ITEM	PART NUMBER	DESCRIPTION	QTY	ITEM	PART NUMBER	DESCRIPTION	QTY

PROJ ENGR: S. SHIPP
DWN BY: S. SHIPP 10-13-88
CHECKED BY: DATE 11-23-88
APPROVAL: DATE DW 11-23-88

DO NOT SCALE WORK TO DIMENSIONS SHOWN

REMOVE BURRS - BREAK SHARP CORNERS & EDGES

TOLERANCES UNLESS OTHERWISE SPECIFIED
DECIMAL — X ± .010 ANGULAR ± 1/2°
XX ± .005
XXX ± .003 FRACTIONAL ± 1/64

FIRST PROJECT NO: 5086-01
FIRST USAGE: C-12849
QTY: -
MATERIAL:

WILLIAMS ELECTRONICS, INC.
3401 N CALIFORNIA AVE CHICAGO IL 60618

NAME: SYS-E SOUND-2 BD SCHEMATIC

SCALE: -/-
SHT 4 OF 7
PART NO: 16-9044
REV: -

16-9044

REV	DESCRIPTION OF CHANGE	ENG NO DATE
	NEW PART RELEASE.	

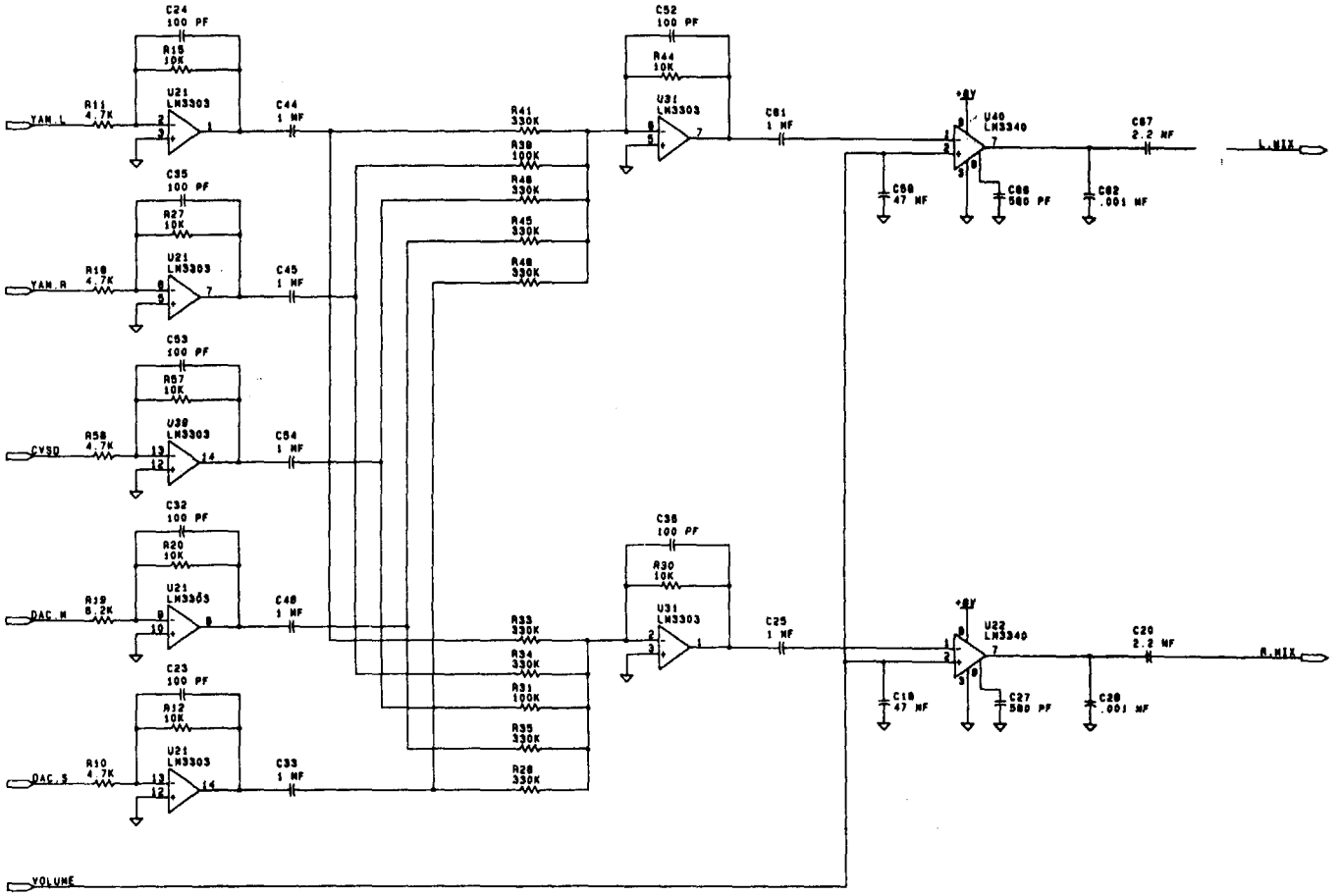

ITEM	PART NUMBER	DESCRIPTION	QTY	ITEM	PART NUMBER	DESCRIPTION	QTY

PROJ ENGR: G. SHIPP
DWN BY: G. SHIPP 10-13-88 DATE
CHECKED BY: DATE 11-23-88
APPROVAL: DATE 11-23-88

DO NOT SCALE WORK TO DIMENSIONS SHOWN

FIRST PROJECT NO: 3086-U1
FIRST USAGE: C-12349
QTY: —

REMOVE BURRS - BREAK SHARP CORNERS & EDGES

TOLERANCES UNLESS OTHERWISE SPECIFIED
DECIMAL — X ± .030 ANGULAR ± 1/2°
XX ± .015
XXX ± .005 FRACTIONAL ± 1/64

MATERIAL

WILLIAMS ELECTRONICS, INC.
3401 N. CALIFORNIA AVE CHICAGO IL 60618

NAME: SYS-E SOUND-2 BD. SCHEMATIC

SCALE: -/- SHT 2 OF 2 PART NO: 16-9044 REV: -

REV	DESCRIPTION OF CHANGE	ECN NO DATE
	NEW PART RELEASE	

16-9044

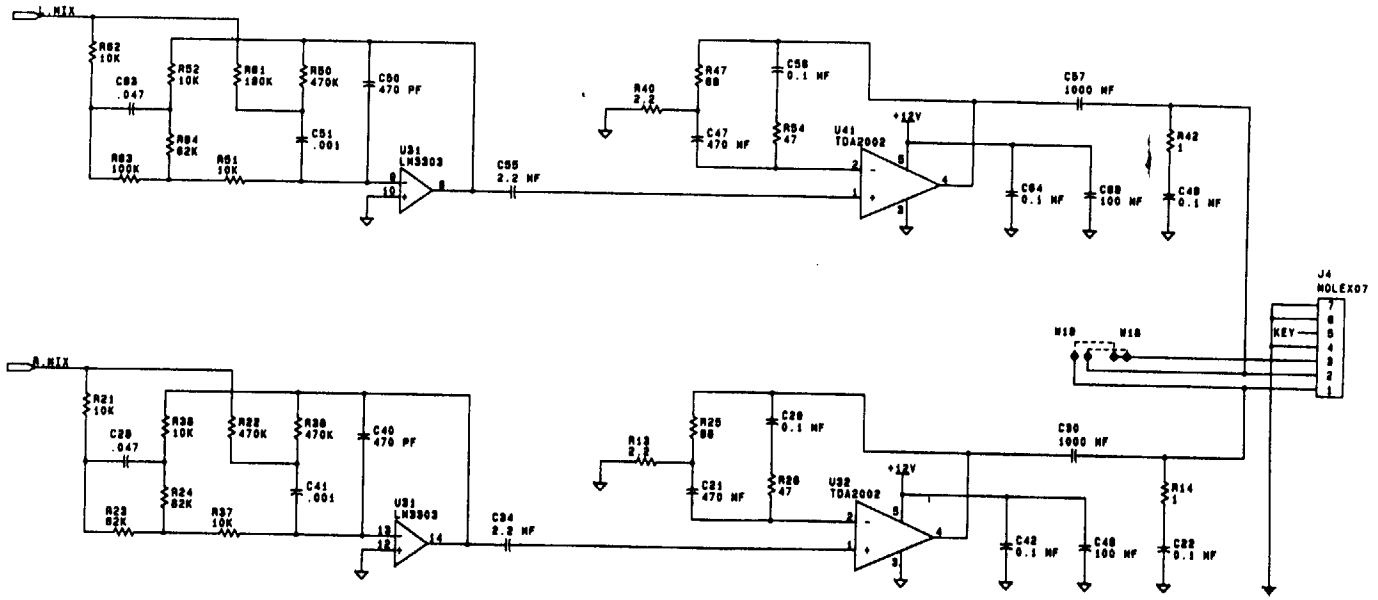

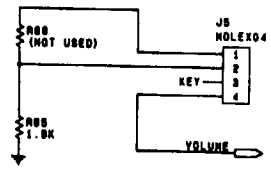

ITEM	PART NUMBER	DESCRIPTION	QTY	ITEM	PART NUMBER	DESCRIPTION	QTY

PROJ. ENGR. S.SHIPP
DWN. BY S.SHIPP 10-13-88
CHECKED BY 11-23-88
APPROVAL 11-29-88

DO NOT SCALE WORK TO DIMENSIONS SHOWN

FIRST PROJECT NO. 3096-U1
FIRST USAGE C-12949
QTY —

REMOVE BURRS-BREAK SHARP CORNERS & EDGES

TOLERANCES UNLESS OTHERWISE SPECIFIED
DECIMAL .XX ±.010 ANGULAR ±1/2°
.XXX ±.005 FRACTIONAL ±1/64

MATERIAL

WILLIAMS ELECTRONICS, INC.
3401 N. CALIFORNIA AVE CHICAGO IL 60618

NAME SYS-2 SOUND-2 BD. SCHEMATIC

SCALE -/- SHT 1 OF 2 PART NO 16-9044 REV -

16-9044

REV	DESCRIPTION OF CHANGE	ECN NO DATE
	NEW PART RELEASE	

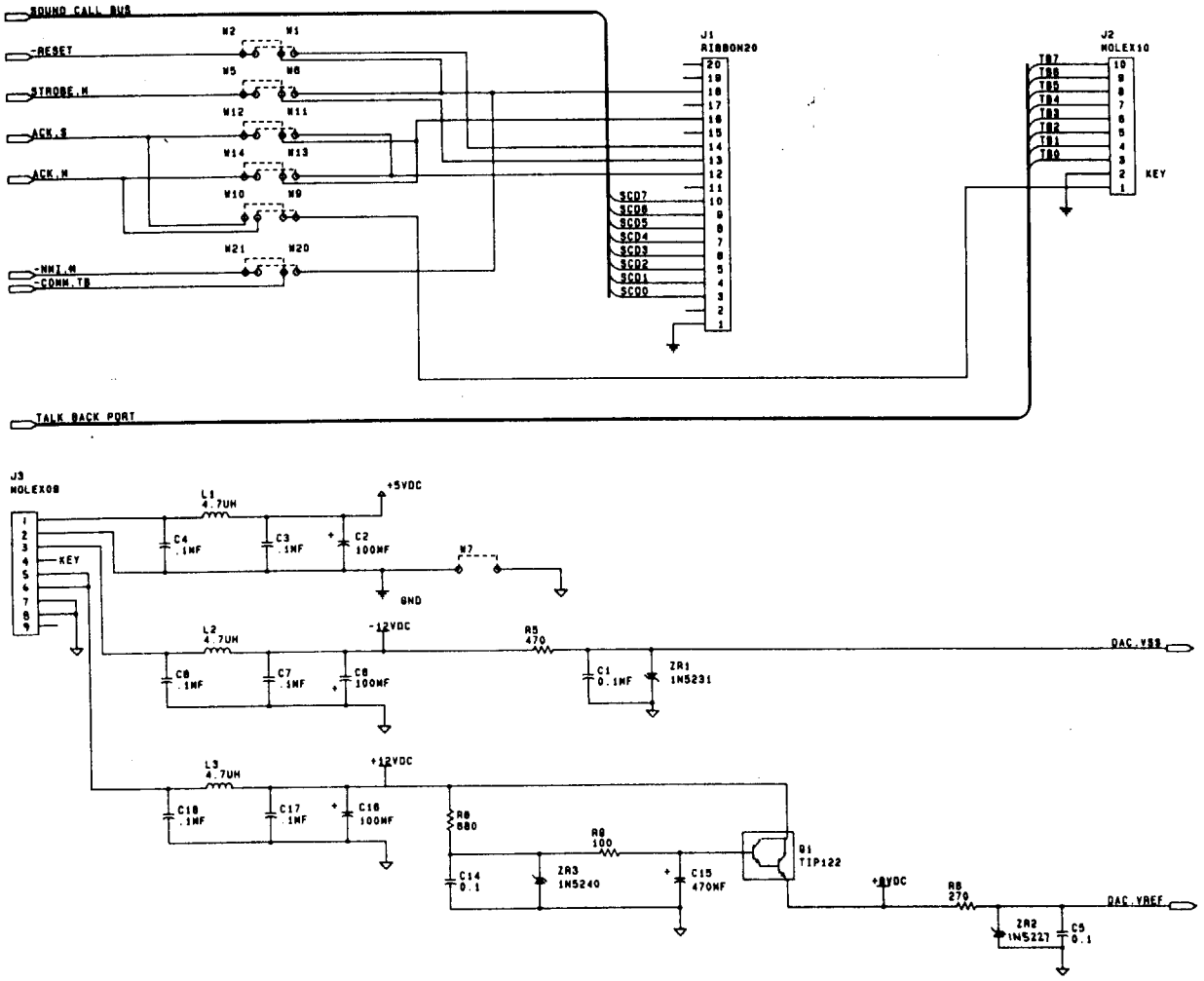

ITEM	PART NUMBER	DESCRIPTION	QTY	ITEM	PART NUMBER	DESCRIPTION	QTY

PROJ ENGR: G.SHIPP
DWN BY: G.SHIPP 10-19-88
CHECKED BY: DATE 11-23-88
APPROVAL: DATE D.W 11-23-88
FIRST PROJECT NO: 5036-01
FIRST USAGE: C-12549
QTY: —

DO NOT SCALE WORK TO DIMENSIONS SHOWN

REMOVE BURRS - BREAK SHARP CORNERS & EDGES

TOLERANCES UNLESS OTHERWISE SPECIFIED
DECIMAL — X ±.030 ANGULAR ±1/2°
XX ±.010
XXX ±.005 FRACTIONAL ±1/64

MATERIAL

WILLIAMS ELECTRONICS, INC.
3401 N CALIFORNIA AVE CHICAGO IL 60618

NAME: SYS-7 SOUND-2 BD. SCHEMATIC

SCALE: -/- SHT 1 OF 1 PART NO 16-9044 REV -

REV	DESCRIPTION OF CHANGE	ECN NO DATE
	NEW PART RELEASE	19100 5-18-88

C-12218

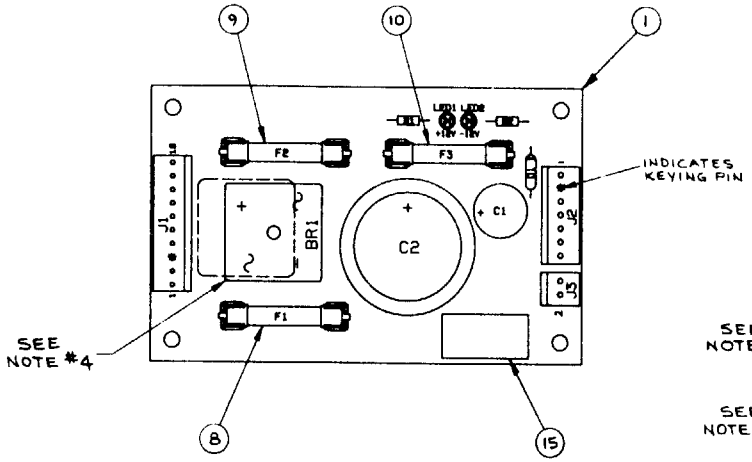

ITEM	PART NO.	PART DESIGNATION	DESCRIPTION	QTY.
15	16-8850-216		LABEL, PCB IDENT.	1
14	5791-10862-10	J1	CONN., 10-PIN MOLEX, .156" CENTER PINS	1
13	5791-10862-07	J2	CONN., 7-PIN MOLEX, .156" CENTER PINS	1
12	5791-10862-02	J3	CONN., 2-PIN MOLEX, .156" CENTER PINS	1
SEE NOTE #3 11	5733-12060-01	F1, F2, F3	FUSEHOLDER	3
10	5730-09797-00	F3	FUSE, 0.75A, 250V	1
SEE NOTE #2 9	5731-09432-00	F2	FUSE, 7A SB, 250V	1
8	5731-10356-00	F1	FUSE, 3A SB, 250V	1
7	5040-12313-00	C2	CAPACITOR, ELECT., RAD., 1500 MFD. 25V.	1
6	5040-12314-00	C1	CAPACITOR, ELECT., RAD., 2200 MFD. 25V.	1
5	5671-09019-00	LED1, LED2	LIGHT EMITTING DIODE, RED	2
4	5100-09418-00	BR1	BRIDGE RECTIFIER, 35V.	1
3	5070-06258-00	D1	DIODE, IN4001	1
2	5010-09314-00	R1, R2	RESISTOR, C.F., 1.2K 5% 1/4 WATT	2
1	5773-12309-00		BARE PC BOARD	1

BILL OF MATERIALS

NOTES:
1. FOR SCHEMATIC, REFER TO DRAWING NO. 16-9037.
2. ALL FUSES TO BE INSTALLED AFTER SOLDER WASH.
3. EACH FUSEHOLDER CAN BE SUBSTITUTED WITH 2 FUSE CLIPS PT. NO. 5732-09178-00.
4. BR1 MUST BE MOUNTED 1/8" ABOVE SURFACE OF PCB.

PROJ ENGR: M. LOFFREDO
DWN BY: R. C. 5/10/88 DATE
CHECKED BY: DATE 5/11/88
APPROVAL: DATE 5/11/88
DO NOT SCALE WORK TO DIMENSIONS SHOWN
FIRST PROJECT NO: 3036-U
FIRST USAGE: C-12259 QTY: 1
REMOVE BURRS - BREAK SHARP CORNERS & EDGES
TOLERANCES UNLESS OTHERWISE SPECIFIED
DECIMAL — X ± .030 ANGULAR ± 1/2°; XX ± .010; XXX ± .005 FRACTIONAL ± 1/64
MATERIAL: NONE

WILLIAMS ELECTRONICS, INC.
3401 N CALIFORNIA AVE CHICAGO IL 60618
NAME: SYS-Z 12 UNREG P/S ASSY
SCALE: 1/1 SHT 1 OF 1
PART NO: C-12218 REV: -

REV	DESCRIPTION OF CHANGE	ECN NO DATE
	NEW PART RELEASE	19100 5-18-88

16-9037

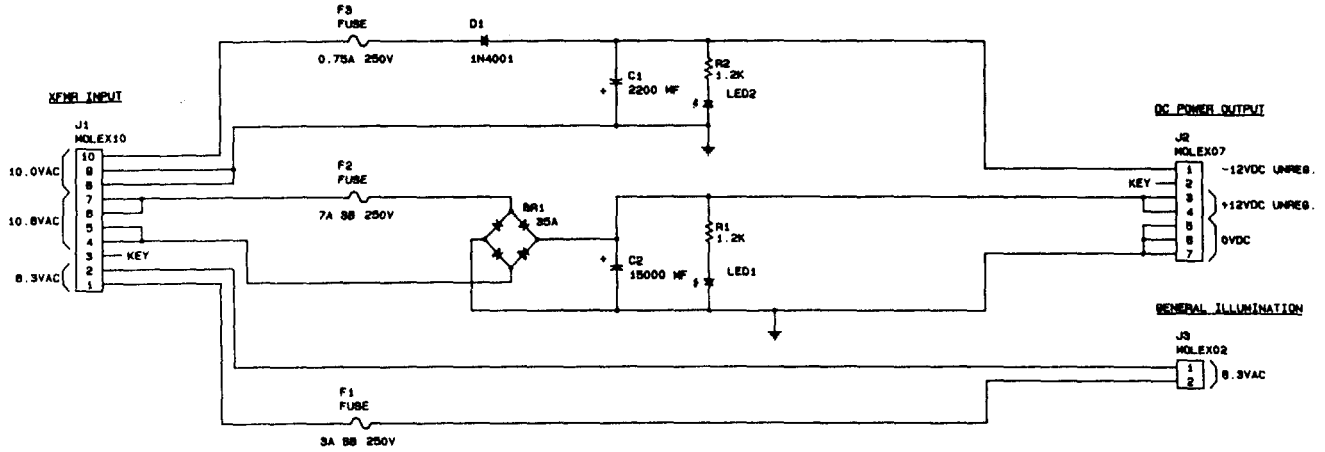

ITEM	PART NUMBER	DESCRIPTION	QTY	ITEM	PART NUMBER	DESCRIPTION	QTY

PROJ ENGR: M LOFFREDO
DWN BY: G. SHIPP 5/10/88
CHECKED BY: 5/11/88
APPROVAL: D.W 5/17/88
DO NOT SCALE WORK TO DIMENSIONS SHOWN
FIRST PROJECT NO: 3036-U
FIRST USAGE: C-12218
QTY: -

REMOVE BURRS - BREAK SHARP CORNERS & EDGES

TOLERANCES UNLESS OTHERWISE SPECIFIED
DECIMAL — X ± .030 ANGULAR ±1/2°
XX ± .015
XXX ± .005 FRACTIONAL ±1/64

MATERIAL

WILLIAMS ELECTRONICS, INC.
3401 N CALIFORNIA AVE CHICAGO IL 60618

NAME: 12 UNREG P/S BD., SCHEMATIC

SCALE: -/-
SHT 1 OF 1
PART NO: 16-9037
REV: -