PO748297
Book 2 of 2

Revision history

October 31, 1993

This is a new document for XI 1 release 19.

Contents

Introduction **1**

Defining the Clock Controller 2

Why networks use Clock Controllers 2

Synchronization methods 2

Hierarchical synchronization 3

Frame slip 5

Determining network configuration 5

Otherdocuments 8

Clock Controller operation **9**

Clock operation 9

Tracking mode 9

Free run (nontracking) mode 9

Holdovermode 10

Reference clock errors 10

Automatic clock recovery 12

Automatic clock switching 12

Clock Controller installation **13**

Determining slots and shelves 14

Replacing a Clock Controller 17

Installing a Clock Controller 17

Starting the Clock Controller 17

Clock Controller commands 18

Installing the Clock Controller in a single group 21

Cabling requirements 25
NT8D74 Clock Controller to InterGroup cable 25
NT8D75 Clock Controller to Clock Controller cable 25
NT8D79 PRI/DTI to Clock Controller cable 26

List of figures

Figure 1
Master/slave relationship 6

Figure 2
Master/slave with a secondary clock source 6

Figure 3
Star clocking arrangement 7

Figure 4
Clock Controller primary and secondary tracking 11

List of tables

Table 1
Node accuracy and parameters . . . 4

Table 2
Clock Controller shelves and slots 14

Table 3
Clock Controller switch settings for QPC47 1 vintage A . . 15

Table 4
Clock Controller switch settings for QPC47 1 vintages B through G . 15

Table 5
Clock Controller switch settings for QPC47 I vintage H 16

Table 6
Clock Controller switch settings for QPC775 16

Introduction

During digital data transmission, all members of the communication network must transmit and receive at the same frequency to minimize data loss and error. To attain a satisfactory level of accuracy. Meridian 1 systems use Clock Controllers to synchronize operations.

This document discusses Clock Controllers, focusing on installation and replacement procedures. This introduction provides background information about the purpose and function of Clock Controllers for readers who may be unfamiliar with the devices.

Clock Controllers commonly work in conjunction with the Digital Trunk Interface (DTI) and Primary Rate Interface (PRI) cards. The dual-CPU systems (NT, XT, XN, options 61.71, and 81) are shipped with two clock controllers (one Clock Controller for each CPU). Single CPUs also require a Clock Controller when DTI or PRI is configured.

Analog applications do not require a Clock Controller.

Defining the Clock Controller

Clock Controllers synchronize the system clock rate with the clock rates of digital switching and transmission equipment over a T1 circuit. Dual-CPU systems have two Clock Controllers: CC0 (associated with CPU 0) and CC1 (associated with CPU 1). One Clock Controller is the primary and the other is a backup.

The standard Meridian 1 Clock Controller is the **QPC471,** currently available in vintages C, D, E, F, G, and H. Option 81 must use vintage H.

Customers outside the United States can use the QPC775. Vintage A of the QPC775 can be used with nonnetworked systems (systems linked directly to a central office); vintage B is appropriate for networked systems (Meridian 1 to Meridian 1 configurations). Customers with option 81 systems must use QPC775 vintage C.

Note: A system cannot use both the QPC471 and the QPC77.5. A system can mix Clock Controller vintages A through G. A vintage H Clock Controller can be used only with another vintage H Clock Controller.

Why networks use Clock Controllers

Both ends of a digital communication link must operate at the same data rate. If link synchronization is not established, data bit slips can occur resulting in a loss of data. Synchronized timing is essential for reliable digital data transfer.

Synchronization methods

When two Meridian 1 switches are connected to one another, one system can derive its timing from the other in a master/slave mode. In a larger network, the digital systems must use one of two synchronization methods:

- Nodal clocks can run independently at the same nominal frequency. Frequency differences among clocks result in frame slips, although the number and magnitude of slips can be minimized by using stable clocks and dynamic buffers that can absorb a limited number of data bits.
- Nodal clocks can be automatically locked to an external reference clock: the central office (CO) or another Meridian 1. This method is recommended; it eliminates frame slips if dynamic buffers are large enough to compensate for transmission variances.

Hierarchical synchronization

The primary timing reference in North America is based on a cesium beam atomic clock. The digital network in the United States, for example, is divided into two regions (one in St. Louis, the other in Boulder, Colorado), each with its own cesium atomic clock. Any DS-1 signal leaving these switches is synchronized to the cesium oscillators. Every digital node should be linked to one of the cesium atomic clocks.

In the North America digital network, a priority master/slave method is the basis for node synchronization. The telecommunications industry in the United States adheres to a four-level categorization: stratum 1, stratum 2, stratum 3, and stratum 4. The Canadian node category A is equivalent to the U.S. stratum 1 (the Canadian cesium clocks are located in Calgary and Ottawa); categories B and C are equivalent to stratum 2; category D is equivalent to stratum 3; and category E is equivalent to stratum 4.

- Stratum 1, the atomic standard, provides the highest level of accuracy.
- Stratum 2 clocks are typically used in large digital switching systems, such as a toll office.
- Stratum 3 clocks help synchronize CO and PBX operations. The Meridian 1 Clock Controllers adhere to this standard.
- Stratum 4 clocks are the least accurate.

Table 1 shows the parameters required for nodes that conform to each stratum.

Table 1
Node accuracy and parameters

	Stratum 2	Stratum 3	Stratum 4
Accuracy	+/– $1.6 * 10^{-8}$ Hz	+/– $4.6 * 10^{-6}$ Hz	+/– $3.2 * 10^{-5}$ Hz
Holdover	$1 * 10^{-10}$ per day	<=255 frame slips in first 24 hours	Not required
Hardware duplication	Required	Required; nonduplicated clock hardware that meets other stratum 3 requirements is referred to as stratum 3ND.	Not required
MTIE during rearrangement	MTIE≤1 usec Phase Change Slope: ≤81 ns in any 1.326 msec	MTIE≤1 usec Phase Change Slope: ≤81 ns in any 1.326 msec	Not required; stratum 4 hardware that meets MTIE requirements during rearrangements is referred to as 4E
Pull-in range	$3.2 * 10^{-8}$ Hz	$9.2 * 10^{-6}$ Hz	$6.4 * 10^{-5}$ Hz
Dedicated timing required	Required	Required	Not required

When the Meridian is used in a hierarchical digital network, each clock accepts synchronization from the external master clock designated as a higher-level source. The individual clocks help synchronize lower-level clocks. If the network connection fails, clocks receive synchronization signals from the highest available source.

Frame slip

A *frame slip* is the repetition or deletion of the 193 data bits of a DS-1 frame results from a discrepancy between buffer read and write rates. When data bits write to the buffer faster than they are being read, the buffer overflows: this is a slip-frame deletion. When data bits are read faster than they are written, the buffer runs dry: this is a slip-frame repetition.

Slippage can affect data as follows:

- encrypted text: encryption key must be present
- video: freeze frame for several seconds; loud pop on audio
- digital data: deletion or repetition of data; possible misframe

  facsimile: deletion of 4-8 scan lines; drop call
- voice band data: transmission errors for 0.01 to 2 seconds; drop call

  voice: possible click

Determining network configuration

In a master/slave network, the master clock should be the highest stratum clock. If there is more than one clock at this level, the clock with the most connections to other clocks should be the master. If two or more clocks have the same number of connections, the most reliable clock should be the master.

The configuration should avoid timing loops, which occur when a clock uses a signal that can be traced to the output of that clock. Closed timing loops on the primary clock are not permitted as they lead to frequency instability. Timing loops are sometimes unavoidable on the secondary clock reference source.

All central office/system links used as clock references should be traceable to the same stratum 1 clock source.

The most common network configuration uses a master Clock Controller that synchronizes the other (slave) Clock Controllers. The master can link directly to all the slaves, or it can be associated with them in a hierarchical relationship. Figure 1 shows an example of a simple master/slave operation.

Figure 1
Master/slave relationship

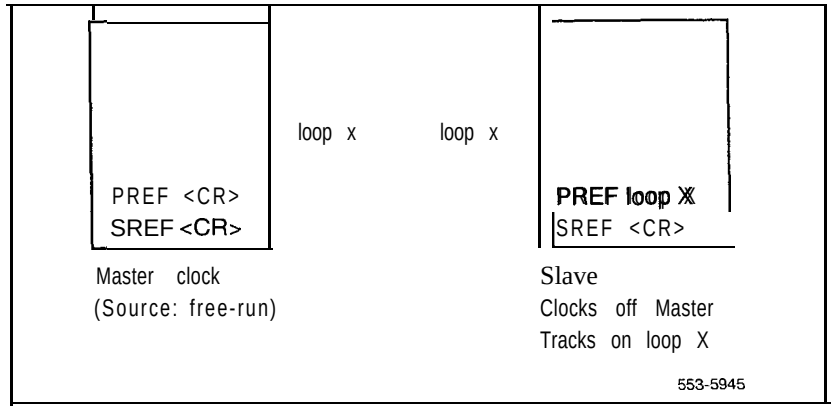

For tie lines between systems connected to a central office, the system, not the CO, establishes the clocking.

As Figure 2 shows, when a secondary digital loop is available, it can be used as a secondary clock source if the primary source fails.

Figure 2
Master/slave with a secondary clock source

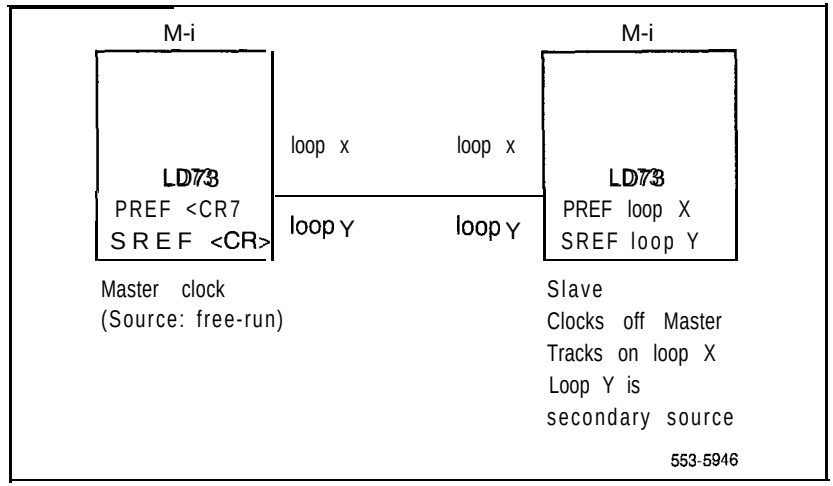

Figure 3 shows a star arrangement: one hub system is linked to the central office. All other systems are connected as slaves. If a second system digital loop from the hub system is available, it can be used as a secondary clock source if the primary source fails.

Figure 3
Star clocking arrangement

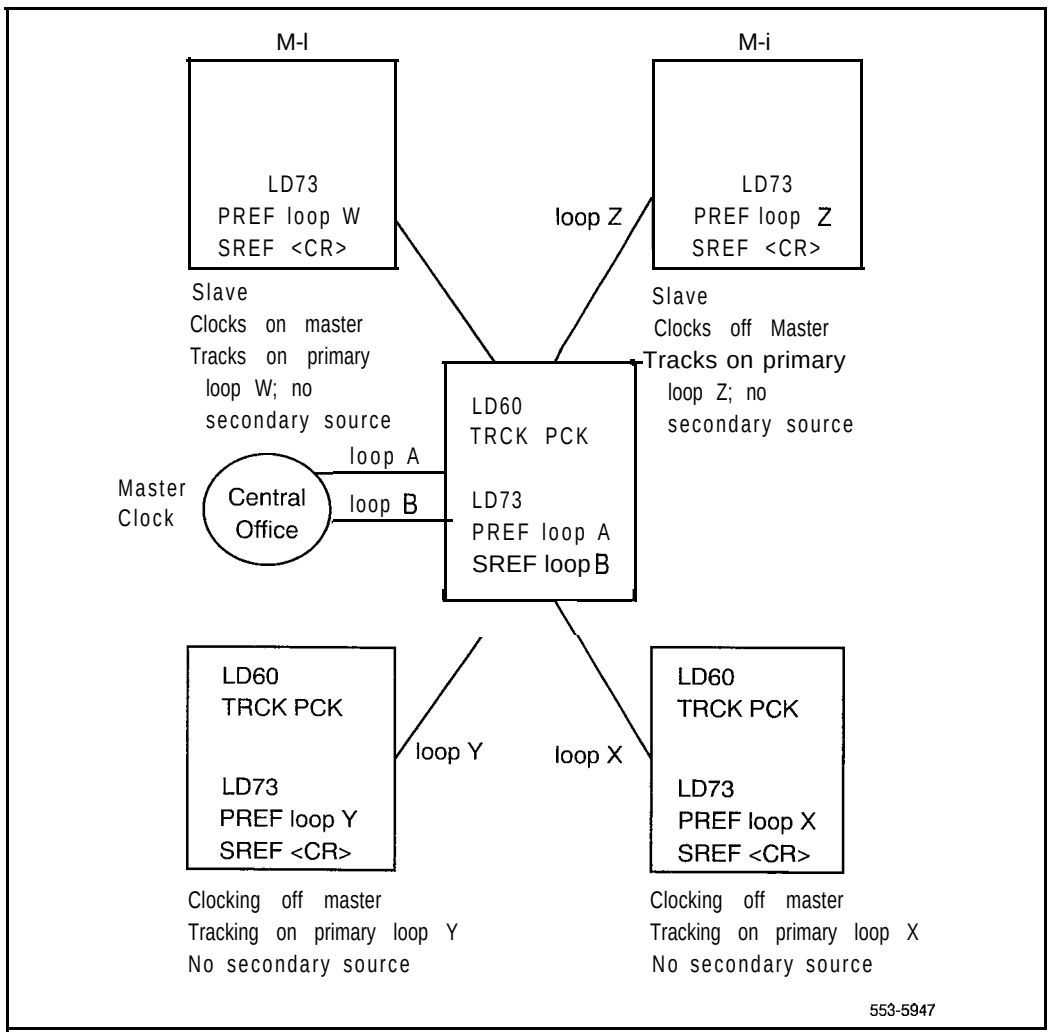

A small network can use a mutual synchronization structure, in which all members can receive synchronization signals from the others.

In another configuration, systems operate independently, each clocking off its own central office master clock. The systems use loops that interconnect them as secondary clocking sources. In this configuration, all central offices must have a path to the same stratum 1 source.

The previous figures indicate the LD60 and LD73 software commands required to set up the system. For more information, see "Clock Controller commands" on page 18.

Other documents

Refer to the following documents to learn more about the systems environment for Clock Controllers:

- *Digital Trunk Interface/Computer-to-PBX Interface installation and data administration* (553-2811-200)
- *ISDN Primary Rate Interface installation* (553-2901-200)
- *X11 input/output guide (553-3001-400)*

Clock Controller operation

This chapter describes basic principles of clock operation, with a discussion of operating modes, error handling, and recovery principles.

Clock operation

There are two types of clock operation for vintages A through F: tracking mode and free run mode. Vintages G and H have three possible modes: tracking, free run, and holdover.

Tracking mode

LD73 defines the digital loop (or loops) supplying an external clock reference to a Clock Controller. If two loops are defined, one is the primary reference source for clock synchronization, the other a secondary reference source that backs up the primary reference.

A dual-CPU system can have two Clock Controllers (CC0 and CC1), a primary and a backup. Each is completely locked to the reference clock as shown in Figure 4.

Free run (nontracking) mode

The clock synchronization for a digital loop can operate in free run mode if

- no loop is defined as a primary clock reference
- the primary and secondary references are disabled
- the primary and secondary references are in red (local) alarm

Holdover mode

Vintages G and H provide a holdover mode that retains references in case of system failure. Holdover mode remembers the last Clock Controller position and restores references upon system restart to maximize synchronization accuracy.

Reference clock errors

The Meridian 1 auditing software checks every 15 minutes to see if a Clock Controller or reference clock error has occurred. Reference clock errors typically result from problems with the clock driver or with the reference system clock at the far end.

In tracking mode, one active Clock Controller tracks a single reference clock. If a Clock Controller error is detected on dual-CPU systems, the system switches to the backup Clock Controller. Figure 4 illustrates the primary and secondary tracking functions.

Figure 4
Clock Controller primary and secondary tracking

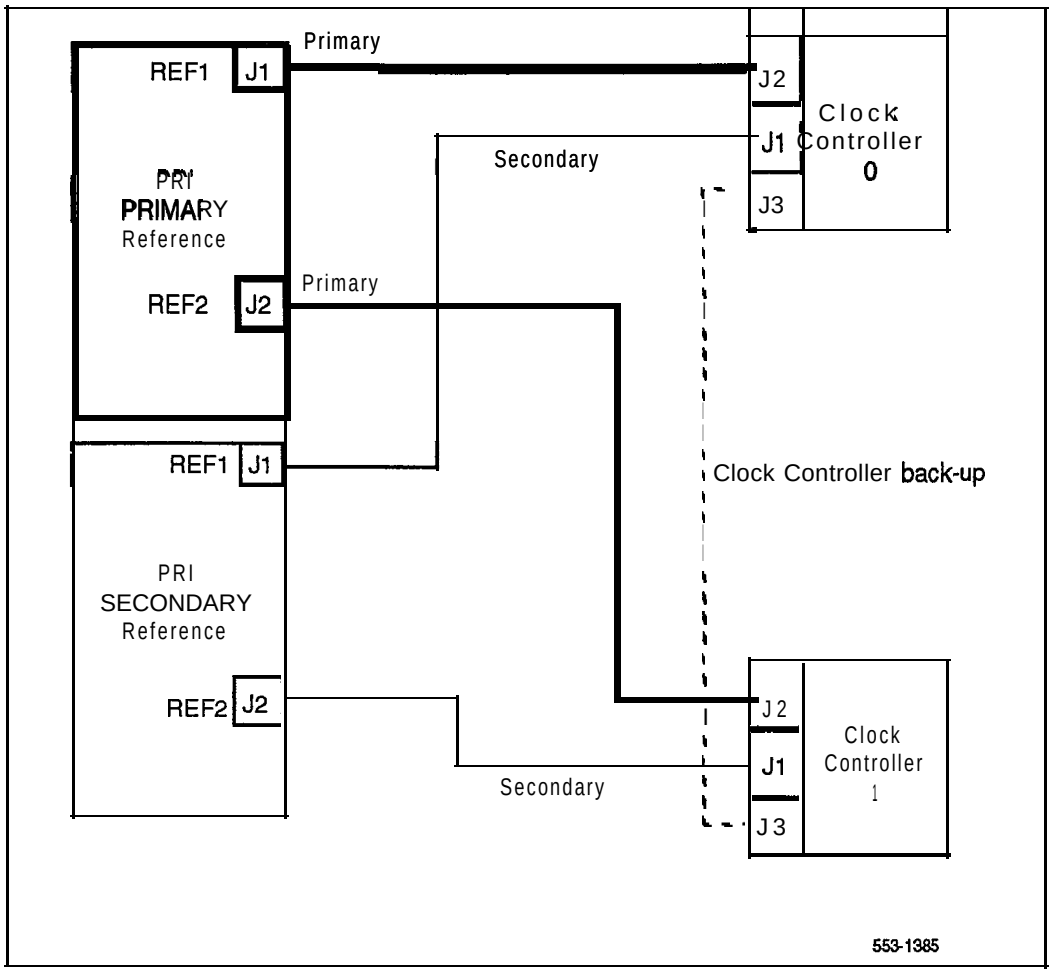

Automatic clock recovery

A red (local) alarm disables a loop. After loop recovery, the loop restarts and automatic clock recovery restarts the clocking devices.

- If the loop is assigned as the primary reference clock but the Clock Controller is tracking on the secondary reference or in free run mode, it is restored to tracking on primary.
- If the loop is assigned as the secondary reference clock but the Clock Controller is in free run mode, it is restored to tracking on secondary.
- If the 15-minute clock check indicates the system is in free run mode, the primary reference clock, if defined, resumes tracking.
- If the primary reference is disabled or in red (local) alarm, the secondary reference clock, if defined, assumes the tracking responsibilities.

A system deliberately set to free run resumes tracking on a reference clock at this time unless the clock-switching option has been disabled (LD60, command MREF) or the reference clock is undefined in the database.

In X11 release 14, the EREF command in LD60 enables the automatic recovery after LD70 has been used to set AUTO=YES. With X11 release 15 and later, set AUTO=YES in LD73; the EREF command is not required.

Automatic clock switching

Automatic changes in tracking may occur when clock recovery is enabled. Normally, the primary reference clock resumes tracking. If the assigned primary reference clock is not available, the secondary reference clock assumes tracking responsibilities. If the secondary reference clock cannot provide tracking, the system switches to free run.

Clock Controller installation

There are three steps to installing a Clock Controller:

1 Determine the location of the Clock Controller card (shelf and slot).

2 Set the switches on the card.

3 Insert the card and connect the cables. This step may also entail removing an old card.

This chapter describes this process.

CAUTION

Do not deviate from the procedures described in this section, as deviation stops call processing.

Determining slots and shelves

The Clock Controller card installation site varies from system to system. Table 2 shows the systems, the shelves used, and the available slot or slots.

Table 2
Clock Controller shelves and slots

System	Shelf	Slot(s)
ST, STE	CE	5–12
MS	CE	9
RT	network	1 3
N, NT, 51	QSD39 network (LH) QSD40 network (RH)	1 3 2
XN	QSD17 CPU	1 4
XT	QSD62	1 5
21, 21E	NT8D11 CE	4-5
61	NT6D39 CPU/NET	9
71	NT8D34 CE Cube	14
81	core	6

Before installing a Clock Controller, set the switches as shown in Table 3, Table 4, Table 5, and Table 6. Tables 3-5 display the settings for different vintages of the QPC471. Table 6 shows the settings for the QPC775.

Table 3
Clock Controller switch settings for QPC471 vintage A

System	Switch	Setting
N, NT, RT	SW2	ON
XN, XT	SW2	OFF
Vintage A applies only to these systems		

Table 4
Clock Controller switch settings for QPC471 vintages B through G

System	Switch	Setting
ST, STE, 21, 21A, 21 E	SW1 SW2 Jumper Plug Jl Jumper Plug J2	ON OFF TP8-9 TP11–TP12
MS	SW1 SW2 Jumper Plug Jl Jumper Plug J2	ON ON TP9–TP10 TP12–TP13
N, NT, RT, 51, 61	SW1 SW2 Jumper Plug Jl Jumper Plug J2	ON OFF TP8–TP9 TP11–TP12
XN, XT, 71	SW1 SW2 Jumper Plug Jl Jumper Plug J2	OFF OFF TP8–TP9 TP11–TP12

Table 5
Clock Controller switch settings for QPC471 vintage H

System	SW1				SW2				SW4			
ST, STE, 21A, 21, 21E	on	on	on	on	off	off	off	off	off	off	off	off
MS, SN	on	on	on	on	on	on	on	on	off	off	off	off
RT, N, NT, 51, 61	on	on	on	on	off	off	off	off	off	on	*	*
XN, XT, 71, 81	oft	off	off	off	off	off	off	off	off	on	*	*
Cable length between the J3 faceplate connectors:												
O-4.3 m (O-l 4 ft)											off	off
4.6–6.1m (15-50 ft)											off	on
6.4–10.1m (21-33 ft)											on	off
10.4-I 5.2 m (34-50 ft)											on	on

• If there is only one Clock Controller card in the system, set to OFF. If there are two Clock Controller cards, set to match the cable length between the J3 faceplate connectors. Determine the total cable length (no single cable can exceed 25 ft) between the J3 connectors. Both cards must have the same setting.

Table 6
Clock Controller switch settings for QPC775

System	SW2	SW3	SW4
N, NT, RT, ST, STE, 21, 21A, 21E, 51, 61	ON	OFF	ON
MS, SN	ON	ON	OFF
XN, XT, 71, 81	OFF	OFF	ON

Replacing a Clock Controller

See step 2 in the procedure, "Installing a Clock Controller" for instructions on how to replace a card.

Do not disable an active clock or a clock associated with an active CPU.

Installing a Clock Controller

Be sure to inspect the Clock Controller card before installing it. Refer to the tables at the beginning of this chapter for shelf, slot, and switch setting information. Remember, do not use both the QPC471 and the QPC775 on a single system. QPC471 vintage H cards cannot be mixed with cards of an earlier vintage.

Starting the Clock Controller

The Clock Controller, when first enabled, is in free run mode. It stays in this mode for several minutes before being switched to tracking mode. Manual intervention is possible if the capability has been set in LD60.

For the earlier QPC471 vintages, up to 20 minutes may pass before the clock locks and tracks. The QPC471 vintage G and H cards begin tracking within 5 minutes.

Clock Controller commands

During the installation procedure, you will use some of the Clock Controller commands available in LD60. In the following list of commands, "x" refers to the Clock Controller number: 0 for the card associated with CPUO, 1 for the card associated with CPU1.

- DIS CC x: disable system Clock Controller x
- DSCK loop: disable clock for specified loop
- DSYL loop: disable yellow alarm processing for specified loop
- ENCK loop: enable clock for specified loop
- ENL CC x: enable system Clock Controller x
- ENYL loop: enable yellow alarm processing for specified loop
- EREF: enable automatic switchover of system clocks
- SSCK x: obtain status of system clock x
- SWCK: switch system clock between active and standby
- TRCK aaa: set Clock Controller track where aaa can be PCK (the primary DTI/PRI reference), SCLK (the secondary DTI/PRI reference) or FRUN (free running)

Procedure 1
Installing the Clock Controller in the ST, STE, 21, 21E, MS, N, RT, 51, and NT half group

Note: Refer to the tables in this chapter to be sure you are using the correct vintage.

1 Set the ENL/DIS toggle switch to DIS (disable) on the new circuit card.

2 If replacing an existing card, follow these steps:

- Perform a status check on the clock with the SSCK command in LD60. The new controller should have the same status.
- Disable the old card using LD60.

Note: ERR20 messages may be generated. These can usually be ignored. However, excessive clock switching should be avoided, especially when counters are near the maintenance or out-of-service thresholds. Excessive switching could generate threshold-exceeded messages or cause the PRI to be automatically disabled. Check the counters in LD60. If necessary, reset the counters using the RCNT command.

- Set the old card's faceplate ENL/DIS switch to DIS.
- Disconnect cables from the old Clock Controller card and remove it from the shelf.

Note: The Clock Controller status display in this mode indicates NO UART (no universal asynchronous receiver transmitter). Do not perform a clock status check when receiving this code.

3 Install the new Clock Controller in the selected slot.

4 Connect the cables to the new card.

- Connect the primary reference to J2.
- If applicable, connect the secondary reference to J1

5 Set the faceplate ENL/DIS switch to ENL (enable).

6 Set the error detection thresholds and clock synchronization control in LD73. (This step is optional if replacing a pack, required with a new installation.)

7 Enable the Clock Controller by entering ENL CCx in LD60.

8 To track on a primary or secondary reference clock, use LD60. The command is

TRCK PCK (for primary)
SCLK (for secondary)
FRUN (for free run)

9 Issue the SSCK command to check controller status

Installing the Clock Controller in a single group

Procedure 2
Installing the Clock Controller in the NT and 61

1 Set the faceplate ENL/DIS switch to DIS (disable) on the new circuit card.

2 If replacing an existing card, follow these steps:

- Perform a status check on the clock with the SSCK command. The new card should have the same status.
- Disable the old card using LD60. Use software to disable a card only if the card is associated with a standby CPU and is in standby state.

Note: ERR20 messages may be generated. These can usually be ignored. However, excessive clock switching should be avoided, especially when counters are near the maintenance or out-of-service thresholds. Excessive switching could generate threshold-exceeded messages or cause the PRI to be automatically disabled. Check the counters in LD60. If necessary, reset the counters using the RCNT command.

Set the old card's faceplate ENL/DIS switch to DIS.

- Disconnect the cables from the old Clock Controller card and remove it from the shelf.

Note: The Clock Controller status display in this mode indicates NO UART (no universal asynchronous receiver transmitter). Do not perform a clock status check when receiving this code.

3 If the 3PE switches have not been modified to recognize the Clock Controller card, adjust them as follows:

QSD39 (left-hand side)
SW1 OFF (OPT 61 shelf 0)
SW2 ON
SW4 OFF

QSD40 (right-hand side)
SW1 OFF (OPT 61 shelf 1)
SW2 ON
SW4 OFF
SW8 OFF

4 Set the faceplate ENL/DIS switch to DISABLE.

5 Install the Clock Controller in the selected slot.

6 Run and connect the cables.

- Connect the primary reference to J2.
- If available, connect the secondary reference to J1.
- Connect the cable between the two clocks to J3 on each controller card.

7 Set the faceplate ENL/DIS switch to ENL.

8 Enable the Clock Controller by entering ENL CC x in LD60.

9 Set the error detection thresholds and clock synchronization controls in LD73. (This step is optional in a replacement, required in a new installation.)

10 To track on a primary or secondary reference clock, use LD60. The command is

TRCK PCK (for primary)
SCLK (for secondary)
FRUN (for free run)

11 Issue the status check command, SSCK.

12 Activate the new Clock Controller with the LD60 SWCK command.

13 Repeat, if necessary, for the second Clock Controller.

Procedure 3
Installing the Clock Controller in the XN, XT, 71, and 81

Note: The option 81 system requires a vintage H Clock Controller.

1 Set the faceplate ENL/DIS switch to DIS on the new circuit card.

2 If replacing an existing card, follow these steps:

- Perform a status check on the clock with the SSCK command. The new card should have the same status.
- Disable it using LD60. Use software to disable a card only if the card is associated with a standby CPU and is in standby state.

Note: ERR20 messages may be generated. These can usually be ignored. However, excessive clock switching should be avoided, especially when counters are near the maintenance or out-of-service thresholds. Excessive switching could generate threshold-exceeded messages or cause the PRI to be automatically disabled. Check the counters in LD60. If necessary, reset the counters using the RCNT command.

- Set the old card's faceplate ENL/DIS switch to DIS.
- Disconnect the cables from the old Clock Controller card and remove it from the shelf.

Note: The Clock Controller status display in this mode indicates NO UART (no universal asynchronous receiver transmitter). Do not perform a clock status check when receiving this code.

3 Set the faceplate ENL/DIS switch to DIS.

4 Install the Clock Controller in the selected slot

5 Run and connect the cables.

- Connect the primary reference to J2.
- If available, connect the secondary reference to J1
- Connect the cable between the two clocks to J3 on each controller card.

6 Set the faceplate ENL/DIS switch to ENL.

7 Enable the Clock Controller by entering ENL CC x in LD60.

8 Set the error detection thresholds and clock synchronization controls in LD73. (This step is optional in a replacement, required with a new installation.)

9 To track on a primary or secondary reference clock, use LD60. The command is

TRCK PCK (for primary)
SCLK (for secondary)
FRUN (for free run)

10 Issue the status check command, SSCK.

11 Activate the newly installed Clock Controller with the LD60 SWCK command.

12 Repeat, if necessary, for the second Clock Controller.

Cabling requirements

Clock Controllers can require three different kinds of cable connections.

- In a single-controller system, cable QCAD130 or NT8D79xx connects QPC720/QPC472 (PRI or DTI card) to QPC471/QPC775 at J2 when DTI/PRI is the primary reference clock source.
- In a single-controller system, cable QCAD130 or NT8D79xx connects QPC720/QPC472 to QPC471/QPC775 at J1 when DTI/PRI is the secondary reference clock source.
- With dual controllers, cable QCAD125 or NT8D75xx connects the Clock Controller cards to each other at J3 in single group mode.

NT8D74 Clock Controller to InterGroup cable

This cable connects the QPC471 or QPC775 Clock Controller card to the NT8D36 InterGroup Module.

This cable is available in the following lengths:

- NT8D74AC 1.2 m (4 ft)
- NT8D74AD 1.8 m (6 ft)

NT8D74AE 2.4 m (8 ft)

NT8D74AF 3 m (10 ft) (QCAD110B)

NT8D74AJ 4.8 m (16 ft)

NT8D75 Clock Controller to Clock Controller cable

This cable connects QPC471 Clock Controller cards to each other.

This cable is available in the following lengths:

NT8D75AC 1.2 m (4 ft)

NT8D75AD 1.8 m (6 ft)

- QCAD125 10 ft

NT8D79 PRI/DTI to Clock Controller cable

This cable connects the PRI/DTI card to the QPC471 Clock C&troller card.

This cable is available in the following lengths:

- NT8D79AB 0.6 m (2 ft)
- NT8D79AC 1.2 m (4 ft)
- NT8D79AD 1.8 m (6 ft)
- NT8D79AE 2.4 m (8 ft)
- NT8D79AF 3 m (10 ft) (QCAD130)

SL-I

Digital Clock Controllers

Installation and administration

Copyright © 1993 Northern Telecom
All rights reserved.

Information subject to change without notice.
Release 1 .0
Standard
October 31, 1993
Printed in the U.S.A.

northern telecom

SL-1

Multi-purpose Serial Data Link

Description

Publication number: 553-3001-I 95
Product release: X11release 19
Document release: 2.0
Document status: Standard
Date: August 1,1993

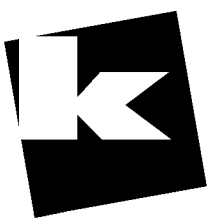

AtoZ KELLATRONICS, INC.

tel: 800.766.3425 fax: 800.720.1172
818.773.8888 818.773.8899

www.kellatronics.com info@kellatronics.com

© 1992 Northern Telecom
All rights reserved.

Revision history

December 31, 1992

This document is issued for X 11 release 18 product introduction. Revision bars are omitted.

August 1, 1993

This document is issued to include updates for Xl 1 release 19. Changes are noted with revision bars in the margins.

Contents

Introduction 1
Document Overview 1
About MSDL 1
Other documentation 2
Hardware 2
Architecture 5
CPU bus interface 5
Micro Processing Unit (MPU) 5
Memory 6
Serial interface 6
MSDL operations 7
Data flow 10

Engineering guidelines 11
Available network card slots 11
Meridian 1 card mix 11
Addressdecoding 12
Port specifications 13
Implementation guidelines 17
Environmental and power requirements 17

Installation 19

Device number 19
MSDL interfaces 19
Installing the MSDL card 21
Cable requirements 22
Cable installation 24
MSDL planning form 26

Maintenance 27

MSDL states 27
Manually disabled 29
Manually Enabled 29
System disabled 29

Maintaining the MSDL 31
System controlled maintenance 31
Manually controlled maintenance 32
Manually Isolating and correcting faults 34

Replacing MSDL cards 36

Symptoms and actions 37

Troubleshooting actions 37

System disabled actions 38

List of figures

Figure 1
Card connection examples 3

Figure 2
MSDL component layout 4

Figure 3
MSDL block diagram 8

Figure 4
MSDL functional block diagram 9

Figure 5
MSDL switch setting example 20

Figure 6
MSDL cabling 22

Figure 7
MSDL states 28

List of tables

Table 1
MSDL card location 12

Table 2
Synchronous interface specifications 13

Table 3
Asynchronous interface specification 14

Table 4
RS-232 interface pin assignments 15

Table 5
RS-422 interface pin assignments 16

Table 6
Environmental requirements 17

Table 7
MSDL power consumption 18

Table 8
MSDL interface switch settings 20

Table 9
Cable types 23

Introduction

The Multi-purpose Serial Data Link card facilitates smooth communication between the Meridian 1 system and peripheral devices or D-channels.

Document Overview

This document describes the Multi-purpose Serial Data Link (MSDL) card. This card provides multiple interface types with four full-duplex serial I/O ports that can be independently configured for various operations. Peripheral software downloaded to the MSDL controls functionality for each port. Synchronous operation is permitted on all MSDL ports. Beginning with X 1 1 release 19, port 0 can be configured as an asynchronous Serial Data Interface (SDI).

About MSDL

An MSDL card occupies one network card slot in the Meridian | Network, CPU/Network, or CE/PE Module and communicates with the CPU over the CPU bus and with I/O equipment over its serial ports. It can coexist with other cards that support the same functions. For example, three cards supported with the MSDL (NT6D80) are QPC757 (DCHI), QPC513 (ESDI), and QPC841 | (SDI).

Though the MSDL is designed to coexist with other cards, the number of ports supported by a system equipped with MSDL cards is potentially four times greater than when using other cards. Since each MSDL has four ports, representing a single device, a Meridian | can support as many as 16 MSDL cards with a maximum of 64 ports.

MSDL cards are supported on Meridian | systems running X | | release 18 and later.

Other documentation

For complete discussions of other interface cards, refer to the correct documentation.

- *QPC513 Enhanced Serial Data Interface Card description* ***(553-2201-192)***
- *QPC841 Quad Serial Data Interface Card description* (553-2201-195)
- *NT8D41 Serial Data Interface Paddle Board description* (553-3001-181)

For information regarding D-channel, Application Module Link, and Xl 1 features, refer to the following documents.

- *ISDN Primary Rate Interface description and administration* (553-2901-100)

  Xl I input/output guide (553-3001-400)

- *Meridian Link description* (553-3201-110)

To read about the Serial Data Interface (SDI) and Single Terminal Access (STA) features available with the MSDL, see *X11 system management application* (553-3001-301).

Figure 1 shows connection examples, and the number of ports provided by an MSDL, a DCHI, and an ESDI card.

Hardware

The MSDL card is a standard size Meridian 1 circuit card that occupies one network card slot and plugs into the module's backplane connector to interface with the CPU bus and to connect to the module's power supply. On the faceplate, the MSDL provides five connectors, four to connect to I/O operations and one to connect to a monitor device that monitors MSDL functions. Figure 2 illustrates major MSDL components and their location on the printed circuit card.

> ***Note:*** Switches S9 and S10 are configured to reflect the device number set in LD17 (DNUM). S9 designates tens, and S10 designates ones. For example, set device number 14 with S9 at 1, and S10 at 4

Figure 1
Card connection examples

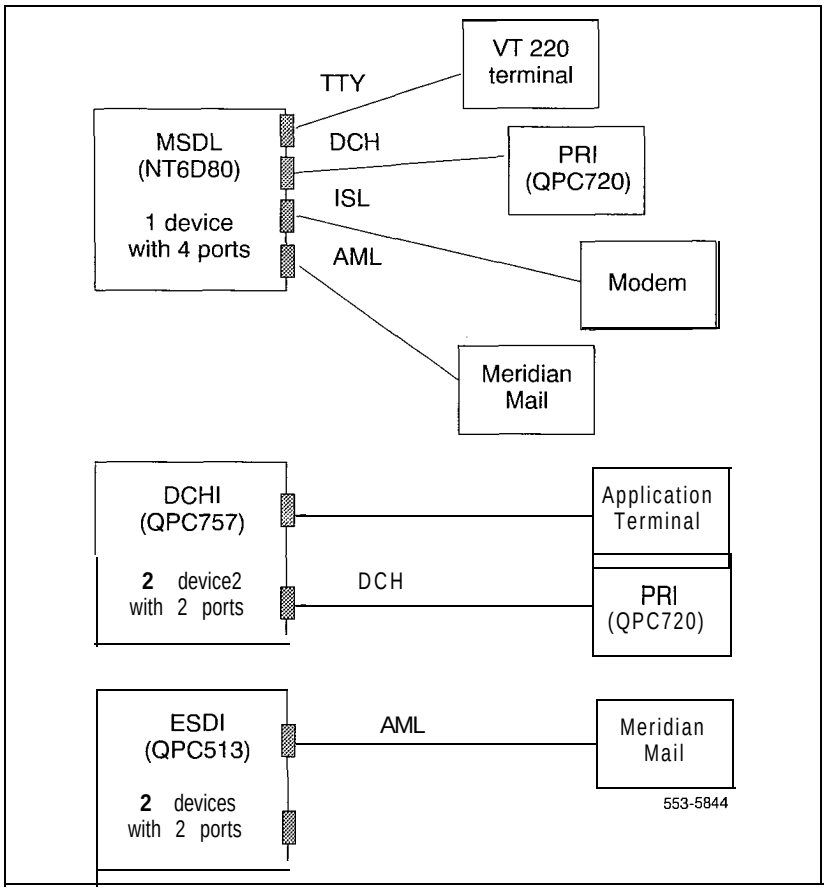

Figure 2
MSDL component layout

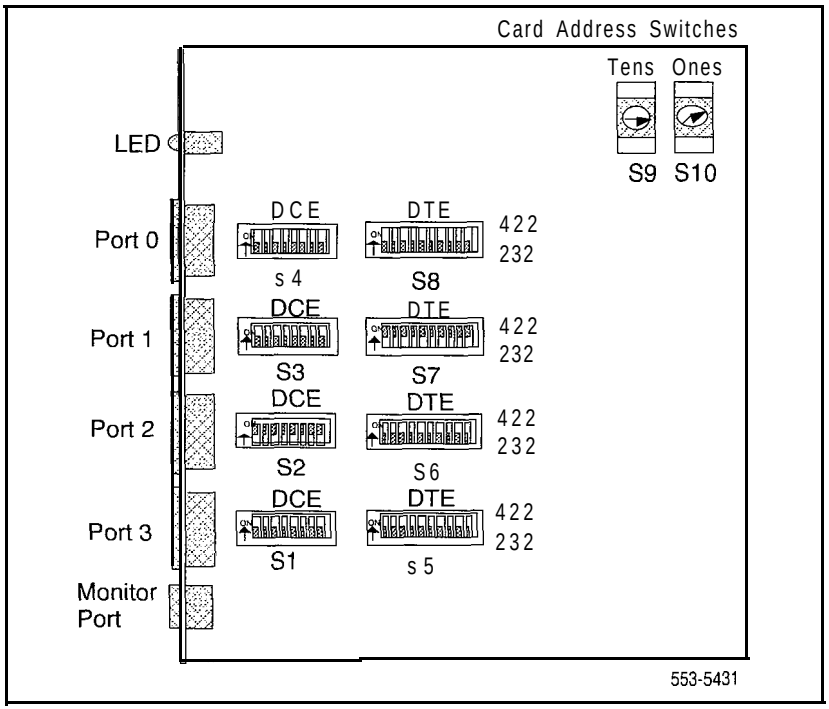

Architecture

Two processing units serve as the foundation for the Meridian 1/MSDL operation: the Meridian 1 Central Processing Unit (CPU) and the MSDL Micro Processing Unit (MPU). Meridian 1 software, MSDL firmware, and peripheral software control MSDL parameters. Peripheral software downloaded to the MSDL controls MSDL operations.

The MSDL card's firmware and software:

- communicates with the Meridian 1 CPU to report operation status,
- receives downloaded peripheral software and configuration parameters
- coordinates data flow in conjunction with the CPU
- manages data link layer and network layer signaling that controls operations connection and disconnection
- controls operation initialization and addressing
- sends control messages to the operations

CPU bus interface

The CPU bus transmits packetized information between the Meridian 1 CPU and the MSDL MPU. This interface has a 16-bit data bus, an 18-bit address bus, and interrupt and read/write control lines.

Shared Random Access Memory (RAM) between the Meridian 1 CPU and the MSDL MPU provides an exchange medium. Both the Meridian 1 CPU and the MSDL MPU can access this memory.

Micro Processing Unit (MPU)

The MPU, which is based on a Motorola 68020 processor, coordinates and controls data transfer and port addressing, communicating via the CPU bus with the Meridian 1. Prioritized interrupts tell the MPU which tasks to perform.

Memory

The MSDL card contains two Megabytes of Random Access Memory (RAM), for storing downloaded peripheral software that controls MSDL port operations. The MSDL card includes the shared RAM that is used as a communication interface buffer between the CPU and the MPU.

The MSDL Flash Erasable Programmable Read Only Memory (Flash EPROM) also includes the peripheral software to protect it against a power failure or reset. MSDL can copy peripheral software directly from the Flash EPROM after power up or reset instead of requesting that the Meridian 1 CPU download it.

The MSDL card also contains Programmable Read Only Memory (PROM) for firmware that includes the bootstrap code.

Serial interface

The MSDL card provides one monitor port and four programmable serial ports that can be configured for various interfaces, and combinations of interfaces.

synchronous port O-3

asynchronous port 0 (beginning with X11 release 19)

- DCE or DTE equipment emulation mode

RS-232 or RS-422 interface

Transmission mode All four ports of the MSDL can be configured for synchronous data transmission by software. Port 0 can be configured for asynchronous data transmission for CRT, TTY, and printer applications only.

Equipment emulation mode Configure an MSDL port to emulate DCE or DTE by setting switches on the card and downloading LD17 interface parameters.

I/O port electrical interface Each MSDL port can be configured as RS-232, or RS-422 interface by setting the switches on the MSDL card. MSDL ports use Small Computer Systems Interface (SCSI) II 26 pin female connectors.

Figure 3 illustrates the MSDL functional block diagram. The MSDL card is divided into four major functional blocks:

- CPU bus interface
- Micro Processor Unit (MPU)
- Memory
- Serial interface

Figure 4 shows Meridian 1 architecture using the MSDL as an operational platform. It illustrates operation routing from the Meridian 1 CPU through the MSDL, to the I/O equipment. It also shows an example in which DCH operation peripheral software in the MSDL controls functions on ports 2 and 3.

MSDL operations

The Meridian 1 automatically performs self-test and data flow activities. Unless a permanent problem exists and the system cannot recover, there is no visual indication that they are taking place.

The Meridian 1 controls the MSDL card with software that it had downloaded. The MSDL and the Meridian 1 enable the MSDL by following these steps:

1. When the MSDL card is placed in the Meridian 1, the card starts a self-test.
2. When the MSDL passes the test, it indicates its state and L/W version to the Meridian 1. The Meridian 1 CPU checks to see if downloading is required.
3. After downloading the peripheral software, the Meridian 1 enables the MSDL.
4. MSDL applications (DCH, AML, SDI) may be brought up if appropriately configured.

Figure 3
MSDL block diagram

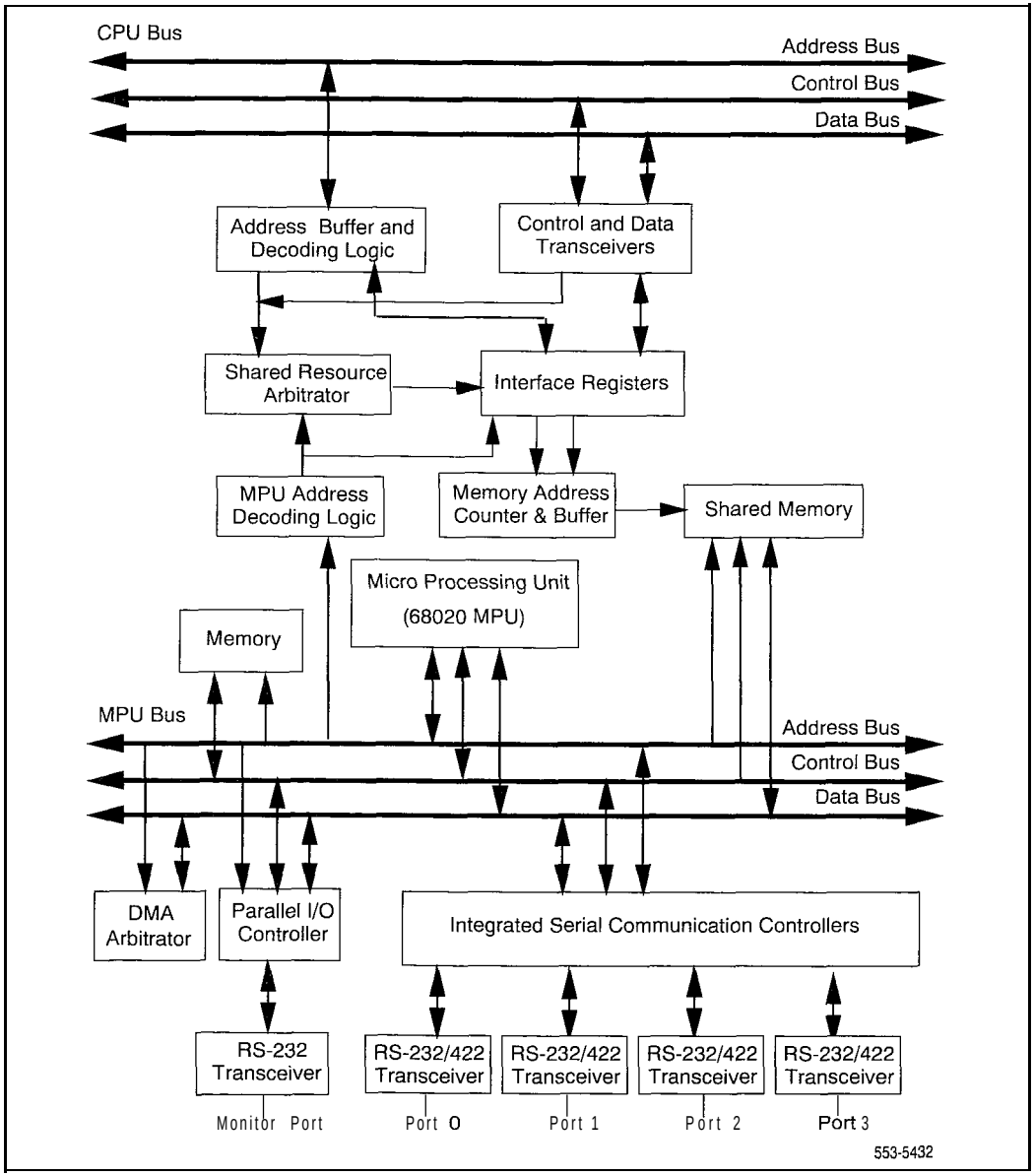

Figure 4
MSDL functional block diagram

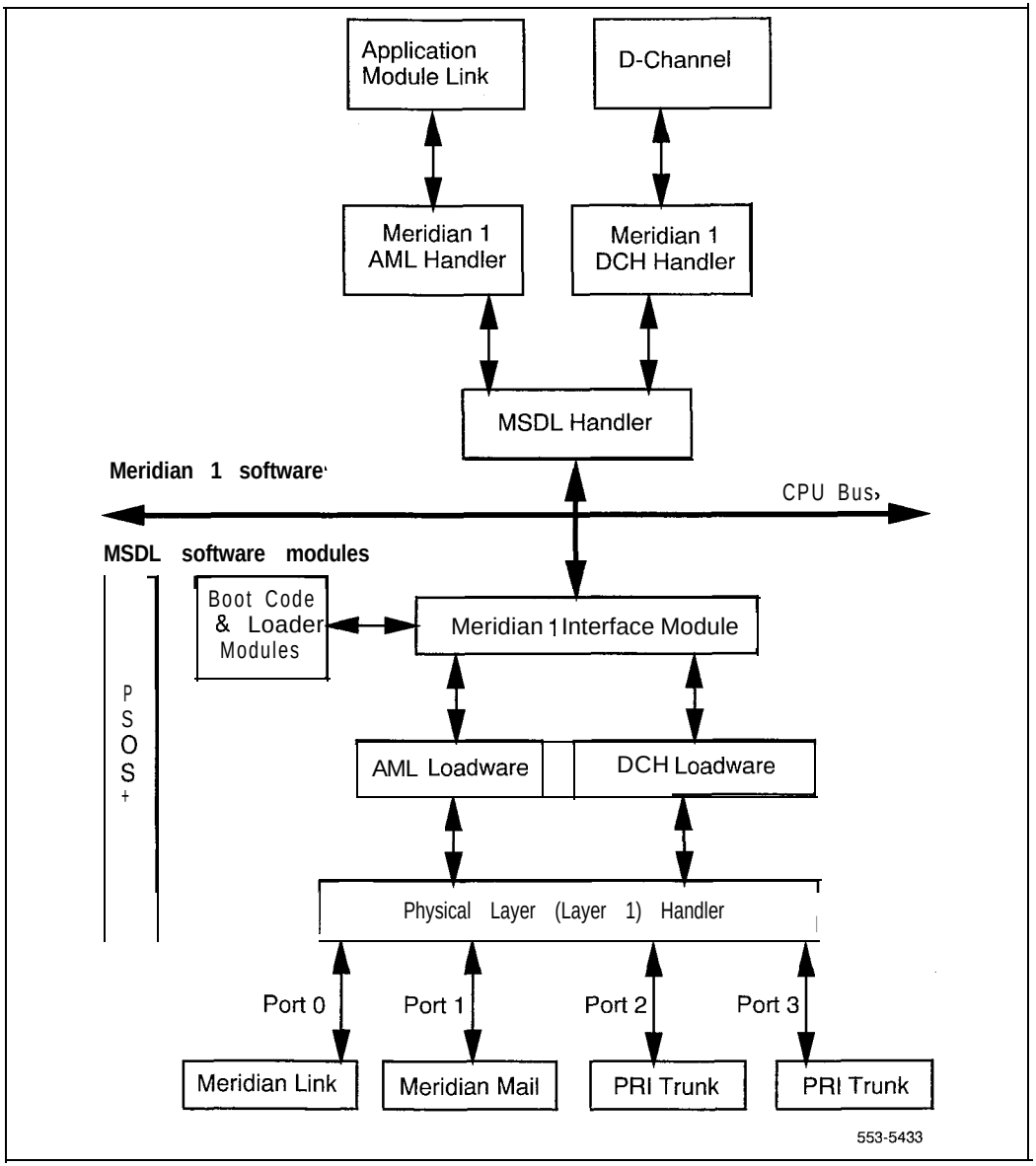

Data flow

The MSDL transmit interface, managed by the MSDL handler, sends data from the Meridian 1 to the MSDL. This interface receives packetized data from the Meridian 1, and stores it in the transmit buffer on the MSDL. The transmit buffer transports these messages to the appropriate buffers, from where the messages travel over the MSDL port to the I/O equipment.

The MSDL uses the MSDL receive interface to communicate with the Meridian 1. The MSDL card receives packetized data from the I/O equipment over the MSDL ports. This data is processed by the MSDL handler and sent to the appropriate Meridian 1 function.

The flow control mechanism provides an orderly exchange of transmit and receive messages for each operation. Each operation has a number of outstanding messages stored in buffers waiting to be sent to their destination. As long as the number of messages does not exceed the threshold specified, the messages queue in the buffer in a first-in-first-out process.

If the outstanding number of messages for an operation reaches the threshold, the flow control mechanism informs the sender to wait until the number of messages is below the threshold before sending the next message.

If buffer space is not available, the request to send a message to the buffer is rejected and a NO BUFFER fault indication is sent.

Engineering guidelines

Meridian 1 supports a maximum of 16 MSDL cards regardless of system size. Systems that lack available network card slots may not be physically able to accommodate 16 MSDL cards.

Available network card slots

The number of available network slots in Meridian I depends on the system option, the system size, and the number of available network slots in each module for the selected system option.

Table 1 lists Meridian 1 system options, their corresponding network module types, and the network card slot numbers for the type of module used in the system.

Some of these network card slots are normally occupied by Network Cards, Superloop Network Cards, Conference/TDS, and others, leaving a limited number of unused slots for MSDL and other cards.

Meridian 1 card mix

A Meridian 1 that exclusively uses MSDL cards can support up to 16 such cards, providing 64 ports. These ports can be used to run various synchronous and asynchronous operations simultaneously.

The Meridian 1 system will also support a mix of interface cards (MSDL, DCHI, and ESDI for example). However, using multiple card types will reduce the number of cards and ports available.

Refer to the individual card documentation (listed at the front of this document) for complete discussions of the specific card types.

Table 1
MSDL card location

Meridian 1	Module	Card slots
21E	NT8D11 CE/PE	Network slots 4 -9
51	NT6D39 CPU/Network	Network slots I-8, 13
61	NT6D39 CPU/Network	Network slots I-8
71	NT8D35 Network	Network slots 5 -12
81	NT8D35 Network	Network slots 5-12
STE	QCA1 36 CE	Network slots 5-13
RT	QCA1 47 Network	Network slots 2-I 0, 12
NT	QSD39 Network (LH) QSD40 Network (RH)	Network slots 2-10, 12 Network slots 5-13, 2, 3
XT	QSD39 Network (LH) QSD40 Network (RH)	Network slots 2-I 0 Network slots 5-I 3, 2, 3

Address decoding

The MSDL card decodes the full length address information received from the Meridian 1. This provides 128 unique addresses. Since MSDL ports communicate with the CPU using a single card address, the Meridian 1 can support 16 MSDL cards providing 64 ports.

The MSDL card addresses are set using decimal switches located on the card. These switches can select 100 unique card addresses from 0 to 99.

An address conflict may occur between the MSDL and other cards due to truncated address decoding by the other cards. For example, if a DCHI port is set to address 5, its companion port will be set to address 4, which means that none of the MSDL cards can have hexadecimal address numbers 05H, 15H, . . .75H, nor addresses 04H, 14H, . . .74H. To avoid this conflict, Xl1 release 19 limits the MSDL card addresses from 0 to 15.

Port specifications

The MSDL card provides four programmable serial ports configured with software as well as with switches for these modes of operation.

- synchronous ports 0-3
- asynchronous port 0 (beginning with X11 release 19)

  DCE or DTE equipment emulation mode
- RS-232 or RS-422 interface

Transmission mode Configure an MSDL port for synchronous or asynchronous data transmission using LD17.

Synchronous transmission uses an external clock signal fed into the MSDL.

Table 2 lists the synchronous interface specifications and the means of configuring the interface parameters.

Table 2
Synchronous interface specifications

Parameter	Specification	Configured
Data bits	In packets-Transparent	N/A
Data rate	1.2, 2.4, 4.8, 9.6, 19.2, 38.4, 48, 56, and 64 kbps	Software
Transmission	Full Duplex	N/A
Clock	Internal/External	Software
Interface	RS-232	Software
	RS-422	Switches
Mode	DTE or DCE	Switches

Asynchronous transmission uses an internal clock to generate the appropriate baud rate for serial controllers.

Table 3 lists asynchronous interface specifications and the means of configuring interface parameters.

Table 3
Asynchronous interface specification

Parameter	Specification	Configured
Data bit, parity	7 bits even, odd or no parity, or 8 bits no parity	Software
Data rate	**0.3, 0.6,** (1.2), **2.4, 4.8,** 9.6, 19.2, and 38.4 kbps	Software
Stop bits	1 (default), 1.5, 2	Software
Transmission	Full Duplex	N/A
Interface	**RS-232**	Software
	RS-422	Switches
Mode	DTE or DCE	Switches

Emulation mode Each port can be configured to emulate a DCE port or a DTE port by setting the appropriate switches on the MSDL. For details on how to set the switches, refer to the "Installation" on page 19 of this document.

DCE is a master or controlling device that is usually the source of information to the DTE and may provide the clock in a synchronous transmission linking a DCE to a DTE.

DTE is a peripheral or terminal device that can transmit and receive information to and from a DCE and normally provides a user interface to the system or to a DCE device.

Interface Each MSDL port can be configured as an RS-232 or an RS-422 interface by setting the appropriate switches on the card.

Table 4 lists the RS-232 interface specifications for EIA and CCITT standard circuits. It shows the connector pin number, the associatedsignal name, and the supported circuit type. It also indicates whether the signal originates at the DTE or the DCE device.

This interface uses a 26-pin (SCSI II) female connector for both RS-232 and RS-422 circuits.

Table 4
RS-232 interface pin assignments

Pin	Signal name	EIA circuit	CCITT circuit	DTE	DCE
1	Frame Ground (FG)	AA	102	-	-
2	Transmit Data (TX)	BA	103	X	
3	Receive Data (RX)	BB	104		X
4	Request to Send (RTS)	CA	105	X	
5	Clear to Send (CTS)	CB	106		X
6	Data Set Ready (DSR)	cc	107		X
7	Signal Ground (SG)	AB	102	-	-
8	Carrier Detect (CD)	CF	109		X
15	Serial Clock Transmit (SCT)	DB	114		X
17	Serial Clock Receive (SCR)	DD	115		X
18	Local Loopback (LL)	LL	141	X	
20	Data Terminal Ready (DTR)	CD	108.2	x	
21	Remote Loopback (RL)	RL	140	X	
23	Data Rate Selector (DRS)	CH/CI	111/112	x	
24	External Transmit Clock (ETC)	DA	113	X	
25	Test Mode (TM)	TM	142		X

The internal power supply in each module provides DC power for the MSDL and other cards. Power consumption and heat dissipation for the MSDL is listed in Table 7.

Table 7
MSDL power consumption

Voltage (VAC)	Current (Amps)	Power (Watts)	Heat (BTUs)
+5	3.20	16.00	55.36
+12	0.10	1.20	4.15
-12	0.10	1.20	4.15

Installation

MSDL cards are supported on Meridian 1 systems running X11 release 18 and later.

Device number

Before installing MSDL cards, determine which of the devices in the system are available. If all 16 devices are assigned, remove one or more installed cards to replace them with MSDL cards.

Make sure that the device number assigned to the MSDL card is not used by an installed card, even if one is not configured. Use the MSDL Planning form, at the end of this section, to assist in configuring MSDL cards.

MSDL interfaces

Prior to installing the cards, select the switch settings that apply to your system, the interfaces. and card addresses.

Table 8 shows the switch position for the DCE and the DTE interface configurations on the MSDL card. Figure 5 shows the MSDL and the location of configuration switches on the MSDL. The switch settings shown in this figure are an example of the different types of interfaces available. Your system settings may differ. Refer to *Circuit card installation and testing* (553-3001-211) for switch information.

Table 8
MSDL interface switch settings

DCE switch	DTE switch	Interface	Comment
OFF	OFF	**RS-232**	DTE/DCE is software configured
OFF	ON	**RS-422 DTE**	All switches configured
ON	OFF	**RS-422** DCE	All switches configured
ON	ON	N/A	Not allowed

Figure 5
MSDL switch setting example

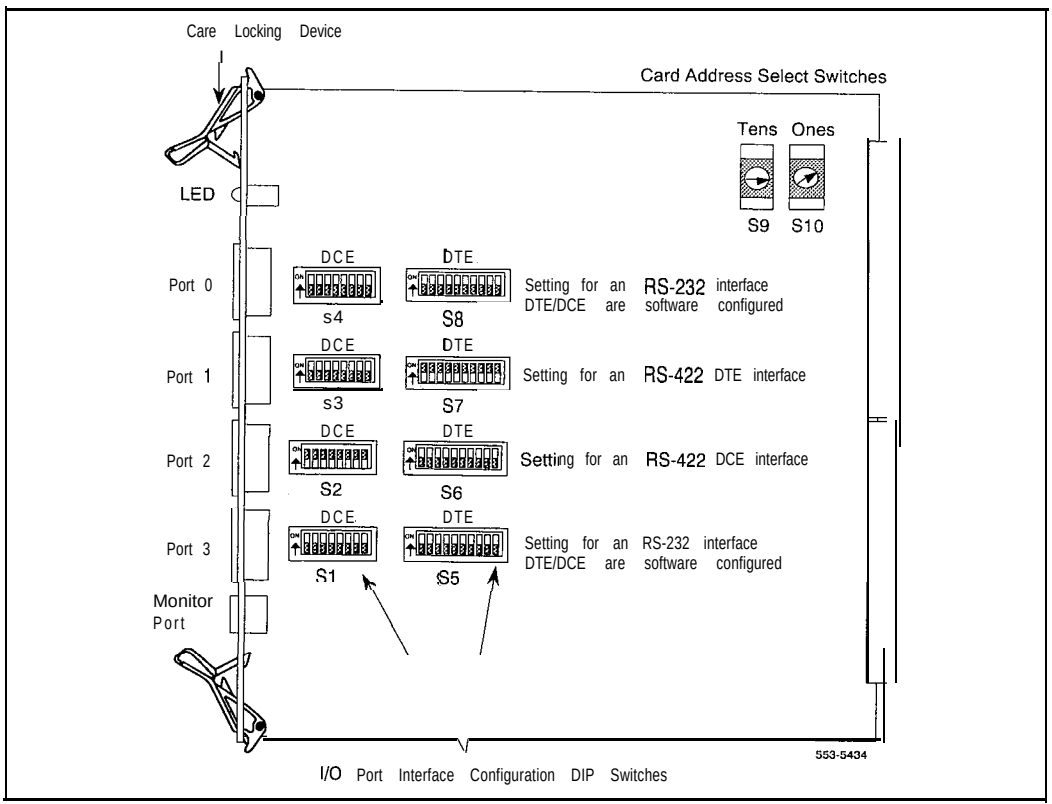

Installing the MSDL card

To install an MSDL into the Meridian 1 module, follow these steps.

1 Hold the MSDL by its card locking devices. Squeeze tabs to unlatch card locking devices and lift the locking device out and away from the card. Be careful not to touch connector pins, conductor traces, or integrated circuits. The static discharge may damage integrated circuits.

2 Insert the MSDL card into the selected card slot of the module following the card guides in the module.

3 Slide the MSDL into the module until it engages the backplane connector.

4 Push the MSDL firmly into the connector using locking devices as levers by pushing them towards the card's front panel.

5 Push card locking devices firmly against the front panel of the card so they latch to the front lip in the module and to the post on the card.

6 Observe the red LED on the MSDL faceplate. If it turns on, flashes three times, and stays on continuously, the MSDL is operating correctly but is not yet enabled.

7 Connect the cables.

If it turns on and stays on continuously without flashing three times, the card may be defective. Go to steps 8 and 9.

8 Unplug the MSDL card and reinsert it. If the red LED still does not flash three times, leave the card installed for approximately 10 minutes to allow the card to be initialized.

9 After 10 minutes unplug the card, reinsert it and if the card still does not flash three times, the card is defective and must be replaced.

Cable requirements

The MSDL card includes four high density 26-pin (SCSI II) female connectors for ports and one 8-pin miniature DIN connector for the monitor port.

Figure 6
MSDL cabling

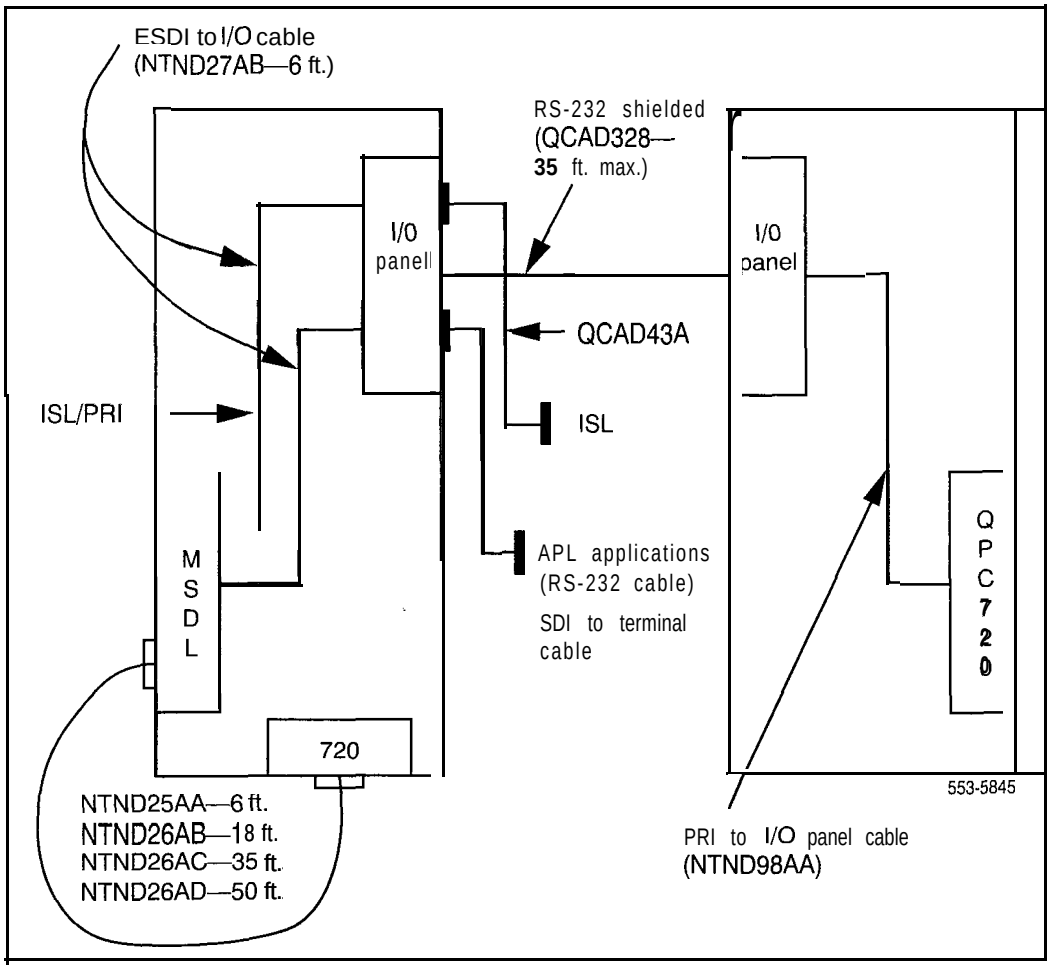

A DCH on the MSDL requires a connection from the appropriate MSDL port connector to the DCH connector located on the ISDN PRI trunk faceplate.

Other operations on the MSDL are connected to external devices such as terminals, modems, etc. To complete one of these connections, connect the appropriate I/O connector on the MSDL to a connector on the I/O panel at the back of the module where the MSDL is installed.

To determine the type and number of cables required to connect to MSDL cards, you must determine the type of operation you wish to run and select the appropriate cable to connect the operation to the MSDL port. Different types of cables, as described in Table 9, connect the MSDL port to a device.

- NTND26, used to connect the MSDL port to the ISDN PRI trunk connector J5, for DCH
- QCAD328 when cabling between two different columns, that is, I/O to I/0 (when MSDL is in one row and QPC720 is in another row)
- NTND98AA (J.5 of QPC720 to I/O panel)
- NTND27, used to connect the MSDL port to the I/O panel at the rear of the module, for other interface functions

Table 9
Cable types

Function	Cable type	Cable length
DCH	NTND26AA	**6** feet
	NTND26AB	**18** feet
	NTND26AC	**35** feet
	NTND26AD	**50** feet
AML, ISL, SDI	NTND27AB	**6** feet

Cable installation

When the MSDL card is installed, connect the cables to the equipment required for the selected operation.

PRI trunk connections

D-Channel operations require connections between the MSDL and a PRI trunk cards. Refer to ***administration*** (553-2901-100) for a complete discussion of PRI and D-Channels.

The following steps explain the procedure for cable connection.

1 Identify the MSDL and the PRI cards to be linked.

2 Select the appropriate length cable from for the distance between the MSDL and the PRI card.

3 Plug the 26-pin SCSI II male connector end of a cable into the appropriate MSDL port.

4 Route the cable through cable troughs, if necessary, to the appropriate PRI card.

5 Plug the DB15 male connector end of the cable into the J5 DB15 female connector on the PRI card.

6 Secure the connections in place with their fasteners.

7 Repeat steps 1 through 6 for each connection.

I/O panel connections

Operations aside from PRI require cable connections to the I/O panel. Connections between the I/O panel and Application Equipment Modules (AEM) is described in Application Module description ***Meridian Link description (553-3201-110).***

The following steps explain the procedure for cable connection.

1 Identify the MSDL card and the I/O panel connector to be linked.

2 Using the NTND27AB cable, plug the 26-pin SCSI II male connector end of a cable into the appropriate MSDL port.

3 Route the cable to the rear of the module next to the I/O panel.

4 Plug the DB25 male connector end of a cable into a DB2.5 female connector at the back of the I/O panel.

5 Secure cable connectors in place with their fasteners.

6 Repeat steps 1 through 6 for each connection.

MSDL planning form

Use the following planning form to help sort and store information concerning the MSDL cards in your system as shown in the sample. Record switch setting for unequipped ports as well as for equipped ports.

MSDL data form

	Device no.	Shelf	Slot	Card ID	Boot Code version
	Date installed	Last update			

Ports	Operation	Logical no.	Switch setting	Cable no,	Operation information
0					
1					
2					
3					

Sample

	Device no.	Shelf	Slot	Card ID	Boot Code version
	13	3	5	NT6D80AA-110046	004
	Date installed 2/1/93	Last update 5/5/93			

Ports	Operation	Logical no.	Switch setting	Cable no.	Operation information
0	TTY	13	RS-232 DCE	NTND27AB	maint TTY 9600 baud
1	DCH	25	RS-422 DTE	NTND26AB	PRI 27 to hdqtrs
2	AML	3	RS-232 DCE	NTND27AB	Meridian Mail
3	Spare		RS-232		

Maintenance

Routine maintenance consists of enabling and disabling MSDL cards, and downloading new versions of peripheral software. These activities are performed by an authorized person such as a Meridian l administrator.

Troubleshooting the MSDL consists of determining problem types, isolating problem sources, and solving the problem. A craftsperson normally performs these activities.

Meridian 1 systems have self-diagnostic indicators as well as software and hardware tools. These diagnostic facilities simplify MSDL troubleshooting and reduce mean-time-to-repair (MTTR). For complete information concerning Meridian l maintenance, refer to *General maintenance information (553-300* l-500).

For complete information regarding X 1 I software maintenance programs. refer to *XI I input/output guide (553-300 I-400).*

MSDL states

MSDL states are controlled manually by maintenance programs or automatically by the system. Figure 7 shows MSDL states and the transitions among them. The three states the MSDL may be in:

- Manually disabled
- Enabled

  System disabled

The following sections describe the relationships among these states.

Figure 7
MSDL states

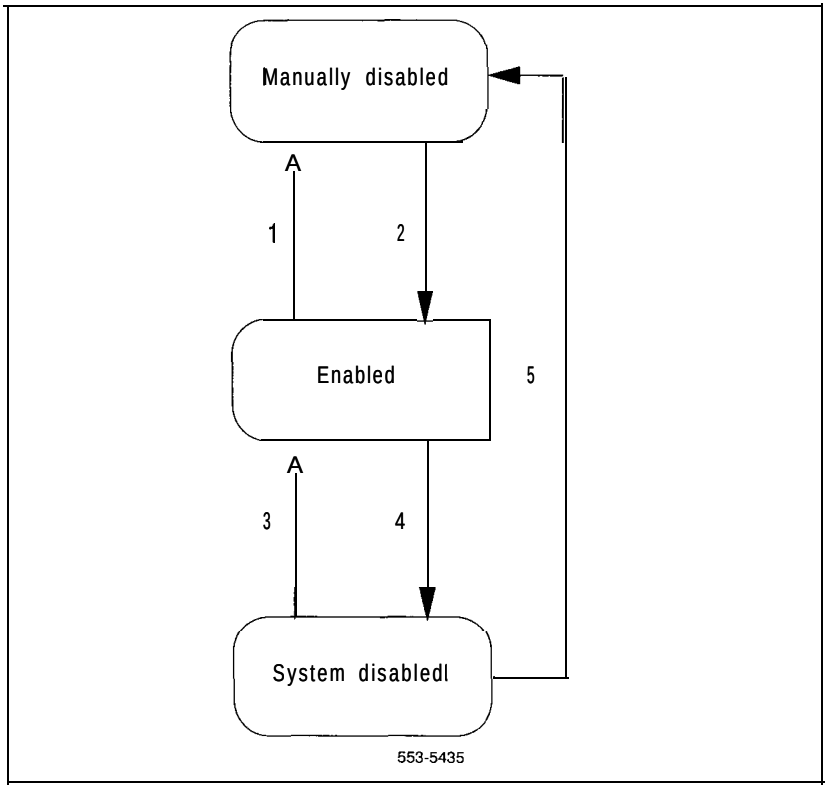

Manually disabled

In this state the MSDL is not active. The system does not attempt to communicate. or attempt any automatic maintenance on the MSDL.

A newly configured MSDL automatically enters the manually disabled state. An operating MSDL can be manually disabled by issuing the **DIS** MSDL x command in LD37 (step 1 in Figure 7).

Entering the **DIS** MSDL x command in LD37 moves the card to manually disabled status, and stops all system communication with the card (step 5 in Figure 7).

Manually Enabled

When the card has been manually disabled, reenable with the ENL MSDL x command in LD37 (step 2 in Figure 7).

System disabled

When the Meridian 1 disables the MSDL card (step 4 of Figure 7), it continues to communicate and attempt maintenance procedure on the card. To stop all system communication with the card, enter DIS MSDL x to disable it (step 5 of Figure 7). Otherwise, the system periodically tries to enable the card, attempting recovery during the midnight routines (step 3 of Figure 7).

The system disables the MSDL if the card:

- Exhibits an overload condition.
- Does not respond to system messages.
- Is removed.
- Resets itself.

  Encounters a fatal error.
- Is frequently system disabled and recovered.

When an MSDL is system disabled, a substate indicates why the MSDL is disabled. These substates:

Not Responding Meridian 1 cannot communicate with the MSDL.

- **Self Testing** The MSDL card is performing self-tests.
- **Self-tests Passed** The MSDL card successfully completed self-tests and Meridian 1 is determining if download is required, or the software downloading is complete.
- **Self-tests Failed** The MSDL card self-tests failed.

Shared RAM Tests Failed The Meridian 1 failed to read/write to the MSDL shared RAM.

- **Overload** Meridian 1 received an excessive number of messages within a specified time period.
- **Reset Threshold** Meridian 1 detected more than four resets within ten minutes.
- **Fatal Error** The MSDL card encountered a fatal condition from which it cannot recover.
- **Recovery Threshold** The MSDL card was successfully enabled by the MSDL autorecovery function five times within thirty minutes. Each time it was system disabled due to a problem encountered during operation.

Bootloading The MSDL base software is in process of being downloaded to the MSDL.

Detailed information on system disabled substates, and the action required for each substate appears in "Troubleshooting actions" on page 37.

Maintaining the MSDL

The Meridian 1 system controls automatic MSDL maintenance functions. A craftsperson or system administrator performs manual maintenance by changing the card status, downloading new versions of peripheral software, or invoking self tests.

System controlled maintenance

Built-in diagnostic functions constantly monitor and analyze the system and individual card, performing the following operations.

- Using autorecovery to automatically correct a temporarily faulty condition, and maintain the system and its components.
- Printing information and error messages to indicate abnormal conditions that caused a temporary or an unrecoverable error.

During system initialization, the Meridian 1 examines the MSDL base code. If the base code needs to be downloaded, the Meridian 1 CPU resets the MSDL card and starts downloading immediately following initialization. At the same time, all other MSDL peripheral software programs are checked and, if they do not correspond to the system disk versions, the correct ones are downloaded to the card.

If manual intervention is required during initialization or operation, information and error messages appear on the console or the system TTY to suggest the appropriate action. For a complete discussion of the information and error messages refer to XII ***input/output guide*** (553-3001-400). Detailed information of system disabled substates, and the action required for each substate is found at the end of this document.

Manually controlled maintenance

Use manual maintenance commands found in the following programs to enable, disable, reset, get the status of, and perform self-tests on the MSDL card

Input/Output Diagnostic Program LD37

- Program LD42
- Link Diagnostic Program LD48
- PRI D-channel Diagnostic Program LD96

For a complete discussion of these programs, refer to *Xl I input/output guide* (553-3001-400).

Note *1:* Enter commands after the dot (.) prompt.

Note 2: The **"x"** in the commands below represents the DNUM value of the card number.

Enabling the MSDL

Enter **ENL MSDL** x to enable the MSDL manually. If the MSDL base code has not been previously downloaded or if the card version is different from the one on the system disk, the software is downloaded and the card is enabled.

To force software download and enable the card, enter **ENL MSDL x FDL.** This command forces the download of MSDL base code and the configured peripheral software even if it is already resident on the card. The card is then enabled.

To enable a disabled MSDL and its ports, enter **ENL MSDL x ALL.** This command downloads of all peripheral software (if required), and enables any configured ports on the card. This command can be issued to enable some manually disabled ports on an already enabled MSDL.

Disabling the MSDL

To disable an MSDL card, enter **DIS** MSDL x.

To disable the MSDL and all its ports, enter **DIS** MSDL x ALL.

Resetting the MSDL

To reset an MSDL, and initiate a limited self-test the MSDL must be in a manually disabled state. To perform the reset, enter RST MSDL x.

Displaying MSDL status

To display the status of all MSDL cards in Meridian 1, enter STAT MSDL.

To display the status of a specific MSDL, enter STAT MSDL x. The status of the MSDL, its ports, and the operation on each port appears.

The command STAT MSDL x FULL displays all information about an MSDL (card ID, bootload firmware version, base code version, base code state, operation state, date of base code activation) as well as the version, state, and activation date for each card operation.

Self-testing the MSDL

To perform extensive self-testing of an MDSL, enter SLFT MSDL x. This test can be activated if the card is in manually disabled state. If the test passes, the Meridian 1 outputs the card ID and a pass message. If it fails, the system displays a message indicating which test failed.

Manually Isolating and correcting faults

Problems are due to configuration errors that occur during installation or hardware faults resulting from component failure during operation. See “Symptoms and actions” on page 37 for more information on problem symptoms and required responses.

Isolate MSDL faults using the diagnostic tools described in this chapter:

1 Observe and list the problem symptoms, for example, a typical symptom is a permanently lit LED.

2 If the LED flashes three times but the card does not enable, verify that it is installed in a proper slot as shown in Table 1, “MSDL card location,” on page 12.

3 Check that the address is unique: no other card in the system can be physically set to the same device number as the MSDL.

4 If installation is correct and no address conflict exists, refer to “Newly installed MSDL” on page 34 or “Previously operating MSDL cards” on page 35.

5 If the MSDL still does not operate correctly, contact your Northern Telecom representative.

Newly installed MSDL

Problems that occur during MSDL card installation usually result from improperly installed, incorrectly addressed, or faulty cards.

If the LED on a newly installed MSDL does not flash three times after insertion, wait five minutes, then remove and reinsert. If the LED still does not flash three times, the card is faulty.

Previously operating MSDL cards

Problems that occur during normal operation usually result from faulty cards. Follow these steps to evaluate the situation:

1 Use the **STAT MSDL** x command to check MSDL card status. See "Displaying MSDL status" on page 33.

2 If the card has been manually disabled, try to enable it using **ENL MSDL** x. See "Enabling the MSDL" on page 32. If this fails, perform self-testing as described in step 4.

3 If the card has been disabled by the system, disable it manually with **DIS MSDL** x. See "Disabling the MSDL" on page 33.

4 Invoke self-testing with the **SLFT MSDL** x command. See "Self-testing the MSDL" on page 33. If self tests fail, replace the card. If self tests pass, try to enable the card again, as in step 2. If the card does not enable, note the message output to the TTY and follow the recommended action.

Replacing MSDL cards

After completing MSDL troubleshooting you may determine that one or more MSDL cards are defective. Remove the defective cards and replace them with new ones.

An MSDL card can be removed from and inserted into a Meridian 1 module without turning off the power to the module. Follow these steps.

1 Log in on the maintenance terminal.

2 At the > prompt, type **LD37** (you can also use LD42, LD48, or LD96) and press Enter.

3 Type **DIS MSDL x ALL** and press Enter to disable the MSDL and any active operations running on one or more of its ports. The MSDL card is now disabled.

4 Disconnect the cables from the MSDL faceplate connectors.

5 Unlatch the card locking devices, and remove the card from the module

6 Insert the replacement card into the same card slot.

7 Observe the red LED on the front panel during self-test. If it flashes three times and stays on, it has passed the test. Go to step 9.

If it does not flash three times and then stays on, it has failed the test. Pull the MSDL partially out of the module and reinsert it firmly into the module. If the problem persists, troubleshoot or replace the MSDL.

8 Connect the cables to the MSDL faceplate connectors.

9 At the . prompt in the **LD37** program, type **ENL MSDL x ALL** and press Enter to enable the MSDL and its operations. If the red LED on the MSDL turns off, the MSDL is functioning correctly. Since self tests were not invoked, no result message appears.

10 Tag the defective card(s) with a description of the problem and return them to your Northern Telecom representative.

Symptoms and actions

Explained here are some of the symptoms, diagnosis. and actions required to resolve MSDL card problems. Contact your Northern Telecom representative for further assistance.

Troubleshooting actions

These explain the causes and actions needed to return the card to enabled state following installation or operational problems.

Symptom: The LED on the MSDL card is steadily lit

Diagnosis: The MSDL card is disabled. or faulty.

Action: Refer to “Manually Isolating and correcting faults” on page 34.

or

Diagnosis: Peripheral software download failed due to MSDL card or system disk failure.

Action: If only one MSDL card has its LED lit, replace it.

Symptom: Autorecovery is activated every 30 seconds to enable the MSDL. MSDL300 messages appear on the console or TTY.

Diagnosis: The MSDL card has been system disabled due to an incorrect address.

Action: Verify the switch settings.

or

Diagnosis: The MSDL card has been system disabled due to peripheral software or configuration errors.

Action: Refer to "System disabled actions" on page 38.

System disabled actions

These explain the causes and actions needed to return the card to enabled state following system disabling.

SYSTEM DISABLED - NOT RESPONDING

Cause: The MSDL card is not installed, or is unable to respond to the messages from the Meridian 1.

Action:

Check the MSDL messages on the console and take the action recommended (refer to Xl I *input/output guide* (553-3001-400)).

Verify that the address switches on the MSDL are set correctly.

Verify that the card is properly installed in the shelf for at least 5 minutes.

If the problem persists, manually disable the card by entering the **DIS MSDL** x. Follow the steps described in "Previously operating MSDL cards" on page 35.

SYSTEM DISABLED - SELF TESTING

Cause: The MSDL card reset itself or Meridian 1 has reset the card to perform self-tests. Self-tests are in progress.

Action:

Wait until self-tests are completed. Under some circumstances the self-tests may take up to six minutes to complete.

Take the action described in the appropriate section below (SYSTEM DISABLED - SELF TESTS PASSED or SYSTEM DISABLED - SELF TESTS FAILED).

SYSTEM DISABLED - SELF TESTS PASSED

Cause: The MSDL card passed self-tests. Meridian 1 will automatically download the MSDL base code, if needed, and attempt to enable the card using autorecovery. If a diagnostic program (overlay) is active in Meridian, the downloading of the MSDL base code occurs later.

Action:

Wait to see if the system will enable the card immediately. If the MSDL is enabled, no further action is necessary.

If the MSDL base code download fails five times, autorecovery stops. The following appears in response to the **STAT MSDL x** command.

```
MSDL 10: SYS DSBL - SELFTEST PASSED
NO RECOVERY UNTIL MIDNIGHT: FAILED BASE DNLD 5 TIMES
      SDI 10 DIS PORT0
      AML 11 DIS PORT 1
      DCH 12 DIS PORT2
      AML 13 DIS PORT3
```

Error messages will usually indicate the problem in this case. See "Maintaining the MSDL" on page 31.

SYSTEM DISABLED ▪ SELF TESTS FAILED

Cause: The card did not pass self-tests. These tests repeat-five times. If unsuccessful, autorecovery stops until midnight unless you take action.

Action:

Allow the system to repeat the self-tests.

If self-tests fail repeatedly, disable the card using the **DIS MSDL x** command, and replace the card.

SYSTEM DISABLED ▪ SRAM TESTS FAILED

Cause: After self-tests passed, Meridian 1 attempted to perform read/write tests to the shared RAM on the MSDL and detected a fault. The shared RAM test will be repeated five times and if unsuccessful, autorecovery will not resume until midnight unless you take action.

Action:

Allow the system to repeat the self-tests.

If self-tests fail repeatedly, disable the card using the DIS **MSDL** x command, and replace the card.

SYSTEM DISABLED - OVERLOAD

Cause: The Meridian 1 received an excessive number of messages from the MSDL card in a certain time period. If the card invokes overload four times in 30 minutes, it exceeds the recovery threshold as described in SYSTEM DISABLED - RECOVERY THRESHOLD. The system resets the card, invokes self-tests, and attempts to enable the card. The problem may be due to excessive traffic on one or more MSDL ports. Traffic load redistribution may resolve this condition.

Action:

Check the traffic report, which may indicate that one or more MSDL ports are handling excessive traffic.

Identify, by disabling each port, to identify the port with too much traffic, and allow the remaining ports to operate normally. Refer to "Maintaining the MSDL" on page 31. If the problem persists, place the card in the manually disabled state by the **DIS MSDL** x command and follow the steps in "Previously operating MSDL cards" on page 35.

SYSTEM DISABLED - RESET THRESHOLD

Cause: The Meridian 1 detected more than four MSDL card resets within 10 minutes. The system attempts to enable the card again at midnight unless you intervene.

Action:

Place the card in manually disabled state with the **DIS MSDL x** command and follow the steps in "Previously operating MSDL cards" on page 35.

SYSTEM DISABLED - FATAL ERROR

Cause: The MSDL card encountered a fatal error and cannot recover. The exact reason for the fatal error is shown in the MSDL300 error message output to the console of TTY when the error occurred.

Action:

Check MSDL300 message to find out the reason.

Alternately display the status of the MSDL, which also indicates the cause of the problem, with the **STAT MSDL** x command and check the information to find the cause of the fatal error.

Allow the system to attempt recovery. If this fails, either by reaching a threshold or detecting self-tests failure, place the MSDL in the manually disabled state with the **DIS MSDL** x command, and follow the steps in "Previously operating MSDL cards" on page 35

SYSTEM DISABLED - RECOVERY THRESHOLD

Cause: The Meridian 1 attempted autorecovery of the MSDL card more than five times within 30 minutes and each time the card was disabled again. The system attempts to enable the card again at midnight unless you intervene.

Action:

Place the MSDL card in manually disabled state with the **DIS MSDL** x command and follow the steps in "Previously operating MSDL cards" on page 3.5.

SL-1

Multi-purpose Serial Data Link

Description

Copyright © 1992 Northern Telecom
All rights reserved.
Information subject to change without notice.
Release 2.0
Standard
August 1, 1993
Printed in the U.S.A.

northern telecom

SL-1

Ml250 and M2250 Attendant Consoles

Description

Publication number: 553-2201-l 17
Document release: 4.0
Document status: Standard
Date: December 1, 1991

AtoZ KELLATRONICS, INC.

tel: 800.766.3425 fax: 800.720.1172
818.773.8888 818.773.8899

www.kellatronics.com info@kellatronics.com

© 1989 Northern Telecom

All rights reserved.

Revision history

February 2, 1989

Standard for Ml250 Console issued.

July 21, 1989

Removed all references to MJ1250 console.

December 20, 1989

Revised to incorporate corrections and updated information.

December 20, 1990

Document is reissued to include updates and changes for X11 release 16. Updates are indicated by revision bars in the margins.

December 1, 1991

This document is reissued to include technical content updates. Due to the extent of changes revision bars are omitted.

Contents

Introduction **I-I**
Related documentation 1-4

Description **2-1**
Features 2-I
Physical details 2-I
Keyboard layout 2-4
Function keys 2-4
Switches 2-7
Shift key 2-7
Handset and headset jacks 2-7
LCD indicators 2-7
Display screen messages 2-8
Connections 2-10
Local console controls 2-10
Busy Lamp Field/Console Graphics Module 2-1 1
Installation 2-I 2
Power requirements 2-12

Attendant console operation **3-I**
Configurations 3-1
QMT2 feature disabled 3-2
QMT2 feature enabled 3-2
Feature key modes 3-3
Attendant console features 3-5
Time and date 3-5
Powering and reset 3-7
Console diagnostics 3-8
Ml 250 failure codes 3-13

Table 1-1
Console engineering and ordering codes

Console model	Engineering code	Color	Ordering (CPC) code
MI250	NT2G00AC-35	Chameleon gray (Ash)	A0387385
MI250	NT2G00AA-98	BTS dark gray	A0338244 (not available in North America)
M2250	NT6G00AE-35	Chameleon gray (Ash)	A0391 779
M2250	NT6G00AE-98	BTS dark gray	A03491 87 (not available in North America)
BLF/CGM	NT3G40AB-35	Chameleon gray (Ash)	A0375234
BLF/CGM	NT3G40AB-98	BTS dark gray	A0349423 (not available in North America)
Adjustable stand	NT3G30AA-35	Chameleon gray (ash)	A0348780
Adjustable stand	NT3G30AA-98	BTS dark gray	A0348778 (not available in North America)

The Ml250 and M2250 have the following features:

- A four-line, 40 character, liquid crystal display (LCD) with backlighting and adjustable viewing angle. Power, including backlighting, is maintained during building power failures through the Meridian 1 battery backup, if equipped.
- In shift mode, the Ml250 console can have up to 16 trunk group busy (TGB) keys, and the M2250 can have up to 20 TGB keys. This eliminates the need for any QMT-2 key/lamp strip add-on modules.
- In shift mode, the M2250 can have up to 10 extra flexible feature keys (total of 20).
- An optional supporting stand that can be adjusted to nine different positions.
- A handset and headset volume adjustment slider control, situated below the dial pad.
- A physical connection to a serial data port through a subminiature D-type female connector on the console back wall. This permits connection of the console to the serial port of a personal computer.
- An optional Busy Lamp Field/Console Graphics Module (BLF/CGM), which displays the status of up to 150 consecutive extensions (SBLF) or any group of 100 extensions within the system (EBLF), and has many text and graphics capabilities.
- The M2250 provides for transmission level adjustment to meet international requirements by accepting and processing downloaded information from the system (when this messaging is supported in software). The transmission level can be adjusted to one of 16 different levels.
- Angle adjustment of the display screen, which can be tilted through 90" from horizontal to fully vertical
- Scrolling control of lines 2 and 3 of the display screen
- Multi-language selection
- Menus for local console features (options menu) and diagnostics (diagnostics menu)

  Code-blue or emergency relay (associated with ICI 0)

- Time and date system download on the M2250
- Alert tone volume and frequency selection
- Electret or carbon transmitter support
- Power Fail Transfer switch
- Keyclick (M2250 only)

Related documentation

Other information pertaining to Meridian 1 attendant consoles can be found in the documents listed below.

- *X11 features and services* (553-3001-305)
- *System options 21, 51, 61, 71 equipment identification* (553-3001-154)
- *Digital telephones, line engineering (553-2201-180)*
- *Telephone and attendant console installation* (553-3001-215)
- *X11 inputloutput guide* (553-3001-400)
- *Busy Lamp Field/Console Graphics Module user guide* (P0706875)

  Ml250 and M2250 Attendant Console user guide (P0728489)
- *Attendant Administration user guide* (P0703633)

Description

Features

Figures 2-l and 2-2 show top views of the layouts of the attendant consoles with the user-accessible components labeled using a row/column grid arrangement. Figure 2-3 shows rear, left-hand side, and bottom views of the consoles. These illustrations show you where to find the various components as you read this document.

Physical details

The attendant console dimensions are as follows:

Width	425 mm (16.75 in.)
Depth	245 mm (9.6 in.)
Height (front)	25 mm (1 in.)
Height (back)	65 mm (2.5 in.)
Height (with display screen panel up)	115 mm (4.5 in.)
Weight	approximately 2.75 kg (6 lbs)

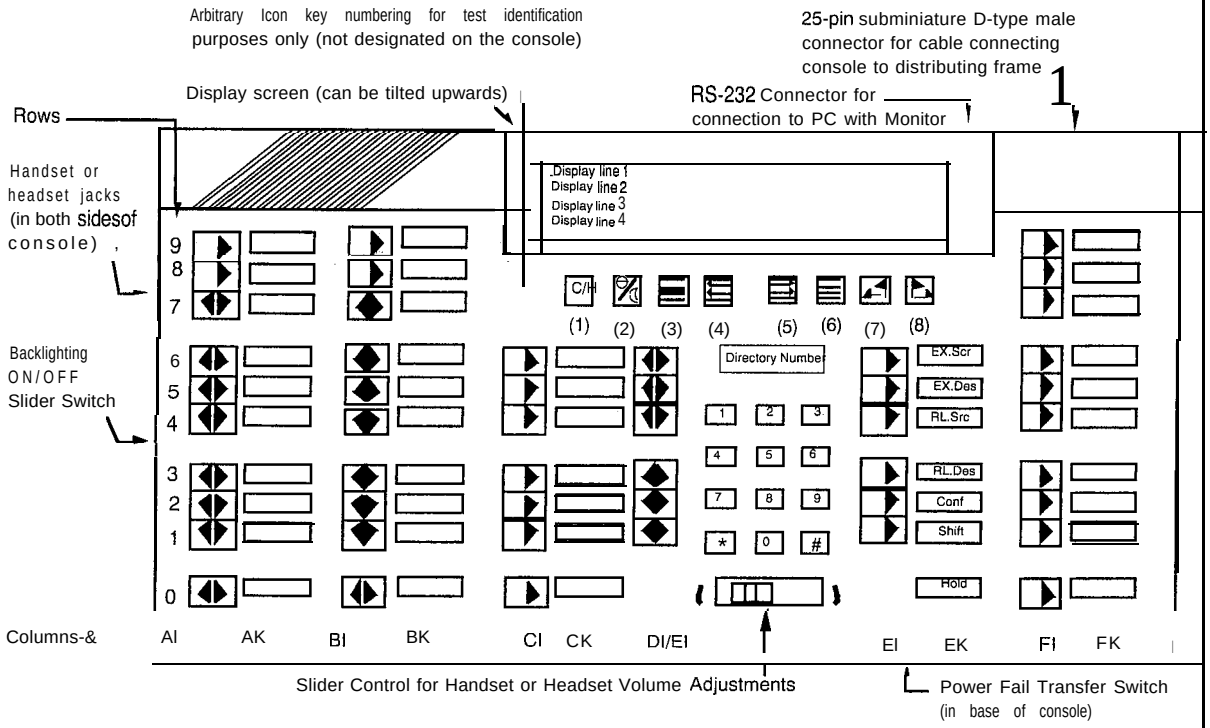

Figure 2-1
M1250 attendant console—top view

Note: Rows and columns are labeled with numbers and letters respectively in order to allow textual references when identifying the location of specific components. In the column designations, the letter I stands for indicators, and the letter K signifies keystrips.

Figure 2-2
M2250 attendant console—top view

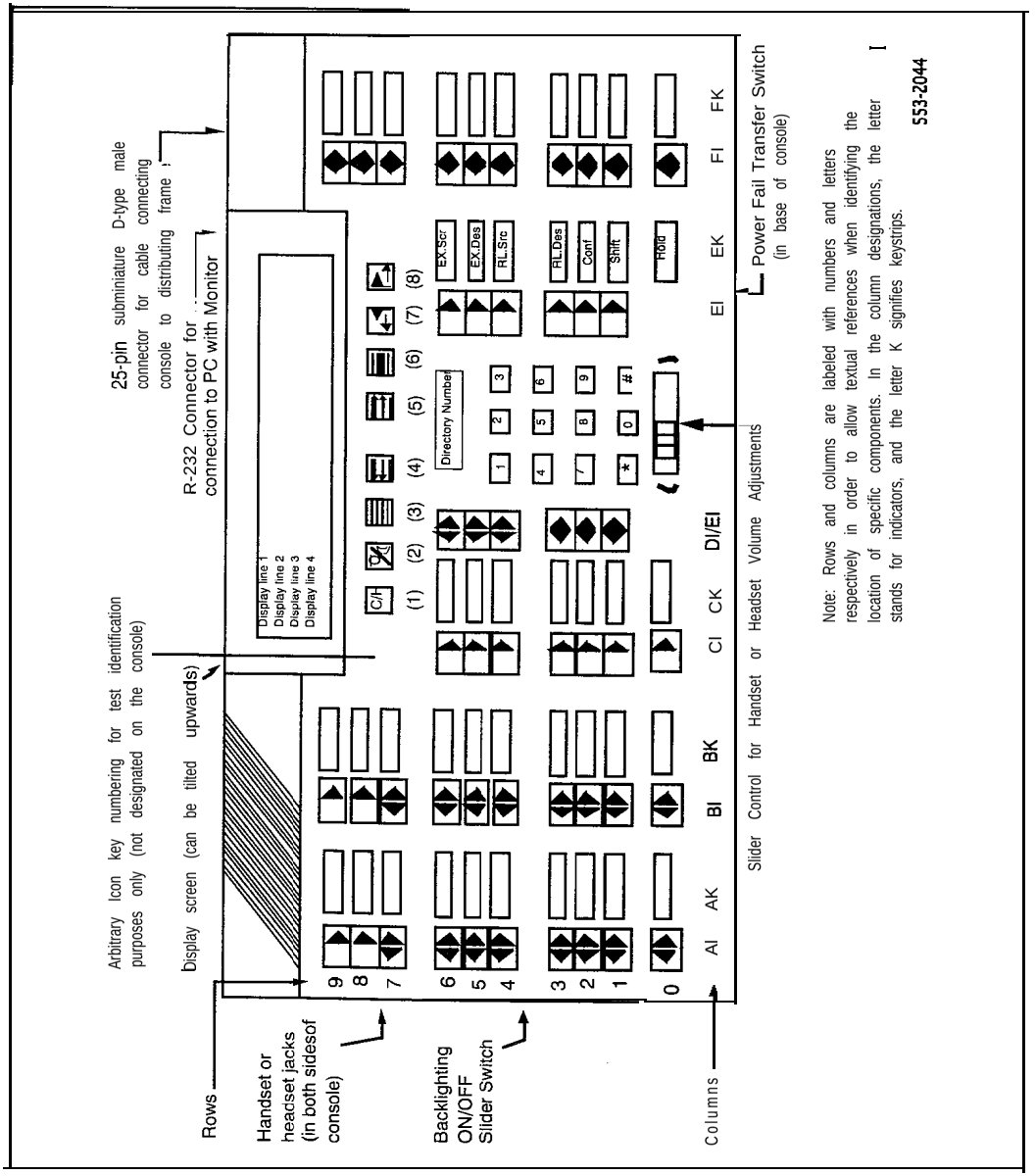

Table 2-1 (continued)
Soft key definitions and functions

Key **number (as shown in Figures 2-1 and 2-2)**	**Key**	**Function of key**
(7)	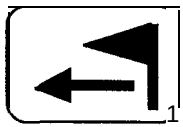	Prime function (normal): Signal Source feature key Level 1 function (Shift): Used with the Busy Lamp Field/Console Graphics Module, as CGM key.
(8)	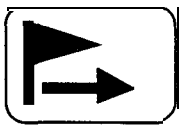	Prime function (normal): Signal Destination feature key Level 1 function (Shift): Used with the Busy Lamp Field/Console Graphics Module, as the Mode key.
Note: Keys are numbered for identification purposes from 1 to 8 (left to right).		

Switches

A slider switch. located below the dial pad, between columns DI/EI and FI (see Figures 2-1 and 2-2), controls the handset and headset receive volume level.

The Power Fail Transfer (PFT) switch is located in the baseplate (see Figure 2-3). Both the line connector and the RS-232 connector for the PC port are located at the back of the attendant console.

Shift key

The shift key, mentioned earlier, is positioned in column FK, row 1, just above the Hold key (see Figures 2-1 and 2-2). It is used to access Level 1 mode functions.

Handset and headset jacks

Two jack-pairs are provided for plugging in handsets or headsets. The jacks are located on both sides of the console beneath the faceplate in the recessed area shown by the arrows (see Figures 2-1 and 2-2). The console accepts both carbon and electret headsets and automatically adapts itself to each type.

Note: Electret headsets and handsets are polarity sensitive and must be correctly inserted into the jack.

LCD indicators

The LCD indicators used on the M1250 and M2250 are half-diamond shaped symbols which normally point towards the key with which they are associated, except in the QMT2 mode of operation and the loop keys where there are two LCDs associated with each key.

On the M2250, every LCD can flash at 30, 60, and 120 impulses per minute (ipm). On the Ml250 console, most lamps can flash at all three speeds, but certain lamps cannot flash at 30 ipm. Refer to “Attendant console operation” for more details.

The M2250 attendant console has 10 more flexible features than the Ml250 attendant console. These are programmed in LD12 and accessed using the shift key.

Display screen messages

Source information appears on line 2 of the display screen. Destination information appears on line 3 of the display screen.

The status messages listed below appear on line 4 of the display screen panel.

M N	(minor alarm)
MJ	(major alarm)
c m	(CAS/History File)
c w	(Call Waiting)
BUSY	(Position Busy)
NIGHT	(Night Service)
IDLE	(Idle)
ACTIVE	(lpk has been selected)
S	(Shift mode) Only on the M2250 and later releases of the M1250.

If the emergency power fail transfer feature is activated, the console status will be displayed as EMERGENCY.

Figure 2-3
M1250 and M2250 attendant consoles-rear, left side, and bottom views

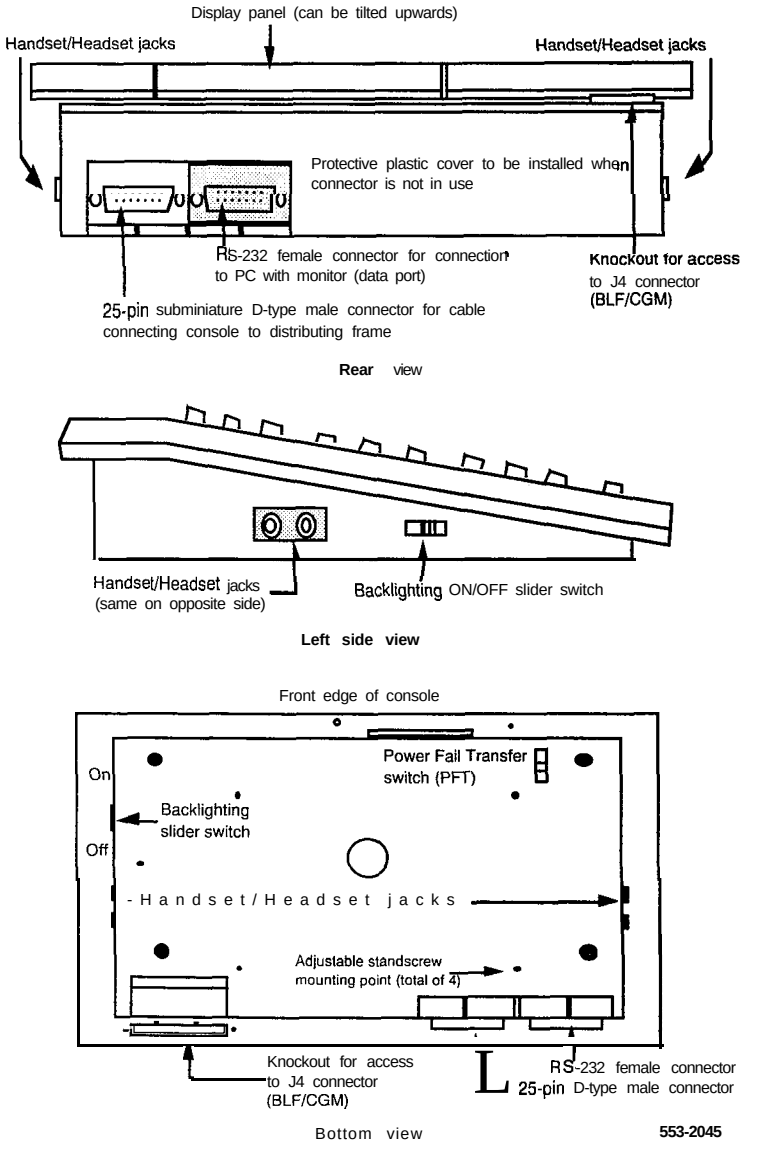

Connections

The line cord connects to the rear of the attendant console through a 25-pin subminiature D-type connector. The jack connector is attached to the line cord for user safety and equipment protection (pins are not exposed). Having the plug connector mounted in the console also prevents interchanges between the line cord and the serial data port connectors (the serial data port in the console has a jack connector).

A two-prong G3 type connector is provided on both sides of the console body to permit handset or headset connection at either side of the console. The attendant console is compatible with both carbon and electret handsets. The electret handset plug is orientation-dependent and is labeled accordingly.

The M2250 attendant console is connected to the Meridian 1 through two digital ports (primary and secondary) with two additional ports for powering. The Ml250 uses two hybrid ports (primary and secondary) for basic operation, with two additional ports used for powering.

The M2250 console requires a Digital Line Card (DLC) or an Integrated Services Digital Line Card (ISDLC) vintage D or later. The Ml250 requires a QPC61 or QPC451 line card.

Local console controls

The display screen contrast on the attendant console can be adjusted using the Contrast option on the Options menu.

The pitch and volume of the buzz tone on the console can be adjusted by the user.

You can choose any one of eight languages (English, French, Spanish, German, Italian, Norwegian, Gaelic, or Turkish) for the console screen displays.

The attendant console is equipped with a real time clock/calendar. The time of day (hours, minutes, and seconds) and the date (day, month, and year) are displayed on line 1 of the display screen.

The user can turn the sound of key click on or off. On the M2250, the user can adjust the pitch and volume of the key click.

Busy Lamp Field/Console Graphics Module

The Busy Lamp Field/Console Graphics Module (BLF/CGM) can be added to an Ml 250 or M22.50 attendant console.

The BLF/CGM can:

- display the status (busy or idle) of up to 150 consecutive extensions within the Meridian 1 (SBLF)
- display the status (busy or idle) of any hundreds group of DNs within the system (EBLF)
- display which attendant console is the supervisory console, and which consoles are active
- display supplementary information about individual extensions, such as the reason the person is away (business, vacation, or illness), when the person is due to return, and an alternate extension where calls to the person should be directed
- display a company logo
- display graphics
- display text in any one of eight languages
- have its screen contrast adjusted for easy viewing.

Installation

The BLF/CGM mounts on the back of the attendant console and is held on using snapfits and two screws. It is connected to the console using a 16-way connector that is located on the keyboard printed circuit board (PCB). This connector is accessed through a rectangular knockout section located underneath the casing overhang at the Meridian logo location (see Figure 2-3).

For more information on the installation of the BLF/CGM, refer to *Telephone and attendant console installation* (553-3001-215). For more information on the features and operation of the BLF/CGM, refer to the *Busy Lamp Field/Console Graphics Module User Guide* (P0706875).

Power requirements

The BLF/CGM obtains its power through the attendant console.

To provide backlighting for the BLF/CGM, an external floating 16 V dc (300 mA) power supply (transformer – A0367601) must be cabled in at the local MDF at a maximum of 115 feet (35 m) from the attendant console.

Attendant console operation

The attendant console faceplate layout is shown in Figures 2-1 and 2-2. Use these illustrations as the basis for component location references throughout this document. Refer to ***Ml250 and M2250 Attendant Console User Guide*** (P06728489) for complete descriptions of attendant console operating procedures.

Configurations

The Ml 250 and M2250 attendant consoles can be configured to operate with the QMT2 feature (QMT2 add-on module incorporated in the console). Instead of having to add a keystrip unit, the technician can set a dip switch on the keyboard/controller printed circuit panel (PCP) to ON (enable QMT2) or OFF (disable QMT2). It is important that the system software configuration and the QMT2 dip switch be set correctly. For more information, refer to the section on LD15 in the following publications:

for Generic X08 software:
(The M2250 console does not run on generic X08 software.)

Data administration I, Generic X08 features and services implementation	(553-2321-310)
Data administration II-input/output reference and error message manual	(553-2321-311)
Telephone and console operation-test manual	(553-2321-315)

for Generic Xl 1 software:

X11 features and services	(553-3001-305)
X11 input/output guide	(553-3001-400)

for Generic XI 1 international software:

Data administration I: features and services implementation	(553-231 I-31 0) (Appendix 1)
Data administration II Generic X11--input/output *reference and error message manual*	(553-231 I-31 1) (Appendix 1)
Telephone set and console operation-test manual	(553-2311-315) (Appendix 1)

QMT2 feature disabled

When the QMT2 feature is disabled:

- If the console is **not** in shift mode, keystrip AK is inactive.
- If the console is in shift mode, the keys in strip AK function as Trunk Group Busy (TGB) keys, if configured in the system software.

  The triangle points aimed to the left adjacent to keystrip AK are never active.
- If the operator presses any key **not** located on keystrip AK when the console is in shift mode, the console performs the function associated with the key pressed. The shift indicator remains on.
- If the operator presses any key located on keystrip AK when the console is in shift mode, the associated trunk group is busied out.
- The keys in strip BK function as Incoming Call Identification keys.

QMT2 feature enabled

When the QMT2 feature is enabled:

- If the console is **not** in shift mode, the keys in strips AK and/or BK function as Incoming Call Identification (ICI) keys.
- If the console is in shift mode, the keys in strips AK and BK function as Trunk Group Busy (TGB) keys (that is, they imitate the keystrips of the QMT2 add-on module):
  - the LCD indicators pointing to the left indicate busy trunks
  - the LCD indicators pointing to the right indicate incoming calls.

Feature key modes

Functions shown for some of the feature keys in Table 2-1 vary depending on which console mode is in effect while the key is being pressed. Table 3-1 lists the various alternate feature key functions.

When a feature key is pressed while the attendant console is in a mode other than normal or Level 1, nothing happens.

When in the normal call processing mode, access the Level 1 mode by pressing the shift key. The LCD indicator beside the shift key lights and remains on throughout all options and menus, extinguishing only upon return to normal call processing. All call processing keys which do not have a dual function perform normally while the console is in Level 1 mode. Press the shift key again to return to normal call processing.

On early releases of the Ml250 attendant console, press the octothorpe (#) key to return from any menu on the display screen to the level 1 mode. On the M2250 attendant console and later releases of the M1250, press the octothorpe (#) key to exit from any submenu, or from the Options Menu or Diagnostics Menu to normal operating mode. Press the shift key to return to the Level 1 mode.

Level 1 mode operation also provides access to additional call processing features as well as to options and maintenance features. One of the additional call processing features is the access to Trunk Group Busy (TGB) keys that are locked out in normal mode. For example, in normal mode, there are 8 available TGB keys on the M1250, and 10 available TGB keys on the M2250. QMT2 enabled allows access to 16 TGB keys on the Ml250 (verses 8), and 20 TGB keys on the M2250 (verses 10).

Table 3-3
Setting the date (M1250)

Step	Action	Response
1	Enter shift mode.	
2	Press F1 to enter the Options menu.	
3	Select option 5 (set date).	The current date appears in the day-month-year format.
4	To exit without changing any settings, press the octothorpe (#) key.	
5	To alter the date setting, use the dial pad keys to overwrite the displayed settings.	As you type in the new date, the cursor moves from position to position, and then to the next entry field. If you enter more than 6 numbers, the cursor returns to the day field.
6	To alter the internal date, press the asterisk (*) key.	After you press the asterisk (*) key, the time you entered is checked for legality. If it is legal, the real time clock changes to the setting entered; if it is illegal, the current real time clock settings are re-displayed.
7	To exit, press the octothorpe (#) key.	

Powering and reset

After a power failure or a temporary corruption of data, the attendant console is reset automatically. If a permanent fault condition is detected, the console enters the maintenance mode (Position Busy) and a failure message is displayed on the LCD screen.

Note 1: The failure code format is XXH, where XX is a two-digit hex-code indicating where the fault has been detected. Refer to Table 3-4 for explanations of the failure codes.

Note 2: When the BLF/CGM is attached to the console, an additional 16V unregulated power source is required.

Console diagnostics

Use the Diagnostic menus to check the functions of the console and to perform tests. To enter the Diagnostic mode, use the procedure listed on this page. Figure 3-1 shows the main Diagnostic menus for the Ml250 and M2250 attendant consoles.

1 Press the Shift key.

2 Press the [redacted]l key (function key F4).

2a (M2250) — dial password "9999"

3 Dial the asterisk (*)to enter Diagnostics menu { 1 }. To toggle between menu { 1 } and menu { 2 }, dial *.

4 From one of the main Diagnostic menus, dial # to quit the Diagnostics mode.

Follow the procedures listed below to perform the Diagnostic tests.

Figure 3-1
Console diagnostics menus

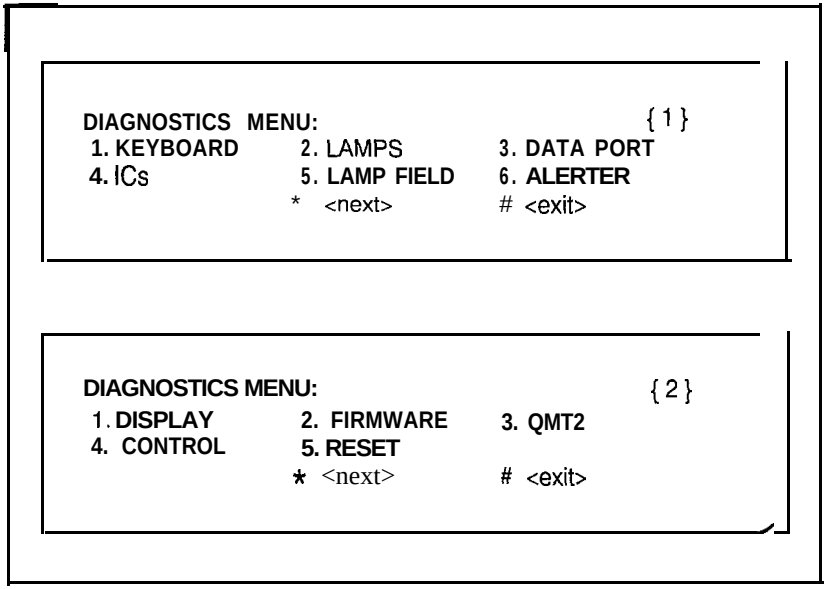

Keyboard To check the functionality of each key on the console. When you press a key its location code is displayed within parenthesis. For example, (00) denotes the upper left-hand ICI key.

1 From Diagnostics menu { 1 }, dial "1".

2 Press any key on the console. The display shows the keys location code, indicating the key is functional. Table 3-4 **shows** the key location codes.

3 Dial the octothorpe (#) to exit and return to Diagnostic menu { 1 }.

Table 3-4
Key location codes for console diagnostics

		22	21	20	34		54	60	61	62		
00	10								70		80	90
01	11								71		81	91
02	12								72		82	92
03	13	23						63	73		83	93
04	14	24						64	74		84	94
05	15	25		35	45	55		65	75		85	95
06	16	26		36	46	56		66	76		86	96
07	17	27		37	47	57		67	77		87	97
08	18	28		38	48	58		68	78		88	98
09	19	29						69	79		89	99

Lamps To check the functionality of each LCD indicator on the console. The operation is as follows:

1 From the Diagnostics menu { 1 }, dial "2".

2 Dial 1 to turn all lamps ON. You can dial the asterisk (*) to turn each lamp OFF one by one.

3 Dial 2 to turn all lamps OFF. You can dial the asterisk to turn each lamp ON one by one.

4 Dial the octothorpe (#) to exit and return to Diagnostic menu { 1 }.

QMT2 To display the current state of the QMT2 dip switch inside the console and to change the setting for verification testing (LD31). After a change, the actual switch setting will after a timeout period of about three minutes.

1 From Diagnostics menu { 2 }, dial "3".

2 Dial "*" to toggle between QMT2 ON and OFF.

3 Dial the octothorpe (#) to exit and return to Diagnostic menu { 1 }.

Control To allow you to turn the conference bridge analog control gates, the auxiliary tone channel and the Code Blue Relay ON or OFF. Note that the auxiliary control only affects the control gate on the ASIP board. To actually generate a tone, use the Alerter menu.

1 From Diagnostics menu { 2 }, dial "4".

```
DIAGNOSTICS: CONTROL
1. SCR    2. DST    3. ARX    4. ATX    5. TON    6. REL
 {0}       {0}       {0}       {0}       {0}       {0}
  * <OFF>                                  # <exit>
```

2 Dial key "1" to toggle the primary control gate between ON and OFF.
Dial key "2" to toggle the secondary control gate between ON and OFF.
Dial key "3" to toggle the attendant receive control between ON and OFF.
Dial key "4" to toggle the attendant transmit control between ON and OFF.
Dial key "5" to toggle the auxiliary tone control between ON and OFF.
Dial key "6" to toggle the relay control between ON and OFF.

3 Dial "*" to turn all the control gates OFF.

4 Dial the octothorpe (#) to exit and return to Diagnostic menu { 1 }.

Reset To perform a hard reset of the console. All devices and memory on the UIP and ASIP boards are reset, as if the power cord were unplugged and plugged in again.

1 From Diagnostics menu { 2 }, dial "5". The reset is performed immediately.

Ml 250 failure codes

A failure code will appear on the Display screen in response to the detection of a hardware fault. Refer to Table 3-5, Ml 250 failure codes, for an explanation of the code and for possible solutions.

Table 3-5
Ml250 failure codes

Failure code	Reason	What to do
20 H	The 6818 RTC, U6, is faulty.	Unplug the line cord and plug it in again. If the failure code still appears, there is an electrical fault in the console, and it should be returned. Note: Log the failure code with the returned unit, as it gives an indication of which component has failed.
10 H	The RAM IC, U10, is faulty.	Same as for 20H.
08H	A key in column A is stuck.	Unplug the line cord. Free the key that is stuck. Plug in the line cord. If the failure code still appears, the console is faulty and should be returned.
09H	A key in column B is stuck.	Same as for 08H.
OAH	A key in column C is stuck.	Same as for 08H.
OBH	A key in column DO is stuck.	Same as for 08H.
OCH	A key in column D1 is stuck.	Same as for 08H.
ODH	A key in column D2 is stuck.	Same as for 08H.
OEH	A key in column E is stuck.	Same as for 08H.
OFH	A key in column F is stuck.	Same as for 08H.

-continued-

Table 3-5 (continued)
MI250 failure codes

Failure code	Reason	What to do
COH	The SRC micro is not responding.	Same as for 20H.
90H	The RS-232 port has failed the loopback test.	Check to see if the loopback connector is inserted. If not, insert it and perform the loopback test again. If the failure code still appears, turn the console off and on while the connector is inserted. Redo the loopback test. If the failure code still appears, the console is faulty and should be returned.
88H	The EPROM, U18, does not contain the correct ID, or is faulty.	Same as for 20H.

The failure codes produced by the firmware are bit-significant as follows:

B7	B6	B5	B4	B3	B2	B1	BO
0	USART	RTC	RAM	KEYS	c2	cl	c0*
1	SRC	BLF	RS232	EPROM	0	0	0

Note: * c0 - c2 = key column number [0-7]

In most instances, the failure code accurately identifies the offending hardware component. However, if the microprocessor is faulty, the readings may be unreliable or misleading.

Failure code 90H is always shown if the loopback test has not been performed. Refer to “Loopback Test.”

M2250 failure codes

A failure code will appear on the Display screen in response to the detection of a hardware fault. Refer to Table 3-6, M2250 failure codes, for an explanation of the code and for possible solutions.

Table 3-6
M2250 failure codes

Failure code	Printed circuit pack (PCP)	Reason	What to do
40H	UIP	The PSG, U13, is not responding.	Unplug the line cord and plug it in again.. If the failure code still appears, there is an electrical fault in the console, and it should be returned. Note: Log the failure code with the, as it gives an indication of which component has failed.
20H	UIP	The RTC, U16, is faulty.	Same as for 40H.
10H	UIP	The RAM IC, U1, is faulty.	Same as for 40H.
08H	UIP	A key in column A is stuck.	Unplug the line cord. Free the key if it is stuck. Plug in the line cord. If the failure code still appears, the console is faulty and should be returned.
09H	UIP	A key in column B is stuck.	Same as for 08H.
OAH	UIP	A key in column C is stuck.	Same as for 08H.
		-continued-	

Table 3-6 (continued)
M2250 failure codes

Failure code	Printed circuit pack (PCP)	Reason	What to do
OBH	UIP	A key in column DO is stuck.	Same as for 08H.
OCH	UIP	A key in column D1 is stuck.	Same as for 08H
ODH	UIP	A key in column D2 is stuck.	Same as for 08H.
OEH	UIP	A key in column E is stuck.	Same as for 08H.
OFH	UIP	A key in column F is stuck.	Same as for 08H.
A0H	ASIP	The RS-232 has failed the loopback test.	Check to see if the loopback connector is inserted. If not, insert it and perform the loopback test again. If the failure code still appears, turn the console off and on while the connector is inserted. Perform the loopback test again. If the failure code still appears, the console is faulty and should be returned.
90H	ASIP	ASM A44#3, U1, is faulty.	Same as for 40H.
88H	ASIP	Secondary A44#2, U2, is faulty.	Same as for 40H.
84H	ASIP	Primary A44#1, U1, is faulty.	Same as for 40H.
82H	ASIP	The UART, U5, is faulty.	Same as for 40H.
81H	ASIP	The RAM, U8, is faulty.	Same as for 40H.

The failure codes produced by the firmware in response to the detection of a hardware fault are bit-significant as follows:

B7	B6	B5	B4	B3	B2	B1	B0
0	PSG	RTC	RAM	KEYS	c2	c1	c0*
1	ASIP	RS-232	A44#3	A44#2	A44#1	UART	RAM

Note: * c0 c2 = key column number [0-7]

Note: Bit 7 indicates whether the failure occurred on the user interface printed circuit card (UIP) (B7=0) or on the audio and system interface printed circuit card (ASIP) (B7=1).

In most instances, the failure code accurately identifies the faulty hardware component. However, if the microprocessor is faulty, the readings may be unreliable or misleading.

Failure code A0H is always shown if the loopback test has not been performed. Refer to "Loopback Test."

Trunk Group Busy indicators

Trunk group busy (TGB) indicators show the status of each group of trunks. If a TGB indicator is on steadily, the attendant has busied out all trunks in that group by pressing the shift key plus the TGB key. If a TGB indicator is flashing, all the trunks in that group are actually busy.

In supervisory mode, TGB keys show the status of other consoles in the customer group. If the indicator is off, the attendant position is in a Position Busy state. When an indicator associated with a particular attendant is on, the attendant is available to service calls.

> ***Note:*** The M2250 attendant console must be equipped with the Attendant Supervisory Module (NT7G10AA) in order to allow attendant supervision.

Incoming call indicators

Incoming call indicators (ICIs) display the various types of incoming calls presented to the attendant console. They also give an indication of the number of calls and the length of time calls have been queued:

- indicator on: one call has been queued for less than a certain length of time (software defined),

  indicator flashing: one call has been queued for more than the defined length of time, or there is more than one call in the queue.

Night service/busy

When the Shift key is off, pressing the Busy key puts the attendant console into Position Busy mode. When the Shift key is on, pressing the Busy key puts the console into Night Service mode. To return to normal operating mode, press the Busy key again.

In a multi-console system, activating Night Service will busy-out all attendant consoles in the system.

Call processing

The attendant answers a call by pressing the flashing loop key.

To answer a specific type of incoming call, press the ICI key associated with the steadily lit LCD. This removes the call from the queue and presents it to the attendant.

ICI key assignments

An ICI key may be assigned more than one call type. kefer to LD15, *X11 input/output guide* (553-3001-400). If the Attendant Call Party Name Display (ACPND) feature is equipped, all incoming calls are displayed by calling party name or external call source. Examples of possible ICI key assignments and displays are given in the following listing.

- **Attendant Intercept** indicates that a call is being made by a station to a facility to which that station is restricted, and has been routed to the attendant console.

  Listed Directory Numbers (maximum four) indicates that a call **is** being made to one of the attendant consoles associated with the listed directory numbers.

  Dial 0 indicates that a station which is not fully restricted has dialed 0.

  Fully-Restricted Station indicates that a fully-restricted station has dialed 0.

- **Foreign Exchange** indicates that the incoming call is from a foreign exchange.

- **Wide Area Telephone Service** indicates that the incoming call originated at a wide area telephone exchange.

- **Recall** indicates that a camped-on call or a call extended to an idle station has not been answered for 30 seconds, or that a station is recalling the attendant.

- **Call Forward** indicates that the call is being forwarded to the console from a station within the system.

  Tie Trunk indicates that the incoming call is on a Tie trunk.

Operating keys

The operating key/lamp strips CI/CK, DI, EI, and FI/FK allow the attendant to process calls from the console. Key/lamp strips CI/CK and FI/FK have permanently assigned functions as given in the following list.

Release allows the attendant to release a call presented to the console. When the LCD associated with the RLS key is lit, it indicates that no incoming calls are being presented to the console.

Loop Keys/Lamps allow the attendant to answer and originate calls from the console. The first call in the incoming queue is automatically presented to an idle loop key. Subsequent calls are queued and presented to a loop key when a loop becomes idle. Call selection is made by pressing the required ICI key. This action causes the call, which was automatically presented to the loop key by the system, to be replaced by the selected incoming call. In all cases, when the loop key is pressed, all ICIs go dark except the one associated with the call presented to the loop key.

- **Position Busy** enables the attendant to put the console in Position Busy mode. All calls directed to a console in Position Busy mode are re-directed to a free console in multi-console installations or to the night connection in single console installations. When a console is in Position Busy mode, "BUSY" is shown on line 4 of the display.

Night Service permits incoming calls to the attendant to be routed to a preselected station. The Night key enables the attendant to assign the Night Directory Number (DN) and to initiate Night Service. When assigning the Night Service DN, "NIGHT" flashes on line 4 of the display. When Night Service is on, "NIGHT" appears without flashing on the display.

In a multi-console system, activating Night Service will busy-out all attendant consoles in the system.

Hold allows the attendant to hold an active call at the console while serving other calls.

- **Conference** permits the attendant to set up a conference of up to five conferees plus the attendant.
- **Release Destination** allows the attendant to release the called party from a call held at the console while holding the calling party.

- **Release Source** allows the attendant to release the calling party from a call held at the console while holding the called party.
- **Signal Source and Destination** allows the operator to recall either party to a call held on the console.
- **Exclude Destination** excludes the called party from an established call held at the console, allowing the attendant to speak privately with the calling party.
- **Exclude Source** excludes the calling party from an established call held at the console, allowing the attendant to speak privately with the called party.

Feature keys

The keys on keystrip FK can be assigned any optional features with the exception of the Barge-In and Busy Verify features. These require five LCD indicator states (off, on, flash at 30, 60, or 120 impulses per minute [ipm]) during operation. If Barge-In or Busy Verify is required, they must be assigned to keys FK-0 and FK-1.

All other features may be assigned to any of the keys on strip FK. The following are some of the more common feature keys. Refer to LD12, *X11 input/output guide* (553-3001-400).

- **Attendant End-to-End Signalling** Enables the attendant to send Dual Tone Multiple Frequency (DTMF) signals to either the source or destination party.
- **Busy Verify** allows the attendant to confirm that a station returning a busy signal is actually being used.
- **Barge-In** allows the attendant to enter an established trunk connection for the purpose of talking to one or both parties.

  Paging allows access to a public address facility.
- **Speed Call** allows numbers to be dialed automatically by pressing the SPEED CALL key and dialing a 1- or 2-digit code.

Call Waiting indicator

The Call Waiting indicator (the characters CW displayed on line 4, bottom right hand side, of the LCD screen) indicates that there is a queue of calls to be answered. The CW display changes from steady to flashing when waiting calls exceed a certain number, or when a call has been waiting longer than a specified time.

The maximum number of waiting calls and the maximum hold time for each call waiting to be answered can be set with a data administration task. Refer to *X11 features* ***and services*** (553-3001-305). An optional buzz is available to indicate when the first call enters the queue. The number of calls waiting can be displayed on the LCD screen by pressing an assigned key on the attendant console.

On the M2250, the number of calls waiting can be displayed continuously on the status line of the display (line 4), if defined in LD15 and selected from the Options Menu.

Alarm indicators

Alarms are displayed on line 4 of the Display. "MN" indicates a minor alarm condition, while "MJ" indicates a major alarm. A minor alarm is an indication of a minor system failure affecting a limited number of lines or trunks, whereas a major alarm indicates that Emergency Transfer may have been initiated.

Emergency Transfer

In the event of a major equipment or power failure which causes the loss of call processing, preselected Central Office (CO) trunks are automatically connected to preselected stations (predetermined and hard-wired at installation time) through relays in the Meridian 1. Emergency Transfer can also be manually activated by a switch underneath the attendant console.

If the switch is activated while the console is still powered up, the word "EMERGENCY" appears on the status line of the display (line 4).

Attendant Administration

Attendant Administration is an optional feature (X11 and X11 international software only) that allows the attendant to modify some of the features assigned to selected telephone sets within the attendant's customer group. The attendant can enter a special program mode with an assigned key.

Once in the program mode, the console key/lamp strips have different functions from those during normal call processing. A plastic overlay can be placed over the console keyboard to identify the altered key functions. Refer to *X11 features* and *services* (553-3001-305) for Attendant Administration description and operating procedures.

SL-1

Ml 250 and M2250 attendant consoles

Description

Copyright © 1989 Northern Telecom
All rights reserved.
Information subject to change without notice.

Release 4.0
Standard
December 1, 1991
Printed in U.S.A.

northern telecom

SL-1

Telephone and attendant console installation

Publication number: 553-3001-215
Document release: 5.0
Document status: Standard
Date: December 31, 1992

AtoZ KELLATRONICS, INC.
tel: 800.766.3425 fax: 800.720.1172
818.773.8888 818.773.8899
www.kellatronics.com info@kellatronics.com

© 1989 Northern Telecom
All rights reserved.

Revision history

December 20, 1989

Standard issue, release 1 .O. Reissued for compliance with Northern Telecom standard 164.0, and to incorporate corrections and updated information.

December 20, 1990

Standard issue, release 2.0. Updated to include Attendant Supervisory Module installation and telephone acceptance tests.

December 1, 1991

Standard. Updated attendant console connections and ASM installation. Due to the extent of changes, revision bars are omitted.

December 31, 1992

This document is issued to include updates for Xl 1 release 18. Changes are noted with revision bars in the margins.

Contents

About this document **1-1**

Wiring installation **2-1**
Wiring for telephones and attendant consoles 2-1
Normal operating ranges 2-5

Attendant consoles **3-1**
Packing and unpacking 3-1
Installation and removal 3-1
Designating attendant consoles 3-12
Cross connecting attendant consoles 3-18

Telephones **4-1**
Packing and unpacking 4-1
Installation and removal 4-1
Meridian Modular Telephones self-test 4-11
M2317 telephone self-test 4-16
M3000 trouble locating 4-22
Designating telephones 4-25
Connecting telephones 4-27
Cross-connecting telephones 4-30

Add-on modules **5-1**
Packing and unpacking 5-1
QMT1, QMT2 add-on module 5-1
Faceplate 5-2
Designating add-on modules 5-12
QMT3 Lamp Field Array 5-13
Busy Lamp Field/Console Graphics Module 5-19

Attendant Supervisory Module (M2250 console)	5-31
QMT4, QMT15 handset modules	5-35
Amplified handset on SL-1 telephones	5-46
NE-G6QDC amplified handset on SL-1 telephones	5-48
QKK1, QKK3 Handsfree unit interface kit	5-49
QSU1 Handsfree unit	5-52
Handsfree unit on a QSU71 telephone	5-54
QKK8 Automatic Answerback	5-56
QKM11 adapter kit	5-59
QKM13 light probe kit	5-60
QUT1 power unit and transformer	5-68
M2000/M2317/M3000 Data Options	5-78
Meridian Modular Telephones	5-86
Meridian Communications Adapter and Meridian Programmable Data Adapter	5-88
Power Supply Board	5-92
Display	5-100
External Alerter Board	5-I 06
Key Expansion Modules	5-109
Wall mounting	5-112
Troubleshooting	5-I 13

About this document

This document contains the installation procedures for attendant consoles, telephones, and add-on modules. See Figure 2-1 for apparatus designations.

"Wiring installation" includes information for the wiring for all telephones and attendant consoles.

"Attendant consoles" describes the installation and removal process for QCW-type, and M1250/M2250 attendant consoles.

Procedures for installing and removing the SL-1, M1109, M2000, M2006/M2008, M2016S, M2216, M2616, and M3000 telephones are found in "Telephones."

Installation and removal information for all add-on modules and options for all telephones and attendant consoles is found in "Add-on modules."

Wiring installation

Wiring for telephones and attendant consoles

This chapter discusses the installation and removal procedures for wiring and calling for telephones and attendant consoles.

Each 500/2500 type telephone requires one pair of Z station wire or equivalent. Each SL-1 telephone requires two pairs of Z station wire or equivalent. You may use existing 16 or 25 pair connectorized cable. Each attendant console requires a 16-pair cable terminated on an Amphenol connector.

When zone cabling and conduit are used, assign a block of numbers or letters to each zone (see Figure 2-2). Allow for growth when assigning blocks of numbers.

Cable markers are normally an adhesive-backed cloth tape 1/2 inch wide by 3-1/2 inch long (15 by 65 mm) with preprinted numbers.

For limits and cabling refer to Figures 2-3 through 2-5.

Figure 2-1
Apparatus designations

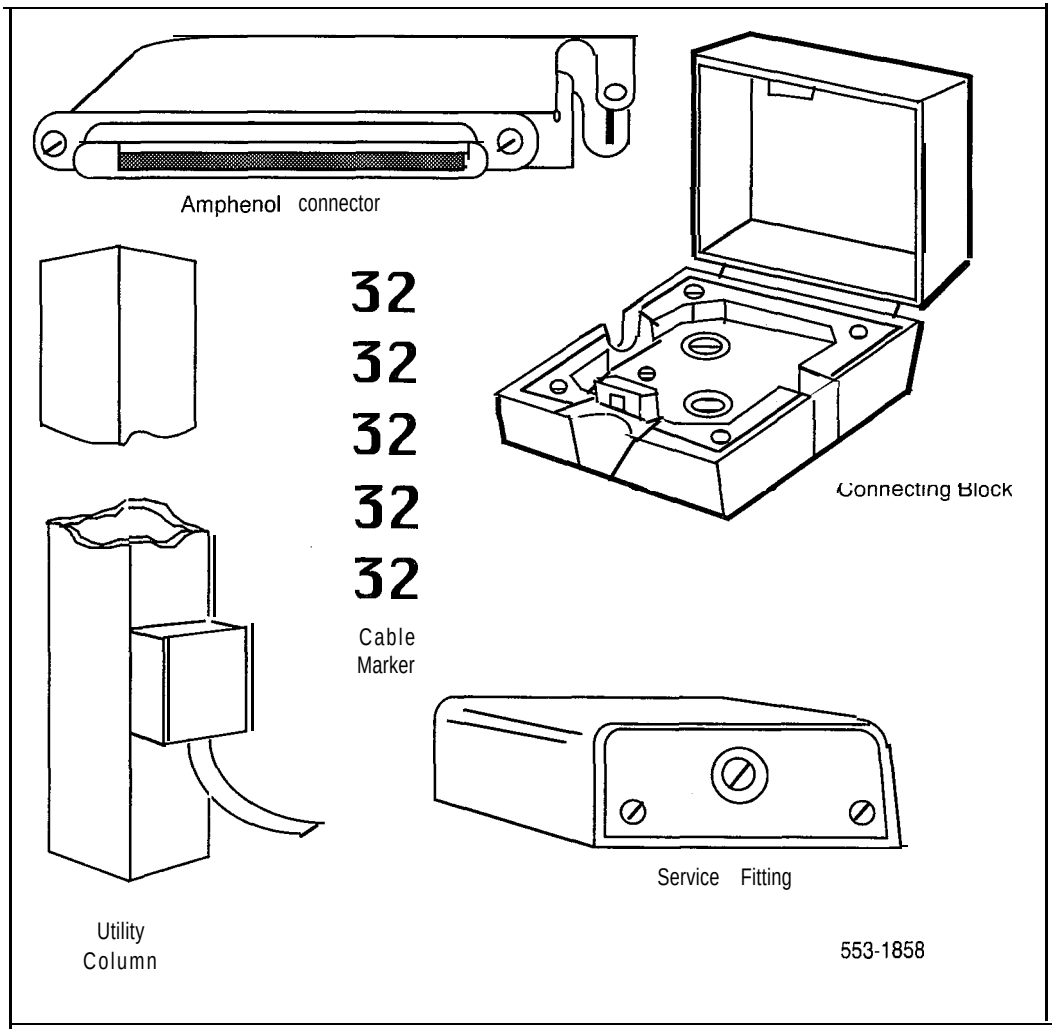

Figure 2-2
Zone cabling and conduit assignment

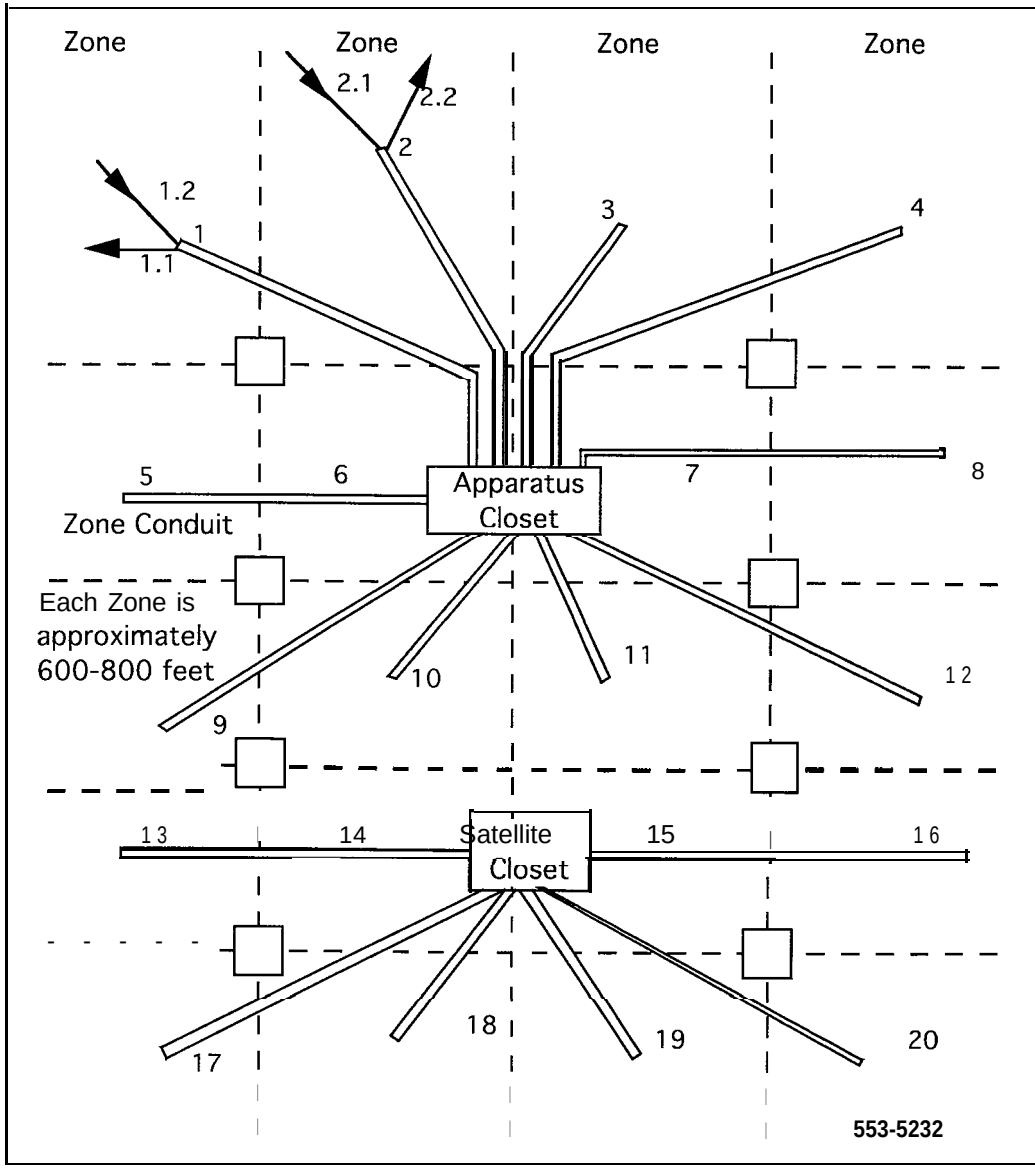

Procedure 2-1
Installing wiring

1 Assign a number to the wire or cable used.

2 Attach the assigned number to the wire or cable at the end nearest the telephone, using a cable marker.

3 Run wire or cable between the telephone location and nearest cross-connect point (if not previously run).

4 Connect cable or wire to telephone connecting block.

5 Designate telephone connecting block.

6 Cross-connect pairs at intermediate cross-connect points (if required) and terminate at the cross-connect terminal,

7 Terminate leads at cross-connect terminal and designate blocks according to house cable plan.

Table 2-1
Terminal connections

Connecting Block Designations			Inside Wiring Colors	
NE-47QA or QBB1B	NE-284-74-5001 Adapter	NE-625F TELADAPT	Z Station Wire	16/25 Pair Cable
G	1T	T1 (G)	G	W-BL
R	1R	R1 (R)	R	BL-W
BK	X1	AUX (BK)	BK	w-o
Y	x2	GND (Y)	Y	o-w
5	R	T2 (BL)		w-SL
6	B	R2 (W)		SL-W

Normal operating ranges

Telephones The following indicates the normal operating ranges for SL-1 telephones, with and without add-on modules.

- 18952 or 6000 cable feet (1830 m) whichever is reached first. For example:

  22 AWG wire range = 6000 feet (1830 m)
  24 AWG wire range = 3700 feet (1125 m)
  26 AWG wire range = 2300 feet (700 m)

  The outside plant cable must not exceed 1Ω per mile, or 18952 per 6 K.

- SL-1 telephones equipped with a QKK1 extension kit have a maximum range of 8000 feet (2440 m). For example:

  22 AWG wire range = 8000 feet (2440 m)
  24 AWG wire range = 5500 feet (1675 m)
  26 AWG wire range = 3690 feet (1125 m)

  The outside plant cable must not exceed 0.085Ω per mile, or 189Ω per 6 K.

  Note: The 24 V and 15 V supplies can be obtained from QUT1 centralized power supply located at the cross-connect terminal. A separate fuse must be used for each set.

- Meridian Modular Telephones have a maximum permissible loop length of 3500 ft (915 m), assuming 24 AWG (0.5 mm) wire with no bridge taps. A 15.5 dB loss at 256 kHz defines the loop length limit.

Attendant consoles The following indicates the normal operating ranges for the QCW1C (or earlier vintage), and QCW2A attendant consoles, with and without add-on modules.

- 18952 or 6000 cable feet (1830 m) whichever is reached first. For example:

  22 AWG wire range = 6000 feet (1830 m)
  24 AWG wire range = 3700 feet (1125 m)
  26 AWG wire range = 2300 feet (700 m)

  The normal operating range of the QCW1D, and QCW2B (or later vintage) attendant consoles is 8000 cable feet (2440 m) using cable rated at a maximum of 0.085Ω per mile (1600 m). For example:

  22 AWG wire range = 8000 feet (2440 m)
  24 AWG wire range = 5500 feet (1675 m)
  26 AWG wire range = 1125 feet (1125 m)

  The normal operating range of the Ml250 attendant console is 8000 cable feet (2440 m) using cable rated at a maximum of 0.085Ω per mile (1600 m). For example:

  22 AWG wire range = 8000 feet (2440 m)
  24 AWG wire range = 5500 feet (1675 m)
  26 AWG wire range = 1125 feet (1125 m)

  Note: The 24V and 15V supplies can be obtained from QUT1 centralized power supply located at the cross-connect terminal. A separate fuse must be used for each console.

  24V power can also be provided from a QPC61 line card. The maximum resistance is 30Ω.

  The outside plant cable must exceed 1Ω per mile, or 18952 per 6 K.

- M2250 attendant consoles have a maximum permissible loop length of 3500 ft (915 m), assuming 24 AWG (0.5 mm) wire with no bridge taps. A 15.5 dB loss at 256 kHz defines the loop length limit.

Figure 2-3
NE-500/2500-type telephones — limits and cabling

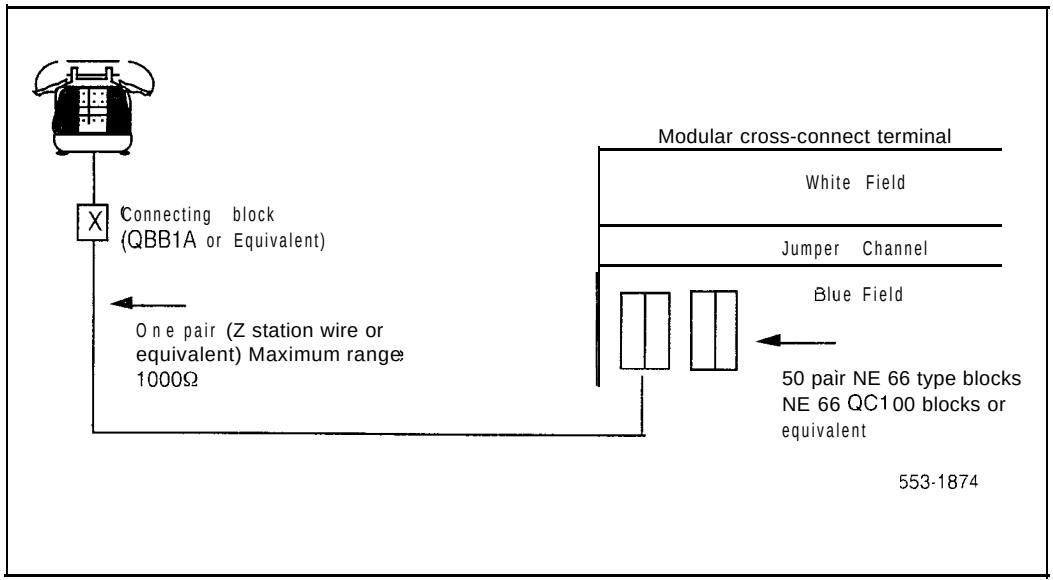

Figure 2-4
SL-1 telephones — limits and cabling

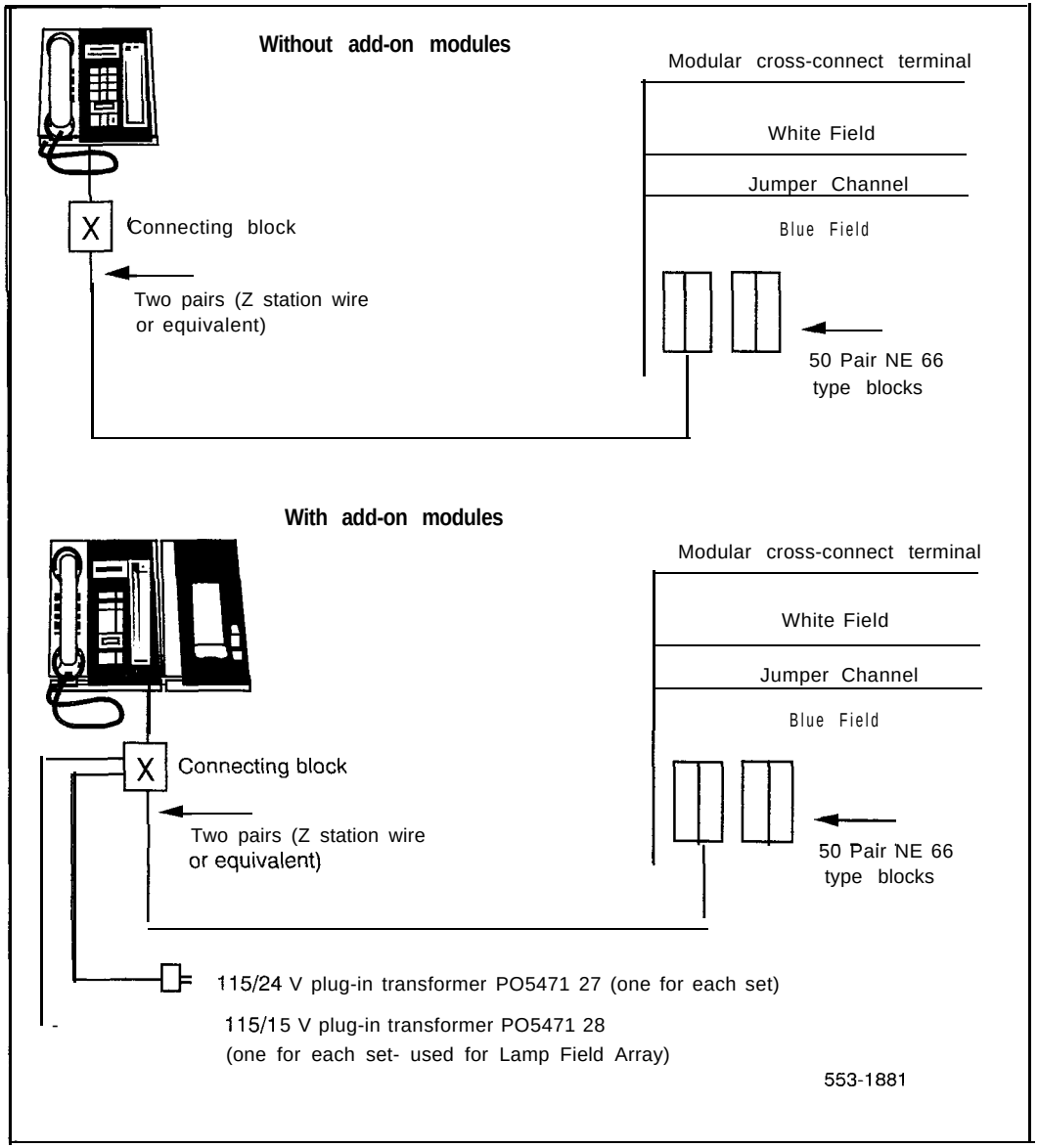

Figure 2-5
QCW type attendant console — limits and cabling

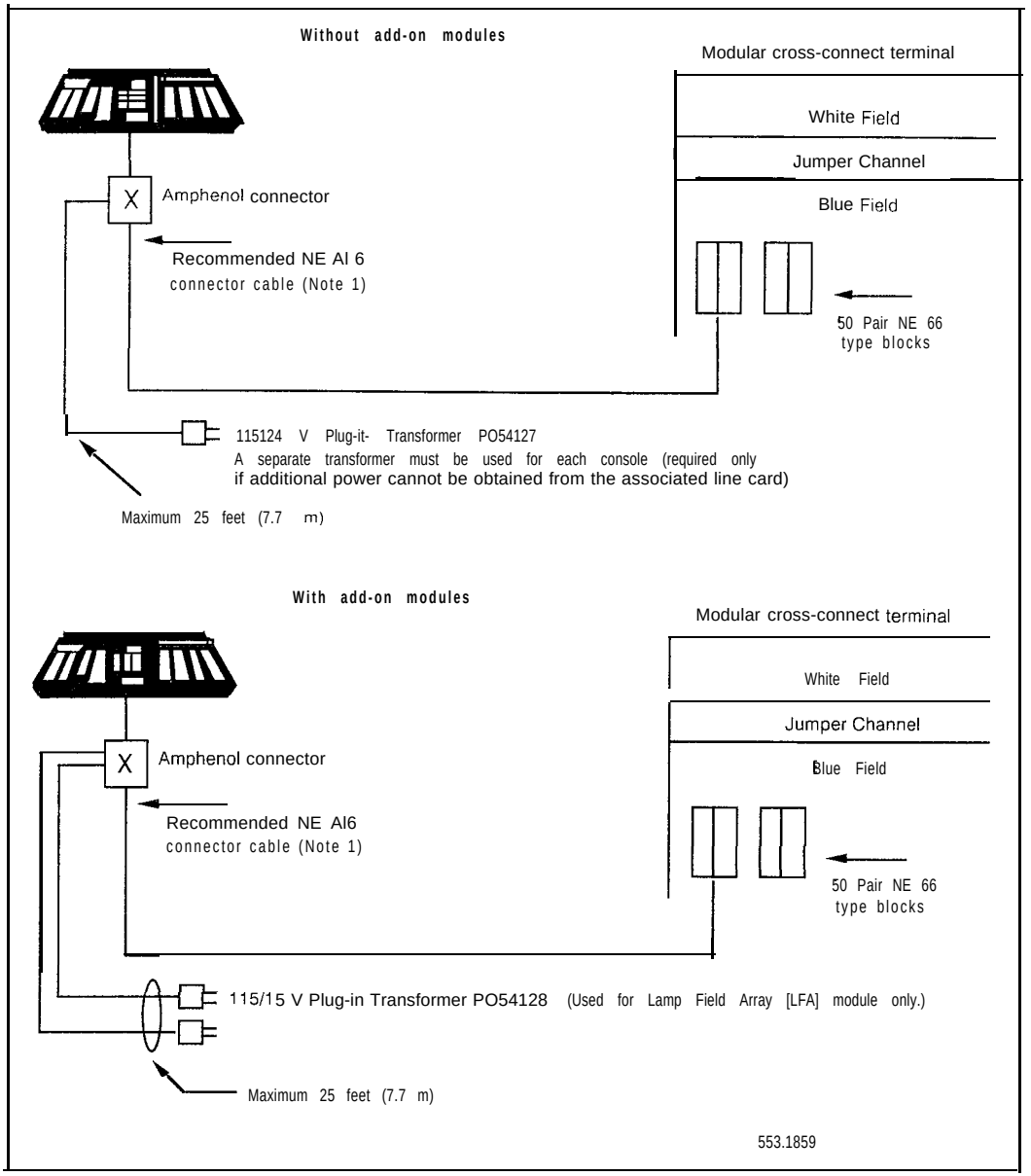

Attendant consoles

Packing and unpacking

Use proper care while unpacking any attendant console. Check for damaged containers so that appropriate claims can be made to the transport company for items damaged in transit.

If an attendant console must be returned to the factory, pack it in the appropriate container to avoid damage during transit. Remember to include all loose parts (cords, handset, power unit, labels, lenses) in the shipment.

Installation and removal

Use the following procedures to install and remove QCW and Ml250 attendant consoles.

> ***Note:*** Although QCW and M1250/M2250 attendant consoles do not require a static discharge ground connection, the connection should be installed to protect any earlier attendant console vintages that may be used as replacements.

Choose a clean, level work surface and place several sheets of soft, clean paper between the attendant console and the work surface. This will prevent scratching or otherwise damaging the top cover, Liquid Crystal Display (LCD) indicators and screen, and the feature keys of the attendant console.

Procedure 3-I
installing QCW attendant consoles

1 Ensure that a 16-pair or 25-pair cable equipped with a 25-pair Arnphenol connector is installed at the attendant console's location.

2 Unpack and inspect the attendant console for damage. If the attendant console is damaged, notify your supplier.

3 Designate the attendant console according to the features provided (see Procedure 3-7).

4 Connect the Amphenol connector on the attendant console line cord to the Amphenol connector on the attendant console cable.

5 Cross-connect the attendant console at the cross-connect terminal (see Procedure 3-8).

6 Using a minimum of 24 AWG cross-connect wire, connect a static discharge ground (use a water pipe or the building main ground system) to pins 15 and 40 (slate-black pair) of the attendant console cable at the cross-connect terminal nearest the attendant console location. Connect the ground within 200 ft (68 m) of the attendant console using an approved ground connector or a clamp. Do not connect the attendant console to the Meridian 1 System ground.

7 Remove the cover from the attendant console:

- Place the attendant console on a desk with the front edge slightly beyond the edge of the desk.
- Insert a paper clip into each release hole in the front edge of the attendant console housing.
- Press the releaser through the release hole inward against the cover until the cover releases.
- Lift off the cover.
- Unscrew the captive retaining screws securing the cover to the housing.
- Remove the cover.

—continued—

8 With a voltmeter, measure the ac and dc voltages between the metal frame of the attendant console and the quick-connect terminal VSS1A on the lower left side of the attendant console circuit board.

Make sure that the voltage measurements are less than ± 40 V. If the voltage is greater than ± 40 V, grounding is inadequate and a better ground must be connected.

9 Replace the attendant console cover:

- Place the attendant console on a desk with the front edge slightly beyond the edge of the desk.
- Fit the cover to the housing and tighten the captive retaining screws.
- Position the faceplate so that the keys will pass through the cutouts in the cover.
- Tilt the back edge of the cover towards the rear of the attendant console and insert the locating tabs into the slots on the attendant console cover.
- Keeping the locating tabs in the slots, tilt the front edge of the cover down, passing the keys through the cutouts in the cover.
- Press the front edge of the faceplate down until the cover catches snap into place.
- Ensure that the cover is securely held in place without binding the keys.

10 Configure the attendant console in the Meridian 1 system. Refer to *X11 input/output guide* (553-3001-400).

Figure 3-1
Typical QCW type attendant console **faceplate layout**

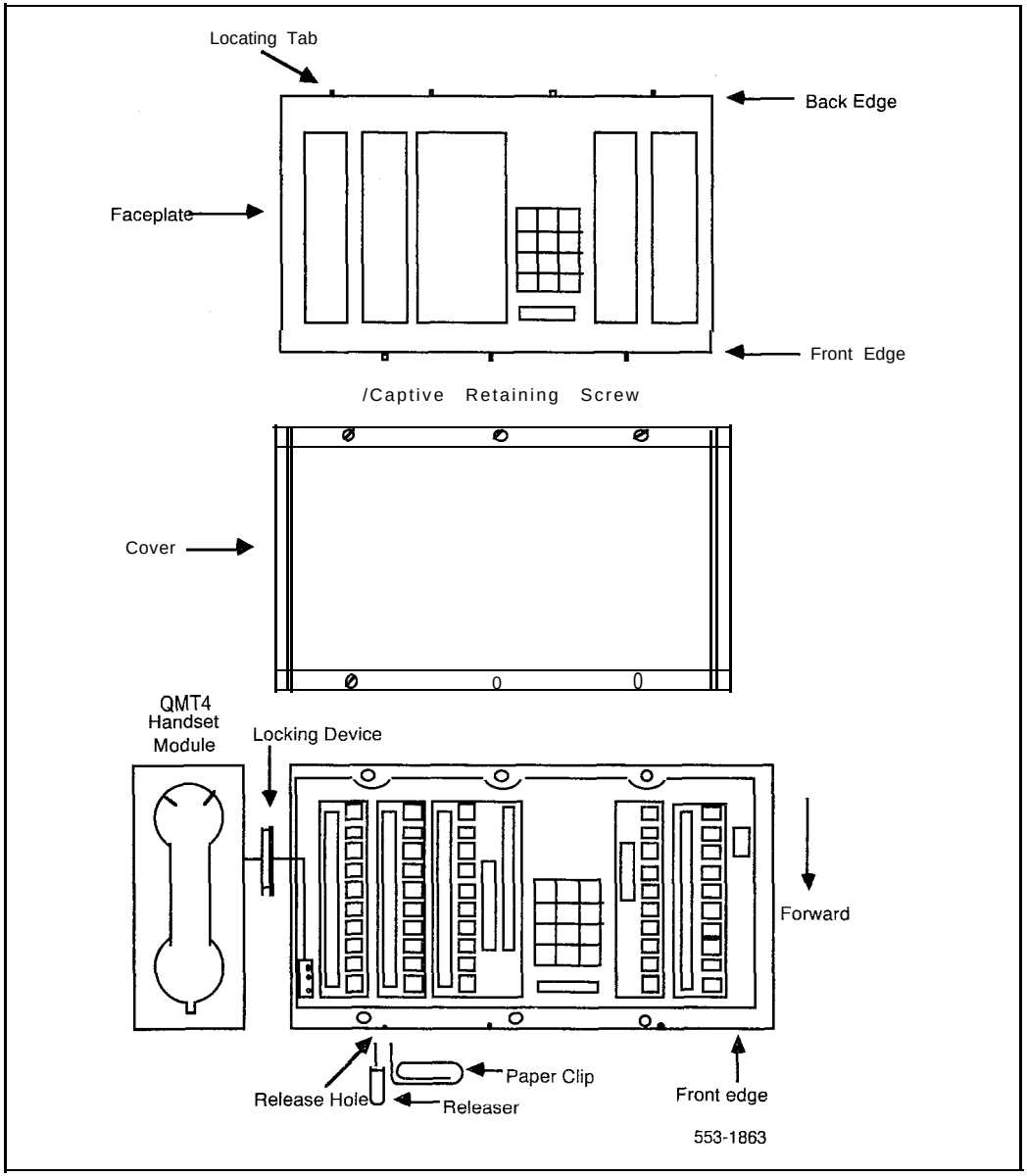

Procedure 3-2
Installing the M1250/M2250 attendant consoles

1 Ensure that a 16-pair or 25-pair cable equipped with a 25-pair Amphenol connector is installed at the attendant console's location.

2 Unpack and inspect the attendant console for damage. If the console is damaged, notify your supplier.

3 Designate the console according to the features provided (see Figures 3-5 through 3-8).

4 Connect the Amphenol plug on the attendant console to the Amphenol jack coming from the Main Distribution Frame (MDF).

- Fasten the Amphenol connectors together and secure the captive screws on the cable.
- Ensure that the connectors are secured in a connector mounting, if provided, or to the wall. Do not leave connectors unprotected on the floor.

5 Add a line circuit for the attendant console, if not already done. Refer to *Circuit card installation and testing (553-3001-211).*

6 Cross-connect the attendant console at the cross-connect terminal (see Procedure 3-8).

7 Enter the related attendant console data in the Meridian 1 system. Refer to *XI 1 input/output guide (553-3001-400).*

8 Test the console features using the attendant console user guide.

Note: Refer to *Assembly and installation of apparatus* (553-2YY1-210) for circuit card installation procedures.

Procedure 3-3
Removing the MI250 and M2250 attendant consoles

1 Remove related attendant console data from the system memory. Refer to *X11 input/output guide* (553-3001-400).

2 Locate and remove cross-connections from the attendant console cable at the cross-connect terminal (see Procedure 3-8).

3 Remove the circuit card if required. Refer to *Assembly and installation of apparatus* (553-2YY1-210).

Note: Do not remove the circuit card if any of the remaining units on the card are assigned.

4 Disconnect the Amphenol connector on the end of the cable that leads to the cross-connect terminal from the connector on the cable leading to the attendant console.

5 Pack the attendant console, handset and cords in a suitable container.

Figure 3-2
MI250 assembly drawing (exploded view)

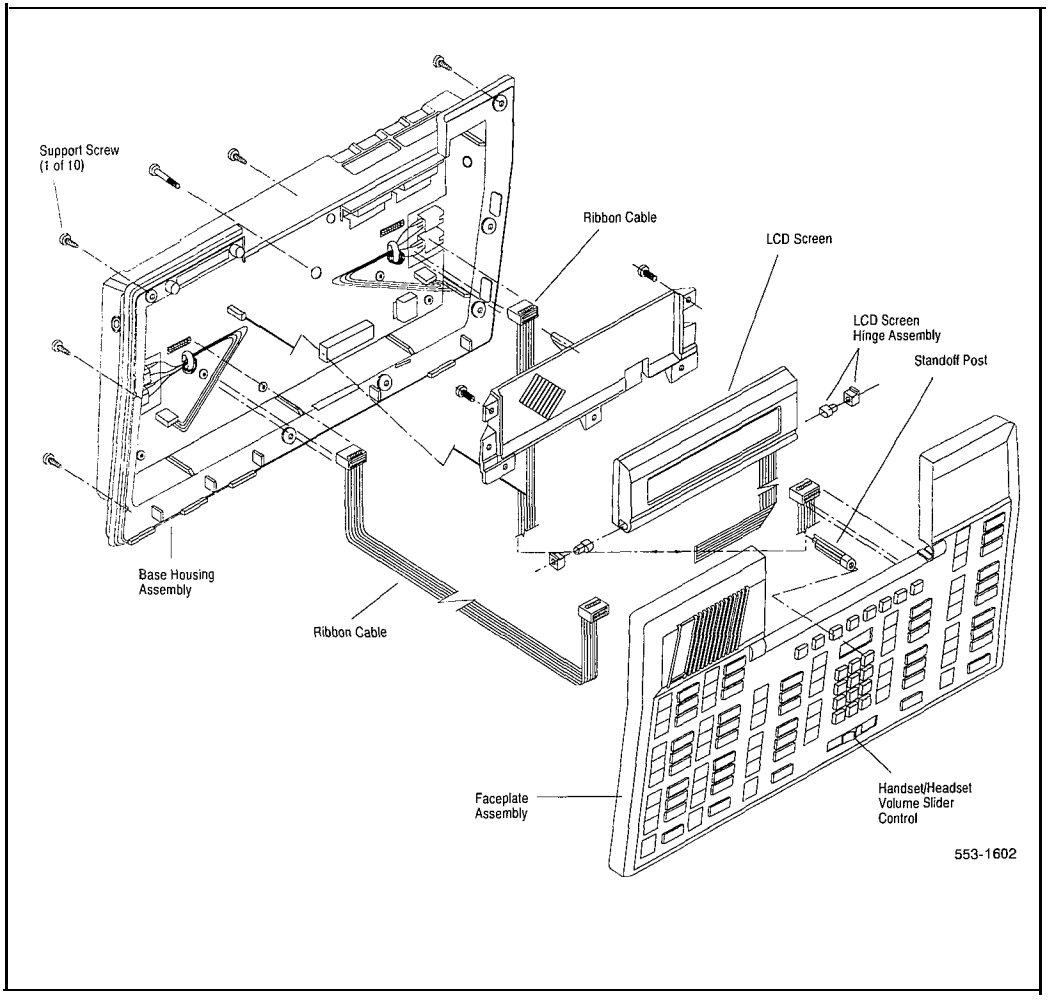

Figure 3-3
M2250 assembly drawing (exploded view)

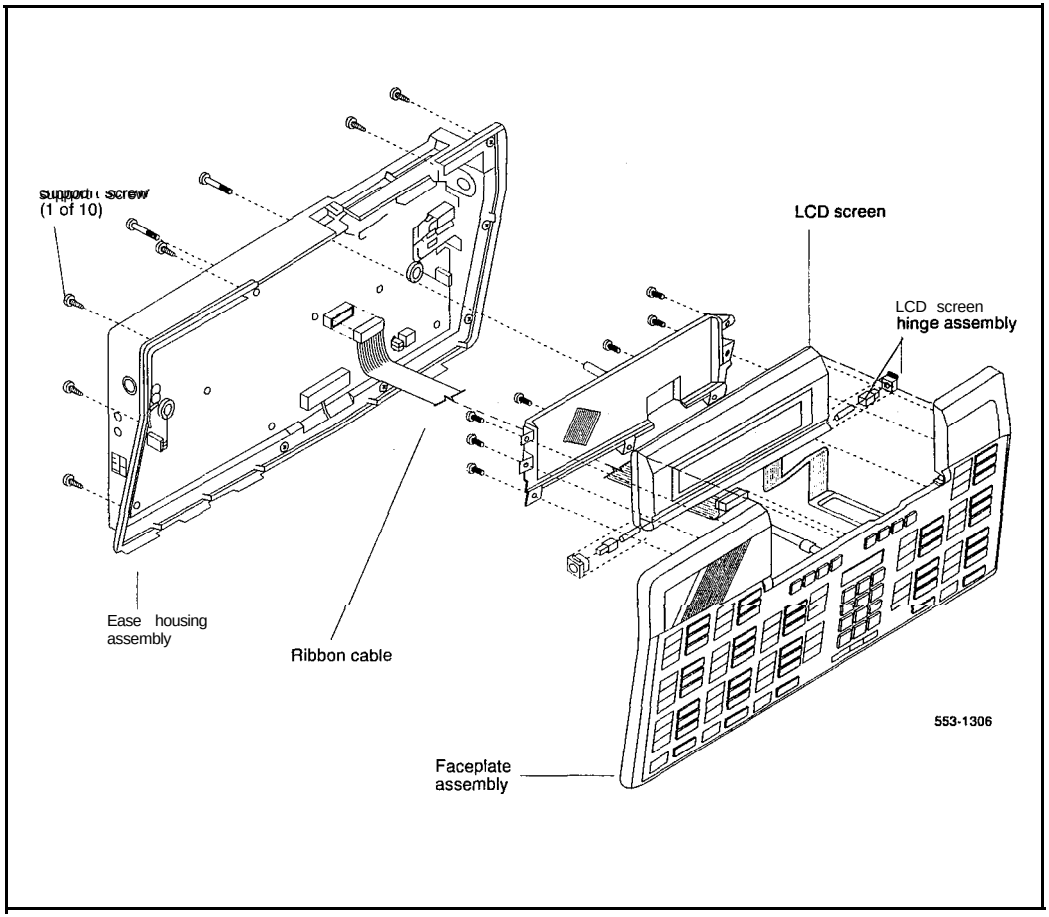

Procedure 3-4
Removing **M1250/M2250 attendant console top cover**

1 Disconnect any plugs and cords from the attendant console.

2 Remove the ten 10 mm fastening screws in the flange of the attendant console, as well as one 10 mm and one 40 mm screw on the base of the attendant console (see Figure 3-2 and Figure 3-3).

3 Holding the top cover and the base together by hand, turn the attendant console right-side up and place it back on the work surface.

4 Carefully lift the faceplate straight up and disconnect the following cable connections:

on the Ml250

J1 – 16 pin plug ribbon cable

J2 – 16 pin plug ribbon cable

on the M2250

J2 – 20 pin plug ribbon cable

When setting the QMT2 switch on the Ml250 attendant console's PCB, ON indicates that the QMT2 is enabled, OFF indicates it is disabled (see Procedure 3-5). The status of the switch can be queried by going to the diagnostics menu and selecting the QMT2 option. The Display menu CHANGE feature provides only a temporary change to the QMT2 status.

Note: On attendant consoles with a digit display attached to the top cover, do not connect or disconnect cable to digit display unless the attendant console line cord is disconnected.

Procedure 3-5
Installing M1250/M2250 attendant console top cover

1 Set the QMT2 dip switch. To locate the dip switch, look at the attendant console from the top. The QMT2 dip switch is the only dip switch on the topmost circuit board. Set switch to ON (enable QMT2) or OFF (disable QMT2).

Note: The QMT2 feature must be enabled in system software. Refer to LD12, *X11 input/output* guide (553-3001-400).

2 Carefully lift the top cover straight up and make the following cable connections:

on the M1250

J1 – 16 pin plug ribbon cable

J2 – 16 pin plug ribbon cable

J7 – 2 pin speaker lead

on the M2250

J2 – 20 pin plug ribbon cable

3 Put the top cover back on the attendant console:

- Place the top cover onto the base housing, and turn the attendant console upside-down.
- Reinsert and tighten the ten 10 mm fastening screws on the flange.
- Reinsert and tighten one 10 mm, and one 40 mm fastening screw on the back.

4 Return the attendant console to its working position, reconnect plugs and cords, and test features.

Procedure 3-6
Loopback test on the MI250 and M2250 attendant consoles

1 Make a loopback connector. Prepare a blank 25 way RS-232 male connector by internally connecting pins 2 and 3 together with strapping wire.

2 Press the Shift key. This accesses Level 1 mode.

3 Press the F4 function key to access the Diagnostics menu on the LCD screen.

4 Plug the loopback connector into the Dataport jack in the back of the console.

5 Select the Dataport option from the Diagnostics menu by dialing "3". The LCD screen displays OK when the test is successfully completed.

If there is a hardware fault in the M1250, 90H is displayed. If there is a hardware fault on the M2250, A0H is displayed.

If the blank RS-232 connector is not plugged into the dataport correctly (Step 3), the display will read 90H or A0H.

6 Press the asterisk (*) key to repeat the test.

7 To exit the test mode press the octothorpe (#). This returns you to the main diagnostics menu.

8 Press the octothorpe to return to normal operating mode.

9 Remove the loopback connector from the Dataport RS-232 jack.

Designating attendant consoles

Refer to the work order to determine features and key designations for each attendant console. Designate each key on the attendant console by placing its feature name (from the designation sheet) in the key cap that fits on the key.

For the QCW type attendant console, the Directory Number (DN) designation window is located beneath the keypad on the face of the attendant console. The DN designation window on the Ml250 attendant console is located above the keypad.

Procedure 3-7
Designating attendant consoles

1. Remove the cap from each key requiring a designation by gently pulling upwards on the cap.
2. Remove the appropriate designation from the sheet of designations.
3. Place the designation in the cap, place the cap over the corresponding key and gently press down. Repeat this procedure for all keys requiring designations.
4. Insert a paper clip in the hole at the left or right end of the DN designation window. Pry the window open.
5. Insert the number tag, and replace the designation window.

The following figures show the typical key designations for QCW type, and Ml250 attendant consoles:

- Figure 3-4 shows the QCW attendant console designations.
- Figures 3-5 and 3-6 show the key designations for the M1250/M2250 attendant console in Shift mode.
- Figures 3-7 and 3-8 show the M1250/M2250 attendant console in unShift mode.

Figure 3-4
Typical key designation for QCW attendant console

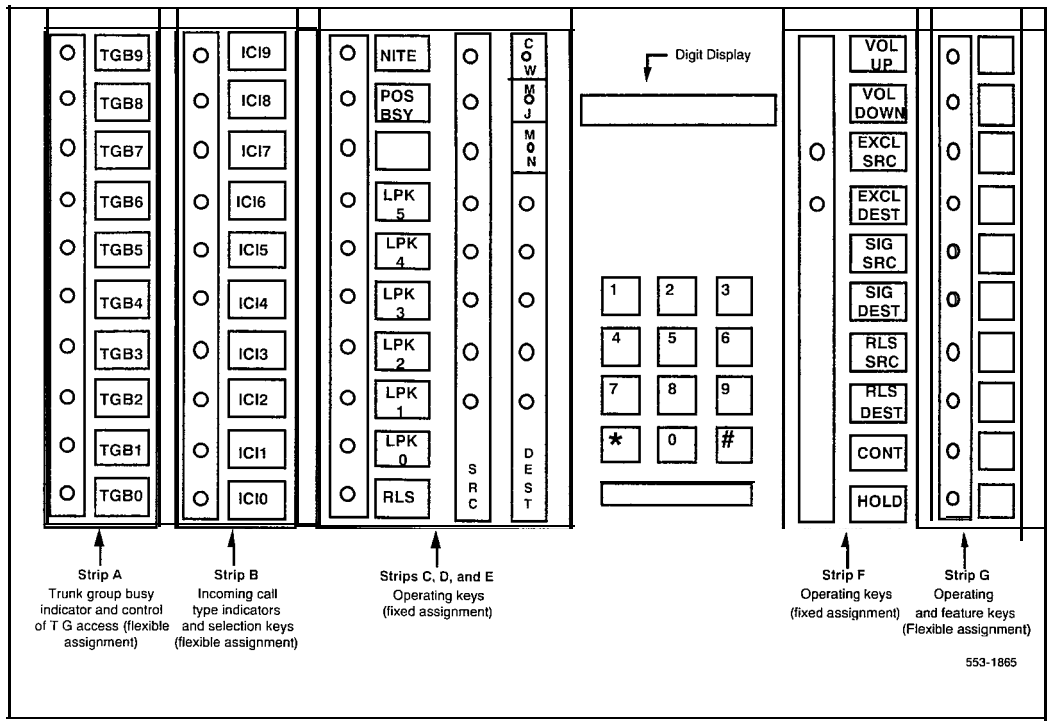

Figure 3-5
M1250/M2250 key designations in Shift mode (QMT2 not enabled)

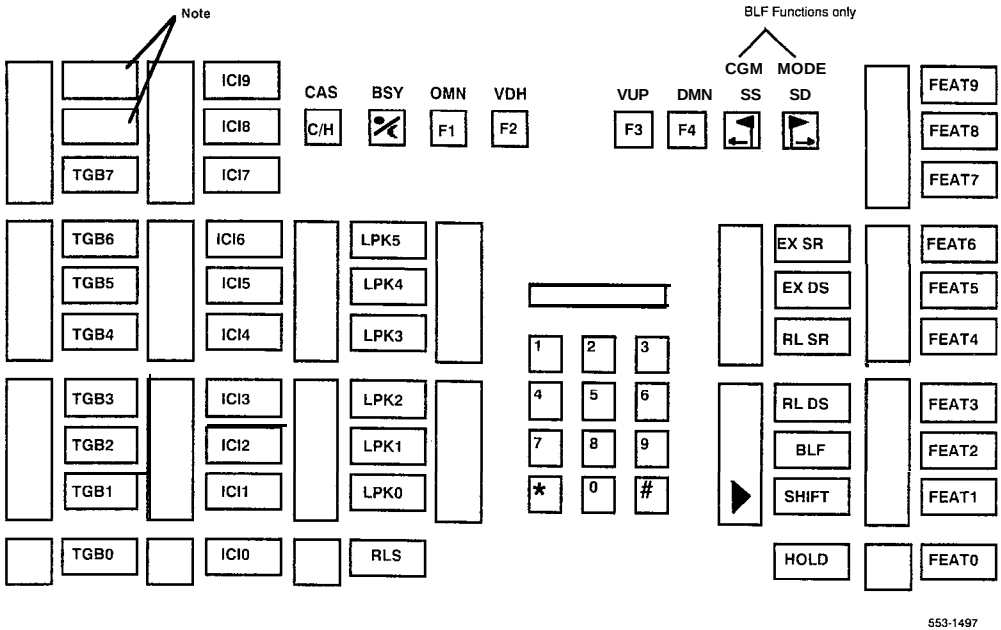

Note: These two keys are used as Trunk Group Busy keys 08 and 09 on the M2250 attendant console. They are not used on the MI250 attendant console.

Figure 3-6
M1250/M2250 key designations in Shift mode (QMT2 enabled)

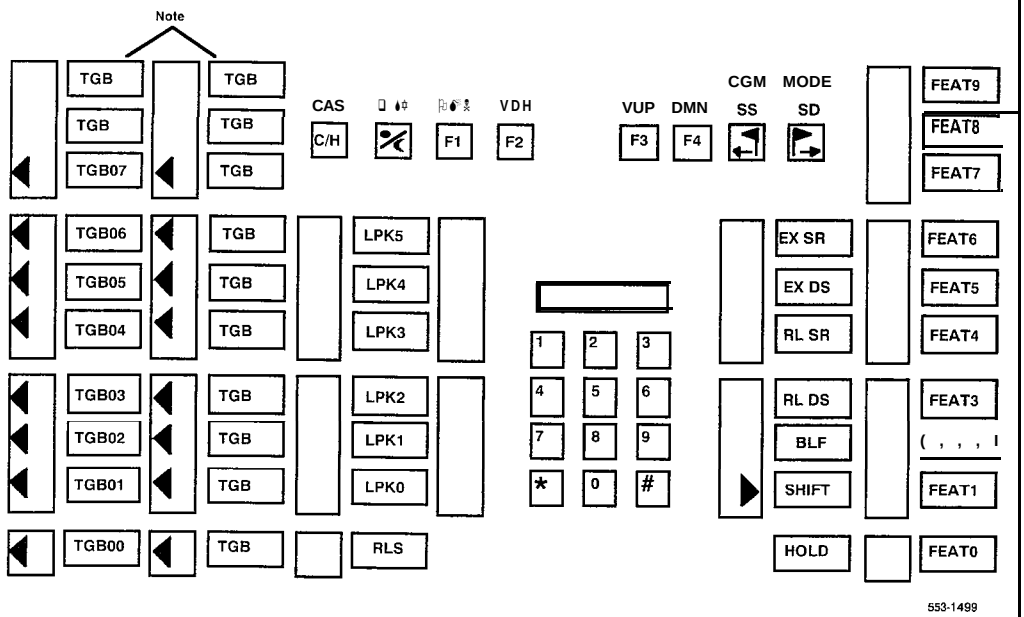

Note: The top two keys in these columns are used as Trunk Group Busy keys only on the M2250. Therefore, the numbering. scheme is as follows:

M1250		M2250	
		TGB09	TGB19
		TGB08	TGB18
TGB07	TGB15	TGB07	TGB17
TGB06	TGB14	TGB06	TGB16
TGB05	TGB13	TGB05	TGB15
TGB04	TGB12	TGB04	TGB14
TGB03	TGB11	TGB03	TGB13
TGB02	TGB10	TGB02	TGB12
TGB01	TGB09	TGB01	TGB11
TGBOO	TGB08	TGBOO	TGB10

Figure 3-7
M1250/M2250 key designations in unShift mode (QMT2 enabled)

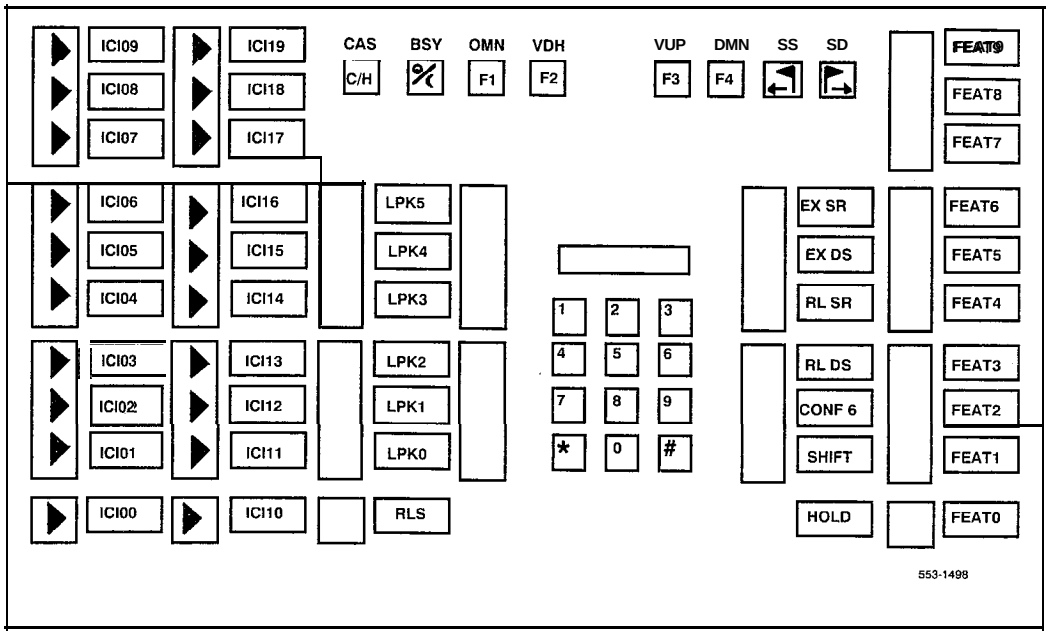

Figure 3-8
M1250/M2250 key designations in unShift mode (QMT2 not enabled)

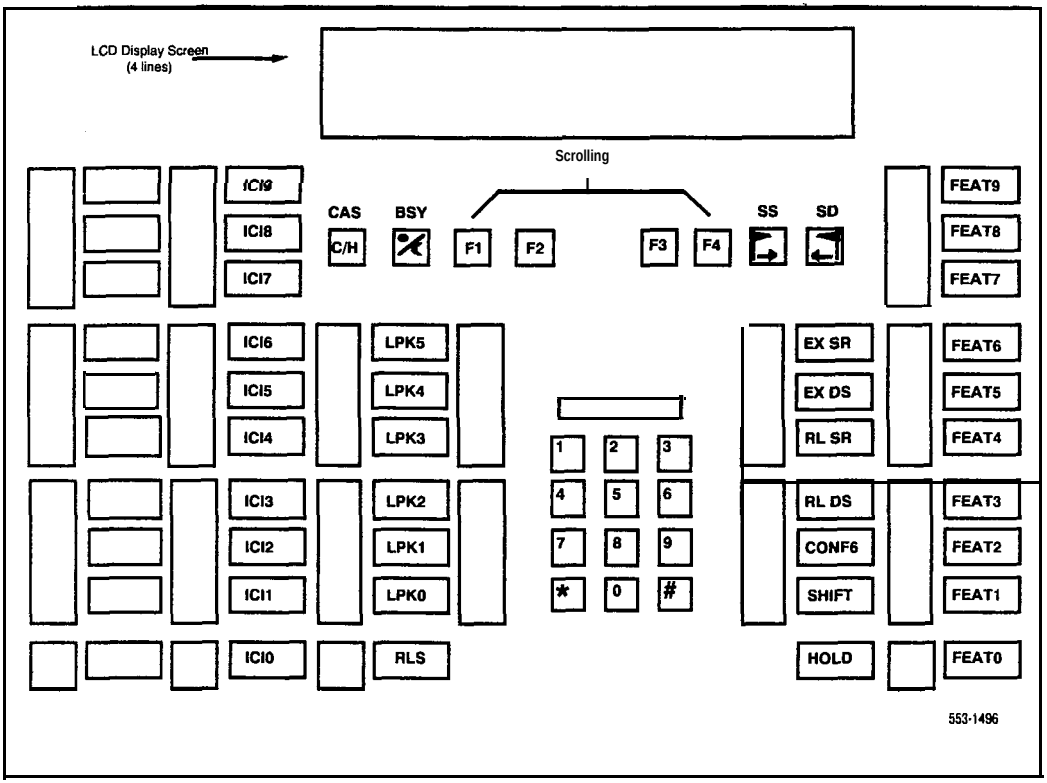

Cross connecting attendant consoles

Terminations are located on the vertical side of the distributing frame (when frame mounted blocks are used) and in the blue field (when wall mounted blocks are used).

Line circuit card (TN) terminations are located on the horizontal side of the distributing frame when frame mounted blocks are used and in the white field when wall mounted blocks are used.

Procedure 3-8
Cross-connecting attendant consoles

1 Locate attendant console terminations at cross-connect terminal.

2 Connect Z-type cross-connecting wire to the leads of the attendant console.

3 Locate line circuit card (TN) terminations.

4 Run and connect the other end of the cross-connecting wire to the assigned TN terminal block.

Table 3-1
Type Z cross-connecting wire

Size	Gauge	Color	Designation
1 pr	24	Y-BL	Tip
		BL-Y	Ring
3 pr	24	W-BL	Voice T
		BL-W	Voice R
		w-o	Signal T
		o-w	Signal R
		W-G	Power
		G-W	Power

Table 3-2
Inside wiring colors

Z Station Wire	16/25 pair cable	Connect to equipment TN
G	W-BL	1 st pair Tip
R	BL-W	1 st pair Ring
BK	w-o	2nd pair Tip
Y	o-w	2nd pair Ring

Figure 3-9
QCW and MI250 attendant console cross-connections

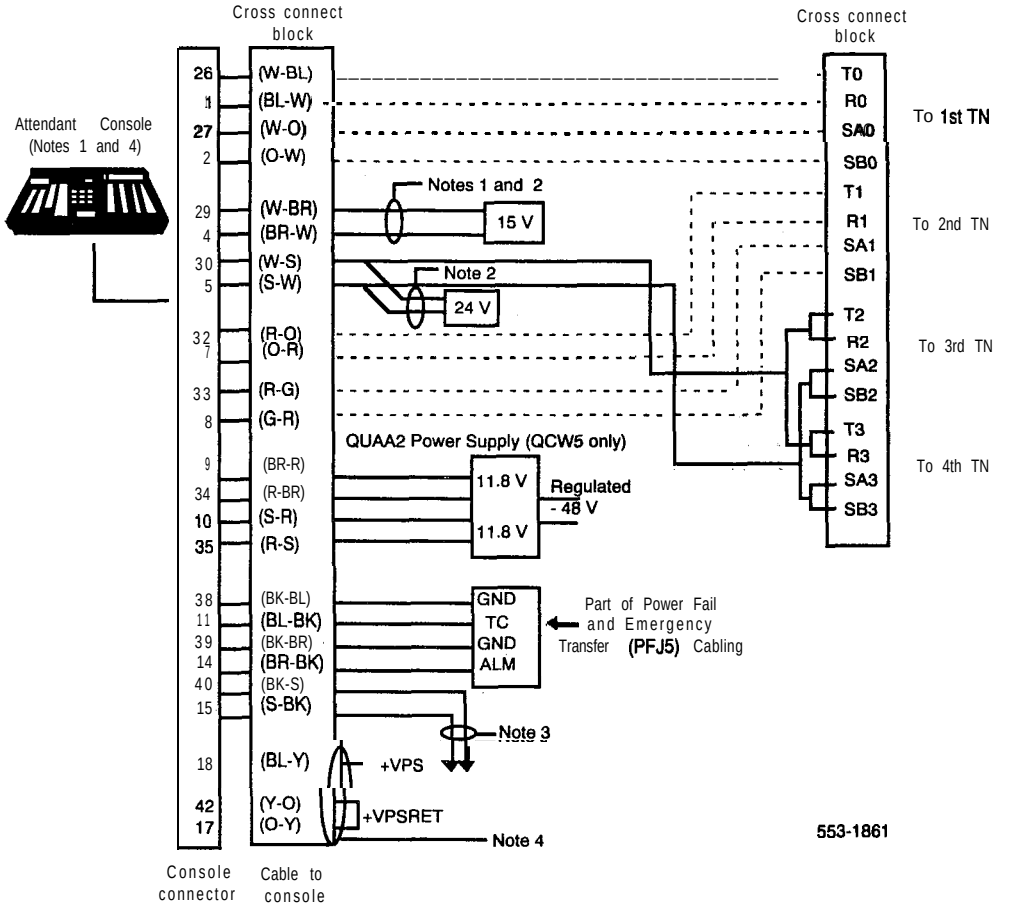

See notes on next page.

The following notes refer to Figure 3-9, QCW and Ml250 attendant console cross-connections.

Note 1: Attendant consoles require 24 V power. Attendant consoles equipped with the QMT3 module require 15 V power in addition to the 24 V power supply.

Note 2: 24 V power may be obtained from the following:

24 V transformers located within 25 feet (7.7 meters) of the console. A separate transformer is required for each attendant console.

QUT1 or QUAA1 centralized power supply. A separate fuse is required for each attendant console.

– 24 V can be provided by two circuits (maximum loop resistance of 300 Ω). This cross connection must not be used if the power is obtained from a source other than the Meridian 1 line circuit.

Note 3: (M1250) Connect to a solid ground (not the Meridian 1 system ground). The maximum distance between the ground source and the attendant console must be less than 200 feet (61 meters). Run the ground directly to the console cable connector if the connection through the cross connector exceeds 200 feet (61 meters).

Note 4: When the BLF/CGM option is used on the M12.50, an additional 16 V dc power supply must be cabled through the +VPS (pin 16) and the +VPSRTN (pins 42 and 17) wires. The maximum loop limit from the attendant console to the connector is 120 feet (36 meters) at 24 AWG.

Table 3-3
QCW and M1250 attendant console connections

Mounting Cord	16/25 Pair Connector Cable				
Lead Designation	PIN Number	PIN Number	Pair Number	Color	Connected to
Voice 1 (SRC)	26 1	26 1	1T R	W-BL BL-W	1 st pair of TN #1
Signal 1 (SRC)	27 2	27 2	2T R	w-o o-w	2nd pair of TN #1
Spare	28 3	28 3	T R	W-G G-W	
15 V Power 15 V Power	29 4	29 4.R	4T R	W-BR BR-W	PO547128 (Note 1) Plug-in transformer
25V Power 25V Power	30 5	30 5	5T R	w-s s-w	PO547127 (Notes 1/2) Plug-in transformer
Spare	31 6	31 6	6T R	R-BL BL-R	
Voice 2 Voice (DEST)	32 7	32 7	7T R	R-O O-R	1st pair of TN #2
Signal 2 Signal (DEST)	33 8	33 8	8T R	R-G G-R	2nd pair of TN #2
GRD 11.8V	34 9	34 9	9T R	R-BR BR-R	QUAA2 Power Supply (QCW5 only)
GRD 11.8V	35 10	35 10	10T R	R-S S-R	QUAA5 Power Supply (QCW5 only)
Emergency Transfer	36 11	36 11	11T R	BK-BL BL-BK	GND (Note 3) TC (Note 4)

—continued—

Table 3-3
QCW and MI250 attendant console connections (continued)

Mounting Cord Lead Designation	16/25 Pair Connector Cable PIN Number	PIN Number	Pair Number	Color	Connected to
Spare	37	37	12T	BK-0	
Spare	12	12	R	0-BK	
Spare	38	38	13T	BK-G	
Spare	13	13	R	G-BK	
Major	39	39	14T	BK-BR	+GND (Note 3)
Alarm	14	14	R	BR-BK	-ALM (Note 4)
GND	40	40	15T	BK-S	See Static Discharge
				GND	
GND	15	15	R	S-BK	Installation Procedure
Spare	41	42-45	16T	Y-BL	
	16	16-20	R	BL-Y	

Note 1: The 15 V and 25V supplies can be obtained at the cross-connect terminal when a QUT1 power supply is provided.

Note 2: The 25V supply can also be obtained from two additional units on a line circuit card.

Note 3: Connect to Pin 3 or 28 of appropriate PFJ5 terminal block.

Note 4: Connect TC to Pin 29 or 5 and ALM to Pin 4 or 31 of appropriate PFJ5 terminal block.

Note 5: This applies to QPC297 and QPC61 circuit cards.

Figure 3-10
M2250 attendant console cross connections

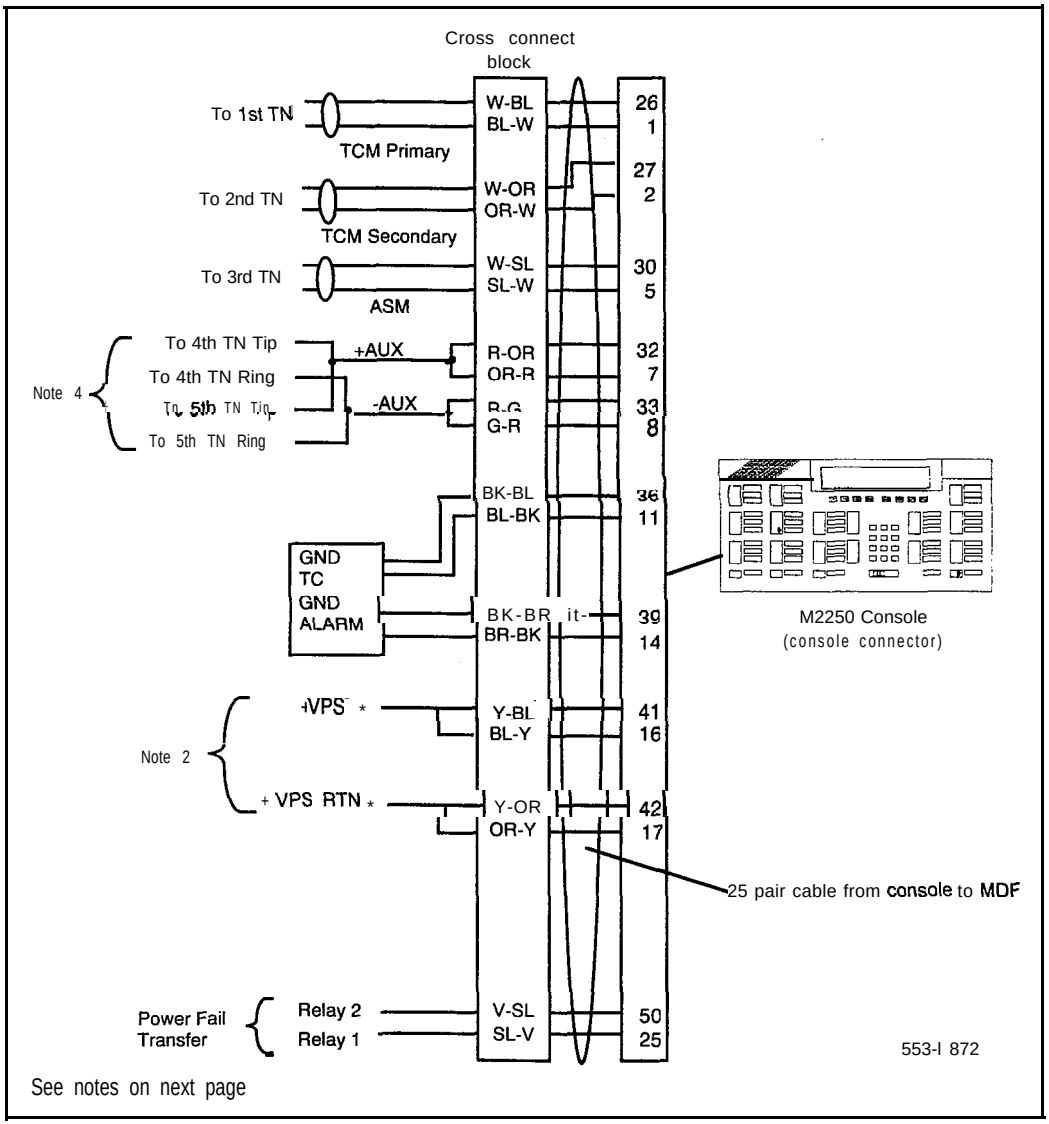

See notes on next page

Table 3-4 explains where each cable pair is connected.

The following notes refer to Figure 3-10, M2250 attendant console cross-connections.

Note I: The M2250 is powered via the line circuits. In addition to the primary TN, secondary TN, and ASM TN, two TNs are cabled to the M2250 using the +AUX and -AUX leads. Maximum loop length of ***3000*** ft of 24 AWG wire.

Note 2: When additional options are used (BLF) an additional 16 V dc power supply is required. The 16 V dc source is cabled using +VPS and +VPS RTN leads. The maximum distance from the console to the power source is 120 feet of 24 AWG wire.

Note 3: It is recommended that 5 consecutive TN on the line circuit be allocated for each console.

Note 4: The M2250 when used with the ISDLC requires QPC578 vintage D or later.

Table 3-4
M2250 attendant console connections

Mounting Cord Lead Designation	16/25 Pair Connector Cable PIN Number	Pair Number	Color	Connected to
TCM primary	26 1	1T R	W-BL BL-W	TN #1
TCM secondary	27 2	2T R	w-o o-w	TN #2
Attendant Supervisory Module	30 5	5T R	w-SL SL-w	TN #3
Snare	31 6	6T R	R-BL BL-R	
+AUX	32 7	7T R	R-O O-R	TN #4
-AUX	33 8	8T R	R-G G-R	TN #5
Spare	34 9	9T R	R-BR BR-R	
Spare	35 10	10T R	R-SL SL-R	
Emergency Transfer	36 11	11T R	BK-BL BL-BK	GND (Note 1) TC (Note 2)

—continued—

Table 3-4
M2250 attendant console connections (continued)

Mounting Cord Lead Designation	16/25 Pair Connector Cable PIN Number	Pair Number	Color	Connected to
Spare	37	12T	BK-O	
Spare	12	R	O-BK	
Spare	38	13T	BK-G	
Spare	13	R	G-BK	
Major Alarm	39	14T	BK-BR	+GND (Note 1)
GND	14	R	BR-BK	-ALM (Note 2)
Spare	40	15T	BK-SL	
	15	R	SL-BK	
+VPS	41	16T	Y-BL	
	16	R	BL-Y	
-VPS RTN	42	17T	Y-O	
	17	R	O-Y	
Spare				
Power Fail Transfer	50	25T	Y-SL	Relay 2
	25	R	SL-Y	Relay 1

Note 1: Connect to Pin 3 or 28 of appropriate PFJ5 terminal block.

Note 2: Connect TC to Pin 29 or 5 and ALM to Pin 4 or 31 of appropriate PFJ5 terminal block.

Table 3-5
M2250 typical cross connections

Pair	Pins	Pair Color	DLC Connections	ISDLC Connections
1T	26	W-BL	Unit	Unit
1R	1	BL-W	0	0
2T	27	w-o	Unit	Unit
2R	2	o-w	1	8
3T	28	W-G	Unit	Unit
3R	3	G-W	2	1
4T	29	W-BR	Unit	Unit
4R	4	BR-W	3	9
5T	30	W-S	Unit	Unit
5R	5	S-W	4	2
6T	31	R-BL	Unit	Unit
6R	6	BL-R	5	10
7T	32	R-O	Unit	Unit
7R	7	O-R	6	3
8T	33	R-G	Unit	Unit
8R	8	G-R	7	11
9T	34	R-BR	Unit	Unit
9R	9	BR-R	8	4
10T	35	R-S	Unit	Unit
10R	10	S-R	9	12
11T	36	BK-BL	Unit	Unit
11R	11	BL-BK	10	5
12T	37	BK-0	Unit	Unit
12R	12	0-BK	11	13
13T	38	BK-G	Unit	Unit
13R	13	G-BK	12	6
14T	39	BK-BR	Unit	Unit
14R	14	BR-BK	13	14
15T	40	BK-S	Unit	Unit
15R	15	S-BK	14	7
16T	41	Y-BL	Unit	Unit
16R	16	BL-Y	15	15

Telephones

Packing and unpacking

Use proper care while unpacking any digital telephone. Check for damaged containers so that appropriate claims can be made to the transport company for items damaged in transit.

If a telephone must be returned to the factory, pack it in the appropriate container to avoid damage during transit. Remember to include all loose parts (cords, handset, power unit, labels and lenses) in the shipment.

Installation and removal

On QSU71 telephones, key 8 must be assigned as NUL, and key 9 as RLS. Do not remove the circuit card if any remaining units on the card are assigned.

Procedure 4-1
Installing 500/2500, SL-1, M1009, M1109, and MI309 telephones

1 Ensure that wiring is installed to the telephone's location.

2 Unpack and inspect the telephone for damage. Assemble the handset and line cords if necessary.

3 Install the required designations on the telephone.

4 Connect the telephone to the connecting block or connector.

5 Cross-connect the telephone wiring at the cross-connect terminal.

6 Configure telephone in the system. Refer to XI *1 input/output guide* (553-3001-400).

Procedure 4-2
Removing 500/2500, SL-1, MI 009, MI 109, and MI 309 telephones

1 Remove telephone data from system. Refer to *X11 input/output guide* (553-3001-400).

2 Disconnect telephone from connecting block or connector.

3 Pack the telephone in a container.

4 If necessary, remove cross-connections for the telephone at the cross-connect terminal.

5 Remove the line circuit card if required. Refer to *Assembly and installation of apparatus* (554-2YY-210).

Procedure 4-3
Installing SL-1 telephone faceplate

1 Place the telephone on a desk with the front edge slightly beyond the edge of the desk.

2 Fit the cover to the housing and tighten the captive retaining screws.

3 Position the faceplate so that the keys will pass through the cutouts in the faceplate (see Figure 4-l).

4 Tilt the back edge of the faceplate towards the rear of the telephone and insert the locating tabs into the slots on the cover.

5 Keeping the locating tabs in the slots, tilt the front edge of the faceplate down, passing the keys through the cutouts in the faceplate.

6 Press the front edge of the faceplate down until the faceplate catches snap into place.

7 Ensure that the faceplate is securely held in place without binding the keys.

Figure 4-1
SL-1 telephone faceplate

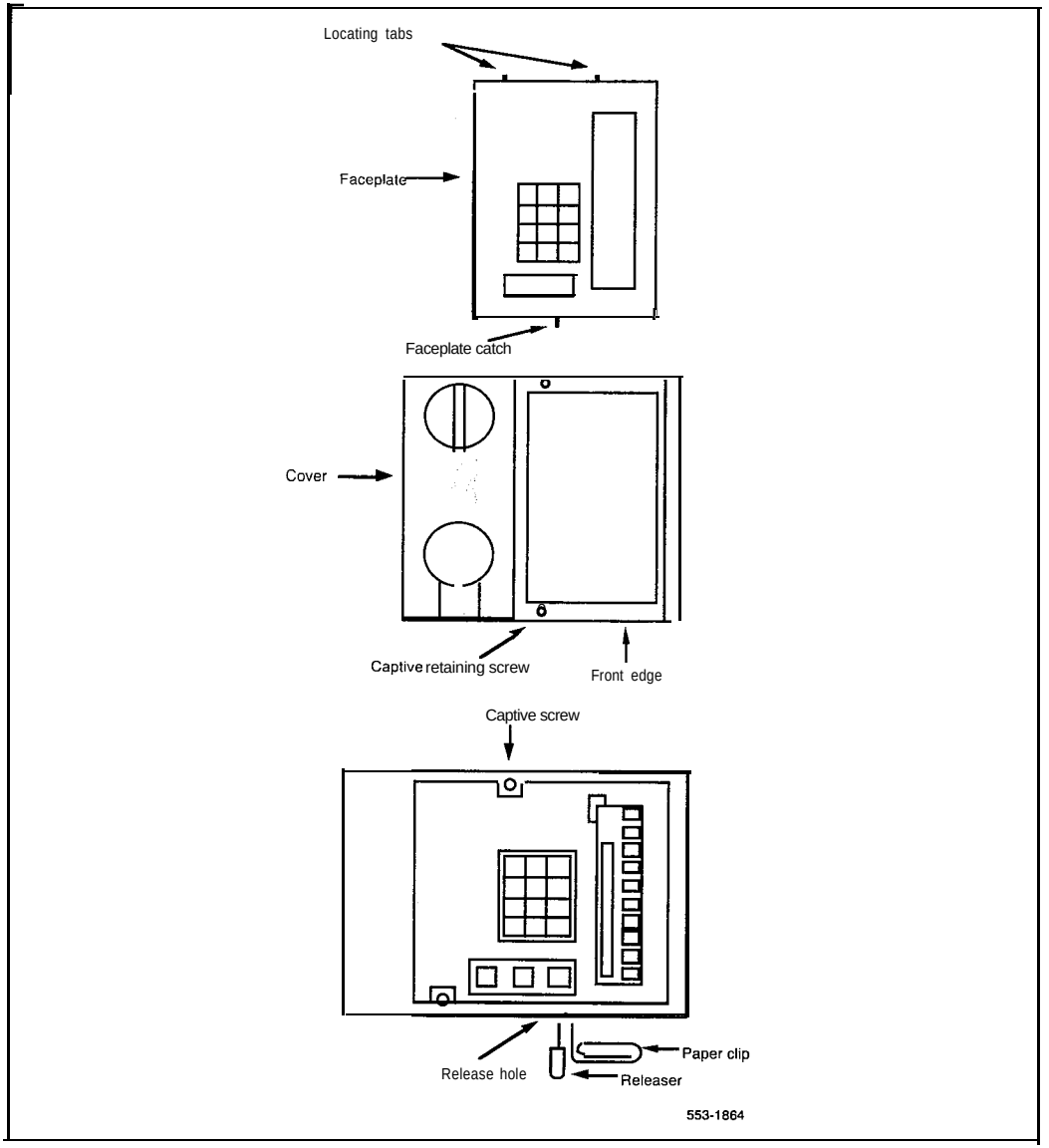

Procedure 4-4
Removing SL-1 telephone faceplate

1 Place the SL-1 telephone on a desk with the front edge slightly beyond the edge of the desk.

2 Insert a paper clip into each release hole in the front edge of the telephone housing, and pry the faceplate open (see Figure 4-l).

3 Lift the faceplate off.

4 Unscrew the captive retaining screws securing the cover to the housing, and remove the cover.

Procedure 4-5
Installing the M2000 digital telephones

1 Complete wiring and cross-connections as shown in Figure 4-2 before connecting telephone(s) to connecting block(s).

2 Place the telephone upside down on a number of sheets of soft, clean paper on a solid level work surface to prevent damage to movable keys and the telephone face.

3 Connect handset cord 4-conductor TELADAPT connectors to handset and the telephone and snap into place.

4 After connecting handset cord to connector in the base of the telephone, turn the smooth side of the handset cord up (away from telephone base) before tucking it under the restraining tab to ensure that the telephone will sit level on the desk after installation is complete.

5 Connect 6-conductor line cord to telephone base, and route under the tabs.

6 Turn telephone right side up and place in normal operating position.

7 Designate buttons for key labels.

8 Insert line cord TELADAPT connector into the connecting block and snap it into place.

9 Test the telephone using LD31. (553-3001-400).

Figure 4-2
M2000 digital telephone connections

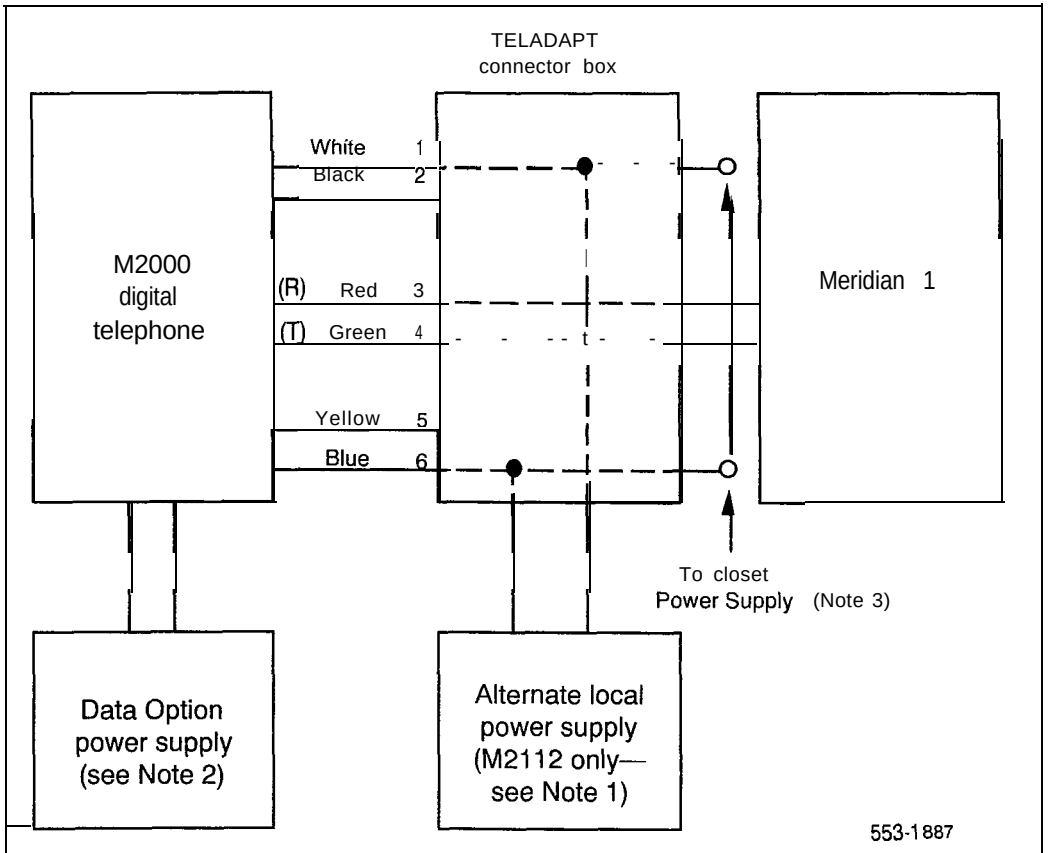

Note 1: Leads 1 and 6 are used for closet power (25V ac), or for alternate power supply, as required depending on local conditions.

Note 2: The Data Option power supply connects directly to a 5-pin connector in the rear of the telephone.

Note 3: If a QUT1 closet power supply is used, each M2112 telephone must be powered by one tap of one winding. However, it is permissible to connect two (2) 12.5 V ac windings in series to provide 25V ac for one Handsfree unit.

Table 4-1
M2000 trouble locating procedures

	Data communication failure
1	If voice communication is normal but data communication fails, check for dc output voltage at power-supply connector pins or replace power-supply plug-in transformer. Attempt to make a data call from the terminal keyboard. If not successful, proceed with Step 2.
2	Remove transformer from ac receptacle, unplug 5-pin power supply connector at back of telephone, and replace the data option circuit board (see Procedure 5-41 and Procedure 5-42). Reconnect data option power supply. Make a new attempt to start a data call. If trouble persists, continue with ISDLC Failure procedure.
	ISDLC failure
1	Check the Meridian 1 system maintenance terminal (TTY or CRT) and check for displayed error and location codes. A "NWS 401 L S C" or a "NWS 501 L S C U" code indicates that the automatic (routine) diagnostic test has detected a fault. Check for the following indications: L = faulty circuit card (ISDLC card) loop number S = circuit pack location (shelf number) C = number of the faulty circuit card U = unit number of a faulty telephone (appears only in conjunction with the NWS 501 code).
2	Replace faulty components. Try to establish a call. If unsuccessful, proceed to check the telephone.

—continued—

Table 4-1 (continued)
M2000 trouble locating procedures

	Telephone (voice or dialing) failure
1	Check line cord and handset cord to determine if all TELADAPT connectors are firmly in place and reconnect loose ones. Ensure that the polarity of the Tip and Ring leads is correct. Lift handset and listen for dial tone and/or dial a directory number. If unsuccessful, proceed with Step 2.
2	Wiggle linecord and/or handset cord while listening for sounds from handset. If crackling or ticking sounds are heard, replace cords. Try to establish a call. If unsuccessful, proceed with Step 3.
3	Replace telephone. Try to establish a call. If unsuccessful, proceed with Step 4.
4	Check wiring between line card, distribution panel, and telephone for breaks or loose connections. If necessary, re-run wiring. Operate telephone. If no error codes are shown at the maintenance terminal (i.e. no automatic diagnostic test was running), the Network and Signaling Diagnostic ▪ LD30 can be loaded and run manually from the system TTY. Refer to XI *1 input/output guide* (553-3001-400). Note: If no error codes are shown at the maintenance terminal (i.e. no automatic diagnostic test was running), the Network and Signaling Diagnostic ▪ LD30 can be loaded and run manually from the system TTY. Refer to X7 1 *input/output guide* **(553-3001-400).**

Procedure 4-6
Installing Meridian Modular telephones (M2006/M2008/M2016S/M2616/M2216ACD)

1 Complete wiring and cross-connections (loop power) before connecting telephone to connecting block. See Figure 4-4.

2 Place the telephone upside down on a number of sheets of soft, clean paper on a solid, level work surface to prevent damage to movable keys and the telephone's face.

3 Connect handset cord (5-conductor TELADAPT connectors) to handset and snap into place (not applicable to M2216ACD).

4 Connect other end of handset cord to connector in bottom cover of telephone. Turn smooth side of handset cord up (away from telephone bottom cover) before tucking it under the restraining tab to ensure that it will sit level on the desk after installation is complete (not applicable to M2216ACD).

5 Connect the line cord to the telephone bottom cover. Route the cord through channels.

6 Turn telephone right side up and place in normal operating position.

7 Print directory number on designation card. Using a paper clip, remove number lens from the telephone. Insert designation card and snap lens back into place.

8 Designate feature keys.

9 Insert line cord TELADAPT connector into connecting block and snap it into place.

10 Perform the self-test (see Procedure 4-7) and acceptance test procedures. See LD31, *Xl 1 input/output guide (553-3001-400).*

11 Supply the user with a quick reference card and all user documentation. Make sure the SPRE **number** is printed on the quick reference card.

Figure 4-3
Meridian Modular Telephone connections

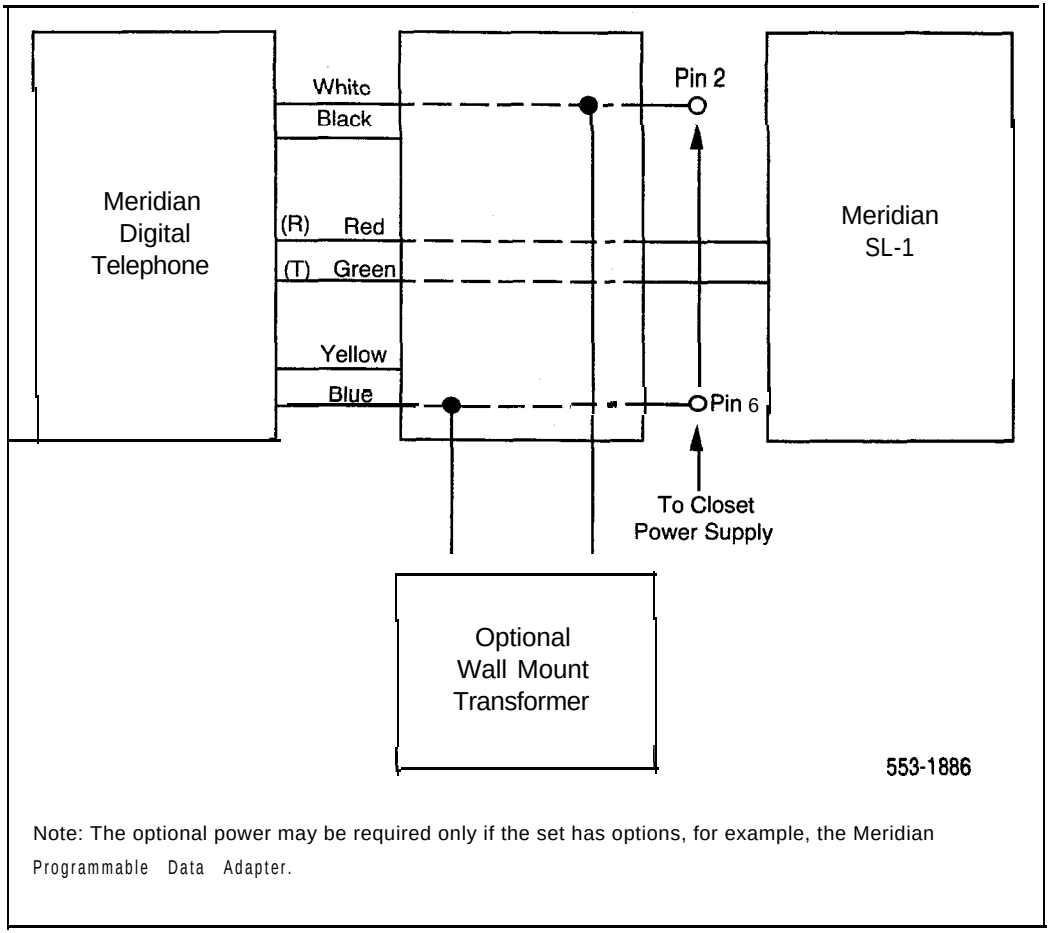

Note: The optional power may be required only if the set has options, for example, the Meridian Programmable Data Adapter.

Figure 4-4
Meridian Modular Telephone cross-connections

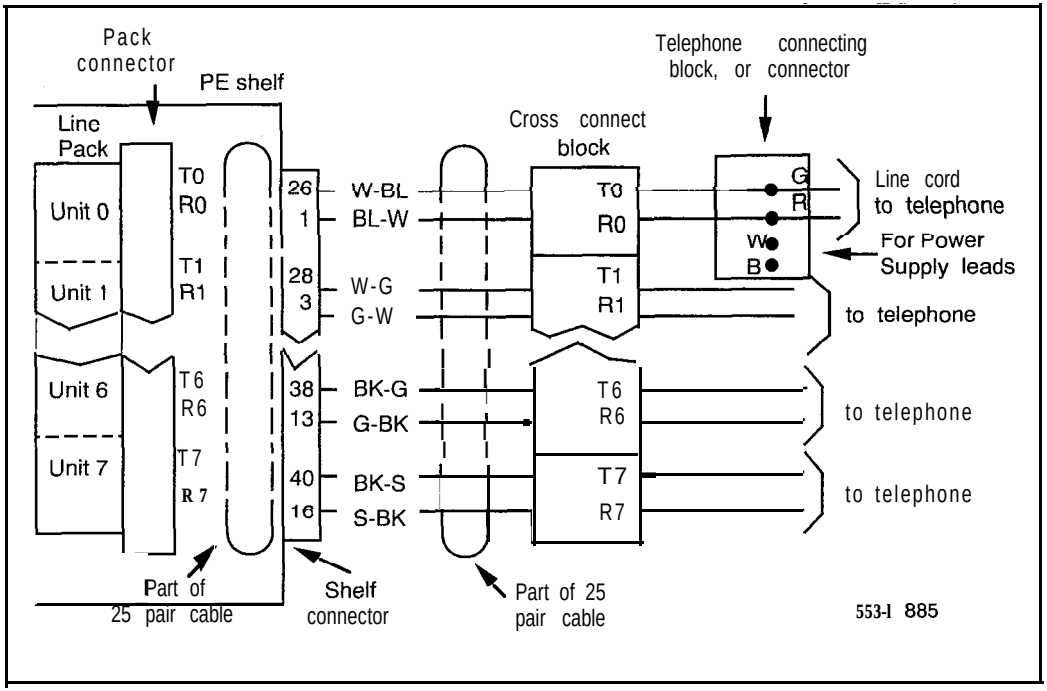

Meridian Modular Telephones self-test

Meridian Modular Telephones have a self-testing capability. Perform the self-test after installing a Meridian Modular Telephone or any of the hardware options to assure proper operation.

Procedure 4-7
Meridian Modular Telephones self-test

1 Unplug the line cord from the telephone.

2 While holding down the RLS key, plug in the line cord to the telephone. Let go of the RLS key.

3 Use Table 4-2 to perform the necessary steps and check results.

Table 4-2
Meridian Modular Telephones self-test steps and results

Step	Action	Result
1	Begin test (plug in line cord while holding down RLS key). Handset is on-hook.	Speaker beeps once, all LCDs flash, Message Waiting lamps light steadily, Display reads: LOCAL DIAGNOSTIC MODE PRESS RLS KEY TO EXIT
2	Press each function key, from zero to fifteen (if you have Key Expansion Modules, continue pressing the function keys, in any order).	Adjacent LCD goes off when key is pressed.
3	Press HOLD key.	Speaker beeps.
4	Press each dialpad key.	Speaker beeps each time a key is pressed.
5a	Lift handset (if applicable). Press dialpad keys. Replace handset.	Speaker beeps. Handset beeps.
5b	Plug in headset (if applicable). Press dialpad keys. Unplug headset.	Speaker beeps. Headset beeps.

—continued—

Table 4-2 (continued)
Meridian Modular Telephones self-test steps and results

Step	Action	Result
6	Press right side of volume control key.	Speaker beeps, Display is filled with dark squares.
	Press right side of volume control key.	Speaker beeps, Display is blank.
	Press right side of volume control key.	Speaker beeps, Display shows symbols including digits O-9 and upper-case alphabet
	Press right side of volume control key.	Speaker beeps, Display shows symbols including upper- and lower-case alphabet.
	Press right side of volume control key.	Speaker beeps, Display shows various symbols.
	Press right side of volume control key.	Speaker beeps, Display shows symbols.
	Press right side of volume control key.	Speaker beeps, Display is filled with dark squares.
7	Press RLS key (end of test).	Message Waiting lamp goes off, Display shows idle screen within 10 seconds.

Procedure 4-8
Installing the M2317 telephone

1 Complete wiring and cross connection according to Figure 4-5 before connecting the telephone to the TELADAPT connector block.

2 Place the telephone upside down on a number of sheets of soft, clean paper and on a solid, level work surface to prevent damage to movable keys and the telephone's face.

3 Connect the handset cord four-conductor TELADAPT connectors to the handset and to the telephone and snap into place.

4 Turn the smooth side of the cord away from the telephone base and secure it under the restraining tab. This ensures that the telephone sits level after the installation is complete.

5 Connect the six-conductor line cord to the telephone base, and place it under the restraining tabs.

6 Turn the telephone face up, and place it in normal operating position.

7 Print the DN on the designation card and place it in the designation card holder.

8 Designate button labels for programmable keys, and place them under the button cover.

9 Insert the line cord TELADAPT connector block and snap it into place. Place the line cord under the restraining tabs.

10 Plug the 5V power supply connector into the back of the telephone.

11 Plug the power supply into an ac utility outlet.

12 After the M2317 digital telephone is connected to a line that is both enabled and designated as an M2317 digital line, the startup screen displays INITIALISATION V6.4. Within 5 seconds, the Idle state screen is displayed, and the M2317 is operational, The term V6.4 represents the firmware issue number, and may differ with some installations.

continued—

13 If the M2317 has been connected to a line that is designated as a digital line, but is not enabled, the Display will prompt CONTACT SYSTEM ADMINISTRATOR. The line must be enabled using LD32 from the maintenance terminal, and enabling the features outlined in the work order. Refer to *X11 input/output guide* (553-3001-400) for the required routines, prompts, and responses.

If the M2317 has been connected to a line that is neither defined as a digital line, nor enabled, refer to *XI I input/output guide* (553-3001-400) for required routines, prompts, and responses.

14 Verify that all the requested features are enabled by accessing them with the soft keys, or programmable keys, from the M2317 telephone and observing the display screen.

15 Perform the self-test (see Procedure 4-9) and acceptance test procedures. See LD31, XII *input/output guide* (553-3001-400).

Figure 4-5
M2317 digital telephone cross-connections

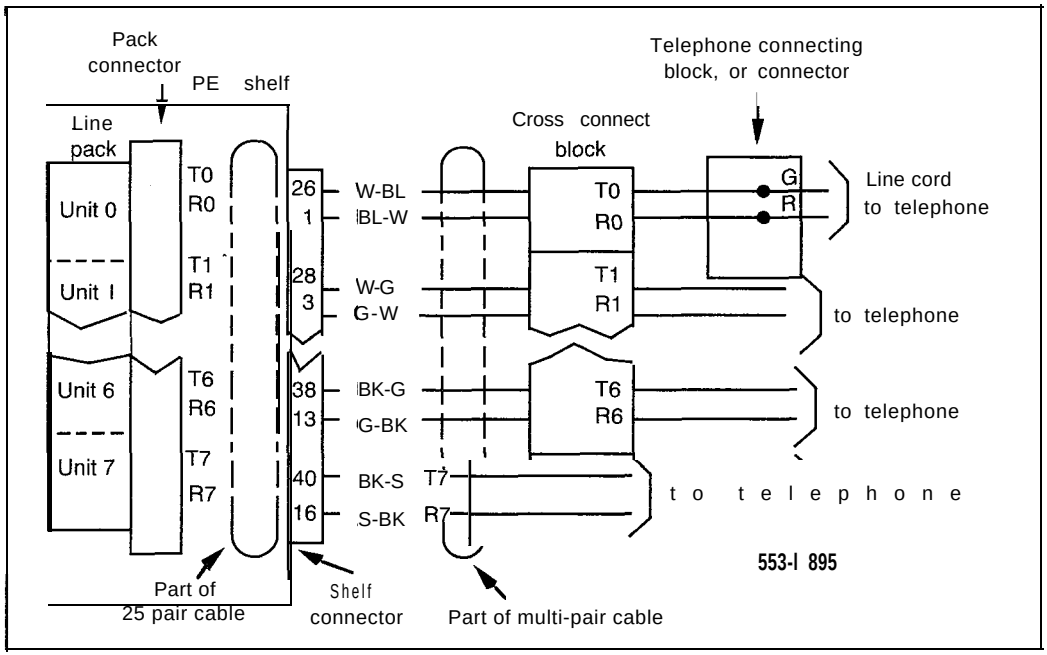

M2317 telephone self-test

The M2317 telephone has a self-testing capability. You can perform this test whether or not the telephone is connected to the Meridian 1 system. The test checks the proper functioning of the keys and LCD indicators on the set. Follow the steps listed in Procedure 4-9 and Table 4-3 to perform the M2317 self-test.

Procedure 4-9
M2317 telephone self-test

1 Connect the telephone to the ac power supply.

LCD screen displays "Initialization . . . vX.X"
(note that you have only three to five seconds to begin Step 2).

2 Press softkey 5 twice, then press softkey 4 twice.

3 Use Table 4-3 to perform the necessary steps and check results.

4 Unplug the power supply to end the test.

Table 4-3
M2317 telephone key/LCD indicator self-tests

Step	Key operated	Required response
1	Any programmable key	Toggles the corresponding indicator on/off
2	Any dialpad key	Displays the corresponding character in top line of the display screen
3	Volume control	Displays characters ">" for volume up and "<" for volume down in the top line of of the display screen
4	Softkey 1	Both display lines are filled with characters as follows: ABCDEFGHIJKLMNOPQRSTUVWXYZABCDEFGHIJKLMN OPQRSTUVWXYZABCDEFGHIJKLMNOPQRSTUVWXYZAB
5	Softkey 2	Both display lines are filled with characters as follows: abcdefghijklmnopqrstuvwxyzabcdefghijklmn opqrstuvwxyzabcdefghijklmnopqrstuvwxyzab
6	Softkey 3	All LCD pixels are turned on
7	Softkey 4	Display is blank
8	Softkey 5	Both display lines are filled with characters as follows: 8888888888888888888888888888888888888888 8888888888888888888888888888888888888888

Table 4-4
M2317 trouble locating procedures

When the M2317 digital telephone and/or the data option fail to function properly, follow the steps listed below in sequence to isolate the problem area.

Loop power failure

1 Plug telephone in.

2 LCDs flash once to indicate power is OK.

Data communication failure

1 If voice communication is normal but data communication fails, check for dc output voltage at power-supply connector pins or replace power-supply plug-in transformer.

Attempt to make a data call from the terminal keyboard (refer to *M23 17 Digital Telephone, description and specifications,* 553-2201-I 13). If not successful, proceed with Step 2.

2 Make a call to the DN (voice or data) to verify that the port is enabled.

3 Use an EIA or RS-232 breakout box in conjunction with the terminal cable to verify lead states and replace or repair cable if pinouts are incorrect.

Attempt to make a data call from the terminal keyboard (refer to *M2317 Digital Telephone, description and specifications,* 553-2201-I 13). If still not successful, proceed with Step 4.

4 Remove transformer from ac receptacle, unplug 5-pin power supply connector at back of telephone, and replace the data option circuit board (see Procedure 5-42). Reconnect data option power supply.

Make a new attempt to start a data call. If trouble persists, continue with ISDLC failure procedure.

5 Use self-test procedure to verify that the telephone electronics are operating correctly.

ISDLC failure

1 Go to the system maintenance terminal (TTY or CRT) and check for displayed error and location codes. A "NWS 401 L S C" or a "NWS 501 L S C U" code indicates that the automatic (routine) diagnostic test has detected a fault.

—continued—

Table 4-4 (continued)
M2317 trouble locating procedures

Check for the following indications:

L = faulty circuit card (ISDLC card) loop number
S = circuit card location (shelf number)
C = number of the faulty circuit card
U = unit number of a faulty telephone (appears only in conjunction with the NWS 501 code).

2 Replace faulty components.

Try to establish a call. If unsuccessful, proceed to check the telephone.

Telephone (voice or dialing) failure

1 Check line cord and handset cord to determine if all TELADAPT connectors are firmly in place and reconnect loose ones. Ensure that the polarity of the Tip and Ring leads is correct.

Lift handset and listen for dial tone and/or dial a directory number. If unsuccessful, proceed with Step 2.

2 Wiggle linecord and/or handset cord while listening for sounds from handset. If crackling or ticking sounds are heard, replace cords.

Try to establish a call. If unsuccessful, proceed with Step 3

3 Replace telephone.

Try to establish a call. If unsuccessful, proceed with Step 4.

4 Check wiring between line card, distribution panel and telephone for breaks or loose connections. If necessary, re-run wiring.

Operate telephone.

Note: If no error codes are shown at the maintenance terminal, the Network and Signaling Diagnostic - LD30 can be loaded and run manually from the system TTY. Refer to X7 *1 input/output* guide (553-3001-400).

Procedure 4-10
Installing the M3000 Touchphone

1 Place the Touchphone upside down on a number of sheets of soft, clean paper on a solid, level work surface to prevent damage to movable keys and the telephone's face.

Installing Asynchronous Data Option (ADO)

2 Remove the four (4) self-tapping screws that fasten the stand to the Touchphone body. Lift the stand off the locating posts in a straight, upward motion.

3 Snap the ADO into the rear of the Touchphone body, with the ribbon cable and header connector protruding from the front of the ADO housing.

4 Plug the 34 pin header connector at the end of the ribbon cable into the receptacle located in the body of the Touchphone and press firmly.

Assemble Touchphone and Stand

5 Place the stand over the Touchphone body and position over the four (4) locating posts.

6 Using the four (4) self-tapping screws removed earlier, fasten the stand securely to the Touchphone body.

Connect the Cords

7 If the handset is not already connected to the Touchphone, connect the cord's TELADAPT connector to the Touchphone body. Route the cord under the plastic tabs in the stand and out the exit slot. Snap the other end of the cord into the handset receptacle.

8 Connect the line cord TELADAPT connector to the Touchphone body jack, and route the cord through the channel in the stand. Connect the other end of the line cord in the baseboard or wall connector.

-continued-

9 Plug the power transformer cord into the mating connector in the Touchphone body and press firmly.

10 Route the power cord through its channel in the stand. Plug the transformer into an ac wall outlet. The Touchphone display screen will show STARTING UP and will prompt the user to PLEASE WAIT.

Note *1:* The characters displayed between the prompt PLEASE WAIT, and the string of five numbers at the bottom of the display are special codes used for service routines only. Unless this is an initial installation, ignore them.

Note 2: If installing the telephone for the first time, enter the initialization code. This clears the directory, and prepares the telephone for installation.

Initialization

11 If the Touchphone being installed is connected to a line that is defined as an M3000 Touchphone line, and is enabled, the STARTING UP screen display will automatically change to the IDLE screen display within ten seconds.

If the prompt STARTING UP. . . .PLEASE WAIT remains on the screen longer than 1.5 seconds, the Touchphone being installed is connected to a line defined as an M3000 line, but is not enabled. The line must be enabled using LD32 from the maintenance terminal, and enabling the features outlined in the work order. Refer to XI *1 inputloutput guide* (553-3001-400) for the required routines, prompts, and responses.

If the Touchphone being installed is connected to a line that is neither defined as a M3000 line, nor enabled, refer to LD11, *X11 input/output guide* (553-3001-400). Refer to Step 12 for feature verification.

—continued—

Figure 4-6
M3000 Touchphone cross-connections

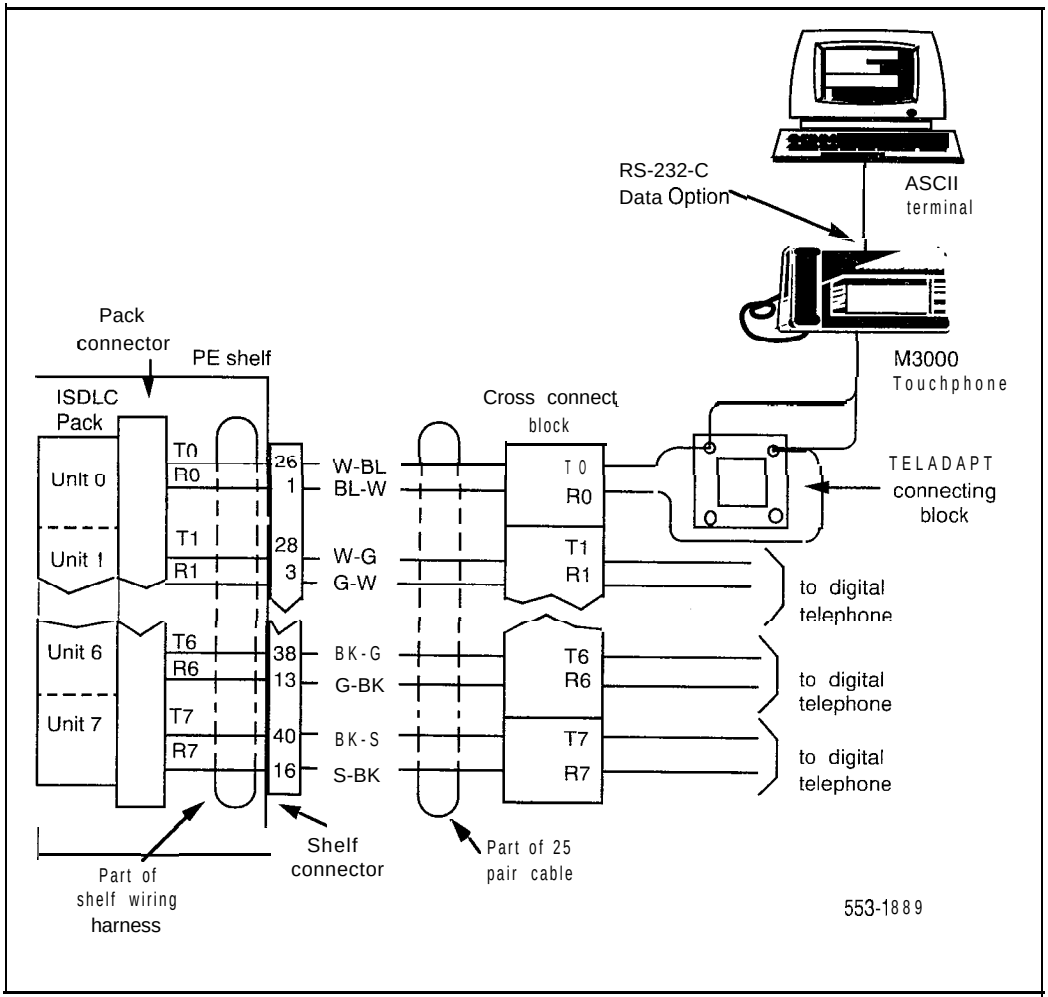

12 If the Touchphone to be installed has arrived directly from the factory, or if it has come from another location with an internal directory stored that is unrelated to the new location, touch positions 1 3 3 2 (in that sequence) in the number string at the bottom of the STARTING UP screen display prior to loading data and features.

Note: If digits 1, 3, 3, and 2 are operated on the STARTING UP screen, the internal memory store of that Touchphone will be wiped clean.

13 Verify that all features requested in the work order are enabled by touching TOUCH PROFILE on the IDLE screen, then LIST FEATURES on the TOUCH PROFILE screen. Enabled features will show a black box beside them. Features not enabled will show a blank box.

The M3000 is now operational. Should the M3000 Touchphone fail to operate, see *M3000* ***Touchphone description (553-2201-115).***

M3000 trouble locating

Trouble conditions are either reported by the telephone user (customer report) or by the Meridian 1 system trouble indicating system via automatic routine tests. For recommended trouble locating routine refer to Table 4-5. For detailed diagnostic program description and input/output reference consult ***XI 1 input/output guide*** (553-3001-400).

When the Touchphone and/or the data option fails to function properly, follow the steps in sequence as listed below to isolate the problem area.

Table 4-5
M3000 trouble locating procedures

Data Communication Failure

1 If Touchphone screen shows the prompt: CHECK TERMINAL AND TRY AGAIN, check for a disconnected RS-232 plug or a power failure at the DTE or the computer terminal and take corrective action.

Touchphone screen should change to the Data Call Initiation state. *See M3000 Touchphone, description and specifications, 553-2201-*115. Attempt to make a data call from the terminal keyboard. If unsuccessful, check subsequent Steps.

2 If Touchphone screen shows the prompt: REPORT DATA CHANNEL PROBLEM, check out the following:

(a) Check if the data TN has been disabled in LD32, or if the system disabled it due to excessive errors. If so, re-enable the data TN in LD32.

(b) If the station was recently relocated, the data TN may not have been re-defined (set relocation does not automatically move the voice and data TNs together). Check LD20 to see if data TN is defined. If not, use Overlay 11 to make the data TN and Voice TN conform (Note that the Data TN must be 8 units higher than the Voice TN, with the same loop, shelf, and card number).

(c) The data option could be defective or disconnected from the Touchphone circuit board, or switch 5 on the SL-1 system QPC464 peripheral buffer card is not set for quad density. Check switch 5 on the QPC464 first, and if that is set correctly, check if ribbon cable connector from data option is plugged into the Touchphone securely (Touchphone stand must be removed to check ribbon cable).

Attempt to make a data call from the terminal keyboard. Refer to *M3000 Touchphone, description and specifications, 553-2201-I 15.* If not successful, proceed with Step 3.

3 Replace the data option (see Procedures 5-41 and 5-42).

Make a new attempt to start a data call. If trouble persists, continue with "ISDLC Failure."

—continued—

Table 4-5 (continued)
M3000 trouble locating procedures

ISDLC Failure

Check the system maintenance terminal (TTY or CRT) for displayed error and location codes. A "NWS 401 L S C" or a "NWS 501 L S C U" code indicates that the automatic (routine) diagnostic test has detected a fault. Check for the following indications:

L = faulty circuit pack (ISDLC card) loop number

S = shelf number where circuit card is located

C = the number of the faulty circuit card

U = the unit number of a faulty telephone (appears only in conjunction with the NWS 501 code).

Replace faulty components (for replacement procedures refer to 553-2YY1-210).

Try to establish a call. If unsuccessful, proceed to check the Touchphone.

Touchphone (Voice or Dialing) Failure

Check line cord and handset cord to determine if all Teladapt connectors are firmly in place and reconnect them where found loose.

Lift handset and listen for dial tone and/or dial a directory number. If unsuccessful, proceed with Step 3.

Verify that the port is enabled.

Wiggle line cord and/or handset cord while listening for sounds from handset. If crackling or ticking sounds are heard, replace cords.

Try to establish a call. If unsuccessful, proceed with Step 4.

Replace Touchphone.

Try to establish a call. If unsuccessful, proceed with Step 5.

Check wiring between line card, distribution panel, and telephone for breaks or loose connections. If necessary, re-run wiring.

Operate Touchphone.

Note: If no error codes are shown at the maintenance terminal (i.e. no automatic diagnostic test was running), the Network and Signaling Diagnostic - LD30 can be loaded and run manually from the Meridian 1 system TTY by keying in "LD30" and the suspected loop number. Refer to X7 1 *input/output guide* (553-3001-400).

Designating telephones

Before designating telephones, check the work order for features enabled, and key designations. Designate each key by placing its feature name (from the designation sheet) in the key cap that fits on the key.

Procedure 4-11
Designating 500-type telephones

1 Remove the finger wheel and number card from its envelope.

2 Designate the number card with the appropriate directory number and station designator.

3 Insert the number card into the finger wheel (making sure the number card is properly oriented).

4 Place telephone on a flat surface.

5 Place finger wheel over clamp on dial, with "0" hole directly over digit "9," making sure finger wheel depressions are properly positioned on prongs of clamp plate.

6 Rotate finger wheel counterclockwise until clamp spring snaps into notch on underside of finger wheel.

Procedure 4-12
Removing the fingerwheel from 500-type telephones

1 Place telephone on flat surface.

2 Rotate fingerwheel clockwise as far as possible.

3 Insert a paper clip into the small hole between the digits "9" and "0" located on the edge of the grooved section of the finger-wheel.

4 Press down on the releaser to disengage the fingerwheel clamp spring.

5 Rotate the fingerwheel further clockwise until clamp spring releases.

6 Remove the fingerwheel when it becomes loose. Dial returns to normal position.

Procedure 4-13
Designating 2500-type telephones

1 Designation window is located directly below the dial pad. Insert paper clip into the hole at left or right end of designation window.

2 Gently pry the window towards the center and remove.

3 Insert number tag with appropriate directory number and station designator, and replace the designation window.

Procedure 4-14
Designating SL-1, digital, and Meridian modular telephones

1 Remove cap from each key requiring a designation.

2 Place designation in cap, place cap over corresponding key and gently press down, Repeat for all keys requiring designations.

3 Insert a paper clip into the hole at left or right end of designation window.

4 Gently pry the window towards the center and remove, and insert the number tag.

5 Replace the designation window.

Connecting telephones

Procedure 4-15 describes how to connect SL-1 and Ml 109 Compact telephones.

Procedure 4-16 describes how to connect 500 and 2500-type telephones.

Procedure 4-15
Connecting SL-I and Ml 109 telephone

1 Ensure that the terminal connector is compatible with the telephone connector.

2 Connect set cord to terminal connecting block, or couple Amphenol or TELADAPT connector (if provided).

3 Secure cover of connector (if provided).

Figure 4-7
SL-1 and Ml 109 telephone connections

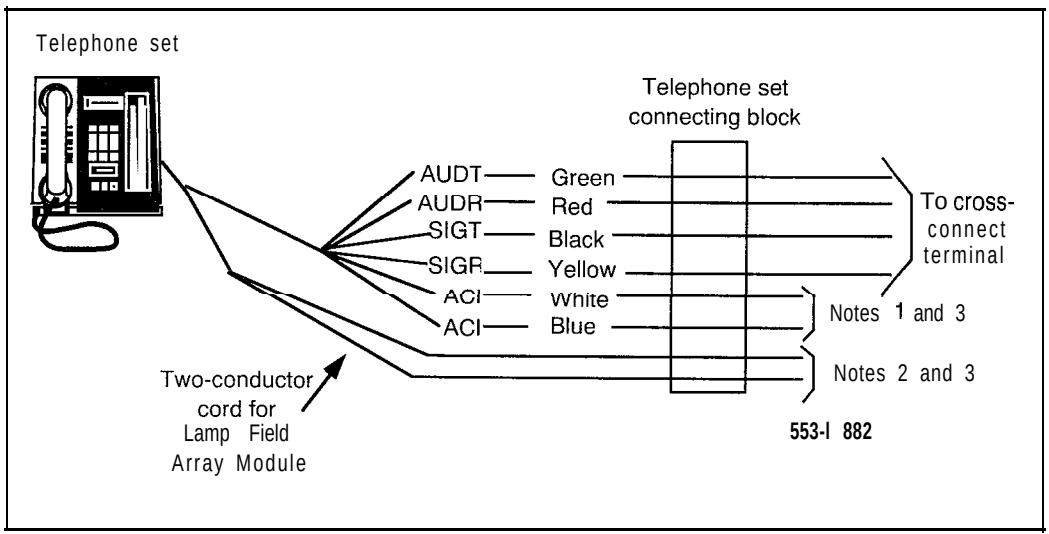

Table 4-6
SL-1 and M1 109 telephone connections

Mounting Cord		Connecting Block Designations			Inside Wiring Colors	
Lead Name	Color	NE-47QA or QBB1B	NE-283 74-5001 Adapter	NE-625F TELADAPT	Z Station Wire	16/25 Pair Cable
Audio T	G	G	IT	T1 (G)	G	W-BL
Audio R	R	R	1R	R1 (R)	R	BL-W
SIG T	BK	BK	X1	AUX (BK)	BK	w-o
SIG R	Y	Y	x2	GND (Y)	Y	o-w
AC1	BL	5	R	T2 (BL)		W-SL
AC1	W	6	B	R2 (W)		SL-W

Note *1:* To prevent sending false signals to the CPU, connect and disconnect leads in the following sequence:

Connecting	Disconnecting
1) Signal Pair (SIGT, SIGR)	1) Power Pair
2) Audio Pair (AUDT, AUDR)	2) Audio Pair
3) Power Pair (AC1, ACI)	3) Signal Pair

Note 2: A 24 V ac supply is required when the telephone is equipped with a digit display, QUS1C logic Handsfree unit, QKK-type remote powering kit (for extended range), QMT1 or QMT2 key/lamp modules

Note 3: 15 V ac supply required when equipped with QMT3 lamp field array module. An extra 3-conductor cord kit is required.

Note 4: These supplies may be obtained from:

115/24 V ac or 115/15 V ac transformers located within 25 ft. (7.7 m) of the telephone (each requires a separate transformer).

QUT1 or QUAA1 centralized power unit (each telephone requires a separate fuse to prevent noise or cross talk).

Procedure 4-16
Connecting 500/2500-type telephones

1 Ensure that the terminal connector is compatible with telephone connector.

2 Connect telephone mounting cord.

TELADAPT cords (NE-625F connector) do not require terminations. Insert the plastic connector on the end of telephone mounting cord into the NE-625F type receptacle.

3 Connect the mounting cord to an NE-284-74-5007 Amphenol adapter if reusing 16- or 25-pair cable. Plug the adapter into the cable connector. Fasten the connector together with the screws provided at the end of each connector.

Table 4-7
NE-500/2500 telephone connections

Mounting Cord	NE-47QA or QBBIB Block Designation	NE-284-74-5001 Designation	Cable Color Pairs 16 to 25 not used	Connect to TN
TIP (green)	G	IT	W-BL	TIP
RING (red)	R	1R	BL-W	RING
GND (yellow)	BK	x2		
	Y	X1		

Cross-connecting telephones

Be sure to connect the telephones according to the following figures. Figure 4-8 provides the diagram for cross connecting 500/2500-type telephones on a Peripheral Equipment (PE) module. Tables 4-10, 4-11 and 4-12 show 500/2500 telephone cross-connections on an Intelligent Peripheral Equipment (IPE) module.

Cross connections for SL-1 telephones are shown in Figure 4-9, and the Meridian Modular telephones cross connections are shown in Figure 4-10.

Procedure 4-17
Cross-connecting telephones

1 Locate telephone terminations at cross-connect terminal.

Telephone terminations are located on the vertical side of the frame (when frame mounted blocks are used) and in the blue field (when wall mounted blocks are used).

2 Connect Z-type cross-connecting wire to the leads of the telephone.

3 Locate line circuit card (TN) terminations.

Line circuit card (TN) terminations are located on the horizontal side of the distributing frame when frame mounted blocks are used and in the white field when wall mounted blocks are used.

4 Run and connect the other end of the cross-connecting wire to the assigned TN terminal block.

Table 4-8
Type Z cross-connecting wire

Size	Gauge	Color	Designation
1 pr	24	Y-BL	Tip
		BL-Y	Ring
3 pr	24	W-BL	Voice T
		BL-W	Voice R
		w-o	Signal T
		o-w	Signal R
		W-G	Power
		G-W	Power

Table 4-9
Inside wiring colors

Inside Wiring Colors		
Z Station Wire	**16/25 pair cable**	**Connect to Equipment TN**
G	W-BL	1st pair Tip
R	BL-W	1st pair Ring
BK	W-O	2nd pair Tip
Y	O-W	2nd pair Ring

Figure 4-8
NE-500/2500-type telephone cross-connections for PE modules

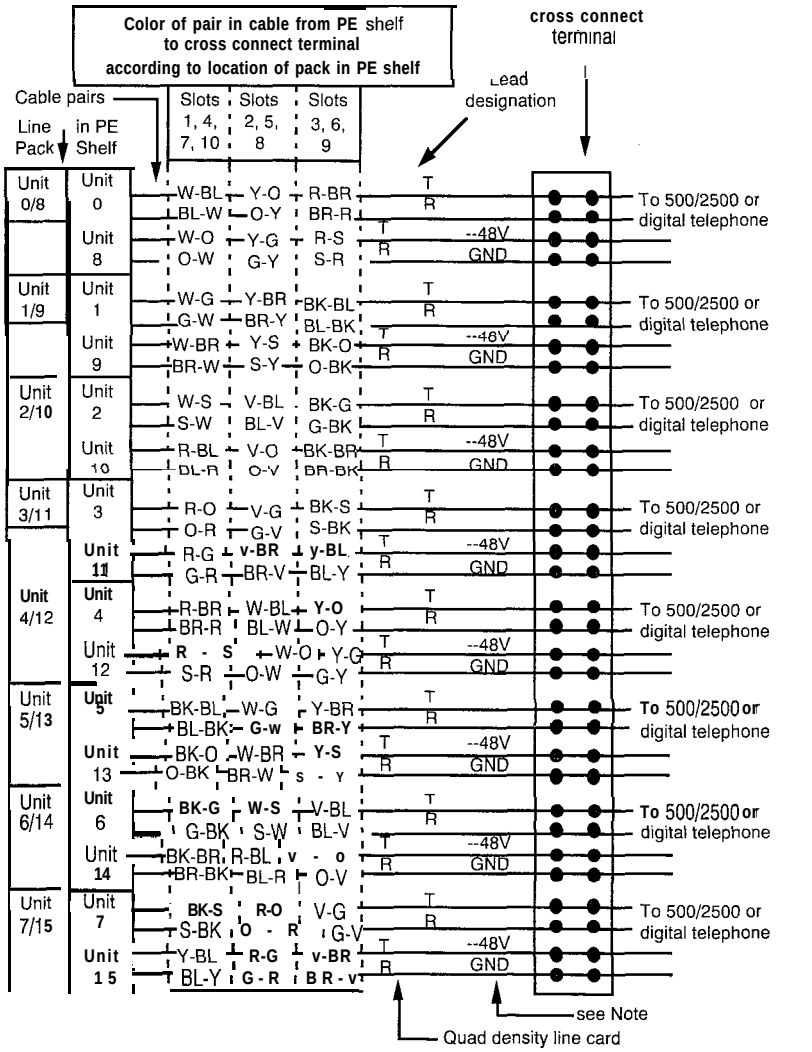

Note: **This connection applies only to line cards equipped with the Parallel Massage Waiting Lamp feature. This connects to a second message waiting indication, a lamp bank for example. The maximum loop resistance is 2000Ω.**

553-I 873

Table 4-10
500/2500 line card pair-terminations for IPE module connectors A, E, K; R

Pair	Pins	Pair color	I/O panel connectors				Unit
			A	E	K	R	16/card
1T / 1R	26 / 1	W-BL / BL-W	slot 0	slot 4	slot 8	slot 12	0
2T / 2R	27 / 2	W-O / O-W					1
3T / 3R	28 / 3	W-G/G-W					2
4T / 4R	29 / 4	W-BR / BR-W					3
5T / 5R	30 / 5	w-s / s-w					4
6T / 6R	31 / 6	R-BL / BL-R					5
7T / 7R	32 / 7	R-O / O-R					6
8T / 8R	33 / 8	R-G / G-R					7
9T / 9R	34 / 9	R-BR / BR-R					8
10T / 10R	35 / 10	R-S / S-R					9
11T / 11R	36 / 11	BK-BL / BL-BK					10
12T / 12R	37 / 12	BK-O/O-BK					11
13T / 13R	38 / 13	BK-GIG-BK					12
14T / 14R	39 / 14	BK-BR / BK-BR					13
15T / 15R	40 / 15	BK-S / S-BK					14
16T / 16R	41 / 16	Y-BL / BL-Y					15

Table 4-11
500/2500 line card pair-terminations for IPE module connectors B, F, L, S

Pair	Pins	Pair color	I/O panel connectors				Unit
			B	F	L	S	16/card
1T / 1R	26 / 1	W-BL / BL-W	slot 1	slot 5	slot 9	slot 13	0
2T / 2R	27 / 2	W-O / O-W					1
3T / 3R	28 / 3	W-G / G-W					2
4T / 4R	29 / 4	W-BR / BR-W					3
5T / 5R	30 / 5	W - S / S - W					4
6T / 6R	31 / 6	R-BL / BL-R					5
7T / 7R	32 / 7	R-O / O-R					6
8T / 8R	33 / 8	R-G / G-R					7
9T / 9R	34 / 9	R-BR / BR-R					8
10T / 10R	35 / 10	R-S/S-R					9
11T / 11R	36 / 11	BK-BL/BL-BK					10
12T / 12R	37 / 12	BK-O / O-BK					11
13T / 13R	38 / 13	BK-G / G-BK					12
14T / 14R	39 / 14	BK-BR / BK-BR					13
15T / 15R	40 / 15	B K - S / S - B K					14
16T / 16R	41 / 16	Y-BL / BL-Y					15
17T / 17R	42 / 17	Y-O / O-Y	slot 2	slot 6	slot 10	slot 14	0
18T / 18R	43 / 18	Y-G / G-Y					1
19T / 19R	44 / 19	Y-BR / BR-Y					2
20T / 20R	45 / 20	Y-S / S-Y					3
21T / 21R	46 / 21	V-BL / BL-V					4
22T / 22R	47 / 22	V-O / V-O					5
23T / 23R	**48 / 23**	**U-G / G-U**					6
24T / 24R	49 / 24	U-BR / BR-U					7
25T / 25R	**50 / 25**	V-S / S-V					Spare

Table 4-I 2
500/2500 line card pair-terminations for IPE module connectors C, G, M, T

Pair	Pins	Pair color	I/O panel connectors				Unit
			C	G	M	T	16/card
1T / 1R	26 / 1	W-BL / BL-W	slot 2	slot 6	slot 10	slot 14	8
2T / 2R	27 / 2	W-O / O-W					9
3T / 3R	28 / 3	W-G / G-W					10
4T / 4R	29 / 4	W-BR / BR-W					11
5T / 5R	30 / 5	w-s / s-w					12
6T / 6R	31 / 6	R-BL / BL-R					13
7T / 7R	32 / 7	R-O/O-R					14
8T / 8R	33 / 8	R - G / G - R					15
9T / 9R	34 / 9	R-BR / BR-R	slot 3	slot 7	slot 11	slot 15	0
10T / 10R	35 / 10	R-S / S-R					1
11T / 11R	36 / 11	BK-BL / BL-BK					2
12T / 12R	37 / 12	BK-O/O-BK					3
13T / 13R	38 / 13	BK-G / G-BK					4
14T / 14R	39 / 14	BK-BR / BK-BR					5
15T / 15R	40 / 15	BK-S / S-BK					6
16T / 16R	41 / 16	Y-BL / BL-Y					7
17T / 17R	42 / 17	Y-O / O-Y					8
18T / 18R	43 / 18	Y - G I G - Y					9
19T / 19R	44 / 19	Y-BR / BR-Y					10
20T / 20R	45 / 20	Y-S / S-Y					11
21T / 21 R	46 / 21	V-BL / BL-V					12
22T / 22R	47 / 22	V-O / V-O					13
23T / 23R	48 / 23	V-G / G-V					14
24T / 24R	49 / 24	V-BR / BR-V					15
25T / 25R	50 / 25	V-S / S-V					Spare

Figure 4-9
SL-1 telephone cross-connections

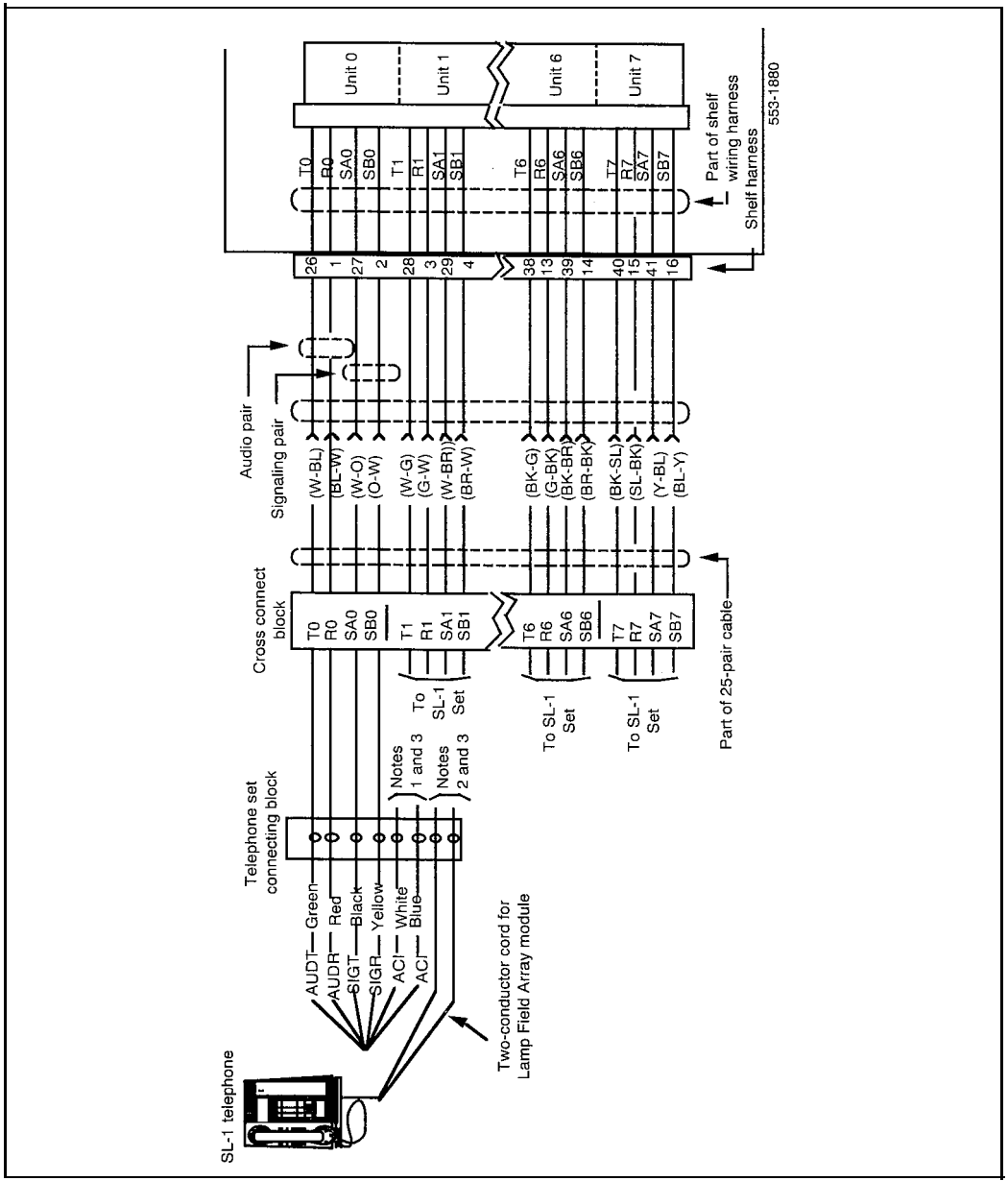

Figure 4-10
Meridian Modular Telephone cross-connections

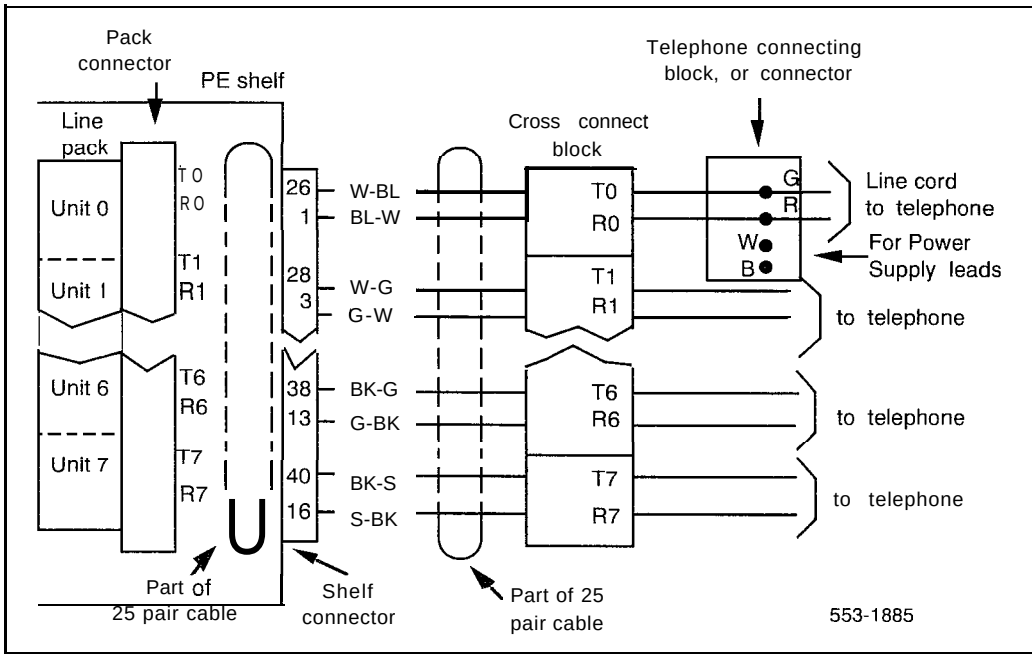

Add-on modules

Packing and unpacking

USC proper care while unpacking any add-on module. Check for damaged containers so that appropriate claims can be made to the transport company for items damaged in transit.

If a module must be returned to the factory, pack it in the appropriate container to avoid damage during transit. Remember to include all loose parts in the shipment.

QMT1, QMT2 add-on module

The QMT1 key/lamp module has 10 non-locking keys and 8 LED, while the QMT2 key/lamp module has 20 non-locking keys and 16 LED. Add modules to the right side of an SL- 1 telephone or attendant console.

The SL- 1 telephone can have up to six additional key strips (for example, six QMT1 modules, or two QMT1 and two QMT2 modules). However, the number of additional key strips that you can add may be limited by other equipment that is connected to the telephone. A full description of equipment that can be added to an SL- 1 telephone, along with their limitations is described in *SL-I telephones and add-on modules* (553-2001-l 10).

The QCW type attendant console accommodates one QMT2 or two QMT1 modules.

When the Ml250 or M2250 attendant console is delivered from the factory, the QMT2 option switch is OFF. To turn the switch ON, you must open the attendant console (see "Attendant consoles," Procedure 3-5).

Each telephone which has a key/lamp module installed requires a 25V ac power supply.

Procedures 5-3 and 5-4 describe how to connect and disconnect add-on key modules. Tables 5-1 through 5-4 give switch settings for the various applications of add-on modules. Table 5-5 gives the jack numbering for add-on module connecting.

Faceplate

See Figure 5-l as a reference for the removal and installation of the QMT1 and QMT2 add-on module faceplate.

Procedure 5-1
Installing QMT1 and QMT2 add-on module faceplate

1 Place the add-on module on a desk with the front edge slightly beyond the edge of the desk.

2 Fit the cover to the housing and tighten the captive retaining screws.

3 Position the faceplate so that the keys will pass through the cutouts in the faceplate.

4 Tilt the back edge of the faceplate towards the rear of the module, and insert the locating tabs into the slots on the attendant console cover.

5 Keeping the locating tabs in the slots, tilt the front edge of the faceplate down, passing the keys through the cutouts in the faceplate.

6 Press the front edge of the faceplate down until the faceplate catches snap into place.

7 Ensure that the faceplate is securely held in place without binding the keys.

Procedure 5-2
Removing QMT1 and QMT2 add-on module faceplate

1 Place the add-on module on a desk with the front edge slightly beyond the edge of the desk.

2 Insert a paper clip into each release hole in the front edge of the module housing to release faceplate (see Figure 5-l).

3 Lift the faceplate off.

4 Unscrew the captive retaining screws securing the cover to the housing, and remove the cover.

Figure 5-1
QMT1 and QMT2 add-on module faceplate

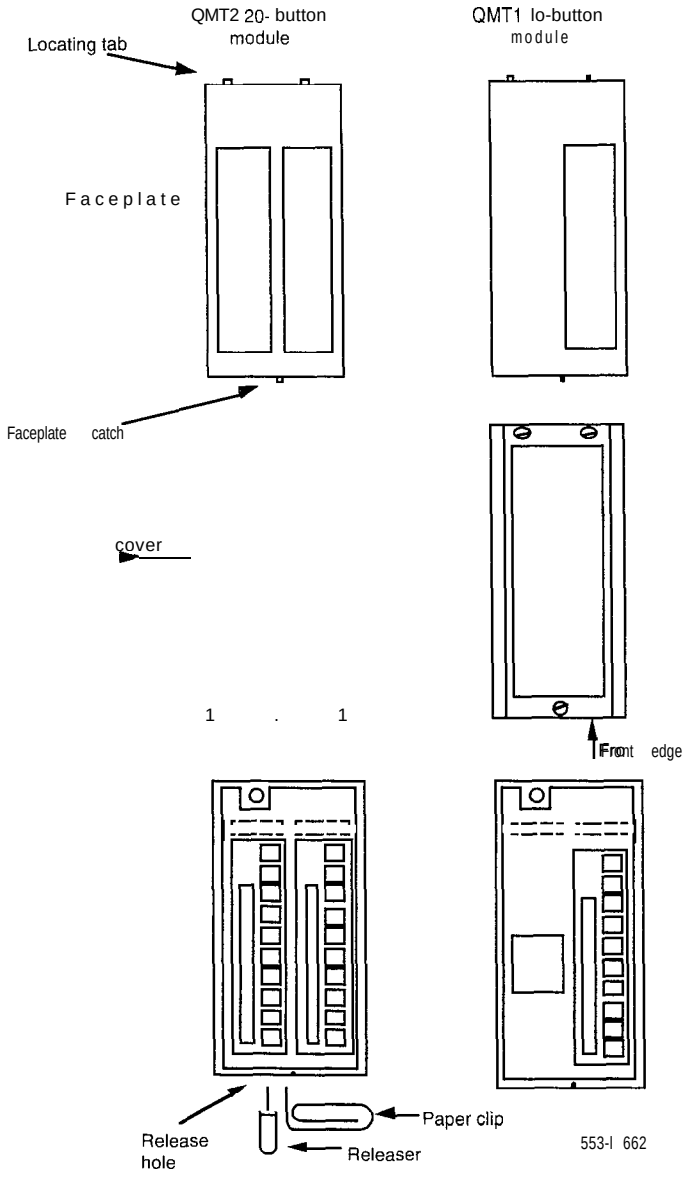

Procedure 5-3
Connecting QMT1 and QMT2 add-on module

1 Verify that the address switches are correctly set.

2 Remove filler plate from right side of telephone, attendant console or add-on module. Store filler plate.

3 Place the left side of the new module against the right side of the telephone, attendant console or installed module, aligning the filler plate openings.

4 Lock the new module in place by inserting the locking device, attached to the wiring harness, over the edges of the filler plate openings.

5 Extend the module harness into the existing unit and insert the plug into the jack.

If the QMT2 module is of C vintage or earlier remove the screws securing the circuit board to the module housing and remove the circuit board. Insert the plug of the wiring harness into the connector and replace the circuit board and secure with screws.

6 Provide the 25 V ac supply if this is the first module being added to an SL-1 telephone.

Procedure 5-4
Disconnecting QMT1 and QMT2 add-on module

1 Remove data from system memory. Refer to XI ***1 input/output guide*** (553-3001-400).

2 Remove the plug on the end of the module wiring harness, from the jack in adjacent unit.

If the QMT2 module is vintage C or earlier, remove the screws securing the circuit board to the module housing.

3 Remove locking device, connecting the module to adjacent unit.

4 Locate stored filler plate and insert in filler plate opening.

5 Disconnect 25 V ac supply if not required.

Figure 5-2
Add-on module(s) connection to SL-1 telephone

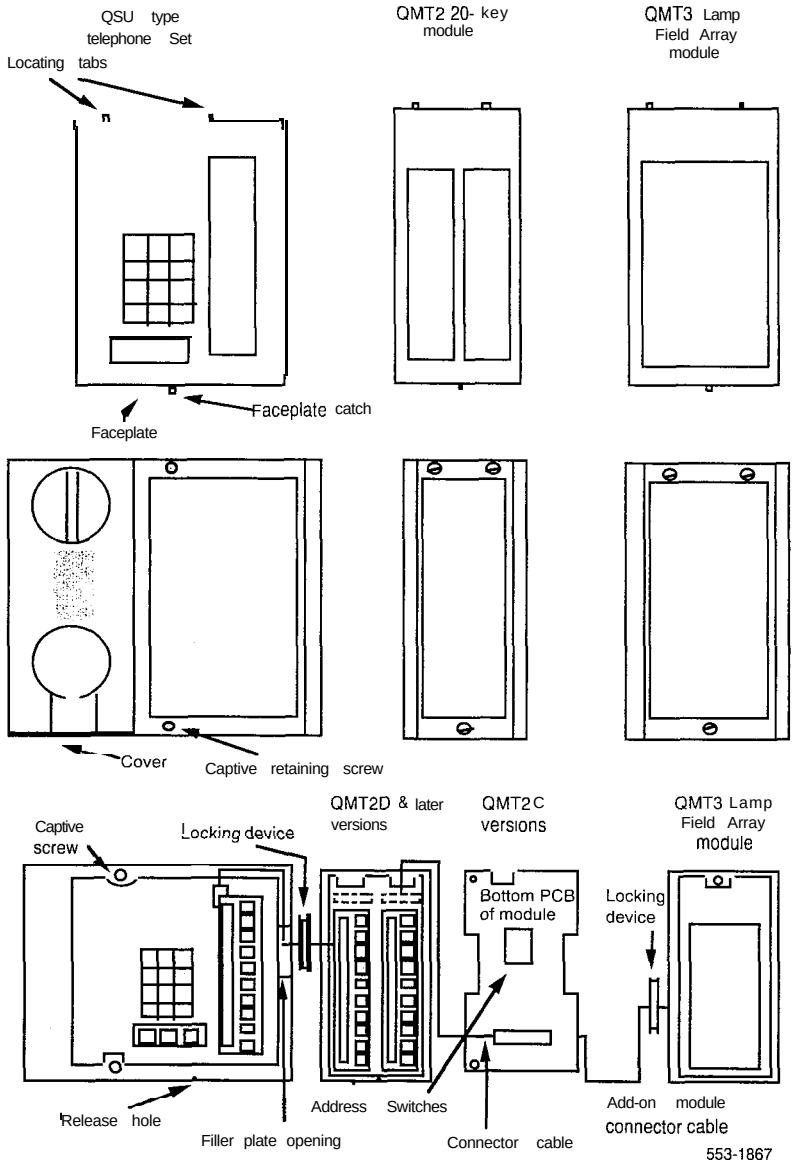

Figure 5-3
Add-on module(s) connection to attendant console

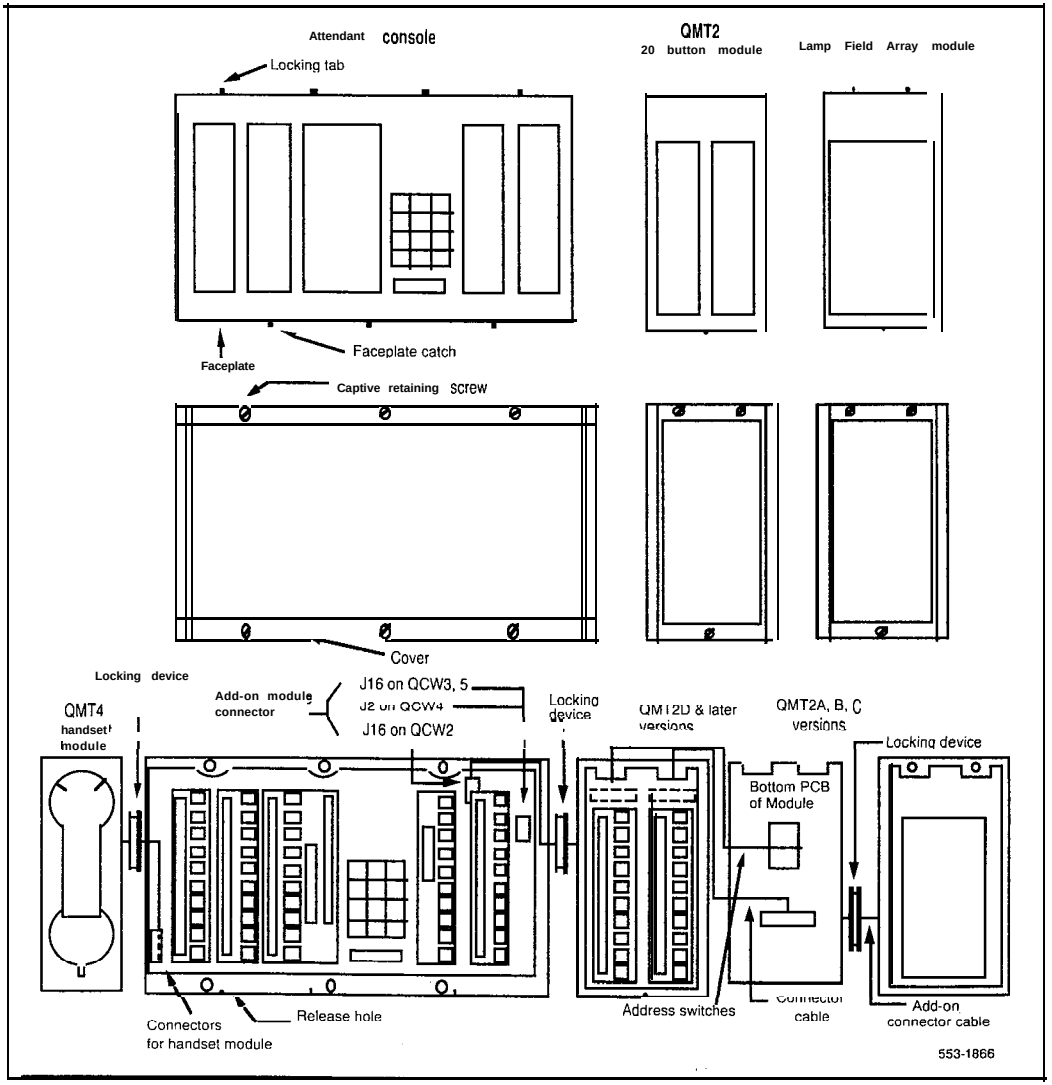

Table 5-I
QMT1 key/lamp module address switch settings (SL-1 telephones)

Added Key/Lamp Strip Number (Note)	Address Switch Settings					
	1	2	3	4	5	6
1	0	0	X	0	0	0
2	0	X	0	0	0	0
3	0	X	X	0	0	0
4	X	0	0	0	0	0
5	X	0	X	0	0	0
6	X	X	0	0	0	0

Switch OFF = 0
Switch ON = X

Note: When a QMT1 module is added to an SL-1 telephone, the address switch contained in the module must be set according to the corresponding strip number, for example, the first module added is strip 1 and the second module added is strip 2. The number of key strips that can be added to an SL-1 telephone varies from 4 to 6 key strips, depending on the type of other add-on modules or kits that are connected to the telephone. Refer to *SL-1 telephones and add-on modules description* (553-2001-I 10) for add-on module limitations.

Table 5-2
QMT2 key/lamp module address switch settings (SL-1 telephones)

Added Key/Lamp Strip Number (Note)	Address Switch Settings					
	1	2	3	4	5	6
1,2	0	0	X	0	X	0
2,3	0	X	0	0	X	X
3,4	0	X	X	X	0	0
4,5	X	0	0	X	0	X
5,6	X	0	X	X	X	0

Switch OFF = 0
Switch ON = X

Note: When a QMT2 module is added to an SL-1 telephone, the address switch contained in the module must be set to the corresponding strip number, for example, the first module added is strip 1 and 2 and the switch is set to address 1 and 2. If a QMT1 precedes a QMT2, then the switch is set to address 2 and 3. The number of key strips that can be added to an SL-1 telephone varies from 4 to 6 key strips, depending on the type of other add-on modules or kits that are connected to the telephone. Refer to *SL-1 telephones and add-on modules* (553-2001-I 10) for add-on module limitations.

Table 5-3
QMT1 module Address Switch settings (attendant consoles)

Added Key/Lamp Strip Number (Note)	Address Switch Settings					
	1	2	3	4	5	6
First module 4	X	0	0	0	0	0
Second module 5	X	0	X	0	0	0

Switch OFF = 0
Switch ON = X

Note: Only two 1 O-key lamp strips may be added to an attendant console. The first strip added is assigned to address 4, the second to address 5.

Table 5-4
QMT2 Module Address Switch settings (attendant console)

Added Key/Lamp Strip Number (Note)	Address Switch Settings					
	1	2	3	4	5	6
Strip 4 and 5	X	0	0	X	0	X

Switch OFF = 0
Switch ON = X

Note: Only one QMT2 key/lamp strip can be added to an attendant console.

Table 5-5
Jack numbering for add-on module connection

Equipment	Jack number
SL-1 telephones (see Note)	J1
SL-1 telephone equipped with QKK3 kit	J2 of QKK3
QMT1 Add-on module	J2
QMT2C Add-on module	J1
QMT2D Add-on module	J2
QMT3 Add-on module	J6
QCW2, 3 and 5 Attendant consoles	J16
QCW4 Attendant console	J2

Note: On SL-I telephones with a digit display, jack J1 is extended to the connector located beside the right-hand filler plate.

Designating add-on modules

Be sure to refer to the work order for features enabled, and key‘ designations. Refer to ***SL-1 telephones and add-on modules*** (553-2001-I 10) for add-on module limitations.

Procedure 5-5
Designating add-on modules

1 Remove cap, by gently pulling upwards, from each key requiring a designation.

2 Remove appropriate designation from sheet of designations.

3 Place designation in cap, place cap over corresponding key and gently press down. Repeat for all keys requiring designations.

4 Insert a paper clip into the hole at left or right end of designation window, and gently pry open the window.

5 Insert number tag, and replace the designation window.

QMT3 Lamp Field Array

The addition of a QMT3 Lamp Field Array on an SL-1 telephone reduces the number of add-on modules that may be equipped on the telephone. Refer to *SL-I telephones and add-on modules, description* (553-2001-110) for a full description of the types and limitations of add-on modules that may be added to an SL-1 telephone.

Refer to *Attendant console and add-on modules description* (553-2001-115) for a description of QCW type attendant consoles equipped with a QMT3 Lamp Field Array. See also "Busy Lamp Field/Console Graphics Module" for installation of LFA on Ml250 and M2250 attendant consoles.

The QMT3 Lamp Field Array (LFA) module is added to the right-hand side of the attendant console or SL-1 telephone. It can be used with any combination of 10- or 20-key modules and requires a separate 15 V ac power supply.

The QMT3 module should be installed at the extreme right of the attendant console or other add-on modules, to avoid disassembling the QMT3 module to gain access to its connector.

The Lamp Field Array module obtains its power through the attendant console. The requirements are:

- a reference ground line (OV)
- 5V to power the CMOS electronics which control the Lamp Field Array module (c. 50 mA)
- power source of -12 V for the display of the Lamp Field Array module (c. 10 mA)

backlighting power

The Lamp Field Array module mounts on the back of the attendant console and is held on using snapfits and two screws.

Procedure 5-6
Connecting QMT3 module to an SL-1 telephone or a QCW attendant console

1 Unpack and inspect the Lamp Field Array (LFA) for damage. If it is damaged, notify your supplier.

2 Remove the faceplate and cover from the attendant console or from the SL-1 telephone, and from any add-on module that is connected to the right-hand side of the attendant console or telephone.

3 Disconnect the switchhook cable connector from the PCB of the telephone.

If you are adding the LFA to a QSU3 or QSU1F (and later vintage) telephones, go to step 7.

4 Remove the LED strip and cable connector from the telephone.

5 Remove the four (4) dial pad retaining screws. Remove the dial pad cable connector from the PCB.

6 Remove the retaining screws at the top and bottom of the PCB. Remove PCB from telephone.

If you are adding the LFA to a QSU1C through QSU1E vintage telephone, go to step 8.

7 (for pre-QSU3D vintage SL-1 telephones) Remove the retaining screws from around the dial pad and remove the dial pad.

Note: Some dial pads are soldered to the PCB and cannot be disconnected.

8 Remove the retaining screws from the PCB and remove the PCB.

9 Install a 2-conductor power cord (with spade-tip connectors) through the base of the telephone alongside the existing line cord. Secure the power cord to the line cord with plastic cable tie.

—continued—

10 Replace the PCB and secure with retaining screws,

11 Connect the two leads of the power cord to the AC2 quick-connect terminals.

12 Replace the dial pad (if necessary) and secure with retaining screws.

13 Remove the filler plate from the right side of the set (or right-most add-on module).

14 Lock the LFA to the set (or attached add-on module) by slipping the locking device on the LFA wiring harness over the edges of the filler plate opening. Connect the LFA wiring harness to the jack on the telephone (or attached add-on module).

15 Reconnect the switchhook cable connector. Reconnect the LED strip (if necessary) and secure with retaining screws.

16 Cross-connect (at the main cross-connect terminal or the intermediate cross-connect point) 15 V ac from the power unit to the attendant console or telephone.

17 Reattach the faceplate and cover to the attendant console or SL-1 telephone and the add-on module.

18 Configure the QMT3 in the system. Refer to *Xl I input/output guide* **(553-3001-400).**

Procedure 5-7
Disconnecting QMT3 module from an SL-1 telephone or QCW attendant console

1 Remove lamp field array data from the system memory. Refer to *XI I input/output guide* (553-3001-400).

2 Remove the faceplate and cover from the attendant console or the SL-1 telephone and from the any add-on module connected to the right-hand side of the telephone.

3 Disconnect the lamp field array module.

4 Reattach the cover and faceplate on the set or attendant console, and on the add-on module.

5 Pack the Lamp Field Array module in a container.

6 Test the SL-1 telephone or attendant console. Refer to *Acceptance test manual* (553-2YY1-230).

Table 5-6
Jack numbering for QMT3 module connection

Equipment	Jack number
SL-1 telephones (Note)	J1
SL-I telephone equipped with QKK3 kit	J2 of QKK3
QMT1 add-on module	J2
QMT2C add-on module	J1
QMT2D add-on module	J2
QMT3 add-on module	J6
QCW2, 3 and 5 attendant consoles	J16
QCW4 attendant console	J2

Note: On telephones with a digit display, jack J1 is extended to the connector located beside the right-hand filler plate.

Figure 5-4
QMT3 Lamp Field Array connections to attendant console

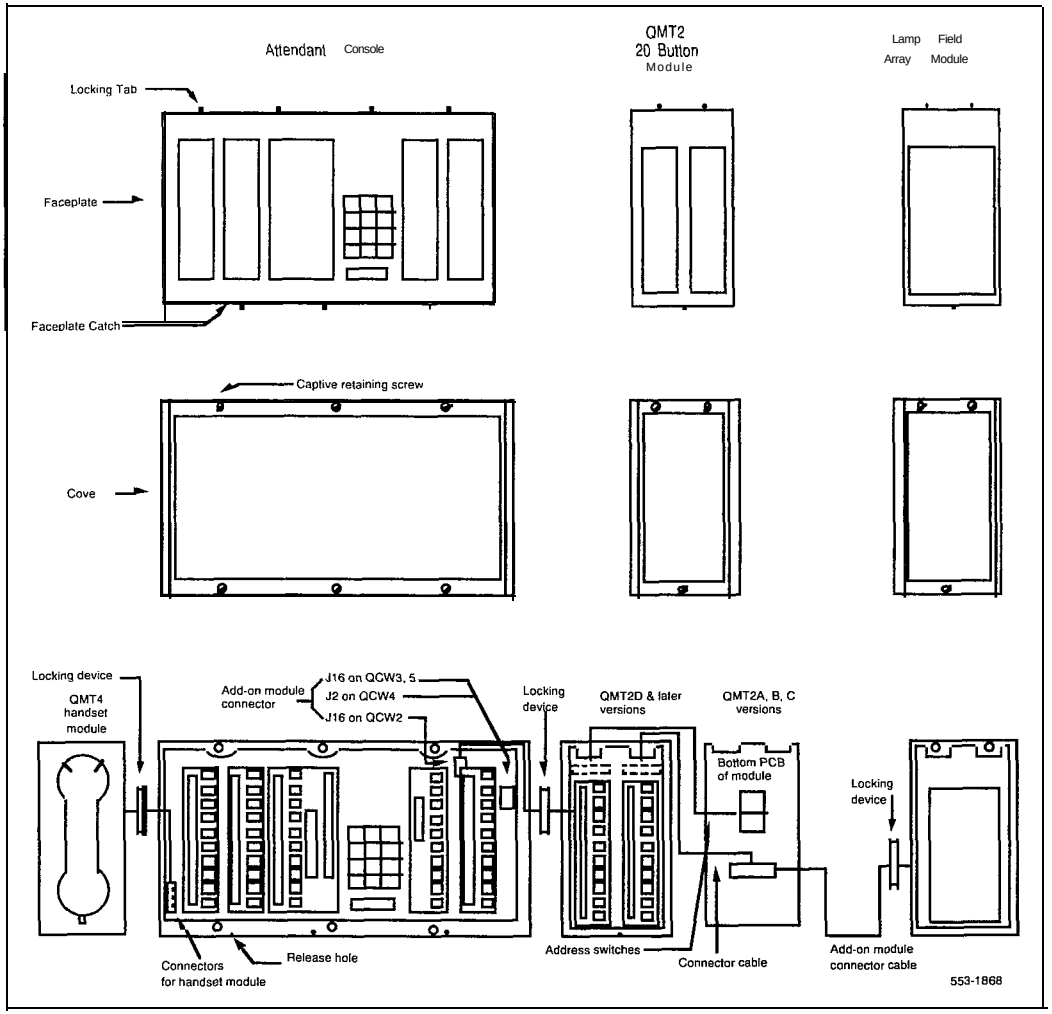

Figure 5-5
QMT3 Lamp Field Array connections to SL-1 telephone

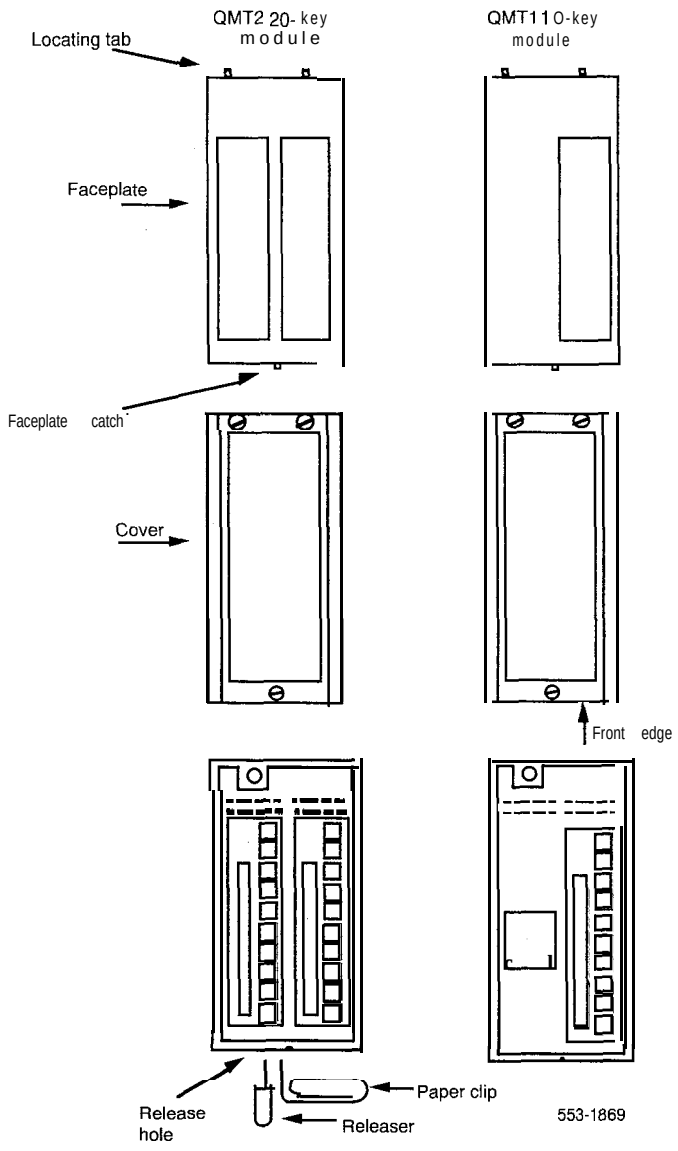

Busy Lamp Field/Console Graphics Module

The Busy Lamp Field/Console Graphics Module obtains its power through the attendant console. The requirements are:

- a reference ground line (OV)
- power source of 5 V for the CMOS electronics which control the lamp field array module (c. 50 mA)
- power source of 12 V for the display of the Console Graphics Module (c. 10 mA)
- backlighting power

An external floating 16 V dc (300 mA) power supply is required to be cabled in at the local MDF at a maximum of 120 feet (36 m) from the attendant console when the BLF/CGM is installed (A0367601 Transformer). This provides ail power requirements for the M2250 applications, and for backlighting support on the M1250. Basic functionality is supported on the Ml250 without the power supply.

The BLF/CGM has a battery that provides backup power to maintain the Supplementary Information when the console is powered down. Battery lifetime is five years. To replace the battery, return the BLF/CGM to your supplier.

The BLF/CGM mounts on the back of the attendant console and is held on using snapfits and two screws.

The attendant console's top cover must be removed to install the Busy Lamp Field/Console Graphics Module (BLF/CGM).

Refer to *Ml250 Attendant Console User Guide* (P0699329), *M2250 Attendant Console User Guide* (P0704329) or *Busy Lamp Field/Console Graphics Module User Guide* (P0706875) for further information. Refer to *Ml250 and M2250 attendant consoles description* (553-2201-117) for a description of Ml 250, and M2250 attendant consoles equipped with a Busy Lamp Field/Console Graphics Module (BLF/CGM).

Follow normal anti-static precautions when installing the BLF/CGM onto the attendant console.

Figure 5-6
Busy Lamp Field/Console Graphics Module on the M1250/M2250 attendant console

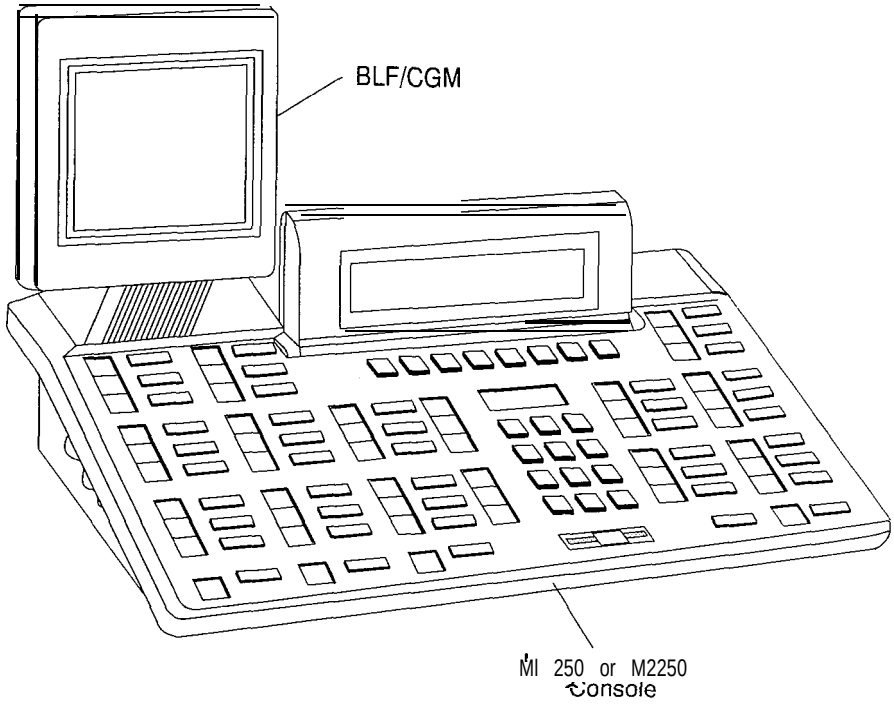

Procedure 5-8
Connecting the BLF/CGM to MI250 and M2250 attendant consoles

1 Disconnect the main power/system cable from the rear of the attendant console, and remove the handset jackplug from the side.

2 Move adjustable display to down position to protect it from damage while installing the BLF/CGM. Also move the volume slider switch to the far left (see Figure 5-7).

Figure 5-7
Volume slider position

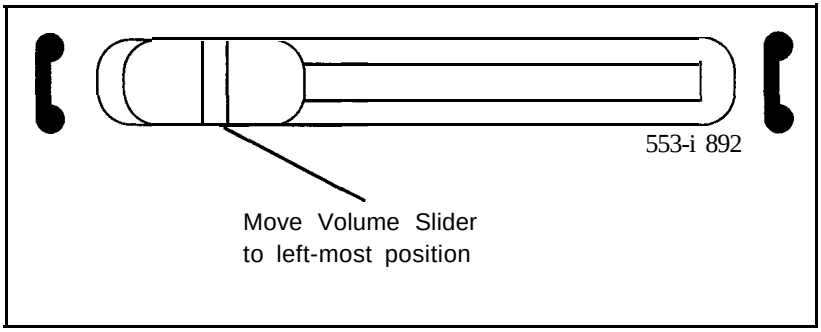

3 Place the attendant console face-down on a properly prepared work surface, taking care to avoid scratching or damaging the top cover or Display. Remove the adjustable stand, if required.

The stand is secured with four screws. Remove the stand as a complete assembly, and set aside.

4 Remove the twelve fastening screws in the base of the attendant console that secure the top cover to the console base (see Figure 5-8). Holding the console base and cover firmly, turn it back over so that the top cover is on, facing up.

-continued-

Figure 5-8
Removina the fastening screws

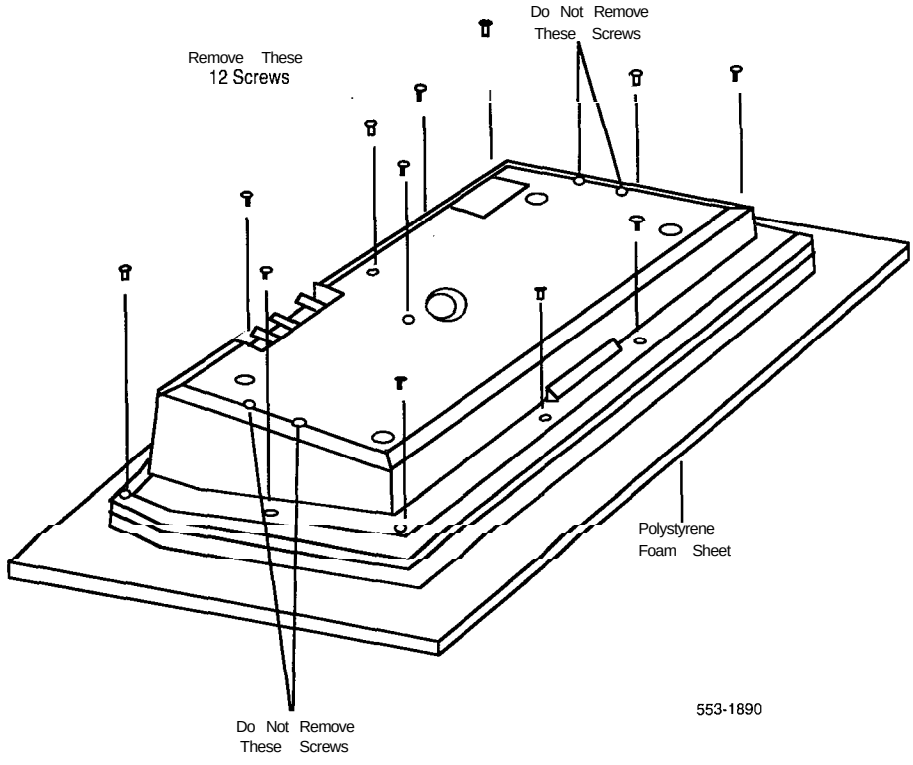

5 For Ml250 Attendant Consoles, raise and hold the top cover to disconnect the two flat cable connectors as well as the alerter cable connector from the bottom PCB (see Figure 5-9).

For the M2250 Attendant Console, raise and hold the top cover to remove the single cable connector only. The alerter cable does not need to be removed (see Figure 5-9).

6 Remove the top cover and place it upside down to the left of the attendant console.

-continued-

Figure 5-9
Removing the top cover

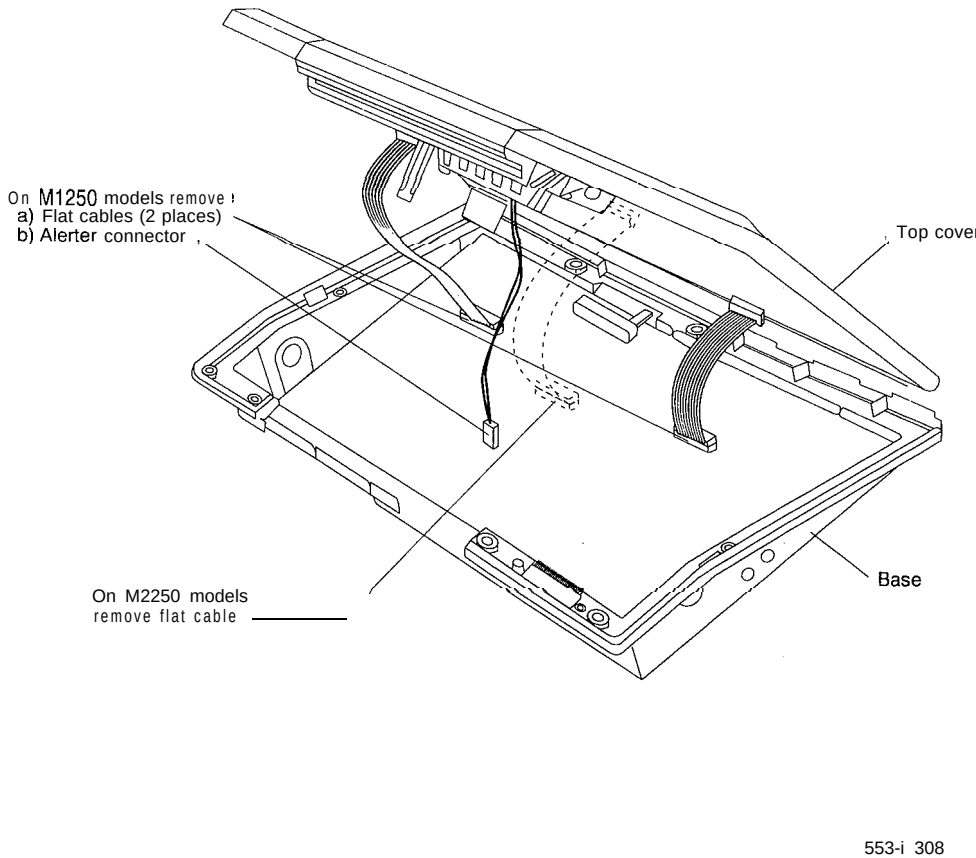

7 Remove the knockout section on the back of the attendant console (see Figure 5-10) with a small screwdriver or similar tool. Remove any remnants of the breakaway tags.

8 Feed the flat ribbon cable for the BLF/CGM through knockout hole in the base of the attendant console.

9 Hold the BLF/CGM unit over the console in a vertical position, ensuring that the two locators on the bottom bracket of the BLF/CGM are located in the knockout hole.

Figure 5-10
Attendant console knockout section

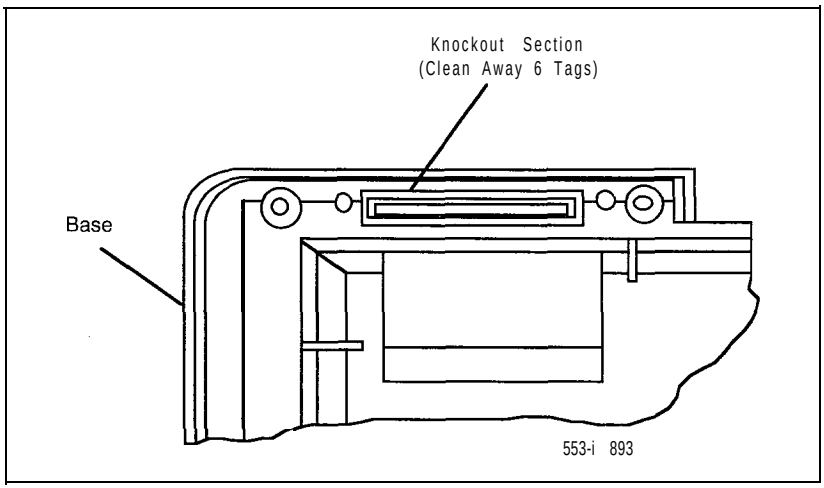

10 Push down on the attendant console, while holding the BLF/CGM unit, until the two locators snap into place (see Figure 5-11).

11 Fit the BLF/CGM ribbon cable onto the top cover circuit board, into flexible strip connector J4 (so the blue line on the cable faces away from the circuit board).

—continued—

Figure 5-l 1
Connecting the BLF/CGM to the attendant console

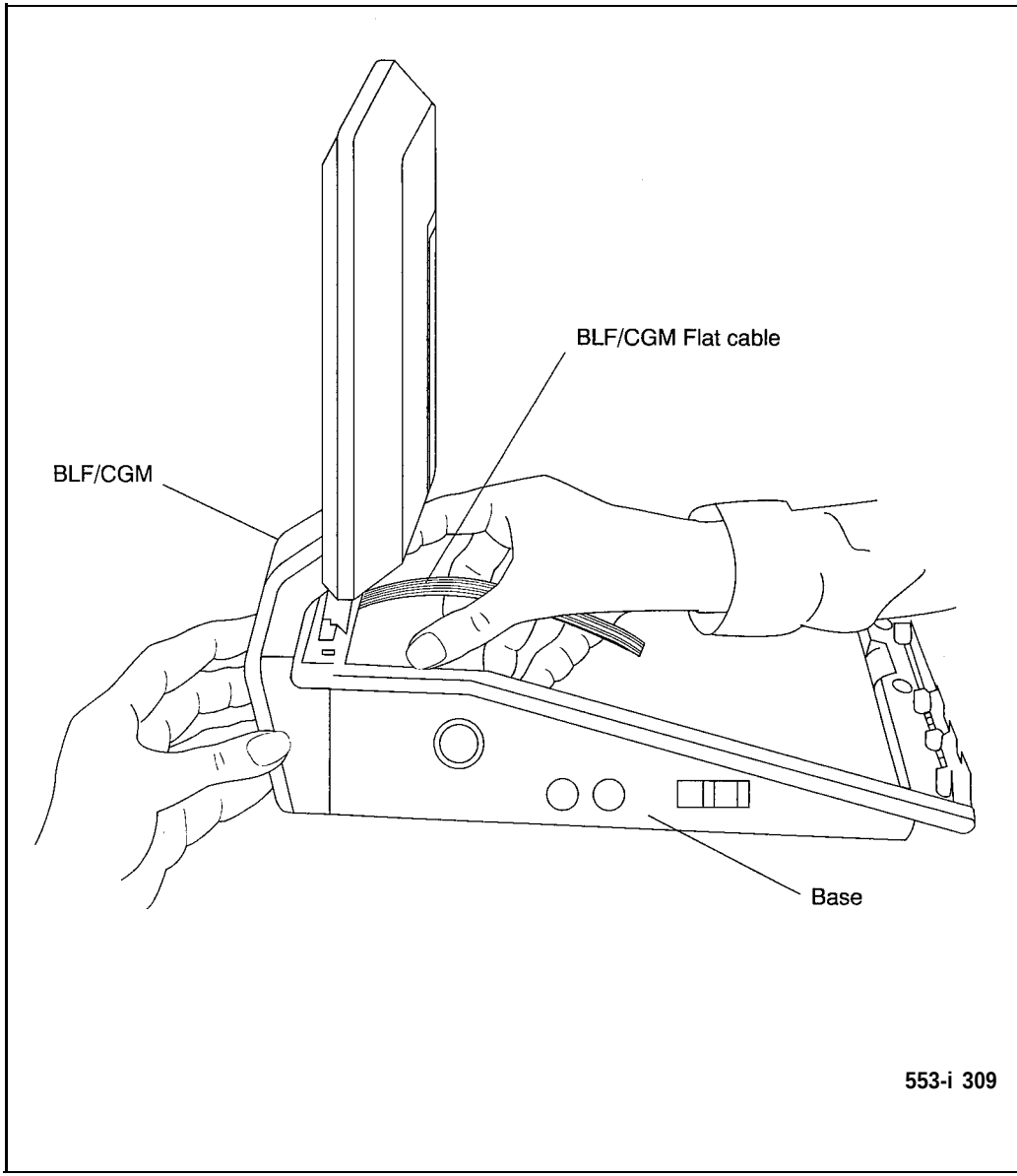

12 Hold the top cover over the attendant console and reconnect the cable connector(s) onto the base of the attendant console.

For the M1250, reconnect the alerter cable. Ensure that the protrusion on the support spacer is located in the correct slot on the console (see Figure 5-12).

13 Place the top cover on the console. Slide it back and down into place (see Figure 5-13). Check that all the cables are in the correct positions, and that none are trapped.

14 Push the BLF/CGM display into position by rotating it back (see Figure 5-13).

15 Ensuring that the volume slider is fully engaged in the correct slider, hold the top cover and console base firmly together. Turn the assembly upside down (see Figure 5-14).

16 Reinsert the twelve screws that secure the top cover to the console base and tighten.

17 Insert the two new screws supplied with the BLF/CGM that attach it to the base, and tighten (see Figure 5-7).

18 Cable in BLF power at local MDF as per M1250, M2250 cross-connections (see Procedure 3-8).

19 If required, replace the adjustable stand.

20 Reconnect the main system cable to the rear of the console.

21 If the BLF/CGM has been correctly installed, the main menu appears when you supply power to the attendant console. Test the BLF/CGM by selecting a menu option. Refer to *Field/Console* ***Graphics Module User Guide*** (P0706875) for programming information.

22 Define the Busy Lamp Field in system database. Refer to ***X11 features and services (553-3001-305).***

23 Test the Busy Lamp Field features using *M1250* Attendant Console ***User Guide*** (P0699329) or *M2250* ***Attendant Console User Guide*** (P0704329).

Figure 5-l 2
Support spacer

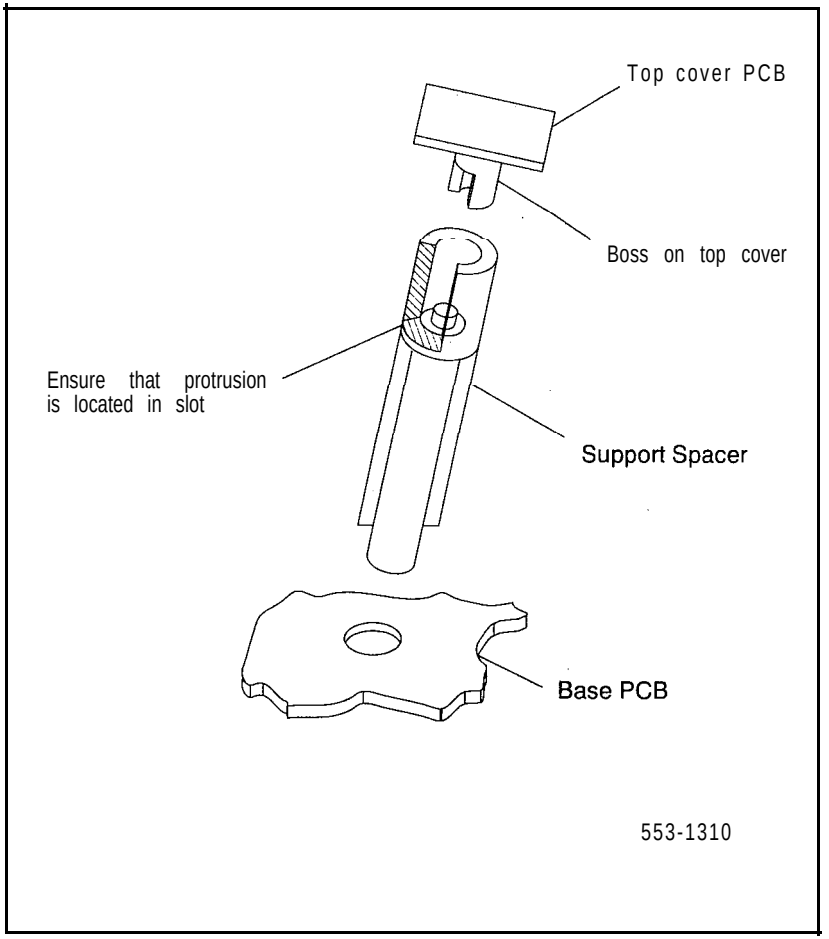

Figure 5-13
Positioning the top cover and BLF/CGM

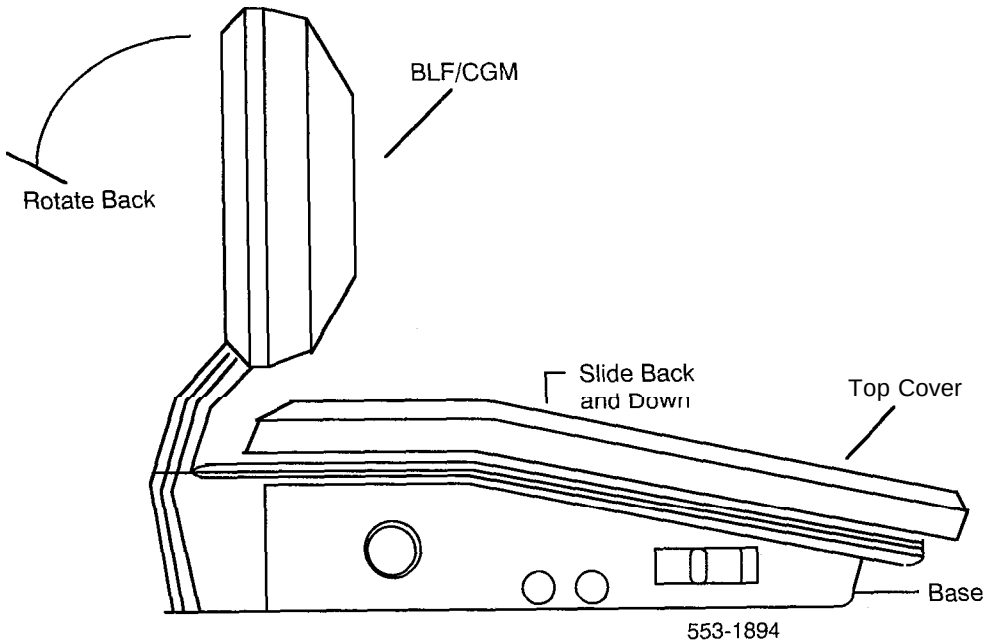

Figure 5-14
Attaching the top cover to the attendant console base and BLF/CGM

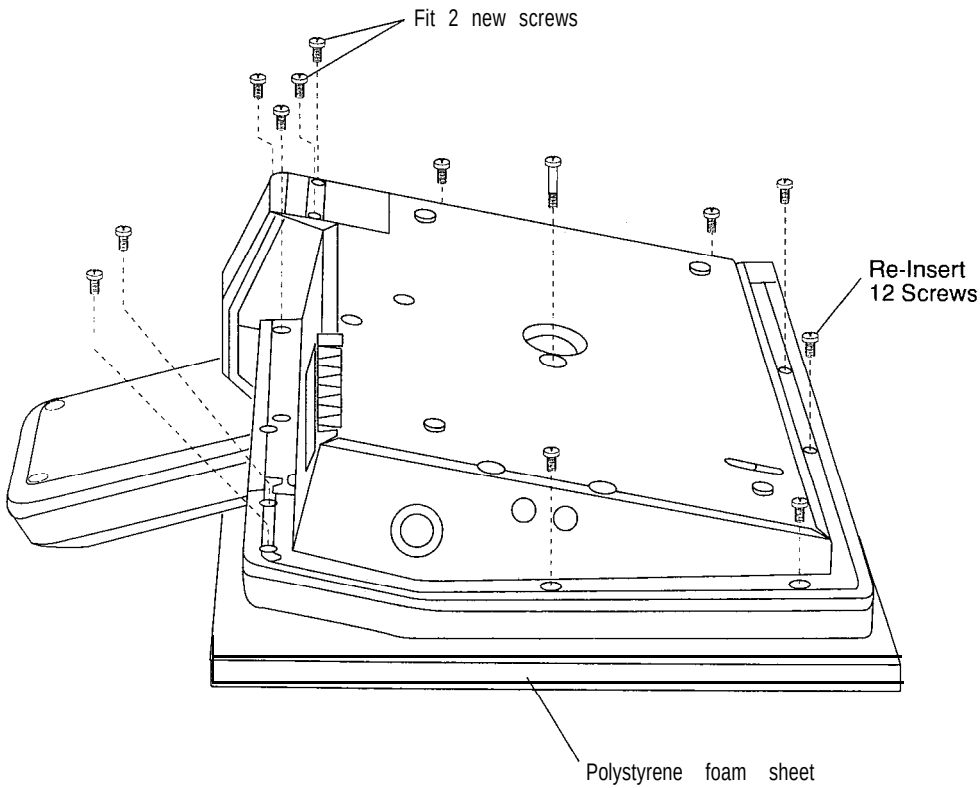

Procedure 5-9
Removing the Busy Lamp Field/Console Graphics Module.

1 Disconnect the main power/system cable from the rear of the attendant console, and remove the handset jackplug from the side.

2 Move adjustable display to down position to protect it from damage while removing the BLF/CGM. Also move the volume slider switch to the far left (see Figure 5-7).

3 Place the attendant console face-down on a properly prepared work surface, taking care to avoid scratching or damaging the top cover or Display. Remove the adjustable stand, if required.

The stand is secured with four screws. Remove the stand as a complete assembly, and set aside.

4 Remove the twelve fastening screws in the base of the attendant console that secure the top cover to the console base (see Figure 5-8).

Remove the two screws securing the BLF/CGM to the base of the attendant console.

5 Holding the console base and cover firmly, turn it back over so that the top cover is on, facing up.

6 For Ml250 Attendant Consoles, raise and hold the top cover to disconnect the two flat cable connectors as well as the alerter cable connector from the bottom PCB (see Figure 5-9).

For the M2250 Attendant Console, raise and hold the top cover to remove the single cable connector only. The alerter cable does not need to be removed (see Figure 5-9).

7 Unplug the BLF/CGM ribbon cable from the attendant console.

8 Remove the top cover and place it upside down to the left of the attendant console.

9 Pull back the snap-fits on the BLF/CGM to disengage the BLF/CGM from the attendant console.

—continued—

10 Place the top cover on the console. Slide it back and down into place (see Figure 5-13). Reconnect all cables in the correct positions, and make sure that none are trapped,

11 Ensuring that the volume slider is fully engaged in the correct slider, hold the top cover and console base firmly together. Turn the assembly upside down (see Figure 5-14).

12 Reinsert the twelve screws that secure the top cover to the console base and tighten.

13 If required, replace the adjustable stand.

14 Reconnect the main system cable to the rear of the console.

Attendant Supervisory Module (M2250 console)

The M2250 digital attendant console needs the Attendant Supervisory Module (ASM) to allow supervision. The M2250 cannot be connected to a QPC297 Attendant Console Monitor circuit card. With the ASM installed, the M2250 attendant console can be supervised just like any other attendant console. An M2250 attendant console configured as supervisor does not need the ASM installed.

To accept the ASM, the minimum vintage M2250 attendant console is AD. To fully support the ASM, the minimum vintage BLF/CGM is AB. The third PWR TN must be programmed and wired out to support the ASM (see Figure 3-10).

Procedure 5-10
Installing Attendant Supervisory Module in M2250 attendant console

CAUTION

Before handling internal set components, static electricity must be discharged from hands and tools by touching any grounded metal surface or conductor.

1 Disconnect the main power/system cable from the rear of the attendant console, and remove the handset jackplug from the side.

2 Move adjustable display to down position to protect it from damage while installing the ASM. Move the volume slider switch to the left-most position.

—continued—

3 Place the attendant console face-down on a properly prepared work surface, taking care to avoid scratching or damaging the top cover or display. Remove the adjustable stand, if equipped.

The stand is secured with four screws. Loosen the screws and remove the stand as a complete assembly, and set aside.

4 Remove the twelve fastening screws in the base of the attendant console that secure the top cover to the console base (see Figure 5-S). Holding the console base and cover firmly, turn it back over so that the top cover is on, facing up.

5 Raise and hold the top cover to remove the single cable connector. The alerter cable does not need to be removed (see Figure 5-9). Remove the top cover and place it upside down to the left of the attendant console.

6 The attendant console's main PCB has holes located in the upper right-hand side, near grid positions D1, D5, and A5 (see Figure S-15). Insert one Standoff in each of the holes, twisting it until it is secure.

CAUTION

Once you insert a standoff, it cannot be removed. Be sure you are placing each standoff in the correct hole on the main PCB, as shown in Figure 5-15.

-continued-

8 Position ASM board over J3 connector on the console's main PCB. Align holes on ASM board with the Standoffs and carefully work ASM pin connector onto connector J3 until firmly seated. See Figure 5-15.

Figure 5-15
Identifying correct grid positions on main PCB and attaching ASM

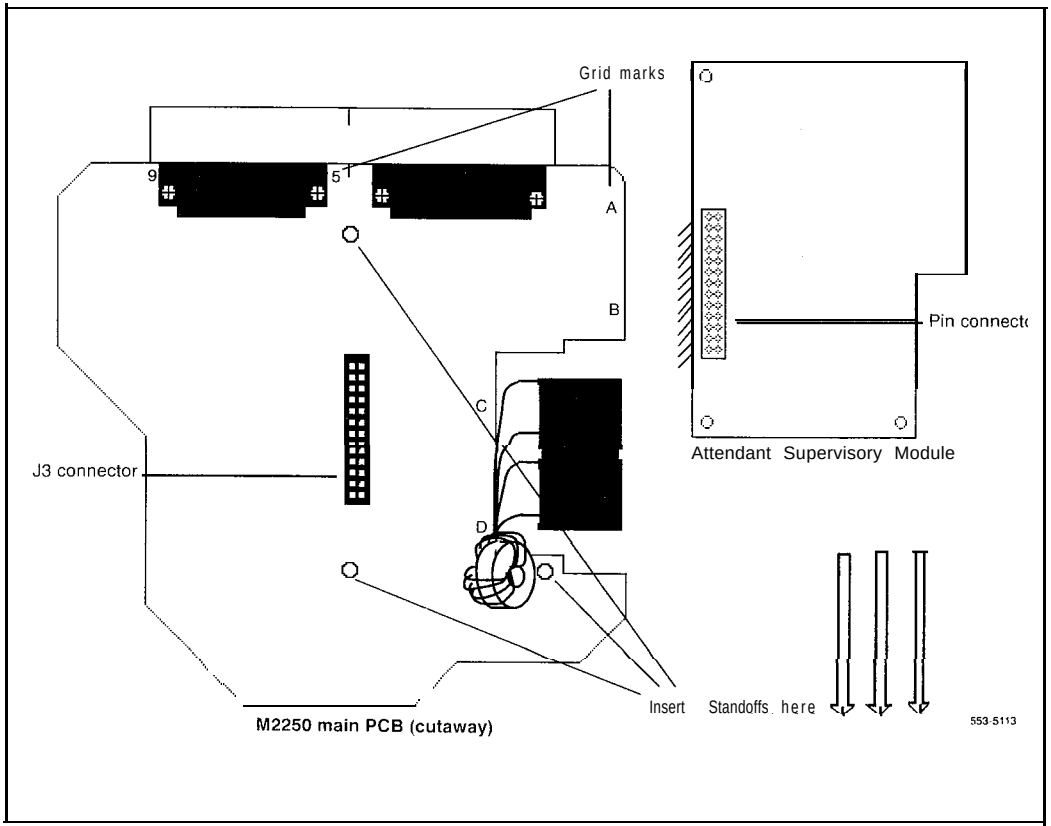

9 Hold the top cover over the attendant console and reconnect the cable connector onto the base of the console.

—continued—

10 Place the top cover on the console. Slide it back and down into place. Check that all the cables are in the correct positions, and that none are trapped.

11 Ensure that the volume switch is fully engaged in the correct slider. Hold the top cover and console base firmly together. Turn the assembly upside down.

12 Reinsert the twelve screws that secure the top cover to the console base and tighten.

13 If required, replace the adjustable stand.

14 Reconnect the main system cable to the rear of the console.

15 Test the Supervisory Console feature to make sure you can now properly supervise the M22.50 attendant console. Refer to *M2250 Attendant Console user guide* (P0704329).

QMT4, QMT15 handset modules

The following procedures describe the installation and removal of QMT4 and QMT15 handset modules:

- Procedure 5-11 explains how to connect QMT4A or B handset modules to a QCW2, QCW3 or QCW4 (or one of earlier vintage) attendant consoles.
- Procedure 5-12 explains how to disconnect QMT4A and B handset modules.
- Procedure 5- 13 explains how to connect QMT4C handset modules to all types of attendant consoles.
- Procedure 5-14 explains how to connect QMT15 amplified handset modules to QCW4E and later vintages of attendant consoles.

  Procedure 5-15 explains how to disconnect a QMT15 amplified handset module from QCW4E (and later vintages) of attendant consoles and the disconnecting of QMT4C handset modules.
- Procedure 5-16 explains how to connect QMT15 amplified handset modules to QCW2, QCW3 and QCW4D (and earlier vintages) attendant consoles.
- Procedure 5-17 explains how to disconnect QMT15 amplified handset modules from QCW2, QCW3 and QCW4D (or earlier vintages) of attendant consoles.

The QMT4 A/B handset module can be attached to the left side of the attendant console or left free standing. The QMT4 A/B handset module cannot be connected to the QCW4E attendant console.

The QMT4C can be installed on all attendant consoles.

The QMT15 amplified handset module cannot be installed on QCW4E (and earlier) attendant consoles equipped with a QMT3 Lamp Field Array (LFA) module.

The QMT15 module cannot be installed on QCW2, QCW3, or QCW4D (and earlier) attendant consoles equipped with a QMT3 Lamp Field Array module.

Procedure 5-11
Connecting Handset Module QMT4 A/B on a QCW2, QCW3 or QCW4D (or earlier vintage) attendant console

1 Unplug handset from attendant console.

2 Disengage the first LED strip on the left side of the attendant console by loosening the retaining clips at each end of the LED strip (QCW2 only).

3 Remove the filler plate from the right side of the handset module and the left side of the attendant console. Store filler plates.

4 Place the right side of the handset module against the left side of the attendant console aligning the filler plate openings.

5 Lock the module to the attendant console by inserting the plug adapter into the filler plate opening.

6 Insert the module wiring harness through the plug adapter into the attendant console.

7 In the attendant console, disconnect the six leads connecting the handset jacks to the Printed Circuit Board (PCB). Insulate and store the six leads.

8 Connect the six leads of the module wiring harness to the attendant console PCB.

9 (for QCW2 only) Replace the LED strip and secure with the two retaining clips.

10 Plug handset into jacks on left side of handset module.

Procedure 5-I 2
Disconnecting Handset module QMT4 A/B

1 Disengage the first LED strip on the left side of the attendant console by loosening the retaining clips at each end of the LED strip (QCW2 only).

2 In the attendant console, disconnect the six leads of the handset module wiring harness from the PCB.

3 Locate the six insulated handset jack leads stored in the attendant console base.

4 Remove the tape from the ends of the leads and connect the leads to the PCB.

5 Unlock the handset module from the attendant console by removing the plug adapter from the filler plate.

6 Install a filler plate in the filler plate opening on the attendant console.

7 Reinstall the LED strip and secure it with the two retaining clips (QCW2 only).

8 Plug the handset into the handset jacks on the lower left side of the attendant console.

Procedure 5-13
Disconnecting QMT4C handset module

1 Unplug handset from attendant console.

2 Insert plugs on right side of QMT4C into jacks on left side of attendant console.

3 Plug handset into left side of handset module.

Figure 5-16
QMT4 A/B handset module attached and connected to attendant console

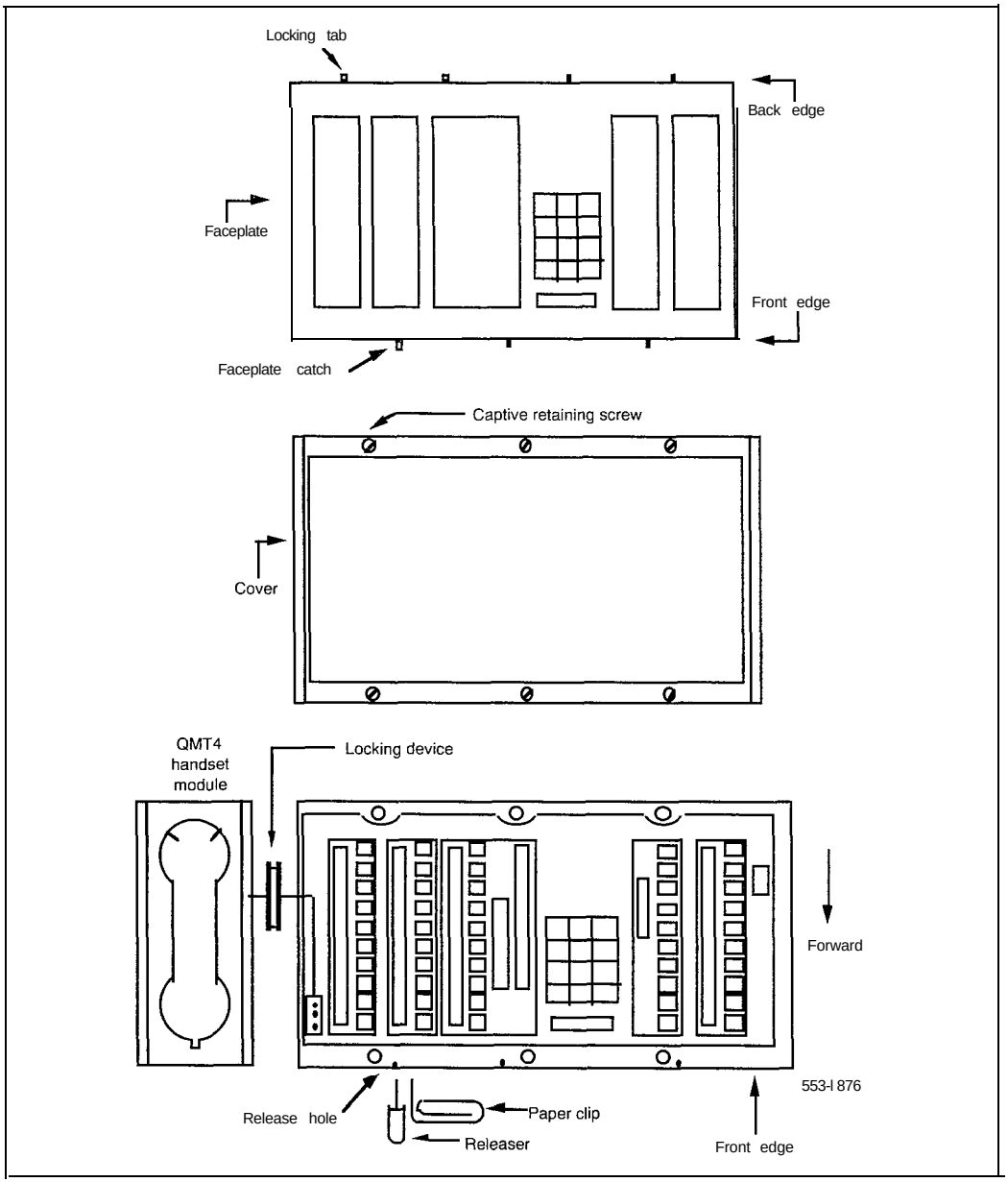

Procedure 5-14
Connecting QMT15 amplified handset module to QCW4E (and later) attendant console

1 Unplug handset from attendant console.

2 Remove and store filler plate from opening on left side of attendant console.

3 Insert plugs on right side of QMT15 module, into jacks on left side of attendant console.

4 Ensure that the locking device on the right side of module is properly seated in the opening on the left side of the attendant console.

5 Tighten down the two locking screws on the locking device. The locking screws should protrude through the bottom of the locking device and press against the inside of the attendant console housing.

6 Plug handset into left side of handset module.

Procedure 5-15
Disconnecting QMT4C or QMT15 handset module from a QCW4E attendant console

1 Unplug handset from handset module.

2 If QMT4C, unplug module from left side of attendant console and go to step 6.

3 If QMT15, loosen the two locking screws on the locking device until screws no longer protrude through the bottom of the locking device.

4 Unplug the module from the side of the attendant console.

5 Install a filler plate in the opening on the left side of the attendant console.

6 Plug handset into left side of attendant console.

Procedure 5-16
Connecting amplified handset module QMT15 to a QCW2, QCW3, or QCW4D (or earlier) attendant console

1 Remove and store filler plate from opening on left side of attendant console.

2 Pass the connector assembly (housed in the handset module) through the locking device on the right side of module.

3 Insert plugs on right side of the QMT15 module into jacks on left side of attendant console.

4 Ensure that the locking device on right side of module is properly seated in opening on left side of attendant console.

5 Tighten down the two locking screws on the locking device. The locking screws should protrude through the bottom of the locking device and press against the inside of the attendant console housing.

6 Extend the connector assembly from the QMT15 module to jack in attendant console. Insert plug into jack.

- If attendant console is equipped with QMT1 and/or QMT2 add-on key/lamp module(s), remove faceplate(s) and cover(s), extend the connector assembly through the openings between modules and connect the plug into the jack in the last module.
- If the QMT2 module is of C vintage or earlier, remove the screws securing the circuit board to the module housing and remove the circuit board. Insert the plug of the connector assembly into jack J1, replace the circuit board and secure with screws.

7 Ensure connector assembly wiring does not interfere with attendant console and module(s) (if equipped) covers.

8 Replace cover and faceplate on QMT1 and/or QMT2 modules if equipped.

9 Plug handset into handset module.

Procedure 5-17
Disconnecting QMT15 amplified handset module from a QCW2, QCW3, or QCW4D (or earlier) attendant console

1 Unplug handset from handset module.

2 Remove faceplate and cover from QMT1 and/or QMT2 key/lamp module(s) if equipped.

3 Remove the connector assembly plug from the jack in the attendant console or last key/lamp module (if equipped).

If QMT2 module is vintage C or earlier, remove the screws securing the circuit board to the module housing and remove the circuit board. Remove the connector assembly plug from jack J1. Replace the circuit board and secure with screws.

4 Remove connector assembly from module(s) and/or attendant console.

5 Loosen the two locking screws on the locking device (between handset module and attendant console) until the screws no longer protrude through the bottom of the locking device.

6 Unplug the QMT15 handset module from the attendant console.

7 Install a filler plate in the opening on the left side of the attendant console.

8 Replace the cover and faceplate on the QMT1 and/or QMT2 module(s) if provided.

9 Plug handset into attendant console.

Table 5-7
QMT4 A/B Handset module wiring harness connections

Lead Color	PCB Designation
v-o	AAA
V-G	BBB
S-BR	c c c
s-w	DDD
v-s	HANDSET
V-BR	v s s

Table 5-8
Attendant console and key/lamp add-on module jack numbering

Equipment	Jack No.
QMT1 add-on module	J2
QMT2C add-on module	J1
QMT2D add-on module	J2
QCW2, 3 and 5 attendant consoles	J16
QCW4 attendant console	J2

Figure 5-17
QMT4A, B & C handset module

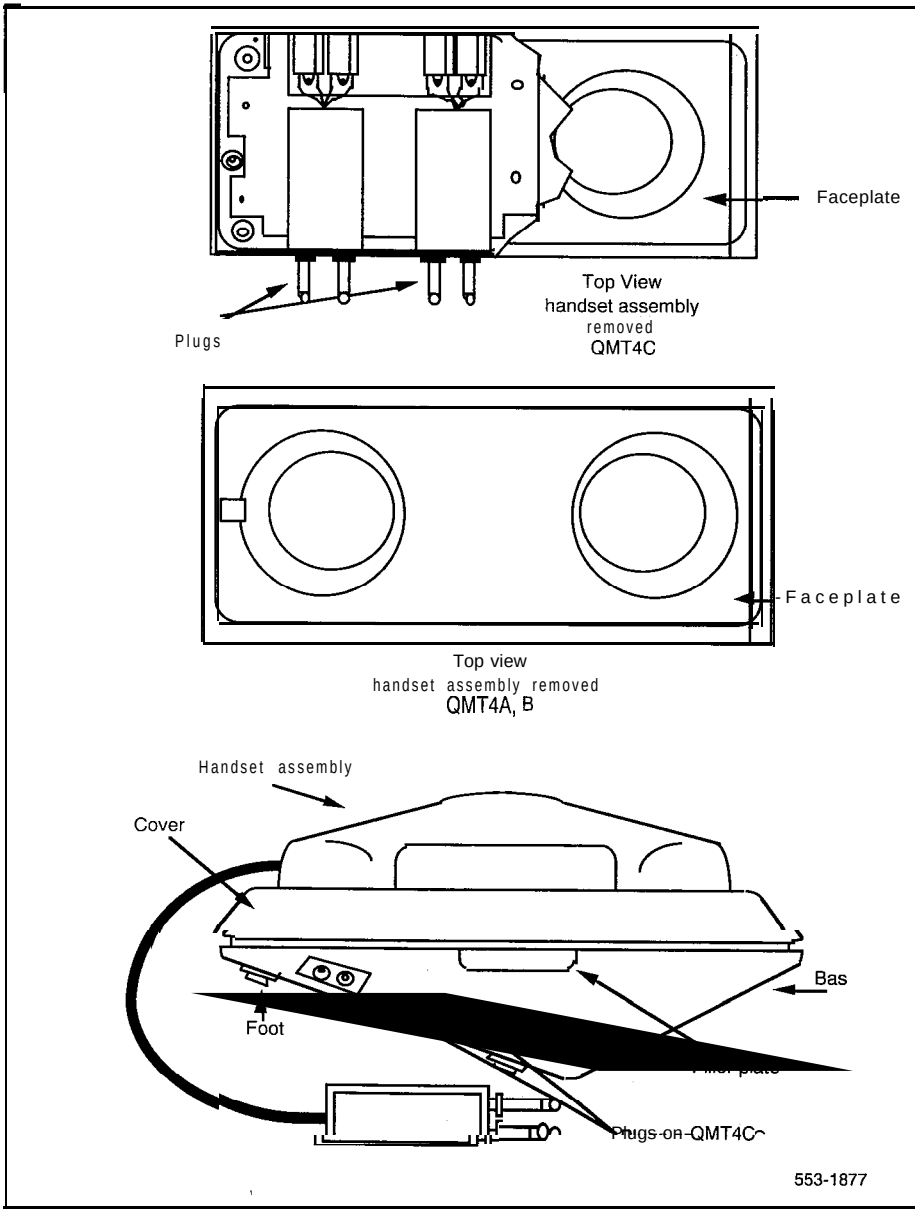

Figure 5-18
QMT15 amplified handset module

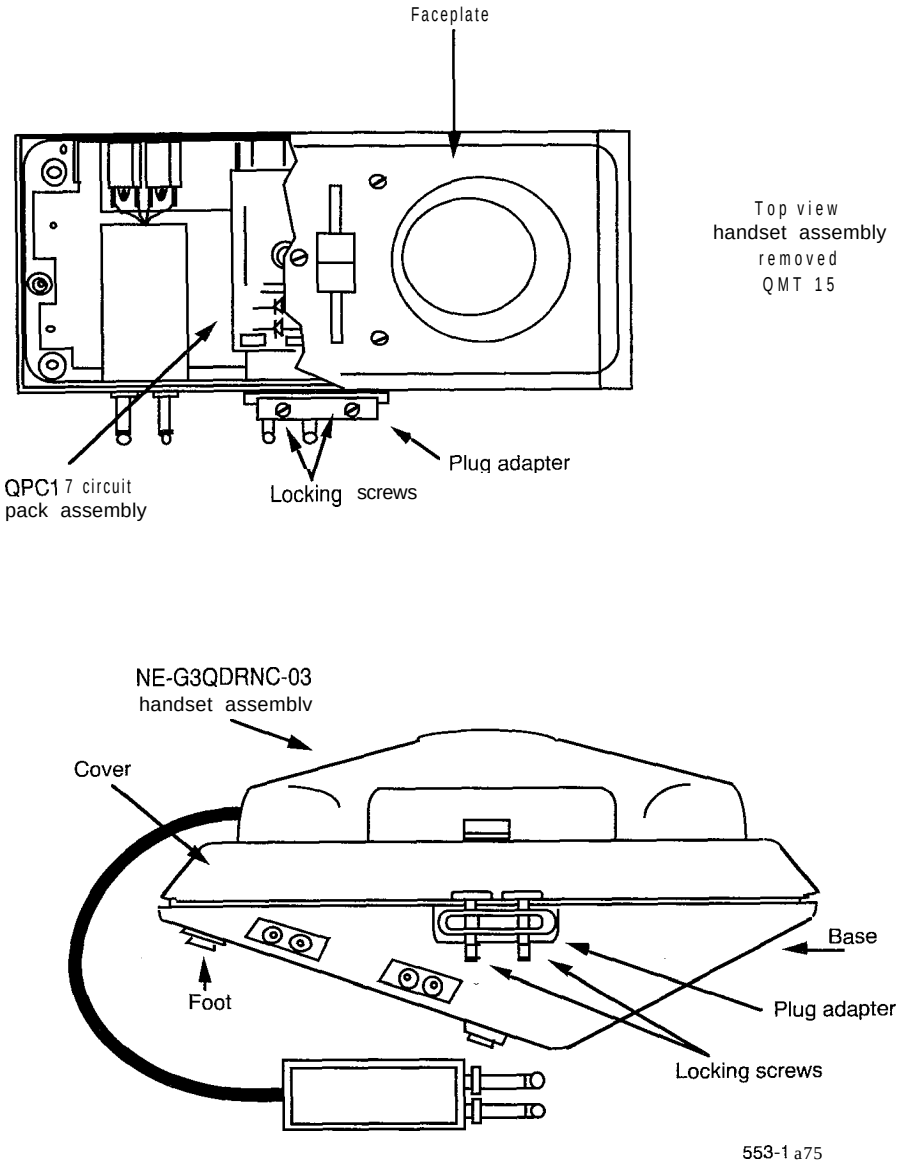

Figure 5-19
Current limiting kit connections

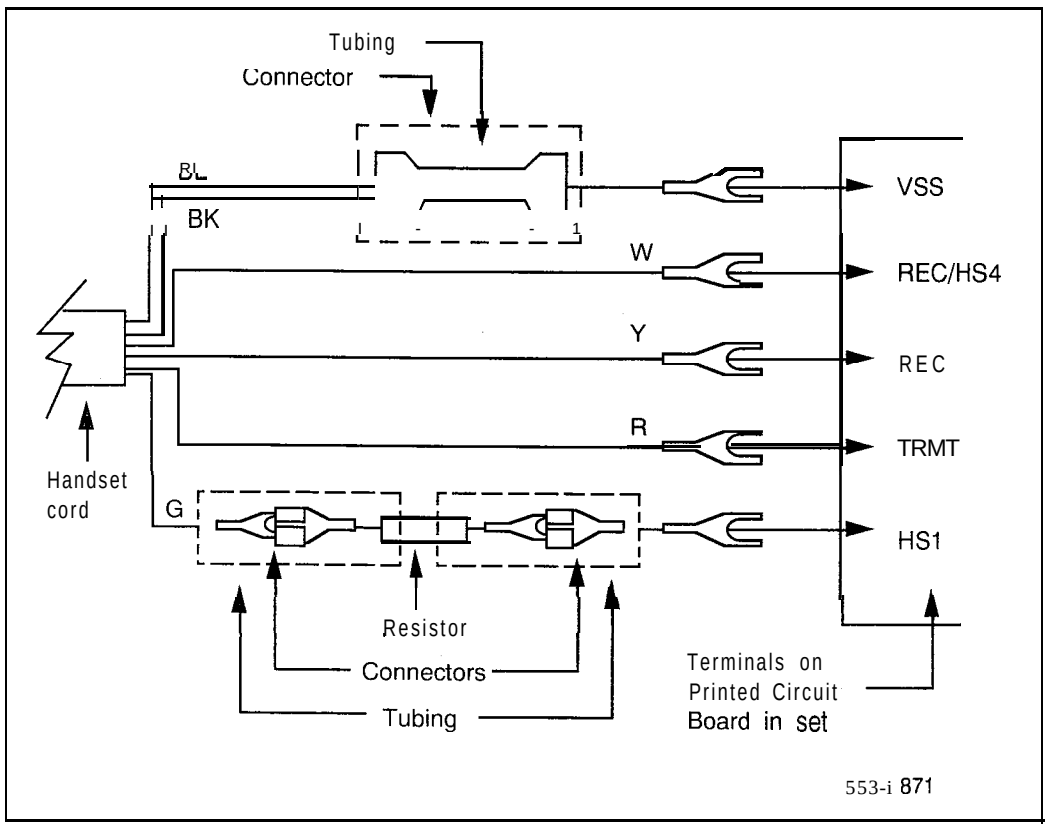

Amplified handset on SL-1 telephones

A PO630408 Current Limiting Kit is required to install the amplified handset on an SL-1 telephone.

Procedure 5-18
Connecting amplified handset

1 Disconnect existing handset cord from terminals TRMR, REC/HS4, REC and VSS on the Printed Circuit Board (PCB) in the telephone.

2 Remove handset and cord from telephone.

3 Connect the white lead from the cord of the amplified handset to terminal REC/HS4 on the PCB in the telephone.

4 Connect the yellow lead from the cord of the amplified handset to terminal REC on the PCB in the telephone.

5 Connect the Red lead from the cord of the amplified handset to terminal TRMR on the PCB in the telephone.

6 Connect the blue and black leads from the cord of the amplified handset together with the bridging connector supplied with the Current Limiting Kit.

7 Connect extension lead (provided with the kit) to the bridging connector and insulate with tubing.

8 Connect extension lead to terminal VSS on the PCB in the telephone.

9 Connect Green lead from cord of amplified handset to connector on resistor (provided with the kit) and insulate with tubing.

10 Connect extension lead (provided with the kit) to the resistor and insulate with tubing.

11 Connect extension lead to connector HS1 on the PCB in the telephone.

12 Secure handset cord to telephone with retaining clip on cord.

Procedure 5-19
Disconnecting amplified handset

1 Disconnect amplified handset cord from terminals VSS, REC/HS4, REC, TRMR and HS1 on the Printed Circuit Board (PCB) in the telephone.

2 Remove handset and cord from telephone.

3 Connect one white lead from the cord of the regular G-type handset to terminal REC/HS4 on the PCB in the telephone.

4 Connect the second white lead from the cord of the handset to terminal REC on the PCB in the telephone.

5 Connect the red lead from the cord of the handset to terminal TRMR on the PCB in the telephone.

6 Connect the black lead from the cord of the handset to terminal VSS on the PCB in the telephone.

7 Secure handset cord to telephone with retaining clip on cord.

NE-G6QDC amplified handset on SL-1 telephones

A PO630408 Current Limiting Kit is required to install the amplified handset on an SL-1 telephone.

Procedure 5-20
installing amplified handset

1 Unpack and inspect current limiting kit and handset for damage.

2 Remove the faceplate and cover from the SL-1 telephone.

3 Connect the current limiting kit and the amplified handset.

4 Reattach cover and faceplate to the telephone.

5 Test the telephone by placing a call and adjusting the volume control on the handset.

Procedure 5-21
Removing amplified handset

1 Remove the faceplate and cover from the telephone.

2 Disconnect the current limiting kit and handset and connect regular handset.

3 Reattach faceplate and cover to the telephone.

4 Test the telephone by placing a call.

QKK1, QKK3 Handsfree unit interface kit

The QKK1 kit is used to modify an SL-1 telephone when a QSU-type Handsfree unit is to be added to the telephone.

The QKK3 kit is used to modify an SL-1 telephone when a QSU-type Handsfree unit is to be added to the telephone and Automatic Answerback is to be provided. The addition of a QKK3 kit reduces the number of key strip modules that can be added to an SL-1 telephone. Refer to ***telephones and add-on modules*** (553-2001-110) for add-on module limitations.

Both kits require a 24 V ac power supply and can be used to extend the range of the telephone as described in ***SL-1 telephones and add-on modules*** (553-2001-110).

Procedures 5-22 and 5-23 explain how to connect and disconnect the QKK1 interface kit, and Procedures 5-24 and 5-25 the QKK3 interface kit.

Procedure 5-22
Connecting QKK1 kit

1. Disconnect the loudspeaker leads.
2. Remove the left-hand filler plate from the telephone.
3. Mount the PCB of the kit in the base of the telephone using the two attached mounting screws.
4. Connect the Y-BR lead of the PCB to (C15) terminal in the telephone or to (REM PWR) terminal.
5. Insert connector P3 of the kit into jack J3 of the telephone.
6. Insert the kit 15-pin plug assembly into the left-hand filler plate opening.
7. Connect the 25 V ac auxiliary power supply to the telephone.
8. Connect the loudspeaker leads.

Procedure 5-23
Disconnecting QKK1 kit

1 Disconnect the loudspeaker leads.

2 Remove the kit 15-pin plug assembly from the left hand filler plate opening in the telephone.

3 Remove connector P3 of the kit from jack J3 of the telephone.

4 Disconnect the Y-BR lead of the kit PCB from the (C15) terminal in the telephone or from (REM PWR) terminal.

5 Remove the two mounting screws which secure the kit PCB in the base of the telephone. Remove the PCB.

6 Connect the loudspeaker leads.

7 Insert a filler plate into the filler plate opening.

8 Disconnect 2.5 V ac if not required.

Procedure 5-24
Connecting QKK3 kit

1 Disconnect the loudspeaker leads.

2 Remove the left-hand filler plate from the telephone.

3 Mount the PCB of the kit in the base of the telephone using the two attached mounting screws.

4 Insert connector P3 of the kit into jack J3 of the telephone.

5 If the telephone is equipped with a digit display or add-on module, move connector P1 of digit display or add-on module from jack J1 of the telephone to jack J2 of the kit.

6 Insert connector P1 of the kit into jack J1 of the telephone.

7 Insert the kit 15-pin plug assembly into the filler plate opening.

8 Connect a 2.5 V ac auxiliary power supply to the telephone.

9 Connect the loudspeaker leads.

Procedure 5-25
Disconnecting QKK3 kit

1 Disconnect the loudspeaker leads.

2 Remove the kit 15-pair plug assembly from the left hand filler plate opening in the telephone.

3 Remove connector P1 of the kit from jack J1 of the telephone.

4 If the telephone is equipped with a digit display or add-on module, move connector P1 of digit display or add-on module from jack J2 of the kit to jack J1 of the telephone.

5 Remove connector P3 of the kit from jack J3 of the telephone.

6 Remove the two mounting screws securing the kit PCB in the base of the telephone.

7 Connect the loudspeaker leads.

8 Insert a filler plate into the filler plate opening.

9 Disconnect 25 V ac supply if not required.

QSU1 Handsfree unit

This module is reissued to update information about modifying Handsfree units used with QKK3 interface kits.

Connection of a Handsfree unit to an SL-1 telephone requires a QKK1 Handsfree or QKK3 automatic Handsfree interface kit. For detailed information on the Handsfree units, *QSU1* ***Companion and Logic Handsfree units*** (512-6251-200).

Only QUSlC2 vintage Handsfree unit requires modification when used with a QKK3 interface kit. Other vintages of QUS1C Handsfree units do not require modification.

Procedure 5-26
Connecting the QSU1 Handsfree unit

1 Remove straps El and E2 on the PCB of the telephone if equipped; otherwise, move the connection from terminal TRMR to KR2 and from terminal REC/HS4 to KR4.

For QSU1C and QSU1D telephones, the dial pad must be removed to gain access to E2. For QSU1F telephones, disconnect one end of El and E2 by loosening the screw terminal and bending back the straps. Ensure that these straps do not contact any other terminal. Tighten the screws. These wiring modifications must be reversed if the QKK unit is removed.

2 Install interface kit as described in Procedure 5-22 (QKK1) or 5-24 (QKK3).

3 Plug the Handsfree unit into the interface kit 15-pin connector.

Procedure 5-27
Modifying a QUS1C2 Handsfree unit used with a QKK3 interface kit

1 Loosen the retaining screws on the bottom of the Handsfree unit, and remove the cover.

2 Move the Y-S lead from terminal B .*(2C for QUS1C4/5) to terminal VBB with the R-G lead.

3 Move the S-Y lead from terminal R .*(M2 for QUS1C4/5) to terminal ON with the O-V lead.

4 Move the G lead from terminal M2 .*(2O for QUS1C4/5) to terminal OFF with the S-V lead.

5 Replace the cover on the QUS1C unit and tighten the retaining screws.

It is not necessary to return these leads to their original terminals when using a QKK2 interface kit.

Procedure 5-28
Disconnecting the QSU1 Handsfree unit

1 Reconnect straps El and E2 on the PCB of the telephone, if equipped. Otherwise, move the connection from terminal KR2 to TRMR and from terminal KR4 to REC/HS4.

For QSU1C and QSU1D telephones the dial pad must be removed to gain access to E2. For QSU1F telephones, bend the El and E2 straps back to the terminals and reconnect. Tighten the screws.

2 Unplug the Handsfree unit from the interface kit 15-pin connector.

3 Remove interface kit if not required for remote powering.

Handsfree unit on a QSU71 telephone

QSU71 telephones are shipped with Handsfree enabled. If Handsfree has been disabled, follow the steps in Procedure 5-29.

Procedure 5-29
Enabling Handsfree

1 Remove the handset and place it beside the telephone.

2 Place the telephone face down on a flat surface and leave in this position until after the base and TELADAPT cords are reattached.

3 Disconnect the TELADAPT cords from the base of the telephone.

4 Remove the four retaining screws from the base of the QSU71 telephone and carefully lift off the base.

5 Locate the three pin header connector J6, on the upper housing circuit board. If Handsfree is disabled, header connector removeable plug will not be inserted into the connector J6 socket pin 1 (pin 1 of the three pin header connector is indicated by a white dot on the circuit board).

6 Unplug the removeable header connector by gently pulling on the solid head of the removeable plug.

7 Place the removeable plug into the connector, ensuring pins 1 and 2 are connected to the pins 1 and 2 of the connector socket.

8 If Automatic Answerback is required, go to Procedure 5-31, otherwise reattach the base of the telephone to the upper housing cover using the four screws removed in Step 4.

9 Reconnect the TELADAPT cords to the base of the telephone.

10 Turn the telephone face up and place the handset on hook.

Procedure 5-30
Disabling Handsfree

1 Remove the handset and place it beside the telephone.

2 Place the telephone face down on a flat surface and leave in this position until after the base and TELADAPT cords are reattached.

3 Disconnect the TELADAPT cords from the base of the telephone.

4 Remove the four retaining screws from the base of the QSU71 telephone and carefully lift off the base.

5 Locate the three pin header connector J6, on the upper housing circuit board.

If Handsfree is enabled, header connector removeable plug pins 1 and 2 will be inserted into the connector J6 socket pins 1 and 2 (pin 1 of the three pin header connector is indicated by a white dot on the circuit board).

6 Unplug the header connector by gently pulling on the solid head of the removeable plug.

7 Place the removeable plug into the connector, ensuring pin 1 is not connected to the connector socket.

8 Reattach the base of the telephone to the upper housing cover using the four screws removed in Step 4.

9 Reconnect the TELADAPT cords to the base of the telephone.

10 Turn the telephone face up and place the handset on hook.

QKK8 Automatic Answerback

The QKK8 Automatic Answerback kit can only be installed in M1109 Compact (QSU71) telephones.

Procedure 5-31
installing QKK8 unit

1 Remove the handset and place it beside the telephone.

2 Place the telephone face down on a flat surface and leave the telephone in this position until after the base and TELADAPT cords are reattached.

3 Disconnect the TELADAPT cords from the base of the telephone.

4 Remove the four retaining screws from the base of the QSU71 telephone, carefully lift off the base and place it beside the telephone.

5 Place the QKK8 unit on top of the mounting holes located on the top right corner of the base (viewed with the base flat, handset to the left).

6 Secure the QKK8 unit to the base of the telephone with the screws provided.

7 Connect the QKK8 connecting plug to the J3 connector (located on the upper housing circuit board).

8 Reattach the base of the telephone to the upper housing using the screws removed in Step 5.

9 Turn the telephone face up and place the handset on hook.

Procedure 5-32
Removing QKK8 unit

1 Remove the handset and place it beside the telephone.

2 Place the telephone face down on a flat surface and leave it in this position until after the base and TELADAPT cords are reattached.

3 Disconnect the TELADAPT cords from the base of the telephone.

4 Remove the four retaining screws from the base of the QSU71 telephone, carefully lift off the base and place it beside the telephone.

5 Disconnect the QKK8 connecting plug from the J3 connector (located on the upper housing circuit board).

6 Remove the screws attaching the QKK8 unit to the base of the telephone and remove the QKK8 unit from the base.

7 Reattach the base of the telephone to the upper housing using the screws removed in Step 5.

8 Turn the telephone face up and place the handset on hook.

Table 5-9
SL-1 telephone connections

Mounting Cord		Connecting Block Designations			Inside Wire Colors		
Lead Name	Color	NE-47QA or QBB1B	NE-283 73 5001 Adapter	NE-625F TE LADAPT	Z Station Wire	16/25 Pair	Connect to Equipment TN
Audio T	G	G	IT	T1 (G)	G	W-BL	1 st pair Tip
Audio R	R	R	1R	R1 (R)	R	BL-W	1 st pair Ring
SIG T	BK	BK	X1	AUX (BK)	BK	w-o	2nd pair Tip
SIG R	Y	Y	x2	GRD (Y)	Y	o-w	2nd pair Ring
AC1	BL	5	R	T2 (BL)		w-SL	Aux Power Note 1
AC1	W	6	B	R2 (W)		SL-w	

Note *1:* Connect to auxiliary power when the telephone is equipped with add-on modules. Telephones with a Digit Display always require an auxiliary 25 V supply.
Use one of the following for auxiliary power:

25 V ac and 15 V ac transformers located within 25 ft. of the telephone.

QUT1 or QUAA1 centralized power supply. To prevent noise and crosstalk, each telephone should have its own transformer, or fuse (if using centralized power).

Note 2: See the cross-connections to SL-1 System equipment.

QKM11 adapter kit

The QKM11A adapter kit is used to upgrade existing QSU6B/QSU7C SL-1 telephones to vintage QSU6C/QSU7D respectively. This kit replaces covers, relocating the agent jacks from the left-hand side to the front of the telephone. The kit includes a moulded plastic cover, cable assembly, hole plug buttons, and required screw and washers.

Procedure 5-33
QKM11 adapter kit installation

1 Remove the faceplate and cover from the telephone (vintage QSU6B or QSU7C).

2 Detach the loudspeaker and foam insert.

3 Unscrew and remove the lower jacks from the left-hand side of the telephone.

4 Remove the connector cable between the QPC266 sub-board and QPC100 main board.

5 Remove the QPC266 sub-board from the base of the telephone and attach it to the underside of the new cover with supplied screws.

6 Using the cable connector supplied with the adapter kit, reconnect the QPC266 sub-board to the QPClOO main board.

7 Connect the jacks (removed in Step 3) into the front of the new telephone cover.

8 Connect the foam insert and loudspeaker (removed in Step 2) to the new telephone cover.

9 Use hole plug buttons supplied with the adapter kit to fill the holes in the left-hand side of the telephone (where the agent jacks were).

10 Attach the new cover and faceplate to the telephone.

11 Test the telephone: Refer to *Xl 1 input/output guide* (553-3001-400).

QKM13 light probe kit

The light probe enables sight impaired attendants or SL-1 telephone users to use existing QCW-type attendant consoles or QSU-type SL-1 telephones.

The probe has a light sensor on one end and a small button on the other end. To operate the probe, the user presses the button and then scans the LED strips on the attendant console or SL-1 telephone. A tone is heard in the headset or handset when the light sensor is placed over an LED that is on.

Some devices inside the light probe kit can be damaged by static electricity. Before working on the light probe kit, touch ground or faceplate contact of set or attendant console to discharge electricity from body.

The QKM13A kit cannot be added to a attendant console equipped with the QMT3 Busy Lamp Module.

A PO643059 connector kit is required to install the QKM13 in an SL-1 telephone.

Procedure 5-34
installing the QKM13 Light Probe kit in attendant console

1 Remove faceplate and cover from attendant console and add-on module(s) if equipped.

2 Remove left hand filler plate from attendant console.

3 This step applies to all attendant consoles except QCW4E and later vintages.

- Connect the S-G lead from the light probe PCB to terminal BBB located on the left front corner of the PCB in the attendant console base assembly.
- Connect the S-Y lead from the light probe PCB to terminal VSS located on the left front corner of the PCB in the attendant console base assembly.
- Plug the connector on the BL-R lead into connector J16 (J2 on QCW4 attendant consoles) located at right rear corner of PCB in attendant console base assembly, or extension jack in last add-on module, if equipped.

—continued—

4 This step applies only to QCW4E (and later vintage) attendant consoles.

- Turn attendant console upside down.
- Remove slide at bottom of attendant console to obtain access to line cord connector.
- Remove screw securing connectors and separate connectors.
- Turn attendant console rightside up.
- Remove three screws along the top edge and three screws along the bottom edge of the main Printed Circuit Board (PCB) of the attendant console.
- Lift the PCB assembly from the attendant console.
- Using a spare lead from the light probe kit, extend the S-G lead to terminal JK5-S located near the line cord connector on the lower PCB.
- Using a spare lead from the light probe kit, extend the S-Y lead to terminal COMM located near the line cord connector on the lower PCB.
- Reinstall the main PCB in the attendant console.
- Plug the connector on the BL-R lead into connector 32 located at right rear comer of PCB in attendant console base assembly, or extension jack in last add-on module, if equipped.
- Turn attendant console upside down, reconnect line cord connector and secure to bottom of attendant console with retaining screw.
- Reinstall slide on line cord connector opening and turn attendant console rightside up.

5 Insert light probe PCB into filler plate opening on left side of attendant console.

-continued-

6 Replace cover and faceplate on attendant console and module(s) if equipped.

7 Plug light probe cable into jack on the PCB in filler plate opening on left side of attendant console.

8 Plug the headset/handset into either jack on attendant console and test light probe. A tone should be heard only when the probe is over a lit LED. The headset/handset should be plugged into the jack (on the attendant console) that provides the loudest tone.

Procedure 5-35
Removing the QKM13 Light Probe kit from attendant console

1 Unplug light probe cable from PCB jack in filler plate opening on left side of attendant console.

2 Remove faceplate and cover from attendant console and add-on module(s), if equipped.

3 This step applies to all attendant consoles except QCW4E and later vintages.

- Disconnect the connector on the BL-R lead from connector J16 (J2 on QCW4 attendant consoles) located at right rear corner of PCB in attendant console base assembly, or extension jack in last add-on module, if equipped.
- Disconnect the S-G lead from the light probe PCB to terminal BBB located on the left front corner of the PCB in the attendant console base assembly.
- Disconnect the S-Y lead from the light probe PCB to terminal VSS located on the left front comer of the PCB in the attendant console base assembly.

-continued-

4 This step applies only to QCW4E (and later vintage) attendant consoles.

- Turn attendant console upside down.
- Remove slide at bottom of attendant console to obtain access to line cord connector.
- Remove screw securing connectors and separate connectors.
- Turn attendant console rightside up.
- Disconnect the connector on the BL-R lead from connector J2 located at right rear corner of PCB in attendant console base assembly, or extension jack in last add-on module, if equipped.
- Remove three screws along the top edge and three screws along the bottom edge of the main Printed Circuit Board (PCB) of the attendant console.
- Lift the PCB assembly from the attendant console.
- Disconnect the S-G lead from the light probe kit to terminal JK5-S located near the line cord connector on the lower PCB.
- Disconnect the S-Y lead from the light probe kit to terminal COMM located near the line cord connector on the lower PCB.
- Reinstall the main PCB in the attendant console.
- Turn attendant console upside down, reconnect line cord connector and secure to bottom of attendant console with retaining screw.
- Reinstall slide on line cord connector opening and turn attendant console rightside up

5 Remove light probe PCB from filler plate opening on left side of attendant console.

6 Insert filler plate into opening on left side of attendant console.

7 Replace cover and faceplate on attendant console and module(s), if equipped.

8 Pack QKM13 light probe kit and store or return to supplier.

Figure 5-20
Light Probe PCB connections to attendant console and SL-I telephone.

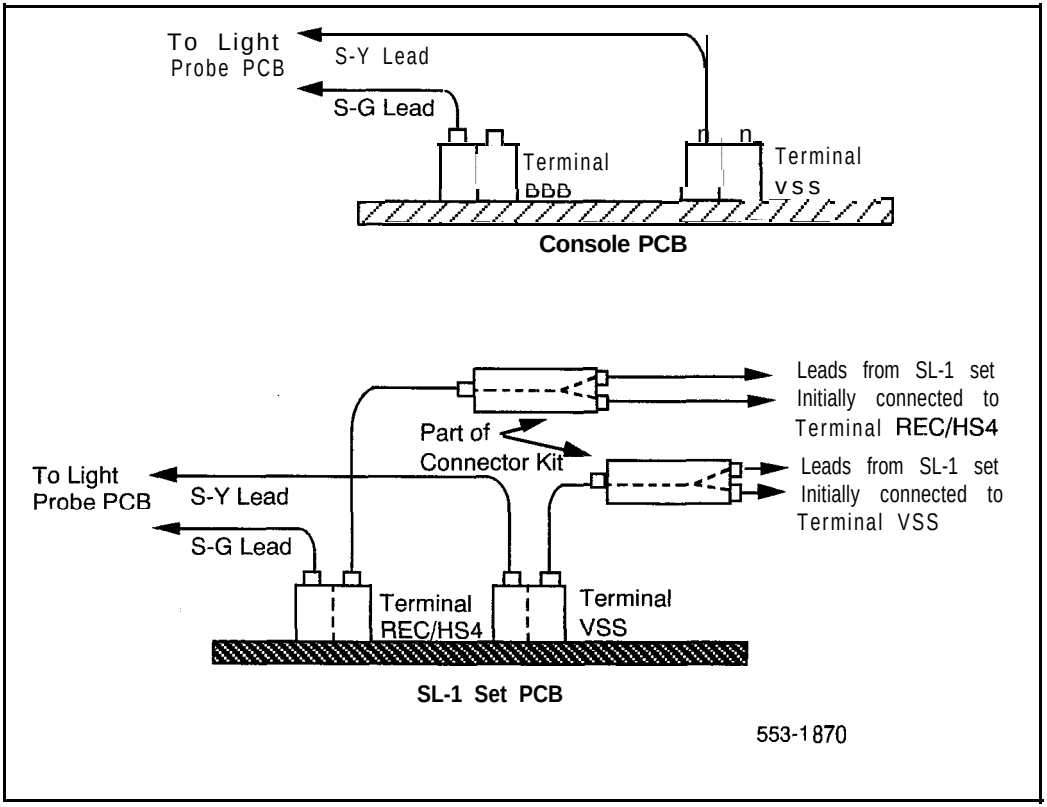

Procedure 5-36
installing the QKM13 Light Probe kit in an SL-1 telephone

1 Remove the faceplate and cover from the set and add-on module(s) if equipped.

2 Remove the filler plate from left side of telephone.

3 Insert the light probe PCB into the filler plate opening on the left side of telephone.

4 Remove the two wires on terminal REC/HS4 on the set PCB and connect the wires to connector kit.

5 Connect the wire from the connector kit to terminal REC/HS4 on telephone PCB.

6 Connect the (S-G) lead from the light probe PCB to terminal REC/HS4 on telephone PCB.

7 Remove the two wires from terminal VSS on set PCB and connect the wires to connector kit.

8 Connect the wire from the connector kit to terminal VSS on set PCB.

9 Connect the (S-Y) lead from the light probe PCB to terminal VSS on telephone PCB.

10 Plug the light probe PCB female connector (BL-R lead) into jack J1 in the set or into the extension jack in the last add-on module.

11 Replace cover and faceplate on telephone and add-on module(s), if equipped.

12 Plug light probe cable into jack on PCB in filler plate opening on left side of telephone and test. A tone should be heard only when the probe is over a lit LED.

Procedure 5-37
Removing the QKM13 Light Probe kit from an SL-1 telephone

1 Unplug light probe cable from PCB jack in filler opening on left side of telephone.

2 Remove faceplate and cover from telephone and add-on module(s) if equipped.

3 Unplug the light probe PCB female connector (BL-R lead) from jack J1 in the telephone or from the extension jack in the last add-on module.

4 Disconnect light probe PCB leads (S-Y) and (S-G) from terminals VSS and REC/HS4 on telephone PCB.

5 Disconnect the wire going to connector kit from terminal VSS on telephone PCB.

6 Disconnect the two wires connected to the opposite end of the connector kit and connect these wires to terminal VSS on telephone PCB.

7 Disconnect the wire going to connector kit from terminal REC/HS4 on telephone PCB.

8 Disconnect the two wires connected to the opposite end of the connector kit and connect these wires to terminal REC/HS4 on telephone PCB.

9 Remove light probe PCB from filler plate opening and the connector kits from the telephone.

10 Insert filler plate into opening on left side of telephone.

11 Replace cover and faceplate on telephone and add-on module(s), if equipped.

12 Test telephone to ensure proper operation.

13 Pack QKM13 light probe kit and store or return to supplier.

QUT1 power unit and transformer

The QUT1 power unit is designed to supply power for add-on units of up to eleven SL-1 telephones or attendant consoles from a centralized location.

When ac transformers are used to provide auxiliary power to attendant consoles or sets a separate 25 V and/or 15 V ac transformer is required for each attendant console or telephone.

Procedure 5-38
Installing the QUT1 power unit

1 Unpack, inspect QUT1 unit. If damaged, repack and return to supplier.

2 Determine, from the work order where to install the power units. (equipment room or terminal closet.)

3 Place the power unit on a flat surface face up.

4 Completely loosen the two screws securing the cover of the unit and remove the cover.

5 Remove the two screws (diagonally opposite corners) securing the metal backboard to the power unit.

6 Mount the backboard on wall within 6 ft (1830 mm) of a 117 V ac electrical outlet.

7 Place the power unit on the backboard so that the holes in the back of the power unit engage the hooks on the backboard.

8 Secure the power unit to the backboard with the two machine screws previously removed.

9 Loosen the two screws securing the connector clamp located on the front (lower left) of the power unit and slide the clamp downwards.

10 Select an NE-A25B (or equivalent) connector cable of suitable length.

11 Insert the connector on the cable, into the connector jack on the power unit. Run the cable slightly to the right and then down through the bottom entry hole of the power unit.

-continued-

Figure 5-21
QUT1 power unit faceplate

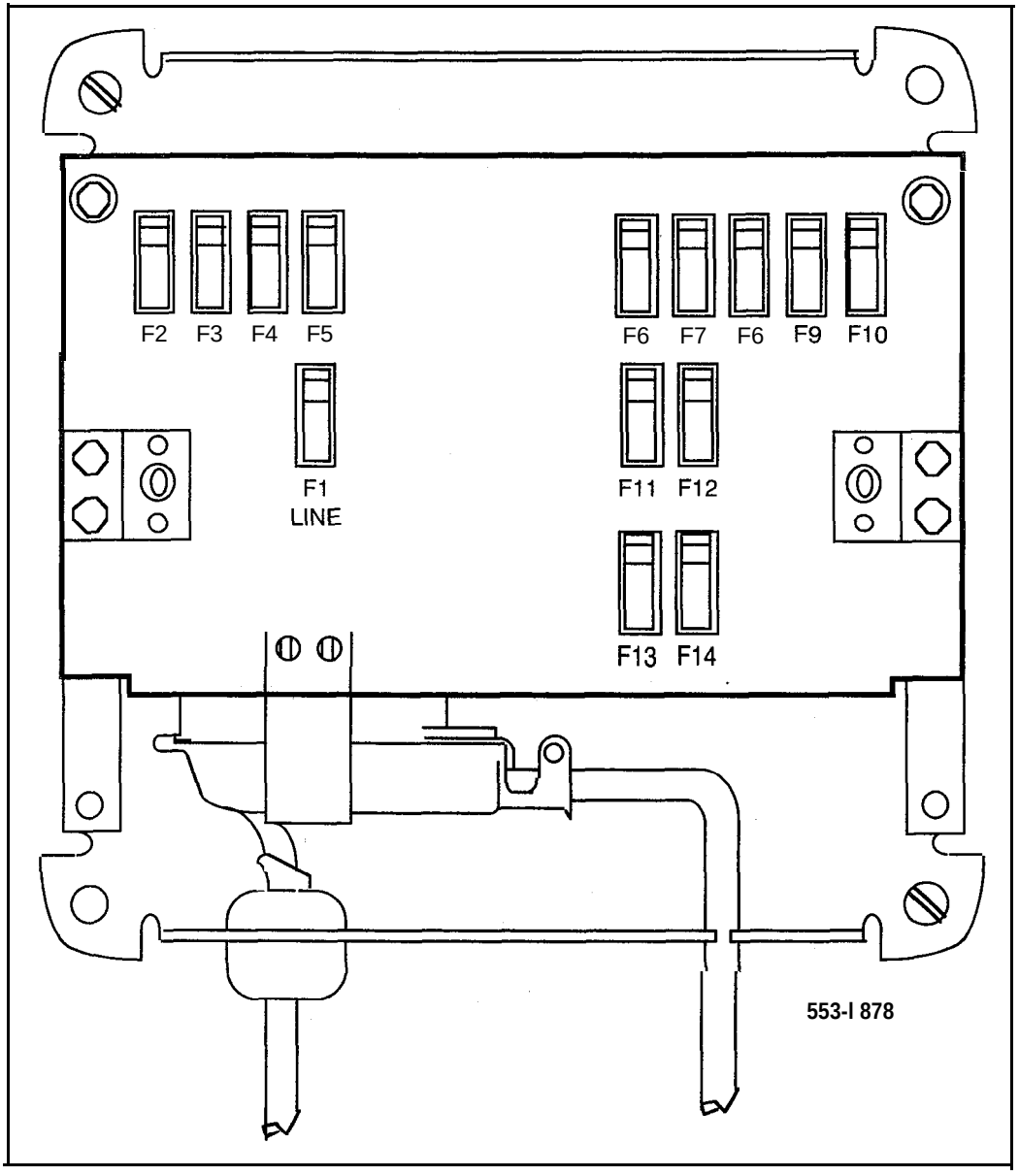

12 Mount a 25-pair NE-66 (or equivalent) type connecting block in the yellow of wall mounted cross-connect terminal or on the horizontal side bottom row of distributing frame. Designate connecting block.

13 Terminate the end of the cable on the connecting block, following the sequence provided in Figure 5-22.

14 Insert appropriate fuses (if not provided) in fuse holders, on the power unit, as required.

15 Place the cover on the power unit. Secure the cover with the two retaining screws provided with the cover.

16 Cross-connect to attendant console or telephone as required.

Figure 5-22
QUT1 power unit connections

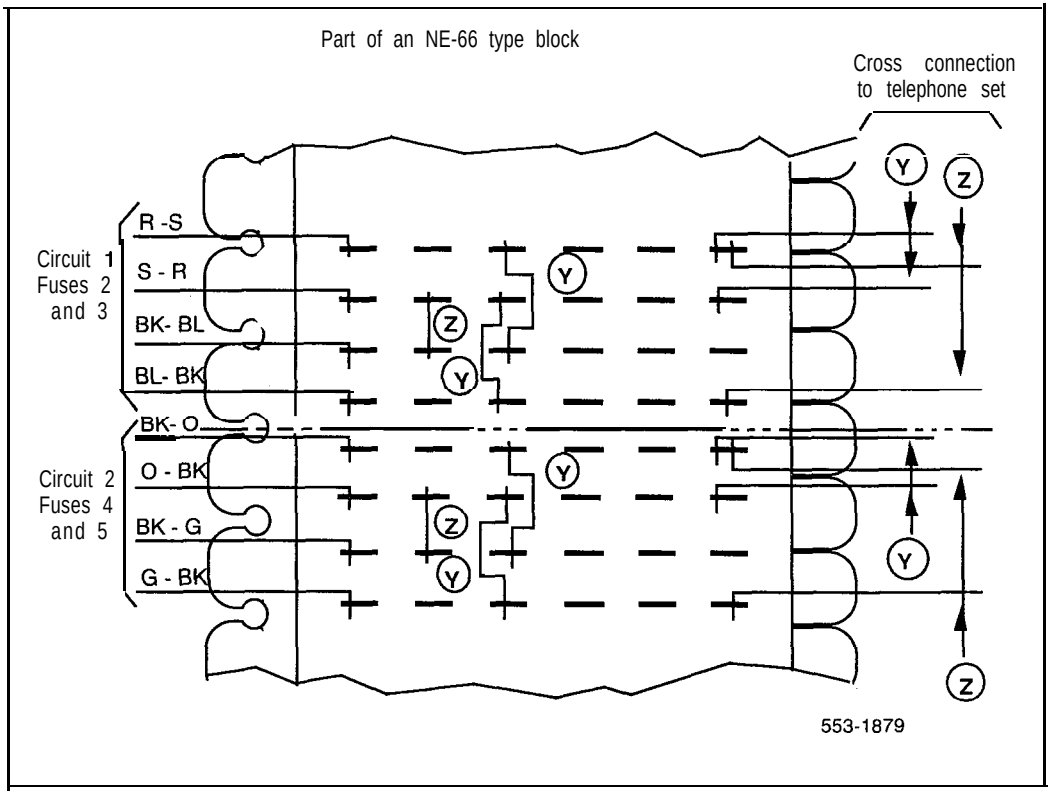

Procedure 5-39
Removing the QUT1 power unit

1 Completely loosen the two screws securing the cover of the power unit and remove the cover.

2 Remove the ac plug from the 117 V ac electrical outlet.

3 Loosen the two screws securing the connector clamp, located on the front (lower left) of the power unit, and slide the clamp downwards.

4 Disconnect the connector on the cable from the connector jack on the power unit.

5 Remove the two machine screws securing the power unit to the backboard.

6 Unhook the power unit from the backboard. Place unit on flat surface with face up.

7 Remove the screws securing the metal backboard to the wall. Remove the backboard.

8 Secure the metal backboard to the removed power unit with the two machine screws previously removed.

9 Replace cover on power unit and secure with mounting screws.

10 Remove the 25-pair connector cable running to the cross-connect terminal, if no longer required.

11 Remove power cross-connections from 66-type connecting block to attendant console or telephone.

Procedure 5-40
Installing the transformer

1 Plug 15 V or 25 V ac transformer into 115 V ac power outlet located within 25 ft (7620 mm) of the telephone or attendant console.

2 Connect and run 3-wire 24 AWG Z stationwire from the transformer to the attendant console or telephone connecting block.

3 Connect the attendant console or telephone.

Procedure 5-41
Removing the transformer

1 Unplug 15 V or 25 V ac transformer from 115 V ac power outlet.

2 Disconnect and remove Z station wire from transformer and attendant console or telephone connecting block.

Table 5-l 0
QUT1 Power Unit fusing

Fuse	Use	Type	Rating (A)
FI	117 V ac line	QFF1A	2-1/3
F6-F14	25V	QFF1G	1/2
F3-F5*	12.5 v	QFF1G	1/2
F3-F5**	12.5 V	QFF1G	1/2

Note: * Z option : F3-F3, F5-F5 in series, 25 V
** Y option : F3-F3, F5-F5 in parallel, 12.5 V

Table 5-11
QUT1 connections

NE-66 Pair	Color	QUT1	Voltage
1	W-BL BL-W	FUSE 6	25 v
2	w-o o-w	FUSE 7	25 V
3	W-G G-W	FUSE 8	25 V
4	W-BR BR-W	FUSE 9	25 v
5	w-s s-w	FUSE 10	25 V
6	R-BL BL-R	FUSE 11	25 V
7	R-O O-R	FUSE 12	25 V
8	R-G G-R	FUSE 13	25 V
9	R-BR BR-R	FUSE 14	25V
10	R-S S-R	FUSE 2	12.5 V
11	BK-BL BL-BK	FUSE 3	12.5 V

—continued—

Table **5-11**
QUT1 connections (continued)

JE-66 Pair	Color	QUT1	Voltage
12	BK-O O-BK	FUSE 4	12.5 V
13	BK-G G-BK	FUSE 5	12.5 V
14	BK-BR BR-BK	—	
15	BK-S S-BK	—	
16	Y-BL BL-Y	—	
17	Y-O O-Y	—	
18	Y-G G-Y	—	
19	Y-BR BR-Y	—	
20	Y-S S-Y	—	
21	V-BL BL-V	—	

-continued-

Table 5-11
QUT1 connections (continued)

NE-66 Pair	Color	QUT1	Voltage
22	v-o O-V	—	
23	V-G G-V		
	V-BR BR-V		-
25	v-s s-v	—	

Table 5-12
Allowable distance from QUT1 to telephone

Telephone equipped with:	22 AWG ft. (m)	24 AWG ft. (m)	26 AWG ft. (m)
10 KL module *	11000 (3390)	7150 (2200)	4550 (1400)
20 KL module **	5550 (1710)	3500 (1076)	2200 (677)
10 + 20 KL module	3650 (1120)	2300 (708)	1450 (446)
20 +. 20 KL module	2650 (815)	1700 (524)	1050 (324)
20 +. 20 +KL module	2100 (647)	1300 (400)	850 (262)
HFU + 10 KL module ***	905 (278)	575 (177)	365 (112)
HFU + 20 KL module	755 (232)	480 (148)	320 (98)
HFU + 20 + 10 KL module	650 (200)	410 (126)	260 (80)
HFU + 20 + 20 &pl. 10 KL module	500 (154)	315 (97)	200 (62)

Note: Cable pairs may be doubled to double the allowable distance to the telephone.

* 10 KL = lo-button key/lamp

** 20 KL = 20-button key/lamp

*** HFU = Handsfree unit

Table 5-13
Allowable distance from QUT1 to Lamp Field Array module

22 AWG ft(m)	24 AWG ft(m)	26 AWG ft(m)
130 (40)	80 (24.6)	50 (15.4)

Table 5-14
Allowable distance from QUT1 to attendant console

Equipment	22 AWG ft (m)	24 AWG ft (m)	26 AWG ft (m)
Attendant console	1850 (568)	1200 (369)	**750 (231)**
Attendant console + LA module	1600 (492)	1000 (308)	**650 (200)**
Attendant console + 10 KL module	1600 (492)	**1000 (308)**	**850 (200)**
Attendant console + 10 KL + LA module	**1400 (431)**	**900 (277)**	**550 (169)**
Attendant console + **20** KL module	1400 (431)	**900 (277)**	**550 (169)**
Attendant console + 20 KL + LA module	1250 (385)	**800 (246)**	**500** (154)

Note: The distances given in this figure are for the **24 V supply.**

M2000/M2317/M3000 Data Options

If an existing digital telephone was not originally equipped with the Data Option, or if the existing Data Option has become defective, that option can be added or replaced. The following procedure explains how to install the Data Option for the M2000 series telephones.

CAUTION

CMOS devices inside the telephone can be damaged by electrostatic discharge. Before opening any M2000 telephone, hands and tools must be discharged by touching any grounded metal surface or conductor.

Procedure 5-42
Installing the M2000/M2317/M3000 Asynchronous Data Option (ADO)

1 Remove handset, and place the telephone upside down on a level workplace (a desktop, for example).

2 Disconnect all cords from the telephone.

3 Loosen and remove five screws in the base of the telephone, lifting the base upward.

4 If the telephone is not equipped with the ADO, proceed with step 5.

If the telephone is equipped with a defective ADO, carefully disconnect the ribbon cable connector from the header connector in the digital printed circuit board. Loosen and remove the two self-tapping screws that fasten the ADO to the telephone base and remove the defective ADO. Proceed with step 6.

5 Remove the breakout section in rear of the telephone base by tapping it with the handle of a small screwdriver.

6 Place the black, plastic connector shroud over the RS-232-C interface connector.

Note: It is not possible to install the shroud after the board has been inserted in the telephone base.

—continued—

7 Tip the circuit board up and insert, connector end first, under tabs in the base. Position over the molded locating pins, then lower the board completely into position in the telephone base. Use the three slotted self-tapping screws supplied with the board and install them through the mounting holes. Tighten the screws.

8 Plug the ribbon cable connector into the header connector, located on the existing circuit board of the telephone (mounted on the faceplate assembly). There is only one such connector on the telephone's circuit board. Make sure the connector is snug.

9 In M2112 telephones equipped with Handsfree, make certain that the rubber gasket covering the microphone cavity is firmly in place before closing the case.

10 Reassemble the telephone by placing the base section on the faceplate section. Reinstall the five (5) screws.

11 Tighten the screws, reconnect all cords, and place the telephone back in its former position.

12 Refer to ***Installing the M2000/M2317 data terminal*** procedure or ***Installing the M3000 data terminal*** procedure to connect the power supply and data terminal to the ADO.

Procedure 5-43
Installing the M2000/M2317 data terminal

1 Connect the RS-232-C interface connector from the data terminal to the matching header connector in the back of the telephone.

2 Insert the two captive screws in the connector body into the threaded holes in the header connector. Secure tightly to prevent accidental disconnection during data terminal operation.

3 Insert the keyed power supply plug securely into the five-pin power connector located to the right of the RS-232-C connector.

4 Plug the wall transformer into the nearest ac outlet. The data terminal is now operational.

Figure 5-23
M2000/M2317 data terminal and Data Option power supply connection

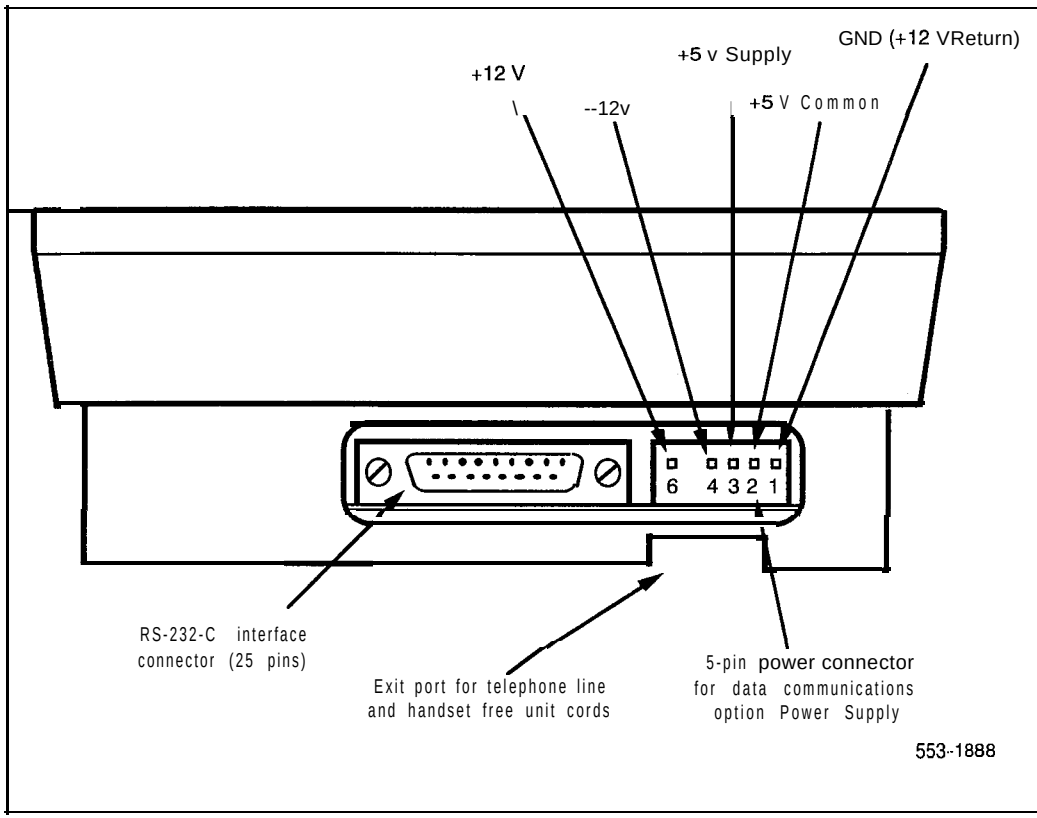

Note I: If an ADM3, ADM5, or ADM11 terminal is used in conjunction with the RS-232-C connector in the Asynchronous Data Option, pin 22 in the RS-232-C cable must be disconnected. The quoted ADM terminals will go into test mode if this pin is not disconnected.

Note 2: A special 9 pin connector is required to connect the Apple Macintosh to the RS-232-C connector in the M2000 Asynchronous Data Option. The connections are shown in Table 5-15.

Table 5-15
Connections for Apple Macintosh to M2000/M2317 Asynchronous Data Option (ADO)

9 pin connector (from terminal)		25 pin (RS-232-C) connector (at ADO port)
Pin 3	to	Pin 7
Pin 5	to	Pin 2
Pin 9	to	Pin 3

Note: Strap pins 4 and 5, and pins 6, 8, and 20 together.

Table 5-16
RS-232-C signals and associated pin numbers for M2317 telephones

Circuit designation			Pin	Signal source		
EIA	Common	CCITT	number	DTE	DCE	Name
AA		101	1		X	Frame Ground
BA	TXD	103	2	X		Transmit Data
BB	RXD	104	3		X	Receive Data
CA	RTS	105	4	X		Request to Send
CB	CTS	106	5		X	Clear to Send
cc	DSR	107	6		X	Data Set Ready
AB	GND	102	7	X		Signal Ground
CD	DTR	108.2	20	X		Data Terminal Ready
CE	RI	125	22		X	Ring Indicator

Table 5-15
Connections for Apple Macintosh to M2000/M2317 Asynchronous Data Option (ADO)

9 pin connector (from terminal)		25 pin (RS-232-C) connector (at ADO port)
Pin 3	to	Pin 7
Pin 5	to	Pin 2
Pin 9	to	Pin 3

Note: Strap pins 4 and 5, and pins 6, 8, and 20 together.

Table 5-16
RS-232-C signals and associated pin numbers for M2317 telephones

Circuit designation			Pin	Signal source		
EIA	Common	CCITT	number	DTE	DCE	Name
AA		101	1		X	Frame Ground
BA	TXD	103	2	X		Transmit Data
BB	RXD	104	3		X	Receive Data
CA	RTS	105	4	X		Request to Send
CB	CTS	106	5		X	Clear to Send
cc	DSR	107	6		X	Data Set Ready
AB	GND	102	7	X		Signal Ground
CD	DTR	108.2	20	X		Data Terminal Ready
CE	RI	125	22		X	Ring Indicator

Procedure 5-44
Installing the M3000 data terminal

1 Connect the RS-232-C interface connector from the data terminal to the Data Option connector in the back of the M3000 Touchphone.

2 Insert the two captive screws in the connector body into the threaded holes in the Data Option connector. Secure tightly to prevent accidental disconnection during data terminal operation.

3 Ensure that the Touchphone power supply transformer is plugged in the wall outlet, and connected to the Touchphone.

Tables 5-17 and 5-18 show the connector pin numbers together with the signals associated with each pin as it applies to the standard RS-232-C interface.

Note: If an ADM3, ADM5, or ADM11 terminal is used in conjunction with the RS-232-C connector in the Asynchronous Data Option, pin 22 in the RS-232-C cable must be disconnected. The quoted ADM terminals will go into test mode if this pin is not disconnected.

Figure 5-24
M3000 data terminal and DTE/computer terminal connection

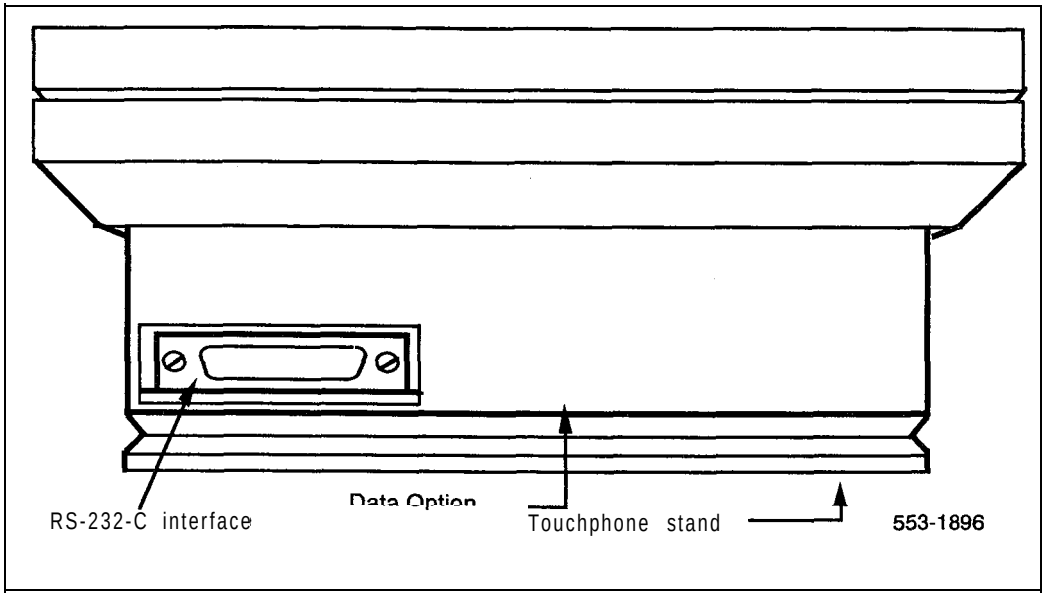

Table 5-17
RS-232-C signals and associated pin numbers for the M3000 Touchphone

Circuit designation			Pin	Signal source		
EIA	Common	CCITT	number	DTE	DCE	Name
AA		101	1		X	Frame Ground
BA	TXD	103	2	X		Transmit Data
BB	RXD	104	3		X	Receive Data
CA	RTS	105	4	X		Request to Send
CB	CTS	106	5		X	Clear to Send
c c	DSR	107	6		X	Data Set Ready
AB	GND	102	7	X		Signal Ground
CD	DTR	106.2	20	X		Data Terminal Ready
CE	RI	125	22		X	Ring Indicator

A special 9 pin connector is required to connect the Apple Macintosh to the RS-232-C connector in the M3000 Asynchronous Data Option. See Table 5-18 for cable connections.

fable 5-18
Connections for Apple Macintosh to M3000 Data Option

g-pin connector (from terminal)		25 Pin (RS-232-C) connector (at Data Option port)
Pin 3	to	Pin 7
Pin 5	**to**	Pin 2
Pin 9	to	Pin 3

Note: Strap pins 4 and 5, and pins 6, 8, and 20 together.

Figure 5-25
Exploded view of M2616/M2016S/M2216ACD telephone

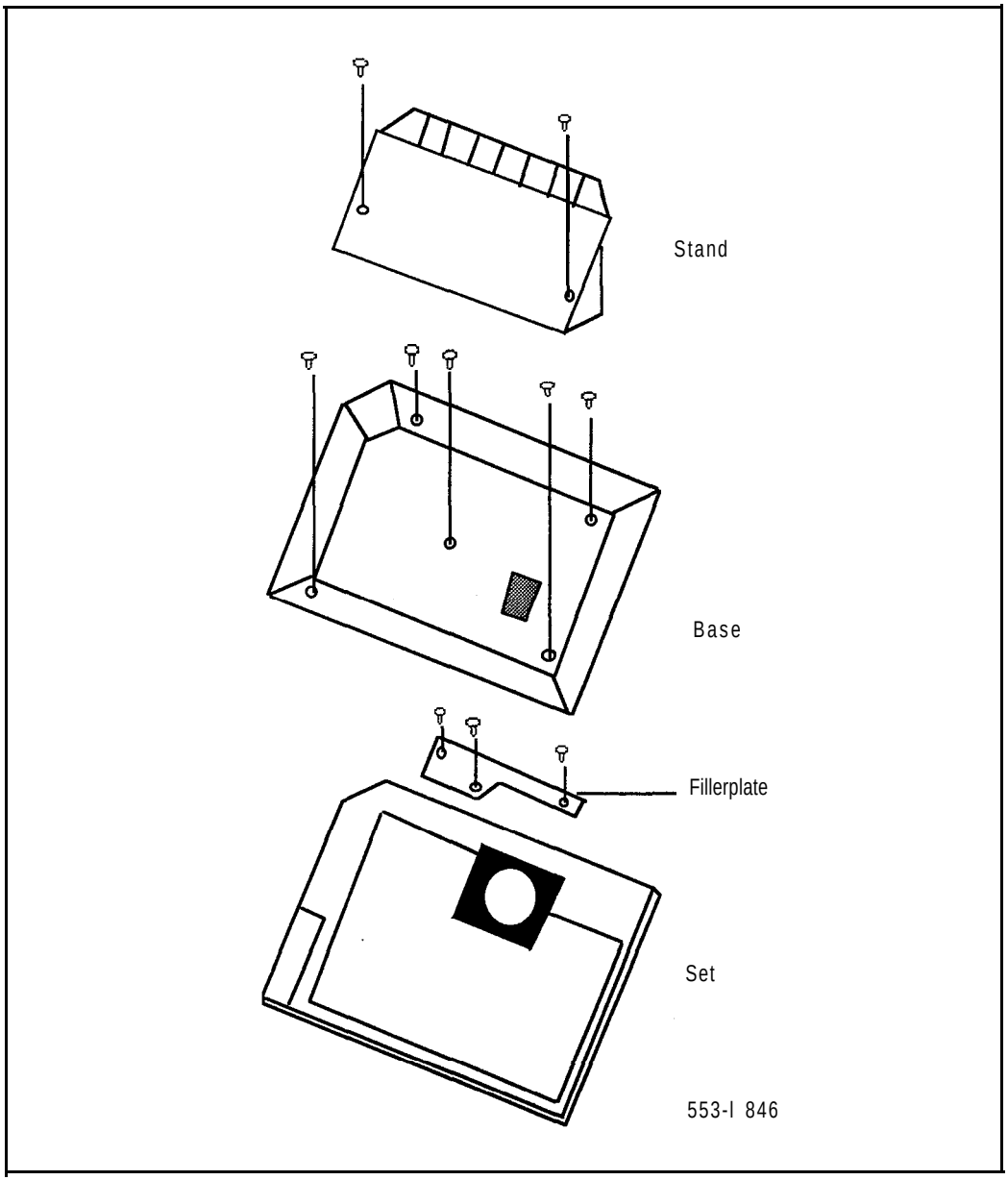

Meridian Communications Adapter and Meridian Programmable Data Adapter

Use the following procedures to add the Meridian Communications Adapter (MCA) or Meridian Programmable Data Adapter (MPDA) to the telephone and to connect it to your terminal or personal computer.

Note *1:* Meridian Programmable Data Adapter (MPDA) is supported by X11 release 14-17. Meridian Communications Adapter (MCA) is supported by Xl 1 release 14 and later.

Note 2: The MCA replaces the MPDA. With X11 release 18 and later: data programming can be implemented n the MCA through service change (LD11) as well as the keypad. X11 release 14 through 17 support data commands on the keypad only.

When using the MCA for synchronous data connections, configure the telephone with a display option to view the data prameters.

The MPDA and MCA are supported on on Meridian Modular telephones only. In all cases, adding the MCA or MPDA to a telephone requires a Power Supply Board along with an additional power source (see Procedure 5-47 for M2006/M2008, see Procedure 5-48 for M2016S/M2616/M2216ACD).

The MCA may be placed as far from its associated data terminal or computer port as is consistent with EIA RS-232 or V.35.

When the MCA is used as a V.35 interface, an additional cable is required to convert the DB-25 into a 34-pin restangular connector. This does not apply to asynchronous configurations. If the pins are left in V.35 mode, asynchronous operation is not supported, and the MCA looks as though it is locked up.

Remove the two 12-pin jumper plugs inside the MCA from the RS232 sockets and install the V.35 sockets. V.35 interface runs at 19.2 kbps or greater.

Note: The female cable ordering code is A0300753. The male cable ordering code is A0300752.

Modem pooling is not supported on the MCA

When a call is connected between two MCAs, and power is removed from one, the MCA does not release until power is restored.

The MCA always remembers the most recent data parameters. In the case of power failure, you do not have to reset any data settings.

Table 5-l 9
V.35 **CCITT signals supported by MCA**

			Adapter Cable		Signal Source		
v.35 CCITT	MCA DB-25 Pin No.	Abbrev.	DB-25 Pin No.	v.35 Pin No.	DTE	MCA	Description
101	1	DG	1	A			Protective Ground *
103A	2	SDA	2	P	X		Transmit Data A
104A	3	RDA	3	R		X	Receive Data A
105	4	RTS	4	C	X		Request to Send
106	5	CTS	5	D		X	Clear to Send
107	6	DSR	6	E		X	Data Set Ready
102	7	S	7	B			Signal Ground
109	8	CD	8	F		X	Carrier Detect
----	9/10	----	9/10	CC/L			no connection
----	11	----	11	K	X		**
115B	12	SCRB	12	X		X	Serial Clock Receive B
103B	13	SDB	13	S	X		Transmit Data B
1148	14	SCTB	14	AA		X	Serial Clock Transmit B
114A	15	SCTA	15	Y		X	Serial Clock Transmit A
104B	16	RDB	16	T		X	Receive Data B
115A	17	SCRA	17	v		X	Serial Clock Receive A
----	18/19	----	18/19	M/HH			no connection
108.2	20	DTR	20	H	X		Data Terminal Ready
----	21	----	21	EE			no connection
125	22	RI	22	J		X	Ring Indicator
113B	23	SCTEB	23	W	X	X	Tran Sign Elemt Time B
113A	24	SCTEA	24	U	X	X	Tran Sign Elemt Time A
----	25	----	25	MM	X		**

* Pin 1 is connected to the MCDS shelf Frame.

** These leads are ignored by the MCA controller

Procedure 5-45
Installing and removing the Meridian Communications Adapter or Meridian Programmable Data Adapter

CAUTION

Before handling internal telephone components, static electricity must be discharged from hands and tools by touching any grounded metal surface or conductor.

1 Remove handset and place telephone upside down on top of a level, solid work surface (a desktop) covered with soft material or paper to prevent damage to movable keys and the telephone face.

2 Disconnect all cords from the telephone.

3 Remove the two screws from the stand assembly and unsnap stand assembly by pressing inward at back of stand where it meets the base and pulling upward.

4 If the telephone is not equipped with the Meridian Programmable Data Adapter (MPDA) or Meridian Communications Adapter (MCA), go to step 6. If you wish to replace an existing MPDA or MCA, carefully disconnect the end of the 8-pin TELADAPT jack plugged into the telephone by pressing firmly on the latch-tab and slowly lifting up.

5 Turn the telephone stand assembly over and put it in the normal use position. Remove the two self-tapping screws which fasten the MPDA or MCA to the telephone stand assembly and remove the MPDA or MCA by pulling outward and up. Go to Step 7 to replace the MPDA or MCA.

6 Remove break-out section in rear of the telephone stand assembly, and clean away the small tabs.

7 For MCA, set option plugs to required configuration, RS-232 or V.35. Factory default is RS-232.

– continued –

Procedure 5-45 (continued)
Installing and removing the Meridian Communications Adapter or Meridian Programmable Data Adapter

8 Tilt the MPDA or MCA circuit board up and insert the DB-25 connector socket into the breakout section, then slide the board connector end-first under the tabs in stand assembly and position over locating pins. Position and lower completely onto the telephone stand assembly. Insert the two Phillips head, self-tapping screws supplied with the MPDA or MCA into the mounting holes and tighten with a #1 Phillips screwdriver.

9 Plug one end of an 8-conductor line cord supplied with a TELADAPT adapter in the jack J1 of the MPDA or MCA (latch tab facing down) and plug the other end of the line cord into the jack of the modular telephone. Make certain the latch tab of each cable end is firmly snapped into place.

10 Carefully route excess cable so that it will not become pinched between the stand and base.

11 Reassemble base and stand assembly sections, ensuring that stand is firmly seated to the base.

12 Tighten screws, reconnect all cords, and place telephone in normal operating position. Place label supplied with the MPDA or MCA on bottom cover of telephone for tracking purposes.

Note: If an ADM3, ADM5, or ADM11 terminal is used in conjunction with the DB-25 connector-C connector in the Asynchronous Programmable Data Adapter, pin 22 in the DB-25 connector cable must be disconnected. The quoted ADM terminals will go into test mode if this pin is not disconnected.

Procedure 5-46
Connecting the data terminal

1 Connect the DB-25 connector-C interface connector from the data terminal to the matching header connector in the back of the modular telephone.

2 Insert the two captive screws in the connector body into the threaded holes in the header connector and secure tightly to prevent accidental disconnection during data terminal operation.

Power Supply Board

Use the following procedures to add a Power Supply Board to the telephone, for connection to a transformer or closet power supply. Procedure 5-47 is for the M2006 and M2008. Procedure 5-48 is for the M2016S, M2616, and M2216ACD.

CAUTION

Connect the optional Power Supply to your Meridian Modular Telephone only. Equipment damage may result from incorrect connections. Both the closet power supply and the transformer are for use with the Meridian Modular Telephone only.

Procedure 5-47
Installing and removing the M2006/M2008 Power Supply Board

CAUTION

Before handling internal components of telephones, static electricity must be discharged from hands and tools by touching any grounded metal surface or conductor.

1 Remove handset and place telephone upside down on top of a level, solid work surface (such as a desktop) covered with soft material or paper to prevent damage to movable keys and the telephone face.

2 Disconnect all cords from the telephone.

3 Remove the two screws from the stand assembly and unsnap stand assembly by pressing inward at back of stand where it meets the base and pulling upward.

4 If the telephone is equipped with a Meridian Programmable Data Adapter (MPDA) or Meridian Communications Adapter (MCA), unplug data cable from telephone's base jack.

5 Remove the four (4) screws securing the base of the telephone to the top cover. Remove base and set aside.

—continued—

6 If the telephone is equipped with Display, disconnect the Display ribbon cable from the Display Board and move out of the way.

7 If the telephone is not equipped with the Power Supply Board, remove jumpers from P1 connector pins on Main Board. Go to step 9.

If the telephone is equipped with a Power Supply Board, go to step 8.

8 The Power Supply Board is located on the left side of the telephone. Remove two (2) small screws from Power Supply Board (near top) and set aside. Grasp Board firmly on each side. Work Board loose from connector by slowly applying upward pressure to alternate sides until released.

If you are not replacing the Power Supply Board, place jumpers (A0288529) connecting the bottom two sets of pins on P1 connector.

9 Place Power Supply Board so alignment pin on telephone fits into Slot A on Board (see Figure 5-26). Align mounting holes in Board (near top) over mounting holes in telephone and carefully press down so H1 connector on Board slides onto P1 pins.

10 Take the Phillips head, self-tapping screws supplied with the Power Supply Board and install into the mounting holes. Tighten firmly with a #1 Phillips screwdriver.

11 If telephone has a Display, reconnect Display ribbon cable, routing cable as described in Procedure 5-49.

Note: Do not allow R5 on Power Board to become bent during this procedure.

12 Replace base. If the telephone is equipped with an MPDA or MCA, reconnect data cable to the base telephone jack and replace stand (ensuring MPDA or MCA cable does not get pinched between base and stand). Make sure stand is firmly seated to base.

13 Tighten all screws, reconnect line cord and place telephone in normal operating position. Place label supplied with the Power Supply option on bottom cover of telephone for tracking purposes.

Figure 5-26
M2006/2008 telephone and option boards

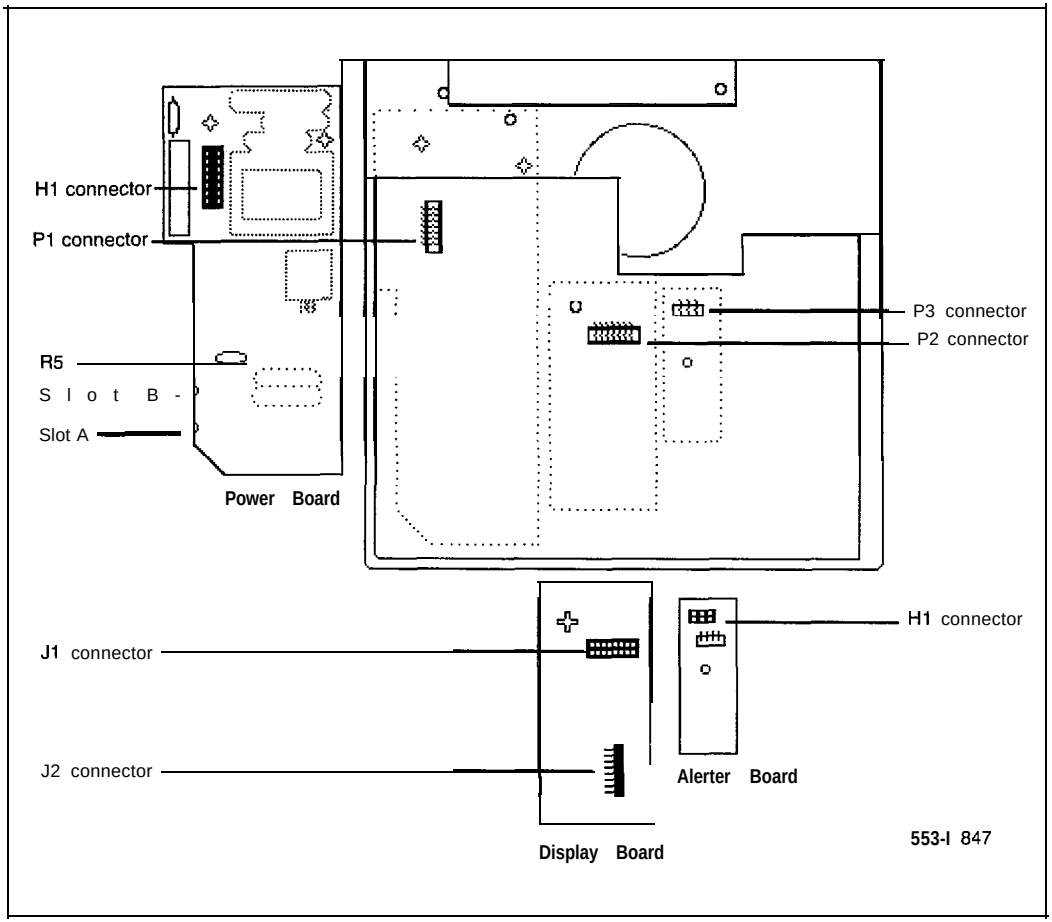

Figure 5-27
M2616/M2016S/M2216ACD telephone and option boards

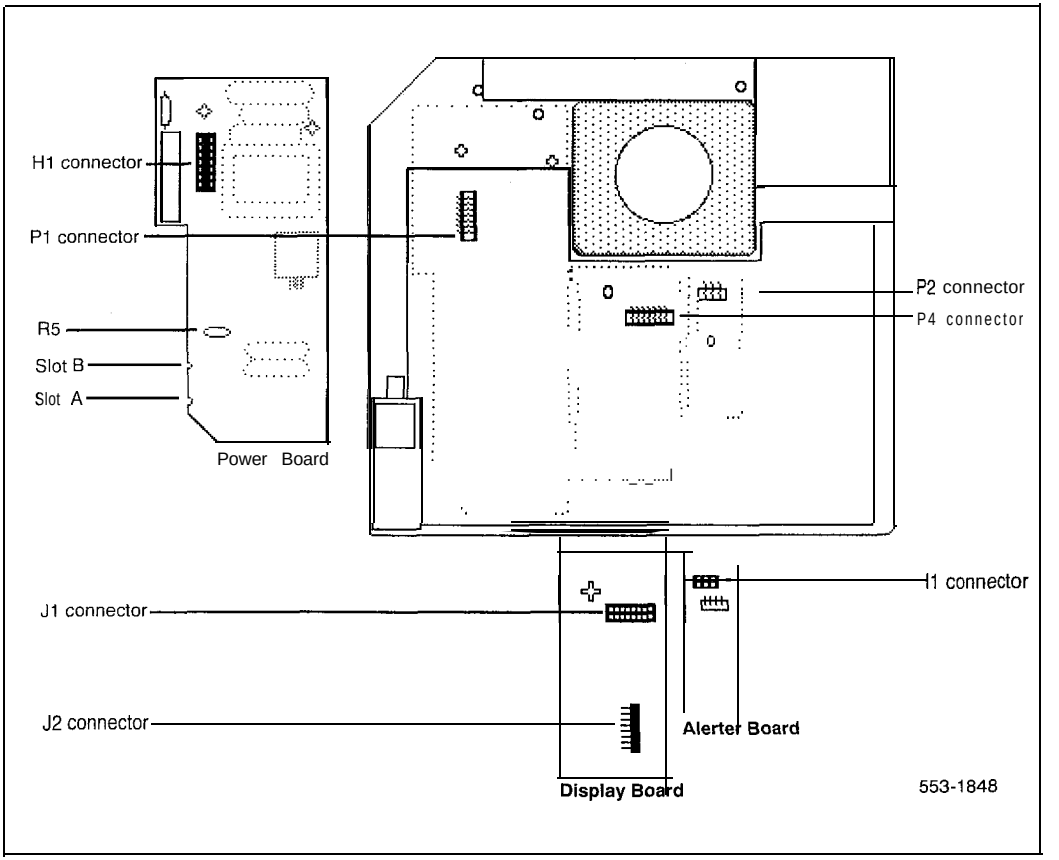

Procedure 5-48
Installing and removing the M2016S/M2616/M2216ACD Power Supply

CAUTION

Before handling internal telephone components, static electricity must be discharged from hands and tools by touching any grounded metal surface or conductor.

1 Remove handset and place telephone upside down on top of a level, solid work surface (such as a desktop) covered with soft material or paper to prevent damage to movable keys and the telephone face.

2 Disconnect all cords from the telephone.

3 Remove the two screws from the stand assembly and unsnap stand assembly by pressing inward at back of stand where it meets the base and pulling upward.

4 If the telephone is equipped with a Meridian Programmable Data Adapter (MPDA) or Meridian Communications Adapter (MCA), unplug data cable from base telephone jack.

5 Remove the four (4) or five (5) screws securing the base to the top cover. Remove base and set aside.

6 If the telephone is equipped with Display, disconnect the Display ribbon cable from the Display Board and move out of way.

7 If the telephone is not equipped with the Power Supply Board, remove jumpers from P1 connector pins on Main Board. Go to step 9.

If the telephone is equipped with a Power Supply Board, go to step 8.

8 The Power Supply Board is located on the left side of the telephone. Remove two (2) small screws from Power Supply Board (near top) and set aside. Grasp Board firmly on each side. Work Board loose slowly until released.

If you are not replacing the Power Supply Board, place jumpers (A0288529) connecting the bottom two sets of pins on P1 connector.

-continued-

9 Place Power Supply Board so Slot B fits into alignment pin on telephone (see Figure 5-27). Align mounting hole.4 in Board (near top) over mounting holes in telephone and carefully press down so H1 connector on Board slides onto P1 pins.

10 Take the Phillips head, self-tapping screws supplied with the Power Supply Board and install into the mounting holes. Tighten firmly with a #1 Phillips screwdriver.

11 If telephone has a Display, reconnect Display ribbon cable, routing cable as described in Procedure 5-50.

Note: Do not allow R5 on Power Board to become bent during this procedure.

12 Replace base. If the telephone is equipped with a Meridian Programmable Data Adapter (MPDA) or Meridian Communications Adapter (MCA), reconnect data cable to the base telephone jack and replace stand (ensuring MPDA or MCA cable does not get pinched between base and stand). Make sure stand is firmly seated to base.

13 Tighten all screws, reconnect line cord and place telephone in normal operating position. Place label supplied with the Power Supply option on bottom cover of set for tracking purposes.

14 Connect the telephone to a local transformer (Figure 5-28) or closet power supply (Figure 5-29) as shown. Refer to ***Telephones*** (553-2201-116) for requirements.

Figure 5-28
Configuration of local plug-in transformer

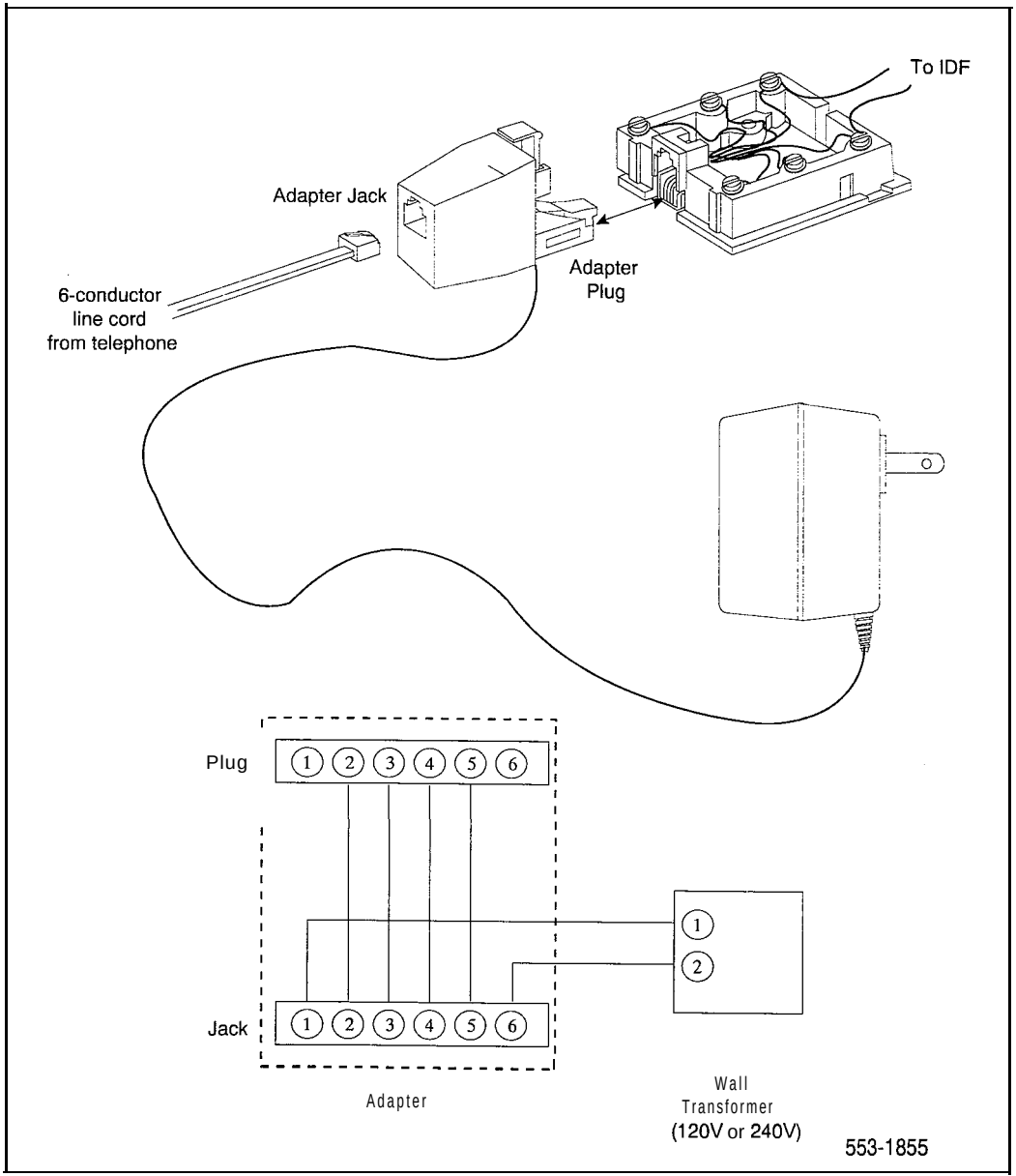

Figure 5-29
Closet power supply configuration

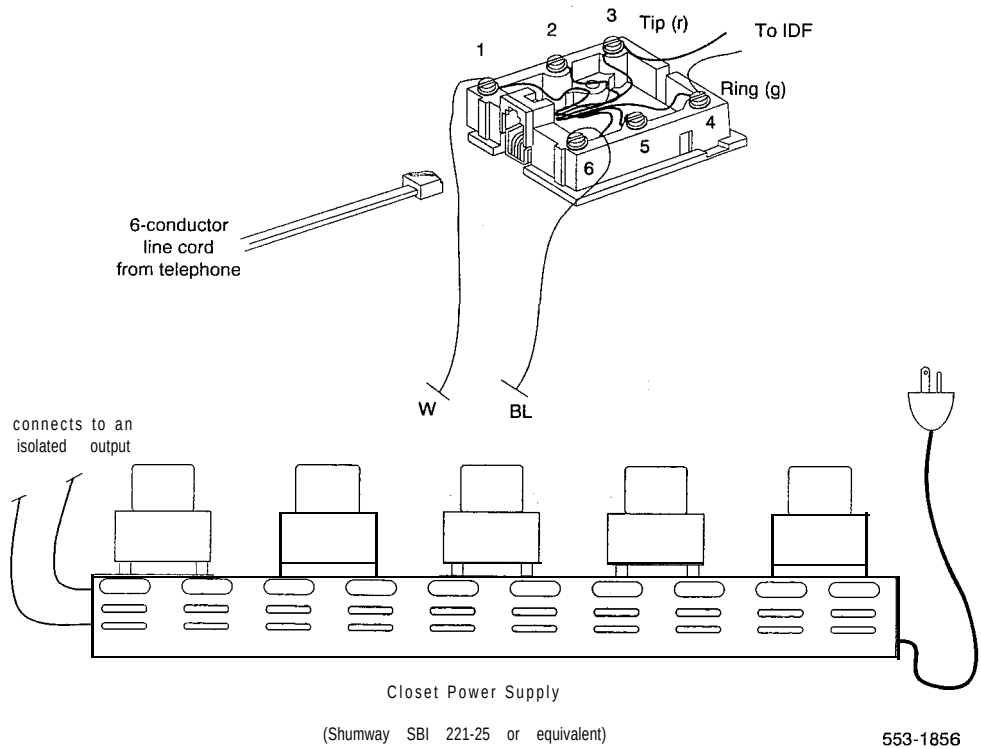

Display

Use the following procedure to add a Display to the telephone:
Procedure 5-49 is for the M2008, Procedure 5-50 is for the M2016S, M2616, and the M2216ACD.

Procedure 5-49
Installing and removing the M2008 Display

CAUTION

Before handling internal telephone components, static electricity must be discharged from hands and tools by touching any grounded metal surface or conductor.

1 Remove handset and place telephone upside down on top of a level, solid work surface covered with soft material or paper to prevent damage to movable keys and the telephone face.

2 Disconnect all cords from the telephone.

3 Remove the two screws from the stand assembly and unsnap stand assembly by pressing inward at back of stand where it meets the base and pulling upward.

4 If the telephone is equipped with an MPDA or MCA, unplug data cable from base telephone jack. Remove the four (4) screws securing the base to the telephone. Remove base and set aside.

5 The Power Supply Board (if equipped) is located on the left side of the telephone. Remove two (2) small screws from Power Supply Board (near top) and set aside. Grasp Board firmly on each side. Carefully work Board loose until released.

-continued-

6 If the telephone is not equipped with Display, go to step 9. If the telephone is equipped with Display, go to step 7.

Removing the Display Board

7 The Display Board is located at left center of telephone. Disconnect Display ribbon cable from Display Board. Remove the small screw from Board. Grasp board firmly on each end and pull upward to remove. To replace, go to step 9.

Removing the Display

8 Remove two (2) or three (3) screws from Display module. Remove Display from telephone. To install Display option, go to step 11.

installing the Display Board

9 Place J1 connector of Display Board over P2 pins of telephone (see Figure 5-26). Press down slowly until J1 slides onto P2 pins and is firmly seated.

10 Take the Phillips head, self-tapping screw supplied with the Display and insert into the mounting hole (near top). Tighten firmly with a #1 Phillips screwdriver.

Installing the Display

11 Place Display face down near top of telephone and align the two (2) mounting holes of Display with two (2) mounting holes of telephone.

12 Place the two (2) Phillips head, self-tapping screws from faceplate and insert into the mounting holes; tighten firmly with a #1 Phillips screwdriver.

—continued—

Note: Do not allow R5 on Power Board to become bent during this procedure.

13 Install the Power Board (see Procedure 5-47).

14 Fold ribbon cable near connector to align with J2 pins on Display Board, ensuring that notch on ribbon cable is facing toward the Display Board. Carefully work ribbon cable connector onto J2 pins until firmly seated. Route cable flat beside Power Supply Board, gathering excess cable under the Display. Be careful not to press cable beneath alignment posts or studs of base.

15 Replace base. If the telephone is equipped with an MPDA or MCA, reconnect data cable to the base telephone jack and replace stand (ensuring MPDA or MCA cable does not get pinched between base and stand). Make sure stand is firmly seated to base,

16 Tighten all screws, reconnect line cord, and place telephone in normal operating position. Place label supplied with the Display on bottom cover of telephone for tracking purposes.

17 Perform the self-test (Procedure 4-7) and acceptance test procedures. *See* LD31, *X11 inputloutput guide* (553-3001-400).

Procedure 5-50
Installing and removing the M2616/M2016S/M2216ACD Display

CAUTION

Before handling internal telephone components, static electricity must be discharged from hands and tools by touching any grounded metal surface or conductor.

1 Remove handset and place telephone upside down on top of a level. solid work surface covered with soft material or paper to prevent damage to movable keys and the telephone face.

2 Disconnect all cords from the telephone.

3 Remove the two screws from the stand assembly and unsnap stand assembly by pressing inward at back of stand where it meets the base and pulling upward.

4 If the telephone is equipped with an MPDA or MCA, unplug data cable from base telephone jack. Remove the five (5) screws securing the base to the telephone. Remove base and set aside.

5 If the telephone is not equipped with Display, go to step 9. If the telephone is equipped with Display, go to step 6.

Removing the Display Board

6 The Display Board is located at left center of telephone. Disconnect Display ribbon cable from Display Board. Remove the small mounting screw from Board. Grasp board firmly on each end and pull upward to remove. To replace, go to step 9.

Removing the Display

7 The Power Supply Board is located on the left side of the telephone. Remove two (2) small screws from Power Supply Board (near top) and set aside. Grasp Board firmly on each side. Carefully work Board loose until released.

8 Remove three (3) screws from Display module. Remove Display from telephone. To install Display, go to step 11.

—continued—

Installing the Display Board

9 Place J1 connector of Display Board over P2 pins of telephone (see Figure 5-27). Press down **slowly until** J1 slides onto P2 pins and is firmly seated.

Note: If the center screw is included, do not perform step 10.

10 Take the Phillips head, self-tapping screw supplied with the Display and insert into the mounting hole (near top). Tighten firmly with a #1 Phillips screwdriver.

Installing the Display

11 Place the three (3) Phillips head, self-tapping screws from the faceplate and insert into the mounting holes; tighten firmly with a #1 Phillips screwdriver.

12 Install the Power Board (see Procedure 5-48). This step not necessary on M26 16 unless you have other hardware options.

13 Fold ribbon cable near connector to align with J2 pins on Display Board, ensuring that notch on ribbon cable is facing toward the Display Board. Carefully work ribbon cable connector onto J2 pins until firmly seated. Route cable flat beside Power Supply Board, gathering excess cable under the Display. Be careful not to dress cable beneath alignment posts or studs of base. See Figure 30.

Note: Do not allow R5 on Power Board to become bent during this procedure.

14 Replace base. If the telephone is equipped with an MPDA or MCA, reconnect data cable to the base telephone jack and replace stand (ensuring MPDA or MCA cable does not get pinched between base and stand). Make sure stand is firmly seated to base.

15 Tighten all screws, reconnect line cord, and place telephone in normal operating position. Place label supplied with the Display on bottom cover of telephone for tracking purposes.

16 Perform the self-test (see Procedure 4-7) and acceptance test procedures. *See* LD31, *Xl 1 inputloutput guide* (553-3001-400).

Figure 5-30
Display cable routing

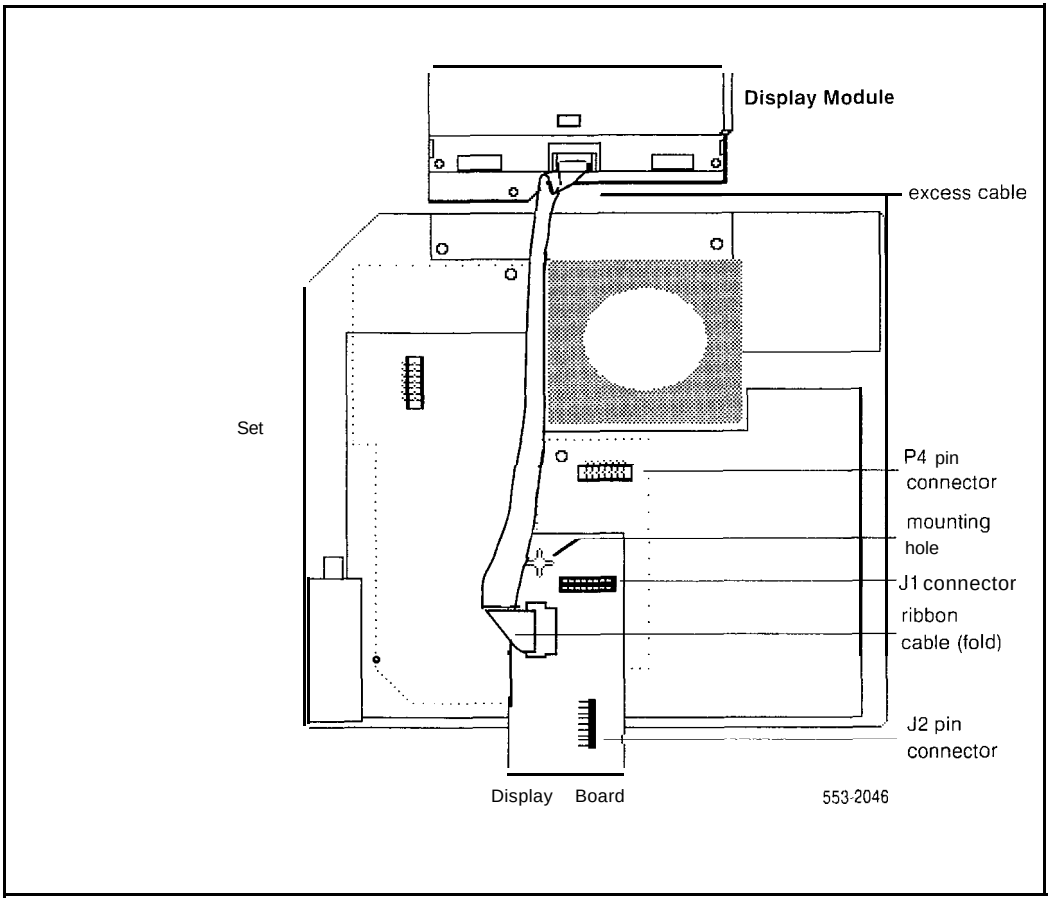

External Alerter Board

Use this procedure to add an External Alerter Board to the M2006, M2008, or M2616 telephone. See Figure 5-31 for information on hooking up the third-party External Alerter device.

Procedure 5-51
Installing and removing the External Alerter

CAUTION

Before handling internal telephone components, static electricity must be discharged from hands and tools by touching any grounded metal surface or conductor.

1 Remove handset and place telephone upside down on top of a level, solid work surface covered with soft material or paper to prevent damage to movable keys and the telephone face.

2 Disconnect all cords from the telephone.

3 Remove the two screws from the stand assembly and unsnap stand assembly by pressing inward at back of stand where it meets the base and pulling upward.

4 If the telephone is equipped with a Meridian Programmable Data Adapter (MPDA) or Meridian Communications Adapter (MCA), unplug data cable from base telephone jack.

5 Remove the four (4) screws securing the base of the telephone to the top cover. Remove base and set aside.

6 If the telephone is not equipped with the External Alerter, go to step 8. If you wish to replace an existing External Alerter, go to step 7.

Removing the External Alerter

7 The External Alerter Board is located at right-center of telephone. Remove screw from Board. Grasp board firmly on each end and pull upward to remove.

—continued—

Installing the External Alerter

8 Place H1 connector of Alerter Board over P3 pins of telephone (see Figure 5-26 for M2006/M2008; see Figure 5-27 for M2616/M2216ACD). Align mounting hole over mounting post. Carefully work H1 onto P3 pins until firmly seated. Place the Phillips head, self-tapping screw supplied with the External Alerter into mounting hole and tighten with a #1 Phillips screwdriver.

9 To signal the External Alerter when the telephone's handset or speaker is active, place jumpers (A0288529) connecting the two right-most pins on the Alerter Board.

To signal the External Alerter when the telephone is ringing or buzzing, place jumpers connecting the two left-most pins on the Alerter Board.

10 If the telephone is not yet equipped with the Power Board, install the Power Board (see Procedure 5-47 for M2006/M2008; see Procedure 5-48 for M2616/M2016S/M2216ACD).

Note: Do not allow R5 on Power Board to become bent during this procedure.

11 Replace base. If the telephone is equipped with an MPDA or MCA, reconnect data cable to the base telephone jack and replace stand (ensuring MPDA or MCA cable does not get pinched between base and stand). Make sure stand is firmly seated to base.

12 Tighten all screws, reconnect line cord, and place telephone in normal operating position. Place label supplied with the External Alerter on bottom cover of telephone for tracking purposes.

13 For connecting block configuration see Figure 5-31.

14 Perform the self-test (see Procedure 4-7) and acceptance test procedures. See LD31, ***X11 input/output guide (553-3001-400).***

Figure 5-31
External Alerter connecting block configuration

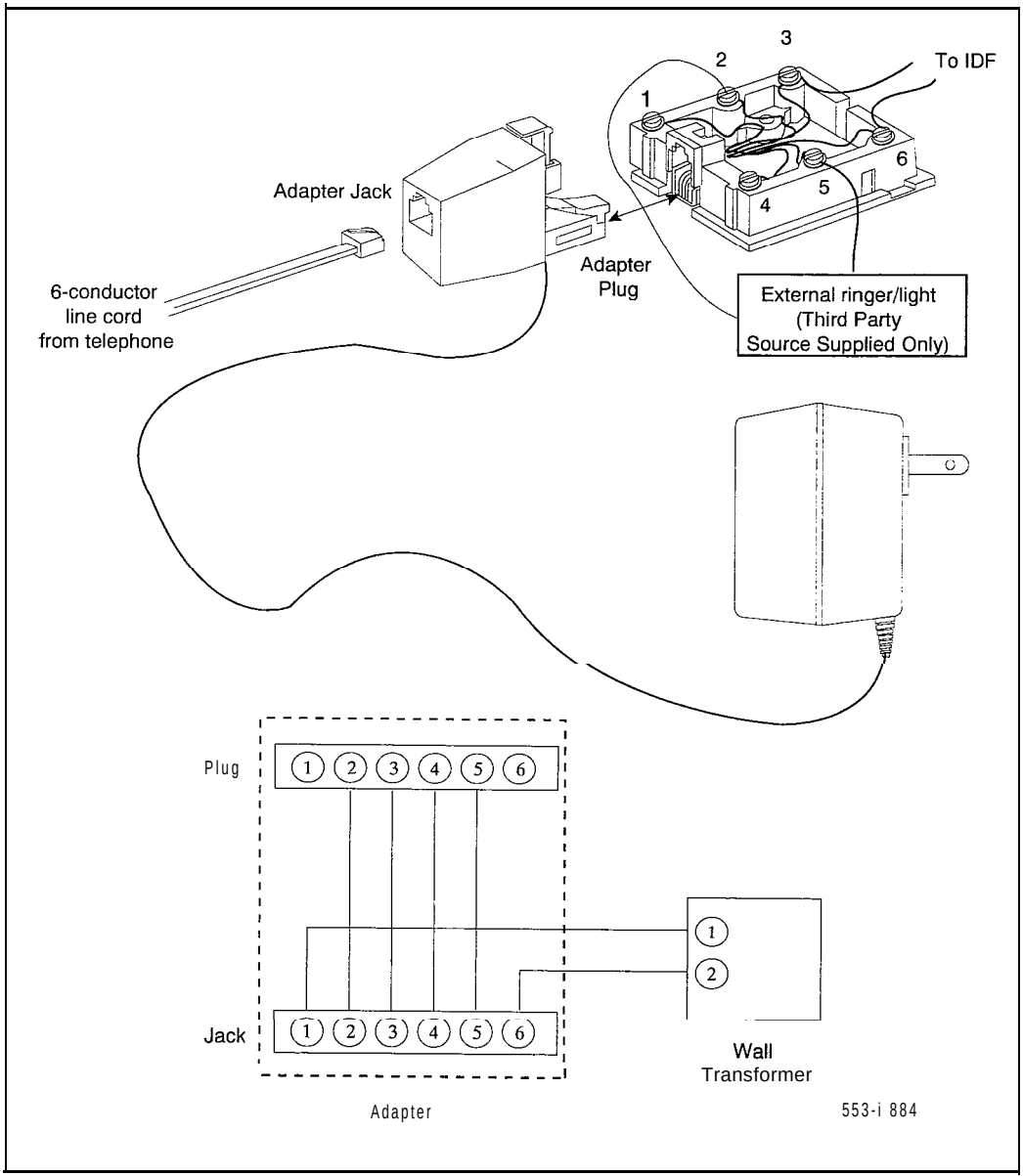

Key Expansion Modules

Use this procedure to add one (single) or two (double)-Key Expansion Modules to the M2016S, M2616, or M2216ACD telephones.

Note I: Before installing the Key Expansion Module(s), you must have the associated Footstand.

Note 2: Adding a Key Expansion Module to a telephone requires a Power Supply Board along with an additional power source (see Procedure 5-47 for M2006/M2008, see Procedure 5-48 for M2016S/M2616/M2216ACD).

Procedure 5-52
Installing and removing Key Expansion Module(s) on the M2016S, M2616, and M2216ACD telephones

1 Remove handset and place telephone upside down on top of a level, solid work surface covered with soft material or paper to prevent damage to movable keys and the telephone face.

2 Disconnect all cords from the telephone.

3 Remove the two screws from the stand assembly and unsnap stand assembly from the telephone by pressing inward at back of stand where it meets the base and pulling upward.

Note: If the M2616/M2016S is equipped with a Meridian Programmable Data Adapter (MPDA) or Meridian Communications Adapter (MCA), it must be removed and installed into the Key Expansion Module Footstand. Use Procedure 5-45, "Installing and removing the Meridian Programmable Data Adapter or Meridian Communications Adapter."

4 If the telephone is not equipped with Key Expansion Module(s), go to step 7. If you are replacing the Key Expansion Module(s), go to step 5.

-continued-

Removing the Key Expansion Module(s)

5 Remove screws from stand assembly (where it meets Key Expansion Module) and unsnap stand assembly from Key Expansion Module and telephone by pressing inward at back of stand where it meets the base and pulling upward.

6 Remove interface cable from telephone by pressing down on the locking tab. If equipped, remove interface cable from 1st Key Expansion Module (closest to telephone).

Installing the Key Expansion Module(s)

7 If the telephone is not yet equipped with the Power Board, install the Power Board (see Procedure 5-48).

8 Align bottom of Key Expansion Module(s) to bottom of telephone (see Figure 5-32).

9 Snap ribbon cable connector(s) into bottom interface jack on the Key Expansion Module. Snap other end of ribbon cable into interface jack in telephone (left side). Gather excess cable in base of the Key Expansion Module.

10 To add a second Key Expansion Module, snap a second ribbon cable connector into the bottom interface jack on the second Key Expansion Module. Snap other end of ribbon cable into top interface jack on first Key Expansion Module (see Figure 5-32). Gather excess cable in base of the second Key Expansion Module.

11 If the telephone is equipped with an MPDA or MCA, reconnect data cable to the base telephone jack. Make sure MPDA or MCA cable (and interface cable) does not get pinched between base and stand.

-continued-

12 Secure Footstand to Key Expansion Module(s) and telephone by placing tabs of Footstand into slots provided on the base of Key Expansion Module and telephone and pressing down. Make sure stand is firmly seated to base. Ensure ribbon cable(s) are not pinched between the Footstand and mounting posts.

13 Insert the three (four if you have two Modules) self-tapping Phillips head screws supplied with the Key Expansion Module into the mounting holes in bottom of Footstand. Tighten firmly with a #1 Phillips screwdriver.

14 Tighten all screws and replace all cords; place telephone in normal operating position. Place label supplied with the Key Expansion Module(s) on bottom cover of telephone (or Footstand) for tracking purposes.

15 Perform the self-test (see Procedure 4-7) and acceptance test procedures. See LD31, *X11 input/output guide (553-3001-400).*

Figure 5-32
Key Expansion Module connections (bottom view)

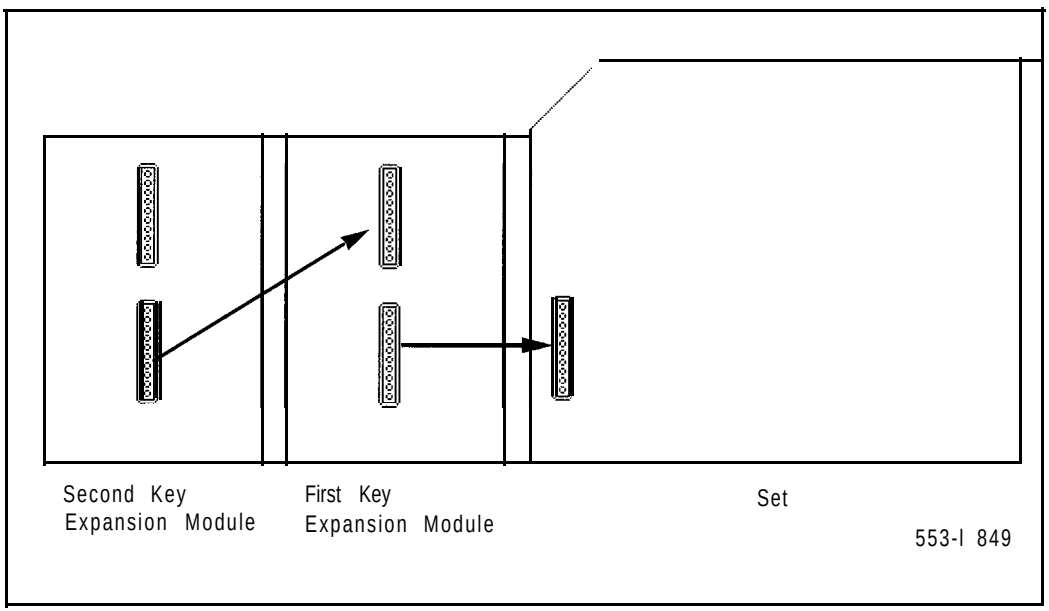

Wall mounting

The M2006, M2008, M2616, and the M2016S telephones are-equipped with a reversible footstand which allows for wall hanging. The Wall Mount Clip should be purchased and inserted in the handset well to hold the handset securely in place on wall-mounted telephones. You can hang Meridian Modular Telephones on the wall with installed Display or Key Expansion Module.

Note: The footstand cannot be reversed when the Meridian Programmable Data Adapter or Meridian Communications Adapter is equipped, so telephones with data cannot be wall-mounted. Additionally, some wall plates are too deep to allow for wall mounting on top of the plate. In these cases you should mount the telephone on the wall next to the plate.

An additional clip is provided for wall mounting. This clip is attached to the switchhook rest to prevent the handset from slipping when mounted on the wall.

Procedure 5-53
Wall mounting instructions for Meridian Modular Telephones

1 Remove handset and place telephone upside down on top of a level, solid work surface covered with soft material or paper to prevent damage to movable keys and the telephone face.

2 Disconnect all cords from the telephone.

3 Remove the two screws from the stand assembly and unsnap stand assembly by pressing inward at back of stand where it meets the base, and pulling upward.

4 Rotate the footstand 180" and snap the footstand back into place on the telephone bottom cover. Make sure stand is firmly seated to base of telephone.

5 Tighten all screws and replace all cords.

6 Insert Wall Mounting Clip in switchhook rest.

7 Mount telephone on wall using wall mount holes provided on the bottom of the footstand.

Troubleshooting

Use Table 5-20 to check problems encountered when installing Meridian Modular Telephones and their options.

Table 5-20
Troubleshooting Meridian Modular Telephones

Symptom	Solution
Telephone does not work.	1 Unplug line cord from telephone and plug back in. 2 If the telephone uses external power, make sure transformer or closet power supply is properly connected and that Power Supply Board is properly installed. If the telephone does not use external power, make sure that jumpers are placed connecting the bottom two sets of pins on P1 connector on main circuit board.
All LCDs flash and telephone does not function.	1 Press the Release (Rls) key. 2 Unplug line cord from telephone and plug back in.
Telephone wobbles.	1 Ensure all cords are properly routed through channels in the footstand. 2 Check that footstand is firmly seated to the telephone. 3 Ensure that all feet are firmly seated in the footstand.
Display does not work.	1 Unplug the line cord from telephone and plug it in again. 2 Ensure transformer is plugged in or closet power is connected (M2008 only). 3 Ensure Power Board is installed properly (M2008 only). 4 Check that Display ribbon cable is properly connected to the Display Board and has not been pinched. 5 Ensure Display Board is installed correctly and held securely with a mounting screw. 6 (M2006, M2008, M2616—ensure that ADD Class of service is configured in LD1 *1. See Xl 1 input/output guide* (553-3001-400). **—continued—**

Table 5-20
Troubleshooting Meridian Modular Telephones (continued)

Symptom	Solution
No response when you type <CR> or AT at the terminal	1 Press P-key and dial 28 to make sure you are in terminal mode. 2 Make sure your PC or terminal's power is on and you are on-line. 3 If the equipment connected to your MCA is not configured as Data Terminal Equipment, you will need to connect using a null modem cable. 4 Make sure the MCA is receiving external power. Check to see that the power cables are connected properly and the external power supply is running. 5 If you have a Display on your phone, press the P-key and dial 63 to get into EIA Monitor mode. Be surethe MCA is receiving signals from your terminal by watching the Display while entering carriage returns on the keyboard. If the indicator flashes, the connection is correct. If not, check the cable to make sure it is standard RS232 and is properly connected. 6 Press P-key and dial 62 to ensure that the MCA is in the Asynchronous mode). Press P-key and dial 20 to change to the Asyncronous mode. 7 Press P-key and dial *to ensure that the MCA is in the idle mode.
The prompt: CALL CONNECTED.SESSION STARTS is followed by: RELEASE	Check the configuration parameters of the far end data device. If they do not match those of your MCA, the call will be dropped. You will have to change the parameters of your MCA to match.
Garbled prompts are sent to your terminal when you type <CR>.	Enter a period (.) followed by <CR> to perform an autoparity.
You are connected to a host computer, but get no response when you try to log on.	First, release the call. Turn on Remote Loopback and make the call again. Type some characters at your terminal. If they echo back and appear on your terminal, the problem is with the far end data device. If the characters do not appear on your terminal, the problem is with the MCA. Call your telephone system administrator.

—continued—

Table 5-20
Troubleshooting Meridian Modular Telephones (continued)

Symptom	Solution
You try to make a data call from the initial prompt (or Main menu) in keyboard dialing. You see the prompt: CALLING	First, hold down the break key(s) for two seconds, enter <CR> and try again to make the data call. If the problem persists, your MCA is probably disabled. Call your telephone system administrator.
MCA does not operate at all.	1 Check the LED in the back of the telephone to see if it is flashing. If the LED is steadily lit, the MCA needs to be configured in your system, or it may be bad. If the LED is not lit, the MCA requires external power. 2 Make sure the cable from your terminal or PC is connected to the MCA. 3 Check the data parameters for your display. 4 Be sure the transformer is plugged in, or the closet power is connected. 5 Be sure the cable between the MCA and your telephone is connected and has not been pinched. 6 Be sure the power card is installed correctly. Verify the jumper settings are correct for either RS232 or V.35 (whichever you are using).
Key Expansion Module does not work.	1 Unplug and plug line cord. 2 Ensure that transformer is plugged in or that closet power supply is connected. 3 Ensure Power Board is installed properly. 4 Make sure ribbon cable connecting telephone and Key Expansion Module is routed properly and is not pinched.
	-continued-

Table 5-20
Troubleshooting Meridian Modular Telephones (continued)

Symptom	Solution
External Alerter does not work.	1 Ensure Alerter Board is installed properly. 2 Check that connections between the alerting device and the telephone connecting block are correct. 3 Make sure that jumpers are placed on the pins on Alerter Board as described in Procedure 5-51. 4 Ensure transformer is plugged in or closet power is connected. 5 Ensure Power Board is installed properly.
Note *1:* If pseudo random pattern 511 data is idle, telephone keypad dialing is inoperative. Use the release key to clear this condition.	
Note 2: If using an RS232 cable to connect the MCA to an ADM3/5 terminal, be sure pin 22 is disconnected.	
Note 3: Change the baud rate before you change the mode from synchronous to asynchronous.	
Note 4: Some terminals may drop DTR with the break. If this happens, RELEASE is not displayed.	

Figure 5-33
Flowchart for troubleshooting MCA

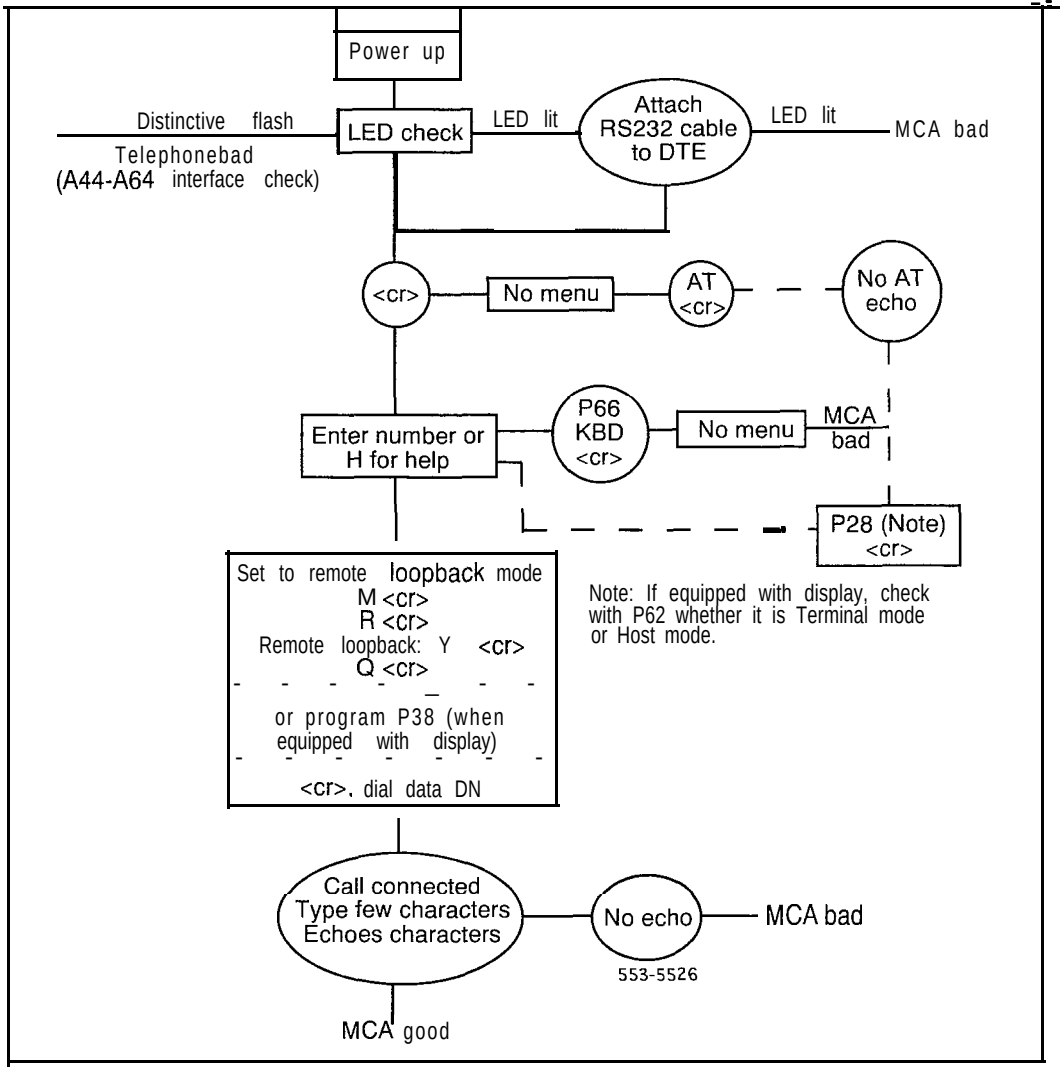

SL-I

Telephone and attendant console Installation

Copyright © 1989 Northern Telecom
All rights reserved.

Information subject to change without notice
Release 5.0
Standard
December 31, 1992
Printed in U.S.A.

northern telecom

SL-1

Remote Peripheral Equipment

Description, installation, and testing

Publication number: 553-2601-200
Document release: 2.0
Document status: Standard
Date: December 1, 1991

AtoZ KELLATRONICS, INC.
tel: 800.766.3425 [redacted] fax: 800.720.1172
818.773.8888 [redacted] 818.773.8899
www.kellatronics.com [redacted] info@kellatronics.com

© 1984 Northern Telecom

All rights reserved.

Revision history

August 10, 1990

Standard, release 1.0. Reissued for compliance with Northern Telecom standard 164.0.

December 1, 1991

This document is reissued to include technical content updates. Due to the extent of changes revision bars are omitted.

Contents

Description 1

Equipment configuration 3
- Carrier system 3
- Carrier shelf 3
- Circuit cards 4
- Emergency transfer 4

Equipment description 9
- Cabinets 9
- Carrier shelves 9
- PE shelves 10
- Local carrier buffer — QPC63 10
- 1.5 M baud converter — QPC62 11
- 2 M baud converter — QPC66 11
- Carrier interface — QPC99 11
- Carrier maintenance — QPC67 12
- 5112-V converter — QPC190/QPC355/QPC85 12
- Remote peripheral switch card — QPC65 13
- Cables 13
- QBL14 Power Distribution Box 14

Assembly and installation 15

Carrier interface 27
- Land-based carrier 27
- General engineering considerations 27
- Carrier specifications 27
- In-house RPE (IRPE) 30
- Microwave radio 31

Connections . **33**

Testing **41**
Transmission quality test 41
Span line fault locating 42

Description

Remote peripheral equipment (RPE) increases the 15 m (50 ft) range of the loop between the common equipment (CE) and peripheral equipment (PE) shelves in a SL-1 system.

The increased range enables the PE to be placed closer to the stations it serves which in turn increases the serving range of the SL-1 system.

The RPE uses a carrier link between the local and remote ends. The carrier link may consist of one of the following:

- a wire pair with no repeaters or other interface ("in-house" RPE)
- a digital carrier link meeting T1 specifications (such as Northern Telecom LD-1)
- a microwave radio link (which meets T1 interfacing specifications)
- a fiber-optic link (which meets T1 interfacing specifications)

Equipment configuration

Carrier system

A block diagram of the basic RPE system is shown in Figure 1. A 1.544 MB/s multiplexed digital carrier system (such as LD-I) or microwave radio link is required for each RPE system. A maximum of two network loops may be connected through two RPE carrier shelves (one shelf at the local equipment location and one at the remote location). A complete RPE shelf (two network loops) requires four digital carrier lines.

Carrier shelf

The same type of carrier shelf for the RPE is used at the local and remote locations. The QSD 6 (left-hand mounted) and QSD1 1 (right-hand mounted) shelves may be mounted in any SL-1 PE cabinet. The power supply connector is a 2-pin type. Each shelf has a power converter card to derive its required voltages from a -48 V supply provided by a QBL14 Power Distribution Box. All cables from the carrier shelves are connectorized.

Each loop services a maximum of four PE shelves. RPE network loops are fully assigned to RPE use, and no other PE shelves can be served by these loops.

Each loop requires four cable pairs (two carder lines) between the carrier shelf and the carrier system for transmission and signaling. A maximum of two cable pairs is required for maintenance purposes. These are the Order Wire (OW) and Fault Locating (FLP) and are optional depending on the distance between the carrier shelves and on the location of the office repeater bay (ORB) in the system.

Each RPE system requires at least one ORB (Figure 2) and line repeaters unless the remote equipment is within about 762 m (2500 ft) of the SL-1 equipment. Locating the ORB at both local and remote ends of the carder line is strongly recommended. This effectively allows isolation of the carrier span from the SL-1.

An ORB provides the following:

- span line powering
- error monitoring

- fault-locate system access
- order-wire termination with DDD access
- line looping

A typical RPE configuration is shown in Figure 3. Each RPE system requires a carrier shelf at the local and remote locations. They are cabled to the SL-1 cross-connect terminal through two NE-A25B cables.

Carrier shelves at the local equipment location and at the remote location are connected to QPC50 network cards and PE shelves respectively through NE-A18QA connector cables.

Peripheral equipment shelves at the remote location are connected to the cross-connect terminal through four NE-A25B connector cables in the same manner as regular SL-1 PE shelves. See the installation procedures for the system for cabling and terminating instructions.

Two network loops connect to the carrier shelf and they can each serve a maximum of four PE shelves. Circuit card positions 1 to 4 and 5 to 8 serve network loops X and Y respectively.

Circuit cards

The same circuit cards are used in the local and remote carrier shelves (see Figure 3) except for the QPC63 (local) and the QPC65 (remote) cards. All circuit cards have designated slot positions on the carrier shelves, and they must be kept in these positions to function properly. The QPC62 and QPC99 cards have option switches on their circuit boards. Circuit card handling procedures are described in *Circuit card installation and testing* (553-3001-211).

Emergency transfer

Designated 500-type telephones are cross-connected through emergency transfer units to outgoing trunks at the remote location. The telephones are connected to these trunks when the normally operated relays of the emergency transfer units release as a result of any of the following:

- loss of -48 V carrier shelf power
- loss of -48 V or ±10 V (under control of the QPC84 Power Monitor circuit card)
- carrier failure (network loops are controlled independently)
- manual operation of emergency transfer switch on consoles

  Note: This will not affect a remote location.

- manual operation of emergency transfer switch on the QPC84 circuit card

Figure 1
RPE block diagram

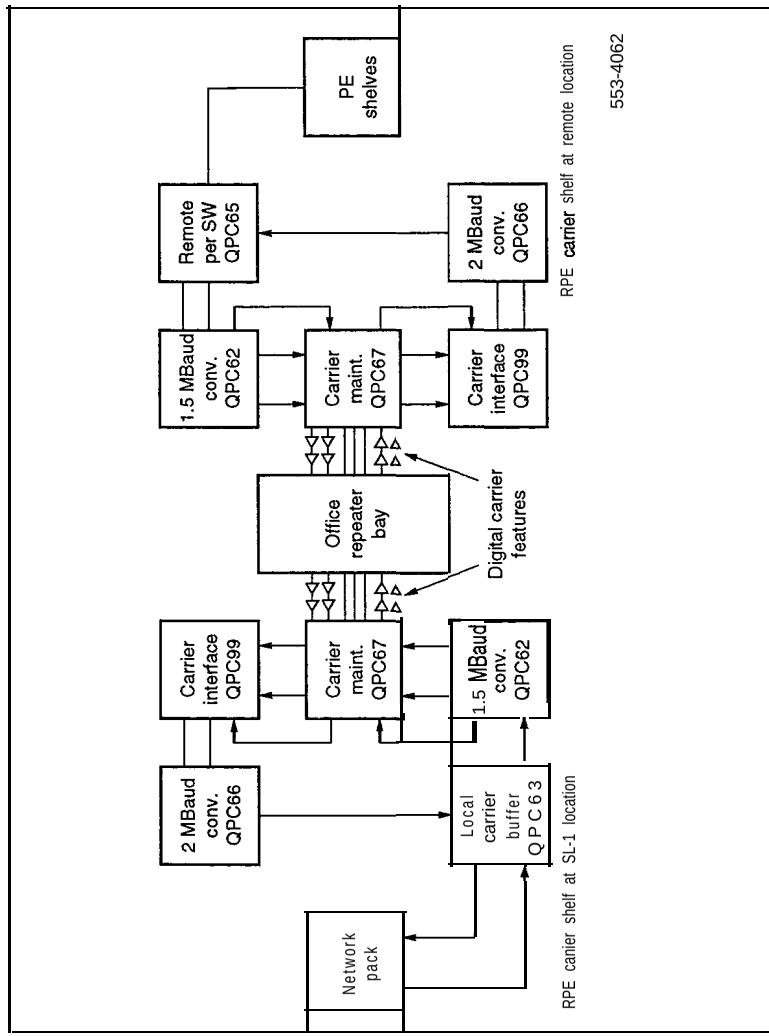

Figure 2
Possible ORB locations in RPE system

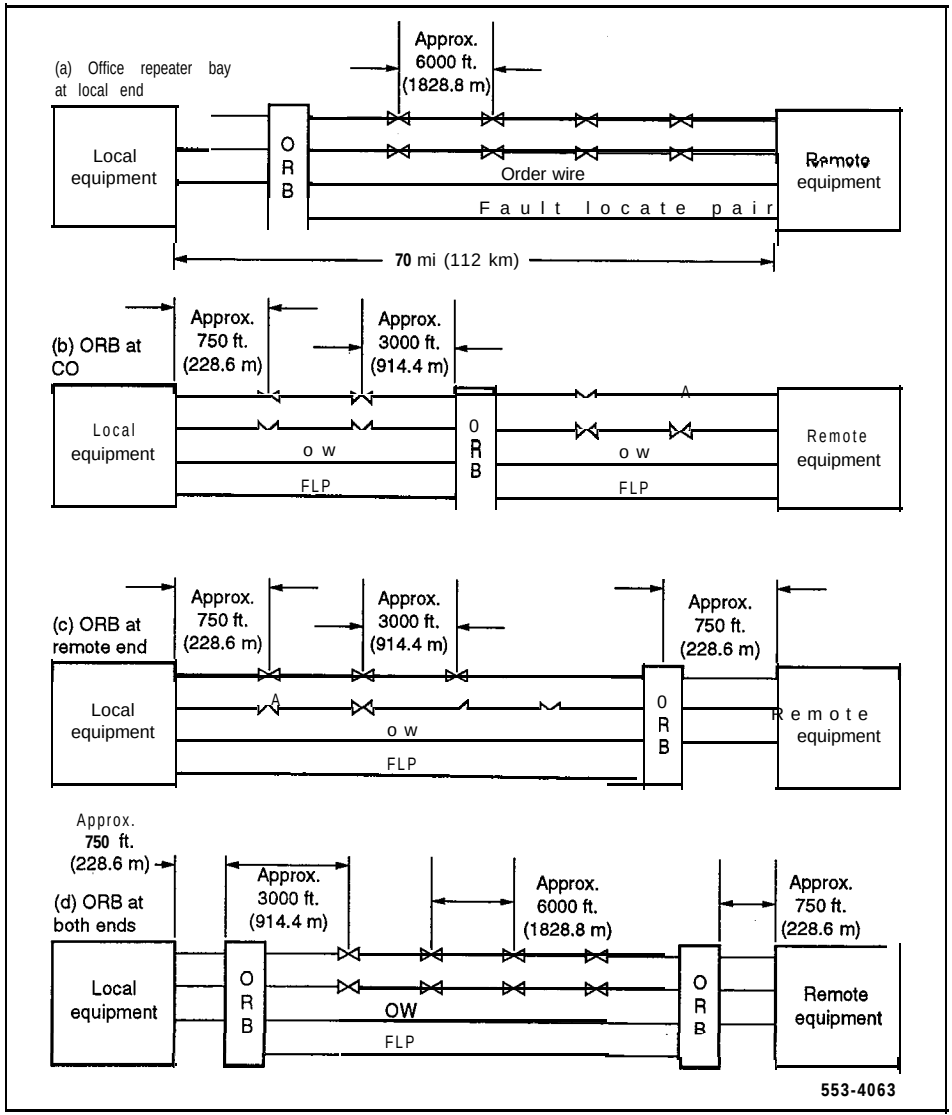

Figure 3
Typical RPE equipment configuration

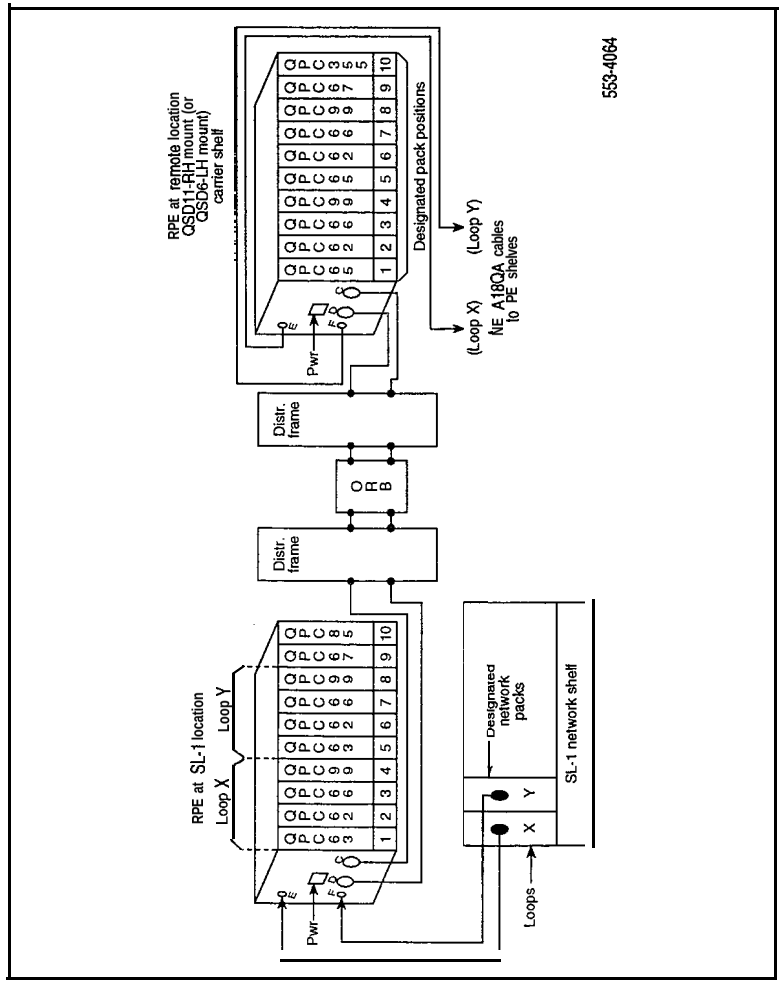

Equipment description

Cabinets

The RPE equipment are housed in standard SL-1 cabinets. A QCA8, QCA37, or QCA74 cabinet is required at the remote location to provide power for the QBL14 Power Distribution Box that powers the carrier shelves. A QCA6, QCA8, QCA23, QCA37, or QCA74 cabinet may be used at the local location to house the QBL14 power distribution box.

The RPE carrier shelves may be installed in any SL-1 cabinet (except QCA60). They must be within 3.8 m (12.5 cable feet) of the QBL-14 Power Distribution Box.

Carrier shelves

The following carrier shelves are available:

- QSD6 left-hand mount shelf

  QSD1 1 right-hand mount shelf

Purpose

The carrier shelf accommodates the circuit cards listed in Table 1. These cards can only function in the designated card positions shown in Figure 3.

Table 1
Carrier shelf circuit cards

Location	Code	Description	Quantity
Local and Remote	QPC85/QPC190/QPC355	5/12-Converter	1 per shelf (Note)
	QPC67	Carrier maintenance	1 per shelf
	QPC62	1.5 M baud converter	2 per network loop
	QPC66	2.0 M baud converter	2 per network loop
	QPC99	Carrier interface	2 per network loop
Local only	QPC63	Local carrier buffer	1 per network loop
Remote only	QPC65	Remote peripheral switch	1 per network loop

Note: QPC190/QPC355 circuit cards can only ix used in QSD11B series B and QSD6B series B shelves or QSD11C and QSD6C shelves. QSD11B series A and QSD6B series A shelves only work with a QPC65 circuit card. Using the QPC190 in the earlier vintage shelves will damage both the QPC190 itself and the QPC99 (Carrier Interface).

Quantity

One shelf is required at the local and remote locations for each two network loops.

Location

Any PE shelf position in a cabinet must be within 3.8 m (12.5 cable feet) of the QBL14 Power Distribution Box that powers the shelf.

Features

The carrier shelf features are as follows:

- steel and aluminum construction
- printed circuit backpanel
- fully connectorized power and signaling connections
  international rack mounting standards (48.3 cm (19 in.))
- approximate weight: 15.9 kg (35 lbs) fully equipped

PE shelves

Left- or right-hand mount shelves are used. See *Equipment identification* (553-2201-153) for their description.

Local carrier buffer — QPC63

Purpose

Generates a 1.544 MHz clock from the 2.048 MHz clock. Decodes and provides enables for outgoing and incoming data. Delays the data incoming from the carrier so that its frame relative to the outgoing data frame is equivalent to that returning from a peripheral buffer. Relays line status information to the processor. Decodes line control information from the processor.

Quantity

One for each network loop connected to the carrier shelf at the local equipment location.

Location

Positions 1 and 5 of the carrier shelf at the local equipment location. Position 1 for the first network loop connected to the shelf; position 5 for the second network loop connected.

1.5 M baud converter — QPC62

Purpose

Converts an SL-1 loop into two carrier loops. Contains switch-selectable line equalizers.

Note: QPC62C and converters of later vintage must be used when the 12 V option setting is required.

Quantity

Two for each network loop, one in the local shelf, one in the remote shelf.

Location

Position 2 for the first network loop; position 6 for the second network loop in each carrier shelf.

2 M baud converter — QPC66

Purpose

Converts two carrier loops into an SL-1 loop.

Quantity

Two for each network loop, one in the local carrier shelf, one in the remote carrier shelf.

Location

Position 3 for the first network loop, and position 7 for the second loop in each carrier shelf.

Carrier interface — QPC99

Purpose

- Contains two carrier line receivers with 7.5 dB pads built in. Converts the bipolar line signals into TTL level signals. Provides facilities for LD-1 carrier looping, monitors system, and invokes emergency transfer if carrier fails.

- Contains an option switch on its circuit board. In cards of vintages F andlater, the -7.5 dB pads are switch selectable. The settings on switches 1 to 4, and 7 to 12 determine the location of the card. Switches 5 and 6 determine loopback conditions. With 5 closed, the loop carrier is looped for an additional 8 seconds. With 6 closed, loopback occurs when DC is on the fault-locate pair and bipolar violations occur on the carrier. With 6 open, loopback occurs when:
  - DC is on the fault-locate pair and TRIOS present
  - DC is on the fault-locate pair and excessive bipolar violations (BPV)
  - TRIOS present
- The later vintages also have a ROUT jack for each channel to allow a test signal to input into the system. A Manual Loop Back (MLB) switch is also added to allow looping of the system for fault clearing. All other features of the earlier vintages are retained.

Quantity

Two for each network loop, one in each carrier shelf.

Location

Position 4 for the first network loop and position 8 for the second loop in each carrier shelf.

Carrier maintenance — QPC67

Purpose

Contains an M-type (3017 Hz) fault-locate filter for fault-locate testing in the LD-1 system, DC detection circuitry for the fault-locate pair, and carrier loopback relays to facilitate software maintenance testing. Terminates and gives access to the order wire pair through a jack and binding posts on the faceplate.

Quantity

One in each carrier shelf.

Location

Position 9 in the carrier shelf.

5/12-V converter — QPC190/QPC355/QPC85

Purpose

Converts -48 V dc to +12 V and +5 V dc for the carrier shelves.

CAUTION

QPC190/QPC355 circuit cards can only be used in QSD11B series B and QSD6B series B shelves, or QSD11C and QSD6C shelves. QSD1 1B series A and QSD6B series A shelves only work with a QPC85 circuit card. Using the QPC190 in the earlier vintage shelves will damage both the QPC190 itself and the QPC99 (Carrier Interface).

Quantity

One for each carrier shelf.

Location

Position 10 in each carrier shelf.

Remote peripheral switch card — QPC65

Purpose

Each SL-I loop at a remote site has a remote peripheral switch (RPS) associated with it. The card provides:

- shelf, card, and line enables plus the bypass bit to the shelves it serves at the remote site

  cyclic scanning of the terminals it serves for incoming signaling messages

  monitoring of timeslot 0 for outcoming (from peripheral signaling (PS) card to RPS or terminal) messages

- assembling ingoing (RPS to PS) messages

Quantity

One for each network.

Location

Positions 1 and 5 of the remote carrier shelf for the first and second network loops respectively.

Cables

The following cables are used in RPE installations:

- NE-A18Q to interconnect the local carrier shelf to a network card and to interconnect the PE shelves to each other and to the remote carrier shelf.
- NE-A25B cables are used to connect jacks C and D of the local and remote carrier shelves to the cross-connect terminal and to connect jacks A, B, C, and D of each PE shelf to the cross-correct terminal.

QBL14 Power Distribution Box

Purpose

Distributes -48 V to a maximum of 4 carrier shelves. Equipped with circuits to provide a low voltage (-42 V) disconnect.

Quantity

One for every 4 carrier shelves.

Location

Above the QUX3 Power Distribution Unit or above the QBL5 Power Distribution Box in a QCA8 cabinet. May also be installed in a QCA6 cabinet above the QUX1 or QBL3 units. In QCA28 and QCA37 cabinets, the unit can be mounted in any unequipped shelf location.

Assembly and installation

RPE may be shipped fully assembled in PE cabinets, or shelves and circuit cards may be shipped individually packaged for installation in existing PE cabinets.

When new cabinets are to be installed, refer to the installation procedures for the system for grounding and power requirements and wiring diagrams, cabinet installation and inspection procedures.

Procedures 1 and 2 give the installation and cabling procedures for RPE shelves at the local and remote equipment locations respectively. Procedure 3 provides the remote alarm installation. Figures 4 and 5 illustrate RPE shelf cabling.

Sets, consoles, and add-on-modules are installed and connected as described in *Circuit card installation and testing* (553-3001-215) and system installation procedures.

Procedure 1
Local RPE installation

Step	Procedure
1	Install the QSD6 or QSD11 (left-hand or right-hand mounted) carrier shelf with no circuit cards inserted.
2	Install an NE-Al 8Q cable from carrier shelf connector jacks E and F to each networkcard (Figure 4).
3	Install two NE-A25B cables from shelf connector jacks C and D to the cross-connect terminal (Figure 5).
4	Insert QPC85, QPC190, or QPC355 5/1 2-Converter card (depending on shelf vintage) in position 10 of the shelf.
	The QPC190 and QPC99 (Carrier Interface) will be damaged if the QPC190 is used on earlier vintage shelves. Refer to the 5/12 V converter description herein for associated shelves.
5	Perform cabinet inspection procedures if a new cabinet was installed.
6	If there is no existing RPE equipment, install a QBL14 Power Distribution Box (Figure 6). Refer to the note at end of Procedure 2 for trip circuitry information.
7	Install the power cable (supplied with carrier shelf); connecting it from the QBL14 unit to the carrier shelf power jack (see Figure 6).
8	Terminate the cables.
9	Connect power to the RPE carrier shelf.
10	Check the option switch settings and header pin strapping on QPC62, QPC66, and QPC99 cards (Figures 7, 8, and 9). For more information, see *Circuit card installation and* testing (553-3001-211).
11	Insert all other circuit cards in their designated positions (see Figure 3.)

Procedure 2
Remote RPE installation

Step	Procedure
1	Install the QSD6 or QSD11 carrier shelf (left-hand or right-hand mounted).
2	Install the PE shelves (left-hand or right-hand mounted).
3	Install two NE-A25B cables from carriershelf connector jacks C and D to the cross-connect terminal (Figure 5). Terminate the cables.
4	Install NE-A18QA cables from carrier shelf jacks E and F to the PE shelves for network loops X and Y (Figure 5).
5	Install NE-A18QA cables between the PE shelves (Figure 5).
6	install four NE-A25B type cables from jacks A, B, C, and D of each PE shelf to cross-connect terminal. See Telephone *and attendant console installation* (553-3001-215) for designations and terminating procedures.
7	Perform cabinet inspection procedures if a new cabinet was installed.
8	If there is no existing RPE equipment, install a QBL14 Power Distribution Box (Figure 6).
9	Install the power cable (supplied with the carrier shelf); connecting it from the QBL14 unit to the carrier shelf power jack (see Figure 6). See note for trip circuitry information.
10	Insert QPC85, QPC190, or QPC355 card (depending on shelf vintage) in shelf position 10. The QPC190 and QPC99 (Carrier Interface) will be damaged if the QPC190 is used on earlier vintage shelves. Refer to the 5/12 V converter description herein for associated shelves.
11	Connect power to the RPE carrier shelf.
12	Check the option switch settings and header pin strapping on QPC62, QPC66, and QPC99 cards (Figures 7, 8, and 9). For more information, see Circuit ***card installation am*** testing (553-3001-211).
13	Insert all other circuit cards in their designated positions (see Figure 3).

Note: The QBL14 Power Distribution Box located in the RPE contains undervoltage detection circuitry that trips the input circuit breaker when the dc. input voltage drops below -42 volts. This circuit prevents the RPE from dropping the battery voltage below -4'2 volts which would cause permanent battery damage.

Where battery backup is not provided, a short interruption of the main ac input powerwill cause the input breaker to trip. This interruption keeps the power to the RPE off when the ac power source is restored.

In this situation (no battery backup), the trip circuitry can be disabled by removing the single wire from the D terminal on the input breaker of the QBL14 (Sea Figure 10). The disconnected end should be wrapped with insulating tape and the wire dressed back.

The foregoing also applies to the Q BL14 used with the local carrier shelves if reserve battery is not installed at the main location.

Figure 4
Local end network loop and carrier shelf cabling

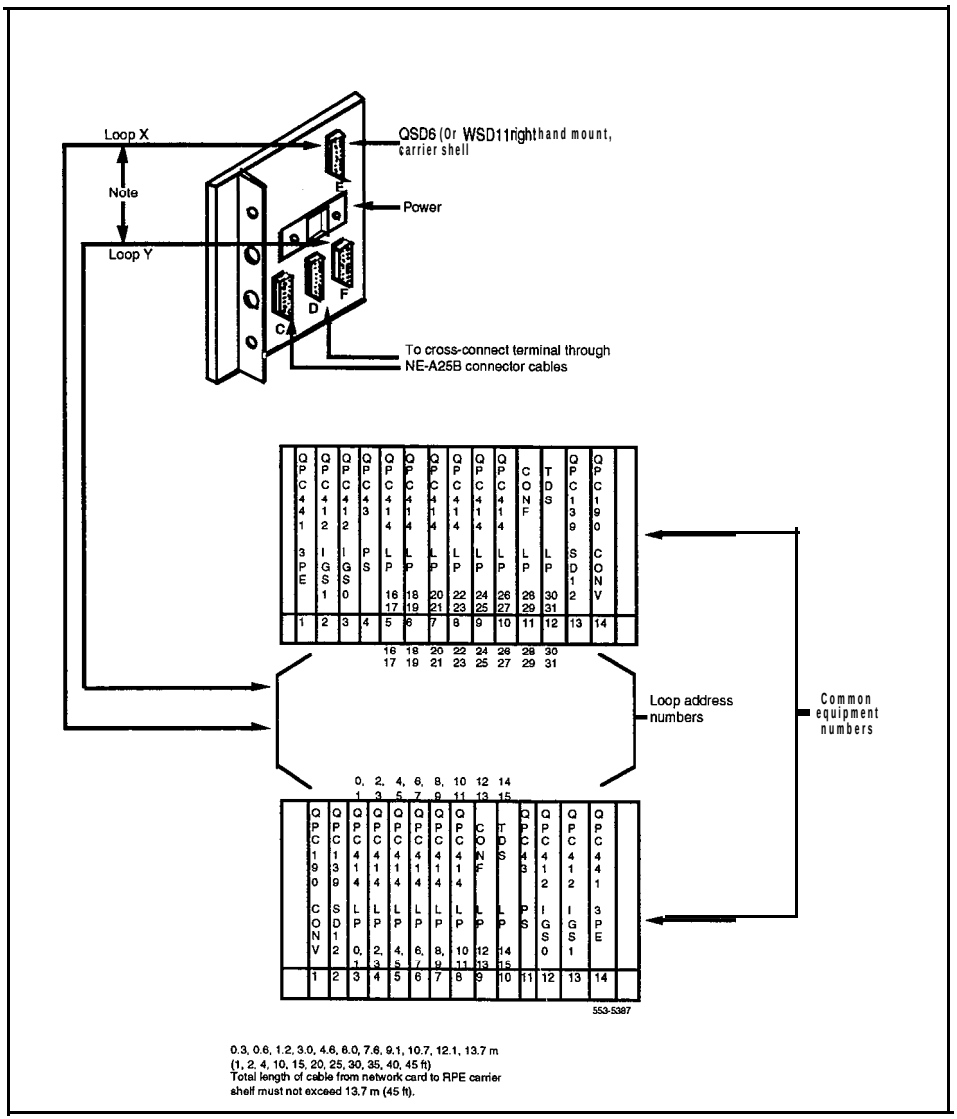

0.3, 0.6, 1.2, 3.0, 4.6, 6.0, 7.6, 9.1, 10.7, 12.1, 13.7 m
(1, 2, 4, 10, 15, 20, 25, 30, 35, 40, 45 ft)
Total length of cable from network card to RPE carrier shelf must not exceed 13.7 m (45 ft).

Figure 5
Remote end PE shelf and carrier shelf cabling

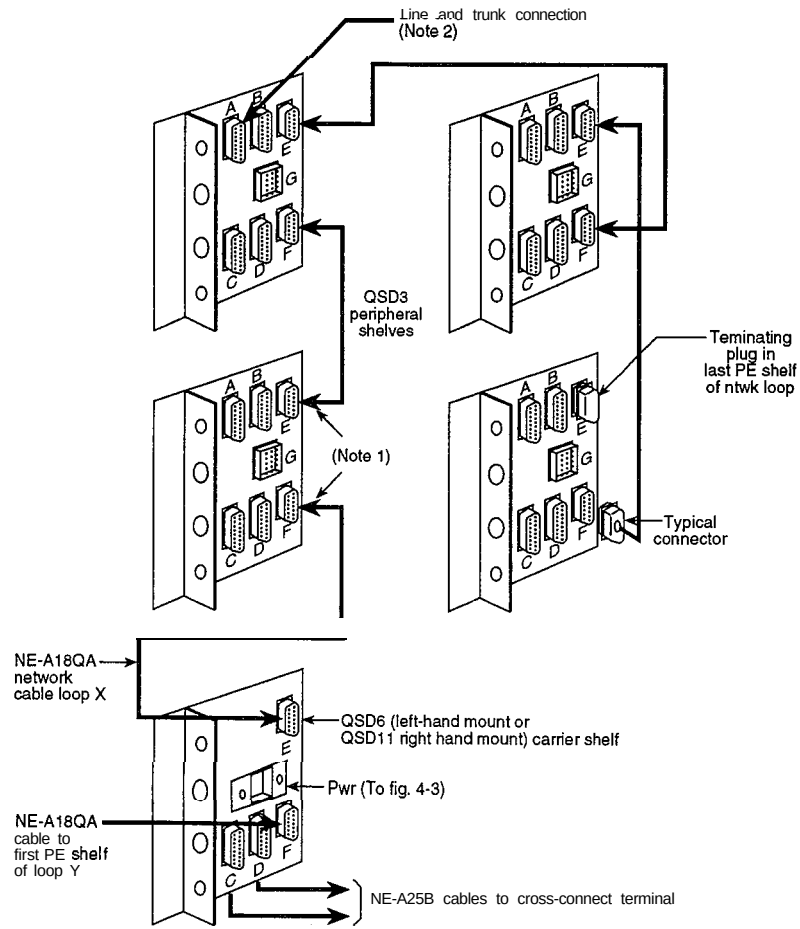

Note 1: NE-A18QA cables are available in the following lengths:
1, 2, 4, 10, 15, 20, 25, 30, 35, 40, 45 feet
(.3, .6, 1.2, 3.0, 4.6, 6.0, 7.6, 9.1, 10.9, 12.1, 13.7 m)
Total length of cable from PE shelf to RPE carrier shelf must not exceed 45 ft. (13.7 m)

Note 2: 1 of 4 connectors (A, B, C, D) cabled to cross-connect terminal via NE-A25B cables.

Note 3: Connector designations are similar on other type PE shelves

553-4066

Figure 6
QBL14 power distribution box wiring and connections

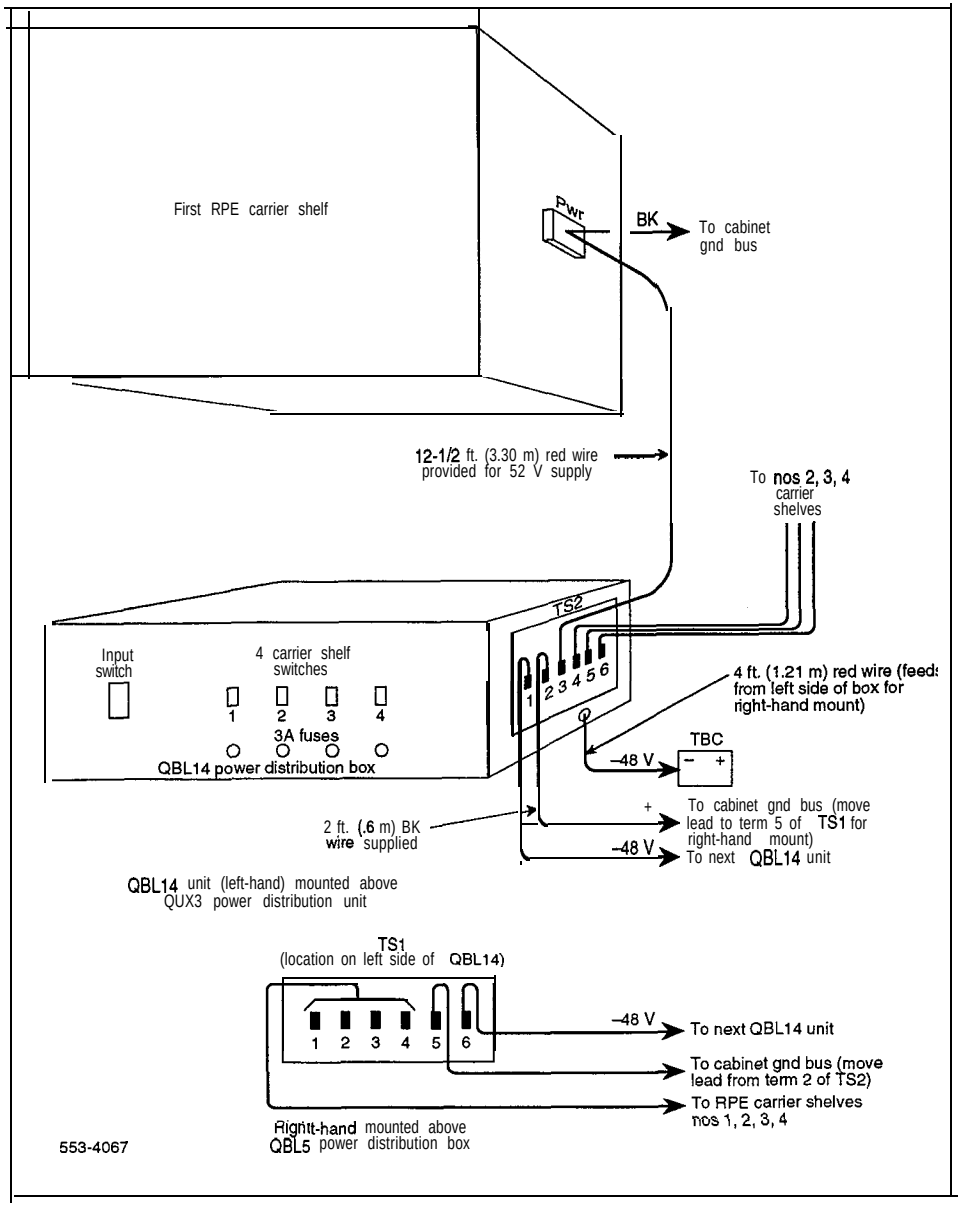

Figure 7
QPC62 1.5 M baud converter card option switch and header pin locations and settings

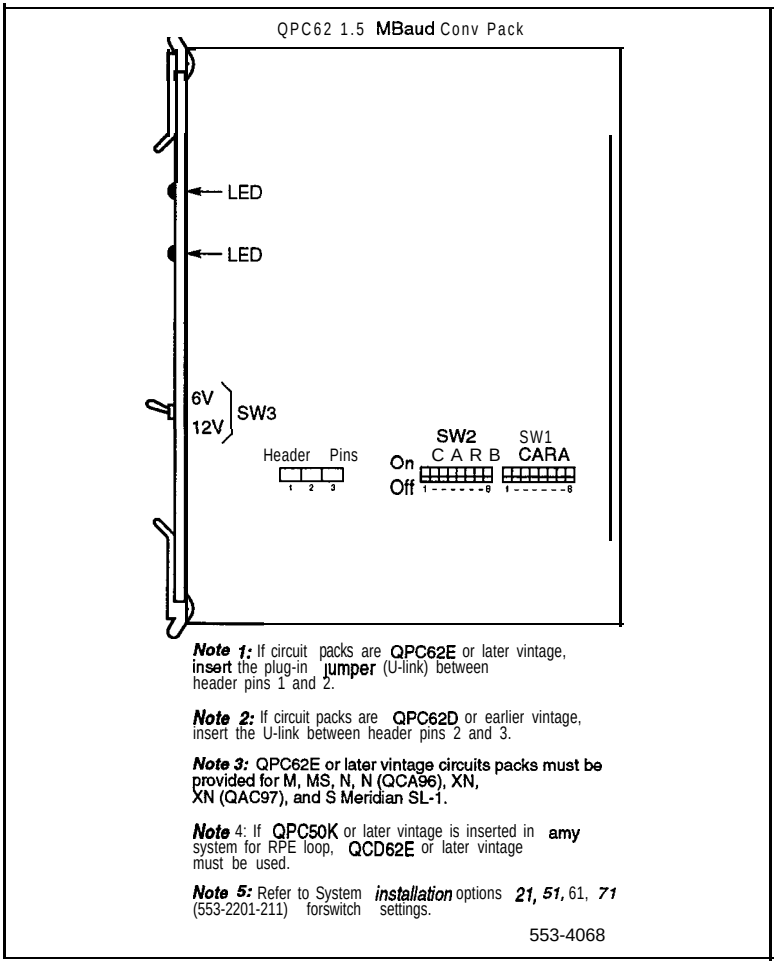

Figure 8
QPC66 2.0 M baud converter card header pin strapping

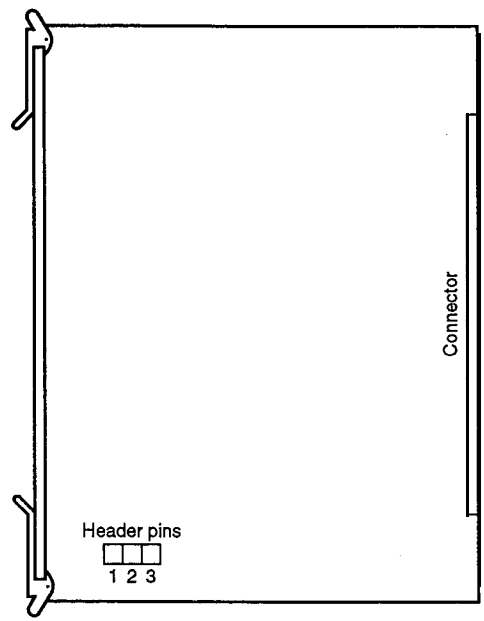

Note 1: If circuit packs are QPC66D or later vintage, insert the plug-in jumper (U-link) between header pins 1 and 2.

Note 2: If circuit packs are QPC66C or earlier vintage, insert the U-link between header pins 2 and 3.

Note ***3:*** QPC66D or later vintage circuits packs must be provided for SL-M, MS, N, N (QCA96), XN, XN (QAC97), and S Meridian SL-1.

Note 4: If QPC50K or later vintage is inserted in any system for RPE loop, QCD66D or later vintage must be used.

553-4069

Figure 9
QPC99 carrier interface card option switch settings.

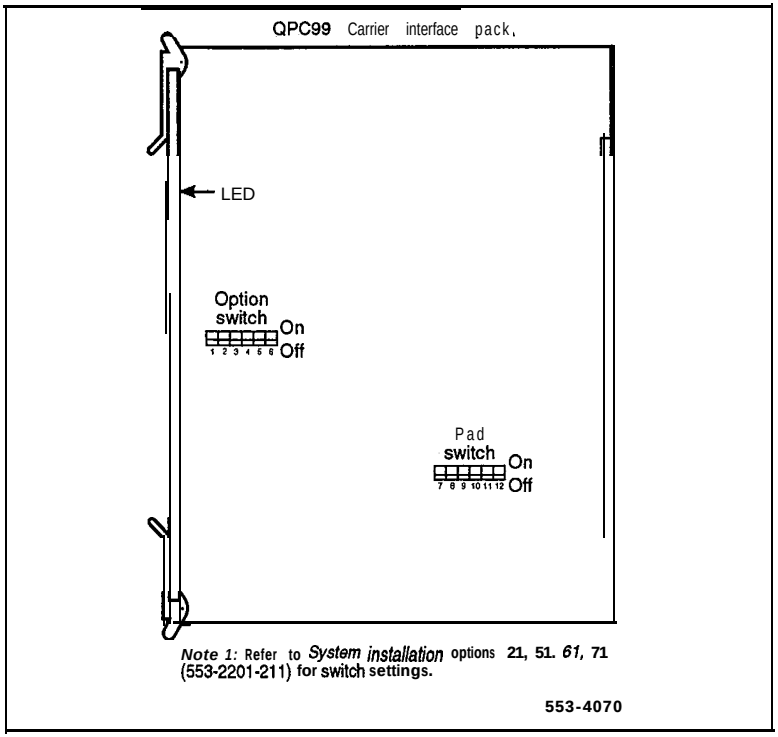

Figure 10
Input breaker of QBL14 Power Distribution Box

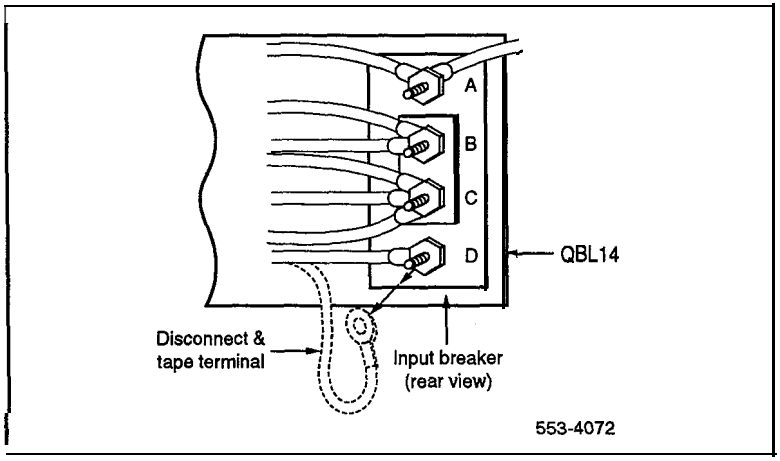

Procedure 3
Remote alarm installation

Step	Procedure
	Note: In an RPE installation, a power failure at the remote end cannot be detected at the local end. To overcome this, a wire pair can be connected from the remote QPC84 Power Monitor to the alarm input of the local QPC84. This can be used to generate system terminal and/or visual alarm indication of power failure at the remote end.
1	Use the system installation procedures to install connector cables (NEA25B or equivalent) from the P10 plug of each remote QCA8 to the cross-connect field.
2	Install and designate an NEA25B (or equivalent) connector cable from the cross-connect terminal to the main location.
3	At the main location, connect the two alarm leads (through the cross-connect terminal) to a customer provided alarm with provision for audio indication of remote power failure.
4	Connect 2 leads from the main alarm to TS3 of the QCA6 (L system), QCA10 (VL system), QCA23 (LE system), QCA24 (VLE and XL systems), QCA28 (A system), or QCA37 (SL-1M system).

Figure 11
Remote alarm connection

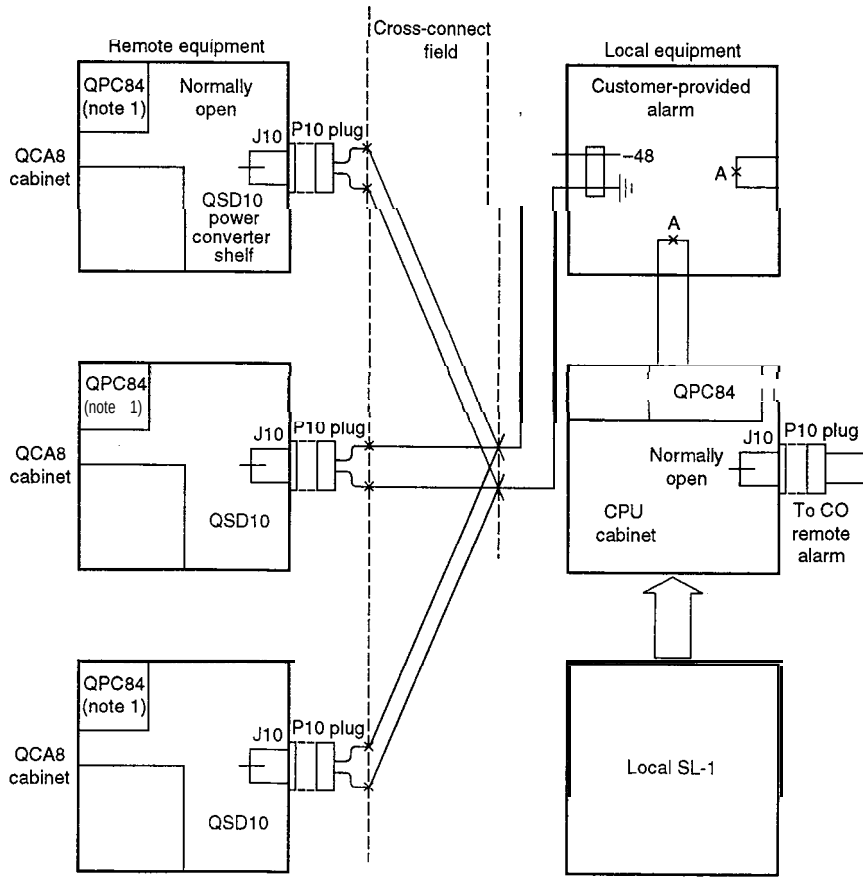

Note 1: **The QPC84 circuit pack, in the power converter shelf, provides LED indication of out-of-tolerance voltages and controls the system alarm indication,**

Note 2: The rectifier is present in L, LE, M and A systems only, When the QSD4 is not present, TS3 is located on OUT type power units (for fans).

Note 3: See System installation options 21, 51, 61. 71 **(553-3001-210) and** *Attendant console and set installation procedures* **(553-3001-215) for connecting information.**

553-4071

Carrier interface

Land-based carrier

The SL-1 RPE hardware interfaces with Northern Telecom LD-I carrier apparatus which conforms to the T- 1 industry standard. Therefore any carrier system conforming to T-l signaling standards should be able to interface with SL-1 RPE. Minor differences in carrier maintenance can generally be accommodated by option switches in the carrier interface card.

General engineering considerations

In addition to the T1 carrier rules, the following rules also apply:

- The distance from local to remote equipment cannot exceed 112.7 km (70 miles).

  Line repeaters are powered from the office repeater bay (ORB) since no power is available from the SL-I interface.

- The SL-1 interface with the LD-1 carrier line contains an M-type fault location filter (3017 Hz) without level of polarity options. The fault location filter is powered by the SL-1 RPE equipment. No other M-type filters can be used in the same span.

If an ORB is being used, the cable between the ORB and the main distribution frame (MDF) should have the following characteristics:

- The impedance presented to the SL-1 equipment should be 100 ohms at 722 kHz.
- The total distance between the SL-1 and the ORB or first line repeater should not exceed 228.6 m (750 ft).
- Cable, designed for pulse code modulation (PCM) or digital signals, should consist of individually shielded twisted pairs (such as NE-750A to NE-759A-type cables).

Carrier specifications

The SL-1 RPE is compatible with carrier facilities having the characteristics shown in Table 2 and Figure 12.

Table 2
Carrier characteristics

Line rate	1.544 Mb/s (±200 b/s)
Signal	bipolar, 50% duty cycle
Output level	Option 1 If the equipment interfaces directly with the carrier line, or with an office repeater bay which is less than 45.7 m (150ft) away from the common equipment, the positive and negative output pulse heights are 3 V ±10% and the imbalance between the positive and negative pulses is less than 5%. Option 2 When interfacing with an Office Repeater Bay which is between 45.7 m (150 ft) and 228.6 m (750 ft) away from the common equipment, the positive and negative output pulse heights are 6 V ±10% and the imbalance between positive and negative pulses is less than 5%. With this configuration one of two possible equalizers is inserted in the carrier line, in order to make the total cable and equalizer loss about 6 dB. This will provide the required 3 V pulses at the ORB.
Output pulse width	The output pulse width at half pulse height is 324 ± 30 ns. Unbalance between positive and negative pulse width at half pulse height is less than ±15 ns.
Output rise and fall time	The output rise and fall time is less than 90 ns.
Overshoot	The overshoot at the trailing edge of the output pulse is between 20 and 40% of pulse height with decay to 10% or less of base line to peak overshoot within 400 ns.
Impedance	The nominal impedance at the line interface is 100 Ω.
Output jitter	The maximum jitter on the digital output signal can be 30 ns RMS.
Input level	The positive and negative input pulse height will be in the range of 0.07 to 3 V with a possible imbalance between positive pulses of 5%.
Input jitter	The system can accommodate a low frequency input jitter of up to 20 ns RMS. Jitter with frequencies above 2 kHz should not be more than ±50 ns peak.
Interpulse time	The time between pulses in adjacent time slots will be 648 ± 20 ns.

Figure 12
Output pulse characteristics (6 V option selected and no output equalizer terminating into 100 ohm load)

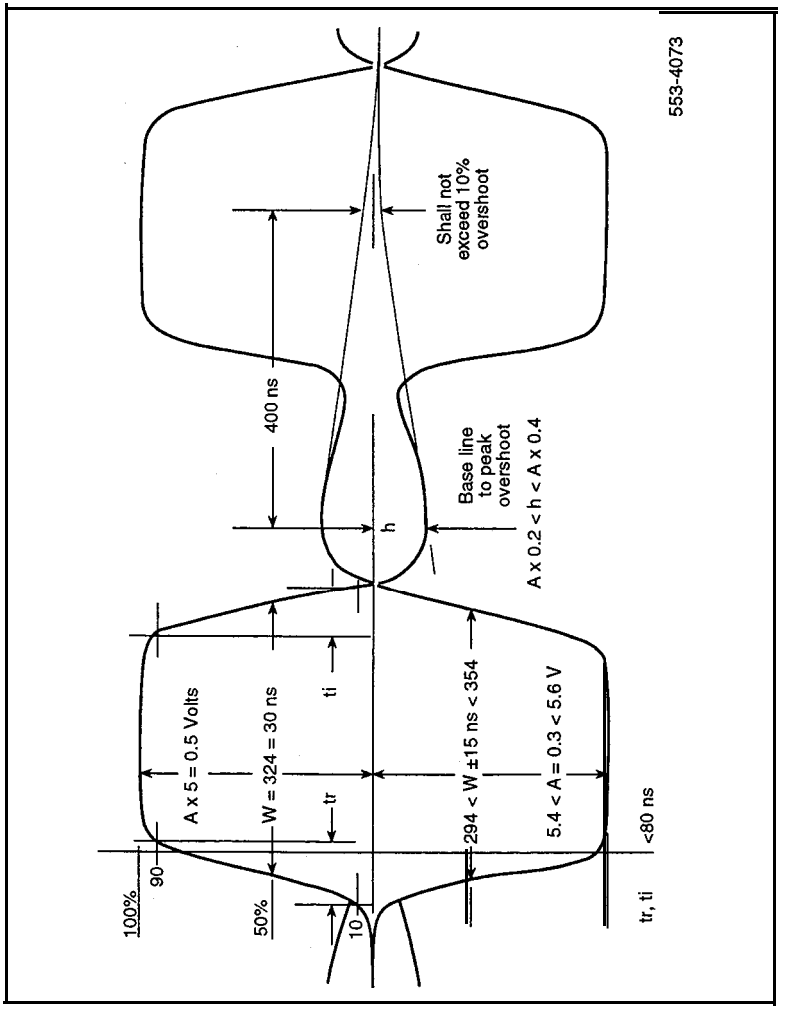

In-house RPE (IRPE)

Since there is a carrier repeater located in the QPC99, it is not necessary to use ORBs and extra repeaters between the local and remote ends of the RPE if the distance between them is typically less than 762 m (2500 ft). In this case the standard T-l procedures for cable installation should be followed. Other considerations are as follows:

- The impedance presented to the SL-1 system should be 100 Ω at 772 kHz.
- Unless the cable effectively separates transmit and receive pairs, separate cables for transmit and receive should be used to avoid crosstalk.
- Bridges, taps and loading coils, and building-out capacitors are to be avoided.
- Cable environment can affect transmission line capacitance and resistance, causing impedance mismatches and signal reflections. Cable should therefore be clean and dry.

IRPE maximum distances

Permissible IRPE operating distances depend on total losses and noise between the local and remote locations.

- If separate cables are used for transmit and receive directions and if no noise or crosstalk from other pairs or external sources reaches the signal pairs, the maximum allowable loss at 772 kHz is 26 dB. In this case the following approximate values apply:
  - 975 m (3200 ft) of 26 AWG wire
  - 1158 m (3800 ft) of 24 AWG wire
  - 1554 m (5100 ft) of 22 AWG wire
- Table 3 shows the operating limits when using several carrier systems without any additional equipment in the same group.

Table 3
Number of 1.544 Mb/s systems in one binder group

	Number of RPE systems per binder GRP maximum cable length (m (ft))		
Wire gauge	4	8	12
26	762 (2500)	640 (2100)	579 (1900)
24	853 (2800)	732 (2400)	671 (2200)
22	1097 (3600)	914 (3000)	823 (2700)

- If only one twin carrier system and SL-1 equipment (such-as SL-1 or 500-type telephones) are used in the same binder group, the following cable length limits apply:
  - 762 m (2500 ft) of 26 AWG wire
  - 853 m (2800 ft) of 24 AWG wire
  - 1097 m (3600 ft) of 22 AWG wire
- If other high transient switching pairs are used in the same binder group, the maximum cable length is limited by LD-1 engineering rules for high noise environments and the following worst case limits apply:
  - 579 m (1900 ft) of 26 AWG wire
  - 640 m (2 100 ft) of 24 AWG wire
  - 732 m (2400 ft) of 22 AWG wire

Microwave radio

Cabling between the SL-1 and the carrier facility should meet the same criteria outlined for land-line carrier systems. In addition, the complete microwave system must also meet the overall limits for land-based carrier systems and conform to T1 interfacing specifications.

Distance limits

As in land-line carrier systems, the distance at which the SL-1 can operate is governed by a time out in the peripheral signaling card of 1.5 ms when interrogating the peripheral equipment. This 1.5 ms value is the maximum total round-trip time allowable, including propagation time and any delay introduced by signal processing at microwave stations. The maximum distance allowed is given by the following formula:

Maximum Allowable Distance (miles) = (M x V – D)

M = maximum allowable delay (ms)
V = propagation velocity (miles/ms)
D = any other processing delays

Example

In the case of a land-line system, assume that the maximum allowable delay (M) is 1.25 ms to give a safety margin of 0.25 ms. The propagation velocity of signals through wire is 115 miles/ms. Assume there are no delays in the system. Thus the formula:

(MV – D) (1.25 x 115) – 0 = 71.875 or about 70 miles

Connections

All cables, except cables to connectors C and D of carrier shelves, are terminated and designated as described in
(553-3001-215). Connector C and D cables are terminated as shown in Tables 4 and 5.

Cross-connect wiring to QUA1 emergency transfer unit as shown in Figure 13 and Table 5.

Sets and consoles are cross-connected to PE shelves as described in ***Telephone and attendant console installation*** (553-3001-215).

Connections for 500-type telephones and trunks that connect through emergency transfer units are given in Figure 13. A ring ground start button must be provided on these telephones, if the trunks are ring ground start.

RPE local and remote carrier shelves are cross-connected to the digital carrier cable pairs as shown in Figures 14 and 15.

RPE maintenance pairs are cross-connected as shown in Figure 16.

Table 4
Cable C designations (local and remote locations)

Network loop	Card position	Connector C pin number	Lead color	Lead designation
X	9	1	BL-W	C1
X	9	26	W-BL	c 2
X	9	2	o - w	c 3
X	9	27	w - o	c 4
Y	9	3	G-W	C9
Y	9	28	W-G	C10
Y	9	4	BR-W	C11
Y	9	29	W-BR	C12
	9	5	s - w	OWT
	9	30	w - s	OWR
	9	6	BL-R	FLT
	9	31	R-BL	FLR
	4	7	O-R	FLWA
	4	32	R-O	FLWB
	4	8	G-R	WFIT
	4	33	R-G	WFIR
		9 to 25		GND
		34 to 50		GDN
		(see Notes)		

Note 1: These leads are grounded in the carrier shelf when cable connectors C and D are installed in jacks C and D. They are cut off at the MDF when cables C and D go directly to an MDF. Carrier problems are less likely to occur when the cables terminate directly on the MDF.

No8 2: When cables C and D go to an intermediate cross-connect terminal, (such as an SL-1 cross-connect terminal), they are terminated at that terminal and extended to the MDF. These leads are then cut off at the MDF.

Table 5
Cable D designations (local and remote locations)

Network loop	Card position	Connector C pin number	Lead color	Lead designation
X	9	1	BL-W	c5
X	9	26	W-BL	C6
X	9	2	o-w	c7
X	9	27	w-o	C8
Y	9	3	G-W	C13
Y	9	28	W-G	C14
Y	9	4	BR-W	C15
Y	9	29	W-BR	CI6
	5	5	s-w	GND
	5	30	w-s	GND
	4	6	BL-R	PFX1
	4	31	R-BL	PFX2
	8	7	O-R	PFY1
	8	32	R-O	PFY2
	9	8	G-R	DCST
	9	33	R-G	DSCR
	9	9	BR-R	DETT
	9	34	B-BR	DETR
		10-25		
		35-50 (see Notes)		

Nok *1:* These leads are grounded in the carrier shelf when cable connectors C and D are installed in jacks C and D. They are cut off at the MDF when cables C and D go directly to an MDF.

Note 2: When cables C and D go to an intermediatecross-connect terminal (such as an SL-1 cross-connect terminal), they are terminated at that terminal and extended to the MDF. These leads are then cut off at the MDF.

Figure 13
PFT intercabinet and console cross-connections (QUA1 shown)

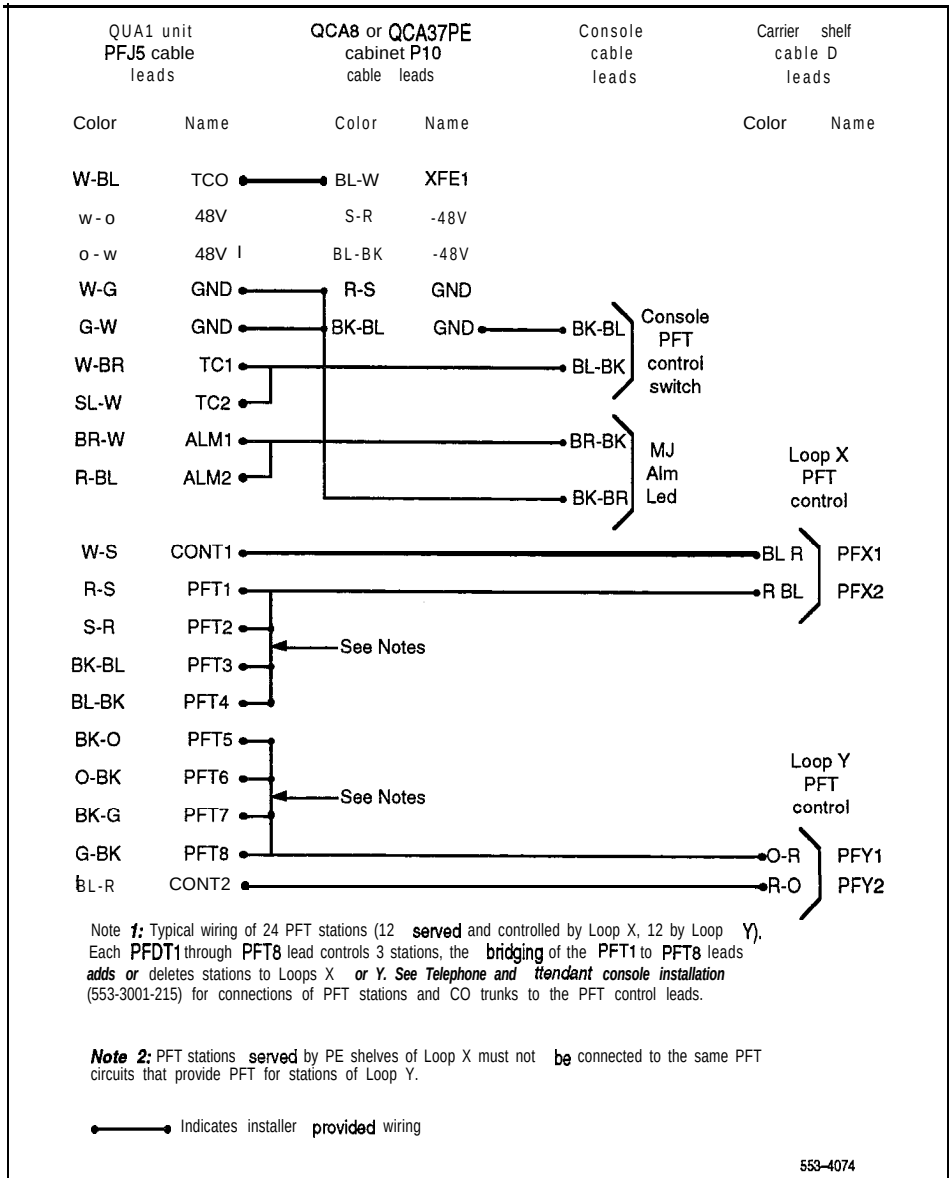

Note *1:* Typical wiring of 24 PFT stations (12 served and controlled by Loop X, 12 by Loop Y). Each PFDT1 through PFT8 lead controls 3 stations, the bridging of the PFT1 to PFT8 leads *adds or* deletes stations to Loops X *or Y. See Telephone and ttendant console installation* (553-3001-215) for connections of PFT stations and CO trunks to the PFT control leads.

Note 2: PFT stations served by PE shelves of Loop X must not be connected to the same PFT circuits that provide PFT for stations of Loop Y.

——● Indicates installer provided wiring

553–4074

Figure 14
PFT RPE local-to-remote RPE cross connections

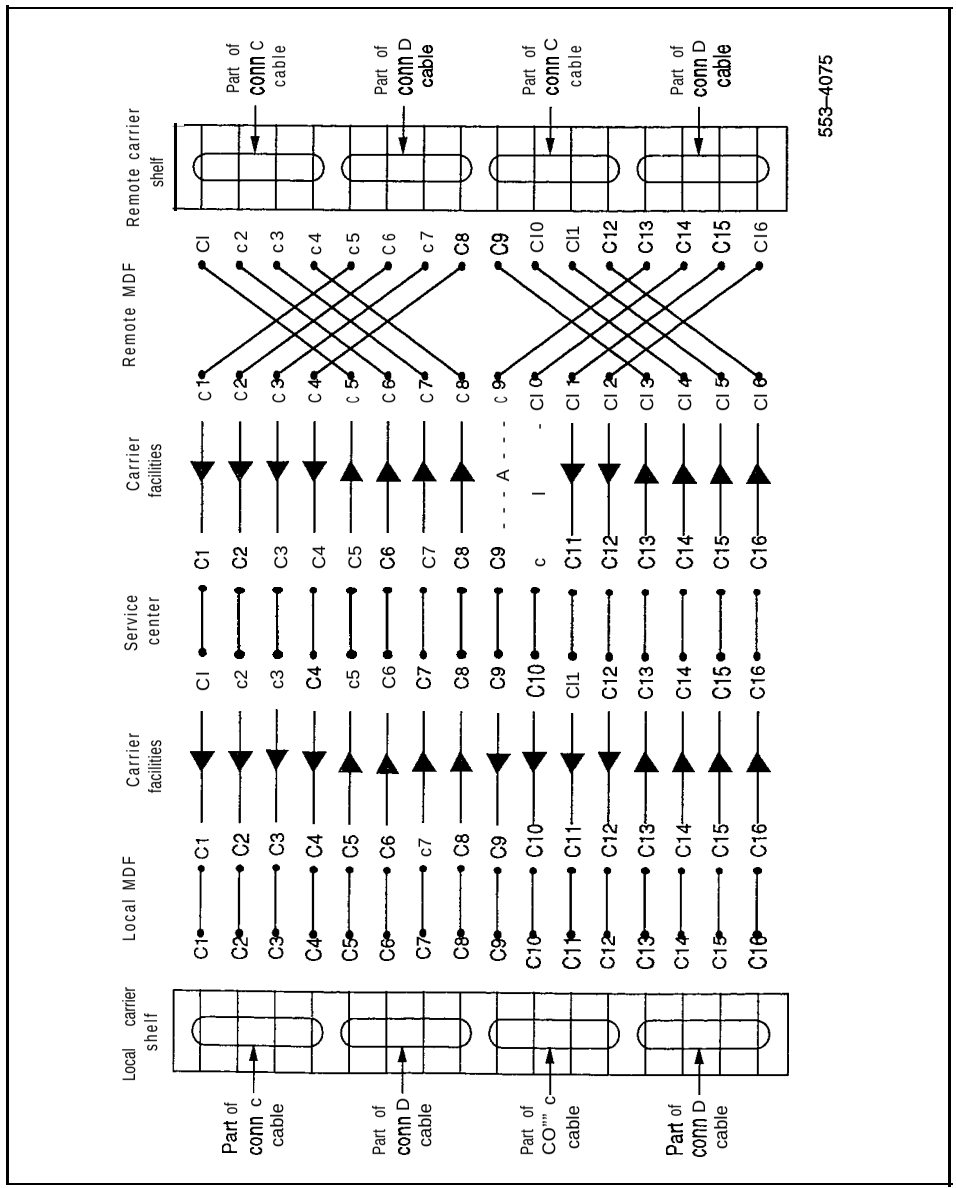

Figure 15
Detail of MDF cross-connections (local and remote)

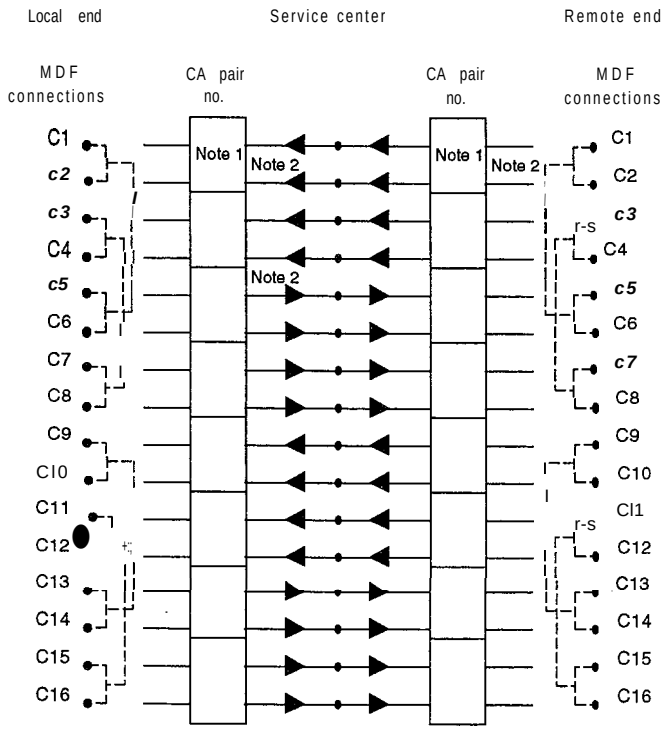

Note 1: Receiving and transmission cable pairs to be entered in these columns. Obtained from switching center personnel and work order.

Note 2:
Indicates transmission to service center from local end.
Indicates receiving from service center at local end.
Indicates receiving from service center at remote end.
Indicates transmission to service center from remote end.

Each set of cable pairs (joined by broken lines) is a separate carrier line (system).

553-5375

Figure 16
Maintenance leads cross-connections

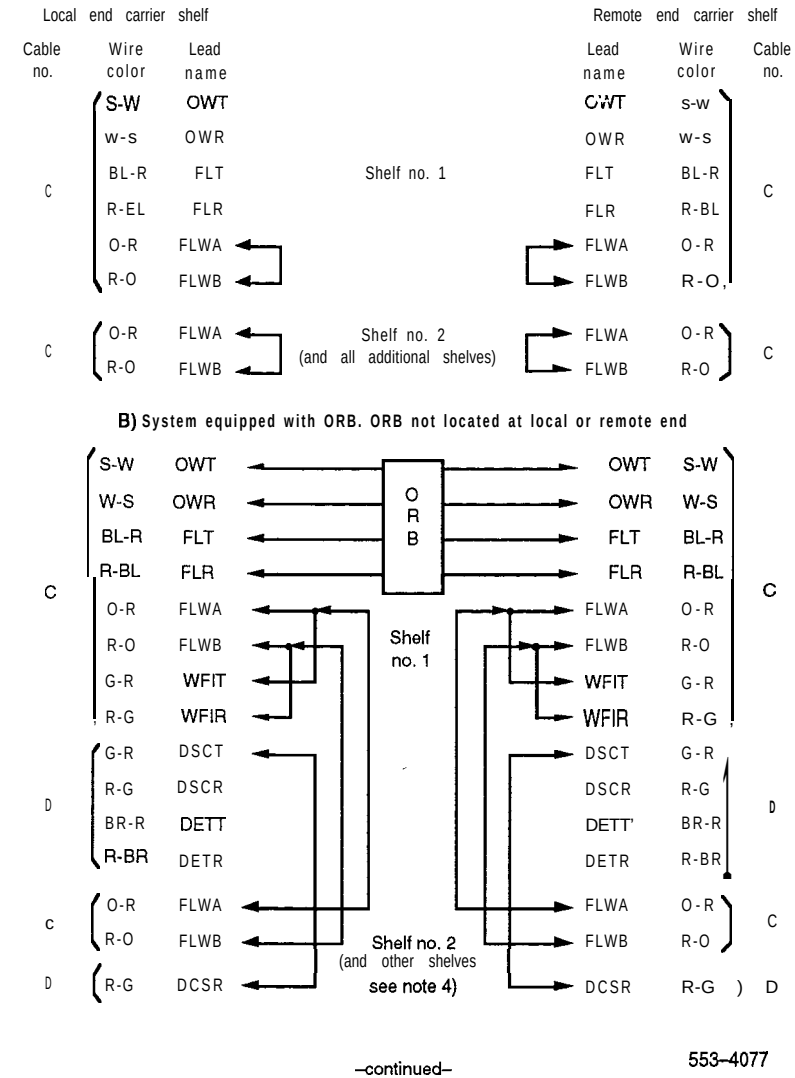

Figure 16
Maintenance leads cross-connections (continued)

C) System equipped with ORB at local or remote or both locations.

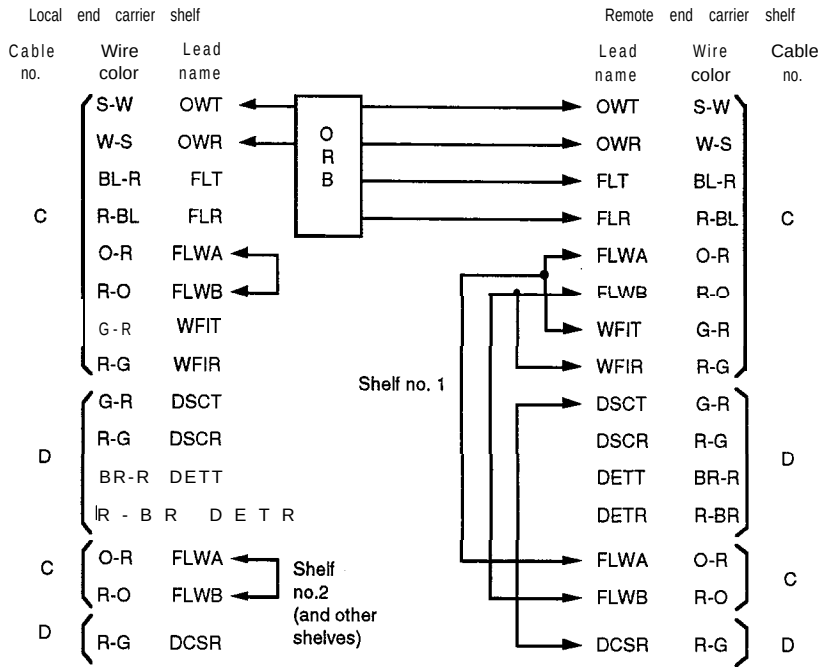

Note 1: Cross-connections are shown when ORB is located at the local end.

Note 2: If ORB is located at the remote end, the cross-connections shown above for the local end are connected at the remote end and the connections shown for the remote end are connected at the local end.

Note *3:* If there is an ORB at the local and remote ends, cross-connections for both en& are the same as shown above for the local end.

Note 4: Assuming all the shelves go to the same remote location.

553-4077

Testing

The following identifies the testing information for equipment associated with RPE.

- LD-1 carrier equipment. Refer to 368-2101-200.
- Network loops:
  Load the Remote Peripheral Equipment Diagnostic Program 33.
  Enter LD 33 on TTY
  Enter Command LOOP L (L is the loop number)
  Response will be "OK" if no faults are detected.
  Enter Command SCAR L to switch primary carriers on loop L
  Enter LOOP L again on TTY.

  Note: Any connection memory or channel faults detected result in the affected channel being disabled. Refer to LD30 to interpret outputs.

- 500/2500 telephones, SL-1 telephones, attendant consoles, and add-on modules. Refer to XII *features and services* (553-3001-305).
- Emergency transfer stations and trunks. Manually invoke emergency transfer by operating the emergency transfer switch on the faceplate of the QPC84 card. Perform an outgoing and incoming call to each station.

  Note: If outgoing trunks are ring ground start, momentarily operate the ground start button on the 500-type telephone after lifting the receiver to get dial tone.

The Remote Peripheral Equipment diagnostic program (LD33) should be included in the midnight routines for any system having RPE.

Transmission quality test

Figure 17 shows the monitoring facility built into the QPC99 Carrier Interface circuit card. Using these facilities, transmission quality should be tested when the installation is complete.

There are four jacks on the front of the QPC99:

- ROUT A and ROUT B are input jacks for channels A and B respectively.
- MON A and MON B are output jacks for the monitoring of the regenerated signal. Connecting a test set to the MON jack does not upset an operating RPE system. A test set can be connected to a MON jack at any time to test transmission quality.

Transmission may be checked by closing the MLP switch at the rear end, injecting a test signal at the ROUT jack and monitoring the output at a far end MON jack. This checks the transmission path in one direction. The reverse transmission path should be checked in the same way.

Span line fault locating

The typical repeatered line maintenance arrangement (Figure 18) includes a series of fault-locating filters and a fault-locating cable pair installed in each span line. One fault locating filter is used for all repeaters installed in a single housing (maximum 25 two-way repeaters in a single housing). A filter with a different audio center frequency is installed in each repeater housing in the span line.

The fault locating filter is a narrow band selective filter centered at one of 12 audio frequencies. The output of each repeater in the housing is bridged across the input of the respective fault-locating filter. The outputs of all filters in a span are connected to the common fault locating cable pair. This arrangement permits interrogating each repeater in a span from either span terminal using a test signal with an audio frequency component corresponding to the center frequency of the respective fault locating filter.

The fault locating test is performed using a Pulse Code Modulation (PCM) line and repeater test telephone (Lair Seigler Sierra 415A or equivalent), when a span line is producing excessive errors or a failure has occurred, and it is necessary to locate the defective repeater. To accomplish the test, the line is removed from service and the test telephone is connected to the line at the span terminal. The output of the test telephone transmit section is connected to the span line while the receive section input is connected to the corresponding fault locating jack.

A series of test pulses with an audio-frequency component is transmitted down the line. The audio-frequency component is selected in turn to correspond to each of the fault-locating filters in the span. This audio-frequency component appears in the output of each repeater in the span. However, a portion of this signal filters through the appropriate associated fault-locating filter and returns to the test telephone over the fault locating pair. The amplitude of this test signal is measured on the dB meter and is a function of the performance of the repeater under the various test signal conditions. If a repeater has failed completely, no test signal is returned to the test telephone. By changing the audio-frequency component, each repeater in a span can be tested until the faulty or marginal repeater is located.

Figure 17
QPC99 maintenance jacks and looping switches

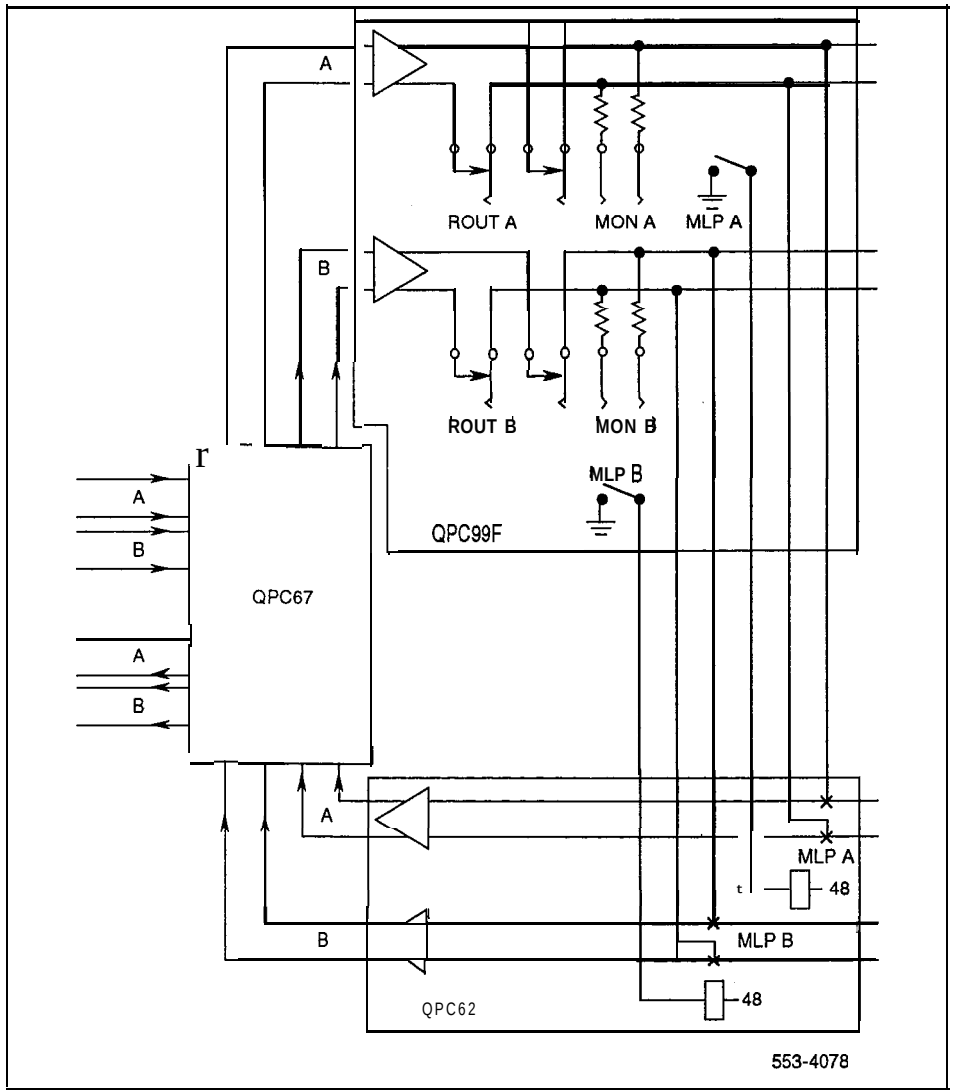

Figure 18
Typical span line fault-locating arrangement

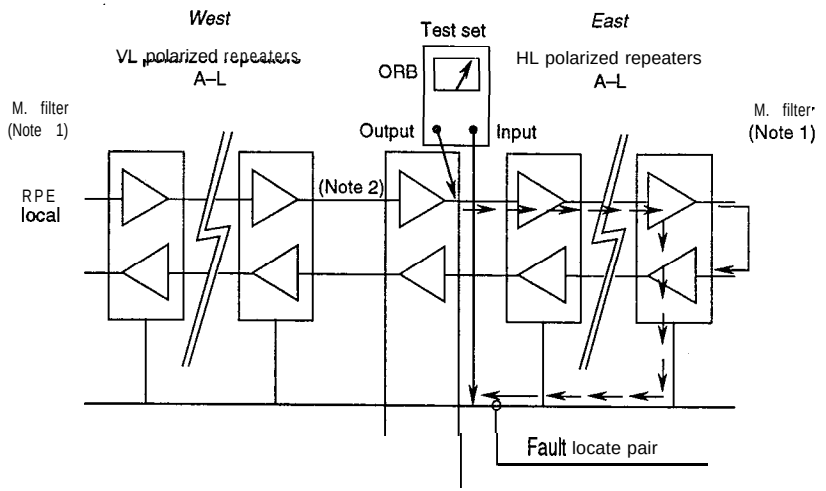

Note 1: Non-polarized M filter on the QPC67 pack. There must be no M filters within the repeater span.

Note 2: The previous filter must be good for the signal to continue.

Note ***3:*** Loopback conditions, controlled by QPC99, occur under the following conditions:

- DC on fault locate pair and TRIOS present
- DC on fault locate pair and excessive bipolar violations (BPV)
- TRIOS present

553-4079

Business Communication Systems

Remote Peripheral Equipment (RPE)

Description, installation and testing

© 1984 Northern Telecom
All rights reserved.
SL-1 is a registered trademark of Northern Telecom.
Information subject to change without notice.
Release 2.0
Standard
December 1, 1991
Printed in the U.S.A.

INTEGRATED SERVICES NETWORK

MERIDIAN SL-1*

QCA144 1.5 MB/S REMOTE PERIPHERAL EQUIPMENT CABINET DESCRIPTION, INSTALLATION AND TESTING

CONTENTS PAGE

1. DESCRIPTION 1-1
REMOTE PERIPHERAL EQUIPMENT (RPE)..... 1-1
QCA144 RPE CABINET 1-1
Expansion Shelves.. 1-1
Power Converters 1-1
Power Line Cords 1-2
Reserve Batteries.. 1-2
Cooling Units 1-2
Built-in Cross Connect Terminal 1-2
2. INSTALLATION AND CONNECTIONS 2-1
ENVIRONMENT.. 2-1
GROUNDING 2-1
OPTION AND SWITCH SETTINGS ON CIRCUIT PACKS . . 2-1
INSTALLATION. 2-1

Figure

1-1 Front View QCA144 RPE Cabinet 1-3
1-2 Front View Typical Common Equipment (CE) Cabinet 1-4
2-1 Ground Connection and Tests.. 2-4
2-2 Typical Terminal Block Layout.. 2-5
2-3 Built-in Cross Connect Terminal Layout 2-6
2-4 RPE Cables C and D Cross Connections.. 2-7

Contents Continued - - - - - - - - - - - - - - - - - -

printed in USA

0 Northern Telecom 1987

CONTENTS **Continued** **PAGE**

2-5 Front View of RPE Cabinet.. 2-8
2-6 Shelf Assembly 2-19
2-7 Rear View of Cabinet 2-20
2-8 Battery Cell Connections 2-26
2-9 Reserve Power Supply Connections 2-27
2-10 Expansion Battery Unit Connections 2-28
2-11 P10 Cable Terminations and Designations 2-33
2-12 Cabinet Top Assembly 2-36
2-13 Cooling Unit Location and Connections 2-37
2-14 QBL15 Battery Distribution Box 2-43
2-15 Reserve Power Connections Outside Cabinet 2-44
2-16 Battery Sensing and Monitoring Connections. 2-45
2-17 Local-To-Remote Cross-Connections.. 2-46

Charts

2-1 QCA144 RPE CABINET INSTALLATION..... 2-2
2-2 QSD66 OR QSD69 EXPANSION SHELF INSTALLATION . 2-16
2-3 QBL24 BATTERY UNIT INSTALLATION (MAIN UNIT) . . 2-21
2-4 EXPANSION QBL24 BATTERY UNIT INSTALLATION.... 2-24
2-5 QUA6 POWER FAIL TRANSFER UNIT (PFTU) INSTALLATION..... 2-29
2-6 ALARM AND TRANSFER WIRING (P10) INSTALLATION..... 2-30
2-7 QPC705 POWER CONVERTER INSTALLATION..... 2-34
2-8 QUD24 FAN UNIT INSTALLATION..... 2-35
2-9 QCAD321 JUNCTION BOX ASSEMBLY INSTALLATION. 2-38
2-10 QBL15 BATTERY DISTRIBUTION BOX INSTALLATION . 2-42

Tables

2-A PERIPHERAL EQUIPMENT CABLE TERMINATING SEQUENCE 2-9
2-B PFJ1 EMERGENCY TRANSFER CABLE CROSS-CONNECTIONS 2-32
2-C CABLE C DESIGNATIONS (RECEIVE) LOCAL AND REMOTE..... 2-47
2-D CABLE D DESIGNATIONS (TRANSMIT) LOCAL AND REMOTE..... 2-48

This practice is reissued to include additional information about cross-connections, to remove references to rectifiers other than the QRF12 -48 V rectifier supplied with the system and to make other minor changes. Changes are indicated by a vertical bar in the margin next to the affected item.

1. DESCRIPTION

REMOTE PERIPHERAL EQUIPMENT (RPE)

1 .01 A description of the use and operation of RPE is given in **553-2601-200.**

1.02 This appendix describes the installation, connections and testing of RPE installed in a QCA144 RPE cabinet and in a QSD69 RPE shelf mounted in a cabinet either at the remote end or the local end.

QCA144 RPE CABINET

1.03 The QCA144 RPE cabinet is used to house RPE equipment at a remote location. The single-tier base cabinet is equipped with an RPE shelf, one PE shelf capable of accommodating ten PE line packs and a peripheral buffer circuit pack, and the required power equipment (Fig. l-l). The base cabinet can be expanded to a two- or three-tier cabinet by the addition of one RPE or two PE expansion shelves. An RPE shelf can be installed in place of a PE expansion shelf if additional network loops are required.

Expansion Shelves

1.04 QSD69 RPE Shelf. The QSD69 RPE shelf assembly can be mounted at the Main Meridian SL-1 location in a QCA136 or QCA141 CE equipment cabinet (Fig. l-2) or in a QCA144 RPE cabinet at the remote location. The RPE shelf assembly is designed to contain all the RPE related circuit packs required to operate two network loops. Included in the shelf assembly is a dual loop PE shelf containing eight slots for lines and trunks. One additional slot is reserved for a dual loop peripheral buffer circuit pack.

1.05 QSD66 PE Expansion Shelf. The QSD66 PE expansion shelf can be used to expand a QCA144 RPE cabinet to a two- or three-tier cabinet. The QSD66 is equipped with two PE shelves each capable of accommodating eight line circuit packs and one peripheral buffer circuit pack.

Note: Although the QSD66 PE expansion shelf provides dual-loop capabilities, the shelf can only be used in a single-loop mode when operating with RPE.

Power Converters

1.06 QPC705 Power Converter. The QPC705 power converter supplies ±15 V (for SL-1 and digital telephones) and -150 V (for message waiting) to the PE shelf in the first tier of the cabinet. A QCAD278 cable is required to connect the QPC705 converter.

1.07 QPC706 Power Converter. The QPC706 power converter provides all the required power supplies to each PE shelf in the second and third tiers of the cabinet. One converter is required for each PE shelf and is installed in the designated slot on each shelf.

Power Line Cords

1.08 Three commercial power line cords can be used with the QCA144 RPE cabinet.

(a) A QCAD273 line cord is used when a 115 V 15A power supply is provided. A NEMA type 5-15R power supply receptacle is required to accommodate the line cord.

(b) A QCAD274 line cord is used when a 220 V 20A power supply is provided. A NEMA type L6-20R power supply receptacle is required to accommodate the line cord.

(c) A QCAD275 line cord is used when a 110 V30A power supply is provided. A NEMA type L5-30R power supply receptacle is required to accommodate the line cord.

1.09 Power cords are connected to the rear of the -48 V rectifier in the cabinet.

Reserve Batteries

1.10 One or two QBL24 battery units containing rechargeable dry cells can be connected to the cabinet when service is required during commercial power failures.

1.11 The cabinet can also be connected to lead acid batteries through a QBL15 battery distribution box and a QCAD321 junction box assembly.

Cooling Units

1.12 QUD24 Cooling Units are used to dissipate excess heat and are required in cabinets equipped with three tiers.

Built-in Cross Connect Terminal

1.13 An optional built-in cross connect terminal using BIX* cable terminal block system is available with cabinets equipped for suppression of EMI. The built-in cross connect terminal. which is mounted on the EMI shields at the rear of the cabinet, is accessible through the removal of the cabinet rear covers. Connections to the system which would otherwise be made at an external wall mounted or frame mounted terminal can be made using the built-in cross connect terminal.

1.14 In a three tier cabinet the built-in cross connect terminal allows for 424 three-pair station wiring terminations plus additional connectors for Power Fail Transfer Unit (PFTU) terminations. However, in cases where a high density of 16-port line cards and/or four- or six-pair station cabling is used, there may not be sufficient space to route or terminate all the wiring. In these cases, additional external terminal blocks may be required. The built-in cross connect terminal feature is not used in two cabinet configurations.

* BIX is a trademark of Northern Telecom

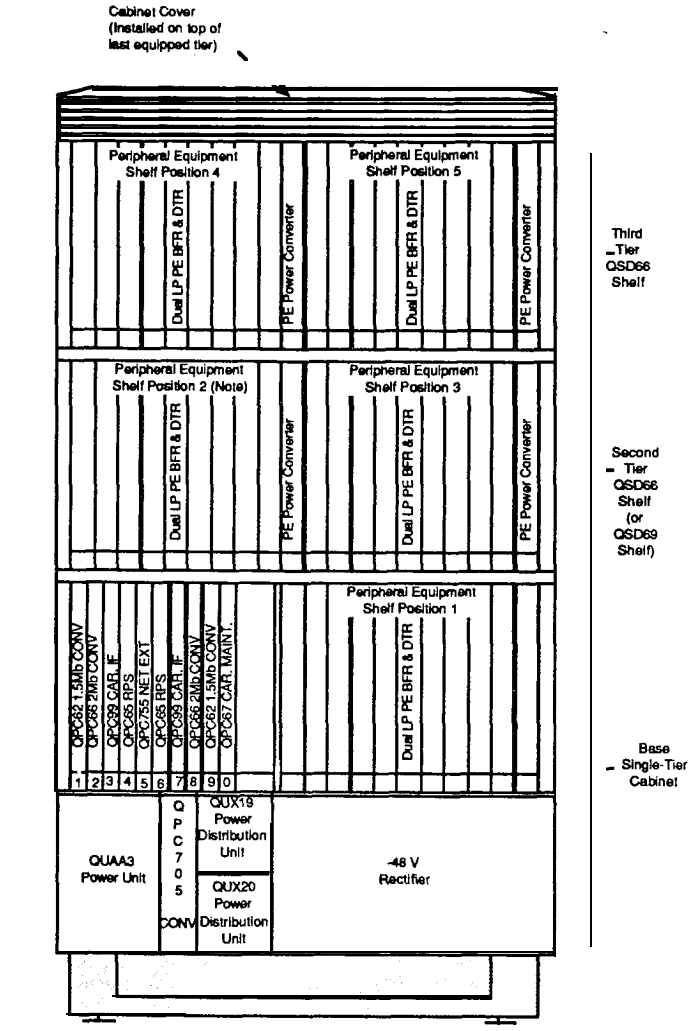

Note: This position can be equipped with an RPE shelf when additional RPE network loops are required.

(lll.553-1266)

Fig. 1-1
Front View QCA144 RPE Cabinet

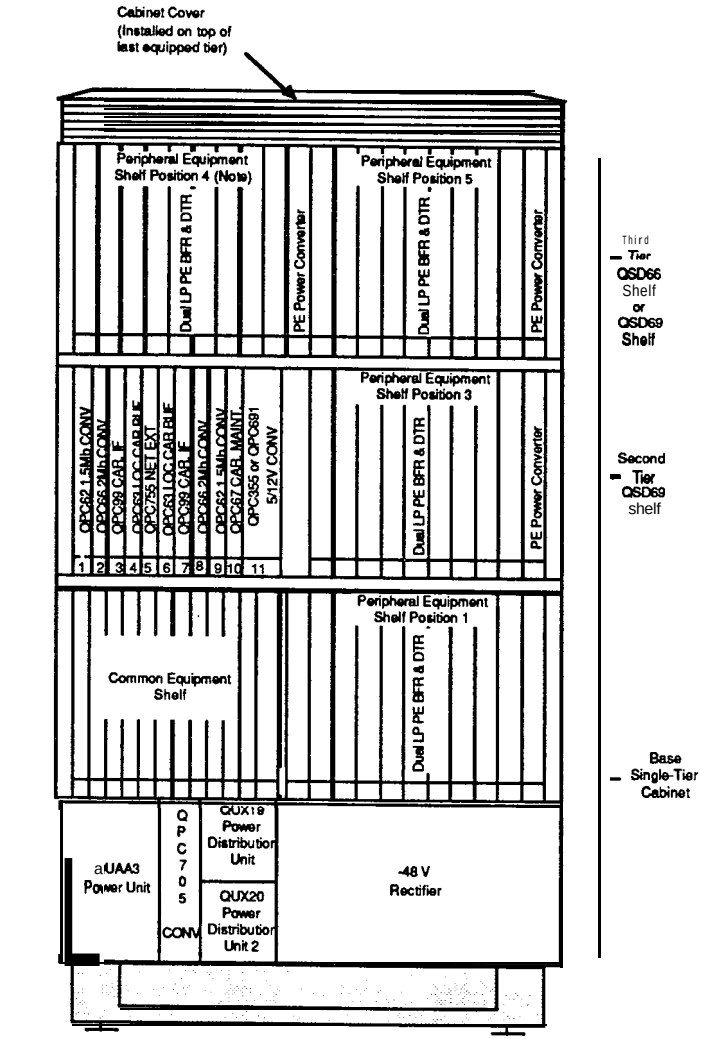

Note: This position can be equipped with a QSD69 RPE shelf when additional RPE network loops are required.

(lll.553-1267)

Fig. 1-2
Front View Typical Common Equipment (CE) Cabinet

2. INSTALLATION AND CONNECTIONS

ENVIRONMENT

2.01 The QCA144 should be installed in an environment suitable for Meridian SL-1. The location should be clean, dry and protected from extreme heat or cold. The operating environment described in 553-2YY1-200 for the location of the main Meridian SL-1 should be used as a guide when installing the QCA144 RPE cabinet.

GROUNDING

2.02 The QCA144 RPE cabinet must be connected to a suitable building ground to ensure proper operation of the RPE equipment. Refer to 553-2YY1-200 for a description of suitable building grounds.

OPTION AND SWITCH SETTINGS ON CIRCUIT PACKS

2.03 Certain circuit packs are equipped with option plugs or switches located on the component side of the pack. Refer to 553-2201-211 for a list of these circuit packs and the option settings.

I

circuit packs can prevent the system from operating properly and in certain cases can cause system failure. Check option settings ***on all*** circuit ***packs being*** installed ***in the cabinet.***

INSTALLATION

2.04 Chart 2-l describes the steps which should be followed when installing a QCA144 RPE cabinet.

2.05 Chart 2-2 describes the procedures which should be followed when installing an additional QSD66 PE or QSD69 RPE shelf assembly, in an existing QCA144 RPE cabinet.

2.06 Chart 2-3 describes the procedures which should be followed when installing a QBL24 Battery Unit.

2.07 Chart 2.4 describes the procedures which should be followed when installing an expansion QBL24 Battery Unit.

2.08 Chart 2-5 describes the procedures which should be followed when installing a QUA6 Power Fail Transfer Unit (PFTU).

2.09 Chart 2-6 describes the procedures which should be followed when installing alarm and transfer wiring (P10).

2.10 Chart 2-7 describes the procedures which should be followed when installing a QPC705 power converter.

2.11 Chart 2-8 describes the procedures which should be followed when installing QUD24 cooling units.

2.12 Chart 2-9 describes the procedures which should be followed when installing a QCAD321 junction box assembly.

2.13 Chart 2-10 describes the procedures which should be followed when installing QBL15 battery distribution box.

Chart 2-l
QCA144 RPE CABINET INSTALLATION

STEP	PROCEDURE
1	Transport the cabinet as close as possible to its final location.
2	Transport the remaining equipment to a convenient safe dry location.
3	Unpack and inspect the cabinet.
4	Remove cabinet from pallet and place on floor.
5	If casters are provided, tilt the cabinet and replace the levellers on the cabinet with four casters.
6	Adjust floor levellers or casters when in final location. When casters are provided, ensure that they are locked in position when the cabinet is in its final location.
7	Remove the front and rear cabinet covers.
8	If required, install additional shelves as described in Chart 2-2.
9	Install but do not connect a 6 AWG wire between the approved building ground and the ground lug identified by a ground symbol (Fig. 2-l) at the rear of the cabinet.
10	At the building ground end of the wire, connect the 6 AWG wire to the approved building using at least two fastening devices and insulate the connections with electrical tape. Install a DO NOT DISCONNECT tag on the connection.
11	With an ohmmeter, measure the resistance between the ground pin on the ac power cord plug and the ground lug at the rear of the cabinet (Fig. 2-l). The resistance should be 0 Ω. If greater than 0 Ω, check power cord connections at rear of cabinet.
12	Ensure that the AC BRKR breaker on the faceplate of the -48 V rectifier in the cabinet is set to OFF.
13	Connect the power line cord to the commercial ac power supply.
14	Measure the resistance between the system ground wire and the ground lug at the rear of the cabinet (Fig. 2-l). If the resistance is greater than 5 Ω, check the building ground and ac panel connections.

Chart Continued

Chart 2-1 Continued
QCA144 RPE CABINET INSTALLATION

STEP	PROCEDURE
15	Disconnect the power line cord from the commercial ac power supply.
16	Connect the 6 AWG building ground wire to the ground lug identified by a ground symbol at the rear of the cabinet (Fig. 2-l).
17	If required, install reserve battery unit as described in Chart 2-3.
18	If cabinet is not equipped with a built-in cross connect terminal, install connecting blocks at cross-connect terminal. A typical watt-mounted terminal block layout is shown in Fig. 2-2.
19	If a QUA6 Power Fail Transfer Unit (PFTU) is provided, install unit as described in Chart 2-4.
20	If required, install alarm and transfer (P10) wiring as described in Chart 2-5.
2 1	Install and terminate Peripheral Equipment (PE) cables to cross connect terminal. Cable terminating sequence is given in Table 2-A.

Note: These cables are usually factory installed in cabinets equipped with a built-in cross connect terminal (Fig. 2-3).

22	Install and terminate two NE A-25B-type cables from connectors C and D at the mar of the RPE shelf to connecting blocks at an external cross connect terminal. See Tables 2-C and 2-D cable color terminating sequence and lead designations. I

Note: Do not terminate RPE cables C and D on the built-in cross connect terminal.

23	Install cross connections for RPE cables C and D as shown in Fig. 2-4, Fig. 2-17 and in Pan 6 of 553-2601-200. I
24	Ensure that the circuit packs are in their assigned position in the RPE shelf (Fig. 2-5).
25	Connect ac power line cord to commercial ac power supply.
26	Set all breakers at the front of the cabinet to ON.
27	Test RPE equipment as described in 553-2601-200.
28	Install front and mar covers on cabinet.

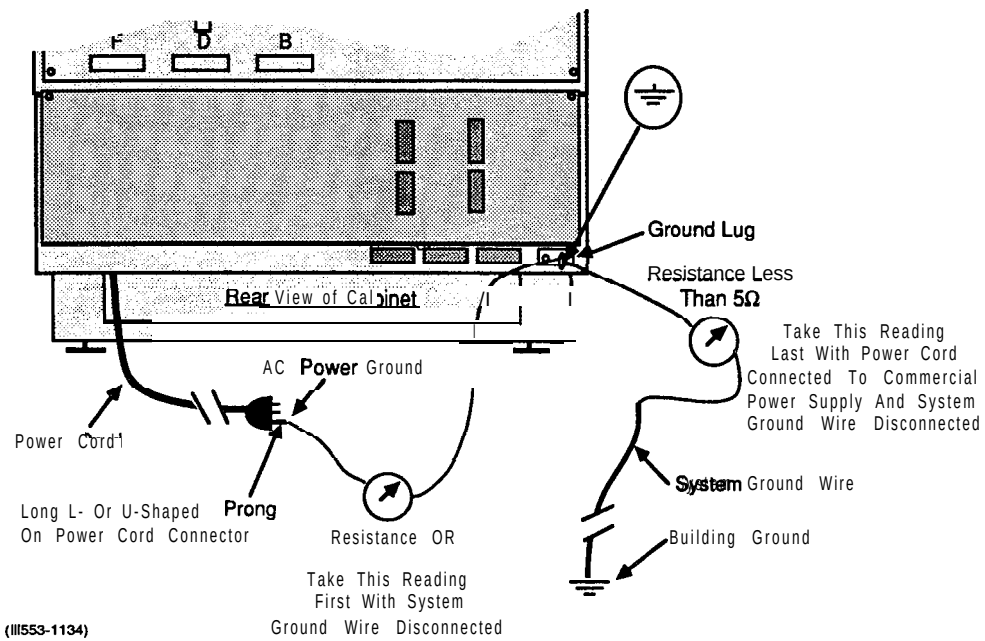

Fig. 2-1
Ground Connection and Tests

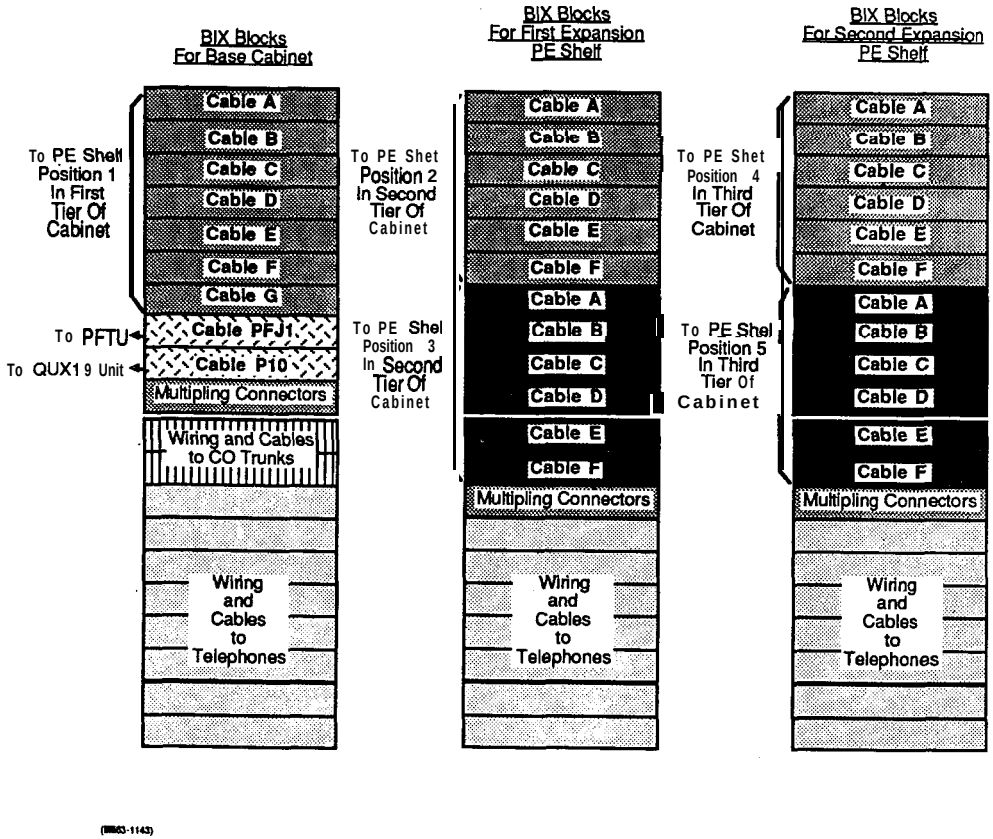

Fig. 2-2
Typical Terminal Block Layout

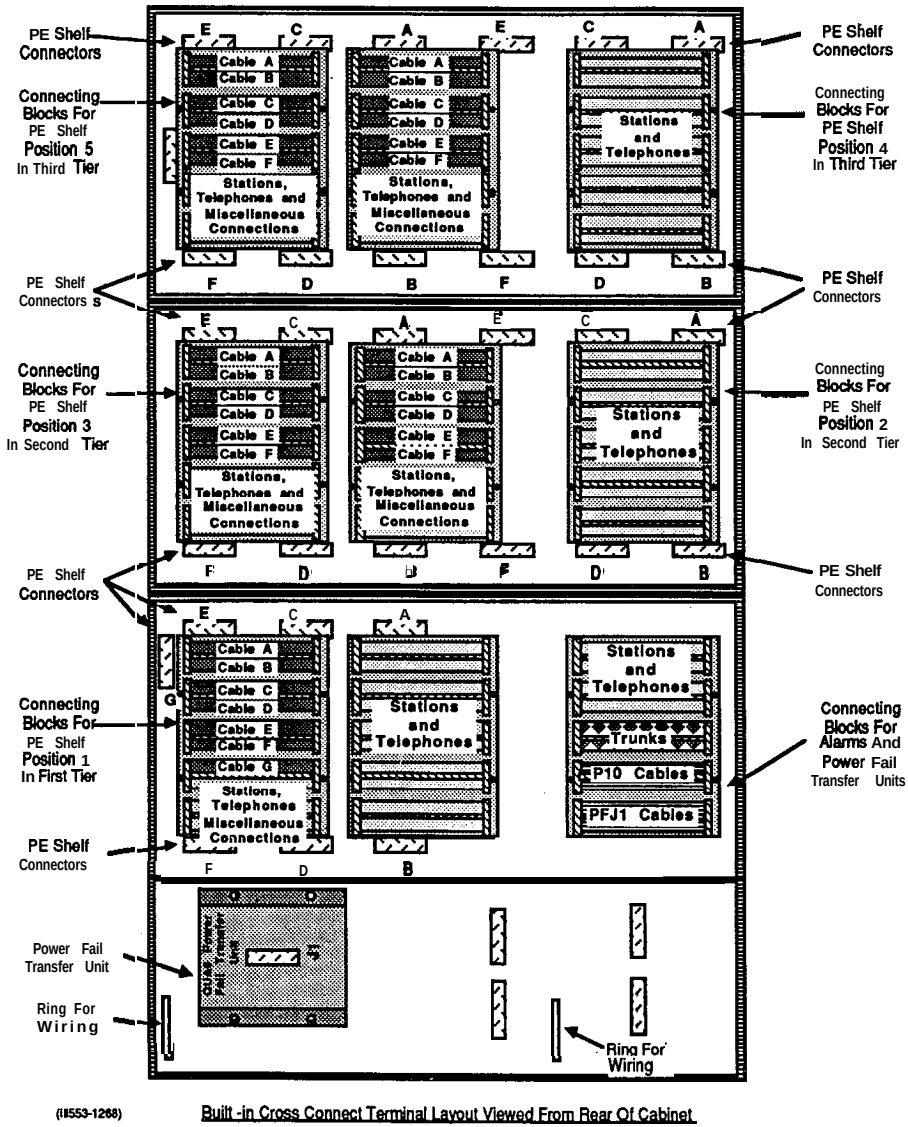

Fig. 2-3
Built-in Cross Connect Terminal Layout

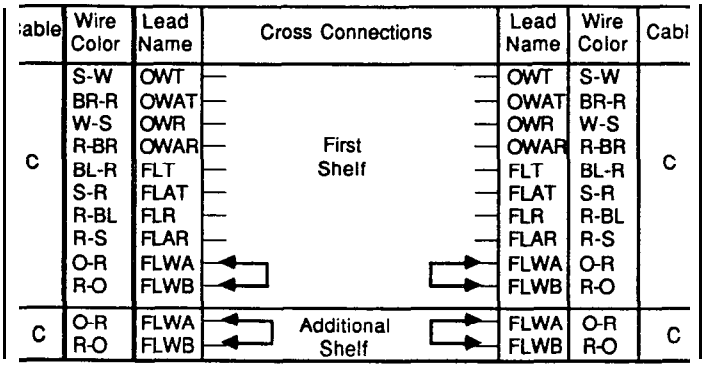

RPE System Not Equipped With ORB

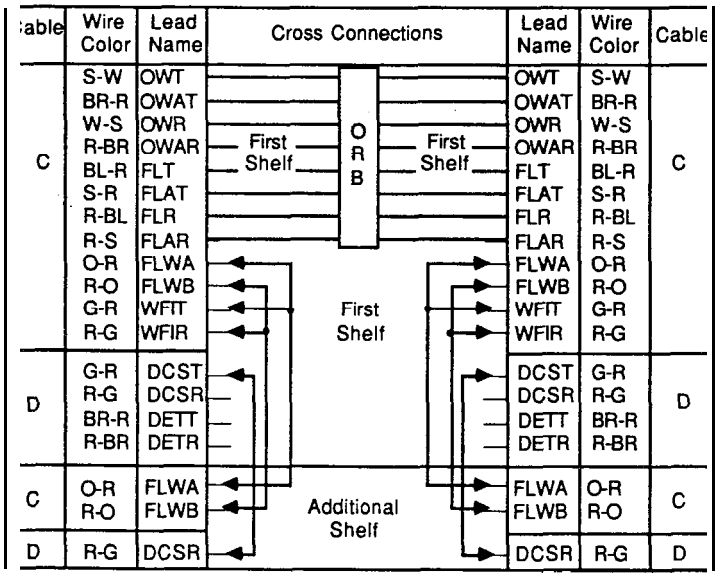

RPE System Equipped With ORB Not Located At Local

(III.553-1269)

Fig. 2-4
RPE Cables C and D Cross Connections

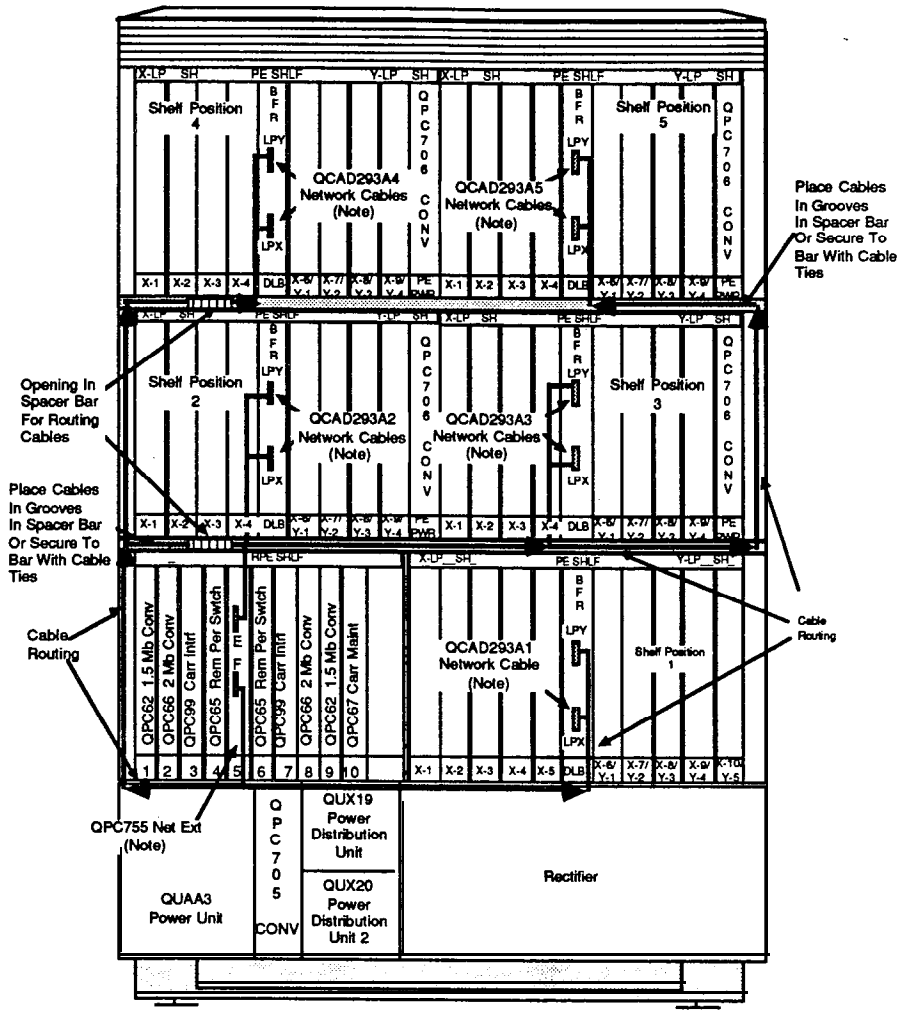

Fig. 2-5
Front View of RPE Cabinet

Table 2-A
PERIPHERAL EQUIPMENT CABLE TERMINATING SEQUENCE

I

			PE CABLE FROM CONNECTOR A					
			TERMINAL NUMBER (TN)					
PAIR	PIN	PAIR COLOR	DUAL LOOP MODE	SINGLE LOOP MODE	16 UNITS PER CARD	8 UNITS PER CARD	4 UNITS PER CARD	UNITS PER CARD
1T	26	W-BL	SLOT X-1 CARD	SLOT X-1 CARD 1	UNIT 0	UNIT 0	UNIT 0	UNIT 0
1R	1	BL-W						
2T	27	W-O			UNIT 8			
2R	2	O-W						
3T	28	W-G			UNIT 1	UNIT 1		
3R	3	G-W						
4T	29	W-BR			UNIT 9			
4R	4	BR-W						
5T	30	W-S			UNIT 2	UNIT 2	UNIT 1	UNIT 1
5R	5	S-W						
6T	31	R-BL			UNIT 10			
6R	6	BL-R						
7T	32	R-O			UNIT 3	UNIT 3		
7R	7	O-R						
8T	33	R-G			UNIT 11			
8R	8	G-R						
9T	34	R-BR			UNIT 4	UNIT 4	UNIT 2	
9R	9	BR-R						
10T	35	R-S			UNIT 12			
10R	10	S-R						
11T	36	BK-BL			UNIT 5	UNIT 5		
11R	11	BL-BK						
12T	37	BK-O			UNIT 13			
12R	12	O-BK						
13T	38	BK-G			UNIT 6	UNIT 6	UNIT 3	
13R	13	G-BK						
14T	39	BK-BR			UNIT 14			
14R	14	BR-BK						
15T	40	BK-S			UNIT 7	UNIT 7		
15R	15	S-BK						
16T	41	Y-BL			UNIT 15			
16R	16	BL-Y						
17T	42	Y-O	SLOT X-2 CARD 2	SLOT X-2 CARD 2	UNIT 0	UNIT 0	UNIT 0	UNIT 0
17R	17	O-Y						
18T	43	Y-G			UNIT 8			
18R	18	G-Y						
19T	44	Y-BR			UNIT 1	UNIT 1		
19R	19	BR-Y						
20T	45	Y-S			UNIT 9			
20R	20	S-Y						
21T	46	V-BL			UNIT 2	UNIT 2	UNIT 1	UNIT 1
21R	21	BL-V						
22T	47	V-O			UNIT 10			
22R	22	O-V						
23T	48	V-G			UNIT 3	UNIT 3		
23R	23	G-V						
24T	49	V-BR			UNIT 11			
24R	24	BR-V						
25R	50	V-S	SPARE					
25T	25	S-V						

(II553-1146a)

Table Continued

Table 2-A Continued
PERIPHERAL EQUIPMENT CABLE TERMINATING SEQUENCE

PE CABLE FROM CONNECTOR B								
			TERMINAL NUMBER (TN)					
PAIR	PIN	PAIR COLOR	DUAL LOOP MODE	SINGLE LOOP MODE	16 UNITS PER CARD	8 UNITS PER CARD	4 UNITS PER CARD	2 UNIT PER CARD
1T	26	W-BL	SLOT X-2 CARD 2	SLOT X-2 CARD 2	UNIT 4	UNIT 4	UNIT 2	
1R	1	BL-W						
2T	27	W-O			UNIT 12			
2R	2	O-W						
3T	28	W-G			UNIT 5	UNIT 5		
3R	3	G-W						
4T	29	W-BR			UNIT 13			
4R	4	BR-W						
5T	30	W-S			UNIT 6	UNIT 6	UNIT 3	
5R	5	S-W						
6T	31	R-BL			UNIT 14			
6R	6	BL-R						
7T	32	R-O			UNIT 7	UNIT 7		
7R	7	O-R						
8T	33	R-G			UNIT 15			
8R	8	G-R						
9T	34	R-BR	SLOT X-3 CARD 3	SLOT X-3 CARD 3	UNIT 0	UNIT 0	UNIT 0	UNIT 0
9R	9	BR-R						
10T	35	R-S			UNIT 8			
10R	10	S-R						
11T	36	BK-BL			UNIT 1	UNIT 1		
11R	11	BL-BK						
12T	37	BK-O			UNIT 9			
12R	12	O-BK						
13T	38	BK-G			UNIT 2	UNIT 2	UNIT 1	UNIT 1
13R	13	G-BK						
14T	39	BK-BR			UNIT 10			
14R	14	BR-BK						
15T	40	BK-S			UNIT 3	UNIT 3		
15R	15	S-BK						
16T	41	Y-BL			UNIT 11			
16R	16	BL-Y						
17T	42	Y-O			UNIT 4	UNIT 4	UNIT 2	
17R	17	O-Y						
18T	43	Y-G			UNIT 12			
18R	18	G-Y						
19T	44	Y-BR			UNIT 5	UNIT 5		
19R	19	BR-Y						
20T	45	Y-S			UNIT 13			
20R	20	S-Y						
21T	46	V-BL			UNIT 6	UNIT 6	UNIT 3	
21R	21	BL-V						
22T	47	V-O			UNIT 14			
22R	22	O-V						
23T	48	V-G			UNIT 7	UNIT 7		
23R	23	G-V						
24T	49	V-BR			UNIT 15			
24R	24	BR-V						
25R	50	V-S	SPARE					
25T	25	S-V						

(lll553-1146b)

Table Continued

Table 2-A Continued
PERIPHERAL EQUIPMENT CABLE TERMINATING SEQUENCE

PE CABLE FROM CONNECTOR C								
			TERMINAL NUMBER (TN)					
PAIR	PIN	PAIR COLOR	DUAL LOOP MODE	SINGLE LOOP MODE	16 UNITS PER CARD	8 UNITS PER CARD	4 UNITS PER CARD	UNITS PER CARD
1T	26	W-BL			UNIT 0	UNIT 0	UNIT 0	UNIT 0
1R	1	BL-W						
2T	27	W-O			UNIT 8			
2R	2	O-W						
3T	28	W-G			UNIT 1	UNIT 1		
3R	3	G-W						
4T	29	W-BR			UNIT 9			
4R	4	BR-W						
5T	30	W-S	S	S	UNIT 2	UNIT 2	UNIT 1	UNIT 1
5R	5	S-W	L	L				
6T	31	R-BL	O	O	UNIT 10			
6R	6	BL-R	T	T				
7T	32	R-O			UNIT 3	UNIT 3		
7R	7	O-R	X-4	X-4				
8T	33	R-G			UNIT 11			
8R	8	G-R	C	C				
9T	34	R-BR	A	A	UNIT 4	UNIT 4	UNIT 2	
9R	9	BR-R	R	R				
10T	35	R-S	D	D	UNIT 12			
10R	10	S-R						
11T	36	BK-BL	4	4	UNIT 5	UNIT 5		
11R	11	BL-BK						
12T	37	BK-O			UNIT 13			
12R	12	O-BK						
13T	38	BK-G			UNIT 6	UNIT 6	UNIT 3	
13R	13	G-BK						
14T	39	BK-BR			UNIT 14			
14R	14	BR-BK						
15T	40	BK-S			UNIT 7	UNIT 7		
15R	15	S-BK						
16T	41	Y-BL			UNIT 15			
16R	16	BL-Y						
17T	42	Y-O	S	S	UNIT 0	UNIT 0	UNIT 0	UNIT 0
17R	17	O-Y	L	L				
18T	43	Y-G	O	O	UNIT 8			
18R	18	G-Y	T	T				
19T	44	Y-BR			UNIT 1	UNIT 1		
19R	19	BR-Y						
20T	45	Y-S	X-5	X-5	UNIT 9			
20R	20	S-Y						
21T	46	V-BL	C	C	UNIT 2	UNIT 2	UNIT 1	UNIT 1
21R	21	BL-V	A	A				
22T	47	V-O	R	R	UNIT 10			
22R	22	O-V	D	D				
23T	48	V-G			UNIT 3	UNIT 3		
23R	23	G-V	5	5				
24T	49	V-BR	(Note 1)		UNIT 11			
24R	24	BR-V	(Note 2)					
25R	50	V-S	SPARE					
25T	25	S-V						

Notes:
1. Card number 5 (slot 5 in PE shelf) cannot be assigned on shelves equipped with only eight PE slots.
2. The transfer lead (BR-V) is provided only on PE shelves equipped with a maximum of eight slots and connects to the PE SHELF TRANSFER lead (W-O) of the QUA6 power fail transfer unit serving trunks on this shelf (if equipped).

(lfib53-1148c)

Table Continued - - - - - - -

Table 2-A Continued
PERIPHERAL EQUIPMENT CABLE TERMINATING SEQUENCE

PE CABLE FROM CONNECTOR D								
			TERMINAL NUMBER (TN)					
PAIR	PIN	PAIR COLOR	DUAL LOOP MODE	SINGLE LOOP MODE	16 UNITS PER CARD	8 UNITS PER CARD	4 UNITS PER CARD	2 UNITS PER CARD
1T	26	W-BL			UNIT			
1R	1	BL-W	S	S	4	UNIT		
2T	27	W-O	L	L	UNIT	4		
2R	2	O-W	0	0	12		UNIT	
3T	28	W-G	T	T	UNIT		2	
3R	3	G-W			5	UNIT		
4T	29	W-BR	X-5	X-5	UNIT	5		
4R	4	BR-W			13			
5T	30	W-S	C	C	UNIT			
5R	5	S-W	A	A	6	UNIT		
6T	31	R-BL	R	R	UNIT	6		
6R	6	BL-R	D	D	14		UNIT	
7-r	32	R-O			UNIT		3	
7R	7	O-R	5	5	7	UNIT		
8T	33	R-G			UNIT	7		
8R	8	G-R	(Note)		15			
9T	34	RBR			UNIT			
9R	9	BR-R			0	UNIT		
10T	35	R-S			UNIT	0		
10R	10	S-R			8		UNIT	UNIT
11T	36	BK-BL			UNIT		0	0
11R	11	BL-BK			1	UNIT		
12T	37	BK-O			UNIT	1		
12R	12	O-BK			9			
13T	38	BK-G			UNIT			
13R	13	G-BK			2	UNIT		
14T	39	BK-BR	S	S	UNIT	2		
14R	14	BR-BK	L	L	10		UNIT	UNIT
15T	40	BK-S	O	O	UNIT		1	1
15R	15	S-BK	T	T	3	UNIT		
16T	41	Y-BL			UNIT	3		
16R	16	BL-Y	Y-1	X-6	11			
17T	42	Y-O			UNIT			
17R	17	O-Y	C	C	4	UNIT		
18T	43	Y-G	A	A	UNIT	4		
18R	18	G-Y	R	R	12		UNIT	
19T	44	Y-BR	D	D	UNIT		2	
19R	19	BR-Y			5	UNIT		
20T	45	Y-S	1	6	UNIT	5		
20R	20	S-Y			13			
21T	46	V-BL			UNIT			
21R	21	BL-V			6	UNIT		
22T	47	V-O			UNIT	6		
22R	22	O-V			14		UNIT	
23T	48	V-G			UNIT		3	
23R	23	G-V			7	UNIT		
24T	49	V-BR			UNIT	7		
24R	24	BR-V			15			
25R	50	V-S	SPARE					
25T	25	S-V						

Note: Card number 5 (slot 5 in PE shelf) cannot be assigned on shelves equipped with only eight PE slots.

(III553-1146d)

Table Continued -

Table 2-A Continued
PERIPHERAL EQUIPMENT CABLE TERMINATING SEQUENCE

PE CABLE FROM CONNECTOR E									
			TERMINAL NUMBER (TN)						
PAIR	PIN	PAIR COLOR	DUAL LOOP MODE	SINGLE LOOP MODE	16 UNITS PER CARD	8 UNITS PER CARD	4 UNITS PER CARD	2 UNITS PER CARD
1T	26	W-BL	SLOT Y-2 CARD 2	SLOT X-7 CARD 7	UNIT 0	UNIT 0	UNIT 0	UNIT 0
1R	1	BL-W						
2T	27	W-O			UNIT 8			
2R	2	O-W						
3T	28	W-G			UNIT 1	UNIT 1		
3R	3	G-W						
4T	29	W-BR			UNIT 9			
4R	4	BR-W						
5T	30	W-S			UNIT 2	UNIT 2	UNIT 1	UNIT 1
5R	5	S-W						
6T	31	R-BL			UNIT 10			
6R	6	BL-R						
7T	32	R-O			UNIT 3	UNIT 3		
7R	7	O-R						
8T	33	R-G			UNIT 11			
8R	8	G-R						
9T	34	R-BR			UNIT 4	UNIT 4	UNIT 2	
9R	9	BR-R						
10T	35	R-S			UNIT 12			
10R	10	S-R						
11T	36	BK-BL			UNIT 5	UNIT 5		
11R	11	BL-BK						
12T	37	BK-O			UNIT 13			
12R	12	O-BK						
13T	38	BK-G			UNIT 6	UNIT 6	UNIT 3	
13R	13	G-BK						
14T	39	BK-BR			UNIT 14			
14R	14	BR-BK						
15T	40	BK-S			UNIT 7	UNIT 7		
15R	15	S-BK						
16T	41	Y-BL			UNIT 15			
16R	16	BL-Y						
17T	42	Y-O	SLOT Y-3 CARD 3	SLOT X-8 CARD 8	UNIT 0	UNIT 0	UNIT 0	UNIT 0
17R	17	O-Y						
18T	43	Y-G			UNIT 8			
18R	18	G-Y						
19T	44	Y-BR			UNIT 1	UNIT 1		
19R	19	BR-Y						
20T	45	Y-S			UNIT 9			
20R	20	S-Y						
21T	46	V-BL			UNIT 2	UNIT 2	UNIT 1	UNIT 1
21R	21	BL-V						
22T	47	V-O			UNIT 10			
22R	22	O-V						
23T	48	V-G			UNIT 3	UNIT 3		
23R	23	G-V						
24T	49	V-BR			UNIT 11			
24R	24	BR-V						
25R	50	V-S	SPARE					
25T	25	S-V						

(Ill553-1146e)

Table Continued

Table 2-A Continued
PERIPHERAL EQUIPMENT CABLE TERMINATING SEQUENCE

PE CABLE FROM CONNECTOR F								
			TERMINAL NUMBER (TN)					
PAIR	PIN	PAIR COLOR	DUAL LOOP MODE	SINGLE LOOP MODE	16 UNITS PER CARD	8 UNITS PER CARD	4 UNITS PER CARD	2 UNITS PER CARD
1T	26	W-BL	SLOT Y-3 CARD 3	SLOT X-8 CARD 8	UNIT 4	UNIT 4	UNIT 2	
1R	1	BL-W						
2T	27	W-O			UNIT 12			
2R	2	O-W						
3T	28	W-G			UNIT 5	UNIT 5		
3R	3	G-W						
4T	29	W-BR			UNIT 13			
4R	4	BR-W						
5T	30	W-S			UNIT 6	UNIT 6	UNIT 3	
5R	5	S-W						
6T	31	R-BL			UNIT 14			
6R	6	BL-R						
7T	32	R-O			UNIT 7	UNIT 7		
7R	7	O-R						
8T	33	R-G			UNIT 15			
8R	8	G-R						
9T	34	R-BR	SLOT Y-4 CARD 4	SLOT X-9 CARD 9	UNIT 0	UNIT 0	UNIT 0	UNIT 0
9R	9	BR-R						
10T	35	R-S			UNIT 8			
10R	10	S-R						
11T	36	BK-BL			UNIT 1	UNIT 1		
11R	11	BL-BK						
12T	37	BK-O			UNIT 9			
12R	12	O-BK						
13T	38	BK-G			UNIT 2	UNIT 2	UNIT 1	UNIT 1
13R	13	G-BK						
14T	39	BK-BR			UNIT 10			
14R	14	BR-BK						
15T	40	BK-S			UNIT 3	UNIT 3		
15R	15	S-BK						
16T	41	Y-BL			UNIT 11			
16R	16	BL-Y						
17T	42	Y-O			UNIT 4	UNIT 4	UNIT 2	
17R	17	O-Y						
18T	43	Y-G			UNIT 12			
18R	18	G-Y						
19T	44	Y-BR			UNIT 5	UNIT 5		
19R	19	BR-Y						
20T	45	Y-S			UNIT 13			
20R	20	S-Y						
21T	46	V-BL			UNIT 6	UNIT 6	UNIT 3	
21R	21	BL-V						
22T	47	V-O			UNIT 14			
22R	22	O-V						
23T	48	V-G			UNIT 7	UNIT 7		
23R	23	G-V						
24T	49	V-BR			UNIT 15			
24R	24	BR-V						
25R	50	V-S	SPARE					
25T	25	S-V						

(NSS3-11460)

Table Continued - - - - - - - - -

Table 2-A Continued
PERIPHERAL EQUIPMENT CABLE TERMINATING SEQUENCE

PE CABLE FROM CONNECTOR G								
			TERMINAL NUMBER (TN)					
PAIR	PIN	PAIR COLOR	DUAL LOOP MODE	SINGLE LOOP MODE	16 UNITS PER CARD	8 UNITS PER CARD	4 UNITS PER CARD	2 UNITS PER CARD
1T	26	W-BL			UNIT 0	UNIT 0	UNIT 0	UNIT 0
1R	1	BL-W						
2T	27	W-O			UNIT 8			
2R	2	O-W						
3T	28	W-G			UNIT 1	UNIT 1		
3R	3	G-W						
4T	29	W-BR			UNIT 9			
4R	4	BR-W						
5T	30	W-S	S	S	UNIT 2	UNIT 2	UNIT 1	UNIT 1
5R	5	S-W	L	L				
6T	31	R-BL	O	O	UNIT 10			
6R	6	BL-R	T	T				
7T	32	R-O			UNIT 3	UNIT 3		
7R	7	O-R	Y-5	X-10				
8T	33	R-G			UNIT 11			
8R	8	G-R	C	C				
9T	34	R-BR	A	A	UNIT 4	UNIT 4	UNIT 2	
9R	9	BR-R	R	R				
10T	35	R-S	D	D	UNIT 12			
10R	10	S-R						
11T	36	BK-BL	5	10	UNIT 5	UNIT 5		
11R	11	BL-BK						
12T	37	BK-O			UNIT 13			
12R	12	O-BK	(Note)					
13T	38	BK-G			UNIT 6	UNIT 6	UNIT 3	
13R	13	G-BK						
14T	39	BK-BR			UNIT 14			
14R	14	BR-BK						
15T	40	BK-S			UNIT 7	UNIT 7		
15R	15	S-BK						
16T	41	Y-BL			UNIT 15			
16R	16	BL-Y						
17T	42	Y-O						
17R	17	O-Y						
18T	43	Y-G						
18R	18	G-Y						
19T	44	Y-BR						
19R	19	BR-Y						
20T	45	Y-S	S					
20R	20	S-Y	P					
21T	46	V-BL	A					
21R	21	BL-V	R					
22T	47	V-O	E					
22R	22	O-V						
23T	48	V-G						
23R	23	G-V						
24T	49	V-BR						
24R	24	BR-V						
25R	50	V-S						
25T	25	S-V						

Note: Slot 10 applies only to PE shelves equipped with 10 PE slots.

(III553-1146n)

Chart 2-2
QSD66 OR QSD69 EXPANSION SHELF INSTALLATION

STEP	PROCEDURE
1	Remove screws securing front and rear cabinet covers and remove covers.
2	If the cabinet is equipped with EMI shields, set the CAB INP breaker on the QUX19 to OFF.
3	Set the input breakers on the QUX20 unit (if equipped) for the new shelf to OFF.
	Note: The designations on the breakers located on the QUX20 unit correspond to connectors PE2 through PE5 on the QCAD276 and QCAD277 power cables.
4	Perform this step only if the cabinet is equipped with EMI shields. Tag and disconnect cables from connectors at rear of cabinet to allow removal of EMI shields. Remove screws securing shields and remove shields.
5	If not previously installed, install a QUX20 power unit as follows: • Insert the QUX20 unit in its position in front of cabinet (Fig. 2-5) and secure with two mounting screws. • From the rear of the cabinet, connect lead equipped with a spade connector from the QUX20 unit to the terminal at TB3 at rear of the QUX19 unit.
6	Remove the louvered top assembly from the cabinet by removing the six screws through the top assembly.
7	Remove the side panels from each end of the existing top shelf of the cabinet by sliding panels upward (Fig. 2-6).
8	Remove the four hex screws at each end of the top shelf securing the top panel to the cabinet (Pig. 2-6).
9	Remove top panel and place towards rear of cabinet. Do not damage wiring to the thermostat in top panel.
10	With self-tapping screws supplied, secure a joiner plate (two screws each) to each end of the existing top shelf of the cabinet.
11	Ensure that the spacers installed in the top of each of the two front comer uprights of the cabinet are in place (Fig. 2-6).
12	Reinstall the two cabinet side panels by sliding them down in the grooves located in the uprights at each end of the cabinet. The flange on the side panels should be positioned at the top facing towards the inside of the cabinet.
13	Set the new shelf on top of the existing shelf with both ends overlapping the joiner plates.

Chart Continued

Chart 2-2 Continued
QSD66 OR QSD69 EXPANSION SHELF INSTALLATION

STEP PROCEDURE

14 Install a spacer bar between the bottom front rail of the new shelf and the top front rail of the existing top shelf as follows (Fig. 2-6):

- Tilt the new shelf slightly backwards.
- Position the spacer bar with the cut-out on the left and facing outward (Fig. 2-6) in the groove along the top front of the existing shelf.
- Lower the new shelf onto the spacer bar with the top rail of the bar in the groove in the bottom of the new shelf.

15 Align the new shelf with the existing shelf and secure the joiner plates with two screws each.

16 If equipped, remove EM1 shield from shelf.

17 Connect power connector from QCAD276 or QCAD277 power cable to connector J on the shelf backplane according to shelf position in the cabinet (Fig. 2-7).

- Connector PE2 from QCAD276 cable connects to backplane in position 2.
- Connector PE3 from QCAD276 cable connects to backplane in position 3.
- Connector PE4 from QCAD277 cable connects to backplane in position 4.
- Connector PE5 from QCAD277 cable connects to backplane in position 5.

18 If not previously connected, connect the other end of the power cable as follows:

a) QCAD276 power cable.

- Connector P3 to J3 at the rear of the QUAA3 power unit.
- Black leads equipped with ring connections to the GRD2 lug on the ground bus near the rear of the QUAA3 unit.
- White leads equipped with ring connections to the GRD1 lug on the ground bus.
- The red lead designated 2 equipped with a spade connector to TB5 terminal 2 at the rear of the QUX20 unit.
- The blue lead designated 3 equipped with a spade connector to TB5 terminal 3 at the rear of the QUX20 unit.

b) QCAD277 power cable.

- Connector P4 to J4 at the rear of the QUAA3 power unit.
- Connector P7 to J7 at the rear of the QUAA3 power unit.
- Black leads equipped with ring connections to the GRD2 lug on the ground bus near the rear of the QUAA3 unit.

Chart Continued

Chart 2-2 Continued
QSD66 OR QSD69 EXPANSION SHELF INSTALLATION

STEP PROCEDURE

- White leads equipped with ring connections to the GRD1 lug on the ground bus.
- The red lead designated 4 equipped with a spade connector to TB5 terminal 4 at the rear of the QUX20 unit.
- The blue lead designated 5 equipped with a spade connector to TB5 terminal 5 at the rear of the QUX20 unit.

19 Reinstall top panel and secure to top shelf with four hex screws at each end.

20 Install the two shelf side panels by sliding them down into the grooves located in the uprights at each end of the new shelf.

Note: The flange on the side panels should be positioned at the top facing towards the inside of the new cabinet.

21 If QUD24 cooling units are required, install units as described in Chart 2-g.
If cooling units are not required, reinstall the louvered top assembly on top of the new shelf and secure with six screws through the top.

22 If previously removed, reinstall EMI shields and reconnect cables.

23 If required, install EMI shield on new shelf and secure with mounting screws.

24 If this is an operating cabinet, set the CAB INP breaker on the QUX19 unit to ON to restore service to the cabinet.

25 Install circuit packs in assigned positions in new shelf (Fig. 2-5).

26 If cabinet is not equipped with a built-in cross connect terminal (Fig. 2-3), install NE-A25B-type cables from connectors A, B, C, D, E and F on the shelf backplane to the cross connect terminal. Cable terminating sequence is shown in Table 2-A.

27 Set the input breakers for the new shelf to ON.

Note: The designations on the QUX20 power unit correspond to connectors PE2 through PE5 on the QCAD276 and QCAD277 power cables.

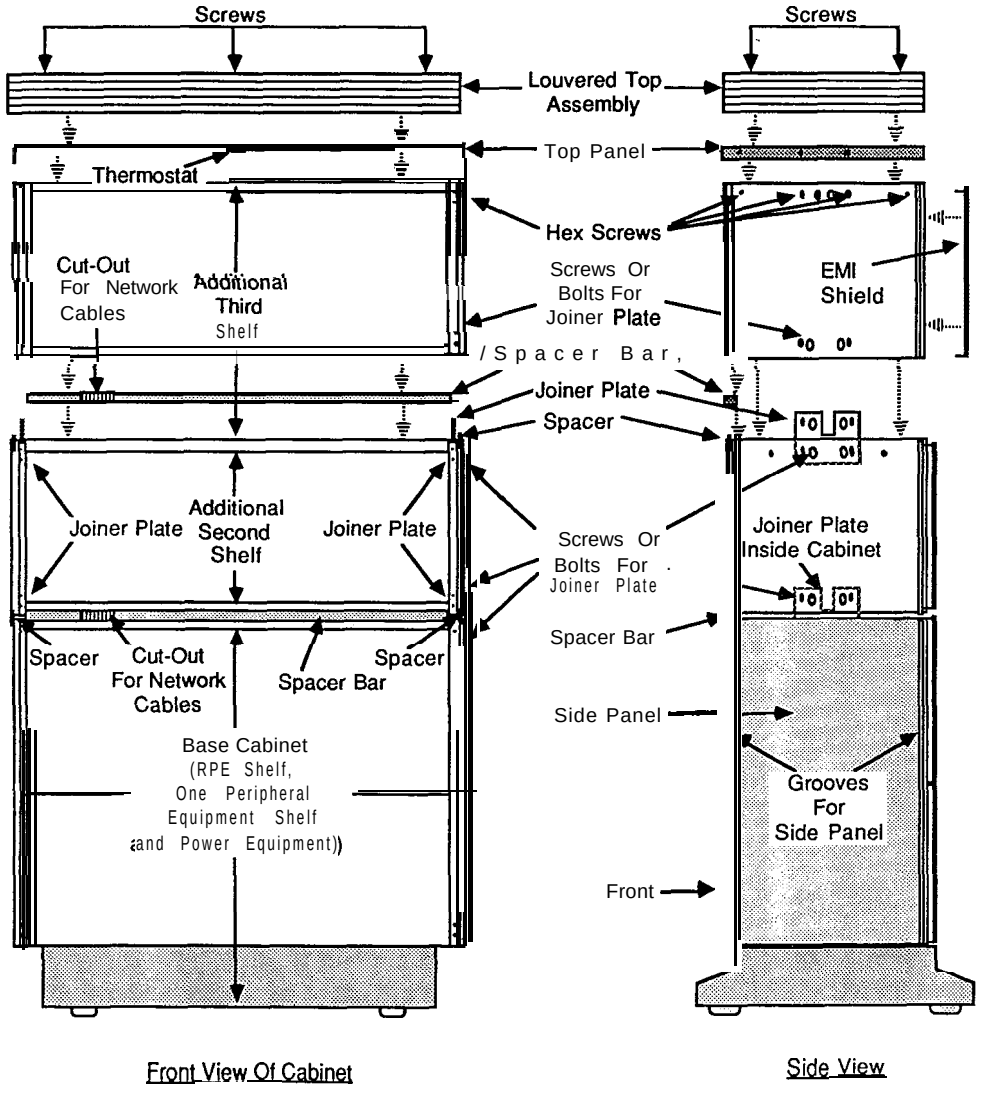

Fig. 2-6
Shelf Assembly

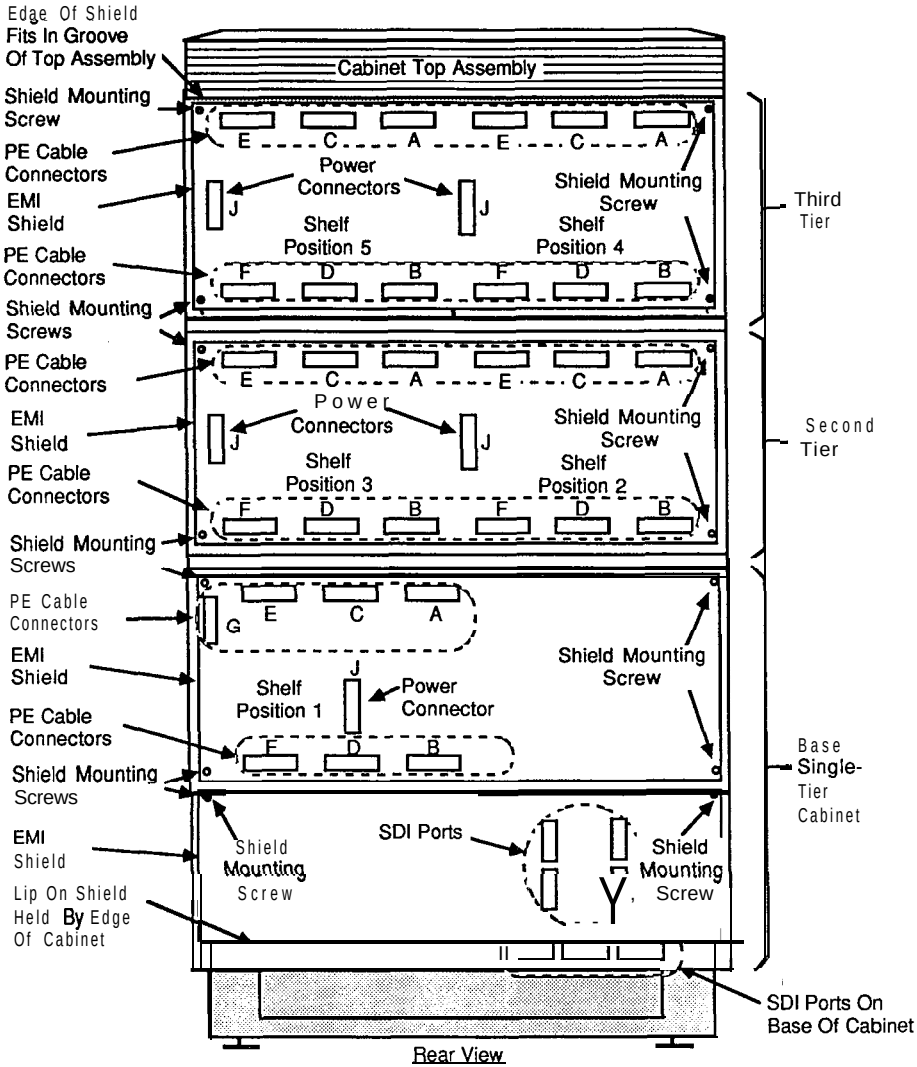

Note: Connectors on systems not equipped with EMI shields are on the shelf backplane.

(III553-1120)

Fig. 2-7
Rear View of Cabinet

Chart 2-3
QBL24 BATTERY UNIT INSTALLATION (MAIN UNIT)

When adding batteries to a cabinet ensure that the cabinet is connected to a 220 V 20A or 110 V 30A ac power supply. Service is interrupted when adding batteries to an operating cabinet.

not add batteries to a cabinet connected to a 110 V 15A power supply. Ensure batteries are installed in a well ventilated area.

STEP PROCEDURE

1 If more than one QBL24 battery unit is being connected to this cabinet, refer to Chart 2-4 and connect the expansion QBL24 unit.

Note: The expansion QBL24 unit requites a QCAD301 expansion cable.

2 Set the breaker on the front of the QBL24 unit to OFF.

3 Remove cover from the QBL24 unit by loosening the captive screws on top of the unit.

4 Unpack batteries and place in unit as shown in Fig. 2-8.
Ensure that the date indicated on the battery packs is the same on all packs.

WARNING: ***The battery cells are capable of delivering high currents when externally short-circuited. Caution must be used when working near the open terminals of the batteries to ensure that the terminals are not inadvertently short-circuited.***

5 With the three black jumper wires supplied with the batteries, connect the four battery packs in series as shown in Fig. 2-8. Connect the large lug of the black to the large terminal (+) on the first battery pack. Connect the small lug of the wire to the small terminal (-) on the second battery pack and so on until all packs am interconnected. Ensure that connections to the battery terminals are secure but do not over-tighten (maximum torque not to exceed 35 in/lb (3.95 N.m)).

6 Connect the black wire inside the battery unit to the remaining positive (+) battery terminal and the red wire to the remaining negative (-) battery terminal.

7 If not removed, remove the front and rear covers from the cabinet.

8 Service will be interrupted on operating cabinet when performing this step.

Set the AC BRKR breaker on the faceplate of the 48 V rectifier at the front of the cabinet to OFF. I

9 If not previously disconnected, disconnect the power line cord from the commercial power supply. I

Chart Continued

Chart 2-3 Continued
QBL24 BATTERY UNIT INSTALLATION (MAIN UNIT)

STEP	PROCEDURE
10	Remove the EMI shield (if equipped) from the bottom mar of the cabinet.
11	Remove the lock nut from the 90" elbow on the end of the flexible conduit containing wiring from the QBL24 unit.
12	Insert the wires and the 90" elbow in the hole at the rear of the cabinet to the right of the cabinet power cord.
13	Insert the wires through the lock nut and secure elbow to cabinet.
14	At the rear of the -48 V rectifier, disconnect and remove red and black wires going from TB3 to TB1 at the rear of the QUX19 unit (Pig. 2-9).
15	Connect the power and control wiring from the QBL24 unit as follows (Pig. 2-9): • Connect the long black wires (designated 1 and 2) to terminals 1 and 2 of TB3 at the rear of the rectifier. • Remove straps from terminals 1 and 2, and 3 and 4 of TB4 at rear of rectifier (Pig. 2-9). • Connect the black wire equipped with a spade tip connector to terminal 2 (+SENSE) on TB4 of the rectifier (Pig. 2-9). • Connect the red wire equipped with a spade tip connector to terminal 3 (-SENSE) on TB4 of the rectifier (Pig. 2-9). • Connect red and black wires not equipped with connectors (bare-ended) to the R (1) and BK (2) terminals of TB1 at the mar of the QUX19 unit (Pig. 2-9). • Connect the white wire equipped with two spade tip connectors (designated DCON) to the terminal designated DCON (terminal 5) on TB4 at rear of rectifier. Connect the second connector on the wire to terminal 3 on TB2 at the rear of the QUX19 unit. • Connect the remaining green wire to the GRD1A lug on the ground bar at the rear of the cabinet.
16	Reinstall the EM1 shield if previously removed.
17	Install cover on QBL24 battery unit and secure with locking screws.
18	Set all breakers on the front of the QUX19 and QUX20 power distribution units to the OFF position.
19	Connect the power line cord to the commercial power supply.

Chart Continued

Chart 2-3 Continued
QBL24 BATTERY UNIT INSTALLATION (MAIN UNIT)

STEP	PROCEDURE
20	Set the AC BRKR breaker on the front of the -48 V rectifier to ON.
21	With a volt meter, measure the voltage at the test points located on the front of the QBL24 battery unit (Pig. 2-10). If required, adjust the voltage by turning the VOLT ADJ screw on the rectifier until a reading of -53.60 V is attained.
22	Set breakers to ON in the following order:

i DC BRKR breaker on the front of the QBL24 unit (and expansion unit if equipped).

ii CAB INP breaker on the QUX19 unit.

Note: Check power and battery connections if DC BRKR or CAB INP breaker trips.

iii CE/PE1 breaker on QUX19 unit.

iv PE2 through PE5 breakers on QUX20 unit (if equipped).

Note: Breakers PE2 through PE5 supply power to the corresponding shelf positions in the cabinet. Breakers for unused positions should be set to OFF.

23 If required, install cabinet covers.

Chart 2-4
EXPANSION QBL24 BATTERY UNIT INSTALLATION

STEP	PROCEDURE
1	Set the breaker on the front of the QBL24 unit to OFF.
2	Remove cover from the QBL24 unit by loosening the captive screws on top of the unit.
3	Unpack batteries and place in unit as shown in Fig. 2-8. Ensure that the date indicated on the battery packs is the same on all packs.

WARNING: The battery cells are capable of delivering high currents when externally short-circuited. Caution must be used when working near the open terminals of the batteries to ensure that the terminals are not inadvertently short-circuited.

4	With the three black jumper wires supplied with the batteries, connect the four battery packs in series as shown in Fig. 2-8. Connect the large lug of the black to the large terminal (+) on the first battery pack. Connect the small lug of the wire to the small terminal (-) on the second battery pack and so on until all packs are interconnected. Ensure that connections to the battery terminals are secure but do not over-tighten (maximum torque not to exceed 35 in/lb (3.95 N.m)).
5	Connect the black wire inside the battery unit to the remaining positive (+) battery terminal and the red wire to the remaining negative (-) battery terminal.
6	If the expansion QBL24 battery unit is being added to a main QBL24 unit previously connected to an operating cabinet, remove the front covers from the cabinet.

Set the following breakers to OFF:

- the AC BRKR breaker on front of -48 V rectifier
- the DC BRKR on front of main QBL24 battery unit
- the CAB INP breaker on the QUX19 unit.

7	Remove cover from top of the main QBL24 battery unit.
8	Remove plug from top hole on the right side of the main QBL24 battery unit (Fig. 2-10).
9	Remove lock nut from the 90" elbow on the end of the flexible conduit containing wiring from the expansion QBL24 unit.
10	Insert the wires and the 90" elbow in the top hole on the right of the existing QBL24 battery unit (Fig. 2-10).
11	Insert the wires through the lock nut and secure elbow to cabinet.

Chart Continued

Chart 2-4 Continued
EXPANSION QBL24 BATTERY UNIT INSTALLATION

STEP	PROCEDURE

12 Connect wiring from expansion QBL24 battery unit to the main QBL24 unit as follows (Fig. *2-10).*

- Connect the green to lug 2 at the front of the unit.
- Connect the black wire to terminal 1 of terminal strip W1.
- Connect the red wire to terminal 5 of TB1.

13 Install covers on both QBL24 battery units.

Note: Do not install cover on main QBL24 if battery cells have not been installed in that unit.

14 Perform this step only if the expansion QBL24 battery unit is added to a main QBL24 unit previously connected to an operating cabinet.

a) Set the AC BRKR breaker on the -48 V rectifier to ON.

b) Set the DC BRKR breaker on the main QBL24 battery unit to ON.

c) Set the DC BRKR breaker on the expansion QBL24 battery unit to ON.

Note: Check wiring and polarity of batteries if DC BRKR breaker on the QBL24 battery unit trips.

d) Set the CAB INP breaker on the QUX19 unit to ON.

15 If required, install cabinet covers.

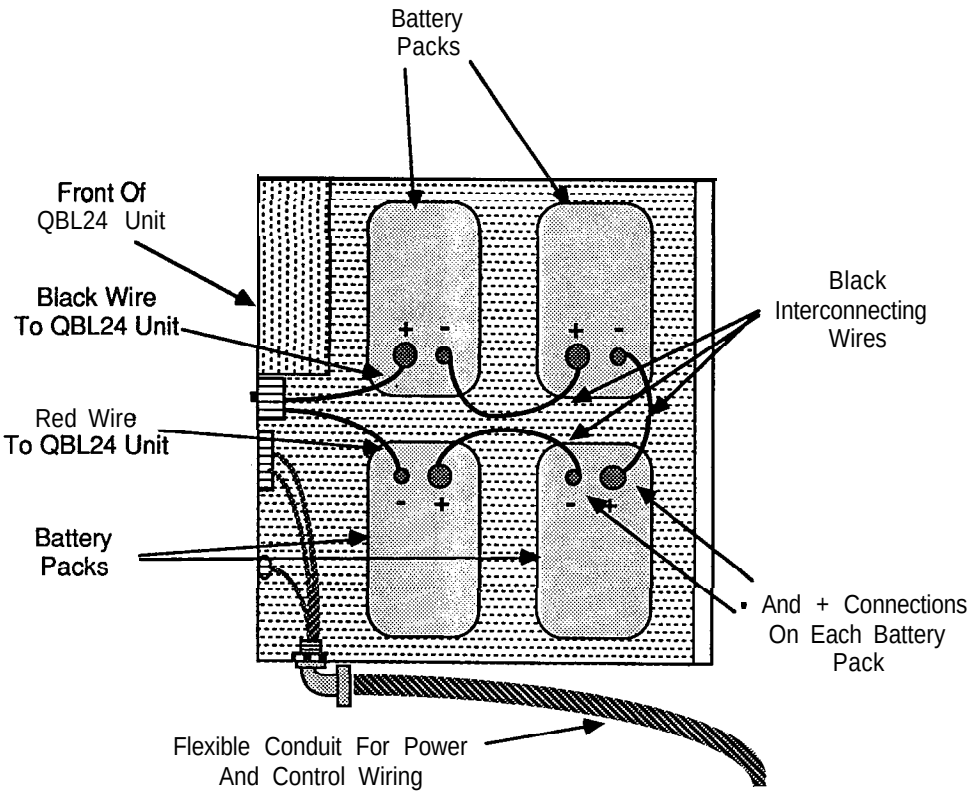

Top View Of QBl 74 Battery Unit

(Ill553-1136)

Fig. 2-8
Battery Cell Connections

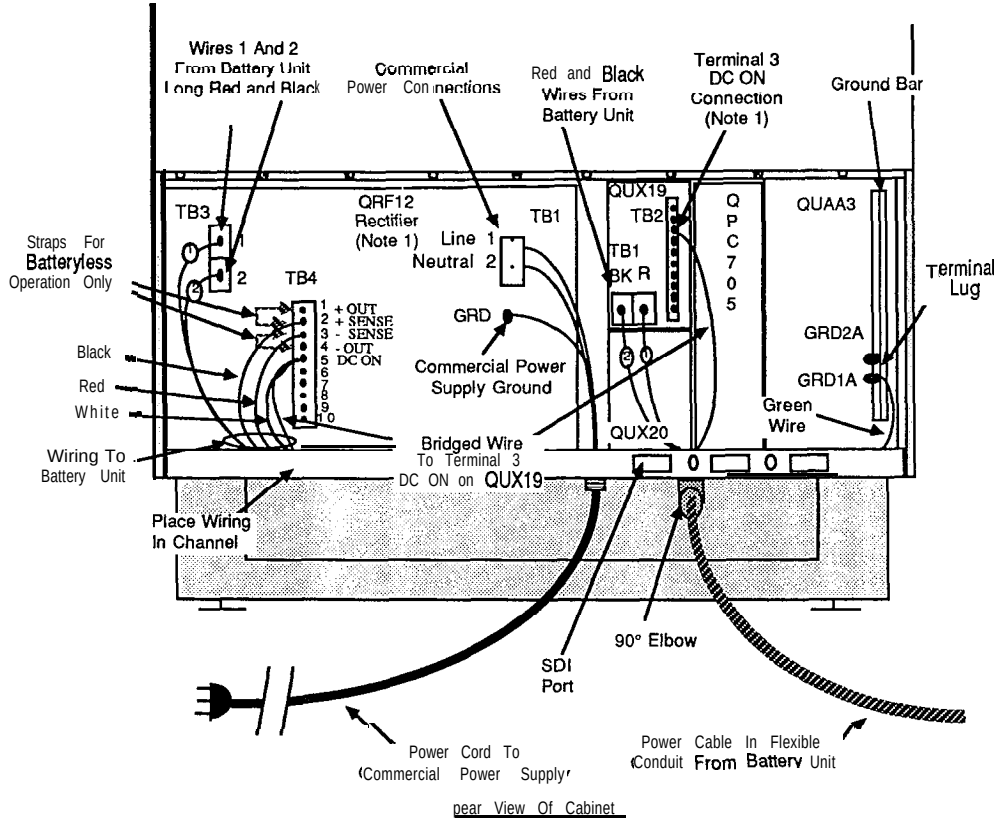

Note 1: These terminals are located on the QUX21 unit in PE expansion cabinets. PE expansion cabinets are not quipped with QUX19, QUXM or QPC705 units.

(lll553-1410)

Fig. 2-9
Reserve Power Supply Connections

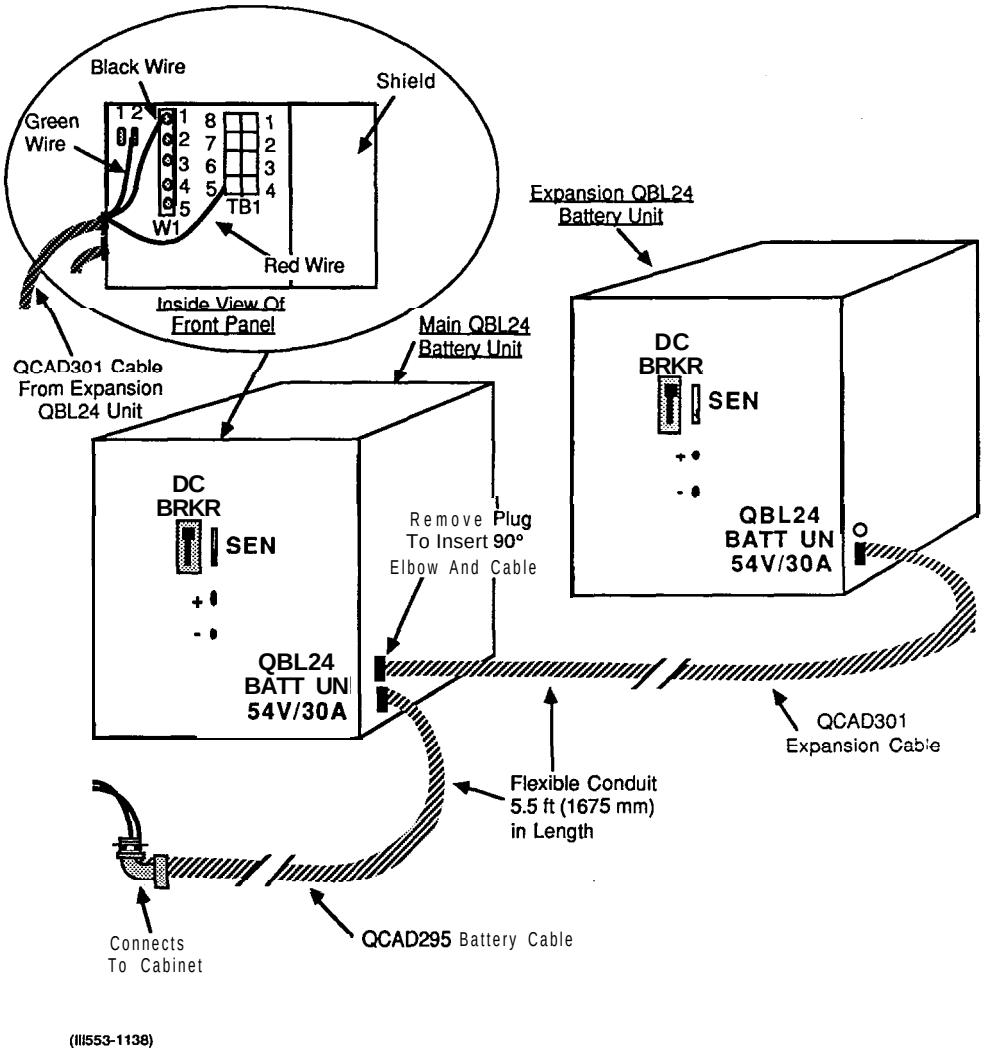

Fig. 2-10
Expansion Battery Unit Connections

Chart **2-5**

QUA6 POWER FAIL TRANSFER UNIT (PFTU) INSTALLATION

The QUA6 unit is located on the bottom rear EMI shield in cabinets equipped with a built-in cross connect terminal (Fig. 2-3) and is accessible by removing the rear cabinet cover.

STEP	PROCEDURE
1	Remove the QUA6 unit from its container.
2	Mount the unit (preferably on a wall if cabinet is not equipped with a built-in cross connect terminal) near the Meridian SL-1 cross connect tenninal and secure with four screws.
3	Install an NE-A25B-type cable from connector J1 on the QUA6 unit to a connecting block reserved for PFJ1 cables at the cross-connect terminal.
4	Cross-connect the PFJ1 cable to the P10 cable and to the telephones and trunks assigned to emergency transfer. See Table 2-B.

Chart 2-6
ALARM AND TRANSFER WIRING (P10) INSTALLATION

P10 wiring in cabinets equipped with a built-in cross connect terminal is terminated on the lower right set of blocks mounted on the EMI shield at the rear of the cabinet, This chart describes the method of extending the P10 wiring to an external cross connect terminal. Connections and designations for the P10 wiring are the same in both instances.

The P10 wiring is extended from the rear of the QUX19 unit in the cabinet to the cross connect terminal using a QCAD294-type cable available in the following lengths:

- 25 ft (7600 mm) - QCAD294B I
- 50 ft (15200 mm) - QCAD294B2
- 100 ft (30400 mm) - QCAD294B3

One QCAD294 cable is required when the cabinet is served by one or more QUA6 Power Fail Transfer Units (PFTU). This cable should be designated as cable 1.

A second QCAD294 cable is used to extend the major (MI) alarm connections to attendant consoles and to extend remote (REM) alarm connections. This cable should be designated as cable 2.

STEP	PROCEDURE
1	If not previously removed, remove the lower rear cover and EMI shield (if equipped) from the cabinet.
2	Tag and install one or two (as required) QCAD294 cables through a round access hole at the rear of the cabinet. Note: The end of the wires equipped with spade tip connectors will be connected to TB2 at the rear of the QUX19 power unit. Leave enough wire to reach the connections.
3	Install the cables in to the area reserved for P10 cables at the cross connect terminal. Note: The cables each contain two black wires, one paired with a white wire and one with a red wire. Care must be taken not to interchange the black wires.
4	Terminate and designate cable 1 (if provided) as follows (Fig. 2-11): - Terminate the red wire and designate as AUX. - Terminate the white wire and designate as GRD. - Terminate the black wire associated with the white wire and designate as XPE. - Terminate the black wire associated with the red wire and designate as CPE. - Store the braided wire (connected only in the cabinet to suppress EMI).

Chart Continued

Chart 2-6 Continued
ALARM AND TRANSFER WIRING (P10) INSTALLATION

STEP	PROCEDURE
5	Terminate and designate cable 2 (if provided) at the cross connect terminal as follows (Fig. 2-11): • Terminate the black wire associated with the red wire and designate as REM A. • Terminate the black wire associated with the white wire and designate as REM B. • Terminate the ted wire and designate as MJ. • Store the remaining white wire (not used) and the braided wire (connected only in the cabinet to suppress EMI).
6	Connect cable 1 (if provided) to the terminals on TB2 at the rear of the QUX19 unit in the cabinet as follows: • red wire to terminal 5 (AUX) on TB2 • white wire to terminal 4 • black wire associated with the white wire to terminal 8 (XPE) • black wire associated with the red wire to terminal 9 (XCE) • braided bare wire to terminal 4.
7	Connect cable 2 (if provided) to terminals on TB2 at the rear of the QUX19 unit as follows: • black wire associated with the red wire to terminal 6 (REMA) • black wire associated with the white wire to terminal 7 (REMB) • red wire to terminal 10 (MJ) • braided bare wire to terminal 4 • store the white wire (not used).
8	If required, reinstall EM1 shield and cabinet cover.

Table 2-B
PFJ1 EMERGENCY TRANSFER CABLE CROSS-CONNECTIONS

FUNCTION	PAIR NUMBER	PAIR COLOR	CONNECTS TO	COMMENTS
CONTROL	1T 1R	W-BL BL-W	(ALM) CONSOLE ALARM LED (GND) ON P10, CONSOLE	See 553-2201-215 for connections to attendant console.
	2T 2R	W-O O-W	(SLT) SHELF TRANSFER (XPE/XCE) (GND) ON P10	The Shelf Transfer (W-O) connects to pair 24R (BR-V) of cable C from each PE shelf in positions 2 to 5 and to XCE/XPE on the P10 cable served by this PFTU.
	3T 3R	W-G G-W	(TC) CONSOLE TRANSFER SWITCH	See 553-2201-215 for connections to attendant console.
	4T 4R	W-BR BR-W		This pair is not used.
PFT 1	5T 5R	W-S S-W	500-TYPE TELEPHONE	Connect to 500-type telephone.
	6T 6R	R-BL BL-R	500-LINE CARD	Connect to TN assigned to telephone.
	7T 7R	R-O O-R	CENTRAL OFFICE TRUNK	Connect to Central Office trunk.
	8T 8R	R-G G-R	CO LINE CARD	Connect to TN assigned to CO trunk.
PFT 2	9T 9R	R-BR BR-R	500-TYPE TELEPHONE	Connect to 500-type telephone.
	10T 10R	R-S S-R	500-LINE CARD	Connect to TN assigned to telephone.
	11T 11R	BK-BL BL-BK	CENTRAL OFFICE TRUNK	Connect to Central Office trunk.
	12T 12R	BK-O O-BK	CO LINE CARD	Connect to TN assigned to CO trunk.
PFT 3	13T 13R	BK-G G-BK	500-TYPE TELEPHONE	Connect to 500-type telephone.
	14T 14R	BK-BR BR-BK	500-LINE CARD	Connect to TN assigned to telephone.
	15T 15R	BK-S S-BK	CENTRAL OFFICE TRUNK	Connect to Central Office trunk.
	16T 16R	Y-BL BL-Y	CO LINE CARD	Connect to TN assigned to CO trunk.
PFT 4	17T 17R	Y-O O-Y	500-TYPE TELEPHONE	Connect to 500-type telephone.
	18T 18R	G-Y Y-G	500-LINE CARD	Connect to TN assigned to telephone.
	19T 19R	Y-BR BR-Y	CENTRAL OFFICE TRUNK	Connect to Central Office trunk.
	20T 20R	Y-S S-Y	CO LINE CARD	Connect to TN assigned to CO trunk.
PFT 5	21T 21R	V-BL BL-V	500-TYPE TELEPHONE	Connect to 500-type telephone.
	22T 22R	V-O O-V	500-LINE CARD	Connect to TN assigned to telephone.
	23T 23R	V-G G-V	CENTRAL OFFICE TRUNK	Connect to Central Office trunk.
	24T 24R	Y-BR BR-V	CO LINE CARD	Connect to TN assigned to CO trunk.
PFTU POWER	25T 25R	V-S S-V	-52V -52V	Connect to AUX on P10 cable

(!!!553-1145)

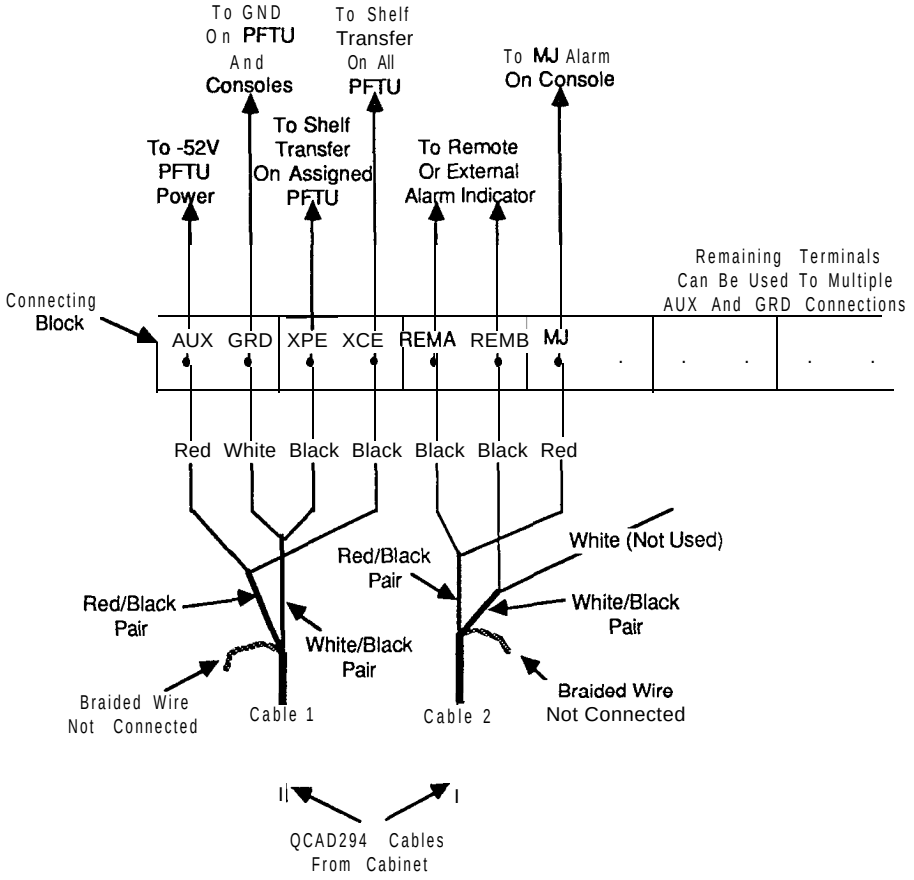

(111553-I 144)

Fig. 2-11
P10 Cable Terminations and Designations

Chart 2-7
QPC705 POWER CONVERTER INSTALLATION

The QPC705 power converter mounts in the slot between the QUAA3 power unit and the QUX19 power distribution unit, A QCAD278 cable is required to connect the QPC705 power converter.

STEP	PROCEDURE
1	Remove the lower front and rear cabinet panels.
2	Remove the lower EM1 shield (if equipped) from the rear of the cabinet.
3	From the front of the cabinet. remove dummy faceplate covering the slot between the QUAA3 power unit and the QUX19 power distribution unit.
4	Unpack the QPC705 power converter.
5	Connect connector 705 on the QCAD278 cable to the connector on rear of QPC705 power converter.
6	From the front of the cabinet, route the free end of the QCAD278 cable through the slot between the QUAA3 unit and the QUX19 unit to the rear of cabinet.
7	Insert the QPC705 power converter in its assigned slot and secure to cabinet with mounting screws.
8	***Caution: Service in the cabinet is interrupted when performing this step.*** Set the CAB INP breaker on the QUX19 unit to OFF.
9	From the rear of the cabinet, connect connector P2 of the QCAD278 cable to connector P2 at the rear of the QUX19 unit.
10	Connect the red lead (equipped with a spade connector) to terminal 2 of TB2 on the rear of the QUX19 unit.
11	Connect the black lead (equipped with a ring connector) to the GRD2 terminal on the ground bus at tbe rear of the cabinet.
12	Set the CAB INP breaker on the QUX19 unit to ON. Service should be restored to the cabinet.
13	Reinstall the EMI shield and cabinet cover (if required),

Chart 2-8
QUD24 FAN UNIT INSTALLATION

STEP	PROCEDURE
1	If not previously removed, remove the lower front and top rear covers.
2	Remove screws securing cabinet top assembly and remove assembly and louvers (Fig. 2-12).
3	Position QUD24 cooling units in their assigned location on the cabinet top panel and secure with mounting screws (Fig. 2-13).
4	Connect a QCAD302 power cable from connector P2 on the first QUD24 unit to connector P1 on the second QUD24 unit (Fig. 2-13).
5	Connect the male connector of a QCAD303 power cable to connector P1 on the second QUD24 unit (Fig. 2-12).
6	Connect the other end of the QCAD303 power cable to connector CU1 of the QCAD277 power cable at the rear of the cabinet (Fig. 2-13).
7	Install a QCAD304 terminating plug in connector P2 on the first QUD24 cooling unit (Fig. *2-13).*
8	Secure cooling unit cables to cabinet top panel with plastic cable ties to avoid interference with fans.
9	Remove and store the six screws from the cabinet top assembly and insert six replacement screws (longer screws supplied with cooling unit assemblies).
	Note: The six removed screws should be retained for future use.
10	Install the two extra louvers supplied with the cooling unit assemblies and reinstall the cabinet top assembly (Fig. 2-12).
11	Ensure that the QUX19 unit located at the front bottom of the cabinet is equipped with a 3 A fuse in the fuse position designated FN.
12	If required, reinstall cabinet covers.

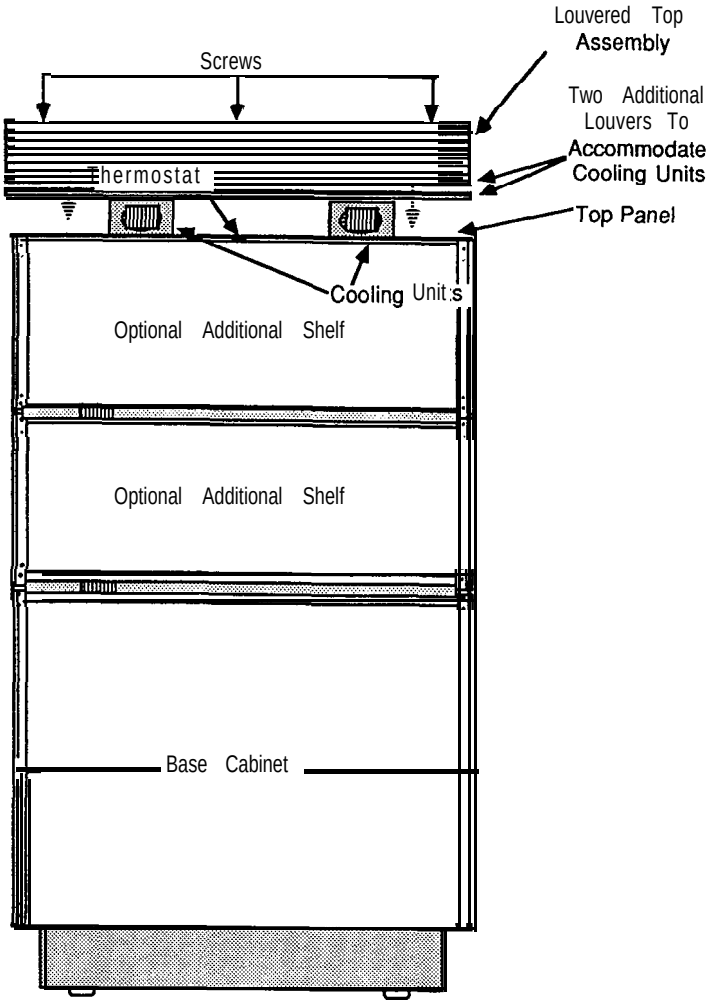

Fig. 2-12
Cabinet Top Assembly

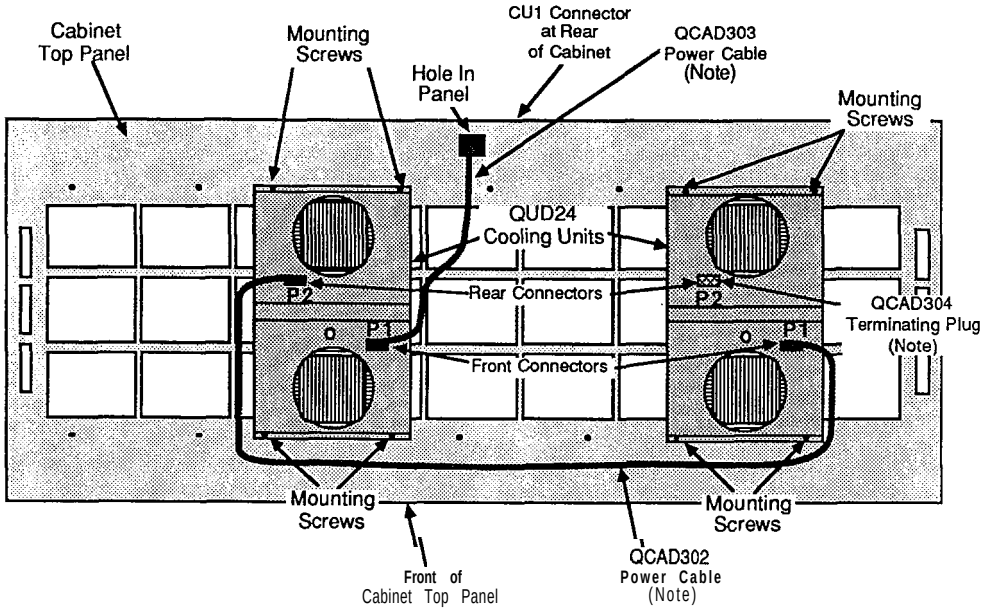

Note: Cooling units are wired in series. Connections to and between cooling units may not always be as shown.

{III553-1142}

Fig. 2-13
Cooling Unit Location and Connections

Chart 2-9
QCAD321 JUNCTION BOX ASSEMBLY INSTALLATION

The QCAD321 junction box assembly is equipped with power and control wiring enclosed in a flexible conduit 5.5 ft (1675 mm) long. The junction box should be installed on the floor or on the wall within 5 ft (1525 mm) of the cabinet.

When suppression of Electromagnetic Interference (EMI) is a requirement, wiring should be run in metallic conduit between the QBL15 battery distribution box and the QCAD321 junction box assembly. The QBL15 battery distribution unit and the junction box are capable of accepting 1 1/4 in conduit.

STEP PROCEDURE

The QBL15 battery distribution unit should be installed before attempting to install the QCAD321 junction box assembly.

1 Unpack the QCAD321 junction box assembly and dispose of the packing material.

2 Mount the junction box on a wall or locate on floor within 5 ft (1525 mm) of the cabinet.

3 Remove screws securing cover to junction box and remove cover.

4 Remove front and rear covers from cabinet.

5 Service in the cabinet will be interrupted when performing this step on an operating cabinet.

Set the AC BRKR breaker on the faceplate of the 48 V rectifier in the cabinet to OFF.

Set breakers on the faceplates of the power distribution units (QUX19, QUX20, QUX21) to OFF.

6 If not previously disconnected, disconnect the power line cord from the commercial power supply.

7 Remove the EMI shield (if equipped) from the bottom rear of the cabinet.

8 If the first SDI port is equipped with a connector (Fig. 2-9), remove port mounting screws and pull SDI connector away from cabinet.

9 Remove the lock nut from the 90" elbow on the end of the flexible conduit containing wiring from the QCAD321 junction box.

10 Insert the wires and the 90" elbow in the hole at the rear of the cabinet to the right of the cabinet power cord.

11 Insert the wires through the lock nut and secure the 90" elbow to the cabinet. Ensure that the locking teeth on the nut are facing downward against the cabinet metal

Chart Continued

Chart 2-9 Continued
QCAD321 JUNCTION BOX ASSEMBLY INSTALLATION

STEP	PROCEDURE

12 If previously removed, reinstall the SDI port.

13 Disconnect and remove the red and black wires going from TB3 at the rear of the -48 V rectifier to TB1 at the rear of the QUX19 unit (Fig. 2-9) or QUX21 unit (whichever is equipped). I

Note: Do not discard these wires as they are required if the batteries are removed at a future date.

14 Connect the power and control wiring from the QCAD321 junction box as follows (see Fig. 2-9): I

Connect the long black and red wires (designated wires 1 and 2) equipped with ring lugs to terminals 1 and 2 of TB3 on the QRF12 rectifier.

Remove straps between +OUT and +SENSE and -OUT and -SENSE terminals of TB4 on the QRF12 rectifier.

Connect the black and red wires equipped with spade tip connectors to +SENSE (black wire to terminal 2) and -SENSE (red wire to terminal 3) terminals of TB4 on the QRF12 rectifier.

Connect the two black and red wires not equipped with connectors (bare-ended) to the R (1) and BK (2) terminals of TB1 at the rear of the QUX19 or QUX21 power unit (whichever is equipped). Ensure that the connections are secure.

Connect the white wire equipped with two spade tip connectors (designated DCON) to the DCON connection of TB4 on the QRF12 rectifier and extend to terminal 3 of TB2 at the rear of the QUX19 or QUX21 power unit (whichever is equipped).

Connect the remaining green wire to the GRD 1A lug on the ground bar at the rear of the cabinet.

15 Remove assigned DISCHARGE fuse from the QBL15 battery distribution box (Fig. 2-14).

16 Install and connect a 4 AWG red wire between the CHARGE bus in the QBL15 and terminal 1 of terminal block TB1 in the QCAD321 junction box (Fig. 2-14 and 2-15).

Note: Use one 4 AWG wire for distances up to 100 ft (30 m). Use two 4 AWG wires for distances of 100 to a maximum of 200 ft (20 to 60 m). Terminal 2 of terminal block TB1 in the junction box is reserved for a second 4 AWG wire.

17 Install and connect a 2 pair 24 AWG Z-type station wire between terminal blocks TB1 and TB2 (-SENSE, +SENSE and ALARM) in the QBL15 battery distribution unit and terminal 1 (-SENSE), terminal 2 (+SENSE) and terminal 3 (ALARM) of terminal block TB2 in the QCAD321 junction box (Fig. 2-16).

Note: The TRIP connection is not used with a QCAD321 junction box assembly. I

Chart Continued

Chart 2-9 Continued
QCAD321 JUNCTION BOX ASSEMBLY INSTALLATION

STEP	PROCEDURE

18 Remove the assigned discharge fuses (Pig. 2-14) from the QBL15 battery distribution box.

19 Install and connect a 4 AWG red wire from the assigned discharge fuse in the QBL15 battery distribution box to terminal 3 of terminal block TB1 in the QCAD321 junction box (Pig. 2-14 and 2-15.

Note: Use one 4 AWG wire for distances up to 100 ft (30 m). Use two 4 AWG wires for distances of 100 to a maximum of 200 ft (30 to 60 m). Terminal 4 of terminal block TB1 in the junction box is reserved for a second 4 AWG wire.
If the cabinet draws more than 30 A. install and connect additional 4 AWG red wiring between discharge terminal 4 in the QBL15 battery distribution box and terminal 3 or 4 of terminal block TB1 in the QCAD321 junction box.

20 Install and connect a 4 AWG black wire from the positive (+VE) bus in the QBL15 battery distribution box to terminal 5 of terminal block TB1 in the QCAD321 junction box (Pig. 2-14 and 2-15).

Note: Use one 4 AWG wire for distances up to 100 ft (30 m). Use two 4 AWG wires for distances of 100 to a maximum of 200 ft (30 to 60 m). Terminal 6 of terminal block TB1 in the junction box is reserved for a second 4 AWG wire.

21 Ensure that all connections and conduit (if required) are secured. If conduit is not used, grommets should be installed in the entrance holes of the QCAD321 junction box to protect the wiring.

22 Install cover on QCAD321 junction box and secure with four screws.

23 Insert the previously removed DISCHARGE fuse in the QBL15 battery distribution box (Pig. 2-14).

24 Connect the power line cord to the commercial ac power supply,

25 Set breakers to ON in the cabinet in the following order:

a) CAB INP breaker on the QUX19 or QUX21 power distribution unit (whichever is equipped).

b) CE/PE1 breaker on the QUX19 unit (if equipped).

c) Remaining PE breakers on the power distribution units (QUX20, QUX21).

Note: The numbers assigned to the PE breakers correspond to the shelf positions in the cabinet. Breakers for unused shelf positions should be set to OFF.

Chart Continued

Chart 2-9 Continued
QCAD321 JUNCTION BOX ASSEMBLY INSTALLATION

STEP	PROCEDURE
26	Connect the positive test probe of a volt meter to a ground source and test the following terminals: a) Terminal 1 of terminal block TB3 on the QRF12 rectifier. The meter should indicate a minimum reading of 52.08 V. b) Negative input (CHARGE) terminal in the QBL15 battery distribution box. The meter should indicate a minimum reading of 52.08 V. Any voltage variations from the batteries should be investigated.
27	Reinstall the EMI shield (if previously removed).
28	Insert the discharge fuses in the QBL15 battery distribution box.
29	Set the AC BRKR breaker on the faceplate of the 48 V rectifier in the cabinet to ON.
30	If required, install cabinet covers.
31	Install and secure the front panel on the QBL15 battery distribution unit.
32	Ensure that the EQUALIZE switch on the front of the QBL15 battery distribution box is set to OFF for normal operation.

Note: When the EQUALIZE switch is set to ON, the RECT LED on the QUAA3 unit in the cabinet extinguishes giving an alarm indication.

Chart 2-10
QBL15 BATTERY DISTRIBUTION BOX INSTALLATION

The **QBL15** battery distribution box should be located on the wall near the Meridian SL-I cabinet to readily enable viewing of meters and LED indicators on the front of the unit.

When suppression of Electromagnetic Interference (EMI) is a requirement, power and alarm wiring should be run in metallic conduit between the **QBL15** battery distribution box and tbe QCAD321 junction box assembly. The battery unit and the junction box are capable of accepting 1 1/4 in. conduit.

STEP	PROCEDURE
1	Unpack the **QBL15** battery distribution box and dispose of the packing material.
	QBL15 battery distribution box weighs approximately 50 lbs (23 kg).
2	Inspect the unit for damage, paying particular attention to the meters. Report any damage to supplier.
3	Using screws or bolts, mount the unit on a wall within 6 ft (1830 mm) of the batteries. The bottom of the unit should be approximately 4 ft (1220 mm) above the floor (Pig. 2-14).
	Note: A wooden backboard may be required to support the unit on the wall.
4	Remove the screws securing the front panel of the battery distribution box.
5	Remove the main fuse (CRS200) from the **QBL15** battery distribution box (Pig. 2-14).
6	Install and connect a red 1/0 AWG wire between the negative terminal of the battery string and the negative input (-VE BUS) in the **QBL15** battery distribution box (Pig. 2-15).
7	Install and connect a black l/O AWG wire between the positive terminal of tbe battery string and the negative bus (+VE BUS) in the **QBL15** battery distribution box (Pig. 2-15).
8	Insert the main fuse (CRS200) in the **QBL15** battery distribution box (Pig. 2-14).
9	If required, install cover.

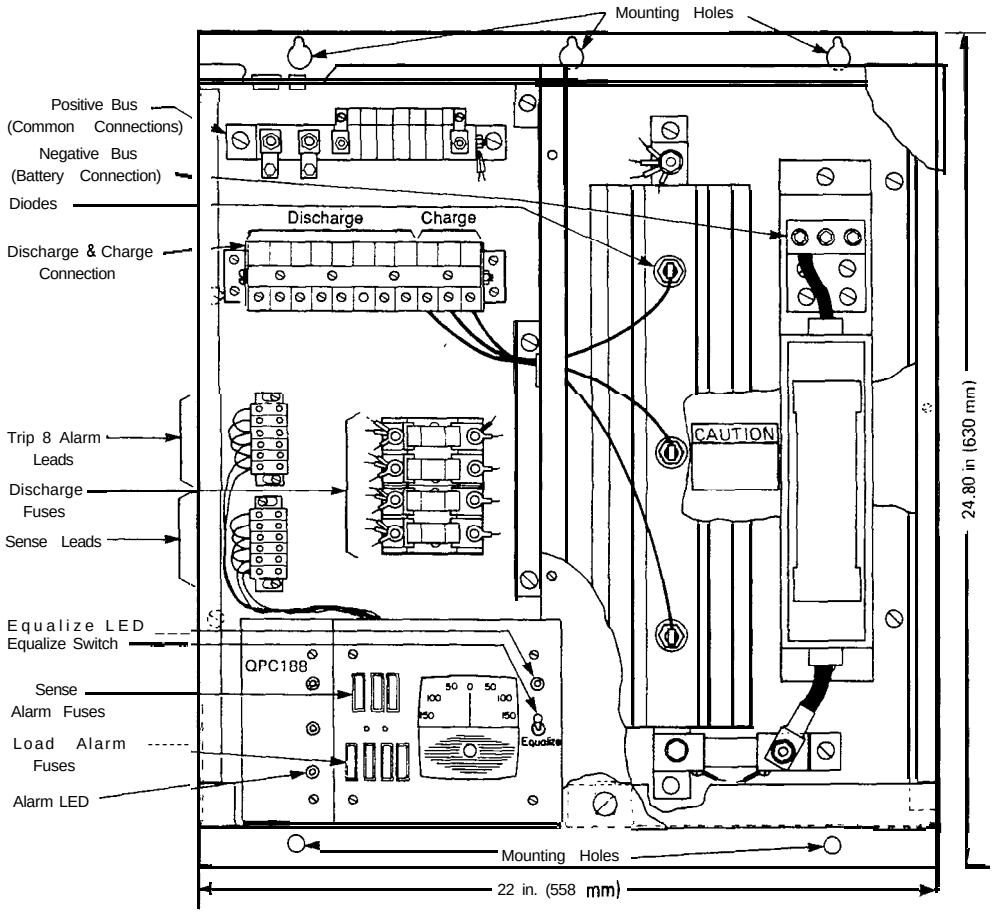

(Ill. 00512)

Fig. 2-14
QBL15 Battery Distribution Box

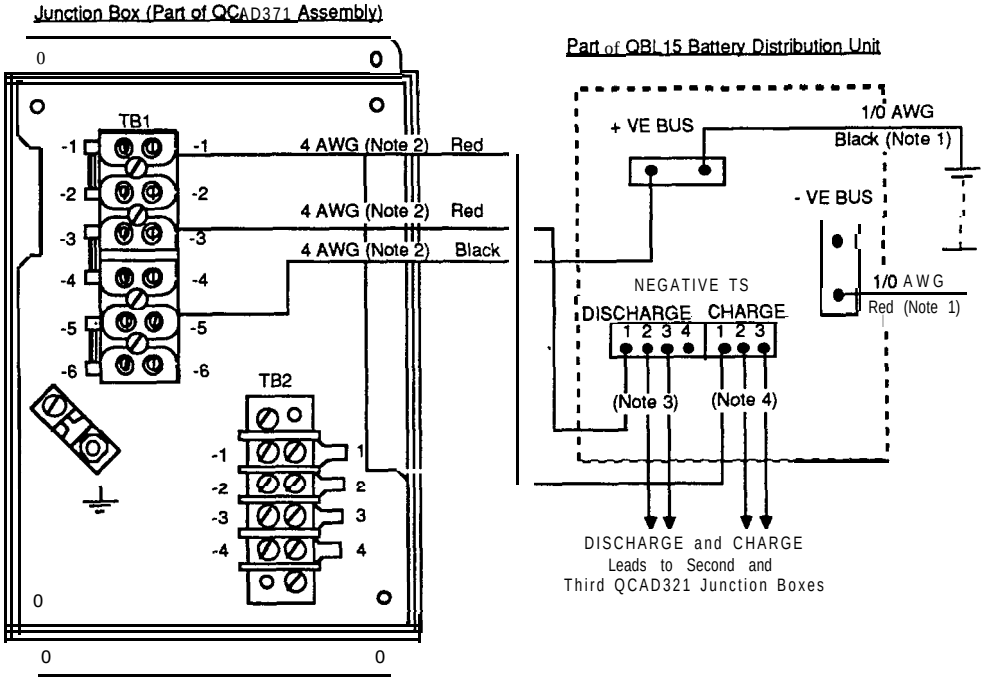

Notes:

1. Maximum cable length is 6 ft (1630 mm).
2. Single cable for 100 ft (30 m) or less.
   Double cable for 100 to 200 ft (30 to 60 m) maximum.
3. Connect to first available discharge terminal 1, 2 or 3.
   Discharge terminal 4 is used when a second supply is required to a cabinet drawing more than 30A.
4. Connect to first available charge terminal 1, 2 or 3.
   CHARGE leads not required when connecting to customer provided -46 V power supply.

(lli553-1262)

Fig. 2-15
Reserve Power Connections Outside Cabinet

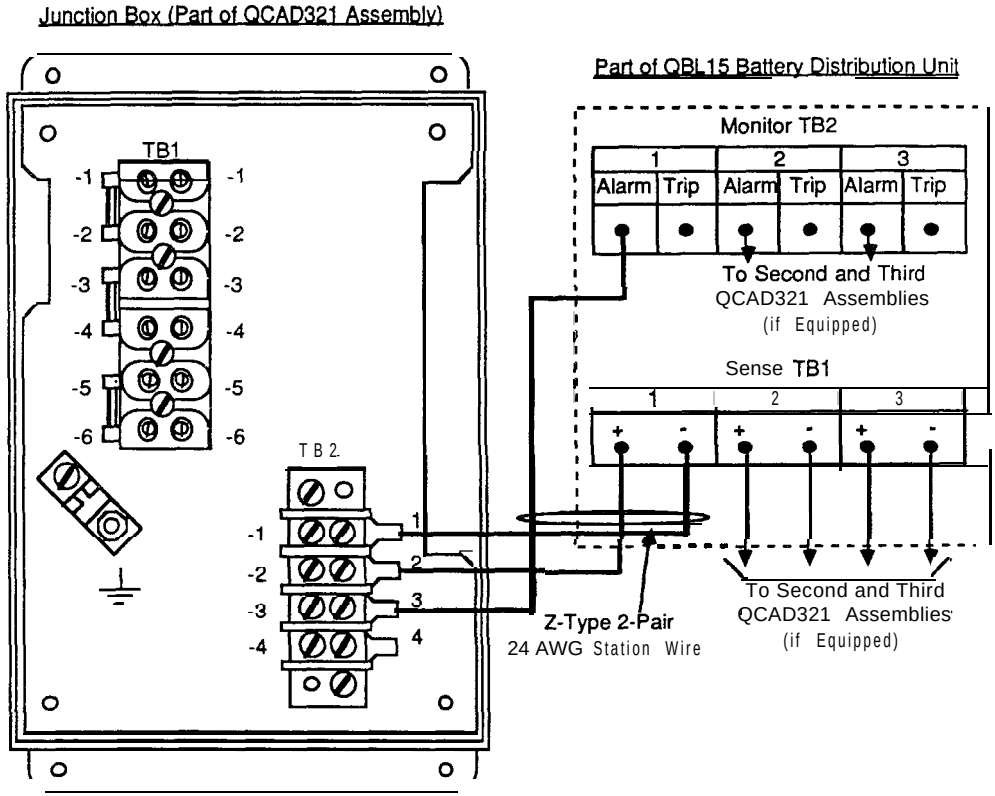

Fig. 2-16
Battery Sensing and Monitoring Connections

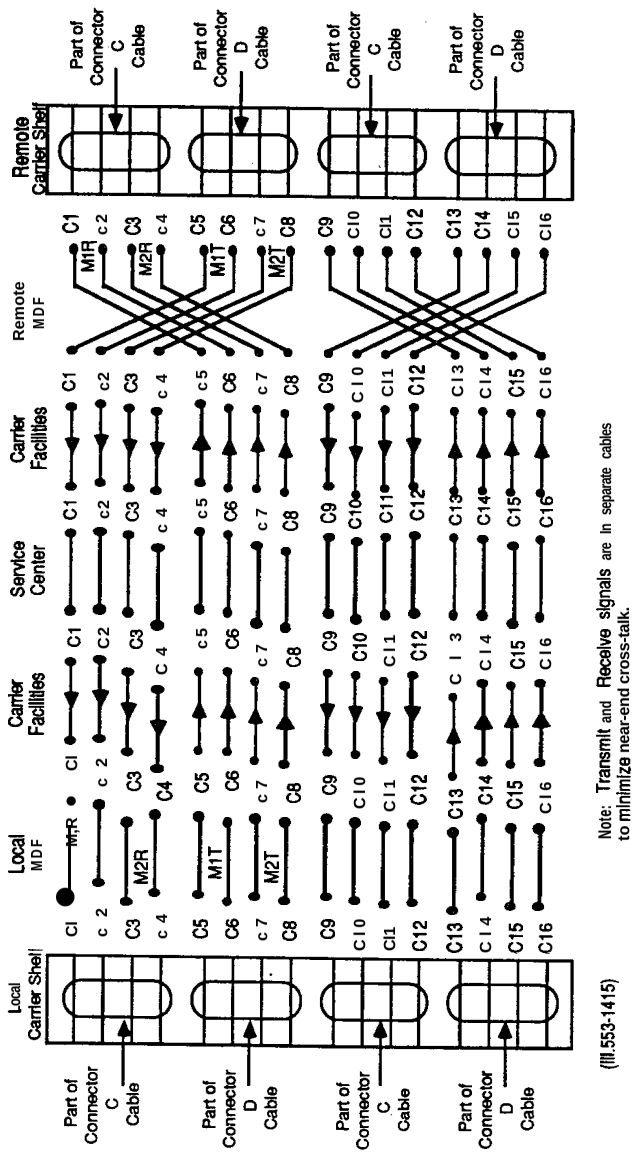

Fig. 2-17
Local-To-Remote Cross-Connections

Table 2-C
CABLE C DESIGNATIONS (RECEIVE)
LOCAL AND REMOTE

CARRIER	NETWORK LOOP	CARD POSITION	CONNECTOR C PIN NUMBER	LEAD COLOR	LEAD DESIGNATION
A	X	9	1	BL-W	C1
A	X	9	26	W-BL	c2
B	X	9	2	O-W	c3
B	X	9	27	W-G	c4
A	Y	9	3	G-W	C9
A	Y	9	28	W-G	C10
B	Y	9	4	BR-W	C11
B	Y	9	29	W-BR	C12
		9	5	s-w	OWT
		9	30	w-s	OWR
		9	6	BL-R	FLT
		9	31	R-BL	FLR
		4	7	O-R	FLWA
		4	32	R-G	FLWB
		4	8	G-R	WFIT
		4	33	R-G	WFIR
			9 to 25 (Note)		GND
			34 to 50 (Note)		GND

Note: These leads are grounded in the carrier shelf when cable connectors C and D are installed in jacks C and D. They are cut off at the MDF when cables C and D go directly to an MDF. Carrier problems are less likely to occur when cables terminate directly on the MDF. When cables C and D go to an intermediate cross-connect terminal, such as a Meridian SL-I cross-connect terminal, they are terminated at that terminal and extended to the MDF. These leads are then cut off at the MDF.

Table 2-D
CABLE D DESIGNATIONS (TRANSMIT)
LOCAL AND REMOTE

CARRIER	NETWORK LOOP	CARD POSITION	CONNECTOR D PIN NUMBER	LEAD COLOR	LEAD DESIGNATION
A	X	9	1	BLW	C5
A	X	9	26	W-BL	C6
B	X	9	2	G-W	c7
B	x	9	27	W-O	C8
A	Y	9	3	G-W	C13
A	Y	9	28	W-G	C14
B	Y	9	4	BR-W	C15
B	Y	9	29	W-BR	Cl6
		5	5	S-W	GND
		5	30	W-S	GND
		4	6	BL-R	PFX 1
		4	31	R-BL	PFX2
		8	7	G-R	PFY1
		8	32	R-O	PFY2
		9	8	G-R	DCST
		9	33	R-G	DSCR
		9	9	BR-R	DETT
		9	34	R-BR	DETR
			10 to 25 (Note)		
			35 to 50 (Note)		

Note: These leads are grounded in the carrier shelf when cable connectors C and D are installed in jacks C and D. They are cut off at the MDF when cables C and D go directly to an MDF. Carrier problems are less likely to occur when cables terminate directly on the MDF. When cables C and D go to an intermediate cross-connect terminal, such as a Meridian SL-1 cross-connect terminal, they are terminated at that terminal and extended to the MDF. These leads are then cut off at the MDF.

SL-1

Remote Peripheral Equipment

Maintenance procedures

Publication number: 553-2601-500
Document release: 2.0
Document status: Standard
Date: December 1, 1991

© 1980 Northern Telecom

All tights reserved.

Revision history

August 10, 1990

Standard, release 1.0. Reissued for compliance with Northern Telecom standard 164.0.

December 1, 1991

This document is reissued to include technical content updates. Due to the extent of changes revision bars are omitted.

Contents

About this document 1

Equipment description 3

Fault detection 5
Overlay programs 5
Alarm indications 6

Fault clearing 7

Carrier fault clearing 17
Radio carrier system 17
Land-line carrier systems 17
Looping options 17
RPE looping options 17
Common causes of faults 18
Carrier looping options 18
Testing the carrier system 21

About this document

Remote Peripheral Equipment (RPE) is a hardware option available for the Meridian 1. RPE is used to extend the serving range of the Meridian 1 to a maximum of 112 km (70 miles) from the main Meridian 1 location.

A carrier system must be used to link the local and remote RPE locations. This can be provided by Northern Telecom or by the customer. The system should conform to "T1" carrier specifications.

It must be kept in mind that the Meridian 1 RPE and the carrier constitute a unified system. The first stages of the fault-clearing procedure should deal with identifying the location of the fault.

Before this document is used to diagnose faults and guide the repair of faults, *RPE description* (553-2601-200) should be read to gain familiarity with RPE.

This publication gives fault-clearing procedures for the Meridian 1 RPE only. Carrier equipment is referred to, but only in general terms, since the proper documentation for each carder system should be obtained from the manufacturer.

Equipment description

Each RPE system extends a Meridian 1 network loop to a maximum of 70 miles (112 km). Each loop serves up to a maximum of 4 Peripheral Equipment (PE) shelves.

A network loop card connects to an RPE carrier shelf at the Meridian 1 equipment (local end) and the PE shelves connect to an RPE carrier shelf at the remote location (see Figure 1). The two carrier shelves interface with a 1.544 Mb/s multiplexed digital carrier system (such as LD-1) via four cable pairs for signaling and transmission, The two carrier shelves (one local, one remote) will serve two remote network loops.

An ORB is required in an RPE system if the remote PE equipment is more than 762 m (2500 ft) from the local Meridian 1 carrier shelf.

An ORB provides the following:

- span line monitoring
- error monitoring
- fault-locate system access
- order-wire termination with DDD access
- line looping

Figure 1
RPE block diagram

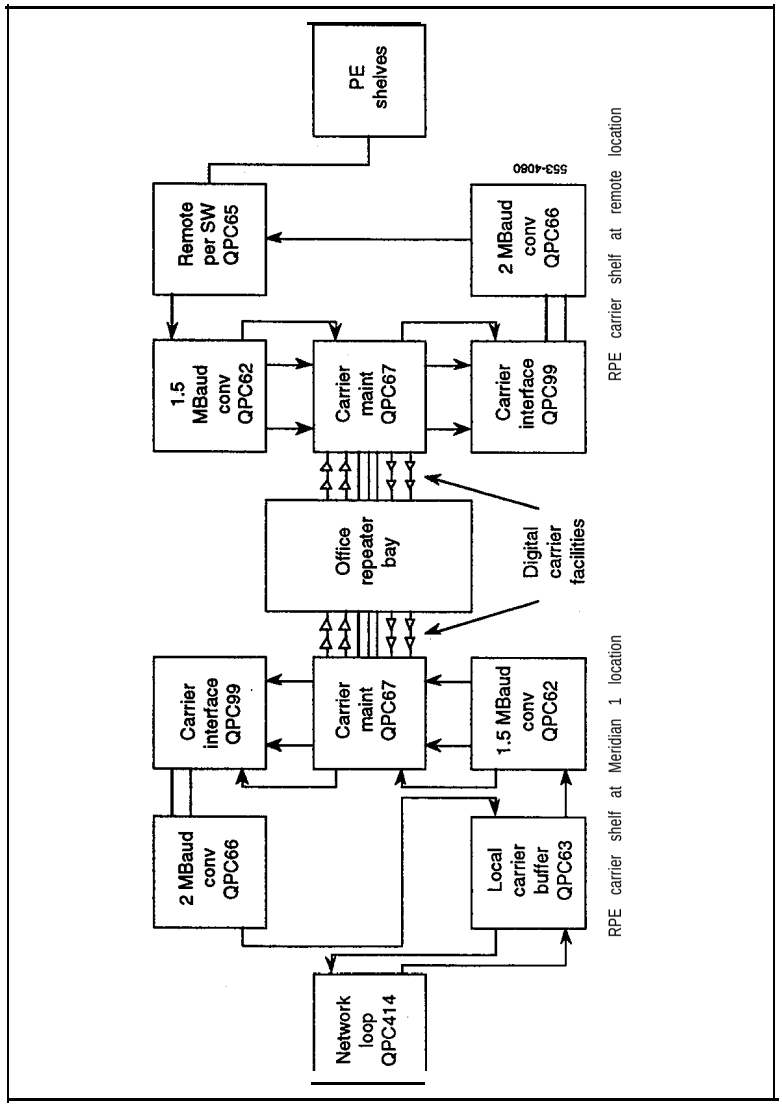

Fault detection

Overlay programs

Most faults are detected automatically by diagnostic routines that are provided on the system tape.

The Background Signaling and Switching program (LD45) is run continuously to test the signaling paths to all PE shelves.

The 1 .5Mb/s RPE Diagnostic program (LD33) should be included in the midnight routines, see *the XII input/output guide* (553-3001-400) for procedures) which automatically tests RPE systems every 24 hours. The program may also be loaded manually to test an RPE system.

The 1.5Mb/s RPE Diagnostic program for the local end (LD62) may be loaded manually to test the local equipment associated with an RPE system.

LD45 and LD33 may disable parts of RPE systems (network loops) that fail during a test. LD45 may light the LED on PE shelf cards. Faults are also indicated by an output on a system terminal or by a code on a maintenance display on the common equipment shelf.

The meaning of the mnemonics output on the system terminal is determined by referring to the *X11 input/output guide* (553-3001-400). The first three characters of the output identify the program and the other characters identify the meaning of the output.

Alarm indications

Local and remote error monitors in the QPC99 indicate when:

- the error rate at one of the two carriers exceeds one in 10^4 bits, or
- the carrier loses framing

When a remote error monitor detects an error it sends a message to the central control. If the local monitor is in the error condition, or receives and error message from the remote monitor, the background signaling diagnostic takes the following action.

- Minor alarm lamp at the locally served attendant console(s) is steadily ht.
- Time slots served by the faulty line are busied out.
- Diagnostic messages at all maintenance terminals is printed out.

Lamps are provided on circuit cards QPC62 and QPC99 to indicate out of frame and/or high error rate conditions. If the errors are in the carrier line going from the remote equipment to the ORB, an alarm is sounded at the ORB.

Errors in peripheral equipment at the remote location raise the same error and alarm indications as local Peripheral Equipment.

Fault clearing

Fault clearing begins with the flowchart in this section. The steps in the flowchart are designed to isolate the fault with the use of LD33 and LD62 and then to replace the defective apparatus.

Precautions

Circuit cards in an RPE network loop should not be changed without disabling the loop according to the following procedure:

- Load LD33 (RPD).
- Issue DISL L command. See the XII (553-3001-400) for more detail.
- Change circuit card.
- Issue ENLL L command.

If a card has been changed while the loop was enabled, the loop should be re-enabled in two steps:

- Disable the loop (DISL L).
- Enable the loop (ENLL L).

Other precautions are listed in ***Circuit card installation and testing*** (553-3001-211) and should be followed while replacing faulty apparatus.

Option switches

See Circuit card installation and testing (553-3001-211) for the option switch settings on the QPC62 and QPC99 circuit cards. When replacing these cards, the option switches on the replacement card must be set accordingly.

Power

Carrier shelves are powered by a QBL14 power distribution box (see *description* (553-2601-200) for connections and wiring). If the power fault lies elsewhere, refer to the fault-clearing procedures for the system.

Faceplate layout

Figure 2 depicts the faceplates of circuit cards located on the local and remote carrier shelves. Table 1 gives the functions of the switches and the meanings of the LEDs on each faceplate.

Disabling loop for testing

An RPE loop uses two carrier links. If a fault can be isolated to one carrier link, the suspected link should be disabled. In this case the traffic handled by a single link is 360 ccs. Fault clearing can then be done with unnoticeable effects for the end user. If a spare compatible carrier link is available it can be switched into the system until the fault is cleared.

Figure 2
Carrier shelf circuit card faceplates

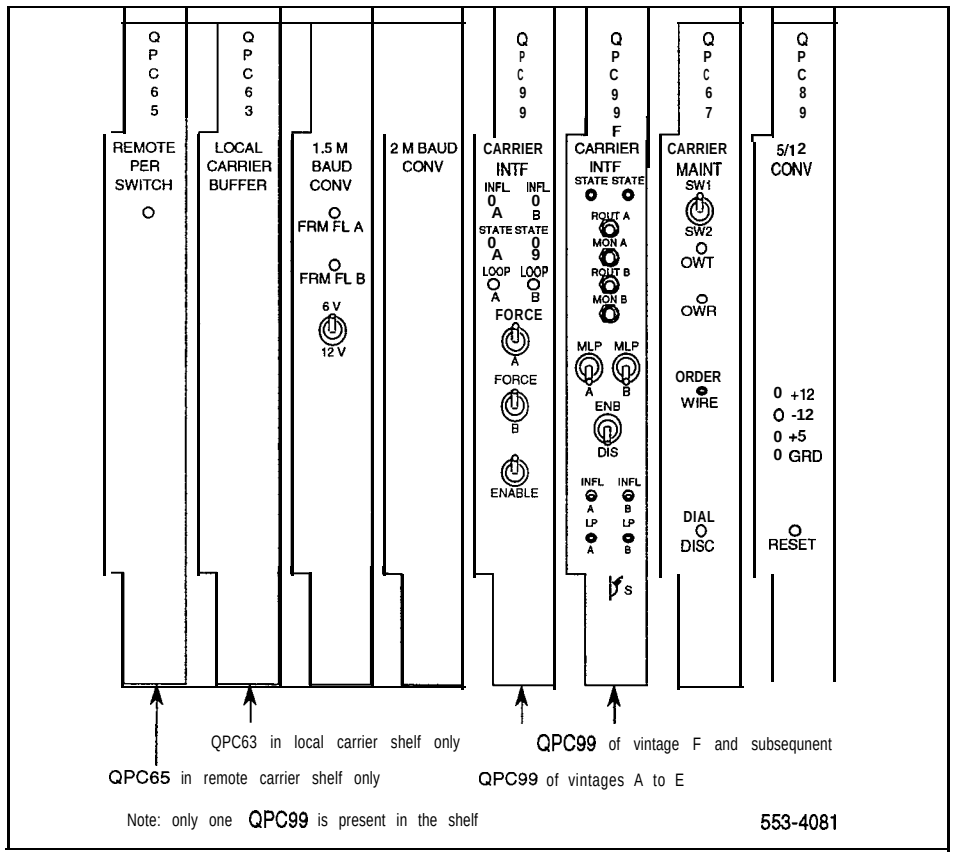

Table 1
Circuit card LED

Circuit card								Comments
QPC62		QPC99						
LED Designation								
FRM FLA	FRM FL B	INFL A	INFL B	STATE A	STATE B	LPA	LPB	
Status of LED • = Lit o = Extinguished								
o	o	o	o	•	□	□	□	System is normal and operating on STATE A. If unable to switch to STATE B, outgoing Carrier 0 has failed.
o	o	o	o	o	•	□	□	System is normal and operating on STATE B. If unable to switch to STATE A, outgoing Carrier 1 has failed.
•	□	•	□	□	•	□	□	Incoming Carrier 1 has failed.
o	•	□	•	•	□	□	□	Incoming Carrier 0 has failed.
•	•	•	•	□	□	□	□	Both incoming carriers have failed.
o	o	o	o	o	o	o	o	Both incoming carriers have failed.
●	○	●	○	○	●	●	□	Carrier looping test in progress on Carrier 1.
○	●	○	●	●	○	○	•	Carrier looping test in progress on Carrier 0.
○	○	●	●	○	○	○	□	Loop is manually disabled, disable switch in disable position.

Flowchart 1
RPE fault-clearing procedures (sheet 1)

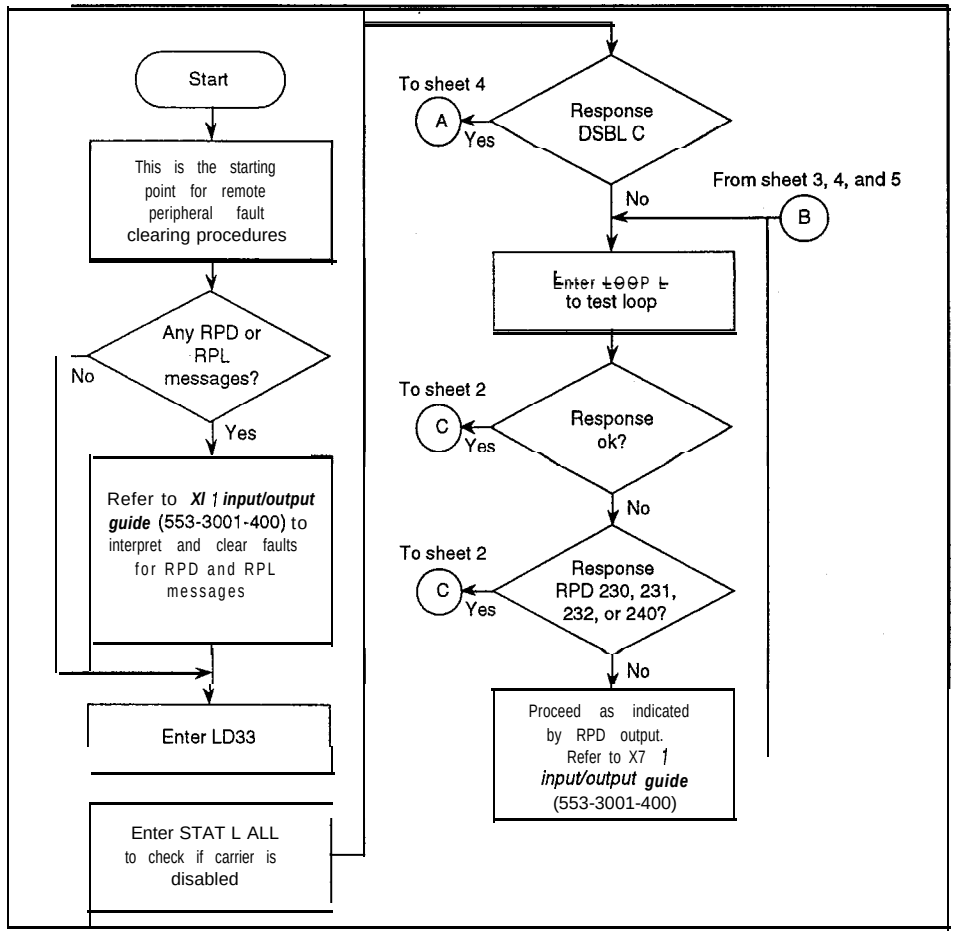

Flowchart 1
RPE fault-clearing procedures (sheet 2)

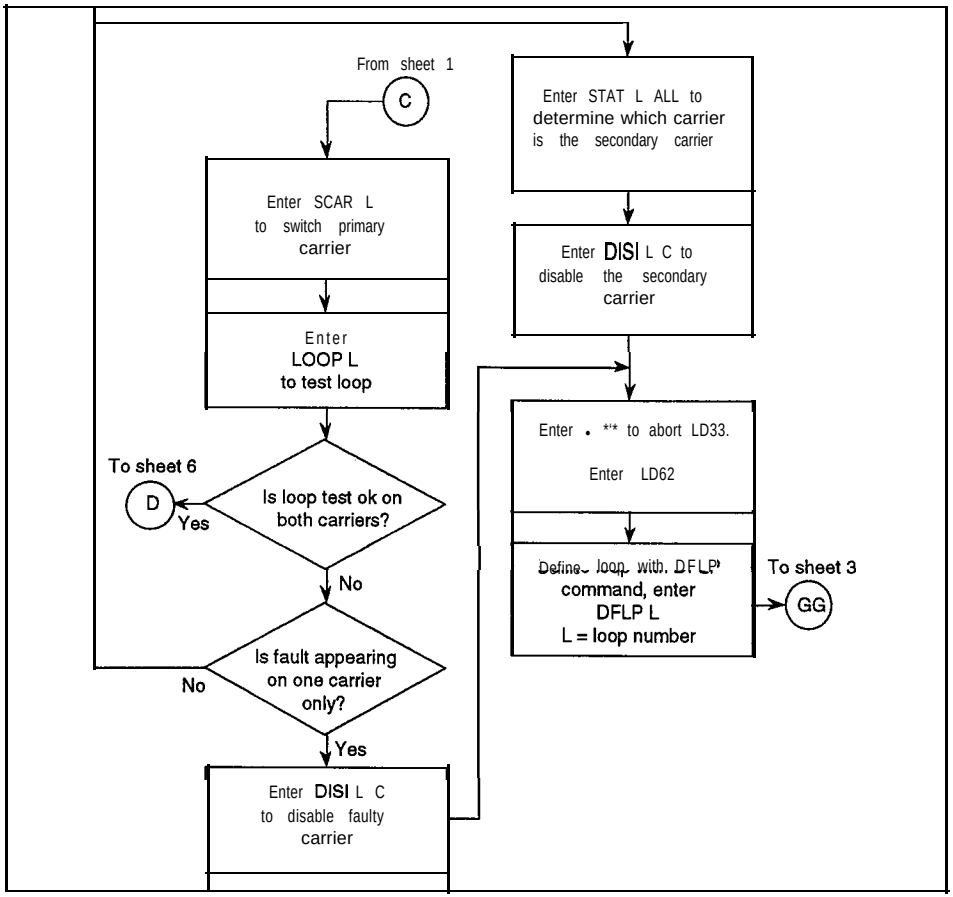

Flowchart 1
RPE fault-clearing procedures (sheet 3)

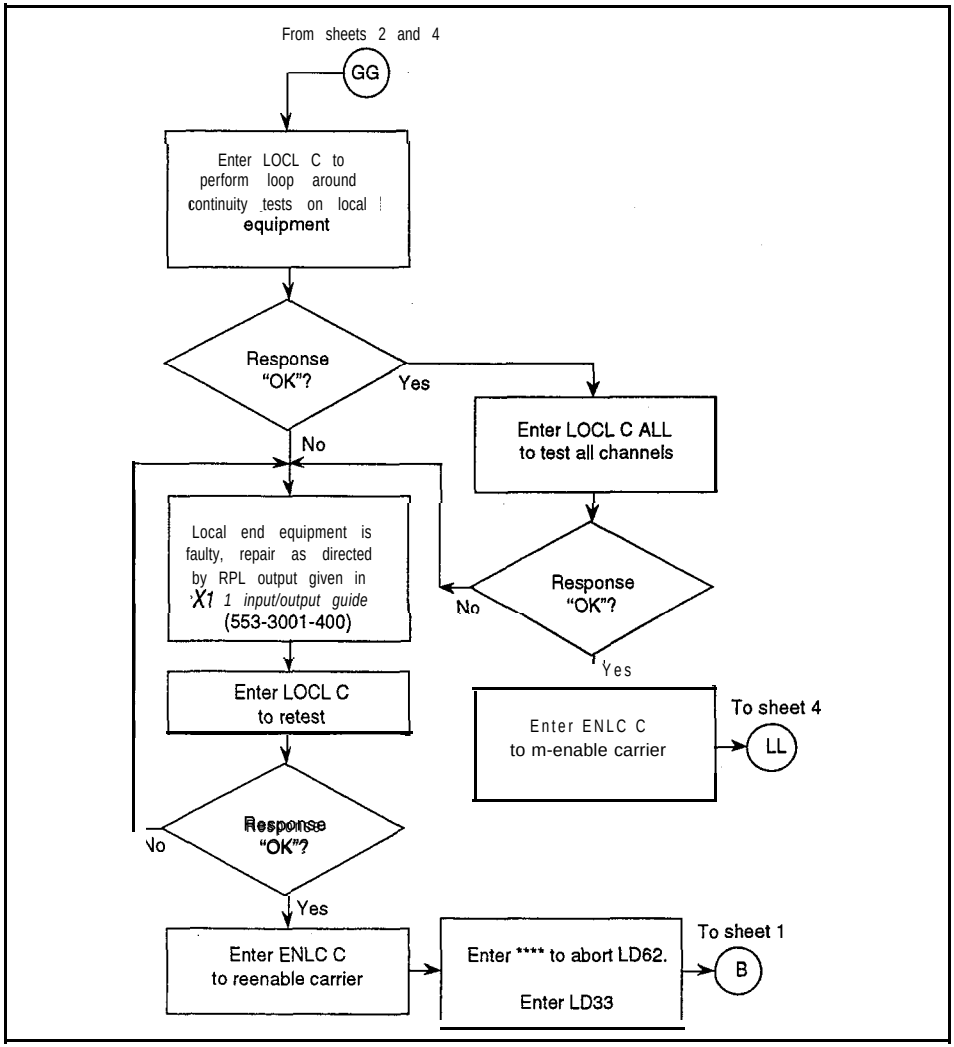

Flowchart 1
RPE fault-clearing procedures (sheet 4)

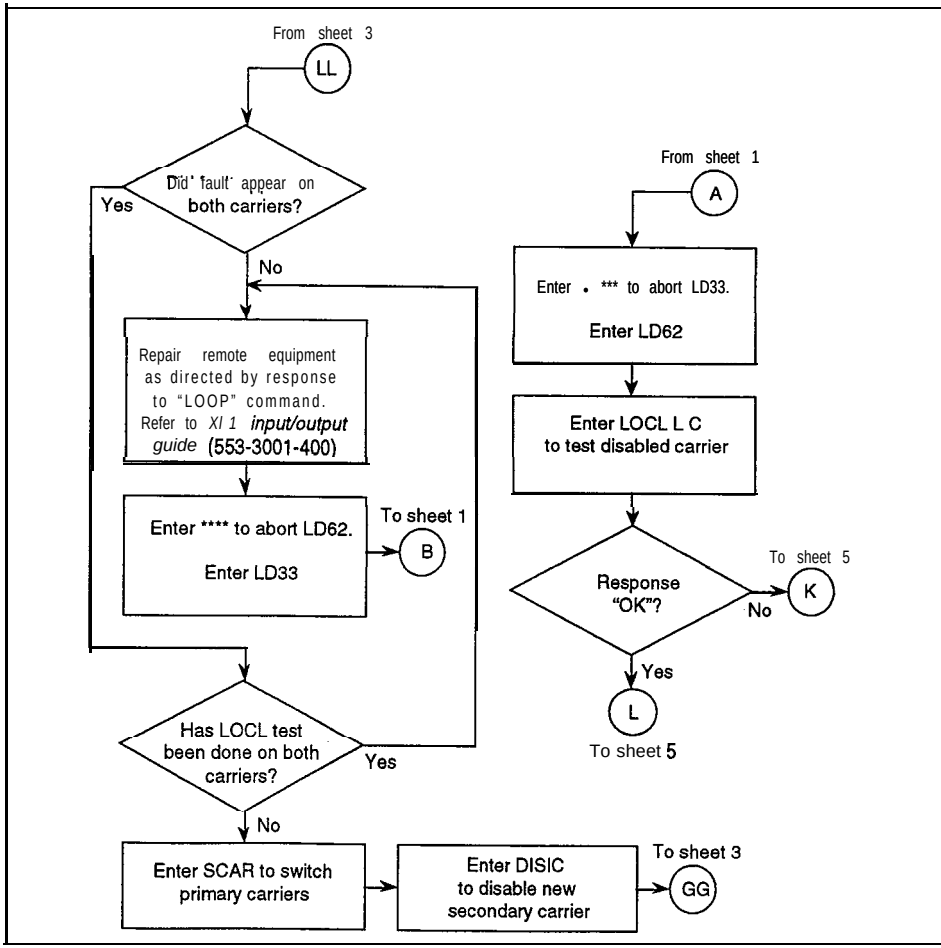

Flowchart 1
RPE fault-clearing procedures (sheet 5)

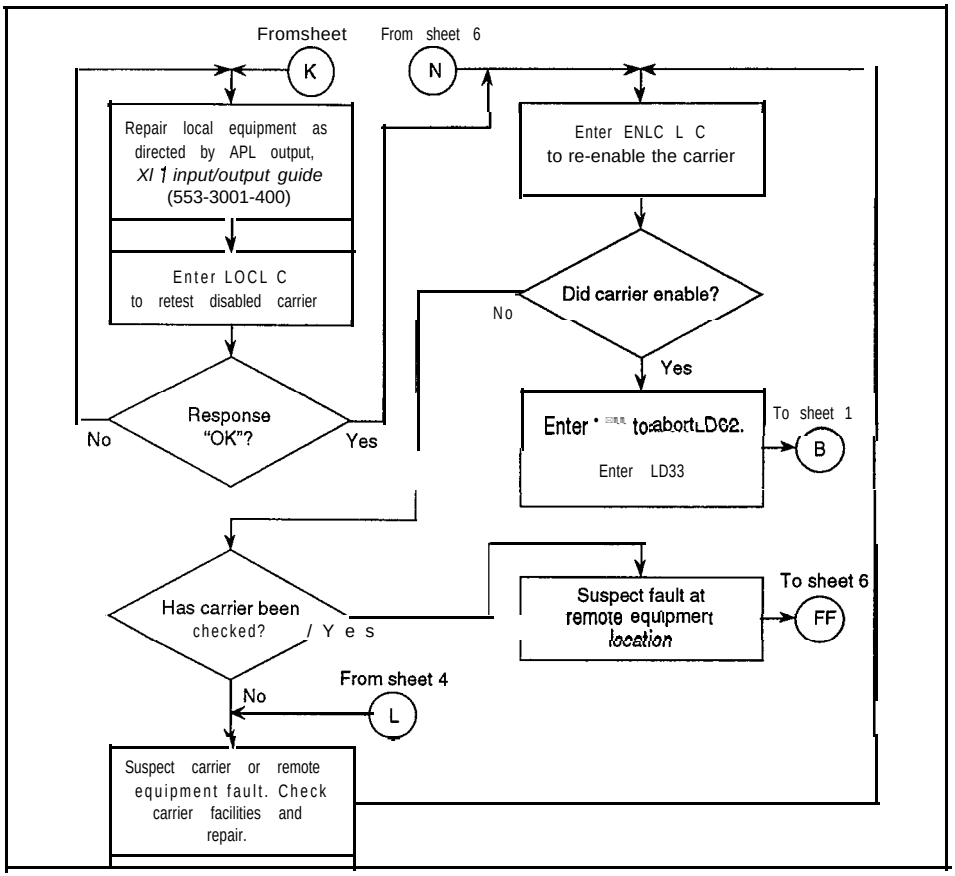

Flowchart 1
RPE fault-clearing procedures (sheet 6)

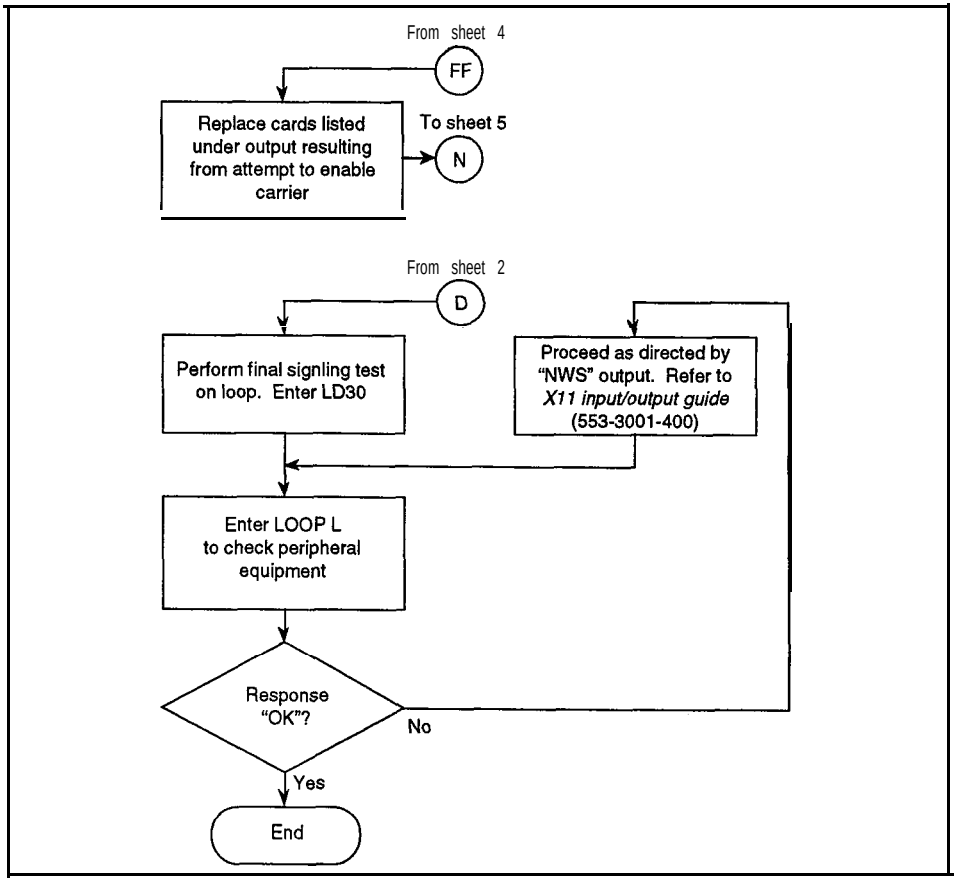

Carrier fault clearing

Radio carrier system

The considerations for clearing faults in land carrier systems also apply to radio links. The radio link should meet T1 interfacing specifications and any cable connections between the radio and the RPE should meet the same requirements as for ground links.

Land-line carrier systems

Due to the number of carrier systems available, this section can only give general ideas for clearing faults in carrier systems. Clearing carrier faults requires:

- a general understanding of carrier systems
- oscilloscope
- carrier line test set
- complete documentation for the carrier system

Figure 3 shows a simplified organizational diagram of an RPE carrier system. The system can be partitioned at any of several points to determine whether any component (ORB, line repeater, etc.) is causing the fault. To assist in this, the Meridian 1 RPE system has a facility to inject test patterns at the ROUT jacks in the QPC99 (Figure 4).

Looping options

An RPE system has several looping options available to aid fault location. These options are illustrated in (Figure 3).

RPE looping options

The system can be tested by looping the signal at the peripheral buffer (D). Load LD32 and refer to the *X11* (553-3001-400) for a list of available commands.

Common causes of faults

Possible causes of carrier faults can include:

- Traffic and pattern changes. Each digital repeater regenerates the clock from the incoming signal. When the loop is idle, a high density of 1s is put into the line, making clock recovery easier. Under traffic conditions the signal density decreases, making clock recovery more difficult. If faults occur when traffic is increased, there may be one or more marginal repeaters in the carrier system, or the clock recovery circuit at one or both RPE ends may be mistuned.
- Shortened or partially grounded cable pair,
- The output from the local transmitter can be looped back into the local receiver (A). Load LD62 and see the *XII input/output guide* (553-3001-400) for the appropriate commands.
- The carrier can be looped manually and tested from the ORB (B + C), depending on the type of carrier system used.

Carrier looping options

- loop when error rate exceeds one in 10^4
- loop when DC is detected on the FLP and error rate exceeds one in 10^4
- loop when the manual loop back switch (MLP) on the QPC99 is closed

The manual loop back (MLP) switches on the QPC99 allow the signal from the QPC99 to be put directly back into the carrier line and monitored at the far end using the monitor (MON) jacks on the QPC99 at the far end.

These options are switch-selectable on the QPC99. The use of fault-locating filters is outlined in the Northern Telecom Publication for the LD-1 carrier system. Whichever carrier system is used, documentation for it should be obtained and used to assist in the fault clearing process.

Problems may be encountered at the repeater site itself, such as:

faulty repeater

- faulty cable pair at the input to a regenerative repeater, wherein signal errors are arriving from the line
- faulty cable pair at the repeater output toward the next repeater location, causing reflections and poor impedance characteristics which result in errors at the repeater
- faulty simplex power loop, causing degraded repeater performance or complete failure
- faulty wiring in the repeater housing, sometimes encountered during pre-service testing

Figure 3
Carrier looping options

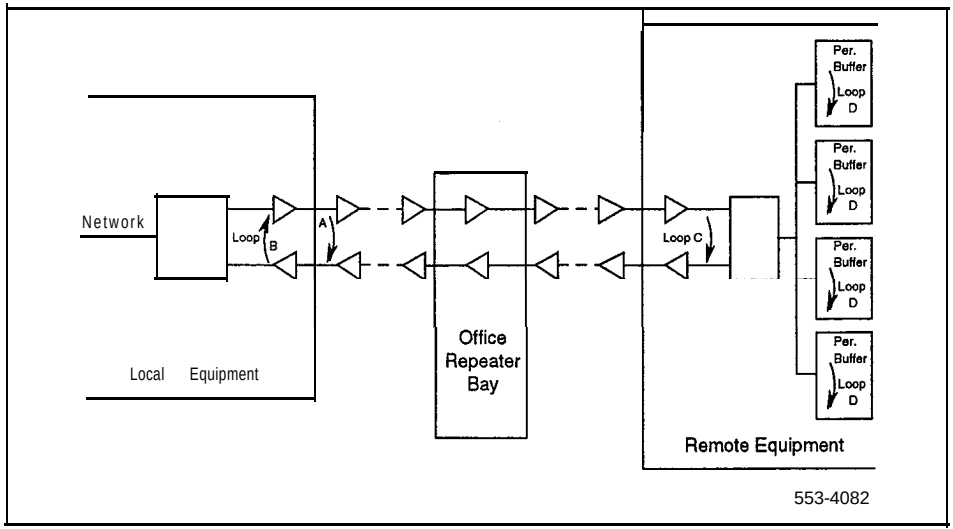

Figure 4
QPC99F maintenance jacks and looping switches

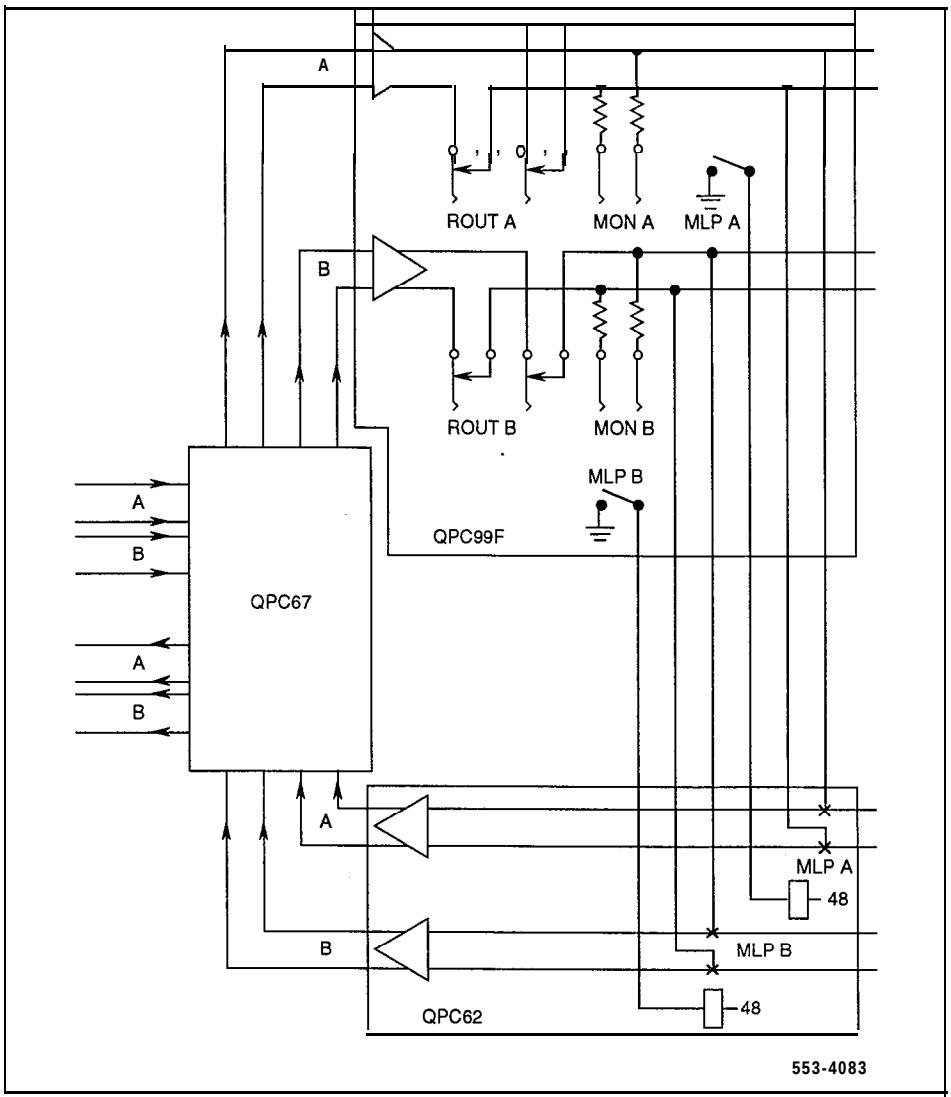

Testing the carrier system

The performance of a PCM system can be observed either by "by eye" using an oscilloscope or by using a test set to measure error density.

Error measurement

For voice traffic, a PCM system with 10^{-6} (one error in a million bits) performance is generally considered excellent. With 10-5, clicks may be heard, and 10^{-4} performance results in pops, clicks, and noise. At 10^{-3} most PCM systems go into alarm condition. (At this point there is one error in only 1000 bits).

For data traffic, any system performing at less than the 10^{-6} level causes problems for customers.

- Crosstalk. Every cable has its limits on the number of PCM systems that can be safely operated in the same sheath without intersystem interference. Crosstalk causes errors because of the regenerator's inability to decide if an induced signal constitutes a "pulse" or not. This shows up as "pops," noise, and data transmission errors. The most common crosstalk path is within the repeater housing and within the cable near the repeater itself due to the large difference (32 dB or more) between the outgoing and incoming signal.
- unbalanced cable pairs
- load coils, bridge taps, or building-out capacitors not removed
- moisture in cable
- defective lightning protection devices
- crossed cable pairs
- open or very high resistance cable pairs or splices (continuity tests may help in locating this)

When inspecting the waveform on the oscilloscope at various points in the carrier span, the requirements listed in ***RPE description*** (553-2601-200) should be kept in mind, since any deviation from tbe limits listed there causes errors or contributes to them.

SL-I

Remote Peripheral Equipment

Maintenance procedures

© 1980 Northern Telecom
All rights reserved.
Meridian 1 is a registered trademark of Northern Telecom.
Information subject to change without notice.
Release 2.0
Standard
December 1, 1991
Printed in the U.S.A.

northern telecom

INTEGRATED SERVICES NETWORK

MERIDIAN SL-1*

QCA144 1.5 MB/S REMOTE PERIPHERAL EQUIPMENT CABINET MAINTENANCE AND EQUIPMENT REPLACEMENT

CONTENTS PAGE

1. GENERAL.. 1-1

2. FAULT DETECTION AND LOCATING.. 2-1

OVERLAY PROGRAMS.. 2-1
ALARM INDICATIONS 2-1
FAULTLOCATING 2-1
FAULTCLEARINGPROCEDURES.. 2-1

3. EQUIPMENT REPLACEMENT 3-1

Equipment Replacement Procedures 3-1

Figure

3-1 Battery Cell Connections.. 3-17
3-2 Expansion Battery Unit Connections 3-18
3-3 Connections At Rear Of Cabinet..... 3-19
3-4 Cabinet Top Assembly 3-20
3-5 Shelf Assignments 3-21
3-6 Cooling Unit Connections 3-22

Chart

2-1 CE/PE1 BREAKER ON QUX19 UNIT TRIPS.. 2-5
2-2 AC BRKR BREAKER ON -48 V RECTIFIER TRIPS..... 2-6

Contents Continued----------

* MERIDIAN and SL-I are trademarks of Northern Telecom

Printed in USA

© Northern Telecom 1987

CONTENTS Continued PAGE

2-3 PE2, PE3, PE4 OR PE5 BREAKER TRIPS 2-7
2-4 FNFUSEOPERATESORFNLEDISEXTINGUISHED 2-7
3-1 BATTERY REPLACEMENT.. 3-2
3-2 EXPANSION QBL24 BATTERY UNIT REPLACEMENT.... 3-3
3-3 MAIN QBL24 BATTERY UNIT REPLACEMENT.. 3-4
3-4 QUAA3 POWER UNIT REPLACEMENT..... 3-5
3-5 QUX19 POWER UNIT REPLACEMENT 3-6
3-6 QUX20 POWER UNIT REPLACEMENT 3-8
3-7 POWER DISTRIBUTION CABLE REPLACEMENT. 3-9
3-8 QUA6 POWER FAIL TRANSFER UNIT REPLACEMENT... 3-11
3-9 QPC705 CONVERTER REPLACEMENT.. 3-11
3-10 QPC706 POWER CONVERTER CIRCUIT PACK REPLACEMENT.. 3-12
3-11 QUD24 COOLING UNIT REPLACEMENT..... 3-13
3-12 QRF12 RECTIFIER REPLACEMENT 3-14
3-13 PERIPHERAL EQUIPMENT SHELF BACKPLANE REPLACEMENT.. 3-15

Table

2-A ALARM INDICATIONS..... 2-2
2-B FAULT INDICATORS AND POSSIBLE CAUSES,. 2-3

Reason For Reissue: This practice is reissued to remove references to rectifiers other than the QRF12 -48 rectifier supplied with the cabinets. Changes to the practice are indicated by a vertical bar in the margin next to the affected item.

1. GENERAL

1.01 This appendix describes maintenance and equipment replacement procedures for the QCA144 Remote Peripheral Equipment (RPE) cabinet and related equipment.

1.02 Fault clearing for the RPE housed in the QCA144 cabinet is described in the main practice (553-2601-500).

2. FAULT DETECTION AND LOCATING

OVERLAY PROGRAMS

2.01 Overlay programs are used to detect most faults in the QCA144 cabinet. These programs are described in 553-2601-500.

ALARM INDICATIONS

2.02 RPE related alarms are described in 553-2601-500. Table 2-A of this appendix gives the alarm indications and causes that are unique to the QCA144 cabinet and are not necessarily caused by a fault in the RPE.

FAULT LOCATING

2.03 Table 2-B gives a cross-reference of fault indicators and associated fault type. Some faults may be cleared simply by using Table 2-A. Others are cleared by using the appropriate chart for the type of fault indicated in Table 2-A.

FAULT CLEARING PROCEDURES

2.04 The following charts describe the procedures to follow to clear faults in the cabinet.

- CE/PE Breaker Trips On QUX19 Unit - Chart 2-1
- AC BRKR Breaker Trips On -48 V Rectifier - Chart 2-2
- PE2, PE3, PE4 Or PE5 Breaker Trips - Chart 2-3
- FN Fuse Operates Or LN LED Is Extinguished - Chart 24.

Table 2-A
ALARM INDICATIONS

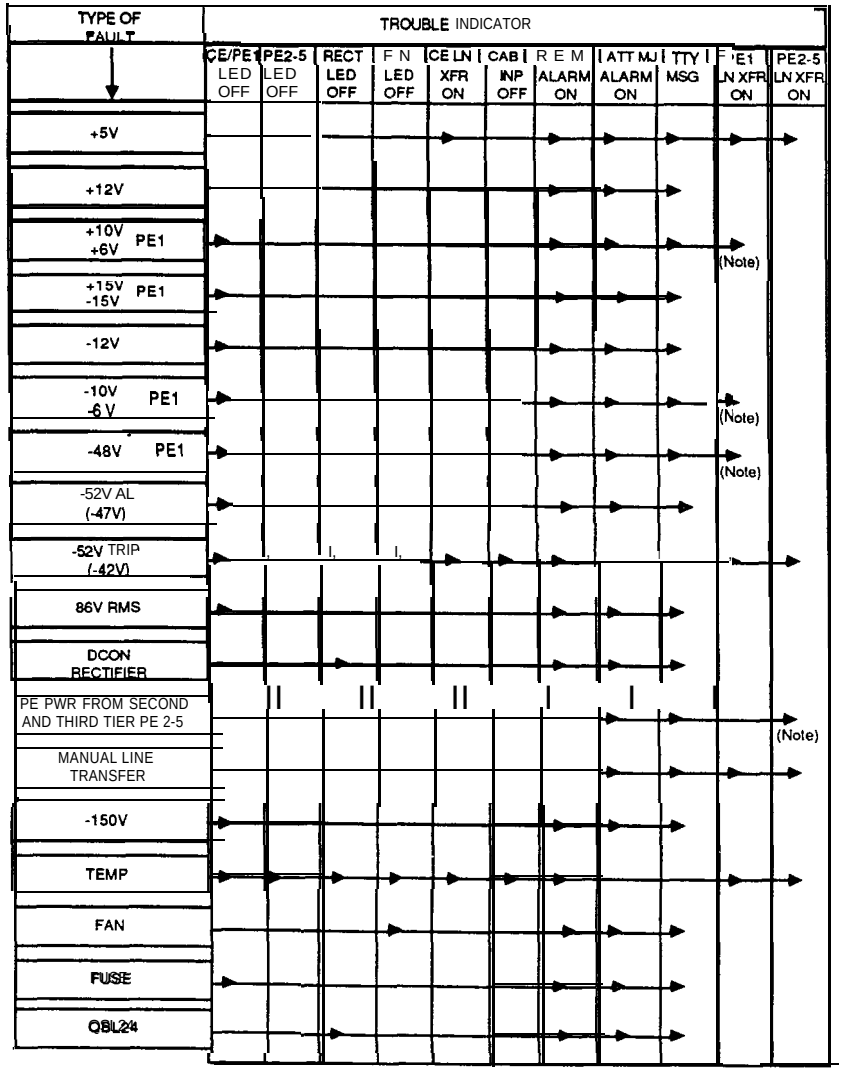

Note: Individual shelf transfer if +10, -10 or -48 volts fail on shelf power converter.

(Ill.553-1292)

Table 2-B
FAULT INDICATORS AND POSSIBLE CAUSES

FAULT INDICATION	POSSIBLE CAUSE
CE/PE LED Extinguished	Check QUX19 unit for tripped breaker.
	Check for a blown fuse on the QUAA3 and QUX19 units.
	Check connector PE1 on shelf backplane for a short or defective wiring.
	Check for a defective QPC705 (required if bottom PE shelf is equipped with message waiting line card).
	Check LN XFR switch on faceplate of QUAA3 unit and ensure that it is set to 0. Wait 2 minutes for fault indication to clear.
	Press 48 V CLR button on QUAA3 unit. If fault does not clear, replace the following items until fault clears.
	1) QPC705 (if equipped).
	2) QPC659 in PE shelf in first tier.
	3) QUAA3 power unit.
RECT/BATT LED Extinguished	Check for tripped AC BRKR breaker on the -48 V rectifier. I
	Check for a blown fuse in the QBL15 battery unit (if provided).
	Check for a tripped breaker on the QBL24 battery unit (if provided). A tripped breaker on the QBL24 unit indicates defective batteries or a defective QBL24 unit.
PE2-5 LED Extinguished	Check for tripped PE2, PE3. PE4 or PE5 breaker on QUX20 unit.
	Check for extinguished LED on a QPC706 or QPC659 circuit pack on the PE shelves. replace pack with extinguished LED.
FN LED Extinguished	Check FN fuse on QUX19 unit.

Table Continued

Table 2-B Continued
FAULT INDICATORS AND POSSIBLE CAUSES

FAULT INDICATION	POSSIBLE CAUSE
LED Extinguished on QPC705 Power Converter	Press the -48 V CLR button on the QUAA3 unit. The QPC705 or the cable connecting it is defective. Replace the following items until the fault is cleared. I) Replace the QPC705. 2) Replace the cable connecting the QPC705.
LED Extinguished on QPC706 Power Converter	Check for tripped breaker on QUX20 unit Check circuit packs on affected shelf by unseating all packs, resetting the power and reinserting packs one-at-a-time. If all circuit packs are good, replace following items until fault is cleared. 1) Affected QPC706 converter. ***QUX20 unit (Fig. 3-5) must be set to OFF before removing or inserting a QPC706 converter.*** 2) Power distribution cable going to shelf. 3) QUX20 unit.
DC ON LED Extinguished	Check commercial ac power supply. Check DC BRKR on QBL24 battery box (if equipped). Check F1 and F2 fuses (if equipped) on -48 V rectifier. If blown, replace rectifier.

Table Continued

Table 2-B Continued
FAULT INDICATORS AND POSSIBLE CAUSES

FAULT INDICATION	POSSIBLE CAUSE
FAULT INDICATION	POSSIBLE CAUSE
LED Lit on Power Fail Transfer Unit (PFTU)	At the local site, load program 35 and enter command CMAJ. If fault does not clear, check the following at the local site. 1) Cable on faceplate of PFTU and ensure that it is secure. 2) Check transfer switches on underside of consoles. 3) Check P10 cable connections at cross-connect terminal. 4) Check wiring to consoles. 5) If fault persists, replace PFTU.

Chart 2-1
CE/PE1 BREAKER ON QUX19 UNIT TRIPS

STEP	ACTION	VERIFICATION
1	Reset breaker.	If breaker does not trip, fault has cleared If breaker trips, proceed with next step.
2	Unseat the QPC659 buffer pack in the PE shelf in the first tier (base) of the cabinet. Reset breaker.	If breaker trips, replace power distribution cable at rear of cabinet. If breaker does not trip, proceed with next step.
3	Set breaker to OFF. Unseat all remaining circuit packs from PE shelf. Set breaker to ON.	If breaker trips, replace the shelf backplane.
4	Set breaker to OFF. Insert QPC659 pack. Reset breaker ON.	If breaker trips, replace defective QPC659 pack.
5	Reinsert circuit packs one-at-a-time until circuit breaker trips.	If breaker trips when a pack is inserted, it is defective. Replace pack.

Chart 2-2
AC BRKR BREAKER ON -48 V RECTIFIER TRIPS

STEP	ACTION	VERIFICATION
1	Reset breaker.	If breaker does not trip, fault has cleared. If fault reoccurs. replace the following items in the order shown until the fault clears. 1) The 48 V rectifier. 2) The batteries (if equipped). 3) The QBL24 battery box (if equipped). 4) The QUAA3 power unit. 5) The QUX19 power unit. 6) The QUX20 power unit (if equipped).
2	Disconnect red and black wires from TB3 at rear of rectifier. Reset breaker.	If breaker trips, replace defective -48 V rectifier.
3	Set breaker to OFF and reconnect wires.	
4	Disconnect red and black wires from TB1 at rear of QUX19 unit. reset breaker.	If breaker trips and no batteries are provided, the fault is in the red and black wiring between TB3 of the rectifier and TB1 of the QUX19 unit repair wiring
5	Set the. DC BRKR breaker on the QBL24 battery unit to OFF. Reset breaker.	If breaker trips, replace the QBL24 battery box. If breaker does not trip, replace the batteries.

Chart 2-3
PE2, PE3, PE4 OR PE5 BREAKER TRIPS

STEP	ACTION	VERIFICATION
1	Reset breaker.	If breaker does not trip, fault is cleared.
2	Check for extinguished LED on QPC706 pack associated with tripped breaker and replace pack. Reset breaker.	If breaker does not trip, fault is cleared.
3	Unseat all circuit packs on the shelf except the QPC706 pack. Reset breaker.	If breaker trips, replace power cabling to shelf at rear of cabinet. If breaker still trips when reset, replace the QUX20 unit.
4	Insert circuits one-at-a-time until breaker trips.	Last circuit pack inserted is defective. Replace.

Chart 2-4
FN FUSE OPERATES OR FN LED IS EXTINGUISHED

Note: When not equipped with cooling units, the cable from the QUX19 unit should be connected to J7 on the QUAA3 unit When cooling units are equipped, J7 is connected to the cabinet wiring leading to the cooling units.

STEP	ACTION	VERIFICATION
1	Remove mar EMI shields (if equipped) and check connector J7 at rear of QUAA3 unit. Connection should be secure.	
2	Ensure that FN fuses are not blown or defective.	If fuse blows when replaced, replace fan units one-at-a-time. If fault persists replace cabling to cooling units at rear of cabinet followed by QUX19 unit.
3	If fuses are good and FN LED is not lit, replace QUAA3 unit.	

3. EQUIPMENT REPLACEMENT

Equipment Replacement Procedures

3.01 The following charts describe equipment replacement procedures used when replacing defective apparatus in QCA144 RPE cabinets.

- Battery Replacement - Chart 3-l
- Expansion QBL24 Battery Unit Replacement - Chart 3-2
- Main QBL24 Battery Unit Replacement - Chart 3-3
- QUAA3 Power Unit Replacement - Chart 3-4
- QUX19 Power Unit Replacement - Chart 3-5
- QUX20 Power Unit Replacement - Chart 3-6
- Power Distribution Cable Replacement - Chart 3-7
- QUA6 Power Fail Transfer Unit (PFTU) Replacement - Chart 3-8
- QPC705 Converter Replacement - Chart 3-9
- QPC706 Power Converter Replacement - Chart 3-10
- QUD24 Cooling Unit Replacement - Chart 3-11
- QRF12 Rectifier Replacement - Chart 3-12
- Shelf Backplane Replacement - Chart 3-13.

Chart 3-1
BATTERY REPLACEMENT

Caution: Service in the cabinet is interrupted when replacing the batteries.

STEP PROCEDURE

1 Set the AC BRKR breaker on the front of the 48 V rectifier and the CAB INP breaker on the front of the QUX19 unit to OFF.

2 Set the DC BRKR breaker on the QBL24 battery units serving the cabinet to OFF.

3 Remove the screws securing the cover on the QBL24 battery unit and remove cover.

WARNING: The battery cells are capable delivering high currents when externally short-circuited. Caution must be used when working near the open terminals of the batten-es to ensure that the terminals are not inadvertently short-circuited.

4 Disconnect the red and black wires from the + and - terminals to the battery unit (Fig.3-1).

5 With caution, disconnect one-at-a-time the black jumper wires interconnecting the battery packs (Pig. 3-l).

6 Remove batteries from QBL24 battery unit.

7 Place replacement batteries in QBL24battery unit

8 With three black jumper wires, connect the four battery packs in series (Pig. 3-1).Connect the large lug on the black wire to tterminal of the first battery pack Connect the small lug on the wire to the - terminal on the second battery pack. Install the remaining wires between the second and third, and the third and fourth battery packs. Ensure that connections to the battery terminals am secure but do no over-tighten (maximum torque not to exceed 35 in/lb [3.95 N.m]).

9 Connect the black wire inside the QBL24 unit to the remaining positive (+) battery terminal, and the red wire to the remaining negative (-) battery terminal.

10 Reinstall cover on QBL24 battery unit.

11 Set the AC BRKR breaker located on the front -48 V rectifier to ON.

12 Set the DC BRKR breaker on the front of the QBL24 battery units to ON.

13 Set the CAB INP breaker on the front of the QUX19 or QUX21 unit to ON.

Chart 3-2
EXPANSION QBL24 BATTERY UNIT REPLACEMENT

expansion QBL24 battery unit.

STEP PROCEDURE

1 Set the AC BRKR breaker on the front of the 48 V rectifier to OFF in the cabinet connected to the QBL24 battery unit being replaced. I

2 Set the DC BRKR breaker on both QBL24 battery units serving the cabinet to OFF.

3 Remove the screws securing the cover on the main QBL24 battery unit and remove cover ***(Fig. 3-2).***

WARNING: The battery cells are capable of delivering high currents when externally short-circuited. Caution must be used when working near the open terminals of the batteries to ensure that the terminals are not inadvertently short-circuited.

4 Disconnect the red and black wires from the expansion QBL24 battery unit to the front of the main QBL24 unit (Fig. 3-2).

5 From the main QBL24 unit, remove the flexible conduit and wiring going to the expansion QBL24 unit (Fig. 3-2).

6 Remove batteries from old unit and install in new QBL24 unit as described in Chart 1 (or install new batteries).

7 Install cover on expansion QBL24 unit.

8 Install flexible conduit and wiring from expansion QBL24 unit to main QBL24 unit (Fig. 3-2).

9 Connect green wire to lug 2, black wire to terminal 1 of W1 and red wire to terminal 5 of TB1 on front panel of main QBL24 unit (Fig. 3-2).

10 Install cover on main QBL24 unit.

11 Set the AC BRKR breaker located on the front 48 V rectifier to ON in the cabinet connected to the replacement QBL24 battery unit. I

12 Set the DC BRKR breaker on the front of the QBL24 battery units to ON.

Chart 3-3
MAIN QBL24 BATTERY UNIT REPLACEMENT

Caution: Service in the cabinet is interrupted when replacing the main QBL24 battery unit.

STEP	PROCEDURE
1	Set the AC BRKR on the front of the -48 V rectifier to OFF in the cabinet connected to the QBL24 battery unit being replaced.
2	Disconnect the cabinet power line cord from the commercial ac power supply.
3	Set the DC BRKR breaker on main and expansion (if equipped) QBL24 battery units serving the cabinet to OFF.
4	If cabinet is equipped with EMI shields, remove the bottom shield
5	Disconnect wiring from rear of 48 V rectifier, QUX19 unit and from terminal GRD1A on ground bus to main QBL24 unit (Fig. 3-3). Remove wiring and flexible conduit from cabinet.
6	Install flexible conduit and wiring from replacement QBL24 unit and to 48 V rectifier, QUX19 unit and to GRD1 ground bus termional as shown in Fig. 3-3.
7	Reinstall EMI shield (if requited).
8	If an expansion QBL24 unit is equipped, disconnect from old main QBL24 unit and connect to new main unit as described in Chart 2.
9	Remove batteries from old main QBL24 and install in new main QBL24 unit as described in Chart 1 (or install new batteries).
10	Install cover on QBL24 unit.
11	Reconnect power line cord to commercial ac power supply.
12	Set the AC BRKR breaker located on the front -48 V rectifier to ON.
13.	Set the DC BRKR breaker on the front of the QBL24 battery units to ON.

Chart 3-4
QUAA3 POWER UNIT REPLACEMENT

Caution: **Service in the *cabinet*** is ***interrupted*** *when replacing* ***the QUAA3*** *power unit.*

STEP	PROCEDURE	
1	Set the AC BRKR breaker on the front of the -48 V rectifier to OFF.	I
2	Set the DC BRKR breaker on the QBL24 battery units (if equipped) serving the cabinet to OFF.	
3	If cabinet is equipped with EMI shields remove the bottom shield. Remove the two screws at the top comers of the shield and lower shield to disengage from cabinet..	
4	Tag and disconnect connectors J1, J2. J3, J4, J5. J6 and J7 at rear of QUAA3 unit	
5	Tag and disconnect wires from terminals 1, 2, 3, 4, 5 and 6 of TB4 at rear of QUAA3 unit.	
6	Perform this step only if a QPC705 converter is installed beside the QUAA3 unit. From the front of the cabinet, remove screws securing the QPC705 converter to the cabinet. Slide the QPC705 out of the cabinet and set aside.	
7	From the front of the cabinet, remove the two bolts securing the right bottom of the QUAA3 unit to the cabinet	
8	Remove the two screws securing the left side of the QUAA3 unit to the cabinet and remove unit from cabinet.	
9	Position the replacement QUAA3 unit in the cabinet and secure to cabinet with mounting screws and bolts.	
10	If Previously removed, reinstall the QPC705 converter and secure to cabinet with mounting screws.	
11	At the rear of the QUAA3 unit, reconnect connectors J1, J2. J3, J4, J5, J6 and J7.	
12	On TB4 at rear of QUAA3 unit, reconnect wires to terminals 1.2, 3, 4, 5 and 6.	
13	If previously removed, reinstall EMI shield at rear of cabinet and secure with mounting screws.	
14	Ensure that the 25HZ/20HZ and the LN XFR switches on the front of the QUAA3 unit are correctly set (usually set the same as on the removed QUAA3 unit).	
15	Set the AC BRKR breaker located on the front -48 V rectifier to ON.	I
16	If cabinet is equipped with QBL24 battery units, set the DC BRKR breaker on the units to ON.	

Chart 3-5
QUX19 POWER UNIT REPLACEMENT

Caution: Service in the cabinet is interrupted when replacing the QUX19 power unit.

STEP	PROCEDURE
1	Set the **AC BRKR** breaker on the front of **the** -48 V rectifier to OFF.
2	Set the DC BRKR breaker on the QBL24 battery units (if equipped) serving the cabinet to OFF.
3	If cabinet **is** equipped with **EMI** shields tag and disconnect cables from all connectors A. **B,** C, D. E, F and G at the rear of the cabinet and remove shields.
4	Remove screws securing cabinet top assembly (Fig. 3-4).
5	With a soldering iron, disconnect wiring from thermostat under **cabinet** top assembly (Fig. 34).
6	At the tear of the **QUAA3** unit, disconnect cable connectors **P1, P5,** P6. and **P7** and wiring from **terminals** 1, 2, 3. 4. **5** and 6 of TB4.
7	At the rear of the **QUX19** unit, tag and disconnect power wiring from TBI and **P10 wiring** from TB2.
8	From **the** ground bus at the right rear of **the** cabinet, disconnect wiring from lugs **GRD2A, GRD2G** and **GRD1C.**
9	From the front of the cabinet. remove the screws securing **the QUX19** unit to **cabinet** and remove unit and attached wiring from **cabinet.**
10	Install replacement **QUX19** unit and wiring in cabinet and secure with mounting screws.
11	From **the** rear of the cabinet, position the long black and white wires for the thermostat. Connect and solder connections to thermostat (Fig. 34).
12	Install cabinet top assembly and secure with mounting screws (Fig. 34).
13	Reconnect power wiring to **TB1** and **P10** wiring to TB2 at rear of **QUX19** unit
14	**Connect** connectors **P1, P5,** P6 and **P7** from **QUX19** unit to **connectors J1, J5,** J6 and J7 at rear of **QUAA3** unit.
15	Connect **connector** PE to connector J on backplanes.

Chart Continued

Chart 3-5 Continued
QUX19 POWER UNIT REPLACEMENT

STEP	PROCEDURE
16	Connect power wiring harness containing three red wires, two blue wires and a black wire to TB4 at the rear of the QUAA3 unit as follows; a) The two 10 AWG red wires to terminals 1 and 2. b) The two 10 AWG blue wires to terminals 3 and 4. c) The 14 AWG black wire to terminal 5. d) The 14 AWG black wire to terminal 6.
17	At the cabinet ground bus connect the remaining wires from the QUX19 unit as follows; a) Black and yellow wires to terminal GRD2A on one lug. b) Blue wire to the second lug on terminal GRD2A. c) One black wire on each lug of terminal GRD2G. d) One white wire on each lug of terminal GRD1C.
18	If previously removed, reinstall EMI shields and reconnect cables at rear of cabinet.
19	Set the CAB INP breaker on the front of the QUX19 unit to ON.
20	Set tbe AC BRKR breaker on the front of the 48 V rectifier to ON.
21	Set the DC BRKR breaker on the QBL24 battery units (if equipped) serving the cabinet to ON.

Chart 3-6
QUX20 POWER UNIT REPLACEMENT

is *interrupted when replacing the QUX20 power unit.*

STEP	PROCEDURE
1	Set the breakers on the faceplate of the QUX20 unit to OFF.
2	Set the CAB INP breaker on the QUX19 unit to OFF.
3	If equipped, remove the lower EMI shield from the rear of the cabinet,
4	From the rear of the cabinet, disconnect the lead equipped with a spade connector from the QUX20 unit to TB3 at rear of the QUX19 unit.
5	Tag and disconnect red and blue wires from terminals 2, 3, 4 and 5 (4 and 5 may be spare) of TB5 at rear of QUX20 unit.
6	From the front of the cabinet. remove the screws securing the QUX20 unit to the cabinet and remove unit.
7	Position replacement QUX20 unit and secure to cabinet with mounting screws.
8	From the rear of the cabinet, connect the lead equipped with a spade connector to the terminal at TB3 at the rear of the QUX19 unit
9	Reconnect red and blue wires to terminals 2, 3, 4 and 5 (4 and 5 may be spare) of TB5 at rear of QUX20 unit.
10	If required, reinstall EMI shields.
11	Set the required breakers on the front of the QUX20 unit to ON.
12	Set the CAB INP breaker on the QUX19 unit to ON.

Chart 3-7
POWER DISTRIBUTION CABLE REPLACEMENT

interrupted when replacing a power distribution cable.

STEP PROCEDURE

1 Set the CAB INP breaker on the QUX19 unit to OFF.

2 Perform this step only if EM1 shields are equipped.

a) Remove screws securing bottom shield and remove shield.

b) Tag and disconnect cables from connectors at rear of the first PE shelf. Remove EMI shield.

c) Tag and disconnect cables from connectors A, B. C, D, E and F at rear of PE shelf on second tier. Remove EMI shield.

d) If power cable being replaced is connected to the third tier , tag and disconnect cables from connectors A, B, C, D. E and F of third tier. Remove EMI shield,

3 Perform this step only if the power cable serving the first tier is being replaced.

a) Disconnect connector P3 from the rear of the QUAA3 unit.

b) Disconnect red and blue wires from terminals 2 and 3 of TB5 at the rear of the QUX20 unit.

c) Disconnect the black and white wires from the distribution cable to the GRD2 and GRD1 connections on the ground bus at the rear of the cabinet.

d) Disconnect connectors PE2 and PE3 from the PE shelf backplane.

e) Connect connectors PE2 and PE3 of the replacement distribution cable to the PE shelf backplane J connectors and connector P3 to J3 at the rear of the QUAA3 unit.

f) Connect the white and black wires equipped with ring connectors to GRD1 and GRD2 terminals on the ground bus.

g) Connect the red and blue wires to terminals 2 and 3 of TB5 at the rear of the QUX20 unit

Chart Continued -

Chart 3-7 Continued
POWER DISTRIBUTION CABLE REPLACEMENT

STEP	PROCEDURE
4	Perform this step only if the power distribution cablefor the third tier is being replaced. a) Disconnect connector P4 and P7 from the rear of the QUAA3 unit. b) Disconnect red and blue wires from terminals 4 and 5 of TB5 at the rear of the QUX20 unit. c) Disconnect the black and white wires from the distribution cable to the GRD2 and GRD1 connections on the ground bus at the rear of the cabinet. d) Disconnect connectors PE4 and PE5 from the PE shelf backplane. e) Connect connectors PE4 and PE5 of the replacement distribution cable to the PE shelf backplane J connectors and connectors P4 and P7 to J4 and J7 at the rear of the QUAA3 unit. f) Connect the white and black wires equipped with ring connectors to GRD1 and GRD2 terminals on the ground bus. **g) Connect the red and blue wires to terminals 4 and 5 of TB5. at the rear of the QUX20 unit.**
5	Reinstall EMI shields and secure with mounting screws.
6	Reconnect all cables previously disconnected.
7	Set the CAB INP breaker on the QUX19 unit to ON.

Chart 3-8
QUA6 POWER FAIL TRANSFER UNIT REPLACEMENT

STEP	PROCEDURE
1	Place temporary jumpers at cross-connect terminal to maintain service on telephones involved with the QUA6 unit.
2	Remove and tag cable from connector J1 on the faceplate of the QUA6 unit.
3	Remove screws securing QUA6 unit to wall (if mounted on wall) and remove unit.
4	With mounting screws. mount replacement QUA6 unit.
5	Reconnect cable to connector J1 on the faceplate of the QUA6 unit.
6	Remove temporary jumpers at cross-connect terminal.

Chart 3-9
QPC705 CONVERTER REPLACEMENT

STEP	PROCEDURE
1	***Caution: Service in the cabinet is interrupted when performing this step.*** Set the CAB INP breaker on the QUX19 power distribution unit to OFF.
2	Remove the screws securing the QPC705 converter to the cabinet.
3	Slide the QPC705 converter out of its position and disconnect the QCAD278 power cable from the connector at the rear of the converter.
4	Perform this step only if the QCAD278 cable is beiig replaced. a) Remove the screws securing the lower EMI shield (if equipped) at the rear of the cabinet and remove shield. b) Disconnect the QCAD278 cable from terminal 2 of TB2 on the QUX19 unit, connector P2 at the rear of the QUAA3 unit and from the lug on the ground bus. c) Remove cable.
5	If QPC705 is being replaced, connect existing QCAD278 cable to connector on rear of new QPC705 converter. If the QCAD278 cable is being replaced, connect connector 705 of new cable to connector at rear of existing QPC705 convener.

Chart Continued

Chart 3-9 Continued
QPC705 CONVERTER REPLACEMENT

STEP	PROCEDURE
6	Install the QPC705 in its assigned position with the QCAD278 cable towards the rear of tbe cabinet Secure the QPC705 converter to the cabinet with mounting screws.
7	Perform this step only if the QCAD278 power cable is being replaced.
	a) Connect connector P2 of the QCAD278 cable to connector P2 at the rear of the QUAA3 tit.
	b) Connect the red wire equipped with a spade connector to terminal 2 of TB2 at the mar of the QUX19 unit.
	c) Connect the black wire equipped with a ring connector to GRD2 terminal on the ground bus at the rear of the cabinet.
	d) Reinstall the EMI shield at rear of cabinet and secure with mounting screws.

Chart 3-10
QPC706 POWER CONVERTER CIRCUIT PACK REPLACEMENT

Caution: The appropriate breaker must be OFF before attempting to replace a QPC706 converter pack. See Fig. 3-5 for break& assignments.

STEP	PROCEDURE
1	See 553-2301-511 and load overlay 32 and disable loops on shelf containing the QPC706 converter.
2	Set the ENB/DIS switch on the QPC659 circuit pack on the PE shelf containing the QPC706 converter to DIS.
3	Set the PE breaker corresponding to the PE shelf on the QUX20 unit to OFF (Pig. 3-5).
4	Remove the QPC706 converter and install replacement.
5	Set the corresonding PE breaker on the QUX20 unit to ON.
6	Set the ENB/DIS switch on the QPC659 circuit pack on the PE shelf to ENB.
7	Using overlay program 32, enable loops previously disabled.

Chart 3-11

QUD24 COOLING UNIT REPLACEMENT

Note: QUD24 Cooling units am located in the cabinet top panel assembly. Connections given in this chart are typical and may vary from one installation to another. Cooling units am connected in series.

STEP PROCEDURE

1 Remove the six screws securing the cabinet top panel assembly and remove top (Pig. 3-4).

2 Disconnect cable from P1 connector of QUD24 unit (Pig. 3-6).

3 Disconnect the cable or terminating plug (whichever is equipped) from connector P2 of the QUD24 unit (Pig. 3-6).

4 Remove mounting screws securing QUD24 unit to cabinet top panel (Pig. 3-6) and remove QUD24 unit

5 Unpack and inspect the replacement QUD24 cooling unit.

6 Install replacement QUD24 unit and secure to cabinet top panel with mounting screws (Pig. 3-6).

7 Reconnect cable to connector P1 of the QUD24 cooling unit (Pig. 3-6).

8 Reconnect cable or terminating plug (removed from previous QUD24 unit) to connector P2 of the QUD24 unit (Pig. 3-4).

9 Reinstall cabinet top assembly and secure with mounting screws (Pig. 3-4).

Chart 3-12
QRF12 RECTIFIER REPLACEMENT

rectifier unless battery backup is provided.

STEP	PROCEDURE
1	Set AC BRKR breaker on the front of the rectifier to OFF.
2	Disconnect rectifier commercial power line cord from its receptacle.
3	If equipped, remove the bottom **EMI** shield.
4	Tag and disconnect the commercial power line cord, sense leads, DCON lead and battery leads from the rear of the rectifier (Fig. 3-3).
5	Remove the mounting screws at the front of the rectifier and remove the rectifier **from** cabinet.
6	Position the new rectifier in the cabinet and secure with mounting screws.
7	Set the ac breaker on the new rectifier to OFF.
8	Reconnect all previously disconnected wiring (Fig. 3-3).
9	Ensure that the 1 **10V/220V** switch on the front of the new rectifier is set to the correct voltage.
10	Connect the rectifier commercial power **line** cord to its receptacle.
11	Set the rectifier AC BRKR breaker on the front rectifier to ON.

Chart 3-13
PERIPHERAL EQUIPMENT SHELF BACKPLANE REPLACEMENT

STEP	PROCEDURE
1	Log in to the system and load overlay program 32 as described in 553-2301-511.
2	Disable the PE shelf being replaced using command DISS 1 s, where l is the loop number and s is the shelf number.
	Note: If the loop is extended to a second PE shelf, that shelf must also be disabled.
3	If the backplane being replaced is located on the same level as the RPE shelf in the first tier (base) of the cabine, remove the PE1 fuse from the QUX19 power unit. If the backplane being replaced is located in shelf positions 2 through 5, set the corresponding PE breaker (PE2, PE3, PE4 or PE5)
4	If the backplane being replaced is in positions 2 through 5 and the cabinet is equipped with EM1 shields, tag and disconnect cables from connectors A, B, C. D, E and F on the back of the shelf next to the backplane being replaced.
5	If the cabinet is equipped with EM1 shields, remove the screws securing the shield behind the backplane being replaced.
6	Disconnect power cable from connector J on the backplane being replaced.
7	Unseat all circuit packs from backplane being replaced.
8	Remove thc hex screws securing the top and bottom of the backplane to the cabinet and remove backplane.
9	Position the new backplane and secure to cabinet with hex screws.
10	Reconnect power cable to connector J on backplane.
11	If previously removed, reinstall EM1 shield and secure to cabinet with mounting screws.
12	Reconnect all cables previously disconnected from connectors on shelf backplanes.
13	Reinsert all circuit packs previously unseated.
14	Reinsert PE1 fuse (if removed) on QUX19 unit or set PE breaker on QUX20 unit for replaced backplane to ON.
15	With overlay program 32 (sec 553-2301-511) enable the previously disabled shelves by entering command ENLS 1 s, where 1 is the loop and s is the shelf number.

Chart Continued

Chart 3-13 Continued
PERIPHERAL EQUIPMENT SHELF BACKPLANE REPLACEMENT

STEP	PROCEDURE
16	Enter **** to abort overlay program 32.
17	To test replacement PE shelf, load overlay program 30 (NWS).
18	Enter command LOOP 1. where 1 is the loop number on which the shelf was replaced.
19	If the system response is other than OK, refer to the trouble indicators documented in this practice.

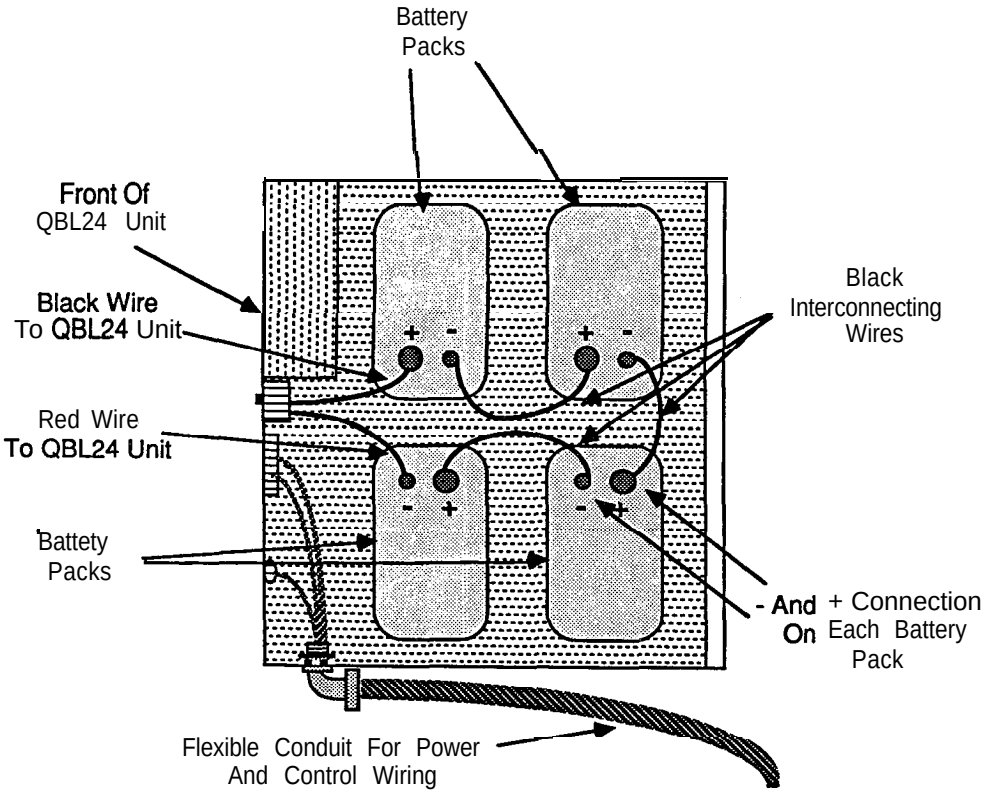

Fig. 3-1
Battery Cell Connections

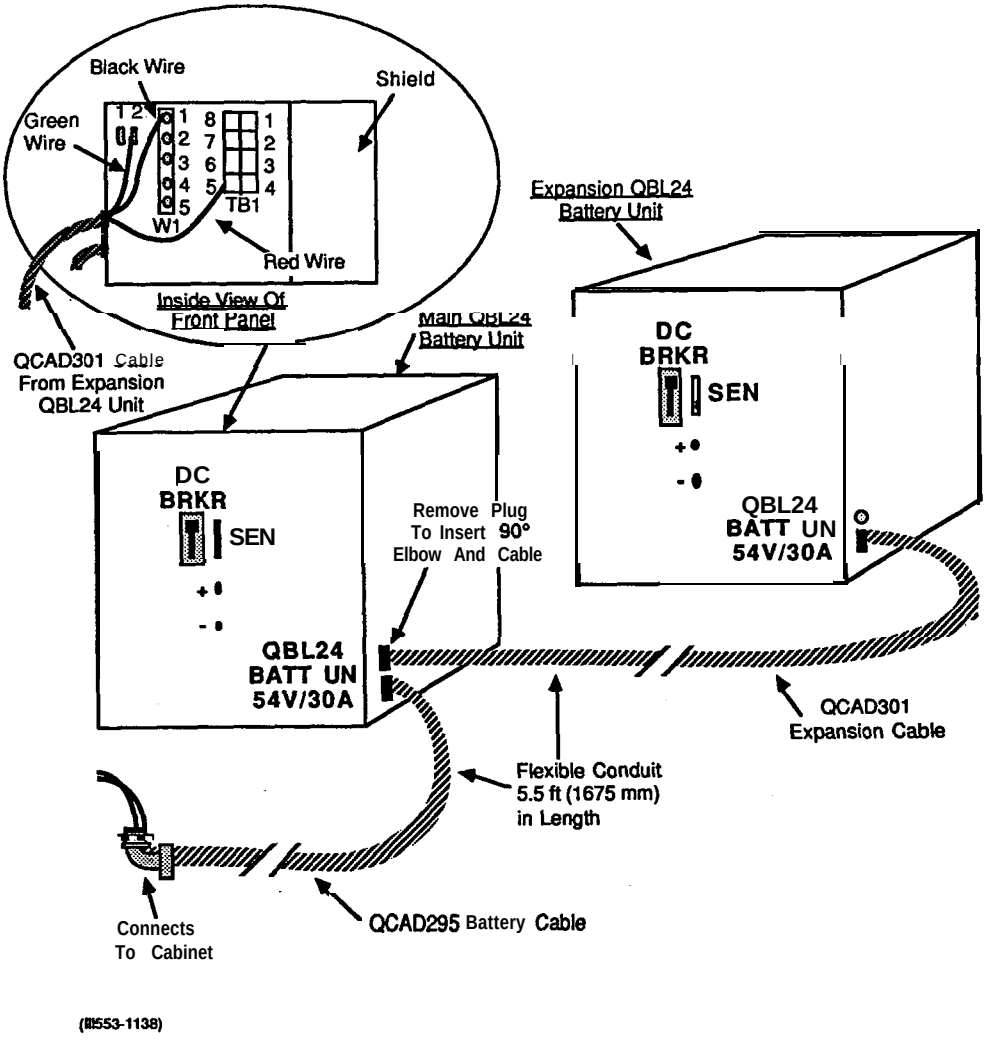

Fig. 3-2
Expansion Battery Unit Connections

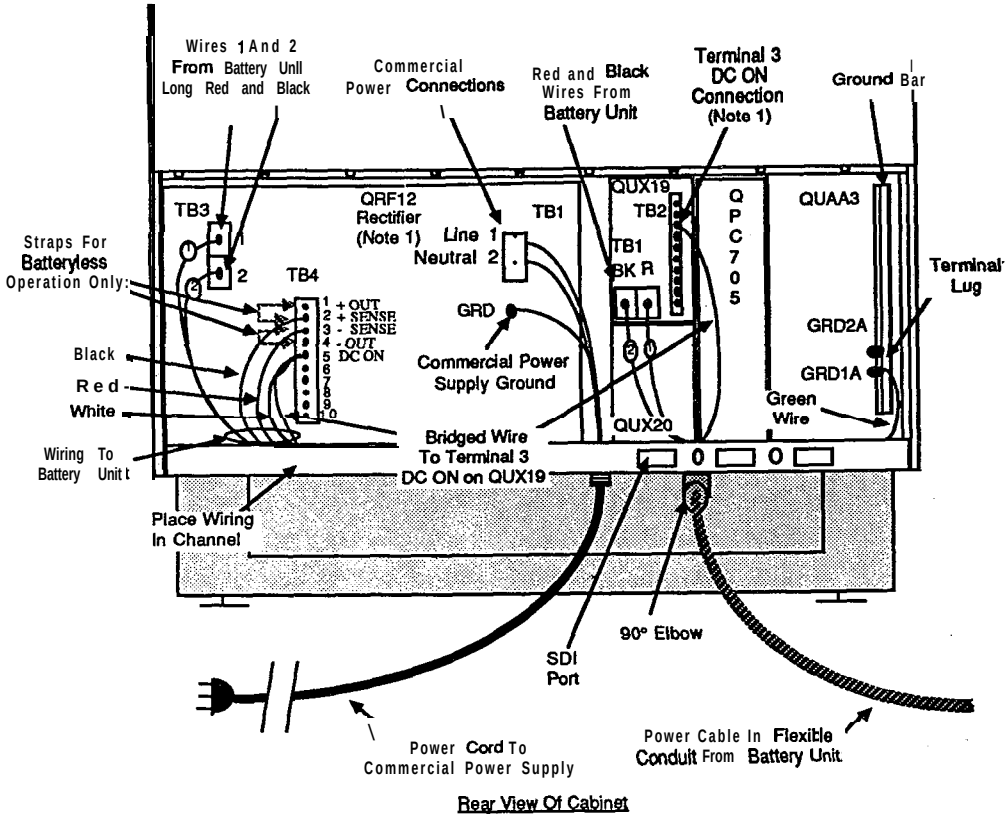

Note 1: These terminals are located on the QUX21 unit in PE expansion cabinets PE expansion cabinets are not equipped with QUX19, QUX20 or QPC705 units.

(Ill553-1410)

Fig. 3-3
Connections At Rear Of Cabinet

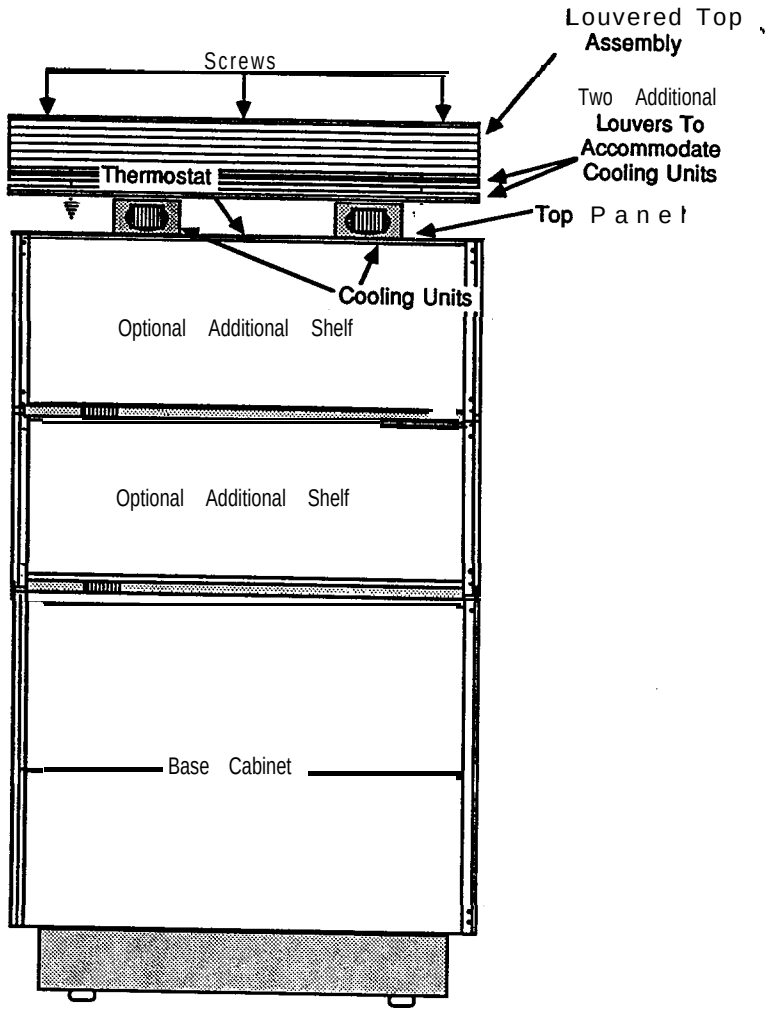

Front View Of Cabinet

(II553-1141)

Fig. 3-4
Cabinet Top Assembly

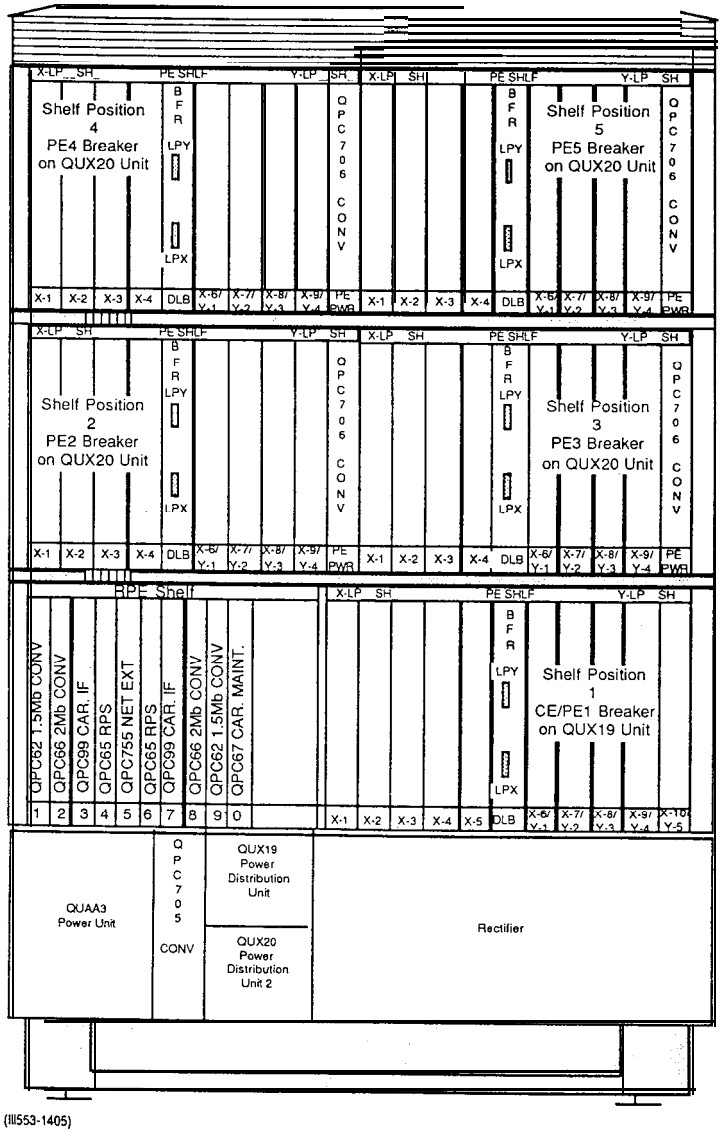

Fig. 3-5
Shelf Assignments

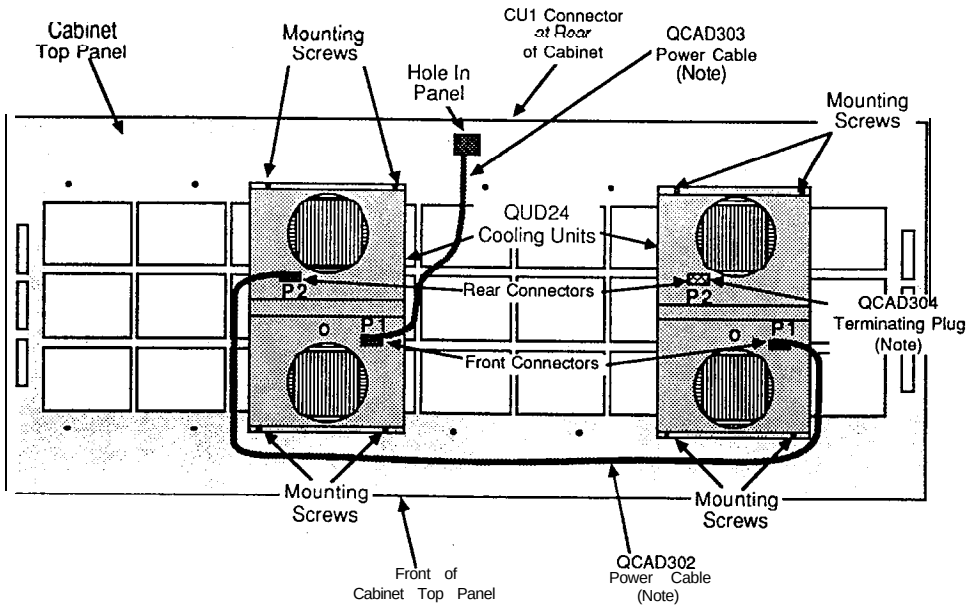

Note: Cooling units are wired in series. Connections to and between cooling units may not always be as shown.

(lll553-1142)

Fig. 3-6
Cooling Unit Connections

AtoZ KELLATRONICS, INC.
tel: 800.766.3425 fax: 800.720.1172
818.773.8888 818.773.8899
www.kellatronics.com info@kellatronics.com