Perception® e & ex

DIGITAL PBX

INSTALLATION AND MAINTENANCE MANUAL

TOSHIBA AMERICA INFORMATION SYSTEMS, INC.
Telecommunication Systems Division

TOSHIBA PUBLICATIONS
SECTION 200-255-000
FEBRUARY 1992

Perception® e & ex

DIGITAL PBX

INSTALLATION AND MAINTENANCE MANUAL

TABLE OF CONTENTS

GENERAL DESCRIPTION
INSTALLATION INSTRUCTIONS SECTION 200-255-200
PROGRAMMING PROCEDURES SECTION 200-255-300
FAULT FINDING PROCEDURES SECTION 200-255-500
TECHNICAL BULLETINS SECTION 200-255-600

INSTALLATION INSTRUCTIONS
SECTION 200-255-200
FEBRUARY 1992

Perception® e & ex

DIGITAL PBX
INSTALLATION INSTRUCTIONS

PERCEPTION$_{e\&ex}$ INSTALLATION INSTRUCTIONS

TABLE OF CONTENTS

PARAGRAPH	SUBJECT	PAGE
CHAPTER 1	INTRODUCTION	1-1
1.	PURPOSE	1-1
2.	ORGANIZATION	1-1
3.	REFERENCE DOCUMENTATION	1-1
4.	SYSTEM MNEMONICS	1-1
5.	INSPECTION, PACKING AND STORAGE	1-2
5.00	Inspection	1-2
5.10	Packing and Storage	1-2
5.20	Required Tools	1-2
CHAPTER 2	SYSTEM DESCRIPTION	2-1
1.	PERCEPTION$_e$	2-1
1.00	Basic Equipment Cabinet	2-1
1.10	Expansion Cabinet	2-1
1.20	Power Supply	2-1
2.	PERCEPTION$_{ex}$	2-1
2.00	Basic Equipment Cabinet	2-1
2.10	Expansion Cabinet	2-1
2.20	Power Supply	2-2
3.	PEAK LOAD BATTERY	2-2
4.	EXTENDED RESERVE POWER	2-3
5.	POWER FAILURE/EMERGENCY TRANSFER	2-3
6.	PRINTED CIRCUIT BOARD DESCRIPTION	2-4
	NFDU (Floppy Disk Drive Unit)	2-4
	LCCU (Central Control Unit)	2-4
	NTWU (Time Switch Unit)	2-4
	NPRU (Paging and Music-on-Hold Unit)	2-5
	NRCU (Receiver Unit)	2-5
	NEKU (Electronic Telephone Unit)	2-5
	NDKU (Digital Telephone Unit)	2-5
	NSTU (Standard Telephone Unit)	2-6
	NDSU (DSS Console Controller Unit)	2-6
	NDCU (Data Control Unit)	2-6
	NMDU (Modem Pooling Unit)	2-6
	NCOU (Central Office Trunk Unit)	2-6
	NEMU (E & M TIE Trunk Unit)	2-6
	NLSU (DID Trunk Interface Unit)	2-6
	NDTU (T1 Interface)	2-6
	NOCU (Off-hook Call Announce Interface Unit)	2-6
	HVSU/HVSI (Off-hook Call Announce PCBs)	2-6
	DVSI (Digital Off-hook Call Announce PCB)	2-6

PARAGRAPH	SUBJECT	PAGE
7.	SYSTEM INDICATORS AND CONTROLS	2-7
	NFDU	2-7
	LCCU	2-7
	NTWU	2-7
	NPRU	2-7
	NCOU/NEMU/NLSU	2-7
	NDTU	2-7
	NEKU/NSTU/NOCU/NDKU	2-8
	NDSU	2-8
	NDCU	2-8
	NMDU	2-8
	NPSA-M/LPSA-M	2-8
	NPSA-S	2-8
8.	PERIPHERAL EQUIPMENT	2-8
8.00	Electronic and Digital Telephone	2-8
8.10	Headset Upgrade (HHEU)	2-9
8.20	Attendant Console	2-9
8.30	DSS Console	2-9
8.40	Standard Telephone	2-9
8.50	DDIU/PDIU	2-9
8.60	Paging Equipment	2-9
8.70	Music-on-Hold	2-9
8.80	Universal Night Answer	2-9
8.90	Station Message Detail Recording	2-9
CHAPTER 3	INSTALLATION SITE REQUIREMENTS	3-1
1.	COMMERCIAL POWER	3-1
2.	ENVIRONMENTAL REQUIREMENTS	3-1
3.	EQUIPMENT ROOM RECOMMENDATIONS	3-1
4.	CABLING CONSIDERATIONS	3-1
5.	GROUNDING	3-2
CHAPTER 4	SYSTEM INSTALLATION	4-1
1.	PERCEPTION$_e$	4-1
1.00	Power Supply Installation	4-1
1.10	Expansion Cabinet Installation	4-3
2.	PERCEPTION$_{ex}$	4-4
2.00	Power Supply Installation	4-4
2.10	First Expansion Cabinet Installation	4-6
2.20	Second Expansion Cabinet Installation	4-8
3.	PRINTED CIRCUIT BOARD INSTALLATION	4-9
3.00	NFDU	4-9
3.10	LCCU	4-10
3.20	NTWU	4-10
3.30	NPRU	4-10
3.40	NEKU, NDKU, and NOCU	4-10
3.50	NSTU	4-12
3.60	NDSU	4-12

PARAGRAPH	SUBJECT	PAGE
3.70	NEMU, NCOU, and NLSU	4-13
3.80	NDTU	4-15
3.90	NMDU and NDCU	4-18
4.	CABLE CONNECTIONS	4-19
5.	ELECTRONIC TELEPHONE STATION EQUIPMENT INSTALLATION	4-20
5.00	Electronic Telephone Connections	4-20
5.10	Electronic Telephone Wall Mounting	4-20
5.20	Off-hook Call Announce	4-20
5.30	Carbon Handset Transmitter Installation	4-23
5.40	HHEU Installation	4-23
5.50	Attendant Console Connection	4-25
5.60	DSS Console Connections	4-26
5.70	Digital Data Interface Unit Connections (DDIU)	4-26
5.80	DDIU-MAT	4-28
5.90	DDIU-MA	4-30
6.	DIGITAL TELEPHONE STATION EQUIPMENT INSTALLATION	4-32
6.00	Digital Telephone Connections	4-32
6.10	Digital Telephone Wall Mounting	4-32
6.20	Off-hook Call Announce	4-34
6.30	Carbon Handset Transmitter Installation	4-35
6.40	Beep Strap Removal	4-36
6.50	Microphone/Speaker Threshold Adjustment (Speakerphone only)	4-36
6.60	HHEU Installation	4-36
6.70	Attendant Console Connection	4-37
6.80	DSS Console Connections	4-37
6.90	Digital Data Interface Unit Installation (PDIU)	4-37
6.100	Common DIU Connections	4-39
6.110	EIA Interface Leads (Signals)	4-39
6.120	DIP Switch Options	4-46
6.130	PDIU-DI Installation	4-46
6.140	PDIU-DI to Personal Computer (PC) Installation	4-47
6.150	PDIU-DS to Printer Installation	4-47
6.160	PDIU-DS to Modem Installation	4-51
6.170	PDIU-DS Disassembly and Assembly	4-52
6.180	PDIU-DI/PDIU-DS Installation Tests	4-52
7.	STANDARD TELEPHONE EQUIPMENT INSTALLATION	4-58
7.00	Standard Telephone Connections	4-58
8.00	TRUNK CONNECTIONS	4-58
9.	PERIPHERAL EQUIPMENT INSTALLATION	4-58
9.00	Modem Pooling Connections (DDIU-MA only)	4-58
9.10	Power Failure/Emergency Transfer	4-58
9.20	Reserve Power	4-60
9.30	Paging Equipment	4-61
9.40	Music-on-Hold	4-62
9.50	Universal Night Answer	4-62
9.60	Station Message Detail Recording	4-63
9.80	Lodging/Health Care Data Audit	4-67

PARAGRAPH	SUBJECT	PAGE
10.	SYSTEM POWER UP	4-67
10.00	General	4-67
CHAPTER 5	MDF ARRANGEMENT	5-1

TABLE LIST

TABLE	SUBJECT	PAGE
5-1	CARD SLOT/CABLE CONNECTOR MATRIX	5-4
5-2	LIST OF CONNECTOR CABLES	5-5
5-3	ATTENDANT CONSOLE #0 & #1	5-6
5-4	PAGING, MUSIC & UNA RINGING	5-7
5-5	NDSU/NDKU (DSS CONSOLE) "C" SLOT	5-8
5-6	NDSU/NEKU/NDKU/NSTU/NDCU/NMDU/NOCU (L00 ~ L03/L15 ~ L18)	5-9
5-7	NDSU/NEKU/NDKU/NSTU/NDCU/NMDU/NOCU (L04 ~ L11/L19 ~ L26) or NCOU/NLSU/NEMU (T07 ~ T00/T15 ~ T08)	5-10
5-8	CENTRAL OFFICE LINE CONNECTION & PFT CONTROL J1	5-11
5-9	STATION LINE CONNECTION J2	5-12
5-10	ATTENDANT CONSOLE #0 & #1	5-13
5-11	PAGING, MUSIC & UNA RINGING	5-14
5-12	NCOU/NEMU/NLSU/NDTU (T00 ~ T15)	5-15
5-13	NDSU/NEKU/NDKU/NSTU/NDCU/NMDU/NOCU (U00 ~ U31) or NCOU/NEMU/NLSU (T16 ~ T31)	5-16
5-14	CENTRAL OFFICE LINE CONNECTION & PFT CONTROL J1	5-17
5-15	STATION LINE CONNECTION J2	5-18

FIGURE LIST

FIGURE	SUBJECT	PAGE
2-1	PERCEPTION$_e$ BASIC CABINET	2-1
2-2	PERCEPTION$_e$ EXPANSION CABINET	2-1
2-3	PERCEPTION$_{ex}$ BASIC CABINET	2-2
2-4	PERCEPTION$_{ex}$ WITH EXPANSION CABINETS	2-2
2-5	PERCEPTION$_{ex}$ MAIN POWER SUPPLY	2-2
2-6	DPFT FUNCTIONAL DIAGRAM	2-3
2-7	PERCEPTION$_e$ PCB INSTALLATION	2-4
2-8	PERCEPTION$_{ex}$ PCB INSTALLATION	2-5
3-1	PERCEPTION$_e$ MINIMUM FLOOR SPACE	3-1
3-2	PERCEPTION$_{ex}$ MINIMUM FLOOR SPACE	3-1
3-3	UL GROUNDING DIAGRAM	3-2
4-1	PERCEPTION$_e$ BASIC CABINET REAR COVER	4-1
4-2	PERCEPTION$_e$ CABLE CONNECTIONS	4-1
4-3	PERCEPTION$_e$ VOLTAGE CHECKS	4-2
4-4	PEAK LOAD BATTERY	4-3
4-5	PERCEPTION$_e$ POWER SUPPLY CONTROLS AND INDICATORS	4-3

FIGURE	SUBJECT	PAGE
4-6	PERCEPTION$_e$ EXPANSION CABINET INSTALLATION	4-3
4-7	PERCEPTION$_{ex}$ BASIC CABINET REAR COVER	4-5
4-8	PERCEPTION$_{ex}$ CABLE CONNECTIONS	4-5
4-9	PERCEPTION$_{ex}$ VOLTAGE CHECKS	4-6
4-10	PERCEPTION$_{ex}$ POWER SUPPLY CONTROLS AND INDICATORS	4-7
4-11	PERCEPTION$_{ex}$ EXPANSION CABINET INSTALLATION	4-8
4-12	NFDU STRAPPING	4-10
4-13	LCCU STRAPPING	4-10
4-14	NTWU STRAPPING	4-11
4-15	NPRU STRAPPING	4-11
4-16	NRCU MOUNTING	4-11
4-17	NDKU SWITCH OPTIONS	4-12
4-18	NEMU STRAPPING	4-14
4-19	NCOU STRAPPING	4-14
4-20	NLSU STRAPPING	4-16
4-21	NDTU STRAPPING	4-16
4-22	NMDU STRAPPING	4-19
4-23	ELECTRONIC TELEPHONE CONNECTION	4-21
4-24	REMOVAL OF ELECTRONIC TELEPHONE BASE	4-22
4-25	REMOVAL OF HANDSET HANGER	4-22
4-26	INSTALLATION OF MOUNTING BASE FOR WALL-MOUNT INSTALLATION	4-22
4-27	HVSI/HVSU INSTALLATION	4-23
4-28	ELECTRONIC TELEPHONE PCB CONNECTIONS	4-23
4-29	OFF-HOOK CALL ANNOUNCE CONNECTION (NOCU)	4-24
4-30	LOCATION OF CARBON STRAPS	4-24
4-31	REMOVAL OF HHEU MODULAR CONNECTOR ACCESS TAB	4-24
4-32	INSTALLATION OF HHEU UPGRADE OPTION	4-25
4-33	ATTENDANT CONSOLE #0 CONNECTION	4-25
4-34	ATTENDANT CONSOLE #1 CONNECTION	4-26
4-35	DSS CONSOLE CONNECTION FOR PERCEPTION$_e$ "C" SLOT	4-27
4-36	DSS CONSOLE CONNECTION FOR PERCEPTION$_{ex}$ "U" SLOTS AND PERCEPTION$_e$ "L" SLOTS	4-27
4-37	DIGITAL DATA INTERFACE UNIT CONNECTION (DDIU-MA and DDIU-MAT)	4-28
4-38	INSTALLING DDIU-MAT	4-29
4-39	DDIU-MAT DIP SWITCHES	4-29
4-40	DDIU-MA DIUA PCB	4-31
4-41	DIUB PCB	4-31
4-42	DIGITAL TELEPHONE CONNECTION	4-33
4-43	REMOVAL OF DIGITAL TELEPHONE BASE	4-34
4-44	REMOVAL OF HANDSET HANGER	4-34
4-45	INSTALLATION OF MOUNTING BASE FOR WALL-MOUNT INSTALLATION	4-34
4-46	DVSU INSTALLATION	4-35
4-47	TELEPHONE PCB CONNECTIONS AND STRAPS	4-35
4-48	HHEU INSTALLATION FOR DIGITAL TELEPHONE	4-36
4-49	DIGITAL DSS CONSOLE CONNECTION FOR PERCEPTION$_e$ "C" SLOT	4-38
4-50	DIGITAL DSS CONSOLE CONNECTION FOR PERCEPTION$_{ex}$ "U" SLOTS AND PERCEPTION$_e$ "L" SLOTS	4-38

FIGURE	SUBJECT	PAGE
4-51	PERCEPTION DATA INSTALLATION EXAMPLE BLOCK DIAGRAM	4-40
4-52	PDIU-DI/PDIU-DS MODULAR CABLE/RJ-45 ADAPTER CONNECTIONS	4-41
4-53	PDIU-DI/PDIU-DS MODULAR CORDS AND RJ-45/RS-232 ADAPTER PIN CONNECTIONS	4-42
4-54	PDIU-DS JUMPER PLUG OPTIONS/RS-232 CONNECTOR INFORMATION	4-43
4-55	PDIU-DI/PDIU-DS SW1 DIP SWITCH INFORMATION	4-44
4-56	PDIU-DI PCB/DIGITAL TELEPHONE INSTALLATION	4-46
4-57	PDIU-DS TO TOSHIBA PRINTER, RS-232 CONNECTOR/CABLE CONNECTIONS	4-48
4-58	PDIU-DI TO IBM XT-TYPE COMPUTER, RS-232 CONNECTOR/CABLE CONNECTIONS	4-49
4-59	PDIU-DI TO IBM AT-TYPE COMPUTER, RS-232 CONNECTOR/CABLE CONNECTIONS	4-50
4-60	PDIU-DS TO HAYES-TYPE SMART MODEM, RS-232 CONNECTOR/CABLE CONNECTIONS	4-53
4-61	PDIU-DS DISASSEMBLY/ASSEMBLY DIAGRAM	4-54
4-62	PC TO PC TEST CALL USING AT COMMANDS	4-55
4-63	PC TO PRINTER TEST CALL USING MANUAL DIALING	4-55
4-64	INTERNAL PC TO EXTERNAL PC TEST CALL USING AT COMMANDS	4-55
4-65	EXTERNAL PC TO INTERNAL PC TEST CALL USING AT COMMANDS	4-56
4-66	STANDARD TELEPHONE CONNECTION	4-59
4-67	MODEM POOLING CONNECTION (DDIU-MA ONLY)	4-60
4-68	RESERVE POWER INSTALLATION	4-61
4-69	PAGING WITH MUSIC OVER EXTERNAL SPEAKER FROM SAME AMPLIFIER	4-62
4-70	PAGING WITH ONE AMPLIFIER	4-63
4-71	PAGING WITH MULTIPLE AMPLIFIERS	4-64
4-72	LCCU SWITCHES	4-65
4-73	EXAMPLE: SMDR CALL RECORD	4-66
4-74	EXAMPLE: AUDIT PRINTOUT (LODGING/HEALTH CARE)	4-68
4-75	INSERTING DISK (PERCEPTION$_{ex}$ ONLY)	4-69
4-76	INSERTING DISK (PERCEPTION$_{e}$ ONLY)	4-69
5-1	CONNECTOR LOCKING BAR	5-1
5-2	MAIN DISTRIBUTION FRAME LAYOUT	5-2
5-3	SECONDARY PROTECTOR DIAGRAM	5-3

CHAPTER 1

INTRODUCTION

1. PURPOSE

1.00 This section describes the installation procedures necessary to ensure proper operation of the PERCEPTION$_{e\&ex}$ system.

2. ORGANIZATION

2.00 The organization of this manual is as follows:

1. INTRODUCTION
2. SYSTEM DESCRIPTION
3. INSTALLATION SITE REQUIREMENTS
4. SYSTEM INSTALLATION
5. MDF ARRANGEMENTS

3. REFERENCE DOCUMENTATION

3.00 The PERCEPTION$_{e\&ex}$ system is supported by a complete set of documentation. A list of the reference documentation associated with the PERCEPTION$_{e\&ex}$ system is provided below:

Document	Section Number
Fault Finding	200-255-500
General Description	
Operating Procedures	200-255-400
Programming	200-255-300
System Record	

4. SYSTEM MNEMONICS

4.00 The system is provided with a complete set of mnemonics that relate directly to its operation and features. The following alphabetical list describes the mnemonics used in this manual.

DATT—Attendant Console

DDIU—Digital Data Interface Unit PCB (Electronic Telephone)

DDIU-MA—Digital Data Interface Unit (Stand-alone)

DDIU-MAT—Digital Data Interface Unit (Electronic Telephone)

DDSS—Digital Direct Station Selection Console

DKT—Digital Telephone

DPFT—Power Failure/Emergency Transfer Unit

DSS—Direct Station Selection Console (Electronic Telephone)

DVSU—PCB for Off-hook Call Announce (installed inside the digital telephone)

EKT—Electronic Telephone

FDD0—Floppy Disk Drive 0

FDD1—Floppy Disk Drive 1

GND—Ground

HHEU—Optional Headset Module

HVSI—PCB for Off-hook Call Announce (installed inside the electronic telephone)

HVSU—PCB for Off-hook Call Announce (installed inside the electronic telephone)

LCCU—Central Control Unit

LCD—Liquid Crystal Display

LCEC-M—PERCEPTION$_{ex}$ Basic Cabinet

LCEC-S—PERCEPTION$_{ex}$ Expansion Cabinet

LPSA-M—PERCEPTION$_{ex}$ Main Power Supply

MDF—Main Distribution Frame

NCEC-M—PERCEPTION$_{e}$ Basic Cabinet

NCEC-S—PERCEPTION$_{e}$ Expansion Cabinet

NCOU—Central Office Trunk Unit

NDCU—Data Control Unit

NDKU—Digital Telephone, Digital DSS, PDIU-DI, PDIU-DS Unit

NDSU—DSS Console Controller Unit (Electronic Telephone)

NDTU—Digital Trunk Unit

NEKU—Electronic Telephone Unit

NEMU—E & M TIE Trunk Unit

NFDU—Floppy Disk Drive Unit

NLSU—DID Trunk Interface Unit

NMDU—Modem Pooling Unit

NOCU—Off-hook Call Announce Interface Unit

NPRU—Paging and Music-on-Hold Unit

NPSA-M—PERCEPTION$_e$ Main Power Supply

NPSA-S—PERCEPTION$_{e\&ex}$ Expansion Power Supply

NRCU—Receiver Unit

NSTU—Standard Telephone Unit

NTWU—Time Switch Unit

PCB—Printed Circuit Board

PDIU-DI—Integrated Data Interface Unit (Digital Telephone)

PDIU-DS—Stand-alone Data Interface Unit (Keyboard Dial)

PFT—Power Fail Transfer

SMDR—Station Message Detail Recording

TTY—Teletypewriter

UNA—Universal Night Answer

5. INSPECTION, PACKING and STORAGE

5.00 Inspection

5.01 When the system is received, examine all packages and make careful note of any visible damage. If any damage is found, bring it to the attention of the delivery carrier and make the proper claims.

5.02 Check the system against the purchase order and packing slip. If it is determined that equipment is missing, contact your supplier immediately.

5.03 After unpacking (and before installing), inspect all equipment for damage. If any is detected, contact your supplier immediately.

CAUTION!
When handling (installing, removing, examining, etc.) printed circuit boards (PCBs), do not touch the back (soldered) side or edge connector. Always hold the PCB by its edge whenever handling it.

5.10 Packing and Storage

5.11 When storing or shipping PCBs, be sure they are packed in their original antistatic bags for protection against static discharge.

5.20 Required Tools

5.21 Installation of the PERCEPTION$_{e\&ex}$ systems requires standard telephony tools. A 13mm socket wrench and extension is recommended for ease of expansion cabinet installation.

CHAPTER 2

SYSTEM DESCRIPTION

1. PERCEPTION$_e$

1.00 Basic Equipment Cabinet

1.01 The basic equipment cabinet (NCEC-M) consists of a single, free-standing cabinet mounted on casters for easy movement. Once system installation has been completed and the cabinet has been positioned, the casters can be locked to prevent movement. The interior of the cabinet houses two shelves for printed circuit card installation. A separate area is provided for installation of the power supply and peak load battery. MDF connections are facilitated by amphenol connectors located on the rear of the cabinet (Figure 2-1).

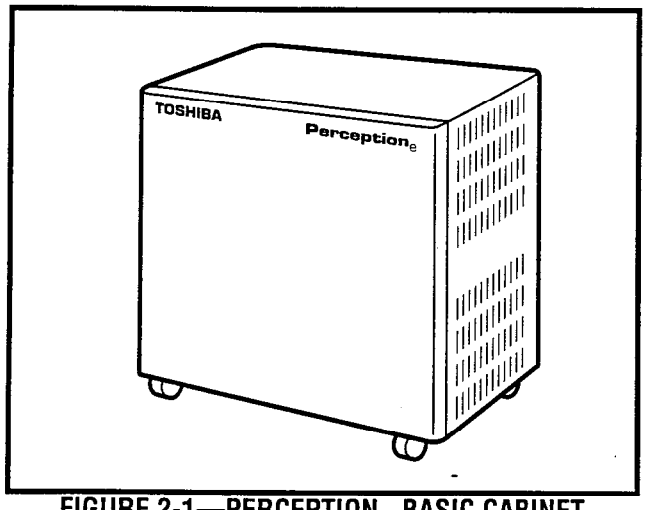

FIGURE 2-1—PERCEPTION$_e$ BASIC CABINET

1.10 Expansion Cabinet

1.11 The expansion cabinet (NCEC-S) is a single cabinet that mounts on top of the basic cabinet and is secured in place with four bolts. The cabinet houses two shelves for printed circuit card installation. MDF connections are facilitated by amphenol connectors located on the rear of the cabinet (Figure 2-2).

1.20 Power Supply

1.21 The Main Power Supply (NPSA-M) consists of a single metal chassis. In addition to the power supply, this chassis contains the system ring generator and a charger/inverter for Reserve Power. Located on the front of the chassis are a circuit breaker and LED indicator for each power supply output, and an AC power indicator, and the system power switch. The battery switch is also on the front of the NPSA-M.

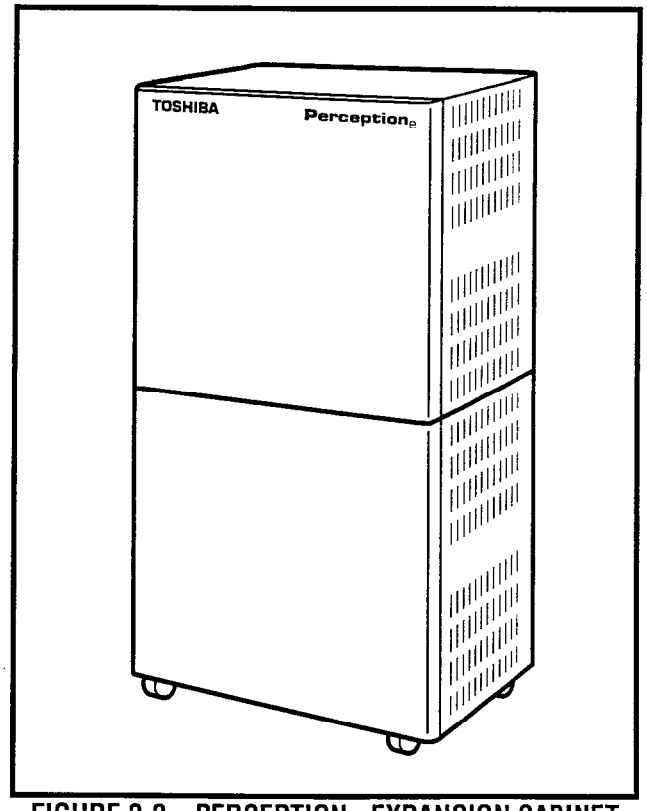

FIGURE 2-2—PERCEPTION$_e$ EXPANSION CABINET

2. PERCEPTION$_{ex}$

2.00 Basic Equipment Cabinet

2.01 The basic equipment cabinet (LCEC-M) is a single free-standing cabinet mounted on casters for easy movement. The cabinet contains three shelves for printed circuit card installation. A separate area is provided for power supply and peak load battery installation. MDF connections are facilitated by amphenol connectors located on the rear of the cabinet (Figure 2-3).

2.10 Expansion Cabinet

2.11 The expansion cabinet (LCEC-S) is a single cabinet that houses a single printed circuit card

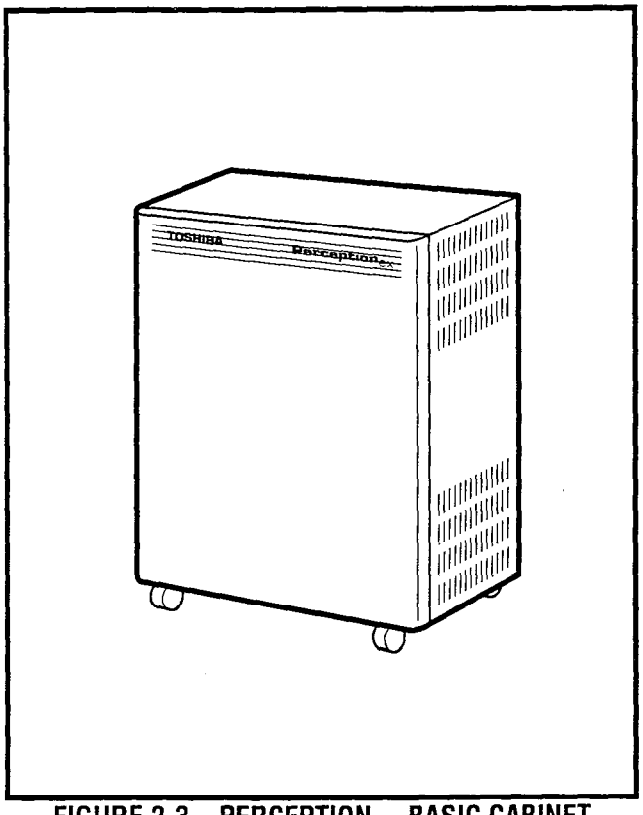

FIGURE 2-3—PERCEPTION$_{ex}$ BASIC CABINET

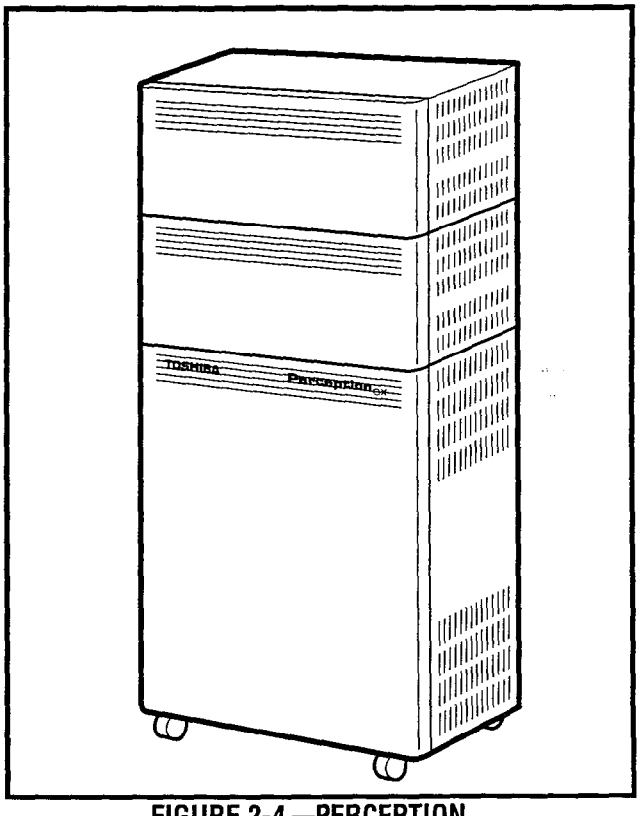

FIGURE 2-4—PERCEPTION$_{ex}$ WITH EXPANSION CABINETS

shelf. MDF connections are facilitated by amphenol connectors located on the rear of the cabinet (Figure 2-4). Up to two expansion cabinets may be added to the PERCEPTION$_{ex}$ basic equipment cabinet.

2.20 Power Supply

2.21 The Main Power Supply (LPSA-M) consists of a single metal chassis which contains the system ring generator and charger/inverter for the Reserve Power. A circuit breaker switch, LED indicators, AC power indicator and system power switch are located on the front of the chassis. For ease in installation a handle is located at the top front of the power supply (Figure 2-5).

3. PEAK LOAD BATTERY

3.00 The peak load battery will maintain call processing for a maximum of two minutes in the event the PERCEPTION$_e$ or PERCEPTION$_{ex}$ experiences a power failure. Additionally, when the system is under heavy usage the peak load battery will

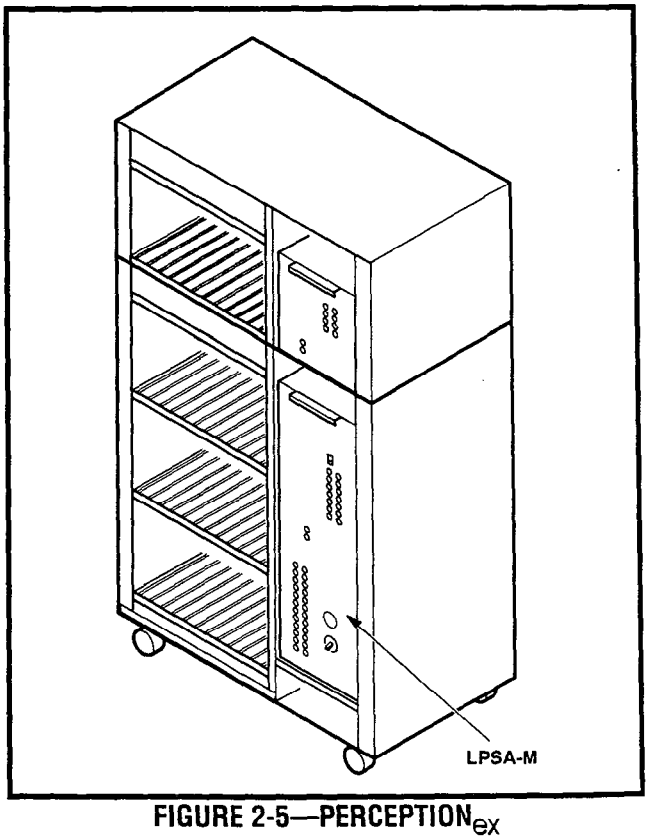

FIGURE 2-5—PERCEPTION$_{ex}$ MAIN POWER SUPPLY

avoid power degradation by supplementing the -24 volts, maintaining a constant power level.

4. EXTENDED RESERVE POWER

4.00 The power supply is equipped, as a standard feature, with an internal battery charger/inverter. Full reserve power can be provided for any system by connecting an appropriate, customer-supplied 24-volt battery pack. During normal operation, the power supply charger/inverter will maintain the proper charge in the battery pack. In the event of an AC power failure, switchover to battery power will be automatic. There will be no loss of system operation as a result of power switchover. When AC power is restored, switchback to the power supply will be automatic.

4.01 Battery selection and size will depend on system size and desired reserve operating time. The maximum power consumption of the basic cabinet is 11.5 amps at -24 VDC. For both a basic and expansion cabinet configuration, the maximum will be 19 amps at -24 VDC. The selected batteries must be compatible with the system's charger float voltage of 27.3 VDC.

5. POWER FAILURE/EMERGENCY TRANSFER

5.00 The function of the Power Failure/Emergency Transfer Unit (DPFT) is to automatically connect selected trunks to selected standard telephones in the event of system failure while permitting normal operation when the system is in service (maximum of 1 per cabinet).

5.01 The DPFT is a self-contained module that mounts externally to the basic cabinet, typically on the MDF. Connections to the trunks, stations and basic cabinet are made via two 50-pin amphenol-type connectors (**J1** and **J2**) on the DPFT (see functional diagram in Figure 2-6).

5.02 The module consists of eight relays that are normally operated, connecting the telephones to NSTU circuits and the trunks to NCOU circuits. If a power failure (or other emergency) occurs, the relays release, connecting the telephones directly to the trunks. Calls can then be placed from the telephones over the CO trunks, bypassing the system (which is out of service).

5.03 Power Fail Transfer (PFT) telephones con-

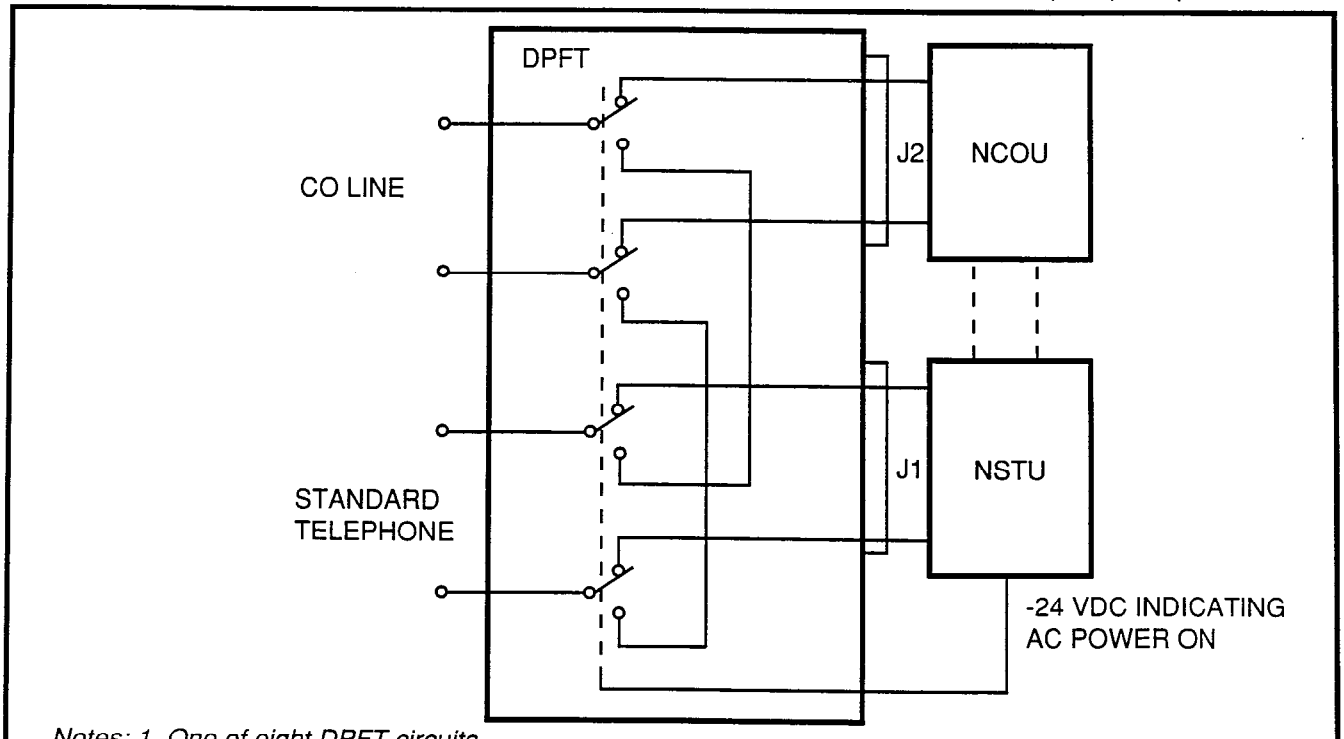

Notes: 1. One of eight DPFT circuits.
2. Conditions of AC power on.

FIGURE 2-6—DPFT FUNCTIONAL DIAGRAM

nected to ground-start trunks must have ground taps (tap buttons) in order to make outgoing calls during power fail transfer conditions.

5.04 A transfer can be caused by a loss of power or triggered manually by either of two buttons, one of which is located on the underside of the attendant console and the other on the front of the NPRU PCB. A transfer that is caused by a power failure will be reset automatically when power is restored; a manual transfer must be reset manually.

5.05 When the DPFT is reset after a transfer, existing PFT conversations will be protected. Individual circuits will be restored only when they become idle.

6. PRINTED CIRCUIT BOARD DESCRIPTION

6.00 Sixteen different types of PCBs are available for use in both PERCEPTION systems (Figures 2-7 & 2-8). The universal port architecture enables multiple installation of trunk cards. The PERCEPTION$_e$ can support a maximum of 16 trunk cards; 8 in the basic cabinet, and 8 in the expansion cabinet. The PERCEPTION$_{ex}$ can support a maximum of 32 trunk cards; 24 in the basic cabinet, and 8 in each expansion cabinet.

NFDU (Floppy Disk Drive Unit)—One or two per system: This card houses a 3.5 inch, 1.2 Mbyte disk drive. One disk contains system program and customer data. The second disk stores the Maintenance and Administration programs. (Two NFDUs are required in **D.02** and later version software using Remote Maintenance.)

LCCU (Central Control Unit)—One per system: The LCCU card contains the circuitry which, under the direction of the system program, provides centralized control for the entire system. Additionally, the LCCU performs data transmission and receiving functions between the central control and all peripheral equipment, including:

- Station PCBs
- Trunk PCBs
- TTY interface
- SMDR interface
- Lodging/Health Care audit interface

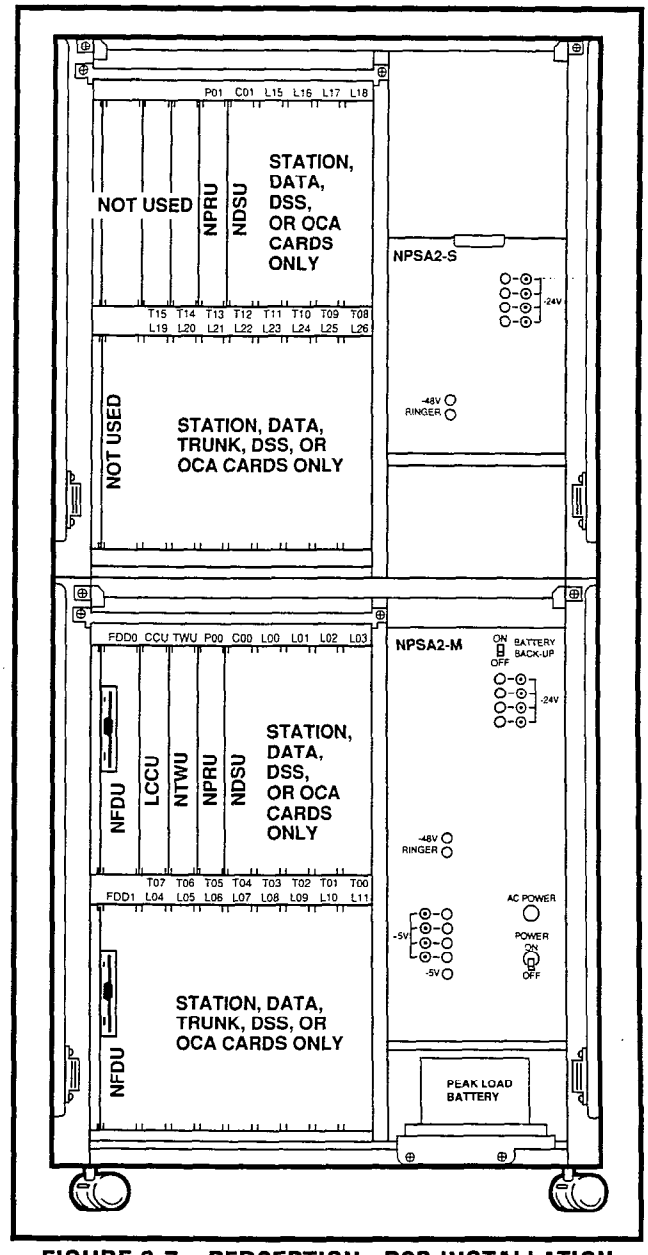

FIGURE 2-7—PERCEPTION$_e$ PCB INSTALLATION

- Modem interface

This circuitry consists of a 16-bit 80C88 main processor, an 8-bit Z-80 secondary processor, and 1Mbyte of memory.

NTWU (Time Switch Unit)—One per system: This card performs the time slot interchange function for call processing and the conference features, provides the digital speech paths with digital padding, timing and control for time slot switching and generates system tones.

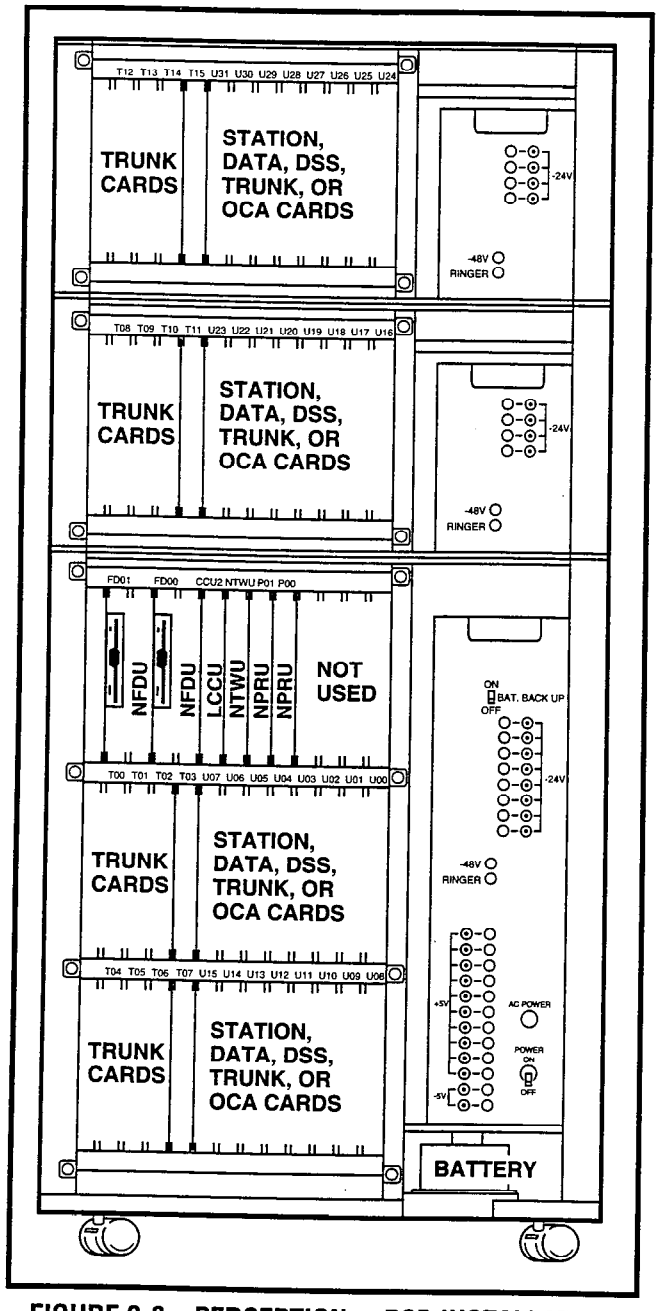

FIGURE 2-8—PERCEPTION$_{ex}$ PCB INSTALLATION

NPRU (Paging and Music-on-hold Unit)—Houses program load and initialization control switches and performs several miscellaneous functions (up to two per system):

- Paging interface and control
- Music-on-hold interface
- UNA control
- Interface for the NRCU
- Attendant Console Functions
- Power Failure/Emergency transfer control
- Digitized voice message for Automatic Wake-up (optional)

NRCU (Receiver Unit)—Two per NPRU (4 per system maximum): This card provides DTMF receivers, which are required for receiving tone dialing from standard telephone ports (including voice mail ports) and some incoming trunk (DID, TIE and CCSA) types. It also provides the capability for remote access to service. It mounts piggy-back on the NPRU PCB, where there is available space for two NRCUs. Each NRCU provides four DTMF receiver circuits, with a system maximum of 16.

NOTE:
When using the Call Forward-No Answer to Trunk feature, an NRCU MUST be installed in the system.

NEKU (Electronic Telephone Unit)—One per eight electronic telephones: Interfaces electronic telephone to the system. It also serves as an attendant console interface. Each attendant console requires one electronic telephone circuit.

PERCEPTION$_e$
ATT #0-PCB position **L00** circuit **#1**
ATT #1-PCB position **L15** circuit **#1**

A maximum of 12 NEKU/NDKU PCBs may be installed in each cabinet (24 NEKU/NDKU PCBs maximum per system).

PERCEPTION$_{ex}$
ATT #0-PCB position **U00** circuit **#1**
ATT #1-PCB position **U01** circuit **#1**

A maximum of 16 NEKU/NDKU PCBs can be installed in the PERCEPTION$_{ex}$ basic cabinet, and eight in each expansion cabinet.

NDKU (Digital Telephone Unit)—A 2B+D architecture is used to interface up to 8 or 16 circuits for the Digital Telephone and Integrated Data Interface Unit (PDIU-DI), Stand-alone Data Interface Unit (PDIU-DS), or Digital Direct Station Selection Console. Digital telephones and digital DSS consoles cannot be interfaced to the same NDKU PCB. Four configuration options are switch-selectable as follows:

1) Option 1: Eight digital telephones only.

2) Option 2: Eight digital telephones with Integrated Data Interface Unit (PDIU-DI) or Off-hook Call Announce. This position also supports Stand-alone Data Interface Units (PDIU-DS).

3) Option 3: Four digital DSS consoles. In PERCEPTION$_e$ C00 and C01 may be used for this option only.

4) Option 4: Eight digital DSS consoles.

NOTE:
*When using Option 2 or 4, the next **highest** number adjacent card slot **cannot** be used. For example: If an NDKU is installed in L01 or U01, the card slot L02 or U02 respectively, must be left vacant.*

NSTU (Standard Telephone Unit)—Interfaces eight standard telephones (DTMF or rotary dial) to the system.

NDSU (DSS Console Controller Unit)—Interfaces four DSS consoles to the system. The NDSU is installed in the C00 or C01, or any line slot for PERCEPTION$_e$; or in any universal slot for PERCEPTION$_{ex}$. A maximum of two NDSU PCBs are allowed per system, and both can be installed in the same cabinet.

NDCU (Data Control Unit)—Interfaces eight Digital Data Interface Units (DDIUs) to the system. The NDCU controls data transmission between the DDIU and the cabinet. A maximum of four NDCU PCBs may be installed in each PERCEPTION$_e$ cabinet. In the PERCEPTION$_{ex}$, four PCBs per shelf can be installed.

NMDU (Modem Pooling Unit)—Interfaces up to four modems and their associated DDIU-MAs. Any of the four DDIU circuits not required by a modem can be used with a standard DDIU (-MA or -MAT). A maximum of four NMDU PCBs may be installed in each PERCEPTION$_e$ cabinet. In the PERCEPTION$_{ex}$, four PCBs can be installed per shelf.

NOTE:
The system maximum of NDCU or NMDU PCBs consists of any combination of the two PCBs totaling four per cabinet for PERCEPTION$_e$ and four per shelf for PERCEPTION$_{ex}$.

NCOU (Central Office Trunk Unit)—One per four CO trunks: Provides the signaling supervisory functions on loop- and ground-start trunks. Interfaces four CO trunks to the system. These trunks can be incoming, outgoing, or both way CO trunks; WATS trunks, or Foreign Exchange (FX) trunks.

NEMU (E & M TIE Trunk Unit)—One per four E & M TIE trunks: Each TIE trunk can be individually strapped for Type I or II operation with either 2-wire or 4-wire connection.

NLSU (DID Trunk Interface Unit)—One per four DID trunks: Each NLSU connects four Direct Inward Dialing (DID) trunks to the system.

NDTU (T1 Interface)—Maximum of two per system (one in the main cabinet, one in the expansion cabinet): Each NDTU provides a maximum of 24 trunk lines. The Digital Trunk printed circuit card enables the PERCEPTION$_{e\&ex}$ systems to use DS1 signaling to connect directly to either T1 span lines which connect to the telco (through a Channel Service Unit), or to a private network.

NOCU (Off-hook Call Announce Interface Unit)—One per eight electronic telephones. Each NOCU provides eight Off-hook Call Announce circuits for up to eight electronic telephones. Each NOCU takes a station PCB location in the cabinet.

HVSU2 (Off-hook Call Announce PCBs)—Install inside the electronic telephone. One unit per electronic telephone is required to receive off-hook call announce.

DVSU (Digital Off-hook Call Announce PCB)—Installs inside the digital telephone. One unit per digital telephone is required to receive off-hook call announce.

7. SYSTEM INDICATORS AND CONTROLS

7.00 Several system indicators and controls are located on the various PCBs and assemblies. The locations and functions are:

NFDU

- Disk Drive LED—Will light to indicate when the disk is being accessed.
- PUSH Button—Used to eject the diskette from the drive.

LCCU

- MAJ LED—Lights when a MAJOR alarm exists in the system.
- MDR LED—Lights when the DTR signal from the SMDR device is not present. An MDR alarm on the attendant console lights simultaneously if enabled in programming.
- AUX LED—Lights when the DTR signal from the MIS system is not present.
- TTY switch—Slide switch used to select 300 or 1,200 bps speed for TTY port. This port is used for either programming and maintenance and/or the Lodging/Health Care Audit.
- MDR switch—Slide switch used to select 300 or 1,200 bps speed for the SMDR port. This port is used for SMDR and/or the Lodging/Health Care Audit.
- AUX switch—This switch is used with MIS system. Must be set at 1200 bps.

NTWU

- CLOCK LED—Flashes continuously when the system is functioning as usual.

NPRU

- FALT LED—Indicates software-detected faults concerning MOH or Paging circuits.
- BSY LED 1 & 2
  #1 lights when any page is in progress.
  #2 indicates when MOH is in use (a call is on hold or camp-on).
- MOH volume control—Adjust, Music-on-hold volume level.
- LOAD switch—A momentary switch used in an emergency condition to reload system program and data from disk. All existing calls will be dropped when this switch is pushed.
- INT switch—A momentary switch used in emergency conditions to reset system logic. All existing calls will be dropped when this switch is pushed.
- PFT switch—A locking switch used to manually activate a transfer with the DPFT unit. A transfer activated by this switch can only be reset by this switch.
- MDM LED—Not currently used.
- PFT LED—LED is **ON** whenever a power fail transfer condition has been manually initiated.
- NRCU FALT LEDs 1, 2, 3 & 4—Used to indicate software-detected faults or a disabled state caused by an input command from the maintenance terminal (**TPER Program**). Each LED indicates two of the four circuits on each of the two NRCUs that can mount on the NPRU.
  FALT #1 = Circuits 1 & 2, NRCU2 1
  FALT #2 = Circuits 3 & 4, NRCU2 1
  FALT #3 = Circuits 1 & 2, NRCU2 2
  FALT #4 = Circuits 3 & 4, NRCU2 2

NCOU/NEMU/NLSU

- FALT LEDs 1 & 2—Indicate software-detected faults or a disabled state caused by an input command from the maintenance terminal (**TPER Program**) or while ports are programmed. Each LED indicates two of the four circuits on the NCOU, NEMU or NLSU:
  FALT #1 = Circuits 1 & 2
  FALT #2 = Circuits 3 & 4
- BSY LEDs 1 ~ 4—Indicate the busy/idle status of each of the four circuits on the NCOU, NEMU or NLSU. LED is **ON** when circuit is busy.

NDTU

- FALT LED—Indicates software-detected faults or a disabled state caused by an input command from the maintenance terminal (**TPER Program**) or while ports are programmed. LED indicates fault occuring in more than one channel.
- BSY LED—Indicates the busy/idle status of the 24 channels on the NDTU. LED is **ON** when more than one channel is busy.
- FALM LED—Indicates NDTU has not achieved Synchronization.

- MFALM LED—Indicates NDTU has not achieved Frame Synchronization.
- YALM LED—Indicates a Yellow Alarm is detected by the NDTU.
- BALM LED—Indicates a Blue Alarm is detected by the NDTU.
- Signaling Type Selection Switches S4 ~ S11—Six-element DIP switches used to select one of four available signaling modes, on a per channel basis, for each of the 24 NDTU channels. Available signaling modes are:
  CO (Loop Start) mode
  CO (Ground Start) mode
  DID (2-wire signaling)
  TIE Line mode (4-wire E&M)

NEKU/NSTU/NOCU/NDKU

- FALT LEDs 1 & 2—Indicate software-detected faults or a disabled state caused by an input command from the maintenance terminal (**TPER Program**) or while ports are programmed. Each LED indicates four of the eight circuits on the NEKU, NSTU, NOCU, or NDKU:
  FALT #1 = Circuits 1 ~ 4
  FALT #2 = Circuits 5 ~ 8

NDSU

- FALT LEDs 1 & 2—Indicate software-detected faults or a disabled state caused by an input command from the maintenance terminal (**TPER Program**) or while ports are programmed. Each LED represents two of the four ports on the NDSU:
  FALT #1 = Circuits 1 & 2
  FALT #2 = Circuits 3 & 4

NDCU

- FALT LEDs 1 & 2—Indicate software-detected faults or a disabled state caused by an input command from the maintenance terminal (**TPER Program**) and while ports are programmed. Each LED indicates four of the eight circuits on the NDCU:
  FALT #1 = Circuits 1 ~ 4
  FALT #2 = Circuits 5 ~ 8
- NOT READY LEDs DIU 1 ~ 4 and DIU 5 ~ 8—Indicate the DDIU's (-MA or -MAT) power switch is not in the **ON** position or tip and ring line polarity is reversed.

NMDU

- FALT LEDs 1 & 2—Indicate software-detected faults or a disabled state caused by an input command from the maintenance terminal (**TPER Program**) and while ports are programmed:
  FALT #1 = DIU Circuits 1 ~ 4
  FALT #2 = Modem Circuits 1 ~ 4
- NOT READY LEDs DIU 1 ~ 4—Indicate the DDIU's (-MA or -MAT) power switch is not in the **ON** position or tip and ring line polarity is reversed.
- BSY LEDs (Modem) 1 ~ 4—Indicate the busy/idle status of each of the four modem circuits (the LED is **ON** when the circuit is busy).

NPSA-M/LPSA-M

- LEDs indicate the presence of: Ringer and -48, -24, -12, +12, -5, +5 voltages.
- AC Power LED—Indicates the presence of AC power to the NPSA-M.

NPSA-S

- LEDs indicate the presence of: -48 and -24 voltages.

8. PERIPHERAL EQUIPMENT

8.00 Electronic and Digital Telephone

8.01 Four different electronic telephones and two different digital telephones may be used in the system.

8.02 All electronic telephones share the same dimensions:
Height: 3.7 in. (94mm)
Width: 7.1 in. (180mm)
Depth: 9.5 in. (241mm)

8.03 All digital telephones share the same dimensions:
Height: 3.6 in. (92mm)
Width: 7.3 in. (184mm)
Depth: 9.0 in. (229mm)

8.04 Both electronic and digital telephones feature modular handset cords. Electronic telephones are connected to the system via 4-conductor modular

line cords. Digital telephones are connected to the system via 2-conductor modular line cords. In addition, all models may be used at any or all stations.

8.10 Headset Upgrade (HHEU)

8.11 Each electronic/digital telephone may also be upgraded to provide a modular headset jack by installing a headset upgrade assembly. The assembly consists of a small PCB (HHEU) which installs on the main PCB, inside the electronic or digital telephone, with a plug-in connector. Most standard headsets are compatible with the HHEU jack.

8.20 Attendant Console

8.21 The Attendant Console is available with faceplates for the Business and Lodging/Health Care applications. The console consists of a plastic housing with handset/headset modular jacks. Two horizontal rows of non-locking buttons, LEDs and a 12-button dialpad enable call processing.

8.30 DSS Console

8.31 As an option both electronic and digital Direct Station Selection (DSS) consoles can be used with systems that do not require attendant consoles, or require distributed call-handling positions. Two DSS consoles per electronic/digital telephone, up to a system maximum of eight DSS consoles, can be installed.

8.40 Standard Telephone

8.41 Standard telephones can be mixed with electronic telephones as required by the user's application. Standard telephones can access all telephone features using dial code access.

8.50 DDIU/PDIU

8.51 There are four types of Digital Data Interface Units (DDIUs/PDIUs), DDIU-MAT, DDIU-MA, PDIU-DI, and PDIU-DS. The DDIU-MAT is a built-in unit that attaches directly to the bottom of a 10- or 20-button electronic telephone (replacing the base). The PDIU-DI is a built-in unit that attaches directly to the bottom of both digital telephones (replacing the base). The DDIU-MA and PDIU-DS are standalone units. Each unit is equipped with a female RS-232C connector and operation switches. Both the DDIU-MAT and DDIU-MA are equipped with a power supply that connects to the DDIUs via a 6' cord, and plugs into a standard 117 VAC wall outlet.

8.60 Paging Equipment

8.61 A customer-supplied paging amplifier can work in conjunction with the system's paging interface and speaker zone switching to provide a system paging capability.

8.70 Music-on-Hold

8.71 A standard interface enables a customer-provided music source to be connected to the system. This music is connected to all calls placed in the hold, camp-on or call waiting condition by a station or the attendant. The same music source can also be used by the Automatic Wake-up feature for wake-up calls.

8.80 Universal Night Answer

8.81 Incoming calls, when the system is in night operation, can be programmed to go either to a night answer station or to a Universal Night Answer device such as a bell or loud ringer. Any station user can pick up a UNA call by either pressing a UNA button on the telephone or by dialing an access code. Up to two UNA zones can be programmed per system, when the system is in tenant service.

8.90 Station Message Detail Recording

8.91 PERCEPTION$_{e\&ex}$ automatically record call data (such as call duration, digits dialed, originating station and account codes) of calls made to and from the system. Lodging/Health Care feature activation (Automatic Wake-up, Message Registration, etc.) is also recorded. This data can then output to a printer, recording device or call accounting system. The Lodging/Health Care feature audit can be combined with SMDR or can be output separately. SMDR helps the user reduce telephone costs and monitor employee telephone usage.

CHAPTER 3

INSTALLATION SITE REQUIREMENTS

1. COMMERCIAL POWER

1.00 The system requires a power source of 100 ~ 120 VAC, 50/60 Hz. The AC outlet *must be dedicated* to system use, grounded and fused. To avoid accidental power turn-off, it is recommended that an ON/OFF wall switch not be used on this dedicated AC circuit.

1.01 If reserve power is to be installed, the battery pack requires a well-ventilated location adjacent to the equipment cabinet.

2. ENVIRONMENTAL REQUIREMENTS

2.00 Humidity at the equipment cabinet should be within 20 ~ 80% (non-condensing), and the temperature should be relatively constant within 32 ~ 104°F (0 ~ 40°C). Exposure to dust and airborne chemicals should be avoided.

3. EQUIPMENT ROOM RECOMMENDATIONS

3.00 The minimum floor and maintenance space required for installation of each of the two equipment cabinets is shown in Figures 3-1 and 3-2.

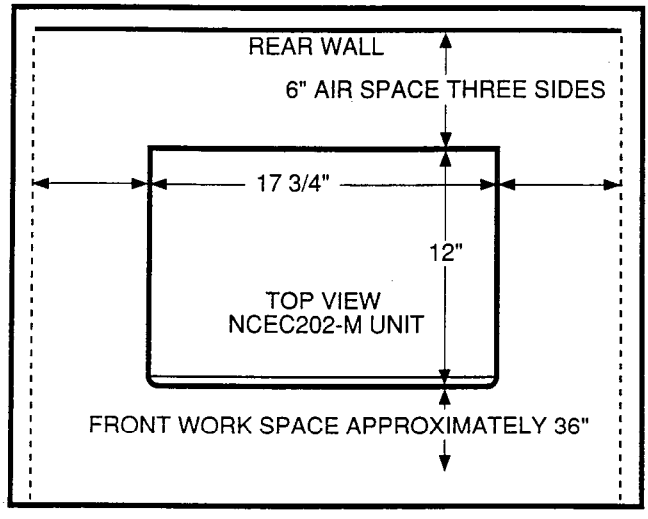

FIGURE 3-1—PERCEPTION$_e$ MINIMUM FLOOR SPACE

3.01 The following requirements must be considered when selecting a location for the equipment cabinet:

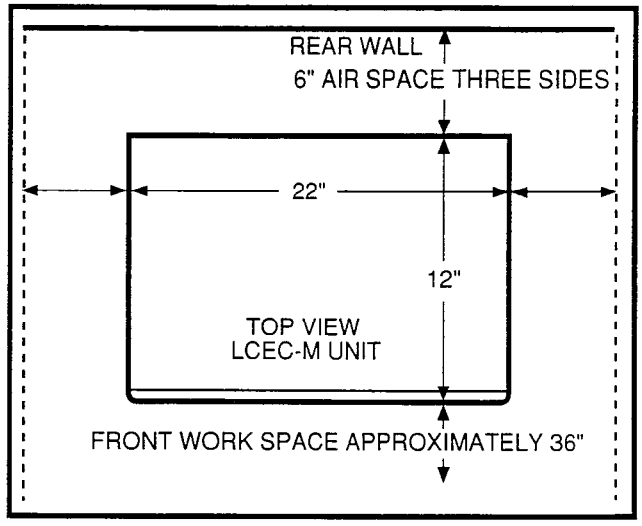

FIGURE 3-2—PERCEPTION$_{ex}$ MINIMUM FLOOR SPACE

The location MUST BE:

- Dry and clean.
- Well ventilated.
- Well lit.
- Easily accessible.

The location MUST NOT BE:

- Subject to extreme heat or cold.
- Subject to corrosive fumes.
- Next to a reproducing or copying machine.

4. CABLING CONSIDERATIONS

4.00 The equipment cabinet must be located close to the facility Main Distribution Frame (MDF). Maximum house cable run distances for station and peripheral equipment must also be considered when choosing the location of the equipment cabinet. The limit for each type of equipment is:

- Electronic/Digital Telephone - 1,000 cable feet (305 M), 24 AWG
- Standard Telephone - 500-ohms (including telephone)
- Stand-alone DDIU-MA/PDIU-DS - 3, 280 cable feet (1,000 M), 24 AWG
- Attendant Console - 1,000 cable feet (305 M), 24 AWG
- Electronic DSS - 500 cable feet, 24 AWG

- Digital DSS - 1,000 cable feet (305 M), 24 AWG

4.01 Acceptable cable for all telephones is 22 or 24 AWG twisted pair inside telephone station cable (jacketed but not shielded). Two twisted pairs are required for the electronic telephone, one pair for a standard telephone, and one twisted pair for the digital telephone, even if equipped with a PDIU-DI. Three twisted pairs are required for an electronic telephone equipped with a DDIU-MAT. The stand-alone DDIU-MA/PDIU-DS requires one twisted pair.

4.02 A 25-pair cable is required for the attendant console. The console is equipped with a male 50-pin amphenol-type connector.

WARNING!

1. ***Never install telephone wiring during a lightning storm.***
2. ***Never install telephone jacks in wet locations, unless the jacks are specifically designed for wet locations.***
3. ***Never touch uninsulated telephone wires or terminals unless the telephone line has been disconnected at the interface.***
4. ***Use caution when installing or modifying telephone lines.***

5. GROUNDING

5.00 The following grounding directions are required in order to comply with the Underwriters' Laboratories' Standard 1459 2nd edition:

1) Redundant and independent equipment grounding conductors are to be installed between the product and the wiring system ground.

2) One of the equipment grounding conductors (ground 1) shall be an insulated grounding conductor. Its size shall not be smaller than the size of the grounded and ungrounded branch-circuit supply conductors. It shall also have their equivalent insulation material and thickness, except that it is green with, or wilthout, one or more yellow stripes. This insulated grounding conductor is to be installed as part of the circuit that supplies the system, and it is to be connected to ground at the service equipment.

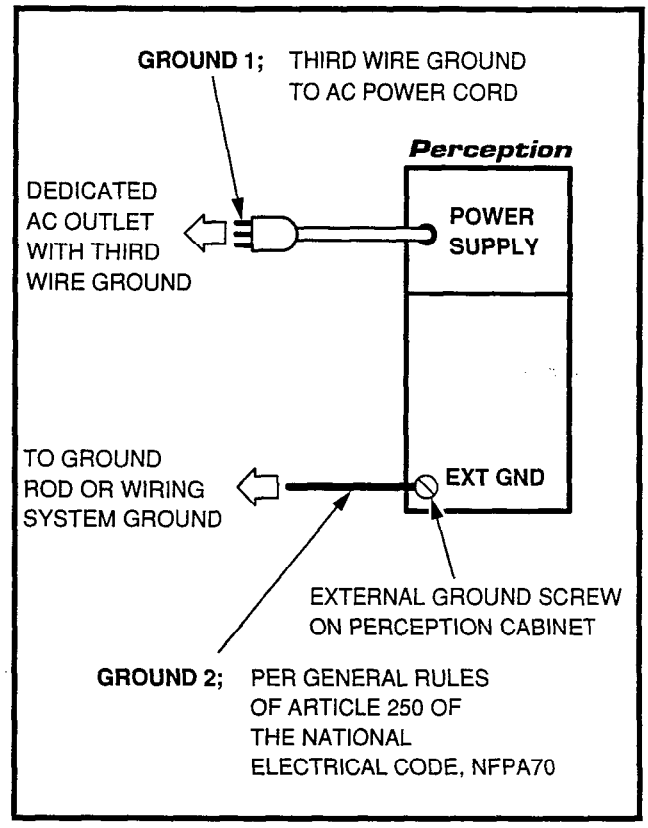

FIGURE 3-3—UL GROUNDING DIAGRAM

3) The other conductor (ground 2) shall comply with the general rules for grounding contained in Article 250 of the National Electrical Code, NFPA 70, but shall not depend on the cord and plug of the product.

CHAPTER 4

SYSTEM INSTALLATION

1. PERCEPTION$_e$

1.00 Power Supply Installation

1.01 Install the main power supply as follows:

1) Remove the two screws securing the basic cabinet front cover. Lift the cover off the cabinet.

2) Loosen two screws, remove and retain four screws securing the basic cabinet rear cover plate, and remove the rear cover plate (Figure 4-1).

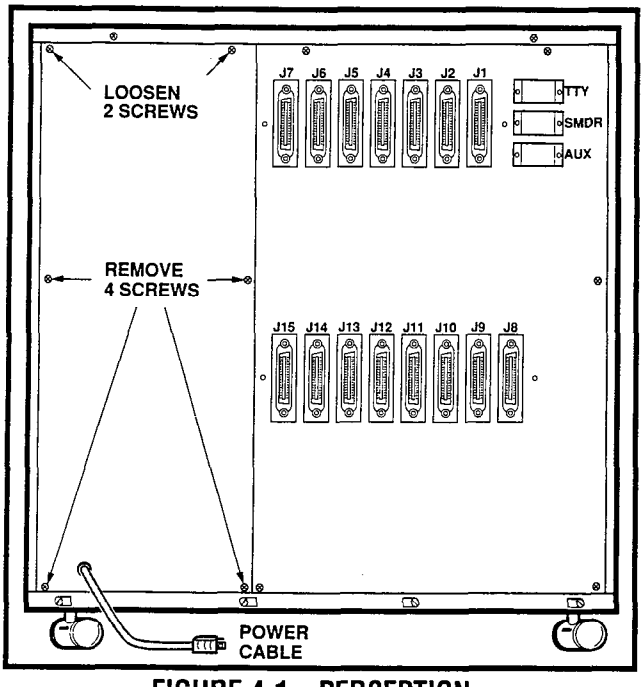

FIGURE 4-1—PERCEPTION$_e$
BASIC CABINET REAR COVER

3) Unpack the main power supply and inspect it carefully for any visible damage. Verify that all connectors are securely attached.

4) Remove and retain the three corner screws from the back of the main power supply.

5) Slide the main power supply into the basic cabinet from the front and secure in place with three screws at the rear.

6) Check the 15-amp fuse (F1) located at the top of the power supply to verify that it is in working order.

7) Remove plastic cover from AC connection terminal TB1 by removing two screws.

8) Connect the white and black leads to the **AC** terminal (black to **L** and white to **N**) and the green lead (ground) to the **GND** screw on the main power supply (Figure 4-2). Replace the plastic cover and secure with two screws.

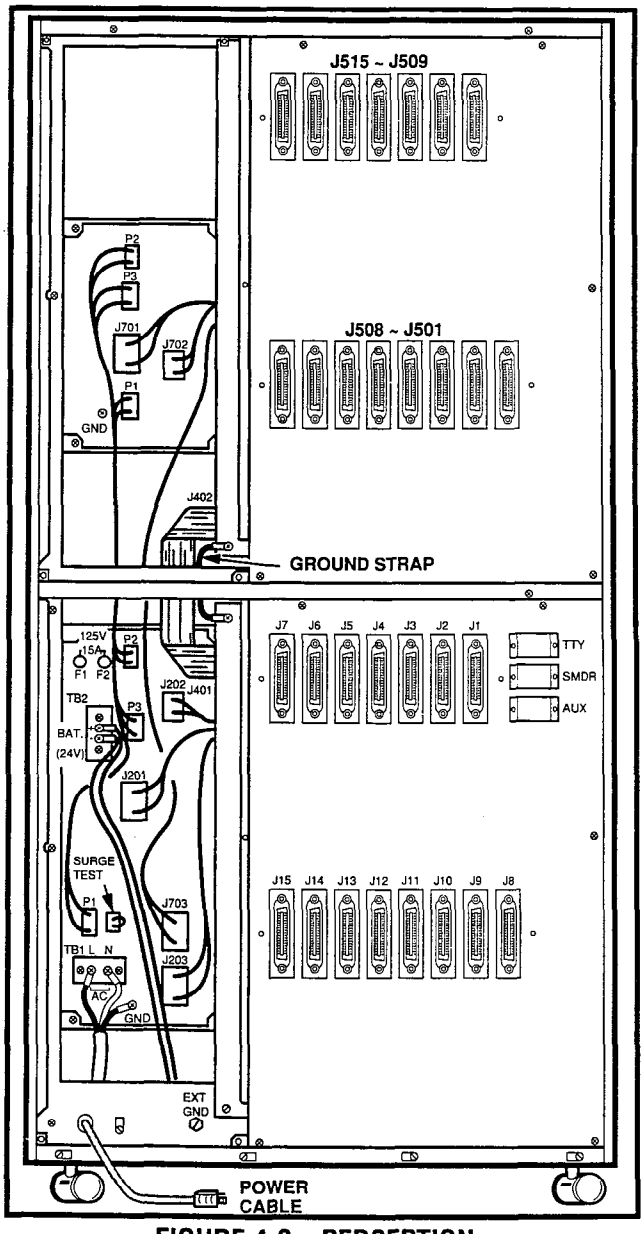

FIGURE 4-2—PERCEPTION$_e$
CABLE CONNECTIONS

9) With the main power supply turned **OFF**, plug the AC power cord into the AC outlet.

10) Momentarily press each circuit breaker to verify that it is not tripped.

11) Place the main power supply power switch in the **ON** position.

WARNING!
Hazardous voltage that may cause death or injury is exposed at the power supply AC terminal.

12) Verify that all main power supply power indicator LEDs are on (**RINGER** LED should be pulsating rapidly). If any of the LEDs are **not** on, replace the main power supply.

13) Using a multimeter (set to the appropriate ranges), check the pins on connectors **J201**, **J202**, **J203** and **J703** for the voltages shown in Figure 4-3. (The connectors are on the rear of the power supply chassis.) Measure between the voltage pin and a ground pin. (All ground leads are tied to a single point, so any can be used.) Figure 4-3 also shows the acceptable range for each output voltage. If a measured voltage falls outside of the acceptable range, replace the main power supply.

14) Turn the power supply **OFF** and then connect **J201**, **J202** and **J203**, respectively, as shown in Figure 4-2.

15) Remove and retain the two screws securing the peak load battery mounting bracket and slide the bracket out the front of the basic cabinet.

16) Install the peak load battery as shown in Figure 4-4. Secure the battery to the mounting bracket with the retaining strap and a single screw.

WARNING!
Hazardous voltage that may cause death or injury is exposed at the peak load battery cables. DO NOT touch wires together.

17) Connect the peak load battery cables to TB2 on the rear of the basic power supply (see Figure 4-2). Ensure that the correct polarity is observed as follows:

blue to positive (+)
yellow to negative (-)

EXPANSION CABINET

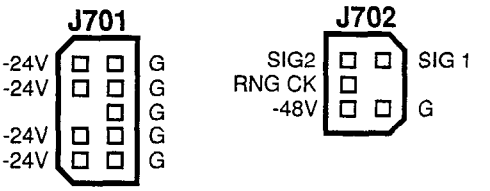

BASIC CABINET

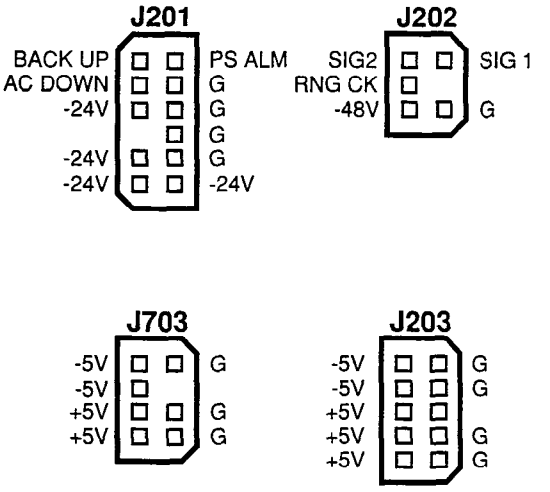

FPSA ACCEPTABLE VOLTAGE RANGES	
NOMINAL (VDC)	RANGE (VDC)
-48	-47.52 ~ -48.96
-24	-26.75 ~ -28.12
+12	+11.76 ~ +12.48
-12	-11.76 ~ -12.48
+5	+5.0 ~ +5.4
-5	-5.0 ~ -5.4

FIGURE 4-3—PERCEPTION$_e$ VOLTAGE CHECKS

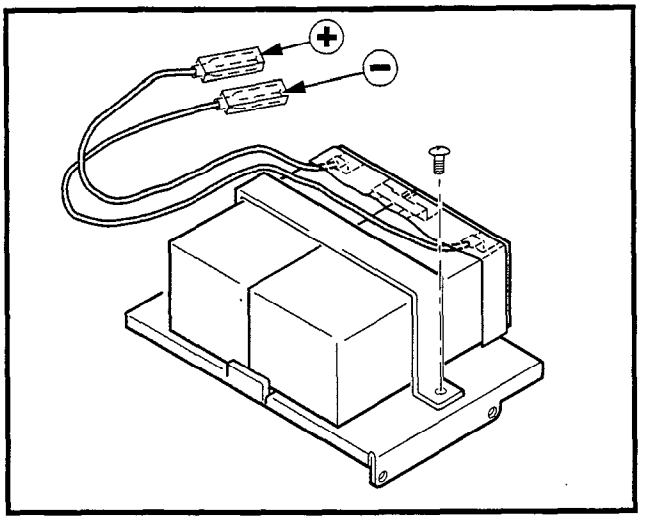

FIGURE 4-4—PEAK LOAD BATTERY

18) Slide the mounting bracket/battery assembly in place and secure with two screws.

19) Set the **BATTERY BACKUP** switch to **ON** (Figure 4-5).

1.10 Expansion Cabinet Installation

WARNING!

Hazardous voltage that may cause death or injury is present in the system during operation. Ensure that AC power to both cabinets is turned off prior to performing this procedure.

NOTE:
A 13mm socket wrench and extension is recommended for ease of expansion cabinet installation.

1) Remove and retain the four screws securing the basic cabinet top cover and lift the cover off the cabinet (Figure 4-6).

2) Remove and retain the two screws securing each of the expansion cabinet side panels. Pull the side panels off.

3) Place the four casters on the basic cabinet in the lock position to ensure cabinet stability during the expansion cabinet installation.

4) On both the basic and expansion cabinets, remove and retain two screws securing the cabinet doors. Remove and retain the six screws securing the rear panel on each cabinet.

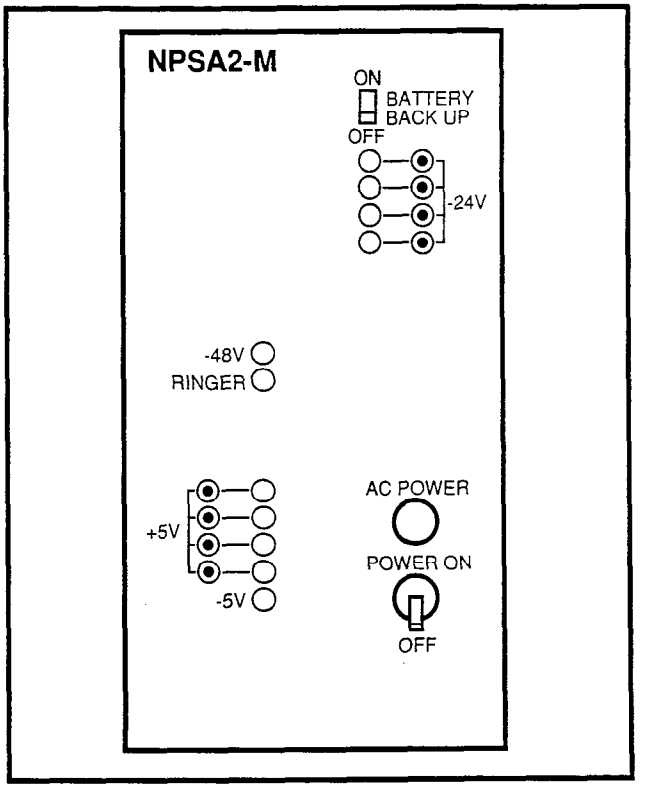

FIGURE 4-5—PERCEPTION$_e$
POWER SUPPLY CONTROLS AND INDICATORS

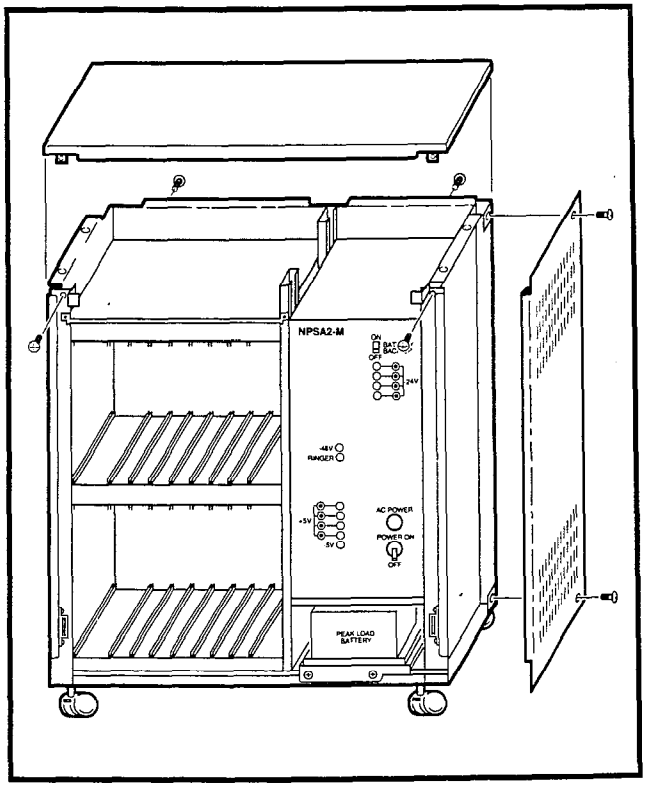

FIGURE 4-6—PERCEPTION$_e$
EXPANSION CABINET INSTALLATION

5) Place the expansion cabinet on top of the basic cabinet, ensuring proper alignment of the four mounting holes. Secure in place with four metric bolts, flat washers and lockwashers.

6) Reinstall the two side covers on the expansion cabinet and secure in place using four screws (two per side).

7) Install the top cover on the expansion cabinet and secure with four screws.

8) Connect the intercabinet ground wire in accordance with Figure 4-2.

9) Route the expansion cabinet ribbon cable from **J402** in the expansion cabinet through the opening provided in the cabinet bottom and connect to the basic cabinet backplane at **J401**.

10) Remove three screws from the secondary power supply. From the front of the expansion cabinet slide the power supply into the rack and secure in place with the three rear screws.

NOTE:
Prior to routing intercabinet cabling, check the 15-amp fuse (F2) located at the top of the main power supply to verify that it is in working order.

11) Route the power supply cabling through the hole in the expansion cabinet and connect both power supplies at the **P1**, **P2** and **P3** receptacles.

12) With the main power supply turned **OFF**, plug the AC power cord into the AC outlet.

13) Momentarily press each secondary power supply circuit breaker to verify that it is not tripped.

14) Place the main power supply power switch in the **ON** position.

15) Verify that all secondary power supply power indicator LEDs are on. If any of the LEDs are ***not*** on, replace the NPSA-S (**RINGER** LED should be pulsating rapidly).

16) Using a multimeter (set to the appropriate ranges), check the pins on connectors **J701** and **J702** on the secondary power supply for the voltages shown in Figure 4-3. (The connectors are on the rear of the power supply chassis.) Measure between the voltage pin and a ground pin. (All ground leads are tied to a single point, so any can be used.) Figure 4-3 also shows the acceptable range for each output voltage. If a measured voltage falls outside of the acceptable range, replace the secondary power supply.

17) Turn the power supply **OFF**.

18) Plug in connectors **J701** and **J702**.

19) Route cable **J703** into the basic cabinet and plug it into connector **J703**.

20) Reinstall the rear panels and doors on both cabinets and secure in place with screws.

2. PERCEPTION$_{ex}$

2.00 Power Supply Installation

2.01 Install the main power supply as follows:

1) Remove the two screws securing the basic cabinet front cover. Lift the cover off the cabinet.

2) Remove and retain six screws securing the basic cabinet rear cover plate and remove the rear cover plate (Figure 4-7).

3) Unpack the main power supply and inspect it carefully for any visible damage. Verify that all connectors are securely attached.

4) Remove and retain the three corner screws from the back of the main power supply.

5) Slide the main power supply into the basic cabinet from the front and secure in place with three screws at the rear.

6) Check the two 30-amp fuses (F1 and F2) located at the top of the power supply to verify that they are in working order.

7) Remove plastic cover from AC connection terminal TB1 by removing two screws.

8) Connect the white and black leads to the **AC** terminal (black to **L** and white to **N**) and the

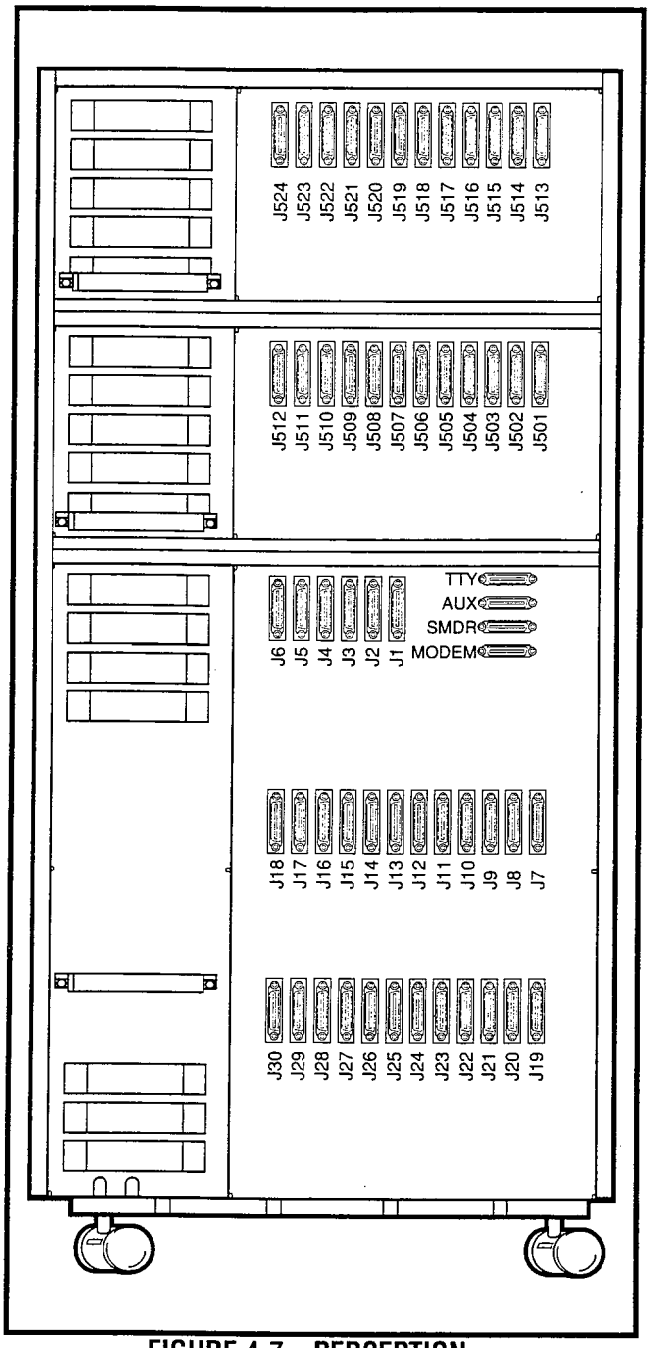

FIGURE 4-7—PERCEPTION$_{ex}$ BASIC CABINET REAR COVER

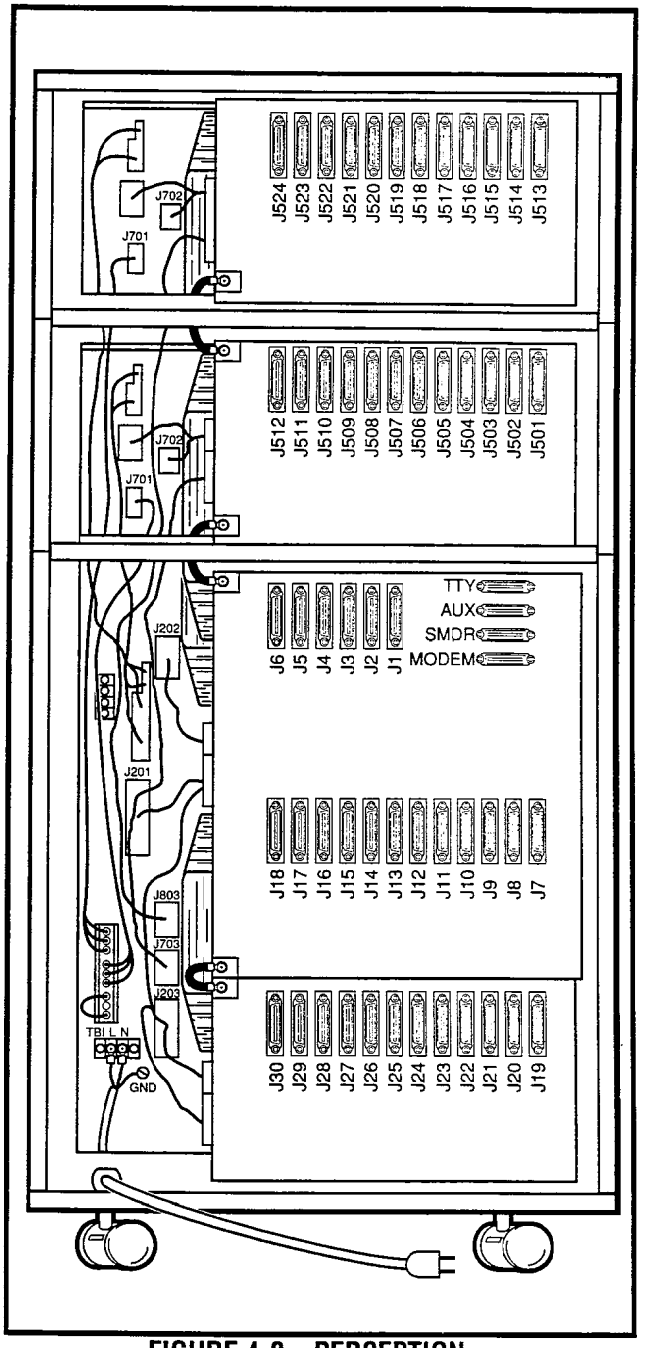

FIGURE 4-8—PERCEPTION$_{ex}$ CABLE CONNECTIONS

green lead (ground) to the **GND** screw on the main power supply (Figure 4-8). Replace the plastic cover and secure with two screws.

9) With the main power supply turned **OFF**, plug the AC power cord into the AC outlet.

10) Momentarily press each circuit breaker to verify that it is not tripped.

11) Place the main power supply power switch in the **ON** position.

WARNING!
Hazardous voltage that may cause death or injury is exposed at the power supply AC terminal.

12) Verify that all main power supply power indicator LEDs are on (**RINGER** LED should be pulsating rapidly). If any of the LEDs are **not** on, replace the main power supply.

13) Using a multimeter (set to the appropriate ranges), check the pins on connectors **J201**, **J202**, **J203, J703** and **J803** for the voltages shown in Figure 4-9. (The connectors are on the rear of the power supply chassis.) Measure between the voltage pin and a ground pin. (All ground leads are tied to a single point, so any can be used.) Figure 4-9 also shows the acceptable range for each output voltage. If a measured voltage falls outside of the acceptable range, replace the main power supply.

14) Turn the power supply **OFF** and then connect **J201**, **J202** and **J203,** respectively, as shown in Figure 4-9.

15) Remove and retain the two screws securing the peak load battery mounting bracket and slide the bracket out the front of the basic cabinet.

16) Install the peak load battery as shown in Figure 4-4. Secure the battery to the mounting bracket with the retaining strap and a single screw.

WARNING!
Hazardous voltage that may cause death or injury is exposed at the peak load battery cables. DO NOT touch wires together.

17) Connect the peak load battery cables to TB2 on the rear of the basic power supply (see Figure 4-4). Ensure that the correct polarity is observed as follows:

blue to positive (+)
yellow to negative (-)

18) Slide the mounting bracket/battery assembly in place and secure with two screws.

19) Set the **BATTERY BACKUP** switch to **OFF** Figure 4-10.

2.10 First Expansion Cabinet Installation

WARNING!
Hazardous voltage that may cause death or injury is present in the system during

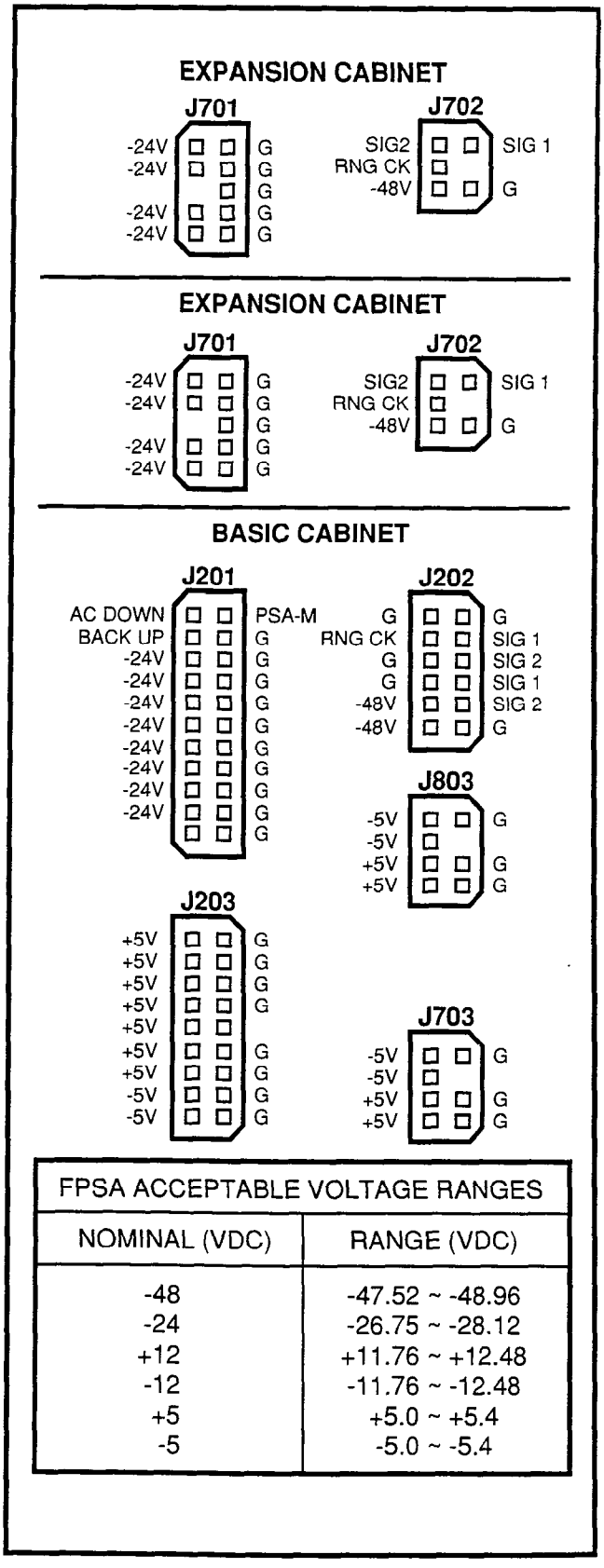

FPSA ACCEPTABLE VOLTAGE RANGES	
NOMINAL (VDC)	RANGE (VDC)
-48	-47.52 ~ -48.96
-24	-26.75 ~ -28.12
+12	+11.76 ~ +12.48
-12	-11.76 ~ -12.48
+5	+5.0 ~ +5.4
-5	-5.0 ~ -5.4

FIGURE 4-9—PERCEPTION$_{ex}$ VOLTAGE CHECKS

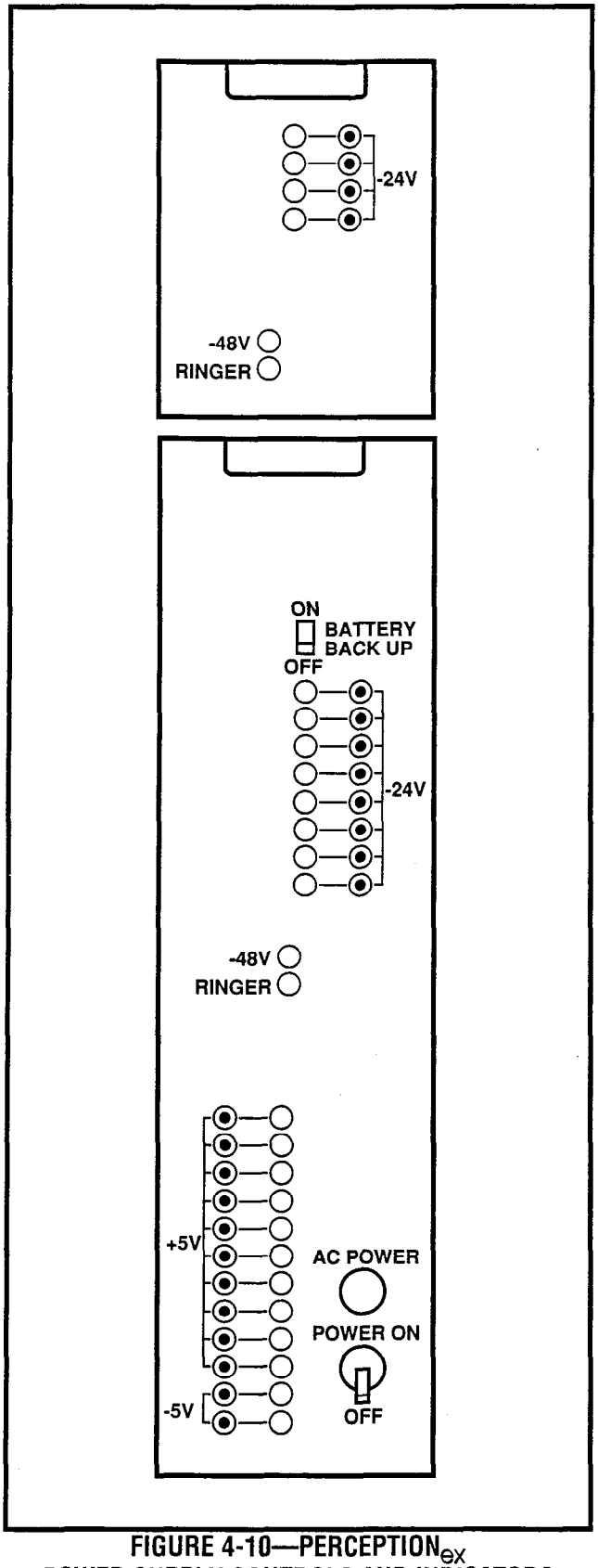

FIGURE 4-10—PERCEPTION$_{ex}$ POWER SUPPLY CONTROLS AND INDICATORS

operation. Ensure that AC power to both cabinets is turned off prior to performing this procedure.

NOTE:
A 13mm socket wrench and extension is recommended for ease of expansion cabinet installation. Two expansion cabinets can be installed.

1) Remove and retain the four screws securing the basic cabinet top cover and lift the cover off the cabinet (Figure 4-11).

2) Remove and retain the two screws securing each of the expansion cabinet side panels. Pull the side panels off.

3) Place the four casters on the basic cabinet in the lock position to ensure cabinet stability during the expansion cabinet installation.

4) On both the basic and expansion cabinets, remove and retain two screws securing the cabinets doors. Remove and retain the six screws securing the rear panel on each cabinet.

5) Place the expansion cabinet on top of the basic cabinet, ensuring proper alignment of the four mounting holes. Secure in place with four metric bolts, flat washers and lockwashers.

6) Reinstall the two side covers on the expansion cabinet and secure in place using four screws (two per side).

7) Install the top cover on the expansion cabinet and secure with four screws.

8) Connect the intercabinet ground wire in accordance with Figure 4-8.

9) Route the expansion cabinet ribbon cable from **J405** in the expansion cabinet through the opening provided in the cabinet bottom and connect to the basic cabinet backplane at **J402.**

10) Remove three screws from the secondary power supply. From the front of the expansion cabinet, slide the power supply into the rack and secure in place with the three rear screws.

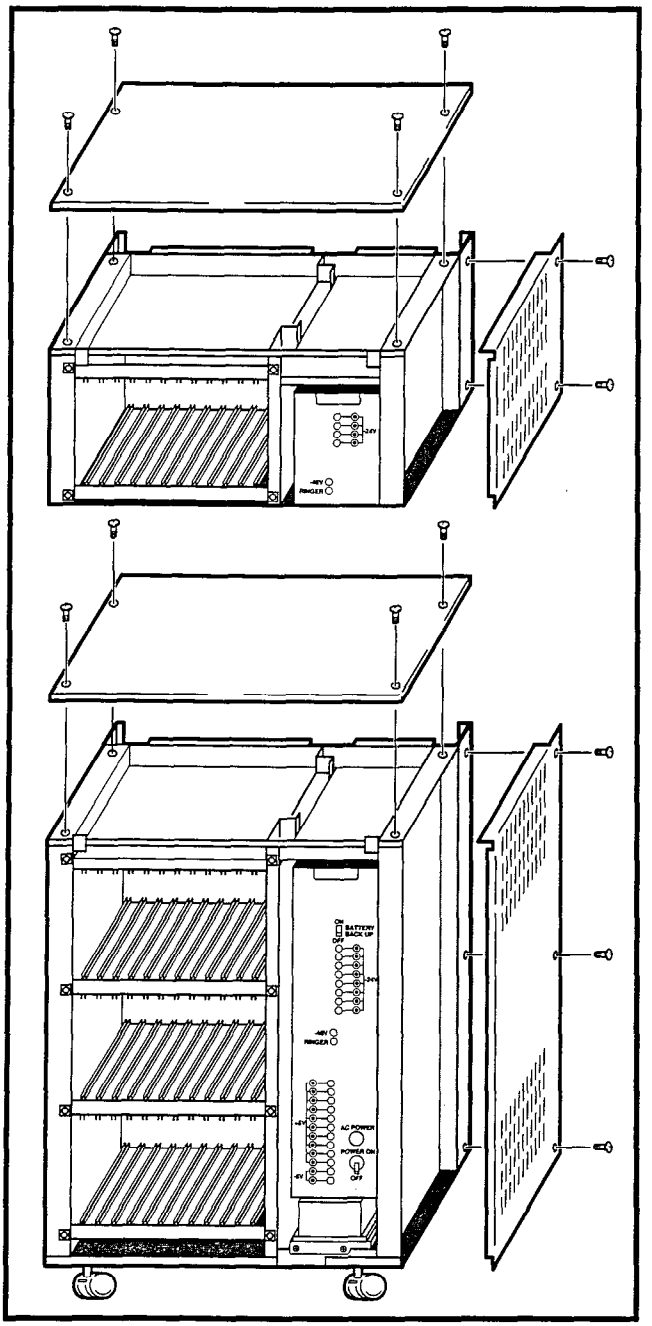

FIGURE 4-11—PERCEPTION$_{ex}$ EXPANSION CABINET INSTALLATION

NOTE:
Prior to routing intercabinet cabling, check the 15-amp fuse (F2) located at the top of the main power supply to verify that it is in working order.

11) Route the power supply cabling through the hole in the expansion cabinet and connect both power supplies to the lower connectors at the **P1**, **P2** and **P3** receptacles.

12) With the main power supply turned **OFF**, plug the AC power cord into the AC outlet.

13) Momentarily press each secondary power supply circuit breaker to verify that it is not tripped.

14) Place the main power supply power switch in the **ON** position.

15) Verify that all secondary power supply power indicator LEDs are on. If any of the LEDs are ***not*** on, replace the NPSA-S (**RINGER** LED should be pulsating rapidly).

16) Using a multimeter (set to the appropriate ranges), check the pins on connectors **J701** and **J702** on the secondary power supply for the voltages shown in Figure 4-9. (The connectors are on the rear of the power supply chassis.) Measure between the voltage pin and a ground pin. (All ground leads are tied to a single point, so any can be used.) Figure 4-9 also shows the acceptable range for each output voltage. If a measured voltage falls outside of the acceptable range, replace the secondary power supply.

17) Turn the power supply **OFF**.

18) Plug in connectors **J701** and **J702**.

19) Route cable **J703** into the basic cabinet and plug it into connector **J703**.

20) Reinstall the rear panels and doors on both cabinets and secure in place with screws.

2.20 Second Expansion Cabinet Installation

WARNING!
Hazardous voltage that may cause death or injury is present in the system during operation. Ensure that AC power to both cabinets is turned off prior to performing this procedure.

NOTE:
A 13mm socket wrench and extension is recommended for ease of expansion cabinet

installation. Two expansion cabinets can be installed.

1) Remove and retain the four screws securing the basic cabinet top cover and lift the cover off the cabinet (Figure 4-11).

2) Remove and retain the two screws securing each of the expansion cabinet side panels. Pull the side panels off.

3) Place the four casters on the basic cabinet in the lock position to ensure cabinet stability during the expansion cabinet installation.

4) On both the basic and expansion cabinets, remove and retain two screws securing the cabinets' doors. Remove and retain the six screws securing the rear panel on each cabinet.

5) Place the expansion cabinet on top of the basic cabinet, ensuring proper alignment of the four mounting holes. Secure in place with four metric bolts, flat washers and lockwashers.

6) Reinstall the two side covers on the expansion cabinet and secure in place using four screws (two per side).

7) Install the top cover on the expansion cabinet and secure with four screws.

8) Connect the intercabinet ground wire in accordance with Figure 4-8.

9) Route the expansion cabinet ribbon cable from **J406** in the expansion cabinet through the opening provided in the cabinet bottom and connect to the basic cabinet backplane at **J403.**

10) Remove three screws from the secondary power supply. From the front of the expansion cabinet, slide the power supply into the rack and secure in place with the three rear screws.

NOTE:
Prior to routing intercabinet cabling, check the 15-amp fuse (F2) located at the top of the main power supply to verify that it is in working order.

11) Route the power supply cabling through the hole in the expansion cabinet and connect both power supplies to the upper connectors at the **P1**, **P2** and **P3** receptacles.

12) With the main power supply turned **OFF**, plug the AC power cord into the AC outlet.

13) Momentarily press each secondary power supply circuit breaker to verify that it is not tripped.

14) Place the main power supply power switch in the **ON** position.

15) Verify that all secondary power supply power indicator LEDs are on. If any of the LEDs are ***not*** on, replace the NPSA-S (**RINGER** LED should be pulsating rapidly).

16) Using a multimeter (set to the appropriate ranges), check the pins on connectors **J701** and **J702** on the secondary power supply for the voltages shown in Figure 4-9. (The connectors are on the rear of the power supply chassis.) Measure between the voltage pin and a ground pin. (All ground leads are tied to a single point, so any can be used.) Figure 4-9 also shows the acceptable range for each output voltage. If a measured voltage falls outside of the acceptable range, replace the secondary power supply.

17) Turn the power supply **OFF**.

18) Plug in connectors **J701** and **J702**.

19) Route cable **J703** into the basic cabinet and plug it into connector **J803**.

20) Reinstall the rear panels and doors on both cabinets and secure in place with screws.

3. PRINTED CIRCUIT BOARD INSTALLATION

3.00 NFDU

3.01 Install an NFDU in the FDD0 slot in the basic cabinet. If the system uses **D.02** or later version software and Remote Maintenance, a second NFDU must be installed in the FDD1 slot in the basic cabinet. There are different strap selections on the various NFDUs, depending on the slot in which the

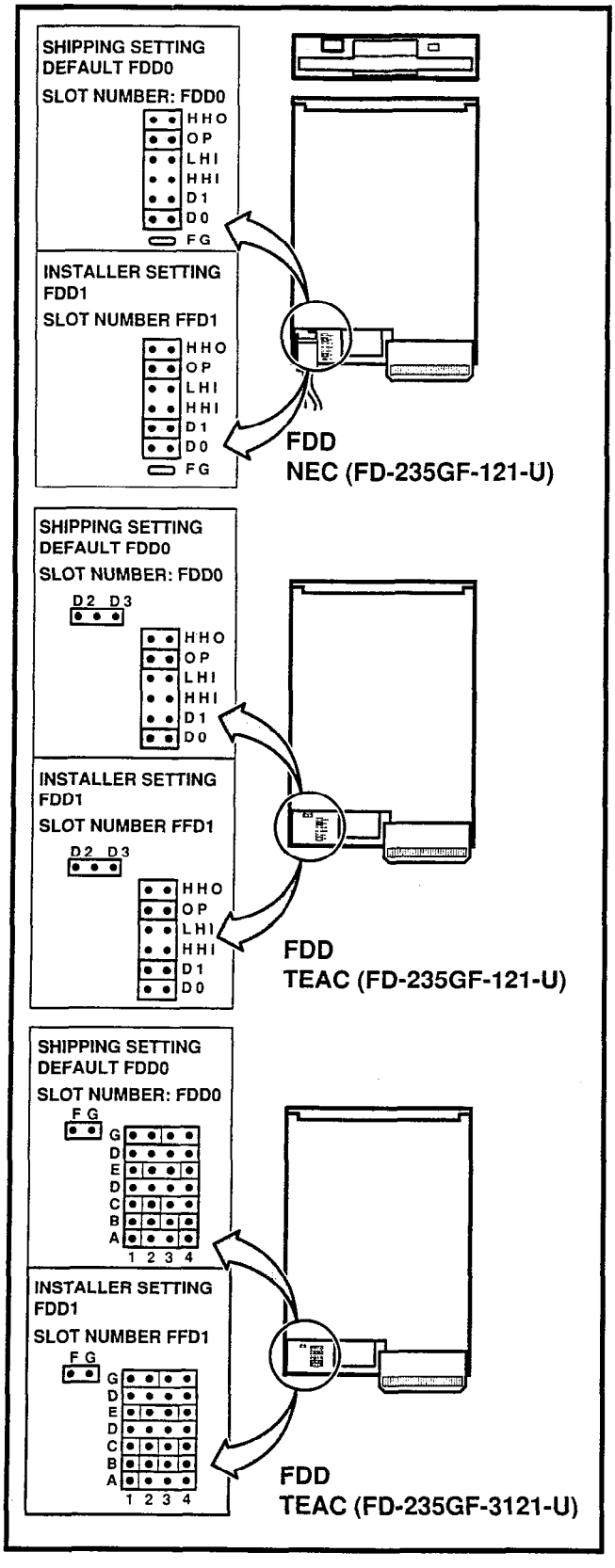

FIGURE 4-12—NFDU STRAPPING

PCB is installed or the type of NFDU that you are working with. Check the identification number on the NFDU and refer to the corresponding diagrams in Figure 4-12 which show how the jumper block on the rear of the NFDU must be set.

3.10 LCCU

3.11 Install the LCCU in the CCU slot of the basic cabinet. There are no straps on this PCB; however, there is a plug (**P5**). Verify that the connection plug is in place in accordance with Figure 4-13.

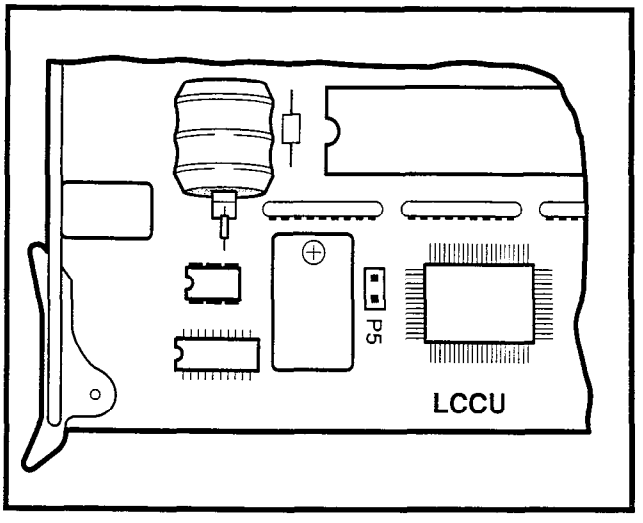

FIGURE 4-13—LCCU STRAPPING

3.20 NTWU

3.21 The NTWU has one strap that must be verified before installation (Figure 4-14). Install the NTWU in the TWU slot of the basic cabinet. Ensure that the strap is as follows:

TBC5: pins 1 & 2 must be strapped

3.30 NPRU

3.31 The NPRU has one strap that requires verification before installation (Figure 4-15). If Automatic Wake-up is required, verify that the DROM is installed in the **IC15** socket. Install the NPRU in the **P00** slot. (An NPRU must be installed in the **P00** card slot.) If a second NPRU PCB is used, install it in the **P01** slot in the PERCEPTION$_e$ expansion cabinet. In PERCEPTION$_{ex}$, both NPRUs are installed in the basic cabinet. Verify that **TB1** is strapped as follows:

TB1: pins 1 and 2 must be strapped.

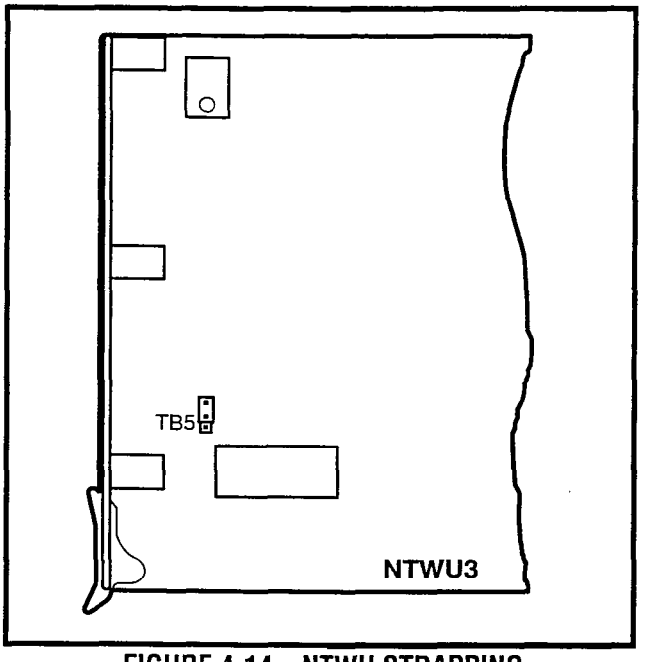

FIGURE 4-14—NTWU STRAPPING

NOTE:
DROM only required for digitized voice on automated wake-up calls.

3.32 If NRCUs are to be installed, mount them on the NPRU. The first NRCU mounts on connector **J3**, the second on **J4** (see Figure 4-16).

3.40 NEKU, NDKU, and NOCU

3.41 Install the NEKU in any of the line designated slots **L00 ~ L11** or **L15 ~ L26** in PERCEPTION$_e$. If an attendant console is used, an NEKU must be installed in slot **L00**. If a second attendant console is installed, a second NEKU must be installed in slot **L15**. Attendant consoles must be installed on circuit 1 in both slots.

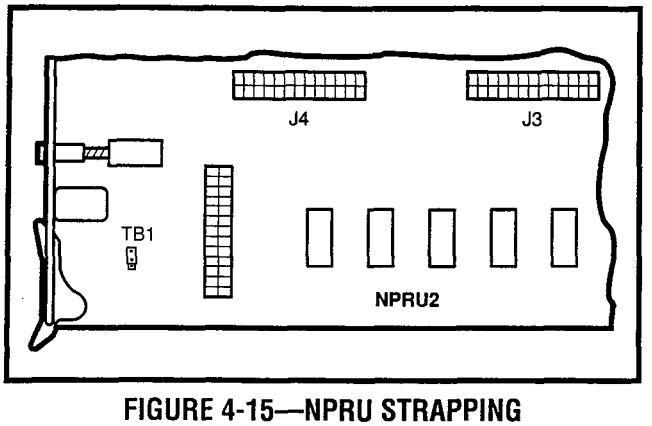

FIGURE 4-15—NPRU STRAPPING

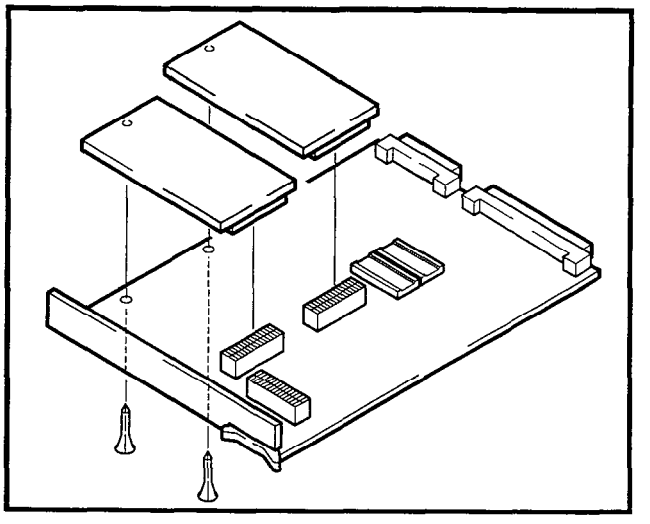

FIGURE 4-16—NRCU MOUNTING

3.42 For PERCEPTION$_{ex}$, install the NEKU in any designated slot **U00 ~ U31**. To utilize attendant consoles, install NEKUs in the following slots:

ATT#0-PCB position **U00** Circuit **#1**
ATT#1-PCB position **U01** Circuit **#1**

3.43 There are no straps on the NEKU PCB for either system.

3.44 Install the NDKU in any of the line designated slots **L00 ~ L11** or **L15 ~ L26** in PERCEPTION$_e$. For PERCEPTION$_{ex}$, install the NDKU in any designated slots **U00 ~ U31**. Some options require adjacent PCB slots be left vacant.

3.45 The NDKU employs a 2B+D architecture for each circuit that must be configured for one of four different operating options using the dip switch S1 (Figure 4-17) as follows:

OPTION	S-1 POSITION	OPERATION
1	DIP switches 1 ~ 4: ON	DKT only
2	DIP switches 2 ~ 4: ON DIP switch 1: OFF	DKT with DIU or OCA
3	DIP switches1, 3, and 4: ON DIP switch 2: OFF	4 DSS only
4	DIP switches 1 and 2:OFF DIP switches 3 and 4: ON	8 DSS only

1) OPTION 1: Eight digital telephones only: this option uses one of the two B channels for each circuit to interface up to eight 1000-series digital telephones.

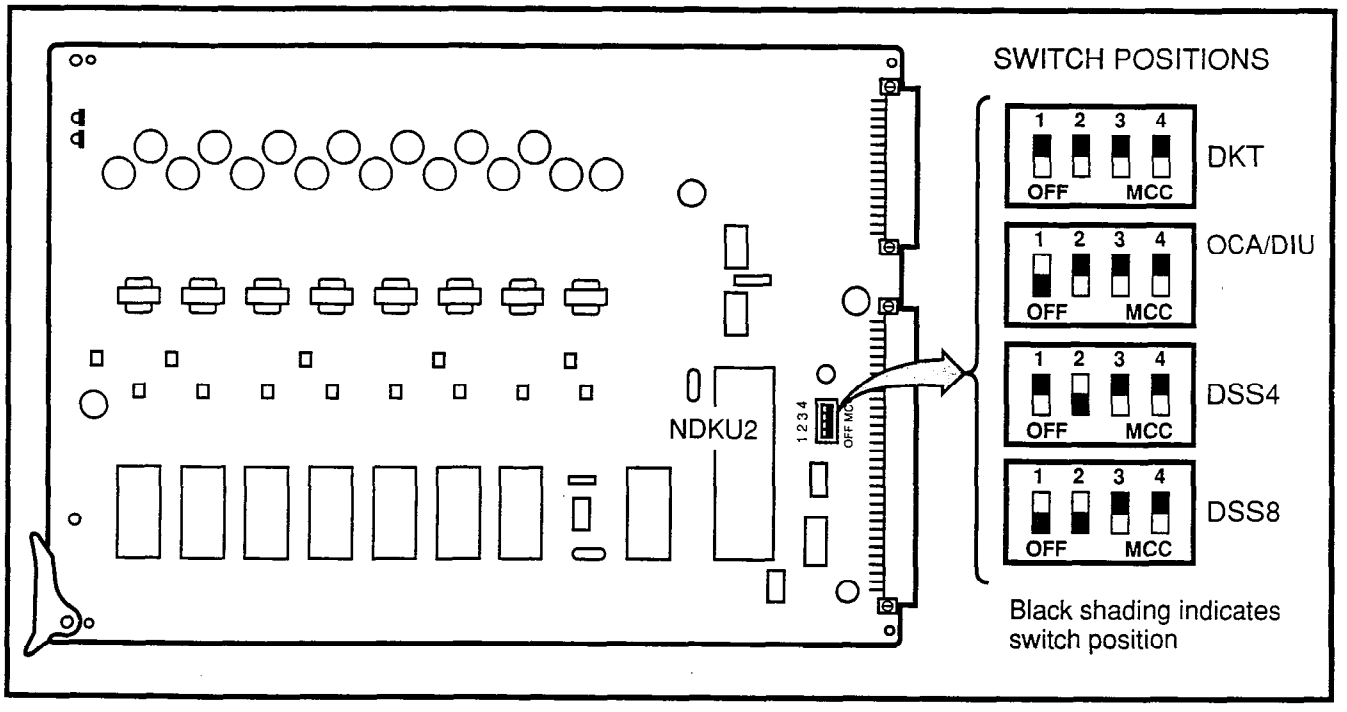

FIGURE 4-17—NDKU SWITCH OPTIONS

2) OPTION 2: Eight digital telephones with DIU or OCA: this option uses both B channels for each circuit to interface up to eight 1000-series digital telephones; plus each telephone may have an integrated Data Interface Unit (PDIU-DI) or Off-hook Call Announce PCB (DVSU) installed. In addition, this option supports the Stand-alone Data Interface Unit (PDIU-DS). One B channel for each circuit interfaces a single PDIU-DS. The other B channel of this circuit **cannot** be used. A single PDIU-DS **only** may be installed per each circuit.

3) OPTION 3: Four digital DSS consoles only: this option uses one of the B channels for each of the two circuits to interface up to four 1000-series digital DSS consoles.

4) OPTION 4: Eight digital DSS consoles only: this option uses both B channels for each of the two circuits to interface up to eight 1000-series digital DSS consoles.

NOTE:

1. *When using option 2 or 4, the next highest number adjacent PCB slot **cannot** be used. For example, if an NDKU is installed in **L01** or **U01**, the PCB slot **L02** or **U02** respectively, must be left vacant.*
2. *When using option 4, program the first four DDSSs on circuits 1, 3, 5 and 7 on the NDKU PCB. Program the second four DDSSs on cirucits 1, 3, 5 and 7 on the adjacent slot next to the NDKU PCB.*
3. *When using option 4, wire the first four DDSSs to circuits 1, 2, 3 and 4 on the NDKU PCB (these are the NDKU assigned DDSSs) and the second four DDSSs to circuits 5, 6, 7 and 8 (these are the DDSSs assigned to the adjacent slot) on the NDKU PCB.*

3.46 The NOCU PCB is installed at a rate of one PCB for each group of eight electronic telephones. There are no strapping options on this PCB. The NOCU is installed in any of the line designated slots **L00 ~ L11** and/or **L15 ~ L26** in PERCEPTION$_e$, and in any designated slots **U00 ~ U31** in PERCEPTION$_{ex}$. If any of the eight circuits is not used for Off-hook Call Announce, the remaining circuits *CANNOT* be used for other electronic telephone assignments.

3.50 NSTU

3.51 Install the NSTU in any of the line designated slots **L00 ~ L11** or **L15 ~ L26** in the PERCEPTION$_e$ system. The designated slots in PERCEPTION$_{ex}$

are **U00 ~ U31**. There are no straps on the PCB for either system.

3.60 NDSU

3.61 Install the NDSU PCB either in the **C00** or **C01** slots or in any of slots **L00 ~ L11** or **L15 ~ L26** in the PERCEPTION$_e$ system. Two NDSUs can be installed in the same cabinet. There are no straps on this PCB. There are no **C** slots resident within the PERCEPTION$_{ex}$ system so NDSU PCB installation will be in any **U** slot .

3.70 NEMU, NCOU, and NLSU

3.71 Trunk PCBs (NEMU, NCOU, and NLSU) may be installed in any **T** slot. Additionally, up to 16 **U** slots may also be used for trunk PCBs.

3.72 There are four circuits on the NEMU PCB, and each circuit has its own set of straps (Figure 4-18). On a circuit-by-circuit basis, strap the PCB as follows:

1) For Type I/II operation:

CIRCUIT	STRAPS	OPERATION	
		TYPE I	TYPE II
1	TB 101 TB 102 TB 106	1 ~ 2	2 ~ 3
2	TB 201 TB 202 TB 206		
3	TB 301 TB 302 TB 306		
4	TB 401 TB 402 TB 406		

2) For 2-wire/4-wire connection:

CIRCUIT	STRAPS	CONNECTION	
		2-WIRE	4-WIRE
1	TB 103 TB 107	2 ~ 3	1 ~ 2
2	TB 203 TB 207		
3	TB 303 TB 307		
4	TB 403 TB 407		

3) For 600-/900-ohm operation:

CIRCUIT	STRAPS	OPERATION	
		600 ohm	900 ohm
1	TB 104 TB 105	A ~ B	B ~ C
2	TB 204 TB 205		
3	TB 304 TB 305		
4	TB 404 TB 405		

3.73 The NCOU PCBs have Ground-/Loop-start, 600/900-ohm termination, and 2dB pad strap selections that must be made before they are installed (Figure 4-19).

1) Each NCOU circuit is individually strapped for either Ground Start or Loop Start operation. The strapping location and options for each circuit are shown as follows:

CIRCUIT	STRAPS	OPERATION			
		GND ST		LP ST	
		Extend	No Extend	Normal	Reverse
1	TB 104	B ~ C	D ~ E	C ~ D	A ~ B
2	TB 204				
3	TB 304				
4	TB 404				

NOTES:

1. *The GROUND START "EXTEND/NO EXTEND" options refer to "loop extenders" on long trunk loops. If a battery boost is used on the trunk, select EXTEND, otherwise NO EXTEND should be selected.*
2. *The LOOP START "NORMAL/REVERSE" options refer to the system's ability to detect a pre-ring supervision signal in the form of a battery polarity reversal on the CO TIP and RING.*
   - *If NORMAL is selected, the system will not be sensitive to CO trunk polarity.*
   - *If REVERSE is selected, the CO circuit will be "made busy" when the CO reverses polarity prior to ringing on an incoming call.*

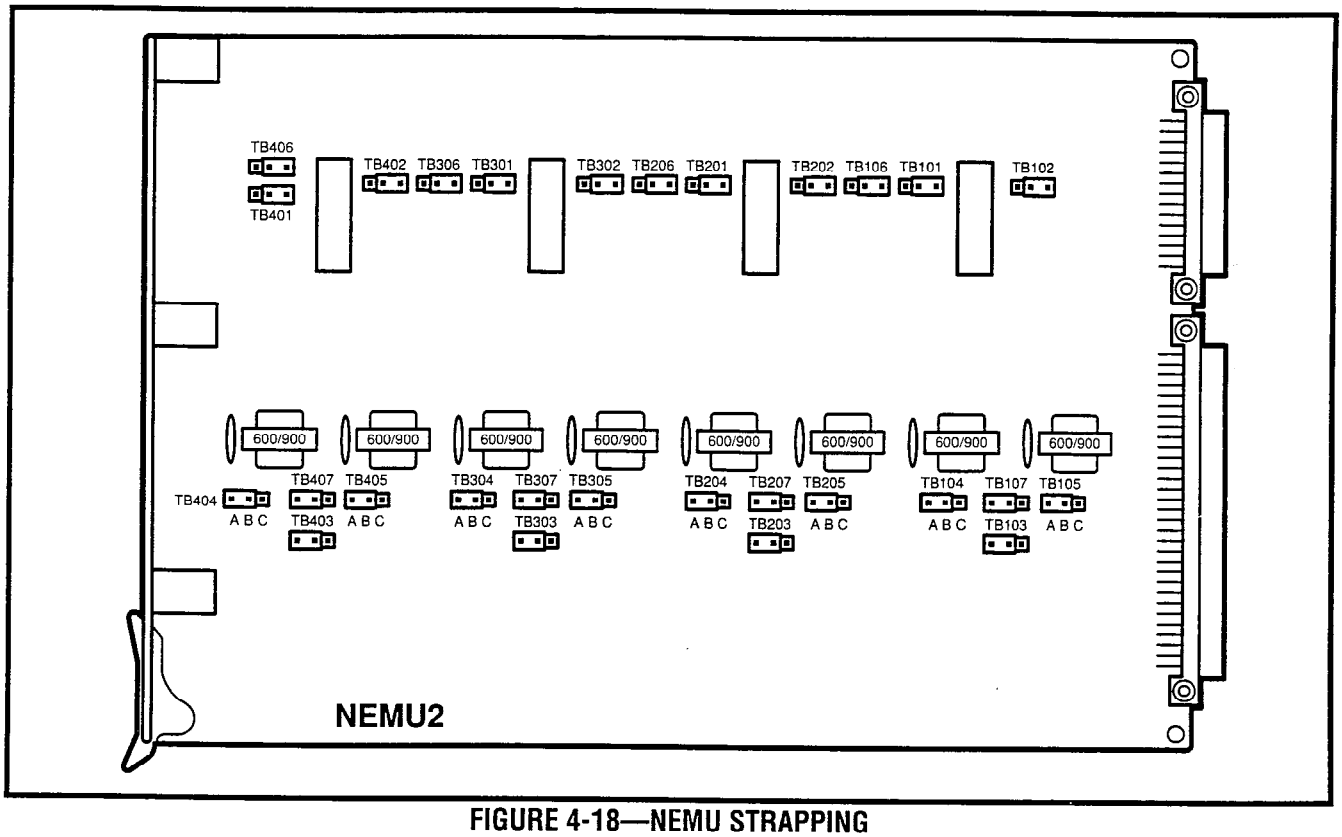

FIGURE 4-18—NEMU STRAPPING

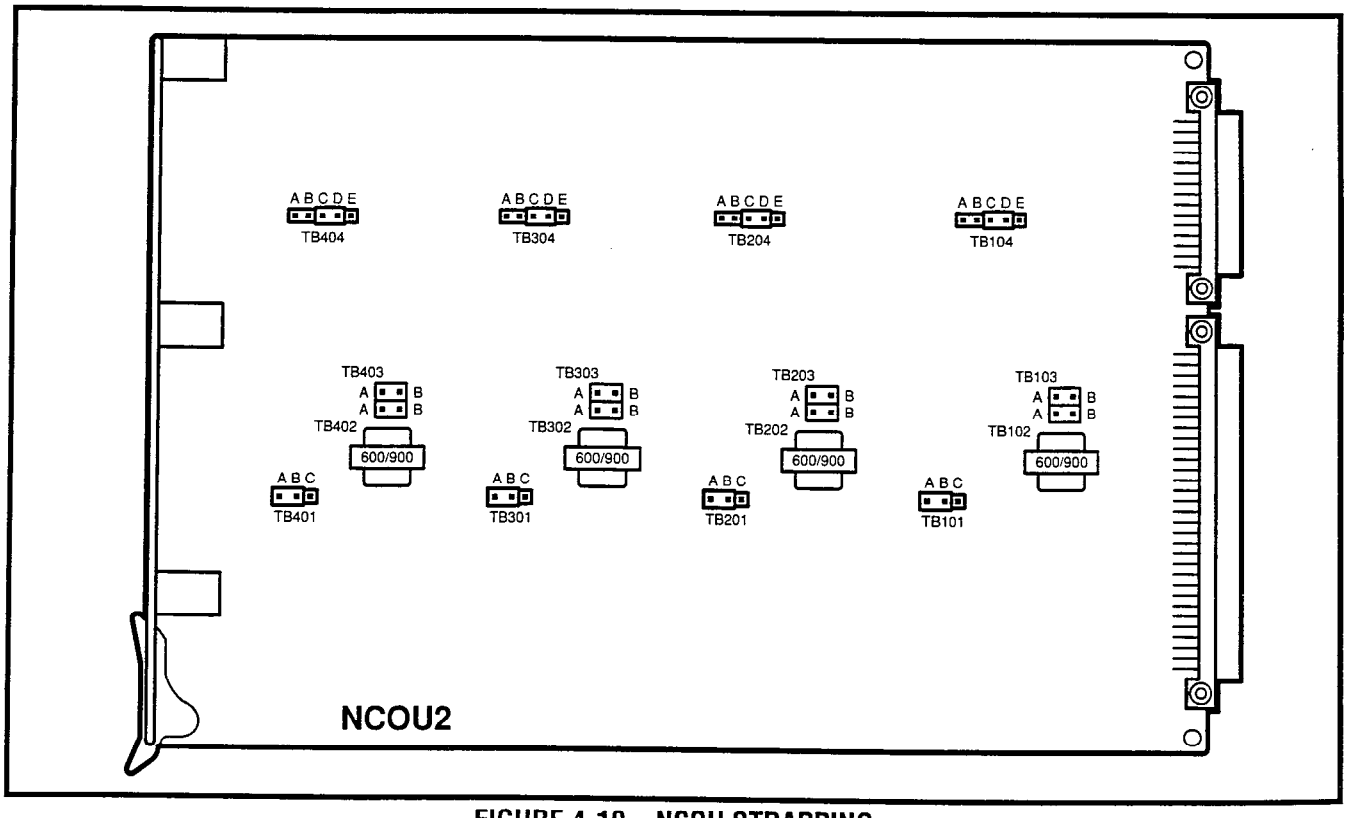

FIGURE 4-19—NCOU STRAPPING

2) Determine the proper impedance for each trunk and then strap its NCOU circuit for either 600- or 900-ohm operation. Install the shorting bar across the center pin and the outer pin labeled either 600 or 900 at each strapping location (Figure 4-19). Each circuit's strapping location is shown as follows:

CIRCUIT	STRAPS	OPERATION	
		600 ohm	900 ohm
1	TB 101	A ~ B	B ~ C
2	TB 201		
3	TB 301		
4	TB 401		

3) In some installations, particularly those near the serving Central Office, noise may be introduced over the CO trunk that will appear as sidetone at the telephone. In such situations, a 2dB pad can be inserted into the line to reduce the sidetone. The following table shows the strapping position for each circuit to either insert or remove the 2dB pad.

CIRCUIT	STRAPS	OPERATION	
		OPEN	2 dB PAD
1	TB 102	A ~ B	
	TB 103		A ~ B
2	TB 202	A ~ B	
	TB 203		A ~ B
3	TB 302	A ~ B	
	TB 303		A ~ B
4	TB 402	A ~ B	
	TB 403		A ~ B

3.74 Three separate strappings must be made for each of the four circuits on the NLSU PCB (Figure 4-20).

1) Determine the proper impedance for the trunk line to be used, and then set the 600-ohm/900-ohm loop termination for each circuit as follows:

CIRCUIT	STRAPS	OPERATION	
		600 ohm	900 ohm
1	TB 101	A ~ B	B ~ C
2	TB 201		
3	TB 301		
4	TB 401		

2) When the CO distance exceeds 2,000-ohm loop resistance, Battery-to-Ground Dial Pulsing should be used. For a distance of less than 2,000-ohm loop resistance, use Loop Dial Pulsing. Strap each circuit as follows:

CIRCUIT	STRAPS	OPERATION	
		BAT-GND DP	LOOP DP
1	TB 103	A ~ B	B ~ C
2	TB 203		
3	TB 303	E ~ F	D ~ E
4	TB 403		

3) Each NLSU circuit must be adjusted for CO trunk loop resistance to ensure proper detection of incoming digits. Each circuit adjustment is made by strapping as follows:

CIRCUIT	STRAPS	OPERATION		
		LEAST	MID	MOST
1	TB 102	c ~ d	b ~ c	a ~ b
2	TB 202			
3	TB 302			
4	TB 402			

NOTE:
This strapping should be made only after the appropriate CO distance strapping (step 2) has been made. The CO trunk loop resistance values are arbitrary and are used as an initial strapping guide. If the incoming digits are not being detected properly, move the strap to the next most sensitive position and test again for proper operation.

3.80 NDTU

3.81 A maximum of two NDTU PCBs (Figure 4-21) may be installed. The system must be equipped with an NTWU-3 to ensure proper operation of the NDTU. The NDTU is connected to the telco through a customer-supplied Channel Service Unit (CSU). A separate CSU is required for each NDTU. Each NDTU has 11 DIP switches and 8 strapping options, which must be verified before installation.

NOTE:
The factory-default switch settings and strapping options are indicated by an asterisk (*).

1) Select the desired operating mode using mode selection switch **S1** (4-element DIP switch)

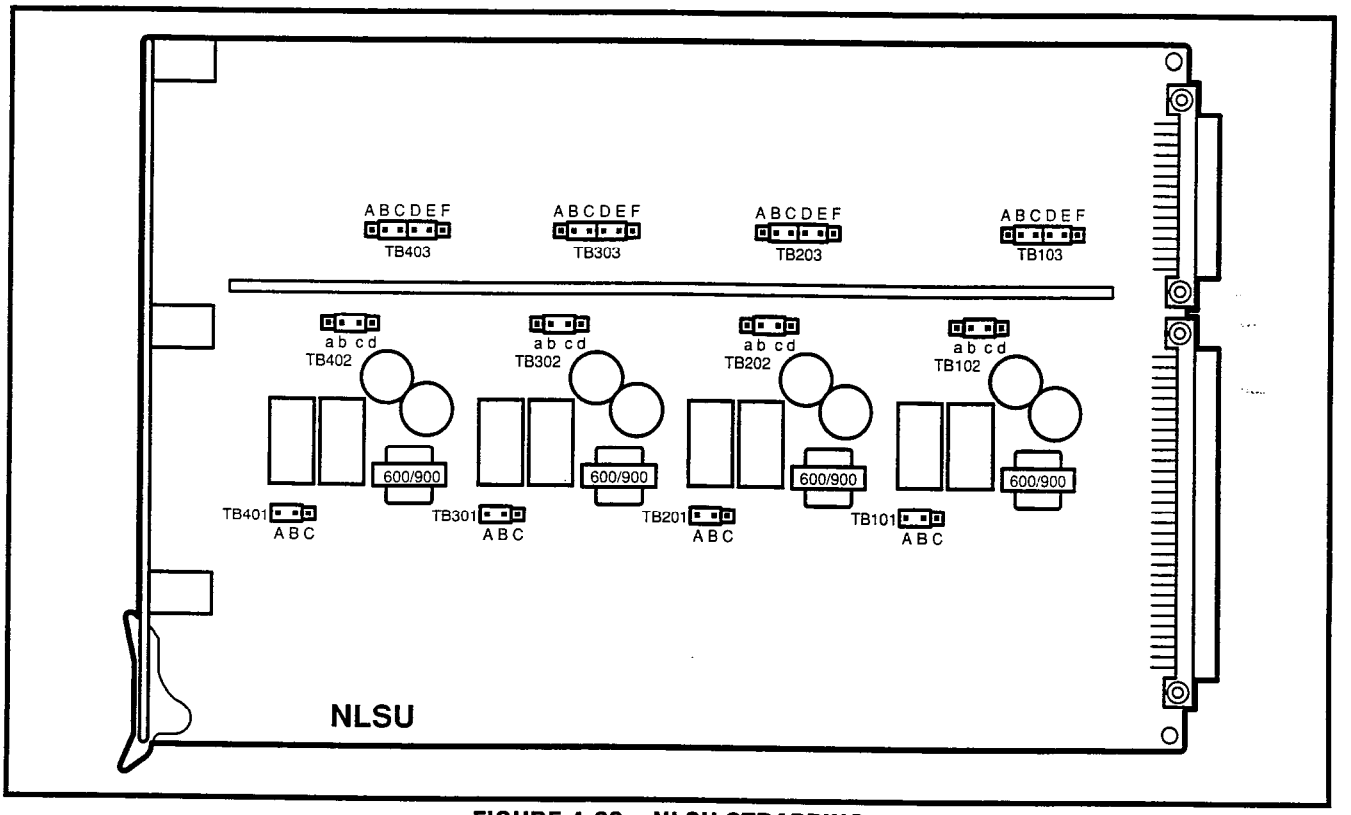

FIGURE 4-20—NLSU STRAPPING

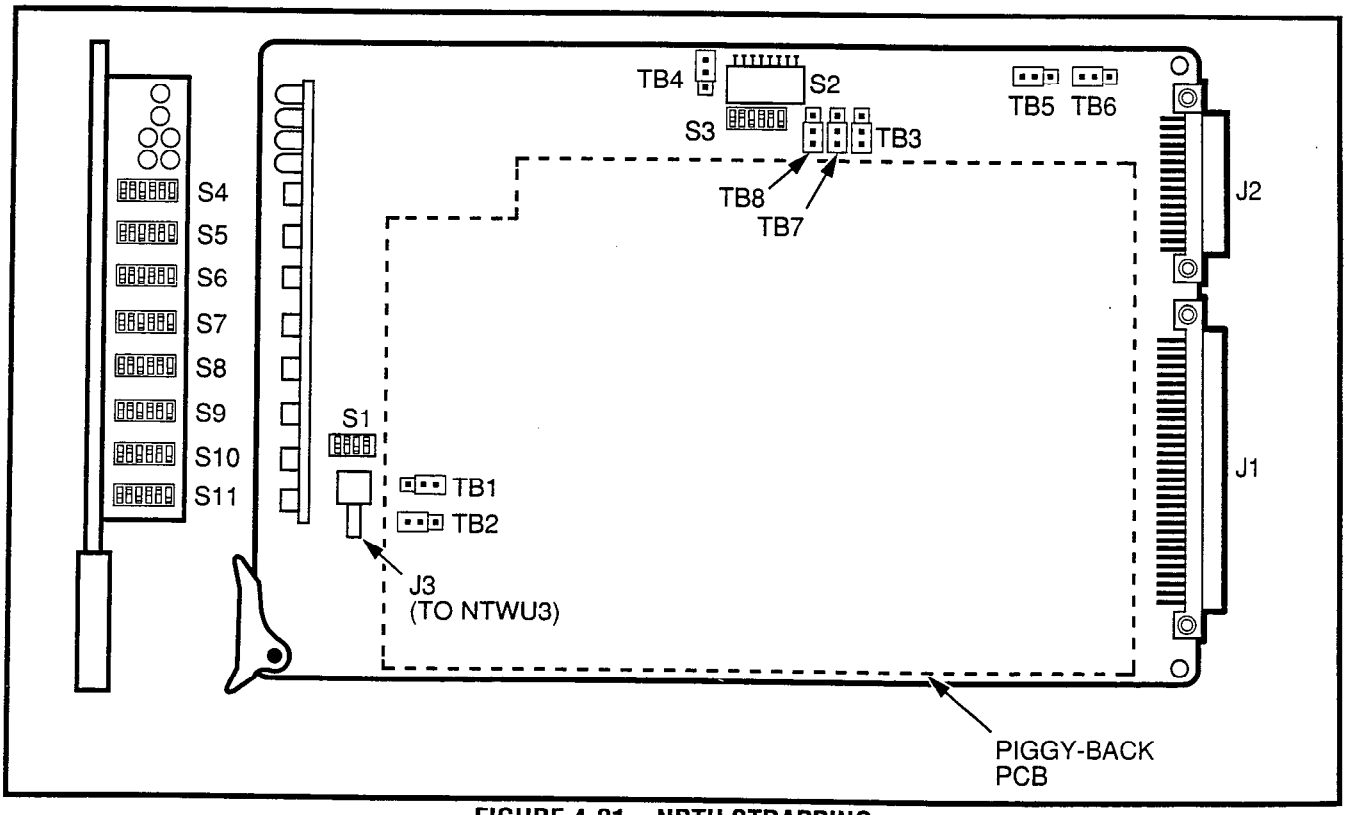

FIGURE 4-21—NDTU STRAPPING

as follows:

ELEMENT	POSITION	MODE
s1	ON *	12 Multi (Robbed bit signaling)
s1	OFF	24 Multi (Common channel signaling)
s2	ON	Zero Code Suppression (ZCS)
s2	OFF*	Binary Eight Zero Suppression (B8ZS)
s3	ON	DMI Bit Oriented Signaling format (Note 1)
s3	OFF*	Normal Operation
s4	Not used	

NOTE:
Digital Multiplexed Interface BOS.

2) Determine the proper transmit equalizer setting; either short (0 ~ 150 feet), medium (150 ~ 450 feet), or long (450 ~ 655 feet); then select the appropriate setting using transmit equalizer setting switch **S2** (8-element DIP switch) as follows:

ELEMENT	SETTING		
	SHORT*	MEDIUM	LONG
s1	ON	OFF	OFF
s2	OFF	ON	OFF
s3	OFF	OFF	ON
s4	OFF	ON	OFF
s5	OFF	OFF	ON
s6	OFF	ON	OFF
s7	OFF	OFF	ON
s8	Not used		

3) The NDTU is installed in the T00 slot. A second NDTU may be installed in the T08 slot. Each NDTU provides a maximum of 24 channels, divided into groups consisting of four channels each. The first group would fill trunk slot T00, the second T01 with the remaining four groups occupying trunk slots T02 ~ T05 for a total of six groups. For example, if eight channels are active on the NDTU then slots T00 and T01 are active i.e., no PCB may be installed in slot T01. However, PCBs may be installed in slots T02 ~ T05. Enable the appropriate channels using slot enable/disable switch **S3** (6-element DIP switch) as follows:

ELEMENT	POSITION	CHANNELS	SLOT POSITION	
			MAIN	EXPANSION
s1	ON*	1 ~ 4	T00	T08
s1	OFF	1 ~ 4	T00	T08
s2	ON*	5 ~ 8	T01	T09
s2	OFF	5 ~ 8	T01	T09
s3	ON*	9 ~ 12	T02	T10
s3	OFF	9 ~ 12	T02	T10
s4	ON*	13 ~ 16	T03	T11
s4	OFF	13 ~ 16	T03	T11
s5	ON*	17 ~ 20	T04	T12
s5	OFF	17 ~ 20	T04	T12
s6	ON*	21 ~ 24	T05	T13
s6	OFF	21 ~ 24	T05	T13

NOTE:
*Set switch element to **ON** to enable associated digital trunk channels; **OFF** to disable channels.*

4) Signaling modes are individually selectable for each active channel. Determine the appropriate signaling mode for each channel; either CO (Loop Start) mode, CO (Ground Start) mode, DID (2-wire loop signaling), or TIE trunk (Type II 4-wire E&M) mode; then assign the selected signaling modes using signaling type selection switches **S4 ~ S11** (6-element DIP switches) see Loop/Ground Start Mode.

5) Configure the NDTU for the appropriate ROM type, either 64 Kbit or 256 Kbit, using the strappings shown below.

STRAPS	ROM TYPE	
	64K BIT	256K BIT
TB1 and TB2	1 ~ 2*	2 ~ 3

6) When configured for normal operation, the NDTU is in the slave mode, and the central office serves as the master clock. For CO testing purposes, the NDTU may be configured as the master. Configure the NDTU for the appropriate operating mode using the strapping options shown below.

STRAPS	OPERATING MODE		LOOPBACK OPTION	
	SLAVE	MASTER	MASTER	SLAVE
TB3 and TB4	1 ~ 2*	2 ~ 3		
TB5 and TB6			1 ~ 2	2 ~ 3*

Loop/Ground Start Mode

CHANNEL	SWITCH	ELEMENT	MODE			
			CO (Loop)	CO (Ground)	DID	TIE
CH1	S4	s1	OFF	ON	ON	OFF
		s2	OFF	ON	OFF	ON
CH2	S4	s3	OFF	ON	ON	OFF
		s4	OFF	ON	OFF	ON
CH3	S4	s5	OFF	ON	ON	OFF
		s6	OFF	ON	OFF	ON
CH4	S5	s1	OFF	ON	ON	OFF
		s2	OFF	ON	OFF	ON
CH5	S5	s3	OFF	ON	ON	OFF
		s4	OFF	ON	OFF	ON
CH6	S5	s5	OFF	ON	ON	OFF
		s6	OFF	ON	OFF	ON
CH7	S6	s1	OFF	ON	ON	OFF
		s2	OFF	ON	OFF	ON
CH8	S6	s3	OFF	ON	ON	OFF
		s4	OFF	ON	OFF	ON
CH9	S6	s5	OFF	ON	ON	OFF
		s6	OFF	ON	OFF	ON
CH10	S7	s1	OFF	ON	ON	OFF
		s2	OFF	ON	OFF	ON
CH11	S7	s3	OFF	ON	ON	OFF
		s4	OFF	ON	OFF	ON
CH12	S7	s5	OFF	ON	ON	OFF
		s6	OFF	ON	OFF	ON
CH13	S8	s1	OFF	ON	ON	OFF
		s2	OFF	ON	OFF	ON
CH14	S8	s3	OFF	ON	ON	OFF
		s4	OFF	ON	OFF	ON
CH15	S8	s5	OFF	ON	ON	OFF
		s6	OFF	ON	OFF	ON
CH16	S9	s1	OFF	ON	ON	OFF
		s2	OFF	ON	OFF	ON
CH17	S9	s3	OFF	ON	ON	OFF
		s4	OFF	ON	OFF	ON
CH18	S9	s5	OFF	ON	ON	OFF
		s6	OFF	ON	OFF	ON
CH19	S10	s1	OFF	ON	ON	OFF
		s2	OFF	ON	OFF	ON
CH20	S10	s3	OFF	ON	ON	OFF
		s4	OFF	ON	OFF	ON
CH21	S10	s5	OFF	ON	ON	OFF
		s6	OFF	ON	OFF	ON
CH22	S11	s1	OFF	ON	ON	OFF
		s2	OFF	ON	OFF	ON
CH23	S11	s3	OFF	ON	ON	OFF
		s4	OFF	ON	OFF	ON
CH24	S11	s5	OFF	ON	ON	OFF
		s6	OFF	ON	OFF	ON

7) In some installations, particularly those near the serving Central Office, noise may be introduced over the CO trunk that will appear as sidetone at the telephone. In such situations, a 2dB pad can be inserted into the line, for either incoming voice or outgoing voice, to reduce the sidetone. Strapping options for the 2dB pad are shown below.

STRAPS	OPERATION			
	INCOMING		OUTGOING	
	OPEN	2dB PAD	OPEN	2dB PAN
TB7	1 ~ 2*	2 ~ 3		
TB8			1 ~ 2*	2 ~ 3

8) Install the NDTU in the T00 slot in the main cabinet. If applicable, install a second NDTU in the T08 slot. Connect the NDTU to the CSU using the Toshiba-supplied cable.

9) The NDTU contains an on-board 12.288 MHz clock used to synchronize the NDTU with the NTWU-3. Connect a coaxial clock cable from NDTU connector **J3** to NTWU connector **J2**.

3.90 NMDU and NDCU

3.91 The NMDU (Figure 4-22) must be strapped for operation with either a one-pair or two-pair modem connection. The two strapping positions for each modem are shown below.

CIRCUIT	STRAPS	OPERATION	
		One-pair	Two-pair
1	TB 501 TB 502	B ~ C	A ~ B
2	TB 601 TB 602		
3	TB 701 TB 702		
4	TB 801 TB 802		

3.92 To change the strap positions on TB 801/802 it is necessary to lift the small piggy-back PCB off the NMDU. Replace the PCB once the straps have been changed.

3.93 If any of the first four NMDU circuits are not used for Modem Pooling, the corresponding DDIU

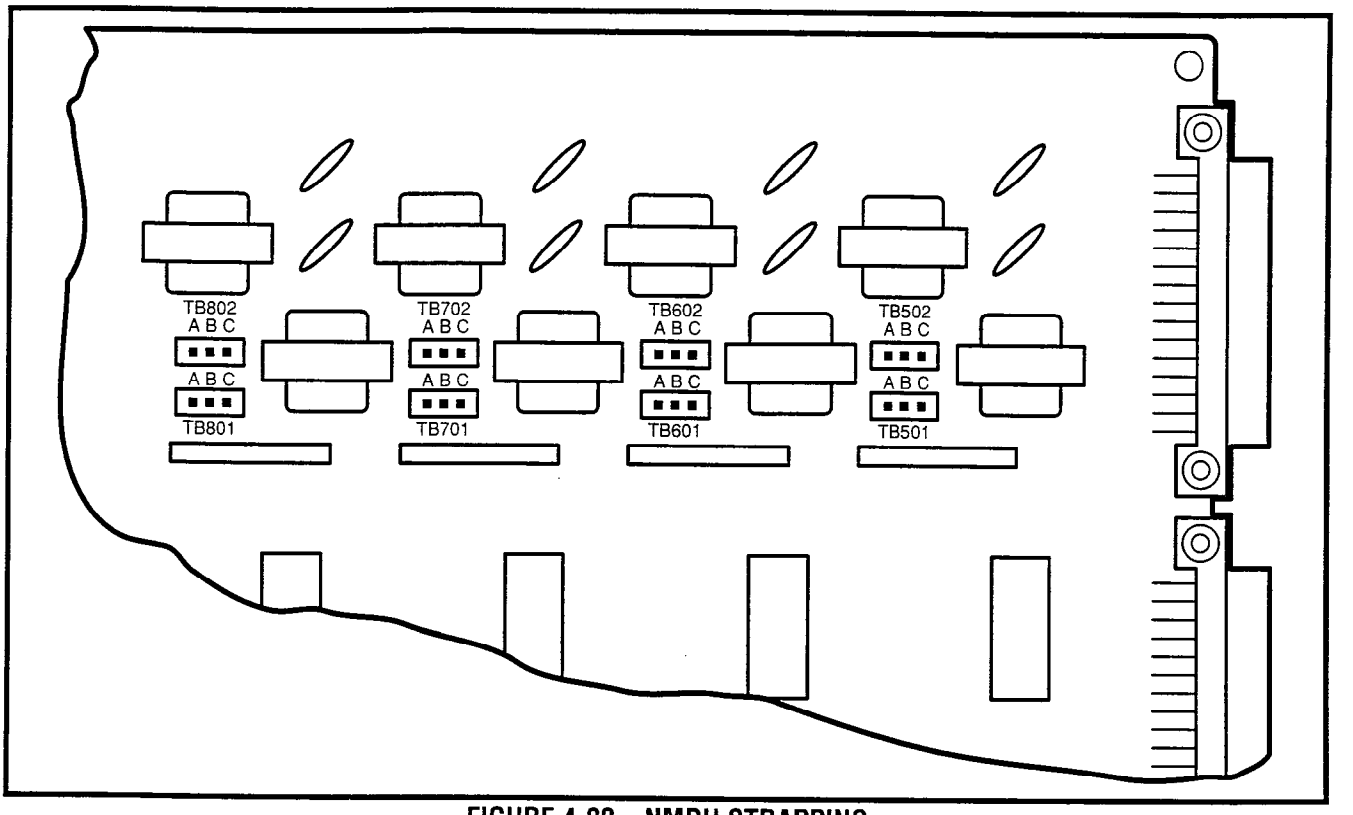

FIGURE 4-22—NMDU STRAPPING

circuit may be used for a DDIU (-MA or -MAT) connection. Use the **DDIU Program** in Section **200-255-300**, *Programming*, to assign the desired port (1 ~ 4) on the NMDU.

3.94 The NDCU PCB is installed at a rate of one PCB for each group of eight DDIUs. There are no strapping options on this PCB.

NOTE:
The NMDU and NDCU PCBs are not used with the PDIUs. PDIUs use the NDKU PCB.

4. CABLE CONNECTIONS

4.00 All connections to the system are made on the rear of the basic and expansion cabinets and on the Power Failure Transfer Unit. Cables with standard male 25-pair amphenol-type connectors are used for everything except the TTY, SMDR and MODEM connectors (which require male RS-232C DB25-pin connectors).

4.01 Detailed connection information for each cable is shown in Chapter 5.

IMPORTANT!
Note the station, trunk, DSS console, and DDIU/PDIU connections are identified by the PCB location and circuit number on that PCB. These numbers combine to form a Port Number and are used in the programming section as the station, DSS console, or trunk circuit's identifier when directory numbers and features are assigned.

4.02 Determine the station and DSS console (or data) port numbers as follows (DSS consoles assigned to L or U slots use circuits 1, 3, 5, & 7):

PCB LOCATION	PCB CIRCUIT	PORT NO.
P_e L00 ~ L26 or C00	1 ~ 8	
P_{ex} U00 ~ U31	1 ~ 8	
Example: L01	2	L012

4.03 Determine trunk port numbers as follows:

PCB LOCATION	PCB CIRCUIT	PORT NO.
P_e T00 ~ T15	1 ~ 4	
P_{ex} T00 ~ T15 U00 ~ U31	1 ~ 4	
Example: T02	3	T023

5. ELECTRONIC TELEPHONE STATION EQUIPMENT INSTALLATION

5.00 Electronic Telephone Connections

5.01 See the **DEKT Program** in Section **200-255-300**, *Programming*, for instructions on programming electronic telephones. The system must be told which type of electronic telephone (10- or 20-button, LCD) and what button assignment is required.

5.02 Electronic telephones are connected to the MDF via standard twisted-pair jacketed telephone cable. (Two-pair wiring is required; however, 3-pair wiring is strongly recommended to permit future upgrades, such as data, etc.) To accommodate the electronic telephone line cord, terminate the cable in a modular station connector block (RJ25) at the station location. The standard modular electronic telephone cord length is 7 feet (the maximum allowed length is 25 feet).

5.03 The overall length of the electronic telephone cable run from equipment cabinet to phone must not exceed 1,000 feet (305 M), 24 AWG cable.

IMPORTANT!
When installing the electronic telephone cable, do not run parallel to and within 3 feet of an AC power line. Such power lines should be crossed at right angles (90°) only.

5.04 Electronic telephone connection details are shown in Figure 4-23.

5.10 Electronic Telephone Wall Mounting

5.11 All electronic telephones are wall-mounted in the same manner, and they may be mounted on a wall or any other flat, vertical surface to which the base can be secured. When selecting the mounting site, consider the electronic telephone's weight and the additional stresses to which the mounting will be subjected.

5.12 Loosen the four captive screws securing the electronic telephone's base, and remove the base (Figure 4-24).

5.13 Using a cutter, remove the handset hanger from the base. Insert the handset hanger in the slot provided on the front of the telephone (Figure 4-25). The hanger fits in the notch on the handset.

5.14 Rotate the mounting base 180° and secure to the telephone with the four captive screws (Figure 4-26).

5.15 Connect the electronic telephone to the wall modular connector with a short cord (approximately 3 inch length). Route the cord into the hollow portion of the base, then mount the electronic telephone on the wall mounting connector. Test each electronic telephone using the **TTRM Program**, Section **200-255-300**, *Programming*.

5.20 Off-hook Call Announce

5.21 The Off-hook Call Announce (OCA) feature enables an electronic telephone to originate and receive voice announcement when the station's handset is off-hook. Standard telephones can originate off-hook call announces, however, it cannot receive them. A station user is allowed or denied the ability to originate the Off-hook Call Announce feature in the **DCOS Program**. In order to receive the Off-hook Call Announce feature, PCBs are required to be installed in each affected electronic telephone and the cabinet.

5.22 A PCB called NOCU is required to be installed in the cabinet. Each NOCU provides eight Off-hook Call Announce circuits. This PCB takes up a station slot. Therefore, for each NOCU installed, station capacity is decreased by eight stations.

5.23 HVSU and HVSI PCBs inside a 6500-series electronic telephone allow the electronic telephone to receive the Off-hook Call Announce feature.

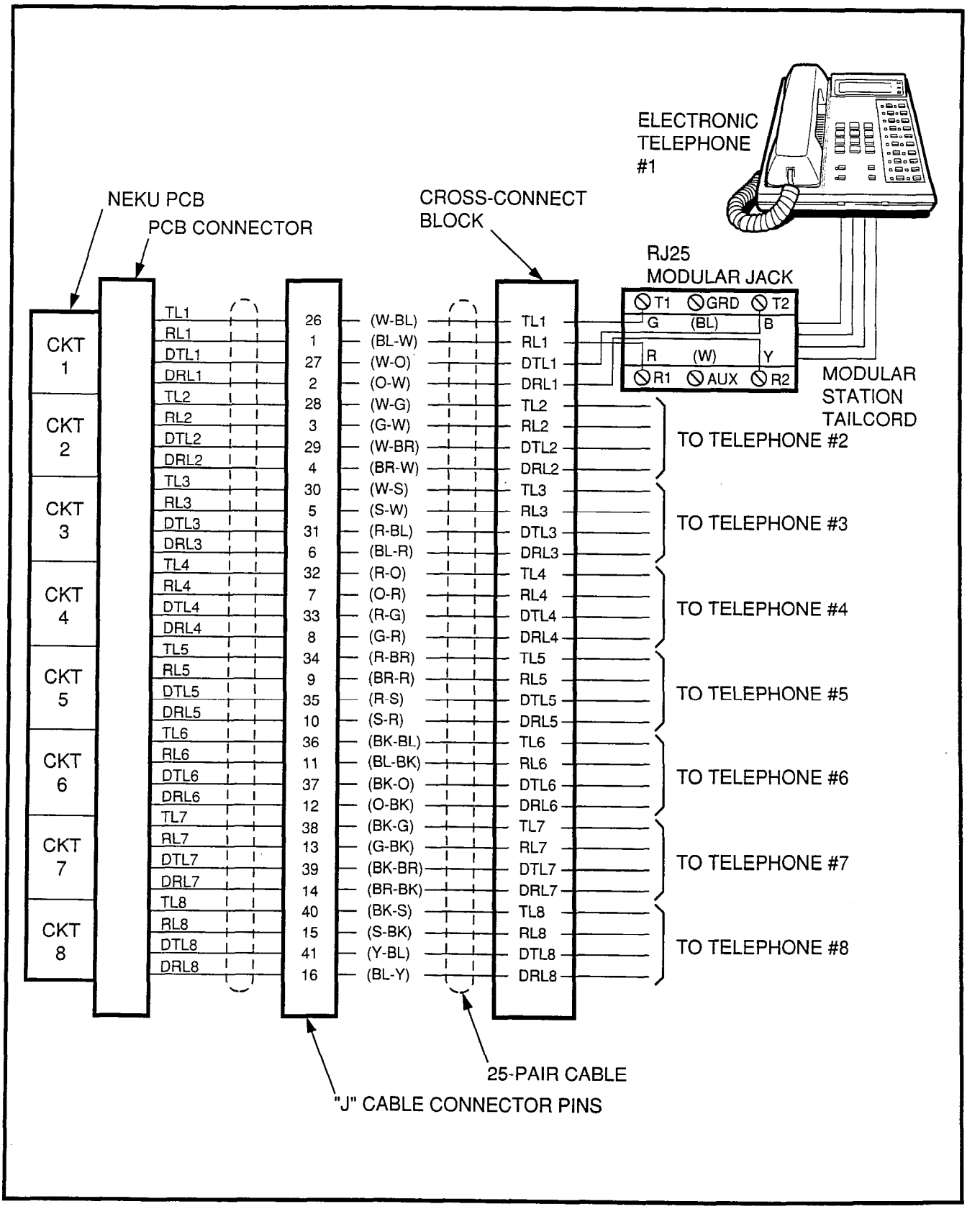

FIGURE 4-23—ELECTRONIC TELEPHONE CONNECTION

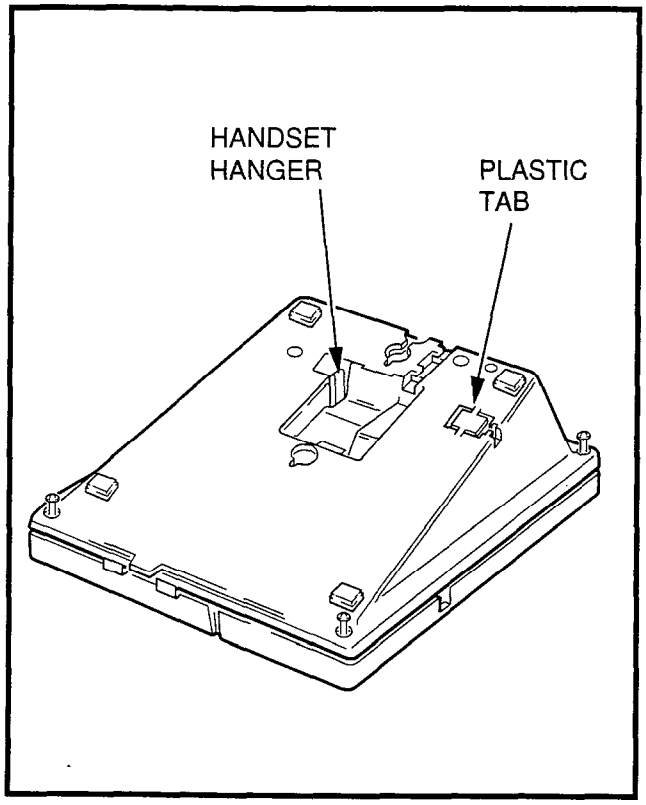

FIGURE 4-24—REMOVAL OF ELECTRONIC TELEPHONE BASE

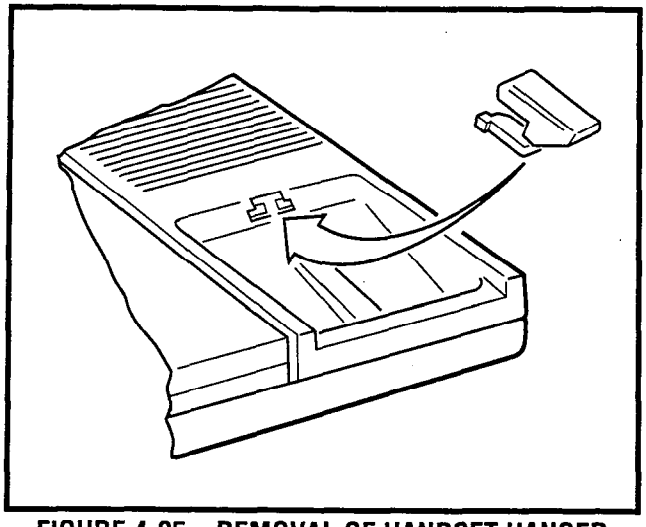

FIGURE 4-25—REMOVAL OF HANDSET HANGER

NOTE:
It is not recommended to equip electronic telephones with both Off-hook Call Announce and the headset option at the same time.

5.24 The installation of the HVSU/HVSI PCBs has to be done in accordance with the following steps:

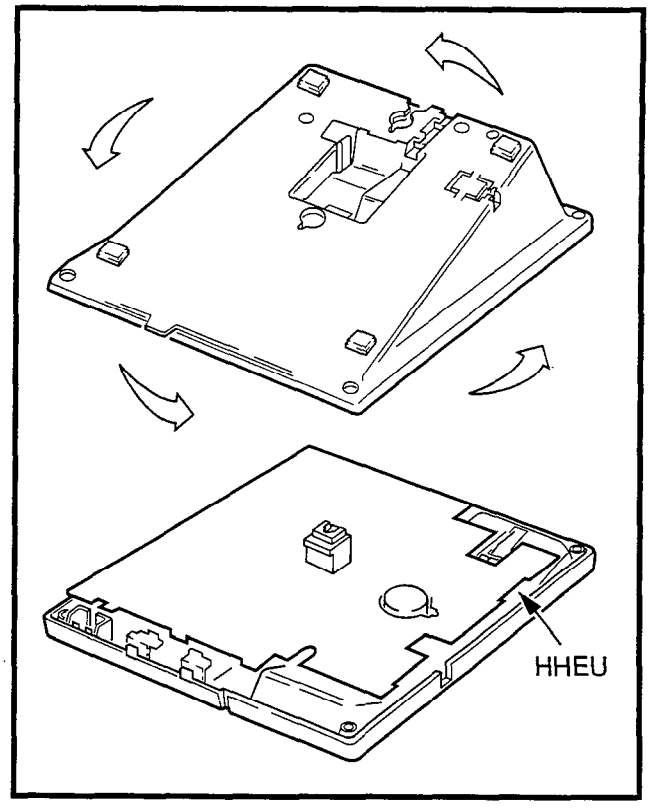

FIGURE 4-26—INSTALLATION OF MOUNTING BASE FOR WALL-MOUNT INSTALLATION

1) Remove the base as described in Paragraph **5.12**.

NOTE:
Exercise care when assembling the HVSU PCB to the HVSI PCB to prevent damage to the connector pins.

2) Align the P5 connector on the HVSI PCB with its receptacle on the HVSU PCB (Figure 4-27). Apply firm, even pressure to the PCBs to ensure that the connectors mate properly (they click when mated properly).

3) Position the HVSU/HVSI assembly on the standoffs inside the base, and secure with the two screws provided.

4) Connect the HVSU/HVSI PCBs to the electronic telephone PCB as shown in Figure 4-28.

5) Reinstall the electronic telephone base and secure it with its four captive screws.

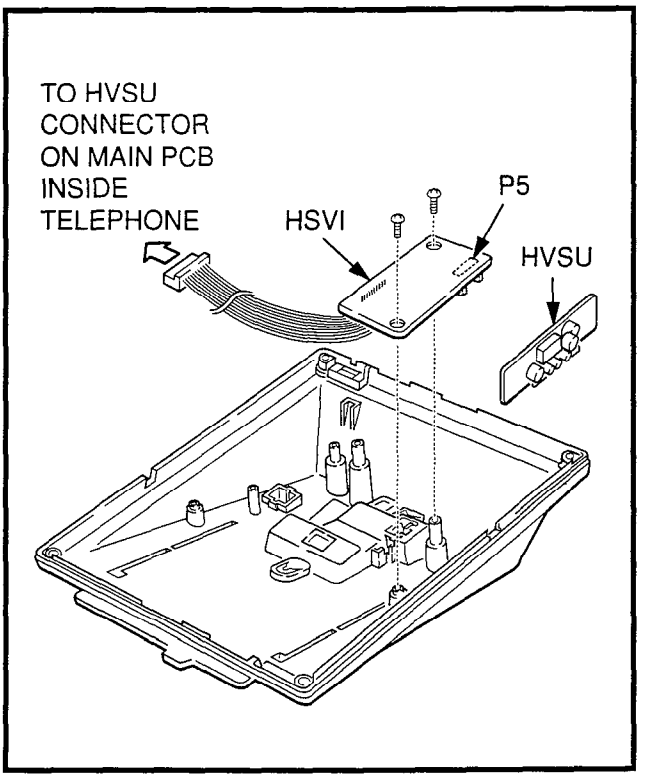

FIGURE 4-27—HVSI/HVSU INSTALLATION

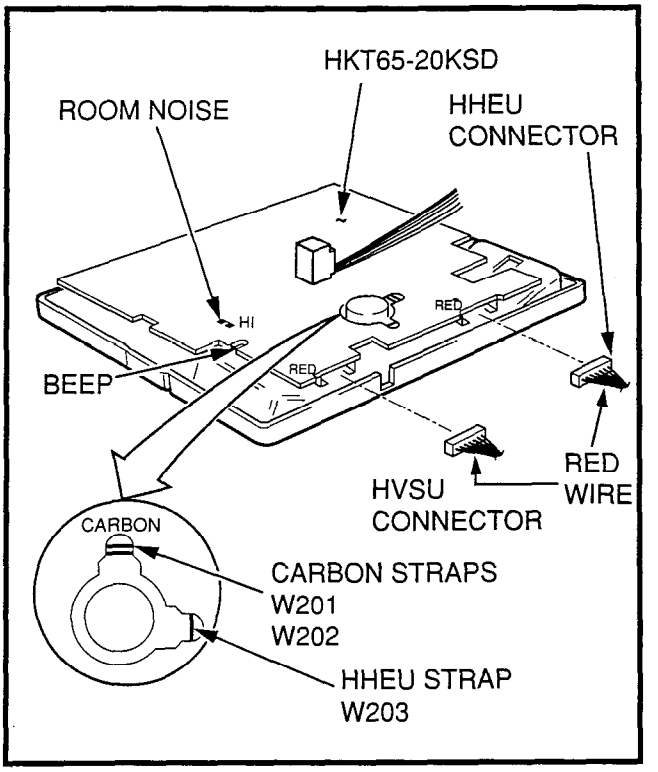

FIGURE 4-28
ELECTRONIC TELEPHONE PCB CONNECTIONS

5.25 Two pairs of the provided 3-pair modular line connector connect the electronic telephone to the DEKT port, and the other pair connects it to the NOCU PCB.

5.26 NOCU connection details are shown in Figure 4-29.

5.30 Carbon Handset Transmitter Installation

5.31 If a customer-supplied carbon-type handset is used with the 6500-series electronic telephone, it is necessary to cut two jumper straps located on the main PCB inside the telephone. Cut the jumpers as follows:

5.32 Loosen the four captive screws securing the electronic telephone's base, and remove the base (Figure 4-24).

5.33 Locate the two carbon straps **W201** and **W202** (Figure 4-30). Cut both straps.

5.34 Cut the **W401** strap for proper LCD functions in **A.05** (and below) software.

5.35 Reinstall the electronic telephone's base and secure using the four captive screws.

5.36 Remove the Toshiba handset and connect the carbon-type handset.

5.40 HHEU Installation

5.41 The HHEU option provides the interface and control for a customer-supplied headset.

5.42 Loosen the four captive screws securing the electronic telephone's mounting base, and remove the base as shown in Figure 4-24.

5.43 Using a screwdriver or other suitable tool, remove the plastic access tab located on the back of the mounting base (Figure 4-31). The HHEU modular connector is accessed through this opening.

5.44 Set **HEADSET/EXT IO** switch **SW601** on the HHEU PCB (Figure 4-32) to the **HEADSET** position.

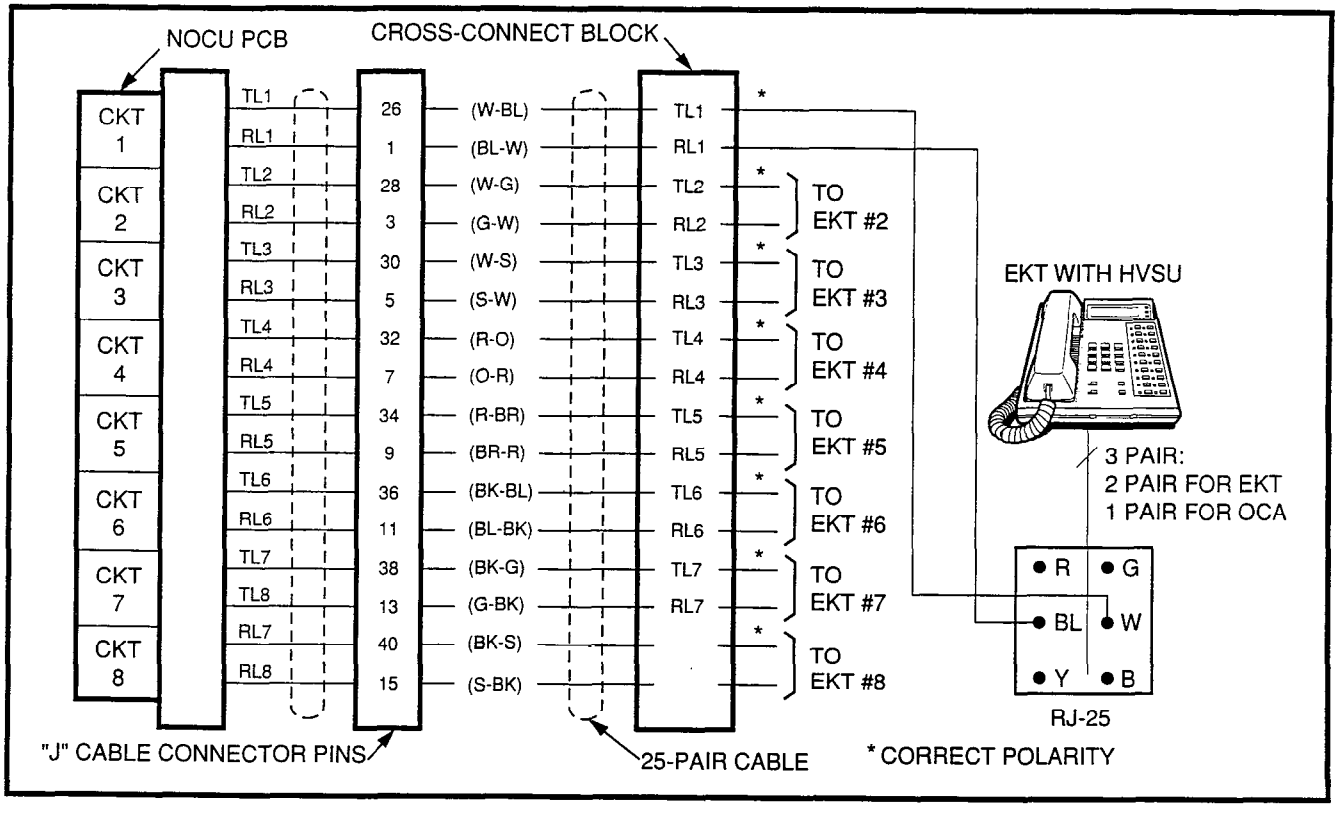

FIGURE 4-29—OFF-HOOK CALL ANNOUNCE CONNECTION (NOCU)

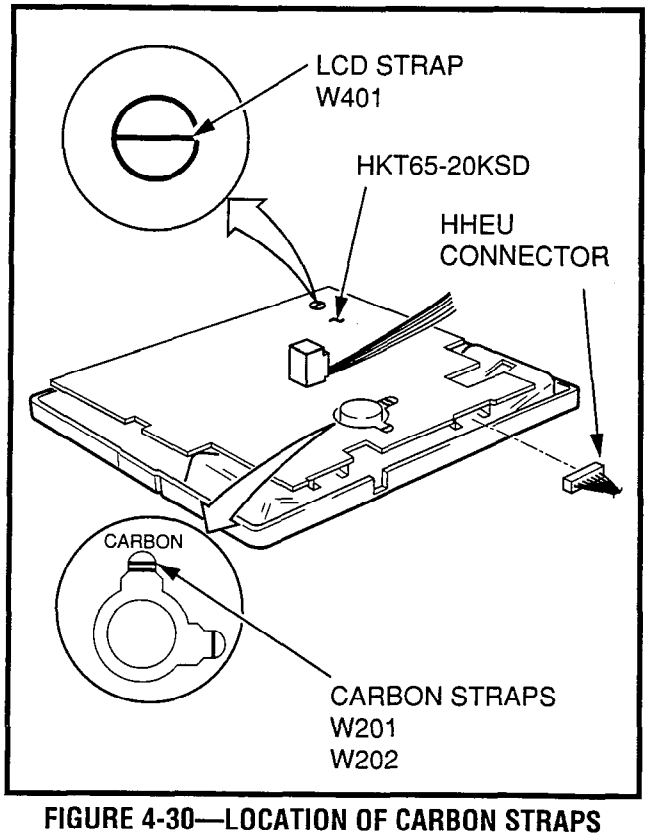

FIGURE 4-30—LOCATION OF CARBON STRAPS

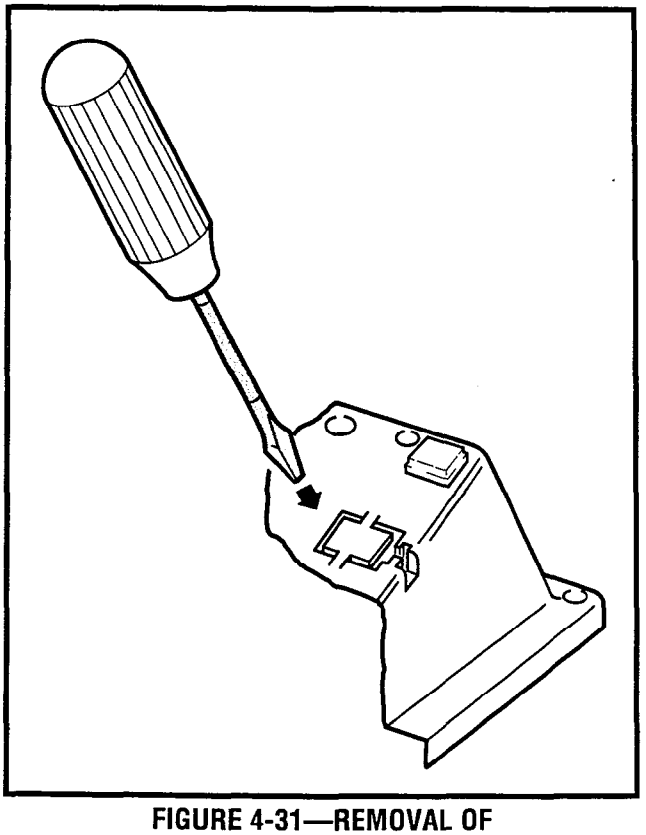

FIGURE 4-31—REMOVAL OF HHEU MODULAR CONNECTOR ACCESS TAB

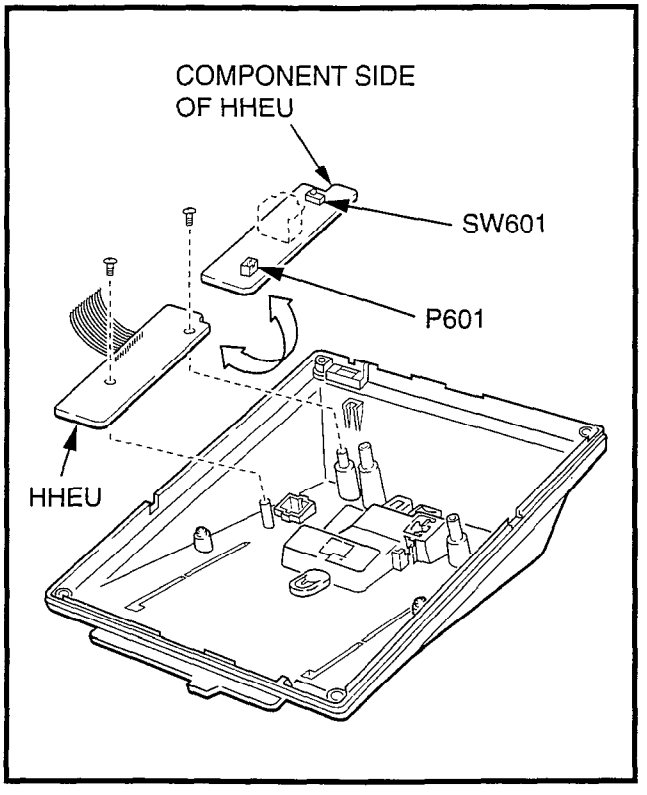

FIGURE 4-32—INSTALLATION OF HHEU UPGRADE OPTION

5.45 Position the HHEU PCB on the standoffs inside the mounting base, and secure in place using the two screws provided.

5.46 Connect the HHEU PCB to the electronic telephone PCB (Figure 4-30).

5.47 Connect the headset modular cord through the access hole created in Paragraph **5.43** of this procedure.

5.48 Reinstall the electronic telephone's base and secure in place using the four captive screws.

5.50 Attendant Console Connection

5.51 The attendant console is connected to the MDF via an industry-standard 25-pair cable equipped with a female amphenol-type connector at the console location.

5.52 Connection details for the attendant console(s) are shown in Figures 4-33 and 4-34.

5.53 Each attendant console requires a port on an

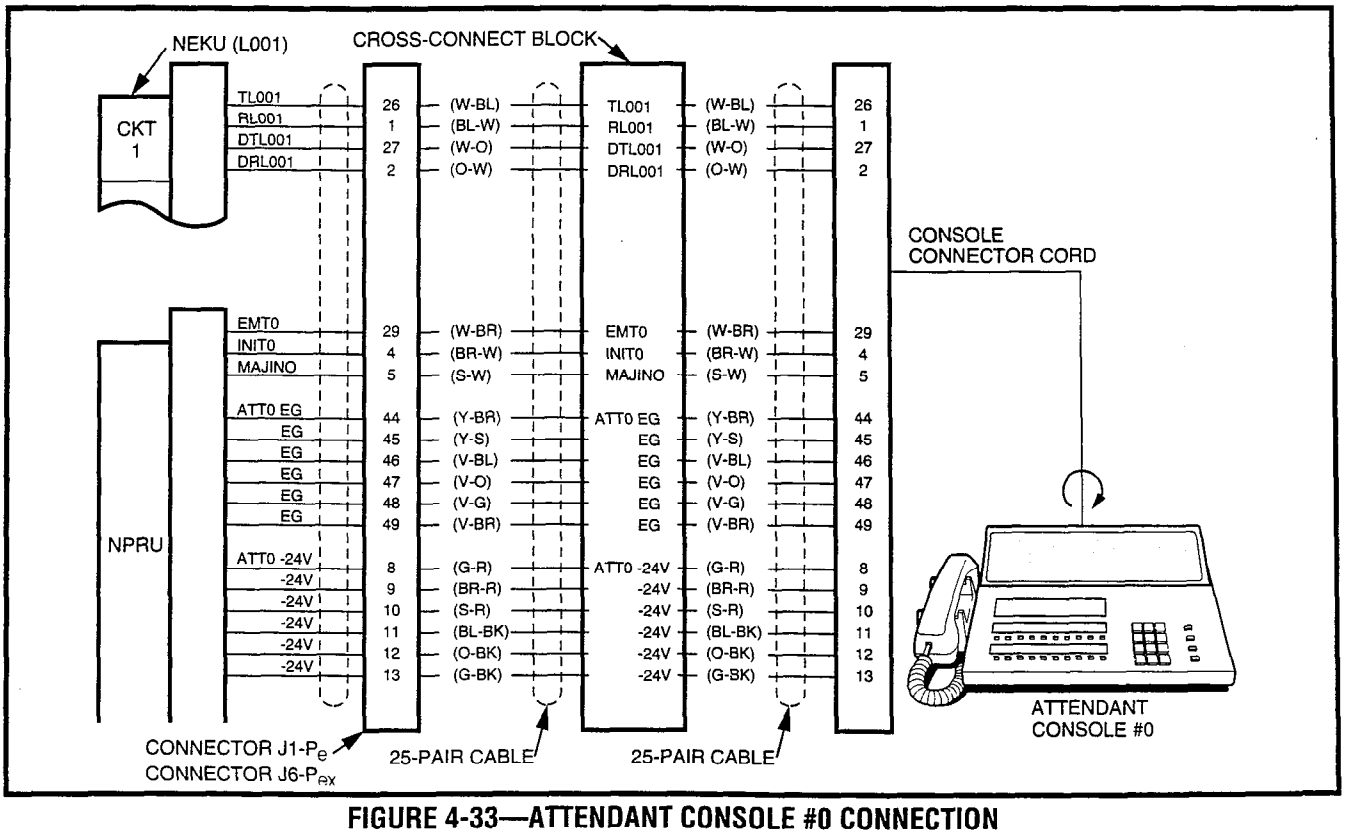

FIGURE 4-33—ATTENDANT CONSOLE #0 CONNECTION

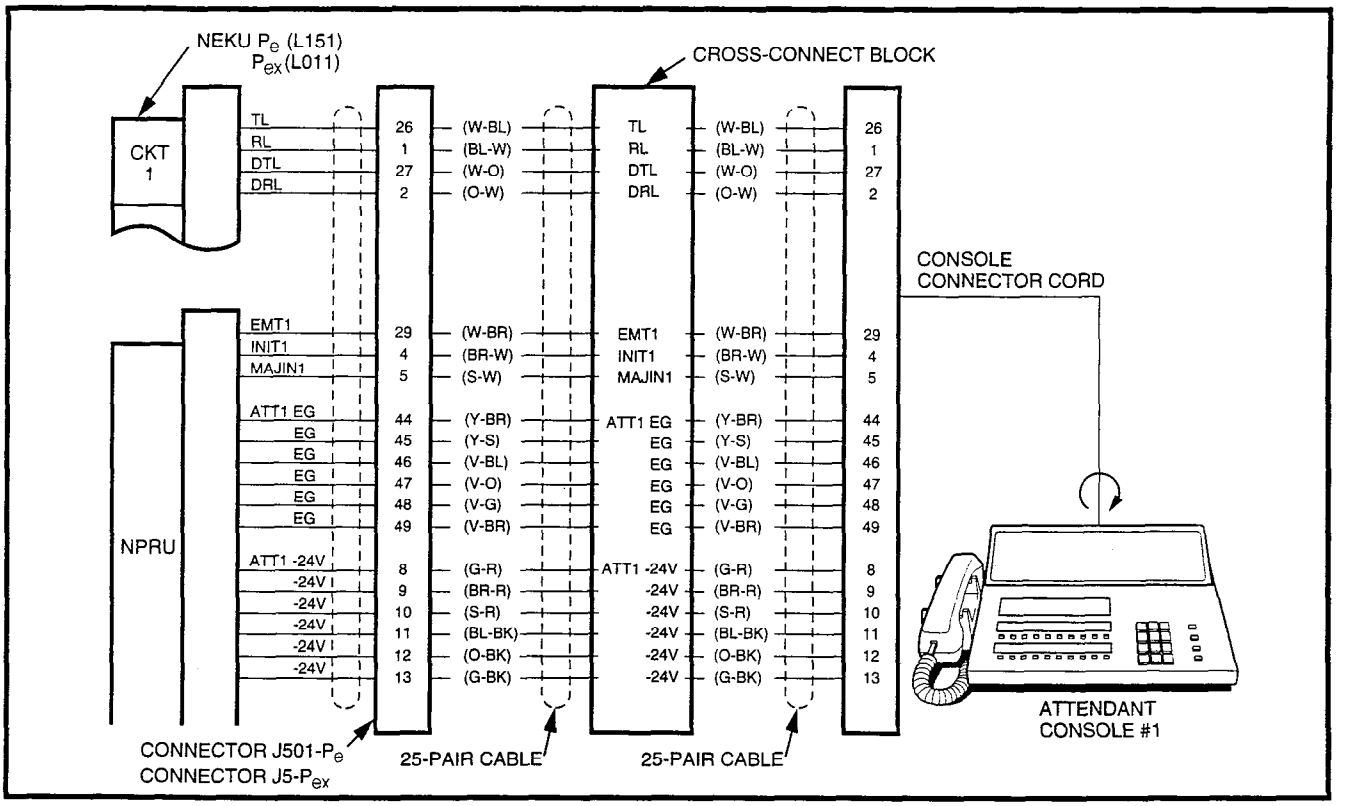

FIGURE 4-34—ATTENDANT CONSOLE #1 CONNECTION

NEKU PCB to provide a speech path. The NEKUs must be installed as follows:

PERCEPTION$_e$
Att#0-PCB position **L00** Circuit **#1**
Att#1-PCB position **L15** Circuit **#1**

PERCEPTION$_{ex}$
Att#0-PCB position **L00** Circuit **#1**
Att#1-PCB position **L01** Circuit **#1**

NOTE:
***DO NOT** cross connect an electronic telephone with either of these ports if the associated attendant console is installed.*

5.60 DSS Console Connections

5.61 See the **DSS Program** in Section **200-255-300**, *Programming*, to input information concerning the electronic DSS consoles.

5.62 The DSS console must be positioned adjacent to an electronic telephone (preferably an LCD model). DSS consoles use 2-pair wiring and are connected to the MDF via standard twisted-pair telephone cables. The console connection is made using only the data pair. An RJ25 modular connector should be attached to the instrument-end of the telephone cable to permit connection to the DSS console.

5.63 The overall length of the DSS console cable run from the equipment cabinet must not exceed 500 feet (152.5 M), 24 AWG cable.

IMPORTANT!
When installing the DSS console cable, do not run parallel to and within 3' of an AC power line. Such power lines should be crossed at right angles (90°) only.

5.64 DSS console(s) connection details are shown in Figures 4-35 and 4-36, PERCEPTION$_e$ and $_{ex}$, respectively.

5.70 Digital Data Interface Unit Connections (DDIU)

5.71 See the **DDIU Program** in Section **200-255-300**, *Programming*, to input information concerning

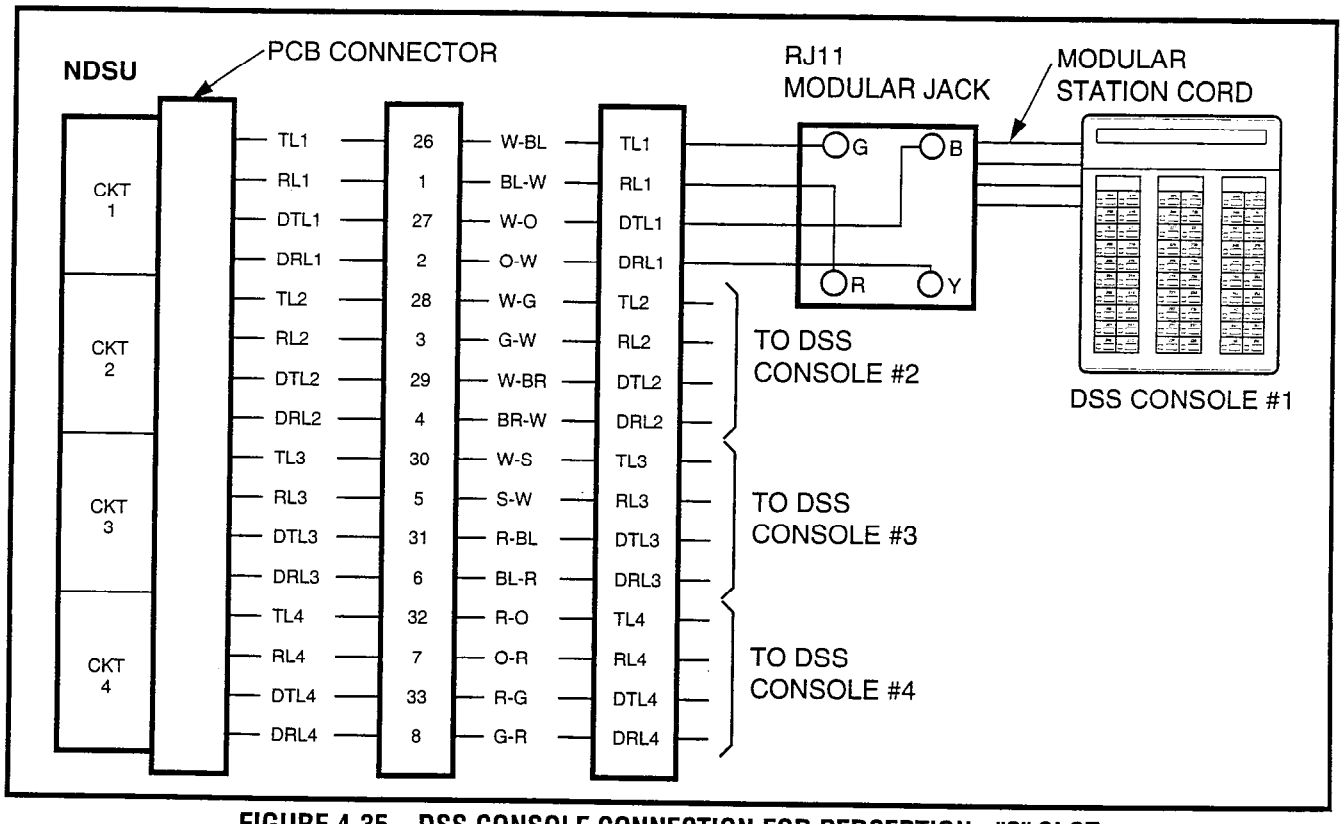

FIGURE 4-35—DSS CONSOLE CONNECTION FOR PERCEPTION$_e$ "C" SLOT

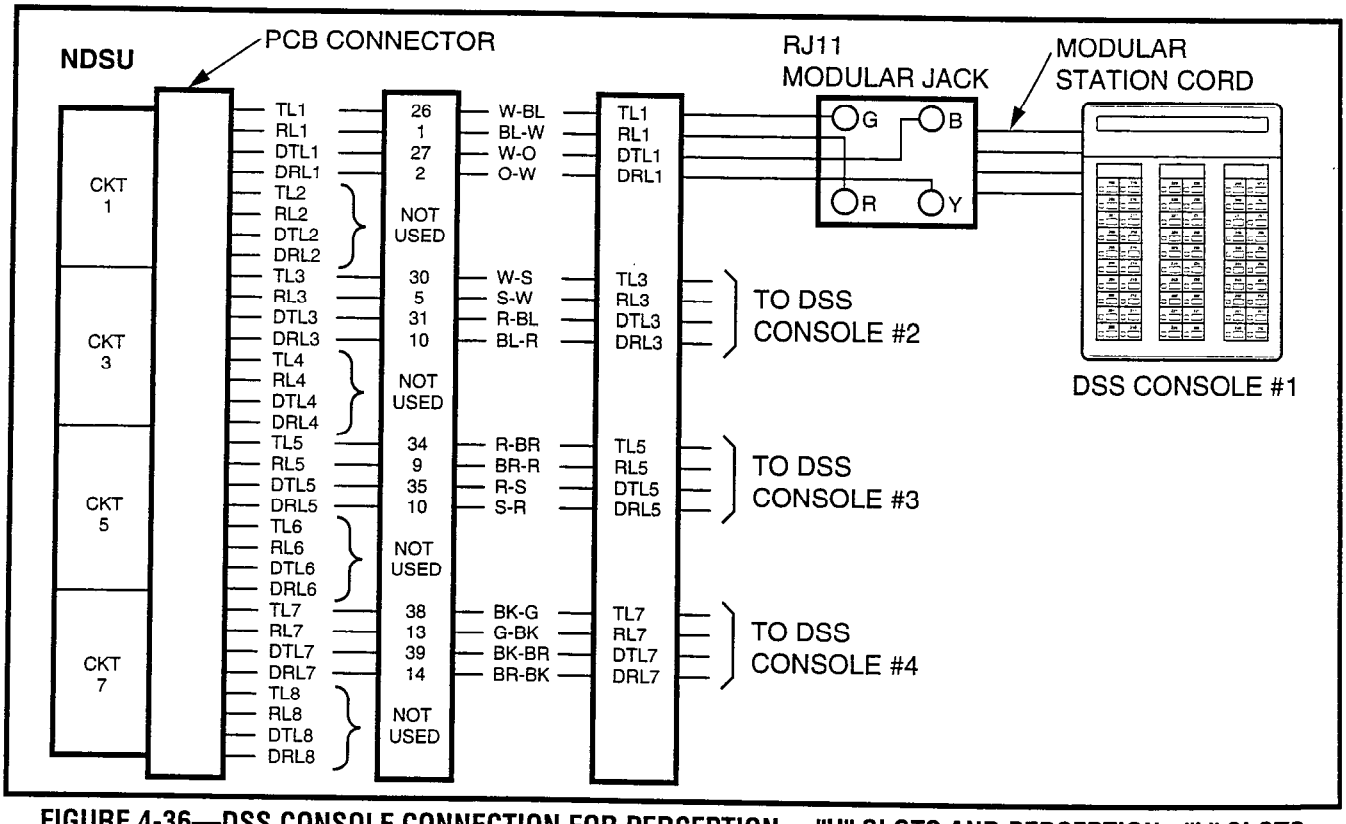

FIGURE 4-36—DSS CONSOLE CONNECTION FOR PERCEPTION$_{ex}$ "U" SLOTS AND PERCEPTION$_e$ "L" SLOTS

Digital Data Interface Units. The system *must* be told which type of DDIU (-MA or -MAT) is installed at each location.

5.72 Digital Data Interface Units require only single-pair wiring and are connected to the MDF via standard twisted-pair telephone cables.

NOTE:
The DDIU-MAT requires an additional two-pair for electronic telephone operation. (For this reason, three-pair cable should be used at locations where a DDIU-MAT may be installed.)

5.73 Digital Data Interface Unit connection details are shown in Figure 4-37.

5.80 DDIU-MAT

5.81 The DDIU-MAT (Figure 4-38) mounts directly on the bottom of an electronic telephone (forming a single unit) as follows:

1) Remove the electronic telephone base (see Paragraph **5.12**).

2) Replace the telephone base with the DDIU-MAT.

NOTE:
An electronic telephone with a DDIU-MAT attached cannot be wall-mounted.

5.82 The DDIU-MAT requires four types of connections for proper operation.

- Power supply (to power outlet).
- 25-pin female RS-232C connector (to data device).
- 2-pair modular line cord (to electronic telephone).
- 3-pair modular connector (to LCEC/NCEC).

5.83 The power supply (provided) connects the DDIU-MAT to a 117 VAC wall outlet. The 25-pin female RS-232C connector interfaces with the customer-supplied Data Terminal Equipment (DTE) and uses the following pins:

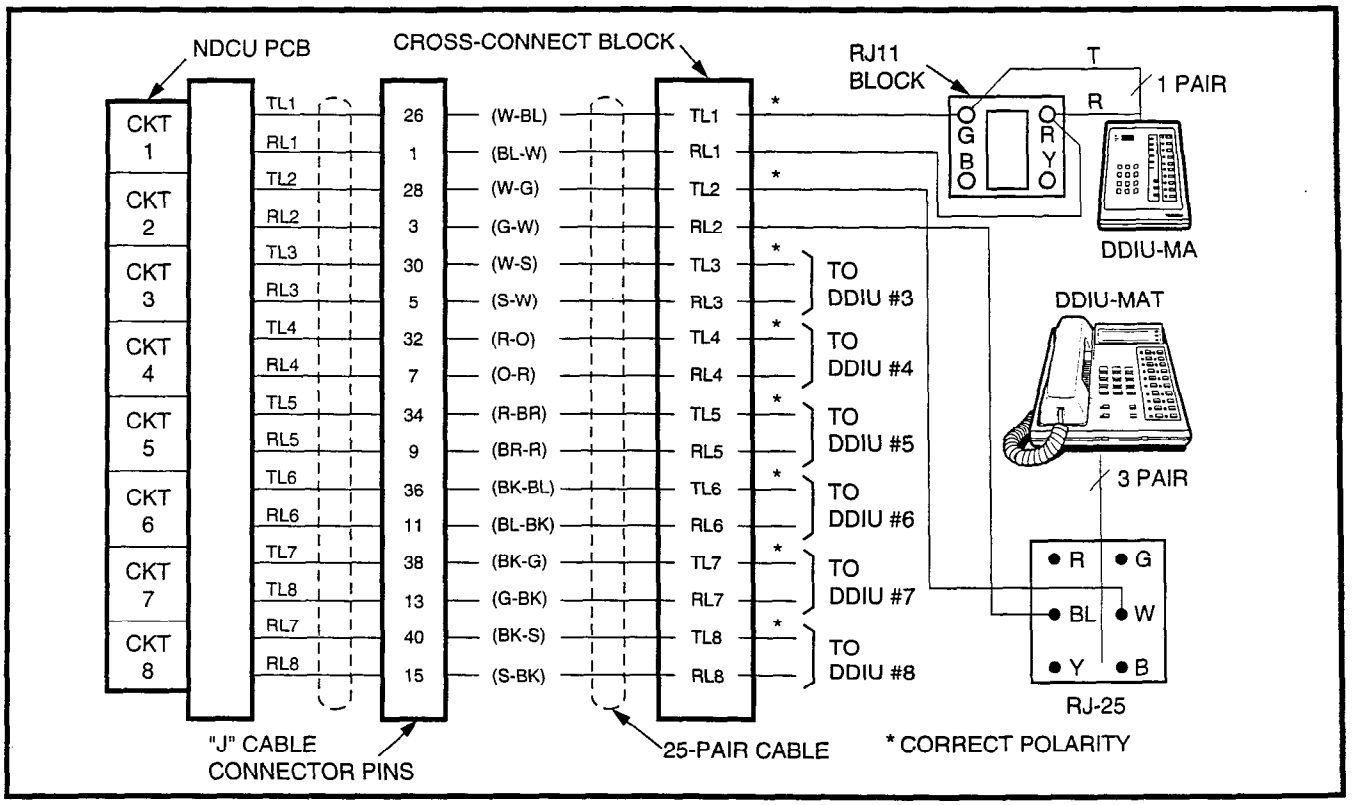

FIGURE 4-37—DIGITAL DATA INTERFACE UNIT CONNECTION (DDIU-MA and DDIU-MAT)

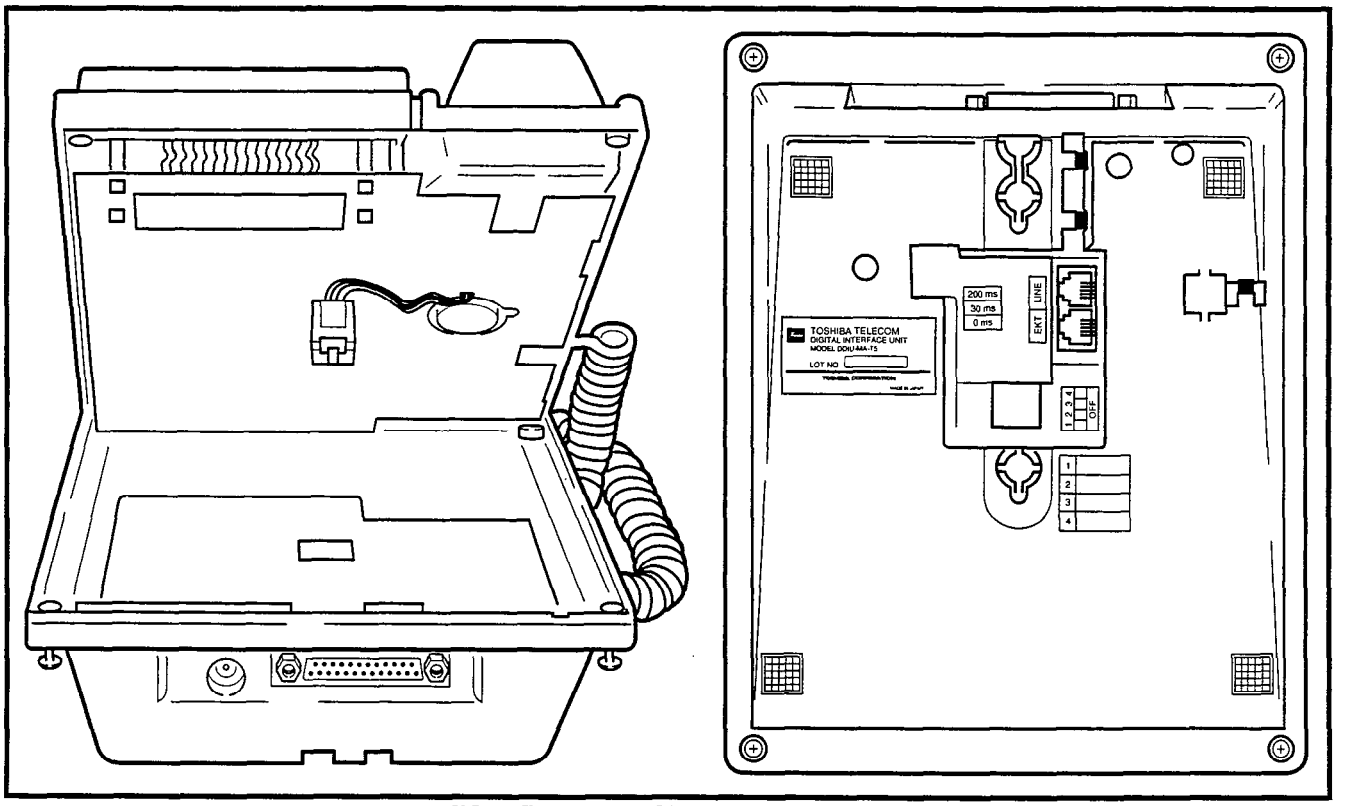

FIGURE 4-38—INSTALLING DDIU-MAT

Pin No.	Designation	
1	FG	Protective Ground/Frame
2	SD	Transmitted Data (to DDIU)
3	RD	Receive Data (from DDIU)
4	RTS	Request to Send (to DDIU)
5	CTS	Clear to Send (from DDIU)
6	DSR	Data Set Ready (from DDIU)
7	SG	Signal Ground/Common Return
8	RCD	Receive Carrier Detect (from DDIU)
15	ST2	Transmission Signal Element Timing (from DDIU)
17	RT	Transmission Signal Element Timing (from DDIU)
20	DTR	Data Terminal Ready/Equipment Ready (to DDIU)
22	CI	Ring Indicator (from DDIU)

5.84 The provided 2-pair modular line cord connects the DDIU-MAT to the electronic telephone line connector. The 3-pair modular line connector connects to the 3-pair house cable run from the LCEC/NCEC (see Digital Data Interface Unit Connections, Paragraph **5.70**).

5.85 Several DIP switches found on the bottom of the DDIU-MAT must be set for proper operation (Figure 4-39).

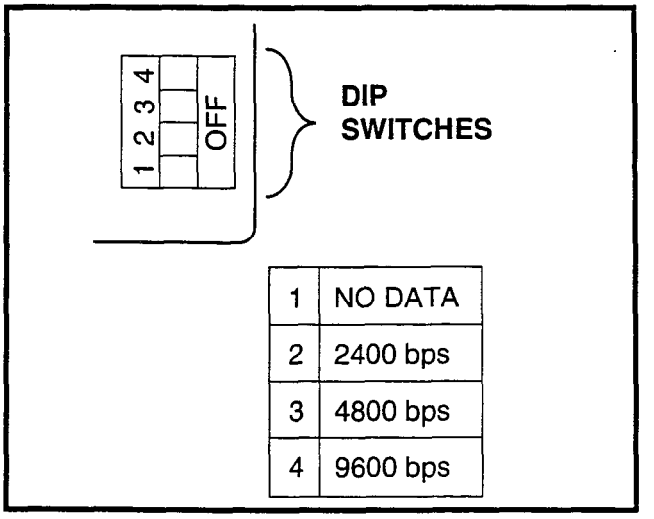

1	NO DATA
2	2400 bps
3	4800 bps
4	9600 bps

FIGURE 4-39—DDIU-MAT DIP SWITCHES

5.86 When the **DATA DETECTION** switch (**Switch 1**) is placed in the **ON** position, the automatic data release feature will be activated (data connection is automatically released if no data is transmitted for a period of 18 minutes).

5.87 **Switches 2, 3,** and **4** select the data speed for synchronous transmission only.

Switch 2 = 2400 bps
Switch 3 = 4800 bps
Switch 4 = 9600 bps

5.88 If asynchronous operation is used, the switches will have no effect and the data speed will self-adjust to a maximum speed of 19.2 kbps or less.

5.89 A power **ON/OFF** switch that appears on some early DDIU-MAT models controls power to the DDIU-MAT from the power supply. If the switch is **OFF**, the DDIU-MAT will not function, but the electronic telephone will continue functioning normally. When the switch is **ON**, both DDIU-MAT and electronic telephone are functional. In later models, the DDIU-MAT is operational when the power supply is plugged in.

IMPORTANT!
All connections to DDIUs (-MA or -MAT) must observe correct tip and ring polarity for proper operation.

5.90 DDIU-MA

5.91 The DDIU-MA is a stand-alone unit that incorporates both the manual dialing and auto-answering features of the DDIU-MAT, but is used as a data transceiver only.

5.92 The DDIU-MA has several internal and external switches that must be set for proper operation.

5.93 The power **ON/OFF** switch, on the bottom of the DDIU-MA, must be turned **ON** for the DDIU-MA to operate. When the switch is **ON**, an LED on the front faceplate will light.

5.94 The DDIU-MA's faceplate must be removed to set the internal DIP switches. Remove the faceplate by carefully lifting the lower right corner and then pulling the faceplate away from the base. Set the following parameters as required at switch **S26** on the internal DIUA PCB (Figure 4-40):

Switch 1* = Equipment Ready Supervision
ON-Data device provides an Equipment Ready signal to the DDIU (the Terminal Ready LED will light only when the signal is received).
OFF-Data device does not provide an Equipment Ready signal to the DDIU (the Terminal Ready LED will remain lit continuously).
Switch 2 = not used.
Switch 3 = not used.
Switch 4 = **ON** (Enables automatic answer mode of operation.)
Switch 5 = **ON** (Activates Automatic Data Release feature. The data connection is automatically released if no data is transmitted for a period of 18 minutes.)
Switch 6 = 2400 BPS **
Switch 7 = 4800 BPS **
Switch 8 = 9600 BPS **

A data path cannot be established if the Terminal Ready light is **OFF (even though a DDIU-MA can be answered manually). The Terminal Ready light **must** be **ON** to establish a data path when answering manually.*
***Select the appropriate speed for synchronous data transmission. If the asynchronous mode of operation is used, these switches have no effect and the DDIU-MA will automatically adjust to the appropriate speed (to a maximum of 19.2 kbps).*

5.95 Two switches on the DIUB PCB must be set for either DTE or MODEM (DCE) operation. The pin assignments shown in Paragraph **5.83** explain the RS-232C cable signaling differences between DTE and DCE devices. (Typically, a DTE is a terminal device such as a personal computer or printer, while a DCE is an intermediate device such as a modem or protocol converter connected to a host. Refer to the data device manufacturer's documentation for its signaling information.) Set the DIUB PCB switches as follows:

1) Loosen the two screws found under the DDIU-MA's faceplate on the right side (top and bottom) of the DIUA PCB (Figure 4-40).

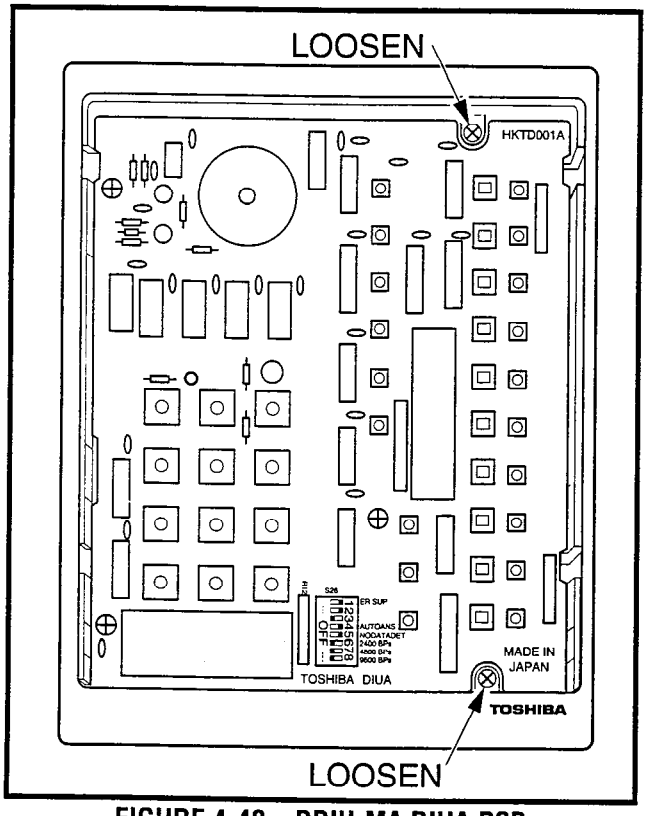

FIGURE 4-40—DDIU-MA DIUA PCB

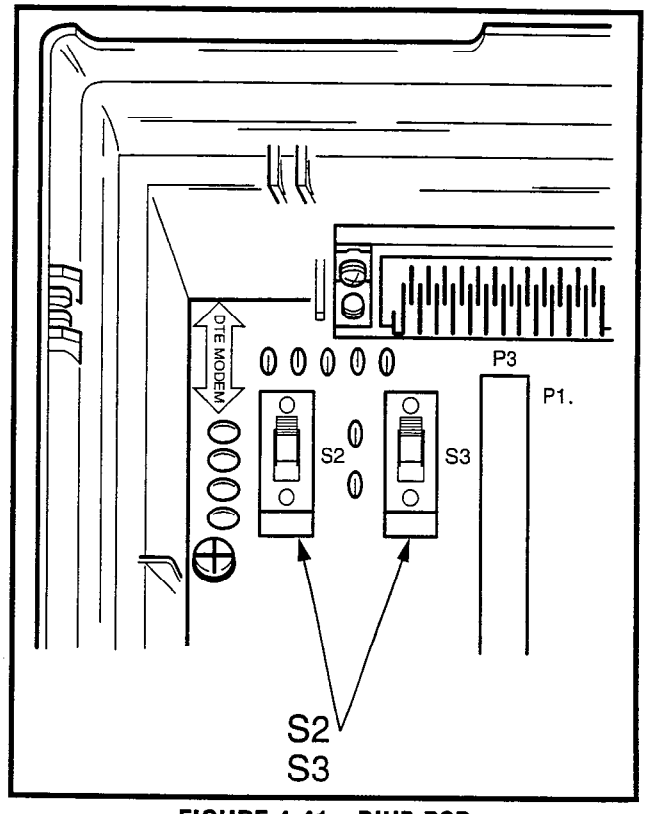

FIGURE 4-41—DIUB PCB

2) Carefully separate the two halves of the DDIU-MA to expose the **S2** and **S3** (DTE/MODEM) switches (Figure 4-41) in the upper left corner of the DIUB PCB.

3) If the DDIU-MA is to be connected to a **DTE**, both switches must be in the DTE position. If it will be connected to a DCE, both switches must be in the **MODEM** position.

4) Reassemble the DDIU-MA.

5.96 See *Operating Procedures* or DDIU-MA and Electronic Telephone *User Guides* for information on the DDIU dialpad, LED/button operation and functions.

5.97 The DDIU-MA requires three types of connections for proper operation:

- Power supply (to facility power).
- 25-pin female RS-232C connector (DDIU-MA to LCEC/NCEC).
- Single-pair modular connector (DDIU-MA to LCEC/NCEC).

5.98 The power supply (provided) connects the DDIU-MA to a 117 VAC wall outlet. The 25-pin female RS-232C connector connects to the customer-supplied data device and is configured for either DTE or DCE operation as follows:

DTE Position:

Pin No.		Designation
1	FG	Protective Ground/Frame
2	SD	Transmitted Data (to DDIU)
3	RD	Receive Data (from DDIU)
4	RTS	Request to Send (to DDIU)
5	CTS	Clear to Send (from DDIU)
6	DSR	Data Set Ready (from DDIU)
7	SG	Signal Ground/Common Return
8	RCD	Receive Carrier Detect (from DDIU)
15	ST2	Transmission Signal Element Timing 2 (from DDIU)
17	RT	Transmission Signal Element Timing 2 (from DDIU)
20	DTR	Data Terminal Ready/Equipment Ready (to DDIU)
22	CI	Ring Indicator (from DDIU)

DCE (MODEM) Position:

Pin No.		Designation
1	FG	Protective Ground/Frame
2	TD	Transmitted Data (from DDIU)
3	RD	Receive Data (to DDIU)
4	RTS	Request to Send (from DDIU)
5	CTS	Clear to Send (to DDIU)
6	DSR	Data Set Ready (to DDIU)
7	SG	Signal Ground/Common Return
20	ER	Data Terminal Ready/Equipment Ready (from DDIU)
24	ST1	Transmit Signal Element Timing 1 (to DDIU)

5.99 The DDIU-MA connects to the LCEC/NCEC with a single-pair station line cable that plugs into the modular connector on the back of the base (see Digital Data Interface Unit Connections, Paragraph **5.70**).

IMPORTANT!
All connections to DDIUs (-MA or -MAT) must observe correct tip and ring polarity for proper operation.

6. DIGITAL TELEPHONE STATION EQUIPMENT INSTALLATION

6.00 Digital Telephone Connections

6.01 See the **DEKT Program** in Section **200-255-300**, *Programming*, for instructions on programming digital telephones. When installing digital telephones, digital DSS consoles, PDIU-DI, or PDIU-DS, Version **D.04** software or higher must be installed. The system must be told the type of digital telephone (20-button, or 20-button with LCD) and what button assignment is required.

6.02 Digital telephones are connected to the MDF via standard twisted-pair jacketed telephone cable. (Single-pair wiring is required; however, 2- or 3-pair wiring is strongly recommended to permit expected distances for data, spare pair, etc.) To accommodate the digital telephone line cord, terminate the cable in a modular station connector block (RJ25) at the station location. The standard modular digital telephone cord length is 7 feet (the maximum allowed length is 25 feet).

6.03 The overall length of the digital telephone cable run from equipment cabinet to phone must not exceed 1,000 feet (305 M), 24 AWG cable.

IMPORTANT!
When installing the digital telephone cable, do not run parallel to and within 3 feet of an AC power line. Such power lines should be crossed at right angles (90°) only.

6.04 Digital telephone connection details are shown in Figure 4-42.

6.10 Digital Telephone Wall Mounting

6.11 Both telephones are wall-mounted in the same manner, and they may be mounted on a wall or any other flat, vertical surface to which the base can be secured. When selecting the mounting site, consider the digital telephone's weight and the additional stresses to which the mounting will be subjected.

NOTE:
Digital Telephones with Data Interface Units (PDIU-DI) or Off-hook Call Announce (DVSU), and Stand-alone Data Interface Units (PDIU-DS) are connected, per Figure 4-42, using single-pair wiring.

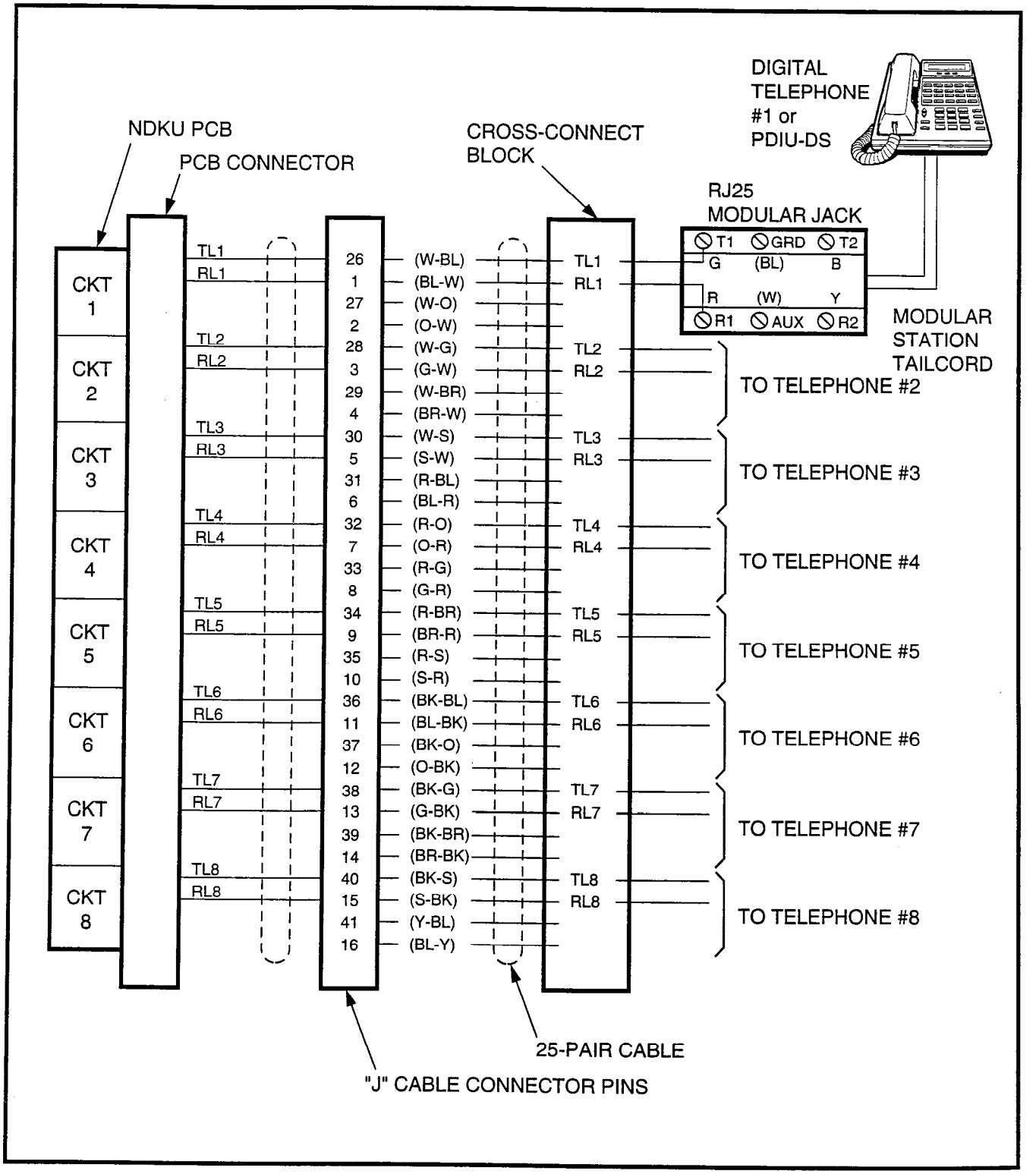

FIGURE 4-42—DIGITAL TELEPHONE CONNECTION

6.12 Loosen the four captive screws securing the digital telephone's base, and remove the base (Figure 4-43).

6.13 Using a cutter, remove the handset hanger from the base. Insert the handset hanger in the slot provided on the front of the telephone (Figure 4-44). The hanger fits in the notch on the handset.

6.14 Rotate the mounting base 180° and secure to the telephone with the four captive screws (Figure 4-45).

6.15 Connect the electronic telephone to the wall modular connector with a short cord (approximately 3 inch length). Route the cord into the hollow portion of the base, then mount the digital telephone on the wall mounting connector. Test each digital telephone using the **TTRM Program**, Section **200-255-300**, *Programming*.

6.20 Off-hook Call Announce

6.21 The Off-hook Call Announce (OCA) feature enables a digital telephone to originate and receive voice announcement when the station's handset is off-hook. Standard telephones can originate off-hook call announces, however, it cannot receive them. A station user is allowed or denied the ability to originate the Off-hook Call Announce feature in the **DCOS Program**. In order to receive the Off-hook Call Announce feature, a PCB (DVSU) is required to be installed in each affected digital

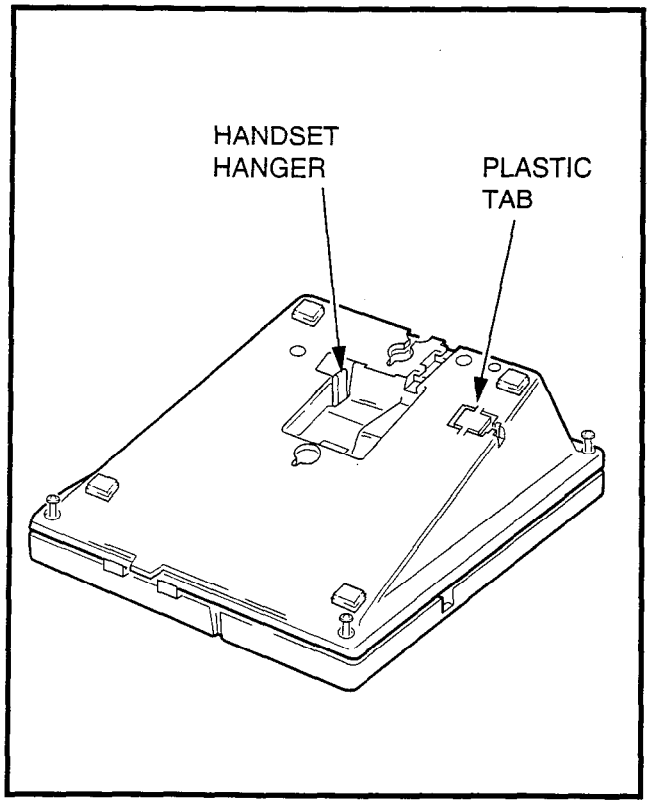

FIGURE 4-43—REMOVAL OF DIGITAL TELEPHONE BASE

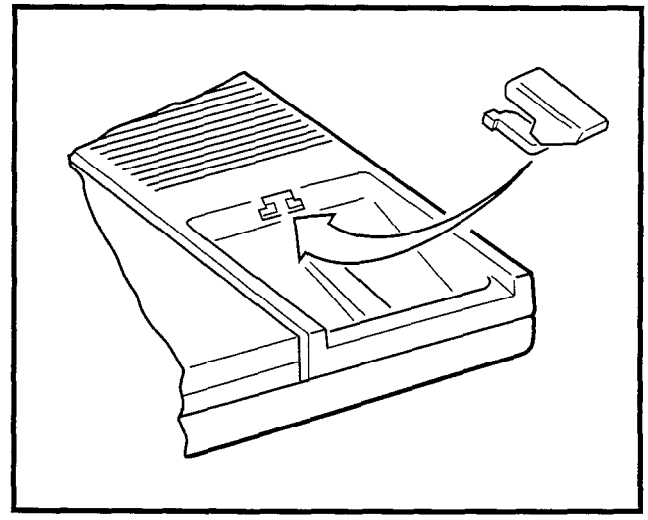

FIGURE 4-44—REMOVAL OF HANDSET HANGER

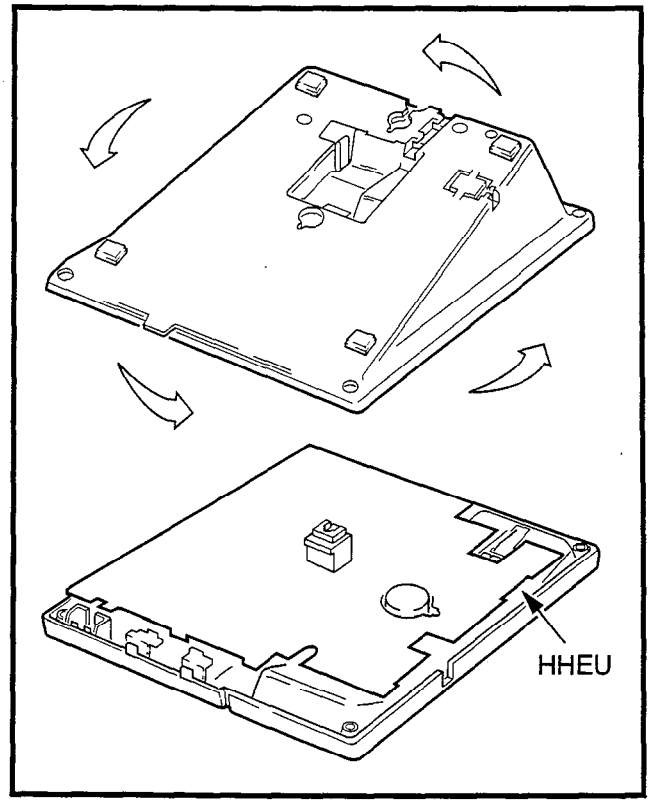

FIGURE 4-45—INSTALLATION OF MOUNTING BASE FOR WALL-MOUNT INSTALLATION

telephone, and the NDKU must be set for option 2 (see Paragraph **3.45** of this chapter).

6.22 A DVSU PCB inside a 1000-series digital telephone allows the digital telephone to receive the Off-hook Call Announce feature.

NOTE:
It is not recommended to equip digital telephones with both Off-hook Call Announce and the headset option at the same time.

6.23 The installation of the DVSU PCB must be done in accordance with the following steps:

1) Loosen the four captive screws securing the telephone's mounting base (Figure 4-43), and remove the base.

2) Loosen the four captive screws securing the metal plate to the standoffs inside the base where the DVSU PCB will be installed (Figure 4-46). Remove the metal plate and discard it.

3) Position the DVSU PCB on the standoffs (Figure 4-46), and secure it with the four screws provided.

4) Connect the DVSU wire plugs to the connectors labelled "DVSU" on both telephone's PCBs (Figures 4-46 and 4-47).

IMPORTANT NOTE!
Make sure that the DVSU wire plugs are connected to the proper connectors.

5) Reinstall the telephone's mounting base (Figure 4-43), and secure it with its four captive screws.

6.24 A single pair of wires are required to connect the digital telephone to the NDKU port. OCA connection details are shown in Figure 4-42, the Digital Telephone Connection diagram.

6.30 Carbon Handset Transmitter Installation

6.31 If a customer-supplied carbon-type handset is used with the 1000-series digital telephone, the two jumper straps on the telephone's upper PCB, labelled "PERCEPTION-SUB (SPF)," must be cut. To cut the straps:

1) Loosen the four captive screws securing the telephone's mounting base (Figure 4-43), and remove the base.

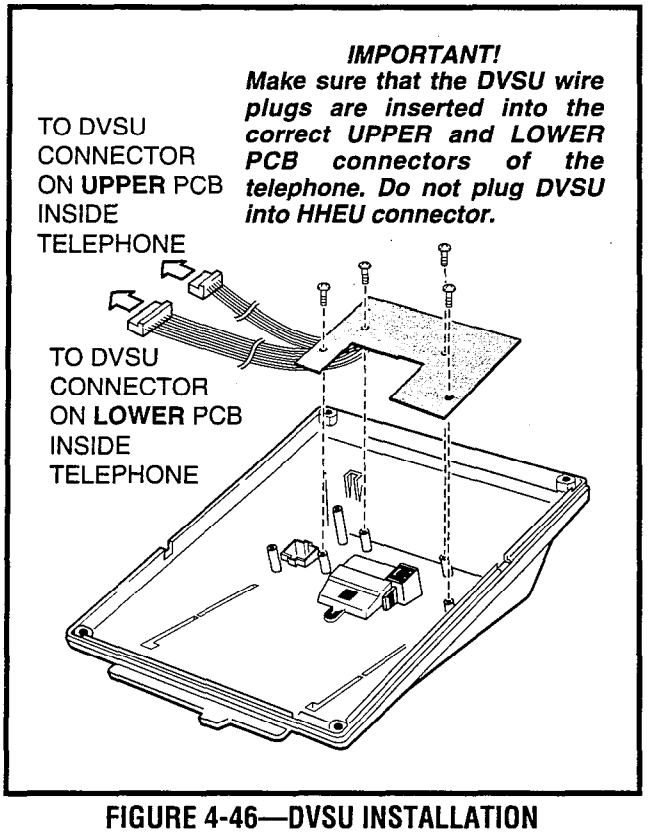

FIGURE 4-46—DVSU INSTALLATION

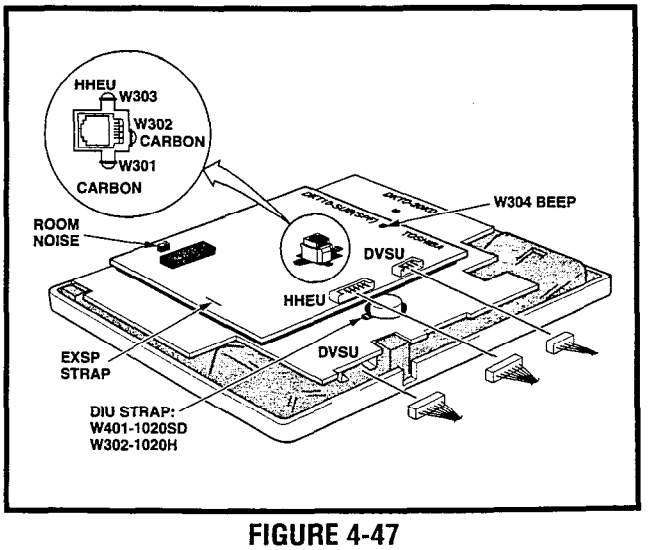

FIGURE 4-47
TELEPHONE PCB CONNECTIONS AND STRAPS

2) Refer to Figure 4-47, and locate the CARBON straps, **W301** and **W302**, and cut them.

3) Reinstall the telephone base (Figure 4-43), and secure it with its four captive screws.

6.40 Beep Strap Removal

6.41 A beep is emitted whenever a dialpad button or flexible button is pressed. This beep can be eliminated if the beep strap is cut. To cut the strap:

1) Loosen the four captive screws securing the telephone's mounting base (Figure 4-43), and remove the base.

2) Refer to Figure 4-47, and locate the BEEP strap, **W304**, labelled "PERCEPTION10-SUB (SPF)" on the telephone's upper PCB, and cut it.

3) Reinstall the telephone's mounting base (Figure 4-43), and secure it with its four captive screws.

6.50 Microphone/Speaker Threshold Adjustment (Speakerphone only)

6.51 If the speaker frequently cuts off during handsfree operation, because of high ambient noise levels, set the **ROOM NOISE** switch to the high position. To set the switch:

1) Loosen the four captive screws securing the telephone's mounting base (Figure 4-43), and remove the base.

2) Refer to Figure 4-47, and locate the **ROOM NOISE** switch, labelled "PERCEPTION10-SUB (SPF)" on the telephone's upper PCB. Carefully push the switch to the **HIGH** (H) position.

3) Reinstall the telephone's mounting base (Figure 4-43), and secure it with its four captive screws.

6.60 HHEU Installation

6.61 The HHEU option provides the interface and control for a customer-supplied headset. It is installed in accordance with the following steps:

1) Loosen the four captive screws securing the telephone's mounting base (Figure 4-43), and remove the base.

2) Using a screw driver or other suitable tool, remove the plastic tab located on the back of the mounting base (Figure 4-43). The HHEU modular connector for the headset is accessed through this opening.

3) Set the **SW601** switch on the HHEU PCB to the **HEADSET** position (Figure 4-48).

4) If the headset receiver is not to receive OCA caller voice announcements, cut both sides of the **R607** resistor on the HHEU PCB (Figure 4-48), then remove the resistor.

5) Position the HHEU PCB on the standoffs inside the base (Figure 4-48), and secure with the two screws provided.

6) Connect the HHEU PCB to the telephone's upper PCB, labelled "PERCEPTION10-SUB (SPF)." See Figure 4-47.

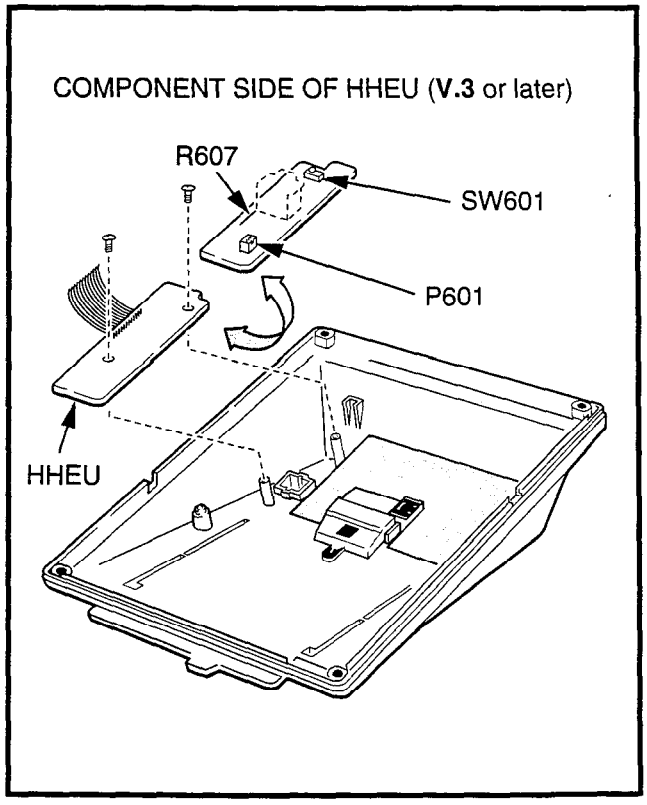

FIGURE 4-48
HHEU INSTALLATION FOR DIGITAL TELEPHONE

7) Refer to Figure 4-47, and locate the HHEU strap, **W303**, on the upper PCB. Cut the strap if the HHEU PCB is to be connected to a headset.

8) Reinstall the telephone's mounting base and secure it with its four captive screws.

6.70 Attendant Console Connection

6.71 See Paragraph **5.50** for the attendant console connection.

6.80 DSS Console Connections

6.81 See the **DSS Program** in Section **200-255-300**, *Programming*, to input information concerning the digital DSS consoles.

6.82 The DSS console must be positioned adjacent to a digital telephone (preferably an LCD model). DSS consoles use 2-pair wiring and are connected to the MDF via standard twisted-pair telephone cables. An RJ25 modular connector should be attached to the instrument-end of the telephone cable to permit connection to the DSS console.

6.83 The overall length of the DSS console cable run from the equipment cabinet must not exceed 1000 feet (304 M), 24 AWG cable.

IMPORTANT!
When installing the DSS console cable, do not run parallel to and within 3' of an AC power line. Such power lines should be crossed at right angles (90°) only.

6.84 DSS console(s) connection details are shown in Figures 4-49 and 4-50, for both PERCEPTION$_e$ and $_{ex}$.

6.90 DIGITAL DATA INTERFACE UNIT (PDIU)

6.91 The Perception$_{e\&ex}$ with D.04 software provides two new style digital Data Interface Units (DIUs) that enable digital telephone users to simultaneously transmit and receive data on the same NDKU station port and wire pair while communicating on a voice call. One unit, called the integrated DIU (PDIU-DI) replaces the digital telephone's base; the other unit is a small self-contained box called the stand-alone DIU (PDIU-DS). Each DIU is powered by the NDKU PCB it is connected to; therefore, no external power is required.

6.92 Both PDIUs can be connected to standard Electronic Industries Association (EIA) RS-232 asynchronous serial data devices. EIA devices are divided into two categories:

- Data communication equipment (DCE). Common DCE devices are modems and some printers.
- Data terminal equipment (DTE). Common DTE devices are personal computers, ASCII terminals, and some printers.

The PDIU-DI operates like a DCE, and it connects directly to DTE devices using standard RS-232 cables. Depending on how its internal jumper plugs are configured, the PDIU-DS can either operate like a DTE and connect to DCE devices, or operate like a DCE device and connect to a DTE device. In most applications, DTE and DCE devices exchange data between each other via the standard RS-232 cable connection.

6.93 PDIUs can function with DCE and DTE devices at data speeds of up to 19.2kbps; however, keyboard dialing using AT commands (from a PC or a terminal connected to a PDIU) is limited up to 9.6kbps. PDIU data transmission speed is set by the first AT command that the PDIU receives once it is in the command mode. The transmission speed is transparent to the PDIU if data is being sent via manual dialing or if the PDIU is receiving calls.

NOTES:

1. *See the **DDIU Program** in **Section 200-255-300** for information on programming the Digital Data Interface Units. The system must be told which type of PDIU (-DI or -DS) is installed at each location.*
2. *Digital Data Interface Unit (PDIU-DI and PDIU-DS) connection details are shown in Figure 4-42, the Digital Telephone Connection diagram.*

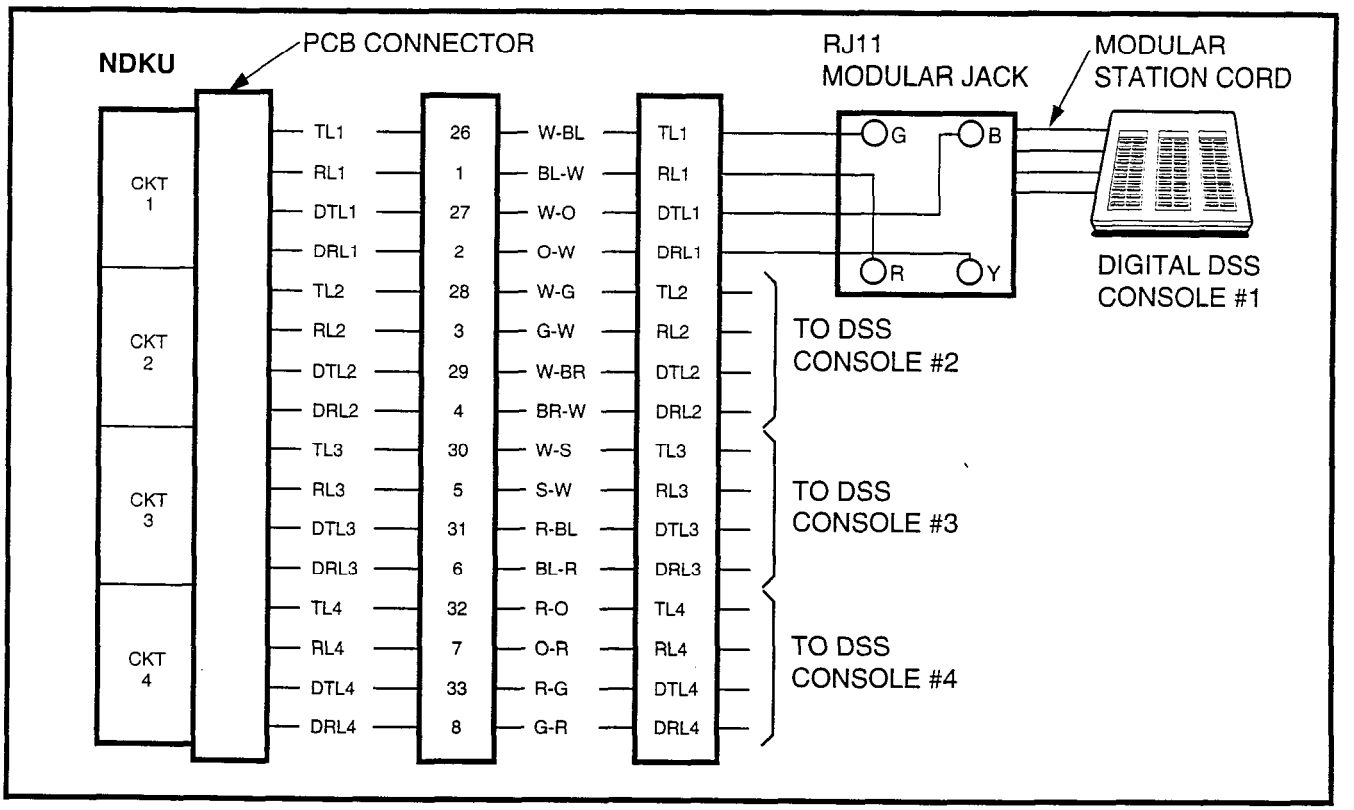

FIGURE 4-49—DIGITAL DSS CONSOLE CONNECTION FOR PERCEPTION$_e$ "C" SLOT

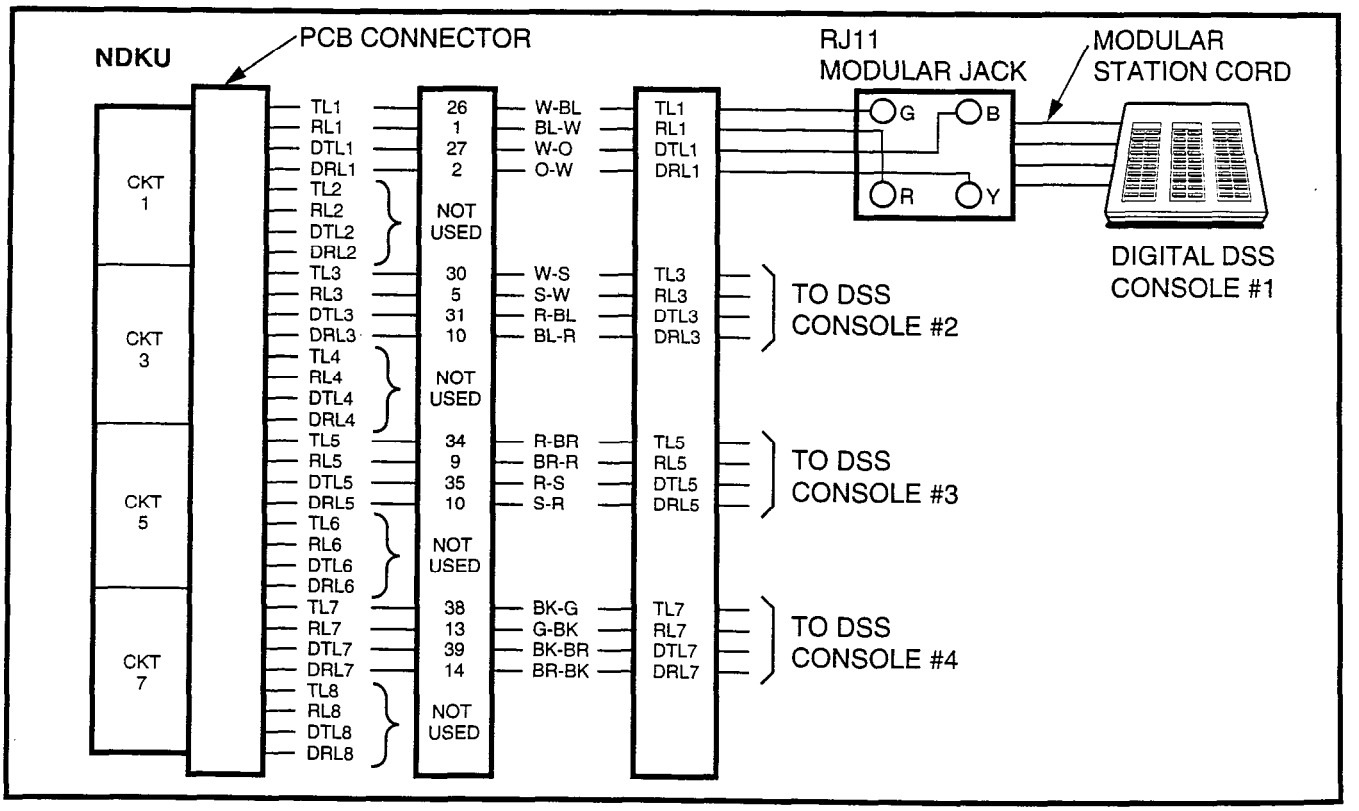

FIGURE 4-50
DIGITAL DSS CONSOLE CONNECTION FOR PERCEPTION$_{ex}$ "U" SLOTS AND PERCEPTION$_e$ "L" SLOTS

IMPORTANT NOTE!
To use the PDIU-DI or PDIU-DS with AT commands, communications software or some program that performs "terminal emulation" must be loaded in the computer. The AT commands cannot be issued from the computer's operating system prompt.

6.100 Common DIU Connections

6.101 The block diagram in Figure 4-51 illustrates common DIU connections. In this example, PDIU-DIs are connected to laptop personal computers (PC1 and PC2), and the PDIU-DS's are connected to a serial printer and modems. The PC users can transfer files internally, print files on the same printer, and access the modem to send/receive data to/from an external personal computer, or dial up a data service.

6.102 To access these devices, a data call connection must be established between the DIUs. This is accomplished by dialing the destination DIU from a digital telephone dialpad or from a PC keyboard using standard AT dial commands. PDIU-DIs have port and DATA DN assignments adjacent to the digital telephones that they are connected to, while PDIU-DS's have separate port and DATA DN assignments. The DN and DATA buttons on the digital telephone tell the system whether a voice or data call is being made: The DN button indicates voice calls, and the DATA button indicates data calls. When dialing from a keyboard with AT commands, enter **ATD** for data calls. Only DATA calls can be made through keyboard dialing.

6.103 Installation instructions for these devices are provided in Paragraphs **6.140 ~ 6.160**. Call paths and scenarios for four types of data calls are provided in Paragraphs **6.181 ~ 6.185**. Step-by-step data calling procedures are provided in the *PDIU User Guide*.

6.110 EIA Interface Leads (Signals)

6.111 Both DIUs operate with the ten standard EIA RS-232 interface leads (signals) on which signaling data is transmitted and received. DIUs connect to serial data devices' signals with standard RS-232 cables, available from telephone supply stores. The PDIU-DI/PDIU-DS Data Units require ten signals for some applications, but can function with eight, using modular cords and connectors with RJ45/DB25 adapters for other applications (Figures 4-52 and 4-53). If uncertain which signals are necessary for an application, all ten should be connected.

IMPORTANT NOTES!

1. ***The PDIU-DI is always a DCE device; the PDIU-DS may be a DTE or DCE, depending on how its internal jumpers (1 ~ 9) are configured (see Figure 4-54).***
2. ***In the descriptions below, when a signal is ON, its potential is about seven volts positive, relative to signal ground (pin 7); when a signal is OFF, it is about 7 volts negative, relative to the signal ground (pin 7).***

- **Frame Ground (FG, Pin 1):** The FG signal (EIA circuit AA) is a protective or safety ground which is bonded to the PDIU-DI/PDIU-DS. If required by local codes, the FG may be connected to external ground.
- **Transmit Data (TD, Pin 2):** DTE devices transmit, and DCE devices receive data on the TD lead (EIA circuit BA). Before the DTE device can transmit the TD signal, the RTS, CTS, DSR, and DTR signals (all discussed later in this section) must be **ON**. The TD signal is **OFF** in the idle state.
- **Receive Data (RD, Pin 3):** The DCE device transmits data to the DTE device on the RD lead (EIA circuit BB).
- **Request to Send (RTS, Pin 4):** Some DTE devices send an RTS signal (EIA circuit CA) to the DCE device when they are ready to transmit data on the TD lead. If the DTE device generates the RTS signal, the DIU DIP switch **SW1-4** should be set to **ON** to inform the PDIU. Sometimes, the DTE/DCE device may use RTS/CTS for Ready/Busy-type flow control. In these cases, DIP switch **SW1-4** should be set to **OFF** (see Figure 4-55 for the DIP switch information).

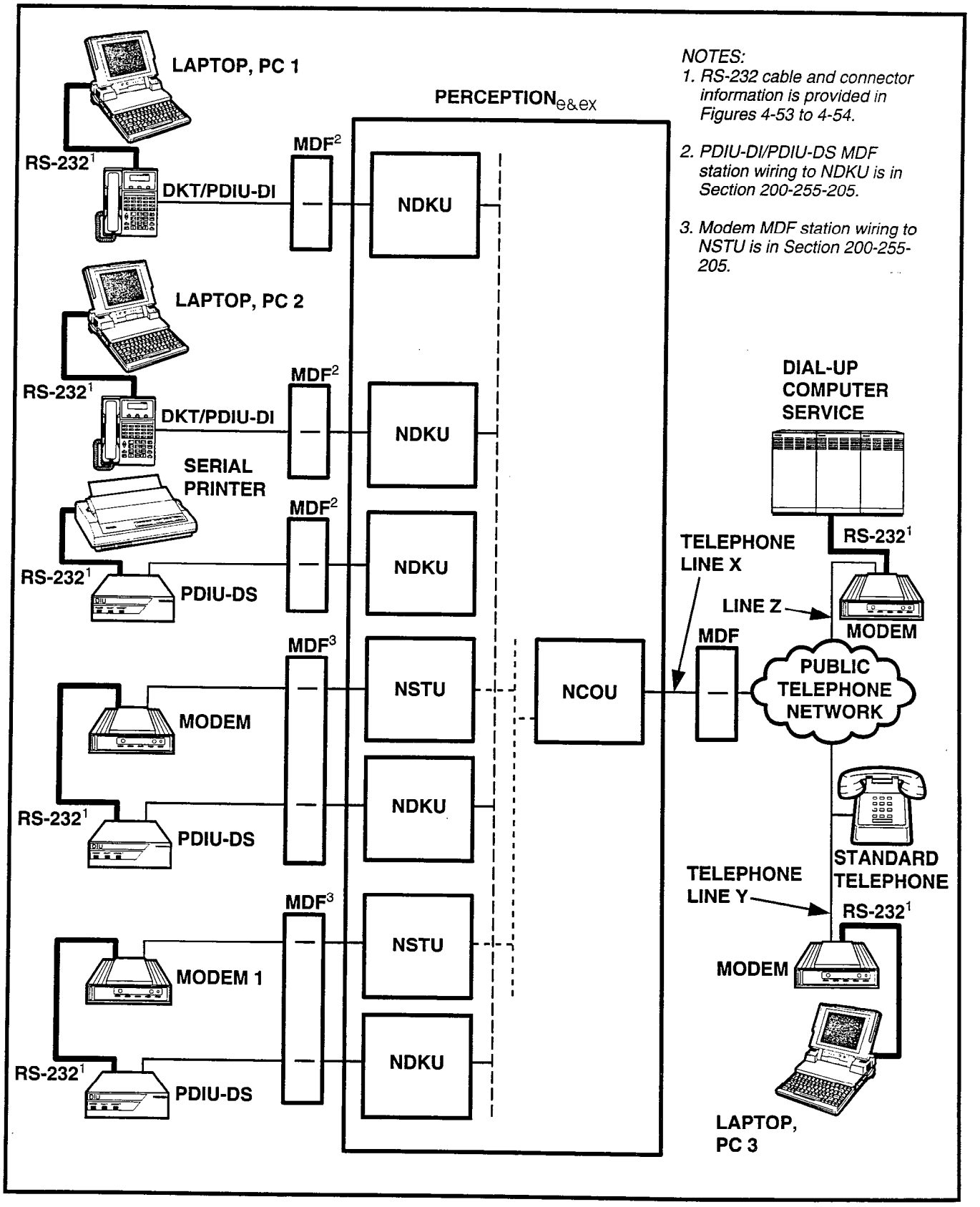

FIGURE 4-51—PERCEPTION DATA INSTALLATION EXAMPLE BLOCK DIAGRAM

CONNECTION EXAMPLE 1

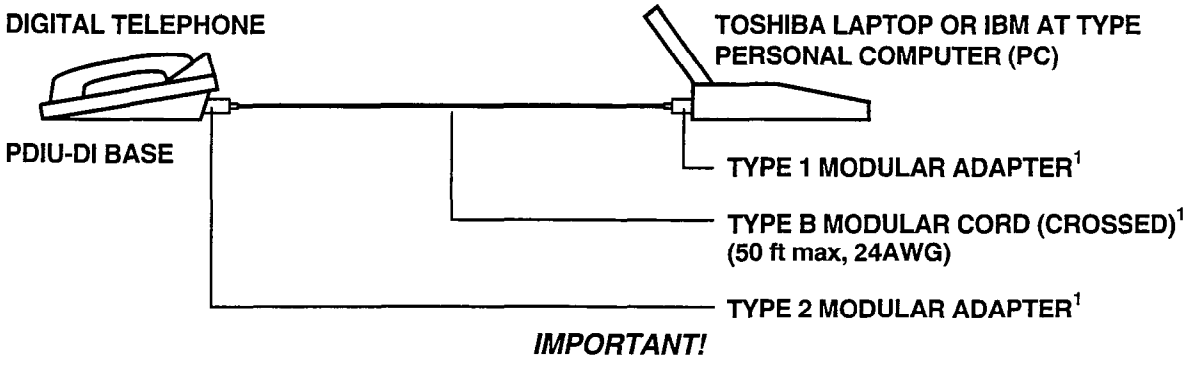

IMPORTANT!

Will not function with applications that require the Ring Indicator signal to PC.

CONNECTION EXAMPLE 2

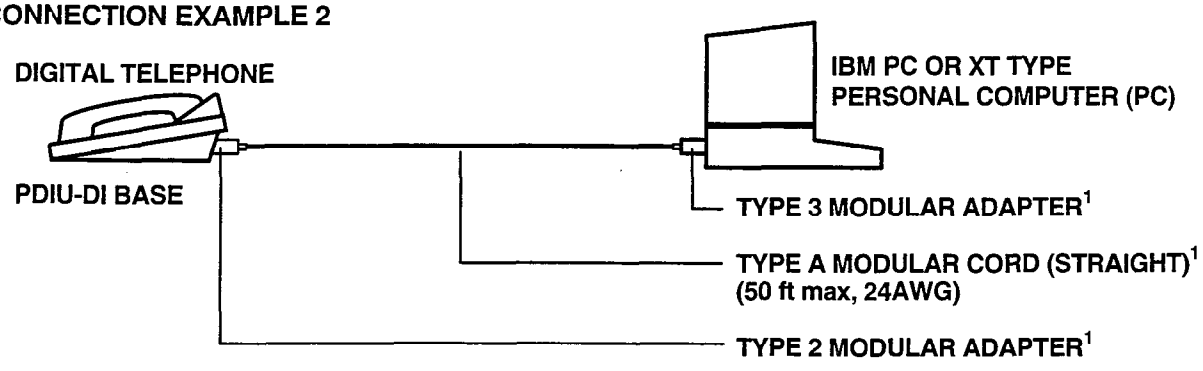

IMPORTANT!

Will not function with applications that require the Ring Indicator signal to PC.

CONNECTION EXAMPLE 3

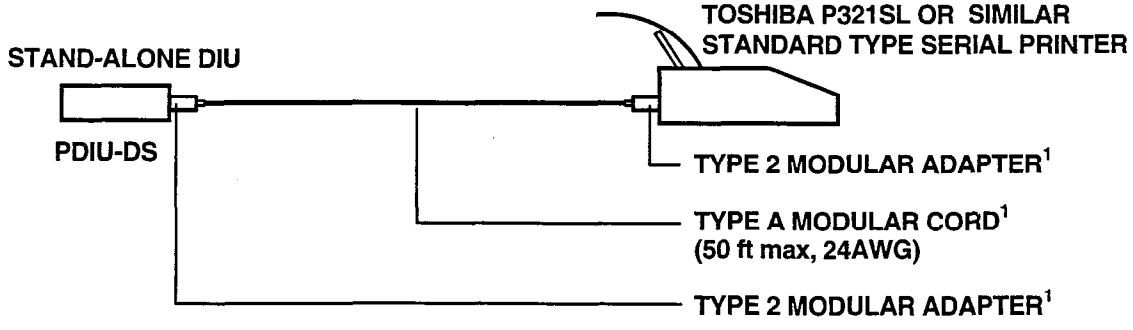

NOTES:

1. *See Figure 4-53 for detailed pin out information of modular cords and adapters.*
2. *Never use modular cords and adapters when connecting a PDIU-DI/PDIU-DS to a modem.*
3. *Connection examples 1 and 2 work when using the PDIU-DI to make calls with personal computer applications (printer sharing, outgoing modem calls, etc). If the PC PDIU-DI must receive calls, the RI lead is normally required; therefore, a standard RS-232 cable must be used (see Figures 4-54 and 4-55).*
4. *In Connection example 3, PDIU-DS must be in the "connect to DTE mode" (**P1 ~ P9**, strapped A-B).*
5. *All modular cords and adapters are customer-supplied.*

FIGURE 4-52—PDIU-DI/PDIU-DS MODULAR CABLE/RJ-45 ADAPTER CONNECTIONS

TYPE 1
RJ45 TO DB9 (FEMALE) ADAPTER

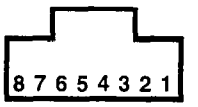

8	7	6	5	4	2	1	N/C	RJ45
DSR	RTS	RD	DCD	TD	GND	CTS	RI	LEAD NAME
6	7	2	1	3	5	8	9	DB9

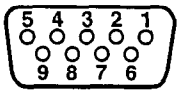

TYPE 2
RJ45 TO DB25 (MALE) ADAPTER

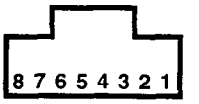

8	7	6	5	4	3	2	1	N/C	RJ45
CTS	SG	DTR	TD	DCD	RD	RTS	DSR	RI	LEAD NAME
5	7	20	2	8	3	4	6	22	DB25

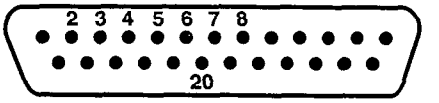

TYPE 3
RJ45 TO DB25 (FEMALE) ADAPTER

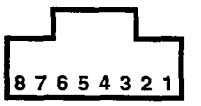

8	7	6	5	4	3	2	1	N/C	RJ45
CTS	SG	DTR	TD	DCD	RD	RTS	DSR	RI	LEAD NAME
5	7	20	2	8	3	4	6	22	DB25

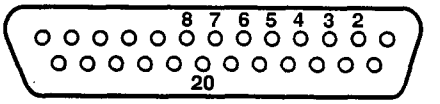

TYPE A
RJ45 FLAT MODULAR
CORD (STRAIGHT)

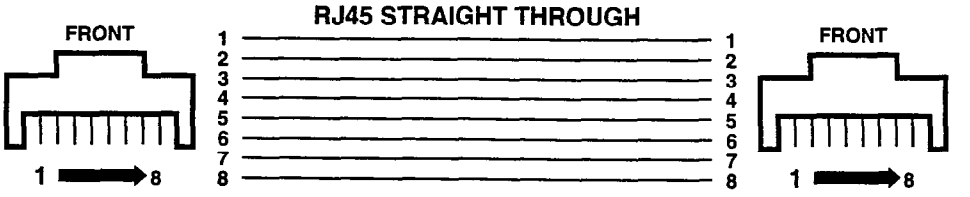

TYPE B
RJ45 FLAT MODULAR
CORD (CROSSED)

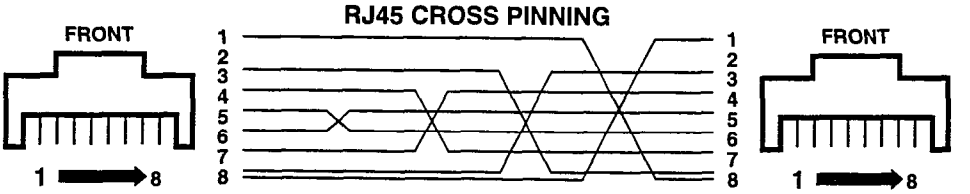

Modular Cords (50 ft max, 24AWG; customer supplied)

FIGURE 4-53—PDIU-DI/PDIU-DS MODULAR CORDS AND RJ-45/RS-232 ADAPTER PIN CONNECTIONS

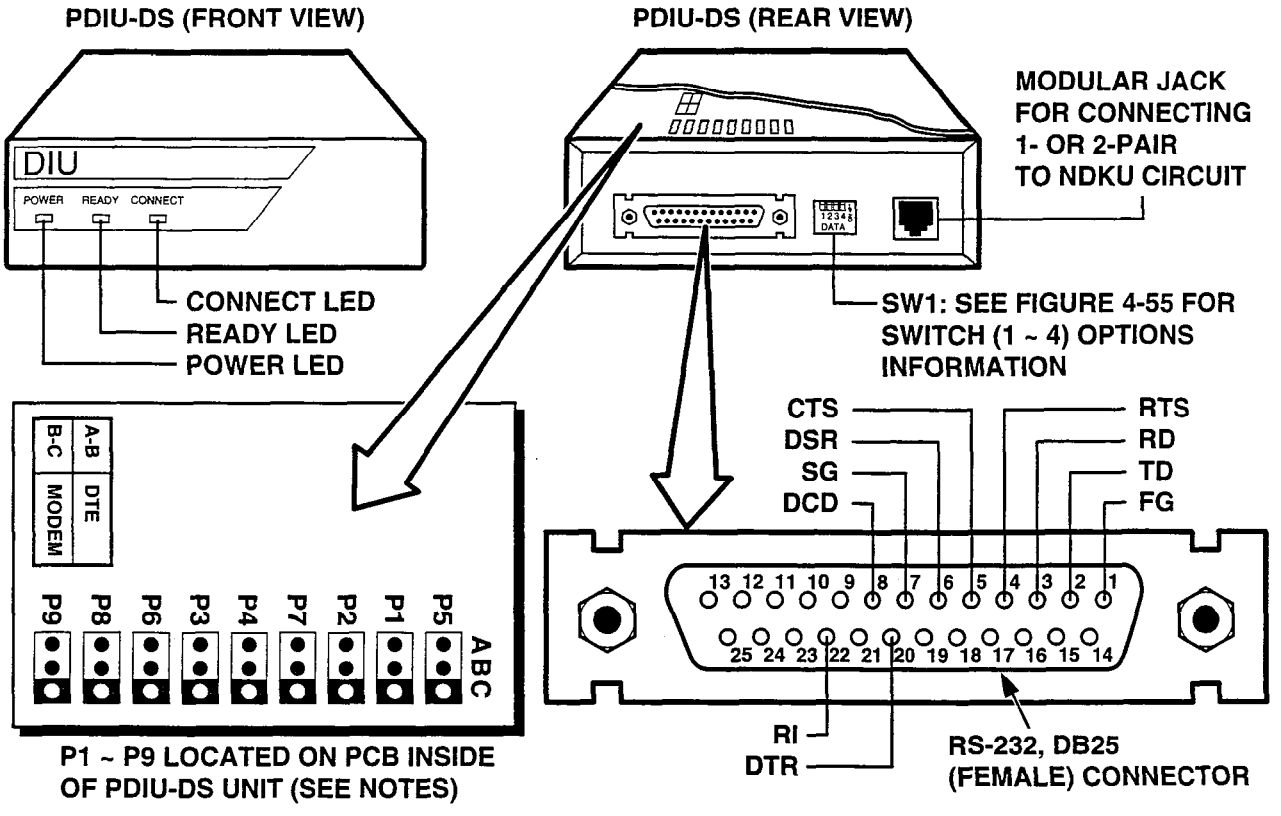

			SIGNAL DIRECTION AND FUNCTION OF P1 ~ P9			
			PDIU-DS CONNECTED TO DTE		PDIU-DS CONNECTED TO DCE	
SIGNAL ABBREVIATON	SIGNAL NAME/ FUNCTION	PDIU-DS PIN NO.	SIGNAL DIRECTION	FUNCTION: A-B (DTE MODE)	SIGNAL DIRECTION	FUNCTION: B-C (MODEM MODE)
FG	FRAME GROUND	1				
SG	SIGNAL GROUND	7				
TD	TRANSMIT DATA	2	DTE ➡ DIU	P1	MODEM ⬅ DIU	P1
RD	RECEIVE DATA	3	DTE ⬅ DIU	P2	MODEM ➡ DIU	P2
RTS	REQUEST TO SEND	4	DTE ➡ DIU	P6	MODEM ⬅ DIU	P6
CTS	CLEAR TO SEND	5	DTE ⬅ DIU	P7/P5	MODEM ➡ DIU	P7/P5
DSR	DATA SET READY	6	DTE ⬅ DIU	P4	MODEM ➡ DIU	P4
DTR	DATA TERMINAL READY	20	DTE ➡ DIU	P3	MODEM ⬅ DIU	P3
DCD	DATA CARRIER DETECT	8	DTE ⬅ DIU	P8	MODEM ➡ DIU	P8
RI	RING INDICATOR	22	DTE ⬅ DIU	P9	MODEM ➡ DIU	P9

NOTES:

*1. Mode select **(P1 ~ P9)** "A-B" if PDIU-DS is connected to a terminal-type device (DTE).*

*2. Mode select **(P1 ~ P9)** "B-C" if PDIU-DS is connected to a modem-type device (DCE).*

3. See Figure 4-61 to disassemble/assemble PDIU-DI.

4. Some RS-232 leads go by different names depending on the equipment manufacturer.

FIGURE 4-54—PDIU-DS JUMPER PLUG OPTIONS/RS-232 CONNECTOR INFORMATION

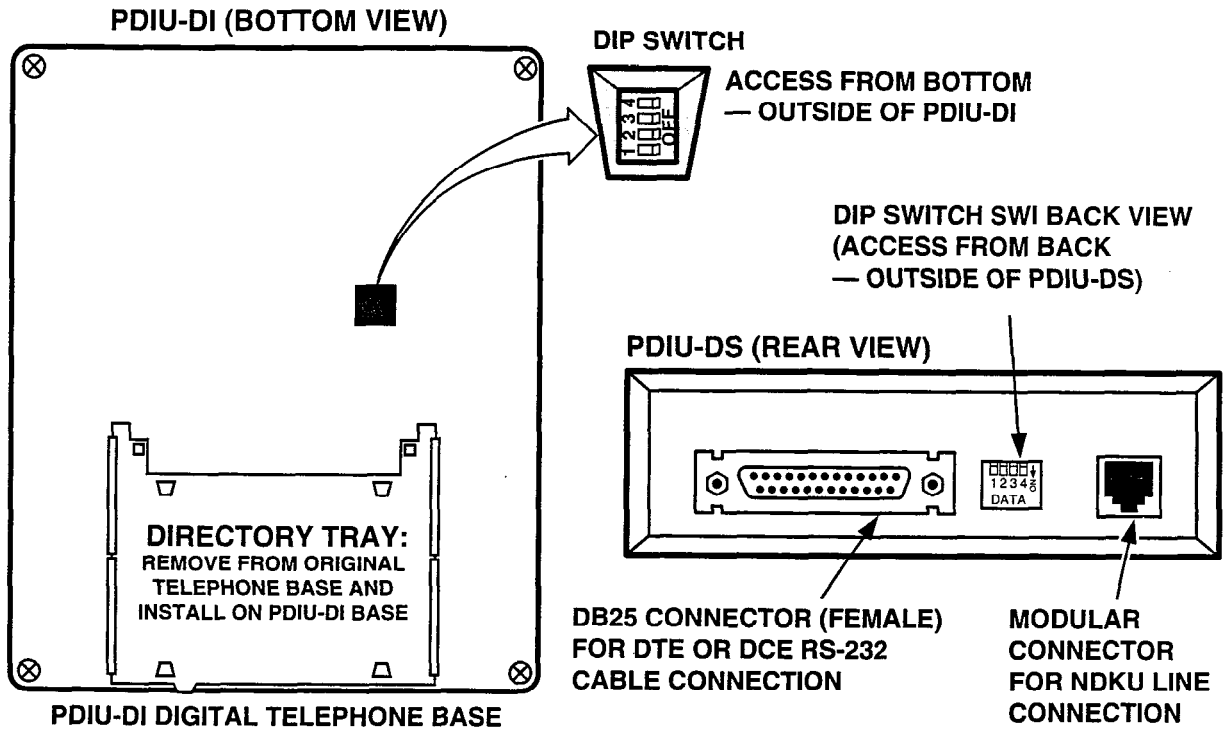

PDIU-DI AND -DS SW1 DIP SWITCH (1 ~ 4) FUNCTIONS

SWITCH	FUNCTION	INITIAL POSITION
SW1 (1)	Forced hang up when DIU does not detect space signal on TD or RD for about 9 minutes ON: enable (auto-disconnect) OFF: disable	OFF
SW1 (2)	DCD, DSR control ON: continuous on OFF: DSR depends on DTR (DCD is on during communication state)	OFF
SW1 (3)	RI control ON: RI is on continuously during ringing state OFF: RI is 1 sec ON/3 sec OFF during ringing state	OFF
SW1 (4)	RTS control ON: DTE doesn't have RTS signal OFF: DTE has RTS signal (ready/busy flow control: RTS/CTS:DCD)	OFF

FIGURE 4-55—PDIU-DI/PDIU-DS SW1 DIP SWITCH INFORMATION

- **Clear to Send (CTS, Pin 5):** The DCE device sends the CTS signal (EIA circuit CB) which indicates that it is prepared to transmit data to the DTE device. The DCE device sends this signal, only when it receives the RTS signal from the DTE device. Sometimes, the DTE/DCE device may use RTS/CTS for Ready/Busy-type flow control; in these cases, dip switch **SW1-4** should be set to **OFF** (see Figure 4-55 for the DIP switch information).
- **Data Set Ready (DSR, Pin 6)**: When connected to the communication channel and prepared to exchange control characters to initiate data transmission, the DCE device sends the DSR signal (EIA circuit CC) to the DTE device. If the PDIU DIP switch **SW1-1** is set to **OFF**, DSR and DCD (see DCD description below) will be **ON** continuously; if the switch is set to **ON**, the PDIU generates DSR only after receiving the DTR signal. Sometimes, DTE/DCE devices use DTR/DSR for Ready/Busy flow control; in these cases, DIP switch **SW1-2** should be set to **OFF** (see Figure 4-55 for the DIP switch information).
- **Signal Ground (SG, Pin 7):** The SG signal (EIA circuit AB) establishes the common ground reference for all other PDIU and data device signals, and must be wired for all applications.
- **Data Carrier Detect (DCD, Pin 8):** The DCE device sends the DCD signal (DCD, Pin 8) when receiving the carrier signal on the line side. Before transmitting or receiving data, most DTE devices require that the DCD be **ON**. If the carrier signal is removed by the remote end or lost due to a fault condition on the line, the DCE notifies the DTE device by an **OFF** condition with the DCD signal. To set the DCD on continuously, PDIU DIP switch **SW1-2** is set to **ON**; if set to **OFF**, the DCD signal will be on during the communication state only. **SW1-2** is set to **OFF** when the DTE/DCE uses the DTR/DSR signals for Ready/Busy flow control (see Figure 4-55 for the DIP switch information).
- **Data Terminal Ready (DTR, Pin 20):** The DTE device sends the DTR signal (EIA circuit CD) to the DCE device, prompting the DCE device to open the communication line. The line is closed and the call disconnected when the DTE device quits sending the DTR signal. DTR may be sent any time to indicate that the DTE is ready to transmit or receive data. Sometimes, DTE/DCE devices use DTR/DSR for Ready/Busy flow control; in these cases, DIP switch **SW1-2** should be set to **OFF** (see Figure 4-55 for the DIP switch information).
- **Ring Indicator (R1, Pin 22):** The RI signal (EIA circuit CE) is sent by the DCE device to the DTE device. Whenever the DCE device receives a ringing signal on the line side, it turns the RI signal on. If PDIU DIP switch **SW1-3** is set to **ON**, the RI signal will be on continuously; if the switch is set to **OFF**, the RI signal will be one second on/three seconds off.

Pin No.		Designation
1	FG	Protective Ground/Frame
2	SD	Transmitted Data (to PDIU)
3	RD	Receive Data (from PDIU)
4	RTS	Request to Send (to PDIU)
5	CTS	Clear to Send (from PDIU)
6	DSR	Data Set Ready (from PDIU)
7	SG	Signal Ground/Common Return
8	RCD	Receive Carrier Detect (from PDIU)
15	ST2	Transmission Signal Element Timing (from PDIU)
17	RT	Transmission Signal Element Timing (from PDIU)
20	DTR	Data Terminal Ready/Equipment Ready (to PDIU)
22	CI	Ring Indicator (from PDIU)

6.120 DIP Switch Options

6.121 Each of the PDIU-DI and the PDIU-DS data units has a four-control DIP switch which can be configured for signaling options. The switch is located on the bottom of the PDIU-DI, and on the back panel of the PDIU-DS (see Figure 4-55).

- **SW1-1:** Normally, this switch is set to **OFF.** When set to **ON**, it automatically disconnects devices from the PDIUs if no data is exchanged between the devices and PDIU for an interval of eight to nine minutes.
- **SW1-2:** This switch is placed in the **ON** position when the PDIU-DI (or PDIU-DS configured like a DCE) must hold DCD and DSR on continuously. Sometimes, a computer may use DTR/DSR for Ready/Busy flow control; in these cases, this switch should be **OFF**. Consult the DTE/DCE device or application software documentation to determine which type of flow control is required.
- **SW1-3:** The PDIU-DI (or PDIU-DS configured as a DCE) sends the Ring Indicate signal (RI) to the computer to tell the computer (DTE) that the PDIU is receiving an incoming call. **SW1-3** should be set to **ON** for the DCE to send RI continuously, and **OFF** to send at one-second-ON/three-seconds-OFF intervals. Consult the DTE/DCE device or application software documentation to determine which type of flow control is required.
- **SW1-4:** This switch is placed in the **ON** position if the computer does not output the RTS signal. Sometimes, the computer may use RTS/CTS for Ready/Busy flow control; in these cases, **SW1-4** should be **OFF**. Consult the DTE/DCE device or application software documentation to determine which type of flow control is required.

6.130 PDIU-DI INSTALLATION

6.131 The PDIU-DI (Figure 4-56) mounts directly on the bottom of a digital telephone (forming a single unit) as follows:

1) Remove the digital telephone base (see Paragraph **6.12**).

2) Replace the telephone base with the PDIU-DI.

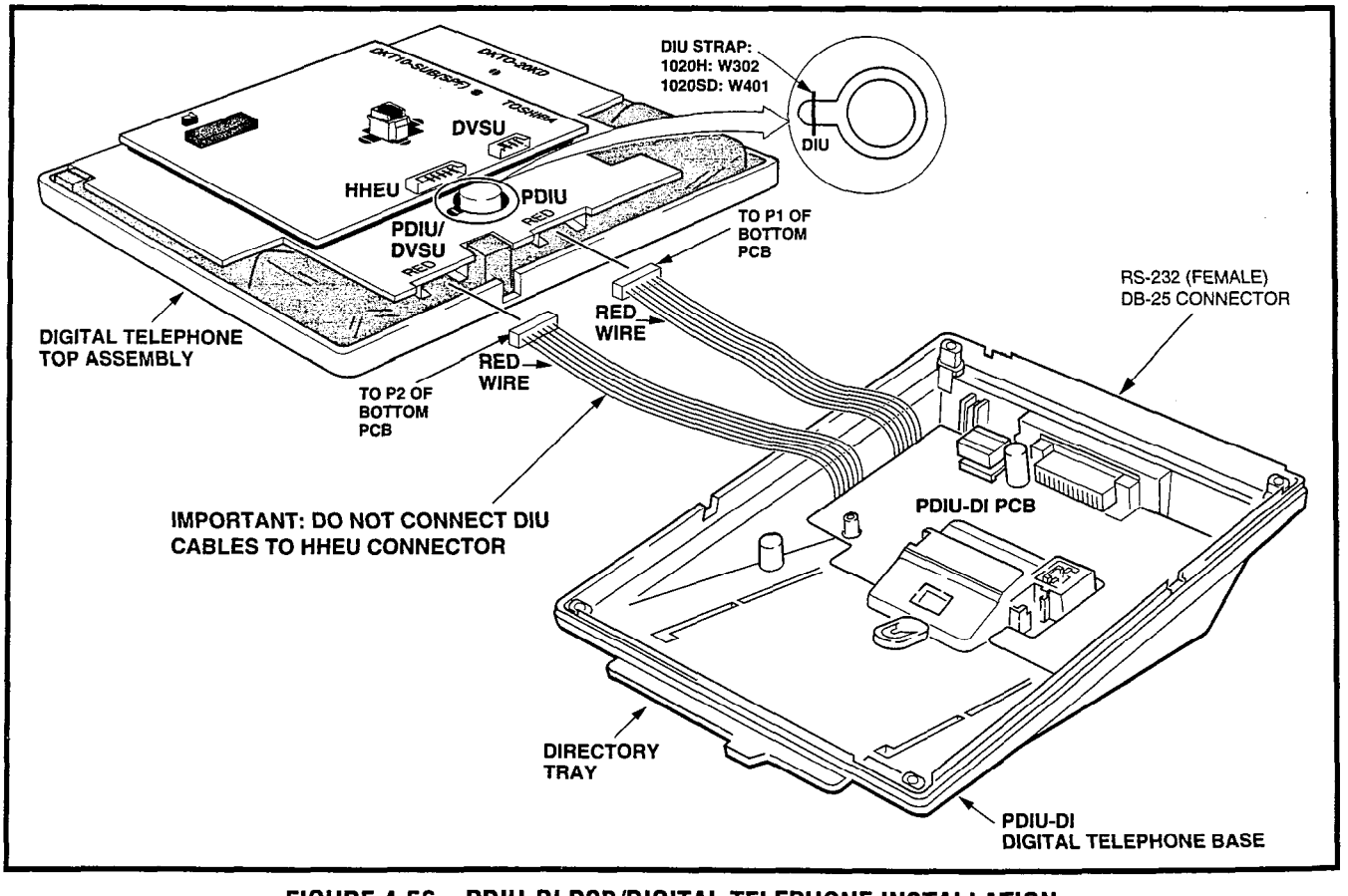

FIGURE 4-56—PDIU-DI PCB/DIGITAL TELEPHONE INSTALLATION

NOTE:
A digital telephone with a PDIU-DI attached cannot be wall-mounted.

6.140 PDIU-DI to Personal Computer (PC) Installation

6.141 The PDIU-DI always functions as a DCE device; it transmits data on the Receive Data lead (RD) and receives data on the Transmit Data lead (TD). Most personal computers function as DTE devices; PCs transmit data on the TD lead and receive data on the RD lead. Follow the steps below to install the PDIU-DI to a DTE or DCE PC:

NOTES:
1. *Use the steps below when installing an ASCII terminal, or any other DTE device to a PDIU-DI.*
2. *The PDIU-DI can connect to a DCE computer or any other DCE-type device using a specially configured RS-232 cable or adapter; however, this application is rarely required.*

1) Install the digital telephone that is to be equipped with PDIU-DI in accordance with the instructions in Section 200-255-205, MDF Arrangement, Paragraph **1.01** and in Figure 5-2.

2) Install the PDIU-DI in the digital telephone's base in accordance with the instructions in Paragraph **6.130**.

NOTE:
The PDIU-DI operates only as a DCE device; therefore, unlike the PDIU-DS, it has no internal jumpers.

3) Connect the appropriate RS-232 cable between the PDIU-DI DB-25 female connector and the PC's appropriate asynchronous serial communications port connector.

IMPORTANT NOTE!
Check the PC manufacturer's serial communication port interface documentation for correct RS-232 pin requirements; requirements vary with each manufacturer. The number of EIA RS-232 signals required (8, 9, or 10 wires) will depend on the application. When EIA signal requirements are not known, connect the 10 EIA signals listed in Paragraph 6.110. Figures 4-57, 4-58, and 4-59 provide diagrams for connecting RS-232 cables between PDIU-DIs and a Toshiba printer and laptop computer, IBM XT-type and AT-type personal computers.

4) Set the PDIU-DI/PDIU-DS DIP switch (**SW1-1 ~ 4**) for the desired application. Figure 4-55 shows the DIP switch locations and Paragraph 6.120 describes the switch functions.

5) Access the DEKT and DDIU Programs for PDIU port connection and data button assignments.
   - The port number entered for the PDIU-DI in the DDIU Program is the adjacent port number of the digital telephone.

     Example: DKT port number = L024, PDIU-DI port number = L034

IMPORTANT NOTE!
The eighth port (circuit) of the NDKU cannot be used for data switching connections (PDIU-DI or PDIU-DS).

6.150 PDIU-DS To Printer Installation

6.151 PERCEPTION$_{e\&ex}$ enables serial printers (laser, dot matrix, or other types) to be connected to stand-alone data interface units (PDIU-DS). Digital telephones equipped with PDIU-DI and Electronic Telephones equipped with DDIU-MAT can share access to these printers. Serial printers operate as DCE or DTE devices, depending on the vendor. The PDIU-DS can be connected to either type, since it can be configured as a DTE or DCE device. (The PDIU-DS comes from the factory configured as a DCE device.) Follow the steps below to install the PDIU-DS to a serial printer.

TOSHIBA PS321SL PRINTER (FUNCTIONS LIKE A DTE)

DB25 PIN DESIGNATIONS

PRINTER PIN #	1	2	3	4	5	6	7	8	20	22
NAME	FG	TD	RD	RTS	N/C	DSR	SG	DCD	DTR	RI

PDIU-DS (CONFIGURED IN THE "CONNECT TO DTE" MODE: P1 ~ P9 = A-B SO PDIU FUNCTIONS LIKE A DCE)

DB25 PIN DESIGNATIONS

PDIU-DS PIN #	1	2	3	4	5	6	7	8	20	22
NAME	FG	TD	RD	RTS	CTS	DSR	SG	DCD	DTR	RI

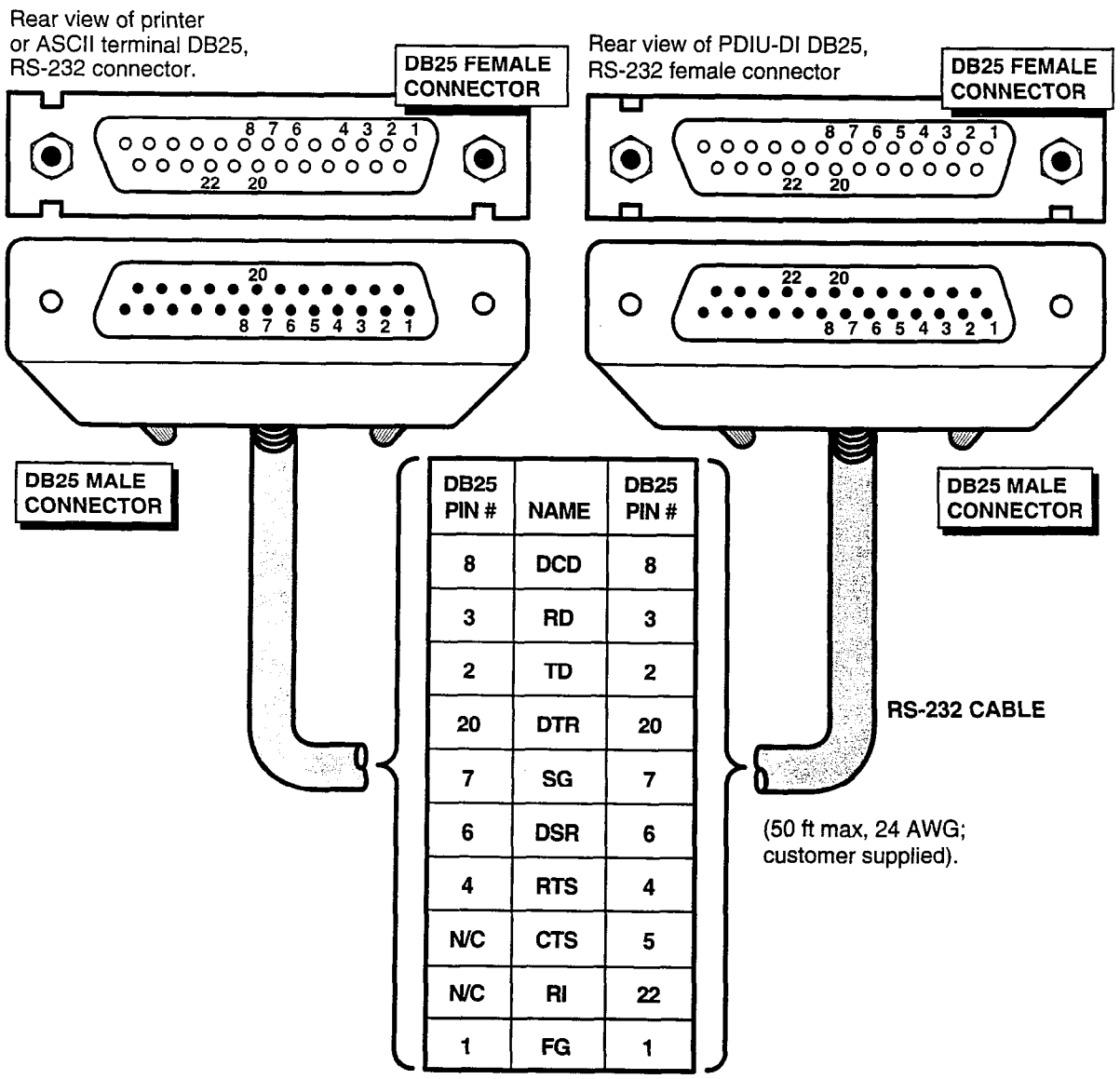

DB25 PIN #	NAME	DB25 PIN #
8	DCD	8
3	RD	3
2	TD	2
20	DTR	20
7	SG	7
6	DSR	6
4	RTS	4
N/C	CTS	5
N/C	RI	22
1	FG	1

NOTES:

1. *The printer receives data on pin 3 (RD) and transmits data on pin 2 (TD).*
2. *The PDIU-DS should be in the connect to DTE mode (**P1 ~ P9** are strapped A-B), so that it transmits data on pin 3 (RD) and receives data on pin 2 (TD).*

FIGURE 4-57—PDIU-DS TO TOSHIBA PRINTER, RS-232 CONNECTOR/CABLE CONNECTIONS

IBM XT PERSONAL COMPUTER OR ASCII TERMINAL (FUNCTIONS LIKE A DTE)

DB25 PIN DESIGNATIONS

PDIU-DI PIN #	1	2	3	4	5	6	7	8	20	22
NAME	FG	TD	RD	RTS	CTS	DSR	SG	DCD	DTR	RI

PDIU-DI (FUNCTIONS LIKE A DCE)

DB25 PIN DESIGNATIONS

PDIU-DI PIN #	1	2	3	4	5	6	7	8	20	22
NAME	FG	TD	RD	RTS	CTS	DSR	SG	DCD	DTR	RI

Rear view of personal computer or ASCII terminal DB25, RS-232 connector

DB25 MALE CONNECTOR

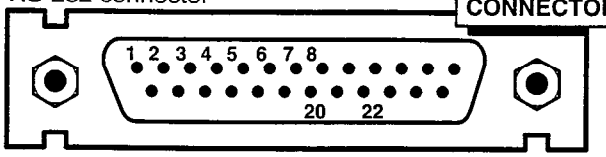

Rear view of PDIU-DI DB25, RS-232 female connector

DB25 FEMALE CONNECTOR

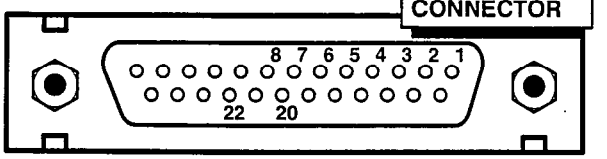

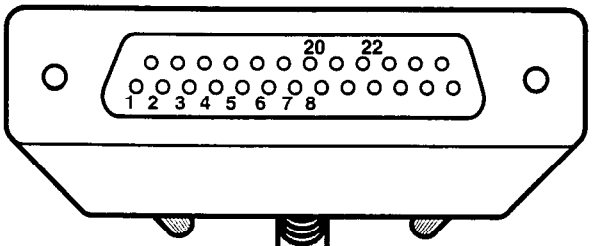

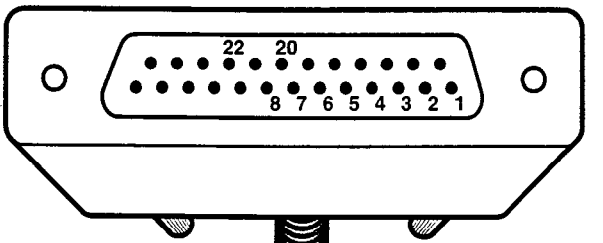

DB25 FEMALE CONNECTOR

DB25 MALE CONNECTOR

DB25 PIN #	NAME	DB25 PIN #
8	DCD	8
3	RD	3
2	TD	2
20	DTR	20
7	SG	7
6	DSR	6
4	RTS	4
5	CTS	5
22	RI	22
1	FG	1

RS-232 CABLE

IBM PC XT modem style (serial) DB25 to DB25 (M/F) RS-232 cable (50 ft max, 24 AWG, customer supplied).

NOTE:
The PC/ASCII terminal receives data on pin 3 (RD) and transmits data on pin 2 (TD).

FIGURE 4-58—PDIU-DI TO IBM XT-TYPE COMPUTER, RS-232 CONNECTOR/CABLE CONNECTIONS

TOSHIBA LAPTOP OR IBM AT-TYPE PERSONAL COMPUTER (DTE)
PIN DESIGNATIONS

COM PORT PIN #	1	2	3	4	5	6	7	8	9
NAME	DCD	RD	TD	DTR	SG	DSR	RTS	CTS	RI

PDIU-DI (FUNCTIONS LIKE A DCE)
PIN DESIGNATIONS

PDIU-DI PIN #	1	2	3	4	5	6	7	8	20	22
NAME	FG	TD	RD	RTS	CTS	DSR	SG	DCD	DTR	RI

Rear view of asynchronous (serial) communication interface connector (DB9) of Toshiba laptop or IBM AT personal computer

Rear view of PDIU-DI DB25, RS-232 female connector

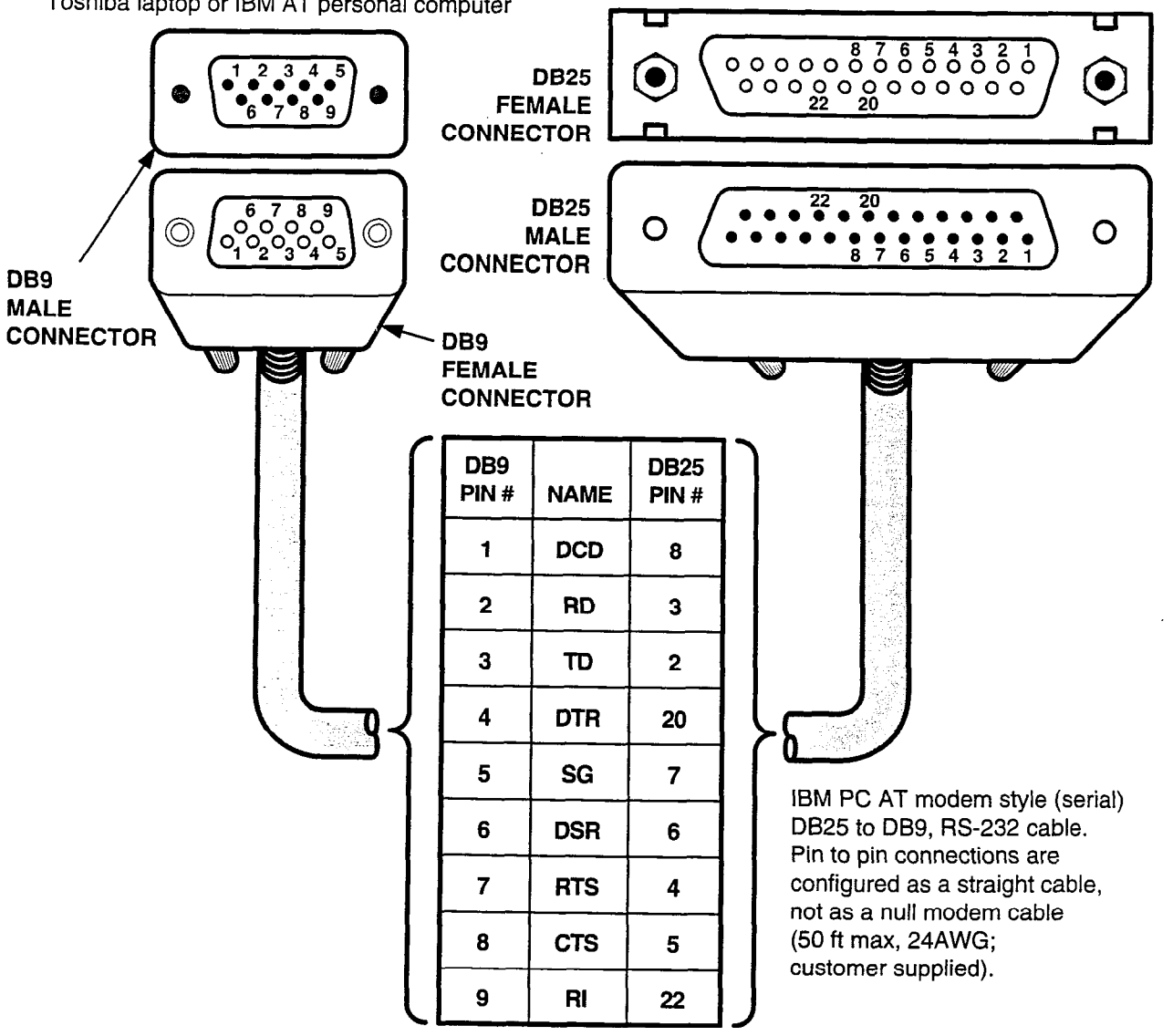

DB9 PIN #	NAME	DB25 PIN #
1	DCD	8
2	RD	3
3	TD	2
4	DTR	20
5	SG	7
6	DSR	6
7	RTS	4
8	CTS	5
9	RI	22

IBM PC AT modem style (serial) DB25 to DB9, RS-232 cable. Pin to pin connections are configured as a straight cable, not as a null modem cable (50 ft max, 24AWG; customer supplied).

NOTES:
1. Some RS-232 EIA leads may be called by other names by some manufacturers.
2. The computer receives data on pin 2 (RD) and sends data on pin 3 (TD).

FIGURE 4-59—PDIU-DI TO IBM AT-TYPE COMPUTER, RS-232 CONNECTOR/CABLE CONNECTIONS

NOTES:

1. *Only serial printers that conform to EIA RS-232 signaling requirements can be connected to PDIU-DS units.*
2. *In rare applications, printers can be connected to PDIU-DIs. Refer to the printer's installation instructions.*

1) Consult the serial printer's documentation, and determine if the printer operates as a DCE or DTE device:
   - As a DCE device:
     a) Disassemble the PDIU-DS, and configure it to operate like a DTE device by placing the jumper plugs **P1 ~ P9** in the "B-C" (MODEM) position.
     b) Reassemble the PDIU-DS, and mark "B-C" on the bottom identification label for future reference. (Paragraph 6.170 provides PDIU-DS disassembly/assembly instructions, and Figure 4-54 provides jumper plug information).

   - As a DTE device:
     It may not be necessary to disassemble the PDIU-DS, since it comes direct from the factory configured as a DCE device. However, if uncertain,
     a) Disassemble the PDIU-DS, and verify that jumper plugs **P1 ~ P9** are in the "A-B" (DTE) position for DTE operation.
     b) Reassemble the PDIU-DS and mark "A-B" on the bottom identification label for future reference. (Paragraph **6.170** provides PDIU-DS disassembly/assembly instructions, and Figure 4-54 provides jumper plug information).

2) Connect the PDIU-DS to the appropriate NDKU circuit in accordance with the wiring diagrams in Section 200-255-205.

3) Connect the appropriate RS-232 cable between the printer and the PDIU-DS.

4) If steps 2 and 3 are properly done, the POWER and READY LEDs on the PDIU-DS should light when the printer is turned on.

IMPORTANT NOTE!
Check the printer's serial documentation for correct RS-232 pin requirements. The requirements vary with each manufacturer.

5) Refer to the **DDIU Program** for PDIU-DS data assignments.

IMPORTANT NOTE!
The eighth port (circuit) of the NDKU cannot be used for data switching connection (PDIU-DI or PDIU-DS).

6.160 PDIU-DS To Modem Installation

6.161 With **D.04** software, PERCEPTION$_{e\&ex}$ enables asynchronous-type (**not** synchronous) modems to be connected to PDIU-DS's. This allows PDIU-DI-equipped digital telephones that are connected to PCs, terminals, and other devices to share access to a modem.

6.162 Modems can be accessed internally for outgoing data calls or externally for incoming data calls. Modems operate as DCE devices, so the PDIU-DS must be configured to operate like DTE devices. The installation example in Figure 4-51 shows that two modems are connected to NSTU ports; however, the line side of modems can be directly connected to a dedicated CO line. The modem connects to the PDIU-DS with a standard RS-232 connector; the PDIU-DS line side (RJ-11 connector) always connects to its own individual NDKU port. Use the following instructions to connect modems to PDIU-DS's.

1) Configure the PDIU-DS as a DTE device:
   a) Disassemble the PDIU-DS, and place jumper plugs **P1 ~ P9** in the "B-C" position (MODEM).
   b) Reassemble the PDIU-DS, and mark "B-C" on the bottom identification label for future reference (Paragraph **6.170** provides

PDIU-DS disassembly/assembly instructions, and Figure 4-54 provides jumper plug information).

2) Connect the PDIU-DS to the appropriate NDKU circuit in accordance with the wiring diagrams in Section 200-255-205.

3) Connect the appropriate RS-232 cable between the modem and the PDIU-DS. Figure 4-60 shows an example of PDIU-DS to a Hayes modem RS-232 connection.

IMPORTANT NOTE!
All ten PDIU-DS EIA leads (signals) should be connected to the modem. Consult the modem's documentation for correct RS-232 pin requirements. The requirements may vary with each manufacturer.

4) Connect the line side of the modem to a NSTU standard telephone circuit, or a dedicated CO line (Consult the modem's documentation to connect it to a CO line). Section 200-255-205 provides NSTU station port wiring information.

5) Refer to the **DDIU Program** for PDIU-DS connection assignments.

IMPORTANT NOTE!
The eighth port (circuit) of the NDKU cannot be used for data switching connections (PDIU-DI or PDIU-DS).

6.170 PDIU-DS Disassembly and Assembly

6.171 To set the jumper plugs **P1 ~ P9** on the subassembly inside the PDIU-DS for DCE or DTE operation, the PDIU-DS must be disassembled (Figure 4-61). Disassemble the PDIU-DS in accordance with the steps in Paragraph **6.172**.

6.172 Disassembling the PDIU-DS

1) Remove the four screws securing the bottom panel to the rest of the unit. These screws are not captive, so place them together where they can be easily accessed.

2) Remove the bottom panel.

3) Remove the PCB by lifting the back panel from its side grooves.

4) Turn the PCB over and set jumper plugs **P1 ~ P9** as follows:
   - If the PDIU-DS is connected to a DTE, set the plugs to the "A-B" position.
   - If the PDIU-DS is connected to a DCE device, set the plugs to the "B-C" position.

6.173 Assembling the PDIU-DS

1) Position the back panel to the PCB.

2) Slide the back panel down into its side grooves.

3) Attach the bottom panel, and secure it with the four noncaptive screws.

6.180 PDIU-DI/PDIU-DS Installation Tests

6.181 Figures 4-62 ~ 4-65 provide tests for four PDIU call applications. The telephone and port numbers used in these figures are provided for explanation purposes only. When actually testing, use port and telephone numbers appropriate for the system. Each of these tests can be conducted with either manual dialing from a telephone dialpad, or AT dialing from a personal computer keyboard; however, only the preferred method of dialing for the application is presented. The *PDIU User Guide* has additional information on the tests, which are listed below:

- Figure 4-62—PC to PC Test Call Using AT Commands
- Figure 4-63—PC to Printer Test Call Using Manual Dialing
- Figure 4-64—Internal PC to External PC Test Call Using AT Commands
- Figure 4-65—External PC to Internal PC Test Call Using AT Commands

HAYES-TYPE SMART MODEM (FUNCTIONS LIKE A DCE)

MODEM PIN #	1	2	3	4	5	6	7	8	20	22
NAME	FG	TD	RD	RTS	CTS	DSR	SG	DCD	DTR	RI

PDIU-DS (CONFIGURED IN THE "CONNECT TO MODEM" MODE, P1 ~ P9 = B-C, SO IT FUNCTIONS LIKE A DTE)

PDIU-DS PIN #	1	2	3	4	5	6	7	8	20	22
NAME	FG	TD	RD	RTS	CTS	DSR	SG	DCD	DTR	RI

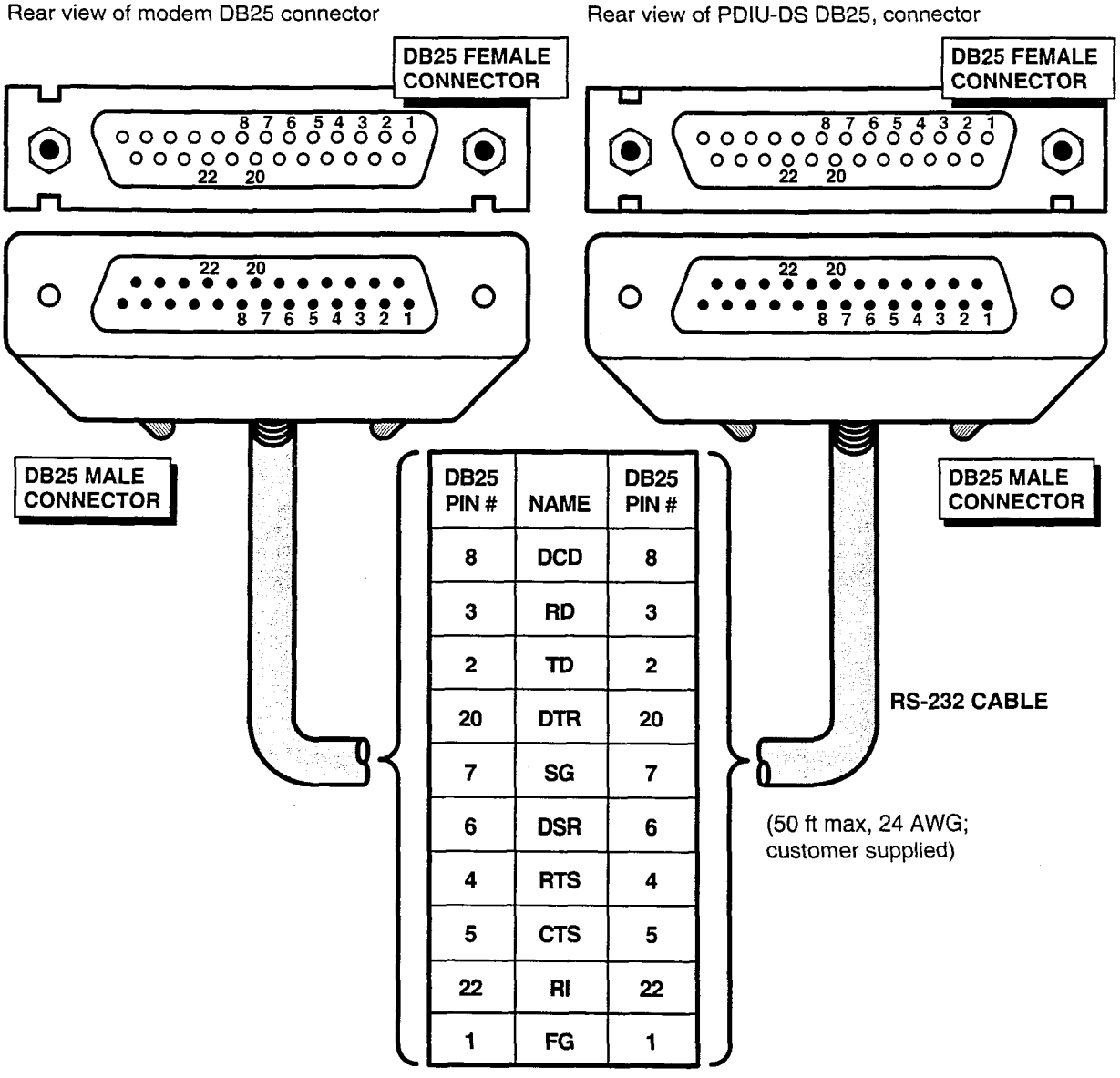

DB25 PIN #	NAME	DB25 PIN #
8	DCD	8
3	RD	3
2	TD	2
20	DTR	20
7	SG	7
6	DSR	6
4	RTS	4
5	CTS	5
22	RI	22
1	FG	1

NOTES:

1. *Modem receives data on pin 2 (TD) and transmits data on pin 3 (RD).*
2. *The PDIU-DS must be in the connect to modem mode (**P1 ~ P9** strapped B-C) so that it transmits data on pin 2 (TD) and receives data on pin 3 (RD).*

FIGURE 4-60—PDIU-DS TO HAYES-TYPE SMART MODEM, RS-232 CONNECTOR/CABLE CONNECTIONS

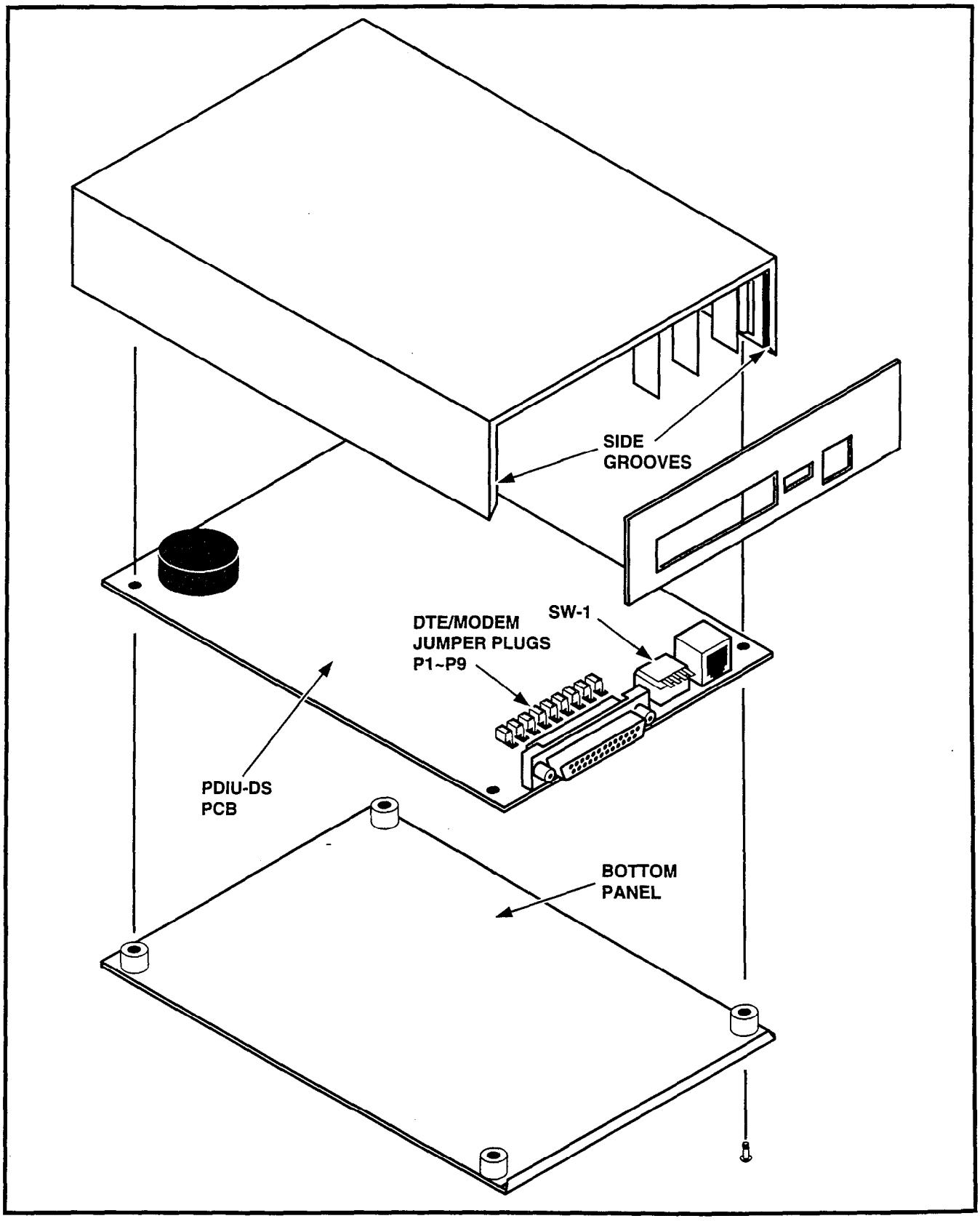

FIGURE 4-61—PDIU-DS DISASSEMBLY/ASSEMBLY DIAGRAM

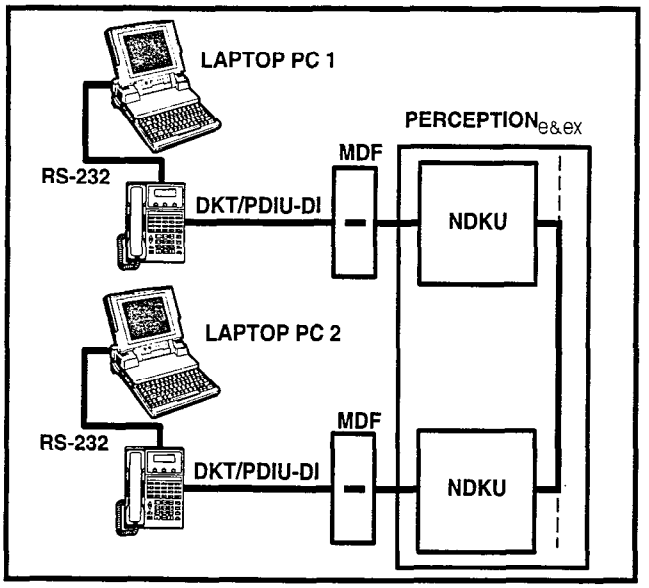

FIGURE 4-62
PC TO PC TEST CALL USING AT COMMANDS

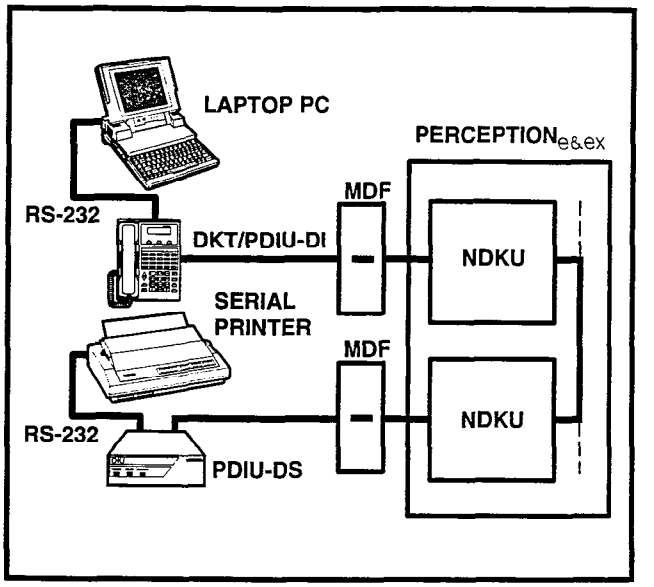

FIGURE 4-63
PC TO PRINTER TEST CALL USING MANUAL DIALING

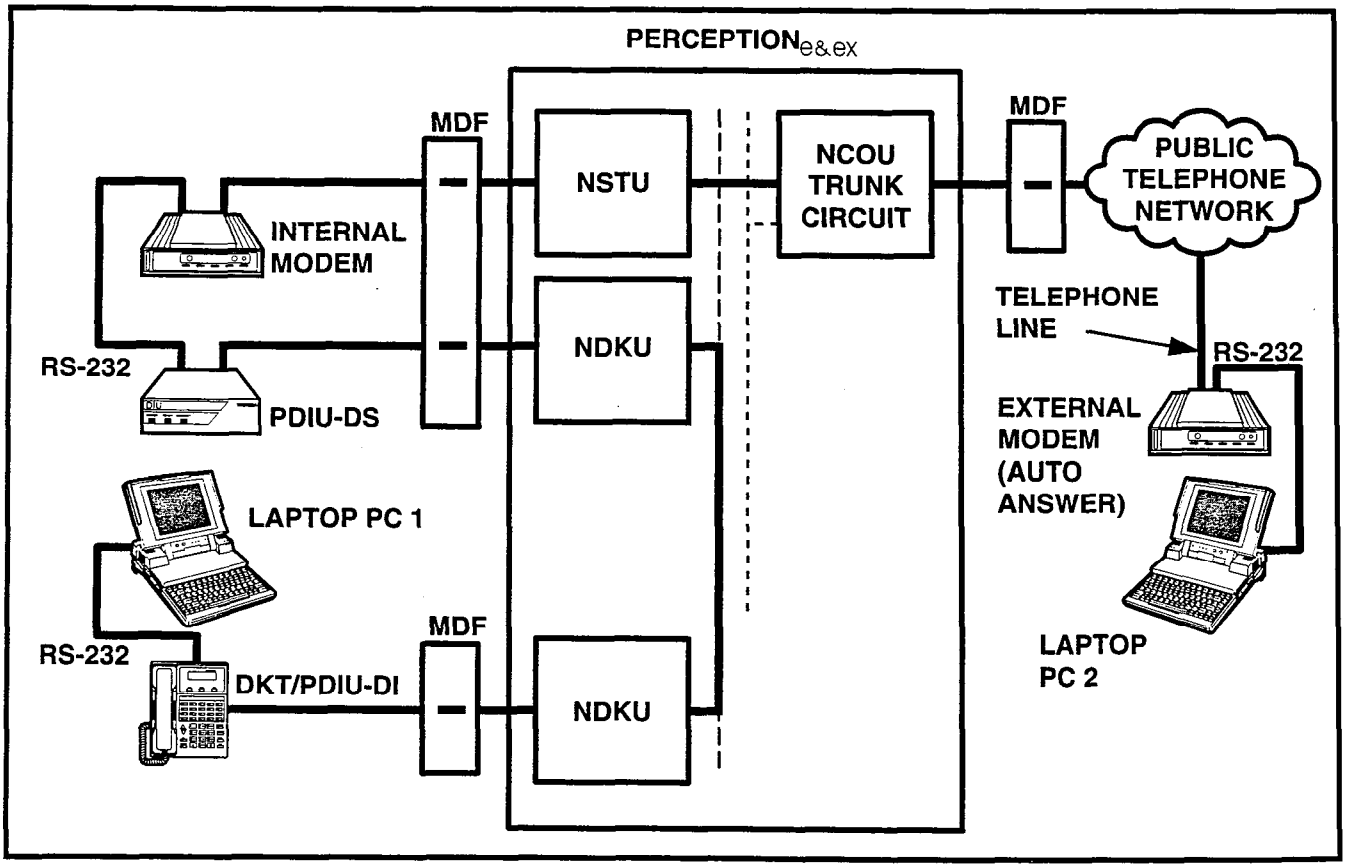

FIGURE 4-64—INTERNAL PC TO EXTERNAL PC TEST CALL USING AT COMMANDS

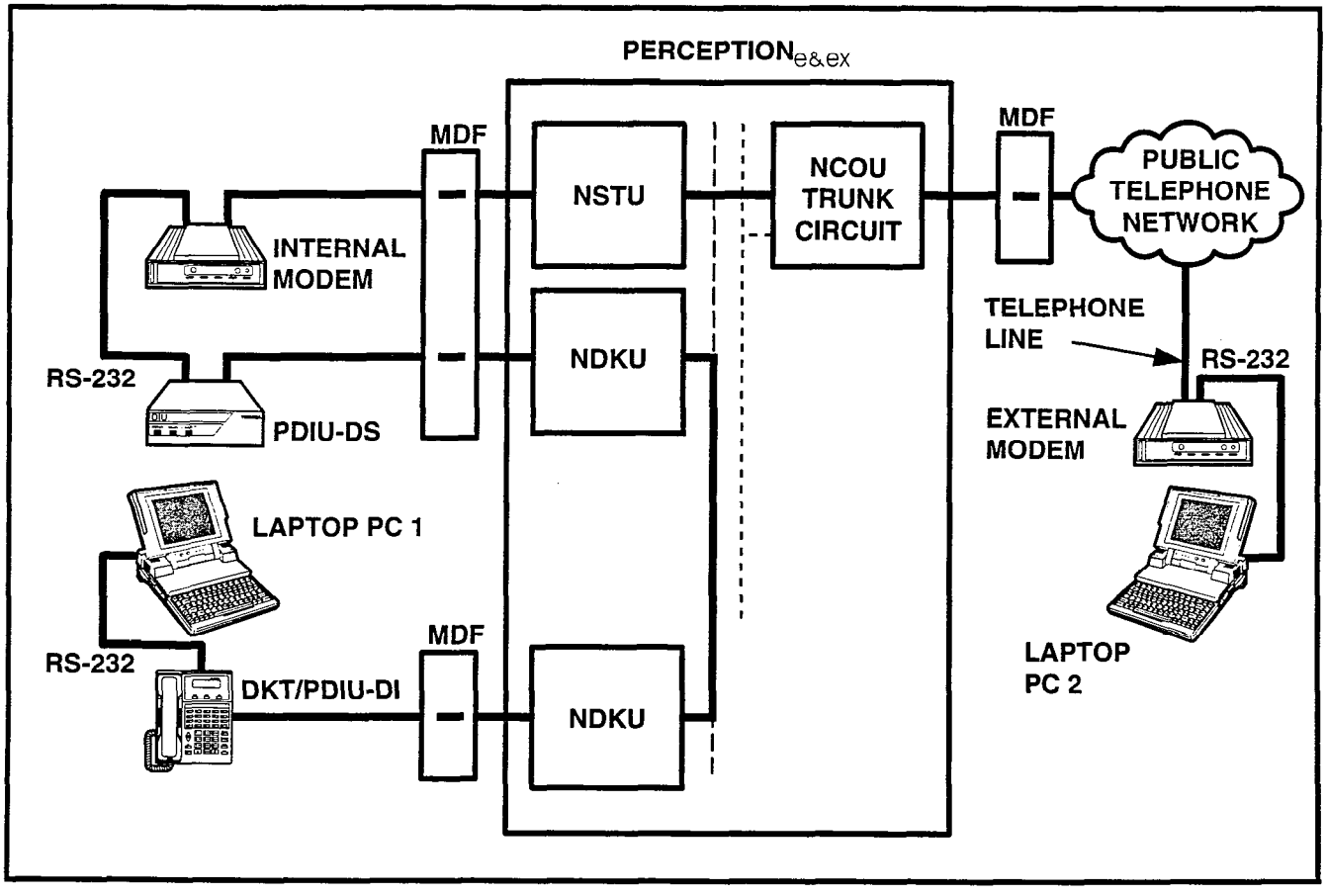

FIGURE 4-65—EXTERNAL PC TO INTERNAL PC TEST CALL USING AT COMMANDS

6.182 PC to PC Test Call Using AT Commands

1) Make sure that PC 1 and PC 2 are equipped with a communication software package, and that the communication parameters of each PC and the communication software package are set to the same values (data transmission rate, flow control, etc.).

2) From either PC keyboard, type **A T D X X X X** and press ENTER, where XXXX is the Data Extension number. (AT commands must be capital letters.)

3) To terminate the call:
   a) Type **+ + +** from either PC keyboard.
      - The PC screen displays "OK."
   b) Type **A T H** from the PC keyboard used in step 3a.
      - PC 1 and PC 2 screens both display "NO CARRIER."
      - The DATA LED on each DKT will be off.

6.183 PC to Printer Test Call Using Manual Dialing

1) Make sure that the PC is configured to print data from its serial COM port (the PC COM port is connected to DKT/PDIU-DI). This is normally accomplished using the DOS and MODE commands.

2) Using the manufacturer's documentation, make sure that the communication parameters (data speed, data bits, etc.) of the PC COM port match the printer's serial interface parameters.

3) To connect the PC to the printer, press the DKT's DATA button and dial **X X X**, where XXX is the Data Extension number.

- The CONNECT LED on the PDIU-DS will light.
- The connection between the PC and the printer is complete.
- If busy tone is sent to the DKT, the connection is not complete. Try step 3 again.

4) Operate the PC to print data as required.

5) To terminate the call, press the DKT's DRS button.

6.184 Internal PC to External PC Test Call Using AT Commands

1) Make sure PC 1 and PC 2 are equipped with a communication software package, and that the communication parameters of each PC and communication software package are set to the same values (data transmission rate, flow control, etc.).

2) From PC 1's keyboard, type **A T D X X X X** and press ENTER, where XXXX is Data Extension number. (AT commands must be capital letters.)
   - The DATA LED on the DKT will light.
   - The CONNECT LED on the PDIU-DS will light.
   - The screen on PC 1 displays "CONNECT XXXX," where XXXX is the data transmission speed set by the communication software.
   - At this time, PC 1 and the PDIU-DS are connected.

3) From PC 1's keyboard, type **A T D T X X X X X X X X X X** and press ENTER, where XXXXXXXXXXX is the trunk access code and modem telephone number.
   - The internal modem goes off-hook, dials the access code to seize the trunk, and then dials the external modem's telephone number.
   - The external modem rings and auto answers, the modems handshake and establish communications.
   - If the external modem sends result codes, the screen on PC 1 displays "CONNECT XXXX," where XXXX is the data transmission speed set by the communication software.
   - At this time PC 1 and PC 2 are connected, and can exchange data (file transfers, type messages, etc.).

4) To terminate the call:
   a) Type **+ + +** from either PC keyboard.
      - The PC screen displays "OK."
   b) Type **A T H** from the PC keyboard used in step 5a.
      - PC 1 and PC 2 screens both display "NO CARRIER."
      - The DATA LEDs on each DKT will go out.

6.185 External PC to Internal PC Test Call Using AT Commands

1) Make sure PC 1 and PC 2 are equipped with a communication software package, and that the communication parameters of each PC and communication software package are set to the same values (data transmission rate, flow control, etc.).

2) From PC 2's keyboard, type **A T D X X X X X X X** and press ENTER, where XXXXXXX is telephone number.
   - The external modem originates the call.
   - Trunk rings incoming call to the internal modem.
   - The internal modem rings and auto answers, the modems handshake and establish communications.
   - If the internal modem sends result codes, PC 2's screen displays "CONNECT XXXX," where XXXX is the data transmission speed set by the communication software.
   - At this time, PC 2 is connected to the PDIU-DS.

3) From PC 2's keyboard, type **A T D X X X X** and press ENTER, where XXXX is the Data Extension number. (AT commands must be capital letters.) This prompts the PDIU-DS to dial and connect to the PDIU-DI.
   - The CONNECT LED on the PDIU-DS will light, the DATA LED on the DKT will also light.
   - The screens on PC 1 and PC 2 display "CONNECT XXXX," where XXXX is the data transmission speed set by the communication software.
   - At this time PC 1 and PC 2 are connected and they exchange data (file transfers, typed messages, etc.).

4) To terminate the call:
   a) Type + + + from either PC keyboard.
      - The PC screen displays "OK."
   b) Type **A T H** from the PC keyboard used in step 5a.
      - PC 1's and PC 2's screens both display "NO CARRIER."
      - The DATA LED on each DKT will go out.

7. STANDARD TELEPHONE EQUIPMENT INSTALLATION

7.00 Standard Telephone Connections

7.01 See the **DSTT Program** in Section **200-255-300**, *Programming*, for instructions on programming standard telephones. The system must be told at which ports standard telephones are installed.

7.02 Standard telephones require single-pair wire and are connected to the MDF via standard twisted-pair telephone cables.

7.03 Standard telephone connection details are shown in Figure 4-66.

8. TRUNK CONNECTIONS

8.10 Connections from the telephone company jack (RJ21X for CO/FX/WATS/DID trunks and RJ2EX for E & M TIE trunk) should be terminated on a 66-block, and then cross-connected to the appropriate leads on the CO portion of the MDF, using the Tables 5-7, 5-8, and 5-13 ~ 5-15 as guides. Connection requirements for each type of trunk are shown below.

DESIGNATOR	FUNCTION	TRUNK TYPE
T	Tip	CO, DID, TIE
R	Ring	CO, DID, TIE
T1	Tip 1	TIE (4-wire)
R1	Ring 1	TIE (4-wire)
E	E	TIE
SG	Sig. Gnd.	TIE (Type II)
M	M	TIE
SB	Sig. Bat.	TIE (Type II)

9. PERIPHERAL EQUIPMENT INSTALLATION

9.00 Modem Pooling Connections (DDIU-MA only)

9.01 See the **NMDM Program** in Section **200-255-300,** *Programming*, to input information concerning *Modem Pooling for the DDIU-MA only.*

9.02 Most modems require only single-pair wiring and are connected to the MDF via standard twisted-pair telephone cables. However, some modems may require a two-pair connection (one for transmit—one for receive). For this type of connection, use the next wire pair (which is not normally used). Modem Pooling Connection details are shown in Figure 4-67.

IMPORTANT!
All connections to DDIUs (-MA or -MAT) must observe correct tip and ring polarity for proper operation.

9.10 Power Failure/Emergency Transfer

9.11 One DPFT can be installed in a two-cabinet system. Install the DPFT as follows:

1) Mount the DPFT near the MDF.

2) Using 25-pair cables with amphenol-type connectors (female for **J1**, male for **J2**), connect the DPFT to two 66-type cross-connect blocks.

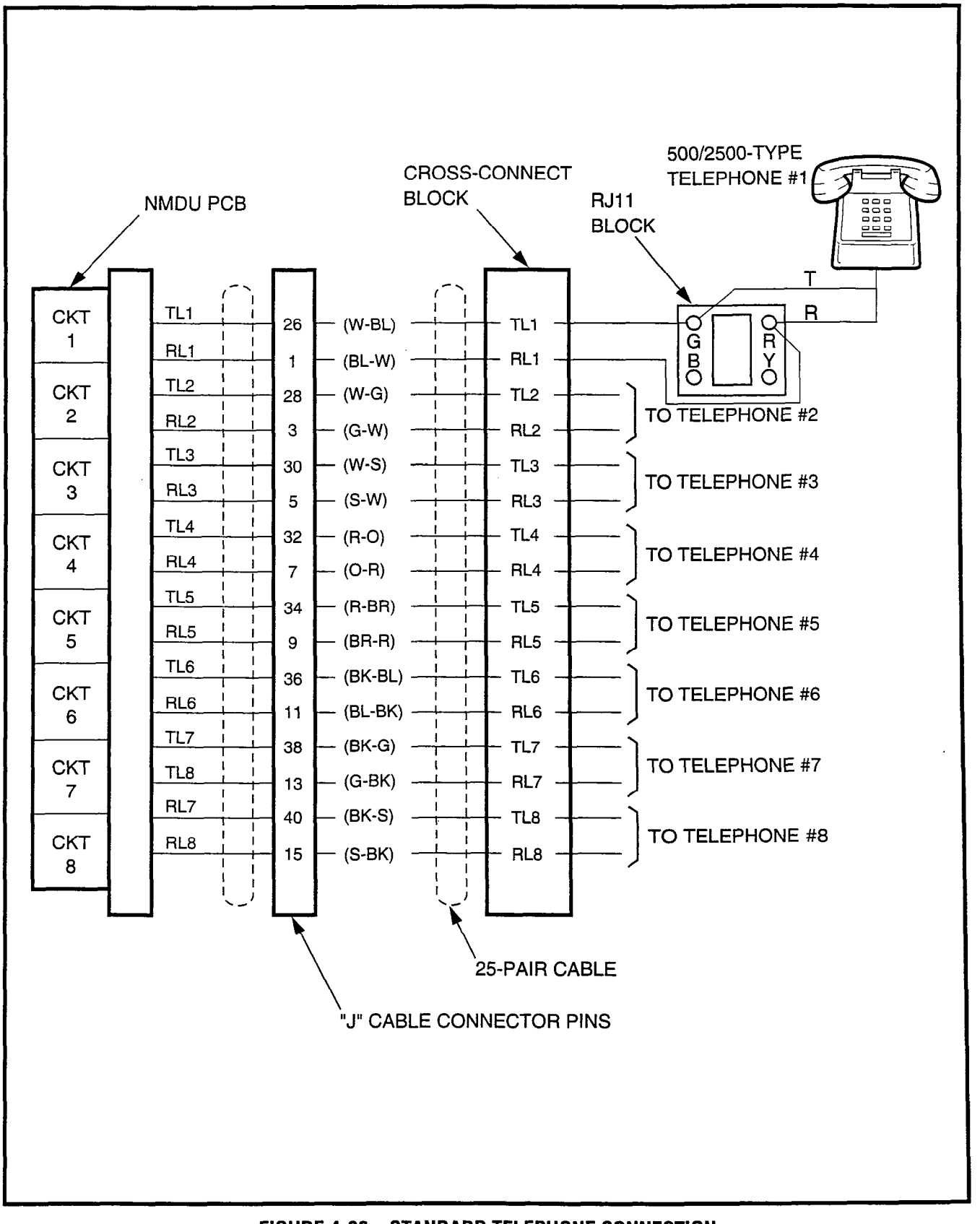

FIGURE 4-66—STANDARD TELEPHONE CONNECTION

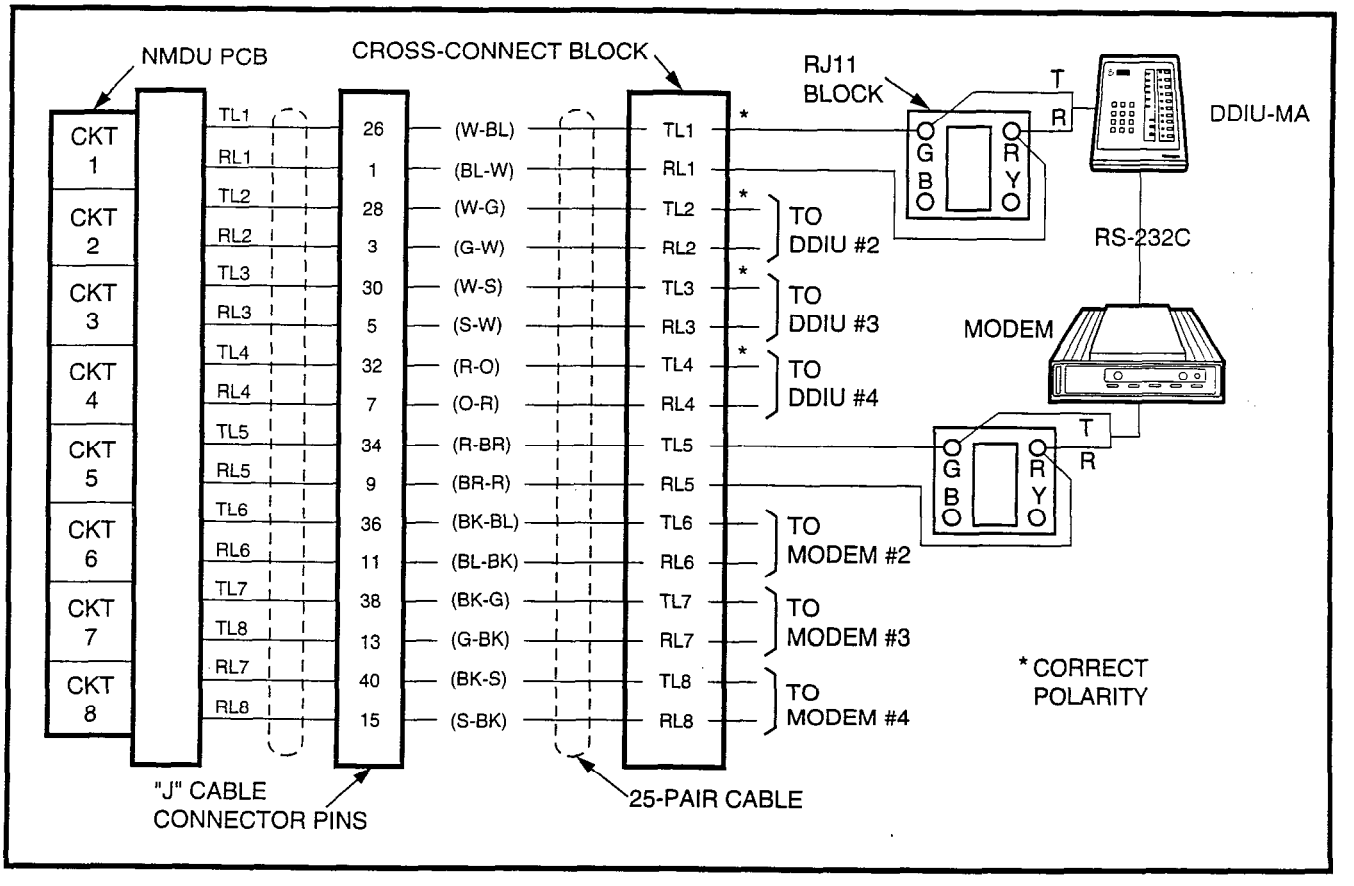

FIGURE 4-67—MODEM POOLING CONNECTION (DDIU-MA ONLY)

3) Using Tables 5-8 and 5-15 for guides:
   - Connect the trunks selected for emergency use to the **J1** block "CO Tip" and "CO Ring" terminals.
   - Connect the NCOU circuits supporting the emergency trunks to the **J1** block "NCOU Tip" and "NCOU Ring" terminals.

4) Using Tables 5-6, 5-7, 5-9, 5-14 and 5-16 for guides:
   - Connect the standard telephone stations, designated for emergency use, to the proper terminals on the **J2** block "TEL Tip" and "TEL Ring" terminals.

5) At the MDF, connect the DPFT to the system as follows:

PERCEPTION$_e$
DPFT **J1** (trunk) = LCEC/NCEC-M & S **J8-J15/J508-J515**
Pin 25 (S-V) = Pin 25 (S-V)*
Pin 50 (V-S) = Pin 50 (V-S)*
DPFT **J2** (station) = LCEC/NCEC-M & S **J4-J15/J504-J515**

PERCEPTION$_{ex}$
Any trunk position

On the **J1 connector, the pin 25 connection provides the -24 VDC input required to drive the DPFT and the pin 50 connection provides ground. There are no power connections on connector **J2.***

9.20 Reserve Power

9.21 Install Reserve Power as follows (Figure 4-68):

1) Place the customer-supplied battery pack where it will be located.

CAUTION!

Batteries can emit fumes that are poisonous to people, potentially explosive, and corrosive to electronic components. Locate batteries so that any fumes are adequately vented per local fire codes.

2) Place the **POWER** switch (on the front of the main power supply) in the **OFF** position and remove the AC power cable from the outlet.

3) Connect the battery pack leads (customer-supplied) to **TB2 BAT** on the NPSA-M or LPSA (Figure 4-68). Observe the correct polarity. Leave the leads from the peak load battery connected.

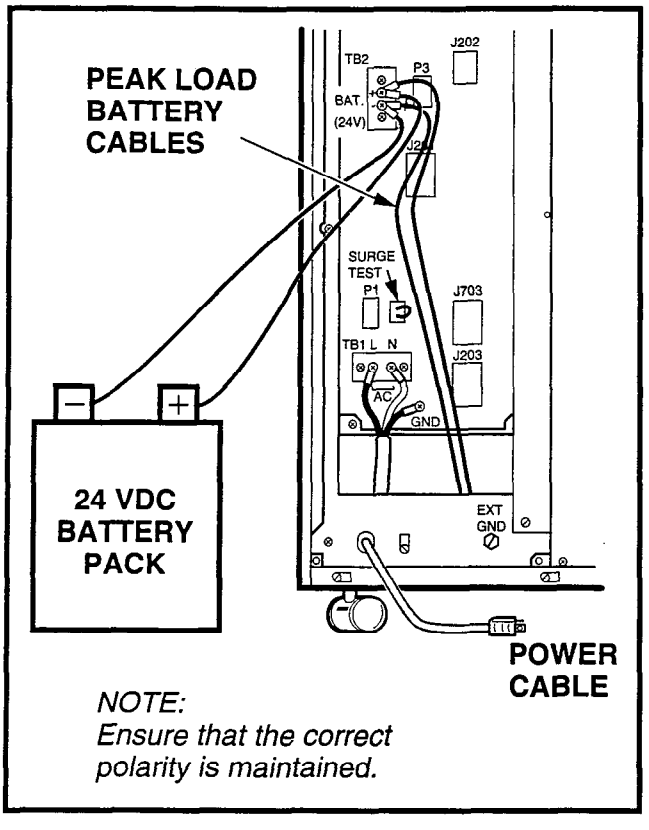

FIGURE 4-68—RESERVE POWER INSTALLATION

4) Connect the leads to the battery pack (Figure 4-67). Observe the correct polarity. Fix battery leads to the cabinet using the clamp.

5) Place the **BAT BACK UP** switch on the front of the main power supply in the **ON** position.

6) Plug the AC cable into the outlet and turn the **POWER** switch **ON**.

9.30 Paging Equipment

9.31 By combining a single customer-supplied paging amplifier with the system's paging interface and speaker zone switching, it is possible to provide a paging system of up to five zones with All Zone Page capability.

9.32 Figures 4-69, 4-70 and 4-71 show possible paging arrangements. As a standard feature (part of the NPRU PCB), the system provides a 600-ohm output to a paging amplifier. If more than one paging zone is required, the output of the amplifier can be routed back to the NPRU PCB where it will be switched to one of five sets of speakers. The speaker operated is determined by the access code dialed by the station user. The actual access code is assigned in software (see Section **200-255-300**, *Programming*).

9.33 An All Page code can also be defined in software. When that code is dialed, all relays will be activated simultaneously to permit paging to all speaker zones.

9.34 If the power loads of the different zones are such that a single amplifier is not suitable, multiple amplifiers (up to one for each zone) can be connected as shown in Figure 4-71.

9.35 If music is to be broadcast over the paging system, two arrangements are possible:

1) If the music is supplied from a separate amplifier (as in Figures 4-70 and 4-71), it can be connected between the speaker common line and the **PG GND** input to the NPRU (PERCEPTION$_e$ **J2/J502** and pin 2 or PERCEPTION$_{ex}$ **J1/J2** and pin 2). The music will be connected to all speaker zones when no page is in progress. When a page access code is dialed, the music is disconnected from the zone and the page amplifier output is connected.

2) If the music is connected to a second input of the paging amplifier (Figure 4-69), the PG1

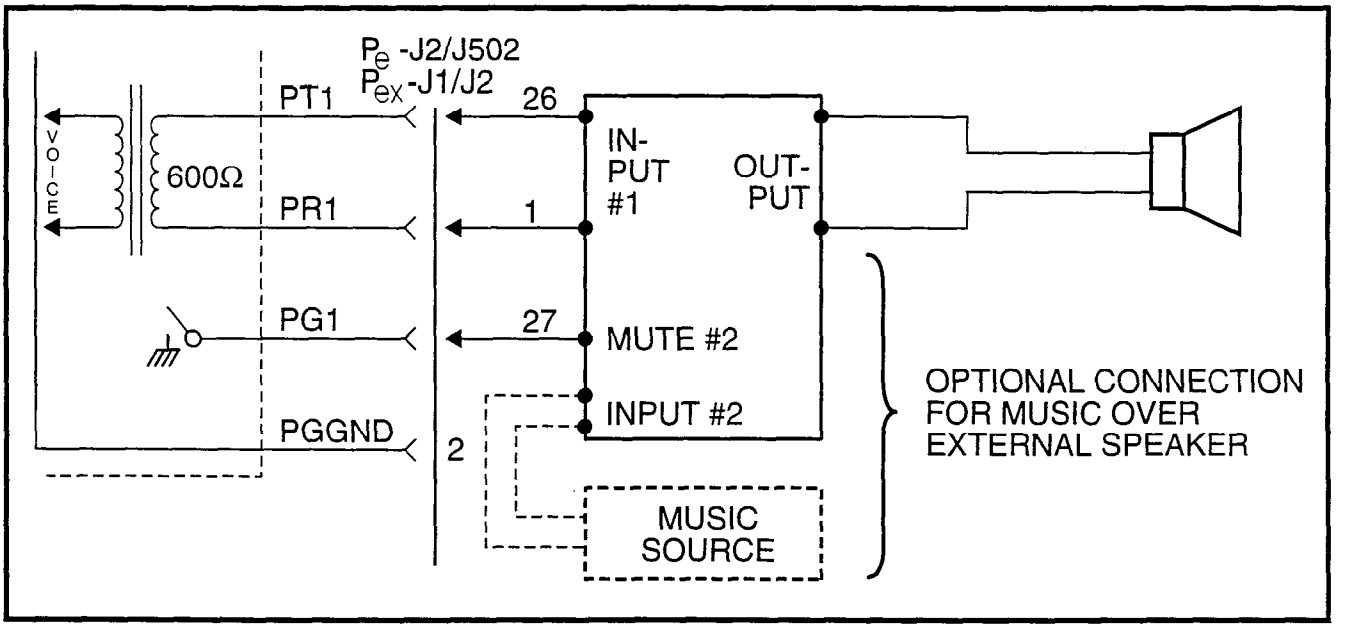

FIGURE 4-69—PAGING WITH MUSIC OVER EXTERNAL SPEAKER FROM SAME AMPLIFIER

control lead (**J2** and **J502** pin 27 or **J1** and **J2** for PERCEPTION$_{e\&ex}$, respectively) can be connected to the MUTE terminal of the page amplifier music channel. When any page access code is dialed, a ground output is applied to the **PG1** lead to mute the music.

9.36 All paging connections are made at the **J2** and **J502** or **J1** and **J2** connectors on the PERCEPTION$_{e\&ex}$ systems, respectively. The connectors are located on the rear of the basic and expansion cabinets. See Tables 5-4 and 5-10 for details.

9.40 Music-on-Hold

9.41 A Music-on-Hold (MOH) interface is a standard feature on the system. The circuitry occupies part of the NPRU PCB. If MOH is equipped, it will be heard by any station or trunks on-hold in the system, or by any trunk put into the camp-on state.

9.42 A tuner or other program source, supplied by the customer, is connected to the MOH input via pins 4 and 29 (Br-W and W-BR) of **J2** or **J502** / **J1** or **J2** for the PERCEPTION$_{e\&ex}$ systems, respectively (see Tables 5-4 and 5-10). The input impedance is 600 ohms. (This cannot be the same source used to provide music over external speakers.)

9.43 Adjust the MOH volume with the MOH volume control on the front of the NPRU PCB. Maximum volume is limited by internal circuits in order to comply with FCC regulations.

9.50 Universal Night Answer

9.51 The Universal Night Answer (UNA) feature provides an output of interrupted ringing voltage (85 ±10 VRMS, 20 Hz superimposed on -24 VDC) whenever the system is in Night Service and an incoming call is received by a trunk designated for UNA. Any station user, upon hearing the chime or bell, can dial the UNA access code and be connected to the caller.

9.52 The ringing voltage output is intended to control a strategically located chime or loud ringing bell. The available power is five ringer equivalents.

9.53 Two UNA zones can be installed in tenant systems. Either zone can be assigned in programming to either tenant. For PERCEPTION$_{e}$, connections to the UNA ringing signal are via pins 12 and 37 (O-BK, BK-O) of **J2**. This connection is to **J502** in the expansion cabinet for UNA Zone 1 (see Tables 5-4 and 5-10). UNA zone 1 requires a second NPRU PCB in the expansion cabinet.

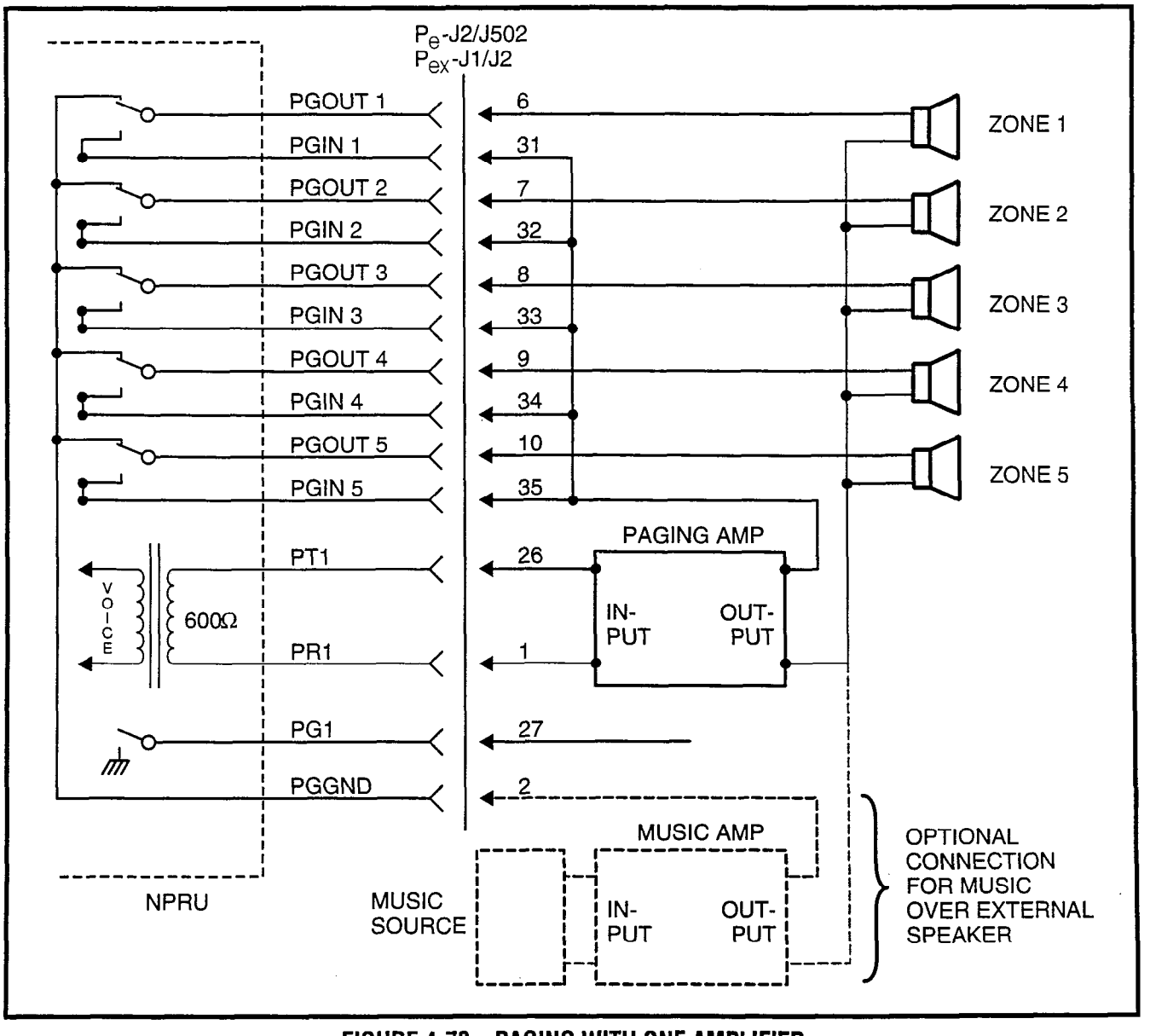

FIGURE 4-70—PAGING WITH ONE AMPLIFIER

9.54 UNA connections for PERCEPTION$_{ex}$ are made at pins 12 and 37 connectors **J1** and **J2** on the basic cabinet. A second UNA device requires a second NPRU to be installed in the basic cabinet.

9.60 Station Message Detail Recording

9.61 The Station Message Detail Recording (SMDR) feature enables a business to monitor and control its telephone costs. Data can be collected for each outgoing and/or incoming trunk call. Each such call generates a call record that is output at the SMDR connector on the connector panel at the upper rear of the LCEC-M or NCEC-M. (In Lodging/Health Care applications, data specific to those applications are included in the SMDR output.)

9.62 SMDR output can be connected to a variety of customer-provided equipment:

- A local 80-column printer for an on-line printout at the termination of each trunk call.
- A recording device to store data for subsequent processing, either on-site or by a service bureau.
- Call accounting equipment to provide customized call reports.

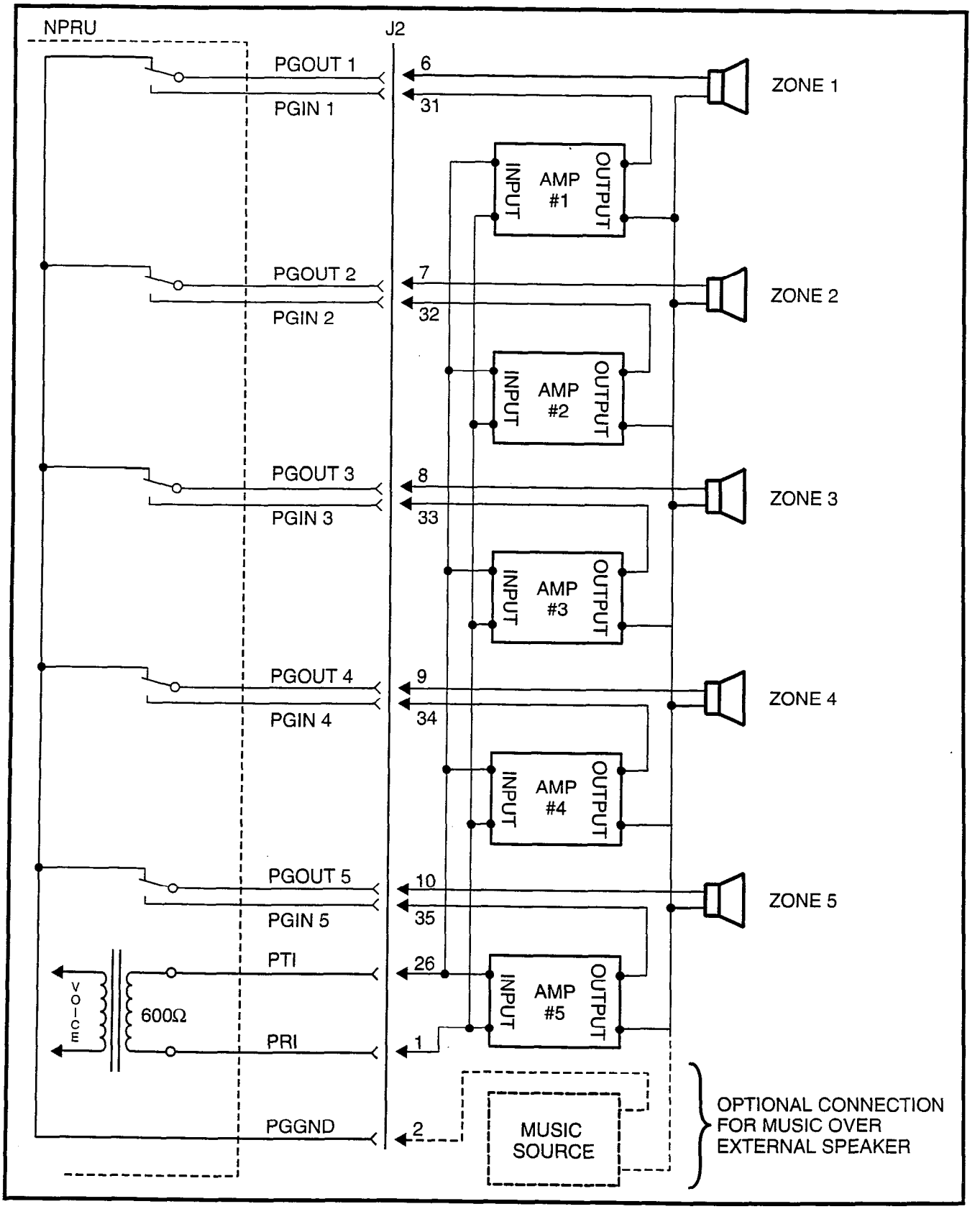

FIGURE 4-71—PAGING WITH MULTIPLE AMPLIFIERS

9.63 Refer to the external device manufacturer's documentation for information on its SMDR connector pin assignments.

9.64 The SMDR output speed can be set for either 300 bps or 1200 bps by the MDR switch on the front panel of the LCCU PCB (Figure 4-72). SMDR pin assignments are as follows:

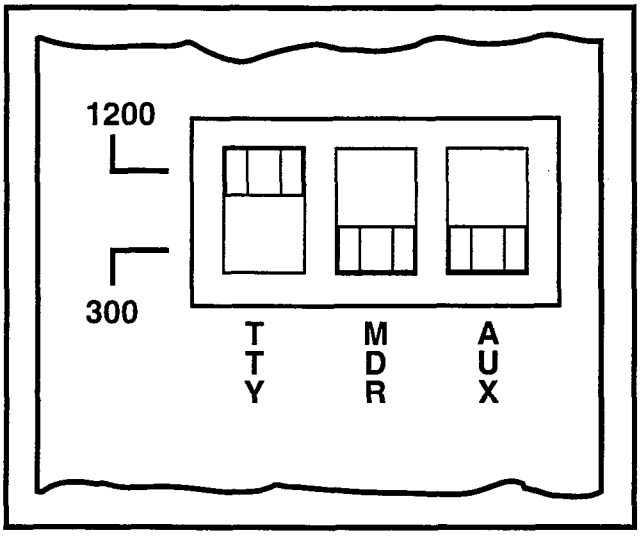

FIGURE 4-72—LCCU SWITCHES

PIN	SIGNAL
2	Receive Data (from SMDR device)
3	Transmit Data (to SMDR device)
4	Request to Send (to SMDR device)
5	Clear to Send (to SMDR device)
6	Data Set Ready
7	Signal Ground
8	Carrier Detect
20	Data Terminal Ready (from SMDR device)

9.65 The code used by SMDR is standard 7-level ASCII using one start bit, one stop bit and one parity bit (even parity).

9.66 SMDR can be programmed to record data under any one of the following conditions:

- Incoming calls only.
- Outgoing calls only.
- Incoming and outgoing calls.
- Outgoing toll calls only.
- All incoming calls and outgoing toll calls.

9.67 When outgoing calls are chosen, all calls seizing a trunk will be recorded regardless of duration. On incoming calls, all answered calls will be recorded. Calls disconnected by Toll or Code Restriction features are not recorded.

9.68 Timing for recorded calls will start as follows (Figure 4-73):

- Outgoing—when trunk is seized.
- Incoming to attendant only—when attendant answers.
- Incoming and extended by the attendant—when attendant answers.
- Incoming to a station—when answered.

9.69 A station user can enter a charge account code of up to 12 digits for each call. This code is included in the SMDR output.

9.70 The recording criteria and account code length are defined in **DMDR Program** (see Section **200-255-300**, *Programming*).

9.71 Each time a trunk is seized, data is collected for that call until the trunk is released. This data is output at the SMDR port in the following format (see Figure 4-73).

- Time
  - Start of Call Hour - tens - units
    Minute - tens - units
  - Call Duration Hour - units
    Minute - tens- units
    Seconds - tens - units
  - Condition Code (see table)
    A = Attendant handled
    D = Call > 10 hours
    E = Maintenance (SMDR port)
    F = Maintenance (trunk test)
    I = Incoming call
    K = Outgoing call
    L = Conference Attendant or 3-party
    M = Transfer or Call Forward
    N = SPCC #1
    O = SPCC #2
    P = Date/Time change
    Q = System Initialize
    R = Incomplete call
    S = Date printed (every hour)
- Access Code 3 digits maximum

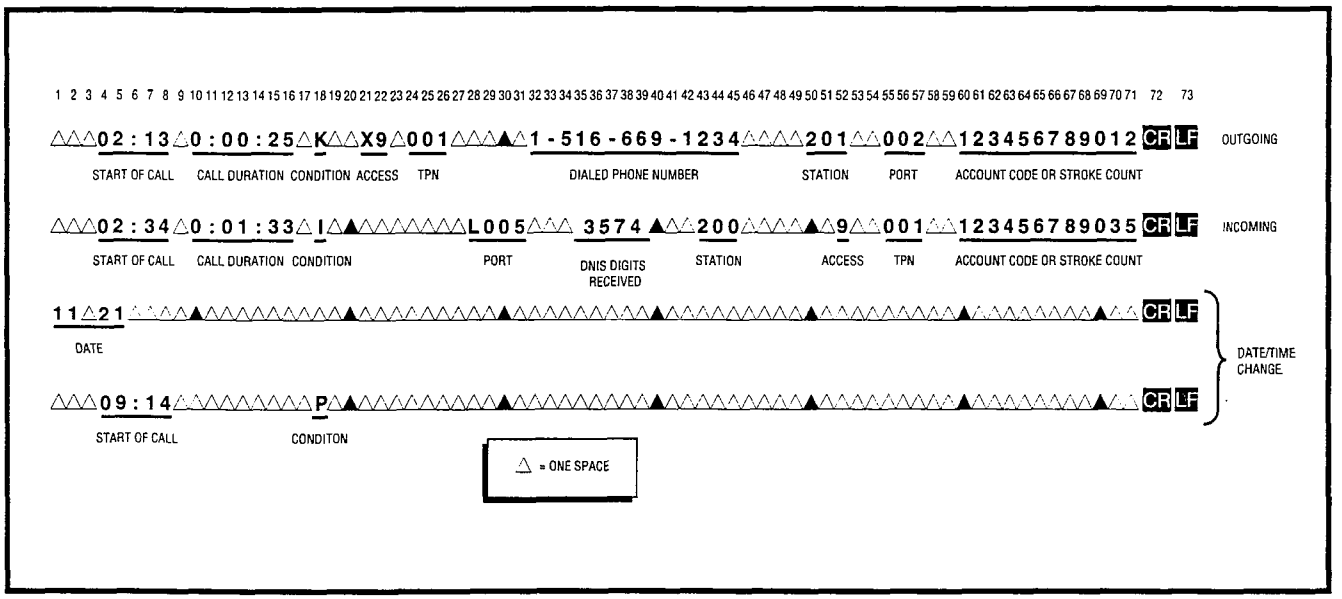

FIGURE 4-73—EXAMPLE: SMDR CALL RECORD

- Dialed Number 15 digits maximum
- Calling DN 4 digits maximum
- Trunk Port 3 digits maximum
- DNIS Digits 4 digits maximum
- Calling Port No. 3 digits maximum
- Account Code 12 digits maximum
  or
- Stroke Count 4 digits maximum

9.72 The format of the special record, for Initialize/Reload and Time Change, is as follows:
Initialize/Reload:
NNNN etc. (previous records-usual call)
00 (initialize or reload)

9.73 Any record printed after the initialize record will appear on the same line and be offset three columns from the usual record.

Example:
NNNN (previous record)
00 NNNNN (initialize and next record)
NNNNNN

Time Change:
MM DD (old date)
HH : MM (old time)
MM DD (new date)
HH : MM (new time)

9.74 Some complex calls will cause multiple call records (CR) for the same station or trunk.

Examples:

1) Station 1 transfers Trunk 1 to Station 2
   CR for Station 1 ~ Trunk 1
   = Condition Code I or K
   CR for Station 2 ~ Trunk 1
   = Condition Code M

2) Station 1 transfers Trunk 1 to Trunk 2
   CR for Station 1 ~ Trunk 1
   = Condition Code I or K
   CR for Station 1 ~ Trunk 2
   = Condition Code L
   CR for Trunk 1 ~ Trunk 2
   = Condition Code M

3) Station 1 holds Trunk 1 and calls Trunk 2
   CR for Station 1 ~ Trunk 1
   = Condition Code I or K
   CR for Station 1 ~ Trunk 2
   = Condition Code K

9.75 All connections to miscellaneous equipment are made via **J2**, **J1**, **TTY**, **SMDR**, and **MODEM** connectors on the connector panels of the system.

9.80 Lodging/Health Care Data Audit

9.81 The Lodging/Health Care Data Audit feature enables the user to record and analyze the registration and operation of specific features in Lodging/Health Care applications.

9.82 Lodging/Health Care audit data is output at either the **SMDR** (as part of the **SMDR** printout) or the **TTY** (as a separate report) connector on the upper rear of the basic cabinet. (Because the **TTY** connector is required for on-site programming and maintenance procedures, it is recommended that the **SMDR** port be used.) The selection of data to be output and the connector choice (**TTY** or **SMDR**) are software-controlled (see **DHMF Program** in Section **200-255-300**, *Programming*).

9.83 The **SMDR** or **TTY** output can be connected to either:

- A local 80-column printer for an on-line printout.
- Compatible call accounting or property management interface equipment, supplied by another vendor.

9.84 The audit pin-out assignments at the **SMDR** or the **TTY** connector are not identical. Refer to Paragraph **9.64** for the pin-out assignments of each connector. For instruction on connecting equipment provided by other vendors, refer to the manufacturer's documentation.

9.85 The audit data output rate can be set for either 300 bps or 1200 bps (depending on the configuration of the receiving equipment) at either the **SMDR** switch or the **TTY** switch on the front panel of the LCCU PCB.

CAUTION!

If the TTY connector is used for programming and maintenance operations, (either with an on-site teleprinter or remotely via a modem) be careful not to change the data rate setting of the TTY switch so that it is incompatible with programming equipment.

9.86 Figure 4-74 shows a typical Lodging/Health Care audit printout. Notes on the figure explain the possible value for each column.

10. SYSTEM POWER UP

10.00 General

10.01 Upon initial power up, the system will automatically load its operating system and customer data from the disk. Two sets of disks are provided with each system; one set should always be mounted in the drive, the other kept as a spare.

10.02 Activate the system as follows:

1) Be sure the main power switch on the NPSA-M is in the **OFF** position, and plug the AC cord into the outlet.

2) If the system uses **D.02** or later version software, insert the **SYSTEM** disk in **FDD0.** If two drives are used, insert the **MAINTENANCE** disk (Figure 4-75) in **FDD1**. If the system uses **D.01** software, insert the program disk in **FDD0**.

3) Turn the main power switch on the NPSA-M to the **ON** position.

4) The floppy disk will run: LED will come on.
   - LCCU MAJ ALARM LED will be on.
   - NPRU PFT LED will be on.

5) When loading is complete, the system will initialize and clear all LEDs. Only a true fault indication will remain. Refer to Section **200-255-500**, *Fault Finding Procedures*, for meaning of indications and assistance with fault clearing.

6) Refer to Section **200-255-300**, *Programming*, to complete customer data assignments.

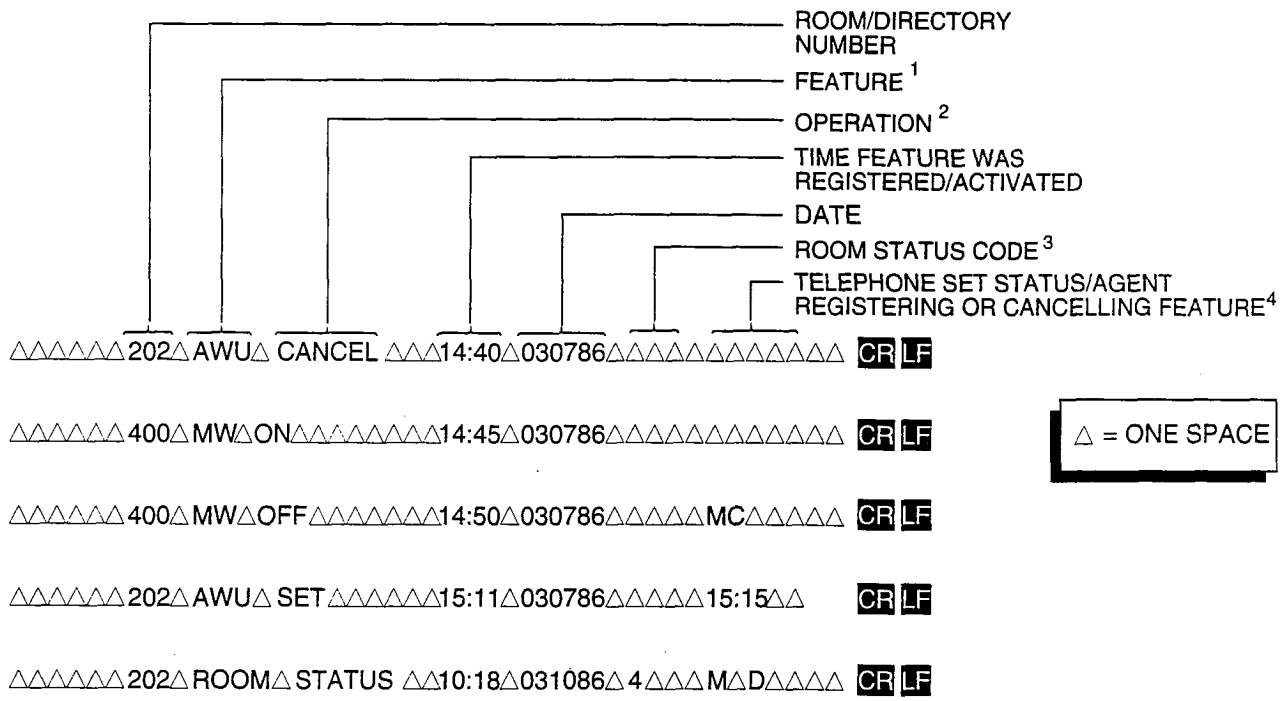

NOTES:

1. FEATURE

MW *= Message Waiting*
AWU *= Automatic Wake-up*
MRA *= Message Registration Audit*
Room Status *= Room Status Audit*

2. OPERATION

ON *= Set at Attendant Console*
OFF *= Cancelled at either Attendant Console or Station*
SET *= Set at either Attendant Console or Station*
CANCEL *= Cancelled at either Attendant Console or Station*

3. ROOM STATUS CODE

1 *= Vacant and clean*
2 *= Occupied and clean*
3 *= Vacant and needs cleaning*
4 *= Occupied and needs cleaning*

4. This column shows either the status of the station accessed for feature operation (for example, a wake-up call) or the agent who registered the feature.

STATUS

RNA *= Ring No-Answer*
Bsy *= Busy*
$XXX.XX *= Total call charges for this station*
M *= Maid in Room*
XX:XX *= Time Wake-up Call Scheduled for*

AGENT

MC *= Message Center*
EXT *= Station*

FIGURE 4-74—EXAMPLE: AUDIT PRINTOUT (LODGING/HEALTH CARE)

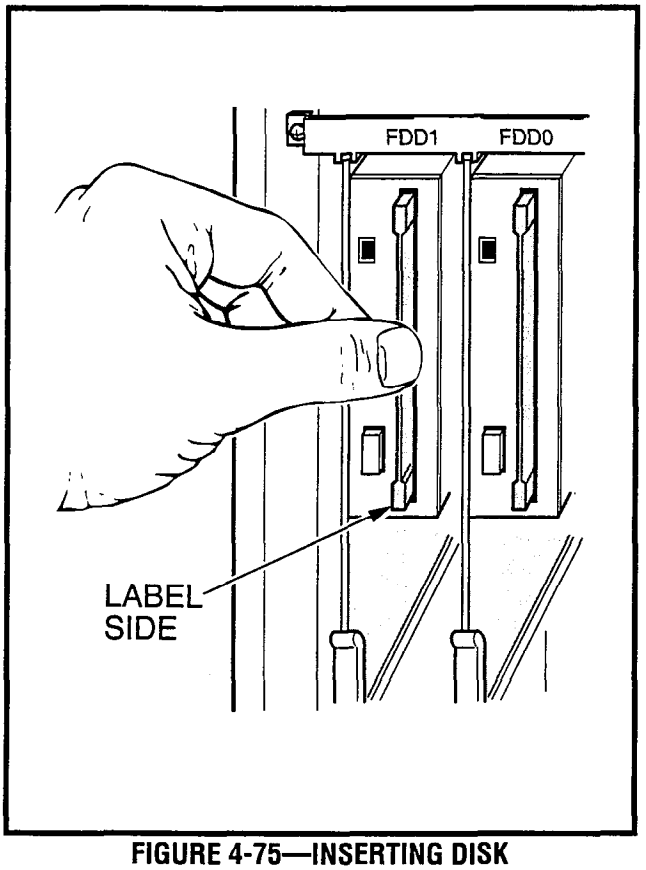

FIGURE 4-75—INSERTING DISK
(PERCEPTION$_{ex}$ ONLY)

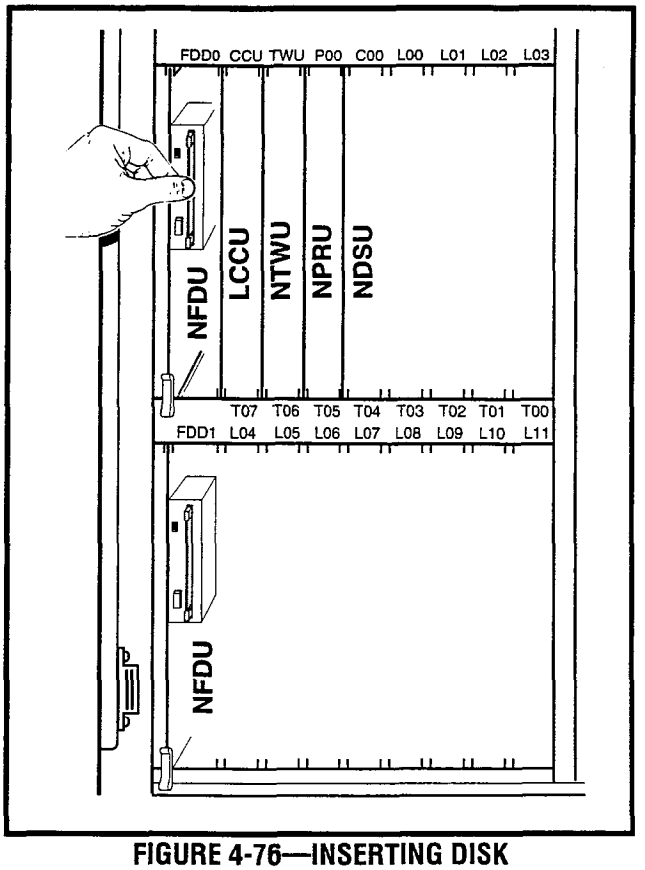

FIGURE 4-76—INSERTING DISK
(PERCEPTION$_{e}$ ONLY)

CHAPTER 5

MDF ARRANGEMENT

1.00 All connections from the system to external equipment, such as trunks, stations, data interface units, etc., are made via a customer-provided main distribution frame (MDF).

1.01 Cables with male amphenol-type connectors are attached to the connector panels of the basic and expansion cabinets and secured with the connector locking bar (Figure 5-1). Plastic cable clamps are provided along the base of the basic cabinet to secure cables. The opposite ends of the cables are then terminated on 66-type quick-connect terminal blocks on the MDF (split blocks with bridging clips should be used to allow for fault isolation). A typical MDF layout is shown in Figure 5-2. Connect each cable from the basic and expansion cabinets to one side of the block and external equipment cables to the other side. Use bridge clips to make the connections.

1.02 FCC regulations prohibit unregistered equipment from being terminated on the same block as CO trunks. It is good practice to separate trunks from all other equipment at the MDF.

1.03 Table 5-1 shows the connector-card slot match-up. Table 5-2 lists the connector cables required for the system. Each connector provides the interface for only a single card slot.

1.04 To protect against transient voltages and currents beyond what is provided by simple primary protectors, the Underwriters' Laboratories' Standard 1459 2nd edition lists secondary protectors that should be installed if there are outside leads. See Figure 5-3 for these conditions.

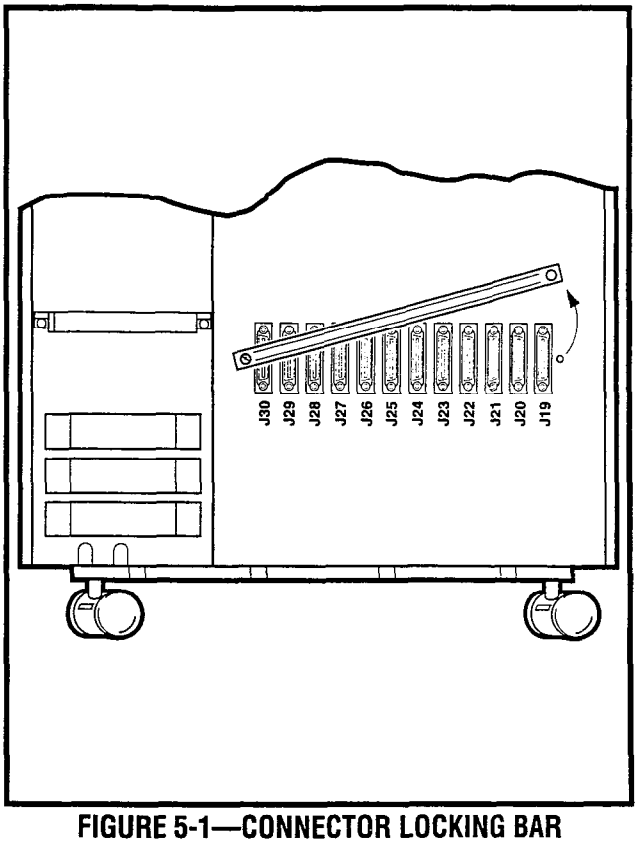

FIGURE 5-1—CONNECTOR LOCKING BAR

Install and test the secondary protectors per the installation instructions of the applicable U.L. listed manufacturers:

- Centron Corp., Anaheim, California 92807: Model 08450.
- Curtis Mfg. Co. Inc., Jaffrey, New Hampshire 03452: Model Diamond Chip.
- Oneac Corp., Libertyville, Illinois 60048: Models OnLine 614 and OnLine DG/S.
- Siemon Co., Watertown, Connecticut 06795: Models PM-2305 and CPM-2 Plus.
- Simplex Time Recorder Co., Gardener, Massachusetts 01440: Models 2081-9027 and 2081-9028.

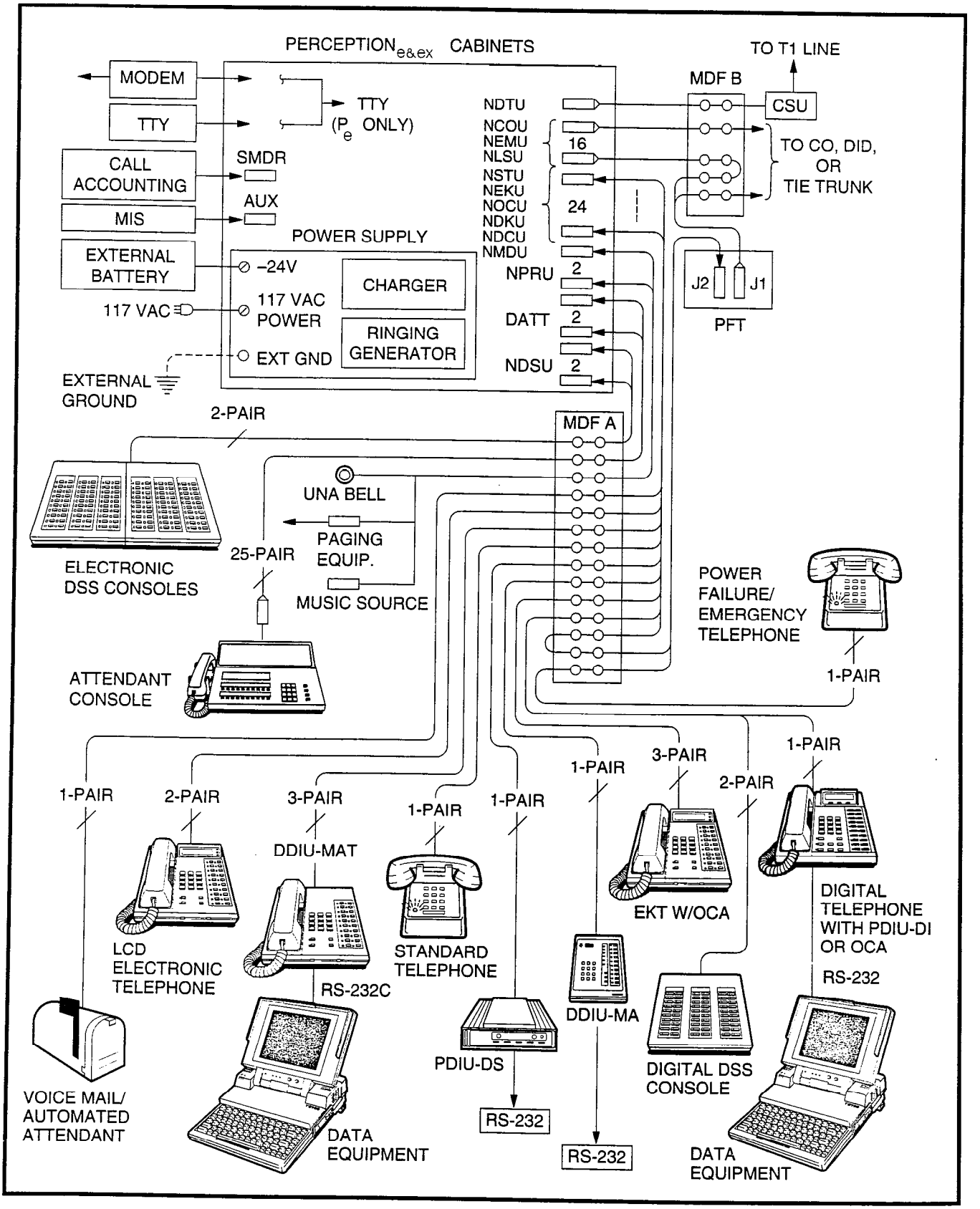

FIGURE 5-2—MAIN DISTRIBUTION FRAME LAYOUT

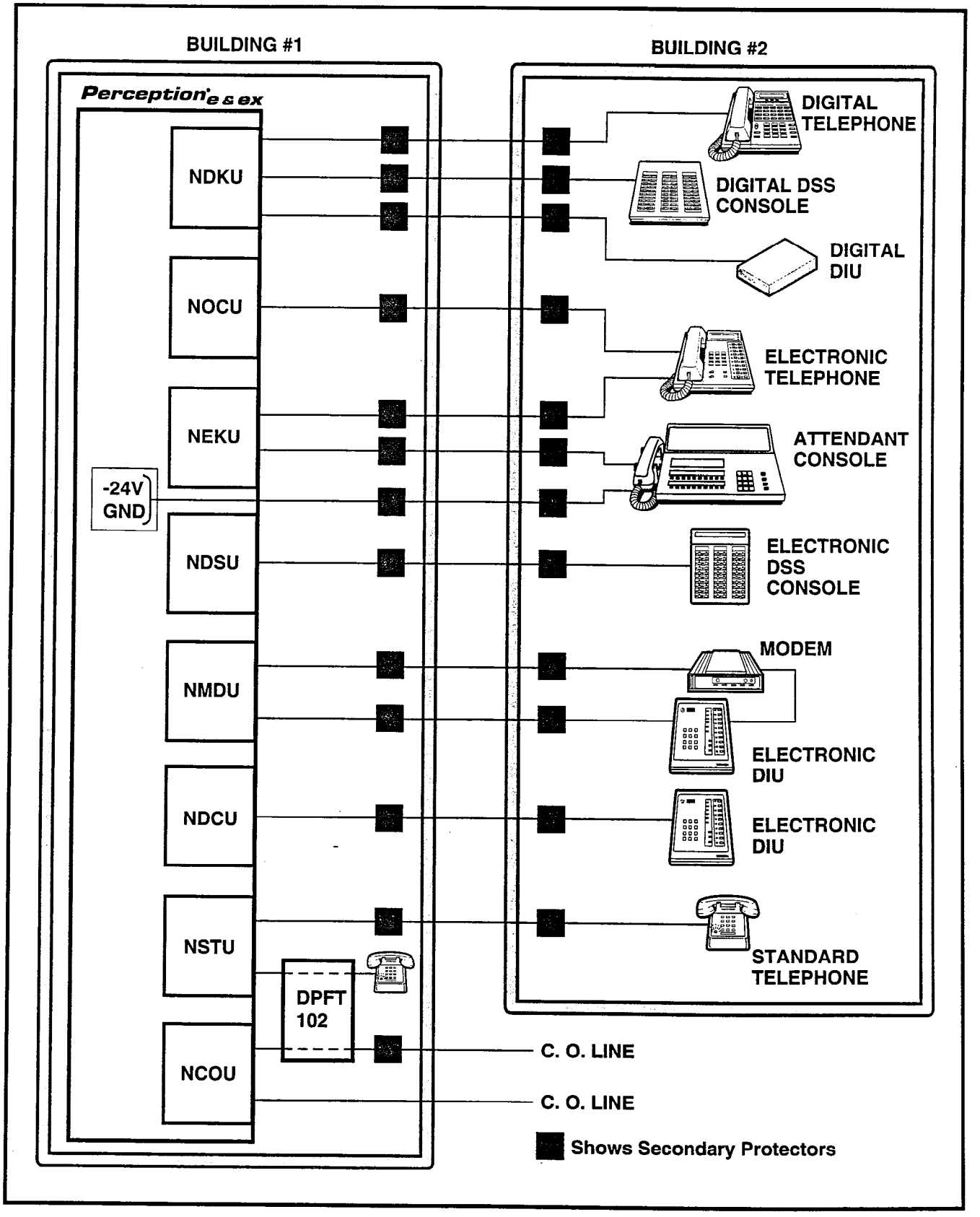

FIGURE 5-3—SECONDARY PROTECTOR DIAGRAM

TABLE 5-1
CARD SLOT/CABLE CONNECTOR MATRIX

	CONFIGURATION	CARD SLOT	CONNECTOR	CARD SLOT	CONNECTOR
PERCEPTION$_e$	BASIC 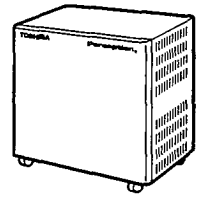	C00 L00 L01 L02 L03 L04/T07 L05/T06	J3 J4 J5 J6 J7 J8 J9	L06/T05 L07/T04 L08/T03 L09/T02 L10/T01 L11/T00	J10 J11 J12 J13 J14 J15
	EXPANDED 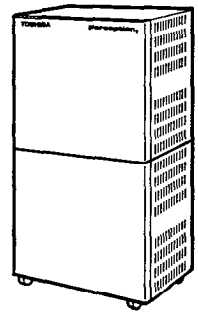	C01 L15 L16 L17 L18 L19/T15 L20/T14	J503 J504 J505 J506 J507 J508 J509	L21/T13 L22/T12 L23/T11 L24/T10 L25/T09 L26/T08	J510 J511 J512 J513 J514 J515
PERCEPTION$_{ex}$	BASIC 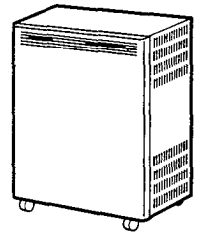	U00 U01 U02 U03 U04 U05 U06 U07 T03 T02 T01 T00	J18 J17 J16 J15 J14 J13 J12 J11 J10 J09 J08 J07	U08 U09 U10 U11 U12 U13 U14 U15 T07 T06 T05 T04	J30 J29 J28 J27 J26 J25 J24 J23 J22 J21 J20 J19
	EXPANDED (ONE EXPANSION UNIT) 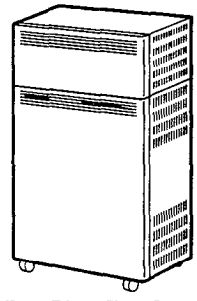	U16 U17 U18 U19 U20 U21	J512 J511 J510 J509 J508 J507	U22 U23 T11 T10 T09 T08	J506 J505 J504 J503 J502 J501
	EXPANDED (TWO EXPANSION UNITS) 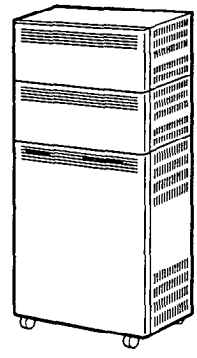	U24 U25 U26 U27 U28 U29	J524 J523 J522 J521 J520 J519	U30 U31 T15 T14 T13 T12	J518 J517 J516 J515 J514 J513

TABLE 5-2
LIST OF CONNECTOR CABLES

PERCEPTION$_e$			
CARD SLOT	**CONN. NO.**	**CONTENT OF CONNECTOR**	**DESC. TABLE**
MDF	J1 & J501	ATT0 & ATT1	5-3
MDF	J2 & J502	Paging, Music & UNA Ringing	5-4
MDF	J3 & J503	NDSU	5-5
MDF	J4~J7 & J504~J507	NDSU/NEKU/NDKU/NSTU/NDCU/NMDU/NOCU [1]	5-6
MDF	J8~J15 & J508~J515	NDSU/NEKU/NDKU/NSTU/NDCU/NMDU/NOCU or NCOU/NLSU/NEMU/NDTU [1]	5-7
From PFT to MDF	PFT Conn. No.	CO Line & NCOU 00~07 (Maximum: 8) (Maximum: 8)	5-8
From PFT to MDF	PFT Conn. No.	STT Line & NSTU 00~14 (Maximum: 8) (Maximum: 8)	5-9
PERCEPTION$_{ex}$			
MDF	J1 & J2	Paging, Music & UNA Ringing	5-11
MDF	J6	ATT0	5-10
	J5	ATT1	5-10
MDF	J07~J10/J19~J22/ J501~J504/J513~J518	NCOU/NEMU/NLSU/NDTU [2]	5-12
MDF	J11~J18/J23~J30/ J505~J512/J517~J524	NDSU/NEKU/NDKU/NSTU/NDCU/NMDU/NOCU or NCOU/NEMU/NLSU	5-13
From PFT to MDF	PFT Conn. No.	CO Line & NCOU 00~07 (Maximum: 8) (Maximum: 8)	5-14
From PFT to MDF	PFT Conn. No.	STT Line & NSTU 00~14 (Maximum: 8) (Maximum: 8)	5-15

NOTES:

1. *In PERCEPTION$_e$ the J connector cabinet is determined by 1- and 2-digit numbers indicating the basic cabinet. Three-digit number connectors are located in the expansion cabinet.*
2. *In PERCEPTION$_{ex}$ the J connector cabinet is determined by 1- and 2-digit numbers indicating the basic cabinet. Three-digit numbers J501 ~ J512 identify expansion cabinet #1. Three-digit numbers J513 ~ J524 identify expansion cabinet #2.*

TABLE 5-3
TERMINAL SEQUENCE & DESIGNATIONS
CONNECTOR NO. J1/J501
ATTENDANT CONSOLE #0 & #1

PAIR	PIN	COLOR CODE	LEAD DESIGNATION	FUNCTION	PCB POSITION
1T	26	W-Bl	TL 001/151	Tip-Line CKT 001	NEKU L00/L15
R	1	Bl-W	RL 001/151	Ring-Line CKT 001	NEKU L00/L15
2T	27	W-O	DTL 001/151	Data Tip-Line CKT 001	NEKU L00/L15
R	2	O-W	DRL 001/151	Data Ring-Line CKT 001	NEKU L00/L15
3T	28	W-G	Spare		
R	3	G-W	Spare		
4T	29	W-Br	EMT 0	Emergency Transfer SWT	NPRU
R	4	Br-W	INIT 0	Initialize Switch	NPRU
5T	30	W-S	Spare		
R	5	S-W	MAJ IN 0	Major Alarm	NPRU
6T	31	R- Bl	Spare		
R	6	Bl-R	Spare		
7T	32	R-O	Spare		
R	7	O-R	Spare		
8T	33	R-G	Spare		
R	8	G-R	ATT0-24V	-24V	NPRU
9T	34	R-Br	Spare		
R	9	Br-R	ATT0-24V	-24V	NPRU
10T	35	R-S	Spare		
R	10	S-R	ATT0-24V	-24V	NPRU
11T	36	Bk-Bl	Spare		
R	11	Bl-Bk	ATT0-24V	-24V	NPRU
12T	37	Bk-O	Spare		
R	12	O-Bk	ATT0-24V	-24V	NPRU
13T	38	Bk-G	Spare		
R	13	G-Bk	ATT0-24V	-24V	NPRU
14T	39	Bk-Br	Spare		
R	14	Br-Bk	Spare		
15T	40	Bk-S	Spare		
R	15	S-Bk	Spare		
16T	41	Y-Bl	Spare		
R	16	Bl-Y	Spare		
17T	42	Y-O	Spare		
R	17	O-Y	Spare		
18T	43	Y-G	Spare		
R	18	G-Y	Spare		
19T	44	Y-Br	ATT0 EG	Ground	NPRU
R	19	Br-Y	Spare		
20T	45	Y-S	ATT0 EG	Ground	NPRU
R	20	S-Y	Spare		
21T	46	V-Bl	ATT0 EG	Ground	NPRU
R	21	Bl-V	Spare		
22T	47	V-O	ATT0 EG	Ground	NPRU
R	22	O-V	Spare		
23T	48	V-G	ATT0 EG	Ground	NPRU
R	23	G-V	Spare		
24T	49	V-Br	ATT0 EG	Ground	NPRU
R	24	Br-V	Spare		
25T	50	V-S	Spare		
R	25	S-V	Spare		

TABLE 5-4
TERMINAL SEQUENCE & DESIGNATIONS
CONNECTOR NO. J2/J502
PAGING, MUSIC & UNA RINGING

PAIR	PIN	COLOR CODE	LEAD DESIGNATION	FUNCTION	PCB POSITION
1T	26	W-Bl	PT 1	Paging Tip	NPRU
R	1	Bl-W	PR 1	Paging Ring	NPRU
2T	27	W-O	PG 1	Paging Equip. Control	NPRU
R	2	O-W	PG Gnd	Paging Equip. Common	NPRU
3T	28	W-G	Spare		
R	3	G-W	Spare		
4T	29	W-Br	MT	MOH Source Tip	NPRU
R	4	Br-W	MR	MOH Source Ring	NPRU
5T	30	W-S	Spare		
R	5	S-W	Spare		
6T	31	R- Bl	PG In 1	Paging Amp #1 Out	NPRU
R	6	Bl-R	PG Out 1	Page Zone #1 Out	NPRU
7T	32	R-O	PG In 2	Paging Amp #2 Out	NPRU
R	7	O-R	PG Out 2	Page Zone #2 Out	NPRU
8T	33	R-G	PG In 3	Paging Amp #3 Out	NPRU
R	8	G-R	PG Out 3	Page Zone #3 Out	NPRU
9T	34	R-Br	PG In 4	Paging Amp #4 Out	NPRU
R	9	Br-R	PG Out 4	Page Zone #4 Out	NPRU
10T	35	R-S	PG In 5	Paging Amp #5 Out	NPRU
R	10	S-R	PG Out 5	Page Zone #5 Out	NPRU
11T	36	Bk-Bl	Spare		
R	11	Bl-Bk	Spare		
12T	37	Bk-O	UNA B	UNA Ringing Ground	NPRU
R	12	O-Bk	UNA A	UNA Ringing 20 Hz	NPRU
13T	38	Bk-G	Spare		
R	13	G-Bk	Spare		
14T	39	Bk-Br	Spare		
R	14	Br-Bk	Spare		
15T	40	Bk-S	Spare		
R	15	S-Bk	Spare		
16T	41	Y-Bl	Spare		
R	16	Bl-Y	Spare		
17T	42	Y-O	Spare		
R	17	O-Y	Spare		
18T	43	Y-G	Spare		
R	18	G-Y	Spare		
19T	44	Y-Br	Spare		
R	19	Br-Y	Spare		
20T	45	Y-S	Spare		
R	20	S-Y	Spare		
21T	46	V-Bl	Spare		
R	21	Bl-V	Spare		
22T	47	V-O	Spare		
R	22	O-V	Spare		
23T	48	V-G	Spare		
R	23	G-V	Spare		
24T	49	V-Br	Spare		
R	24	Br-V	Spare		
25T	50	V-S	Spare	PFT-24 Volts (Ground)	NPRU
R	25	S-V	Spare	(Power)	NPRU

TABLE 5-5
TERMINAL SEQUENCE & DESIGNATIONS FOR PERCEPTION$_e$ ONLY
CONNECTOR NO. J3.503
NDSU/NDKU (DSS CONSOLES) "C" SLOT

PAIR	PIN	COLOR CODE	STATION FUNCTION	LINE CIRCUIT
1T	26	W-Bl	Tip-Line	CXX1
R	1	Bl-W	Ring-Line	
2T	27	W-O	Data Tip-Line	
R	2	O-W	Data Ring-Line	
3T	28	W-G	Tip-Line	CXX2
R	3	G-W	Ring-Line	
4T	29	W-Br	Data Tip-Line	
R	4	Br-W	Data Ring-Line	
5T	30	W-S	Tip-Line	CXX3
R	5	S-W	Ring-Line	
6T	31	R- Bl	Data Tip-Line	
R	6	Bl-R	Data Ring-Line	
7T	32	R-O	Tip-Line	CXX4
R	7	O-R	Ring-Line	
8T	33	R-G	Data Tip-Line	
R	8	G-R	Data Ring-Line	

TABLE 5-6
TERMINAL SEQUENCE & DESIGNATIONS
CONNECTOR NO. J4 ~ J7/J504 ~ J507
NDSU/NEKU/NDKU/NSTU/NDCU/NMDU/NOCU (L00 ~ L03/L15 ~ L18)

PAIR	PIN	COLOR CODE	STATION FUNCTION	LINE CIRCUIT
1T	26	W-Bl	Tip-Line	LXX1
R	1	Bl-W	Ring-Line	
2T	27	W-O	Data Tip-Line	
R	2	O-W	Data Ring-Line	
3T	28	W-G	Tip-Line	LXX2
R	3	G-W	Ring-Line	
4T	29	W-Br	Data Tip-Line	
R	4	Br-W	Data Ring-Line	
5T	30	W-S	Tip-Line	LXX3
R	5	S-W	Ring-Line	
6T	31	R- Bl	Data Tip-Line	
R	6	Bl-R	Data Ring-Line	
7T	32	R-O	Tip-Line	LXX4
R	7	O-R	Ring-Line	
8T	33	R-G	Data Tip-Line	
R	8	G-R	Data Ring-Line	
9T	34	R-Br	Tip-Line	LXX5
R	9	Br-R	Ring-Line	
10T	35	R-S	Data Tip-Line	
R	10	S-R	Data Ring-Line	
11T	36	Bk-Bl	Tip-Line	LXX6
R	11	Bl-Bk	Ring-Line	
12T	37	Bk-O	Data Tip-Line	
R	12	O-Bk	Data Ring-Line	
13T	38	Bk-G	Tip-Line	LXX7
R	13	G-Bk	Ring-Line	
14T	39	Bk-Br	Data Tip-Line	
R	14	Br-Bk	Data Ring-Line	
15T	40	Bk-S	Tip-Line	LXX8
R	15	S-Bk	Ring-Line	
16T	41	Y-Bl	Data Tip-Line	
R	16	Bl-Y	Data Ring-Line	

TABLE 5-7
TERMINAL SEQUENCE & DESIGNATIONS
CONNECTOR NO. J8 ~ J15/J508 ~ J515
NDSU/NEKU/NDKU/NSTU/NDCU/NMDU/NOCU (L04 ~ L11/L19 ~ L26)
or NCOU/NLSU/NEMU (T07 ~ T00/T15 ~ T08)

PAIR	PIN	COLOR CODE	STATION FUNCTION	LINE CIRCUIT	TRUNK FUNCTION	TRUNK CIRCUIT
1T	26	W-Bl	Tip-Line	LXX1	T	TXX1
R	1	Bl-W	Ring-Line		R	
2T	27	W-O	Data Tip-Line		T1	
R	2	O-W	Data Ring-Line		R1	
3T	28	W-G	Tip-Line	LXX2	E	
R	3	G-W	Ring-Line		SG	
4T	29	W-Br	Data Tip-Line		M	
R	4	Br-W	Data Ring-Line		SB	
5T	30	W-S	Tip-Line	LXX3	T	TXX2
R	5	S-W	Ring-Line		R	
6T	31	R- Bl	Data Tip-Line		T1	
R	6	Bl-R	Data Ring-Line		R1	
7T	32	R-O	Tip-Line	LXX4	E	
R	7	O-R	Ring-Line		SG	
8T	33	R-G	Data Tip-Line		M	
R	8	G-R	Data Ring-Line		SB	
9T	34	R-Br	Tip-Line	LXX5	T	TXX3
R	9	Br-R	Ring-Line		R	
10T	35	R-S	Data Tip-Line		T1	
R	10	S-R	Data Ring-Line		R1	
11T	36	Bk-Bl	Tip-Line	LXX6	E	
R	11	Bl-Bk	Ring-Line		SG	
12T	37	Bk-O	Data Tip-Line		M	
R	12	O-Bk	Data Ring-Line		SB	
13T	38	Bk-G	Tip-Line	LXX7	T	TXX4
R	13	G-Bk	Ring-Line		R	
14T	39	Bk-Br	Data Tip-Line		T1	
R	14	Br-Bk	Data Ring-Line		R1	
15T	40	Bk-S	Tip-Line	LXX8	E	
R	15	S-Bk	Ring-Line		SG	
16T	41	Y-Bl	Data Tip-Line		M	
R	16	Bl-Y	Data Ring-Line		SB	

TABLE 5-8
TERMINAL SEQUENCE & DESIGNATIONS
CENTRAL OFFICE LINE CONNECTION & PFT CONTROL
J1

PAIR	PIN	COLOR CODE	LEAD DESIGNATION	FUNCTION	PCB POSITION
1T	26	W-Bl	T	Tip-CO #1	
R	1	Bl-W	R	Ring-CO #1	
2T	27	W-O	T	Tip-NCOU #1	
R	2	O-W	R	Ring-NCOU #1	
3T	28	W-G	T	Tip-CO #2	
R	3	G-W	R	Ring-CO #2	
4T	29	W-Br	T	Tip-NCOU #2	
R	4	Br-W	R	Ring-NCOU #2	
5T	30	W-S	T	Tip-CO #3	
R	5	S-W	R	Ring-CO #3	
6T	31	R- Bl	T	Tip-NCOU #3	
R	6	Bl-R	R	Ring-NCOU #3	
7T	32	R-O	T	Tip-CO #4	
R	7	O-R	R	Ring-CO #4	
8T	33	R-G	T	Tip-NCOU #4	
R	8	G-R	R	Ring-NCOU #4	
9T	34	R-Br	T	Tip-CO #5	
R	9	Br-R	R	Ring-CO #5	
10T	35	R-S	T	Tip-NCOU #5	
R	10	S-R	R	Ring-NCOU #5	
11T	36	Bk-Bl	T	Tip-CO #6	
R	11	Bl-Bk	R	Ring-CO #6	
12T	37	Bk-O	T	Tip-NCOU #6	
R	12	O-Bk	R	Ring-NCOU #6	
13T	38	Bk-G	T	Tip-CO #7	
R	13	G-Bk	R	Ring-CO #7	
14T	39	Bk-Br	T	Tip-NCOU #7	
R	14	Br-Bk	R	Ring-NCOU #7	
15T	40	Bk-S	T	Tip-CO #8	
R	15	S-Bk	R	Ring-CO #8	
16T	41	Y-Bl	T	Tip-NCOU #8	
R	16	Bl-Y	R	Ring-NCOU #8	
17T	42	Y-O	Spare		
R	17	O-Y	Spare		
18T	43	Y-G	Spare		
R	18	G-Y	Spare		
19T	44	Y-Br	Spare		
R	19	Br-Y	Spare		
20T	45	Y-S	Spare		
R	20	S-Y	Spare		
21T	46	V-Bl	Spare		
R	21	Bl-V	Spare		
22T	47	V-O	Spare		
R	22	O-V	Spare		
23T	48	V-G	Spare		
R	23	G-V	Spare		
24T	49	V-Br	Spare		
R	24	Br-V	Spare		
25T	50	V-S	PFT EG	PFT Ground (Input)	NPRU
R	25	S-V	PFT -24V	PFT -24V (Input)	NPRU

TABLE 5-9
TERMINAL SEQUENCE & DESIGNATIONS
STATION LINE CONNECTION
J2

PAIR	PIN	COLOR CODE	LEAD DESIGNATION	FUNCTION	PCB POSITION
1T	26	W-Bl	T	Tip-TEL #1	
R	1	Bl-W	R	Ring-TEL #1	
2T	27	W-O	T	Tip-NSTU2 #1	
R	2	O-W	R	Ring-NSTU2 #1	
3T	28	W-G	T	Tip-TEL #2	
R	3	G-W	R	Ring-TEL #2	
4T	29	W-Br	T	Tip-NSTU2 #2	
R	4	Br-W	R	Ring-NSTU2 #2	
5T	30	W-S	T	Tip-TEL #3	
R	5	S-W	R	Ring-TEL #3	
6T	31	R- Bl	T	Tip-NSTU2 #3	
R	6	Bl-R	R	Ring-NSTU2 #3	
7T	32	R-O	T	Tip-TEL #4	
R	7	O-R	R	Ring-TEL #4	
8T	33	R-G	T	Tip-NSTU2 #4	
R	8	G-R	R	Ring-NSTU2 #4	
9T	34	R-Br	T	Tip-TEL #5	
R	9	Br-R	R	Ring-TEL #5	
10T	35	R-S	T	Tip-NSTU2 #5	
R	10	S-R	R	Ring-NSTU2 #5	
11T	36	Bk-Bl	T	Tip-TEL #6	
R	11	Bl-Bk	R	Ring-TEL #6	
12T	37	Bk-O	T	Tip-NSTU2 #6	
R	12	O-Bk	R	Ring-NSTU2 #6	
13T	38	Bk-G	T	Tip-TEL #7	
R	13	G-Bk	R	Ring-TEL #7	
14T	39	Bk-Br	T	Tip-NSTU2 #7	
R	14	Br-Bk	R	Ring-NSTU2 #7	
15T	40	Bk-S	T	Tip-TEL #8	
R	15	S-Bk	R	Ring-TEL #8	
16T	41	Y-Bl	T	Tip-NSTU2 #8	
R	16	Bl-Y	R	Ring-NSTU2 #8	
17T	42	Y-O	Spare		
R	17	O-Y	Spare		
18T	43	Y-G	Spare		
R	18	G-Y	Spare		
19T	44	Y-Br	Spare		
R	19	Br-Y	Spare		
20T	45	Y-S	Spare		
R	20	S-Y	Spare		
21T	46	V-Bl	Spare		
R	21	Bl-V	Spare		
22T	47	V-O	Spare		
R	22	O-V	Spare		
23T	48	V-G	Spare		
R	23	G-V	Spare		
24T	49	V-Br	Spare		
R	24	Br-V	Spare		
25T	50	V-S	Spare		
R	25	S-V	Spare		

TABLE 5-10
TERMINAL SEQUENCE & DESIGNATIONS
CONNECTOR NO. J6/J5
ATTENDANT CONSOLE #0 & #1

PAIR	PIN	COLOR CODE	LEAD DESIGNATION	FUNCTION	PCB POSITION
1T	26	W-Bl	TL 001	Tip-Line CKT 001	NEKU U00/U01
R	1	Bl-W	RL 001	Ring-Line CKT 001	NEKU U00/U01
2T	27	W-O	DTL 001	Data Tip-Line CKT 001	NEKU U00/U01
R	2	O-W	DRL 001	Data Ring-Line CKT 001	NEKU U00/U01
3T	28	W-G	Spare		
R	3	G-W	Spare		
4T	29	W-Br	EMT 0	Emergency Transfer SWT	NPRU
R	4	Br-W	INIT 0	Intialize Switch	NPRU
5T	30	W-S	Spare		
R	5	S-W	MAJ IN 0	Major Alarm	NPRU
6T	31	R- Bl	Spare		
R	6	Bl-R	Spare		
7T	32	R-O	Spare		
R	7	O-R	Spare		
8T	33	R-G	Spare		
R	8	G-R	ATT0 -24V	-24V	NPRU
9T	34	R-Br	Spare		
R	9	Br-R	ATT0 -24V	-24V	NPRU
10T	35	R-S	Spare		
R	10	S-R	ATT0 -24V	-24V	NPRU
11T	36	Bk-Bl	Spare		
R	11	Bl-Bk	ATT0 -24V	-24V	NPRU
12T	37	Bk-O	Spare		
R	12	O-Bk	ATT0 -24V	-24V	NPRU
13T	38	Bk-G	Spare		
R	13	G-Bk	ATT0 -24V	-24V	NPRU
14T	39	Bk-Br	Spare		
R	14	Br-Bk	Spare		
15T	40	Bk-S	Spare		
R	15	S-Bk	Spare		
16T	41	Y-Bl	Spare		
R	16	Bl-Y	Spare		
17T	42	Y-O	Spare		
R	17	O-Y	Spare		
18T	43	Y-G	Spare		
R	18	G-Y	Spare		
19T	44	Y-Br	ATT0 EG	Ground	NPRU
R	19	Br-Y	Spare		
20T	45	Y-S	ATT0 EG	Ground	NPRU
R	20	S-Y	Spare		
21T	46	V-Bl	ATT0 EG	Ground	NPRU
R	21	Bl-V	Spare		
22T	47	V-O	ATT0 EG	Ground	NPRU
R	22	O-V	Spare		
23T	48	V-G	ATT0 EG	Ground	NPRU
R	23	G-V	Spare		
24T	49	V-Br	ATT0 EG	Ground	NPRU
R	24	Br-V	Spare		
25T	50	V-S	Spare		
R	25	S-V	Spare		

TABLE 5-11
TERMINAL SEQUENCE & DESIGNATIONS
CONNECTOR NO. J1 & J2
PAGING, MUSIC & UNA RINGING

PAIR	PIN	COLOR CODE	LEAD DESIGNATION	FUNCTION	PCB POSITION
1T	26	W-Bl	PT 1	Paging Tip	NPRU
R	1	Bl-W	PR 1	Paging Ring	NPRU
2T	27	W-O	PG 1	Paging Equip. Control	NPRU
R	2	O-W	PG Gnd	Paging Equip. Common	NPRU
3T	28	W-G	Spare		
R	3	G-W	Spare		
4T	29	W-Br	MT	MOH Source Tip	NPRU
R	4	Br-W	MR	MOH Source Ring	NPRU
5T	30	W-S	Spare		
R	5	S-W	Spare		
6T	31	R- Bl	PG In 1	Paging Amp #1 Out	NPRU
R	6	Bl-R	PG Out 1	Paging Zone #1 Out	NPRU
7T	32	R-O	PG In 2	Paging Amp #2 Out	NPRU
R	7	O-R	PG Out 2	Paging Zone #2 Out	NPRU
8T	33	R-G	PG In 3	Paging Amp #3 Out	NPRU
R	8	G-R	PG Out 3	Paging Zone #3 Out	NPRU
9T	34	R-Br	PG In 4	Paging Amp #4 Out	NPRU
R	9	Br-R	PG Out 4	Paging Zone #4 Out	NPRU
10T	35	R-S	PG In 5	Paging Amp #5 Out	NPRU
R	10	S-R	PG Out 5	Paging Zone #5 Out	NPRU
11T	36	Bk-Bl	Spare		
R	11	Bl-Bk	Spare		
12T	37	Bk-O	UNA B	UNA Ringing Ground	NPRU
R	12	O-Bk	UNA A	UNA Ringing 20 Hz	NPRU
13T	38	Bk-G	Spare		
R	13	G-Bk	Spare		
14T	39	Bk-Br	Spare		
R	14	Br-Bk	Spare		
15T	40	Bk-S	Spare		
R	15	S-Bk	Spare		
16T	41	Y-Bl	Spare		
R	16	Bl-Y	Spare		
17T	42	Y-O	Spare		
R	17	O-Y	Spare		
18T	43	Y-G	Spare		
R	18	G-Y	Spare		
19T	44	Y-Br	Spare		
R	19	Br-Y	Spare		
20T	45	Y-S	Spare		
R	20	S-Y	Spare		
21T	46	V-Bl	Spare		
R	21	Bl-V	Spare		
22T	47	V-O	Spare		
R	22	O-V	Spare		
23T	48	V-G	Spare		
R	23	G-V	Spare		
24T	49	V-Br	Spare		
R	24	Br-V	Spare		
25T	50	V-S	Spare	PFT-24 Volts (Ground)	NPRU
R	25	S-V	Spare	(Power)	NPRU

TABLE 5-12
TERMINAL SEQUENCE & DESIGNATIONS
CONNECTOR NO. J07 ~ J10/J19 ~ J22/J501 ~ J504/J513 ~ J518
NCOU/NEMU/NLSU/NDTU (T00 ~ T15)

PAIR	PIN	COLOR CODE	TRUNK FUNCTION	TRUNK CIRCUIT
1T	26	W-Bl	T	TXX1
R	1	Bl-W	R	
2T	27	W-O	T1	
R	2	O-W	R1	
3T	28	W-G	E	
R	3	G-W	SG	
4T	29	W-Br	M	
R	4	Br-W	SB	
5T	30	W-S	T	TXX2
R	5	S-W	R	
6T	31	R- Bl	T1	
R	6	Bl-R	R1	
7T	32	R-O	E	
R	7	O-R	SG	
8T	33	R-G	M	
R	8	G-R	SB	
9T	34	R-Br	T	TXX3
R	9	Br-R	R	
10T	35	R-S	T1	
R	10	S-R	R1	
11T	36	Bk-Bl	E	
R	11	Bl-Bk	SG	
12T	37	Bk-O	M	
R	12	O-Bk	SB	
13T	38	Bk-G	T	TXX4
R	13	G-Bk	R	
14T	39	Bk-Br	T1	
R	14	Br-Bk	R1	
15T	40	Bk-S	E	
R	15	S-Bk	SG	
16T	41	Y-Bl	M	
R	16	Bl-Y	SB	

NOTE:
The NDTU may be installed in T00 or T08, connectors J07 and J501 respectively. It may not be used in universal slots.

TABLE 5-13
TERMINAL SEQUENCE & DESIGNATIONS
CONNECTOR NO. J11 ~ J18/J23 ~ J30/J505 ~ J512/J517 ~ J524
NDSU/NEKU/NDKU/NSTU/NDCU/NMDU/NOCU (U00 ~ U31) or NCOU/NEMU/NLSU (T16 ~ T31)

PAIR	PIN	COLOR CODE	STATION FUNCTION	LINE CIRCUIT	TRUNK FUNCTION	TRUNK CIRCUIT
1T	26	W-Bl	Tip-Line	LXX1	T	TXX1
R	1	Bl-W	Ring-Line		R	
2T	27	W-O	Data Tip-Line		T1	
R	2	O-W	Data Ring-Line		R1	
3T	28	W-G	Tip-Line	LXX2	E	
R	3	G-W	Ring-Line		SG	
4T	29	W-Br	Data Tip-Line		M	
R	4	Br-W	Data Ring-Line		SB	
5T	30	W-S	Tip-Line	LXX3	T	TXX2
R	5	S-W	Ring-Line		R	
6T	31	R- Bl	Data Tip-Line		T1	
R	6	Bl-R	Data Ring-Line		R1	
7T	32	R-O	Tip-Line	LXX4	E	
R	7	O-R	Ring-Line		SG	
8T	33	R-G	Data Tip-Line		M	
R	8	G-R	Data Ring-Line		SB	
9T	34	R-Br	Tip-Line	LXX5	T	TXX3
R	9	Br-R	Ring-Line		R	
10T	35	R-S	Data Tip-Line		T1	
R	10	S-R	Data Ring-Line		R1	
11T	36	Bk-Bl	Tip-Line	LXX6	E	
R	11	Bl-Bk	Ring-Line		SG	
12T	37	Bk-O	Data Tip-Line		M	
R	12	O-Bk	Data Ring-Line		SB	
13T	38	Bk-G	Tip-Line	LXX7	T	TXX4
R	13	G-Bk	Ring-Line		R	
14T	39	Bk-Br	Data Tip-Line		T1	
R	14	Br-Bk	Data Ring-Line		R1	
15T	40	Bk-S	Tip-Line	LXX8	E	
R	15	S-Bk	Ring-Line		SG	
16T	41	Y-Bl	Data Tip-Line		M	
R	16	Bl-Y	Data Ring-Line		SB	

TABLE 5-14
TERMINAL SEQUENCE & DESIGNATIONS
CENTRAL OFFICE LINE CONNECTION & PFT CONTROL
J1

PAIR	PIN	COLOR CODE	LEAD DESIGNATION	FUNCTION	PCB POSITION
1T	26	W-Bl	T	Tip-CO #1	
R	1	Bl-W	R	Ring-CO #1	
2T	27	W-O	T	Tip-NCOU #1	
R	2	O-W	R	Ring-NCOU #1	
3T	28	W-G	T	Tip-CO #2	
R	3	G-W	R	Ring-CO #2	
4T	29	W-Br	T	Tip-NCOU #2	
R	4	Br-W	R	Ring-NCOU #2	
5T	30	W-S	T	Tip-CO #3	
R	5	S-W	R	Ring-CO #3	
6T	31	R- Bl	T	Tip-NCOU #3	
R	6	Bl-R	R	Ring-NCOU #3	
7T	32	R-O	T	Tip-CO #4	
R	7	O-R	R	Ring-CO #4	
8T	33	R-G	T	Tip-NCOU #4	
R	8	G-R	R	Ring-NCOU #4	
9T	34	R-Br	T	Tip-CO #5	
R	9	Br-R	R	Ring-CO #5	
10T	35	R-S	T	Tip-NCOU #5	
R	10	S-R	R	Ring-NCOU #5	
11T	36	Bk-Bl	T	Tip-CO #6	
R	11	Bl-Bk	R	Ring-CO #6	
12T	37	Bk-O	T	Tip-NCOU #6	
R	12	O-Bk	R	Ring-NCOU #6	
13T	38	Bk-G	T	Tip-CO #7	
R	13	G-Bk	R	Ring-CO #7	
14T	39	Bk-Br	T	Tip-NCOU #7	
R	14	Br-Bk	R	Ring-NCOU #7	
15T	40	Bk-S	T	Tip-CO #8	
R	15	S-Bk	R	Ring-CO #8	
16T	41	Y-Bl	T	Tip-NCOU #8	
R	16	Bl-Y	R	Ring-NCOU #8	
17T	42	Y-O	Spare		
R	17	O-Y	Spare		
18T	43	Y-G	Spare		
R	18	G-Y	Spare		
19T	44	Y-Br	Spare		
R	19	Br-Y	Spare		
20T	45	Y-S	Spare		
R	20	S-Y	Spare		
21T	46	V-Bl	Spare		
R	21	Bl-V	Spare		
22T	47	V-O	Spare		
R	22	O-V	Spare		
23T	48	V-G	Spare		
R	23	G-V	Spare		
24T	49	V-Br	Spare		
R	24	Br-V	Spare		
25T	50	V-S	PFT EG	PFT Ground (Input)	NPRU
R	25	S-V	PFT -24V	PFT -24V (Input)	NPRU

TABLE 5-15
TERMINAL SEQUENCE & DESIGNATIONS
STATION LINE CONNECTION
J2

PAIR	PIN	COLOR CODE	LEAD DESIGNATION	FUNCTION	PCB POSITION
1T	26	W-Bl	T	Tip-TEL #1	
R	1	Bl-W	R	Ring-TEL #1	
2T	27	W-O	T	Tip-NSTU2 #1	
R	2	O-W	R	Ring-NSTU2 #1	
3T	28	W-G	T	Tip-TEL #2	
R	3	G-W	R	Ring-TEL #2	
4T	29	W-Br	T	Tip-NSTU2 #2	
R	4	Br-W	R	Ring-NSTU2 #2	
5T	30	W-S	T	Tip-TEL #3	
R	5	S-W	R	Ring-TEL #3	
6T	31	R- Bl	T	Tip-NSTU2 #3	
R	6	Bl-R	R	Ring-NSTU2 #3	
7T	32	R-O	T	Tip-TEL #4	
R	7	O-R	R	Ring-TEL #4	
8T	33	R-G	T	Tip-NSTU2 #4	
R	8	G-R	R	Ring-NSTU2 #4	
9T	34	R-Br	T	Tip-TEL #5	
R	9	Br-R	R	Ring-TEL #5	
10T	35	R-S	T	Tip-NSTU2 #5	
R	10	S-R	R	Ring-NSTU2 #5	
11T	36	Bk-Bl	T	Tip-TEL #6	
R	11	Bl-Bk	R	Ring-TEL #6	
12T	37	Bk-O	T	Tip-NSTU2 #6	
R	12	O-Bk	R	Ring-NSTU2 #6	
13T	38	Bk-G	T	Tip-TEL #7	
R	13	G-Bk	R	Ring-TEL #7	
14T	39	Bk-Br	T	Tip-NSTU2 #7	
R	14	Br-Bk	R	Ring-NSTU2 #7	
15T	40	Bk-S	T	Tip-TEL #8	
R	15	S-Bk	R	Ring-TEL #8	
16T	41	Y-Bl	T	Tip-NSTU2 #8	
R	16	Bl-Y	R	Ring-NSTU2 #8	
17T	42	Y-O	Spare		
R	17	O-Y	Spare		
18T	43	Y-G	Spare		
R	18	G-Y	Spare		
19T	44	Y-Br	Spare		
R	19	Br-Y	Spare		
20T	45	Y-S	Spare		
R	20	S-Y	Spare		
21T	46	V-Bl	Spare		
R	21	Bl-V	Spare		
22T	47	V-O	Spare		
R	22	O-V	Spare		
23T	48	V-G	Spare		
R	23	G-V	Spare		
24T	49	V-Br	Spare		
R	24	Br-V	Spare		
25T	50	V-S	Spare		
R	25	S-V	Spare		

Perception® e & ex

PROGRAMMING PROCEDURES

(D.05 SOFTWARE)

PERCEPTION$_{e\&ex}$ PROGRAMMING PROCEDURES

TABLE OF CONTENTS

CHAPTER	SUBJECT	PAGE
1	INTRODUCTION	1-1
	1. General	1-1
	2. Dual Disk Operation	1-1
	3. Customer Data	1-1
	4. Utility Programs	1-1
2	SET UP KEYBOARD/REMOTE MAINTENANCE	2-1
	1. Keyboard Terminal	2-1
	2. Remote Administration	2-1
	3. Data Format	2-1
3	DATA INPUT/OUTPUT PROCEDURES	3-1
	1. General	3-1
	2. Data Input	3-1
	3. Data Output	3-1
4	AUTHORIZATION PROCEDURES/UTILITY PROGRAM USE	4-1
	1. Authorization Procedure	4-1
	2. Authorization Level Allowances—Data Input Procedures	4-1
	3. Authorization Level Allowances—Data Output Procedures	4-1
	4. Authorization Level Allowances—Maintenance Procedures	4-1
	5. Execution of Authorization Procedure	4-2
	6. Utility Program Use	4-2
5	SYSTEM DATA	5-1
	1. Authorization Code Change (Table 5-1)	5-1
	2. System Data Block (Table 5-2)	5-2
	3. Print System Data Block (Table 5-3)	5-8
	4. System Data Block 2 (Table 5-4)	5-9
	5. Print System Data Block 2 (Table 5-5)	5-13
6	FEATURE DATA	6-1
	1. Access Code Data Block (Table 6-1)	6-1
	2. Print Access Code Data Block (Table 6-2)	6-5
	3. Class of Service Data Block (Table 6-3)	6-6
	4. Print Class of Service Data Block (Table 6-4)	6-10
7	ATTENDANT/STATION/DSS DATA	7-1
	1. Attendant Data Block (Table 7-1)	7-1
	2. Electronic/Digital Telephone Data Block (Table 7-2)	7-4
	3. Standard Telephone Data Block (Table 7-3)	7-13

TABLE OF CONTENTS (continued)

CHAPTER	SUBJECT	PAGE
	4. Print Station Data Block (Table 7-4)	7-17
	5. Print Call Pickup Groups (Table 7-5)	7-19
	6. Print Hunting Arrangements (Table 7-6)	7-20
	7. Print Paging Group Data Block (Table 7-7)	7-21
	8. DSS Console Data Block (Table 7-8)	7-22
	9. Print DSS Console Data Block (Table 7-9)	7-29
8	MESSAGE CENTER DATA	8-1
	1. Message Center Data Block (Table 8-1)	8-1
	2. Print Message Center Data Block (Table 8-2)	8-4
9	TRUNK DATA	9-1
	1. Trunk Group Data Block (Table 9-1)	9-1
	2. Print Trunk Group Data Block (Table 9-2)	9-3
	3. Trunk Data Block (Table 9-3)	9-8
	4. Print Trunk Data Block (Table 9-4)	9-14
	5. Station Message Detail Recording Data Block (Table 9-5)	9-16
	6. Print Station Message Detail Recording Data Block (Table 9-6)	9-18
	7. Dialed Number Identification Service Data Block (Table 9-7)	9-18
	8. Print Dialed Number Identification Service Data Block (Table 9-8)	9-20
10	TOLL RESTRICTION DATA	10-1
	1. Toll Restriction Data Block (Tables 10-1 ~ 10-4)	10-1
	2. Print Toll Restriction Data Block (Table 10-5)	10-8
11	DATA SWITCHING DATA	11-1
	1. Digital Data Interface Unit Data Block (Table 11-1)	11-1
	2. Print Digital Data Interface Unit Data Block (Table 11-2)	11-6
	3. Modem Pooling Data Block (Table 11-3)	11-7
	4. Print Modem Pooling Data Block (Table 11-4)	11-9
12	LEAST COST ROUTING DATA	12-1
	1. Least Cost Routing Data Block (Table 12-1)	12-1
	2. Least Cost Routing Data Block 1 (Tables 12-2 ~ 12-4)	12-2
	3. Least Cost Routing Data Block 2 (Tables 12-5 ~ 12-6)	12-6
	4. Print Least Cost Routing Data Block (Table 12-7)	12-12
13	LODGING/HEALTH CARE DATA	13-1
	1. Lodging/Health Care Features Data Block (Table 13-1)	13-1
	2. Print Lodging/Health Care Features Data Block (Table 13-2)	13-3
	3. Message Registration Data Block (Table 13-3)	13-4
	4. Print Message Registration Data Block (Table 13-4)	13-7
14	SPEED DIAL LIST DATA	14-1
	1. Speed Dial List Data Block (Table 14-1)	14-1
	2. Print Speed Dial List Data Block (Table 14-2)	14-3

TABLE OF CONTENTS (continued)

CHAPTER	SUBJECT	PAGE
15	TRAFFIC MEASUREMENT DATA	15-1
	1. Traffic Measurement Data Block (Table 15-1)	15-1
16	ALPHANUMERIC MESSAGING DATA	16-1
	1. Alphanumeric Message Data Block (Table 16-1)	16-1
	2. Print Alphanumeric Message Data Block (Table 16-2)	16-2
17	ACD DATA	17-1
	1. ACD Data Block (Table 17-1)	17-1
	2. Print ACD Data Block (Table 17-2)	17-7
18	VERIFIABLE ACCOUNT CODES DATA	18-1
	1. Verifiable Account Codes Data Block (Table 18-1)	18-1
	2. Print Verifiable Account Codes Data Block (Table 18-2)	18-4
19	MAINTENANCE PROCEDURES	19-1
	1. General	19-1
	2. Backup Memory Check Entry Procedure (Table 19-1)	19-1
	3. Data Dump Program (Table 19-2)	19-2
	4. Electronic or Digital Telephone/Attendant Console Test (Tables 19-3 ~ 19-4)	19-3
	5. Peripheral Equipment Test (Table 19-5)	19-8

TABLE LIST

TABLE	TITLE	PAGE
1-1	Floppy Disk Installation Procedures	1-2
2-1	PERCEPTION$_e$ TTY and MODEM Connections	2-2
2-2	PERCEPTION$_{ex}$ TTY and MODEM Connections	2-3
3-1	Utility Program Reference Guide Data Input and Output Procedures	3-2
5-1	Authorization Code Change	5-1
5-2	System Data Block	5-6
5-3	Print System Data Block	5-8
5-4	System Data Block 2	5-11
5-5	Print System Data Block 2	5-13
6-1	Access Code Data Block	6-1
6-2	Print Access Code Data Block	6-5
6-3	Class of Service Data Block	6-6
6-4	Print Class of Service Data Block	6-10
7-1	Attendant Data Block	7-2
7-2	Electronic/Digital Telephone Data Block	7-8
7-3	Standard Telephone Data Block	7-15

TABLE LIST (continued)

TABLE	TITLE	PAGE
7-4	Print Station Data Block	7-17
7-5	Print Call Pickup Groups	7-19
7-6	Print Hunting Arrangements	7-20
7-7	Print Paging Group Data Block	7-21
7-8	DSS Console Data Block	7-24
7-9	Print DSS Console Data Block	7-29
8-1	Message Center Data Block	8-2
8-2	Print Message Center Data Block	8-4
9-1	Trunk Group Data Block	9-4
9-2	Print Trunk Group Data Block	9-7
9-3	Trunk Data Block	9-10
9-4	Print Trunk Data Block	9-15
9-5	Station Message Detail Recording (SMDR) Data Block	9-17
9-6	Print Station Message Detail Recording (SMDR)	9-18
9-7	Dialed Number Identification Service Data Block	9-19
9-8	Print Dialed Number Identification Service Data Block	9-20
10-1	Toll Restriction Data Block	10-1
10-2	Miscellaneous Parameters Table	10-3
10-3	Restriction Class Table	10-5
10-4	Area/Office Code Exception Table	10-7
10-5	Print Toll Restriction Data Block	10-8
11-1	Digital Data Interface Unit Data Block	11-3
11-2	Print Digital Data Interface Unit Data Block	11-6
11-3	Modem Pooling Data Block	11-8
11-4	Print Modem Pooling Data Block	11-9
12-1	Least Cost Routing Data Block	12-1
12-2	Miscellaneous Parameters Table	12-3
12-3	Area Code Table	12-4
12-4	Area/Office Code Table	12-5
12-5	Route Table	12-8
12-6	Modify Digits Table	12-10
12-7	Print Least Cost Routing Data Block	12-13
13-1	Lodging/Health Care Features Data Block	13-2
13-2	Print Lodging/Health Care Features Data Block	13-3
13-3	Message Registration Data Block	13-5
13-4	Print Message Registration Data Block	13-7
14-1	Speed Dial List Data Block	14-2
14-2	Print Speed Dial List Data Block	14-3
15-1	Traffic Measurement Data Block	15-2
16-1	Alphanumeric Message Data Block	16-1
16-2	Print Alphanumeric Message Data Block	16-2
17-1	ACD Data Block	17-4
17-2	Print ACD Data Block	17-7
18-1	Verifiable Account Codes Data Block	18-2
18-2	Print Verifiable Account Codes Data Block	18-4
19-1	Backup Memory Check Entry Procedure	19-1

TABLE LIST (continued)

TABLE	TITLE	PAGE
19-2	Data Dump Program	19-2
19-3	Electronic/Digital Telephone Test Procedure	19-4
19-4	Attendant Console Test Procedure	19-6
19-5	Peripheral Equipment Diagnostic Procedure	19-11
19-6	Disk Drive Operation Error Codes	19-15

CHAPTER 1

INTRODUCTION

1. General

1.01 PERCEPTION$_e$ and PERCEPTION$_{ex}$ are both stored program-controlled systems which utilize a 16-bit microprocessor as the central processing unit (CPU). The system memory is made up of Read Only Memory (ROM), Dynamic Random Access Memory (DRAM), and Static Random Access Memory (SRAM). The small amount of ROM that is provided contains the "Loader" program for the 3.5-inch disk drive (NFDU card). When the system is initially powered up or is reset manually, the remainder of the Operating System programs and Customer Data will be loaded into RAM from the disk, under the control of the Loader program.

1.02 Since Dynamic RAM is volatile (its contents are lost when power is removed), the disk remains in the system as backup. If a reload is required, the entire system program and customer database will reload in approximately 45 seconds. In Lodging/ Health Care operation, some customer data is stored in Static RAM in order to protect it in case of a power failure.

2. Dual Disk Operation

2.01 PERCEPTION$_{e\&ex}$ systems with **D.02** software and above, utilize two floppy disks (FDs) for the storage of operating and maintenance data. One of these disks (the System FD) is used specifically for the system program, customer data, and the **DSYS**, **DTRF**, and **TPER** maintenance programs, while the other disk (the Maintenance FD) is used exclusively for all other maintenance programs. A separate disk drive for each disk is required for remote maintenance. Systems with a single disk drive must interchange disks manually in order to perform the various system programming functions. The System FD is inserted for system program loading, data saving, and system operation, while the Maintenance FD is inserted for system programming or the performance of maintenance operations. Dual-drive systems require the insertion of the System FD in FDD0, followed by the insertion of the Maintenance FD in FDD1. The various steps involved in floppy disk installation for both single- and dual-disk systems are noted in Table 1-1.

3. Customer Data

3.01 All PERCEPTION$_{e\&ex}$ options are controlled by entries made in the Customer Database. Tables are provided for defining System Parameters and Trunks, as well as individual station features. The Customer Data is unique to each system and is usually entered by using a keyboard terminal. After the data has been entered into system memory, a simple keyboard command causes it to be copied onto the System FD, where it remains as a permanent record.

4. Utility Programs

4.01 In addition to the Operating System Programs and Customer Data, the System FD also contains many Utility Programs, which are used to program and maintain customer data. The Utility Programs are divided into three main groups:

1) Data Input Procedures

2) Data Output Procedures

3) Maintenance Procedures

4.02 When required, a Utility Program can be called up by entering a command via the keyboard terminal. The system will respond by locating the proper Utility Program on the proper floppy disk and then loading it into the memory overlay area. When the loading is completed, a prompt will be output to the terminal. The overlay area can accommodate only one Utility Program at a time. When a program is called up, the previous program will be taken out of the overlay.

NOTE:
Any disk failure will cause an error code to be output to the terminal. See Table 19-6 for the list of error codes.

TABLE 1-1
FLOPPY DISK INSTALLATION PROCEDURES

Operation	Disk That Performs Operation		
	One-Disk Systems	Two-Disk Systems	Note
1. Turn power on (Boot Loading).	Sys-FD	Sys-FD in FDD0	1
2. For two-drive systems: After the system initializes, change the NOD entry in the DSYS Program from 1 to 2.	Sys-FD	Sys-FD in FDD0	1
3. Set up customer data for all maintenance programs except DSYS, DTRF, and TPER.	Mnt-FD	Mnt-FD in FDD1	2 & 3
4. Save and dump data.	Sys-FD	Sys-FD in FDD0	4

NOTES:

1. *If the System-FD is not inserted in FDD0, LEDs 1 ~ 4 on the LCCU will light.*
2. *The **DSYS**, **DTRF**, and **TPER Programs** are stored on the System-FD. If this disk is not inserted in FDD0, then the system will respond with the following message:*
   "CURRENT FD IS NOT SYSTEM FD. CHANGE IT TO SYSTEM FD."
3. *If the Maintenance-FD is not installed either in FDD0 of a one-drive system, or in FDD1 of a two-drive system, then the following message will be generated:*
   "CURRENT FD IS NOT MAINT. FD. CHANGE IT TO MAINT. FD."
4. *If the System-FD is not installed in FDD0, then the system will request a change by generating the same message as in note 2.*
5. *In single drive systems, the Maintenance FD can be left in FDD0 up until performing a SAVE. Before a SAVE can actually be performed, the System FD must be installed.*
6. *After an initialization, to clear Call Forwarding (CFD) and Message Waiting (MSG) data, is performed on the system, perform the following procedures:*
   a. *Run the **DMYC Program**.*
   b. *When it is completed, perform the following steps at the attendant console:*
      - *Press an LPK button, dial # 1 8, (CFD clear), and press the RLS button.*
      - *Press an LPK button, dial # # 5, (MSG clear), and press the RLS button.*
      - *Wait about 20 minutes for the system to run through and clear the above data.*
      - *Initialize the system.*
      - *Do a data dump (DDMP) procedure.*
      - *Reload the system (power off and on).*

CHAPTER 2

SET UP KEYBOARD/REMOTE MAINTENANCE

1. Keyboard Terminal

1.01 PERCEPTION$_e$ and PERCEPTION$_{ex}$ systems are designed to interface with a standard asynchronous keyboard/printer data terminal (a Texas Instruments Model 743 or 745, or equivalent) or a personal computer configured as a dumb terminal. The terminal is connected to the system via a female-type RS-232C connector (labeled TTY), which is located on the connector panel on the lower rear of the basic cabinet. The TTY port can operate at a speed of either 300 or 1200 bps, which is designated by a switch on the front of the LCCU PCB. The selected bps setting must match the setting on the connected modem or TTY. TTY and modem port pin assignments for PERCEPTION$_e$ systems are shown in Table 2-1, while assignments for PERCEPTION$_{ex}$ systems are shown in Table 2-2.

2. Remote Administration

2.01 PERCEPTION$_e$ and PERCEPTION$_{ex}$ systems can be programmed and tested from a remote location via a locally-provided 300 or 1200 bps modem. Utility Programs can be called up via a telephone line and then the desired data change or test can be performed. On the PERCEPTION$_e$, the modem connects to the TTY RS-232C connector on the rear of the basic cabinet via a Null Modem cable (see Table 2-1 for PERCEPTION$_e$ pin assignments). On the PERCEPTION$_{ex}$, the modem connects directly to the modem connector on the rear of the basic cabinet (see Table 2-2 for PERCEPTION$_{ex}$ pin assignments).

3. Data Format

3.01 The PERCEPTION$_e$ and PERCEPTION$_{ex}$ systems communicate on the TTY and modem ports via the standard 7-bit ASCII code, using one start bit, one stop bit, and one parity bit. Both systems transmit even parity and ignore parity on the receive side.

3.02 Prior to switching on the PERCEPTION$_e$ or PERCEPTION$_{ex}$ system, data terminal, or modem power, all speed settings should be made and data terminals and modems should be set for full duplex operation.

Bei Graphics
modem ext - [redacted]
code = [redacted]

TABLE 2-1
PERCEPTION$_e$ TTY and MODEM CONNECTIONS

TTY PORT		TTY	
PIN	SIGNAL	PIN	SIGNAL
2	Receive Data	2	Transmit Data
3	Transmit Data	3	Receive Data
4	Ready to Send	4	Ready to Send
5	Clear to Send	5	Clear to Send
6	Data Set Ready	6	Data Set Ready
7	Signal Ground	7	Signal Ground
8	Data Carrier Detect	8	Data Carrier Detect
20	Data Terminal Ready	20	Data Terminal Ready

TTY PORT		MODEM	
PIN	SIGNAL	PIN	SIGNAL
2	Receive Data	3	Transmit Data
3	Transmit Data	2	Receive Data
4	Ready to Send	5	Clear to Send
5	Clear to Send	4	Ready to Send
6	Data Set Ready	20	Data Terminal Ready
7	Signal Ground	7	Signal Ground
20	Data Terminal Ready	6	Data Set Ready

TABLE 2-2
PERCEPTION$_{ex}$ TTY and MODEM CONNECTIONS

TTY PORT		TTY	
PIN	SIGNAL	PIN	SIGNAL
2	Receive Data	2	Transmit Data
3	Transmit Data	3	Receive Data
4	Ready to Send	4	Ready to Send
5	Clear to Send	5	Clear to Send
6	Data Set Ready	6	Data Set Ready
7	Signal Ground	7	Signal Ground
8	Data Carrier Detect	8	Data Carrier Detect
20	Data Terminal Ready	20	Data Terminal Ready

MODEM PORT		MODEM	
PIN	SIGNAL	PIN	SIGNAL
2	Transmit Data	2	Receive Data
3	Receive Data	3	Transmit Data
4	Ready to Send	4	Clear to Send
5	Clear to Send	5	Ready to Send
6	Data Set Ready	6	Data Set Ready
7	Signal Ground	7	Signal Ground
20	Data Terminal Ready	20	Data Terminal Ready

CHAPTER 3

DATA INPUT/OUTPUT PROCEDURES

1. General

1.01 Prior to actual system programming, customer data is recorded on special System Record Sheets which correspond with the prompts outlined in the data block tables contained in this manual (see Appendix 1). After these sheets are completed and after the PERCEPTION$_e$ or PERCEPTION$_{ex}$ system is connected to the data terminal (see Chapter 2), data can be entered into the system via the Data Input Utility Programs. Once the information is input, it can be printed out via Data Output Procedures and tested via special Maintenance Procedures. The Utility Programs used to program and maintain customer data are summarized as follows:

1) Data Input Procedures—used when entering or making changes to Customer Data.

2) Data Output Procedures—used for obtaining printouts of the contents of the Customer Data memory.

3) Maintenance Procedures—used when testing the system. The System FD contains only the **DSYS**, **DTRF**, and **TPER** maintenance programs, while the maintenance FD contains all other maintenance programs.

1.02 Within this manual, tables dealing with Data Input and Data Output Procedures are presented collectively under each chapter category of data (e.g., System Data, Station Data, etc.). This provides a convenient reference to all information that deals with a specific type of data. Maintenance Procedures, consisting of the Data Dump and various test procedures, are grouped into their own chapter at the end of this manual. For convenient reference, each Utility Program's location within this manual is listed in Table 3-1.

1.03 Each Utility Program has a 4-letter mnemonic name that is used to identify it and to call it up from the disk on which it is contained. Each program's mnemonic name is included in the listing in Table 3-1. Before a Utility Program can be called up, an Authorization Procedure must be performed.

2. Data Input

2.01 Before PERCEPTION$_{e\&ex}$ system data can be input, option selections must be made and then listed on the System Record Sheets (see Appendix 1). The System Record will then serve as a programming guide and installation record.

2.02 The System Record contains a form for each Data Input Utility Program. Each form is identified by the Utility Program name and by the program's corresponding mnemonic that is requested by the system (for example: System Data Block = **DSYS Program**).

2.03 Data input via a Utility Program is accomplished by responding to the program's prompts. These prompts are listed in their proper order in the System Record Sheets. Space is provided to record a response to each prompt.

2.04 Refer to each Utility Program's specific instructions for an explanation of the possible responses to each prompt. Record each selected response on the program's corresponding System Record Sheet.

2.05 To input new customer data or to change an established database, perform the Authorization Procedure and then enter the mnemonic name of the desired Data Input Utility Program (see Chapter 4). Refer to the completed System Record Sheets and input the required information.

3. Data Output

3.01 To print out data that is contained in the various data blocks of the customer database, perform the Authorization Procedure and then enter the mnemonic name of the desired Data Output Utility Program. Within this manual, Data Output programs are grouped next to their related Data Input Program. For detailed instructions on how to print out data, refer to each specific program and program table.

TABLE 3-1
UTILITY PROGRAM REFERENCE GUIDE

DATA INPUT AND OUTPUT PROCEDURES

TABLE	NAME	MNEM.	PAGE
5-1	Authorization Code Change	DCHG	5-1
5-2	System Data Block (DB)	DSYS	5-6
5-3	Print System DB	PSYS	5-8
5-4	System DB 2	DSD2	5-11
5-5	Print System DB 2	PSY2	5-13
6-1	Access Code DB	DACD	6-1
6-2	Print Access Code DB	PACD	6-5
6-3	Class of Service DB	DCOS	6-6
6-4	Print Class of Service DB	PCOS	6-10
7-1	Attendant DB	DATT	7-2
7-2	Electronic/Digital Telephone DB	DEKT	7-8
7-3	Standard Telephone DB	DSTT	7-15
7-4	Print Station DB	PSDB	7-17
7-5	Print Call Pickup Groups	PCPG	7-19
7-6	Print Hunting Arrangement	PHNT	7-20
7-7	Print Paging Group DB	PPAG	7-21
7-8	DSS Console DB	DDSS	7-24
7-9	Print DSS Console DB	PDSS	7-29
8-1	Message Center DB	DMCD	8-2
8-2	Print Message Center DB	PMCD	8-4
9-1	Trunk Group DB	DTGP	9-3
9-2	Print Trunk Group DB	PTGP	9-7
9-3	Trunk DB	DTRK	9-10
9-4	Print Trunk DB	PTRK	9-15
9-5	SMDR DB	DMDR	9-17
9-6	Print SMDR	PMDR	9-18
9-7	DNIS DB	DDNI	9-19
9-8	Print DNIS	PDNI	9-20
10-1	Toll Restriction DB	DTOL	10-1
10-5	Print Toll Restriction DB	PTOL	10-8
11-1	DDIU DB	DDIU	11-3
11-2	Print DDIU DB	PDIU	11-6
11-3	Modem Pooling DB	DMDM	11-8
11-4	Print Modem Pooling DB	PMDM	11-9
12-1	Least Cost Routing DB	DLC	12-1
12-2 ~ 4	Least Cost Routing DB 1	DLC1	12-3
12-5 ~ 6	Least Cost Routing DB 2	DLC2	12-8
12-7	Print Least Cost Routing DB	PLCR	12-13
13-1	Lodging/Health Care Features DB	DHMF	13-2
13-2	Print Lodging/Health Care Features DB	PHMF	13-3
13-3	Message Registration DB	DMRD	13-5
13-4	Print Message Registration DB	PMRD	13-7
14-1	Speed Dial List DB	DSDL	14-2
14-2	Print Speed Dial List DB	PSDL	14-3
15-1	Traffic Measurement DB	DTRF	15-2
16-1	Alphanumeric Message DB	DMSG	16-1
16-2	Print Alphanumeric Message DB	PMSG	16-2
17-1	ACD/MIS DB	DACM	17-4
17-2	Print ACD/MIS DB	PACM	17-7
18-1	Verifiable Account Codes DB	DVAC	18-2
18-2	Print Verifiable Account Codes DB	PVAC	18-4

MAINTENANCE PROCEDURES

TABLE	NAME	MNEM.	PAGE
19-1	Backup Memory Check Entry Proc.	DMYC	19-1
19-2	Data Dump Program	DDMP	19-2
19-3 ~ 4	Electronic and Digital Telephone/Attendant Console Test Proc.	TTRM	19-4
19-5	Peripheral Equipment Diagnostic Proc.	TPER	19-11

NOTE:
Error codes associated with each data block are listed after each data block table.

CHAPTER 4

AUTHORIZATION PROCEDURES/UTILITY PROGRAM USE

1. Authorization Procedure

1.01 Before any Utility Program can be called up, PERCEPTION$_e$ and PERCEPTION$_{ex}$ systems require an authorization code to be entered. This prevents unauthorized tampering with the Customer Database.

1.02 There are four levels of authorization (each of which has a unique 4-digit code that is assigned in the system memory). Each authorization level allows certain input, output, and maintenance procedures to be performed. When shipped from the factory, all levels are assigned 0000. Codes are changed with the Authorization Code Change procedure (DCHG).

2. Authorization Level Allowances—Data Input Procedures

2.01 The data input activities that are allowed to each of the four authorization levels are as follows:

Level 1: Can do all activities of Levels 2 and 3.
Can change the 4-digit codes of Levels 1, 2, 3, and 4.

Level 2: Can do all Level 1 activities except change or read out codes for Level 1.
Can change Level 2, 3, and 4 codes.

Level 3: Normally assigned for end user use.
Can change:
System Data Block 2
Class of Service Data Block
Station Data Block
Attendant Data Block
DSS Console Data Block
Station Message Detail Recording Data Block
Speed Dial List Data
Digital Data Interface Unit Data Block
Modem Pooling Data Block
Alphanumeric Message Data Block

Level 4: Normally assigned for ACD Supervisor use.
Can change ACD/MIS Data Block.

NOTE:
No other authorization level can access ACD/MIS Data Block.

3. Authorization Level Allowances—Data Output Procedures

3.01 The entrance of the different authorization codes permits specific customer data to be printed. The data output activities that are allowed to three of the four authorization levels are as follows:

Levels 1, 2, or 3: Print System Data Block
Print System Data Block 2
Print Class Service Data Block
Print Station Data Block
Print DSS Console Data Block
Print SMDR Data Block
Print Digital Data Interface Data Block
Print Modem Pooling Data Block
Print Speed Dial List Data Block
Print Call Pickup Groups
Print Hunting Arrangements
Print Alphanumeric Message Data Block

Levels 2 or 3 only: Print System Data Block
Print Access Code Data Block
Print Message Center Data Block
Print Trunk Group Data Block
Print Trunk Data Block
Print Toll Restriction Data Block
Print Least Cost Routing Data Block
Print Lodging/Health Care Features Data Block
Print Message Registration Data Block
Print Paging Group Data

4. Authorization Level Allowances—Maintenance Procedures

4.01 The maintenance activities that are allowed to three of the four authorization levels are as follows:

Levels 1, 2, or 3: Data Dump Program
Electronic and Digital Telephone/Attendant Console Test

Levels 1 or 2 only: Backup Memory Check Entry Procedure
Peripheral Equipment Test

5. Execution of Authorization Procedure

5.01 To perform the Authorization Procedure:

1) Plug in and power up the data terminal.

2) The system will respond with a copyright and then greater than sign (>).

3) Press the carriage return CR key.
   - The system will respond by printing COD and will print several characters in the spaces to be occupied by your next entry (this is done to mask the authorization code).

IMPORTANT!
This masking measure is not effective when a CRT is used. Be careful not to leave the authorization code displayed on the screen.

4) Enter the 4-digit authorization code (0000 default value), followed by a CR.
   - The system will print:
     ERROR if an invalid code is entered (return to Step 2).
     OK if a valid code is entered (proceed to request Utility Program).

6. Utility Program Use

6.01 After performing the Authorization Procedure and receiving an OK response, enter the mnemonic of the required Utility Program.

6.02 After the Utility Program name is entered, the program will be loaded from the disk. When the loading is complete, the system will prompt REQ for Request.

6.03 Entering data via a Utility Program is a matter of responding to the prompts given by the system via the data terminal. The prompts and the required responses are mnemonics that are usually abbreviations of the actual English word required.

6.04 If an improper response is made to a prompt, the system will respond with an error message. The error message will be a "?" when the error is obvious, but in most cases it will be an alphanumeric code. The alphanumeric code consists of five letters (identifying the program) and two numbers (identifying the error). Error code lists are provided in this manual to explain each error code.

6.05 Boxes are used to indicate keys on the programming terminal. The CTRL (control) key must be held down while simultaneously pressing either the X or the H key. Press the carriage return key whenever CR appears. The following keys are available when using Utility Programs (press the CR key after each code):

CTRL X—Ignore line entered—the same prompt will be repeated.

CTRL H—Backspace will allow you to overwrite the previous character(s).

DEL—May be entered at anytime—the system will stop execution and return to the REQ prompt.

DEL DEL—Exits the program—ends the use of one utility. The system will respond with SAVE. A "Y" entry will cause the system to copy all present data onto the disk. If more changes are to be made, enter "N."

NOTE:
The above key indications are for Texas Instruments Silent 700 series terminals. Other terminal types have a RUBOUT *key instead of* DEL *and a* BACKSPACE *key, to be used instead of* CTRL H.

6.06 When data already exists for a given prompt and a change is not required, entering a CR will advance the system to the next prompt without changing existing data.

6.07 Tables 5-1 through 19-5 show the format of each Utility Program. Programs are grouped into general categorical areas (e.g., System Data, Feature Data, etc.). Each Data Output program is grouped with its related Data Input program(s). If applicable, each data table is followed by a list explaining the error codes which pertain to that program. Using the appropriate tables as guides, enter data that has been previously recorded in the System Record Sheets.

CHAPTER 5

SYSTEM DATA

1. Authorization Code Change (Table 5-1)

1.01 The **DCHG Program** changes the authorization codes which are used in the Authorization Procedure.

1.02 To use the **DCHG Program**:

- Complete the Authorization Procedure (Level 1 or 2).
  Enter: DCHG CR (in response to the OK prompt).
- The next prompt will be: L1XXXX (Level 1 authorization code).
  (XXXX = present code.)

NOTES:

1. *If a Level 2 authorization code was given above, L1 will not be output. Go to the next prompt (L2).*
2. *If a Level 3 authorization code was entered above, an error message will be given, Level 3 cannot change the authorization codes.*

Enter: New L1 code (4 digits) CR.
L2XXXX (Level 2 authorization code).
(XXXX = present code.)
Enter: New L2 code (4 digits) CR.
L3XXXX (Level 3 authorization code).
(XXXX = present code.)
Enter: New L3 code (4 digits) CR.
L4XXXX (Level 4 authorization code).
Enter: New L4 code (4 digits) CR.
Enter: DEL DEL (to exit the program).

TABLE 5-1

Procedure — Authorization Code Change

Authorization Procedure must be completed. If an OK response is received, proceed as follows:

ITEM	PROMPT	USER ENTRY	NOTE NO.
	OK	DCHG	
Authorization Level 1	L1 = XXXX	4 Digits	1 & 2
Authorization Level 2	L2 = XXXX	4 Digits	2
Authorization Level 3	L3 = XXXX	4 Digits	2
Authorization Level 4	L4 = XXXX	4 Digits	2
	SAV	Y or N	3

NOTES:

1. *a. An error message will be received if Level 3 or Level 4 was given in the Authorization Procedure.*
   b. If Level 2 was given in the Authorization Procedure, L1 will be omitted and the response to CHG will be: L2 = XXXX.
   c. XXXX = Present code of the designated level 1 ~ 4.
2. *The possible responses are:*
   YYYY = This new access code will replace the existing XXXX.
   CR = Carriage Return — the code will not be changed and the system will issue the next prompt.
   CTRL X = Ignore line entered.
   CTRL H = Backspace.
   DEL = Stop printing and return to REQ.
   DEL DEL = Exit program.
3. *Enter: Y or N.*

2. System Data Block (Table 5-2)

2.01 The System Data Block (**DSYS Program**) contains miscellaneous data entries that apply to the system as a whole rather than to any individual station or trunk. Data is entered as follows:

REQ (Request)—Indicates that the program has loaded. Since data is always present, only the CHG response is possible.

EXP (Expansion Cabinet)—Indicates whether or not an expansion cabinet is installed.
Enter: Y: if an expansion cabinet is installed.
N: if only the basic cabinet is installed.

NOTES:
1. *Y must be entered to enable the system to provide up to 20 simultaneous conferences in a cabinet using a second NPRU PCB.*
2. *If N is entered, then only ten simultaneous conferences will be supported.*

NOD (Number of Drives)—Indicates whether one or two disk drives are being used. (Two drives are used only with **D.02** or later software versions.)
Enter: 1: if only a single drive (FDD0) is used.
2: if two drives (FDD0 and FDD1) are used. (The system will not access maintenance programs in FDD1 if **1** is entered, unless the Maintenance FD is used in place of the System FD.)

TOR (Time of Daily Routine)—Specifies the time of day that the daily routine task (System Dump) will run (listed after the next prompt).
Enter: 24-hour clock time.
(For example: 1315 = 1:15 pm.)

DRT (Daily Routine Task)—Specifies whether or not a System Data Dump is to be performed at the time specified in response to TOR.
Enter: DDMP (Data Dump) or NONE.

TEN (Tenant Service)—Specifies whether or not tenant service is to be used. If "Y" is entered, incoming trunk calls, dial calls, intercepts, etc. will be routed to the proper attendant console (Att. #0 for Tenant #0, and Att. #1 for Tenant #1). Tenant designation for each telephone and trunk is selected in response to the TEN prompt in the following Data Blocks: Electronic/Digital Telephone (**DEKT Program**), Standard Telephone (**DSTT Program**), and Trunk Group (**DTGP Program**). If "N" is entered, then the attendant consoles will operate in the load sharing mode.
Enter: Y or N.

NOTE:
In tenant service, when the Attendant console transfers a call to a station, if the call RNAs and recalls back to the Attendant, it will recall to the original Attendant that transferred the call. In some cases this may mean the call will recall to the Attendant that the station is not assigned to.

ICP1 (Intercept #1)—If the attendant takes control of a trunk group by using the trunk group access control feature, then stations that place calls to that trunk group will be routed to Intercept #1. This entry defines ICP1 as being either overflow tone (OFL) or the attendant (ATT).
Enter: ATT or OFL.

ICP2 (Intercept #2)—An incoming call from a DID, TIE, or CCSA trunk to a non-existing DN will be routed to Intercept #2 when the system is in day service and to overflow tone when night service is active. This entry defines ICP2 as being either overflow tone (OFL), the attendant (ATT), a standard station, or an answering device connected to a trunk or a standard station port (TNNX, LNNX).
Enter: ATT, OFL, TNNX, or LNNX.

ICP3 (Intercept #3)—A call that is violating trunk access restrictions will be routed to Intercept #3 when the system is in day service and to overflow tone when night service is active. This entry defines ICP3 as being either overflow tone or the attendant.
Enter: ATT or OFL.

LCR (Least Cost Routing)—A "Y" response enables Least Cost Routing in the system. Refer to the Least Cost Routing Data Block **DLC1** and **DLC2 Programs.**
Enter: Y or N.

APG (All Page Access Code)—Defines the All Page access code. The use of this code will simultaneously access Internal Group 0 Paging

AAT (Not Used):
Enter: CR.

APX (Not Used):
Enter: CR.

LN1 (Listed Directory Number #1)—Defines the LDN #1, which is used with the DID feature when routing a call to the attendant console (maximum: 4 digits).
Enter: 1, 2, 3, or 4 digits or NONE.

LN2 (Listed Directory Number #2—Defines the LDN #2, which is used with the DID feature when routing a call to the attendant console (maximum: 4 digits).
Enter: 1, 2, 3, or 4 digits or NONE.

NT1 (LDN #1 Night Number)—Defines the destination to which LDN #1 calls will be routed when the system is in night service (DN or Universal Night Answer).
Enter: 1, 2, 3, or 4 digits or UNA.

NT2 (LDN #2 Night Number)— The response to this prompt defines the destination to which LDN #2 calls will be routed when the system is in night service (DN or UNA).
Enter: 1, 2, 3, or 4 digits or UNA.

BLF1 (Busy Lamp Field #1)—Defines one of the hundreds groups that is to be displayed by the console BLF.
Enter: 1 digit (1 ~ 9).

BLF2 (Busy Lamp Field #2)—Defines one of the hundreds groups that is to be displayed by the console BLF.
Enter: 1 digit (1 ~ 9).

OFL1 (Overflow DN-Attendant Console #0)—Defines the destination for calls that are rerouted from attendant console #0 during an overflow condition.
Enter: 1, 2, 3, or 4 digits or NONE (UNA).

NOTE:
This data may also be changed via the attendant console.

OFL2 (Overflow DN-Attendant Console #1)—Defines the destination for calls that are rerouted from attendant console #1 during an overflow condition.
Enter: 1, 2, 3, or 4 digits, or NONE (UNA).

NOTES:
1. *The overflow destination can also be changed at the attendant console.*
2. *OFL 2 applies to tenant 1 and will not print out when the system is not in tenant service.*

MMP (Meet-me Page Access Code)—Defines the access code that is used by the attendant or attendant-position electronic/digital telephone to "park" a call for the Meet-me Page feature (maximum: 3 digits; the system default is 10).
Enter: 1, 2, or 3 digits.

REM (Remote Access DN)—Defines the DN that is used to assign a trunk for "Remote Access to Services" operation (maximum: 4 digits). The DN must be the same as an assigned station DN. Refer to the note at the NIT prompt in the **DTRK Program** .
Enter: 1, 2, 3, or 4 digits, or NONE.

RAC (Remote Access to Services Change Code)—Defines the access code that must be entered before the system's remote access code can be changed. The remote access code can be changed from either an attendant console or an attendant-position electronic telephone after entering the change code. The remote access code is used by outside callers who want to access the system's remote access feature.
Enter: 1, 2, or 3 digits.

ACC* (* Access Code)—Defines the digit that is to be used by a rotary dial telephone in place of the * button.
Enter: 1 digit or NONE.

NOTE:
*AAC * **must not** conflict with either the DN or other access codes—it is not checked by software.*

ACC# (# Access Code)—Defines the digit that is to be used by a rotary dial telephone in place of the # button.
Enter: 1 digit or NONE.

NOTE:
*AAC# **must not** conflict with either the DN or other access codes—it is not checked by the software.*

COT (Camp-on or Call Waiting Timeout)—Defines the Camp-on and Call Waiting feature timeout period.
Enter: Time in seconds.
For example: 30.

RNA (Ring No Answer Timeout)—Defines the Ring No Answer timeout period for attendant-handled calls.
Enter: Time in seconds.

NOTE:
See Note following TEN prompt on page 5-2.

AOF (Attendant Overflow Timeout)—Defines the timeout period for the attendant overflow facility.
Enter: Time in seconds.

CFD (Call Forward No Answer Timeout)—Defines the Call Forward No Answer timeout period.
Enter: Time in seconds.

NOTE:
The CFD timeout period must be less than RNA time or else RNA time will be in effect.

HLD (2500 Hold/Electronic/Digital Telephone Park Timeout)—Defines the timeout period for the recall of a held call to a single line telephone or of a parked call to an electronic/digital telephone.
Enter: Time in seconds or NONE.

DPT (Dial Pause Timeout)—Defines the maximum pause that is allowed before the first digit is dialed or between other digits that are dialed from an electronic/digital telephone. Stations that are released due to the DPT timer will hear overflow tone. This timeout is used with the line lockout feature.
Enter: Time in seconds.

NOTES:
1. *The Dial Pause Timeout also controls the release of an idle attendant console LPK button.*
2. *Outbound calls can send DTMF tones until the DPT timer expires. Once the timer expires, it changes to the transfer mode.*

PBT (Pushbutton Timeout)—Defines the maximum pause that is allowed between digits that are dialed on a trunk from a DTMF telephone. The transmit voice path from a DTMF telephone to a trunk is broken during dialing. The PBT timer determines how quickly the path is restored and therefore, should be set as short as possible.
Enter: Time in seconds.

LLO (Line Lockout Time)—Defines the length of time that overflow tone is applied to a station after having been released due to the DPT timer. After this timeout occurs, the station will hear silence. When Emergency Ringdown is used, a transfer to the Emergency Ringdown destination will not occur until the LLO timeout period has elapsed.
Enter: Time in seconds.

ACB (Automatic Callback Reserve Time)—Defines the length of time that the called station or trunk in an ACB call is reserved for the caller.
Enter: Time in seconds.

DLY (Delay Ring Timer)—Defines the time period between the ringing of Direct-in Line day answering stations programmed to ring immediately, and stations set for delayed ringing. For example, if stations 200 and 201 are set for immediate ringing, and station 202 is set for delayed ringing, then when a call rings in, the delayed ring-time period must elapse before station 202 will ring.
Enter: Time in seconds (0 ~ 99).

account code that has not been entered before or during the call.
Enter: Time in seconds (0 ~ 255).

HFS (Handsfree Answerback Station)—A "Y" response allows calls from any station to voice-announce to an electronic/digital telephone that is equipped with Handsfree Answerback.
Enter: Y or N.

HFA (Handsfree Answerback Attendant)—A "Y" response allows calls from the attendant to voice-announce to an electronic/digital telephone that is equipped with Handsfree Answerback.
Enter: Y or N.

MDR (SMDR Equipped)—A "Y" response enables SMDR and activates the MDR alarm on the console.
Enter: Y or N.

UNA0 (Universal Night Answer Zone 0)—A response of 0 assigns UNA Zone 0 to Tenant 0. A response of 1 assigns UNA Zone 0 to Tenant 1. (This prompt will only appear if **TEN** was answered **Y**.)
Enter: TEN0 or TEN1.

UNA1 (Universal Night Answer Zone 1)—A response of 0 assigns UNA Zone 1 to Tenant 0. A response of 1 assigns UNA Zone 1 to Tenant 1. (This prompt will only appear if **TEN** was answered **Y**.)
Enter: TEN0 or TEN1.

TABLE 5-2

Procedure — System Data Block

Authorization Procedure must be completed. If an OK response is received, proceed as follows:

ITEM	PROMPT	USER ENTRY	NOTE
	OK	DSYS	
– DISK LOADING –			
	REQ	CHG	
Expansion Cabinet	EXP	Y or N (N)	
Number of Disk Drives	NOD	1 or 2 (1)	1
Time of Daily Routine	TOR	XXXX (0000)	
Daily Routine Tasks	DRT	DDMP or NONE (NONE)	
Tenant Service?	TEN	Y or N (N)	
Intercept #1	ICP1	ATT or OFL (OFL)	
Intercept #2	ICP2	ATT, OFL, TNNX, or LNNX (OFL)	2
Intercept #3	ICP3	ATT or OFL (OFL)	
Least Cost Routing	LCR	Y or N (N)	
All Page Access Code	APG	1 ~ 3 digits (NONE)	3
Not Used	AAT	CR (NONE)	
Not Used	APX	CR (NONE)	
Listed Directory Number #1	LN1	1 ~ 4 digits (NONE)	
Listed Directory Number #2	LN2	1 ~ 4 digits (NONE)	
LDN #1 Night Number	NT1	1 ~ 4 digits or UNA (UNA)	
LDN #2 Night Number	NT2	1 ~ 4 digits or UNA (UNA)	
Busy Lamp Field #1	BLF1	1 ~ 9 (NONE)	
Busy Lamp Field #2	BLF2	1 ~ 9 (NONE)	
Overflow DN Attendant Console #0	OFL1	1 ~ 4 digits or NONE = UNA (NONE)	
Overflow DN Attendant Console #1	OFL2	1 ~ 4 digits or NONE = UNA (NONE)	4
Meet-me Page Access Code	MMP	1 ~ 3 digits (10)	
Remote Access DN	REM	1 ~ 4 digits or NONE (NONE)	
Remote Access to Services Change Code	RAC	1 ~ 3 digits (#*2)	
"*" Access Code	ACC*	1 digit or NONE (NONE)	5 & 6
"#" Access Code	ACC#	1 digit or NONE (NONE)	5 & 6
Camp-on (or CWT) Timeout	COT	0 ~ 255 seconds (50)	
Ring No Answer Timeout	RNA	0 ~ 255 seconds (31)	

Default values are noted in parentheses ( ). *(continued)*

TABLE 5-2 (continued)

ITEM	PROMPT	USER ENTRY	NOTE
Attendant Overflow Timeout	AOF	0 ~ 255 seconds (30)	7
Call Forward No Answer Timeout	CFD	0 ~ 255 seconds (10)	8
2500 Hold/Electronic/Digital Telephone Park Timeout	HLD	0 ~ 255 seconds or NONE (50)	
Dial Pause Timeout	DPT	0 ~ 255 seconds (15)	9
Pushbutton Timeout	PBT	0 ~ 255 seconds (4)	
Line Lockout Timeout	LLO	0 ~ 255 seconds (15)	10
Automatic Callback Reserve Time	ACB	0 ~ 255 seconds (4)	
Delay Ring Timer	DLY	0 ~ 99 seconds (15)	
After Call Timer	ACT	0 ~ 255 seconds (15)	
Handsfree Answerback – Station	HFS	Y or N (N)	11
Handsfree Answerback – Attendant	HFA	Y or N (N)	12
SMDR Equipped	MDR	Y or N (N)	
Universal Night Answer	UNA0	TEN0 or TEN1 (NONE)	
Universal Night Answer	UNA1	TEN0 or TEN 1 (NONE)	

Default values are noted in parentheses ( ).

(continued)

NOTES:

1. ***D.02** and later software versions can use two disk drives. If two drives are used, enter 2; otherwise, enter 1.*
2. *LNNX = Single line station port.*
3. *The all page access code can be 1, 2, or 3 digits.*
4. *Not printed if tenant service is not used (TEN = N).*
5. *An entered digit indicates that a number can be dialed in place of "*" or "#."*
6. *Beware of conflicts with the numbering plan and access codes—the system will not always check.*
7. *Timer activates only when a loop button (LPK) is in use at that attendant console.*
8. *CFD time must be less than RNA or else RNA will prevail.*
9. *The DPT timer also controls attendant LPK release.*
10. *The LLO timer also controls emergency ringdown time, since a transfer to an emergency ringdown destination will not occur until LLO times out.*
11. *A "Y" response allows calls from **any station** to a handsfree answerback-equipped electronic telephone to be answered handsfree.*
12. *A "Y" response allows calls from **the attendant** to a handsfree answerback-equipped electronic telephone to be answered handsfree.*
13. CTRL X = *Ignore line entered.*
    CTRL H = *Backspace.*
    DEL = *Stop printing and return to REQ.*
    DEL DEL = *Exit program.*

TABLE 5-2 (continued)
Error Codes

Program Name: System Data Block (DSYS Program)	
Error Code	**Meaning**
ERSYS 00	The directory number or access code conflicts with an existing directory number, access code, or room prefix.
ERSYS 01	The entered DN does not exist in the system.
ERSYS 02	The entered DN is a trunk DN.
ERSYS 05	The station DN has not been assigned as a remote access DN.
ERSYS 07	The entered station port is not assigned, or is not a 500/2500-type port.
ERSYS 08	The input port has already been assigned to another type of announcement port.

3. Print System Data Block (Table 5-3)

3.01 To use the Print System Data Block (**PSYS Program**):

- Perform the Authorization Procedure (Level 1 or 2).
  Enter: PSYS (in response to the OK prompt).
- When the REQ prompt is received after the program is loaded:
  Enter: PRT.
- The System Data Block will be output in the same format as it was input in the **DSYS Program.**

  Example:
  ```
  REQ  PRT
  EXP  N
  NOD  2
  TOR  0000
  DRT  NONE
  TEN  N
  ICP1 ATT
  ICP2 ATT
  etc.
  ```
- REQ will be prompted again once the printout is complete.
  Enter: DEL DEL CR (to exit the program).

TABLE 5-3

Procedure — Print System Data Block

Authorization Procedure must be completed. If an OK response is received, proceed as follows:

ITEM	PROMPT	USER ENTRY	NOTE
	OK	PSYS	
– DISK LOADING –			
	REQ	PRT	1
– EXECUTE –			
	REQ		1

NOTES:

1. *The only response possible is: PRT = Outputs System Data Block.*
2. CTRL X = *Ignore line entered.*
   CTRL H = *Backspace.*
   DEL = *Stop printing and return to REQ.*
   DEL DEL = *Exit program.*

4. System Data Block 2 (Table 5-4)

4.01 The System Data Block (**DSD2 Program**) contains miscellaneous data entries that apply to the system as a whole rather than to any individual station or trunk. Data is entered as follows:

REQ (Request)—Indicates that the program has loaded. Since data is always present, only the CHG response is possible.

MD0 (Master DN0)—Assigns a "master number" to Distributed Hunt Group 0. Whenever this number is dialed, the calls will be distributed among the stations in the group.
Enter: 1 ~ 4-digit number.

MD1 (Master DN1)—Assigns a "master number" to Distributed Hunt Group 1. Whenever this number is dialed, the calls will be distributed among the stations in the group.
Enter: 1 ~ 4-digit number.

MD2 (Master DN2)—Assigns a "master number" to Distributed Hunt Group 2. Whenever this number is dialed, the calls will be distributed among the stations in the group.
Enter: 1 ~ 4-digit number.

MD3 (Master DN3)—Assigns a "master number" to Distributed Hunt Group 3. Whenever this number is dialed, the calls will be distributed among the stations in the group.
Enter: 1 ~ 4-digit number.

NOTE:
The Capacity of each Distributed Hunt Group has been increased to 32 stations.

AHM (Lodging/Health Care)—Identifies the system's mode of operation.
Enter: Y (Lodging/Health Care).
N (Business).

NOS (Night Operator Station)—Assigns the Night Mode answering destination for calls to an attendant console. Calls can be routed either directly to a designated station or voice directory number (1 ~ 4 digits), or to a UNA device.
Enter: XXXX (Station or voice directory number [1 ~ 4 digits]).
NONE (UNA).

RTO (Transfer Recall Timeout)—Assigns the length of time that the system will wait before performing a transfer recall. A transfer recall occurs when a station transfers a call to another station which is not answered. This station will ring until the Ring No-Answer timeout period elapses (or, if the station is busy, until the Camp-on/Call Waiting timeout period elapses). After this time, the transferred call will return to the transferring station, where it will ring for the period designated by the Transfer Recall Timer, before it is directed to another destination (an attendant console, system UNA device, voice mail system, or alternative station). This final destination is assigned for each trunk, in response to the TRCL prompt in the **DTRK Program**.
Enter: 1 ~ 255 seconds.

NOTE:
If the system is to utilize a voice mail system, then it is recommended that the Transfer Recall Timer be set rather short so that voice mail will be activated promptly.

AEKT (Attendant-Position Telephone)—Assigns an electronic/digital telephone as an attendant position (up to eight per system). This assignment enables the electronic/digital telephone to access several features that are normally associated only with attendant console access (e.g., Meet-me Page assignment and cancellation, system-wide call forward cancellation, and Remote Access Code assignment). Following the AEKT prompt, the system will prompt "D." Any port numbers that are entered, will be deleted. To add an entry, press the carriage return (CR) key. The system will then prompt "A" and any port numbers that are entered will be added.
Enter: LNNX LNNX (in response to the D prompt).
LNNX LNNX (in response to the A prompt).

(LNNX denotes the station port number of the electronic telephone that is to be assigned as an attendant position. Up to eight port numbers may be entered in any one line.)

PEX (PERCEPTION$_{ex}$ Indication)—Designates whether the system being utilized is a PERCEPTION$_{ex}$.
Enter: Y or N.

CDA (Call Distribution Algorithm)—Offers two algorithms that the system can choose to process incoming calls that are in queue. The two algorithms offered are:
NAF = Next Available First.
MIF = Most Idle First.
Incoming calls can be routed to either an agent that is next available, or one that is most idle. This prompt only applies to ACD groups and NOT to Master Distributed Hunt Groups. This is a system wide prompt which applies to all ACD groups. Only one type of distribution can be selected for all ACD groups used in the system. The default entry to the CDA prompt is the NAF algorithm.
Enter: NAF or MIF.

SCL (Stroke Count Length)—Defines the length of a Stroke Count Code (Call Record Identifier) that has to be entered. The Stroke Count feature allows an ACD agent to use the agent station's dial keypad to register up to a four-digit code (this code is optional). For example, a stroke code can be designated for response(s) to various sales campaigns, or calls from a particular location. The code entered will be sent to the MIS processor or recorded by SMDR in the account code field. If an MIS processor is connected, only 1, 2, or None digit code length may be entered. Without the MIS processor, up to 4 or None digit code length may be entered. Enter the digit 1, 2, 3, or 4 representing the code length to be used. The default entry to the SCL prompt is NONE.
Enter: The digit 1, 2, 3, or 4, or NONE.

MIS (MIS Machine)—Defines whether the system is connected to the MIS machine. A "Y" entry indicates that the system is connected to the MIS machine, and an "N" entry indicates that it is not.
Enter: Y or N.

AHA (ACD Handsfree Answerback)—Defines the system-wide availability of an Auto-Answer feature for the ACD station. When an ACD agent position is in auto-answer mode (EKT/DKT feature **ONLY**), the system will provide the agent position with an audible burst of tone (zip tone) before connecting the agent to the incoming ACD call. Two entries are available for this mode:
Y = Auto-answer feature for the ACD station is possible.
N = Auto-answer feature for the ACD station is not possible.
The default entry to the AHA prompt is N.
Enter: Y or N.

HVP (Handset Volume Preset Level)—Defines the system-wide preset of all digital telephones for the handset's initial off-hook volume level. This level can be changed with the digital telephone's volume control button while the handset is off-hook. It will return to the preset level in this program after the handset is placed on-hook (for the next call). The volume level range for digital telephone handsets is 0 ~ 8, with 0 as the lowest. Anytime a handset is off-hook, its volume level can be adjusted anywhere between 0 ~ 8. The level setting established in this program, however, can only be from 1 ~ 4. The default entry to the HVP prompt is 2.
Enter: The digit 1, 2, 3, or 4.

TABLE 5-4

Procedure — System Data Block 2

Authorization Procedure must be completed. If an OK response is received, proceed as follows:

ITEM	PROMPT	USER ENTRY	NOTE
	OK	DSD2	
– DISK LOADING –			
	REQ	CHG	
Master DN0 #0	MD0	1 ~ 4 Digits (NONE)	1
Master DN1 #1	MD1	1 ~ 4 Digits (NONE)	1
Master DN2 #2	MD2	1 ~ 4 Digits (NONE)	1
Master DN3 #3	MD3	1 ~ 4 Digits (NONE)	1
Lodging/Health Care	AHM	Y or N (N)	2
Night Operator Station	NOS	XXXX or NONE (NONE)	3
Transfer Recall Timeout	RTO	1 ~ 255 seconds (30)	4
Attendant-Position Electronic/Digital Telephone	AEKT	LNNX, LNNX... (NONE)	5 & 6
	D	LNNX, LNNX...	5 & 7
	A	LNNX, LNNX...	5, 8, & 9
$PERCEPTION_{ex}$	PEX	Y or N (Y)	10
Call Distribution algorithm	CDA	NAF, MIF (NAF)	11
Stroke Count Length	SCL	1, 2, 3, 4, or None (NONE)	12
MIS Machine	MIS	Y or N (N)	13
ACD Handsfree Answerback	AHA	Y or N (N)	14
Handset Volume Preset Level	HVP	1, 2, 3, or 4 (2)	15

Default values are noted in parentheses ( ). *(continued)*

NOTES:

1. *This entry cannot be changed back to NONE.*
2. *Y = Lodging/Health Care mode (HRM must also be entered in DCOS Data Block). N = Business mode.*
3. *XXXX = The directory number to which dial 0 calls will go when the system is in night service. NONE = UNA.*
4. *If a system utilizes a voice mail system, it is recommended that this timer be set rather short so that voice mail can be activated promptly.*
5. *LNNX denotes the station port number of the electronic/digital telephone that is to be assigned (or is to be added or deleted) as an attendant-position electronic/digital telephone.*
6. *Data which appears represents old entries. If no old data exists, then the system will respond with "NONE."*
7. *"D" represents a deletion. Any port number that is entered in response to this prompt will be deleted as an attendant-position electronic/digital telephone.*
8. *"A" represents an addition. Any port number that is added in response to this prompt will be added as an attendant-position electronic/digital telephone.*
9. *Up to eight port numbers (eight electronic/digital telephones) may be added or deleted in any one line. There is a maximum of eight attendant-position electronic/digital telephones per system.*
10. *Designates whether or not the system is a $PERCEPTION_{ex}$. Y = $PERCEPTION_{ex}$. N = $PERCEPTION_{e}$.*

11. *NAF = Next Available*
12. *The digit 1, 2, 3, 4, or N*
    may be entered.
13. *Y = The system is co*
    machine.
14. *Y = The ACD agent po*
    position is not in autc
15. *The digit 1, 2, 3, or 4*
16. CTRL X = *Ignore*
    CTRL H = *Backsp*
    DEL = *Stop pr*
    DEL DEL = *Exit pro*

5. Print System Data Block 2 (Table 5-5)

5.01 To use the Print System Data Block 2 (**PSY2 Program**):

- Perform the Authorization Procedure (Level 1, 2, or 3).
  Enter: PSY2 (in response to the OK prompt).
- When the REQ prompt is received after the program is loaded:
  Enter: PRT.
- The System Data Block 2 will be output in the same format as it was input in the **DSD2 Program.**
- REQ will be prompted again once the printout is complete.
  Enter: DEL DEL CR (to exit the program).

TABLE 5-5

Procedure — Print System Data Block 2

Authorization Procedure must be completed. If an OK response is received, proceed as follows:

ITEM	PROMPT	USER ENTRY	NOTE
	OK	PSY2	
– DISK LOADING –			
	REQ	PRT	1
– EXECUTE –			
	REQ		1

NOTES:

1. *The only response possible is: PRT = Outputs System Data Block 2.*
2. CTRL X = *Ignore line entered.*
   CTRL H = *Backspace.*
   DEL = *Stop printing and return to REQ.*
   DEL DEL = *Exit program.*

CHAPTER 6

FEATURE DATA

1. Access Code Data Block (Table 6-1)

1.01 The Access Code Data Block (**DACD Program**) assigns the dial access codes for feature execution. Data is entered as follows:

REQ (Request)—Indicates that the program has loaded. Since data is always present, only the CHG response is possible.

FTR (Feature)—
Enter: The 3- or 4-character feature abbreviation (see Table 6-1a), a space, and then the desired 1 ~ 3 digit access code. (See Table 6-1a for feature names and standard code assignments.)

NOTE:
Default access codes are shown in Table 6-1a. Any feature that does not require a change, does not need to be entered. Features may be entered in any order.

TABLE 6-1

Procedure — Access Code Data Block
Authorization Procedure must be completed. If an OK response is received, proceed as follows:

ITEM	PROMPT	USER ENTRY	NOTE
	OK	DACD	
		– DISK LOADING –	
	REQ	CHG	
Feature?	FTR	Feature + [space] + 1 ~ 3 digits	1

(continued)

NOTES:
1. *a. In response to FTR, enter the feature abbreviation, followed by a space and its access code.*
   b. Features may be entered in any order, and any new access code will overwrite the existing one.
   c. Any feature code which does not need to be changed, does not need to be entered.
   d. The feature abbreviations and factory-assigned codes are listed in Table 6-1a.
2. CTRL X = *Ignore line entered.*
   CTRL H = *Backspace.*
   DEL = *Stop printing and return to REQ.*
   DEL DEL = *Exit program.*

TABLE 6-1a
FEATURE ABBREVIATION AND CODE LIST

FEATURE	ABB.	STD. CODE
Automatic Callback	ACB	*7
Automatic Callback Cancel	CBR	**7
Call Forward All Call (Station)	CFD	*9
Call Forward Cancel (Station)	CFR	**9
Call Forward Busy (Station)	CFBY	#10
Call Forward No Answer (Station)	CFNA	#11
Call Forward Busy/No Answer (Station)	CFBD	#12
Call Forward Busy (System/DID)	CFSB	#13
Call Forward Busy/No Answer (System/DID)	CFSN	#14
Call Forward – All Clear	CFAR	#18
Call Pickup Directed	PUD	*6
Call Pickup Group	PUG	*4
Hold-All Calls/Electronic Telephone Park	HLD	*3
Meet-me Page Zone #0	MMP0	110
Meet-me Page Zone #1	MMP1	111
Meet-me Page Zone #2	MMP2	112
Meet-me Page Zone #3	MMP3	113
Meet-me Page Zone #4	MMP4	114
Meet-me Page Zone #5	MMP5	115
Meet-me Page Zone #6	MMP6	116
Meet-me Page Zone #7	MMP7	117
Meet-me Page Zone #8	MMP8	118
Meet-me Page Zone #9	MMP9	119
Meet-me Page Zone #10	MMP10	120
Meet-me Page Zone #11	MMP11	121
Meet-me Page Zone #12	MMP12	122
Meet-me Page Zone #13	MMP13	123
Meet-me Page Zone #14	MMP14	124
Meet-me Page Zone #15	MMP15	125
Meet-me Page Cancel	MPC	150
Override	OVR	*0
Repeat Last Number Dialed	RND	#7
Call Waiting	CWT	#4

(continued)

TABLE 6-1a (continued)

FEATURE	ABB.	STD. CODE
Speed Dial-Station – Call	SDU	#3
Speed Dial-Station – Program	SDC	##3
Speed Dial-System – Call	SDS	#6
Universal Night Answer	UNA	*1
Charge Account (ACL in DMDR must be set)	CRG	#9
Flash	FLH	*5
Internal Group Paging (selected group 1, 2 ~ 17)	PINT	151
Expanded Internal Group Paging (group 0)	PINA	152
External Paging (selected zone 0 ~ 4)	PEXT	153
External All Paging (zones 0 ~ 4)	PEXA	154
Hold – All Calls Retrieve	RTV	**3
Message Waiting All Clear	MAL	##5
Message Waiting Cancel	MCC	#5
Do Not Disturb	DND	#2
Do Not Disturb Cancel	DNC	##2
Remote Access to Services Authorization Code	RAC	**5
Least Cost Routing Access Code	LCR	##6
Day Destination Change Code	DIL	#*3
Automatic Wake-up Time Set/Cancel	AWU	#80
Message Registration Print – All	MRAA	#81
Message Registration Print – Directed	MRAN	#82
Message Registration Print – Stop	MRST	#83
Controlled Outgoing Restriction Set	CRS	#84
Controlled Outgoing Restriction Cancel	CRC	#85
Room Status Print – All	RSAA	#86
Room Status Print – Directed	RSAN	#87
Room Status Print – Stop	RSST	#88
Room Status Change	MIR	#00
Room Status – Maid-in-Room Set	MIRS	#01
Room Status – Maid-in-Room Cancel	MIRC	#02
Room Status – Maid-in-Room Cancel and Set Room Clean	RCLN	#03
Room-to-Room Block Set	RRS	#04
Room-to-Room Block Cancel	RRC	#05

(continued)

TABLE 6-1a (continued)

FEATURE	ABB.	STD. CODE
Room Status – Status 1 Set (Vacant/Clean)	RSS1	*#1
Room Status – Status 2 Set (Occupied/Clean)	RSS2	*#2
Room Status – Status 3 Set (Vacant/Needs Cleaning)	RSS3	*#3
Room Status – Status 4 Set (Occupied/Needs Cleaning)	RSS4	*#4
Room Status Set From 2 to 4	RS24	*#5
Room Status Set From 4 to 2	RS42	*#6
Display Deposit Paid	DPP	*#7
Set Deposit Paid	SDPP	*#8
Clear Deposit Paid	CDPP	*#9
Voice Message Set	VMS	#15
Voice Message Cancel	VMN	#16
Alphanumeric Message	ANM	#17
Night Operator Station	NOS	#*4
Unavailable Agent (ACD only)	STAS	*20
Available Agent (ACD only)	STAC	*21
Remote Log-in, if LOG button is not assigned (ACD only)	RLGI	*22
Remote Log-out, if LOG button is not assigned (ACD only)	RLGO	*23
Assistance (ACD only)	ASSI	*24
Stroke Count (ACD only)	STRK	*25
Work Mode Cancel, if CANCEL button is not assigned (ACD only)	CAN	*26
Verifiable Account Codes, Add	VACA	#*5
Verifiable Account Codes, Delete	VACD	#*6
Traveling Class of Service	CHS	#*7
Off-hook Call Announce	OHCA	#*8
Busy Override Tone Volume Control (Digital telephone only)	BOV	*27
Ringer Volume Control (Digital telephone only)	RNGV	*28
Maid-in-Room Status Clear	RSSO	*#0

TABLE 6-1 (continued)
Error Codes

Program Name: Access Code Data Block (DACD)	
Error Code	**Meaning**
ERACC 00	The input access code conflicts with an existing access code.
ERACC 01	Invalid response (1 ~ 3 digits are allowed).
ERACC 02	Invalid response (7*5, 8#, etc. are not allowed).

2. Print Access Code Data Block (Table 6-2)

2.01 To use the Print Access Code Data Block (**PACD Program**):

- Perform the Authorization Procedure (Level 1 or 2).
  Enter: PACD (in response to the OK prompt).
- When the REQ prompt is received after the program is loaded:
  Enter: PRT.
- The Access Code Data Block will be output in the same format as it was input in the **DACD Program.**

Example:
```
REQ   PRT
ACB   *7
CBR   **7
CFD   *9
CFR   **9
etc.
```

- REQ will be prompted again once the printout is complete.
  Enter: DEL DEL CR (to exit the program).

TABLE 6-2

Procedure — Print Access Code Data Block
Authorization Procedure must be completed. If an OK response is received, proceed as follows:

ITEM	PROMPT	USER ENTRY	NOTE
	OK	PACD	
– DISK LOADING –			
	REQ	PRT	1
– EXECUTE –			
	REQ		1

NOTES:
1. *The only response possible is: PRT = Outputs Access Code Data Block.*
2. CTRL X = *Ignore line entered.*
   CTRL H = *Backspace.*
   DEL = *Stop printing and return to REQ.*
   DEL DEL = *Exit program.*

3. Class of Service Data Block (Table 6-3)

3.01 The Class of Service Data Block (**DCOS Program**) defines the 16 Classes of Service that are available in the system. All features that are controlled by the COS are allowed (except as indicated in notes 3 ~ 10) to all stations unless they are restricted in this Data Block.

3.02 The **DCOS Program** assigns a number (0 ~ 15) to each group of restrictions to be used. The number defined here is then entered in response to the COS prompt in the **DSTT**, **DEKT**, and **DTGP Programs**. Any numbers that are not entered or are otherwise defined will have no COS restrictions. Data is entered as follows:

REQ (Request)—Indicates that the program has loaded. The only response possible is CHG.

COS (Class of Service)—Defines the COS number (0 ~ 15) and the restrictions to be associated with it. The possible restrictions are listed in Table 6-3a.

Enter: COS number, followed by the restriction(s), in the following format: 3 T00 OVR ACO.

NOTES:

1. *In this example, COS 3 will not allow access to Trunk Group 00, the Override feature, or the Attendant Control Override feature.*
2. *If Lodging/Health Care features are to be allowed in the COS, the code HRM must be entered. The result of this entry is the opposite of other COS entries, since it allows rather than denies feature operation.*

COS—Repeat for all COS entries.

TABLE 6-3

Procedure — Class of Service Data Block

Authorization Procedure must be completed. If an OK response is received, proceed as follows:

ITEM	PROMPT	USER ENTRY	NOTE
	OK	DCOS	
– DISK LOADING –			
	REQ	CHG	
	COS	0 AAA BBB etc.	1 ~ 10
	COS	1 AAA BBB etc.	11
	COS	DEL	12
	REQ	Repeat program if necessary	

(continued)

NOTES:

1. *Enter a list of all features which are not allowed to this group. See Table 6-3a for a list of features and codes.*
2. *Default = All features allowed.*
3. *If Lodging/Health Care features are to be allowed in this COS, the code **HRM** must be entered. This entry enables rather than denies these features.*
4. *If the initiation of Off-hook Call Announce (OCA) by a station is to be allowed, the code OCA must be entered in the Class Of Service (COS). This entry enables rather than denies the OCA feature.*
5. *If a station is to be required to enter Forced Account Codes, the code FAC must be entered in the COS. This entry enables rather than denies this feature.*

6. *If a station is to be required to enter Verifiable Account Codes, the code VAC must be entered in the COS. This entry enables rather than denies this feature.*
7. *If a station is to be required to enter Forced Account Codes on toll calls only, the code FAT must be entered in the COS. This entry enables rather than denies the feature.*
8. *If a station is to be required to enter Forced and Verifiable Account Codes, the codes FAC and VAC must be entered in the COS. This entry enables rather than denies this feature.*
9. *If a station is to be required to enter Forced and Verifiable Account Codes on toll calls only, the codes FAT and VAC must be entered in the COS. This entry enables rather than denies the feature.*
10. *For APU and ABPU, the station must be put in a Call Pick-up Group in either the DEKT or DSTT Data Block.*
11. *A maximum of 16 COS groups (0 ~ 15) is allowed.*
12. *The COS prompt will be repeated until DEL is entered, and then an REQ prompt will be given.*
13. CTRL X = *Ignore line entered.*
    CTRL H = *Backspace.*
    DEL = *Stop printing and return to REQ.*
    DEL DEL = *Exit program.*

TABLE 6-3a
CLASS OF SERVICE FEATURES AND CODES

FEATURE	CODE
Trunk Group 0	T00
Trunk Group 1	T01
Trunk Group 2	T02
Trunk Group 3	T03
Trunk Group 4	T04
Trunk Group 5	T05
Trunk Group 6	T06
Trunk Group 7	T07
Trunk Group 8	T08
Trunk Group 9	T09
Trunk Group 10	T10
Trunk Group 11	T11
Trunk Group 12	T12
Trunk Group 13	T13
Trunk Group 14	T14
Trunk Group 15	T15
DDIU Group 0	D00
DDIU Group 1	D01
DDIU Group 2	D02
DDIU Group 3	D03
DDIU Group 4	D04
DDIU Group 5	D05
DDIU Group 6	D06
DDIU Group 7	D07
DDIU Group 8	D08
DDIU Group 9	D09
DDIU Group 10	D10
DDIU Group 11	D11
DDIU Group 12	D12
DDIU Group 13	D13
DDIU Group 14	D14
DDIU Group 15	D15

FEATURE	CODE
Automatic Callback	ACB
Call Forward (All Calls/Station)	CFD
Call Forward/Busy (Station)	CFB
Call Forward/No Answer (Station)	CFN
Call Forward Busy/No Answer (Station)	CFB
Call Forward – Busy (DID)	CSB
Call Forward - Busy/No Answer (DID)	CSN
Call Pickup – Directed	PUD
Call Pickup - Group	PUG
Call Waiting	CWT
Override	OVR
Speed Dialing - System	SDS
Attendant Control Override	ACO
Internal Group Paging (Group 00)	PI00
Internal Group Paging (Group 02)	PI02
Internal Group Paging (Group 03)	PI03
Internal Group Paging (Group 04)	PI04
Internal Group Paging (Group 05)	PI05
Internal Group Paging (Group 06)	PI06
Internal Group Paging (Group 07)	PI07
Internal Group Paging (Group 08)	PI08
Internal Group Paging (Group 09)	PI09
Internal Group Paging (Group 10)	PI10
Internal Group Paging (Group 11)	PI11
Internal Group Paging (Group 12)	PI12
Internal Group Paging (Group 13)	PI13
Internal Group Paging (Group 14)	PI14
Internal Group Paging (Group 15)	PI15
Internal Group Paging (Group 16)	PI16
Internal Group Paging (Group 17)	PI17
Internal Group Paging (Groups 02 ~ 17)	PIA
External Zone Paging (Zone 0)	PE0

(continued)

TABLE 6-3a (continued)

FEATURE	CODE
External Zone Paging (Zone 1)	PE1
External Zone Paging (Zone 2)	PE2
External Zone Paging (Zone 3)	PE3
External Zone Paging (Zone 4)	PE4
External All Paging (Zones 0 ~ 4)	PEA
All Paging (Group 00, Zones 0 ~ 4)	PAL
Direct Trunk Access	DTA
LCR Class 1	LC1
LCR Class 2	LC2

FEATURE	CODE
LCR Class 3	LC3
ACD/MIS Call Pick-up	APU
ACD/MIS Call Be Picked-up	ABPU
Supervisor Monitor Tone and LCD Display	MTL
Remote Log-in	RLOG
Off-hook Call Announce	OCA
Forced Account Code	FAC
Verifiable Account Code	VAC
Forced Account Code—Toll	FAT
Do Not Disturb	DND

TABLE 6-3 (continued)

Error Codes

Program Name: Class of Service Data Block (DCOS)	
Error Code	**Meaning**
ERCOS 01	Invalid Response (0 ~ 15 is allowed).

4. Print Class of Service Data Block (Table 6-4)

4.01 To use the Print Class of Service Data Block (**PCOS Program**):

- Perform the Authorization Procedure (Level 1, 2, or 3).
  Enter: PCOS (in response to the OK prompt).
- When an REQ prompt is received after the program is loaded:
  Enter: PRT.
- The COS Data Block will print out in the following format (see Table 6-3a for an explanation of feature codes):
  COS NO.
  COS 0 AAA BBB CCC DDD EEE FFF GGG HHH III JJJ KKK LLL
  COS 1 (etc., up to 15)
  REQ (This prompt will be given at the end of printout.)
  Enter: DEL DEL CR (to exit program).

TABLE 6-4

Procedure — Print Class of Service Data Block

Authorization Procedure must be completed. If an OK response is received, proceed as follows:

ITEM	PROMPT	USER ENTRY	NOTE
	OK	PCOS	
– DISK LOADING –			
	REQ	PRT	1
– EXECUTE –			
	REQ		1

NOTES:

1. *The only response possible is: PRT = Outputs Class of Service Data Block.*
2. CTRL X = *Ignore line entered.*
   CTRL H = *Backspace.*
   DEL = *Stop printing and return to REQ.*
   DEL DEL = *Exit program.*

CHAPTER 7

ATTENDANT/STATION/DSS DATA

1. Attendant Data Block (Table 7-1)

1.01 The Attendant Data Block (**DATT Program**) defines one or two attendant consoles in the system and selects the attendant options. Data is entered as follows:

REQ (Request)—Indicates that the program has loaded. Three responses are possible:
NEW—To create a new Data Block.
CHG—To alter an existing Data Block.
OUT—To delete an existing Data Block.

ANO (Attendant Number)—Selects the console that is to be assigned.
Enter: 0 or 1.

POR (Port Number)—Selects the port that is to be occupied by the console.
Enter: For PERCEPTION$_e$—L001 for Attendant Console #0.
L151 for Attendant Console #1.
For PERCEPTION$_{ex}$—L001 for Attendant Console #0.
L011 for Attendant Console #1.

NLPK (Number of Loop Keys)—Indicates the quantity of buttons that can be designated as Attendant Loop Buttons.
Enter: 4, 6, or 8.

NOTE:
If the system is operating in the Lodging/Health Care mode, only four loop buttons can be assigned.

LKO (Lockout Allowed?)—A "Y" response will enable the lockout feature, and will not allow the attendant to re-enter a held LPK button conference.
Enter: Y or N.

PAG (Page Button)—Assigns the console PAGE button to access either the Expanded Internal Paging Group (Group 0), one or all external paging zones, or the Expanded Internal Paging Group and all external paging zones. Options that are not assigned to the feature access button may still be accessed by dialing a paging access code.
Enter one of the following:
INT—Expanded Internal Group Paging (Group 0).
EXT—External All Paging (Zones 0 ~ 4).
N—External Paging to Zone N (0 ~ 4).
ALL—Expanded Internal Group Paging and External All Paging.
NONE—No Internal or External Paging Access.

PRI (Incoming Call Priority)—A "Y" response will direct all calls to the attendant console according to the priority defined by the PR1 ~ PR5 prompts. An "N" response will direct all calls to the attendant console on a first-in/first-out priority basis.
Enter: Y or N.

PR1 ~ 5 (Priority 1 ~ 5, Current)—A "Y" response to the PRI prompt will print the current priority tables.

PR1 ~ 5 (Priority 1 ~ 5, Set)—Defines the incoming call priority. The possible types of calls are: CO, FX, TIE, WAT, OPR, RCL, HLD, TIM, LN1, LN2, INT, SER (Business mode only).
Enter: NN or NNN (type of call).

NOTE:
There is no program provided to print out the Attendant Data Block.

TABLE 7-1

Procedure — Attendant Data Block

Authorization Procedure must be completed. If an OK response is received, proceed as follows:

ITEM	PROMPT	USER ENTRY	NOTE
	OK	DATT	
– DISK LOADING –			
	REQ	NEW, CHG, OUT	
Attendant Number	ANO	0 or 1	
Port Number	POR	PERCEPTION$_e$: L001 (ATT0) or L151 (ATT1) PERCEPTION$_{ex}$: L001 (ATT0) or L011 (ATT1)	
Number of Loop Keys	NLPK	4, 6, or 8	1
Lockout Allowed?	LKO	Y or N	
Page Button	PAG	INT, EXT, ALL, or NONE	2
Incoming Call Priority	PRI	Y or N	3
Priority Group 1 (Current)	PR1	Printout of Current Priority Group OPR	4
Priority Group 2 (Current)	PR2	Printout of Current Priority Group CO	4
Priority Group 3 (Current)	PR3	Printout of Current Priority Group NONE	4
Priority Group 4 (Current)	PR4	Printout of Current Priority Group NONE	4
Priority Group 5 (Current)	PR5	Printout of Current Priority Group NONE	4
Priority Group 1 (Set)	PR1	NNN NNN NNN NNN NNN	5
Priority Group 2 (Set)	PR2	NNN NNN NNN NNN NNN	5
Priority Group 3 (Set)	PR3	NNN NNN NNN NNN NNN	5
Priority Group 4 (Set)	PR4	NNN NNN NNN NNN NNN	5
Priority Group 5 (Set)	PR5	NNN NNN NNN NNN NNN	5

(continued)

NOTES:

1. *Entries of 6 and 8 are allowed only in the Business mode.*
2. *Designates the specific kind of paging accessed by the* PAGE *button.*
   INT = Expanded Internal Group Paging (Group 0).
   EXT = External All Paging (Zones 0 ~ 4).
   N = External Paging to Zone N (0 ~ 4).
   ALL = Expanded Internal Group Paging and External All Paging.
   NONE = No Internal or External Paging Access.
3. *If "Y" (yes) is entered, all calls will be directed to the attendant console according to the priority defined by the PR1 ~ PR5 prompts. If "N" (no) is entered, all calls will be directed to the attendant console on a first in/first out priority basis.*
4. *If "Incoming Call Priority" is selected (PRI = Y), the current priority table (PR1 ~ PR5) will be called up and printed.*
5. *Used to change the "Incoming Call Priority" tables (PR1 ~ PR5). NNN = Type of call (CO, FX, TIE, WAT, OPR, RCL, HLD, TIM, LN1, LN2, INT, SER [Business mode only]).*
6. CTRL X = *Ignore line entered.*
   CTRL H = *Backspace.*
   DEL = *Stop printing and return to REQ.*
   DEL DEL = *Exit program.*

TABLE 7-1 (continued)

Error Codes

Program Name: Attendant Data Block (DATT)	
Error Code	**Meaning**
ERATT 00	A PCB is not equipped in that location.
ERATT 01	The PCB is not an NEKU type.
ERATT 02	The port is busy.
ERATT 03	The port has already been assigned to a station or DDIU (REQ = NEW).
ERATT 04	The port has not been assigned (REQ = CHG, OUT).
ERATT 05	Invalid port number.
ERATT 06	The entered access code is not assigned to a paging zone or group.
ERATT 08	Input data was erased because the program was aborted during NEW data entry.
ERATT 09	Attendant data is not assigned to the input port (REQ = CHG, OUT).
ERATT 10	The trunk group is already in this priority group.
ERATT 11	This is not a valid entry.
ERATT 12	The port has already been assigned to a DSS console.
ERATT 13	The port has already been assigned to a trunk.
ERATT 14	The number of the Attendant Loop Buttons in the Lodging/Health Care mode cannot be changed.

NOTE:
There is no program to print out the Attendant Data Block.

2. Electronic/Digital Telephone Data Block (Table 7-2)

2.01 The Electronic/Digital Telephone Data Block (**DEKT Program**) defines all parameters for each electronic/digital telephone. A separate Electronic/Digital Telephone Data Block must be completed for each electronic/digital telephone in the system. Data is entered as follows:

REQ (Request)—Indicates that the program has loaded. Three responses are possible:
NEW—To create a new Data Block.
CHG—To alter an existing Data Block.
OUT—To delete an existing Data Block.

POR (Port Number)—Identifies the hardware location of the electronic/digital telephone circuit that is to be defined. The port number has two parts:

1) NEKU/NDKU PCB location:
PERCEPTION$_e$—L00 ~ L11/L15 ~L26 (NN).
PERCEPTION$_{ex}$—L00 ~ L31 (NN).

2) Circuit number on that PCB: 1 ~ 8 (X).
Example: The port number of the 4th circuit on the NEKU/NDKU in position L01 is L014.
Enter: Port number of the electronic/digital telephone (LNNX).

NOTES:
1. *If the OUT command was given above, the port just defined will be deleted and the next prompt will be REQ.*
2. *Port L318 cannot be assigned.*
3. *The NEKU will not support Digital Telephones and the NDKU will not support Electronic telephones.*

DKT (Digital Key Telephone)—Defines the type of telephone. A **YES** answer is to be entered with digital telephones, and a **NO** answer with non-digital electronic telephones.
Enter: Y or N.

KS (Number of Button Strips)—Informs the system of the number of feature buttons (groups of ten) that the electronic/digital telephone will have.
Enter: 1 (for 10-button) or 2 (for 20-button).

COS (Class of Service)—Assigns one of the 16 Classes of Service to the electronic/digital telephone. (Classes of Service are defined in the **DCOS Program**.)
Enter: COS Number (0 ~ 15).

TEN (Tenant Number)—Assigns the electronic/digital telephone to one of two possible tenants in the system.
Enter: 0 if tenant service **is not** selected in the **DSYS Program** (TEN = N).
0 or 1 to indicate the specific tenant if tenant service **is** selected in the **DSYS Program** (TEN = Y).

PUG (Call Pickup Group)—Assigns the electronic/digital telephone to one of the 32 possible Call Pickup groups.
Enter: Group number (0 ~ 31) or NONE.

WTA (Warning Tone Allowed?)—Defines an interruption-protected station. An "N" response will prevent warning tones from being applied to the station. (CWT cannot be assigned if N is entered.)
Enter: Y or N.

CFT (Call Forward to Trunk)—Permits calls to this station to be forwarded over a trunk to an outside directory number (maximum: 16 digits).
Enter: Y or N.

TOL (Toll Restricted Class)—Assigns one of the ten classes of Toll Restriction to the electronic/digital telephone. Classes 0 ~ 7 are defined in the Toll Restriction Data Block (**DTOL Program**). Class 8 is simple toll restriction, restricting when 0 or 1 is dialed as the first digit. NONE defines the electronic/digital telephone as unrestricted.
Enter: 0 ~ 8 or NONE.

MTA (Not Used):
Enter: N.

HFA (Handsfree Answerback Equipped)—A "Y" response activates the Handsfree Answerback

and voice-announce capability of this electronic/digital telephone.
Enter: Y or N.

DIS (Display Electronic/Digital Telephone)—A "1" or "2" response activates the LCD display on the electronic/digital telephone (maximum display electronic/digital telephones in the system may equal the total number of allowable stations).
Enter: 1, 2, or NONE.
(1 = 2000-series Electronic LCD Telephone,
2 = 6000-series Electronic/1000-series Digital LCD Telephone,
NONE = Not an Electronic/Digital LCD Telephone.)

PAG (Paging Group)—Assigns the station to up to four internal paging groups (numbers 0, 2 ~ 17) or to no paging groups (NONE).
Enter: 0, 2 ~ 17 or NONE.

RDS (Emergency Ringdown Station)—Indicates the destination for an emergency signal (continuous ringing) when a station goes off-hook and does not dial a number, or does not complete dialing a valid number. The emergency ringdown destination will be signalled when the DPT and LLO timers (from the DSYS program) expire. The destination can be programmed as either a specific station, the attendant, or the system UNA device. (In tenant service, the system will route the RDS call to the assigned tenant when ATT is entered.) The designation of an Emergency Ringdown Station is particularly important in Lodging/Health Care applications.
Enter: XXXX = 1- ~ 4-digit station number.
ATT = Attendant.
UNA = System UNA.
NONE = No designation of Emergency Ringdown Station.

RSP (Ring State Preselection)—Provides the station with a capability to answer any calls, that come in on the ACD trunks, by just lifting the telephone handset (without pressing any buttons) when the telephone rings. For ACD DNs **ONLY**.
Enter: Y or N.

OCP (Off-hook Call Announce Port)—Indicates the port that is used for Off-hook Call Announce.
Enter: LNNX or NONE.

NOTE:
The NN indicates the PCB location, and the X the circuit number.

OCA (Off-hook Call Announce)—Defines whether this feature is in automatic or manual mode. When programmed in auto mode, it allows the system to announce an incoming call when the called station is off-hook. If it is in manual mode, the system will let the caller enter an access code or press the feature button before the call interrupts the on-going conversation. Busy tone must be heard (i.e., no call-forwards) to acivate this feature.
Enter: A or M.

KEY (Key Assignments)—Assigns a DN or feature to one of the flexible buttons.
Enter:

1) The number of the button to be defined, followed by a SPACE BAR. Buttons are numbered 0 ~ 9 (or 19 for a 20-button electronic/digital telephone), starting from the bottom of the vertical button strip (the four buttons below the dialpad have fixed assignments). Following the button number and space, any existing button data will be output.

2) Feature or DN assignments. The possible assignments are as follows:
Directory (Station) Number (1, 2, 3, or 4 digits):
SCR NNNN XXXX—Single Call Ring
- Incoming calls will audibly ring this station.
- NNNN = Directory (Station) Number.
- XXXX = Hunt number. Enter either the DN to which this DN will hunt or the code for distributed hunt (see below).

SCN NNNN XXXX—Single Call, No Ring
- Incoming calls will not audibly ring this station (LED flash only).
- NNNN = Directory Number.
- XXXX = Hunt number. Enter either the DN to which this DN will hunt or the code for distributed hunt (see below).

number above. For example: SCR NNN #X.

X = Distributed Hunt Group Number (0 ~ 3). Maximum: 8 stations per group.

Data Directory Number Button Assignment:

- DIU LNNX—Data Port Assignment.
- Incoming data calls will audibly ring the electronic/digital telephone.
- NN = PCB location for NDCU or NMDU PCB or adjacent port location for NDKU.
- X = circuit number.
- An electronic telephone/DDIU-MAT combination will use two station ports—one DEKU port and one NDCU or NMDU port.
- A digital telephone/PDIU-DI combination will use two station ports—one NDKU port and the open incremented adjacent port. Example: Voice = L024, Data = L034.

IMPORTANT NOTE:
The NDKU's eighth circuit cannot be used for Data (PDIU-DI or PDIU-DS).

NOTES:

1. *The data (DN) button entry assigns a data port to an electronic/digital telephone port.*
2. *The data DN is assigned when the data port is assigned (see DDIU Data Block). This must be done before assigning a data port number to an electronic/digital telephone.*

DRS Data Release—Private CO Lines:

PVR XXX—Private Line Ring

- Incoming calls will audibly ring this station.
- XXX = Trunk Directory Number assigned in Trunk Data Block.

PVN XXX—Private Line No Ring

- Incoming calls will not audibly ring this station (LED flash only).
- XXX = TDN assigned in Trunk Data Block.

NOTE:
DRS *buttons are used to cause the DDIU-MAT and PDIU-DI to go back on-hook.*

Features:

CRG—Account Number (SMDR)
MES—Alphanumeric Message
ACB—Automatic Callback
ADL—Automatic Dialing
FAD XXX—Fixed Automatic Dialing
CFD—Call Forward
CFBY—Call Forward - Busy
CFBD—Call Forward - Busy/No Answer
CFNA—Call Forward - No Answer
CFSB—Call Forward - Busy (System/DID)
CFSN—Call Forward - Busy/No Answer (System/DID)
PUD—Call Pickup - Directed
PUG—Call Pickup Group
CWT—Call Waiting
DND—Do Not Disturb
DIS—Display Date & Time/Elapsed Time
FLH—Flash (a 500 ms or 1 second flash on a CO trunk)
HNG XX—Hundreds Group
SIG LNNX—Manual Signaling (LNNX = port number of electronic/digital telephone to be signaled.)
MSG—Message Waiting
OVR—Override
PEXT—External Paging
PINT—Internal Paging
PARK—Call Park
PRS—Privacy Release
RLS—Release
RND—Repeat Last Number Dialed
SCF—Speaker Cut-off
SDS—Speed Dial - System
SDC XX—Speed Dial - Station (controller of list XX; XX = 1 ~ 50.)
SDU XX—Speed Dial - Station (user of list XX; XX = 1 ~ 50.)
SSM—Station-to-Station Message
SYS—System Night Operation (a SYS button can be assigned to one attendant-position electronic/digital telephone or DSS console per tenant if an attendant console is not assigned to that tenant.)

UNA—Universal Night Answer
VCP XXXX—Voice Page (XXXX = DN to be paged.)
ACDS XXXX—ACD Supervisor Line
ACDA XXX—ACD Agent Line
ASST—Assistance
LOG—Log-in/out
MONT—Monitor
OCA—Off-hook Call Announce
STAT—Status Available/Unavailable
STRK—Stroke Count
ATAP—Agent Monitor
CAN—Work Mode Cancel

NOTE:
The system does not check to verify if two buttons are assigned the same feature. When programming digital telephones (DKT = Y), do ***NOT*** *assign RND and MSG to feature buttons. They are fixed buttons on the telephone set.*

KEY—The prompt will be repeated until all entries have been made and the DEL key is pressed.

TABLE 7-2

Procedure — Electronic/Digital Telephone Data Block

Authorization Procedure must be completed. If an OK response is received, proceed as follows:

ITEM	PROMPT	USER ENTRY	NOTE
	OK	DEKT	
– DISK LOADING –			
	REQ	NEW, CHG, OUT	
Port Number	POR	LNNX	1 & 2
Digital Key Telephone	DKT	Y or N	
Number of Buttonstrips	KS	1 or 2	3
Class of Service Group	COS	0 ~ 15	4
Tenant Number	TEN	0 or 1	5
Call Pickup Group	PUG	0 ~ 31 or NONE	6
Warning Tone Allowed?	WTA	Y or N	
Call Forward to Trunk	CFT	Y or N	
Toll Restricted Class	TOL	0 ~ 8 or NONE	7
Not Used	MTA	N	
Handsfree Answerback Equipped?	HFA	Y or N	
Display Electronic/Digital Telephone	DIS	1, 2, or NONE	8
Paging Group	PAG	0, 2 ~ 17, or NONE	9
Emergency Ringdown Station	RDS	1 ~ 4 digits, ATT, UNA, or NONE (NONE)	10
Ring State Preselection	RSP	Y or N	
Off-hook Call Announce Port	OCP	LNNX or NONE	1 & 2
Off-hook Call Announce	OCA	A or M	
Button Assignments (10-button)	KEY	0 ~ 9 [space] Feature	11 ~ 13
Button Assignments (20-button)	KEY	0 ~ 19 [space] Feature	11 ~ 13

Default values are noted in parentheses ( ). *(continued)*

NOTES:

1. *NN = PCB location.*
2. *X = circuit number.*
3. *1 = 10-button electronic/digital telephone. 2 = 20-button electronic/digital telephone.*
4. *There are 16 different COS groups, which are defined in the Class of Service Data Block.*
5. *When RNA calls recall to the Attendant, they will recall to the Attendant (0 or 1) that ORIGINALLY transferred the call.*
6. *There is a maximum of 32 Call Pickup Groups.*
7. *Classes 0 ~ 7 are defined in the Toll Restriction Data Block (**DTOL Program**). Class 8 = 0 or 1 restriction. NONE = No Toll Restriction.*
8. *1 = 2000-series LCD electronic telephone. 2 = 6000-series electronic or 1000/2000-series digital LCD. NONE = Not an LCD electronic/digital telephone.*
9. *The four possible paging groups to which an electronic/digital telephone can belong are 0, or 2 ~ 17. NONE indicates that an electronic/digital telephone does not belong to any paging group. There is a maximum of 32 electronic/digital telephone members for groups 2 ~ 17 and a maximum of 96 for group 0.*
10. *The emergency ringdown destination will be signalled when the DPT and LLO timers (from the DSYS program) expire.*
11. *Enter button number followed by a space and then the entry. Button 0 must be the station's primary DN. See Table 7-2a for possible entries.*
12. *Button numbers may be entered in any order. The KEY prompt will be repeated until DEL is entered.*
13. *If KS was 1, 0 ~ 9 will be allowed. If KS was 2, 0 ~ 19 will be allowed.*
14. CTRL X = *Ignore line entered.*
    CTRL H = *Backspace.*
    DEL = *Stop printing and return to REQ.*
    DEL DEL = *Exit program.*

TABLE 7-2a
ELECTRONIC/DIGITAL TELEPHONE BUTTON ASSIGNMENTS

DIRECTORY NUMBER	ENTRY	NOTE
Single Call Ring	SCR NNNN XXXX	1
Single Call No Ring	SCN NNNN XXXX	1
Station Hunt Distributed	#X	2

ACD/MIS DIRECTORY NUMBER	ENTRY	NOTE
ACD/MIS Supervisor Line	ACDS XXXX	3
ACD/MIS Agent Line	ACDA XXX	4

DATA DIRECTORY NUMBER	ENTRY	NOTE
Data Port Number	DIU LNNX	5
Data Release	DRS	

PRIVATE CO LINE	ENTRY	NOTE
Private Line Ring	PVR XXX	6
Private Line No Ring	PVN XXX	6

FEATURE	ENTRY	NOTE
Account Number (SMDR)	CRG	
Alphanumeric Message	MES	
Assistance (ACD)	ASSI	
Automatic Callback	ACB	
Automatic Dialing	ADL	7
Automatic Dialing (Fixed)	FAD XXX	8
Call Forward – All Calls	CFD	
Call Forward – Busy	CFBY	
Call Forward – Busy/No Answer	CFBD	
Call Forward – No Answer	CFNA	
Call Forward – Busy (System/DID)	CFSB	
Call Forward – Busy/No Answer (System/DID)	CFSN	
Call Pickup Directed	PUD	
Call Pickup Group	PUG	
Call Waiting	CWT	
Display Date and Time/Elapsed Time	DIS	9

(continued)

TABLE 7-2a (continued)

FEATURE	ENTRY	NOTE
Do Not Disturb	DND	
Flash	FLH	10
Hundreds Group	HNG XX	11
Log-in/out (ACD)	LOG	
Manual Signaling	SIG LNNX	12
Message Waiting	MSG	
Monitor (ACD Supervisor)	MONT	
Off-hook Call Announce	OCA	
Override	OVR	
Paging, External	PEXT	13
Paging, Internal	PINT	14
Call Park	PARK	
Privacy Release	PRS	
Release	RLS	
Repeat Last Number Dialed	RND	
Speaker Cut-off	SCF	
Speed Dial – System	SDS	
Speed Dial – Station (Controller)	SDC XX	15
Speed Dial – Station (User)	SDU XX	15
Station-to-Station Message	SSM	
Status (Available/Unavailable, ACD)	STAT	
Stroke Count (ACD)	STRK	
System Night Operation	SYS	16
Tap (Agent Monitor) (ACD)	ATAP	
Universal Night Answer	UNA	
Voice Page	VCP XXXX	17
Work Mode Cancel (ACD)	CAN	

NOTES:

1. *NNNN = Directory Number: 1-, 2-, 3-, or 4-digit DNs are allowed if there is no conflict (e.g., 30X cannot be used if 30 is already being used).*
   XXXX = Hunt DN. To remove the present DN, enter NONE. (Also see Station Hunt-Distributed.)
2. *Following electronic/digital telephone DN assignment, enter # in place of the usual hunt DN.*
   X = Distributed Hunt Group Number (0 ~ 3).
3. *XXXX = A Supervisor DN.*
4. *XXX = An Agent Line number (0 ~ 127).*
5. *NN = PCB location for the NDCU or NDMU PCB.*
   X = Circuit Number.
6. *XXX = Trunk Directory Number (assigned in Trunk Data Block).*

7. *There is a maximum of 500 Autodial (ADL) buttons per system.*
8. *XXX = Fixed digits to be dialed (maximum: 16 digits/* = pause).*
9. *This feature can only be assigned to 2000-series electronic/1000-series digital LCD telephones.*
10. *The Flash button causes a 500 ms or a 1-second flash to a CO trunk.*
11. *XX = Leading one or two digits (1 ~ 9) designating the Hundreds Group to be activated on an associated DSS console (switched operation only).*
12. *LNNX = The port number of the electronic/digital telephone to be signaled.*
13. *External Paging is used to access External Paging Zones (0 ~ 4).*
14. *Internal Paging is used to access Internal Paging Groups (0, 2 ~ 17).*
15. *SDC XX makes the station a controller of Station Speed Dial list XX (XX = 01 ~ 50).*
    SDU XX makes the station a user of Station Speed Dial list XX (XX = 01 ~ 50).
16. *A System Night Button (SYS) can be assigned to one attendant-position electronic/digital telephone per tenant if an attendant console is not assigned to that tenant.*
17. *XXXX = The DN of the station that is to receive a Voice Page.*
18. CTRL X = *Ignore line entered.*
    CTRL H = *Backspace.*
    DEL = *Stop printing and return to REQ.*
    DEL DEL = *Exit program.*

TABLE 7-2 (continued)

Error Codes

Program Name: Electronic Telephone Data Block (DEKT)	
Error Code	**Meaning**
EREKT 00	A PCB is not equipped at that location.
EREKT 01	The PCB is an NSTU type (not an NEKU/NDKU).
EREKT 02	The port is busy (REQ = CHG or OUT).
EREKT 03	The port has already been assigned to a station, DSS console, or DDIU (REQ = NEW).
EREKT 04	1 was entered, but tenant service was not enabled in the System Data Block.
EREKT 05	1 was entered, but Attendant 1 was not programmed (no Attendant Data Block).
EREKT 06	Wrong button number (over permitted button strip number).
EREKT 07	Assigned port LNNX is not assigned as a station port (Manual Signaling).
EREKT 08	The maximum number of ADL buttons has already been assigned (maximum: 500).
EREKT 09	PUG was entered, but a Call Pickup Group number is not assigned.
EREKT 10	The DN conflicts with existing DN.
EREKT 11	510 DNs have already been assigned in the system.
EREKT 12	The DN has already been assigned to its maximum number of appearances (Primary is 1, Secondary is 95).
EREKT 13	"Call Pickup Group number = NONE" was entered, but PUG button has already been assigned.
EREKT 14	The next hunt DN is not assigned.
EREKT 15	A DN has already been assigned to the port.
EREKT 16	The input DN has already been assigned to this station.
EREKT 17	The input data was erased because the program was aborted during a NEW data entry.
EREKT 18	The port is not assigned.
EREKT 19	The port is assigned to an NSTU PCB.

(continued)

TABLE 7-2 (continued)

Error Codes

Program Name: Electronic Telephone Data Block (DEKT)	
Error Code	**Meaning**
EREKT 20	The SDC has already been assigned to this Speed Dial.
EREKT 21	The input port is not an NEKU/NDKU port (SIG LNNX).
EREKT 22	PVR NNN/PVN NNN is entered, but trunk DN NNN has not been assigned.
EREKT 23	The input DN is a trunk DN (VCP NNN Hunt DN).
EREKT 24	32 DNs have already been assigned to the Distributed Hunt Group.
EREKT 26	The input port conflicts with the electronic/digital telephone's port (KEY x DIU LNNX).
EREKT 27	The station is assigned as a Lodging/Health Care guest room telephone, therefore only fixed ADL buttons can be assigned.
EREKT 28	Autodial (ADL) digits exceed the maximum of 16.
EREKT 30	The input port is not an NDCU/NDKU open port (KEY x DIU LNNX).
EREKT 31	The DIU button has already been assigned to another button.
EREKT 32	The associated DIU is busy.
EREKT 33	MES is set but the station is not DIS = 2.
EREKT 34	DIS was entered, but DIS does not equal 1.
EREKT 40	The SYS button has already been assigned in the system once.
EREKT 41	More than two digits were entered as station HNG XX.
EREKT 42	The Paging Group number is out of range. It should be 0 or 2 ~ 17.
EREKT 43	The group to be assigned is already full (maximum member number of each Group 2 ~ 17 is 32; maximum member number of Group 0 is 96).
EREKT 44	The same Group number was entered twice.
EREKT 45	More than 4 (maximum) Paging Groups have been entered.
EREKT 47	The electronic/digital telephone's assigned DSS console must be deleted before the telephone can be deleted.
EREKT 48	The SYS button cannot be set because the station is not an attendant-position electronic/digital telephone (DSD2 Data Block).
EREKT 49	The port has already been assigned to a trunk.
EREKT 50	The entry should be ATT (0 and/or 1 is not required).
EREKT 51	The ACDS button or ACDA button has already been assigned to another button/station.
EREKT 52	The Agent Line number conflicts with an existing line number.
EREKT 53	The input DN is not a Supervisor DN.
EREKT 54	No NOCU is equipped at that location.
EREKT 55	A PCB other than an NEKU/NDKU has been assigned to the slot.
EREKT 56	The input port has already been assigned.
EREKT 57	The input data is different from the old data.
EREKT 58	The port has already been assigned to an OCA port.
EREKT 59	An ACD Supervisor DN is not allowed to hunt to another DN.

3. Standard Telephone Data Block (Table 7-3)

3.01 The Standard Telephone Data Block (**DSTT Program**) defines all parameters for a given standard telephone. One Data Block must be completed for each standard telephone in the system. Data is entered as follows:

REQ (Request)—Indicates that the program has loaded. Three responses are possible:
NEW—To create a new Data Block.
CHG—To alter an existing Data Block.
OUT—To delete an existing Data Block.

NOTE:
If OUT is entered, then only the port number (POR) needs to be entered below. No other entry is necessary.

POR (Port Number)—Identifies the hardware location of the STT circuit that is to be defined. The port number has two parts:

1) NSTU PCB location:
PERCEPTION$_e$—L00 ~ L11/L15 ~ L26 (NN).
PERCEPTION$_{ex}$—L00 ~ L31 (NN).

2) Circuit number on that PCB: 1 ~ 8 (X).
For example: The port number of the fifth circuit on the NSTU in position L02 is L025.
Enter: Port Number of station (LNNX).

NOTES:
1. *If the OUT command was given above, the port just defined will be deleted and the next prompt will be REQ.*
2. *Port L318 cannot be assigned.*

DN (Directory Number)—Defines the directory number (station number) of the station.
Enter: DN (1, 2, 3, or 4 digits).

SMX (Station Set Mix)—When the DN that was entered after the DN prompt is also programmed as a secondary DN(s) on an electronic/digital telephone(s), bridging is possible between the telephones.
Enter: Y (bridging is automatically established without a warning tone—i.e., no privacy.)
or...
N (bridging is not allowed—privacy exists with an LED indication).

NOTE:
If Station Set Mix is not desired, enter "N."

COS (Class of Group Services)—Assigns one of the 16 available Classes of Service to the telephone. (The Classes of Service are defined in the **DCOS Program**.)
Enter: COS Number 0 ~ 15).

TEN (Tenant Number)—Assigns the station to one of the two possible tenants in the system.
Enter: 0 if tenant service is not selected in the System Data Block.
(TEN = N.)
0 or 1 to specify tenant, if tenant service is selected in the System Data Block.
(TEN = Y.)

PUG (Call Pickup Group)—Assigns the station to one of the 32 possible pickup groups.
Enter: Group number (0 ~ 31) or NONE.

HNT (Hunt Number)—Defines the station to which this DN hunts.
Enter: Next DN in hunt group (1 ~ 4 digits).
For Station Hunt-Distributed: #X.
(X = Distributed hunt group number, [0 ~ 3]; Maximum: 8 stations per group.)
NONE: No hunt group assignment.

DLG (Dialing Type)—Defines the type of dialing, if any, to be used by the station.
Enter: DIP for dial pulse.
TON for DTMF.
MNL XXXX for Manual Line to attendant or a DN.
(XXXX = ATT0, ATT1, or DN [1 ~ 4 digits].)

SDL (Speed Dial List)—Assigns one of the 50, 10-number speed dial lists for use at this station.
Enter: SDC XX—Makes the station a controller of list number XX.
(XX = 1 ~ 50.)
SDU XX—Makes the station a user of list number XX.
(XX = 1 ~ 50.)
NONE—No list assigned.

list number XX.
(XX = 1 ~ 50.)
NONE—No list assigned.

WTA (Warning Tone Allowed?)—Defines an interruption-protected station. An "N" response will prevent warning tones from being applied to the station.
Enter: Y or N.

CFT (Call Forward to Trunk)—Permits calls to this station to be forwarded over a trunk to an outside directory number (maximum: 16 digits).
Enter: Y or N.

TOL (Toll Restriction Class)—Assigns one of the ten Toll Restriction classes to the station. Classes 0 ~ 7 are defined in the Toll Restriction Data Block (**DTOL Program**). Class 8 is simple toll restriction; restricting either 0 or 1 as the first digit. NONE defines the station as unrestricted.
Enter: 0 ~ 8 or NONE.

MWL (Message Waiting Lamp)—Defines a station that is equipped with a Message Waiting Lamp.
Enter: Y or N.

RDS (Emergency Ringdown Station)—Indicates the destination for an emergency signal (continuous ringing) when a station goes off-hook, but does not complete dialing a valid number before the Line Lockout Timeout period elapses. The destination can be programmed as either a specific station, an attendant, or the system UNA device. (In tenant service, the system will route the RDS call to the assigned tenant, when ATT is entered.) The designation of an Emergency Ringdown Station is particularly important in Lodging/Health Care applications.
Enter: XXXX = 1- ~ 4-digit station number.
ATT = Attendant.
UNA = System UNA.
NONE = No designation of Emergency Ringdown Station.

OCA (Off-hook Call Announce)—Defines whether this feature is in automatic or manual mode. When programmed in auto mode, it allows the system to announce an incoming call when the station is off-hook. If it is in manual mode, the system will let the caller enter an access code before the call interrupts the ongoing conversation. Busy tone must be heard (i.e., no call-forwards) to activate this feature.
Enter: A or M.

TABLE 7-3

Procedure — Standard Telephone Data Block

Authorization Procedure must be completed. If an OK response is received, proceed as follows:

ITEM	PROMPT	USER ENTRY	NOTE
	OK	DSTT STdb	
– DISK LOADING –			
	REQ	NEW, CHG, OUT	
Port Number	POR	LNNX	1 & 2
Directory Number	DN	1 ~ 4 digits	3
Station Mix	SMX	Y or N	
Class of Service	COS	0 ~ 15	4
Tenant Number	TEN	0 or 1	5
Call Pickup Group	PUG	0 ~ 31 or NONE	6
Hunt number	HNT	1 ~ 4 digits, #X, or NONE	7
Dialing Type	DLG	DIP, TON, MNL XXXX	8
Speed Dial List	SDL	SDC XX, SDU XX, or NONE	9
Warning Tone Allowed?	WTA	Y or N	10
Call Forward to Trunk	CFT	Y or N	
Toll Restriction Class	TOL	0 ~ 8 or NONE	11
Message Waiting Lamp	MWL	Y or N	
Emergency Ringdown Station	RDS	1 ~ 4 digits, ATT, UNA, or NONE	
Off-hook Call Announce	OCA	A or M	
	REQ	Repeat program, if necessary	

(continued)

NOTES:

1. *NN = PCB location.*
2. *X = Circuit number.*
3. *4-, 3-, 2-, or 1-digit DNs are allowed if there is no conflict (e.g., 30X is not allowed if 30 is used).*
4. *There are 16 different COS groups which are defined in the DCOS Data Block.*
5. *When RNA calls recall to the Attendant, they will recall to the Attendant (0 or 1) that ORIGINALLY transferred the call.*
6. *There is a maximum of 32 Call Pickup Groups.*
7. *The number to which this DN hunts.*
   #X = Station Hunt-Distributed.
   X = Distributed hunt group number (0 ~ 3). Maximum 8 members per group.
   NONE = No hunt.
8. *DIP = Dial Pulse. TON = DTMF. MNL XXXX = Manual Line Direct to DN (1 ~ 4 digits), ATT 0, or ATT1.*
9. *SDC XX makes the station a controller of Station Speed Dial List XX (XX = 01 ~ 50).*
   SDU XX makes the station a user of Station Speed Dial List XX (XX = 01 ~ 50).
10. *Y = Warning tones applied (call waiting feature activated).*
    N = No warning tones applied (camp-on feature activated).

11. *Classes 0 ~ 7 are defined in the Toll Restriction Data Block (**DTOL Program**).*
    Class 8 = Dial 0 or 1 restriction.
    NONE = No Toll Restriction.
12. CTRL X = *Ignore line entered.*
    CTRL H = *Backspace.*
    DEL = *Stop printing and return to REQ.*
    DEL DEL = *Exit program.*

TABLE 7-3 (continued)

Error Codes

Program Name: Standard Telephone Data block (DSTT)	
Error Code	**Meaning**
ERSTA 00	No PCB is equipped at that location.
ERSTA 01	The PCB is an NEKU type (not an NSTU).
ERSTA 02	Port is busy (REQ = CHG, OUT).
ERSTA 03	Port has already been assigned to a station, DSS console, or DDIU.
ERSTA 05	1 was entered, but tenant service was not enabled in the System Data Block.
ERSTA 06	1 was entered, but ATT #1 was not programmed (no Attendant Data Block).
ERSTA 09	Unknown input.
ERSTA 10	DN conflicts with existing DN.
ERSTA 11	510 DNs have already been assigned in the system.
ERSTA 12	DN has already been assigned to the maximum number of appearances (96).
ERSTA 13	Hot Line DN does not exist.
ERSTA 14	Next Hunt DN does not exist.
ERSTA 17	MNL 0 was entered, but ATT0 is not equipped.
ERSTA 18	MNL 1 was entered, but ATT1 is not equipped.
ERSTA 19	MNL 0 was entered, but this station is in tenant group #1.
ERSTA 20	MNL 0 was entered, but this station is in tenant group #2.
ERSTA 21	Input data was erased because the program was aborted during NEW data entry.
ERSTA 22	The port is not assigned.
ERSTA 23	Another type of data (electronic telephone, etc.) is assigned to the input port.
ERSTA 24	SDC has already been assigned to the input list.
ERSTA 25	The next input hunt DN is a trunk DN.
ERSTA 26	The Distributed Hunt Group has already been assigned its maximum member number (8).
ERSTA 27	Invalid Toll Class Number (0 ~ 8).
ERSTA 28	The first digit does not match with RM PFX, or the second digit conflicts with another DN or access code.
ERSTA 29	The port has already been assigned to a trunk.
ERSTA 30	The entry should be ATT (0 and/or 1 not required).
ERSTA 31	Port has already been assigned as an announcement port.

4. Print Station Data Block (Table 7-4)

4.01 To use the Print Station Data Block (**PSDB Program**):

- Perform the Authorization Procedure (Level 1, 2, or 3).
  Enter: PSDB (in response to the OK prompt).
- After the program is loaded and the REQ prompt is received, enter one of the following commands:

PORALL—All Electronic/Digital Telephone and Standard Telephone Data Blocks will be output in numerical order of port numbers (lowest number first).

PORNNX—The Data Block for port NNX will be output (NNX = port number without L).

PORVAC—A list of all unassigned ports will be output.

DNALL—All Electronic/Digital Telephone and Station Data Blocks will be output in numerical order of DN (lowest to highest). For electronic/digital telephones, the prime DN will be used.

DNXXXX—The Data Block for DN XXXX will be output. If it is a multiple appearance DN, then all Data Blocks in which it appears will be output.

EKTALL—All Electronic/Digital Telephone Data Blocks will be output in order of prime DN (lowest first).

STTALL—All STT Data blocks will be output in order of DN (lowest first). The output format will be the same as the input format in the DEKT and DSTT data input programs.

TABLE 7-4

Procedure — Print Station Data Block
Authorization Procedure must be completed. If an OK response is received, proceed as follows:

ITEM	PROMPT	USER ENTRY	NOTE
	OK	PSDB	
– DISK LOADING –			
	REQ		1
– EXECUTE –			
	REQ		1

(continued)

NOTES:

1. *The following responses are possible:*
   PORALL = Outputs all Station Data Blocks in numerical order of ports (lowest first).
   PORNNX = Outputs port NNX data.
   PORVAC = Outputs a list of all unassigned ports.
   DNALL = Outputs all Station Data Blocks in numerical order (lowest first) by DN (prime DN for electronic/digital telephones).
   DNXXXX = Outputs DNXXXX data. If it is a multiple appearance DN, then all Data Blocks in which it appears will be output. (XXXX = DN number, 1 ~ 4 digits.)
   EKTALL = Outputs all Electronic/Digital Telephone Data Blocks in order of prime DN (lowest first).
   STTALL = Outputs all Standard Telephone Data Blocks in order of DN (lowest first).
2. CTRL X = *Ignore line entered.*
   CTRL H = *Backspace.*
   DEL = *Stop printing and return to REQ.*
   DEL DEL = *Exit program.*

TABLE 7-4 (continued)

Error Codes

Program Name: Print Station Data Block (PSDB)	
Error Code	**Meaning**
ERPST 00	The input PCB number or circuit number is out of range.
ERPST 01	The input DN does not exist.
ERPST 02	The input port is not assigned to an electronic or a 500/2500-series telephone.
ERPST 03	A manual signaling port does not exist.
ERPST 04	The input DN is not assigned to an electronic/digital telephone or to a 500/2500-series telephone.

5. Print Call Pickup Groups (Table 7-5)

5.01 To use the Print Call Pickup Groups (**PCPG Program**):

- Perform the Authorization Procedure (Level 1, 2, or 3).
  Enter: PCPG (in response to the OK prompt).
- After the program is loaded and an REQ prompt is received, enter one of the following commands:

ALL—All Call Pickup groups will be output.

DNXXXX—The number of the Call Pickup group containing DNXXXX will be output.

Example:

```
#1      REQ     DN205
        GRP00
#2      REQ     ALL
GRP00           XXX  XXX  XXX XXX
                XXX  XXX  XXX XXX
                XXX  XXX  XXX XXX
                XXX  etc.
GRP01           XXX  XXX  XXX
GRP02           XXX  XXX  XXX
```

TABLE 7-5

Procedure — Print Call Pickup Groups

Authorization Procedure must be completed. If an OK response is received, proceed as follows:

ITEM	PROMPT	USER ENTRY	NOTE
	OK	PCPG	
– DISK LOADING –			
	REQ		1
– EXECUTE –			
	REQ		1

NOTES:

1. *The following responses are possible:*
   ALL = *Outputs all Call Pickup Groups (listed by DN).*
   DNXXXX = *Lists the numbers of all Call Pickup Groups containing DNXXXX.*
2. CTRL X = *Ignore line entered.*
   CTRL H = *Backspace.*
   DEL = *Stop printing and return to REQ.*
   DEL DEL = *Exit program.*

Error Codes

Program Name: Print Call Pickup Groups (PCPG)	
Error Code	**Meaning**
ERPCP 00	Invalid response.
ERPCP 01	The input DN does not exist.

6. Print Hunting Arrangements (Table 7-6)

6.01 To use the Print Hunting Arrangements (**PHNT Program**):

- Perform the Authorization Procedure (Level 1, 2, or 3).
  Enter: PHNT (in response to the OK prompt).
- When an REQ prompt is received after the program is loaded, enter the following command:

ALL—All hunting sequences will be output.

- The output format will be as in the following examples:

```
REQ    ALL
HNT    223-224-225
HNT    242-243
HNT    250-251-252
etc.
```

TABLE 7-6

Procedure — Print Hunting Arrangements

Authorization Procedure must be completed. If an OK response is received, proceed as follows:

ITEM	PROMPT	USER ENTRY	NOTE
	OK	PHNT	
– DISK LOADING –			
	REQ	ALL	1
– EXECUTE –			
	REQ		1

NOTES:

1. *The following responses are possible:*
   ALL = *Outputs all hunting sequences (listed by DN).*
2. CTRL X = *Ignore line entered.*
   CTRL H = *Backspace.*
   DEL = *Stop printing and return to REQ.*
   DEL DEL = *Exit program.*

Error Codes

Program Name: Print Hunting List (PHNT)	
Error Code	**Meaning**
ERPHT 00	The input DN does not exist.

7. Print Paging Group Data Block (Table 7-7)

7.01 To use the Print Paging Group Data Block (**PPAG Program**):

- Perform the Authorization Procedure (Level 1, 2, or 3).
  Enter: PPAG (in response to the OK prompt).
- After the program has loaded and the REQ prompt has been received, enter one of the following commands:

PAG N—All electronic/digital telephone ports belonging to the indicated paging group N will be output in the order in which they were programmed, in the format shown below (for paging group 00):

PAGING GROUP 00 LNNX LNNX LNNX

PAGALL—All assigned paging groups and their electronic telephone members will be output in the order in which they were programmed.

TABLE 7-7

Procedure — Print Paging Group Data Block

Authorization Procedure must be completed. If an OK response is received, proceed as follows:

ITEM	PROMPT	USER ENTRY	NOTE
	OK	PPAG	
– DISK LOADING –			
	REQ		1
– EXECUTE –			
	REQ		1

NOTES:

1. *The following responses are possible:*
   PAG N = *Outputs all electronic/digital telephone ports belonging to the indicated paging group N in the order in which they were programmed.*
   PAGALL = *Outputs all electronic/digital telephone ports belonging to the assigned paging groups in the order in which they were programmed.*
2. CTRL X = *Ignore line entered.*
   CTRL H = *Backspace.*
   DEL = *Stop printing and return to REQ.*
   DEL DEL = *Exit program.*

8. DSS Console Data Block (Table 7-8)

8.01 The DSS Console Data Block (**DDSS Program**) is used to assign both electronic and digital DSS consoles. A maximum of eight electronic/digital DSS consoles can be assigned. Each DSS console must be assigned to an electronic/digital telephone and up to two consoles may be assigned to each electronic/digital telephone. Each console has 60 programmable buttons, which may be programmed as either fixed or switched direct station select (DN) buttons or as feature access buttons. Any electronic/digital telephone feature, except those requiring a speech path, can be programmed onto a DSS console button (see Table 7-8a). Data for this program is entered as follows:

REQ (Request)—Indicates that the program has loaded. Three responses are possible:
NEW—To create a new Data Block.
CHG—To alter an existing Data Block.
OUT—To delete an existing Data Block.

NOTE:
If OUT is entered, then only the port number (POR) needs to be entered below. No other entry is necessary.

NBR (DSS Number)—Defines the number of the DSS console in the system. There is a maximum of eight consoles per system.
Enter: DSS number (0 ~ 7).

POR (Port Number)—Identifies the hardware location of the DSS console circuit that is to be defined (CNNX/LNNX). The port number has two parts, which are each noted as follows:

1) NN designates the location of the PCB on which the DSS console circuit is installed:
$PERCEPTION_e$: C00 ~ C01 or L00 ~ L11/ L15 ~ L26.
CNNX: X = 1 ~ 4;LNNX: X = 1, 3, 5, 7.
$PERCEPTION_{ex}$: L00 ~ L31.
LNNX: X = 1, 3, 5, 7.

2) X designates the DSS console's associated circuit number.
Enter: Port number of the DSS console (CNNX/LNNX).

NOTE:
1. *Electronic DSS consoles are assigned to the NDSU PCB at port locations CNNX or LNNX. Digital DSS consoles are assigned to the NDKU PCB at port locations CNNX or LNNX.*
2. *When using 8 DDSS consoles on one NDKU PCB, program the first four DDSSs on circuits 1, 3, 5 and 7 on the NDKU PCB. Program the second four DDSSs on circuits 1, 3, 5 and 7 on the adjacent slot next to the NDKU PCB.*

DDSS (Digital DSS)—Identifies if the DSS Console assigned is a digital or non-digital DSS.
Enter: Y (for digital) or N (for electronic).

SPT (Station Port)—Designates the electronic/digital telephone station that is to be associated with the DSS console.
Enter: Port number of station (LNNX).

F/S (Fixed or Switched Operation)—Defines the operation of DSS button assignment on the console. Fixed assignment (F) means that each DSS console button is permanently associated with a single station DN. Switched assignment (S) means that each DSS console button is variably assigned and can be changed by a Hundreds Group button. For example, when a Hundreds Group button of 2 is pressed, switched DN keys 00 ~ 09 become buttons 200 ~ 209. When a Hundreds Group button of 3 is pressed, these same buttons become buttons 300 ~ 309. When an electronic/digital telephone has two associated DSS consoles, one may be assigned as switched and one may be assigned as fixed. However, there can be no mixture of switched/fixed functions on the same console.
Enter: F or S.

NOTE:
This prompt will only appear when NEW is entered in response to REQ. To change a programmed DSS console from Fixed/Switched, the console must be deleted and then reprogrammed.

KEY (DSS Console Button)—Defines the various buttons on the DSS console. Each button is assigned either to a specific DN (for fixed operation), to a two-digit number (for switched

operation), or to a specific feature. When assigning or deleting data from DSS console buttons, data can be assigned/deleted in groups. Additionally, data that is assigned to one DSS console may be duplicated either entirely or partially (either specific buttons or columns of buttons) onto another DSS console by using range programming functions. To program a DSS console button, perform one of the following operations:

1) Assign a DN: For a **fixed** button, enter the number of the button being defined (m = 0 ~ 59, followed by a space, *, and the station DN (N, NN, NNN, or NNNN). For a **switched** button, enter the number of the button being defined, a space, #, and the last two digits of the station DN (NN). The digit preceding these lower digits will be determined by Hundreds Group buttons.
   Enter: m *N (NN, NNN, or NNNN) (for Fixed operation).
   m #NN (for Switched operation).

NOTE:
There cannot be a mixture of switched/fixed buttons on the same console.

2) Assign a Feature: Enter the number of the button being defined, followed by a space and the mnemonic of the feature. All electronic/digital telephone features are available to a DSS console arrangement, except those requiring a speech path (DIU, DRS, SCR, SCN, PVR, and PVN). Features that are available for DSS assignment are listed in Table 7-8a.
   Enter: m Feature.
   (m = button number [0 ~ 59].)

3) Range Assignment : This entry allows a consecutive range of directory numbers to be simultaneously assigned to DSS console buttons. Ranges are entered by using a format which indicates the starting point (L) and the ending point (M) of the button range (L must be less than M), and the starting station DN to be programmed (XX, XXX, XXXX [2- ~ 4-digit DNs]). The programmed stations will include the starting station number that is entered, and each subsequent station within the indicated range. The operation of these assignments will depend on whether the DSS console is programmed as fixed or switched. For example, in **switched** DN assignment, a data input of 10 19 30 will assign DNs 30 ~ 39 to DSS console buttons 10 ~ 19. In **fixed** DN assignment, a data input of 00 59 200 will assign DNs 200 ~ 259 to DSS console buttons 0 ~ 59.
   Enter: AUT L M XX or XXX.

4) Duplicate a Complete DSS Console Button Arrangement: This option will duplicate the entire button arrangement of one DSS console onto another DSS console.
   Enter: DUP M.
   (M = The number [0 ~ 7] of the console that is to be duplicated entirely.)

5) Duplicate a Column of DSS Console Buttons: This option will duplicate a complete column of assigned DSS console buttons (X) onto another DSS console (Y). Console button columns are numbered 0 ~ 5, from left to right on the DSS console.
   Enter: DUP MX Y.
   (M = The number of the console being copied.
   X = The column of the DSS console being copied.
   Y = The column of the DSS console to which the copy will be applied.)

6) Duplicate Selected Buttons: This option will duplicate a series of buttons (YY thru ZZ) from one console (M) to the console being programmed.
   Enter: DUP MXX YY ZZ.
   (M = Number of the console being copied.
   XX = The first button on the console that is to be programmed.
   YY = Starting range button of the console being copied.
   ZZ = Ending range button of the console being copied.)

TABLE 7-8

Procedure — DSS Console Data Block

Authorization Procedure must be completed. If an OK response is received, proceed as follows:

ITEM	PROMPT	USER ENTRY	NOTE
	OK	DDSS	
– DISK LOADING –			
	REQ	NEW, CHG, OUT	
DSS Number	NBR	N	1
Port Number	POR	CNNX OR LNNX	2
Digital DSS Console	DDSS	Y or N	3
Station Port	SPT	LNNX	4
Fixed or Switched	F/S	F or S	5
Button Assignment	KEY	m *N (NN, NNN, NNNN)	6
		m #NN	7
		m Feature	8
		AUT L M XX (XXX, XXXX)	9
		DUP M	10
		DUP MX Y	11
		DUP MXX YY ZZ	12

(continued)

NOTES:

1. *A maximum of eight DSS consoles may be assigned to each system. Up to two consoles may be assigned to a single electronic/digital telephone. N = 0 ~ 7.*
2. *CNNX/LNNX represents the port assigned to the DSS console.*
   $PERCEPTION_e$: C00X/C01X or L00X ~ L11X/L15X ~ L26X.
   CNNX: X = 1 ~ 4; LNNX: X = 1, 3, 5, 7.
   $PERCEPTION_{ex}$: L00X ~ L31X.
   LNNX: X = 1, 3, 5, 7.
3. *Identifies DSS console as: digital = Y or electronic = N.*
4. *LNNX represents the port of the station associated with the DSS console.*
   $PERCEPTION_e$: L00X ~ L11X/L15X ~ L26X.
   $PERCEPTION_{ex}$: L00X ~ L31X.
5. *When an electronic/digital telephone is assigned to two consoles, both may be switched/fixed or one may be switched and one may be fixed. However, there cannot be a mixture of switched/fixed functions on the same console.*
6. *Used to assign a fixed DN to a DSS console button (m = button number; N = station DN).*
7. *Used to assign a switched DN to a DSS console button (m = button number; NN = last two digits of station DN).*
8. *Used to assign a feature to a DSS console button. See Table 7-8a for a list of available features.*
9. *Used to assign a range of numbers to a single console.*
   L (00 ~ 59) = Starting button of range. (L must be less than M.)
   M (00 ~ 59) = Ending button of range.
   XX, XXX = Starting DN to be programmed.

TABLE 7-8 (continued)

10. *Used to duplicate an entire DSS console button arrangement. M = number of the DSS console to be copied (0 ~ 7).*
11. *Used to duplicate a row of DSS console buttons to another console.*
    M (0 ~ 7) = *Number of the DSS console being copied.*
    X (0 ~ 5) = *Row of the DSS console being copied.*
    Y (0 ~ 5) = *Row of the DSS console to which the copy will be applied.*
12. *Used to duplicate specific buttons from one console to another.*
    M (0 ~ 7) = *Number of the DSS console being copied.*
    XX (0 ~ 5) = *Starting button on the DSS console being programmed.*
    YY (0 ~ 5) = *Starting button of the range to be copied.*
    ZZ (0 ~ 5) = *Ending button of the range to be copied.*
13. CTRL R = *Ignore line entered.*
    CTRL H = *Backspace.*
    DEL = *Stop printing and return to REQ.*

TABLE 7-8a
AVAILABLE FEATURES FOR DSS BUTTON ASSIGNMENT

FEATURE	ENTRY	NOTE
Account Number (SMDR)	CRG	
Alphanumeric Message	MES	
Assistance (ACD)	ASSI	
Automatic Callback	ACB	
Automatic Dialing, Flexible	ADL	1
Automatic Dialing, Fixed	FAD XXX	1
Call Forward – All Calls	CFD	
Call Forward – Busy	CFBY	
Call Forward – Busy/No Answer	CFBD	
Call Forward – No Answer	CFNA	
Call Forward – Busy (System/DID)	CFSN	
Call Pickup Directed	PUD	
Call Pickup Group	PUG	
Display Date and Time/Elapsed Time	DIS	2
Do Not Disturb	DND	
External Zone Paging	PEXT	
Flash	FLH	3
Hundreds Group	HNG XX	4
Internal Group Paging	PINT	
Log-in/out (ACD)	LOG	
Manual Signaling	SIG LNNX	5
Message Waiting	MSG	
Monitor (ACD Supervisor)	MONT	
Off-hook Call Announce	OCA	
Override	OVR	
Call Park	PARK	
Privacy Release	PRS	
Release	RLS	
Repeat Last Number Dialed	RND	
Speaker Cut-off	SCF	
Speed Dial – System	SDS	
Speed Dial – Station (Controller)	SDC XX	6

(continued)

TABLE 7-8a (continued)
AVAILABLE FEATURES FOR DSS BUTTON ASSIGNMENT

FEATURE	ENTRY	NOTE
Speed Dial – Station (User)	SDU XX	6
Station-to-Station Message	SSM	
Status (Available/Unavailable) (ACD)	STAT	
Stroke Count (ACD)	STRK	
System Night Operation	SYS	7
Tap (Agent Monitor) (ACD)	ATAP	
Universal Night Answer	UNA	
Voice Page	VCP	
Work Mode Cancel (ACD)	CAN	

NOTES:

1. *There is a maximum of 500 Autodial buttons per system.*
2. *This feature can only be assigned to 2000-series electronic/1000-series digital LCD telephones.*
3. *The Flash button causes a 500 ms or a 1-second flash to a CO trunk.*
4. *XX = The higher two digits of the station DN (00 ~ 99).*
5. *LNNX = The port number of the electronic/digital telephone to be signaled.*
6. *SDC XX makes the station a controller of list #XX. SDU XX makes the station a user of list #XX. Maximum: 50, 10-number Speed Dial-Station lists (XX = 1 ~ 50).*
7. *Only **ONE** SYS button can be assigned per **SYSTEM** when an attendant console is not assigned. The SYS button can **ONLY** be assigned to an attendant-position electronic/digital telephone or to a DSS console assigned to an attendant-position electronic/digital telephone.*

TABLE 7-8 (continued)

Error Codes

Program Name: DSS Console Data Block (DDSS)	
Error Code	**Meaning**
ERDSS 00	A PCB is not equipped in that location.
ERDSS 01	The port has already been assigned (REQ = NEW).
ERDSS 02	The wrong button number was entered.
ERDSS 03	The input DSS console or feature button conflicts with the existing button.
ERDSS 04	The PCB is not an NDSU/NDKU.
ERDSS 05	The port is not assigned (REQ = CHG, OUT).
ERDSS 06	The port is busy (REQ = CHG, OUT).
ERDSS 07	An electronic/digital telephone has already been assigned to the PCB.
ERDSS 08	Two DSS have already been assigned to the electronic/digital telephone.
ERDSS 09	The start button number is larger than the end button number (DUP).
ERDSS 10	The DSS button or feature button conflicts with an existing button (DUP).
ERDSS 11	The SYS button has already been assigned in this tenant.
ERDSS 12	The input port cannot be disabled.
ERDSS 13	The wrong button parameter was entered.
ERDSS 14	The input port is not an electronic/digital telephone port (SIG LNNX).
ERDSS 15	A station port (SPT) was entered, but the DSS console has already been assigned to the PCB.
ERDSS 16	The start button number is larger than the end button number (AUT).
ERDSS 17	The button data does not exist.
ERDSS 18	The type of button assignment (Fixed/Switched) is different from the master DSS console.
ERDSS 19	DIS button is set, but station is not set (DIS = 1).
ERDSS 20	MES button is set, but station is not set (DIS = 2).
ERDSS 21	The port must be assigned to a C00 or C01 location.
ERDSS 22	The input DN is a trunk DN (VCP NNN).
ERDSS 23	This SDC has already been assigned.
ERDSS 24	A PUG button has been entered, but a Call Pickup Group has not been assigned.
ERDSS 25	The maximum number of ADL buttons (500) has already been assigned.
ERDSS 26	Too many digits have been assigned to ADL (maximum = 16).
ERDSS 27	Fixed dialing digits cannot be assigned to ADL buttons. Assign these digits to FAD buttons.
ERDSS 28	The ADL button is set, but the station is not an attendant-position electronic/digital telephone.
ERDSS 31	The port has already been assigned to OCA.

9. Print DSS Console Data Block (Table 7-9)

9.01 To use the Print DSS Console Data Block (**PDSS Program**):

- Perform the Authorization Procedure (Level 1, 2, or 3).
  Enter: PDSS (in response to the OK prompt).
- After the program has loaded and the REQ prompt is received:
  Enter one of the following commands:

PORALL—All DSS console Data Blocks will be output in numerical order of ports (lowest first).

PORCNNX (or PORLNNX)—All CNNX (or LNNX) data will be output.

PORVAC—A list of all unassigned ports will be output.

STACNNX (or STALNNX)—All data regarding the station that is associated with the DSS console (installed at either CNNX or LNNX) will be output.

DSSNN—All DSS console switched DN assignments (#NN = the last two digits of station numbers) will be output.

TABLE 7-9

Procedure — Print DSS Console Data Block

Authorization Procedure must be completed. If an OK response is received, proceed as follows:

ITEM	PROMPT	USER ENTRY	NOTE
	OK	PDSS	
– DISK LOADING –			
	REQ		1
– EXECUTE –			
	REQ		1

NOTES:

1. *The following responses are possible:*
   PORALL = Outputs all DSS console Data Blocks in numerical order of ports (lowest first).
   PORCNNX (or PORLNNX) = Outputs all CNNX (or LNNX) data.
   PORVAC = Outputs a list of all unassigned ports (C00/C01 slots only).
   STACNNX (or STALNNX) = Outputs all station data that is associated with CNNX DSS consoles (or LNNX DSS consoles).
   DSSNN = Outputs all DSS console switched DN assignments (#NN = lower two digits of station numbers).
2. CTRL X = *Ignore line entered.*
   CTRL H = *Backspace.*
   DEL = *Stop printing and return to REQ.*
   DEL DEL = *Exit program.*

CHAPTER 8

MESSAGE CENTER DATA

1. Message Center Data Block (Table 8-1)

1.01 The Message Center Data Block (**DMCD Program**) identifies the type of Message Center and its location.

REQ (Request)—Indicates that the program has loaded. Two responses are possible:
NEW—To create a new Data Block.
CHG—To alter an existing Data Block.

MWC0 (Message Center #0)—Identifies the type of Message Center.
Enter: MC (Message Center) or VM (Voice Mail).

MWC1 (Message Center #1)—Identifies the type of Message Center. (This prompt will only appear if TEN = Y in the DSYS Data Block.)
Enter: MC (Message Center) or VM (Voice Mail).

MDN0 (Message Center #0 DN)—Identifies directory numbers of Message Center #0. An "A" will follow the MDN0 prompt and any entries made will be added. To delete a port, press the carriage return (CR) key. The system will then prompt "D" and any entries made will be deleted.
Enter: 1 ~ 4 digits for each DN, or ATT0.
(ATT0 or electronic/digital telephone DN is valid only if MWC0 = MC. If MWC0 = VM, then up to 32 standard telephone [NSTU] port DNs can be entered. This will allow internal DTMF signaling to these ports.)

MDN1 (Message Center #1 DN)—Identifies directory numbers of Message Center #1. This prompt will appear only in tenant systems. An "A" will follow the MDN1 prompt and any entries made will be added. To delete a port, press the carriage return (CR) key. The system will then prompt "D" and any entries made will be deleted.
Enter: 1 ~ 4 digits for each DN, or ATT1.
(ATT1 or electronic/digital telephone DN is valid only if MWC1 = MC. If MWC1 = VM, then up to 32 standard telephone [NSTU] port DNs can be entered. This will allow internal DTMF signaling to these ports.)

NOTE:
If using a Toshiba INTOUCH Digital Voice Messaging System, ***do not*** *make any entries for the MDN0 and MDN1 prompts. Press the* CR *key.*

DSC0 (Disconnect Code)—Defines the disconnect code of the voice mail equipment for Message Center #0. (This prompt will only appear when MWC0 = VM.) This disconnect code is sent to voice mail equipment for disconnect before the voice mail timeout occurs, and it must match the code that is programmed in the voice mail system.
Enter: XXXX or NONE.

DSC1 (Disconnect Code)—Defines the disconnect code of the voice mail equipment for Message Center #1. (This prompt will only appear when MWC1 = VM.) This disconnect code is sent to voice mail equipment before the voice mail timeout occurs, and it must match the code that is programmed in the voice mail system.
Enter: XXXX or NONE.

TVM0 (Toshiba Voice Messaging #0)—If using a Toshiba INTOUCH or VP Digital Voice Messaging System, enter up to 32 directory numbers (NSTU ports) that will be connected to the INTOUCH or VP system. This provides enhanced integration of the PERCEPTION$_{e\&ex}$ and INTOUCH or VP systems. Following the TVM0 prompt, the PERCEPTION$_{e}$ or PERCEPTION$_{ex}$ system will prompt an "A." Any entries made will be added. To delete a port, press the carriage return (CR) key. The system will then prompt a "D" and any entries made will be deleted.
Enter: XXXX XXXX... (in response to the A prompt).
XXXX XXXX... (in response to the D prompt).

TVM1 (Toshiba Voice Messaging #1)—This prompt will only appear in tenant systems. If using a Toshiba INTOUCH or VP Digital Voice Messaging System, enter up to 32 directory numbers (NSTU ports) that will be connected to

the INTOUCH or VP system. This provides enhanced integration of the PERCEPTION$_{e\&ex}$ and INTOUCH or VP systems. Following the TVM0 prompt, the PERCEPTION$_{e}$ or PERCEPTION$_{ex}$ system will prompt an "A." Any entries made will be added. To delete a port, press the carriage return (CR) key. The system will then prompt a "D" and any entries made will be deleted.

Enter: XXXX XXXX... (in response to the A prompt).
XXXX XXXX... (in response to the D prompt).

TABLE 8-1

Procedure — Message Center Data Block

Authorization Procedure must be completed. If an OK response is received, proceed as follows:

ITEM	PROMPT	USER ENTRY	NOTE
	OK	DMCD	
– DISK LOADING –			
	REQ	NEW, CHG	
Message/Voice Mail	MWC0	MC or VM	
Message/Voice Mail	MWC1	MC or VM	1
DN of MC 0	MDN0 A D	 1 ~ 4 digits or ATT0 (maximum: 32 DNs) 1 ~ 4 digits or ATT0 (maximum: 32 DNs)	2 ~ 5
DN of MC 1	MDN1 A D	 1 ~ 4 digits or ATT1 1 ~ 4 digits or ATT1	1 ~ 5
Disconnect Code	DSC0	XXXX or NONE (NONE)	6
Disconnect Code	DSC1	XXXX or NONE (NONE)	1 & 6
Toshiba Voice Messaging #0	TVM0 A D	 1 ~ 4 digits (maximum: 32 DNs) 1 ~ 4 digits (maximum: 32 DNs)	7
Toshiba Voice Messaging #1	TVM1 A D	 1 ~ 4 digits (maximum: 32 DNs) 1 ~ 4 digits (maximum: 32 DNs)	1 & 7

Default values are noted in parentheses ( ). *(continued)*

NOTES:

1. *This entry will appear when TEN = Y.*
2. *If MWC0 or MWC1= VM, then the user will be able to enter a maximum of 32 directory numbers in MDNO.*
   If MWC0 or MWC1= MC, then the user can only enter one directory in MDN1 (electronic/digital telephone DN or attendant console).
   XXXX = Station directory number.
3. *An "A" will appear after the MDN0 (MDN1) prompt and any entries made will be added. After pressing the return key, a "D" will appear and any entries made will be deleted.*
4. *If MWC0 = MC, enter ATT0 or electronic/digital telephone DN.*
   If MWC1 = MC, enter ATT1 or electronic/digital telephone DN. (This prompt will only appear in tenant systems.)

5. *If MWC0 = VM, enter up to 32 directory numbers (NSTU ports) that will be connected to the voice mail system.*
   If MWC1 = VM, enter up to 32 directory numbers (NSTU ports) that will be connected to the voice mail system for Tenant 1 (TEN = Y).

   *NOTE: **Do not** make any entries for these two prompts if using the Toshiba INTOUCH or VP Digital Voice Messaging System. Press the CR key.*

6. *This entry will appear when MWC0 or MWC1 = VM.*
7. *If MWC0 = VM and a Toshiba INTOUCH or VP Digital Voice Messaging System is being used, enter up to 32 directory numbers (NSTU ports) that will be connected to the INTOUCH or VP system.*
   If MWC1 = VM and a Toshiba INTOUCH or VP Digital Voice Messaging System is being used, enter up to 32 directory numbers (NSTU ports) that will be connected to the INTOUCH or VP system for Tenant #1 (TEN = Y).
8. CTRL X = *Ignore line entered.*
   CTRL H = *Backspace.*
   DEL = *Stop printing and return to REQ.*
   DEL DEL = *Exit program.*

TABLE 8-1 (continued)

Error Codes

Program Name: Message Center Data Block (DMCD)	
Error Code	**Meaning**
ERMCD 00	All MDNs are assigned.
ERMCD 01	The DN you are trying to delete does not exist.
ERMCD 02	The MDN has already been assigned.
ERMCD 03	The DN does not exist in the system.
ERMCD 04	Data has already been assigned (REQ = NEW).
ERMCD 05	Data is not assigned (REQ = CHG).
ERMCD 06	MWC0 or MWC1 = VM, therefore ATT0 or ATT1 cannot be entered. You cannot enter ATT0 at the MDN1 prompt, or ATT1 at the MDN0 prompt.

2. Print Message Center Data Block (Table 8-2)

2.01 To use the Print Message Center Data Block (**PMCD Program**):

- Perform the Authorization Procedure (Level 1 or 2).
  Enter: PMCD (in response to the OK prompt).
- When the REQ prompt is received after the program is loaded:
  Enter: PRT.
- The Message Center Data Block will output data in the same format as it was input in the **DMCD Program**.

TABLE 8-2

Procedure — Print Message Center Data Block

Authorization Procedure must be completed. If an OK response is received, proceed as follows:

ITEM	PROMPT	USER ENTRY	NOTE
	OK	PMCD	
– DISK LOADING –			
	REQ	PRT	1

NOTES:

1. *The only response possible is: PRT = Outputs Message Center Data Block.*
2. CTRL X = *Ignore line entered.*
   CTRL H = *Backspace.*
   DEL = *Stop printing and return to REQ.*
   DEL DEL = *Exit program.*

CHAPTER 9

TRUNK DATA

1. Trunk Group Data Block (Table 9-1)

1.01 The Trunk Group Data Block (**DTGP Program**) defines the parameters for each of the 16 possible trunk groups in the system. A Data Block must be completed for each trunk group in the system. Not all of the prompts listed below are used for all trunk types. The response given to the TKT (trunk type) prompt will determine which prompts will be given. Table 9-1a shows the prompts that can be expected for each trunk type. (Use the proper system record form for the type of trunk being defined.) Data is entered as follows:

REQ (Request)—Indicates that the program has loaded. Three responses are possible:
NEW—To create a new trunk group.
CHG—To alter an existing Data Block.
OUT—To delete an existing Data Block.

NOTES:
1. *Before the OUT command is accepted, all trunks must be deleted from the group by using the **DTRK Program**.*
2. *If OUT is entered, only the Trunk Group Number (GRP) needs to be entered. No other entries are necessary.*

GRP (Trunk Group Number)—Identifies the trunk group number. Sixteen groups are available (00 ~ 15). If private lines are to be used, they all occupy one trunk group called PVL. The PVL group replaces group 15.
Enter: 00 ~ 15 (Trunk Group Number) or PVL.

TEN (Tenant Number)—Identifies the tenant to which the trunk group belongs.
Enter: 0 or 1 (Tenant Number).

TKT (Trunk Type)—Identifies the type of trunk to be used in the group.
Enter: COT—Local CO trunk.
FEX—Foreign Exchange line.
DID—Direct Inward Dialing trunk.
CSA—CCSA line.
TIE—TIE trunk.
WAT—WATS line.

NOTES:
1. *It is not possible to enter a change (CHG) for Trunk Type (TKT). The Data Block must be deleted (OUT) and a new (NEW) Data Block must be entered.*
2. *The "DNIS" prompt will appear only when one of these trunk types (DID, CCSA, TIE) is entered.*

DNIS (DNIS Allowed?)—Defines if Dialed Number Indentification Service (DNIS) is allowed. This prompt will appear only when TKT is DID, CCSA, or TIE.
Enter: Y or N.

NOTE:
*DNIS is not intended to tie two PBXs together. Each PBX DN needs to be in a table, limiting it to 125 stations. However, the most important thing to remember is that a station user is **NOT** able to dial a trunk.*

DIG (DNIS Digits Received)—Defines the number of digits that will be received from an incoming dialed number on a DID, CCSA, or TIE trunk.
Enter: 1 ~ 5 digits.

NOTE:
If DNIS is currently programmed at N, and then at a later date changed to Y, the default value of DIG will become zero (0).

IAO (Incoming/Outgoing)—Determines whether the trunks will give 2-way or 1-way service.
Enter: ICT—Incoming only.
OGT—Outgoing only.
IAO—2-way.

STP (Advance Step)—Identifies the next trunk group in a route advance sequence. If a station user attempts to access a trunk in this group and all trunks are busy, then a trunk from the group identified in response to STP will be selected.
Enter: 00 ~ 15 (Next Trunk Group Number) or NONE.

COD (Access Code)—Defines the access code for the trunk group. Access codes can consist of 1, 2, or 3 digits as long as there is no conflict in the system. For example: 3 cannot be used if 30 or 300 is used as an access code or DN.
Enter: 1 ~ 3 digits.

COS (Class of Service)—Defines the feature access level of each inward dialing trunk (TIE, DID, or CCSA trunk). Use one of the 16 Classes of Service that has been defined via the **DCOS Program.**
Enter: 0 ~ 15 (COS number).

TRN (Transmission)—Defines the transmission arrangement that is required for the trunks in the group. The entry made here will determine the type of PAD switching that is performed on trunk connections (see Table 9-1b for loss plan).
Enter: NTC—Non-transmission compensated (2-wire circuit with less than 2dB loss).
TRC—Transmission compensated (4-wire circuit or 2-wire circuit with greater than 2dB loss).
VNL—Via net loss (4-wire VNL circuit).

STR (Start Arrangement)—Defines the start arrangement that is to be used by the trunks in the group.
Enter: IMM—Immediate start.
WNK—Wink start.
DDL—Delay dial.

WTA (Warning Tone Allowed?)—Defines an interruption-protected trunk group (e.g., a data line). An "N" response will prevent warning tones from being applied to this trunk group.
Enter: Y or N.

OAB (Outgoing Absorb Digits)—Identifies the digits which are to be ignored by the Toll Restriction program. These digits will be outpulsed, but will not be counted as the first digit.
Enter: Digits to be absorbed (for example: 1; maximum: 2 digits) or NONE.

IAB (Incoming Absorb Digits)—Defines the number of digits that are to be stripped from an incoming dialed number from a TIE, CCSA, or DID trunk.
Enter: Number of digits (maximum: 2) or NONE.

TRN1 (Translated Number 1)—Defines the absorbed digit (IAB) that is to be translated from one digit to another digit or digits (see example following TRN2).
Enter: X # Y, X # YY, or NONE.
(X = The digit that is to be translated. When two digits are absorbed, only the second digit will be translated.
Y or YY = The translated digit (Y) or digits (YY) that will be inserted.)

TRN2 (Translated Number 2)—Defines the digit that is to be translated from one digit to another digit or digits. (The same as TRN1; used when over 100 digits are to be translated—see examples.)
Enter: X # Y, X # YY, or NONE.

EXAMPLE A: IAB = 1.
TRN1 = 9#2.
TRN2 = 8#3.

3 Digits Received from CO:	To Ring 3-digit DN:
900 ~ 999	200 ~ 299
800 ~ 819	300 ~ 319

EXAMPLE B: IAB = 2.
TRN1 = 9#2.
TRN2 = 8#3.

4 Digits Received from CO:	To Ring 3-digit DN:
5900 ~ 5999	200 ~ 299
5800 ~ 5819	300 ~ 319

EXAMPLE C: IAB = 2.
TRN1 = 9#21.
TRN2 = 8#32.

3 Digits Received from CO:	To Ring 3-digit DN:
590 ~ 599	210 ~ 219
580 ~ 589	320 ~ 329

EXAMPLE D: IAB = 2.
TRN1 = 9#21.
TRN2 = 8#32.

4 Digits Received from CO:	To Ring 4-digit DN:
5900 ~ 5999	2100 ~ 2199
5800 ~ 5899	3200 ~ 3299

TOL (Toll Restriction Class)—Assigns one of the 10 classes of Toll Restriction to each outgoing TIE, CCSA, and DID trunk. Classes 0 ~ 7 are defined in the Toll Restriction Data Block (**DTOL Program**). Class 8 is simple Toll Restriction and restricts when either 0 or 1 is dialed as the first digit. NONE defines the trunk as unrestricted.
Enter: 0 ~ 8 or NONE.

FLT (Flash-hook Timing)—Defines the length of time of a flash-hook (line open) while connected to a CO trunk. On an electronic/digital telephone, the flash-hook will occur whenever the FLH key is pressed.
Enter: 1 = 500 milliseconds.
2 = 1 second.

CTX (Centrex)—A "Y" response indicates that the trunk group is operating on Centrex lines. An "N" response indicates that the trunk group is not operating on Centrex lines. The entry "Y" made here defeats Toll Restriction.
Enter: Y or N.

NOTE:
*When DNIS = Y, the following prompts do **NOT** apply, eventhough they appear on the screen: COS, IAB, TRN1, TRN2, and TOL.*

2. Print Trunk Group Data Block (Table 9-2)

2.01 To use the Print Trunk Group Data Block (**PTGP Program**):

- Perform the Authorization Procedure (Level 1 or 2).
  Enter: PTGP (in response to the OK prompt).
- When an REQ prompt is received after the program is loaded:
  Enter one of the following commands:

ALL—All Trunk Group Data Blocks will be output.

GRPXX—Trunk Group XX Data Block will be output.

COT—All CO Trunk Group Data Blocks will be output.

FEX—All FX Trunk Group Data Blocks will be output.

WAT—All WATS Trunk Group Data Blocks will be output.

TIE—All TIE Trunk Group Data Blocks will be output.

DID—All DID Trunk Group Data Blocks will be output.

CSA—All CCSA Trunk Group Data Blocks will be output.

PVL—All Private Line Trunk Group Data Blocks will be output.

NOTE:
*The output format will be the same as the input format that is used in the **DTGP Program.***

- REQ will be prompted when the printout is complete.
  Enter: DEL DEL CR (to exit the program).

TABLE 9-1

Procedure — Trunk Group Data Block

Authorization Procedure must be completed. If an OK response is received, proceed as follows:

ITEM	PROMPT	USER ENTRY	NOTE
	OK	DTGP	
— DISK LOADING —			
	REQ	NEW, CHG, OUT	
Trunk Group Number	GRP	00 ~ 15 or PVL	1
Tenant Number	TEN	0 or 1	
Trunk Type	TKT	COT, FEX, DID, CSA, TIE, WAT	2
DNIS Allowed?	DNIS	Y or N	3
DNIS Digits Received	DIG	1 ~ 5 digits	4
Incoming/Outgoing	IAO	ICT, OGT, or IAO	
Advance Step	STP	XX or NONE	5
Access Code	COD	1 ~ 3 digits	
Class of Service	COS	0 ~ 15	6
Transmission	TRN	NTC, TRC, or VNL	
Start Arrangement	STR	IMM, WNK, or DDL	
Warning Tone Allowed?	WTA	Y or N	
Outgoing Absorb Digits	OAB	X, XX, or NONE	7
Incoming Absorb Digits	IAB	X, XX, or NONE	8
Translated Number 1	TRN1	X # Y, X # YY, or NONE	9
Translated Number 2	TRN2	X # Y, X # YY, or NONE	9
Toll Restriction Class	TOL	0 ~ 8 or NONE	10
Flash-hook Timing	FLT	1 or 2	11
Centrex	CTX	Y or N	12

(continued)

NOTES:

1. *A maximum of 16 Trunk Groups (normally 00 ~ 15) is possible. If private lines are to be equipped, the code PVL is used in place of 15.*
2. *TKT cannot be changed. The Data Block must be removed (OUT) and NEW data must be entered. The "DNIS" prompt will appear only when one of these trunk types (DID, CCSA, TIE) is entered.*
3. *This prompt will appear only when TKT is DID, CCSA, or TIE.*
4. *This prompt will appear only when DNIS is allowed.*
5. *The Trunk Group that is to be stepped to if this group is busy (00 ~ 15).*
6. *COS is meaningful only for TIE/CCSA/DID Trunks. Sixteen COS groups are provided and are defined in the Class of Service Data Block.*
7. *List the digits which are to be ignored for the purpose of Toll Restriction. These digits will be outpulsed, but not counted as the first digit.*
8. *Enter the number of digits which are to be stripped from an incoming dialed DN (TIE, DID, or CCSA Trunk).*
   Example: IAB = 1. Incoming DN = 8249. Recognized DN = 249.
9. *Enter the absorbed digit (IAB) to be translated.*
   X = the absorbed digit (IAB) to be translated. Y or YY = the translated digits to be inserted.
   Example: IAB = 1. TRN1 = 9#2. Incoming DN = 949. Recognized DN = 249.
   TRN2 = 8#3. Incoming DN = 849. Recognized DN = 349.
10. *Classes 0 ~ 7 are defined in the Toll Restriction Data Block (**DTOL Program**).*
    Class 8 = 0 and 1 restriction. NONE = no restriction.
11. *1 = 500 ms. 2 = 1 second.*
12. *Enter yes if the trunk group is operating on Centrex lines.*
13. CTRL X = *Ignore line entered.* DEL = *Stop printing and return to REQ.*
    CTRL H = *Backspace.* DEL DEL = *Exit program.*

TABLE 9-1a
TRUNK GROUP DATA BLOCK ENTRIES

TRUNK TYPES

	COT	FEX	WAT	PVL	DID	CSA	TIE
GRP	X	X	X	X	X	X	X
TEN	X	X	X	X	X	X	X
TKT	X	X	X	X	X	X	X
DNIS	O	O	O	O	X	X	X
DIG	O	O	O	O	X	X	X
IAO	X	X	X	X	X	X	X
STP	X	X	X	O	X	X	X
COD	X	X	X	O	X	X	X
COS	O	O	O	O	X	X	X
TRN	X	X	X	X	X	X	X
STR	X	X	X	X	X	X	X
WTA	X	X	X	X	X	X	X
OAB	X	X	O	O	X	O	O
IAB	O	O	O	O	X	X	X
TRN1	O	O	O	O	X	X	X
TRN2	O	O	O	O	X	X	X
TOL	O	O	O	O	O	X	X
FLT	X	X	X	X	O	O	O
CTX	X	X	X	X	O	O	O

Legend: X = Used 0 = Not Used

TABLE 9-1 (continued)
Error Codes

Program Name: Trunk Group Data Block (DTGP)	
Error Code	**Meaning**
ERTRG 01	The group still has a trunk assigned (REQ = OUT).
ERTRG 02	The entered group number has already been assigned (REQ = NEW).
ERTRG 03	One or more trunks are busy (REQ = CHG).
ERTRG 04	The entered group number does not exist (REQ = CHG).
ERTRG 05	The entered advance step group is the same as this group number.
ERTRG 08	#1 entered, but tenant service is not enabled in System Data Block.
ERTRG 09	#1 entered, but Attendant Console #1 does not exist.
ERTRG 10	The start arrangement conflicts with the trunk type.
ERTRG 13	The entered group number does not exist (REQ = OUT).
ERTRG 14	The Access Code conflicts with an existing number.
ERTRG 15	Input data was erased because the program was aborted during a NEW mode.

TABLE 9-1b
PERCEPTION$_e$ LOSS PLAN

THROUGH CONNECTION			TERMINAL BALANCE			THROUGH BALANCE
FROM \ TO			Station Lines/ Attendant Lines	NON-VNL: Non-transmission Compensated (2-wire facility <2dB loss and not impedance compensated)	NON-VNL: Transmission Compensated (2-wire facility >2dB loss or impedance compensated or 4-wire facility)	VNL: 4 wire
TERMINAL BALANCE		Station Lines/ Attendant Lines	5	1	1	3
	NON-VNL	Non-transmission Compensated (2-wire facility <2dB loss and not impedance compensated)	1	3	1	3
		Transmission Compensated (2-wire facility >2dB loss or impedance compensated or 4-wire facility)	1	1	1	1
THROUGH BALANCE	VNL	4 wire	3	3	1	1

NOTE:
The numbers in the boxes represent actual through connection loss in dB.

TABLE 9-2

Procedure — Print Trunk Group Data Block

Authorization Procedure must be completed. If an OK response is received, proceed as follows:

ITEM	PROMPT	USER ENTRY	NOTE
	OK	PTGP	
– DISK LOADING –			
	REQ		1
– EXECUTE –			
	REQ		1

NOTES:

1. *The following responses are possible:*
   - *ALL = Outputs all Trunk Group Data Blocks.*
   - *GRPXX = Outputs Trunk Group XX Data Blocks.*
   - *COT = Outputs all CO Trunk Group Data Blocks.*
   - *FEX = Outputs all FX Trunk Group Data Blocks.*
   - *WAT = Outputs all WATS Trunk Group Data Blocks.*
   - *TIE = Outputs all TIE Trunk Group Data Blocks.*
   - *DID = Outputs all DID Trunk Group Data Blocks.*
   - *CSA = Outputs all CCSA Trunk Group Data Blocks.*
   - *PVL = Outputs all PVL Trunk Group Data Blocks.*
2. CTRL X = *Ignore line entered.*
   CTRL H = *Backspace.*
   DEL = *Stop printing and return to REQ.*
   DEL DEL = *Exit program.*

Error Codes

Program Name: Print Trunk Group Data Block (PTGP)	
Error Code	**Meaning**
ERPTG 00	Invalid response.
ERPTG 01	The input trunk group number is out of range (REQ = GRPXX).

3. Trunk Data Block (Table 9-3)

3.01 The Trunk Data Block (**DTRK Program**) defines the parameters for each of the trunk circuits in the system. A separate Data Block must be completed for each trunk circuit in the system.

NOTE:
When using the NDTU PCB (Digital T-1 interface) Trunk Data Block programming remains the same. Each T-1 channel (24 per each NDTU PCB) equals a trunk circuit.

3.02 The trunk type (TKT) defined for the group (in the **DTPG Program**) will determine which entries must be made. Not all prompts are meaningful for all trunk types. Table 9-3a shows the prompts to which responses should be made. (Use the proper system record form for the type of trunk being defined.) Data is entered as follows:

REQ (Request)—Indicates that the program has loaded. Three responses are possible:
NEW—To create a new Data Block.
CHG—To alter an existing Data Block.
OUT—To delete an existing Data Block.

NOTE:
If OUT is entered, then only the port (POR) needs to be specified. No other data entries are necessary.

POR (Port Number)—Identifies the hardware location of the trunk circuit that is to be defined in a PERCEPTION$_e$ or PERCEPTION$_{ex}$ system. The port number has two parts:

1) PERCEPTION$_e$: T00 ~ T15 (trunk PCB location).
PERCEPTION$_{ex}$: T00 ~ T15; T16 ~ T31 for the assignment of additional trunk ports, exceeding T15. When T16 ~ T31 are used, an entry must also be made in response to the UPN prompt. While T00 ~ T15 are fixed trunk slots, T16 ~ T31 are flexible and may be assigned to any universal port slot (00 ~ 31). A maximum of 16 universal port slots can be used for trunks.

2) 1 ~ 4 (circuit number on the trunk PCB).
For example: The port number of the third circuit on the PCB in position T02 is T023.

Enter: PERCEPTION$_e$: TNNX (port number of trunk).
PERCEPTION$_{ex}$: See UPN prompt.

NOTE:
NN = Trunk PCB number; X = Circuit number.

UPN (Universal Port Number)—Identifies the hardware location of the trunk circuit that is to be defined in a PERCEPTION$_{ex}$ system which has trunks assigned above T15. The universal port number's trunk PCB location is T00 ~ T31.
Enter: NN (NN = 00 ~ 31).

NOTE:
*When reprogramming universal port assignments from trunk to station ports (and vice versa), **all** ports on the existing PCB must be deleted prior to entering the new port assignment.*

GMN (Group/Member Number)—The group/member number identifies the trunk position in the system. The GMN is composed of two parts:

1) Group (GG) Number (defined in the **DTGP Program**): Identifies the trunk as being a member of that group (00 ~ 15).

2) Member (MM) Number: A unique number is given to each trunk in a group. The numerical order of the number will determine the order in which the trunks will be selected upon dial access. The highest member number will be selected first. (PERCEPTION$_e$: 00 ~ 63; PERCEPTION$_{ex}$: 00 ~ 63).
Enter: GGMM (Group and Member Number).

NOTES:
1. *GMN cannot be altered by CHG procedure. The GMN prompt will be followed by the existing GMN.*
2. *To change the GMN, the Data Block must be deleted (OUT) and a new Data Block (NEW) must be entered.*

TKID (Trunk Name)—Indicates the alphanumeric name assigned to a particular trunk for CO, FX, and WATS **only**. When a call is coming in via a named trunk, the receiver can see in the LCD display who the call is intended for. This feature

better enables the receiver to handle the call. Trunk Name also appears on outgoing calls.

Enter: Trunk name (A ~ Z, 0 ~ 9, [space]), NONE.

NOTE:
The maximum number of alphanumeric characters allowed for a trunk name is 16.

TDN (Trunk Directory Number)—For private lines only (Trunk Group 15—PVL). TDN defines a directory number that will be used to assign private lines to a station.

Enter: 1- ~ 3-digit directory number.

RAD (Remote Access Day)—A "Y" response enables the Remote Access to Services trunk for both day and night service. An "N" response enables Remote Access only during night service.

Enter: Y or N.

NIT (Night Number)—Assigns the night station for the trunk. Incoming calls on the trunk will ring the night station whenever the system is in night service. If NONE is entered, then the call will activate the UNA signal. This parameter can also be entered and changed by the attendant console.

Enter: Night station number (maximum: 4 digits) or NONE (UNA).

NOTE:
*To assign a ground-start trunk to Remote Access to Services, enter the same DN that was used for the REM entry in the System Data Block (**DSYS Program**) for NIT (Night Number).*

DAY (Day Number)—Assigns the day station(s) for the trunk. Incoming calls on the trunk will ring the day station(s) when the system is not in night service. Up to eight stations can be entered as day stations, to have either immediate or delayed ringing. Delayed ringing is achieved by entering a * immediately after each station number that is to ring after the immediate-ring station(s). This will delay the ringing of these stations for the period set by the Delay Ring Timer in the **DSYS Program** (0 ~ 99 seconds). After this time period elapses, the delayed station(s) will ring. All day stations will receive an immediate visual LED indication with each incoming call. A Day Number can also be assigned as the attendant console, but the Attendant Console cannot be included as part of delayed ringing. ACD pilot numbers cannot be used as part of delayed ringing either. If NONE is entered, the following occurs: If TEN = N in DSYS, calls will load share between the two consoles in the DAY mode, and will activate the UNA device in the NIGHT mode. If TEN = Y in DSYS, trunks assigned to TEN 0 will ring ATT0 in the DAY mode and UNA 0 in the NIGHT mode; trunks assigned to TEN1 will ring ATT1 in the DAY mode and UNA1 in the NIGHT mode. The DAY parameter can also be entered and changed by the attendant console.

Enter: Day station number (up to 8 numbers may be entered; maximum: 4 digits each). After each station number that is to have delayed ringing, enter a *. Enter a space after each DN and/or DN * assignment. ATT0 or ATT1 (attendant console 0 or 1), or NONE (UNA in NITE service—ATT in Day Service).

TRCL (Destination for Transfer Recall Termination)—Assigns the destination to which a transfer recall terminates. When a transfer recall is not answered at the originally transferring station, the call can be routed to either an attendant, the system UNA device, or an alternative DN.

Enter: ATT0, ATT1—Attendant Console 0 or 1.
UNA—System UNA device.
DN—Alternative station (either a station user DN or a master hunt DN).
NONE—No termination destination (the call will continue to ring at the originally-transferring station).

SIG (Signaling)—Identifies the type of signaling to be used on the trunk circuit:

Enter: GRD—Ground Start.
LOP—Loop Start.
EAM—E & M.
LDR—Loop Dial Repeating (for DID trunks).

DIS (Disconnect Supervision)—Informs the system whether or not supervision can be expected when the distant end disconnects. Disconnect Supervision controls trunk-to-trunk connections for ground start trunks.

Enter: Y or N.

CTL (Control of Disconnect)—Defines the release control of TIE, DID, or CCSA connection.

Enter: OPC (Originating Party Control)—The circuit will not be released until the trunk that originated the call disconnects.
FPR (First Party Release)—The trunk at either end of the connection can release.

DIN (Incoming Dialing)—Informs the system of what type of dialing to expect on an incoming call. (This prompt is for TIE, CCSA, and DID trunks only.)

Enter: DIP—Dial Pulse.
TON—DTMF.

DOT (Outgoing Dialing)—Informs the system of what type of dialing to expect on an outgoing call.

Enter: P10 = Rotary Dial 10 PPS.
P20 = Rotary Dial 20 PPS.
TON = DTMF.

OTR (Private Line Outgoing Call Restriction)—This prompt will only appear if the trunk is a member of the private line trunk group (Group 15). The OTR prompt is used to exclude selected stations from making outgoing calls over the private line. Consequently, these lines can be used only for answering incoming calls. If a private line appears on more than one station, then each station can be individually restricted from using the line for outgoing calls by entering the port number of each DN that is to be restricted (LNNX). Following the OTR prompt, the system will prompt "D" and any entries made will be deleted. To add entries, press the carriage return (CR) key. An "A" prompt will appear and any entries made will be added.

Enter: LNNX LNNX (in response to the D prompt)—To delete a station port.
LNNX LNNX (in response to the A prompt)—To add a station port.

TABLE 9-3

Procedure — Trunk Data Block

Authorization Procedure must be completed. If OK response is received, proceed as follows:

ITEM	PROMPT	USER ENTRY	NOTE
	OK	DTRK	
– DISK LOADING –			
	REQ	NEW, CHG, OUT	
Port Number	POR	TNNX	1
Universal Port Number	UPN	00 ~ 31	2
Group/Member Number	GMN	GGMM	3 & 4
Trunk Name	TKID	A ~ Z, 0 ~ 9, [space], NONE	5
Trunk DN	TDN	1 ~ 3 digits	6
Remote Access for Day/Night	RAD	Y or N	
Night Number	NIT	1 ~ 4 digits or NONE (UNA)	7
Day Number	DAY	1 ~ 4 digits, ATT0, ATT1, or NONE	8 & 9
Destination for Transfer Recall Termination	TRCL	ATT0, ATT1, UNA, 1 ~ 4 DIGITS, or NONE	10
Signaling	SIG	GRD, LOP, EAM, or LDR	
Disconnect Supervision	DIS	Y or N	
Control of Disconnect	CTL	OPC or FPR	11
Incoming Dialing	DIN	DIP or TON	12
Outgoing Dialing	DOT	P10, P20, or TON	13
Private Line Outgoing Call Restriction	OTR	LNNX, LNNX . . .	14
Answer Supervision	ANS	Y or N	15

(continued)

TABLE 9-3 (continued)

NOTES:

1. *NN = trunk PCB number, X = circuit number 1 ~ 4 .*
2. *Used only for PERCEPTION$_{ex}$ systems, for trunks assigned above T15.*
3. *GG = trunk group number (00 ~ 15).*
   MM = unique trunk number within group (00 ~ 63).
   15MM = Private Line
   or
   PVLMM = Private Line
4. *GMN cannot be changed. The Data Block must be removed (OUT) and NEW data must be entered.*
5. *The characters available for trunk names are A ~ Z, 0 ~ 9, [space]. A maximum of 16 alphanumeric charaters are allowed for each name. For CO, FX, WATS trunks only.*
6. *This prompt only appears for Trunk Group 15 (PVL). TDN is the DN assigned to a private trunk line (1 ~ 3 digits).*
7. *Enter Trunk's Night Directory Number (1 ~ 4 digits). This number can also be changed by the attendant when making night assignments (no meaning for TIE/CCSA/DID/PVL trunks). This number must match the REM entry in the* ***DSYS Program*** *in order to activate Remote Access to Services.*
8. *Enter Trunk's Day Directory Number (1 ~ 4 digits). Up to 8 numbers may be entered, for either immediate or delayed ringing. Indicate delayed ringing for a specific station by entering * immediately after the station number. Day number(s) can also be changed by the attendant.*
   The Attendant Console(s) CANNOT be included as part of delayed ringing. i.e., If ATTO is entered at the DAY prompt, no other entries are allowed. ACD pilot numbers also CANNOT be entered as part of delay ringing. i.e., If an ACD pilot number is entered at the DAY prompt, no other entries are allowed.
9. *If TEN = Y in the DSYS Data Block and trunks are assigned to TEN = 0 in DTGP, calls will ring only at Attendant 0; if the trunks are assigned to TEN = 1 in DTGP, calls will ring only at Attendant 1. If TEN = N in the DSYS Data Block, only ATT0 can be entered and calls will load share between ATT0 and ATT1 in a two-console operation.*
   NONE = Calls will activate the UNA device.
10. *This entry assigns the destination of a Transfer Recall on this trunk.*
11. *OPC = Originating Party Control. FPR = First Party Release.*
12. *This prompt only appears for TIE/CCSA/DID trunks.*
13. *Outgoing dialing method: P10 = rotary dial 10 PPS. P20 = rotary dial 20 PPS.*
    TON = DTMF.
14. *The OTR prompt appears only when a trunk is assigned to Trunk Group 15 (PVL). Following the OTR prompt, the system will prompt D and any entries made will be deleted. To add a station port, press the CR key. The system will then prompt A and any entries made will be added. Each private line can have up to 96 line appearances, each of which can be individually restricted by using OTR. When programming these station ports, up to 10 ports may be entered in a single line.*
15. *Is Answer Supervision required to the calling party? Y = yes; N = no.*
16. CTRL X = *Ignore line entered.*
    CTRL H = *Backspace.*
    DEL = *Stop printing and return to REQ.*
    DEL DEL = *Exit Program.*

TABLE 9-3a
TRUNK DATA BLOCK ENTRIES

TRUNK TYPES

	COT	FEX	WAT	PVL	DID	CSA	TIE
POR	X	X	X	X	X	X	X
UPN	X	X	X	X	X	X	X
GMN	X	X	X	X	X	X	X
TKID	X	X	X	O	O	O	O
TDN	O	O	O	X	O	O	O
RAD	X	X	X	O	O	O	O
NIT	X	X	X	O	O	O	O
DAY	X	X	X	O	O	O	O
TRCL	X	X	X	X	X	X	O
SIG	X	X	X	X	X	X	X
DIS	X	X	X	X	X	X	X
CTL	O	O	O	O	X	X	X
DIN	O	O	O	O	X	X	X
DOT	X	X	X	X	X	X	X
OTR	O	O	O	X	O	O	O
ANS	O	O	O	O	X	X	X

TABLE 9-3 (continued)

Error Codes

Program Name: Trunk Group Data Block (DTRK)	
Error Code	**Meaning**
ERTRK 00	A PCB is not equipped in that location.
ERTRK 01	The PCB is not a trunk type.
ERTRK 02	The port is busy (REQ = OUT).
ERTRK 03	The port has already been assigned to a station, DSS console, DDIU, or NDKU (REQ = NEW).
ERTRK 04	This Trunk Group Data Block does not exist.
ERTRK 05	Member number has already been assigned.
ERTRK 06	The entry conflicts with an existing DN or TDN.
ERTRK 07	The night number that was entered does not yet exist.
ERTRK 09	The type of signaling entered conflicts with the trunk type.
ERTRK 11	The input data was erased because the program was aborted during a NEW mode.
ERTRK 12	The port is not assigned.
ERTRK 13	Another type of data has already been assigned to the input port.
ERTRK 15	The entered DN has already been assigned to a station (electronic/digital or standard telephone).
ERTRK 16	The entered DN has already been assigned to another trunk.
ERTRK 17	The input DN is a DIU DN.
ERTRK 19	The DN Table is full.
ERTRK 20	The Transfer Recall Termination DN does not exist.
ERTRK 21	The input port has already been entered.
ERTRK 22	The maximum number of ports (96) has already been registered for this PVL.
ERTRK 23	The entered port does not exist.
ERTRK 24	The input port is not assigned as a universal port.
ERTRK 25	The input universal port number has already been assigned.
ERTRK 27	The input data is not a DN.
ERTRK 28	The input data has already been entered.
ERTRK 29	The maximum number of DNs (8) has already been entered for this port.
ERTRK 30	The input data is ATT0, ATT1, UNA, or NONE.
ERTRK 31	(REQ = OUT) The input port has already been assigned as a voice port (DSYS: ICP2).
ERTRK 32	The Trunk ID is too long (maximum = 16).
ERTRK 33	The Agent ID number cannot be assigned.

ANS (Answer Supervision)—Determines whether or not answer supervision will be provided to the distant trunk on incoming calls. (This prompt is for TIE, CCSA, and DID trunks only.) If "N" is entered, then the system will not return answer supervision.
Enter: Y or N.

4. Print Trunk Data Block (Table 9-4)

4.01 To use the Print Trunk Data Block (**PTRK Program**):

- Perform the Authorization Procedure (Level 1 or 2).
  Enter: PTRK (in response to OK prompt).
- When the REQ prompt is received after the program is loaded:
  Enter one of the following commands:

PORALL—All Trunk Data Blocks will be output in order of Port Number (lowest first).

PORNXX—Trunk Data Block of Port NNX will be output.

PORVAC—All unassigned trunk ports will be listed.

TGPNN—All Trunk Data Blocks assigned to Trunk Group NN will be output.

COT—All CO Trunk Data Blocks will be output.

FEX—All FX Trunk Data Blocks will be output.

TIE—All TIE Trunk Data Blocks will be output.

DID—All DID Trunk Data Blocks will be output.

WAT—All WATS Trunk Data Blocks will be output.

CSA—All CCSA Trunk Data Blocks will be output.

PVL—All Private Line Trunk Data Blocks will be output.

NIT—Night Station assignments for all CO/FX/WATS trunks will be output.

UPN—Universal Port Number assignments for trunks above T15 will be output.

NOTES:
1. *The output format will be the same as that used for data input in the **DTRK Program**.*
2. *OTR will print for each trunk type, although it only has a meaning for PVL.*

TABLE 9-4

Procedure — Print Trunk Data Block

Authorization Procedure must be completed. If OK response is received, proceed as follows:

ITEM	PROMPT	USER ENTRY	NOTE
	OK	PTRK	
– DISK LOADING –			
	REQ		1
– EXECUTE –			
	REQ		1

NOTES:

1. *The following responses are possible:*
   PORALL = Outputs Trunk Data Blocks in numerical order of ports (lowest first).
   PORNNX = Outputs Trunk Data Block of Port NNX.
   PORVAC = Outputs all unassigned trunk ports.
   TGPNN = Outputs all Trunk Data Blocks assigned to trunk group NN.
   COT = Outputs all CO Trunk Data Blocks.
   FEX = Outputs all FX Trunk Data Blocks.
   WAT = Outputs all WATS Trunk Data Blocks.
   TIE = Outputs all TIE Trunk Data Blocks.
   DID = Outputs all DID Trunk Data Blocks.
   CSA = Outputs all CCSA Trunk Data Blocks.
   PVL = Outputs all PVL Trunk Data Blocks.
   NIT = Outputs the Night Station Assignments for all CO, FX, and WATS trunks.
   UPN = Outputs the Universal Port Number Assignments for trunks above T15.
2. CTRL X = *Ignore line entered.*
   CTRL H = *Backspace.*
   DEL = *Stop printing and return to REQ.*
   DEL DEL = *Exit program.*

Error Codes

Program Name: Print Trunk Data Block (PTRK)	
Error Code	**Meaning**
ERPTR 00	Invalid response.
ERPTR 01	The PCB number or circuit number is out of range (REQ = PORNNX).
ERPTR 02	The input trunk group is out of range (REQ = TGPNN).
ERPTR 03	The input port is not assigned to a trunk (REQ = PORVAC).

5. Station Message Detail Recording Data Block (Table 9-5)

5.01 The Station Message Detail Recording Data Block (**DMDR Program**) defines the account code length and type of calls to be recorded for each trunk group for the SMDR feature. Data is entered as follows:

REQ (Request)—Indicates that the program has loaded. Three responses are possible:
NEW—To create a new Data Block.
CHG—To alter an existing Data Block.
OUT—To delete an existing Data Block.

TPN (Trunk Port Number)—Allows Trunk Port Numbers to be printed in the SMDR report.
Enter: Y to allow; N to deny.

ACL (Account Code Length)—Defines the length of the account code that is to be used or indicates that no account code is to be used.
Enter: Number of digits to be used (1 ~ 12) or NONE.

NOTE:
The account code length must be programmed in order for the account code features (Voluntary, Verified and Forced) to be enabled.

SPCC1 (Specialized Common Carrier #1)—Informs the system of the DN that is used to access an SPCC (MCI, Sprint, etc.). The system will recognize the DN and enter a unique condition code in the SMDR output.
Enter: SPCC Number NXXXXXX or
Equal Access Number 10XXX or NONE.

SPCC2 (Specialized Common Carrier #2)—Same as SPCC1, but for a second carrier.
Enter: SPCC Number NXXXXXX or
Equal Access Number 10XXX or NONE.

NOTE:
Data that is entered here will also appear at the SPCC1 and SPCC2 entries in the DTOL Data Block. SPCC1 and SPCC2 entries will not appear in the SMDR output.

TGP (Trunk Group)—Defines the type of calls to be recorded by SMDR for a given trunk group.
Enter: XX YYY.
(XX = Trunk group number.)
(YYY = INC—Incoming only
OGT—Outgoing only
IAO—Incoming and outgoing
TOL—Toll calls only
INT—Incoming—all; Outgoing—toll only
NONE—No records.)
Repeat for each trunk group that is used in the system.

NOTE:
*A call made by using an SPCC is **not** treated as a toll call for SMDR purposes.*

TABLE 9-5

Procedure — Station Message Detail Recording (SMDR) Data Block

Authorization Procedure must be completed. If an OK response is received, proceed as follows:

ITEM	PROMPT	USER ENTRY	NOTE
	OK	DMDR	
– DISK LOADING –			
	REQ	NEW, CHG, OUT	
Trunk Port Number	TPN	Y or N	1
Account Code Length	ACL	1 ~ 12 or NONE	
Special Common Carrier #1 DN	SPCC1	NXXXXXX or 10XXX or NONE	2
Special Common Carrier #2 DN	SPCC2	NXXXXXX or 10XXX or NONE	2
Trunk Group	TGP	XX YYY	3
	TGP		4

NOTES:

1. *Y = Trunk Port Number will be printed in the SMDR report.*
   N = Trunk Port Number will not be printed.
2. *SPCC 1 & 2 entries are the DN of any Specialized Common Carrier (SPCC) used (MCI, Sprint, etc.) or Equal Access Number (10XXX). Data entered here will also appear in the PAR table in Toll Restriction (DTOL). (Data that is entered here will not appear in the SMDR output.)*
3. *Enter the trunk group number (XX) and the type of calls (YYY) to be recorded on this Trunk Group:*
   INC = Incoming only.
   OGT = Outgoing.
   IAO = Incoming and outgoing.
   TOL = Toll only.
   INT = Incoming — All.
   Outgoing — Toll only.
   NONE = No records.
4. *TGP continues to be prompted until* DEL *is entered.*
5. CTRL X = *Ignore line entered.*
   CTRL H = *Backspace.*
   DEL = *Stop printing and return to REQ.*
   DEL DEL = *Exit program.*

Error Codes

Program Name: SMDR Data Block (DMDR)	
Error Code	**Meaning**
ERMDR 00	SMDR customer data already exists (REQ = NEW).
ERMDR 01	SMDR customer data does not exist (REQ = CHG, OUT).
ERMDR 02	The account code length cannot be changed if verifiable account codes are programmed.

6. Print Station Message Detail Recording Data Block (Table 9-6)

6.01 To use the Print SMDR Data Block (**PMDR Program**):

- Perform the Authorization Procedure (Level 1, 2, or 3):
  Enter: PMDR (in response to the OK prompt).
- When an REQ response is received after the program is loaded:
  Enter: PRT.
- The SMDR Data Block will be printed out in the following format:

  REQ PRT
  ACL XX (01 12)
  SPCC1 NXXXXXX or 10XXX
  SPCC2 NXXXXXX or 10XXX
  TGP XX XXX
  TGP XX XXX
  etc.
- The REQ prompt will be given when the printout is complete.
  Enter: DEL DEL CR (to exit the program).

7. Dialed Number Identification Service Data Block (Table 9-7)

7.01 The Dialed Number Identification Service (DNIS) Data Block (**DDNI Program**) is used to program DNIS numbers, destinations, and alpha-numeric displays. The system refers to this data block for routing and other handling instructions for

TABLE 9-6

Procedure — Print Station Message Detail Recording (SMDR)
Authorization Procedure must be completed. If an OK response is received, proceed as follows:

ITEM	PROMPT	USER ENTRY	NOTE
	OK	PMDR	
– DISK LOADING –			
	REQ		1
– EXECUTE –			
	REQ		1

NOTES:
1. *The only response possible is: PRT = Outputs SMDR Data Block.*
2. CTRL X = *Ignore line entered.*
   CTRL H = *Backspace.*
   DEL = *Stop printing and return to REQ.*
   DEL DEL = *Exit program.*

calls received via a port assigned to a DNIS trunk group.

REQ (Request)—Indicates that the program has loaded. Three responses are possible:
NEW—To create a new Data Block.
CHG—To alter an existing Data Block.
OUT—To delete an existing Data Block.

TAB (DNIS Table Number)—Identifies the DNIS Table. The system can support a maximum of 125 DNIS tables.
Enter: 1 ~ 125.

NUM (Number of Digits Received)—Identifies the number of digits sent by the CO.
Enter: 1 ~ 5.

DIG (Actual Digits Received)—Identifies the actual DTMF/DP digits received from CO.
Enter: XXXXX (1 ~ 5 digits).

DN (Destination Directory Number)—Routing destination for DNIS trunk. This can be an internal directory number, an ACD Group pilot number, a Master Distributed Hunting Group pilot number, a voice mail port, the attendant console (UNA in Night Service), or UNA in either Day or Night Service.
Enter: XXXX (1 ~ 4 digits) or NONE (UNA).

NOTES:
1. *When TEN = N in the **DSYS Program**, programming ATT0 or ATT1 with two consoles causes a load share condition.*

TABLE 9-7

Procedure — Dialed Number Identification Service Data Block
Authorization Procedure must be completed. If an OK response is received, proceed as follows:

ITEM	PROMPT	USER ENTRY	NOTE
	OK	DDNI	
— DISK LOADING —			
	REQ	NEW, CHG, OUT	
DNIS Table Number	TAB	1 ~ 125	1
Number of Digits Received	NUM	1 ~ 5	2
Actual Digits Received	DIG	XXXXX	3
Destination Directory Number	DN	1 ~ 4 digits	4
Alphanumeric Display	DIS	16 characters	5

NOTES:
1. *A maximum of 125 DNIS tables is possible.*
2. *Number of digits sent by CO.*
3. *Actual DTMF/DP digits received from CO.*
4. *Routing destination for DNIS trunk. This can be an internal directory number, an ACD Group pilot number, a Master Distributed Hunting Group pilot number, a voice mail port, the attendant console (UNA in Night Service), or UNA in either Day or Night service.*
5. *Alphanumeric characters to be displayed. If different digits (DIG) were received for different calls, and the calls were routed to the same Destination Directory Number (DN), a different message can be displayed for each call. (A ~ Z, 0 ~ 9 allowed and SPACE/BLANK.)*
6. CTRL X *= Ignore line entered*
   CTRL H *= Backspace.*
   DEL *= Stop printing and return to REQ.*
   DEL DEL *= Exit program.*

TABLE 9-7 (continued)
Error Codes

Program Name: Dialed Number Identification Service Data Block (DDNI)	
Error Code	**Meaning**
ERDNI 00	The data is already assigned (REQ=NEW).
ERDNI 01	The number of "DIG" is different from "NUM."
ERDNI 02	Input DIG data has already been assigned.
ERDNI 03	Input DN or table is not assigned.
ERDNI 04	The input data was erased because the program was aborted during a NEW data entry.
ERDNI 05	There is an inappropriate character.
ERDNI 06	Input DN cannot be assigned for the destination DN.

2. *When TEN = Y, the programming of TEN = 0 or 1 in the **DTGP Program** controls which console calls route to. Tenant service does not load share.*

DIS (Alphanumeric Display)—Defines the alphanumeric characters to be displayed.
Enter: Maximum of 16 characters.
or
None (LCD display will show trunk #.)

8. Print Dialed Number Identification Service Data Block (Table 9-8)

8.01 To use the Print Dialed Number Identification Service Data Block (**PDNI Program**):

- Perform the Authorization Procedure (Level 1 or 2).
  Enter: PDNI (in response to the OK prompt).
- When the REQ prompt is received after the program is loaded:
  Enter one of the following commands:
  TBL ALL—All DNIS Data Blocks will be output.
  NUM X—All X (X = 1 ~ 5) Digit Data Blocks will be output.

TABLE 9-8
Procedure — Print Dialed Number Identification Service Data Block
Authorization Procedure must be completed. If an OK response is received, proceed as follows:

ITEM	PROMPT	USER ENTRY	NOTE
	OK	PDNI	
	— DISK LOADING —		
	REQ	TBL ALL, NUM X	1

NOTE:
The following responses are possible:
TBL ALL = All DNIS Data Blocks will be output.
NUM X = All X (X = 1 ~ 5) Digit Data Blocks will be output.

CHAPTER 10

TOLL RESTRICTION DATA

1. Toll Restriction Data Block (Tables 10-1 ~ 10-4)

1.01 The Toll Restriction Data Block (**DTOL Program**) defines the office codes and area codes to be allowed or denied by the Toll Restriction feature.

1.02 There are ten classes of Toll Restriction for defining a station's outward dialing privileges. Of these ten classes, eight may be customized (0 ~ 7), one restricts the dialing of numbers containing 0 or 1 as the first or second digit (8), and one applies no restrictions (NONE). The privileges of each station may be tailored to meet the customer's needs. Each class includes specific restrictions, one area code table, and one office code table. For convenience, the tables may be defined as either allow or deny tables.

1.03 When specific office codes are to be allowed or denied within a specified area code, 32 area/office code tables are available as exceptions to the area code tables. Data is entered as follows:

REQ (Request)—Indicates that the program has loaded. The only response possible is CHG.

TYPE (Sub-program Type)—There are three sub-programs within the **DTOL Program**. Select one of the following three possible responses:

PAR (Miscellaneous Parameters Table—Table 10-2)—Defines system operating parameters.

CLS (Restriction Class Table—Table 10-3)—Defines each class of Toll Restriction that may be customized (classes 0 ~ 7).

AOC (Area/Office Code Exception Table—Table 10-4)—Defines exceptions to the dialing allowances that are defined in the CLS area code table.

1.04 Each sub-program can be entered independently with one of the above responses to the TYPE prompt. After entering the desired sub-program, press the return key (CR). The prompts associated with each sub-program will then be issued sequentially.

TABLE 10-1

Procedure — Toll Restriction Data Block

Authorization Procedure must be completed. If an OK response is received, proceed as follows:

ITEM	PROMPT	USER ENTRY	NOTE
	OK	DTOL	
– DISK LOADING –			
	REQ	CHG	
	TYPE	PAR, CLS, AOC	1

NOTES:

1. *Possible entries are:*
   PAR = Miscellaneous Parameters Table (10-2).
   CLS = Restriction Class Table (10-3).
   AOC = Area/Office Code Exception Table (10-4).
2. CTRL X = *Ignore line entered.*
   CTRL H = *Backspace.*
   DEL = *Stop printing and return to REQ.*
   DEL DEL = *Exit program.*

When entering PAR in response to TYPE (Table 10-2), the next prompt will be:

HAC (Home Area Code)—Defines the area code in which the system is operating. Home area codes are also used to analyze a dialed number that does not contain an area code. Data that is entered here will appear in the Least Cost Routing Data Block (**DLC1 Program**, PAR table, HAC prompt).
Enter: Area Code N0/1X.

NOTE:
N = 2 ~ 9, 0/1 = 0 or 1, X = 0 ~ 9.

ICC (Interchangeable Codes)—A "Y" informs the system that interchangeable codes are used. Interchangeable codes are office codes that have 0 or 1 as the second digit (N0/1X format). Area codes will be identified as the three digits following the DDD prefix. Office codes will be identified as the first three digits when a DDD prefix is not dialed (see DDP prompt).
Enter: Y or N.

SPCC1 (Specialized Common Carrier #1)—Informs the system of the DN that is to be used to access an SPCC (MCI, Sprint, etc.) or equal access carrier (10XXX). The system will recognize the DN and ignore it for Toll Restriction purposes. Data that is entered here will also appear in the **DMDR Program** .
Enter: NXXXXXX (SPCC Number) or
10XXX (Equal Access Number) or
NONE.

SPCC2 (Specialized Common Carrier #2)—Same as SPCC1, but for a second carrier.
Enter: NXXXXXX (SPCC Number) or
10XXX (Equal Access Number) or
NONE.

DDP (Direct Distance Dialing Prefix)—Defines the Direct Distance Dialing (DDD) prefix in the Numbering Plan Area (NPA). If ICC is "Y," then N0/1X and NXX become interchangeable, enabling area codes and office codes to have 0 or 1 as their second digit. In this case, the DDP is used to differentiate between the two code types (see example). If the ICC response is "N," then calls will be made using the normal NPA formula of N0/1X and NNX.
Enter: 1, 2, or 3 digits or NONE.

Example: If ICC is "Y" and the DDP is programmed as 1, then the dialed number 209-1234 is recognized as a call within the home area code, while the dialed number 1-209-555-1234 is recognized as a call outside the home area code. If ICC is "N," this dialing plan is not used.

NOTE:
If a DDD prefix is used in the NPA, it must be entered here even if Toll Restriction is not used.

AUTH1 (Authorization Code #1)—Indicates the number of digits in the authorization code to be used with SPCC1. These digits and the SPCC1 DN that is entered will be ignored for Toll Restriction purposes.
Enter: 1 ~ 12 or NONE.

NOTE:
When using equal access (10XXX) for SPCC1 or SPCC2, do not enter an authorization code.

AUTH2 (Authorization Code #2)—Same as AUTH1, but for SPCC2.
Enter: 1 ~ 12 or NONE.

NOTE:
The SPCC and AUTH entries will not appear in the SMDR output.

TABLE 10-2

Miscellaneous Parameters Table

Load the **DTOL Utility Program**. When the TYPE prompt is received, proceed as follows:

ITEM	PROMPT	USER ENTRY	NOTE
	TYPE	PAR	
Home Area Code	HAC	NO/1X	1
Interchangeable Codes	ICC	Y or N	2
Specialized Common Carrier #1DN	SPCC1	NXXXXXX or 10XXX or NONE	3
Specialized Common Carrier #2DN	SPCC2	NXXXXXX or 10 XXX or NONE	3
DDD Prefix	DDP	XXX (1-, 2-, or 3-digits) or NONE	
Number of digits for SPCC1 Authorization Code	AUTH1	1 ~ 12 or NONE	4
Number of digits for SPCC2 Authorization Code	AUTH2	1 ~ 12 or NONE	4

NOTES:

1. *This entry is coupled with the HAC entry in the PAR table in Least Cost Routing (DLC1). Data that is entered here will also appear in that table.*
2. *Informs the system if interchangeable codes are used (office codes with N0/1X format).*
3. *SPCC 1 & 2 entries are the DN of any specialized common carrier (SPCC) used (MCI, Sprint, etc.) or Equal Access Number (10XXX). Data that is entered here will also appear in the SMDR (**DMDR Program**), but **will not** appear in the SMDR output.*
4. *This represents the number of digits in the authorization codes that are used with SPCC1 or SPCC2. Data that is entered here will **not** appear in the SMDR output.*
5. CTRL X = *Ignore line entered.*
   CTRL H = *Backspace.*
   DEL = *Stop printing and return to REQ.*
   DEL DEL = *Exit program.*

When entering CLS in response to TYPE (Table 10-3), the next prompt will be:

CNO (Class Number)—Indicates the number of the Toll Restriction class that is being defined. This number is used in response to the TOL prompt in the **DEKT**, **DSTT**, and **DTGP Programs** .

Enter: 0 ~ 7 (Class Number) or NOUT.

NOTE:
Enter OUT after the class number (N) in order to remove that class from service.

OPR (Operator and Operator-Assisted Calls)—A "Y" response allows a station in this toll restriction class to make operator and operator-assisted calls.

Enter: Y or N.

INT (International Calls)—A "Y" response allows a station in this toll restriction class to make international calls (011, 01).

Enter: Y or N.

LDA (Long Distance Directory Assistance)—A "Y" response allows a station in this toll restriction class to call long distance directory assistance. Any area code + 555 + XXXX will be allowed.

Enter: Y or N.

ACT (Area Code Table Type)—Defines the Area Code Table of this toll restriction class as either an Allow (A) or a Deny (D) type table.

- An "A" entry will allow all area codes except those deleted below, in response to the ACD prompt.
- A "D" entry will deny all area codes except those added below, in response to the ACD prompt.

Enter: A or D.

ACD (Area Code Table)—Indicates the area codes that are to be allowed or denied for this toll restriction class. Area codes may be either added or deleted, as described above.

Enter: N0/1X N0/1X etc. (in response to the A prompt) to add area codes.

. . . or . . .

N0/1X N0/1X etc. (in response to the D prompt) to delete area codes.

NOTES:
1. *N = 2 ~ 9, 0/1 = 0 or 1, X = 0 ~ 9.*
2. *If "D" is entered in response to the ACT prompt, then "D" must also be entered in response to ACD (and vice versa). For no entries, press the return key (CR).*
3. *Following the ACD prompt, an "A" prompt will appear and any entered codes will be added. To delete, press the return key (CR). A "D" will appear and any entered codes* will be deleted.

OCT (Office Code Table Type)—Defines the Office Code Table of this toll restriction class as either an Allow (A) or a Deny (D) type table. An "A" entry will allow all office codes within the Home Area Code (HAC), except those deleted in response to the OCD prompt. A "D" entry will deny all office codes within the Home Area Code, except those added in response to the OCD prompt.

Enter: A or D.

OCD (Office Code Table)—Indicates the office codes to be allowed or denied for this toll restriction class. Office codes may be added or deleted either as single 3-digit codes, or as a "range" covering up to ten sequential 3-digit office codes. Ranges are entered by using a 4-digit format; where the first two digits are common to all codes in this range; the third digit represents the starting point of the range (from) for the last digit of the office code; and the fourth digit represents the end point of the range (to) for the last digit of the office code. See ranges example.

Enter: NXXX NXX NXXX etc. (in response to the A prompt) to add office codes.

. . . or . . .

NXXX NXX NXXX etc. (in response to the D prompt) to delete office codes.

NOTES:
1. *N = 2 ~ 9, X = 0 ~ 9.*
2. *If "D" is entered in response to the OCT prompt, then "D" must also be entered in response to OCD (and vice versa). For no entries, press the return key (CR).*

3. *Codes cannot be added and deleted in the same pass through the table. A separate pass is required for each step.*
4. *Following the OCD prompt, an "A" prompt will appear and any entered codes will be added. To delete, press the return key (CR). A "D" will appear and any entered codes will be deleted.*

RANGES EXAMPLE:	
4-digit Format	**Office Codes**
2209	220 ~ 229
2316	231 ~ 236
2478	247 ~ 248

TABLE 10-3

Restriction Class Table

Load the **DTOL Utility Program**. When the TYPE prompt is received, proceed as follows:

ITEM	PROMPT	USER ENTRY	NOTE
	TYPE	CLS	
Class Number	CN0	0 ~ 7, NOUT	1 & 2
0 and 0 + Calls Allowed	OPR	Y or N (N)	
International Calls (011, 01) Allowed	INT	Y or N (N)	
L.D. Directory Assist. (NPA-555-1212) Allowed	LDA	Y or N (N)	
Area Code Table = Allow or Deny	ACT	A or D (A)	3
Area Code List = Add or Delete	ACD A D	900, 976, 700 N0/1X N0/1X etc., or N0/1X N0/1X etc.	4
Office Code Table = Allow or Deny	OCT	A or D (A)	5
Office Code List = Add or Delete	OCD A D	 NXX NXXX etc., or NXX NXXX etc.	6

Default values are noted in parentheses ( ).

NOTES:

1. *Enter the number of the Toll Restriction class (0 ~ 7) that is being defined. This number will be used in the DEKT, DSTT, and DTGP Data Blocks in response to the TOL prompt.*
2. *Enter OUT after the class number (NOUT) to remove that class from service.*
3. *Defines the Area Code Table of this class as an allow (A) or deny (D) type.*
   a. *If A is entered, the system **will allow** all area codes **except** those **deleted** in response to the ACD prompt (Note 4).*
   b. *If D is entered, the system **will deny** all area codes **except** those **added** in response to the ACD prompt (Note 4).*
4. *Used to add or to delete area codes from the table (Note 3).*
5. *Defines the Area Code Table of this class as an allow (A) or deny (D) type.*
   a. *If A is entered, the system **will allow** all office codes **except** those **deleted** in response to the OCD prompt (Note 6).*
   b. *If D is entered, the system **will deny** all office codes **except** those **added** in response to the OCD prompt (Note 6).*
6. *Used to add or delete office codes from the table (Note 5). Ranges are possible (7309 = 730 ~ 739).*
7. CTRL X = *Ignore line entered.*
   CTRL H = *Backspace.*
   DEL = *Stop printing and return to REQ.*
   DEL DEL = *Exit program.*

When entering AOC in response to TYPE (Table 10-4), the next prompt will be:

TN0 (Table Number)—Selects one of 32 area/office code exception (AOC) tables.
Enter: 0 ~ 31 (Table Number).

ARC (Area Code)—Identifies the area code to which this AOC table is assigned. A maximum of eight AOC tables can be assigned to any area code (the table numbers must be sequential).
Enter: Area Code N0/1X or NONE.

NOTE:
N = 2 ~ 9, 0/1 = 0 or 1, X = 0 ~ 9.

CN0 (Class Number)—Defines the toll restriction class numbers (0 ~ 7) that are subject to this exception table. Any number of classes, up to a maximum of eight, may be entered. If a toll restriction class table is allowed to dial an area code, then all office codes within that specified area code will be allowed, except those specifically added in response to the OFC prompt. If a toll restriction class table is not allowed to dial an area code, all office codes within that specified area code will not be allowed, except those specifically added in response to the OFC prompt.
Enter: Class Numbers 0 1 2 etc. or NONE.

OFC (Office Codes)—Indicates the office codes that are assigned to this area/office code exception table. Office codes may be added or deleted as single 3-digit codes or as a range covering up to ten sequential 3-digit office codes (the area/office code table is initially blank). Ranges are entered by using a 4-digit format; where the first two digits are common to all codes in this range; the third digit represents the starting point of the range (from) for the last digit of the office code; and the fourth digit represents the end point of the range (to) for the last digit of the office code. See RANGES example, CLS sub-program, OCD prompt.
Enter: NXXX NXX NXXX, etc. (in response to the A prompt) to add office codes.
...or...
NXXX NXX NXXX etc. (in response to the D prompt) to delete office codes.

NOTES:
1. *N = 2 ~ 9, X = 0 ~ 9.*
2. *Codes cannot be added and deleted in the same pass through the table. A separate pass is required for each step.*
3. *When entering office codes (OFC prompt), the system will prompt "A" and any entries made will be added. To delete office codes, press the return key (CR). A "D" will appear and any entries made will be deleted.*

TABLE 10-4

Area/Office Code Exception Table

Load the **DTOL Utility Program**. When the TYPE prompt is received, proceed as follows:

ITEM	PROMPT	USER ENTRY	NOTE
	TYPE	AOC	
Table Number	TNO	0 ~ 31	
Area Code	ARC	N0/1X or NONE	1
Class Number	CNO	0 1 etc. or NONE	
Office Codes	OFC A D	 NXXX NXX etc., or NXXX NXX etc.	2 & 3

NOTES:

1. *ARC identifies the area code to which this AOC is assigned. Format is N0/1X (N = 2 ~ 9, X = 0 ~ 9). A maximum of eight AOC tables can be assigned to any one area code, but the table numbers (TN0) must be sequential.*
2. *Following the OFC prompt, the system will prompt "**A**" and any office codes that are entered will be **added**. To delete an office code, press the RETURN key (CR). The system will then prompt "**D**" and any entries that are made will be **deleted**. Office codes entered will be an **exception** to the listed area code and class. Ranges are possible (7309 = 730 ~ 739).*
3. *Codes cannot be added and deleted in the same pass through the table. A separate pass is required for each step.*
4. CTRL X = *Ignore line entered.*
   CTRL H = *Backspace.*
   DEL = *Stop printing and return to REQ.*
   DEL DEL = *Exit program.*

Error Codes

Program Name: Toll Restriction Data Block (DTOL)	
Error Code	**Meaning**
ERTD 00	Area code (N0/1X) is beyond range.
ERTD 01	Numeric error (0 ~ 9).
ERTD 02	Authorization code is out of range (0 ~ 12).
ERTD 03	Class number is out of range (0 ~ 7).
ERTD 05	Number of entries exceeds the maximum (20).
ERTD 06	Table number is beyond range (0 ~ 31).
ERTD 07	Class numbers exceed the maximum (8).
ERTD 08	Office code does not exist.

2. Print Toll Restriction Data Block (Table 10-5)

2.01 To use the Print Toll Restriction Data Block (**PTOL Program**):

- Perform the Authorization Procedure (Level 1, 2, or 3).
  Enter: PTOL (in response to the OK prompt).
- When an REQ prompt is received after the program is loaded:
  Enter one of the following commands:

TRDALL—All Toll Restriction Data Blocks will be output.

PAR—Miscellaneous Parameters Table will be output.

CLSALL—All code tables (area, office and area/office) will be output for all eight classes.

CLSCNX—All code tables (area, office, and area/office) will be output for class X.

AOCALL—All AOC tables will be output.

AOCNOXX—The area code and all office codes for AOC table number XX will be output.

CODXXX—The AOC table which relates to area code XXX will be output.

TABLE 10-5

Procedure — Print Toll Restriction Data Block
Authorization Procedure must be completed. If an OK response is received, proceed as follows:

ITEM	PROMPT	USER ENTRY	NOTE
	OK	PTOL	
– DISK LOADING –			
	REQ		1
– EXECUTE –			
	REQ		1

NOTES:

1. *TRDALL = Outputs all Toll Restriction Data Blocks.*
   PAR = Outputs Miscellaneous Parameters Table.
   CLSALL = Outputs all Code Tables (Area, Office, and Area/Office) for all eight classes.
   CLSCNX = Outputs all Code Tables (Area, Office, and Area/Office) for class X.
   AOCALL = Outputs all Area/Office Code Tables.
   AOCNOXX = Outputs the Area Code and all Office Codes for Area/Office Code Table number XX.
   CODXXX = Outputs the Area/Office Code Table relating to Area Code XXX.
2. CTRL X = *Ignore line entered.*
   CTRL H = *Backspace.*
   DEL = *Stop printing and return to REQ.*
   DEL DEL = *Exit program.*

CHAPTER 11

DATA SWITCHING DATA

1. Digital Data Interface Unit Data Block (Table 11-1)

1.01 The DDIU Data Block (**DDIU Program**) defines all parameters of a given Digital Data Interface Unit including the PDIU-DI and PDIU-DS. A DDIU Data Block must be completed for each DDIU/PDIU in the system. Not all of the prompts listed below are used for both DDIUs (-MA or -MAT) or PDIUs (-DI or -DS). The response given to the TYP (DDIU/PDIU type) prompt will determine which prompts will be given. Refer to the notes found in Table 11-1 to determine which prompts can be expected for each DDIU/PDIU type. Data is entered as follows:

REQ (Request)—Indicates that the program has loaded. Three responses are possible:
NEW—To create a new Data Block.
CHG—To alter an existing Data Block.
OUT—To delete an existing Data Block.

POR (Port Number)—Identifies the hardware location of the DDIU/PDIU circuit that is to be defined. The port number has two parts:

1) NDCU, NDKU or NMDU PCB location:
PERCEPTION$_e$: L00 ~ L11; L15 ~ L26 (NN).
PERCEPTION$_{ex}$: L00 ~ L31.

2) Circuit number on that PCB: 1 ~ 8 (X) (See Note 3.) on the NDCU/NDKU type or 1 ~ 4 (X) on the NMDU type.
Enter: Port number of DDIU (LNNX).

NOTES:
1. *There is a limit of four data PCBs per cabinet.*
2. *Port L318 cannot be assigned.*
3. *The eighth circuit of the NDKU cannot be used for PDIU-DI or PDIU-DS assignment.*
4. *When programming a PDIU-DI or PDIU-DS, these data units are programmed onto the ports adjacent to the port the NDKU PCB is programmed on.*
For example: If the NDKU is in slot L06, the PDIUs are programmed on to L07. If the NDKU is in slot L11, the PDIUs are programmed on to L12, etc.

PDIU (DIU Style)—Tells the system if a new **D.04**-style digital data unit (PDIU-DI or PDIU-DS) is being assigned to this port. Y = PDIU (**D.04** Software), and N = DDIU.
Enter: Y or N.

ATC (AT Commands)—Tells the system if you need to activate the "Echo Back" feature of the AT command set, when the new style data interface units (PDIUs) are connected. When connected to a modem, for modem pooling, Echo is off (N). Y = Echo on, and N = Echo off.
Enter: Y or N.

TYP (Type)—Identifies the type of hardware that is to be connected to this port.
Enter: DIU1 (DDIU-MA/PDIU-DS) or DIU2 (DDIU-MAT/PDIU-DI).

DN (Directory Number)—Assigns the directory number (data number) of the DDIU/PDIU.
Enter: 1, 2, 3, or 4 digits.

HNT (Hunt Directory Number)—Defines the data station to which this DN hunts. (Used with the Hunting feature.)
Enter: XXXX (1 ~ 4 digits) for the next DN in the hunt group or NONE.

COS (Class of Service)—Assigns one of the 16 Classes of Service to the data station. (The Classes of Service are defined in the **DCOS Program**.)
Enter: COS Number (0 ~ 15).

GOD (Group of DDIUs/PDIUs)—Assigns the DDIU/PDIU to one of the 16 possible DDIU/PDIU groups. Dial access into a group can be denied by Class of Service.
Enter: 0 ~ 15.

TEN (Tenant Number)—Assigns the data station to one of the two possible tenants in the system.

Enter: 0 if tenant service is not selected in the System Data Block (TEN = N).
0 or 1 to specify tenant, if tenant service is selected in the System Data Block (TEN = Y).

NOTE:
The TEN entry for a DDIU-MAT/PDIU-DI should be the same as the TEN entry for the electronic/digital telephone to which it is assigned.

KEY (Button Assignment)—Assigns a DN to the DDIU-MA and PDIU-DS data units. It also assigns features to one of the flexible buttons on DDIU-MA **only**.

NOTE:
PDIU-DS data units do not have flexible buttons for feature assignments. However, it is necessary to assign a data DN to key 0 when programming a PDIU-DS, so that the data unit can be called by other data units.

Enter:

1) The number of the button that is to be defined, followed by a space. Buttons are numbered 0 ~ 9, starting from the bottom of the vertical buttonstrip. The three buttons located next to the dialpad (TRANSFER, HOLD, and RLS) have fixed assignments. The TRANSFER and HOLD buttons are for future use and are non-functional.

2) Feature or DN assignments. The possible assignments are as follows:
Directory (Station) Number: (1, 2, 3, or 4 digits):
SCR NNNN XXXX—Single Call Ring.
- Incoming calls will audibly ring the DDIU/PDIU.
- NNNN = Directory (station) Number.
- XXXX = Hunt number = Enter DN to which this DN will hunt.

SCN NNNN XXXX—Single Call No Ring.
- Incoming calls will not audibly ring DDIU/PDIU (LED flash only).
- NNNN = Directory (station) Number.
- XXXX = Hunt number = Enter DN to which this DN will hunt.

Features (DDIU-MA only):
ACB—Automatic Callback
ADL/FAD—Automatic Dialing (Flexible/Fixed)
DND—Do Not Disturb
RND—Repeat Last Number Dialed
SDC/SDU—Station Speed Dial Controller/User
SDS—Speed Dial System

KEY—The prompt will be repeated until all entries have been made and the DEL key is pressed.

TABLE 11-1

Procedure — Digital Data Interface Unit Data Block

Authorization Procedure must be completed. If an OK response is received, proceed as follows:

ITEM	PROMPT	USER ENTRY	NOTE
	OK	DDIU	
– DISK LOADING –			
	REQ	NEW, CHG, OUT	
Port Number	POR	LNNX	1, 2, & 3
DIU Style	PDIU	Y or N	4
AT Commands	ATC	Y or N	5
Type of DDIU/PDIU	TYP	DIU1 or DIU2	6
Directory Number	DN	1 ~ 4 digits	7 & 8
Hunt Directory Number	HNT	1 ~ 4 digits or NONE	7 & 9
Class of Service Group	COS	0 ~ 15	10
Groups of DDIUs	GOD	0 ~ 15	11
Tenant Number	TEN	0 or 1	12
Button Assignment	KEY	0 ~ 9 [space] FEATURE	13 & 14

(continued)

NOTES:

1. *NN = PCB location.*
2. *X = Circuit number.*
3. *Ports LNN1 ~ 4 on a NMDU PCB can be used if they are not assigned in the **DMDM Program**.*
4. *Select the DIU style, DDIU or PDIU (**D.04** software). Y = PDIU, N = DDIU.*
5. *Echos AT commands; Y = Echo on, N = Echo off (Modem = N).*
6. *DIU1 = DDIU-MA/PDIU-DS. DIU2 = DDIU-MAT/PDIU-DI.*
7. *This prompt will only appear when DIU2 (DDIU-MAT/PDIU-DI) is entered after the TYP prompt.*
8. *This directory number will appear on an electronic/digital telephone.*
9. *Enter the number to which this DN hunts. NONE = No hunt.*
10. *There are 16 different COS groups (which are defined in the COS Data Block).*
11. *Assign this DDIU/PDIU to one of 16 possible groups. Dial access into a group can be denied by Class of Service.*
12. *The TEN entry for a DDIU-MAT/PDIU-DI should be the same as the TEN entry for the electronic/digital telephone to which it is assigned.*
13. *Enter the button number, followed by a space and then the feature entry. Button 0 must be the station's primary DN. See Table 11-1a for possible entries.*
14. *PDIU-DS requires a DN assignment to Key 0.*
15. CTRL X = *Ignore line entered.*
    CTRL H = *Backspace.*
    DEL = *Stop printing and return to REQ.*
    DEL DEL = *Exit program.*

SPECIAL NOTE:
*When a **DIU2** is assigned, two key entries must be made in the **DEKT PROGRAM** as follows:*

PROMPT	USER ENTRY	NOTE
KEY	DIU LNNX	1
KEY	DRS	2

NOTES:
1. *Port number of DIU attached to the electronic/digital telephone (Data DN).*
2. *Data release button.*

TABLE 11-1a
DDIU BUTTON ASSIGNMENTS

DIRECTORY NUMBER	ENTRY	NOTE
Single Call Ring	SCR NNNN XXXX	1
Single Call No Ring	SCN NNNN XXXX	1

FEATURE	ENTRY	NOTE
Automatic Callback	ACB	
Automatic Dialing	ADL/FAD XXX	2
Do Not Disturb	DND	
Repeat Last Number Dialed	RND	
Station Speed Dial Controller/User	SDC XX/SDU XX	
System Speed Dial	SDS	

NOTES:
1. *NNNN = Directory Number: 1-, 2-, 3-, or 4-digit DNs are allowed if there is no conflict (i.e., 30X is not allowed if 30 is used). For DDIU-MA and PDIU-DS units.*
   XXXX = Hunt DN – enter NONE to remove present DN. Also see Station Hunt-Distributed.
2. *The maximum number of* ADL/FAD *buttons for the entire system is 500.*
3. CTRL X = *Ignore line entered.*
   CTRL H = *Backspace.*
   DEL = *Stop printing and return to REQ.*
   DEL DEL = *Exit program.*

TABLE 11-1 (continued)

Error Codes

Program Name: DDIU Data Block (DDIU)	
Error Code	**Meaning**
ERDIU 00	A PCB is not equipped in that location.
ERDIU 01	The PCB is not an NDCU/NDKU or NMDU type.
ERDIU 02	The port is busy (REQ = CHG or OUT).
ERDIU 03	The port has already been assigned to a station, DSS console, DDIU, or PDIU (REQ = NEW).
ERDIU 04	#1 was entered, but tenant service was not enabled in the System Data Block.
ERDIU 05	#1 was entered, but Attendant #1 was not programmed (no Attendant Data Block).
ERDIU 06	The button number is not allowed (exceeds maximum allowed for this DDIU/PDIU).
ERDIU 08	The maximum number of ADL/ FAD buttons has already been assigned (maximum = 500).
ERDIU 10	The DN conflicts with the existing DN.
ERDIU 11	510 DNs have already been assigned in the system.
ERDIU 12	The DN has already been assigned to its maximum number of appearances (maximum for a Primary DN = 1; Secondary DN = 95).
ERDIU 14	The next hunt DN is not assigned.
ERDIU 16	The input DN has already been assigned to the port.
ERDIU 17	The input data was erased because the program was aborted during a NEW entry.
ERDIU 18	The port is not assigned.
ERDIU 19	Another type of data is assigned to the input port.
ERDIU 20	SDC has already been assigned to the input list.
ERDIU 23	The input DN is a trunk DN (VCP NNN HUNT DN).
ERDIU 24	The first digit of an input DN cannot be "0" or "9."
ERDIU 33	Only one DN can be assigned to a DIU.
ERDIU 34	The port has already been assigned to a trunk.

2. Print Digital Data Interface Unit Data Block (Table 11-2)

2.01 To use the Print Digital Data Interface Unit Data Block (**PDIU Program**):

- Perform the Authorization Procedure (Level 1, 2, or 3).
  Enter: PDIU (in response to the OK prompt).
- When a REQ prompt is received after the program is loaded:
  Enter: PORALL.
- All DDIU Data Blocks will be output in numerical order of ports (lowest first).

TABLE 11-2

Procedure — Print Digital Data Interface Unit Data Block

Authorization Procedure must be completed. If an OK response is received, proceed as follows:

ITEM	PROMPT	USER ENTRY	NOTE
	OK	PDIU	
– DISK LOADING –			
	REQ		1
– EXECUTE –			
	REQ		1

NOTES:

1. *The only response possible is:*
   PORALL = Outputs all DDIU Data Blocks in numerical order of ports (lowest first).
2. CTRL X = *Ignore line entered.*
   CTRL H = *Backspace.*
   DEL = *Stop printing and return to REQ.*
   DEL DEL = *Exit program.*

3. Modem Pooling Data Block (Table 11-3)

3.01 The Modem Pooling Data Block (**DMDM Program**) identifies the Modem Pooling ports. The Modem Pooling Data Block is **not** used with the PDIU-DS. See the DDIU Data Block and the Installation Instructions section for Modem Pooling using the PDIU-DS.

REQ (Request)—Indicates that the program has loaded. Two responses are possible:
NEW—To assign a new Data Block.
OUT—To delete an existing Data Block.

POR (Port Number)—Identifies the hardware location of the NMDU circuits that are to be defined. The port number has two parts:

1) NMDU PCB location:
PERCEPTION$_e$—L00 ~ L11/L15 ~ L26 (NN).
PERCEPTION$_{ex}$—L00 ~ L31.

2) Circuit number on that PCB: 1 ~ 4 (X).

3) When a circuit number is identified, two circuits are assigned, one for a modem and one for its associated DDIU (i.e., if circuit 1 is identified, circuits 1 and 5 are assigned; if circuit 2 is identified, circuits 2 and 6 are assigned, and so on).
Enter: Port number (LNNX).

NOTE:
Port L314 cannot be assigned.

TABLE 11-3

Procedure — Modem Pooling Data Block

Authorization Procedure must be completed. If an OK response is received, proceed as follows:

ITEM	PROMPT	USER ENTRY	NOTE
	OK	DMDM	
– DISK LOADING –			
	REQ	NEW, OUT	
Port Number	POR	LNNX	1 & 2

NOTES:

1. *NN = PCB location.*
   PERCEPTION$_e$ – L00 ~ L11/L15 ~ L26.
   PERCEPTION$_{ex}$ – L00 ~ L31.
2. *X = Circuit number (1 ~ 4).*
3. CTRL X = *Ignore line entered.*
   CTRL H = *Backspace.*
   DEL = *Stop printing and return to REQ.*
   DEL DEL = *Exit program.*

Error Codes

Program Name: Modem Pooling Data Block (DMDM)	
Error Code	**Meaning**
ERMDP 00	A PCB is not equipped in that location.
ERMDP 01	The PCB is not an NMDU type.
ERMDP 02	The port is busy (REQ = CHG or OUT).
ERMDP 03	The port has already been assigned to a station, DSS console, or DIU (REQ = NEW).
ERMDP 04	The port is not assigned (REQ) = OUT).
ERMDP 05	The input port is wrong (LNNX, X is not 1 ~ 4).
ERMDP 06	The port has already been assigned to an attendant console.
ERMDP 07	The input port is not a modem pooling port (NMDM).
ERMDP 08	The port has already been assigned to a trunk.

4. Print Modem Pooling Data Block (Table 11-4)

4.01 To use the Print Modem Pooling Data Block (**PMDM Program**):

- Perform the Authorization Procedure (Level 1, 2, or 3).
  Enter: PMDM (in response to the OK prompt).
- When the REQ prompt is received after the program is loaded:
  Enter: PORALL.
- All Modem Pooling Data Blocks will be output in numerical order of ports (lowest first).

TABLE 11-4

Procedure — Print Modem Pooling Data Block

Authorization Procedure must be completed. If an OK response is received, proceed as follows:

ITEM	PROMPT	USER ENTRY	NOTE
	OK	PMDM	
– DISK LOADING –			
	REQ		1
– EXECUTE –			
	REQ		1

NOTES:

1. *The only response possible is:*
   PORALL = Outputs all Modem Pooling Data Blocks in numerical order of ports (lowest first).
2. CTRL X = *Ignore line entered.*
   CTRL H = *Backspace.*
   DEL = *Stop printing and return to REQ.*
   DEL DEL = *Exit program.*

CHAPTER 12

LEAST COST ROUTING DATA

1. Least Cost Routing Data Block (Table 12-1)

1.01 The Least Cost Routing Data Block (**DLCR Program**) defines the proper outgoing trunk based on the outside number that is dialed. LCR stores and examines the number dialed, checking the area and/or office codes. Based on this examination and the time of day, LCR chooses the proper trunk from a programmed route table. The LCR Data Block has been divided between two utility programs (**DLC1** and **DLC2**).

- **DLC1** defines the miscellaneous system parameters, the 15 area code tables, and the 16 area/office tables which further modify the area code tables.
- **DLC2** defines the 15 route tables, containing six routes each, and includes three schedules for time of day selection and 12 Modify Digits Tables. Each route table's data (**DLC1** or **DLC2**) is entered as follows:

REQ (Request)—Indicates that the program has loaded. The only response possible is CHG.

TYPE (Sub-program Type)—There are three sub-programs within the **DLC1 Program** and two within the **DLC2 Program**. The possible responses are as follows:

DLC1:
PAR (Miscellaneous Parameters Table)—Identifies the system operating parameters.
ACT (Area Code Table)—Defines each area code table.
AOC (Area/Office Code Table)—Modifies an area code table.

DLC2:
RTB (Route Table)—Defines routes and the routing selection sequence.
MDT (Modify Digits Table)—Defines the digit modification that is to be applied to a dialed number.

Enter: DLC1 or DLC2, followed by the desired sub-program:
DLC1: PAR, ACT, or AOC.
DLC2: RTB or MDT.

1.02 After entering the desired sub-program, press the return key (CR). The prompts associated with each sub-program will then be issued sequentially.

TABLE 12-1

Procedure — Least Cost Routing Data Block

Authorization Procedure must be completed. If an OK response is received, proceed as follows:

ITEM	PROMPT	USER ENTRY	NOTE
LCR Utility #1 or #2	OK	DLC1, DLC2	1
	– DISK LOADING –		
	REQ	CHG	
Data Table Type	TYPE	PAR, ACT, AOC (DLC1), or RTB, MDT (DLC2)	2

NOTES:

1. *LCR utilities are divided between two programs:*
   Enter: DLC1 for: PAR (Miscellaneous Parameters).
   ACT (Area Code Table).
   AOC (Area/Office Code Table).
   DLC2 for: RTB (Route Table).
   MDT (Modify Digits Table).
2. *If DLC1 was entered, the possible responses are PAR, ACT, or AOC. If DLC2 was entered, the possible responses are RTB or MDT.*

2. Least Cost Routing Data Block 1 (Tables 12-2 ~ 12-4)

When entering DLC1, PAR (Table 12-2), the next prompt will be:

ICC (Interchangeable Codes)—A "Y" informs the system that interchangeable codes are used. These are office codes that have 0 or 1 as the second digit (N0/1X format). Area codes will be identified as the three digits following the DDD prefix. Office codes will be identified as the first three digits when a DDD prefix is not dialed (see **DTOL Program**, PAR table, DDP prompt).
Enter: Y or N.

OTO (Operator Call Timeout)—Defines the time, in seconds, that the system will wait for additional digits to be dialed after 0 is pressed.
Enter: Time in seconds (for example: 10).

RTD1 (Return Dial Tone)—A "Y" response returns system dial tone after the LCR access code has been dialed. An "N" response will return silence.
Enter: Y or N.

WTA (Warning Tone Allowed?)—A "Y" response will cause the system to give a 3-second 440 Hz warning tone when the most expensive (last choice) route is being selected.
Enter: Y or N.

HAC (Home Area Code)—Defines the area code in which the system is operating. A home area code is also used to analyze dialed numbers which do not contain an area code. Data that is entered here will appear in the Toll Restriction Data Block (**DTOL Program**, PAR table, HAC prompt).
Enter: N0/1X (Area Code).

NOTE:
N = 2 ~ 9, 0/1 = 0 or 1, X = 0 ~ 9.

TFC (Toll-Free Calls)—A "Y" response will route toll-free calls (area code = 800) to the route table defined in the Local Call Route (LCR) prompt. An "N" response informs the system to treat area code 800 as a normal area code.
Enter: Y or N.

LCR (Local Call Route)—Defines the route to be selected for local calls (undefined numbers), area code 800 calls (TFC prompt), and Service Code calls (SVC prompt).
Enter: Route Table (1 ~ 15).

SVC (Service Code Table)—Defines the local service codes (411, 611, 911, etc.) that are to be routed via the Route Table defined by the LCR prompt (maximum: 10 3-digit codes).
Enter: NXX NXX etc. (in response to the A prompt, to add service codes).
and/or . . .
NXX NXX etc. (in response to the D prompt, to delete service codes).

DAC (Directory Assistance Calls Allowed)—A "Y" response will route long distance directory assistance calls (NPA + 555 + XXXX) to the route table defined in the long distance information route (LDI prompt). An "N" response will not allow long distance directory assistance calls using Least Cost Routing.
Enter: Y or N.

LD0 (Long Distance International Call Route)—Defines the route table that is to be selected for international (011) calls.
Enter: Route Table (1 ~ 15).

NOTES:
1. *A route table number is entered here, however, it is not necessary to create an RTB table.*
2. *This is for 011 calls only. 01 calls follow the local call route.*

LDI (Long Distance Information Route)—Defines the route table that is to be selected for long distance directory assistance calls (NPA + 555 + XXXX) if permitted by the DAC prompt.
Enter: Route Table (1 ~ 15).

DDP (Direct Distance Dialing Prefix)—Defines the Direct Distance Dialing (DDD) prefix in the Numbering Plan Area (NPA). If ICC is "Y," then N0/1X and NXX become interchangeable, enabling area codes and office codes to have 0 or 1 as their

TABLE 12-2

Miscellaneous Parameters Table

Load the **DLC1 Utility Program.** When TYPE is prompted, proceed as follows:

ITEM	PROMPT	USER ENTRY	NOTE
	TYPE	PAR	
Interchangeable Codes	ICC	Y or N	1
"O" Call Timeout	OTO	Time in seconds: 0 ~ 99	
Return Dial Tone after LCR Access Code	RTD	Y or N	
Warning Tone to caller when the most expensive route is selected	WTA	Y or N	
Home Area Code	HAC	N0/1X (Home Area Code)	2
Toll Free (800) calls permitted via the Local Call Route	TFC	Y or N	3
Local Call Route	LCR	XX (Local Call Route Table 1 ~ 15)	
Service Code Table	SVC A D	 NXX NXX NXX NXX	3 & 4
Directory Assistance (555) Call Allow	DAC	Y or N	5
Long Distance International (011) Call Route	LD0	1 ~ 15	6
Directory Assistance (555) Call Route	LDI	1 ~ 15	
DDD Prefix	DDP	1 ~ 3 digits or NONE	

NOTES:

1. *Informs the system if interchangeable codes are used (Office Codes with N0/1X format).*
2. *Defines the area code in which the system is located. Home area codes are used to route dialed numbers which do not contain an area code. This entry is coupled with the HAC entry in the PAR table Toll Restriction (**DTOL Program**). Data that is entered here will also appear in that table.*
3. *These calls will be routed via the Local Call Route.*
4. *Following the SVC prompt, the system will prompt an "A." Any entries made will be added. To delete a code, press the* RETURN *key. The system will then prompt "D," and any entries made will be deleted. Codes cannot be added and deleted in the same pass through the table. A separate pass is required for each step.*
5. *Route Table to be used for 555 calls.*
6. *Route Table to be used for 011 calls. A route table number is entered here, however, it is not necessary to create an RTB table for that route. This is for 011 calls only, 01 calls will follow the local call route.*
7. CTRL X = *Ignore line entered.*
   CTRL H = *Backspace.*
   DEL = *Stop printing and return to REQ.*
   DEL DEL = *Exit program.*

second digit. In this case, the DDP is used to differentiate between the two code types (see example). If the ICC response is "N," then calls will be made using the normal NPA formula of N0/1X and NNX.

Enter: 1, 2, or 3 digits or NONE.

Example: If ICC is "Y" and the DDP is programmed as 1, then the dialed number 209-1234 is recognized as a call within the home area code, while the dialed number 1-209-555-1234 is recognized as a call outside the home area code. If ICC is "N," this dialing plan is not used.

When entering DLC1, ACT (Table 12-3), the next prompt will be:

RNO (Route Table Number)—Identifies the number of the Route Table (programmed in the RTB sub-program of the **DLC2 Program**) to which this Area Code Table is assigned. Entering OUT will clear all area codes from Route Table Numbers (RNO)1 ~ 14 and will assign all area codes to RNO 15. Entering a Route Table Number 1 ~ 14, followed by OUT will clear only RNO XX and will assign the area codes to RNO 15.

Enter: 1 ~ 15 or
OUT or
1 ~ 14 OUT.

ACA (Area Codes-Add)—Indicates the area codes that are to be added to this RNO. A maximum of 160 area codes are permitted. Initially, RNO 15 contains all possible 160 area codes, but as codes are added to RNO 1 ~ 14, they are automatically deleted from RNO 15.

Enter: N0/1X N0/1X etc.

TABLE 12-3

Area Code Table

Load the **DLC1 Utility Program.** When TYPE is prompted, proceed as follows:

ITEM	PROMPT	USER ENTRY	NOTE
	TYPE	ACT	
Route Table Number	RNO	Route Table 1 ~ 15, OUT, or NN OUT	1
Area Codes — Add	ACA	N0/1X, N0/1X, etc.	2
Area Codes — Delete	ACD	N0/1X, N0/1X, etc.	3

NOTES:

1. *OUT clears RNO 1 ~ 14 and assigns all area codes to RNO 15. NN OUT clears RNO NN and assigns the cleared area codes to RNO 15.*
2. *Input area codes are to be added to this RNO. A maximum of 160 codes in the format N0/1X are permitted (N = 2 ~ 9, X = 0 ~ 9). At start-up, RNO 15 contains all possible area codes. As codes are added to RNO 1 ~ 14, they are automatically deleted from RNO 15.*
3. *Input codes to be deleted from this RNO. As codes are deleted from RNO 1 ~ 14, they are automatically added to RNO 15. Codes can only be deleted from RNO 15 by adding them to another RNO.*
4. CTRL X = *Ignore line entered.*
   CTRL H = *Backspace.*
   DEL = *Stop printing and return to REQ.*
   DEL DEL = *Exit program.*

NOTE:
N = 2 ~ 9, 0/1 = 0 or 1, X = 0 ~ 9.

ACD (Area Codes-Delete)—Indicates the area codes that are to be deleted from this RNO. As codes are deleted from RNO 1 ~ 14, they are automatically added to RNO 15. Codes can only be deleted from RNO 15 by adding them to another RNO (1 ~ 14).
Enter: N0/1X N0/1X etc.

When entering DLC1, AOC (Table 12-4), the next prompt will be:

TNO (Table Number)—Selects one of the 16 area/office code modification (AOC) tables that are to be used.
Enter: 01 ~ 16.

ARC (Area Code)—Identifies the area code to which this AOC table is assigned.
Enter: N0/1X or NONE.

RNO (Route Table Number)—Specifies the number of the route table (RNO) that is to be followed for the calls meeting the area/office code criteria of this AOC table.
Enter: 1 ~ 15.

OCA (Office Codes-Add)—Indicates the office codes that are assigned to the AOC modification table. Office codes may be added either as single 3-digit codes or as a "range," covering up to 10 sequential 3-digit codes. Ranges are entered by using a 4-digit format, where the first two digits are common to all codes in this range; the third digit represents the starting (from) point of the range; and the fourth digit represents the end (to) point of the range for the last office code digit. See RANGES example.
Enter: NXXX NXX NXXXX etc.

OCD (Office Codes-Delete)—Indicates the office codes that are to be deleted from the AOC modification table. Office codes may be deleted by using either single 3-digit codes or a range of codes (entered in the same manner as a range for adding codes). See OCA prompt and RANGES example.
Enter: NXXX NXX NXXX etc.

RANGES EXAMPLE:	
4-digit Format	**Office Codes**
2209	220 ~ 229
2316	231 ~ 236
2478	247 ~ 248

TABLE 12-4

Area/Office Code Table
Load the **DLC1 Utility Program.** When TYPE is prompted, proceed as follows:

ITEM	PROMPT	USER ENTRY	NOTE
	TYPE	AOC	
Table Number	TNO	1 ~ 16	
Area Code	ARC	N 0/1X or NONE	
Route Table Number	RNO	1 ~ 15	
Office Codes — Add	OCA	NXX NXXX etc.	1
Office Codes — Delete	OCD	NXX NXXX etc.	1

NOTE:
A maximum of 800 3-digit numbers (in the format NXX [N = 2 ~ 9, X = 0 ~ 9]) are permittted. Ranges are possible (7309 = 730 ~ 739).

NOTE:
Codes cannot be added and deleted in the same pass through the table. A separate pass is required for each step.

3. Least Cost Routing Data Block 2 (Tables 12-5 ~ 12-6)

When entering DLC2, RTB (Table 12-5), the next prompt will be:

RNO (Route Table Number)—Identifies the number of the Route Table to which an Area Code Table (ACT) and/or an AOC Table is assigned. Entering OUT will clear all Route Tables. Entering RNO 1 ~ 15, followed by OUT will clear RNO XX.
Enter: 1 ~ 15 or
1 ~ 15 OUT.

RT1 ~ 6 (Route Definition)—Defines the Trunk Group for each route in this Route Table. If a Trunk Group is entered at this time, then a Modify Digits Table must also be entered. A particular routing definition (RT1, RT2, etc.) may only be used one time per routing schedule.
Enter: XX MM or NONE.
(XX = Trunk Group Number 0 ~ 15.)
(MM = Modify Digits Table Number 1 ~ 12.)

NOTE:
The existing Route Schedule data will be automatically printed after the response to RT6 prompt is entered.

SCHA (Route Schedule A)—Defines the time-of-day interval for the first of three possible routing schedules. Start and end times are entered by using a 24-hour-clock format.
Enter: Start Time End Time.
(for example: 0900 1700.)

LC3 (Class 3 Routing Priority)—Defines the routing choice sequence that is accessible to station classes LC3, LC2, and LC1 during Schedule A time interval. Enter the routes (RT1 ~ 6) in the order of selection priority.
Enter: Routing Choice (for example: RT6 RT1 etc.).
. . . or . . .
NONE (this entry for LC3 will also change LC2 & LC1 to NONE for this schedule).

LC2 (Class 2 Routing Priority)—Defines the routing choice sequence that is accessible to station classes LC2 and LC1 during Schedule A time interval. Enter the routes (RT1 ~ 6) in the order of selection priority.
Enter: Routing Choice (for example: RT5 RT2 etc.).
. . . or . . .
NONE.

LC1 (Class 1 Routing Priority)—Defines the routing choice sequence that is accessible to station class LC1 during Schedule A time interval. Enter the routes (RT1 ~ 6) in the order of selection priority.
Enter: Routing Choice (for example: RT4 RT3 etc.).
. . . or . . .
NONE.

NOTE:
The DCOS Data Block is used to define station class of service for Least Cost Routing (LCR) by using three classes of service for LCR. The access permitted to each LCR Class of Service is as follows:
LC1—Allows routes defined for LC3, LC2; and LC1.
LC2—Allows routes defined for LC2 and LC3.
LC3—Allows routes defined for LC3 only.

SCHB (Route Schedule B)—Defines the time-of-day interval for the second of three possible routing schedules. The start time, which is the end time of Schedule A, will be automatically printed (24-hour-clock format).
Enter: End Time (for example: 2300).

LC3 (Class 3 Routing Priority)—Same as LC3 in Schedule A, but for Schedule B time interval.
Enter: Routing Choice (for example: RT5 RT4 etc.).
. . . or . . .
NONE (this entry for LC3 will also cause LC2 & LC1 to be longer for this schedule).

LC2 (Class 2 Routing Priority)—Same as LC2 in Schedule A, but for Schedule B time interval.

Enter: Routing Choice (for example: RT3 RT2 etc.).

. . . or . . .

NONE.

LC1 (Class 1 Routing Priority)—Same as LC1 in Schedule A, but for Schedule B time interval.

Enter: Routing Choice (for example: RT1 RT6 etc.).

. . . or . . .

NONE.

SCHC (Route Schedule C)—Defines the time-of-day interval for the last of three possible routing schedules. The start time, which is the end time of Schedule B, and the end time, which is the start time of Schedule A, will be automatically printed (24-hour-clock format).

No entry is necessary.

LC3 (Class 3 Routing Priority)—Same as LC3 in Schedules A and B, but for Schedule C time interval.

Enter: Routing Choice (for example: RT1 RT6 etc.).

. . . or . . .

NONE (this entry for LC3 will also cause LC2 and LC1 to be NONE for this schedule).

LC2 (Class 2 Routing Priority)—Same as LC2 in Schedules A and B, but for Schedule C time interval.

Enter: Routing Choice (for example: RT2 RT3 etc.).

. . . or . . .

NONE.

LC1 (Class 1 Routing Priority)—Same as LC1 in Schedules A and B, but for Schedule C time interval.

Enter: Routing Choice (for example: RT4 RT5 etc.).

. . . or . . .

NONE.

TABLE 12-5

Route Table

Load the **DLC2 Utility Program.** When TYPE is prompted, proceed as follows:

ITEM	PROMPT	USER ENTRY	NOTE
	TYPE	RTB	1
Route Table Number	RNO	1 ~ 15 or NN OUT	2
Route #1 Definition	RT1	XX MM or NONE (NONE NONE)	2
Route #2 Definition	RT2	XX MM or NONE (NONE NONE)	2
Route #3 Definition	RT3	XX MM or NONE (NONE NONE)	2
Route #4 Definition	RT4	XX MM or NONE (NONE NONE)	2
Route #5 Definition	RT5	XX MM or NONE (NONE NONE)	2
Route #6 Definition	RT6	XX MM or NONE (NONE NONE)	2
— Printout of Existing Route Schedule —			3
Route Schedule A	SCHA	HHMM, HHMM (NONE NONE)	4
Class 3 Routing Priority	LC3	RTX, RTX, etc. or NONE (NONE)	5 & 8
Class 2 Routing Priority	LC2	RTX, RTX, etc. or NONE (NONE)	5 & 8
Class 1 Routing Priority	LC1	RTX, RTX, etc. or NONE (NONE)	5 & 8
Route Schedule B	SCHB	HHMM (NONE NONE)	4 & 6
Class 3 Routing Priority	LC3	RTX, RTX, etc. or NONE (NONE)	5 & 8
Class 2 Routing Priority	LC2	RTX, RTX, etc. or NONE (NONE)	5 & 8
Class 1 Routing Priority	LC1	RTX, RTX, etc. or NONE (NONE)	5 & 8
Route Schedule C	SCHC	CR (NONE NONE)	4 & 7
Class 3 Routing Priority	LC3	RTX, RTX, etc. or NONE (NONE)	5 & 8
Class 2 Routing Priority	LC2	RTX, RTX, etc. or NONE (NONE)	5 & 8
Class 1 Routing Priority	LC1	RTX, RTX, etc. or NONE (NONE)	5 & 8

Default values are noted in parentheses ( ).

TABLE 12-5 (continued)

NOTES:

1. *OUT = Will clear all Route Tables. NN OUT = Will clear Route Table NN.*
2. *Route definition — maximum is six routes.*
   Format is: XX = Trunk Group Number (0 ~ 15).
   MM = Modify Digits Table to be applied (1 ~ 12). Modify Digits Table ***must*** *be entered.*
3. *Existing Route Schedule data is printed automatically after the response to RT6 prompt is entered.*
4. *Time-of-day interval for this routing schedule.*
5. *Maximum combined entries for LC3, LC2, LC1 are six routes.* ***Do not*** *assign the same route to more than one class.*
6. *Entry required for schedule B end time only. Schedule A end time has defined schedule B start time.*
7. *No entry required. Schedule A start time has defined the schedule C end time and schedule B end time has defined the schedule C start time.*
8. *LC3, LC2, and LC1 are used in DCOS Data Block to define Station Class of Service. The access permitted to each class is as follows: LC1 = All routes defined for LC1, LC2, LC3.*
   LC2 = Routes defined for LC2, LC3.
   LC3 = Routes defined for LC3 only.
9. CTRL X = *Ignore line entered.*
   CTRL H = *Backspace.*
   DEL = *Stop printing and return to REQ.*
   DEL DEL = *Exit program.*

When entering DLC2, MDT (Table 12-6), the next prompt will be:

TNO (Modify Digits Table Number)—Specifies the Modify Digits Table Number assigned to the defined routes in the Route Tables (RT1 ~ RT6). The same Modify Digits Table may be used for more than one route.
Enter: Table Number (1 ~ 12).

DLT (Digits to be Deleted)—Defines the number of digits that are to be deleted from the start of a dialed number. The system will remove these digits before prefixing any digits defined by the digits-to-be-added (ADD) prompt. Maximum: 10 digits.
Enter: Number of digits to be deleted or NONE.

ADD (Digits to be Added)—Defines the actual digits to be prefixed to a dialed number. The system will prefix these digits after removing the number of digits defined by the digits-to-be-deleted (DLT) prompt. Maximum: 20 digits.
Enter: Actual digits to be prefixed or NONE.

NOTE:
*The following codes are used in response to the ADD prompt to insert pauses: *1 = 1-second pause, *2 = 2-second pause, *3 = 6-second pause (*X = 1 digit).*

TABLE 12-6

Modify Digits Table
Load the **DLC2 Utility Program.** When TYPE is prompted, proceed as follows:

ITEM	PROMPT	USER ENTRY	NOTE
	TYPE	MDT	
Table Number	TNO	1 ~ 12	
Number of digits to be deleted from dialed number	DLT	XX etc., maximum: 10 or NONE (NONE)	1
Digits to be prefixed to dialed number	ADD	XXXX etc, maximum: 20 or NONE (NONE)	1 & 2

Default values are noted in parentheses ( ). *(continued)*

NOTES:
1. *Default Value = NONE.*
2. *The following codes are used to insert pauses in response to ADD:*
   **1 = 1 digit = 1-second pause. *2 = 1 digit = 2-second pause. *3 = 1 digit = 6-second pause.*
3. CTRL X = *Ignore line entered.*
   CTRL H = *Backspace.*
   DEL = *Stop printing and return to REQ.*
   DEL DEL = *Exit program.*

TABLE 12-6 (continued)

Error Codes

Program Name: Least Cost Routing Data Block (DLC1 and DLC2)	
Error Code	**Meaning**
ERLCR 00	Input time (in seconds) is out of range (0 ~ 99).
ERLCR 01	Area Code (N 0/1X) is out of range (N = 2 ~9, X = 0 ~ 9).
ERLCR 02	Route number is out of range (1 ~ 15).
ERLCR 03	Service Code error.
ERLCR 04	Service Codes exceed the maximum (10).
ERLCR 05	Table number is out of range (1 ~ 16).
ERLCR 06	Office Code is out of range.
ERLCR 07	Trunk Group number is out of range.
ERLCR 08	Modify Digits Table number is out of range (1 ~ 12).
ERLCR 09	Route number error (RT1 ~ RT6).
ERLCR 10	The number of digits to be deleted is out of range (10).
ERLCR 11	The digits to be added exceed the maximum (20).
ERLCR 12	The digit to be added is incorrect.
ERLCR 13	Numeric error (0 ~ 9).
ERLCR 14	The number of Area Codes exceeds the maximum (maximum = 160).
ERLCR 15	The number of Office Codes exceeds the maximum (maximum = 800).
ERLCR 16	Schedule time is out of range (HH = 0 ~ 23, MM = 0 ~ 59).
ERLCR 17	Schedule time error.
ERLCR 18	Route number has already been assigned.

4. Print Least Cost Routing Data Block (Table 12-7)

4.01 To use the Print Least Cost Routing Data Block (**PLCR Program**).

- Perform Authorization Procedure (Level 1, 2, or 3).
  Enter: PLCR (in response to the OK prompt).
- When the REQ prompt is received after the program is loaded, enter one of the following commands:

LCRALL—All Least Cost Routing Data Blocks will be output.

PAR—Miscellaneous Parameters Table will be output.

ACTALL—All Area Code Tables will be output.

ACTRNXX—All Area Code Tables that point to Route Number (RN) XX will be output.

AOCALL—All Area/Office Code Tables will be output.

AOCNOXX—Area/Office Code Table XX will be output.

AOCRNXX—All Area/Office Code Tables that point to Route Number (RN) XX will be output.

CODXXX—All Area/Office Code Tables relating to Area Code XXX will be output.

RTALL—All Route Tables will be output.

RTXX—Route Table XX will be output.

TGPXX—All Route Tables using Trunk Group XX will be output.

RTMDXX—All Route Tables using Modify Digits Table XX will be output.

MDTXX—Modify Digits Table XX will be output.

TABLE 12-7

Procedure — Print Least Cost Routing Data Block

Authorization Procedure must be completed. If an OK response is received, proceed as follows:

ITEM	PROMPT	USER ENTRY	NOTE
	OK	PLCR	
– DISK LOADING –			
	REQ		1
– EXECUTE –			
	REQ		1

NOTES:

1. *The following responses are possible:*
   - *LCRALL = Outputs all Least Cost Routing Data Blocks.*
   - *PAR = Outputs Miscellaneous Parameters Table.*
   - *ACTALL = Outputs all Area Code Tables.*
   - *ACTRNXX = Outputs all Area Code Tables that point to Route Number (RNO) XX.*
   - *AOCALL = Outputs all Area/Office Code Tables.*
   - *AOCNOXX = Outputs Area/Office Code Table XX.*
   - *AOCRNXX = Outputs all Area/Office Code Tables that point to Route Number (RNO) XX.*
   - *CODXXX = Outputs all Area Code and Area/Office Code Tables relating to Area Code XXX.*
   - *RTALL = Outputs all Route Tables.*
   - *RTXX = Outputs Route Table XX.*
   - *TGPXX = Outputs all Route Tables using Trunk Group XX.*
   - *RTMDXX = Outputs all Route Tables using Modify Digits Table XX.*
   - *MDTXX = Outputs Modify Digits Table XX.*
2. CTRL X = *Ignore line entered.*
   CTRL H = *Backspace.*
   DEL = *Stop printing and return to REQ.*
   DEL DEL = *Exit program.*

CHAPTER 13

LODGING/HEALTH CARE DATA

1. Lodging/Health Care Features Data Block (Table 13-1)

1.01 The Lodging/Health Care Features Data Block (**DHMF Program**) defines the number of miscellaneous parameters that pertain to the Lodging/Health Care features. Data is entered as follows:

NOTE:
Be sure to run the DMYC program (Back-up Memory Check Entry Procedure) when the system is put into the Lodging/Health Care mode of operation, and before this program is entered.

REQ (Request)—Indicates that the program has loaded. Three responses are possible:
NEW—To create a new Data Block.
CHG—To alter an existing Data Block.
OUT—To delete an existing Data Block.

NOTE:
If OUT is entered, all entries will be set to "NONE."

AWU SRC (Automatic Wake-up Source)—Identifies the source that the called party will hear after the wake-up call has been answered.
Enter: MOH—Music-on-Hold.
VCE—Preprogrammed digitized voice announcement.
NONE—Silence.

AWU POR (Automatic Wake-up)—Identifies the output port that the system will use to send automatic wake-up verification information.
Enter: SMDR, TTY, or NONE.

MW POR (Message Waiting)—Identifies the output port that the system will use to send message waiting verification information.
Enter: SMDR, TTY, or NONE.

MR POR (Message Registration)—Identifies the output port that the system will use to send message registration information.
Enter: SMDR, TTY, or NONE.

RMS (Room Status Audit)—Identifies the output port that the system will use to send Room Status Audit information.
Enter: SMDR, TTY, or NONE.

TABLE 13-1

Procedure — Lodging/Health Care Features Data Block

Authorization Procedure must be completed. If an OK response is received, proceed as follows:

ITEM	PROMPT	USER ENTRY	NOTE
	OK	DHMF	
– DISK LOADING –			
	REQ	NEW, CHG, OUT	1
Automatic Wake-up Source	AWU SRC	MOH, VCE, or NONE (NONE)	2
Automatic Wake-up	AWU POR	SMDR, TTY, or NONE (NONE)	
Message Waiting	MW POR	SMDR, TTY, or NONE (NONE)	
Message Registration	MR POR	SMDR, TTY, or NONE (NONE)	
Room Status Audit	RMS	SMDR, TTY, or NONE (NONE)	

Default values are noted in parentheses ( ).

NOTES:

1. *"OUT" sets all entries to "NONE."*
2. *MOH = Music-on-Hold source.*
   VCE = Preprogrammed digitized voice announcement.
3. CTRL X = *Ignore line entered.*
   CTRL H = *Backspace.*
   DEL = *Stop printing and return to REQ.*
   DEL DEL = *Exit program.*

Error Codes

Program Name: Lodging/Health Care Features Data Block (DHMF)	
Error Code	**Meaning**
ERHMF 00	The input data was erased because the program was aborted during a NEW entry.
ERHMF 01	The input DN conflicts with an existing DN.

2. Print Lodging/Health Care Features Data Block (Table 13-2)

2.01 To use the Print Lodging/Health Care Features Data Block (**PHMF Program**):

- Perform the Authorization Procedure (Level 1, 2, or 3).
  Enter: PHMF (in response to the OK prompt).
- When an REQ prompt is received after the program is loaded:
  Enter: PRT.
- The Lodging/Health Care Features Data Block will be output, with features listed in the order that they were input in the **DHMF Program**.

TABLE 13-2

Procedure — Print Lodging/Health Care Features Data Block

Authorization Procedure must be completed. If an OK response is received, proceed as follows:

ITEM	PROMPT	USER ENTRY	NOTE
	OK	PHMF	
– DISK LOADING –			
	REQ	PRT	1
– EXECUTE –			
	REQ		1

NOTES:

1. *The only response possible is: PRT = Outputs Lodging/Health Care Features Data Block.*
2. CTRL X = *Ignore line entered.*
   CTRL H = *Backspace.*
   DEL = *Stop printing and return to REQ.*
   DEL DEL = *Exit program.*

3. Message Registration Data Block (Table 13-3)

3.01 The Message Registration Data Block (**DMRD Program**) defines all parameters for the Message Registration feature.

REQ (Request)—Indicates that the program has loaded. Two responses are possible:
CHG—To change an existing Data Block.
OUT—To delete an existing Data Block.

ICC (Interchangeable Codes)—A "Y" informs the system that interchangeable codes are used. These are office codes that have 0 or 1 as the second digit (N0/1X format). Area codes will be identified as the three digits following the DDD prefix. Office codes will be identified as the first three digits when a DDD prefix is not dialed (see DDP prompt).
Enter: Y or N.

DDP (Direct Distance Dialing Prefix)—Defines the Direct Distance Dialing (DDD) prefix in the Numbering Plan Area (NPA). If ICC is "Y," then N0/1X and NXX become interchangeable, enabling area codes and office codes to have 0 or 1 as their second digit. In this case, the DDP is used to differentiate between the two code types (see example). If the ICC response is "N", then calls will be made using the normal NPA formula of N0/1X and NNX.
Enter: 1, 2, or 3 digits or NONE.

Example: If ICC is "Y" and the DDP is programmed as 1, then the dialed number 209-1234 is recognized as a call within the home area code, while the dialed number 1-209-555-1234 is recognized as a call outside the home area code. If ICC is "N", this dialing plan is not used.

HAC (Home Area Code)—Defines the area code in which the system is operating. A home area code is also used to analyze dialed numbers which do not contain an area code. Data entered here will appear in the Toll Restriction Data Block (**DTOL Program**, PAR table, HAC prompt).
Enter: Area Code (N0/1X).

SVT (Supervision Time)—Defines the time allowed for a call to be connected before the First Billing Interval begins. This timer will start when the system accesses a trunk during an outgoing local call.
Enter: 0 ~ 120 (time in seconds).

TN1-TN5 (Rate Tables 1 ~ 5)—These prompts require no user entry. They will be followed by prompts which request parameters for the operation of the Message Registration features.

FBI (First Billing Interval)—Defines the interval time for the first billing interval.
Enter: 1 ~ 180 (time in seconds).

FBU (First Billing Unit)—Defines the number of billing units per first billing interval.
Enter: 0 ~ 100.

IBI (Incremental Billing Interval)—Defines the interval time for each incremental billing interval.
Enter: 1 ~ 180 (time in seconds).

IBU (Incremental Billing Units)—Defines the number of billing units per incremental billing interval.
Enter: 0 ~ 100.

CST (Unit Cost)—Defines the cost per each billing unit.
Enter: 1 ~ 500 (cost in cents).

OCA (Office Codes-Add)—Indicates the office codes that are to be added to the office code table and defines the calls that are to be billed according to one of the five Rate Tables. Office codes may be added either by using single 3-digit codes or by using 4-digit range codes.
Enter: NXXX NXX NXXX etc.

OCD (Office Codes-Delete)—Indicates the office codes that are to be deleted from the office code table. Office codes may be deleted either by using single 3-digit codes or by using 4-digit range codes.
Enter: NXXX NXX NXXX etc.

NOTE:
N = 2 ~ 9, X = 0 ~ 9.

RANGES EXAMPLE:	
4-digit Format	**Office Codes**
2209	220 ~ 229
2316	231 ~ 236
2478	247 ~ 248

TABLE 13-3

Procedure — Message Registration Data Block

Authorization Procedure must be completed. If an OK response is received, proceed as follows:

ITEM	PROMPT	USER ENTRY	NOTE
	OK	DMRD	
– DISK LOADING –			
	REQ	CHG, OUT	
Interchangeable Code?	ICC	Y or N (N)	
DDD Prefix	DDP	1 ~ 3 digits or NONE (NONE)	
Home Area Code	HAC	N0/1X (NONE)	1
Supervision Time	SVT	0 ~ 120 (time in seconds) (NONE)	
Rate Table #1	TN1		2
First Billing Interval	FBI	1 ~ 180 (time in seconds) (NONE)	
First Billing Unit	FBU	0 ~ 100 (NONE)	
Incremental Billing Interval	IBI	1 ~ 180 (time in seconds) (NONE)	
Incremental Billing Units	IBU	0 ~ 100 (NONE)	
Unit Cost	CST	1 ~ 500 (cost in cents) (NONE)	
Office Codes — Add	OCA	NXX or NXXX	3
Office Codes — Delete	OCD	NXX or NXXX	3 & 4

Default values are noted in parentheses ( ).

(continued)

NOTES:

1. *N = 2 ~ 9, X = 0 ~ 9.*
2. *This Rate Table will be followed by four other Rate Tables with the same prompts (FBI ~ OCD).*
3. *A maximum of 800 3-digit numbers (in the format NXX [N = 2 ~ 9, X = 0 ~ 9]) is permitted. Ranges are possible (7309 = 730 ~ 739).*
4. *Rate Table 5 contains all office codes. As office codes are **added** to any Rate Table 1 ~ 4, they are automatically **deleted** from Rate Table 5. If an office code is **deleted** from any Rate Table 1 ~ 4, it is automatically **returned to** Rate Table 5.*
5. CTRL X = *Ignore line entered.*
   CTRL H = *Backspace.*
   DEL = *Stop printing and return to REQ.*
   DEL DEL = *Exit program.*

TABLE 13-3 (continued)

Error Codes

Program Name: Message Registration Data Block (DMRD)	
Error Code	**Meaning**
ERMRD 00	Numeric error (0 ~ 9).
ERMRD 01	Area Code (N0/1X) is out of range (N = 2 ~ 9, X = 0 ~ 9).
ERMRD 02	Supervision Time is out of range (0 ~ 120).
ERMRD 03	Billing Interval is out of range (1 ~ 180).
ERMRD 04	Billing Unit is beyond time (0 ~ 100).
ERMRD 05	Unit Cost is beyond limit (1 ~ 500).
ERMRD 06	Office Code (NXX) is out of range (N = 2 ~ 9, X = 0 ~ 9).
ERMRD 07	The number of Office Codes exceeds the maximum (800).
ERMRD 08	The input data was erased because the program was aborted during a NEW entry.
ERMRD 10	MRD data does not exist (REQ = CHG, OUT).

4. Print Message Registration Data Block (Table 13-4)

4.01 To use the Message Registration Data Block (**PMRD Program**):

- Perform the Authorization Procedure (Level 1, 2, or 3).
  Enter: PMRD (in response to the OK prompt).
- When an REQ prompt is received after the program is loaded:
  Enter: One of the following commands:

MRDALL—All Message Registration Data will be output. There may be a delay in the output after the OCA prompt.

MRDPAR—The system will output a partial list of the Message Registration Data Block (ICC, DDP, HAC, and SVT).

RTNPAR—The system will output a partial list of the Message Registration Data Block (FBI, FBU, IBI, IBU, and CST for Rate Tables 1 ~ 5).

RTNALL—The system will output all the data from the Rate Tables 1 ~ 5 (FBI, FBU, IBI, IBU, CST, and OCA). There may be a delay in the output after the OCA prompt.

TABLE 13-4

Procedure — Print Message Registration Data Block

Authorization Procedure must be completed. If an OK response is received, proceed as follows:

ITEM	PROMPT	USER ENTRY	NOTE
	OK	PMRD	
– DISK LOADING –			
	REQ		1
– EXECUTE –			
	REQ		1

NOTES:

1. *The following responses are possible:*
   MRDALL = Outputs all Message Registration Data. There may be a delay in the output after the OCA prompt.
   MRDPAR = Outputs a partial list of the Message Registration Data Block (ICC, DDP, HAC, and SVT).
   RTNPAR = Outputs a partial list of the Message Registration Data Block (FBI, FBU, IBI, IBU, and CST for Rate Tables 1 ~ 5).
   RTNALL = Outputs all the data from Rate Tables 1 ~ 5 (FBI, FBU, IBI, IBU, CST, and OCA). There may be a delay in the output after the OCA prompt.
2. CTRL X = *Ignore line entered.*
   CTRL H = *Backspace.*
   DEL = *Stop printing and return to REQ.*
   DEL DEL = *Exit program.*

CHAPTER 14

SPEED DIAL LIST DATA

1. Speed Dial List Data Block (Table 14-1)

1.01 The Speed Dial List Data Block (**DSDL Program**) contains all numbers stored on the 90-number Speed Dial - System list and the 50 10-number Speed Dial - Station lists.

1.02 The **DSDL Program** allows initial storage or changes to any speed dial list from the maintenance terminal. Data is entered as follows:

REQ (Request)—Indicates that the program has loaded. Two responses are possible:
CHG—To alter an existing or to enter a new Data Block.
OUT—To delete an existing Data Block.

LNO (List Number)—The number of the list to be changed or deleted.
Enter: 00 (for System List) or
01 ~ 50 (for Station List).

NOTE:
If the OUT command was entered in response to REQ above, then no other data is required.

STR (Store Number)—This prompt requests the number to be stored.
Enter: Address code, space, and number in the following format:
Example: 0 9*NPANNXXXXX
1 9*NPANNXXXXX

NOTE:
In these examples, 9 is a trunk access code. Therefore, a "" is entered to cause a 3-second pause for dial tone delay. The "*" is counted as one of the 16 allowable digits.*

TABLE 14-1

Procedure — Speed Dial List Data Block

Authorization Procedure must be completed. If an OK response is received, proceed as follows.

ITEM	PROMPT	USER ENTRY	NOTE
	OK	DSDL	
	– DISK LOADING –		
	REQ	CHG, OUT	
List Number	LNO	XX	1
Store Number	STR	0 9* NPANN XXXXX	2 & 3
	STR	1 9* NPANN XXXXX	
	STR	2 9* NPANN XXXXX	
		DEL	4
	REQ	Repeat program, if necessary.	

NOTES:

1. *XX = List number.*
   00 = System List (90 numbers maximum: 10 ~ 99).
   01 ~ 50 = Station Lists (10 numbers each maximum: 0 ~ 9).
2. *Input procedure is: Address Code + [space] + Access Code + Pause + DN. For example: 1 9*NPANNXXXX.*
3. *Stored numbers may be any length between 1 and 16 digits; * enters a 3-second pause and is counted as one of the 16 digits.*
4. *No further prompt will be given until* DEL *is entered.*
5. CTRL X = *Ignore line entered.*
   CTRL H = *Backspace.*
   DEL = *Stop printing and return to REQ.*
   DEL DEL = *Exit program.*

Error Codes

Program Name: Standard Telephone Data Block (DSTT)	
Error Code	**Meaning**
ERSDL 00	The input list number is out of range (0 ~ 50 are allowed).
ERSDL 01	The address code of the system list is out or range (10 ~ 99 are allowed).
ERSDL 02	The address code of the station list is out of range (0 ~ 9 are allowed).
ERSDL 03	Invalid DN (1 ~ 16 digits are allowed).

2. Print Speed Dial List Data Block (Table 14-2)

2.01 To use the Print Speed Dial List Data Block (**PSDL Program**):

- Perform the Authorization Procedure (Level 1, 2, or 3).
  Enter: PSDL (in response to the OK prompt).
- When the REQ prompt is received after the program is loaded:
  Enter one of the following commands:

ALL—All of the Speed Dial lists will be output.

SYST—System Speed Dial list will be output.

LSTXX—Station Speed Dial list XX will be output.

NOTE:
There are 50 Station Speed Dial Lists (LST01 ~ LST50), each of which may have up to ten numbers (0 ~ 9).

The output format is as follows:

```
REQ     LST06
LNO     06
SDC     L002
SDU     L003  L010
STR     00  9*7147305000
        01  9*9142731750
        02  NONE
        03  "
        ~
        09  "
```

TABLE 14-2

Procedure — Print Speed Dial List Data Block
Authorization Procedure must be completed. If an OK response is received, proceed as follows:

ITEM	PROMPT	USER ENTRY	NOTE
	OK	PSDL	
– DISK LOADING –			
	REQ		1
– EXECUTE –			
	REQ		1

NOTES:
1. *The following responses are possible:*
   ALL = *Outputs all Speed Dial List Data Blocks.*
   SYST = *Outputs System Speed Dial List Data Block.*
   LSTXX = *Outputs Station Speed Dial List XX Data Blocks.*
2. CTRL X = *Ignore line entered.*
   CTRL H = *Backspace.*
   DEL = *Stop printing and return to REQ.*
   DEL DEL = *Exit program.*

Error Codes

Program Name: Print Speed Dial List (PSDL)	
Error Code	**Meaning**
ERPST 00	The list number is out of range (0 ~ 50 is available).

CHAPTER 15

TRAFFIC MEASUREMENT DATA

1. Traffic Measurement Data Block (Table 15-1)

1.01 The Traffic Measurement Data Block (**DTRF Program**) defines the parameters that control the Traffic Measurement feature. Data is entered as follows:

REQ (Request)—Indicates that the program has loaded. Four responses are possible:
STT (Start Command)—Starts the record-keeping and reporting activity when SCH = CMD. (STT must be entered after each RPT request.)
RPT (Report Command)—A report will follow if record-keeping has been started with the STT command (see Table 15-1a for report format).
OUT (Out Command)—Deletes record-keeping and reports.
CHG (Change Command)—Establishes or alters the reporting parameters.

The next prompt for CHG input will be:

SYST. DATE MMDDYY (System Date)—Reports the date that is currently in memory and gives an opportunity for a change.
Enter: New date: MMDDYY or
CR (no change).

DOW (Day of Week)—Identifies the current day of the week for the system clock.
Enter: SUN, MON, TUE, WED, THU, FRI, SAT, or
CR (no change).

SYST. TIME HHMMSS (System Time)—Reports the time that is currently in memory and gives an opportunity for a change.
Enter: New time: HHMMSS (24-hour clock) or
CR (no change).

SCHXXX (Schedule of Reports)—Defines the schedule for reports; outputs the current data; and gives an opportunity for a change.
Enter: CMD—Report will occur only when the RPT command is given in response to REQ above.
30—Report will occur every 30 minutes, beginning at the time listed as STR (next prompt).
60—Same as above, but at 60-minute intervals.

NOTE:
Reports will continually be output at the specified time intervals unless TTY is disabled (OFF). Record-keeping will continue, but only the last time interval will be saved and reported when the TTY is enabled.

STR.DATE MMDDYY (Start Date)—Defines the start date for record-keeping and reporting, outputs current data, and gives an opportunity for a change.
Enter: Start Date: MMDDYY or
CR (no change).

STR.TIME HHMM (Start Time)—Defines the start time for record-keeping and reporting, outputs current data, and gives an opportunity for a change.
Enter: Start Time: HHMM or
CR (no change).

RPT (Report Parameters):

SYST	(System Data)
ATT0	(Attendant 0)
ATT1	(Attendant 1)
TGP00	(Trunk Group 00)
~	~
TGP15	(Trunk Group 15)

Selects those parameters that are to be recorded (see Table 15-1b). The current data (Y or N) is output for each parameter and an opportunity is given for a change.
Enter: Y or N (followed by a CR for each parameter).

TABLE 15-1

Procedure — Traffic Measurement Data Block

Authorization Procedure must be completed. If an OK response is received, proceed as follows:

ITEM	PROMPT	USER ENTRY	NOTE
	OK	DTRF	
	– DISK LOADING –		
	REQ	STT, RPT, OUT, CHG	1
System Date	SYST. DATE MMDDYY	MMDDYY or CR (MMDDYY)	2
Day of Week	DOW	SUN, MON, TUE, WED, THU, FRI, SAT (DOW)	3
System Time	SYST. TIME HHMMSS	HHMMSS or CR (HHMMSS)	4
Schedule	SCH -XXX-	30, 60, or CMD (NONE)	5
Start Date	STR. DATE MMDDYY	MMDDYY or CR (000000)	6
Start Time	STR. TIME HHMM	HHMM or CR (0000)	7
Report	RPT		
	SYST	Y or N (N)	8
	ATT0	Y or N (N)	8
	ATT1	Y or N (N)	8
	TGP00-TGP15	Y or N (N)	8

Default values are noted in parentheses ( ). *(continued)*

NOTES:

1. *STT = Start Command — used to initialize the program and to start the record-keeping reporting activity.*
   RPT = Report Command — if the program had been started previously, a report would follow. See Table 15-1a for format. (The RPT command stops record-keeping reporting activity. The STT command must be used to restart record-keeping reporting activity.)
   OUT = Out Command — used to stop reports.
   CHG = Change Command — used to alter reporting parameters.
2. *The system will output the date in its memory (Month, Day, Year). Any entry (MMDDYY) will overwrite the existing data. A CR = no change.*
3. *Enter the day of the week: SUN, MON, TUE, WED, THU, FRI, or SAT. A CR = no change.*
4. *The system will output the time in its memory (Hour, Minute, Second). An entry (HHMMSS) will overwrite the existing data. A CR = no change.*
5. *Schedule of Reports:*
   30 = Report every 30 minutes beginning at the time listed as STR.DATE (Note 6) and STR.TIME (Note 7).
   60 = Report every 60 minutes beginning at the time listed as STR.DATE (Note 6) and STR.TIME (Note7).
6. *Date that record-keeping and reporting should start. The system will output the date in its memory (Month, Day, Year). An entry (MMDDYY) will overwrite the existing data. A CR = no change.*
7. *The time that record-keeping and reporting should start. The system will output the time in its memory (Hour and Minute). An entry (HHMM) will overwrite the existing data. A CR = no change.*
8. *Enter Y or N, followed by a CR to select the parameters to be reported (see Table 15-1b).*
9. *CTRL X = Ignore line entered.*
   CTRL H = Backspace.
   DEL = Stop printing and return to REQ.
   DEL DEL = Exit program.

TABLE 15-1a
TRAFFIC MEASUREMENT REPORT FORMAT

ITEM	PROMPT	USER ENTRY
Authorization Procedure	OK	DTRF
– DISK LOADING –		
	REQ	RPT
	RPT FROM	MM DD YY
		HH MM SS
	TO	MM DD YY
		HH MM SS
	SYST	RCVR DLY 0000
	ATT 0	IN SVC 0000
		WK TIM 0000
		INC TRK 0000
		INC TIM 0000
		O CALL 0000
		LPS BSY 0000
		TTA 0000
		OVFL 0000
	ATT 1	(SAME AS ATT 0)
	TRUNKS	TGP 00*
		INC USE 0000
		INC CALL 0000
		O.G. USE 0000
		O.G. CALL 0000
		ATB 0000

*Trunk Groups 01 ~ 15 are reported in the same way as Group 00.

TABLE 15-1b
TRAFFIC MEASUREMENT PARAMETERS

GROUP	ITEM RECEIVED	TYPE OF MEASUREMENT
System	DTMF Receiver Delay (3 sec.)	Peg Count
Attendant #0	Time in Service	CCS
	Work Time	CCS
	Incoming Trunk Calls	Peg Count
	Time Servicing Incoming Calls	CCS
	Dial 0 Calls	Peg Count
	All Loops Busy	Peg Count
	Average Time to Answer	SEC
	Overflow	Peg Count
Attendant #1	(Same as Attendant #0)	
Trunks	Group 00* Incoming Usage	CCS
	Incoming Calls	Peg Count
	Outgoing Usage	CCS
	Outgoing Calls	Peg Count
	All Trunks Busy	Peg Count

*Trunk Groups 01 ~ 15 are reported in the same way as Group 00.

TABLE 15-1 (continued)

Error Codes

Program Name: Traffic Management (DTRF)	
Error Code	**Meaning**
ERTRF 01	The program has already been started. Either the start time has been reached or STT was entered previously (REQ = STT).
ERTRF 02	Invalid response. STT or RPS was entered in response to REQ, but the SCH entry is 30, 60, or NONE.
ERTRF 03	RPT was entered in response to REQ, but the program has not been started (to correct start time and date, enter STT).

CHAPTER 16

ALPHANUMERIC MESSAGING DATA

1. Alphanumeric Message Data Block (Table 16-1)

1.01 The Alphanumeric Message Data Block (**DMSG Program**) changes system messages that can be left on 6000-series electronic/1000-series digital LCD telephones (five messages are initialized).

Initialized Messages:

Message Number	Message
0	OUT TO LUNCH
1	IN A MEETING
2	CALL
3	BACK AT
4	RETURN ON

REQ (Request)—Indicates that the program has loaded. The only response possible is CHG.

MSG (Message)—Assigns the ten system alphanumeric messages.
Enter:

1) The number of the message to be defined. The system will automatically enter a space after the number. Messages are numbered 0 ~ 9. Following the message number and space, any existing message will be output. Type the new message (the existing message will be replaced). NONE deletes any existing message but does not add a new one.

2) The available message characters are: 0 ~ 9, A ~ Z, [space], :, -, ?, +, /. Messages can be up to 16 characters in length.

TABLE 16-1

Procedure — Alphanumeric Message Data Block
Authorization Procedure must be completed. If an OK response is received, proceed as follows:

ITEM	PROMPT	USER ENTRY	NOTE
	OK	DMSG	
– DISK LOADING –			
	REQ	CHG	
Message	REQ	Message Number (0 ~ 9) + [space] + Message or NONE	1 & 2

NOTES:
1. *The system will output a space after the MSG number is entered, followed by an existing message (if no message exists, then this will remain blank) and another space. Enter the new message or NONE (to delete the message).*
2. *The characters available for messages are 0 ~ 9, A ~ Z, [space], :, -, ?, +, /.*
3. CTRL X = *Ignore line entered.*
   CTRL H = *Backspace.*
   DEL = *Stop printing and return to REQ.*
   DEL DEL = *Exit program.*

Error Codes

Program Name: Alphanumeric Message Data Block (DMSG)	
Error Code	**Meaning**
ERMSG 00	Message is too long (maximum: 16).
ERMSG 01	Message can only use: 0 ~ 9, A ~ Z, [space], :, -, ?, +, /.

2. Print Alphanumeric Message Data Block (Table 16-2)

2.01 To use the Print Alphanumeric Message Data Block (**PMSG Program**):

- Perform the Authorization Procedure (Level 1, 2, or 3).
  Enter: PMSG (in response to the OK prompt).
- When the REQ prompt is received after the program is loaded:
  Enter: One of the following commands:

ALL—The system will output all messages in the system (0 ~ 9).

MSGX—Message X will be output.
X = 0 ~ 9.

TABLE 16-2

Procedure — Print Alphanumeric Message Data Block
Authorization Procedure must be completed. If an OK response is received, proceed as follows:

ITEM	PROMPT	USER ENTRY	NOTE
	OK	PMSG	
– DISK LOADING –			
	REQ		1

NOTES:

1. *The following responses are possible:*
   ALL = *Outputs all messages.*
   MSG X = *Outputs message X.*
2. CTRL X = *Ignore line entered.*
   CTRL H = *Backspace.*
   DEL = *Stop printing and return to REQ.*
   DEL DEL = *Exit program.*

CHAPTER 17

ACD DATA

1. ACD Data Block (Table 17-1)

1.01 The ACD Data Block (**DACM Program**) assigns the ACD application to the PERCEPTION system. A maximum of 16 ACD groups can be assigned to each system. Data for this program is entered as follows:

REQ (Request)—Indicates that the program has loaded. Three responses are possible:
NEW—To create a new Data Block.
CHG—To alter an existing Data Block.
OUT—To delete an existing Data Block.

AGNO (ACD Group Number)—Assigns one of the 16 ACD groups.
Enter: 0 ~ 15.

APNO (ACD Group Pilot Number)—Identifies the ACD Group pilot number. The system directs all incoming ACD calls to this pilot number.
Enter: XXXX = 1-, 2-, 3-, or 4-digit ACD Group pilot number.

AFSG (After-shift Group)—Indicates that the ACD group is in after-shift mode. In this mode, the system will route all incoming ACD calls to a predefined after-shift answering position. Each ACD group can be programmed with one after-shift answering position. To choose an eligible answering position, enter one of the following:
ATT—Attendant Console.
NNNN—Station DN, Hunt Group Pilot Number, or another ACD Group Pilot Number.
LNNX, TNNX—Announcement Machine Port Number.
NONE—UNA Bell.

NOTES:
1. *When an ACD call attempts to overflow to an ACD group which is in after-shift mode, the call will stay at the original ACD queue.*
2. *If an ACD call is forwarded from one after-shift group to another after-shift group, the call will be routed to an attendant instead of the predefined answering position. This is designed in order to prevent an infinite looping of call routing from happening.*

OVQT (Overall Queue Timer)—Supervises how long an incoming ACD call is supposed to be placed in a first-in-first-out queue, before it is recalled to an attendant position in the DAY mode and UNA in the NITE mode, defined for the ACD group. There is a one-second resolution time.
Enter: 0 ~ 600 (second), where 0 = minimum time-out (no time supervision).
600 = maximum time-out.

ANPT (Announcement Pattern)—Provides announcements and music to queuing ACD calls after a predetermined time interval. The system can be programmed to provide flexible announcement patterns, which can be individually assigned to each ACD group. In an ACD application where an annoucement device is connected to a trunk port (TNNX), calls coming in via loop start trunks that are not answered by the ACD agents will not route to the announcement device. These calls will route to the attendant console or UNA. However, TIE, CSA, DID, and ground trunks have disconnect supervision that supports the announcement device hooked up to TNNX, thereby allowing unanswered ACD calls to route to the announcement device. To program the Announcement Pattern, enter one or a combination of the following:

1) When the system prompts A1 (Announcement 1),
Enter: LNNX, TNNX, or NONE.
- LNNX and TNNX = Announcement Machine's port number.
- NN = Station PCB number, X = Circuit number.
- NN = Trunk PCB number, X = Circuit number.
- NONE = End.

2) At M1 (Music 1) prompt,
Enter: MOH, SLT, or NONE.
- MOH = Music-on-Hold.
- SLT = Silence.
- NONE = End.

3) At A2 (Announcement 2) prompt,
Enter: LNNX, TNNX, or NONE.

4) At M2 (Music 2) prompt,
Enter: MOH, SLT, or NONE.

5) At A3 (Announcement 3) prompt,
Enter: LNNX, TNNX, or NONE.

6) At M3 (Music 3) prompt,
Enter: MOH, SLT, or NONE.

NOTE:
The system will prompt you with A1 through M3 unless NONE is entered. When NONE is entered, the next prompt will be REPD. When A1 through A3 is programmed, REPD cannot be NONE. It must be an AX ... entry.

REPD (Repeat Disposition)—Provides the system with the capability to repeat the announcement pattern. However, it is not necessary to repeat the whole pattern. For example, by entering **A2 M3**, the system can be programmed to just repeat Announcement 2 through Music 3 until a call departs from queue. By entering **A1 [space] M2**, the system will repeat just Announcement 1 and Music 2 until a call departs from queue.

Enter: AX or MX, AX MX, AX [space] MX (X = 1 ~ 3), or NONE.

NOTE:
When an AX entry is made, it must be followed by an MX entry (AX alone is not allowed). The MX entry must be programmed as either MOH or SLT.

OVFD (Overflow Disposition)—Allows the ACD calls waiting in queue to be connected to one of the overflow destinations. The system periodically "looks ahead" so that calls will immediately be routed to the first-available overflow destination. (Any ACD group can be designated as an overflow group for any number of other ACD groups.) Each ACD group queue is associated with an overflow threshold that governs the disposition (timing) of calls to be overflowed. To program the overflow disposition (when to begin overflow of calls),

Enter: RBT = Overflow at the end of the time interval before Announcement 1 is connected.
M1 = Overflow at the end of Music 1 time interval.
M2 = Overflow at the end of Music 2 time interval.
M3 = Overflow at the end of Music 3 time interval.
NONE = No overflow

NOTE:
Continuous look-ahead is provided when there are no announcement ports. When announcement ports are programmed, look-ahead occurs at the end of MOH.

OVFG (Overflow Group)—Designates an overflow destination for an ACD group.

Enter: ATT, NNNN, UNA, LNNX/TNNX, or NONE

- ATT = Attendant Console.
- NNNN = Station DN, Master Distributed Hunt Group pilot number, or another ACD Group pilot number.
- UNA = UNA bell.
- LNNX/TNNX = Announcement Machine's port number.
- NONE = No overflow.

When overflowing to a station or trunk port, they **CANNOT** be the same ports that are used for the Announcement Patterns (prompts A1, A2, and A3). It must be a separate port. Criteria for trunk ports includes:

- EAM and/or GRD signaling
- Disconnect Supervision
- Answer Supervision
- First Party Release

DID trunk ports are not allowed to be used as overflow destinations.

RBTT (Ring Back Tone Timer)—Indicates the length of time interval before the system connects queuing ACD calls to the first announcement.

Enter: 0 ~ 120 (second).

MUT1 (Music 1 Timer)—Indicates the connection time of queuing ACD calls to music source 1.
Enter: 0 ~ 255 (second).

MUT2 (Music 2 Timer)—Indicates the connection time of queuing ACD calls to music source 2.
Enter: 0 ~ 255 (second).

MUT3 (Music 3 Timer)—Indicates the connection time of queuing ACD calls to music source 3.
Enter: 0 ~ 255 (second).

ALGE (Alarm Generation)—Enables the system to trigger an audible alarm to the supervisor position, when certain predefined thresholds (for example, queue size, queue waiting time) are exceeded. The alarm will remain on until the supervisor presses the MONITOR button.
Enter: 0,1, 2, or NONE.

NOTE:
One, or a combination of two of the following criteria can be selected to trigger the alarm:
0 = Queue size is greater than the number programmed in ANQ0.
1 = Number of calls exceeding call waiting alarm timer 1 (CAT1) is greater than the number of calls programmed in ANQ1.
2 = Number of calls exceeding call waiting alarm timer 2 (CAT2) is greater than the number of calls programmed in ANQ2.

ANQ0 (Alarm: Number of Queue 0)—Indicates the queue size threshold that has to be exceeded before an alarm is triggered.
Enter: Number of calls to determine queue size.

CAT1 (Call Waiting Alarm Timer 1)—Defines the call waiting timer 1 threshold that has to time out before an alarm is triggered (sets the timer for ANQ1).
Enter: 0 ~ 255 (second).

ANQ1 (Alarm: Number of Queue 1)—Indicates the queue size threshold, after call waiting timer 1 expires, that has to be exceeded to trigger an alarm.
Enter: Number of calls to determine queue size.

CAT2 (Call Waiting Alarm Timer 2)—Defines the call waiting timer 2 threshold that has to time out before an alarm is triggered (sets the timer for ANQ2).
Enter: 0 ~ 600 (second).

ANQ2 (Alarm: Number of Queue 2)—Indicates the queue size threshold, after call waiting timer 2 expires, that has to be exceeded to trigger an alarm.
Enter: Number of calls to determine queue size.

NOTES:
1. *CAT1 and ANQ1 work together.*
2. *CAT2 and ANQ2 work together.*

ALGT (Alarm Guard Timer)—Provides the system with the capability to **NOT** trigger a new alarm, until the alarm guard timer expires, when a current alarm is being sounded and processed at an ACD group supervisor position.
Enter: 0 ~ 30 (minute).

ASPS (Supervisor Password)—Defines a supervisor's password used to log in to and log out of the ACD group for monitoring purposes.
Enter: XXXX = 4-digit number.

NOTE:
The supervisor's password must be four digits long.

ACWT (After Call Work Time)—Indicates the length of time that an ACD agent is in After Call Work mode, after disconnecting from an ACD call. The agent position remains in this mode until the predefined After Call Work Time expires. During this time the agent position is not available for any incoming ACD calls. There is a one-second resolution time.
Enter: 0 ~ 255 (second).

AALN (ACD Agent Line Number)—Indicates an ACD agent's line number, which is also assigned in the DEKT Data Block.
Enter: XXX ... XXX (XXX = 0 ~ 127) in response to the A prompt.
XXX ... XXX (XXX = 0 ~ 127) in response to the D prompt.

TABLE 17-1

Procedure—ACD Data Block

Authorization Procedure must be completed. If an OK response is received, proceed as follows:

ITEM	PROMPT	USER ENTRY	NOTE
	OK	DACM	
– DISK LOADING –			
	REQ	NEW, CHG, OUT	
ACD Group Number	AGNO	0 ~ 15	1
ACD Group Pilot Number	APNO	XXXX	2
After-shift Group	AFSG	ATT/NNNN/TNNX, LNNX/NONE	3
Overall Queue Timer	OVQT	0 ~ 600 (second)	4
Announcement Pattern	ANPT A1 M1 A2 M2 A3 M3	LNNX, TNNX, NONE MOH, SLT, NONE LNNX, TNNX, NONE MOH, SLT, NONE LNNX, TNNX, NONE MOH, SLT, NONE	5, 6
Repeat Disposition	REPD	AX [space] MX (X = 1 ~ 3), NONE	7
Overflow Disposition	OVFD	RBT/M1/M2/M3/NONE	8
Overflow Group	OVFG	ATT/NNNN/UNA/LNNX/TNNX/NONE	9
Ring Back Tone Timer	RBTT	0 ~ 120 (second)	10
Music 1 Timer	MUT1	0 ~ 255 (second)	11
Music 2 Timer	MUT2	0 ~ 255 (second)	12
Music 3 Timer	MUT3	0 ~ 255 (second)	13
Alarm Generation	ALGE	0, 1, 2, NONE	14
Alarm: Number of Queue 0	ANQ0	Number	14
Call Waiting Alarm Timer 1	CAT1	0 ~ 255 (second)	14
Alarm: Number of Queue 1	ANQ1	Number	14
Call Waiting Alarm Timer 2	CAT2	0 ~ 600 (second)	14
Alarm: Number of Queue 2	ANQ2	Number	14
Alarm Guard Timer	ALGT	0 ~ 30 (minute)	15
Supervisor Password	ASPS	XXXX	16
After Call Work Time	ACWT	0 ~ 255 (second)	17
ACD Agent Line Number	AALN A D	 XXX ... XXX XXX ... XXX	18
ACD/MIS Agent's ID Number & Name	AAID A D	 XXXX#MMMMMMMM ... XXXX#MMMMMMMM XXXX ... XXXX	19

(continued)

NOTES:

1. *A maximum of 16 ACD groups may be assigned to each system.*
2. *XXXX = 1-, 2-, 3-, or 4-digit ACD Group pilot number.*
3. *The eligible answering positions are:*
   ATT = Attendant Console.
   NNNN = Station DN, Hunt Group pilot number, or Another ACD Group pilot number.
   LNNX, TNNX = Announcement machine port number.
   NONE = UNA bell.
4. *This is an overall queue timer.*
5. *LNNX and TNNX = Announcement machine's port number.*
   NN = Station PCB number, X = circuit number.
   NN = Trunk PCB number, X = circuit number.
   MOH = Music-on-Hold.
   SLT = Silence.
   NONE = End.
6. *Unanswered ACD calls that come in via loop start trunks will not route to an announcement device, if the device is connected to a trunk port (TNNX). These calls will route to the attendant console or UNA. Unanswered ACD calls that come in via TIE, CSA, DID, and ground trunks will route to the announcement device that is connected to TNNX, because these trunks have disconnect supervision that supports this connection.*
7. *If **A2M3** is entered, the system repeats announcement A2 through music M3.*
8. *The following describes the Overflow Disposition:*
   RBT = At the end of the time interval, before Announcement 1 is connected.
   M1 = At the end of Music 1 time interval.
   M2 = At the end of Music 2 time interval.
   M3 = At the end of Music 3 time interval.
9. *The following describes the Overflow Group:*
   ATT = Attendant Console.
   NNNN = Station DN, External DN, Master Distributed Hunt Group pilot number, or another ACD Group pilot number.
   UNA = UNA bell.
   LNNX/TNNX = Station/Trunk Announcement Machine's port number.
   NONE = No overflow.
10. *The time interval before connecting the ACD call to the first announcement.*
11. *The connection time for the ACD call in queue to music source 1.*
12. *The connection time for the ACD call in queue to music source 2.*
13. *The connection time for the ACD call in queue to music source 3.*
14. *To trigger an alarm, one or a combination of two of the following criteria can be selected:*
    0 = Queue size is greater than the number entered here.
    1 = Number of calls exceeding call waiting alarm timer 1 is greater than the number entered here.
    2 = Number of calls exceeding call waiting alarm timer 2 is greater than the number entered here.
15. *New alarm will not be triggered until the alarm guard timer expires.*
16. *The Supervisor (Log-in) password is 4 digits long.*
17. *This is a time which an agent is not available for ACD calls.*
18. *XXX is an agent's line number that is also assigned in the DEKT Data Block.*
19. *XXXX is an agent's ID code (Maximum = 4 digits).*
    MMMMMMMM is an agent's name, which is up to 8 digits long.
20. CTRL X = *Ignore line entered.*
    CTRL H = *Backspace.*
    DEL = *Stop printing and return to REQ.*
    DEL DEL = *Exit program.*

TABLE 17-1a
ACD DATA BLOCK ALLOWABLE ENTRIES
FOR ANNOUNCEMENT PORT, OVERFLOW AND AFTER-SHIFT DESTINATIONS

	A1 A2 A3	OVERFLOW	AFTER SHIFT
A1 A2 A3	X	O	O
OVERFLOW	O	X	O
AFTER SHIFT	O	X	X

Legend: X = Used 0 = Not Used

TABLE 17-1 (continued)
Error Codes

Program Name: ACD Data Block (DACM)	
Error Code	**Meaning**
ERAMD 00	The group has already been assigned (REQ = NEW).
ERAMD 01	The group is not assigned (REQ = CHG or OUT).
ERAMD 02	The input data was erased because the program was aborted during a NEW data entry.
ERAMD 03	The input data conflicts with an existing access code.
ERAMD 04	The input data is not assigned.
ERAMD 05	Invalid port number or the input trunk type is not allowed.
ERAMD 06	The last announcement pattern is not "Music."
ERAMD 07	The after-shift group does not exist.
ERAMD 08	The repeat pattern does not exist.
ERAMD 09	The overflow disposition does not exist.
ERAMD 10	The overflow group does not exist.
ERAMD 11	The agent line is busy.
ERAMD 12	The maximum number of agent line numbers has already been assigned (128).
ERAMD 13	The maximum number of agent ID numbers has already been assigned (256).
ERAMD 14	The input port has already been assigned to another kind of announcement port.
ERAMD 15	The announcement port is busy.
ERAMD 16	The input data has already been assigned.
ERAMD 17	The announcement port has already been assigned to its maximum number of appearances (16).
ERAMD 18	The input data is the agent's ID number.
ERAMD 19	The input DN is the private CO's DN.
ERAMD 20	The input port is not assigned in DEKT or DTRK data block.
ERAMD 21	The input port's DN is not assigned.
ERAMD 22	The input ACD pilot number has already been assigned to another ACD group's "After-shift Group," or "Overflow Destination."
ERAMD 23	The agent line number or agent's ID number is not assigned in the group.
ERAMD 24	The agent line number or agent's ID number is currently logged in.

AAID (ACD/MIS Agent ID Number and Name)— Indicates an ACD agent's ID number (maximum = 4 digits) and name (maximum = 8 digits).

Enter: XXXX#MMMMMMMM ... XXXX#MMMMMMMM (in response to the A prompt).
XXXX ... XXXX (in response to the D prompt).

NOTES:

1. *XXXX = Agent's ID, and MMMMMMMM = Agent's name.*
2. *When deleting, only the agent's ID number needs to be entered.*

IMPORTANT NOTE!

The MIS programming procedures are described in detail in the PERCEPTION$_{e\&ex}$ ACD/MIS Administrator's Manual.

2. Print ACD Data Block (Table 17-2)

2.01 To use the Print ACD Data Block (**PACM Program**):

- Perform the Authorization Procedure (Level 1, 2, or 3).
  Enter: PACM (in response to the OK prompt).
- After the program has loaded and the REQ prompt is received, enter one of the following commands:

ALL—All ACD Group Data Block will be output.

GRPXX—ACD Group XX Data Block will be output.

TABLE 17-2

Procedure—Print ACD Data Block
Authorization Procedure must be completed. If an OK response is received, proceed as follows:

ITEM	PROMPT	USER ENTRY	NOTE
	OK	PACM	
– DISK LOADING –			
	REQ		1
– EXECUTE –			
	REQ		1

NOTES:

1. *The following responses are possible:*
   ALL = *All ACD Group Data Block will be output.*
   GRPXX = *ACD Group XX Data Block will be output.*
2. CTRL X = *Ignore line entered.*
   CTRL H = *Backspace.*
   DEL = *Stop printing snd return to REQ.*
   DEL DEL = *Exit program.*

Error Codes

Program Name: Print ACD Data Block (PACM)	
Error Code	**Meaning**
ERPAM 00	The input group number is out of range.

CHAPTER 18

VERIFIABLE ACCOUNT CODES DATA

1. Verifiable Account Codes Data Block (Table 18-1)

1.01 If a station user is required (via the COS) to enter verifiable account codes, the Verifiable Account Codes Data Block (**DVAC Program**) enables the system to verify the account codes entered. The account code can be a 1- ~ 12-digit code, and it is output via the SMDR port as part of the SMDR data.

NOTE:
*DMDR's ACL **MUST** be programmed before the Verifiable Account Codes in the DVAC program will be operable.*

Data for this program is entered as follows:

REQ (Request)—Indicates that the program has loaded. CHG is the only possible response.

TYPE (Data Type)—Indicates the addition or deletion of verified account codes.
Enter: ACTA (to add codes), or ACTD (to delete codes).

ACL (Account Code Length)—Defines the length of the account code that is to be used, or indicates that no account code is to be used. (The ACL prompt appears only if TYPE = ACTA.)

NOTES:
1. *The Account Code Length (ACL) is defined in the **DMDR** (Station Message Detail Recording) **Program.***
2. *No entry to the ACL prompt is possible here. The system will print out the information from the ACL prompt in the **DMDR Program.***

A (Account Codes to Add)—Defines the account codes. (The A prompt appears only if TYPE = ACTA.)
Enter: 1- ~ 12-digit Account Codes (spaces between them) depending on digit length, as defined in the ACL of DMDR.

NOTE:
For ease of entry, Account Codes will automatically be distributed to the appropriate tables.

TABLE NO. (Table Number)—Indicates the table number that the account codes are to be deleted from. (The TABLE NO. prompt appears only if TYPE = ACTD.)
Enter: 0 ~ 14.

ACT—(TABLE #) (Account Number)—The Table Number (from the Table Number indicated in TABLE NO. entry) of the account code that is to be deleted (see Table 18-1a).

NOTE:
No entry to the ACT prompt is necessary. The system will print out the account codes from the entry at the TABLE NO. prompt.

D (Account Codes to Delete)—Defines the account codes (the D prompt appears only if TYPE = ACTD).
Enter: The number associated with each account code to be deleted.

TABLE 18-1

Procedure—Verifiable Account Codes Data Block

Authorization Procedure must be completed. If an OK response is received, proceed as follows:

ITEM	PROMPT	USER ENTRY	NOTE
	OK	DVAC	
– DISK LOADING –			
	REQ	CHG	
Account Code Add	TYPE	ACTA	
Account Code Length	ACL	No entry required	1
Account Codes to Add	A	1 ~ 12-digit Account Codes	2
Account Code Delete	TYPE	ACTD	
Table Number	TABLE NO.	0 ~ 14	3
Account Code Number	ACTX	No entry required	4
	D	1 ~ 4 digits	5

(continued)

NOTES:

1. *No entry is allowed here. This will be the same information from the ACL prompt in the **DMDR Program**.*
2. *You may add more than one account code. If you add more than one account code, put a space between each. The length of the account code must match the length specified in the ACL prompt.*
3. *There is a maximum of 15 table numbers. (Use PVAC: TBL ACL to identify which table a code is in.)*
4. *The system will print out the account codes that have already been programmed in the table entered in the TABLE NO. prompt.*
5. *Enter the corresponding number(s) of the account code(s) you wish to delete.*
6. CTRL X = *Ignore line entered.*
   CTRL H = *Backspace.*
   DEL = *Stop printing and return to REQ.*
   DEL DEL = *Exit program.*

TABLE 18-1a
NUMBER OF VERIFIABLE ACCOUNT CODES

ACL DIGIT LENGTH	12, 11	10, 9	8, 7	6, 5	4	3	2	1
NUMBER OF CODES	500	600	750	1000	1500	1000	100	10
NUMBER OF CODES PER TABLE	50	50	50	50	100	100	100	10
TABLE NUMBERS USED	0 - 9	0 - 11	0 - 14	0 - 19	0 - 14	0 - 9	0	0

TABLE 18-1 (continued)

Error Codes

Program Name: Verifiable Account Codes Data Block (DVAC)	
Error Code	**Meaning**
ERACT 00	The input number of digits is incorrect. Must conform with ACL.
ERACT 01	The account code has already been assigned.
ERACT 02	The maximum number of account codes has already been assigned.
ERACT 03	The input table number is out of range.
ERACT 04	(REQ = OUT). The verifiable account code table number is out of range.
ERACT 05	(REQ = OUT). The verifiable account code table number has already been deleted.
ERACT 06	The account code conflicts with an existing account code.
ERACT 07	The DVAC programmed is being accessed from more than one maintenance port (that is, TTY, ATT, and/or ATT EKT).
ERACT 08	The account code is not assigned.
ERACT 09	The digit of the account code is "NONE."

2. Print Verifiable Account Codes Data Block (Table 18-2)

2.01 To use the Print Verifiable Account Codes Data Block (**PVAC Program**):

- Perform the Authorization Procedure (Level 1, 2, or 3).
  Enter: PVAC (in response to the OK prompt).
- After the program has loaded and the REQ prompt is received, enter one of the following commands:

TBL ALL—All Table Numbers will be output.

TBL X—Table Number X will be output.

TBL X Y—Table Numbers X and Y will be output.

NOTES:
1. *Account Code Length shows the length of the account code that is used, or indicates that no account codes are used.*
2. *TABLE #/Account Number indicates the account code(s) (from the Table Number(s) indicated) that is being printed.*

TABLE 18-2

Procedure—Print Verifiable Account Codes Data Block
Authorization Procedure must be completed. If an OK response is received, proceed as follows:

ITEM	PROMPT	USER ENTRY	NOTE
	OK	PVAC	
– DISK LOADING –			
	REQ		1
– EXECUTE –			
	REQ		1

NOTES:
1. *The following responses are possible:*
   TBL ALL = All Table Numbers will be output.
   TBL X = Table Number X will be output.
   TBL X Y = Table Numbers X through Y will be output.
2. CTRL X = *Ignore line entered.*
   CTRL H = *Backspace.*
   DEL = *Stop printing and return to REQ.*
   DEL DEL = *Exit program.*

CHAPTER 19

MAINTENANCE PROCEDURES

1. General

1.01 The Maintenance Procedures assist with the administration and maintenance of the system.

1.02 Four programs are provided:

- Back-up Memory Check Entry Procedure—**DMYC**
- Data Dump—**DDMP**
- Electronic or Digital Telephone/Attendant Console Test—**TTRM**
- Peripheral Equipment Test—**TPER.**

1.03 The **DDMP** and **TTRM Programs** are available to users of Levels 1, 2, and 3, while the **DMYC** and **TPER Programs** require Level 1 or 2 authorization.

2. Backup Memory Check Entry Procedure (Table 19-1)

2.01 The **DMYC Program** checks the system's memory. To use the **DMYC Program**:

- Perform the Authorization Procedure (Level 1 or 2).
  Enter: DMYC (in response to the OK prompt).
- When an REQ prompt is received after the program is loaded:
  Enter: CHK.
- The system will respond with MYR CHK and the process will begin.

NOTES:

1. *This program MUST be run whenever the system is put into the Lodging/Health Care mode of operation.*
2. *The memory check will delete all data relating to Lodging/Health Care telephones (i.e., Room Status, Message Waiting, and Message Registration).*
3. *To clear data after an initialization is performed on the system, run the **DMYC Program**, and then from the attendant console perform a CFD clear (# 1 8) and MSG clear (# # 5). Then after 20 minutes, initialize the system, perform a DDMP and reload the system (power off and on). Be sure no additional call forwarding is set prior to the initialization and system reload.*

TABLE 19-1

Procedure — Backup Memory Check Entry Procedure
Authorization Procedure must be completed. If an OK response is received, proceed as follows:

ITEM	PROMPT	USER ENTRY	NOTE
	OK	DMYC	
– DISK LOADING –			
	REQ	CHK	1
Memory Check	MYR CHK		2
Memory Checked Out OK	DONE		
Memory Check Failed	ERROR		
	ADRS = XXXH		
	COL = XXH		

NOTES:

1. *Caution: Responding to this prompt will start the memory check and will delete all data relating to Lodging/Health Care telephones, (i.e., Room Status, Message Waiting, and Message Registration).*
2. *The system is performing a memory check. Wait for the next prompt before pressing any buttons.*
3. CTRL X = *Ignore line entered.*
   CTRL H = *Backspace.*
   DEL = *Stop printing and return to REQ.*
   DEL DEL = *Exit program.*

- The system will print DONE when the memory check is complete.
- If the memory check fails, the system will respond with:
  ERROR
  ADRS = XXXH.
  COL = XXH.
- The system must be **INITIALIZED** after running this program.

3. Data Dump Program (Table 19-2)

3.01 The **DDMP Program** transfers the contents of the system data memory to the disk for permanent storage.

3.02 Using this program has the same effect as responding "Y" to the SAV prompt that is given when a data input program is exited. The current data that is then residing in system memory will be written on the disk, thereby replacing any previously-recorded data.

3.03 It is possible, via the System Data Block, to specify the **DDMP Program** as a daily routine and to cause the data to be recorded daily. This enables the speed dialing information that has been entered by the attendant console or station user to be captured on the disk.

3.04 This program is also useful for updating a spare disk. To use the **DDMP Program** manually (refer to Table 19-2):

- Perform the Authorization Procedure (Level 1, 2, or 3).
  Enter: DDMP (in response to the OK prompt).
- The system will respond with DPG and then the dumping process will begin.
- The system will print DUN when the data transfer is complete.
- No other input is required.

TABLE 19-2

Procedure — Data Dump Program
Authorization Procedure must be completed. If an OK response is received, proceed as follows:

ITEM	PROMPT	USER ENTRY	NOTE
	OK	DDMP	
	DPG (Y/N)	Y or N	1
	DUN		2 & 3

NOTES:
1. *Enter Y to perform data dump. Enter N to abort.*
2. *Data dump is complete.*
3. *The system will automatically exit the program.*
4. CTRL X = *Ignore line entered.*
   CTRL H = *Backspace.*
   DEL = *Stop printing and return to REQ.*
   DEL DEL = *Exit program.*

4. Electronic or Digital Telephone/Attendant Console Test (Tables 19-3 ~ 19-4)

4.01 When the **TTRM Program** has been loaded, a test sequence can be performed at the Attendant Consoles and electronic/digital telephones. The test is designed to check all functions of the terminals in a time-efficient manner.

4.02 To use the **TTRM Program** (refer to Tables 19-3 and 19-4):

- Perform the Authorization Procedure (Level 1, 2, or 3).
  Enter: TTRM (in response to the OK prompt).
- REQ will be printed when the program has loaded.

4.03 Proceed to the electronic/digital telephone or console that is to be tested. The test is performed as follows:

1) Electronic/Digital Telephone:
   - Press the DN button to obtain dial tone.
   - Dial *TEK (*835) on the dialpad.
   - The system will respond by lighting all electronic telephone LEDs.
   - Operate the buttons and observe the responses in the sequence shown in Table 19-3.

2) Attendant Console:
   - Press the LPK button in order to obtain dial tone.
   - Dial *TAT (*828) on the dialpad.
   - The system will respond by lighting all BLF LEDs.
   - Operate the buttons and observe the responses in the sequence shown in Table 19-4.

3) When all electronic/digital telephones and console(s) have been tested, exit the program:
   Enter: DEL DEL.

TABLE 19-3

Procedure — Electronic/Digital Telephone Test Procedure

Authorization Procedure must be completed. If an OK response is received, proceed as follows:

ITEM	PROMPT	USER ENTRY	NOTE
	OK	TTRM	
– DISK LOADING –			
	REQ		1

NOTE:
The program is now active. Proceed to the electronic/digital telephone to be tested, go off-hook, and enter [*] T E K [#] 8 3 5 *) via the dialpad. Enter the following commands in sequence:*

ENTRY	ELECTRONIC TELEPHONE RESPONSE	ENTRY	ELECTRONIC TELEPHONE RESPONSE
[*] T E K	All LEDs = On	Button 2	LED 2 = On (1 = Off)
Handset off-hook	All LEDs = Flash (60 Hz)	Button 3	LED 3 = On (2 = Off)
Handset on-hook	All LEDs = Wink (120 Hz)	Button 4	LED 4 = On (3 = Off)
SPKR button on	All LEDs = Off	Button 5	LED 5 = On (4 = Off)
SPKR button off	All LEDs = I-hold	Button 6	LED 6 = On (5 = Off)
MIC button on[1]	All LEDs = Off	Button 7	LED 7 = On (6 = Off)
MIC button on[1]	All LEDs = I-use	Button 8	LED 8 = On (7 = Off)
CONF button on	All LEDs = Off	Button 9	LED 9 = On (8 = Off)
CONF button off	SPKR LED = On	Button 10	LED 10 = On (9 = Off)
HOLD button on/off	SPKR LED = Off	Button 11	LED 11 = On (10 = Off)
Dial 1	LED 0 = On	Button 12	LED 12 = On (11 = Off)
Dial 2	LED 1 = On (0 = Off)	Button 13	LED 13 = On (12 = Off)
Dial 3	LED 2 = On (1 = Off)	Button 14	LED 14 = On (13 = Off)
Dial 4	LED 3 = On (2 = Off)	Button 15	LED 15 = On (14 = Off)
Dial 5	LED 4 = On (3 = Off)	Button 16	LED 16 = On (15 = Off)
Dial 6	LED 5 = On (4 = Off)	Button 17	LED 17 = On (16 = Off)
Dial 7	LED 6 = On (5 = Off)	Button 18	LED 18 = On (17 = Off)
Dial 8	LED 7 = On (6 = Off)	Button 19	LED 19 = On (18 = Off)
Dial 9	LED 8 = On (7 = Off)	Handset off-hook	Dial tone on handset (19 = Off)
Dial 0	LED 9 = On (8 = Off)	Handset on-hook	Dial tone through speaker[2]
Dial *	All LEDs = On	SPKR button	Ringing through speaker[3]
Dial #	All LEDs = Off	SPKR button	Override tone through speaker
Button 0[1]	LED 0 = On	SPKR button	End of test, electronic/digital telephone idle
Button 1	LED 1 = On (0 = Off)		

(continued)

TABLE 19-3 (continued)

NOTES:

1. *The button strip test begins with the bottom button.*
2. *Check the bottom right-hand volume control on speakerphone electronic/digital telephones.*
3. *Check the upper right-hand volume control on speakerphone electronic/digital telephones.*
4. CTRL X = *Ignore line entered.*
   CTRL H = *Backspace.*
   DEL = *Stop printing and return to REQ.*
   DEL DEL = *Exit program.*

TABLE 19-4

Procedure — Attendant Console Test Procedure

Authorization Procedure must be completed. If an OK response is received, proceed as follows:

ITEM	PROMPT	USER ENTRY	NOTE
	OK	TTRM	
– DISK LOADING –			
	REQ		1

		ENTRY	CONSOLE RESPONSE				
I T A T	All BLF LEDs = On	EXCL SRC*	Associated LED = On, Others = Off				
BLF button	All BLF LEDs = Off	EXCL DEST*	Associated LED = On, Others = Off				
Dial 1	ICI TIE & STAT RING = On	VER/CRG*	Associated LED = On, Others = Off				
Dial 2	ICI CO & STAT BSY = On, Others = Off	OVERFLOW*	Associated LED = On, Others = Off				
Dial 3	ICI WAT & STAT FWD = On, Others = Off	CONF*	Associated LED = On, Others = Off				
Dial 4	ICI FX & STAT DND = On, Others = Off	BUZZ*	Associated LED = On, Others = Off				
Dial 5	ICI INT & STAT RST = On, Others = Off	SPARE*	Associated LED = On, Others = Off				
Dial 6	ICI RCL & STAT HNT = On, Others = Off	POS BSY*	Associated LED = On, Others = Off				
Dial 7	ICI OPR & STAT VCT = On, Others = Off	NITE*	Associated LED = On, Others = Off				
Dial 8	ICI TIM & STAT TLK = On, Others = Off	Dial 1	TGB 0 = On	SRC	COS	DEST = 1	**1
Dial 9	ICI SER = On, Others = Off	Dial 2	TGB 1 = On	—	—	12	**2
Dial 0	ICI HLD = On, Others = Off	Dial 3	TGB 2 = On	—	—	123	**3
Dial *	ICI LN1 = On, Others = Off	Dial 4	TGB 3 = On	—	1	234	**4
Dial #	ICI LN2 = On, Others = Off	Dial 5	TGB 4 = On	—	12	345	**5
RLS*	Associated LED = On, Others = Off	Dial 6	TGB 5 = On	1	23	456	**6
LPK1*	Associated LED = On, Others = Off	Dial 7	TGB 6 = On	12	34	567	**7
LPK2*	Associated LED = On, Others = Off	Dial 8	TGB 7 = On	123	45	678	**8
LPK3*	Associated LED = On, Others = Off	Dial 9	TGB 8 = On	888	88	888	**9
LPK4*	Associated LED = On, Others = Off	Dial 0	TGB 9 = On	Off	Off	Off	**0
PAGE*	Associated LED = On, Others = Off	Dial *	All LEDs = Off, busy tone via handset				
JOIN*	Associated LED = On, Others = Off	Dial #	Buzzer via speaker (check volume control)				
SP DIAL*	Associated LED = On, Others = Off	RLS SRC*	MIN ALM = On, Others = Off				
SER CALL*	Associated LED = On, Others = Off	RLS DEST*	MDR LED = On, Others = Off				
MSG*	Associated LED = On, Others = Off	DIS TOD*	CW LED = On, Others = Off				
HOLD*	All LEDs = Off	RLS*	End of test, Console = Night				

* = Button ** = BLF Indication

(continued)

TABLE 19-4 (continued)

NOTES:

1. *The program is now active. Proceed to the Attendant Console to be tested, press an LPK button, and enter* * T A T (*8 2 8) *via the dialpad. Enter the following commands in sequence:*
2. CTRL X = *Ignore line entered.*
   CTRL H = *Backspace.*
   DEL = *Stop printing and return to REQ.*
   DEL DEL = *Exit program.*

5. Peripheral Equipment Test (Table 19-5)

5.01 The **TPER Program** is designed to aid in fault location by disabling and enabling various PCBs and circuits. When a faulty circuit or PCB has been located, it is left disabled until it can be replaced in order to prevent it from interfering with normal system operation.

5.02 It is also possible, with the **TPER Program**, to determine the busy/idle status of any station, trunk, or DTMF receiver port. To use the **TPER Program** (refer to Table 19-5):

- Perform the Authorization Procedure (Level 1 or 2).
  Enter: TPER (in response to the OK prompt).
- REQ will be printed when the program has loaded.
  Enter: One of the following commands:

DSCDXXX—Disables PCB XXX regardless of busy/idle status (XXX = TXX, LXX, CXX, or RXX); lights PCB FALT LEDs, and returns the REQ prompt.

DSTKNNX—Disables trunk NNX if it is idle (NN = trunk PCB number, i.e., T01 = 01; X = circuit number on that PCB, i.e.,1 ~ 4), lights the FALT LED relating to that circuit (FALT #1 for circuits 1 & 2; FALT #2 for circuits 3 & 4), and returns the REQ prompt.

DSLCNNX—Disables station circuit NNX if it is idle (NN = station PCB number, i.e., L04 = 04; X = circuit number on that PCB, i.e., 1 ~ 8), lights the FALT LED relating to that circuit (FALT #1 for circuits 1 ~ 4; FALT #2 for circuits 5 ~ 8), and returns the REQ prompt.

ENCDXXX—Enables PCB XXX (XXX = TXX, LXX, CXX, or RXX), turns FALT LEDs off, and returns the REQ prompt.

ENTKNNX—Enables trunk NNX (NN = trunk PCB number; X = circuit number on that PCB), turns FALT LEDs off unless other circuit is still disabled, and returns the REQ prompt.

ENLCNNX—Enables station line circuit NNX (NN = station PCB number; X = circuit number on that PCB), turns FALT LEDs off unless the other circuits are still disabled, and returns the REQ prompt.

DSDSNNX—Disables DSS console circuit NNX (NN = PCB number; X = circuit number), lights the FALT LED relating to that circuit, and returns the REQ prompt.

ENDSNNX—Enables DSS console circuit NNX (NN = PCB number; X = circuit number), turns FALT LEDs off if all circuits are enabled, and returns the REQ prompt.

DSRCNNX—Disables DTMF receiver circuit 00X/01X if it is idle (R00 = basic cabinet /R01 = expansion cabinet; X = DTMF receiver circuit in that cabinet, 1 ~ 8), lights the FALT LED on the NPRU PCB relating to that circuit (FALT #1 for circuits 1 & 2; FALT #2 for circuits 3 & 4; FALT #3 for circuits 5 & 6; and FALT #4 for circuits 7 & 8), and returns the REQ prompt.

ENRCNNX—Enables DTMF receiver 00X/01X (00/01 = PCB number R00; X = circuit number in that cabinet, 1 ~ 8), turns the FALT LED off unless the other circuit is still disabled, and returns the REQ prompt.

DSCIXXX—Disables each circuit on the PCB as it becomes idle, lights the appropriate FALT LED as circuits are disabled, and returns the REQ prompt.

LIPS—Prints out a list of all system ports (DTMF receivers, DSS consoles, stations, and trunks) that are idle at the time that the command is entered, and returns the REQ prompt when the printout is complete.

LBPS—Prints out a list of all system ports (DTMF receivers, DSS consoles, stations, and trunks) that are busy at the time that the command is entered, and returns the REQ prompt when the printout is complete.

LDPS—Prints out a list of all system ports (DTMF receivers, DSS consoles, stations, and trunks) that are in a disabled state at the time that the command is entered, and returns the REQ prompt when the printout is complete.

STLCNNX—Gives the status of station line circuit NNX (NN = station line PCB number; X = circuit number on that PCB). The output format will be a combination of two items. (See Notes 1 and 2.)

Station Type[1]	Status[2]
EKT	BSY
ATT	DIS TTY
UNEQ	DIS CBL
UNAS	DIS TLD
Example:	
REQ	STLC002
	CKT 2 EKT IDL

- Returns the REQ prompt when the printout is complete.

STTKNNX—Gives the status of trunk circuit NNX (NN = trunk PCB number; X = circuit number on that PCB). The output format will be a combination of two items. (See Notes 1 and 2.)

Trunk Type[1]	Status[2]
CO	IDL
FX	BSY
WAT	DIS TTY
TIE	DIS TLD
CCSA	
UNEQ	
UNAS	
Example:	
REQ	STTK001
	CKT 1 TIE IDL

- Returns the REQ prompt when the printout is complete.

STDSNNX—Gives the status of DSS circuit NNX (NN = PCB number; X = circuit number). The output format will be IDL, BSY, DIS TTY, DIS CBL, DIS TLD. (See Notes 1 and 2.)

Example:

```
REQ   STDS001
      CKT 1 IDL
```

- Returns the REQ prompt when the printout is complete.

STRCNNX—Gives the status of DTMF receiver 00X/01X (00/01 = receiver PCB number R00/R01; X = circuit number in that cabinet). The output format will be IDL, BSY, DIS TTY, DIS TLD, UNEQ, UNAS. (See Notes 1 and 2.)

Example:

```
REQ   STRC001
      CKT 1 IDL
```

- Returns the REQ prompt when the printout is complete.

NOTES:

1. *Type:* *UNEQ = No PCB in that position.*
   UNAS = PCB is equipped but no data is assigned.
2. *Status:* *IDL = Idle.*
   BSY = Busy.
   DIS TTY = Manually disabled via TTY.
   DIS CBL = Electronic/digital telephone port disabled by soft-ware, due to open cable.
   DIS TLD = Software disabled due to traffic load (indicates faulty PCB).

STCDXXX—Gives the status of all circuits on PCB XXX (XXX = PCB location LXX, CXX, TXX, or R00/01). Printout formats will be the same as for STLC, STTK, and STRC commands, but will list all circuits on that PCB in the order of the circuit number.

- Returns the REQ prompt when the printout is complete.

CALL TNNX—Sets up a monitor link from Trunk NNX to the remote test center:

- This command is used at a remote test center to establish an audio link between the system and the test center. The objective is to command the system to select a particular trunk (A) and to dial the number of a telephone at the test center. When the call is answered, a 440 Hz tone will be heard.
- Once a monitor link has been established, other trunks can be tested. The trunk to be tested (B) is seized by the keyboard terminal command and then the test number (for example: time, weather, tone, etc.) to be dialed is entered via the terminal. The audio responses are monitored at the test center.

- The set-up sequence includes several steps that are led by system prompts. Following the entry CALL TNNX, the system prompts will be as follows:

WAIT—Indicates that the first command was received. A carriage return must be entered in order to advance the program.
Enter: CR.

STS TLK, WAIT, or OVR (Status)—Gives the status of the requested trunk.
- STS TLK will be output if the trunk was idle and has now been seized. The program will automatically advance to the next prompt (DN).
- STS WAIT indicates that the requested trunk is busy. The program will automatically return to the WAIT prompt.
  Enter: CR to access the same trunk again or DEL CR to return to the REQ prompt.
- STS OVR indicates that the requested trunk does not exist in the system.
  Enter: DEL CR to return to the REQ prompt.

DN (Directory Number)—The system is requesting the number of the telephone to be called at the test center.
Enter: DN followed by a CR.

STS TLK, DDL, or RLSA (Status)—Gives the status of the connection.
- STS TLK will be output if the dialing is complete, and the program will automatically advance to the next prompt (TRK).
- STS DDL indicates that the trunk was still dialing when CR was entered.
  Enter: CR to advance the program.
- STS RLSA indicates that Trunk A was disconnected due to a malfunction or some outside influence, such as the distant end going on-hook on a ground start trunk. After printing STS RLSA, the program will automatically return to the REQ prompt.

TRK (Trunk)—At this point, the monitor link to the test center (using Trunk A) has been established (a 440 Hz tone is heard when Trunk A is answered at the remote test center), and the system is requesting the identity of a trunk to be tested.
Enter: CALL TNNX (TNNX = port number of the trunk to be tested; 440 Hz tone removed).

WAIT—Indicates that the command was received. A carriage return must be entered to advance the program.
Enter: CR.

STS TLK, BSY, OVR, or RLSA (Status)—Gives the status of the connection.
- STS TLK will be output if the requested trunk was idle and has now been seized. The program will automatically advance to the next prompt (DN).
- STS BSY indicates that the requested trunk is busy. The program will automatically return to the TRK prompt above in order to allow another trunk to be selected.
- STS OVR indicates that the requested trunk does not exist in the system. The program will automatically return to the TRK prompt above to allow another trunk to be selected.
- STS RLSA is output if the monitor link trunk (A) was disconnected due to a malfunction or some outside influence, such as the distant end going on-hook. After printing STS RLSA, the program will automatically return to the REQ prompt.

DN (Directory Number)—The trunk under test (B) has been seized and the system is requesting the number to be dialed (time, weather, tone, etc.).
Enter: DN followed by a CR.

DDL (Dialing)—The system is dialing via Trunk B. When dialing is complete, progress tones (ringing, etc.) will be heard over Trunk B via the monitor link (Trunk A). When the test is complete, enter CR to release Trunk B and to return to the TRK prompt.
Enter: CR.

STS TLK, DDL, RLSA, or RLSB (Status)—Gives the status of the connection.

- STS TLK will be printed in response to a CR entered following the above dialing prompt. The CR released the trunk under test (B), therefore the output indicates the status of the monitor link (A). The program will automatically return to the TRK prompt in order to allow another trunk to be selected.
- STS DDL will be printed if a CR was entered before dialing was complete. This state is the same as DDL above.
- STS RLSA will be printed if the monitor link (A) is released due to a malfunction or some outside influence. The trunk under test (B) will also be released and the program will automatically return to the REQ prompt .
- STS RLSB will be printed if the trunk under test (Trunk B) is released due to a malfunction or some outside influence. The program will automatically return to the TRK prompt in order to allow another trunk to be selected.

Example: Monitor link trunk (A) = T014.
Test center DN = 730-5000.
Test DN = 730-0002.
Trunk under test (B) = T012.

PROMPT	USER ENTRY
OK	TPER
-DISK LOADING-	
REQ	CALL T014
WAIT	CR
STS TLK	
DN	7305000
DDL	CR
STS TLK	(440 Hz tone heard)
TRK	CALL T021
WAIT	CR
STS TLK	
DN	7300002
DDL	CR
STS TLK	(Time, Weather, Tone)
TRK	CALL TNNX(new test)
	...or...
	CR (end of test)

TABLE 19-5

Procedure — Peripheral Equipment Diagnostic Procedure

Authorization Procedure must be completed. If an OK response is received, proceed as follows:

ITEM	PROMPT	USER ENTRY	NOTE
	OK	TPER	
– DISK LOADING –			
	REQ		1

(continued)

NOTE:
See Table 19-5a for possible entries. The REQ prompt will repeat following each test. Enter as many separate entries as required.

TABLE 19-5a
TRUNK STATUS ENTRIES

ENTRY	DESCRIPTION	RESPONSE	
DSCDNNN	Disable PCB XXX immediately	PCB disabled, FAULT LEDs on	
DSTKNNX	Disable Trunk NNX*	TRK disabled, FALT LED on, REQ prompted	
DSLCNNX	Disable Line Circuit NNX*	Line disabled, FALT LED on, REQ prompted	
ENCDNNN	Enable PCB XXX	PCB enabled, FALT LEDs off, REQ prompted	
ENTKNNX	Enable Trunk NNX*	Trunk enabled, FALT LED off if all circuits are enabled, REQ prompted	
ENLCNNX	Enable Line NNX*	Station line enabled, FALT LED off if all circuits are enabled, REQ prompted	
DSDSNNX	Disable DSS Circuit NNX*	DSS disabled, FALT LED ON, REQ prompted	
ENDSNNX	Enable DSS Circuit NNX*	DSS enabled, FALT LED off if all circuits are enabled, REQ prompted	
DSRCNNX	Disable RCVR NNX*	RCVR disabled, FALT LED ON, REQ prompted	
ENRCNNX	Enable RCVR Circuit NNX*	RCVR enabled, FALT LED off if all circuits are enabled, REQ prompted	
DSCIXXX	Disable PCB XXX when idle	Each port disabled when idle, FALT LEDs on	
LIPS	List all idle ports	Idle ports = LNNX, TNNX, etc., REQ prompted	
LBPS	List all busy ports	Busy ports = LNNX, TNX, etc., REQ prompted	
LDPS	List all disabled ports	Disabled ports = LNNX, TNNX, etc., REQ prompted	
STLCNNX	Status of Line Circuit NNX*	**Type (Note 1)** 500/2500 EKT UNEQ UNAS ATT	**Status (Note 2)** IDL, BSY DIS CBL DIS TTY DIS TLD REQ prompted
STTKNNX	Status of TRK NNX*	**Type (Note 1)** WAT FX TIE CO CCSA UNEQ UNAS	**Status (Note 2)** IDL BSY DIS TTY DIS TLD REQ prompted
STDSNNX	Status of DSS NNX*	**Type (Note 1)**	**Status (Note 2)** IDL, BSY DIS CBL DIS TTY DIS TLD
STRCNNX	Status of RCVR 00X*	Status = IDL, BSY, DIS TTY, DIS TLD, UNEQ, UNAS, REQ prompted	
STCDXXX	Status of PCB XXX	Circuit #1 = Same as STLC, STTK, STRC	
		Circuit #2 = Same as STLC, STTK, STRC	
		Circuit #3 = Same as STLC, STTK, STRC	
		Circuit #4 = Same as STLC, STTK, STRC, REQ prompted	

(continued)

* *NN = PCB number X = Circuit number*

NOTE: When requesting status, etc., of a universal port (U slots), the entry must be as a line PCB (example: PCB in slot U26-entry: STCDL26).

TABLE 19-5a (continued)

ENTRY	DESCRIPTION	RESPONSE		
		SYSTEM	USER ENTRY	NOTE
CALL TNNX	Sets up monitor link using TNNX	WAIT	CR	4
		STS TLK...or...	Automatic advance to DN Prompt	
		STS WAIT...or...	CR	5
		STS OVR	DEL CR	6
		DN	DN CR	7
		DDL	CR	8
		STS TLK...or...	Automatic advance to TRK prompt	9
		STS RLSA...or...	Automatic return to REQ prompt	10
		STS DDL	CR	11
		TRK	Call TNNX	12
		WAIT	CR	4
		STS TLK...or...	Automatic advance to DN prompt	13
		STS RLSA...or...	Automatic return to REQ prompt	10
		STS BSY...or...	Automatic return to TRK prompt	14
		STS OVR	Automatic return to TRK prompt	15
		DN	DN CR	16
		DDL	CR when test is complete	17
		STS TLK...or...	Automatic return to TRK prompt	18
		STS RLSA...or...	Automatic return to REQ prompt	10
		STS RLSB...or...	Automatic return to TRK prompt	19
		STS DDL	CR	20

(continued)

NOTES:

1. *Type: UNEQ = No PCB in that position.*
   UNAS = PCB equipped but no data is assigned.
2. *Status: IDL = Idle.*
   BSY = Busy.
   DIS TTY = Manually disabled via TTY.
   DIS CBL = Electronic/digital telephone port disabled by software due to open cable.
   DIS TLD = Software disabled due to traffic load (indicates faulty PCB).
3. CTRL X = *Ignore line entered.*
   CTRL H = *Backspace.*
   DEL = *Stop printing and return to REQ.*
   DEL DEL = *Exit program.*
4. CR *is required to advance program.*
5. *Requested trunk (A) is busy. Enter* CR *to try again.*
6. *Requested trunk (A) does not exist in the system. Enter* DEL CR *to return to the REQ prompt.*
7. *Enter the test center DN followed by* CR.
8. *Allow time for completion of dialing and then enter* CR.
9. *Dialing is complete; program advances to TRK prompt.*
10. *Trunk A (monitor link) has been released due to a malfunction or an outside influence, such as the distant end going on-hook (ground start).*

TABLE 19-5a (continued)

11. *Dialing was not complete when* CR *was entered. A second* CR *is required.*
12. *Enter the port number (TNNX) of the trunk (B) to be tested.*
13. *Requested trunk was idle and has been seized.*
14. *Requested trunk (B) is busy.*
15. *Requested trunk (B) does not exist in the system.*
16. *Enter the DN that should be dialed by the trunk under test, followed by a* CR.
17. *After the dialing is complete, the audio from the trunk under test will be heard via the monitor link. Enter* CR *when the test is complete.*
18. *The test has ended. The program will automatically return to the TRK prompt to allow another trunk to be selected.*
19. *The trunk under test (B) was released due to a malfunction or outside influence, such as the distant end going on-hook (ground start).*
20. CR *was entered while Trunk B was still dialing. (See Note 17.)*

TABLE 19-5 (continued)

Error Codes

Program Name: Peripheral Diagnostic Data Block (TPER)	
Error Code	**Meaning**
ERTPE 00	The PCB type conflicts with customer data.
ERTPE 01	A PCB is not equipped in that location (enable).
ERTPE 02	The cable is open or the port is inhibited by heavy traffic (enable).
ERTPE 03	The entered port is a maintenance terminal (enable).
ERTPE 04	No PCB is equipped in that location (disable).
ERTPE 05	The port is busy.
ERTPE 06	The PCB number or electronic/digital telephone number is out of range.
ERTPE 07	The PCB type is not an NSTU or NEKU/NDKU.
ERTPE 08	The PCB type is not a trunk.
ERTPE 09	The PCB type is not a DTMF receiver.
ERTPE 10	The entered PCB type is incorrect.
ERTPE 11	No PCB is equipped in that location (inhibit).
ERTPE 13	No PCB is equipped in that location (REQ = CALL TNNX).
ERTPE 14	The entered universal port (slot) is unequipped or unassigned.

TABLE 19-6
DISK DRIVE OPERATION ERROR CODES

Error Codes

Program Name: Floppy Disk Drive Error	
Error Code	**Meaning**
ERFD 01	File is closed.
ERFD 02	Read error.
ERFD 03	Write error.
ERFD 04	Directory is full.
ERFD 05	Disk is full.
ERFD 06	End-of-file error.
ERFD 07	Disk drive is not ready.
ERFD 08	Incorrect version number.
ERFD 09	File is write-protected.
ERFD 10	File not found.
ERFD 11	Volume not initialized.
ERFD 12	File already exists.
ERFD FF	Other hardware is causing the error.

Perception® e & ex

DIGITAL HYBRID PBX

APPENDIX #2

LEAST COST ROUTING (LCR)

and

TOLL RESTRICTION (TR)

PROGRAMMING GUIDE

PERCEPTION$_{e\&ex}$ LCR/TR PROGRAMMING GUIDE TABLE OF CONTENTS

PARAGRAPH	SUBJECT	PAGE
1.	INTRODUCTION	1
2.	GENERAL DESCRIPTION	1
2.00	Least Cost Routing (LCR)	1
2.10	Toll Restriction (TR)	1
3.	NUMBERING PLAN (North America)	2
3.00	Description	2
4.	SPECIAL COMMON CARRIER	3
4.00	Description	3
5.	PROGRAMMING	3
5.00	General	3
	CUSTOMER DATA PROGRAMMING FLOWCHART	4
6.	PROGRAMMING EXAMPLES	8
6.00	General	8
6.10	Programming Example #1	8
	PSYS Printout	9
	PACD Printout	9
	PCOS Printout	10
	PLCR (PAR) Printout	10
	PLCR (ACTALL) Printout	11
	Route Table #1 Printout	12
	Route Table #2 Printout	12
	Route Table #15 Printout	12
	Modify Digits Table Printout	13
	PTOL (PAR) Printout	13
6.20	Programming Example #2	14
	PSYS Printout	15
	PACD Printout	15
	PCOS Printout	16
	PLCR (PAR) Printout	16
	PLCR (ACTALL) Printout	17
	PLCR (AOCNO01) Printout	18
	Route Table #1 Printout	18
	Route Table #2 Printout	19
	Route Table #3 Printout	19
	Route Table #15 Printout	20
	Modify Digits Table Printout	20
	PTOL (PAR) Printout	20
	DTOL (CLS) – PTOL (CLSCN0) Restriction Class #0 Printout	21
	DTOL (CLS) – PTOL (CLSCN1) Restriction Class #1 Printout	22
	DTOL (CLS) – PTOL (CLSCN2) Restriction Class #2 Printout	23
	DTOL (CLS) – PTOL (CLSCN3) Restriction Class #3 Printout	24
7.	LOGIC	25
7.00	General	25
	GENERAL LOGIC FLOWCHART	25
	DETAILED LOGIC FLOWCHART	27

1. INTRODUCTION

1.01 This document has two main purposes: a) to describe the Least Cost Routing (LCR) and Toll Restriction (TR) features, and b) to serve as a supplement to Section **200-255-300**, *System Programming*, in order to guide the service technician in LCR/TR programming. Various examples, tables, and flowcharts are provided to clarify feature explanations.

1.02 This document assumes that the reader is familiar with PERCEPTION$_{e\&ex}$ programming procedures and the mnemonics used with the LCR and TR data entry utility programs.

2. GENERAL DESCRIPTION

2.00 Least Cost Routing (LCR)

2.01 Least Cost Routing causes the system to select the least expensive trunk available for that particular time of day. The station user simply dials an LCR access code and the required telephone number. LCR will then select the optimally-priced route and automatically delete and/or insert any necessary digits (for MCI, Sprint, etc.) by analyzing the dialed telephone number (including area code and, in some cases, office code).

2.02 The three variable time schedules per 24-hour clock allow the end-user to take advantage of rate variations during these hours. The various routing combinations for the three time schedules are contained in 15 Route Tables. Each table is selected as a function of the dialed telephone number.

2.03 The LCR feature is compatible with and transparent to all other PERCEPTION$_{e\&ex}$ features. It is designed so that it is completely disabled until a simple parameter (LCR) is enabled in the System Data Block (**DSYS Program**).

2.04 If a Direct Trunk Access code (not the LCR access code) is dialed, the outgoing call is handled as a normal direct trunk access call without using LCR.

2.05 LCR Data Blocks are separated from all other Data Blocks. It is unnecessary to change a completed Data Block when adding the LCR feature to a system already in use, except to assign the LCR access code (**DACD Program**) or to enable LCR (**DSYS Program**).

2.06 There are three LCR classes (LC1, LC2, and LC3), which allow specific stations to be denied access to the most expensive routes. LC3 is the lowest class; LC1 is the highest. LC3 routes are always selected first, no matter what class the station is allowed. If all LC3 routes are busy, and the calling station is allowed LC2, the system will try to select an LC2 route in the order programmed. If LC1 is allowed, and all LC2 routes are busy, the system will try to select an LC1 route.

- The Class of Service Data Block indicates the LCR class of that particular Class of Service.
- A warning tone is received by the station user if the last choice route is selected (if the WTA prompt, PAR table, **DLC1 Program**, is programmed to Y).
- If all the routes are busy, busy tone is received by the station user, who may then activate the Automatic Callback feature. The station will then be called when the first trunk in that station's LCR class is idle. When the station answers the callback, the idle trunk will be seized and the telephone number will be automatically dialed out to the distant end.

2.07 All of the above logic and the remainder of the Least Cost Routing and Toll Restriction features are described, and can be followed step-by-step, in the Detailed Logic Flowchart. This flowchart can be used as a fault finding procedure for customer data programming, and to answer questions regarding what will happen when certain parameters are programmed in a certain way.

2.10 Toll Restriction (TR)

2.11 The Toll Restriction (TR) program causes the system to restrict (or not restrict) specific stations from calling certain area codes and/or office codes.

2.12 Toll Restriction can be used for long distance toll restriction, for restriction in the local area (home area), or both. The TR class also decides whether

to restrict calls to the local central office operator, international calls, and/or long distance directory assistance.

2.13 Eight different TR classes (CLS 0 ~ 7) can be programmed in the previously-described manner. Also, CLS 8 restricts all 0 + and 1 + calls.

2.14 All stations programmed for TOL = NONE will have no restrictions. The TOL parameter (TR class number) is located in the **DEKT**, **DSTT**, and **DTGP** (TIE/CCSA Trunks) **Programs**.

2.15 Before a call via Least Cost Routing or Direct Trunk Access (DTA) is completed, the **DTOL Program** will decide whether or not the number being dialed is allowed. If not allowed, the originating station will receive overflow tone. If allowed, the call will be processed further.

2.16 All of the above logic and the remainder of the TOL parameter are described, and can be followed step-by-step, in the Detailed Logic Flowchart.

Example:
Follow a call through the Logic Flowchart according to what is programmed in Example #2.

3. NUMBERING PLAN (NORTH AMERICA)

3.00 Description

3.01 All telephone systems in the USA and Canada use the North American Numbering Plan. All PERCEPTION$_{e\&ex}$ LCR/TR features are based on this plan.

3.02 The routing codes for Direct Distant Dialing (DDD) within the North American Numbering Plan consist of two basic parts:

1) A 3-digit area code or Numbering Plan Area (NPA) code.
2) A 7-digit telephone number made up of a 3-digit central office (CO) code and a 4-digit station number.

NOTE:
When used together, these ten digits comprise the network "address" or destination code for each telephone.

- The first digit of the area code must be a number between 2 and 9. The second digit must be a 1 or 0. The third digit may be any number between 0 and 9.
- The first two digits in the CO code must be any numbers between 2 and 9, except when interchangeable codes are used (then the second digit can be any number between 0 and 9). The third digit of the CO code on all four subscriber numbers may be any number between 0 ~ 9

TABLE A
NORTH AMERICAN NUMBERING PLAN

Area Code	Office Code	Subscriber No.
N0/1X	NNX	XXXX

X = any number from 0 ~ 9
N = any number from 2 ~ 9
0/1 = number 0 or 1

(Table A).

3.03 The following are exceptions to the rule:

1) Service Code (N11): This is used for various special local services and, when programmed properly, is recognized only as a service code. In this case, the system will act immediately after this 3-digit number is completed.
2) Interchangeable Codes (ICC): In some areas, the second digit of the office code is allowed to be any number from 0 ~ 9. In this case, the office code may look like an area code (if the second digit is 0 or 1). If so, the PERCEPTION$_e$ or PERCEPTION$_{ex}$ looks for a DD prefix (1) to identify whether or not the next 3-digit number is an area code. When ICC is used, 1 + a 3-digit number is always an area code. When ICC is not used, the system identifies the area code by looking at the second digit of the first 3-digit number (if this digit is 0 or 1, the number is an area code; if not, the number is an office code).
3) Inward WATS: This is a form of long distance service without a charge to the originating party.
   - The area code is always 800.
   - In PERCEPTION$_{e\&ex}$ LCR, this type of call can be programmed (in the PAR table) as either a regular DDD call with an area code of **800**, or as a toll free **800** call, routed via the

local call route table (LCR).

4) Long distance directory assistance (555): This is a call using any area code (or no area code) plus 555-1212. If allowed, this type of call is routed via the LDI route table, as indicated in the PAR table, or via the route table (DAC = N) to which this area code is assigned.

NOTE:
When a DDD call is dialed, a prefix of **1** *is usually needed before the area code. A* **0** *prefix will cause the local operator to be connected.*

4. SPECIAL COMMON CARRIER

4.00 Description

4.01 Dialing extra digits to access the Special Common Carrier (SPCC) trunks is not necessary if the LCR feature has been activated. The selection of SPCC trunks (like all other trunks) and the outpulsing of the extra digits (access code, authorization code, etc.), is accomplished automatically by the PERCEPTION$_{e\&ex}$ LCR feature. This function is completely transparent to the station user.

5. PROGRAMMING

5.00 General

5.01 Customer data programming can be done in many different ways with the same results. The starting point and the particular order may differ according to personal preferences. As an example, one logical sequence for programming customer data is shown in the Customer Data Programming Flowchart.

5.02 For detailed information, see *Programming Procedures*, Section **200-255-300**, in the PERCEPTION$_{e\&ex}$ *Installation and Maintenance* manual, and the Logic paragraph in this LCR/TR programming guide (Paragraph **7**).

CUSTOMER DATA PROGRAMMING FLOWCHART

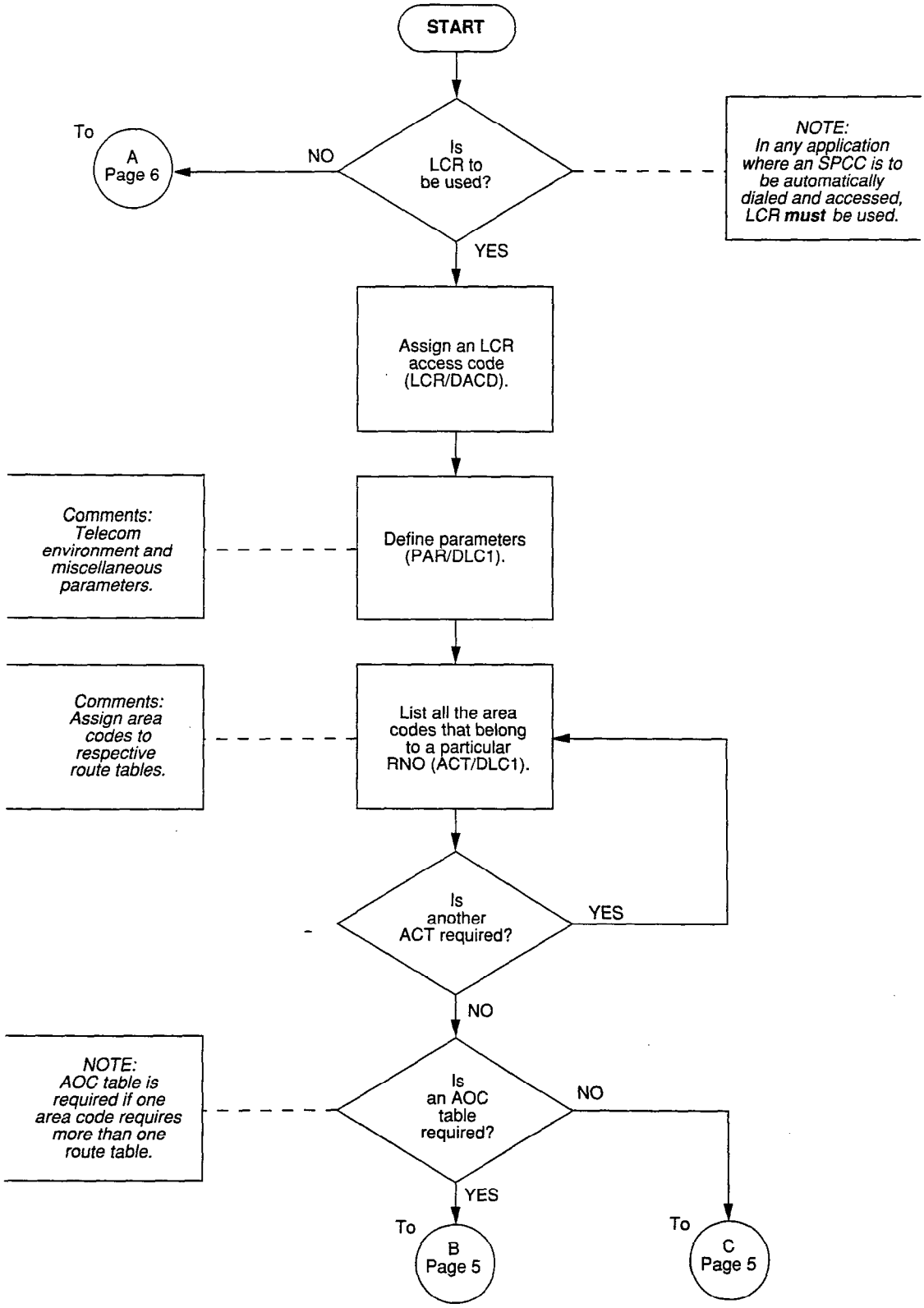

CUSTOMER DATA PROGRAMMING FLOWCHART (continued)

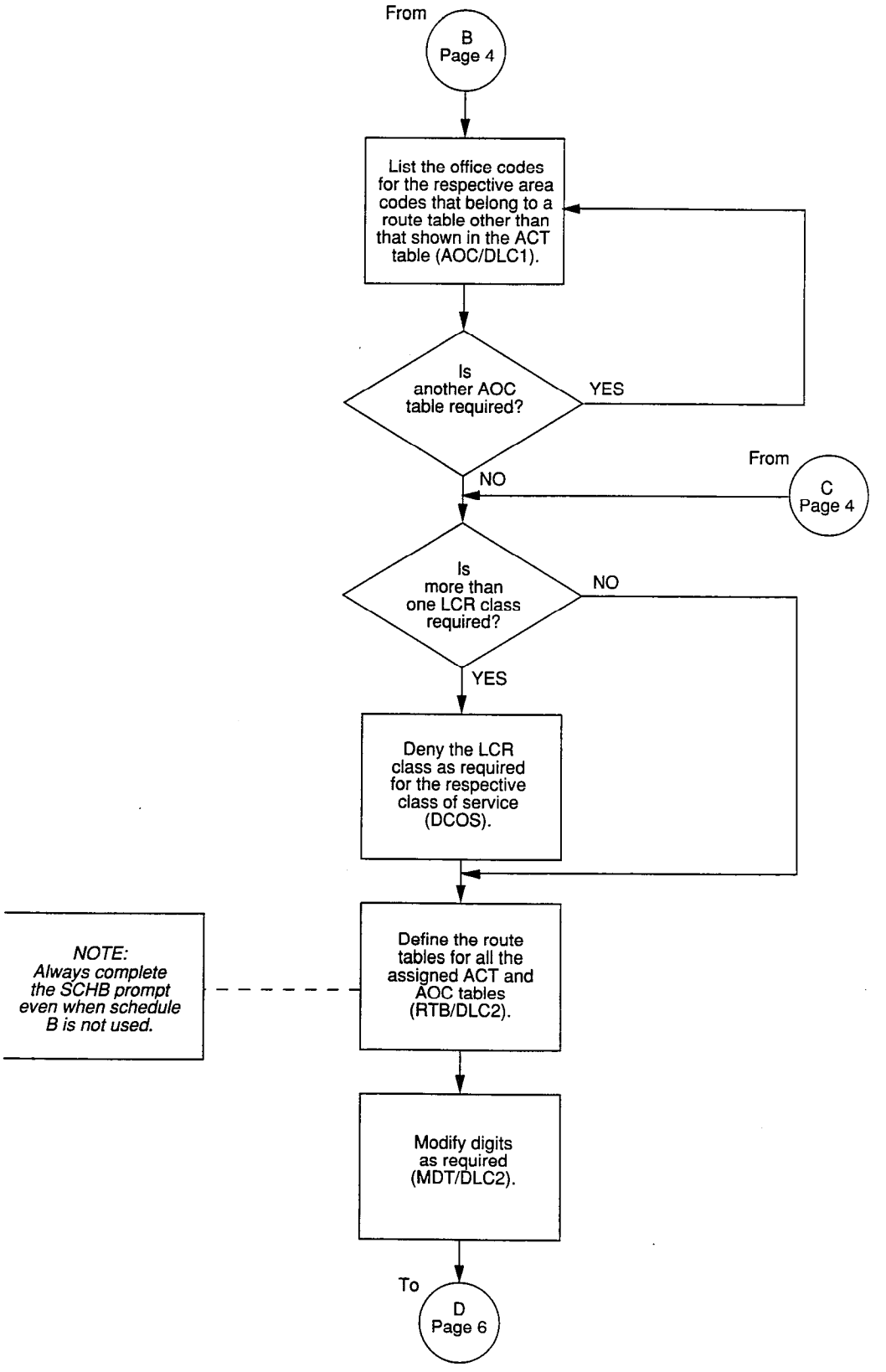

CUSTOMER DATA PROGRAMMING FLOWCHART (continued)

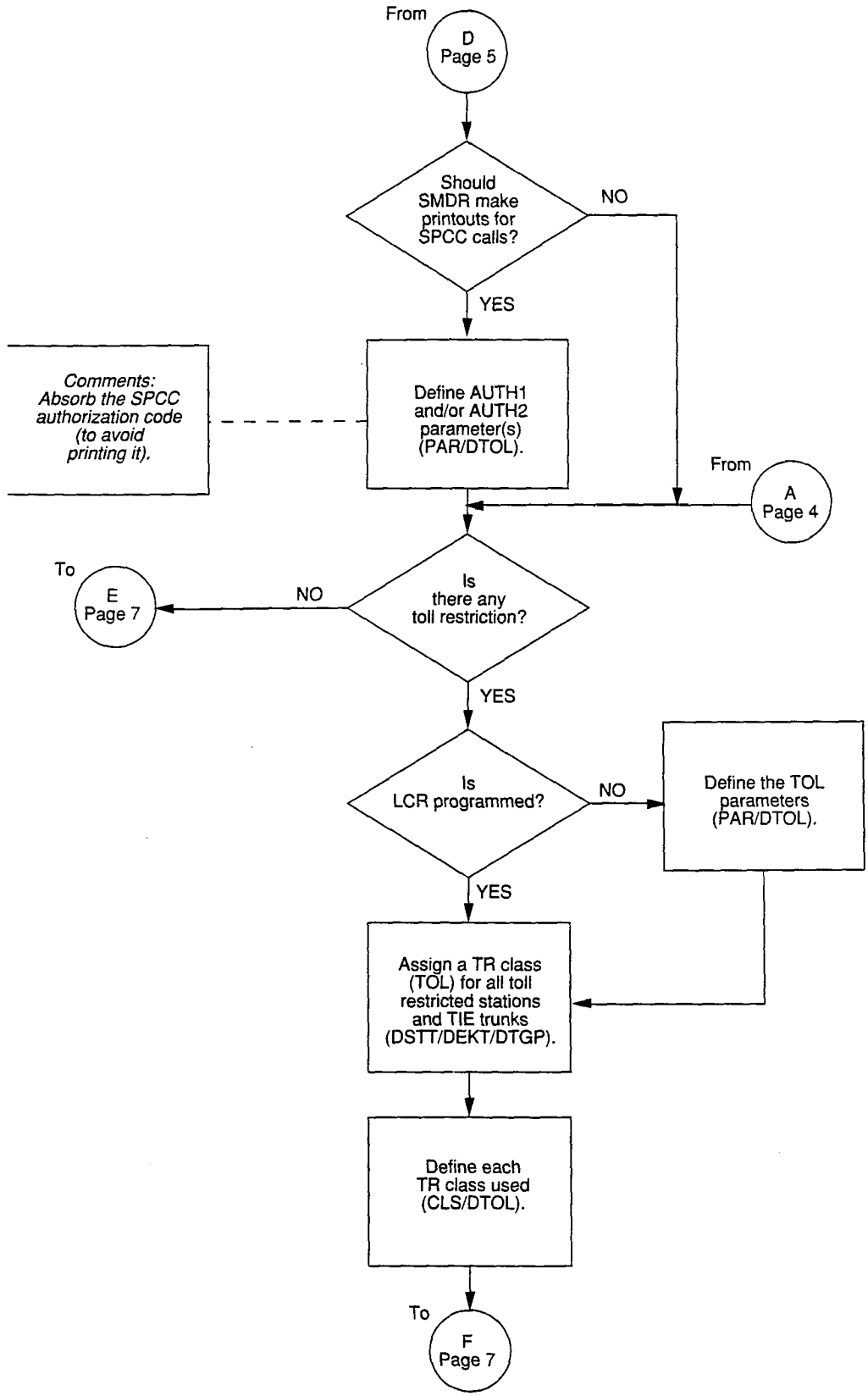

CUSTOMER DATA PROGRAMMING FLOWCHART (continued)

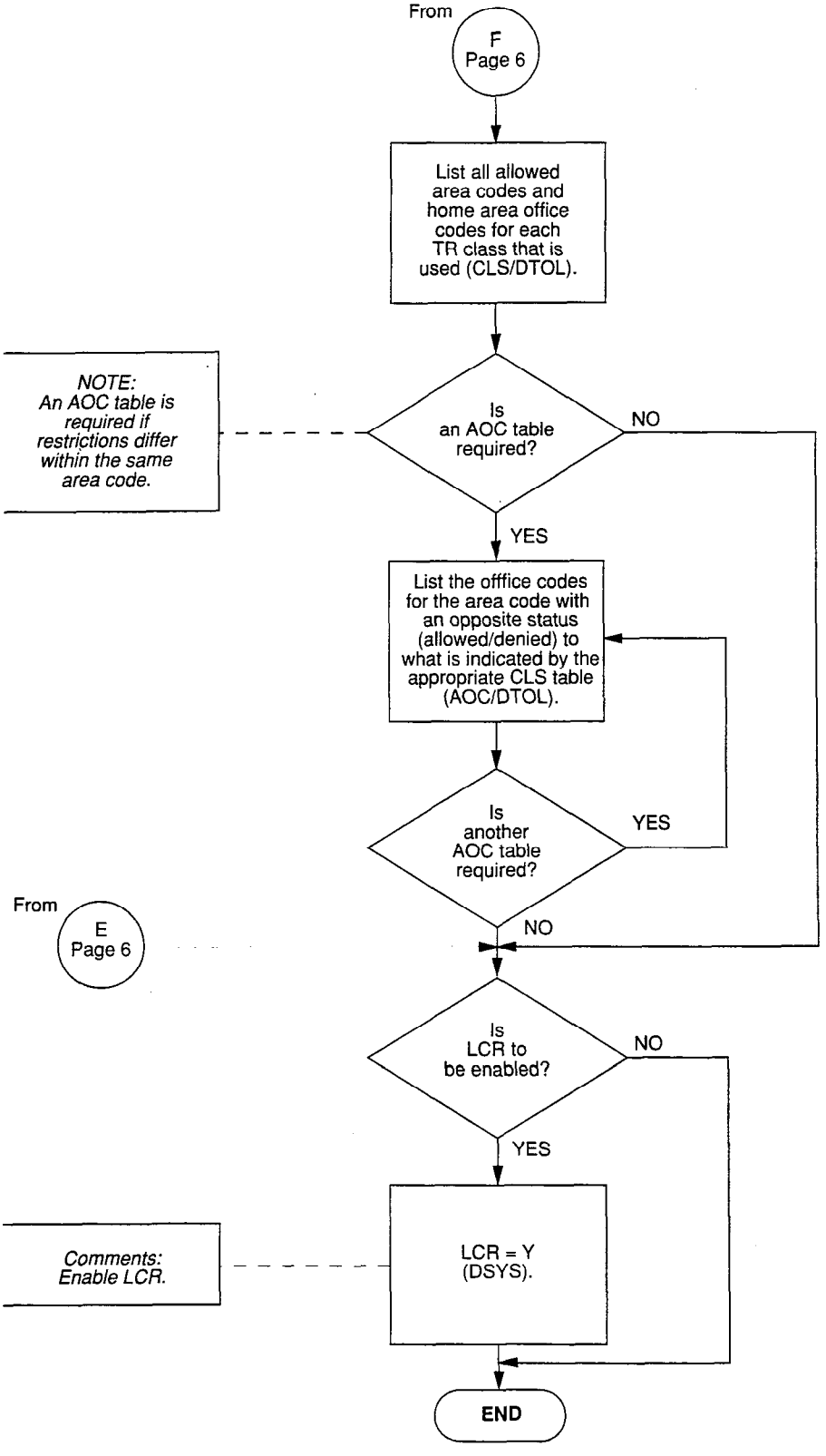

6. PROGRAMMING EXAMPLES

6.00 General

6.01 Examples are given here to show how PERCEPTION$_{e\&ex}$ systems can be programmed for various system applications. It is assumed that your system has been programmed in all areas, except LCR and TR. Comments are shown on the right side of the TTY printouts. These comments are shown only once for the same prompt and are not repeated for every Data Block in the same programming example.

6.02 The two examples show printouts using the Data Output mode (see equivalent Data Blocks for Data Input).

IMPORTANT!
These are examples only and may not be realistic applications for the area under discussion.

6.10 Programming Example #1

6.11 This is a very simple case, where only two trunk groups are used. In this case, there is no Least Cost Routing in the true sense, as this application has only one routing choice for the particular area code dialed. However, LCR recognizes the area code, selects the correct trunk group, and when required, automatically outpulses the codes for SPCC access and authorization.

6.12 Least Cost Routing

a) In this case, the system is located in Orange County, California (NPA=714).

b) For Least Cost Routing purposes, the outgoing trunk calls are divided into three different areas.
   1) Route Table #1 = Local area (NPA = 714).
   2) Route Table #2 = Los Angeles area (NPA = 213).
   3) Route Table #15 = Remainder of North America.

c) One Special Common Carrier (SPCC) is used. An access code (730 0000) and an authorization code (87654) are used to access SPCC.

d) No routing priority is used (i.e., the only LCR class is LC1). This is defined in the DCOS **Program**, by not denying any LCR class. The LCR access code is "9."

e) The telecommunications environment is defined in the **DLC1 Program** (TYPE = PAR).

f) The selection of the Route Table number is accomplished in the Area Code Table. The Modify Digits Table number is selected in the Route Table.

NOTE:
*Even when only one time schedule is used (ie., SCHA), Schedule B (SCHB prompt) must also be completed in the **DLC2 Program**.*

6.13 Toll Restriction: Toll restrictions or home area restrictions are not programmed in the example (TOL = NONE). However, the AUTH1 parameter is programmed to "05" on the PAR table, **DTOL Program**. This causes the 5-digit authorization code to be absorbed (not printed) when the SMDR prints the called number.

```
COD         MMMMMM
OK          PSYS

REQ         PRT
TOR         0000
DRT         NONE
TEN         Y
ICP1        OFL
ICP2        OFL
ICP3        OFL
LCR         Y
APG         14
AAT         NONE
APX         NONE
LN1         NONE
LN2         NONE
NT1         UNA
NT2         UNA
BLF1        3
BLF2        2
OFL1        NONE
OFL2        NONE
MC0         ATT0
MC1         NONE
MMP         10
REM         NONE
RAC         #*2
ACC *       NONE
ACC #       NONE
COT         50
RNA         31
AOF         30
CFD         10
HLD         50
DPT         15
PBT         4
LLO         15
ACB         4
HFS         Y
HFA         Y
MDR         Y
CFS         Y

REQ
```

LCR enabled

PSYS Printout

```
>
COD         MMMMMM
OK          PACD

REQ         PRT
ACB         *7
CBR         **7
CFD         *9
CFR         **9
PUD         *6
PUG         *4
HLD         *3
MMP1        11
MMP2        12
OVR         *0
RND         #7
CWT         #4
SDU         #3
SDC         ##3
SDS         #6
UNA         *1
CRG         #9
FLH         *5
PAG0        15
PAG1        16
PAG2        17
PAG3        18
PAG4        19
RTV         **3
MAL         ##5
MCC         #5
DND         #2
DNC         ##2
RAC
LCR         9
REQ
```

LCR Access Code = 9

PACD Printout

```
COD       MMMMMM
OK        PCOS

REQ       PRT

COS       0 NONE
COS       1 NONE
COS       2 T00
COS       3 NONE
COS       4 NONE
COS       5 NONE
COS       6 NONE
COS       7 NONE
COS       8 NONE
COS       9 NONE
COS       10 NONE
COS       11 NONE
COS       12 NONE
COS       13 NONE
COS       14 NONE
COS       15 NONE
REQ
```

LCR class #1 is allowed for COS 0 through COS 15 (since it is not specifically denied).

PCOS Printout

```
>
COD       MMMMMM
OK        PLCR

REQ       PAR

ICC       N
OTO       04
RTD       N
WTA       N
HAC       714
TFC       Y
LCR       01
SVC       411 611 911
DAC       Y
LDI       01
DDP       1
REQ
```

For detailed information, refer to the PERCEPTION $_{e\&ex}$ Programming Procedures *manual, Section* ***200-255-300****, Chapter* ***12.***

PLCR (PAR) Printout

```
          PLCR
REQ       ACTALL
RNO01
          714
RNO02
          213
RNO03
          NONE
RNO04
          NONE
RNO05
          NONE
RNO06
          NONE
RNO07
          NONE
RNO08
          NONE
RNO09
          NONE
RNO10
          NONE
RNO11
          NONE
RNO12
          NONE
RNO13
          NONE
RNO14
          NONE
RNO15
          200 201 202 203 204 205 206 207 208 209
          210 211 212 214 215 216 217 218 219 300
          301 302 303 304 305 306 307 308 309 310
          311 312 313 314 315 316 317 318 319 400
          401 402 403 404 405 406 407 408 409 410
          411 412 413 414 415 416 417 418 419 500
          501 502 503 504 505 506 507 508 509 510
          511 512 513 514 515 516 517 518 519 600
          601 602 603 604 605 606 607 608 609 610
          611 612 613 614 615 616 617 618 619 700
          701 702 703 704 705 706 708 708 709 710
          711 712 713 715 716 717 718 719 800 801
          802 803 804 805 806 807 808 809 810 811
          812 813 814 815 816 817 818 819 900 901
          902 903 904 905 906 907 908 909 910 911
          912 913 914 915 916 917 918 919
REQ
```

Home Area Code (Local Calls) are routed according to Route Table #1.

Calls to Area Code 213 are routed according to Route Table #2.

All calls to these Area Codes are routed according to Route Table #15.

PLCR (ACTALL) Printout

```
          RT01
RNO01

RT1       00      01      <-----  Trunk Group 00, Modify Digits Table 01.
RT2       NONE    NONE
RT3       NONE    NONE
RT4       NONE    NONE
RT5       NONE    NONE
RT6       NONE    NONE

SCHA      0000    2400    <-----  Schedule A used only in this application.
LC3       RT1
LC2       NONE
LC1       NONE

SCHB      2400    0000    <-----  SCHB prompt must be completed.
LC3       NONE
LC2       NONE
LC1       NONE

SCHC      0000    0000
LC3       NONE
LC2       NONE
LC1       NONE

REQ
```

Route Table #1 Printout
PLCR (RT01)

```
          RT02
RNO02

RT1       01      01
RT2       NONE    NONE
RT3       NONE    NONE
RT4       NONE    NONE
RT5       NONE    NONE
RT6       NONE    NONE

SCHA      0000    2400
LC3       RT1
LC2       NONE
LC1       NONE

SCHB      2400    0000
LC3       NONE
LC2       NONE
LC1       NONE

SCHC      0000    0000
LC3       NONE
LC2       NONE
LC1       NONE

REQ
```

Route Table #2 Printout
PLCR (RT02)

```
          RT15
RNO15

RT1       00      03
RT2       NONE    NONE
RT3       NONE    NONE
RT4       NONE    NONE
RT5       NONE    NONE
RT6       NONE    NONE

SCHA      0000    2400
LC3       RT1
LC2       NONE
LC1       NONE

SCHB      2400    0000
LC3       NONE
LC2       NONE
LC1       NONE

SCHC      0000    0000
LC3       NONE
LC2       NONE
LC1       NONE

REQ
```

Route Table #15 Printout
PLCR (RT15)

```
          PLCR

REQ       MDT1

TNO01                  <------ 1-second pause.
DLT       NONE
ADD       *1

REQ       MDT3

TNO03
DLT       NONE
ADD       *17300000*387654
                  ↑
                  |
                  |------ 1-second pause + 7300000
                          +6-second pause + 86754.
REQ
```

Modify Digits Table Printout
PLCR (MDT1 AND MDT3)

NOTE:
A 1-second pause is usually required when using Loop Start trunks, to allow the CO line enough time to attach a receiving register. This is usually not required for Ground Start trunks.

```
COD       MMMMMM
OK        PTOL

REQ       PAR

HAC       714   |  <------- These parameters are the same as in DLC1/PAR.
ICC       N     |
SPCC1     730-0000 |  <----- These parameters are the same as in DMDR.
SPCC2     NONE     |
DDP       1
AUTH1     05   <------------ Absorbs the 5-digit authorization code, and
AUTH2     NONE                prevents it from being printed (SMDR).
REQ
```

PTOL (PAR) Printout

6.20 Programming Example #2

6.21 Least Cost Routing

a) In this case, the system is located in the Chicago area (NPA = 312).

b) For Least Cost Routing purposes, the outgoing trunk calls are divided into four different areas.
   1) Route Table #1 = Local area (NPA = 312).
   2) Route Table #2 = Metro area (NPA = 312).
   3) Route Table #3 = Illinois.
   4) Route Table #15 = Rest of North America.

c) There are five trunk groups:
   1) Trunk Group #0 = Local lines.
   2) Trunk Group #1 = Metro lines.
   3) Trunk Group #2 = Illinois WATS lines.
   4) Trunk Group #3 = Local lines. Available to LCR class 1 only.
   5) Trunk Group #4 = WATS lines to all North America.

d) One Special Common Carrier (SPCC) is used. An access code (730 0000) and an authorization code (65432) are used to access SPCC.

e) Three LCR classes (routing priorities) are used in this application.
   1) COS 0 = LCR class #1.
   2) COS 1 = LCR class #2.
   3) COS 2 = LCR class #3.

f) Local calls are routed according to Route Table #1. This is defined by the Area Office Code Table #1(TNO01).

g) Other Route Tables are addressed (pointed to) in the Area Code Tables 0 ~ 15.

NOTE:
No numbering relationship exists between the Area Code Tables and Area Office Code Tables, unless defined as such in the Area Office Code Table.

6.22 Toll Restriction: For toll restriction purposes, there are, in this case, four Restriction Class Tables used:

1) CLS 0 = Internal calls only.

2) CLS 1 = 312 Area Code (local and metro) calls only, with one exception—(714)730-XXXX, which is allowed to be dialed.

3) CLS 2 = Local/Metro, Illinois, Wisconsin, and Indiana calls allowed only, with one exception—(714)730-XXXX (also allowed).

4) CLS 3 = No restriction at all.
   Time = 7 p.m. (= 1900).
   Number dialed = (618)NNX-XXXX.
   Station Class of Service = COS 1.
   Station Toll Restriction (TR) class = CLS 2.

6.23 Sequence of events:

1) User pushes DN button.
   - Dial tone is received.

2) LCR access code 5 is dialed.
   - Dial tone is still received.

3) Digit 1 is dialed.
   - Dial tone is removed.

4) Area Code and Office Code are dialed, which in this case = (618)NNX (non-555 call).
   - No overflow tone received (this number is not restricted).

5) Station number (XXXX) is dialed.

6) Route Table #3 is selected.

7) At this time, all trunks in Trunk Group #2 are busy. Trunks in Trunk Group #0 are idle.

8) Route 3 (RT3) is selected and the SPCC signals sent out on Trunk Group #00 are: 1-second pause, 730 0000, 6-second pause, 654321618 NNX XXXX.

9) If an SMDR is connected, the printout for the called number = 1-618-NNX-XXXX.

NOTE:
This sequence can be followed step-by-step in the Detailed Logic Flowchart.

```
          PSYS

REQ       PRT
TOR       2300
DRT       DDMP
TEN       N
ICP1      ATT
ICP2      ATT
ICP3      ATT
LCR       Y   <---------  LCR enabled
APG       14
AAT       NONE
APX       NONE
LN1       NONE
LN2       NONE
NT1       UNA
NT2       UNA
BLF1      2
BLF2      ?
OFL1      NONE
MC0       NONE
MMP       299
REM       NONE
RAC       #*2
ACC*      NONE
ACC#      NONE
COT       40
RNA       30
AOF       6
CFD       20
HLD       60
DPT       7
PBT       4
LLO       15
ACB       6
HFS       Y
HFA       Y
MDR       Y
CFS       Y

REQ
```

PSYS Printout

```
          PACD

REQ       PRT
ACB       *7
CBR       **7
CFD       *9
CFR       **9
PUD       *6
PUG       *4
HLD       *3
MMP1      11
MMP2      12
OVR       *0
RND       #7
CWT       #4
SDU       #3
SDC       ##3
SDS       #6
UNA       *1
CRG       *2
FLH       *5
PAG0      15
PAG1      16
PAG2      17
PAG3      18
PAG4      19
RTV       **3
MAL       #5
MCC       ##5
DND       #2
DNC       ##2
RAC       **5
LCR       5 <---  LCR Access Code = 5

REQ
```

PACD Printout

NOTE:
The LCR Program was not designed for tenant service; therefore, if both LCR and tenant service are desired, one of the following two choices must be made:

a. LCR is shared by both tenants.
b. LCR is used for one tenant, and Direct Trunk Access is used for the other tenant.

```
COD       MMMMMM
OK        PCOS

REQ       PRT

COS       0 NONE          <-------- LCR 1, 2, and 3 allowed.
COS       1 LC1           <-------- LCR 2, and 3 allowed.
COS       2 LC1 LC2       <-------- LCR 3 allowed.
COS       3 NONE
COS       4 NONE
COS       5 NONE
COS       6 NONE
COS       7 NONE
COS       8 NONE
COS       9 NONE
COS       10 NONE
COS       11 NONE
COS       12 NONE
COS       13 NONE
COS       14 NONE
COS       15 NONE
REQ
```

NOTE:
DCOS is a deny list.

PCOS Printout

```
>
COD       MMMMMM
OK        PLCR

REQ       PAR

ICC       Y
OTO       06
RTD       Y
WTA       Y
HAC       312
TFC       Y
LCR       01
SVC       411   911   611
DAC       Y
LDI       01
DDP       1
REQ
```

For detailed information, see the PERCEPTION e&ex Programming Procedures *manual, Section* ***200-255-300****, Chapter* ***12.***

PLCR (PAR) Printout

```
          ACTALL
RNO01
          NONE
RNO02
          312
RNO03
          217  309  618  815
RNO04
          NONE
RNO05
          NONE
RNO06
          NONE
RNO07
          NONE
RNO08
          NONE
RNO09
          NONE
RNO10
          NONE
RNO11
          NONE
RNO12
          NONE
RNO13
          NONE
RNO14
          NONE
RNO15

          200 201 202 203 204 205 206 207 208 209
          210 211 212 213 214 215 216 218 219 300
          301 302 303 304 305 306 307 308 310 311
          313 314 315 316 317 318 319 400 401 402
          403 404 405 406 407 408 409 410 411 412
          413 414 415 416 417 418 419 500 501 502
          503 504 505 506 507 508 509 510 511 512
          513 514 515 516 517 518 519 600 601 602
          603 604 605 606 607 608 609 610 611 612
          613 614 615 616 617 619 700 701 702 703
          704 705 706 707 708 709 710 711 712 713
          714 715 716 717 718 719 800 801 802 803
          804 805 806 807 808 809 810 811 812 813
          814 816 817 818 819 900 901 902 903 904
          905 906 907 908 909 910 911 912 913 914
          915 916 917 918 919
REQ
```

Local calls are routed according to Route Table #1 (see AOCN001).

Metro area calls are routed according to Route Table #2.

Calls to Illinois are routed according to Route Table #3.

All calls to these Area Codes are routed according to Route Table #15.

PLCR (ACTALL) Printout

```
          AOCNO01

TNO01
AC        312

RNO       01      <-----  Local calls (Office Codes below) are
OC                        routed according to Route Table #1

          223 232 244 249 258 289 331 333 336
          356 362 367 377 381 382 426 428 433
          458 464 466 479 526 534 540 546 552
          554 556 557 563 584 587 594 623 634
          658 662 669 672 680 683 689 695 697
          741 742 746 830 837 840 844 851 859
          879 888 892 896 946 972


REQ
```

PLCR (AOCN001) Printout

```
        RT01

RNO01

RT1     00      01      <-----  Trunk Group 00, Modify Digits Table 01.

RT2     03      01      <-----  Trunk Group 03, Modify Digits Table 01.
RT3     NONE    NONE
RT4     NONE    NONE
RT5     NONE    NONE
RT6     NONE    NONE

SCHA    0000    2400    <-----  Schedule A only used in this application.
LC3     RT1
LC2     NONE
LC1     RT2

SCHB    2400    2400
LC3     NONE
LC2     NONE                    <-----  Route 2 can only be used by LCR class #1.
LC1     NONE

SCHC    2400    0000    <-----  SCHB prompt must be completed.
LC3     NONE
LC2     NONE
LC1     NONE

REQ
```

ROUTE TABLE #1 PRINTOUT
PLCR (RT01)

```
                    RT02

RNO02

RT1                 01              01
RT2                 03              01
RT3                 NONE            NONE
RT4                 NONE            NONE
RT5                 NONE            NONE
RT6                 NONE            NONE

SCHA                0000            2400
LC3                 RT1
LC2                 NONE
LC1                 RT2

SCHB                2400            2400
LC3                 NONE
LC2                 NONE
LC1                 NONE

SCHC                2400            0000
LC3                 NONE
LC2                 NONE
LC1                 NONE

REQ
```

Route Table #2 Printout
PLCR (RT02)

```
                    RTO3

RNO03

RT1                 02              01
RT2                 04              01
RT3                 00              02
RT4                 03              02
RT5                 NONE            NONE
RT6                 NONE            NONE

SCHA                0800            1800  <--- Schedule A = 8 a.m. to 6 p.m.
LC3                 RT1
LC2                 RT2 RT3
LC1                 RT4

SCHB                1800            0800  <--- Schedule B = 6 p.m. to 8 a.m.
LC3                 RT1
LC2                 RT3 RT2
LC1                 RT4

SCHC                0800            0800
LC3                 NONE
LC2                 NONE
LC1                 NONE

REQ
```

Route Table #3 Printout
PLCR (RT03)

```
                RT15

RNO15

RT1         00          02
RT2         04          01
RT3         03          02
RT4         NONE        NONE
RT5         NONE        NONE
RT6         NONE        NONE

SCHA        0000        2400
LC3         RT1
LC2         RT2
LC1         RT3

SCHB        2400        2400
LC3         NONE
LC2         NONE
LC1         NONE

SCHC        2400        0000
LC3         NONE
LC2         NONE
LC1         NONE

REQ
```

Route Table #15 Printout
PLCR (RT15)

```
REQ         MDT1

TNO01
DLT         NONE
ADD         *1          <-- 1-second pause.

REQ         MDT2

TNO02
DLT         NONE
ADD         *17300000*365432   <-- 1-second pause + 7300000 = 6-seconds pause + 65432.

REQ
```

Modify Digits Table Printout
PLCR (MDT1 and MDT2)

NOTE:
A 1-second pause is usually required when using Loop Start trunks, to allow the CO line enough time to attach a receiving register. This is usually not required for Ground Start trunks.

```
COD         MMMMMM
OK          PTOL

REQ         PAR

HAC         312     <-- These parameters are the same as in DLC1/PAR.
ICC         Y
SPCC1       730-0000    <-- These parameters are the same as in DMDR.
SPCC2       NONE
DDP         1
AUTH1       05      <-- Absorbs the 5-digit authorization code, and prevents it from being printed (SMDR).

AUTH2       NONE
REQ
```

PTOL (PAR) Printout

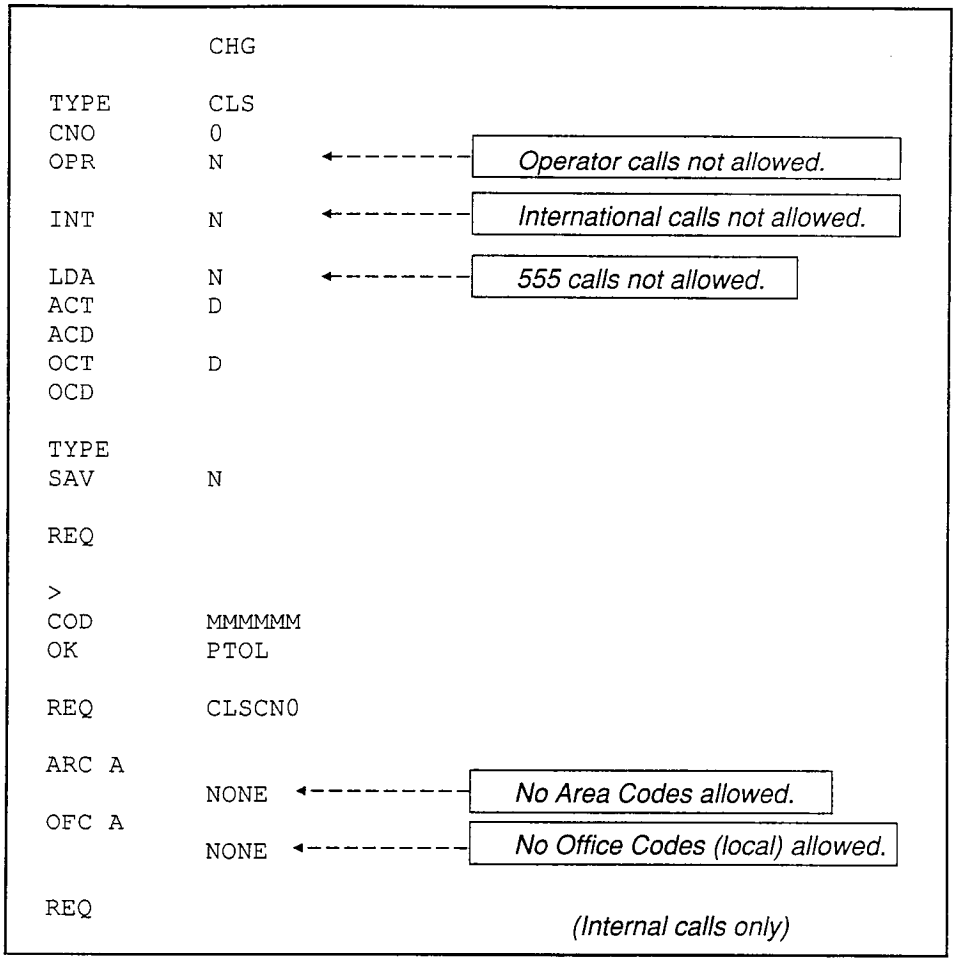

DTOL (CLS) – PTOL (CLSCN0) Restriction Class #0 Printout

NOTE:
Stations can be programmed for internal calls only by denying LC3 and DTA in the Class of Service Data Block (DCOS). However, this will not deny Operator/International/555 calls. To specifically allow/deny these calls, use the DTOL Data Block.

```
>
COD         MMMMMM
OK          DTOL

REQ         CHG
TYPE        CLS
CNO         1
OPR         Y
INT         N
LDA         N
ACT         D
ACD
OCT         A
OCD

TYPE
SAV         N

>
COD         MMMMMM
OK          PTOL

REQ         CLSCN1

ARC A

            NONE
OFC A
            2009  2109  2209  2309  2409  2509  2609  2709  2809
            2909  3009  3109  3209  3309  3409  3509  3609  3709
            3809  3909  4009  4109  4209  4309  4409  4509  4609
            4709  4809  4909  5009  5109  5209  5309  5409  5509
            5609  5709  5809  5909  6009  6109  6209  6309  6409
            6509  6609  6709  6809  6909  7009  7109  7209  7309
            7409  7509  7609  7709  7809  7909  8009  8109  8209
            8309  8409  8509  8609  8709  8809  8909  9009  9109
            9209  9309  9409  9509  9609  9709  9809  9909
TNO         02
ARC         714
CNO         1
OFC
            7300
REQ
```

No Area Codes allowed.
All local Office Codes allowed
(local and metro calls only).

Exception:
Area Code 714 and Office Code 730,
so (714)730-XXXX is allowed.

DTOL (CLS) – PTOL (CLSCN1) Restriction Class #1 Printout

```
          CLS
CNO       2
OPR       Y
INT       N
LDA       Y
ACT       D
ACD
OCT       A
OCD
                                    (See Note)
TYPE
SAV       N

>
COD       MMMMMM
OK        PTOL

REQ       CLSCN2

ARC A
          217  219  309  312  317  414  608  618  715  812
          815
OFC A
          2009  2109  2209  2309  2409  2509  2609  2709  2809
          2909  3009  3109  3209  3309  3409  3509  3609  3709
          3809  3909  4009  4109  4209  4309  4409  4509  4609
          4709  4809  4909  5009  5109  5209  5309  5409  5509
          5609  5709  5809  5909  6009  6109  6209  6309  6409
          6509  6609  6709  6809  6909  7009  7109  7209  7309
          7409  7509  7609  7709  7809  7909  8009  8109  8209
          8309  8409  8509  8609  8709  8809  8909  9009  9109
          9209  9309  9409  9509  9609  9709  9809  9909
TNO       01
ARC       714
CNO       2
OFC
          7300

                -

REQ
```

Allows all calls to Illinois, Wisconsin, and Indiana, including local and metro calls. No other calls allowed, except (714)730-XXXX.

DTOL (CLS) – PTOL (CLSCN2) Restriction Class #2 Printout

Note:
The add/delete list is not shown here. Instead, the result of the programming is shown by using the ***PTOL Program.***

```
COD       MMMMMM
OK        DTOL

REQ       CHG

TYPE      CLS
CNO       3
OPR       Y
INT       Y
LDA       Y
ACT       A
ACD
OCT       A
OCD

TYPE
SAV       N

>
COD       MMMMMM
OK        PTOL

REQ       CLSCN3

ARC A
          200  201  202  203  204  205  206  207  208  209
          210  211  212  213  214  215  216  217  218  219
          300  301  302  303  304  305  306  307  308  309
          310  311  312  313  314  315  316  317  318  319
          400  401  402  403  404  405  406  407  408  409
          410  411  412  413  414  415  416  417  418  419
          500  501  502  503  504  505  506  507  508  509
          510  511  512  513  514  515  516  517  518  519
          600  601  602  603  604  605  606  607  608  609
          610  611  612  613  614  615  616  617  618  619
          700  701  702  703  704  705  706  707  708  709
          710  711  712  713  714  715  716  717  718  719
          800  801  802  803  804  805  806  807  808  809
          810  811  812  813  814  815  816  817  818  819
          900  901  902  903  904  905  906  907  908  909
          910  911  912  913  914  915  916  917  918  919
OFC A
          2009  2109  2209  2309  2409  2509  2609  2709  2809
          2909  3009  3109  3209  3309  3409  3509  3609  3709
          3809  3909  4009  4109  4209  4309  4409  4509  4609
          4709  4809  4909  5009  5109  5209  5309  5409  5509
          5609  5709  5809  5909  6009  6109  6209  6309  6409
          6509  6609  6709  6809  6909  7009  7109  7209  7309
          7409  7509  7609  7709  7809  7909  8009  8109  8209
          8309  8409  8509  8609  8709  8809  8909  9009  9109
          9209  9309  9409  9509  9609  9709  9809  9909
REQ
```

There are no restrictions—treated as if TOL = NONE.

DTOL (CLS) – PTOL (CLSCN3) Restriction Class #3 Printout

7. LOGIC

7.00 General

7.01 The purpose of the General Logic Flowchart (which begins below) is to show the general flow for a typical LCR phone call, but without the details.

7.02 All of the LCR/TR logic, and the sequence in which the logic is processed by the CPU, are summarized in the Detailed Logic Flowchart. Use this flowchart to answer questions about how the system will act when programmed in a certain way. The flowchart may also be used as a fault finding aid for customer data.

GENERAL LOGIC FLOWCHART

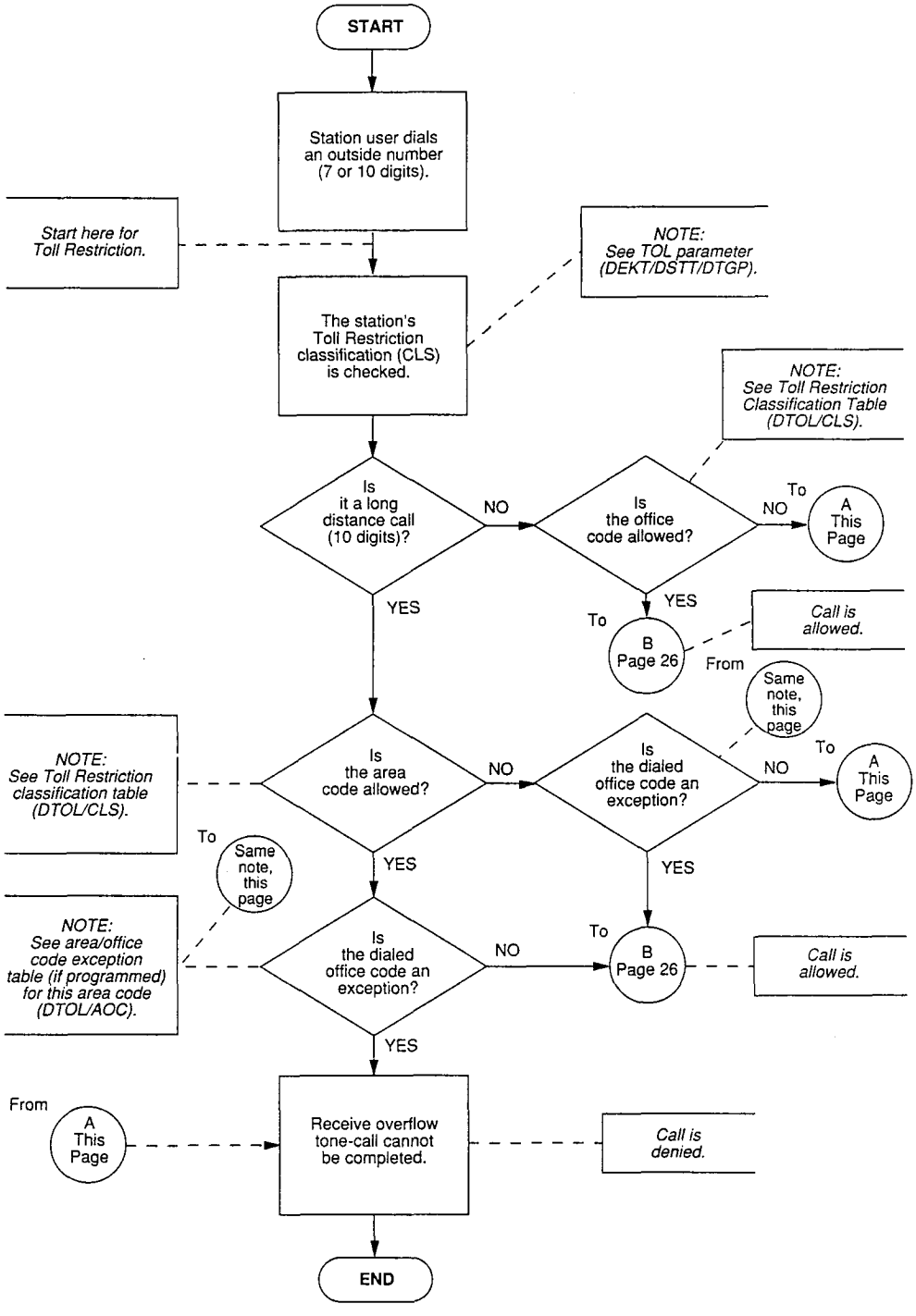

GENERAL LOGIC FLOWCHART (continued)

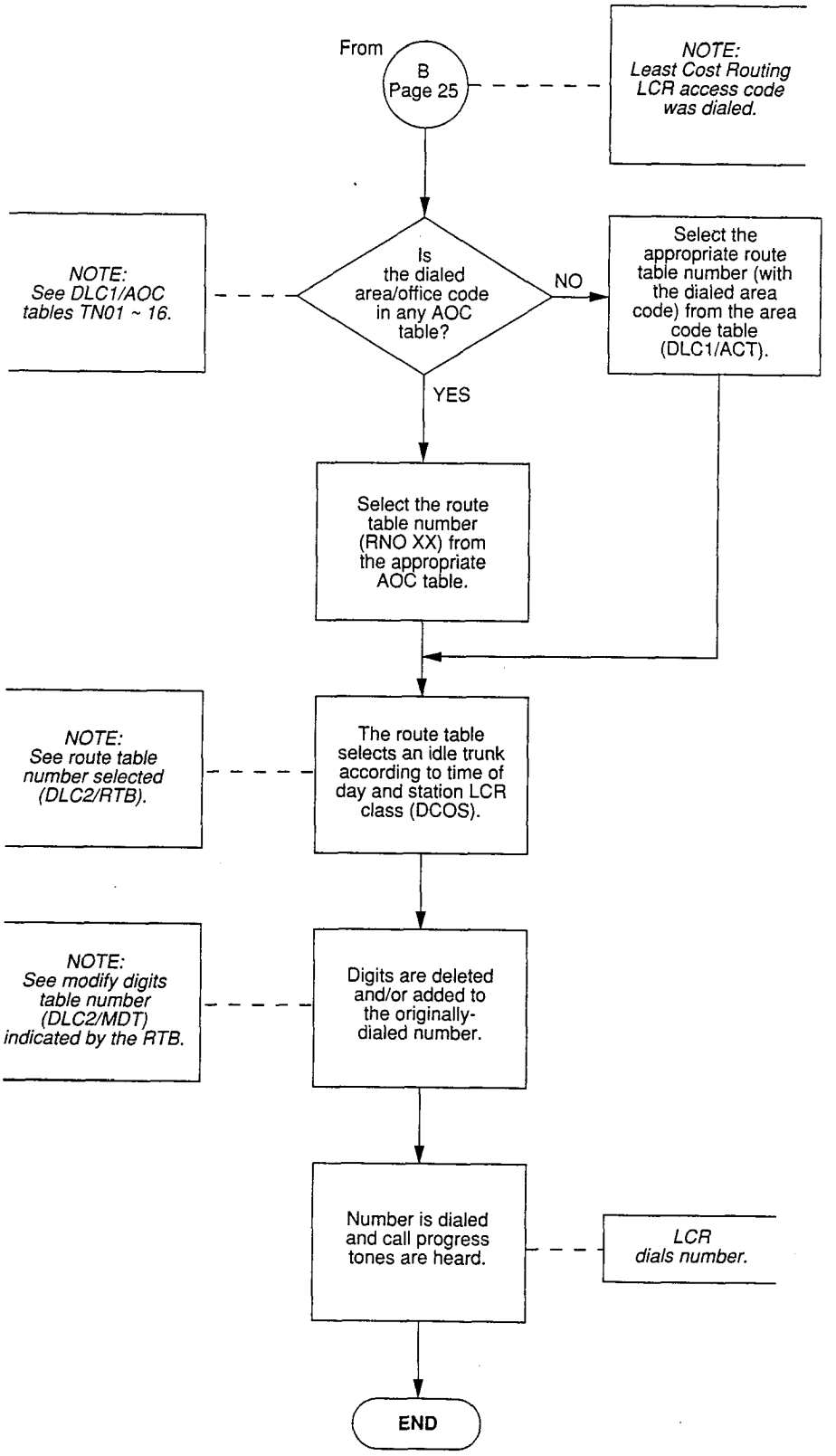

DETAILED LOGIC FLOWCHART

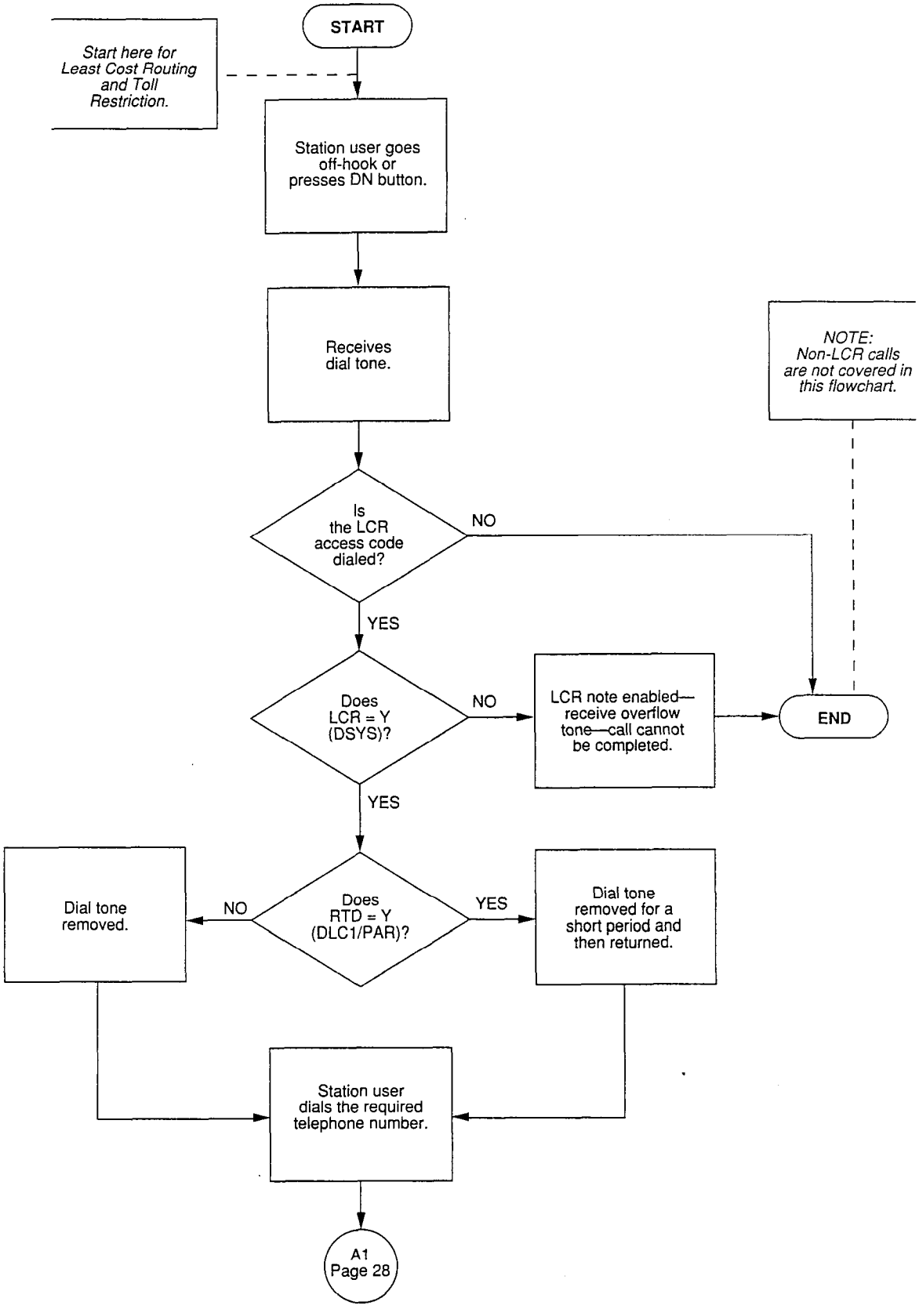

DETAILED LOGIC FLOWCHART (continued)

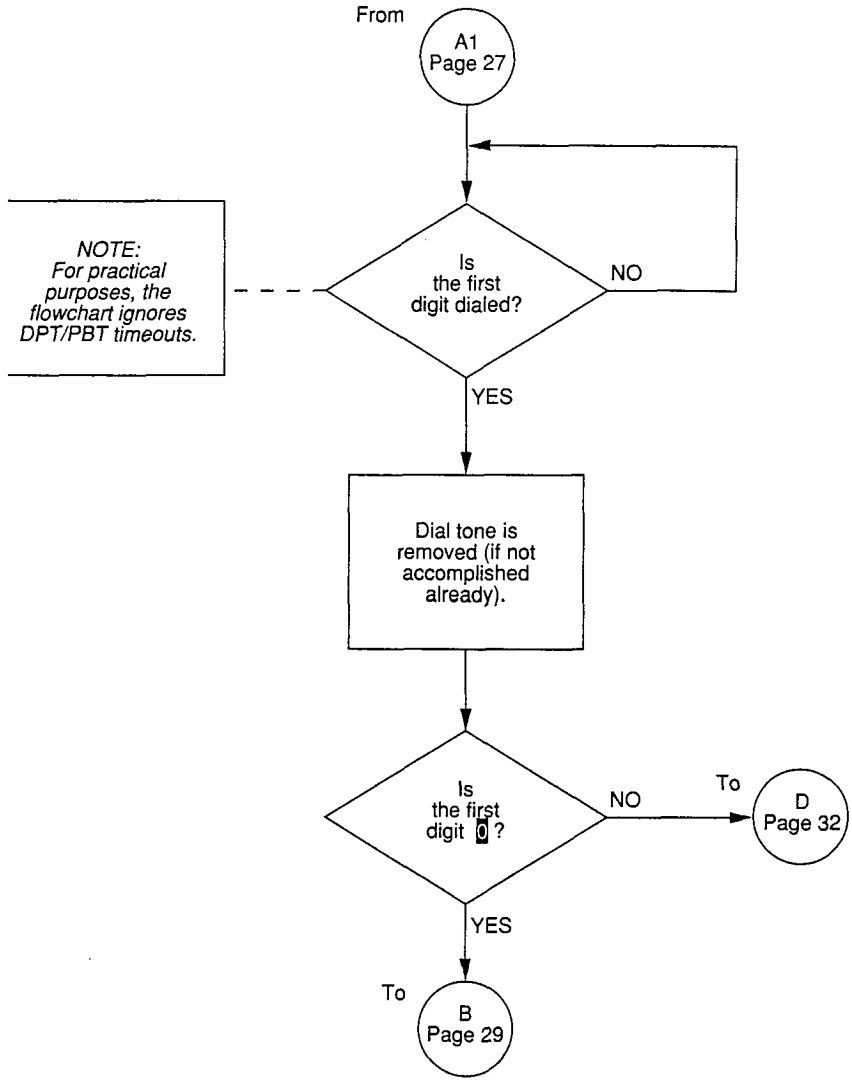

DETAILED LOGIC FLOWCHART (continued)

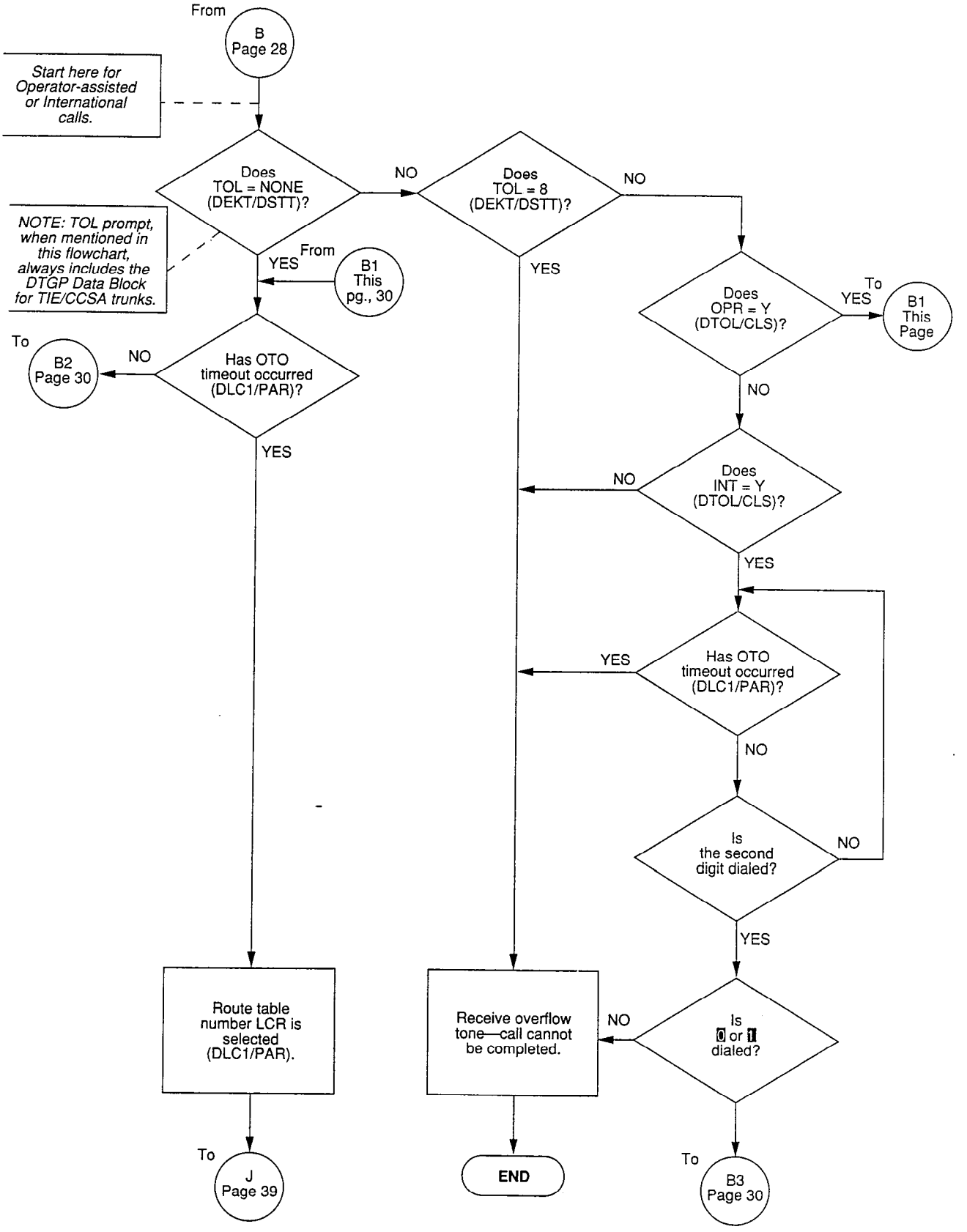

DETAILED LOGIC FLOWCHART (continued)

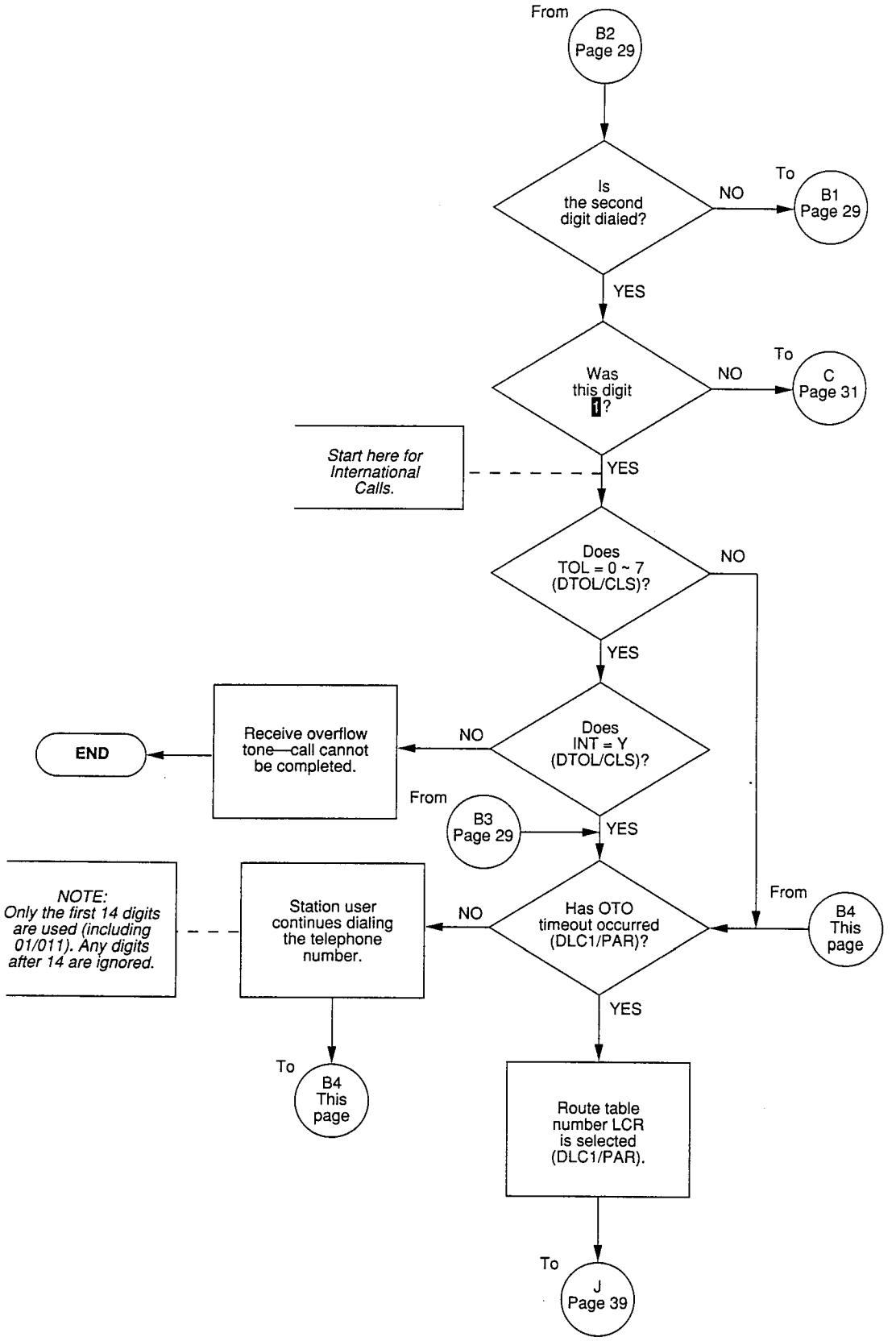

DETAILED LOGIC FLOWCHART (continued)

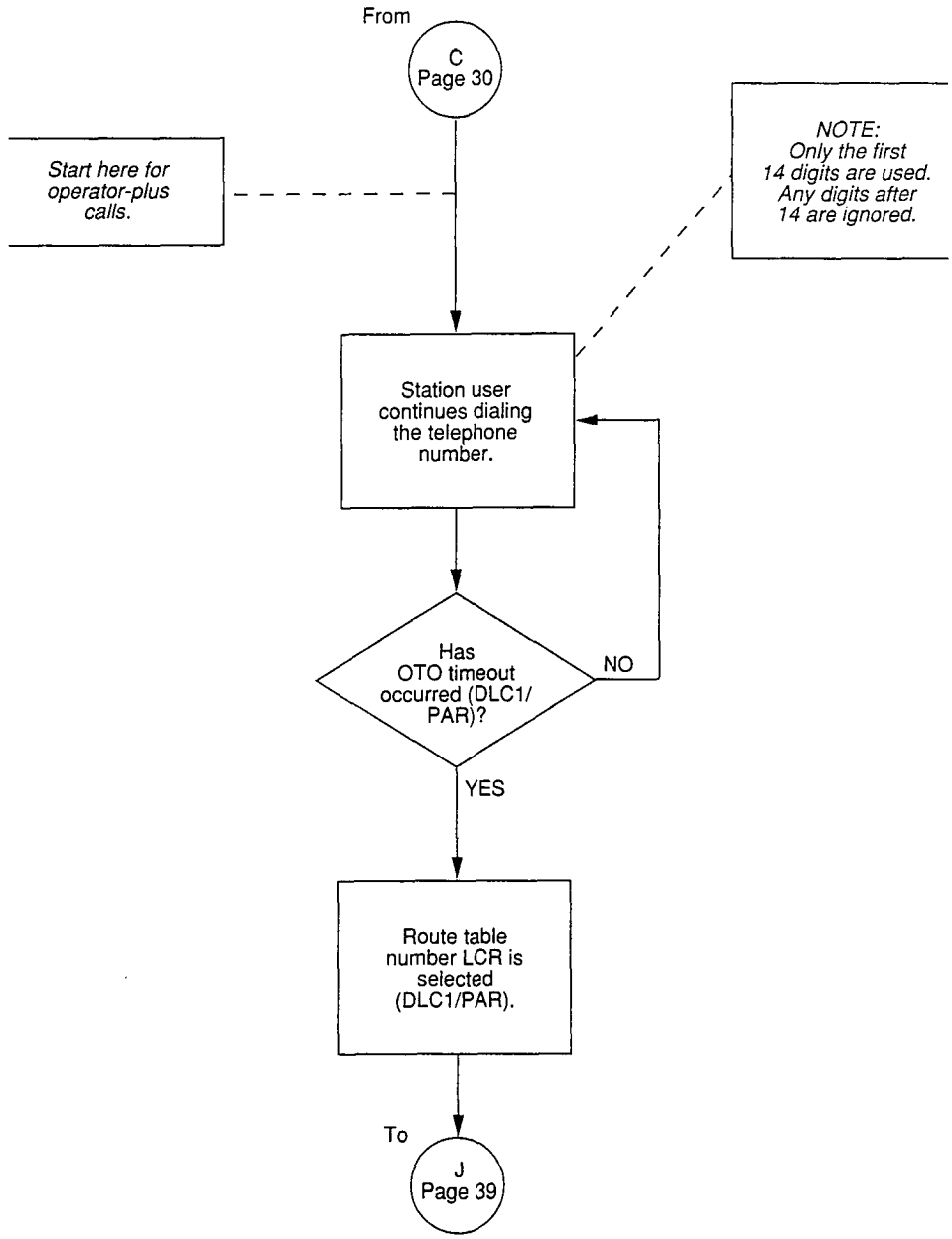

DETAILED LOGIC FLOWCHART (continued)

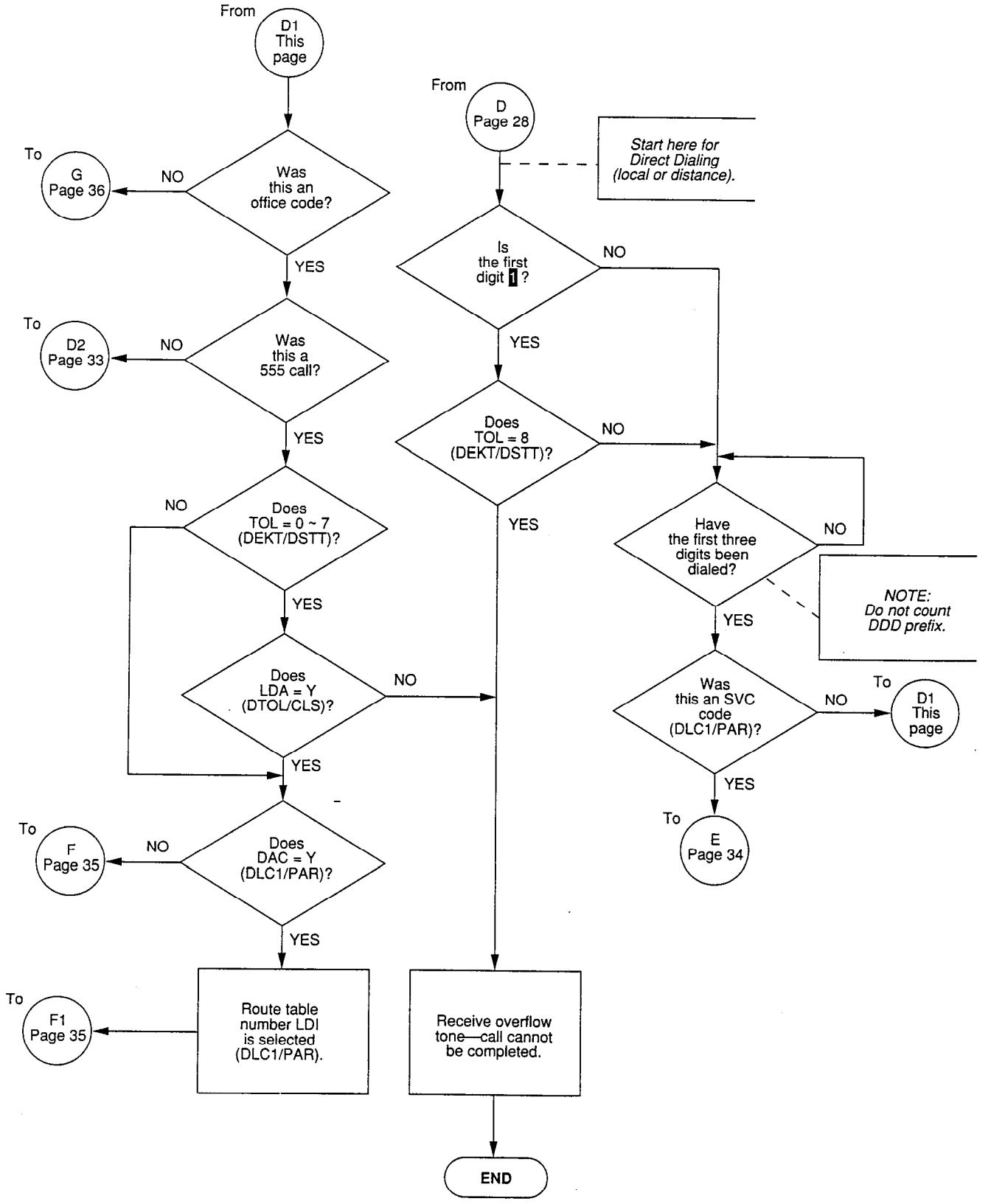

DETAILED LOGIC FLOWCHART (continued)

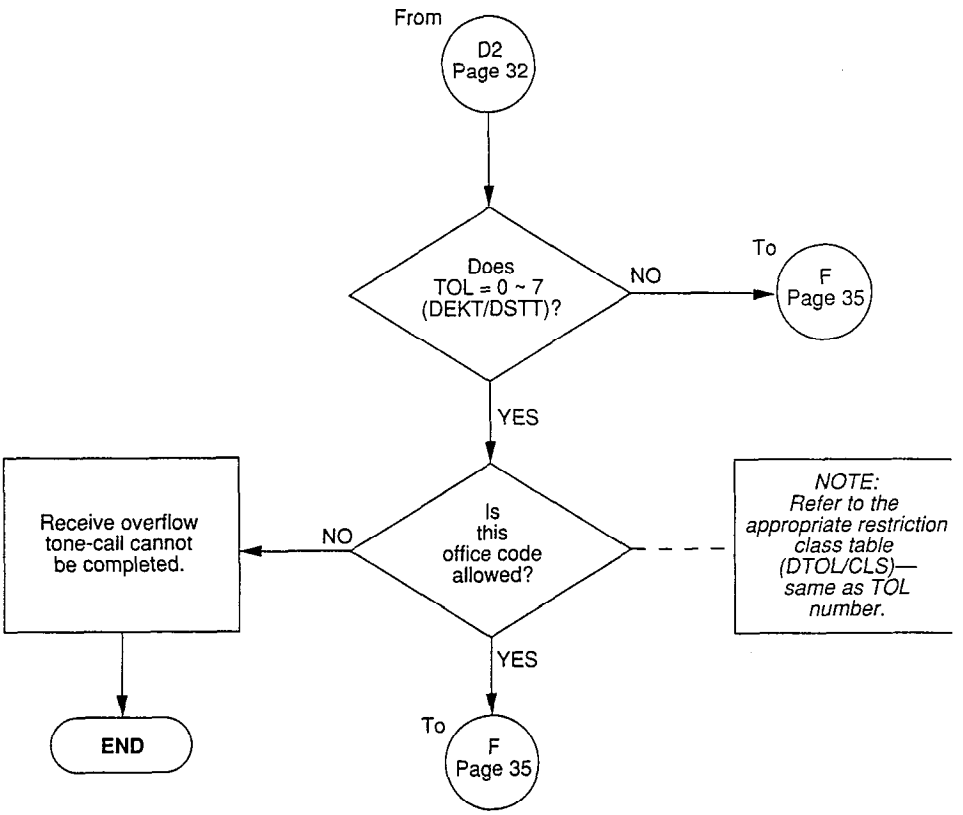

DETAILED LOGIC FLOWCHART (continued)

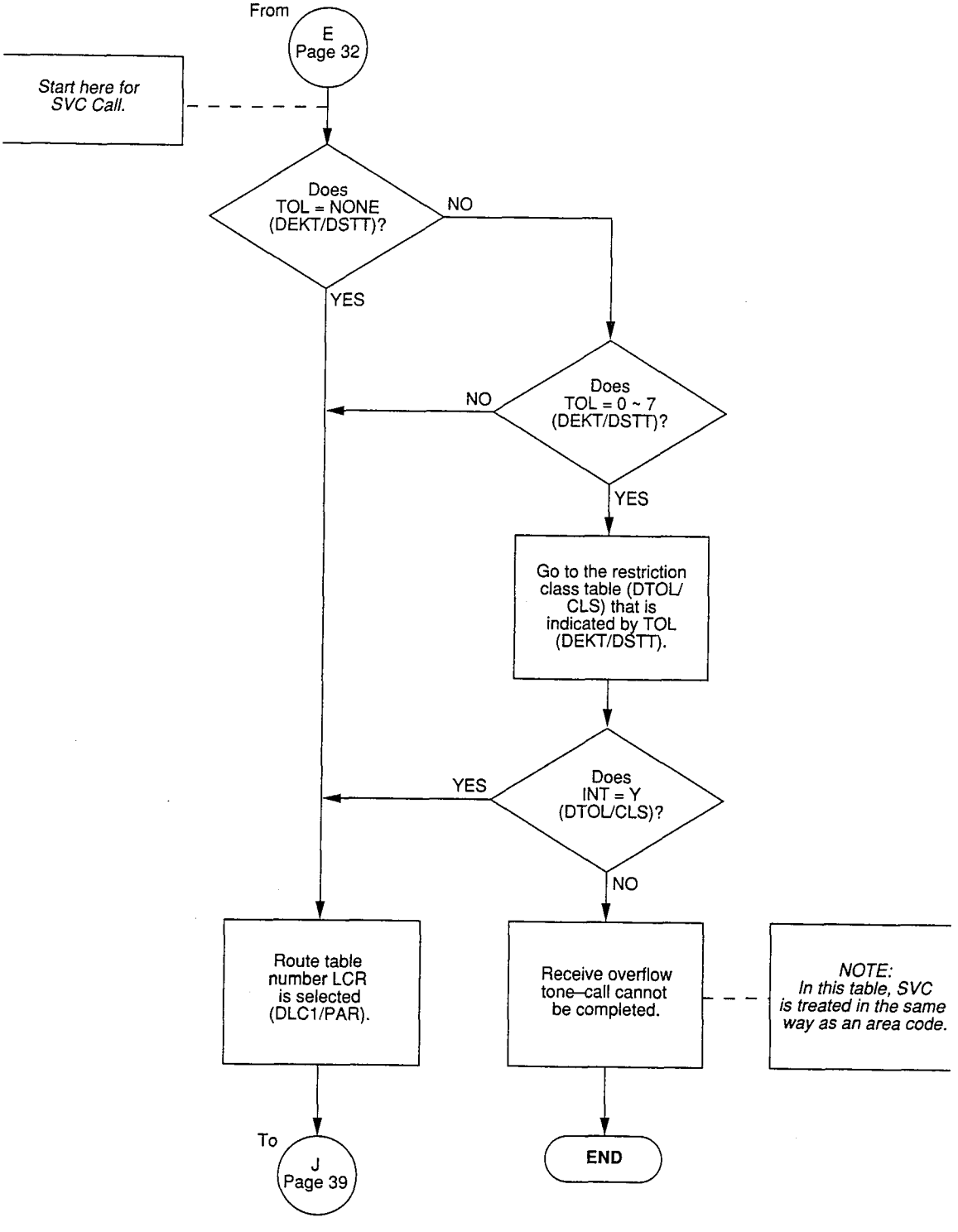

DETAILED LOGIC FLOWCHART (continued)

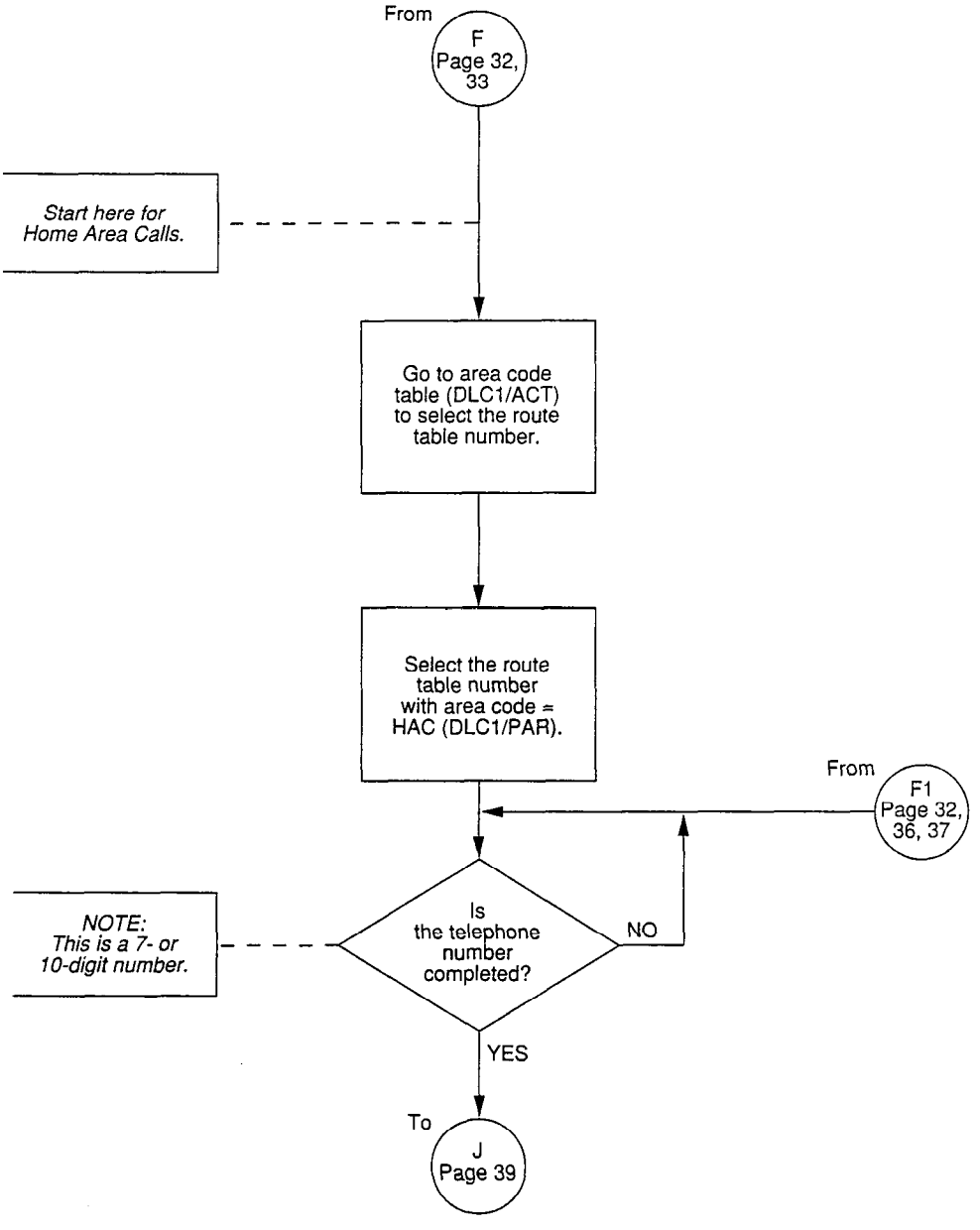

DETAILED LOGIC FLOWCHART (continued)

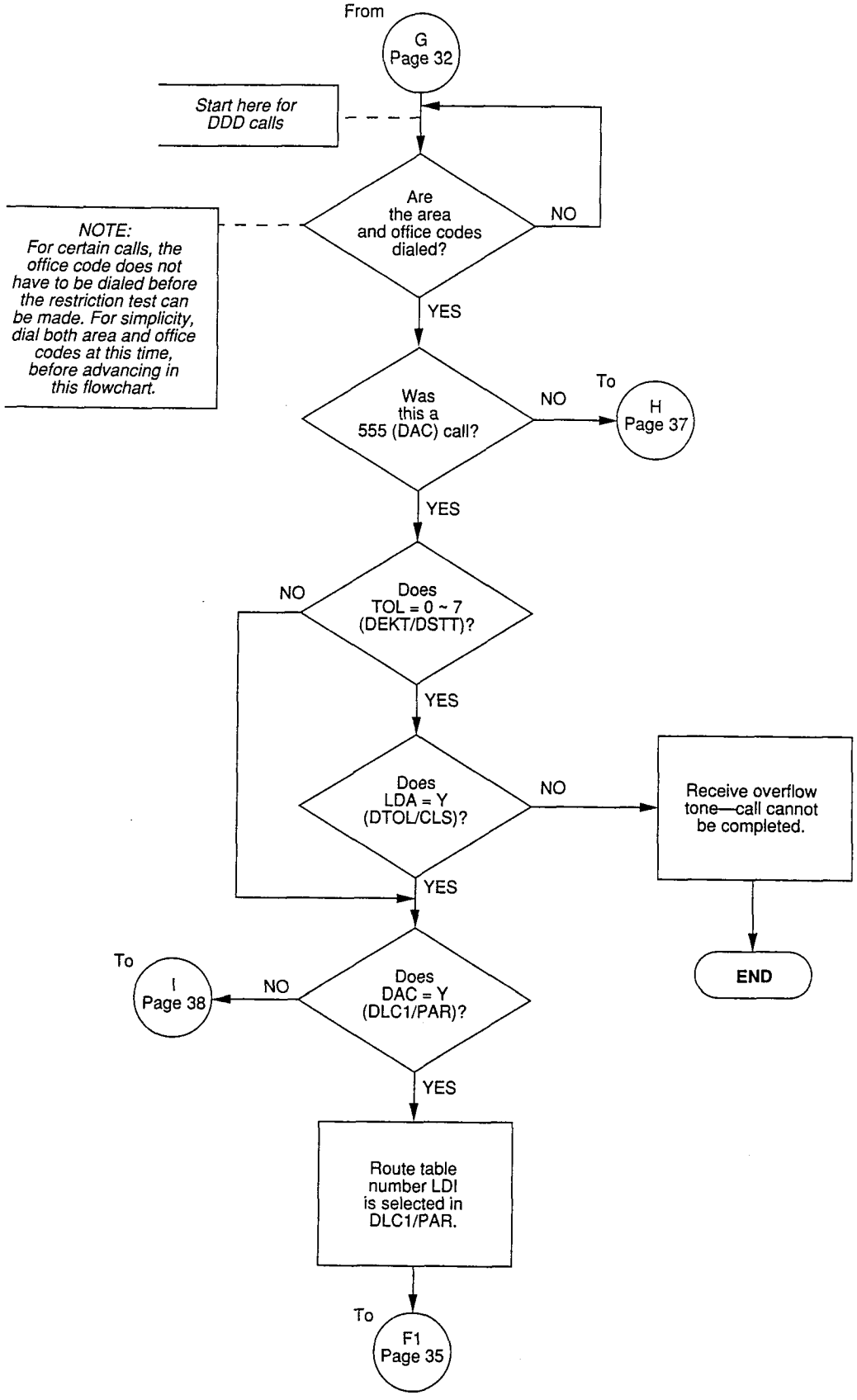

DETAILED LOGIC FLOWCHART (continued)

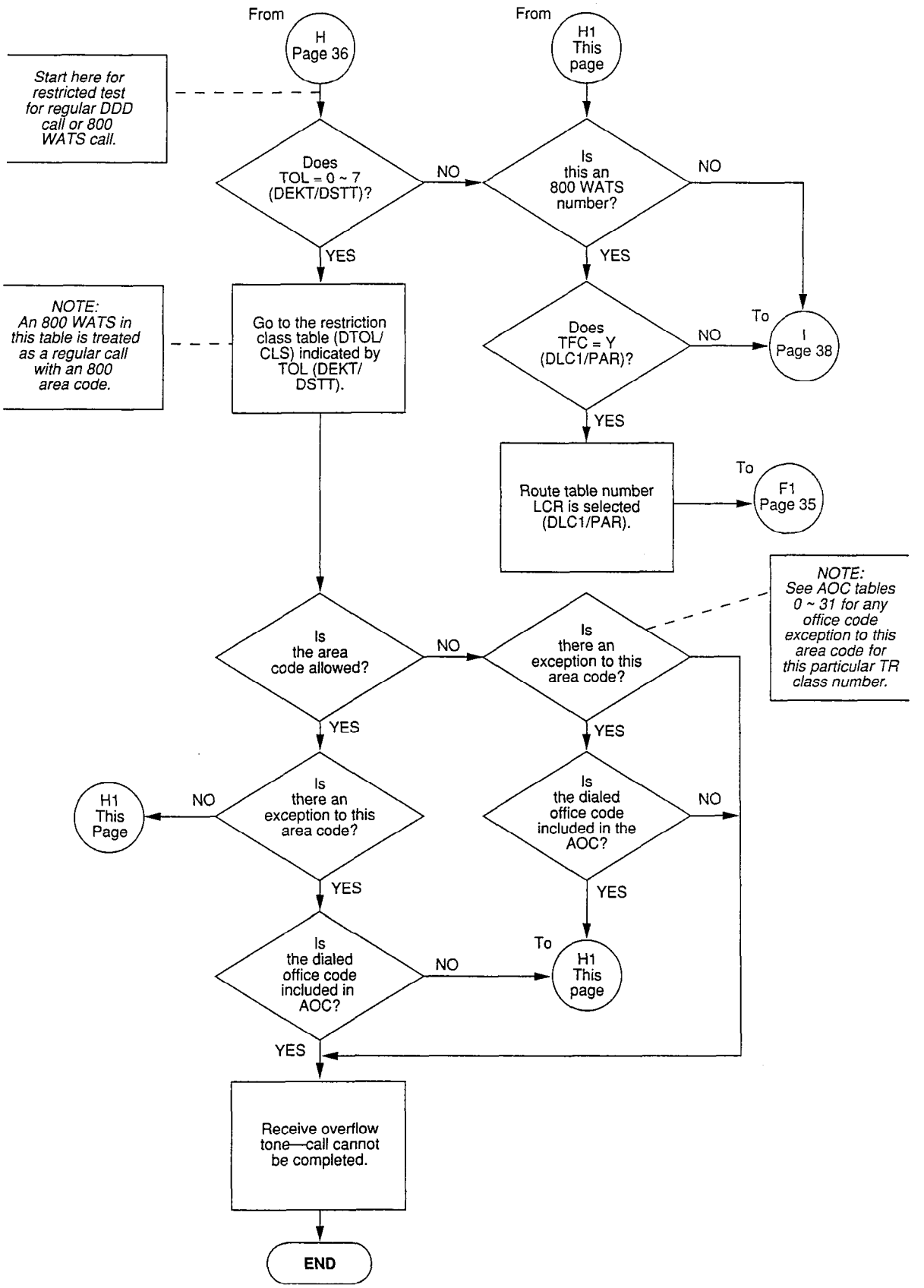

DETAILED LOGIC FLOWCHART (continued)

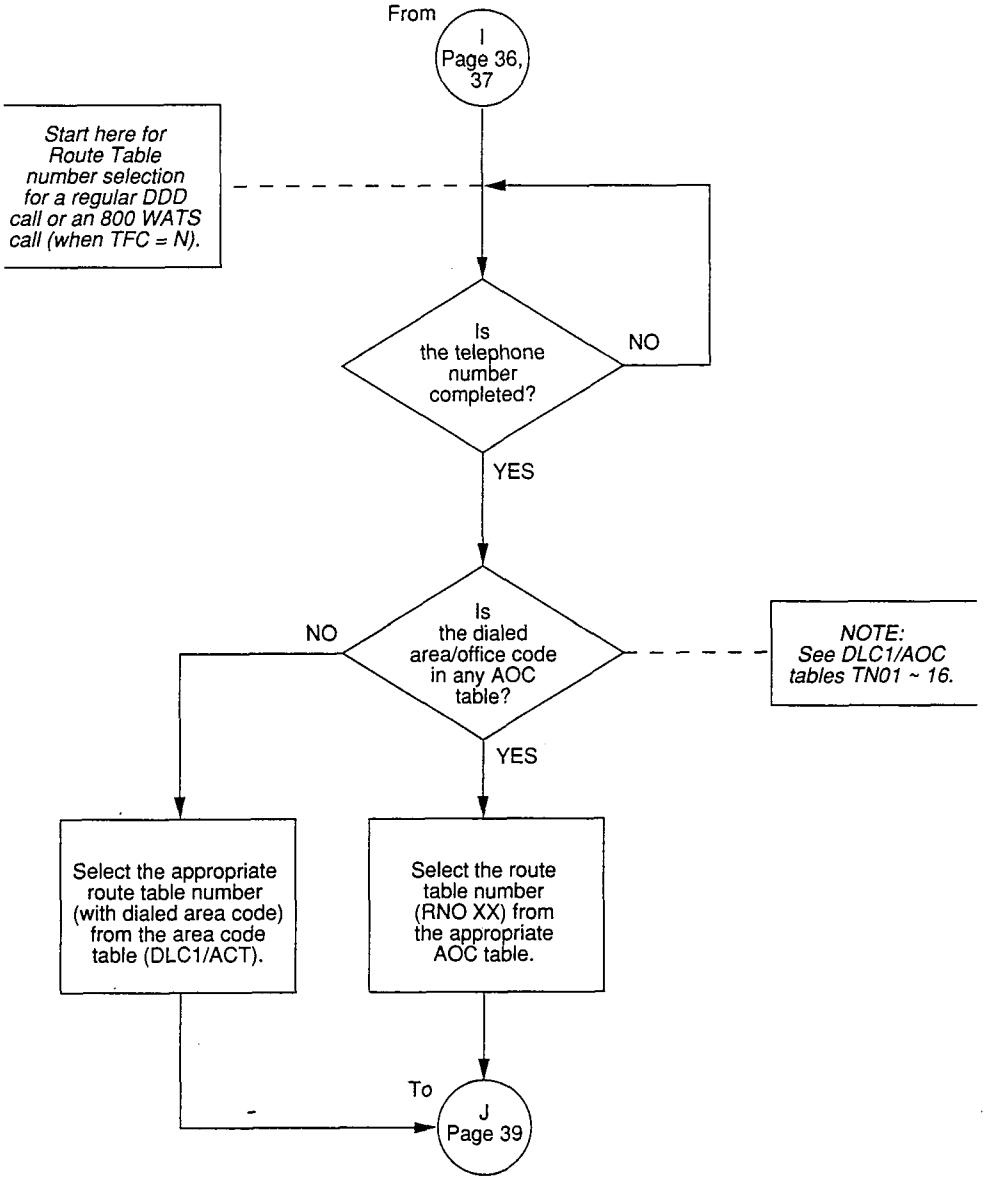

DETAILED LOGIC FLOWCHART (continued)

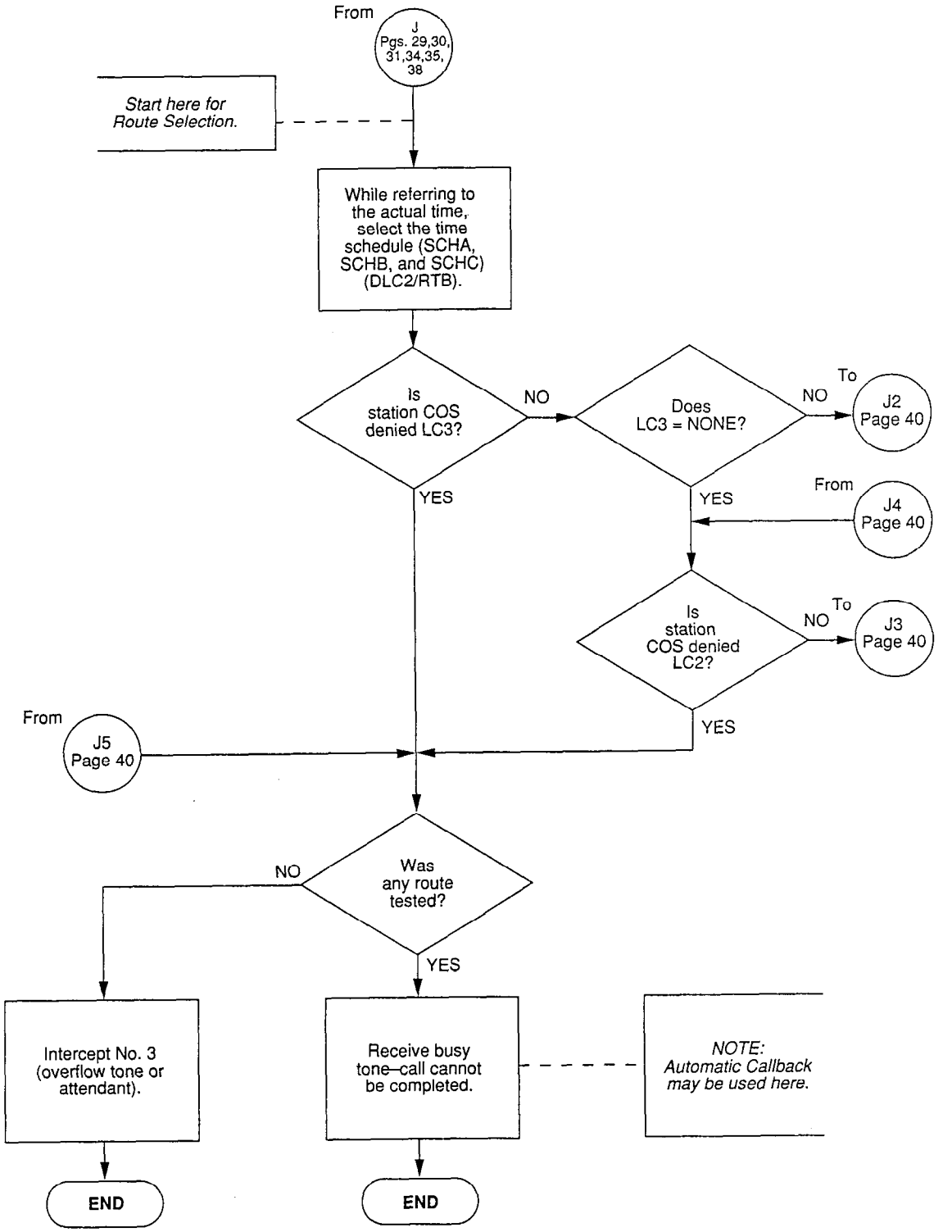

DETAILED LOGIC FLOWCHART (continued)

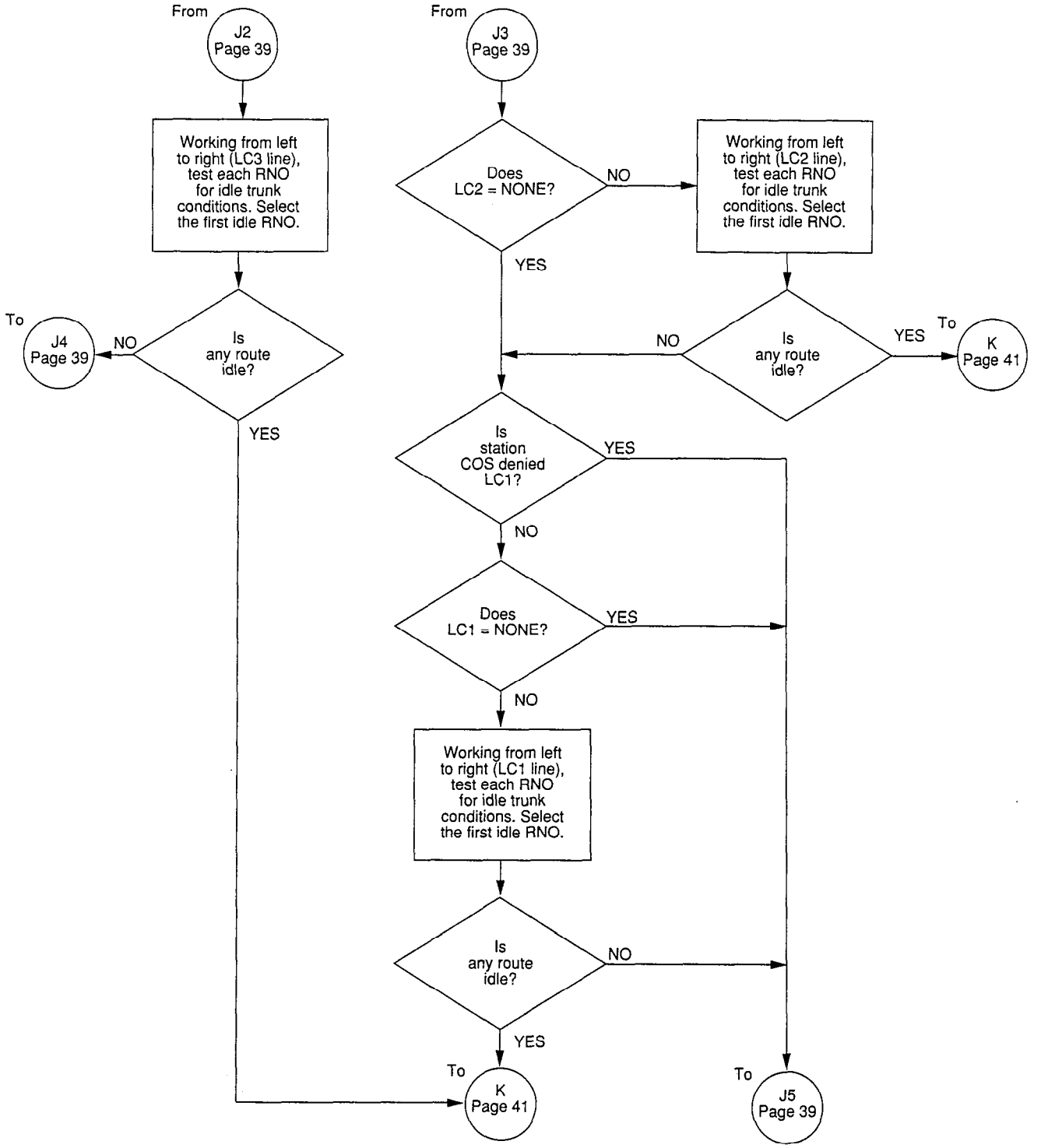

DETAILED LOGIC FLOWCHART (continued)

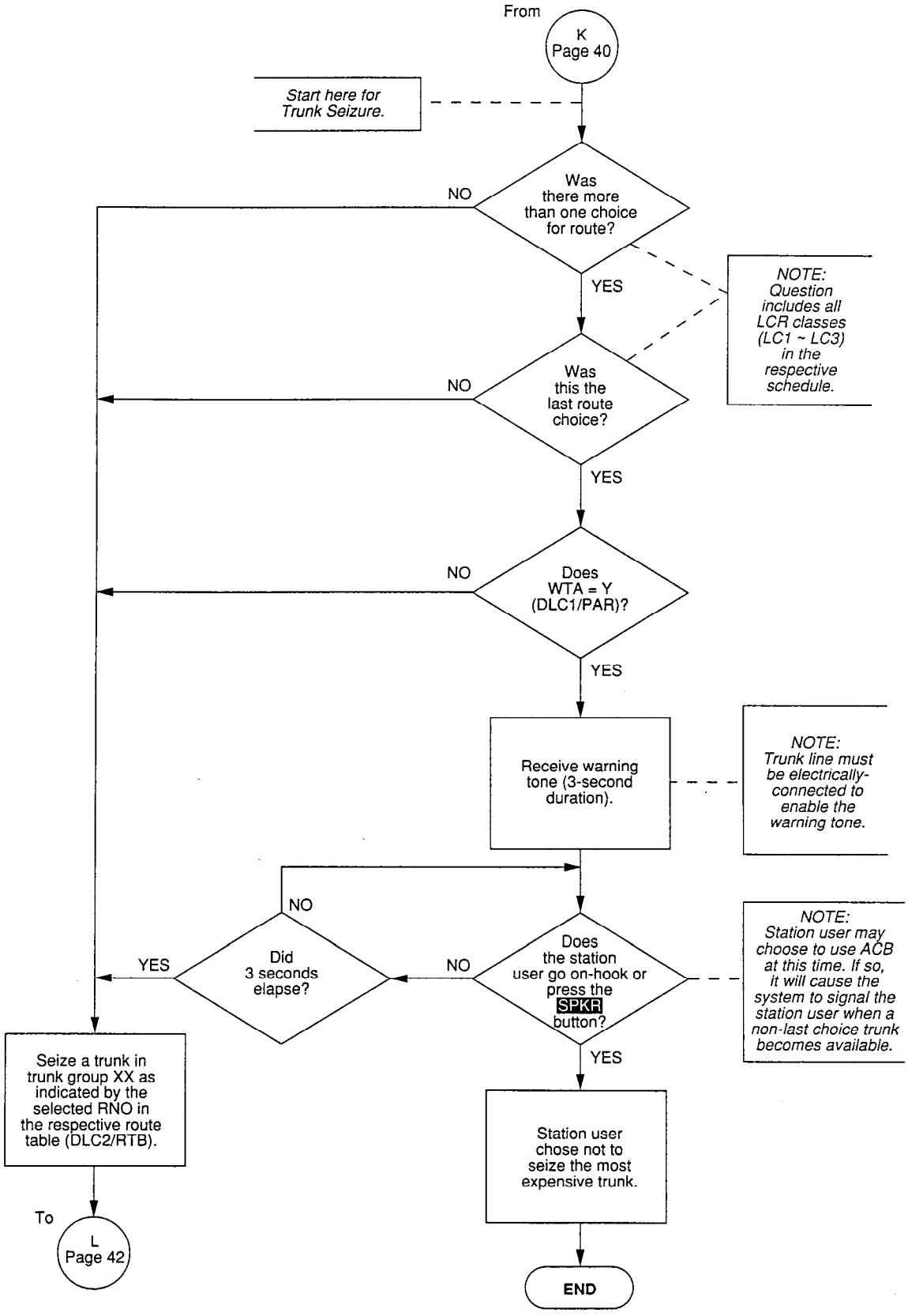

DETAILED LOGIC FLOWCHART (continued)

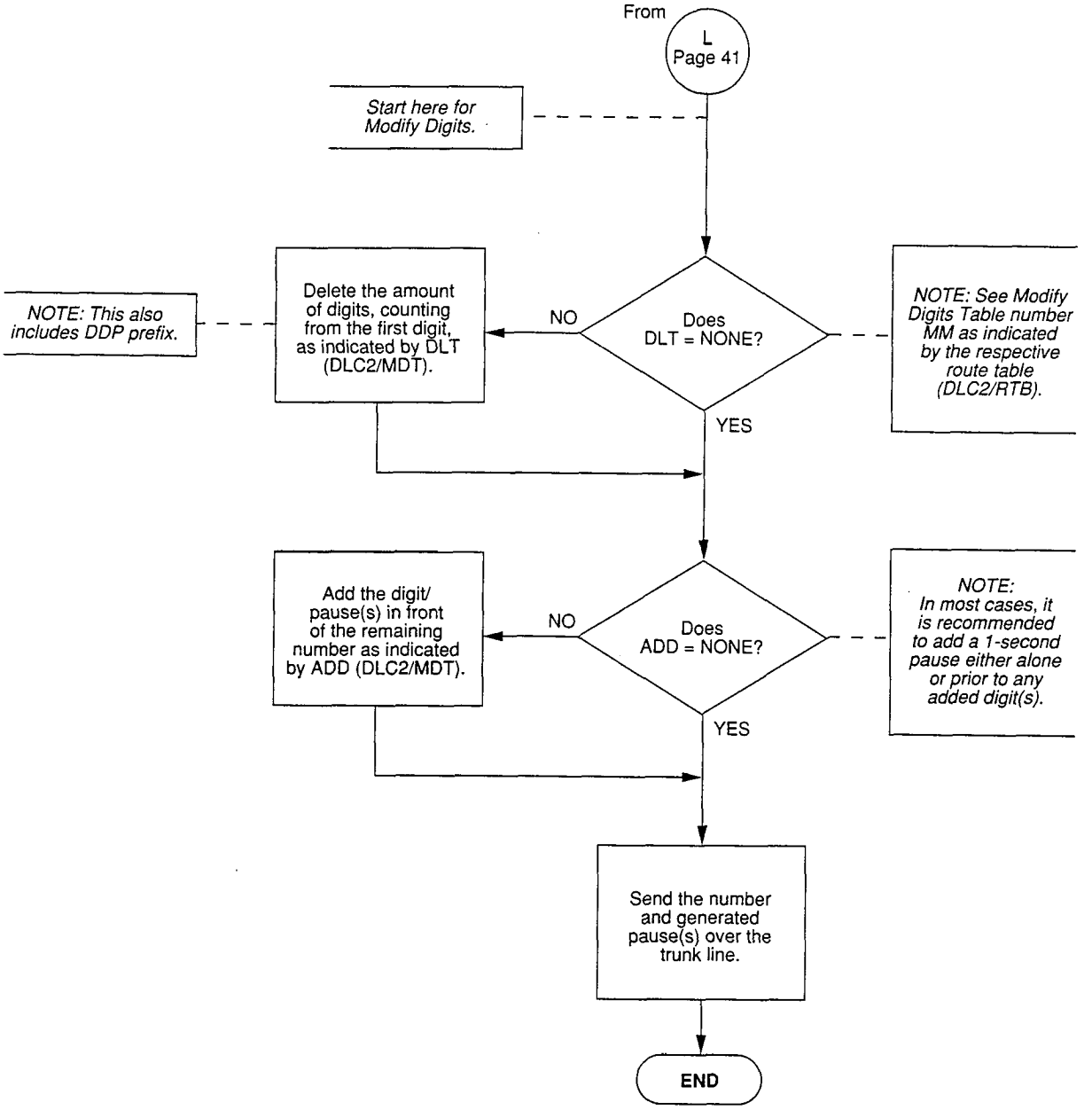

Perception® e & ex

T1/DS-1 DIGITAL TRUNK INTERFACE

APPENDIX #3

PRODUCT FEATURES

PREREQUISITES and PROCEDURES for INSTALLATION

and

TROUBLESHOOTING FLOWCHARTS

PERCEPTION$_{e\&ex}$ T1/DS-1 DIGITAL TRUNK INTERFACE

TABLE OF CONTENTS

PARAGRAPH	SUBJECT	PAGE
1.	INTRODUCTION	1
1.00	General Information	1
1.10	Requirements	1
2.	NDTU CONFIGURATION	2
3.	PREREQUISITES AND PROCEDURES FOR INSTALLATION	2
3.00	General	2
3.10	Specific Switch Settings	3
3.20	Installing NDTU	6
3.30	Connecting to Channel Service Unit	6
3.40	Connecting to Another PBX Closer than 655 Feet	7
3.50	Front Panel LED Overview	7
3.60	Alarm and Status Conditions	8
3.70	Loop Back Procedure	9
3.80	Cabling	10
4	TROUBLESHOOTING	10
4.00	General	10
	ATTACHMENT A	21

FIGURE LIST

FIGURE	TITLE	PAGE
1	DS-1 CONNECTION TO DIGITAL NETWORK	1
2	DS-1 CONNECTION VIA CSU	1
3	DS-1 CONNECTION VIA CSU AND CHANNEL BANK	2
4	NDTU PRINTED CIRCUIT BOARD LAYOUT	3
5	DS-1 CONNECTION TO DIGITAL NETWORK	6
6	REQUIRED CONNECTORS FOR DS-1 CONNECTION AT DISTANCES OF LESS THAN 655 FEET (200 METERS)	7
7	LED POSITIONS	8
8	RED ALARM	8
9	YELLOW ALARM	8
10	BLUE ALARM	9
11	FALT LED	9
12	BSY LED	9
13	FLOWCHART SYMBOLS	10

TABLE LIST

TABLE	TITLE	PAGE
1	TRANSMIT EQUALIZER SETTING SWITCH	4
2	S3-NDTU SLOT POSITION	4

TABLE LIST (CONT)

TABLE	TITLE	PAGE
3	SIGNALING TYPE SELECTION SWITCHES	5
4	TERMINAL SEQUENCE & DESIGNATIONS CONNECTOR NUMBERS J7/J501 (PERCEPTION$_{ex}$), J15/J515 (PERCEPTION$_{e}$) NDTU T00/T08	11

CHART LIST

CHART	TITLE	PAGE
1	HARDWARE VERIFICATION	12
2	FAULT CLASSIFICATION	13
3	ALARM FAULTS	15
4	HARDWARE FAULTS	16
5	FALT LED	17

1 INTRODUCTION

1.00 General Information

1.01 The T1/DS-1 interface (NDTU) PCB provides PERCEPTION$_{e\&ex}$ with a capacity of up to 24 digital circuits. Up to two NDTU PCBs may be placed in a PERCEPTION$_{e\&ex}$ system, so that a maximum of 48 digital circuits may be placed in service. (Attachment A describes the T1/DS-1 interface in greater detail.) The second NDTU PCB must be installed in the expansion cabinet.

1.02 Each NDTU PCB can be programmed to activate 4, 8, 12, 16, 20, or 24 of the digital trunks. The remaining slots can be assigned to analog trunks, so that a mix of analog and digital trunks can be switched in the PERCEPTION$_{e\&ex}$ systems. This internal "fractionalized" use of the T1/DS-1 interface is unique in the industry.

1.10 Requirements

1.11 Span: Each PERCEPTION$_{e\&ex}$T1 span requires the following configuration:

- One NDTU PCB for each T1 span (T1/DS-1 interface).
- A customer-provided Channel Service Unit (CSU) for each span connected to the network, or for a span between PBXs that are more than 655 feet apart (see Attachment B for CSU information).
- A 30 foot amphenol-type to DB15 connector cable (PBX-to-CSU cable) is provided with each NDTU.

IMPORTANT NOTE:
The maximum distance between PERCEPTION$_{e\&ex}$ and the CSU/DSU is 30 feet. Toshiba provides the proper cable for this connection with each NDTU PCB. Its installation is required for proper operation.

1.12 System: Each PERCEPTION$_{e\&ex}$ system requires the following configuration:

- One NTWU-3 PCB.
- **D.01**, or higher level software.
- A cable between NTWU-3 and the first NDTU. (The cable is provided with each NDTU.)

1.13 Applications:

1) A T1/DS-1 interface (span) can be connected to the network, and can provide up to 24 (in units of 4) FX, DID, TIE, and Loop Start or Ground Start CO trunks in any combination. A CSU is required for this configuration (see Figure 1).

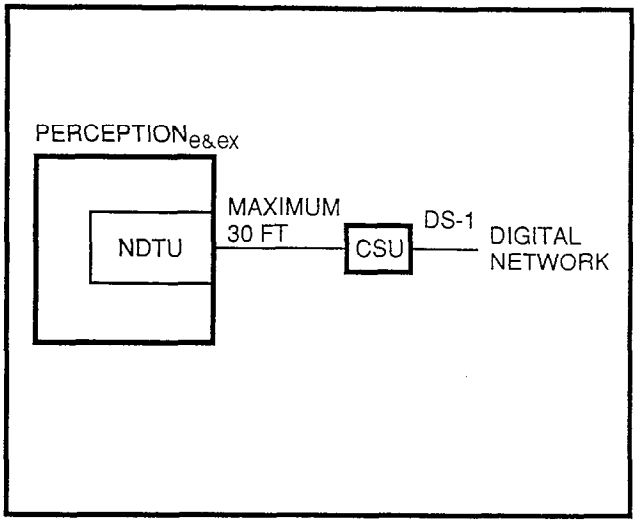

FIGURE 1—DS-1 CONNECTION TO DIGITAL NETWORK

2) A T1 span can also be used to connect digital TIE trunks (Type I or Type II) between PERCEPTION$_{e\&ex}$ and another PBX, with either T1 equipment, or with an analog PBX using channel banks (see Figure 2). A CSU is required at each PBX, if the distance between

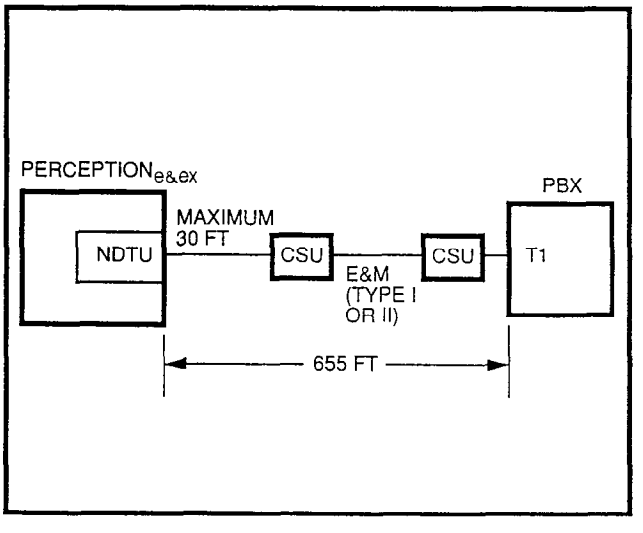

FIGURE 2—DS-1 CONNECTION VIA CSU

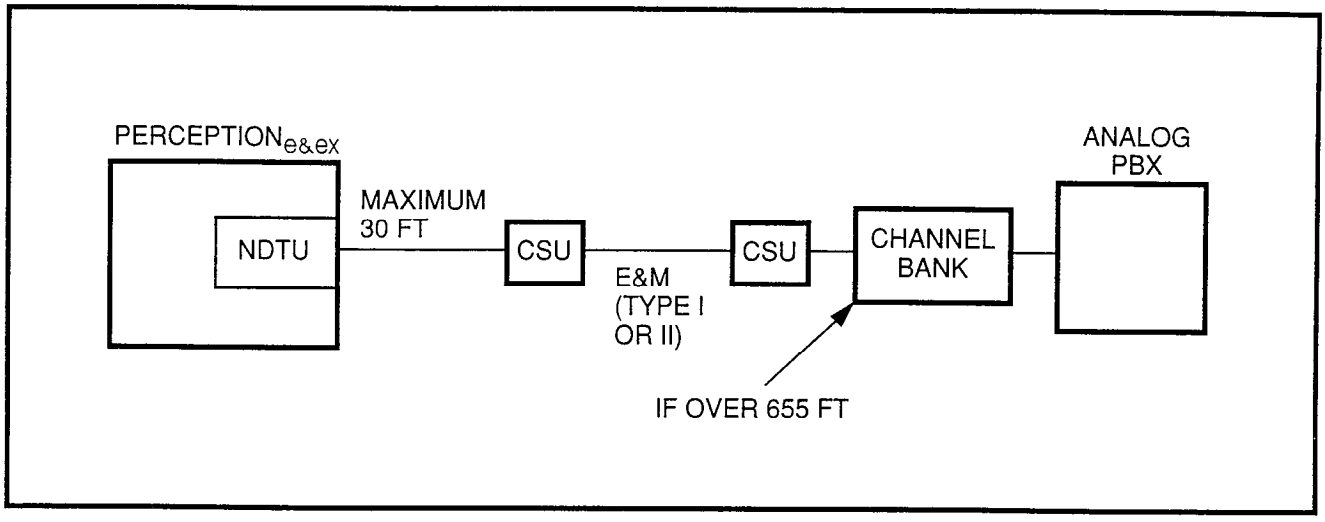

FIGURE 3—DS-1 CONNECTION VIA CSU AND CHANNEL BANK

the PERCEPTION$_{e\&ex}$ system and the PBX exceeds 655 feet (see Figure 3).

NOTE:
CSUs are required if the distance between PBXs is greater than 655 feet.

2 NDTU CONFIGURATION

2.00 The NDTU interface has the following configuration:

1) **Printed Circuit Board Layout:** The NDTU consists of two PCBs (host and subassembly). Figure 4 shows the layout of the switches, strapping options, and connectors on the host PCB, and the LEDs on the front panel attached to the host PCB.

2) **Switches:** There is a total of 11 switches between the host PCB and the front panel of the NDTU. The function of each switch is defined in Paragraph **3.11**.

3) **Straps:** There is a total of eight strapping options on the host PCB. The function of each strapping option is defined in Paragraph **3.12**.

4) **Connectors:** There is a total of three connectors on the host PCB, and they are labeled **J1**, **J2**, and **J3**. The **J1** and **J2** connectors are used to connect the board to the backplane. The **J3** connector, through a coax clock cable, is used to provide the NTWU-3 PCB (Time Switch/ Control Unit PCB) with a clock signal to the NDTU. The coax cable is provided with the NDTU PCB.

5) **LEDs:** There is a total of six LEDs located on the front panel of the NDTU PCB. The function of each LED is defined in Paragraph **3.51**.

3 PREREQUISITES AND PROCEDURES FOR INSTALLATION

3.00 General

NOTE:
*Please refer to Chapter **4** in the Installation section of the PERCEPTION$_{e\&ex}$ Installation and Maintenance manual.*

3.01 The installation of the DS-1 trunk is described in two sections:

1) In PERCEPTION$_{e\&ex}$, see Paragraph **3.20**.

2) From PERCEPTION$_{e\&ex}$ to other equipment, such as a Channel Service Unit. See Paragraphs **3.30**, **3.40**, and Attachment B.

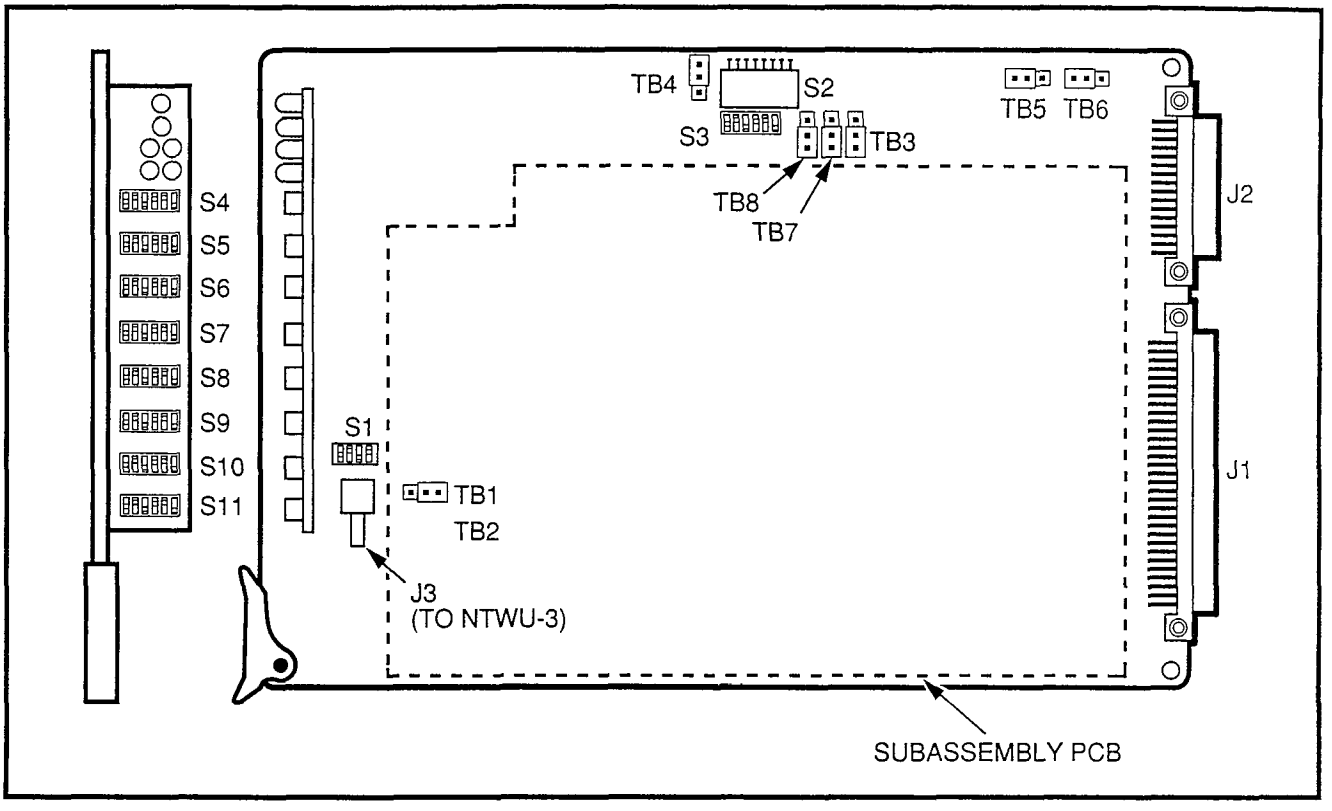

FIGURE 4—NDTU PRINTED CIRCUIT BOARD LAYOUT

3.10 Specific Switch Settings

3.11 The initial (normal) setting of the switches is shown by a • symbol. The upper case "S" indicates the switch, and the lower case "s" indicates the function setting on the switch.

1) S1—Mode selection switch:

   s1: • ON—Robbed bit signaling (normal)
   OFF—Future operation

   s2: • ON—Zero Code Suppression (ZCS)
   OFF—Binary Eight Zero Suppression (B8ZS)

   NOTE:
   Must check and match other side.

   s3: ON—Future operation
   • OFF—Normal operation

   s4: Not used

2) S2—Transmit Equalizer setting switch (distance from PERCEPTION$_{e\&ex}$ to another PBX if CSU/DSU is **not** used). (See Table 1.)

IMPORTANT NOTE:

The maximum distance between PERCEPTION$_{e\&ex}$ and the CSU/DSU is 30 feet. Toshiba provides the proper cable for this connection with each NDTU PCB. Its installation is required for proper operation.

3) S3—NDTU slot position:
   The NDTU PCB can be positioned in slots T00 and T08, in the main or expansion cabinet, respectively. This switch turns on the digital trunks in increments of 4. To use all 24 digital trunks, S3-(s1 ~ s6) must be ON. To activate 12 digital trunks, S3-(s1 ~ s3) must be ON. (See Table 2.)

   ON—Digital Trunk active
   OFF—Digital Trunk disabled

TABLE 1
TRANSMIT EQUALIZER SETTING SWITCH

	• SHORT 0 ~ 150 ft	MEDIUM 150 ~ 450 ft	LONG 450 ~ 655 ft
s1	ON	OFF	OFF
s2	OFF	ON	OFF
s3	OFF	OFF	ON
s4	OFF	ON	OFF
s5	OFF	OFF	ON
s6	OFF	ON	OFF
s7	OFF	OFF	ON
s8	NOT USED	NOT USED	NOT USED

TABLE 2—S3-NDTU SLOT POSITION

		MAIN T00 CHANNELS	EXPANSION T08 CHANNELS
s1	• ON OFF	1 ~ 4	1 ~ 4
s2	• ON OFF	5 ~ 8	5 ~ 8
s3	• ON OFF	9 ~ 12	9 ~ 12
s4	• ON OFF	13 ~ 16	13 ~ 16
s5	• ON OFF	17 ~ 20	17 ~ 20
s6	• ON OFF	21 ~ 24	21 ~ 24

NOTE:
Each channel has two switches.

4) S4 ~ S11-Signaling type selection switches: The NDTU PCB can be set as one of the following four signaling modes. The selection is done per channel basis. (Table 3 shows the switch selection.)

	First	Second
CO (Loop Start) mode	OFF	OFF
CO (Ground Start) mode	ON	ON
DID (2-wire loop signaling)	ON	OFF
TIE line (4-wire E&M, type II)	OFF	ON

3.12 The straps are shown as TB(x). The x in TB(x) indicates the number. The • symbol indicates the strapping option present set-up.

1) TB1 and TB2-ROM type selection:
   - 1-2 3 Normal operation (64 Kbit ROM)
     1 2-3 Future (256 Kbit ROM)
     (See Note 1.)

2) TB3 and TB4-Operation mode:
   - 1-2 3 Slave mode (normal operation)
     1 2-3 Master mode (testing). (Only used in Digital Networking Configuration.)
     One PBX must be master, and the other(s) slave(s).

3) TB5 and TB6-Loop back option:
     1-2 3 Loop back (testing)
   - 1 2-3 No loop back (normal operation)

4) TB7-Incoming voice pad option (see Note 2):
   - 1-2 3 Through (normal operation)
     1 2-3 2dB~8dB pad (reduce sidetone or echo)

5) TB8-Outgoing voice pad option:
   - 1-2 3 Through (normal operation)
     1 2-3 2dB pad (reduce sidetone or echo)

NOTES:
1. *Must remain at this option in all U.S. installations.*
2. *NDTU-2A PCBs are shipped with a 2dB-pad. Contact Toshiba Technical Support department if additional padding is required.*

TABLE 3
SIGNALING TYPE SELECTION SWITCHES
(6 ELEMENTS DIP SW) S4 THROUGH S11 ON NDTU

SIGNALING TYPE SELECTION SWITCHES (6 ELEMENTS DIP SW)

CHANNEL	SW. NO.	MODE	COT LOOP START	COT GROUND START	DID	TIE
CH1	S4	s1	OFF	ON	ON	OFF
		s2	OFF	ON	OFF	ON
CH2	S4	s3	OFF	ON	ON	OFF
		s4	OFF	ON	OFF	ON
CH3	S4	s5	OFF	ON	ON	OFF
		s6	OFF	ON	OFF	ON
CH4	S5	s1	OFF	ON	ON	OFF
		s2	OFF	ON	OFF	ON
CH5	S5	s3	OFF	ON	ON	OFF
		s4	OFF	ON	OFF	ON
CH6	S5	s5	OFF	ON	ON	OFF
		s6	OFF	ON	OFF	ON
CH7	S6	s1	OFF	ON	ON	OFF
		s2	OFF	ON	OFF	ON
CH8	S6	s3	OFF	ON	ON	OFF
		s4	OFF	ON	OFF	ON
CH9	S6	s5	OFF	ON	ON	OFF
		s6	OFF	ON	OFF	ON
CH10	S7	s1	OFF	ON	ON	OFF
		s2	OFF	ON	OFF	ON
CH11	S7	s3	OFF	ON	ON	OFF
		s4	OFF	ON	OFF	ON
CH12	S7	s5	OFF	ON	ON	OFF
		s6	OFF	ON	OFF	ON
CH13	S8	s1	OFF	ON	ON	OFF
		s2	OFF	ON	OFF	ON
CH14	S8	s3	OFF	ON	ON	OFF
		s4	OFF	ON	OFF	ON
CH15	S8	s5	OFF	ON	ON	OFF
		s6	OFF	ON	OFF	ON
CH16	S9	s1	OFF	ON	ON	OFF
		s2	OFF	ON	OFF	ON
CH17	S9	s3	OFF	ON	ON	OFF
		s4	OFF	ON	OFF	ON
CH18	S9	s5	OFF	ON	ON	OFF
		s6	OFF	ON	OFF	ON
CH19	S10	s1	OFF	ON	ON	OFF
		s2	OFF	ON	OFF	ON
CH20	S10	s3	OFF	ON	ON	OFF
		s4	OFF	ON	OFF	ON
CH21	S10	s5	OFF	ON	ON	OFF
		s6	OFF	ON	OFF	ON
CH22	S11	s1	OFF	ON	ON	OFF
		s2	OFF	ON	OFF	ON
CH23	S11	s3	OFF	ON	ON	OFF
		s4	OFF	ON	OFF	ON
CH24	S11	s5	OFF	ON	ON	OFF
		s6	OFF	ON	OFF	ON

3.20 Installing NDTU

3.21 The installation of NDTU **MUST** be done in conjunction with **NTWU-3** and the **D.01**, or higher-level software.

WARNING!
Hazardous voltage that may cause death or injury is exposed at the power supply AC terminal.

1) Install NDTU in position T00 in the main cabinet, and/or T08 in the expansion cabinet.

2) The NDTU PCB can support 24 trunks of different types (CO, DID, TIE).

3) If all 24 trunks are used, **DO NOT** insert any PCBs in the next five trunk slots after T00 or T08.

NOTES:
When programming the trunks assigned to the NDTU PCB, please keep the following in mind:

1. *If the PERCEPTION system is NOT connected to a live T1 span, there are two options to consider:*
   - *Set the NDTU for Loop Back testing (see Paragraph **3.70**), and program the trunks, or*
   - *Place an analog trunk PCB in slot T00 or T08, and program the four circuits on the PCB. Then remove the analog trunk PCB, insert the NDTU PCB, and program the rest of the trunks.*
2. *If the PERCEPTION system is connected to a live T1 span, the NDTU can be installed and programmed in the normal manner.*

4) If less than 24 trunks (in multiples of four) are used, utilize the remaining slots for the designated application as defined in the Installation section (Chapter **4**) of the PERCEPTION$_{e\&ex}$ *Installation and Maintenance* manual.

5) Connect the provided coax clock cable between the NDTU (**J3**) and NTWU-3 (**J2**) PCBs for the first span.

6) If two T1 spans are used, the NDTU connected to the best clock source should be cabled to the NTWU-3 (primary span).

3.30 Connecting to Channel Service Unit

3.31 The CSU/DSU (Channel Service Unit/Data Service Unit) provides an electrical protection, a keep-alive signal, and a repeater function. The CSU can still be network powered per FCC requirements. The DSU provides the physical conversion (V.35 or RS449/422 to DS1), "ONE" density, and D4 or ESF (Extended Superframe) framing (see Figure 5 and Attachment A).

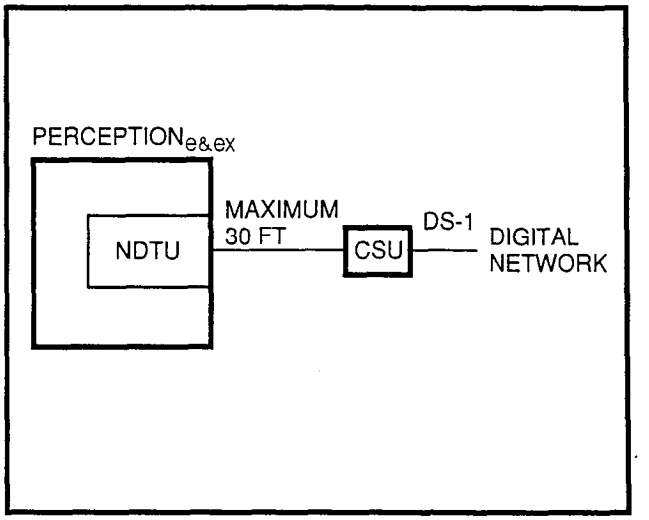

FIGURE 5—DS-1 CONNECTION TO DIGITAL NETWORK

WARNING!
Hazardous voltage that may cause death or injury is exposed at the power supply AC terminal.

1) Use the cable provided with the NDTU PCB to connect the PERCEPTION$_{e\&ex}$ cabinet to the CSU.

2) Connect the 50-pin amphenol to the PBX (see Table 4).

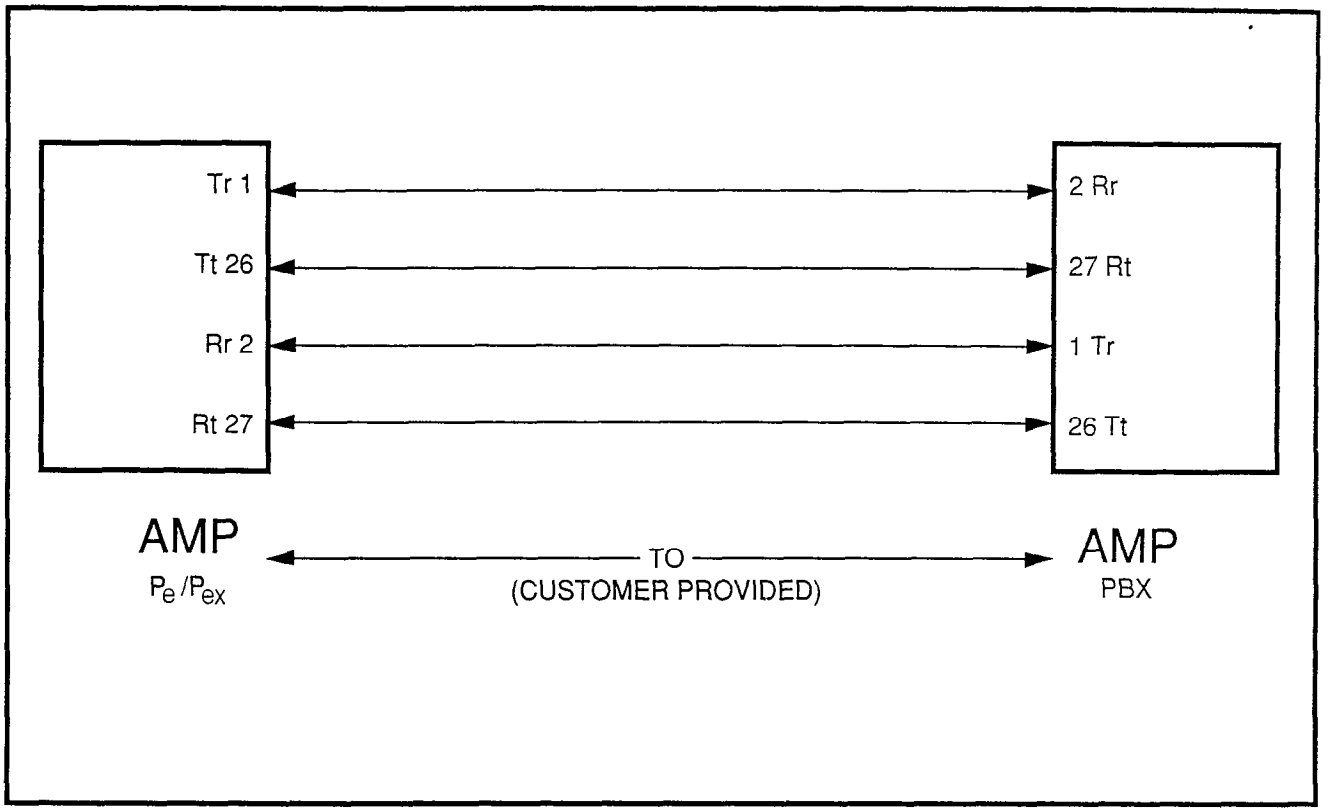

FIGURE 6
REQUIRED CONNECTORS FOR DS-1 CONNECTION AT DISTANCES OF LESS THAN 655 FEET (200 Meters)

3) Connect the DB15 connector to the CSU (see Table 4 and Figure 6). (Pins 2 and 4 are grounded within the cable.)

4) Connect the CSU to the network through RJ-48C or RJ-48X, if customer is providing own CSU. Refer to the back of the CSU for network connection.

NOTES:
1. *The maximum distance between PERCEPTION$_{e\&ex}$ and the CSU/DSU is 30 feet. Toshiba provides for this connection with each NDTU PCB. Its installation is required for proper operation.*
2. *Telephone company-provided T1 will connect to the CSU.*

3.40 Connecting to Another PBX Closer than 655 Feet

3.41 Connecting a PERCEPTION$_{e,ex}$ T1 span to another PBX, in a digital TIE line (Type I or II) configuration and at a distance of less than 655 feet, will require a special cable. Figure 6 shows the required connectors.

NOTE:
Transmit pair and receive pair must be separated by at least 5 pairs, otherwise ABAM coax cable must be used.

3.50 Front Panel LED Overview

3.51 The LEDs on the front panel of the PCB (see Figure 7) are defined as follows:

1) FALT—Fault indication in one or more channels caused by the software, a disabled state by the **TPER Program,** and/or disabled

channel(s) via dip switches on S3. Hardware faults (such as a bad channel) can cause this to light.

2) BSY—Busy indication in one or more channels.

3) FALM—NDTU has not achieved Synchronization (see Note 1).

4) MFALM—NDTU has not achieved Frame Synchronization (see Note 1).

5) YALM—Yellow alarm is detected by NDTU.

6) BALM—Blue alarm is detected by NDTU.

NOTES:
1. *Combination of FALM and MFALM is red alarm.*
2. *If any alarms are lit, refer to the Troubleshooting flowcharts.*

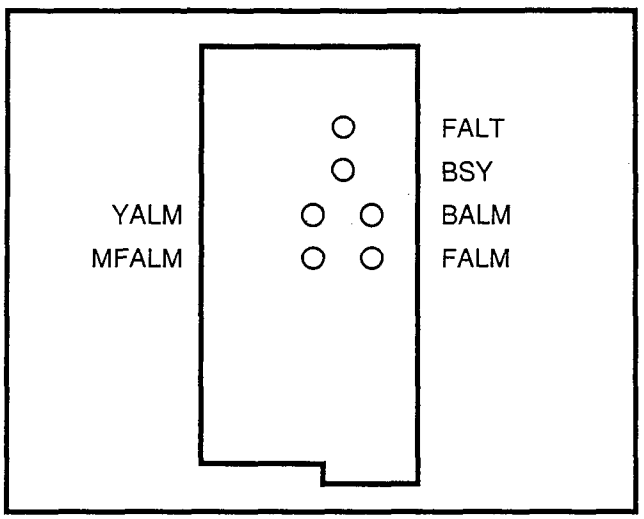

FIGURE 7—LED POSITIONS

3.60 Alarm and Status Conditions

3.61 The NDTU PCB is equipped with six LEDs. These LEDs are the indicators for different alarms and status conditions, that are generated either locally or remotely. The following are the commonly defined alarm and status conditions in the T1/DS-1 interface. These alarms, LED indications, and LED definitions are also noted in Chapter **4**, Paragraph **7.00** in the Installation section of the PERCEPTIONe&ex *Installation and Maintenance* manual.

1) **Red Alarm:** The red alarm is generated when a Loss of Signal (LOS) or Out of Frame (OOF) condition has occurred for a period of 2.0 ~ 3.0 seconds. This alarm is identified as a locally-detected error, and it is a combination of the FALM and MFALM alarms.

2) **Yellow Alarm:** The yellow alarm can be identified as a remotely-detected alarm, as follows:
   - **Superframe:** When the second bit of each channel or the eighth bit is forced to "ZERO."

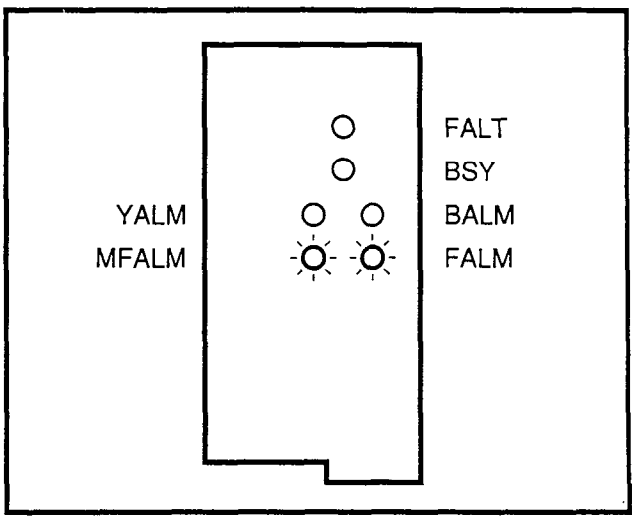

FIGURE 8—RED ALARM

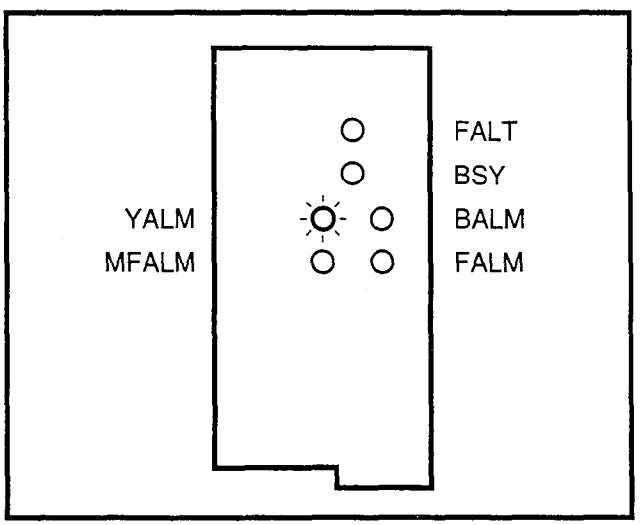

FIGURE 9—YELLOW ALARM

3) **Blue Alarm:** The blue alarm signal is used to inform the far end that the local site is performing the DS-1 level loop back test. The blue alarm is identified as the unframed all "ONE" pattern for the duration of five frames.

4) **FALT LED:** Indicates software-detected faults or a disabled state, caused by an input command from the maintenance terminal (**TPER Program**), or while ports are programmed. LED indicates fault occuring in more than one channel.

5) **BSY LED:** Indicates the busy/idle status of the 24 channels on the NDTU PCB. LED is **ON** when one or more channels are busy.

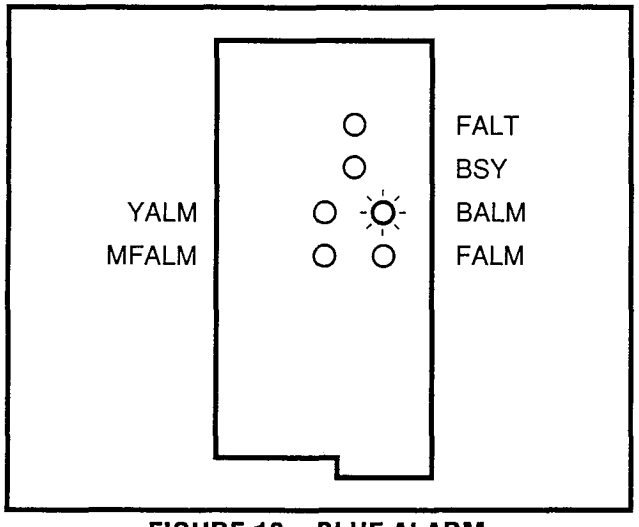

FIGURE 10—BLUE ALARM

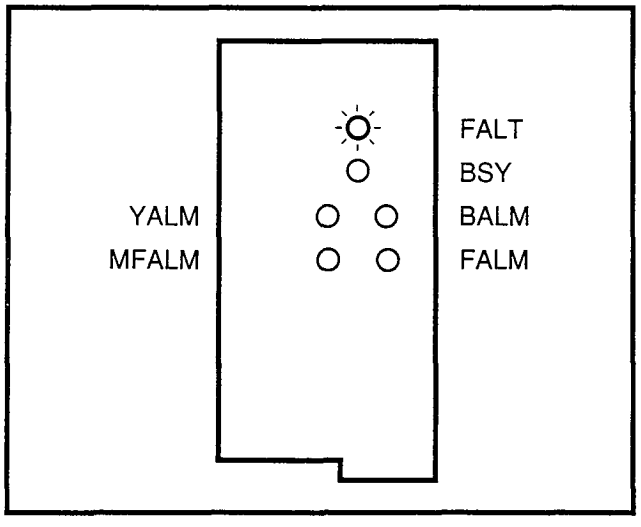

FIGURE 11—FALT LED

3.70 Loop Back Procedure

The following procedure describes how the loop back testing is conducted:

1) Disconnect the NDTU from the Channel Service Unit (CSU).

2) Remove the NDTU from the PERCEPTION system.

3) If they have not been set that way, change TB3 and TB4 to master mode, position 2-3.

4) Set TB5 and TB6 to master loop back, position 1-2.

5) Reinstall the NDTU in the PERCEPTION system, and allow it to sync up.

6) If all the LEDs on the NDTU go out, the loop back test has passed. If any of the LEDs stays on, replace the NDTU.

7) Remove the NDTU from PERCEPTION.

8) Return TB3 and TB4 to their original settings.

9) Return TB5 and TB6 to their original settings.

10) Reinstall the NDTU in the PERCEPTION system.

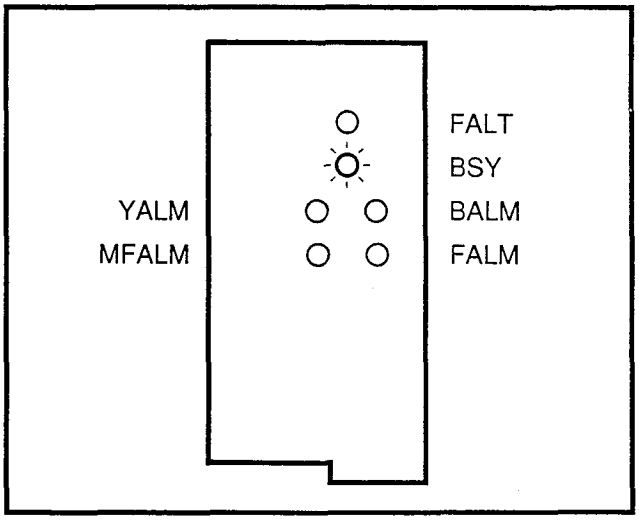

FIGURE 12—BSY LED

11) Reconnect the connection to the CSU.

3.80 Cabling

3.81 Table 4 is provided to give cabling pin bits off the PERCEPTION$_{e\&ex}$ backplane.

4 TROUBLESHOOTING

4.00 General

The Troubleshooting section contains flowcharts for diagnosing possible faults when installing a T1/DS-1 interface, and performing maintenance tasks. To eliminate system faults, they must first be classified, then cleared by replacing the defective apparatus. Operational tests can then be performed to verify correct apparatus operation. The flowcharts must be followed in the sequence they are arranged.

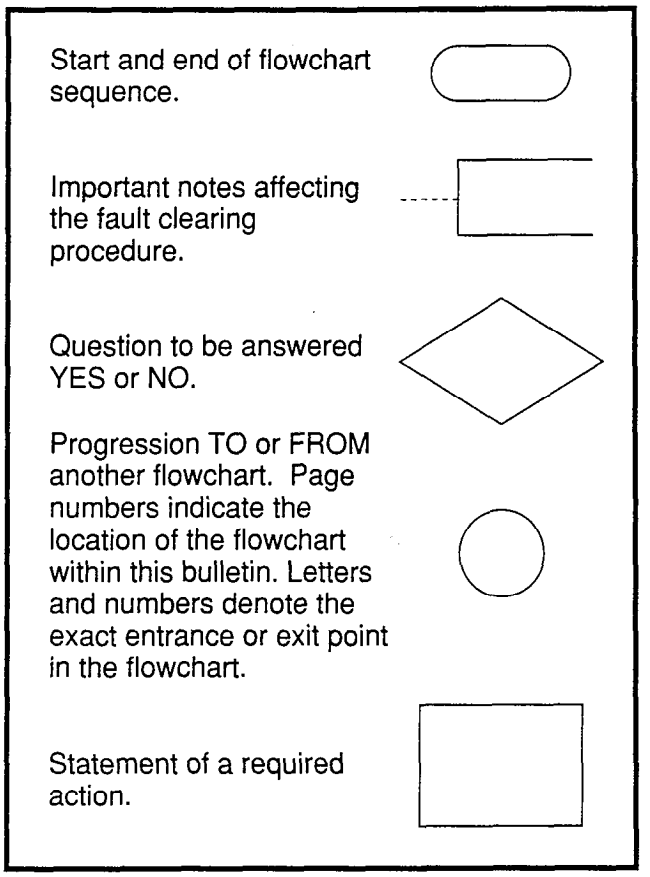

FIGURE 13—FLOWCHART SYMBOLS

TABLE 4
TERMINAL SEQUENCE & DESIGNATIONS CONNECTOR NUMBERS J7/J501 (PERCEPTION$_{ex}$), J15/J515 (PERCEPTION$_{e}$) NDTU T00/T08

PAIR	PIN	COLOR CODE	TRUNK FUNCTION	DB15 PINS	TRUNK CIRCUIT
1T	26	W-Bl	Tt	1	
R	1	Bl-W	Tr	9	T001-T054
2T	27	W-O	Rt	3	T081-T134
R	2	O-W	Rr	11	
3T	28	W-G	SPARE		
R	3	G-W	SPARE		
4T	29	W-Br	SPARE		
R	4	Br-W	SPARE		
5T	30	W-S	SPARE		
R	5	S-W	SPARE		
6T	31	R-Bl	SPARE		
R	6	Bl-R	SPARE		
7T	32	R-O	SPARE		
R	7	O-R	SPARE		
8T	33	R-G	SPARE		
R	8	G-R	SPARE		
9T	34	R-Br	SPARE		
R	9	Br-R	SPARE		
10T	35	R-S	SPARE		
R	10	S-R	SPARE		
11T	36	Bk-Bl	SPARE		
R	11	Bl-Bk	SPARE		
12T	37	Bk-P	SPARE		
R	12	P-Bk	SPARE		
13T	38	Bk-G	SPARE		
R	13	G-Bk	SPARE		
14T	39	Bk-Br	SPARE		
R	14	Br-Bk	SPARE		
15T	40	Bk-S	SPARE		
R	15	S-Bk	SPARE		
16T	41	Y-Bl	SPARE		
R	16	Bl-Y	SPARE		

NOTE:
Pins 2 and 4 of the DB15 connector in ***MOST*** *CSUs are frame ground. No connection is required.*

CHART NO. 1
HARDWARE VERIFICATION

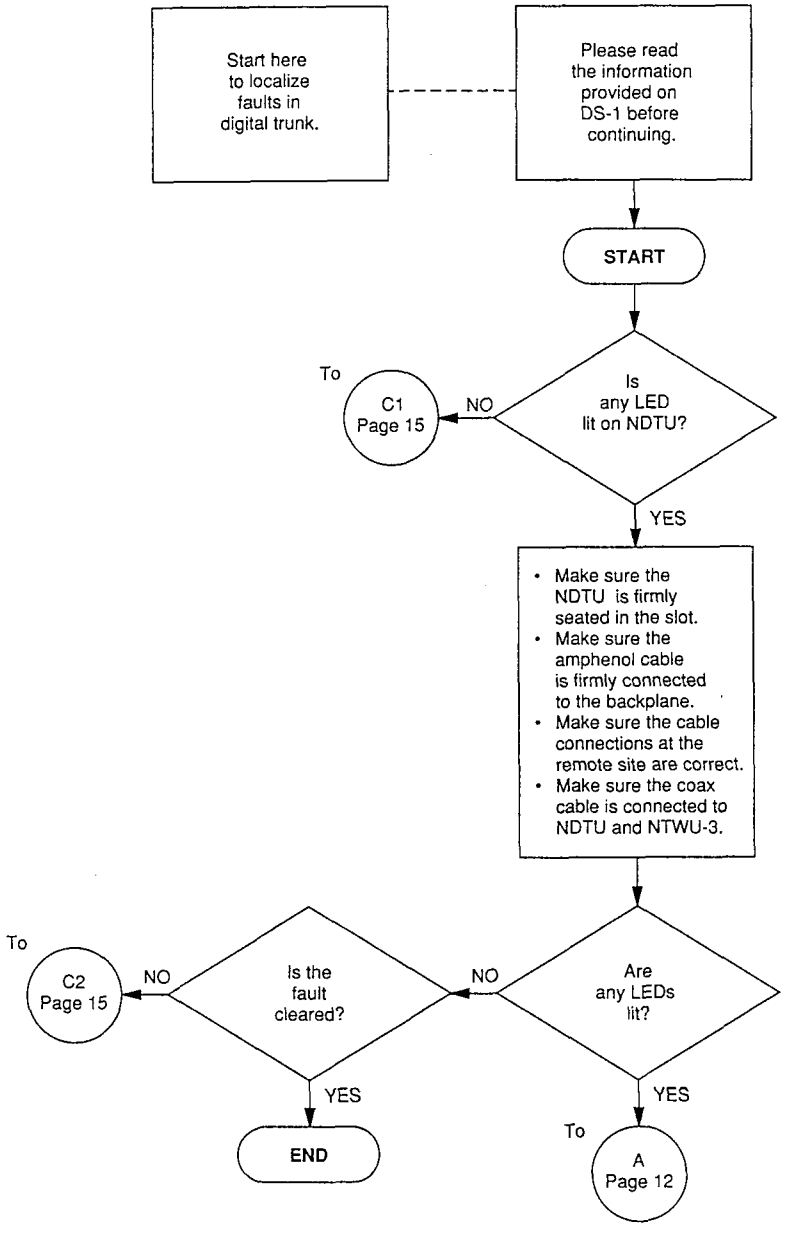

CHART NO. 2
FAULT CLASSIFICATION

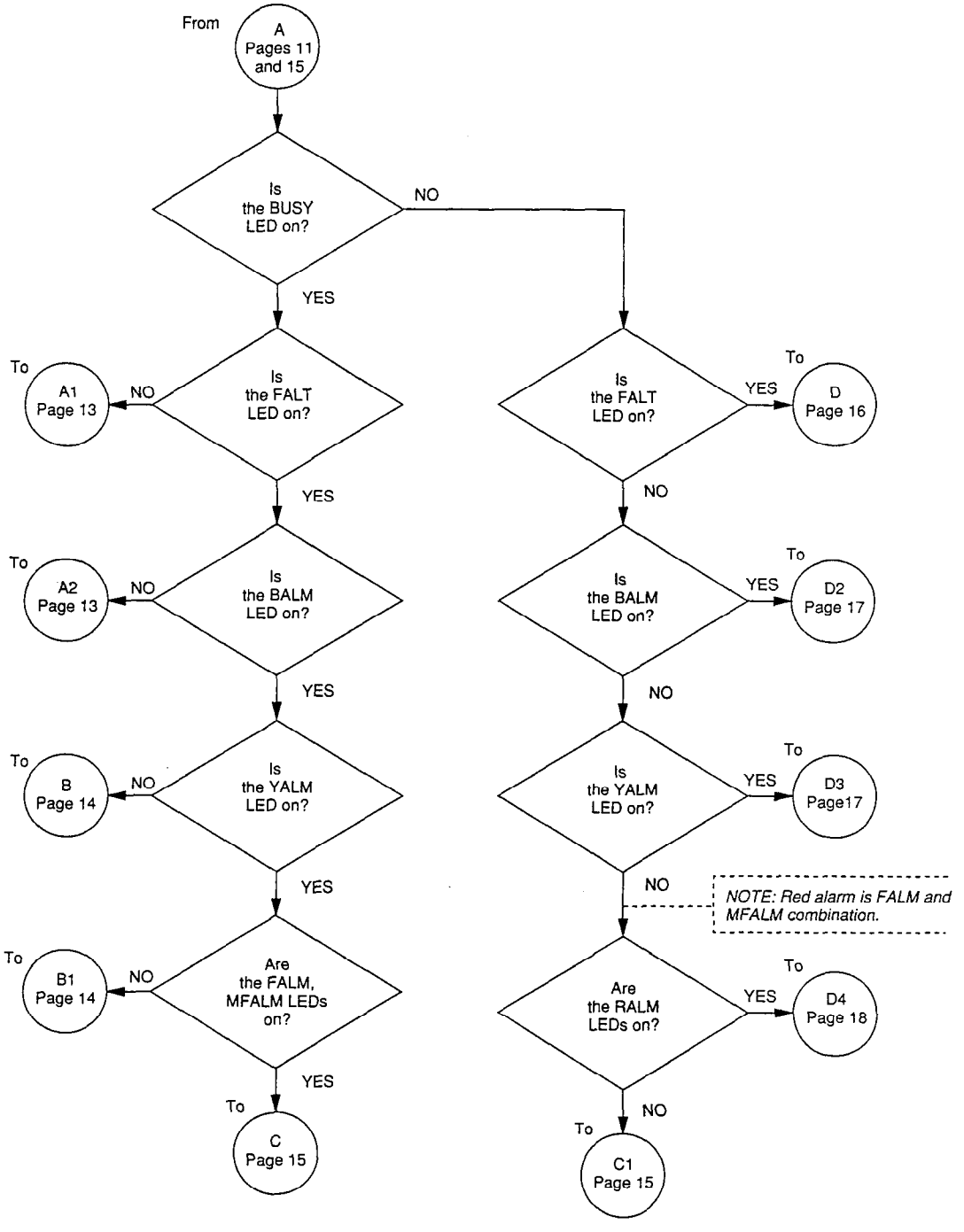

CHART NO. 2
FAULT CLASSIFICATION (continued)

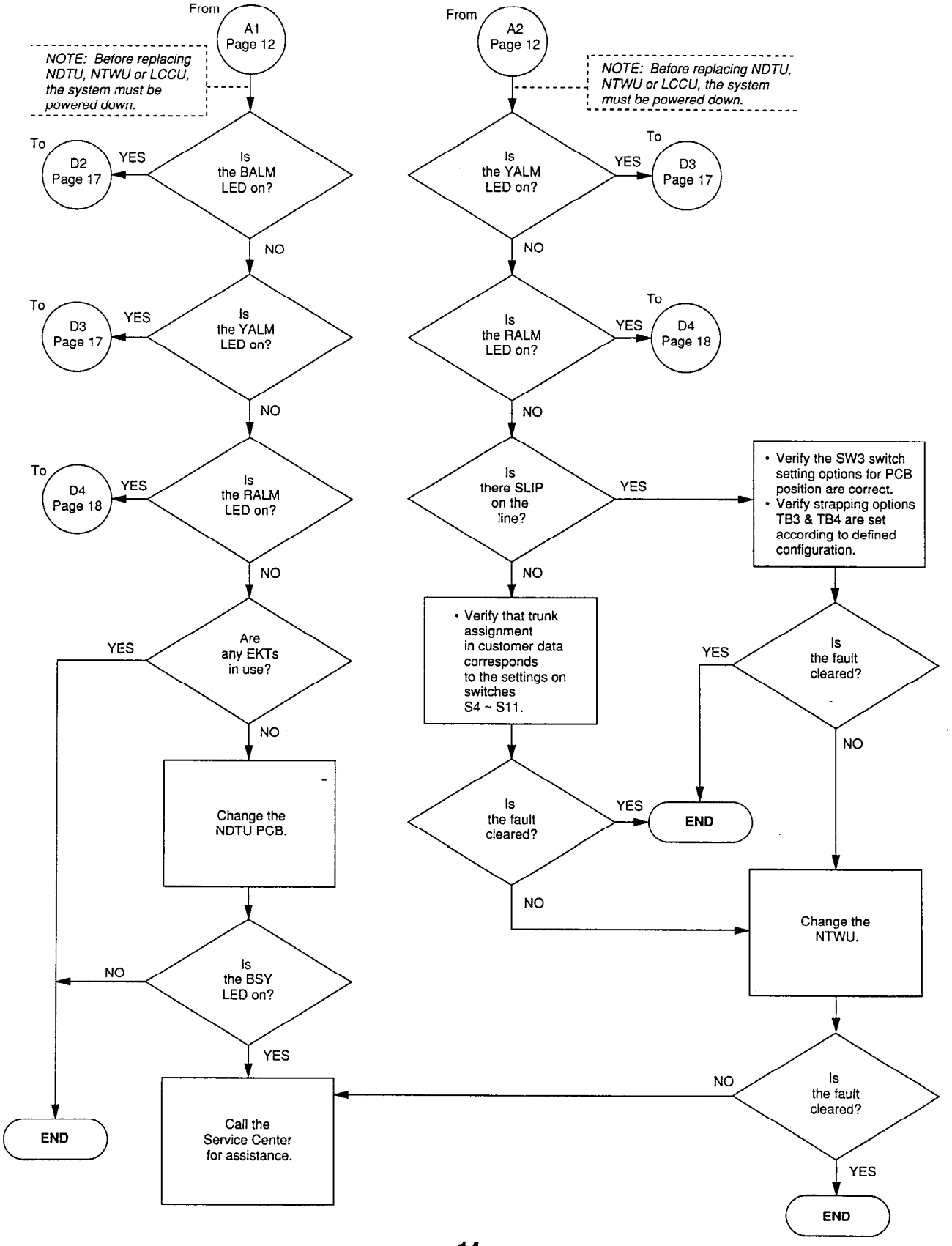

CHART NO. 3
ALARM FAULTS

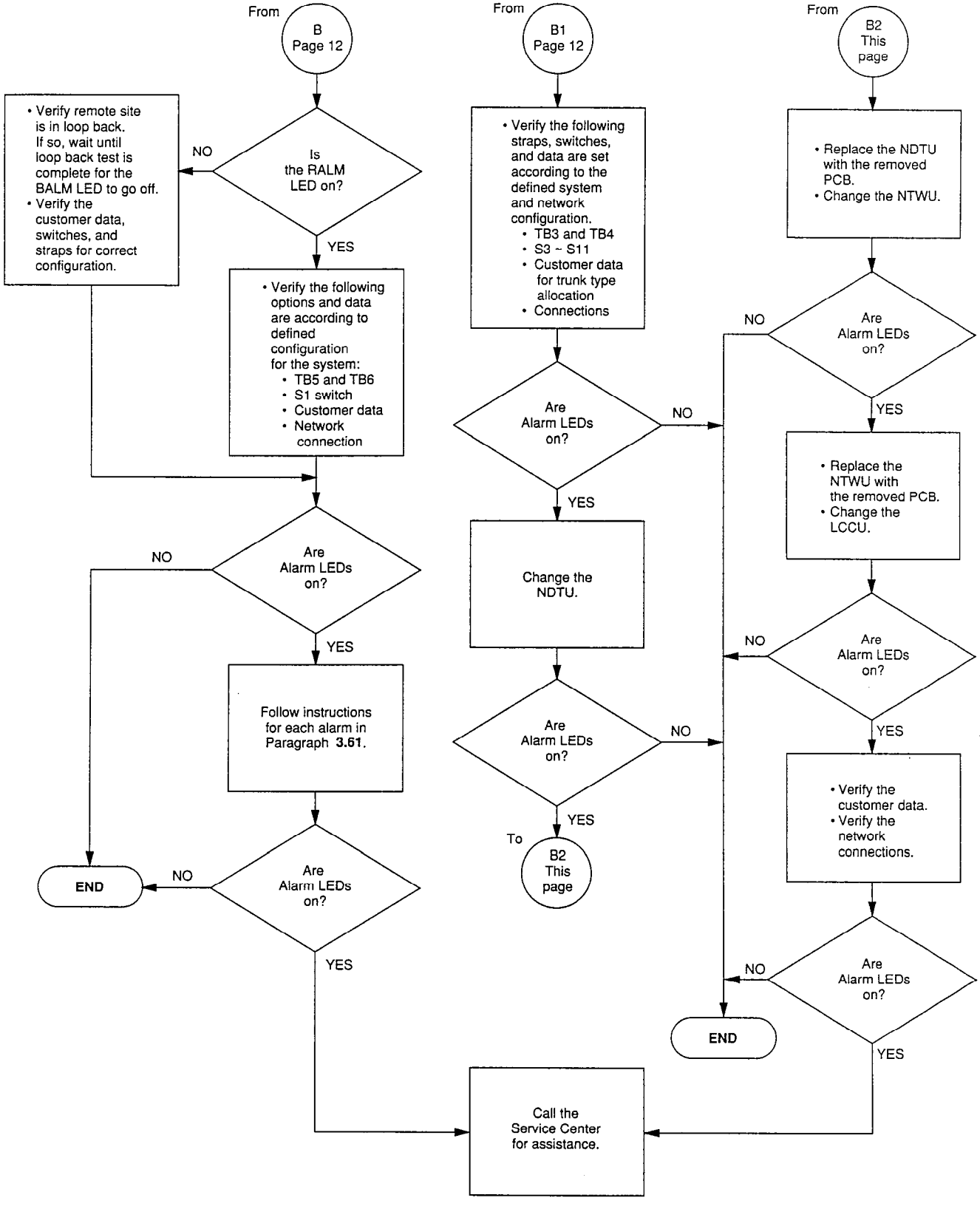

CHART NO. 4
HARDWARE FAULTS

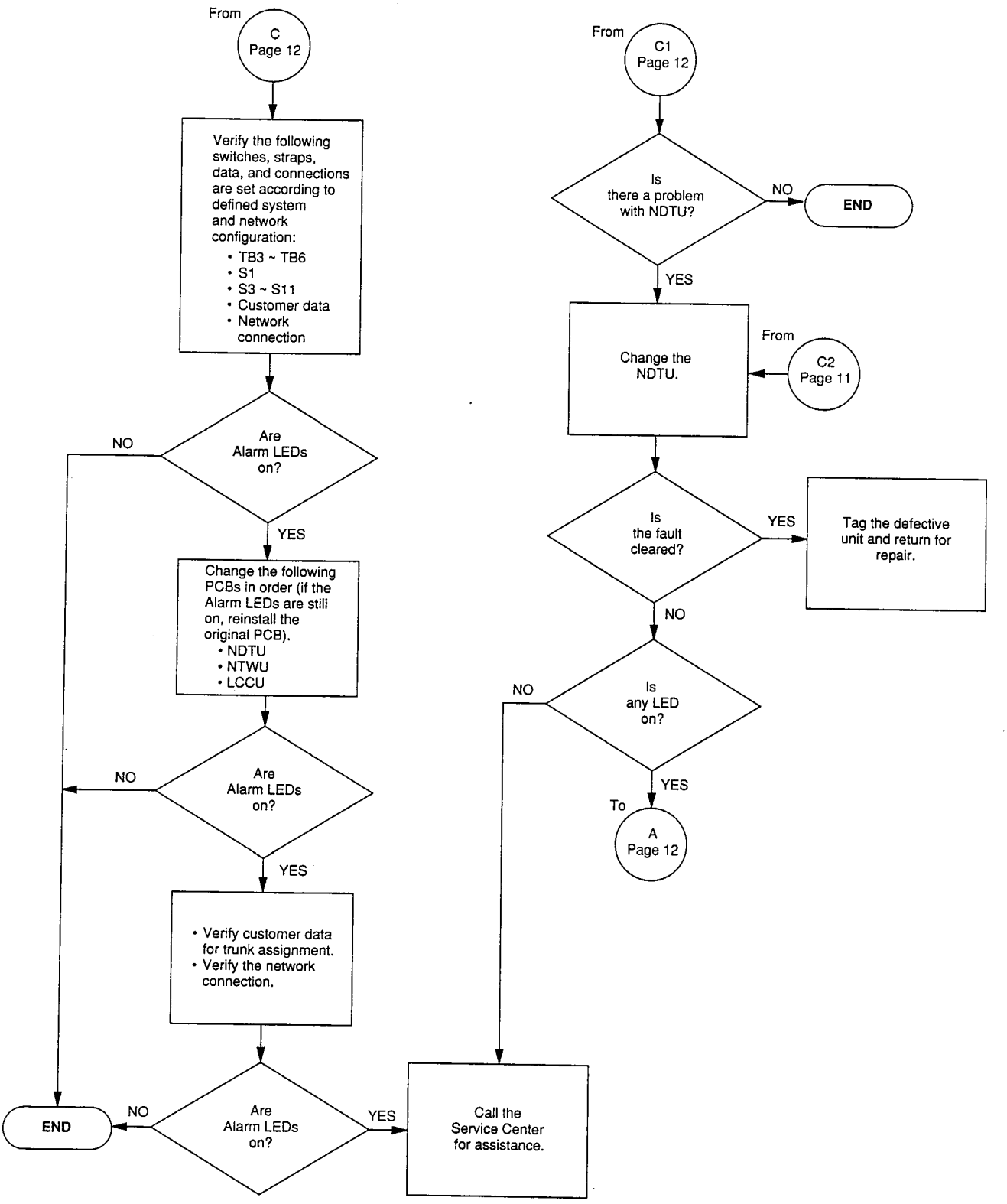

CHART NO. 5
FALT LED

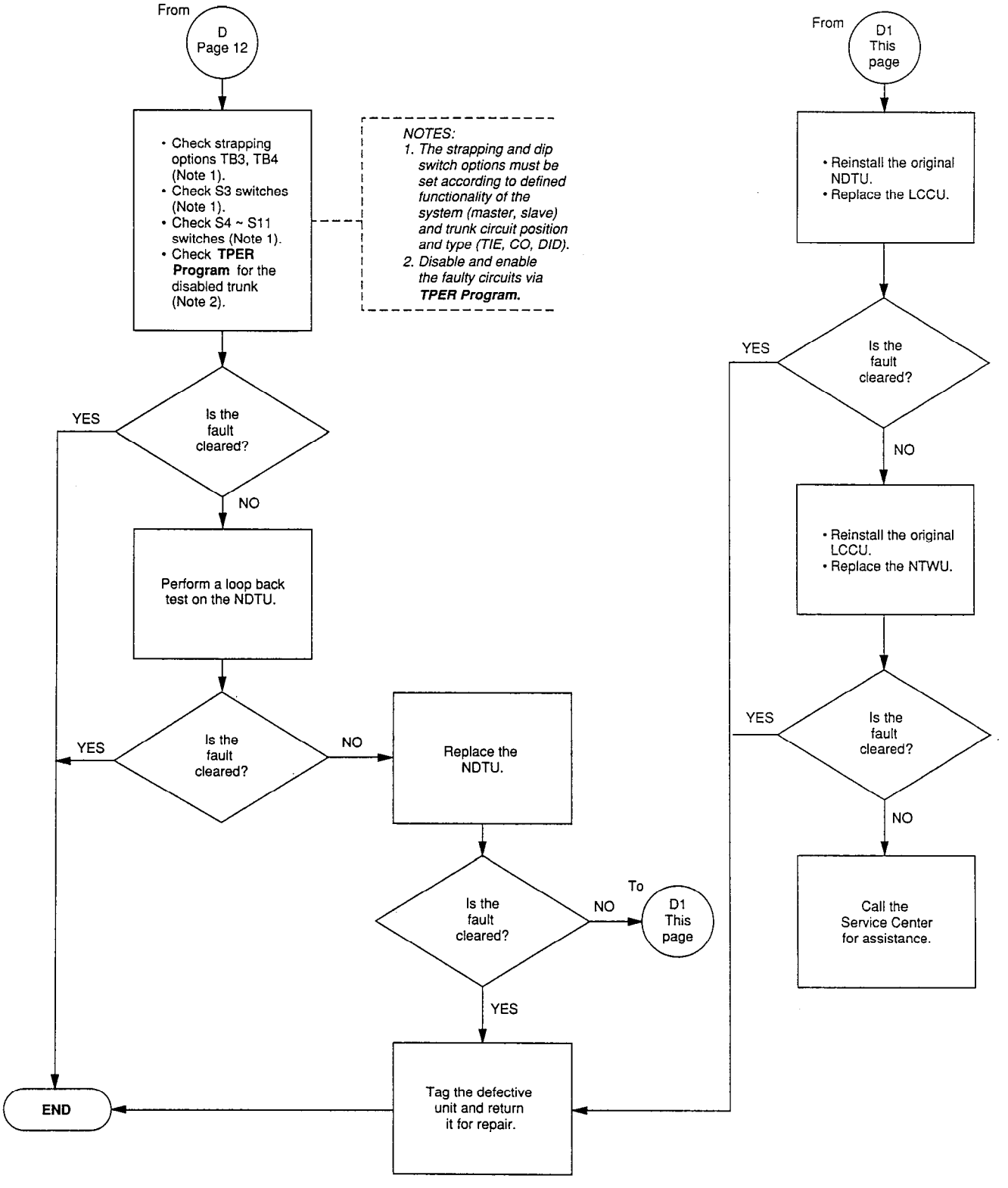

CHART NO. 5
FALT LED (continued)

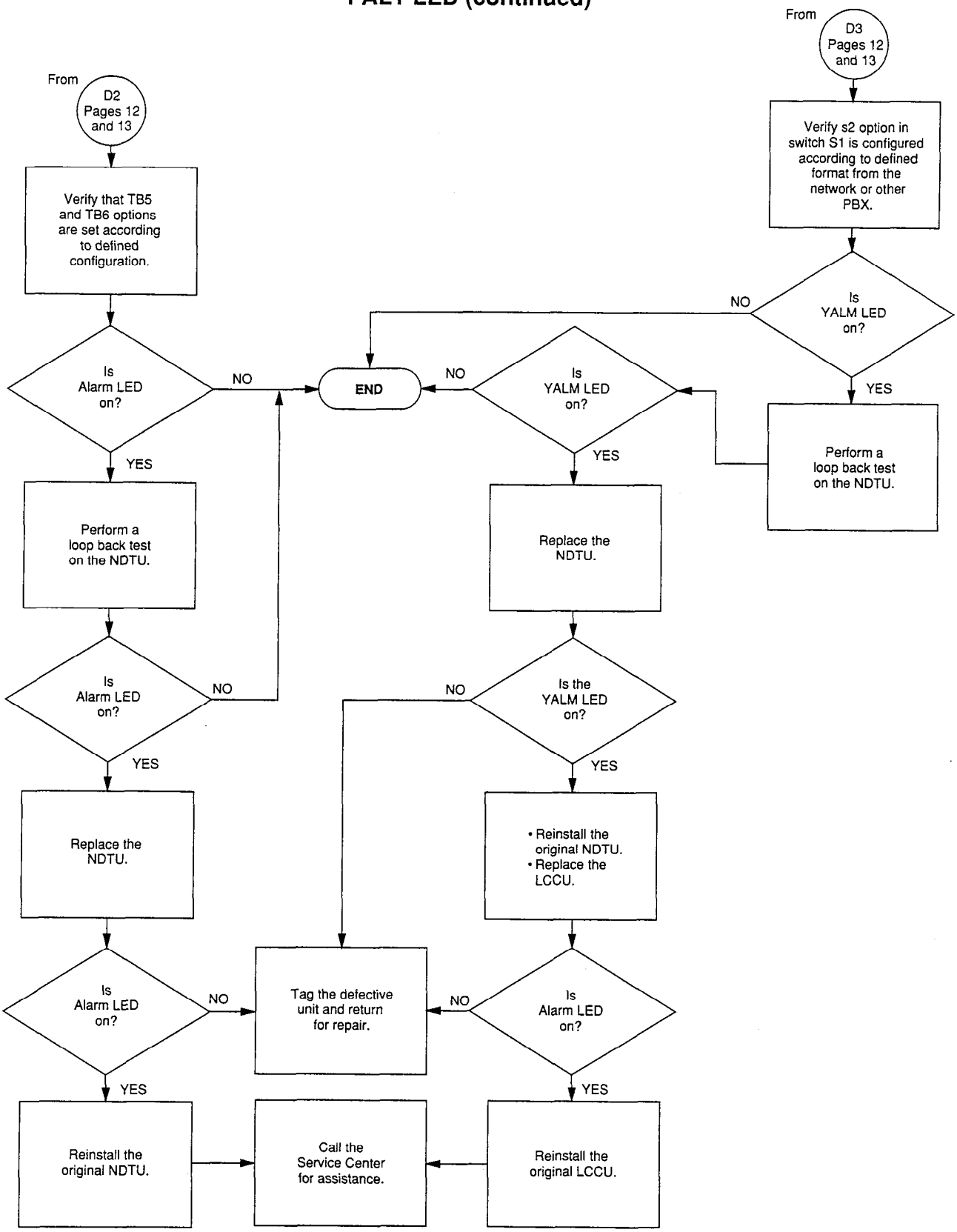

CHART NO. 5
FALT LED (continued)

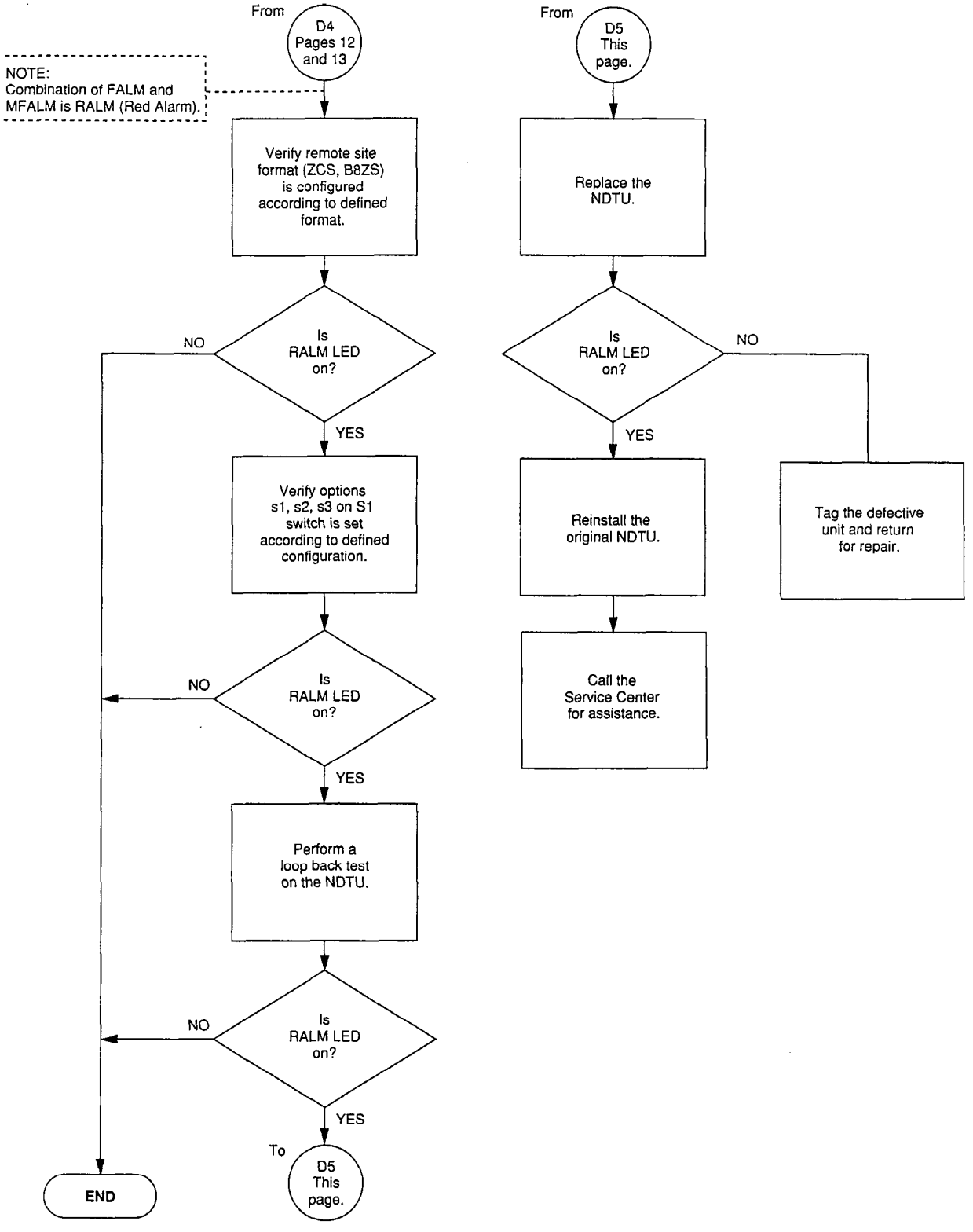

This page intentionally left blank.

ATTACHMENT A

T1/DS-1 INTERFACE

The DS-1 interface operates at the rate of 1.544 Mbps. This rate is obtained by either one of the following two methods:

METHOD 1:

- Rate of each channel (time slot) = 64 kbps
- 64 kbps * 24 channels = 1.536 Mbps
- Rate required for synchronization = 8 kbps
- DS-1 rate = 1.536 Mbps + 8 kbps = 1.544 Mbps

METHOD 2:

- 8 bits per channel * 24 channels = 192 bits
- 1 bit for frame synchronization
- Total bits in one frame = 193 bits
- DS-1 rate = 193 bits * 8000 sampling rate per second = 1.544 Mbps

In order to provide the above capabilities, PERCEPTION$_{e\&ex}$ T1/DS-1 digital trunk interface shall comply with the requirements defined by the industry for DS-1 service. The specified requirements are shown in the following paragraphs.

DS-1 Service Requirements

Physical Interface: The physical interface must comply with the defined specification for T1/DS-1 frame and signaling format, pulse density restriction, and electrical characteristics.

Frame and Signaling Format: As mentioned in Method 2, the DS-1 frame format consists of 24 8-bit words and one framing bit for synchronization, which yields 193 bits per frame. The frames are grouped into multiframes. These multiframes are referred to as Superframe (see Figure 1).

Superframe Grouping Format: Superframe can be grouped in two ways:

1) Twelve frames per Superframe (SF). This grouping is known as the D3/D4 Framing Format.
   - In this arrangement the framing bit is used only for synchronization.
   - The synchronization identifies the beginning of the Superframe and the signaling

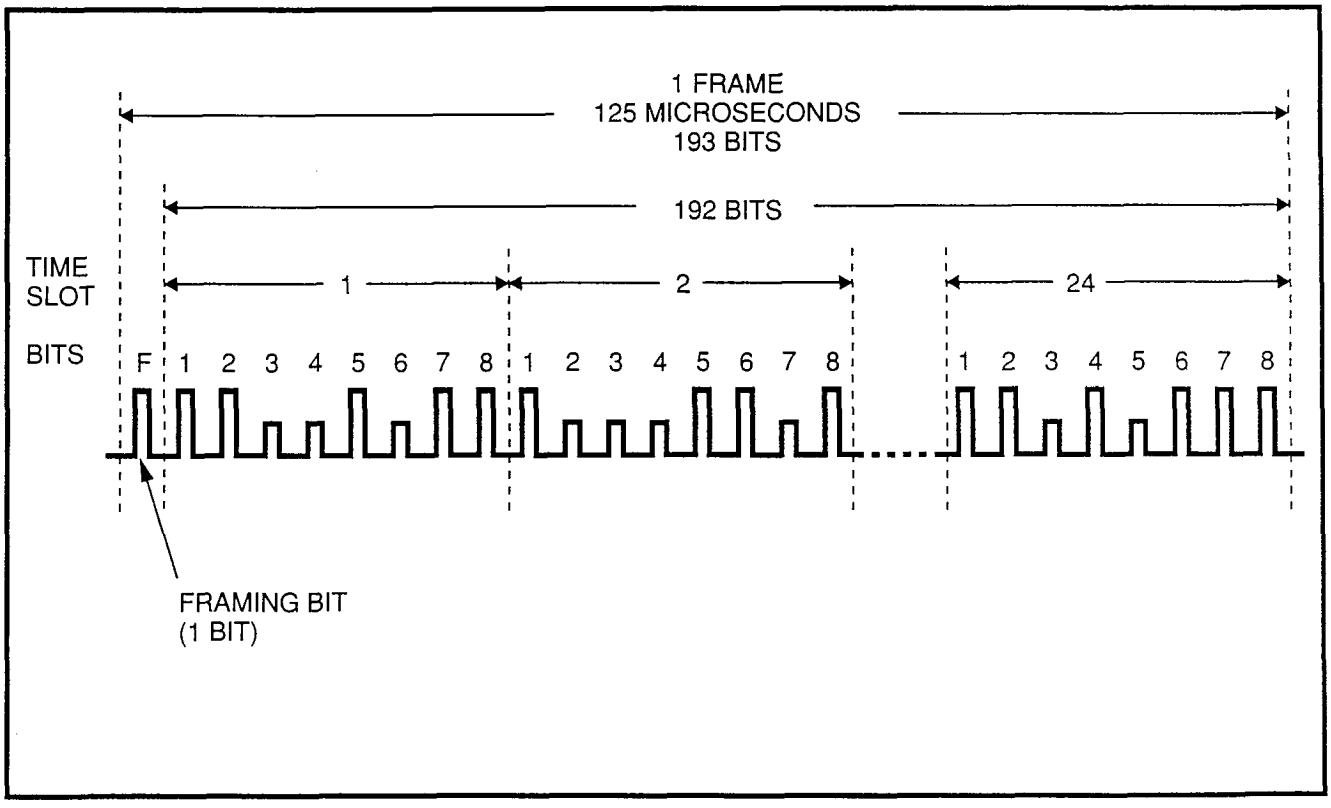

FIGURE 1—FRAME ASSEMBLY

frames within the Superframe.

- The identification is done by verifying the Terminal Framing (FT) bit sequence "101010" (odd frames) and the Signaling Framing (FS) bit sequence "001110" (even frames). (See Figure 2.)

2) Twenty-four frames per Superframe. This grouping is known as the Extended Superframe (ESF).
   - In this arrangement the framing bit is time multiplexed to support three functions, namely, Synchronization, Cyclic Redundancy Check (CRC), and Facility Data Link (FDL).

Signaling Protocol: The DS-1 interface is compatible with two types of signaling protocol:

1) **Channel Associated Signaling:** The DS-1 signaling must be compatible with both the A and B bit signaling protocol of Channel Associated Signaling (CAS), used by a D4 type channel bank. In this protocol, the least significant bit of each time slot in every sixth frame (sixth and twelfth) is robbed for signaling purposes. The signaling in ESF is closely similar to the one in SF, but the former contains the A, B, C, and D signal bits which occur in the sixth, twelfth, eighteenth, and twenty-fourth frames. To provide compatibility between SF and ESF framing format, the A, B, C, and D bits are used in a manner that C = A and D = B.

2) **Common Channel Signaling:** The Common Channel Signaling is also called the Bit Oriented Signaling (BOS). This type of signaling is mainly used in Digital Multiplexed Interface (DMI) applications. In this protocol, the first 23 bits are used for data processing, while the last bit is used for signaling.

Pulse Density Restriction: Since regenerative repeaters are used in the transmission facility, a restriction on the transmission of data has been imposed upon. This restriction is designed to prevent a clock recovery failure (due to an excessive number of "ZEROs") from happening. The restric-

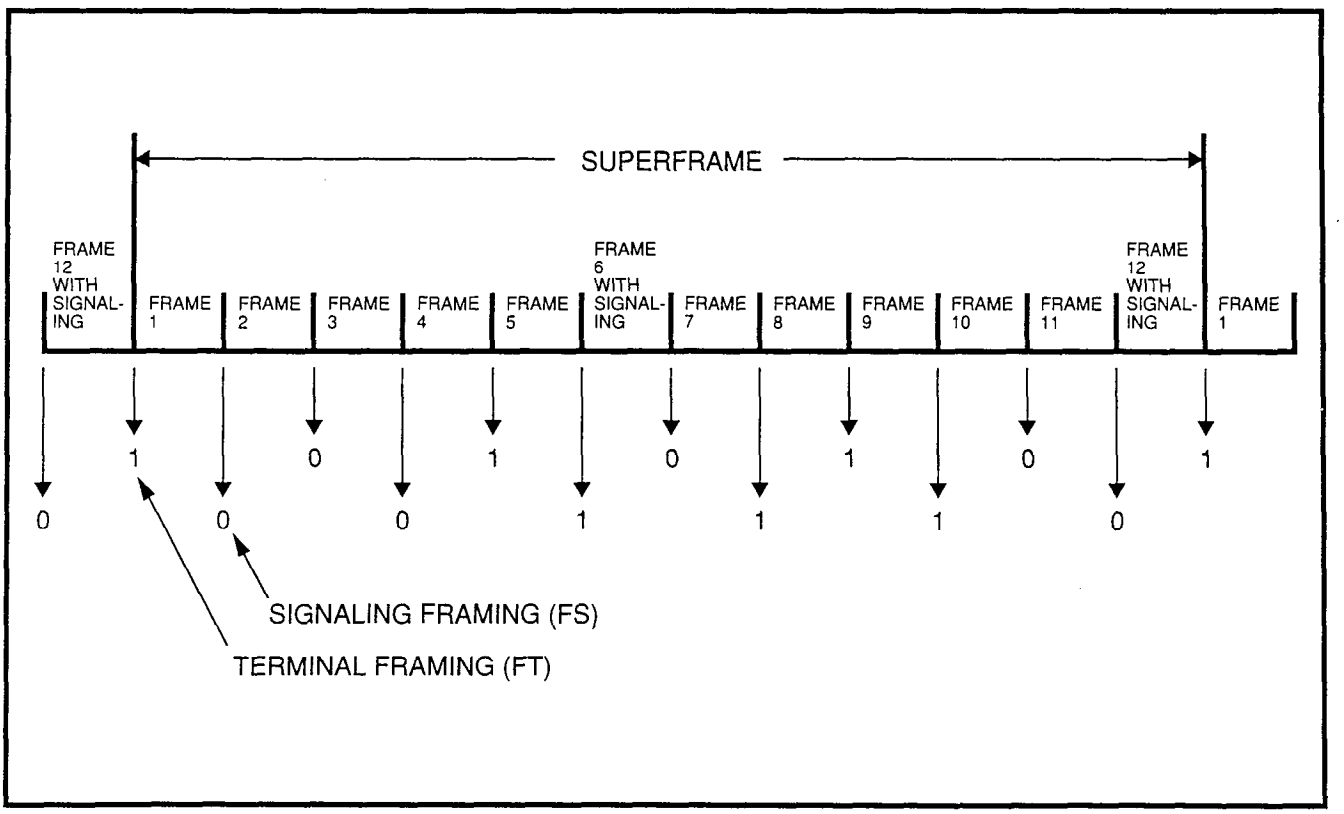

FIGURE 2—D4 FRAMING FORMAT

tion imposes that in every frame of 8(n+1) bits, where n = 1 ~ 23, there must be at least an "n" number of "ONE." There can also be no more than 15 consecutive "ZEROs" present. To comply with these requirements, the T1/DS-1 interface provides the following two techniques:

1) **Zero Code Suppression (ZCS):** This technique forces the second least significant bit of any time slot with eight consecutive "ZEROs" to "ONE."

2) **Bipolar Eight Zero Substitution (B8ZS):** This technique provides a unique algorithm. Whenever a time slot contains eight consecutive "ZEROs," the "ZEROs" are replaced by an 8-bit code (00011011). The bipolar violation occurs in the fourth and the seventh bit positions of the inserted code. The receiving end recognizes this code, and it translates it into all "ZEROs" (see Figure 3).

Voice and Data Applications: The T1/DS-1 trunk capability to emulate different trunks (CO, DID, TIE) provides a feature transparency to voice and data transmission applications. PERCEPTION$_{e\&ex}$ supports **voice only** with the NDTU. Data transmission must be done through a modem or modem pooling.

Synchronization: The PERCEPTION$_{e\&ex}$ T1/DS-1 interface can support two types of clock synchronization. It can either generate the clock reference internally (Master) to the public digital or private digital network, or attain clock (Slave) from the external digital network. In case there is more than one T1/DS-1 trunk installed in PERCEPTION$_{e\&ex}$, only one will provide the clock synchronization signal. When connecting PERCEPTION$_{e\&ex}$ to the network, PERCEPTION$_{e\&ex}$ will always be slave.

Out of Frame (OOF)

An Out of Frame (OOF) condition occurs when an error in the framing bit is observed. An error is considered to have happened when two out of four, or two out of five framing bits are absent. This condition causes the MFALM LED to light.

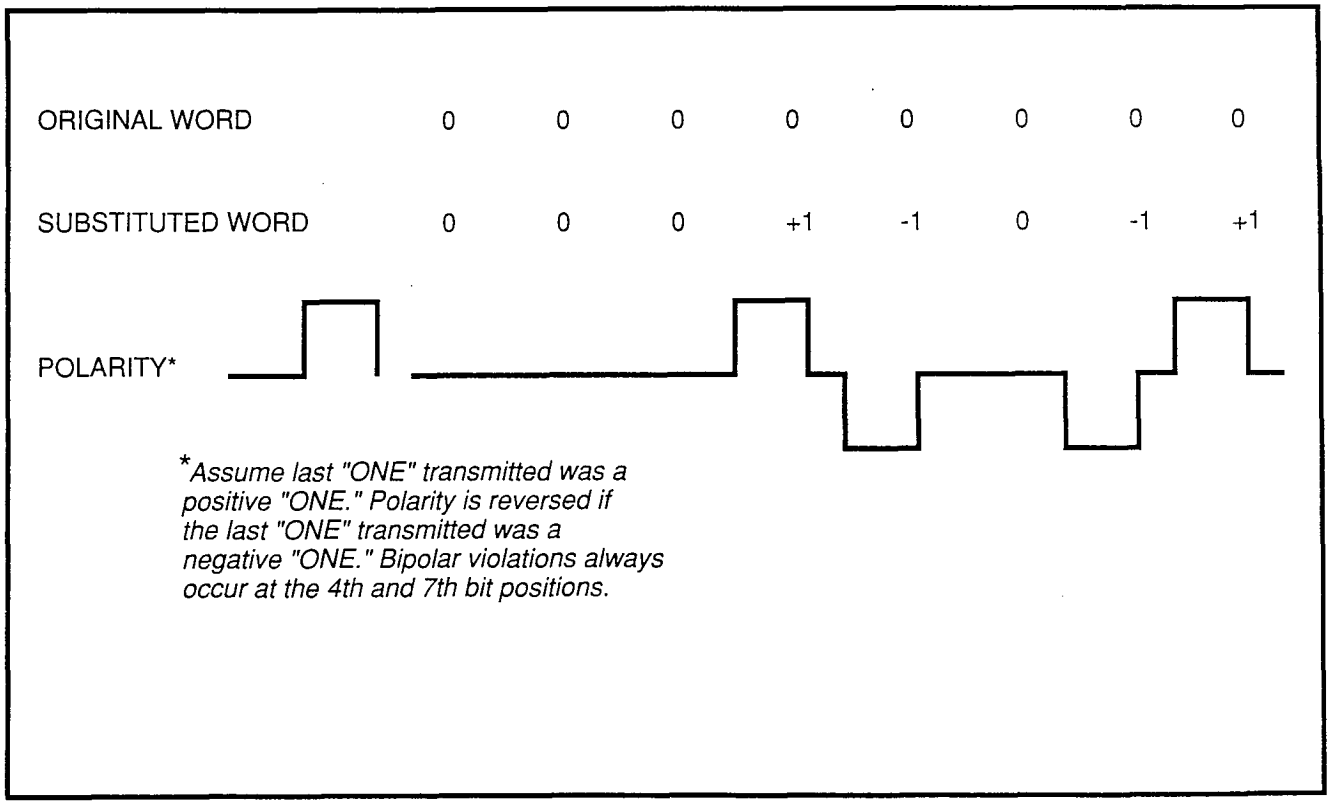

FIGURE 3—SAMPLE OF B8ZS CODE

Loss of Signal (LOS)

A Loss of Signal (LOS) condition is specified when the DS-1 signal is absent for more than 150 milliseconds. Upon detection of LOS, the DS-1 interface generates a consecutive sequence of unframed all "ONE" signal, in order to keep the regenerative repeaters alive. This condition causes the FALM LED to light.

Jitter

Jitters are short-term variations of significant instants (of a digital signal) from their idle positions in time. In the digital transmission, a jitter is generated from two principal sources, digital regenerator and multiplexers. A regenerator jitter is introduced by the imperfections in the timing recovery process, whereas a multiplexer jitter is mainly related to the stuffing mechanism used to synchronize the low speed incoming pulse stream.

Jitters may introduce a number of impairments such as errors, slips, crosstalks, and distortions to the original signal. The following data indicates the maximum input jitter allowed in band 1 (10 Hz to 40 KHz) and band 2 (8 KHz to 40 KHz).

- Band 1: 5.0 per 648 nsec. peak-to-peak (10 Hz to 40 KHz)
- Band 2: 0.1 per 648 nsec. peak-to-peak (8 KHz to 40 KHz)

Slip

Slip occurrences are caused by two factors:

1) Lack of frequency synchronization between the two ends of the DS-1 network.

2) Phase jitter.

An overflow or underflow of the receiver buffer is indicative of a slip.

Bipolar Violation (BPV)

The Alternative Mark Inversion (AMI) coding is used in the DS-1/DMI line transmission. Any variation to this rule is considered a violation. An excessive bipolar violation is declared when a number of BPV, which causes performance to degrade, goes below the threshold of 1455 BPVs in 1000 consecutive seconds. If a B8ZS coding is used, a bipolar violation detected due to "ZERO" substitution should not be considered an error.

Cyclic Redundancy Check (CRC)

The CRC is used with an Extended Superframe (ESF). The CRC code uses 2Kb/s of the 8Kb/s-frame-bit pattern for an end-to-end error rate checking.

ATTACHMENT B

CHANNEL SERVICE UNIT

1) A Channel Service Unit (CSU) provides the following:
   - Electrical protection
   - Keep-alive signal
   - Repeater function

2) CSU requirements:
   - One CSU for each T1/DS-1 interface connected to the network.
   - One CSU for a T1/DS-1 interface between PBXs that are located more than 655 feet apart.

3) Examples of approved CSUs:
   - Kentrox
   - Digital Link

Perception® e & ex

APPENDIX #1

SYSTEM RECORD

Version D.05

SYSTEM DATA BLOCK (DSYS Program)

ITEM	PROMPT	ENTRY
	REQ	CHG
Expansion Cabinet Installed	EXP	
Number of Drives	NOD	
Time of Daily Routine	TOR	
Daily Routine Tasks	DRT	
Tenant Service?	TEN	
Intercept #1	ICP1	
Intercept #2	ICP2	
Intercept #3	ICP3	
Least Cost Routing	LCR	
All Page Access Code	APG	
Not Used	AAT	"CR"
Not Used	APX	"CR"
Listed Directory Number #1	LN1	
Listed Directory Number #2	LN2	
LDN #1 Night Number	NT1	
LDN #2 Night Number	NT2	
Busy Lamp Field #1	BLF1	
Busy Lamp Field #2	BLF2	
Overflow DN – Attendant Console #0	OFL1	
Overflow DN – Attendant Console #1	OFL2	
Meet-me Page DN	MMP	
Remote Access DN	REM	
Remote Access Change Code	RAC	
"*" Access Code	ACC*	
"#" Access Code	ACC#	
Camp-on (or CWT) Timeout	COT	
Ring No Answer Timeout	RNA	
Attendant Overflow Timeout	AOF	
Call Forward No Answer Timeout	CFD	
2500 Hold/Electronic Telephone Park Timeout	HLD	
Dial Pulse Timeout	DPT	
Pushbutton Timeout	PBT	
Line Lockout Timeout	LLO	
Automatic Callback Reserve Time	ACB	
Delay Ring Timer	DLY	
After Call Timer	ACT	
Handsfree Answerback – Station	HFS	
Handsfree Answerback – Attendant	HFA	
SMDR Equipped	MDR	
Universal Night Answer Zone 0	UNA0	
Universal Night Answer Zone 1	UNA1	

SYSTEM DATA BLOCK 2 (DSD2 Program)

ITEM	PROMPT	ENTRY
	REQ	CHG
Master DN0	MD0	
Master DN1	MD1	
Master DN2	MD2	
Master DN3	MD3	
Lodging/Health Care	AHM	
Night Operator Station	NOS	
Transfer Recall Timeout	RTO	
Attendant-Position Electronic/Digital Telephone	AEKT	
Perception$_{ex}$	PEX	
Call Distribution Algorithm	CDA	
Stroke Count Length	SCL	
MIS System	MIS	
ACD Handsfree Answerback	AHA	
Handset Volume Preset Level	HVP	

ACCESS CODE DATA BLOCK (DACD Program)

ITEM	PROMPT	ENTRY*
	REQ	CHG
Feature	FTR	
Feature	FTR	
Feature	FTR	
Feature	FTR	
Feature	FTR	
Feature	FTR	
Feature	FTR	
Feature	FTR	
Feature	FTR	
Feature	FTR	
Feature	FTR	
Feature	FTR	
Feature	FTR	
Feature	FTR	
Feature	FTR	
Feature	FTR	
Feature	FTR	
Feature	FTR	
Feature	FTR	
Feature	FTR	
Feature	FTR	
Feature	FTR	
Feature	FTR	
Feature	FTR	
Feature	FTR	
Feature	FTR	
Feature	FTR	
Feature	FTR	
Feature	FTR	
Feature	FTR	
Feature	FTR	
Feature	FTR	
Feature	FTR	
Feature	FTR	
Feature	FTR	
Feature	FTR	
Feature	FTR	
Feature	FTR	

**Enter the name and access code in this column.*

CLASS OF SERVICE DATA BLOCK (DCOS Program)

ITEM	PROMPT	ENTRY								
	REQ	CHG								
Class of Service	COS									
	COS									
	COS									
	COS									
	COS									
	COS									
	COS									
	COS									
	COS									
	COS									
	COS									
	COS									
	COS									
	COS									
	COS									
	COS									
	COS									
	COS									
	COS									
	COS									
	COS									
	COS									
	COS									
	COS									
	COS									
	COS									
	COS									
	COS									
	COS									
	COS									
	COS									
	COS									
	COS									
	COS									
	COS									
	COS									
	COS									
	COS									
	COS									

NOTE: Use multiple lines as required.

ATTENDANT DATA BLOCK (DATT Program)

ITEM	PROMPT	ENTRY	
		ATT 0	ATT 1
	REQ		
Attendant Number	ANO	0	1
Port Number	POR	L001	L151, L011
Number of Loop Buttons	NLPK		
Lockout Allowed?	LKO		
Page Button	PAG		
Incoming Call Priority	PRI		
Priority 1	PR1		
Priority 2	PR2		
Priority 3	PR3		
Priority 4	PR4		
Priority 5	PR5		

NOTE: Use a second sheet if Tenant Service is activated.

ELECTRONIC/DIGITAL TELEPHONE BLOCK (DEKT Program) PCB Location (L)

ITEM	PROMPT	ENTRY	ENTRY	ENTRY	ENTRY	ENTRY	ENTRY	ENTRY	ENTRY
	REQ								
Port Number	POR								
Digital Key Telephone	DKT								
Number of Button Strips	KS								
Class of Service Group	COS								
Tenant Number	TEN								
Call Pickup Group	PUG								
Warning Tone Allowed?	WTA								
Call Forward to Trunk	CFT								
Toll Restriction Class	TOL								
Not Used	MTA	N	N	N	N	N	N	N	N
Handsfree Answerback Equipped?	HFA								
Display Electronic/Digital Telephone	DIS								
Paging Group	PAG								
Emergency Ringdown Station	RDS								
Ring State Preselection	RSP								
Off-hook Call Announce Port	OCP								
Off-hook Call Announce	OCA								
Button Assignments: Primary DN Only!	KEY 0								
	KEY 1								
	KEY 2								
	KEY 3								
	KEY 4								
	KEY 5								
	KEY 6								
	KEY 7								
	KEY 8								
	KEY 9								
	KEY 10								
	KEY 11								
	KEY 12								
	KEY 13								
	KEY 14								
	KEY 15								
	KEY 16								
	KEY 17								
	KEY 18								
	KEY 19								

NOTE: Use multiple sheets as required.

Sheet 1 of 9

STANDARD TELEPHONE DATA BLOCK (DSTT Program) PCB Location (L o 7x)

ITEM	PROMPT	ENTRY	ENTRY	ENTRY	ENTRY	ENTRY	ENTRY	ENTRY	ENTRY
	REQ								
Port Number	POR								
Directory Number	DN								
Station Set Mix	SMX								
Class of Service	COS								
Tenant Number	TEN								
Call Pickup Group	PUG								
Hunt Number	HNT								
Dialing Type	DLG								
Speed Dial List	SDL								
Warning Tone Allowed?	WTA								
Call Forward to Trunk	CFT								
Toll Restriction Class	TOL								
Message Waiting Lamp	MWL								
Emergency Ringdown Station	RDS								
Off-hook Call Announce	OCA								

STANDARD TELEPHONE DATA BLOCK (DSTT Program) PCB Location (L)

ITEM	PROMPT	ENTRY	ENTRY	ENTRY	ENTRY	ENTRY	ENTRY	ENTRY	ENTRY
	REQ								
Port Number	POR								
Directory Number	DN								
Station Set Mix	SMX								
Class of Service	COS								
Tenant Number	TEN								
Call Pickup Group	PUG								
Hunt Number	HNT								
Dialing Type	DLG								
Speed Dial List	SDL								
Warning Tone Allowed?	WTA								
Call Forward to Trunk	CFT								
Toll Restriction Class	TOL								
Message Waiting Lamp	MWL								
Emergency Ringdown Station	RDS								
Off-hook Call Announce	OCA								

STANDARD TELEPHONE DATA BLOCK (DSTT Program) PCB Location (L)

ITEM	PROMPT	ENTRY	ENTRY	ENTRY	ENTRY	ENTRY	ENTRY	ENTRY	ENTRY
	REQ								
Port Number	POR								
Directory Number	DN								
Station Set Mix	SMX								
Class of Service	COS								
Tenant Number	TEN								
Call Pickup Group	PUG								
Hunt Number	HNT								
Dialing Type	DLG								
Speed Dial List	SDL								
Warning Tone Allowed?	WTA								
Call Forward to Trunk	CFT								
Toll Restriction Class	TOL								
Message Waiting Lamp	MWL								
Emergency Ringdown Station	RDS								
Off-hook Call Announce	OCA								

NOTE: Use multiple sheets as required.

Sheet ____ of ____

DSS CONSOLE DATA BLOCK (DDSS Program)

ITEM	PROMPT	ENTRY
DSS Number	NBR	
Port Number	POR	
Digital DSS	DDSS	
Station Port	SPT	
Fixed or Switched	F/S	
Button Assignment	KEY 0	
	KEY 1	
	KEY 2	
	KEY 3	
	KEY 4	
	KEY 5	
	KEY 6	
	KEY 7	
	KEY 8	
	KEY 9	
	KEY 10	
	KEY 11	
	KEY 12	
	KEY 13	
	KEY 14	
	KEY 15	
	KEY 16	
	KEY 17	
	KEY 18	
	KEY 19	
	KEY 20	
	KEY 21	
	KEY 22	
	KEY 23	
	KEY 24	
	KEY 25	
	KEY 26	
	KEY 27	

ITEM	PROMPT	ENTRY
Button Assignment	KEY 28	
	KEY 29	
	KEY 30	
	KEY 31	
	KEY 32	
	KEY 33	
	KEY 34	
	KEY 35	
	KEY 36	
	KEY 37	
	KEY 38	
	KEY 39	
	KEY 40	
	KEY 41	
	KEY 42	
	KEY 43	
	KEY 44	
	KEY 45	
	KEY 46	
	KEY 47	
	KEY 48	
	KEY 49	
	KEY 50	
	KEY 51	
	KEY 52	
	KEY 53	
	KEY 54	
	KEY 55	
	KEY 56	
	KEY 57	
	KEY 58	
	KEY 59	

MESSAGE CENTER DATA BLOCK (DMCD Program)

ITEM	PROMPT	ENTRY
	REQ	
Message/Voice Mail	MWC0	
Message/Voice Mail	MWC1	
DN of MC0	MDN0	
DN of MC1	MDN1	
Disconnect Code	DSC0	
Disconnect Code	DSC1	
Toshiba Voice Messaging #0	TVM0	
Toshiba Voice Messaging #1	TVM1	

TRUNK GROUP DATA BLOCK (DTGP Program)

TRUNK TYPE: CO										
ITEM	PROMPT	ENTRY								
	REQ									
Trunk Group Number	GRP									
Tenant Number	TEN									
Trunk Type	TKT									
Incoming/Outgoing	IAO									
Advance Step	STP									
Access Code	COD									
Transmission	TRN									
Start Arrangement	STR									
Warning Tone Allowed?	WTA									
Outgoing Absorb Digits	OAB									
Flash-hook Timing	FLT									
Centrex	CTX									

TRUNK GROUP DATA BLOCK (DTGP Program)

TRUNK TYPE: FX										
ITEM	PROMPT	ENTRY								
	REQ									
Trunk Group Number	GRP									
Tenant Number	TEN									
Trunk Type	TKT									
Incoming/Outgoing	IAO									
Advance Step	STP									
Access Code	COD									
Transmission	TRN									
Start Arrangement	STR									
Warning Tone Allowed?	WTA									
Outgoing Absorb Digits	OAB									
Flash-hook Timing	FLT									
Centrex	CTX									

TRUNK GROUP DATA BLOCK (DTGP Program)

TRUNK TYPE: WATS										
ITEM	PROMPT	ENTRY								
	REQ									
Trunk Group Number	GRP									
Tenant Number	TEN									
Trunk Type	TKT									
Incoming/Outgoing	IAO									
Advance Step	STP									
Access Code	COD									
Transmission	TRN									
Start Arrangement	STR									
Warning Tone Allowed?	WTA									
Flash-hook Timing	FLT									
Centrex	CTX									

NOTE: Use multiple sheets as required. Sheet ____ of ____

TRUNK GROUP DATA BLOCK (DTGP Program)

TRUNK TYPE: TIE/CCSA									
ITEM	PROMPT	ENTRY							
	REQ								
Trunk Group Number	GRP								
Tenant Number	TEN								
Trunk Type	TKT								
DNIS Allowed?	DNIS								
DNIS Digits Received	DIG								
Incoming/Outgoing	IAO								
Advance Step	STP								
Access Code	COD								
Class of Service	COS								
Transmission	TRN								
Start Arrangement	STR								
Warning Tone Allowed?	WTA								
Incoming Absorb Digits	IAB								
Translated Number 1	TRN1								
Translated Number 2	TRN2								
Toll Restriction Class	TOL								

TRUNK GROUP DATA BLOCK (DTGP Program)

TRUNK TYPE: PVL (Private Line)									
ITEM	PROMPT	ENTRY							
	REQ								
Trunk Group Number	GRP								
Tenant Number	TEN								
Incoming/Outgoing	IAO								
Transmission	TRN								
Start Arrangement	STR								
Warning Tone Allowed?	WTA								
Flash-hook Timing	FLT								
Centrex	CTX								

TRUNK GROUP DATA BLOCK (DTGP Program)

TRUNK TYPE: DID									
ITEM	PROMPT	ENTRY							
	REQ								
Trunk Group Number	GRP								
Tenant Number	TEN								
Trunk Type	TKT								
DNIS Allowed?	DNIS								
DNIS Digits Received	DIG								
Incoming/Outgoing	IAO								
Advance Step	STP								
Access Code	COD								
Class of Service	COS								
Transmission	TRN								
Start Arrangement	STR								
Warning Tone Allowed?	WTA								
Outgoing Absorb Digits	OAB								
Incoming Absorb Digits	IAB								
Translated Number 1	TRN1								
Translated Number 2	TRN2								

NOTE: Use multiple sheets as required.

Sheet ____ of ____

TRUNK DATA BLOCK (DTRK Program)

TRUNK TYPE: CO/FX/WATS		PCB (T)			
ITEM	PROMPT	ENTRY			
	REQ				
Port Number	POR				
Universal Port Number	UPN				
Group/Member Number	GMN				
Trunk Identification	TKID				
Remote Access Day/Night	RAD				
Night Number	NIT				
Day Number	DAY				
Destination for Transfer Recall Termination	TRCL				
Signaling	SIG				
Disconnect Supervision	DIS				
Outgoing Dialing	DOT				

TRUNK DATA BLOCK (DTRK Program)

TRUNK TYPE: CO/FX/WATS		PCB (T)			
ITEM	PROMPT	ENTRY			
	REQ				
Port Number	POR				
Universal Port Number	UPN				
Group/Member Number	GMN				
Trunk Identification	TKID				
Remote Access Day/Night	RAD				
Night Number	NIT				
Day Number	DAY				
Destination for Transfer Recall Termination	TRCL				
Signaling	SIG				
Disconnect Supervision	DIS				
Outgoing Dialing	DOT				

TRUNK DATA BLOCK (DTRK Program)

TRUNK TYPE: CO/FX/WATS		PCB (T)			
ITEM	PROMPT	ENTRY			
	REQ				
Port Number	POR				
Universal Port Number	UPN				
Group/Member Number	GMN				
Trunk Identification	TKID				
Remote Access Day/Night	RAD				
Night Number	NIT				
Day Number	DAY				
Destination for Transfer Recall Termination	TRCL				
Signaling	SIG				
Disconnect Supervision	DIS				
Outgoing Dialing	DOT				

NOTE: Use multiple sheets as required.

Sheet ____ of ____

TRUNK DATA BLOCK (DTRK Program)

TRUNK TYPE: TIE		PCB (T)				PCB (T)			
ITEM	PROMPT	ENTRY				ENTRY			
	REQ								
Port Number	POR								
Universal Port Number	UPN								
Group/Member Number	GMN								
Signaling	SIG								
Disconnect Supervision	DIS								
Control of Disconnect	CTL								
Incoming Dialing	DIN								
Outgoing Dialing	DOT								
Answer Supervision	ANS								

TRUNK DATA BLOCK (DTRK Program)

TRUNK TYPE: CCSA		PCB (T)				PCB (T)			
ITEM	PROMPT	ENTRY				ENTRY			
	REQ								
Port Number	POR								
Universal Port Number	UPN								
Group/Member Number	GMN								
Destination for Transfer Recall Termination	TRCL								
Signaling	SIG								
Disconnect Supervision	DIS								
Control of Disconnect	CTL								
Incoming Dialing	DIN								
Outgoing Dialing	DOT								
Answer Supervision	ANS								

TRUNK DATA BLOCK (DTRK Program)

TRUNK TYPE: PVL (Private Line)		PCB (T)				PCB (T)			
ITEM	PROMPT	ENTRY				ENTRY			
	REQ								
Port Number	POR								
Universal Port Number	UPN								
Group/Member Number	GMN								
Trunk DN	TDN								
Destination for Transfer Recall Termination	TRCL								
Signaling	SIG								
Disconnect Supervision	DIS								
Outgoing Dialing	DOT								
Private Line Outgoing Call Restriction	OTR								

NOTE: Use multiple sheets as required.

Sheet ____ of ____

TRUNK DATA BLOCK (DTRK Program)

TRUNK TYPE: DID		PCB (T)				PCB (T)			
ITEM	PROMPT	ENTRY				ENTRY			
	REQ								
Port Number	POR								
Universal Port Number	UPN								
Group/Member Number	GMN								
Destination for Transfer Recall Termination	TRCL								
Signaling	SIG								
Disconnect Supervision	DIS								
Control of Disconnect	CTL								
Incoming Dialing	DIN								
Outgoing Dialing	DOT								
Answer Supervision	ANS								

NOTE: Use multiple sheets as required. Sheet ____ of ____

DIALED NUMBER IDENTIFICATION SERVICE DATA BLOCK (DDNI Program) no listing

ITEM	PROMPT	ENTRY
	REQ	
DNIS Table Number	TAB	
Number of Digits Received	NUM	
Actual Digits Received	DIG	
Destination Directory Number	DN	
Alphanumeric Display	DIS	

SMDR DATA BLOCK (DMDR Program)

ITEM	PROMPT	ENTRY
	REQ	
Trunk Port Number	TPN	
Account Code Length	ACL	
Special Common Carrier #1	SPCC1	
Special Common Carrier #2	SPCC2	
Trunk Group	TGP 0	
Trunk Group	TGP 1	
Trunk Group	TGP 2	
Trunk Group	TGP 3	
Trunk Group	TGP 4	
Trunk Group	TGP 5	
Trunk Group	TGP 6	
Trunk Group	TGP 7	
Trunk Group	TGP 8	
Trunk Group	TGP 9	
Trunk Group	TGP 10	
Trunk Group	TGP 11	
Trunk Group	TGP 12	
Trunk Group	TGP 13	
Trunk Group	TGP 14	
Trunk Group	TGP 15	

TOLL RESTRICTION DATA BLOCK (DTOL Program)
Miscellaneous Parameters (PAR Sub-program)

ITEM	PROMPT	ENTRY
	REQ	CHG
Sub-program Type	TYPE	PAR
Home Area Code	HAC	
Interchangeable Codes	ICC	
Specialized Common Carrier #1DN	SPCC1	
Specialized Common Carrier #2DN	SPCC2	
DDD Prefix	DDP	
Authorization Code 1 Digit Length	AUTH1	
Authorization Code 2 Digit Length	AUTH2	

TOLL RESTRICTION DATA BLOCK (DTOL Program)
Restriction Class Table (CLS Sub-program)

ITEM	PROMPT	ENTRY						
	REQ	CHG						
Sub-program Type	TYPE	CLS						
Class Number	CNO							
0 and 0 + Calls Allowed	OPR							
International Calls Allowed	INT							
Long Dist. Directory Assistance Allowed	LDA							
Area Code Table (Allow/Deny)	ACT							
Area Code List (Add/Delete)	ACD							
Office Code Table (Allow/Deny)	OCT							
Office Code List (Add/Delete)	OCD							

TOLL RESTRICTION DATA BLOCK (DTOL Program)
Area/Office Code Exception Table (AOC Sub-program)

ITEM	PROMPT	ENTRY
	REQ	CHG
Sub-program Type	TYPE	AOC
Table Number	TNO	
Area Code	ARC	
Class Number	CNO	
Office Codes (A to add/D to delete)	OFC	

NOTE: Use a separate sheet for each Area/Office Code Exception Table.

Sheet ____ of ____

DDIU DATA BLOCK (DDIU Program)

ITEM	PROMPT	ENTRY
	REQ	
Port Number	POR	
DIU Style	PDIU	
AT Commands	ATC	
Type of DDIU	TYP	
Directory Number	DN	
Hunt Directory Number	HNT	
Class of Service Group	COS	
Group of DDIU	GOD	
Tenant Number Button Assignments:	TEN	
Data DN only!	KEY 0	
	KEY 1	
	KEY 2	
	KEY 3	
	KEY 4	
	KEY 5	
	KEY 6	
	KEY 7	
	KEY 8	
	KEY 9	

MODEM POOLING DATA BLOCK (DMDM Program) PCB Location (L)

ITEM	PROMPT	ENTRY	ENTRY	ENTRY	ENTRY
	REQ				
Port Number	POR				

LEAST COST ROUTING DATA BLOCK (DLC1 Program)
Miscellaneous Parameters (PAR Sub-program)

ITEM	PROMPT	ENTRY
	REQ	
Sub-program Type	TYPE	
Interchangeable Codes	ICC	
Operator Call Timeout	OTO	
Return Dial Tone	RTD	
Warning Tone Allowed?	WTA	
Home Area Code	HAC	
Toll Free (800) Calls	TFC	
Local Call Route	LCR	
Service Code Table	SVC	
Directory Assistance Calls Allowed	DAC	
Long Distance International Call Route	LD0	
Long Distance Information Route	LDI	
DDD Prefix	DDP	

LEAST COST ROUTING DATA BLOCK (DLC1 Program)
Area Code Table (ACT Sub-program)

ITEM	PROMPT	ENTRY
	REQ	CHG
Sub-program Type	TYPE	ACT
Route Table Number	RNO	

Area Codes (Added with ACA/Deleted with ACD)

NOTE: Use multiple sheets as required.

Sheet ____ of ____

LEAST COST ROUTING DATA BLOCK (DLC1 Program)
Area/Office Code Table (AOC Sub-program)

ITEM	PROMPT	ENTRY
	REQ	CHG
Sub-program Type	TYPE	AOC
Table Number	TNO	
Area Code	ARC	
Route Table Number	RNO	
Office Codes (Added with OCA/Deleted with OCD)		

NOTE: Use a separate sheet for each Area/Office Code.

Sheet ____ of ____

LEAST COST ROUTING DATA BLOCK (DLC2 Program)
Route Table (RTB Sub-program)

ITEM	PROMPT	ENTRY		COMMENTS
	REQ	CHG		
Sub-program Type	TYPE	RTB		
Route Table Number	RNO			
		TGN	MDT	
Route #1 Definition	RT1			
Route #2 Definition	RT2			
Route #3 Definition	RT3			
Route #4 Definition	RT4			
Route #5 Definition	RT5			
Route #6 Definition	RT6			
Route Schedule A	SCHA	~		
Class 3 Routing Priority	LC3			
Class 2 Routing Priority	LC2			
Class 1 Routing Priority	LC1			
Route Schedule B	SCHB	~		
Class 3 Routing Priority	LC3			
Class 2 Routing Priority	LC2			
Class 1 Routing Priority	LC1			
Route Schedule C	SCHC	"CR"		
Class 3 Routing Priority	LC3			
Class 2 Routing Priority	LC2			
Class 1 Routing Priority	LC1			

NOTES:

Sheet ____ of ____

1. *Use a separate sheet for each Route Table.*
2. *Use multiple sheets as required.*

LEAST COST ROUTING DATA BLOCK (DLC2 Program)
Modify Digits Table (MDT Sub-program)

ITEM	PROMPT	ENTRY
	REQ	CHG
Sub-program Type	TYPE	MDT
Table Number	TNO	
Number of Digits to be Deleted	DLT	
Digits to be Added (Prefixed)	ADD	

LEAST COST ROUTING DATA BLOCK (DLC2 Program)
Modify Digits Table (MDT Sub-program)

ITEM	PROMPT	ENTRY
	REQ	CHG
Sub-program Type	TYPE	MDT
Table Number	TNO	
Number of Digits to be Deleted	DLT	
Digits to be Added (Prefixed)	ADD	

LEAST COST ROUTING DATA BLOCK (DLC2 Program)
Modify Digits Table (MDT Sub-program)

ITEM	PROMPT	ENTRY
	REQ	CHG
Sub-program Type	TYPE	MDT
Table Number	TNO	
Number of Digits to be Deleted	DLT	
Digits to be Added (Prefixed)	ADD	

LEAST COST ROUTING DATA BLOCK (DLC2 Program)
Modify Digits Table (MDT Sub-program)

ITEM	PROMPT	ENTRY
	REQ	CHG
Sub-program Type	TYPE	MDT
Table Number	TNO	
Number of Digits to be Deleted	DLT	
Digits to be Added (Prefixed)	ADD	

LEAST COST ROUTING DATA BLOCK (DLC2 Program)
Modify Digits Table (MDT Sub-program)

ITEM	PROMPT	ENTRY
	REQ	CHG
Sub-program Type	TYPE	MDT
Table Number	TNO	
Number of Digits to be Deleted	DLT	
Digits to be Added (Prefixed)	ADD	

NOTE: Use multiple sheets as required.

Sheet ____ of ____

LODGING/HEALTH CARE FEATURES DATA BLOCK (DHMF Program)

ITEM	PROMPT	ENTRY
	REQ	
Automatic Wake-up Source	AWU SRC	
Automatic Wake-up	AWU POR	
Message Waiting	MW POR	
Message Registration	MR POR	
Room Status Audit	RMS	

MESSAGE REGISTRATION DATA BLOCK (DMRD Program)

ITEM	PROMPT	ENTRY
	REQ	
Interchangeable Code?	ICC	
DDD Prefix	DDP	
Home Area Code	HAC	
Supervision Time	SVT	
Rate Table	TN1	
First Billing Interval	FBI	
First Billing Unit	FBU	
Incremental Billing Interval	IBI	
Incremental Billing Units	IBU	
Unit Cost	CST	

Office Codes (Added with OCA/Deleted with OCD)

NOTES:

Sheet ____ of ____

1. *Use a separate sheet for each Area/Office Code Table.*
2. *The TN2 ~ TN5 prompts will follow Office Code-Delete (OCD prompt).*

SPEED DIAL DATA BLOCK (DSDL Program)

ITEM	PROMPT	ENTRY	ENTRY	ENTRY
	REQ			
List Number	LNO			
Store Number	STR			

SPEED DIAL DATA BLOCK (DSDL Program)

ITEM	PROMPT	ENTRY	ENTRY	ENTRY
	REQ			
List Number	LNO			
Store Number	STR			

SPEED DIAL DATA BLOCK (DSDL Program)

ITEM	PROMPT	ENTRY	ENTRY	ENTRY
	REQ			
List Number	LNO			
Store Number	STR			

NOTES:

1. *Use multiple sheets as required.*
2. *Use one column for each station list.*
3. *Use multiple columns for system list.*

Sheet ____ of ____

TRAFFIC MEASUREMENT DATA BLOCK (DTRF Program)

ITEM	PROMPT	ENTRY
	REQ	
System Date	SYST. DATE MMDDYY	
Day of Week	DOW	
System Time	SYS. TIME HHMMSS	
Schedule	SCH -XXX-	
Start Date	STR. DATE MMDDYY	
State Time	STR. TIME HHMM	
Report	RPT	
	SYST	
	ATT0	
	ATT1	
	TGP00	
	TGP01	
	TGP02	
	TGP03	
	TGP04	
	TGP05	
	TGP06	
	TGP07	
	TGP08	
	TGP09	
	TGP10	
	TGP11	
	TGP12	
	TGP13	
	TGP14	
	TGP15	

ALPHANUMERIC MESSAGE DATA BLOCK (DMSG Program)

ITEM	PROMPT	ENTRY
	REQ	CHG*
Message 0	MSG 0	
Message 1	MSG 1	
Message 2	MSG 2	
Message 3	MSG 3	
Message 4	MSG 4	
Message 5	MSG 5	
Message 6	MSG 6	
Message 7	MSG 7	
Message 8	MSG 8	
Message 9	MSG 9	

**Enter the message in this column.*

ACD DATA BLOCK (DACM Program)

ITEM	PROMPT	ENTRY
	REQ	
ACD Group Number	AGNO	
ACD Group Pilot Number	APNO	
After-shift Group	AFSG	
Overall Queue Timer	OVQT	
Announcement Pattern	ANPT	
	A1	
	M1	
	A2	
	M2	
	A3	
	M3	
Repeat Disposition	REPD	
Overflow Disposition	OVFD	
Overflow Group Pilot Number	OVFG	
Ring Back Tone Timer	RBTT	
Music 1 Timer	MUT1	
Music 2 Timer	MUT2	
Music 3 Timer	MUT3	
Alarm Generation	ALGE	
Alarm: Number of Queue 0	ANQ0	
Call Waiting Alarm Timer 1	CAT1	
Alarm: Number of Queue 1	ANQ1	
Call Waiting Alarm Timer 2	CAT2	
Alarm: Number of Queue 2	ANQ2	
Alarm Guard Timer	ALGT	
Supervisor Password	ASPS	
After Call Work Timer	ACWT	
ACD Agent Line Number	AALN	
ACD/MIS Agent ID Number and Name	AAID	

VERIFIABLE ACCOUNT CODES DATA BLOCK (DVAC Program)

ITEM	PROMPT	ENTRY			
	REQ	CHG			
Data Table Type	TYPE	ACTA			
Account Code Length	ACL				
	A				