BMW NA

Electrical Troubleshooting Manual

Diagnosis for 5 Series—E34 and 7 Series—E32

from Model Year 1988

NOTE: Sections marked with a black bar pertain to systems not currently installed in U.S. vehicles.

Part 1

0100.0A Index

0110.0A Introduction

0130.0A Systematic Troubleshooting

0150.0A Diagnostic System

1210.0A Digital Motor Electronics (DME M1.1/M1.3, 6-cylinder M20 and M30
1210.0B —Component Testing

1210.3A Digital Motor Electronics (DME M1.2, 12-cylinger M 70)
1210.3B —Component Testing

1210.4A Digital Motor Electronics (DME M1.2, 6-cylinder S 38)
1210.4B —Component Testing

1210.5A Digital Motor Electronics (DME M1.3, 4-cylinder M40)
1210.5B —Component Testing

1210.6A Digital Motor Electronics (DME M1.7, 12-cylinder M70)
1210.6B —Component Testing

1210.7A Digital Motor Electronics (DME M3.1, 6-cylinder M50)
1210.7B —Component Testing

Group 01—23

1210.8A Digital Motor Electronics (DME M1.7, 4-cylinder M40)
1210.8B —component Testing

1210.10A Engine Control MS 40
1210.10B —Component Testing

1220.0A Preheating System (6-cylinder M21)

1230.0A Alternator
1230.0B —Component Testing

1240.0A Starter
1240.0B —Component Testing

1270.0A Electronic Throttle Control (EML, 6-cylinder)

1270.1A Electronic Throttle Control (EML, 12-cylinder)

1290.0A E-Box Fan

1360.0A Digital Diesel Electronics (DDE 1, 6-cylinder M21)
1360.0B —Component Testing

1360.1A Digital Diesel Electronics (DDE 2, 6-cylinder M51)
1360.1B —Component Testing

© BMW of North America, Inc.

Woodcliff Lake, NJ
May 1992

Part Number 91 00 0 000 029

Index

Part 1: Groups 00 to 23

Section		Remarks
0100.0 A	Index	
0110.0 A	Introduction	
0130.0 A	Systematic Troubleshooting	Measurement procedures and important tests
0150.0 A	Diagnostic System	Brief descriptions and instructions
1210.0 A / B	Digital Motor Electronics (DME M 1.1/ M 1.3, 6-cylinder M20 and M30)	
1210.3 A / B	Digital Motor Electronics (DME M 1.2, 12-cylinder M70)	
1210.4 A / B	Digital Motor Electronics (DME M 1.2, 6-cylinder S 38)	
1210.5 A / B	Digital Motor Electronics (DME M 1.3, 4-cylinder M40)	
1210.6 A / B	Digital Motor Electronics (DME M 1.7, 12-cylinder M70)	
1210.7 A / B	Digital Motor Electronics (DME M 3.1, 6-cylinder M 50)	
1210.8 A / B	Digital Motor Electronics (DME M 1.7, 4-cylinder M 40)	
1210.10 A / B	Engine Control MS40	

Index A = System Description and Troubleshooting / Index B = Component Testing

Section		Remarks
1220.0 A	Preheating System (6-cylinder M21)	
1230.0 A / B	Alternator	
1240.0 A / B	Starter	
1270.0 A	Electronic Throttle Control (EML, 6-cylinder)	
1270.1 A	Electronic Throttle Control (EML,12-cylinder)	
1290.0 A	E-Box Fan	
1360.0 A / B	Digital Diesel Electronics (DDE 1, 6-cylinder M 21)	
1360.1 A / B	Digital Diesel Electronics (DDE 2, 6-cylinder M 51)	

Index A = System Description and Troubleshooting / Index B = Component Testing

Part 2: Groups 24 to 54

Section		Remarks
2460.0 A / B	Electronic Transmission Control (EGS 4 HP-22/2)	Electrohydraulic 4-speed automatic
2460.2 A / B	Electronic Transmission Control A4S 310 R (former designation THM R1)	Electrohydraulic 4-speed automatic, applicable to petrol and diesel engines
2460.4 A / B	Electronic Transmission Control A5S 310 Z (former designation THM R1)	Electrohydraulic 5-speed automatic, applicable to petrol and diesel engines

Index A = System Description and Troubleshooting / Index B = Component Testing

Section		Remarks
2460.6 A / B	Electronic Transmission Control A5S 300 J (former designation Jatco RLA)	Japan only
3231.1 A	Steering Column Memory (LSM)	Electrical steering column adjusment with storage
3234.0 A	Airbag (AB)	
3240.0 A	Servotronic	
3450.0 A	Antilock Brake System (ABS)	
3450.1 A	Automatic Stability Control (ASC)	
3450.2 A	Automatic Stability Control plus Traction (ASC + T)	
3450.3 A	Microprocessor-controlled Antilock Brake System (µC–ABS)	System with diagnostic capabilities
3715.0 A	Electronic Damper Control (EDC)	
3715.1 A	Electronic Damper Control III (EDC III)	
5116.0 A	Power Mirrors	Electrical mirror adjustment without seat/mirror memory
5120.0 A	Door Lock Heating (TSH/ZKE)	TSH controlled by ZKE general module
5120.1 A	Door Lock Heating (TSH/ZVM)	TSH controlled by central locking module, ZV system with blocking of ZV drives
5120.2 A	Door Lock Heating (TSH/ZVM II)	TSH controlled by central locking module II, ZV system with decouplig of ZV drives
5125.0 A	Automatic Soft Close Function (SCA)	

Index A = System Description and Troubleshooting / Index B = Component Testing

Section		Remarks
5126.0 A / B	Central Locking System (ZV/ZKE)	Central locking controlled by ZKE general module
5126.1 A	Central Locking Modul (ZVM)	ZV system with blocking of ZV drives
5126.2 A	Central Locking Modul II (ZVM II)	ZV system with decoupling of ZV drives
5133.0 A	Power Windows (FH/ZKE)	
5200.0 A	Electrical Seat Adjustment	Electrical seat adjustment without seat/mirror memory
5200.1 A	Seat/Mirror Memory (SM/SPM)	Electrical seat adjustment with seat/mirror memory
5203.0 A	Heated Seats	
5410.0 A	Sun Roof (SHK/ZKE)	

Index A = System Description and Troubleshooting / Index B = Component Testing

Part 3: Groups 61 to 99

Section		Remarks
6100.0 A	Central Body Electronics (ZKE)	General ZKE system description
6160.0 A / B	Windscreen Wiper Control (SWS/ZKE)	Windscreen wiper control via ZKE general module
6160.1 A	Wipe/Wash Module (WWM)	Windscreen wiper control via wipe/wash module
6164.0 A	Windscreen Wiper Pressure Control (ADV/ZKE)	

Index A = System Description and Troubleshooting / Index B = Component Testing

Section		Remarks
6167.0 A	Headlight Washer System (SRA/ZKE)	
6200.0 A	Instrument Cluster/Check Control Module (K/CC)	Instrument cluster with check control up to February 1989
6200.1 A	Instrument Cluster (Standard Version)	Instrument cluster without check control up to September 1990
6200.2 A	Instrument Cluster (Redesign) / Check Control Module (K/CC)	Instrument cluster with check control as of February 1989
6200.3 A	Instrument Cluster (Redesign Standard Version)	Instrument cluster without check control as of September 1990
6301.0 A	Lamp Control Module (LKM)	
6313.0 A	Hazard Warning System	
6328.0 A	Trailer Module (AHM)	
6330.0 A	Interior Lights (IB/ZKE)	Interior lights controlled by ZKE general module
6330.1 A	Interior Lights (IB/ZVM)	Interior lights controlled by central locking module, ZV system with blocking of ZV drives
6330.2 A	Interior Lights (IB/ZVM II)	Interior lights controlled by central locking module, ZV system with decoupling of ZV drives
6350.0 A	Crash and Alarm Sensor (CAG)	
6400.0 A	Overview of Heating and Air Conditioning Systems	Overview
6410.0 A / B	Heating Control (HR 34) – Analog	
6410.2 A / B	Heating Control (HR 32)	
6410.3 A	Automatic Heating Control (IHR)	With and without filter

Index A = System Description and Troubleshooting / Index B = Component Testing

Section		Remarks
6412.0 A / B	Independent Heating/Ventilation	For all heating and automatic climate control systems
6430.0 A	Automatic Recirculated Air Control (AUC)	
6450.0 A / B	Automatic Climate Control (IHKA)	
6450.1 A	Automatic Climate Control (IHKR)	
6450.2 A	Rear Climate Control System (FHK)	
6450.3 A	Automatic Climate Control (IHKR2) / (IHKR3)	
6561.0 A	Cellular Phone	
6571.0 A / B	Cruise Control (Tempomat)	
6575.0 A	Antiheft System (DWA)	
6575.1 A	Antiheft System III (DWA III)	
6581.0 A	On-Board Computer (BC IV)	
6610.0 A	Infrared Locking System (IR)	
6621 .0 A	Park Distance Control (PDC)	

Index A = System Description and Troubleshooting / Index B = Component Testing

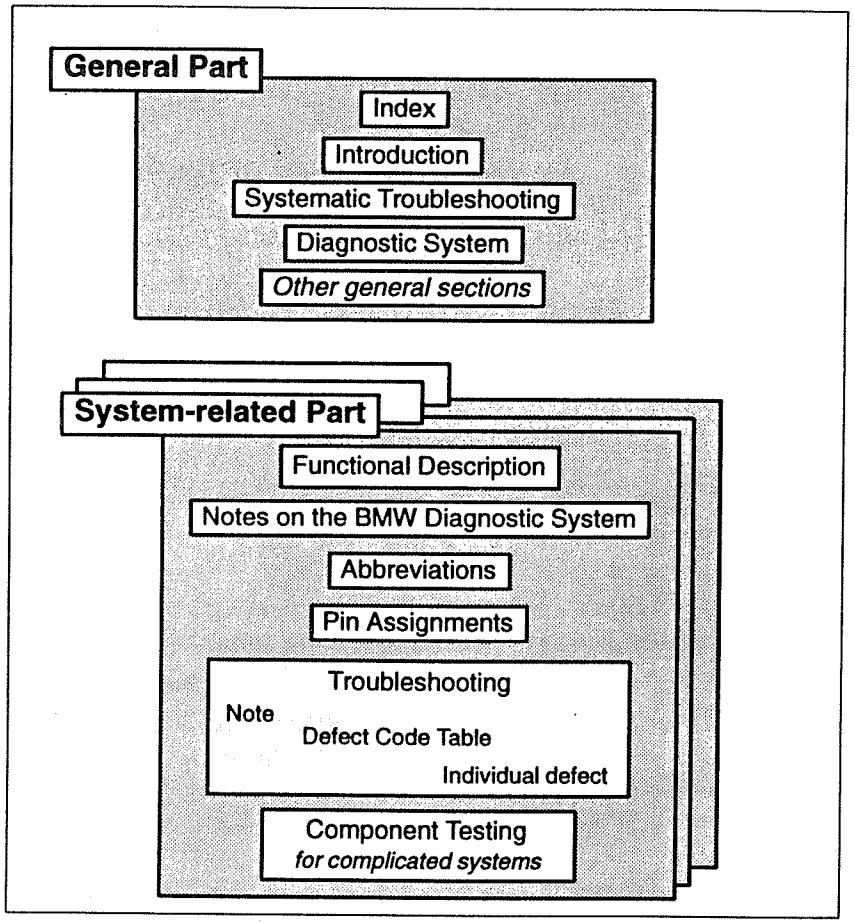

P32 01 001

General

The Electrical Troubleshooting Manual consists of two parts:

– Schematics
– Diagnosis

Diagnosis

The purpose of the diagnosis part is to provide assistance in troubleshooting of the complete vehicle electrical system. It also serves as a supplement to the BMW DIAGNOSTIC SYSTEM.

This manual covers:

– the 7 Series, E32 as of model year 1988
– the 5 Series, E34 as of model year 1988

Structure

The diagnosis part is divided into individual **sections**. The individual system–related sections are subdivided into chapters.

In the case of complicated systems, the Chapter **Component Testing** may be added as an additional supplement. This chapter supports troubleshooting and contains additional information, e.g. nominal values.

Numbering

Sheet Number

Each section of this Troubleshooting Manual is identified by a special number.

Main number: The first four numbers refer to the known main assembly and subassembly numbers.

Additional identifier: If there are several systems within the same main assembly and subassembly differentiation is achieved by an additional number.

Reference letter: A letter follows the section number. This letter stands for:

A	= Diagnosis part of test instructions, troubleshooting
B	= Chapter on Component Testing
No letter	= Schematics

Page numbers: Consecutive page numbering is provided only within the individual sections (A/text part, B/component testing, schematics).

Numbering example:

5126.0A-2

51 = Main design assembly, *here: Body equipment*

26 = Design subassembly, *here: Central locking system*

.0 = Identifier, *here: Central locking system with ZKE*

A = Reference letter, *here: Diagnosis*

-2 = Consecutive page number within the section

Other page identifiers

- Series
- Section description
- Country identifier
- Date of issue
- Model year

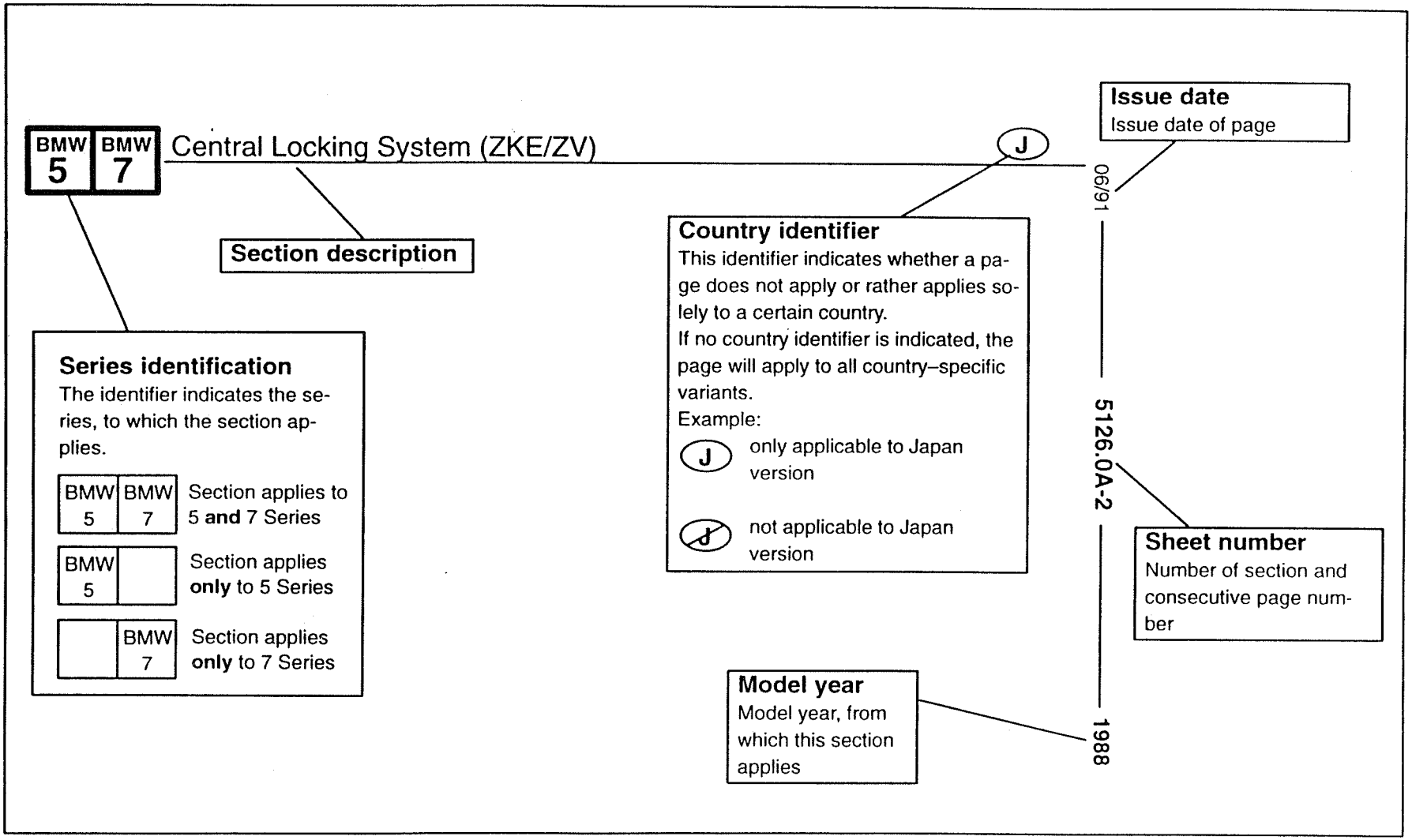
BMW 5 BMW 7
Central Locking System (ZKE/ZV)
J
06/91
5126.0A-2
1988
Section description
Series identification
The identifier indicates the series, to which the section applies.
BMW 5 BMW 7 Section applies to 5 and 7 Series
BMW 5 Section applies only to 5 Series
BMW 7 Section applies only to 7 Series
Country identifier
This identifier indicates whether a page does not apply or rather applies solely to a certain country.
If no country identifier is indicated, the page will apply to all country–specific variants.
Example:
J only applicable to Japan version
J not applicable to Japan version
Issue date
Issue date of page
Sheet number
Number of section and consecutive page number
Model year
Model year, from which this section applies

P32 01 002

Pictogrammes

Chapter **Troubleshooting**

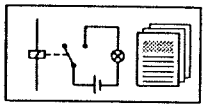

Chapter **Functional Description**

Chapter **Notes on the BMW Diagnostic System**

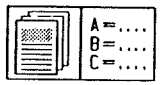

Chapter **Abbreviations**

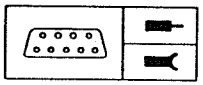

Chapter **Pin Assignments**

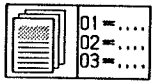

Defect Code Table in Chapter Troubleshooting

General **Notes**

Caution! Cautionary notes

Important! Important notes

P32 01 020

Symbols in the Text

♦M♦ Multimeter.
Select multimeter on the BMW SERVICE TESTER. Select indicated multimeter function.

♦D♦ Diagnostic mode.
Connect the BMW DIAGNOSTIC SYSTEM to the vehicle. Select control unit and set up diagnostic mode with the control unit. Refer to notes on diagnostic procedure.

♦⇑♦ Push button arrow up.
Press specified button on the BMW SERVICE TESTER.

♦⇓♦ Push button arrow down.
Press specified button on the BMW SERVICE TESTER.

♦⇒♦ Push button arrow to right.
Press specified button on the BMW SERVICE TESTER.

♦⇐♦ Push button arrow to left.
Press specified button on the BMW SERVICE TESTER.

Important Information

Pin Assignment

The following prerequisites must be observed when performing tests on the vehicle:

- Vehicle battery charged, **U-min > 12 V.**
- All values apply to the control unit when connected and **fully operable.**
- **Special adapters** are used for measurements.
- The control unit must be in **operating status**, the ignition (terminal 15) switched on.
- All measured values are **mean values.** If no tolerances are specified, a permissible measured value deviation of 10 % will apply.
- Measured data at 0 V have a permissible voltage range of **0 to 2 V.**
- Only use the measuring equipment recommended by BMW AG **for all measurements.**

Troubleshooting

The following prerequisites must be observed when performing trouble-shooting operations on the vehicle:

- Vehicle battery charged, **U-min > 12 V.**
- Only disconnect control units from the wiring harness when the **ignition is switched off.**
- All **fuses** required for trouble–free operation of the system are OK.
- **Wires** are checked in accordance with the schematics.
- **Perform continuity tests** (resistance measurement) on wires only with the control unit or component connectors detached.
- Refer to general information on **wire testing** provided in Section 0130.0A, Systematic Troubleshooting.
- When control units are removed and installed, **defect codes are set in the defect code memory** of the control units without there actually being a malfunction. Therefore:
  - Print out defect code memory prior to removal
  - Clear **defect code memory** on completion of troubleshooting
- Correct installation and removal of components is described in the **Repair Manual** .
- Perform checks at the plug–and–socket connections only with the special **adapter leads** provided for this purpose.

Wire Testing

General Procedure

An electric lead should always be tested in accordance with the relevant schematic since it shows the function, general layout and connections of the line.

The following test procedure is recommended:

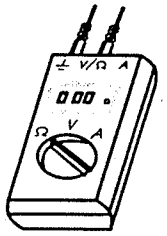

Ohmmeter

P32 01 003

1. Check wire for continuity (resistance measurement).

   ⚠ **Attention!**
   The wire must carry no current!

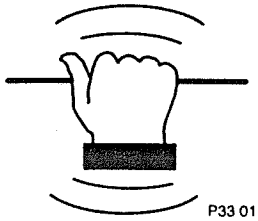

P33 01 004

2. Check the wire for a short to positive or ground.
   Move the wires and plugs during the test in order to find any loose contacts.

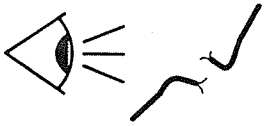

P32 01 005

3. Visual inspection of the wire.
   Is the wire damaged, pinched or broken?

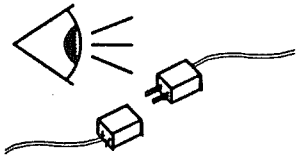

P32 01 006

4. Check the plug connections.
   Do the connections make good contact?
   Are the connections oxidised or moist?
   Are the connectors damaged?
   Are the connections firmly fitted in their housings?

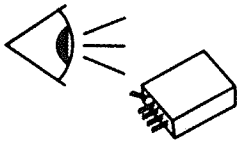

P32 01 007

5. Check the pins at the control unit. Are the pins damaged, bent or pushed back?

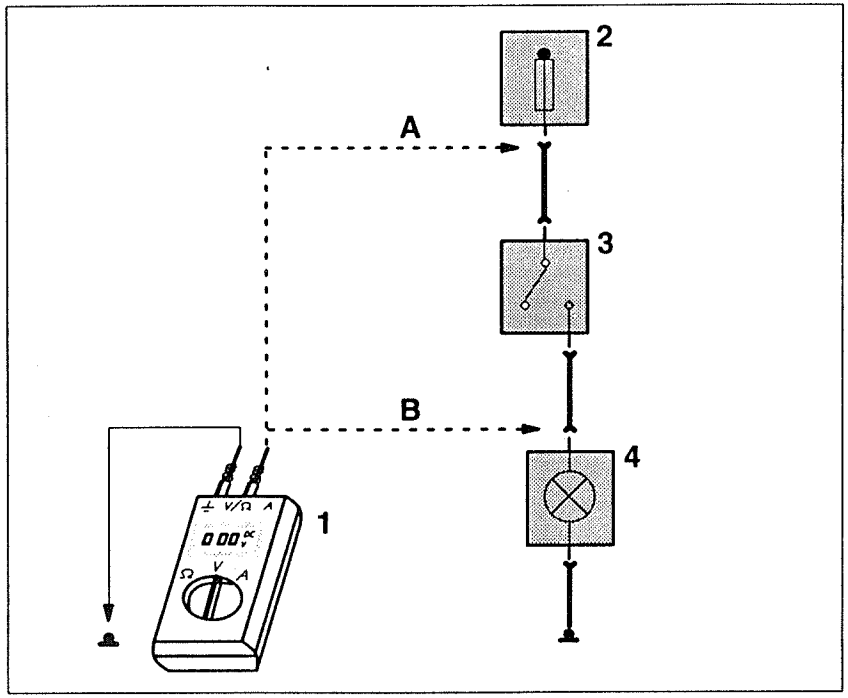

P32 01 008

Example of voltage test

Voltage Test

1 Voltmeter
2 Power distribution box (fuse)
3 Switch for reversing light (OFF)
4 Rear light
A Measured value: U-Batt
B Measured value: No voltage

Measuring instrument: Voltmeter

Test Procedure

To take a voltage measurement, connect the negative lead of the voltmeter to the vehicle ground (negative terminal of the battery or good ground connection). Then connect the positive lead of the voltmeter to the point you want to test. The voltmeter will then indicate a voltage value.

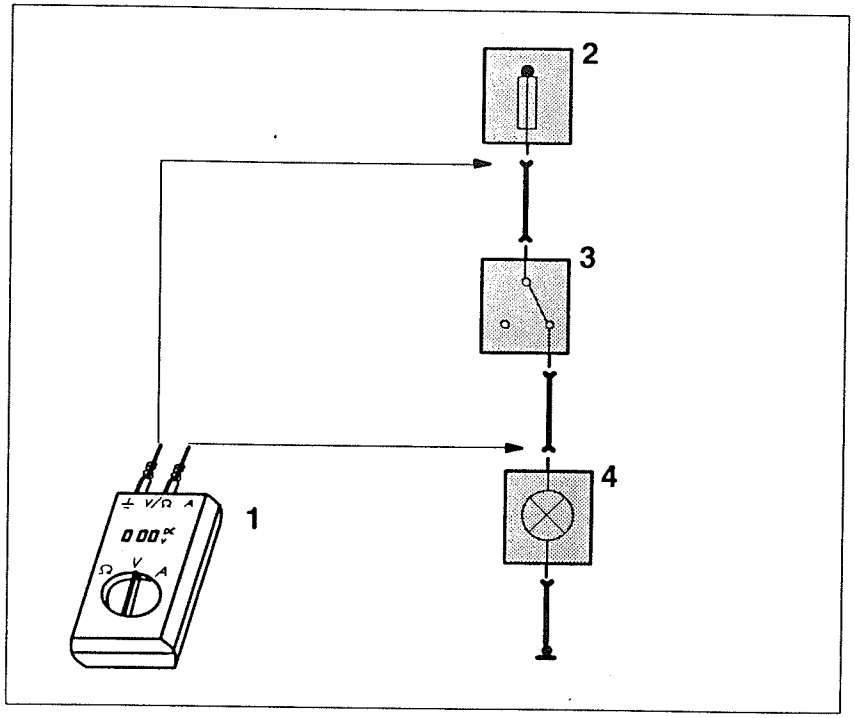

Example of voltage drop test

Voltage Drop Test

1 Voltmeter
2 Power distribution box (fuse)
3 Switch for reversing light
4 Rear light

Measuring instrument: Voltmeter

Wires, connectors and switches are designed to conduct current with a minimum voltage drop.

A voltage drop of more than 1 Volt indicates a problem!

Test Procedure

To test for voltage drop, connect the voltmeter leads to connectors at either end of the circuit section to be tested. The positive lead of the voltmeter should be connected to the end closest to the power supply. Any switch in the circuit should be ON during this test. The voltmeter will indicate the voltage drop.

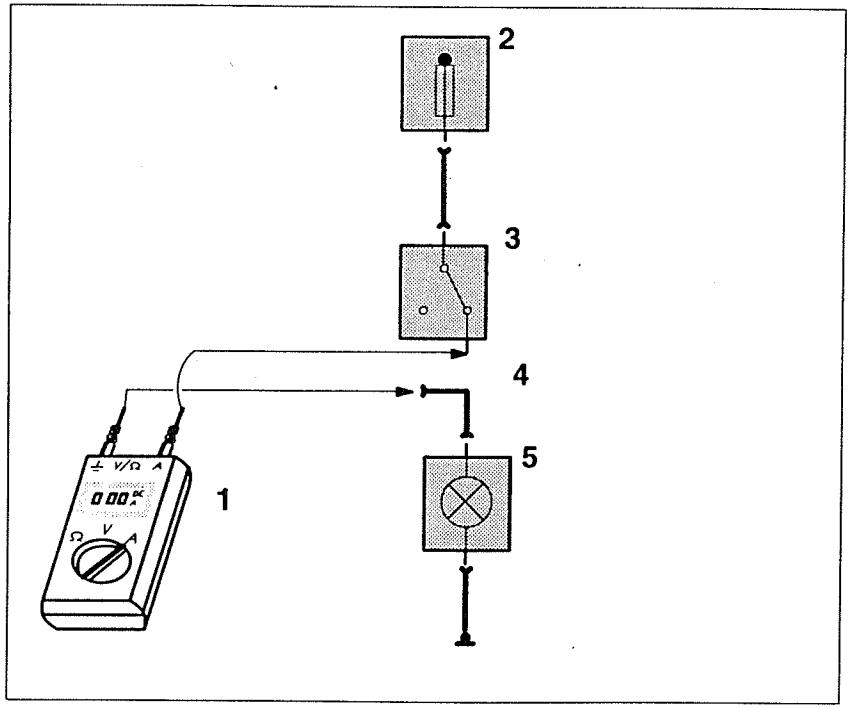

Example of a current test

Current Test

1 Ammeter
2 Power distribution box (fuse)
3 Switch for reversing light
4 Disconnected plug–and–socket connection
5 Rear light

Measuring instrument: Ammeter

Test Procedure

To measure the current, connect the ammeter leads in series with the current. For this purpose, connect the test lead to the plug and socket of a disconnected plug–and–socket connection.

The ammeter will show the current flowing through the circuit.

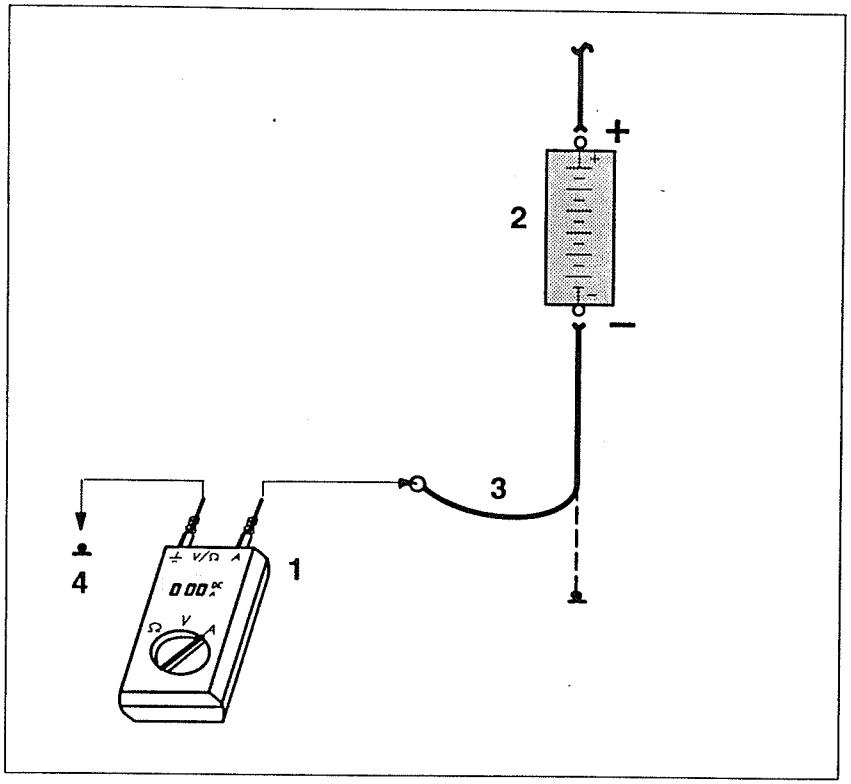

Example of a closed–circuit current test

Closed–Circuit Current Test

1 Ammeter
2 Battery
3 Body ground lead disconnected
4 Ground point in vehicle

Measuring instrument: Ammeter

Important!

The BMW SERVICE TESTER is not suitable for the closed–circuit current test!

Notes

When performing the closed–circuit current test avoid interrupting the power circuit in order

- not to clear the defect code memories and adaptation values in the control units,
- not to have any stuck relays drop out,
- not to exceed the measuring range of the ammeter.

Test Procedure

Step 1

Switch off all loads which can be switched off.

Close and, if necessary, central arrest all doors and front/rear lid with the exception of the door or lid which provides access to the vehicle battery:

- Battery under rear seat – leave right rear door open
- Battery in engine compartment – leave front lid open
- Battery in luggage compartment – leave rear lid open.

Step 2

Connect the leads of the ammeter to the ground lead of the battery and to a ground point on the body.

Attention!
Do not disconnect ground lead from the body at this point!

Step 3

Lock and arrest vehicle via central locking system.

Then wait at least 5 minutes (control units assume closed–circuit current mode).

Attention!
Do not interrupt power circuit during this period of time!

Step 4

After the waiting time has elapsed, disconnect the ground lead from the body.

Attention!
Do not interrupt power circuit when releasing the ground lead!

Step 5

Press light contact switch on door or lid.

The ammeter shows the closed–circuit current.

Defect

A closed–circuit current of more than 50 mA indicates a problem.

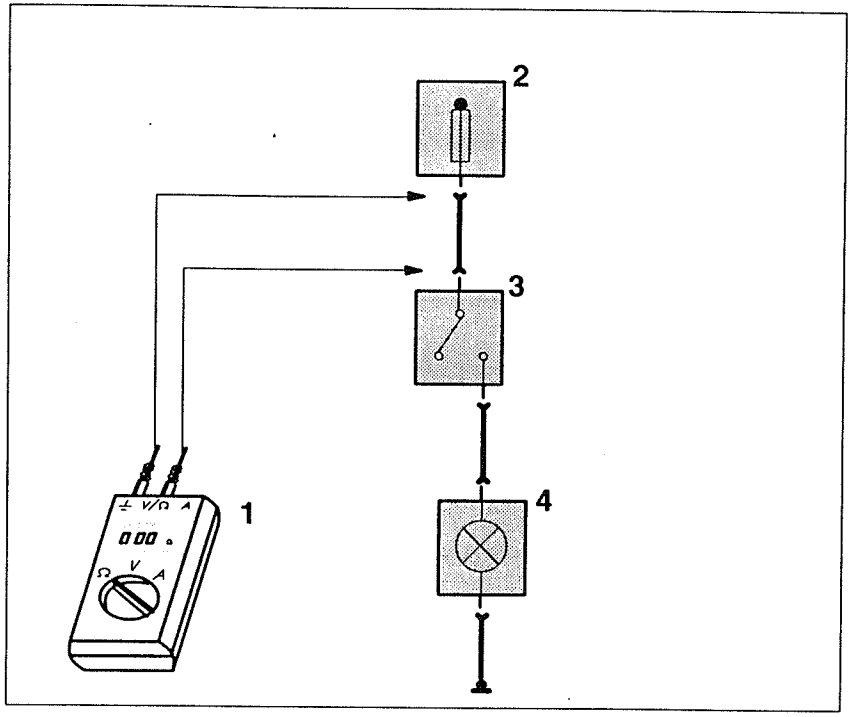

Continuity test with ohmmeter

Continuity Test with Ohmmeter

1 Ohmmeter
2 Power distribution box (fuse)
3 Switch for reversing light (OFF)
4 Rear light

Measuring instrument: Ohmmeter

Test Procedure

Connect the leads of the ohmmeter at either end of the circuit to be tested.

Attention!
The section of the circuit must carry no current!

The ohmmeter will show the resistance across that part of the circuit.

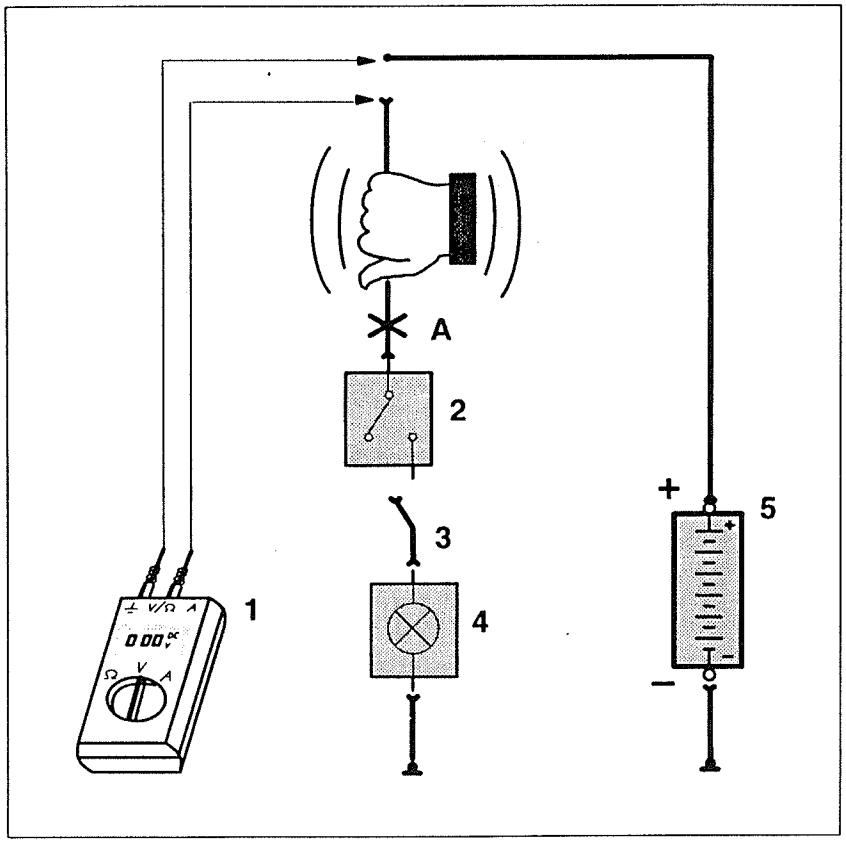

P32 01 013

Short test using voltmeter

Short Test Using Voltmeter

1 Voltmeter
2 Switch for reversing light (OFF)
3 Connection to load disconnected
4 Rear light
5 Battery
A Short to ground

Measuring instrument: Voltmeter

Problem: Short to ground

Test Procedure

Disconnect voltage source and connect voltmeter with test lead. Disconnect the load. Move the lead to the load back and forth and observe the voltmeter reading. If the voltmeter registers a voltage there is a short to ground in the wiring.

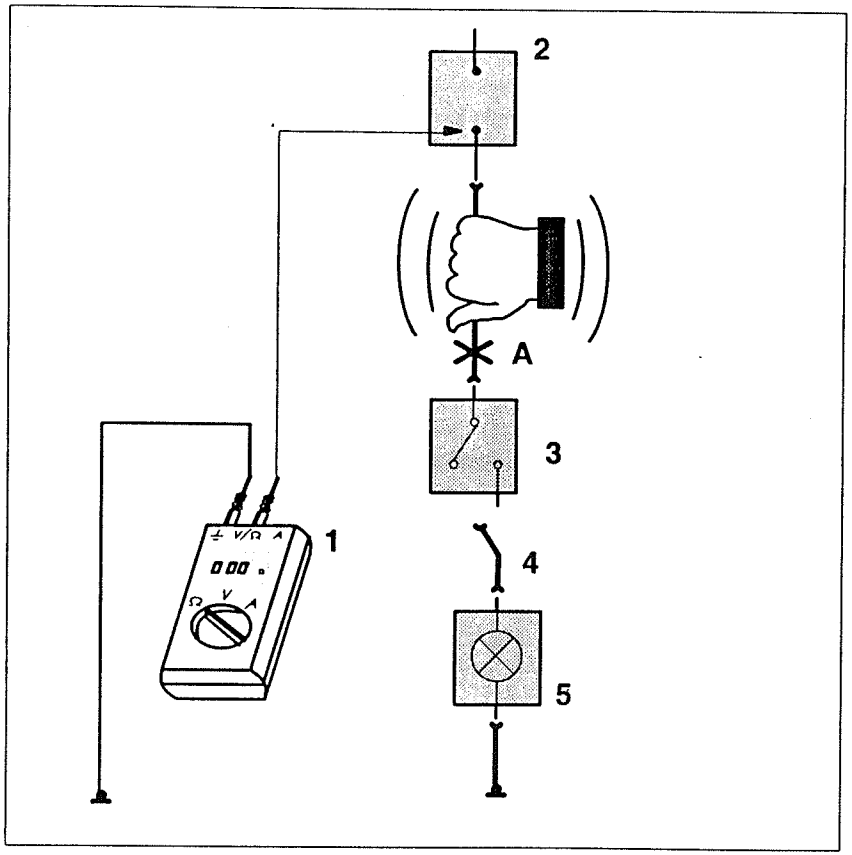

Short test using ohmmeter

Short Test Using Ohmmeter

1 Ohmmeter
2 Fuse holder (without fuse)
3 Switch for reversing light
4 Connection to load disconnected
5 Rear light

Measuring instrument: Ohmmeter

Problem: Short to ground

Test Procedure

Disconnect voltage source and connect ohmmeter with test lead. Disconnect load and, moving the lead to the load back and forth, observe the ohmmeter reading. The ohmmeter will indicate an infinitely high resistance for as long as there is no short–circuit.

Problem: Short–circuit between two wires

Test Procedure

Disconnect power supply to wires to be tested and disconnect load. Connect one test lead each to the two wires. Move the wires back and forth and observe the ohmmeter reading. The ohmmeter will indicate a resistance value with respect to zero as soon as a short–circuit occurs between the two wires.

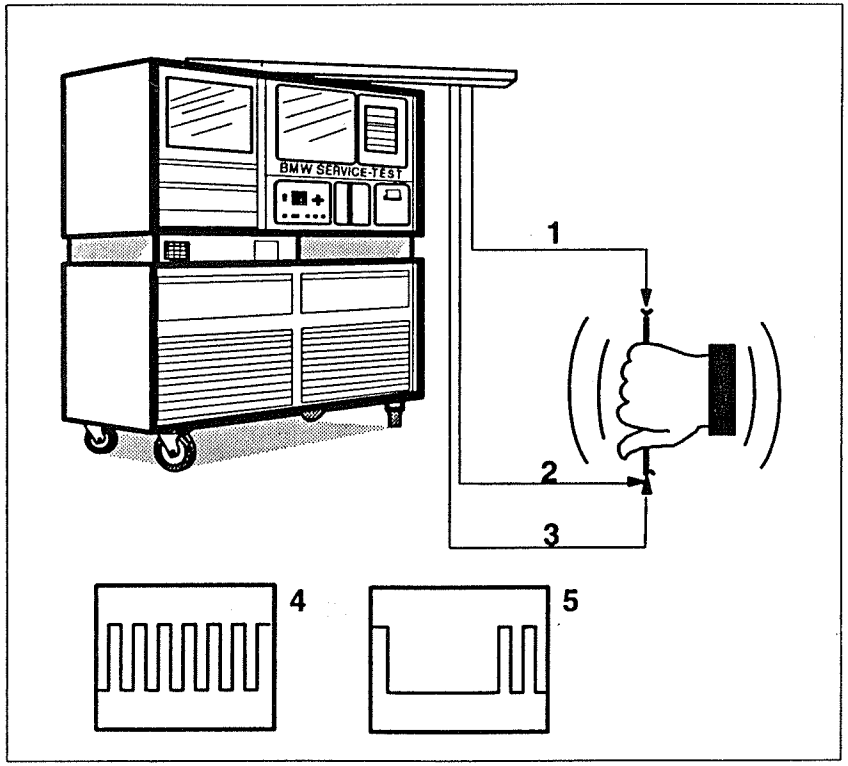

P32 01 015

1 D+, blue
2 Terminal 1, black
3 FREQ OFF (+), blue
4 Oscillogram for correct signal passage
5 Oscillogram for disturbed signal passage

Wire Testing Using Oscilloscope

Measuring instrument: BMW SERVICE TESTER

Test leads: FREQ OFF (+), blue
Terminal 1, black
D+, blue

Test principle

A frequency is applied via one end of the wire to be tested which is then measured with the oscilloscope at the other end.

Test Procedure

Connect universal test lead and leads for frequency testing to the BMW SERVICE TESTER.

Connect the blue D+ lead to the one end of the wire to be tested, the black terminal 1 and the blue FREQ OFF + lead to the other end.

Select ♦ **M** ♦ for multimeter, **"22"** for oscilloscope, **"13"** for frequency output. Apply any frequency and press acknowledgement button twice.

Move the wire back and forth during testing.

If the wire is OK., the oscilloscope will indicate a square–wave signal with a uniform progression. In the case of fault, the signal will be interrupted irregularly.

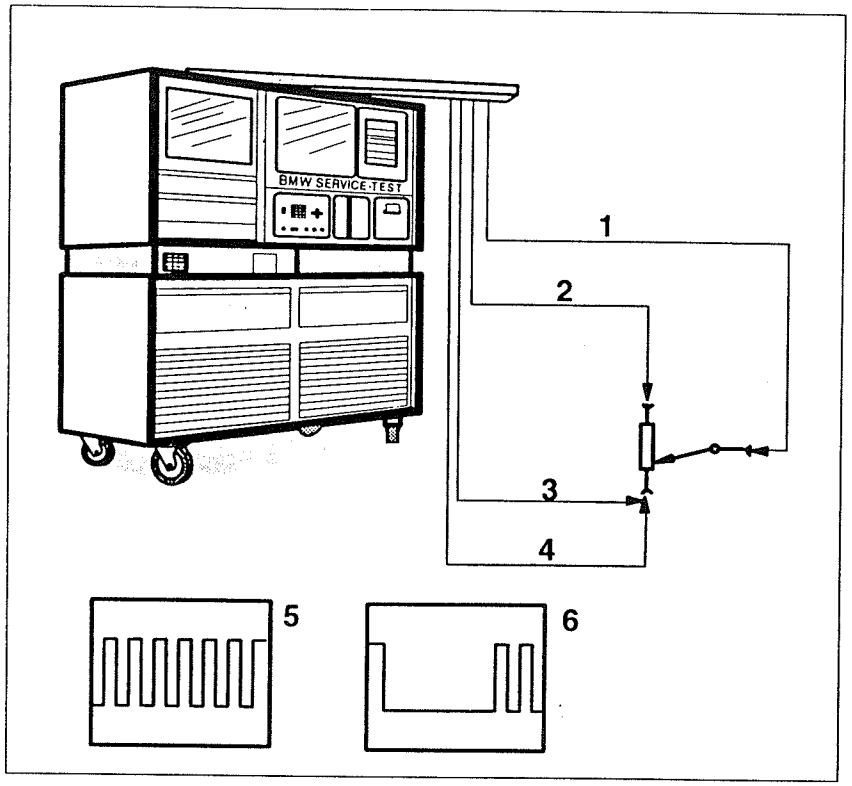

P32 01 016

1 D+, blue
2 FREQ OFF (–), black
3 FREQ OFF (+), blue
4 Terminal 1, black
5 Oscillogram for correct signal passage
6 Oscillogram for disturbed signal passage

Potentiometer Test Using Oscilloscope

Measuring instrument: BMW SERVICE TESTER

Test leads:
FREQ OFF (+), blue
FREQ OFF (–), black
Terminal 1, black
D+, blue

The test is similar to the wire test using the oscilloscope, in this case, however, the measurement is read off at the wiper pick–off.

Test Procedure

Connect universal test lead and leads for frequency measurement to the BMW SERVICE TESTER.

Connect the blue D+ lead to the wiper of the potentiometer to be tested. Connect the black FREQ OFF – lead to the one end, the black terminal 1 and blue FREQ OFF + lead to the other end.

Select ♦ **M** ♦ for multimeter, **"22"** for oscilloscope, **"13"** for frequency output. Apply any frequency and press acknowledgement button twice.

To conduct the test, move the potentiometer through its entire measuring range.

If the potentiometer is faulty, the square–wave signal will be interrupted irregularly.

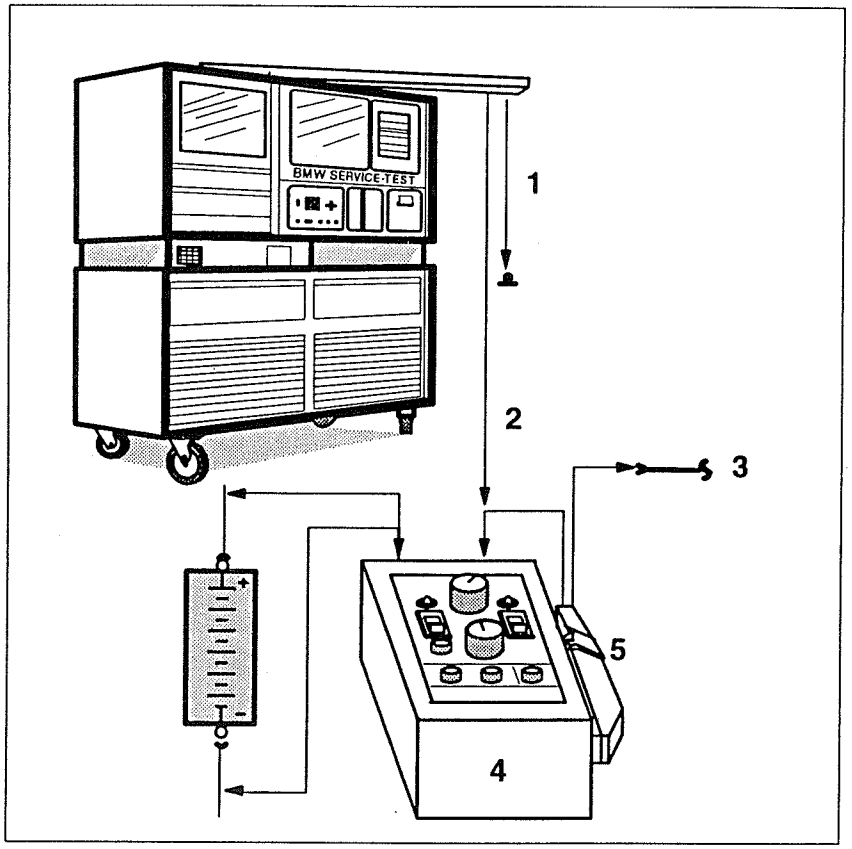

P32 01 017

Simulating vehicle speed signal

1 FREQ ON (–), black
2 FREQ ON (+), yellow
3 Speed A wire or instrument cluster – rear axle reed contact wire
4 Simulator for instrument cluster
5 Jumper

Measuring instrument: BMW simulator for instrument cluster and BMW SERVICE TESTER

Test leads: FREQ ON (+), yellow
FREQ ON (–)
Special connection lead Cartool
No. 61 2 020
for frequency simulation

Test Procedure

The speed signal can be set continuously variable with the BMW simulator for the instrument cluster.

Connect Cartool special connection lead for frequency simulation to the simulator. Connect the power supply lead of the simulator to the vehicle battery. Connect the frequency lead of the simulator to the vehicle wire for the speed signal (speed A wire or wire at rear axle reed contact; disconnect plug–and–socket connection!). Set frequency on the simulator.

The frequency can also be measured by means of the BMW SERVICE TESTER:

Connect the black FREQ ON (–) terminal to chassis ground and the yellow FREQ ON (+) terminal to the frequency output of the simulator.

Select ♦ **M** ♦ for multimeter and **"14"** frequency test, the set frequency is indicated.

Important!

Simulation of the speed signal results in a defect code being stored in some control units. For this reason, perform a quick–test on completion of the signal test and clear the defect codes stored by the simulation.

Calculation of the Vehicle Speed

General

The speed **v** can be calculated with the aid of the entered frequency **f** (in Hz) and the K–number (or read out via the system tester!).

The K-number already contains the conversion to km/h or mph, i.e. the K-number of a km/h speedometer provides the speed v in km/h, and the K-number of a miles speedometer in mph.

The following formula is used to calculate the speed v:

v = f x 3600 / K-number

Deviation

The speedometer value may be up to 10% above the calculated value (speedometer advance).

Example

A frequency f = 200 Hz and the K-number 4535 from a kilometre speedometer result in:

v = 200 x 3600 / 4535 = 159.

The speed is therefore 159 km/h.

Signal Test Using Multimeter Function

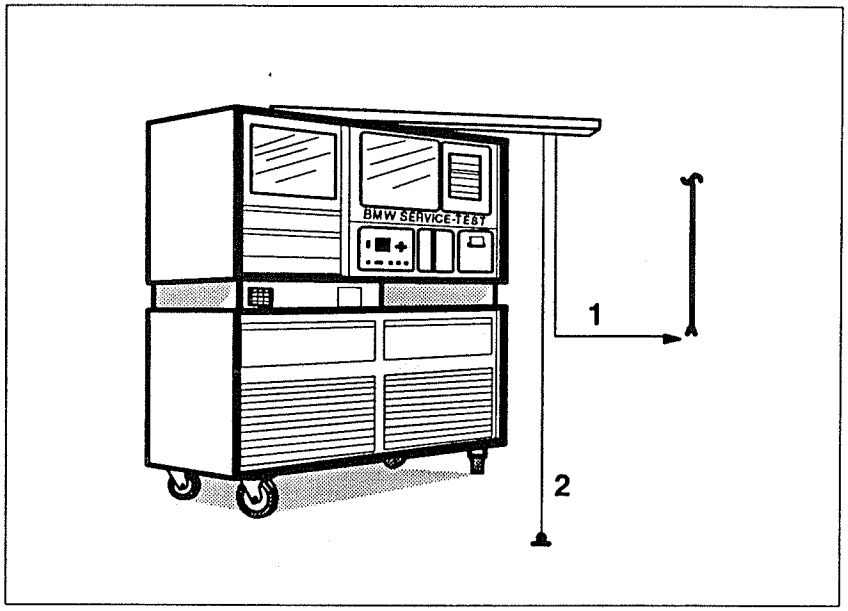

P32 01 018

1 FREQ ON (+), yellow
2 FREQ ON (–), black

Measuring instrument: BMW SERVICE TESTER

Test leads: FREQ ON (+), yellow
FREQ ON (–), black
Diagnosis lead or
Universal lead

Test Procedure

Connect diagnosis lead or lead terminal 31 of universal lead to vehicle ground (measured values will otherwise be falsified).

Connect the black FREQ ON (–) terminal to vehicle ground and the yellow FREQ ON (+) terminal to the wire to be tested.

Select ♦ **M** ♦ for multimeter and

– **"14"** for frequency in Hertz,
– **"15"** for pulse duration in ms,
– **"16"** for pulse duty factor in % or
– **"17"** for pulse duration in ms.

The measurement value is displayed on the screen.

Signal Test Using Oscilloscope

Measuring instrument: BMW SERVICE TESTER

Test lead: Terminal 1, black
Terminal D+, blue
Terminal 31, brown

Test Procedure

Connect terminal 31 to vehicle ground, connect terminal 1 and terminal D+ to the wire to be tested.

To facilitate triggering, the lead terminal 1 (black) can be connected to the lead "FREQ OFF" (blue). (–> Frequency for triggering specified).

Select ♦ **M** ♦ for multimeter and **"22"** for oscilloscope.

The measured signal is displayed on the oscilloscope.

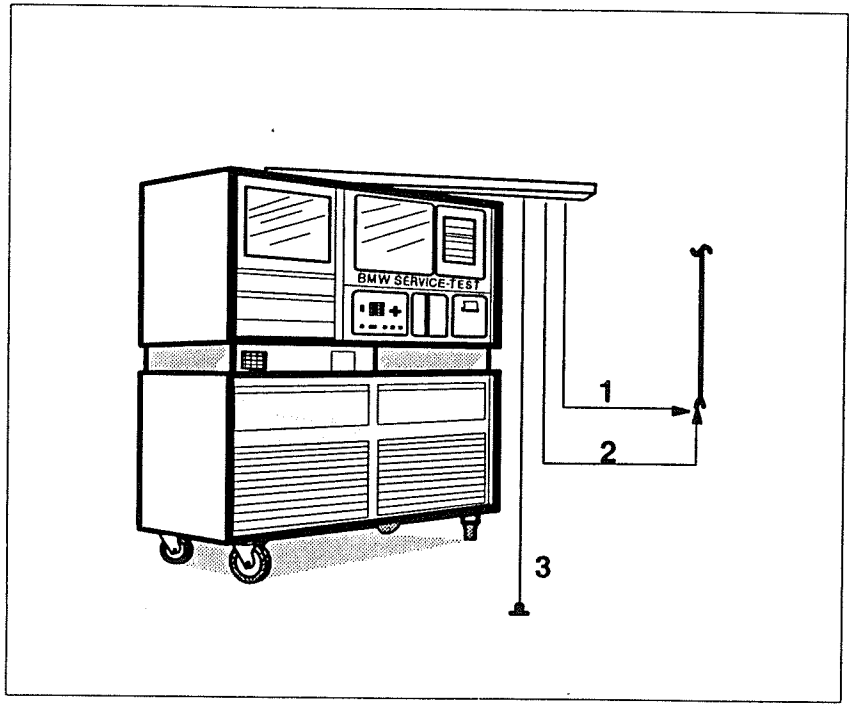

P32 01 019

1 D+, blue
2 Terminal 1, black
3 Terminal 31, brown

General

The BMW Diagnostic System

BMW Service Tester and BMW MoDiC

Diagnosis in the Vehicle

A large number of control units with self–diagnosis capabilities are used in the 5 Series (E34) and 7 Series (E32). In addition to the control of the relevant system, these control units are capable of making available or receiving data for diagnostic procedures. The data can be read out or entered by means of the BMW DIAGNOSTIC SYSTEM.

Diagnostic Links RxD and TxD

The data exchange between the control unit and the BMW DIAGNOSTIC SYSTEM takes place via two diagnostic links (RxD and TxD). The diagnostic links are combined in the diagnostic socket (Pin 15 RxD, Pin 20 TxD) where they can be connected to the BMW SERVICE TESTER or the BMW MoDiC.

To avoid faults occurring during vehicle operation, the RxD link is connected to battery voltage and the TxD link to ground when the diagnostic socket is closed.

Diagnostic Programs

The diagnostic programs are supplied on disks.

After the tester disks have been loaded, the general overview of control units appears on the display screen or on the MoDiC display. The diagnostic procedure is initiated by selecting the relevant control unit and the corresponding diagnostic program is assigned from the tester disk.

Control Unit Identification

After selecting a control unit from the general overview, the BMW DIAGNOSTIC SYSTEM detects which version of the control unit (software version, country–specific version etc.) is installed and automatically allocates the correct test program.

Important!

If a different car is connected to the system or if a control unit has been changed, return to the general overview of control units in the BMW DIAGNOSTIC SYSTEM and **reselect** the corresponding control unit.

Only in this way can you ensure correct program allocation to the control unit version installed in the vehicle.

Diagnostic Functions

Read Defect Code Memory

The majority of control units are capable of automatically detecting a defect and to store it permanently. The contents of the defect code memory can be read out with the BMW DIAGNOSTIC SYSTEM.

Additional information is, in part, also stored when a defect code is stored. This additional information indicates the operating conditions under which and how often the defect occurred.

More extensive troubleshooting is then carried out in accordance with the instructions provided in the diagnostic program or in this Troubleshooting Manual (chapter on Troubleshooting).

The Chapters *Notes on the BMW DIAGNOSTIC SYSTEM* and *Troubleshooting* provide detailed information on how and under what circumstances the relevant control unit detects a defect and its significance.

Important!

On no account clear the defect codes before repair, otherwise important information (troubleshooting, additional information etc.) will no longer appear on the display screen.

Clearing Defect Code Memory

The defect code memory must be cleared after all defects of a system have been rectified.

Test Code

The test code must be printed out before renewing a control unit or an important component of the system. The printout is sent in together with the control unit or component.

The test code contains the coded defect code memory of the control unit. It facilitates fast analysis of the defective component by the Warranty and Quality Assurance departments.

Important!

Print out test code before the defect code memory is cleared!

Status Monitoring

With this function, it is possible to read out current statuses and values applied at the inputs and outputs of the control unit. This display must be compared with the actual status on the vehicle and its plausibility must be checked.

If a signal is found to be defective or if the status detected by the control unit deviates from the actual status on the vehicle, troubleshooting must be carried out at the input or output concerned. In the majority of cases, a defect can then be localized by simple measurement (voltage, resistance etc.).

Test Procedure

– only in the diagnostic program of the BMW SERVICE TESTER –

This function makes it possible to perform a guided check of the system.

The test procedure incorporates status monitoring, component activation and, if necessary, also reading the defect code memory. The display screen pages contain detailed information texts on testing and trouble-shooting.

Component Activation

With this function, components can be activated without the control unit–internal switch–on conditions being set. The actual statuses at the inputs of the control unit are ignored. In this way, the function of components can be checked while they are still installed in order to locate defects.

Special Functions

Special control unit functions can, in part, be called up via the diagnostic procedure (e.g. system test, reading out coded data etc.).

Note

Important information on the control unit or on the diagnostic procedure can be called up from any screen page by way of the note button.

Note button:

#	on BMW Service Tester
C	on BMW MoDiC

Quick Test

General

The quick test makes it possible to check all control units with self–diagnosis capabilities installed in the vehicle for stored defect codes.

The ignition must be switched on before starting the quick test (ignition switch in position 2!).

Quick Test in the BMW Service Tester

The quick test is started from the overview of control units. "Quick test active" is displayed on the last line. The relevant line flashing shows the operator how far the quick test has progressed.

When the BMW DIAGNOSTIC SYSTEM detects a control unit, the corresponding line of the control unit overview is marked with a star.

When a defect code is stored in the defect code memory of a control unit, the line is displayed inversely (white highlighted) and marked with an "F".

On conclusion of the quick test, "quick test completed" is displayed on the last line.

It is possible to terminate a currently running quick test at any time by pressing any key.

Quick Test in MoDiC

Start with the ♦⇓♦ in the overview of control units.

On conclusion of the quick test, an overview of control units which have been detected by the MoDiC diagnostic program appears on the screen. If a defect code is stored in a control unit, the corresponding line is highlighted in black.

Important Notes on Operation

– applicable to the diagnostic program in the BMW SERVICE TESTER –

0.....9	Digits can only be selected when they are displayed inversely. All entries must be confirmed with the acknowledgement key.
♦⇐♦ ♦⇒♦	Arrows can only be selected when they are displayed inversely
♦⇑♦ ♦⇓♦	
♦⇐♦	Back one page
♦⇒♦	Forward one page
♦⇑♦	Return to next higher level. e.g.: From read defect code memory back to selection.
♦⇓♦	Continue to next lower level. e.g.: From defect code explanation to troubleshooting
#	This key can be used to turn back to the general information from any page even if it is not displayed on the screen. This character displayed inversely indicates that there is special information on this page.

– applicable to the diagnostic program in the BMW MoDiC –

♦⇐♦ ♦⇒♦ ♦⇑♦ ♦⇓♦	Arrows can only be selected when they are displayed in the top right field of the MoDiC display. Significance of the arrow keys as in the diagnostic program of the BMW SERVICE TESTER
C	Special operating steps and information
Y	Yes-key for troubleshooting
N	No-key for troubleshooting

Secret number:
For loading via the BMW Service Tester
The MoDiC program can only be loaded when a secret number is entered.

Authorisation code:
Important for coding!
If the coding program is selected after loading, a five–digit number must be entered (freely selected). This code is of no significance for the diagnostic program. However, the coding program can only be called up by persons who know this authorisation code.

Digital Motor Electronics (DME M1.1/ M1.3, 6-cylinder M 20 and M 30)

Notes

The following descripton refers to the digital motor electronics DME M1.1 and M1.3 for the 6-cylinder engines M 20 (2.0 l and 2.5 l) and M 30 (3.0 l and 3.5 l).

The schematics can be found in the files of the corresponding model year under the following sections:

Section	
1210.0	Digital motor electronics (DME M1.1)
1210.1	Digital motor electronics with EML (DME M1.1 and M 1.3)
1210.2	Digital motor electronics (DME M1.3)

Functional Description

The digital motor electronics system (DME) enables precise control of injection and ignition under variable operating conditions.

This system also operates in conjunction with other systems as follows:

- Electronic transmission control (EGS)
- Electronic throttle control (EML)
- Automatic stability control (ASC)
- Engine drag torque control (MSR)
- Instrument cluster
- Antitheft system (DWA)
- On-board computer (BC)

These systems can influence the entire engine control system depending on requirements.

The digital motor electronics (DME) assumes functions which are listed briefly here and are described in more detail in the following:

- Injection control
- Ignition timing
- Closing angle control
- Adaptive emission control (Lambda)
- Adaptive idle speed control
- Adaptive fuel tank ventilation
- Idle speed control
- Maximum speed limitation
- Cold start control
- Acceleration enrichment
- Dynamic deceleration fuel cut-out
- Limited (emergency) operation control
- Characteristic map switchover for EH-transmission
- Relay controls
- Drive-away protection
- Self-diagnosis with defect code storage

Digital Motor Electronics (DME M1.1/ M1.3, 6-cylinder M 20 and M 30)

The following components supply the DME control unit with input signals:

Components	Information
Digital motor electronics DME main relay	Voltage supply for a part of the digital motor electronics
Engine speed/position pulse generator	Engine speed and crankshaft position
Pulse generator, cylinder reference point	Feedback of ignition signal of a defined cylinder
Throttle switch	Position of throttle valve
Intake temperature sensor	Temperature of intake air (in this way, the air density which is reduced as the temperature increases is taken into consideration)
Engine temperature sensor	Temeprature of engine coolant
Air flow meter	Flow of intake air
Oxygen sensor	Oxygen content of exhaust gas
Idle-CO potentiometer (without catalytic converter)	Variable resistor (varistor) for setting the CO-content at idle speed
Instrument cluster	Vehicle speed signal
Air conditioner, defroster or air recirculation switch	Air conditioner in operation
A/C compressor	A/C compressor in operation
Battery	Current system voltage
Terminal 15	Ignition switched on
On-board computer BC	Entered code (engine operation not possible)

Component6s	Information
Antitheft system DWA	Antitheft system armed (engine operation not possible)
Electronic throttle control EML	Idle and full load signal
Electronic transmission control EGS	Shift procedures active,torque converter clutch engaged
Range selector lever of electronic transmission control	Engaged gear range
Automatic stability control ASC	Signal for retarding ignition timing and signal for blanking out ignition and injection
Engine drag torque control MSR	Signal for suppressing deceleration fuel cut-out during engine drag torque control

The outputs of the digital motor electronics are switched via output stages. They supply the following components with the necessary signals:

Components	Information
Injector valves	Injection time
Ignition coil	Ignition voltage
Idle actuator (without EML)	Pulse duty factor for degree of opening
Tank ventilation valve	Clock pulses for opening cycles
Digital motor electronics DME main relay	Voltage supply
A/C compressor relay	Switching off A/C compressor
Electrical fuel pump relay	Activation voltage
Oxygen sensor heating relay	Activation voltage
Instrument cluster	Engine speed signal, injection signal (for fuel consumption indicator), fault lamp (US only)
Electronic transmission control EGS	Engine speed signal, engine temperature, throttle angle
Electronic throttle control EML	Injection signal
Automatic stability control ASC	Engine speed signal
Air flow meter	5 V voltage supply
Kick-down prevent	Current operating status does not permit kick-down since engine speed is too high

Ignition Timing Control

On the basis of the engine speed and load signals, the DME control unit determines the ignition angle (ignition timing) which is output via the ignition output stage. This function also takes into consideration other input signals such as the engine temperature, intake air temperature, throttle position and signals from the electronic throttle control EML, automatic stability control ASC, engine drag torque control MSR and from the electronic transmission control EGS.

Closing Angle Control

The engine speed and the battery or system voltage decide on the time available to build up the primary voltage in the ignition coil. From these variables, the digital motor electronics determines the necessary closing angle, thus ensuring a sufficient ignition voltage under all operating conditions.

Injection Control

The DME control unit calculates the correct injection time on the basis of the engine speed, air flow, throttle position, oxygen sensor voltage, engine temperature and intake air temperature. The mixture is varied by the opening time of the injector valves. The battery or system voltage is also taken into consideration in calculating the injection timing since the pull-up and drop-out times of the injector valves are extended as the voltage decreases.

Types of Injection

Each injector valve group is driven by one output stage (power amplifier). This arrangement makes it possible to divide the injection cycle into cylinder groups (semisequential injection). This also facilitates restricted engine operation in the case of failure of one group.

Arrangement of injector valve groups:

6-cylinder: Cylinders 1+3+5 and cylinders 2+4+6

Semisequential Injection

As of an engine speed of 600 rpm, fuel is injected only once per 720° crankshaft angle into one cylinder group. This facilitates precise metering of the quantity of fuel since the injector valves need not be activated so often. It also enables restricted engine operation in the event of failure of one group.

Semisequential injection is only active when the DME control unit has received a signal from the cylinder reference point pulse generator. If this signal is not received during engine operation, the control system remains set to semisequential injection.

The cylinder reference point sensor is mounted on the ignition lead of cylinder No. 6 at the distributor.

Parallel Injection

Parallel injection refers to simultaneous activation of all injector valves and takes place only when the cylinder reference point sensor has supplied no signal since starting the engine. As soon as a signal is applied, the system switches over to semisequential injection after the next deceleration phase.

Emission Control on Models with Catalytic Converter

To maintain the optimum degree of efficiency of the catalytic converter, this systems aims at achieving the ideal air-fuel ratio ($\lambda = 1$) for combustion. The heated oxyten sensor is used for this purpose which measures the residual oxygen content in the exhaust gas and sends a corresponding voltage signal to the control unit. Here, the mixture composition is corrected if necessary by changing the injection timing. In the case of failure of the oxygen sensor, the DME control unit controls the system with a substitute value (0.45 V) programmed in the control unit.

Since a temperature of approx. 300 ° C is necessary for efficient operation of the oxygen sensor, power is supplied via a relay to a heating resistor in the oxygen sensor. The relay is activated by the DME control unit.

CO-Potentiometer

On models not equipped with a catalytic converter, the CO setting can be corrected by means of a potentiometer (on the air flow meter). Particular care must be taken to ensure that the plug connection for the CO-potentiometer is connected in the wiring harness.

Idle Speed Control

The idle speed is kept constant by an idle speed actuator which supplies the engine with the necessary amount of air. The control is effective as soon as the DME control unit detects the idle speed position by way of the throttle switch or the throttle potentiometer. The preprogrammed engine speed values in the DME control unit are compared with the actual values and corrected. In this way, deviations in engine speed due to mechanical wear, leakages or different functional resistances offered by the engine are compensated. This therefore renders adjustment of the idle speed unnecessary.

Vehicles with Air Conditioner System

On models equipped with an air conditioning system, the idle speed is increased after the system detects that the air conditioner has been switched on. After detecting the A/C compressor signal, the air required at idle speed is corrected to the optimum value.

Vehicles with Automatic Transmission

In the case of vehicles equipped with electronic transmission control (EGS), on detecting the engaged drive range (1, 2, 3 or D), the amount of idle air is increased by the idle speed actuator in order to compensate for a drop in the engine speed caused by the torque converter. However, the nominal speed is set slightly lower.

Vehicles with Electronic Throttle Control

On these vehicles, the idle speed is not controlled by the digital motor electronics but rather by the electronic throttle control system. Control then takes place directly based on the position of the throttle valve.

Maximum Speed Limitation

The DME limits the maximum speed by cutting out the injector valves.

Vehicles with Electronic Throttle Control

On these vehicles, the maximum engine speed is limited by the electronic throttle control EML. Limitation takes place directly by reducing the throttle angle.

Cold Start Control

During the start phase, fuel is injected several times for each cylinder group per crankshaft revolution. The quantity of fuel is adapted dependent on the engine temperature and the engine speed.

In addition, the ignition timing is shifted in the retard direction the higher the temperature and the lower the start engine speed.

During the initial period after engine start, the initially injected quantity is reduced depending upon the temperature and engine speed in order to avoid an excessively rich mixture. If start is repeated within one minute, the complete initial quantity is no longer injected.

During the warm-up phase, the injection timing and the ignition timing are correspondingly varied also dependent upon engine speed and temperature.

These measures are intended to ensure a lower fuel consumption, good throttle response and smooth engine operation.

Deceleration Fuel Cut-out

To reduce fuel consumption, the deceleration fuel cut-out is activated when the throttle valve is closed and the engine speed is above approx. 1000...1200 rpm. The DME cuts out the injection and shifts the ignition timing in the retard direction until the engine speed has dropped below the cut-in speed. Below this engine speed, fuel injection cuts in once again and the ignition timing moves towards the advance direction once again. The cut-in speed is dependent upon the engine temperature and the drop in engine speed.

Acceleration Adaptation

In the case of a sudden change in the throttle position towards the full load direction, the digital motor electronics increases the quantity of injected fuel for the duration of the acceleration procedure and shifts the ignition timing in the advance direction. This function takes into account the criteria such as maximum torque, clean exhaust gas and no acceleration knocking.

Air Flow Measurement

The air drawn in by the engine is routed through the air flow meter. The flow of air acts against a spring-loaded air vane. The deflection of the air vane is a measure for the current air flow. The deflection is converted by a potentiometer, mounted on the outside, to a proportional voltage value and transferred to the digital motor electronics.

The voltage value of the air flow meter in conjunction with the engine speed is a direct measure for the load to which the engine is subjected.

Throttle Switch

Mounted on the throttle valve shaft is a switch with two contacts which is operated in idle or full load position.

This switch informs the digital motor electronics whether the throttle valve is in idle, part load or full load position.

Vehicles with Electronic Throttle Control EML

No throttle switch is installed on vehicles equipped with electronic throttle control. The electronic throttle control informs the digital motor electronics of the position of the throttle valve.

Drive-away Protection

When the drive-away protection function is activated on the on-board computer (code entered) or when the antitheft system DWA is armed, a signal (> 10 V) is sent to the DME control unit which consequently switches off the ignition and injection.

This function can only be activated at an engine speed below approx. 500 rpm.

Fuel Evaporation Control on Models with Catalytic Converter

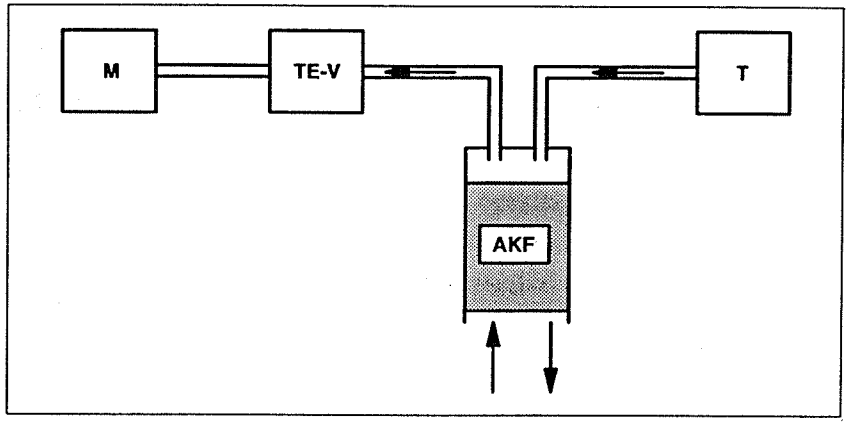

P32 12 001

M	Engine
TE-V	Fuel evaporation control valve
AKF	Activated carbon filter
T	Tank

The fuel evaporation control line of the fuel tank is connected to the activated carbon filter, in which the fuel vapours which accumulate in the tank are collected. The activated carbon filter is linked by means of a further line to the air manifold. A fuel evaporation control valve is installed in this line. When the fuel evaporation control valve is open, the vacuum in the air manifold draws in fresh air to the activated carbon filter. The fresh air flushes out the fuel collected in the filter and routes it to the engine to the combustion process.

Since this additionally supplied mixture influences combustion to a considerable extent, the fuel evaporation control valve consists of a non-return valve and an electrically operated valve. Due to the non-return valve, the fuel evaporation control valve is closed initially when no power is applied. The non-return valve prevents fuel collecting in the air manifold when the vehicle is parked. Electrical actuation takes place dependent on engine speed and load. The venting cycle (flushing phase) begins as soon as the emission (lambda) control system is active. On completion of one cycle, the valve is closed for approx. 1 minute (rest phase).

Adaptations

The fuel-air mixture formed in the intake trakt requires a certain period of time until it reaches the oxygen sensor in the form of exhaust gas. This time decreases as load and engine speed increase. For this reason, the response time of the emission control system is also dependent on load and engine speed. Mixture deviations detected by the oxygen sensor result in storage of adaptation values (learned correction values). By way of these adaptation, the injection can be set close to the nominal values in advance, thus achieving a reduction in the response time.

For instance, if the basic injection values for the DME characteristic map are too low during idling in order to maintain the ideal fuel-air mixture, the emission control system would have to constantly increase the injection timing. In this case, an adaptation value is learnt which corrects the basic injection value. The emission (lambda) control then only needs to undertake the fine adjustment.

Following adaptations are performed during engine operation:

Fuel Evaporation Control Adaptation

When the fuel evaporation control valve is open, an additional combustable mixture or air is supplied to the engine from the activated carbon filter. The shift in the air-fuel ratio detected by the oxygen sensor is almost completely compensated by way of the fuel evaporation control adaptation value.

Idle Air Adaptation

In conjunction with the idle actuator, the idle air adaptation ensures constant idle speeds.

Idle Mixture Adaptation

If the idle signal is applied during the rest phase of the fuel evaporation control system, idle mixture adaptation takes place at certain intervals.

Part Load Mixture Adaptation

Also in the part load range, mixture adaptation takes place at certain intervals. The determined adaptation value is taken into account in all part load ranges.

Relay Control

The **DME main relay**is activated by the DME control unit as of ignition ON. After shutting down the engine, the relay remains on for a further 3 s in order to avoid post-ignition.

The **EKP-relay** is activated as of ignition ON as soon as the DME control unit receives engine speed signals from the crankshaft pulse generator.

The **oxygen sensor heating relay** is activated as of ignition ON. It is switched off dependent on engine speed and load.

Emergency Operation Control

In the case of failure of sensors, substitute values are made available which enable further but restricted engine operation. Further engine operation is no longer possible if the engine speed sensor failrs.

Component	Substitute measure
Intake air temperature sensor	Substitute value active
Engine temperature sensor	Substitute value active
Air flow meter	Substitute values are derived from the position of the throttle valve
Throttle switch	Substitute values for restricted engine operation
Inductive sensor, engine speed/position	None, engine operation no longer possible
Inductive sensor, cylinder reference point	Parallel injection
Oxygen sensor	Substitute value active, emission control not possible
CO-potentiometer	Substitute value active

Transmission Intervention in EH Transmission

During the shift procedure, the EGS control unit sends the DME control unit a signal which has the effect of retarding the ignition timing and reducing the torque. This ensures smooth transmission to the next drive range.

As soon as the torque converter clutch has engaged, the DME control units switch over to another ignition timing characteristic map.

Kick-down Prevent

This function is provided in this form only on the DME M1.3 and hydraulic automatic transmission (not EH transmission). As of a defined vehicle speed (dependent on engine and rear axle gear ratio) a downshift from 4th to 3rd gear is prevented in that the DME control unit deactivates a solenoid valve in the automatic transmission.

Automatic Stability Control ASC

The ASC controller is integrated in the ABS control unit - refer to 3450.1. It operates in conjunction with DME and EML.

The peripheral speeds of the wheels are monitored by the wheel sensors. An excessive speed difference between the driven and non-driven (idle) wheels is detected as wheel slip. Consequently, the EML control unit is instructed to reduce the throttle opening. If excessively high wheel slip still occurs, the DME control unit is instructed to shift the ignition timing in the retard direction. The ignition and the injection can be temporarily switched off as a further measure.

Engine Drag Torque Control MSR

In the same way as the ASC, the MSR is integrated in the ABS control unit – refer to 3450.1. The engine is influenced via DME and EML.

A signal is sent to the DME control unit when increased slip occurs at the drive wheels when the vehicle is coasting. Consequently, the deceleration fuel cut-out function is deactivated. In addition, the EML control unit is instructed to adapt the throttle position until the wheel slip is once again within the permissible range.

Self-diagnosis

The task of the self-diagnosis feature is to detect and store malfunctions in DME components, the associated lines or in the memory of the control unit (ROM, RAM).

The DME control unit makes available substitute values in the event of sensor failure (see troubleshooting – explanation). These substitute values are cancelled once again when normal operation can be resumed.

To facilitate fast and convenient troubleshooting, the stored defect codes or current values can be monitored from the DME control unit with the aid of the BMW DIAGNOSTIC SYSTEM.

For further information, refer to Notes on the BMW DIAGNOSTIC SYSTEM.

Notes on the BMW DIAGNOSTIC SYSTEM

Initialisation of Diagnostic Procedure

Communication with the control unit via the DIAGNOSTIC SYSTEM can be set up after selecting the DME on the BMW SERVICE TESTER. If data transfer is interrupted, information appears on the display screen indicating the possible cause:

- Ignition not switched on
- Voltage supply for control unit < 10 V
- DME relay not supplied with B+ (if not, bypass terminal 30 and 87)
- Control unit not connected
- Diagnostic link defective
- Data traffic inhibited by a defective control unit in the vehicle

Control Unit Assignment

The identification data appear first in order to determine whether the correct control unit is installed. The assignment can be made by means of the variant code (e.g. C01E) and the parts microfiche without having to remove the control unit.

Explanation of Control Unit Identification

The designation of the DME version appears in the first line.

Further data are displayed in the sequence shown below:

- Variant: Model designation, engine type
- With or without emission control
- Transmission variant: HG – Manual transmission
  AG – Automatic transmission, hydraulic
  EH – Automatic transmission, electronic-hydraulic
- Type of fuel: Leaded/unleaded or regular/premium
- Country version: International identification
- Control unit variant code: See parts microfiche
- BMW hardware and software number
- Bosch hardware and software number
- Production code: Used only on special request by "Service Division"

Effective Range of the Self-diagnosis Function

The self-diagnosis function is an aid to facilitate fast fault tracing in the vehicle's electrical/electronic systems. The BMW DIAGNOSTIC SYSTEM (Service Tester, MoDiC) provides the necessary access for the user. Self-diagnosis of the control units detects defects provided the necessary conditions for this have been fulfilled (time, temperature, load etc.). However, defects can only be registered when there is an electrical connection to the control unit. If this is not the case, the check must be performed using conventional methods (e.g. ignition voltage, fuel pressure, mechanical functions etc.).

Refer to chapter – Troubleshooting – for list of defects which can be detected by the self-diagnosis system.

Storage of Defect Codes

Defect codes are stored after the engine has been started. If several defects are detected, they appear in the order they first occurred.

The operating conditions as stored apply only to the conditions, under which the defect was detected for the first time. An intact voltage supply (charged battery) is the prerequisite for maintaining the memory contents.

Substitute values may be active if **no** malfunction can be found despite a defect code being stored. Troubleshooting should still, however, be carried out.

In US models, defects which influence the fuel/air mixture are indicated by a lamp (check engine) in the instrument cluster. As a check, this lamp lights constantly during the period of time between "ignition ON" and engine start.

If the defect code memory has no defect code stored although there is a defect in the vehicle, either the test conditions (e.g. temperature, time, load etc.) for defect detection were not fulfilled or it was technically not possible to store a defect code. A list of monitored components and functions is given in the chapter – Component Testing.

Defect Code Memory Monitoring♦D♦900

The first step should always be to monitor the defect code memory. If one or several defect codes are stored, it is advisable to print out these data immediately (R key). Since it is often necessary during the testing procedure to cut the power supply or to disconnect the connector from the control unit, the contents of the defect code memory will be unintentionally deleted as a consequence.

The learned adaptation values are lost if the battery or the DME control unit is disconnected. This may result in difficulties in starting the engine or the engine may stall when idling. These problems are generally rectified after a short test drive.

DME M1.1 and M1.3 Model '87/'88:

The memory can hold a maximum of 5 defect codes, whereby a defect code with high priority displaces another defect code out of the memory. The defect codes are displayed in the same order, in which they were detected.

The following defect codes are stored with higher priority:

- Air flow meter
- Emission (lambda) control
- Engine temperature sensor
- Idle switch

DME M1.3 from Model '89:

The extended defect code memory contains all defect codes which are detected. If a defect code is stored and the DME shows no signs of any defects, substitute values may be active. Troubleshooting, however, should still be carried out.

Clearing the Defect Code Memory♦D♦999

Carry out this step only when **all** defects have been rectified or caused by simulation. When the battery or the DME control unit are disconnected, **all** stored defect codes, the substitute values (if active) as well as the adaptation values are lost. Current defects cannot be cleared.

Status Monitoring ♦D♦100 and ♦D♦200

Further current data can be called up independently of the defect code storage function. Current values or operating statuses are displayed. Refer to the chapter – Component Testing – for the necessary comparison of nominal values.

Status inquiries can also be made from the blocks 100 and 200 as required. This selection (termed extract list) is made by entering the corresponding number followed by the acknowledgement. The selection is then displayed on the screen with the ♦⇓♦ key.

If status monitoring takes place while the engine is running, an engine speed of 2000 rpm should not be exceeded otherwise faults may be experienced in data transfer.

Component Activation ♦D♦300

To facilitate fast fault finding, various components can be activated from the SERVICE TESTER in conjunction with the DME control unit. The response of components in perfect working order including their supply lines, can therefore be by acoustic means.

Activation is only possible with the component connected. For this reason, signal testing is not possible at the disconnected component connector. This function provides a simple means of differentiation between defects in the control unit, on the supply wire or in the component itself. More detailed information on component activation is provided on the display screen.

Print out Check Code

If a printout of the identification page is requested, the printer prints out the check code. This printout contains the contents of the defect code memory in concise form and should be sent in together with the defective component in warranty cases.

Abbrevations

ABS	Antilock brake system
AG	Automatic transmission
ASC	Automatic stability control
CO	Carbon monoxide
DK	Throttle valve
DKB	Throttle-brake intervention
DKE	Throttle increase
DKR	Throttle reduction
DKV	Preset throttle value
DME	Digital motor electronics
DWA	Antitheft system
EGS	Electronic transmission control
EH	Electrohydraulic transmission
EKM	Electronic body module
EML	Electronic throttle control
EV	Injector valve(s)
HG	Manual transmission
HLM	Hot-wire air mass meter
Hz	Hertz
KD	Kick-down
KW	Crankshaft
LL	Idle
LMM	Air flow meter
MF	Microfiche
MSR	Engine drag torque control
MV	Solenoid valve
PWG	Pedal position sensor
RxD	Diagnosis initialisation line
SG	Control unit
TD	Engine speed signal once per ignition
TE	Fuel evaporation control
ti	Injection time
tL	Load signal
TL	Part load
TR	Engine speed signal once per revolution
TxD	Diagnostic data line
U-Batt	Battery voltage
U-Vers	Supply voltage
VL	Full load
WK	Torque converter clutch
ZAB	Ignition fade-out

Pin Assignments

Pin Assignments of 55-pin DME Control Unit Connector

If no other measurement note is specified, the data given under signal type will apply for idle engine operation.

Pin	Type	Description/function	Connection	Signal type	Tester display	Measurement notes
1	A	Ignition terminal 1	Ignition coil	Primary signal	Engine test test step 05	max. 150 V / max. 0.2 A
2	M	Ground ignition	Ground point	Ground		
3	A	EKP relay and crankshaft reference	Electrical fuel pump relay and electronic transmission control	Negative with overlaid engine speed signal	ON (command from control unit)	crankshaft rotating as of start speed
4	A	Idle actuator – opening winding	Idle actuator (LLS)	Negative clocked		Component activation
5	A	Evaporation control valve	Evaporation control valve	Negative clocked	CLOSED / OPEN	Perform component activation, negative => closed
6	A	Engine speed signal TD	Instrument cluster	Square-wave signal		one signal per ignition
7	E	Air flow meter signal	Air flow meter	0..5 V	UP / UV ratio, load signal in ms	see status monitoring
8	E	Pulse generator, cylinder reference point (ignition)	Pulse generator, cylinder reference point (terminal B)		ON / OFF	see status monitoring
9		not used				
10	M	Ground, oxygen sensor	Oxygen sensor	Ground		
11		not used				
12	A	Voltage supply LMM	Air flow meter LMM	approx. 5 V		

Pin	Type	Description/function	Connection	Signal type	Tester display	Measurement notes
13	E	RxD diagnosis data line	Diagnostic connector	> 10 V		when cover of diagnostic connector closed
14	M	Ground, injector valves	Ground point	Ground		
15	A	Fault lamp (US only)	Instrument cluster	Negative		lights if emission-related defect code stored and for checking lamp at ignition ON
16	A	Injector valves (cyl. 1+3+5)	Injector valve	Negative clocked	Injection time t_i	Negative => Injector valve open, see component activation
17	A	Injector valves (cyl. 2+4+6)	Injector valve	Negative clocked	Injection time t_i	Negative => Injector valve open, see component activation
18	E	Permanent supply terminal 30	Terminal 30	> 10 V		
19	M	Ground for electronics and sensor shielding	Negative point	Ground		
20		not used				
21		not used				
22	A	Idle actuator – closing winding	Idle actuator LLS	Negative clocked		see component activation
23	A	Oxygen sensor heating	Oxygen sensor heating relay terminal 85	Negative	ON	Negative => Sensor heating activated
24	M	Ground, remaining output stages (apart from ignition and injector valve)	Ground point	Ground		
25		not used				
26	M	Ground, air flow meter	Air flow meter	Ground		

Pin	Type	Description/function	Connection	Signal type	Tester display	Measurement notes
27	E	Ignition, terminal 15	Ignition lock	>10 V		
28	E	Oxygen sensor signal	Oxygen sensor	pulsating voltage 0.1...1.2 V	Voltage value	can only be measured with engine running at operating temperature
29	E	Vehicle speed signal	Instrument cluster	Square-wave signal	km/h	
30		not used				
31	E	Pulse generator cylinder reference point (ignition)	Pulse generator cylinder reference point (terminal A)		ON / OFF	see status monitoring
32	A	ti measuring signal (signal for fuel consumption indicator KVA)	Instrument cluster	Square-wave signal	Multimeter function, pulse duration	Oscilloscope
33	A	Solenoid valve kick-down prevent (only in hydraulic automatic transmission)	Kick-down prevent	U-Batt		(only in hydraulic automatic transmission), see component activation
34		not used				
35		not used				
36	A	DME main relay	DME main relay terminal 85	Negative	ON	Diagnosis not possible if not applied – connect jumper at relay terminal 30 and 87
37	E	> 10 V from DME main relay	Main relay terminal 87	> 10 V	Voltage value	Perform status monitoring. Diagnosis not possible if no signal applied – connect jumper at terminal 30 and 87.
38	E	Automatic stability control ASC and DWA	ASC and antitheft system DWA	Ground	OFF	if DWA armed, > 10 V applied

Pin	Type	Description/function	Connection	Signal type	Tester display	Measurement notes
39	E	Programming voltage	Diagnostic connector	Voltage value		activated only during programming
40	E	A/C compressor switch	A/C compressor relay	Negative	ON/OFF	if compressor ON => Negative
41	E	Air conditioner switch	Air conditioner relay	> 10 V	ON	if relay ON => > 10 V
42	E	Drive range P/N (AG only)	Gear selector lever switch	Negative	ON	when in P/N position
43	E	Idle-CO potentiometer	Air flow meter	0..5 V	Voltage value	
44	E	Intake air temperature sensor	Intake air temperature sensor	0...5 V	° C	temperature-dependent
45	E	Engine temperature sensor	Engine temperature sensor	approx. 0 to 5 V	° C	temperature-dependent
46		not used				
47	E	Inductive pulse generator (terminal A)	Pulse generator (sensor)engine speed/position	AC voltage	Engine speed	between Pin 47 and 48 (can only be measured when crankshaft rotating)
48	E	Inductive pulse generator (terminal B)	Inductive pulse generator (sensor) for engine speed and crankshaft position	AC voltage	Engine speed	Status monitoring as of start speed
49		not used				
50	E	Engine drag torque control MSR	ABS/ASC control unit	> 10 V		> 10 V => Signal active
51	E	Ignition timing intervention	Electronic transmission control	Negative	ON	Only active during shift procedure
52	E	Idle signal	Throttle switch or electronic throttle control EML	Negative	ON	when idling
53	E	Full load signal	Throttle switch or electronic throttle control EML	Negative	ON	Under full load (no full load => U-Batt)

Pin	Type	Description/function	Connection	Signal type	Tester display	Measurement notes
54	E	Torque converter clutch WK	Electronic transmission control EGS	Negative	ON (with engine running)	if WK engaged, see status monitoring
55	E/A	TxD diagnostic data line	Diagnostic connector	Negative		when cover of diagnostic connector closed

E = Input, A = Output, M = Ground

Adapter

Component	Connector No.	Description	Adapter number
Control unit	X1500	Universal adapter 55-pin	Universal adapter, HWB 81 12 9 425 091 Connection cable for peripherals 55-pin, HWB 81 12 9 428 907 Connection cable for control unit 55-pin, HWB 81 12 9 428 908
Pulse generator (sensor) cylinder reference, pulse generator (sensor) engine speed/position, idle actuator, throttle switch, oil level sensor	X1521, X1522 X1514, X1526	3-pin, black	V-adapter cable, Cartool 61 1 491
Injector valve, fuel evaporation control valve, temperature sensor	X1501...6, X1513, X1524	T-adapter 2-pin	Cartool 61 1 440
EKP relay/main relay	X1515, X1516	T-adapter	Cartool 61 30 10/20

Troubleshooting

Notes

Relevant safety codes and accident prevention regulations must be observed when carrying out all tests and work on the engine electrical and electronic systems.

Caution!

Dangerous high tension in the primary and secondary circuit of the ignition system.

Wherever possible, the battery should not be disconnected, otherwise the defect codes stored in **all** the control units will be deleted.

Disconnect control units from the wire harness **only** when the ignition is switched off.

Conduct wire tests **only** with the control unit or component connectors disconnected.

Test Equipment

The schematics can be found in the corresponding files in Section 1210. They are contained in Section 1360 for the 7 Series up to model year '89.

The universal adapter with the corresponding connection leads should be used for testing the DME control unit or the engine wire harness.

The universal adapter should only be connected between the control unit and wire harness when **no** diagnostic procedure (diagnostic connector not connected) is to be carried out since this can lead to malfunctions. Use only suitable test leads, terminals and probe tips.

Display of a Stored Error Code on the Screen

- **Defect location:** The number of the defect code indicates the pin assignments at the control unit. The defect can be in the vicinity of the component, the corresponding wiring or in the control unit.
- **Type of defect:** Short-circuits, breaks, range transgressions or illogical functions are indicated.
- **Frequency:** Indication as to whether the defect is momentary or not (intermittent defect). Further indication is provided as to whether the defect occurred several times or only once.

As of model '89 an indication is provided as to how often the defect has already been detected. If the defect is no longer pending, the number of starts is indicated which have taken place since last detection of the defect.

- **Detected at:** Additional defect information on the operating statuses during defect detection.

Defect Code Table

♦D♦900 Defect code memory – stored defect codes:

Defect code stored in defect code memory → Defect code 01 to defect code 100

Malfunctions – defect codes not stored:

Engine operation not possible → Defect code 101

Defect code 01

♦D♦900 Defect code memory: 01 DME control unit

Explanation: This defect code is stored when the internal self-test provides a negative result.

Possible cause: Program error or disturbed program run in the DME control unit.

Corrective measures: Carry out test run after clearing the defect code memory. If defect code is set once again, the DME control unit must be replaced.

Defect code 03

♦D♦900 Defect code memory: 03 Electrical fuel pump relay

Explanation: This defect code is stored when a short occurs at the relay 1 (EKP) or on the control line to the DME control unit Pin 3.

Troubleshooting: As displayed on screen.

Defect code 04

♦D♦900 Defect code memory: 04 Idle speed actuator (open)

Explanation: This defect code is stored when breaks or shorts occur at the idle speed actuator or on its supply wires (voltage supply and control lines). If the defect code 22 idle speed actuator (close) is also stored, then this is attributed to the link of both windings in the idle speed actuator.

Note: Defect codes 04 and 22 are also stored when engine operation is interrupted abruptly without the ignition being switched off beforehand. Such a defect is indicated by the operating status during defect code detection. This defect code can be ignored at an engine speed below 600 rpm.

Troubleshooting: As displayed on screen.

Defect code 05

♦D♦900 Defect code memory: 05 Fuel evaporation control valve

Explanation: This defect code is stored when a short occurs at the fuel evaporation control valve or in the supply wire.

Troubleshooting: As displayed on screen. For test values, see Chapter – Component Testing

Defect code 07

♦D♦900 Defect code memory: 07 Air flow meter

Explanation: This defect code is stored when shorts or breaks occur at the air flow meter or on its supply wires (voltage supply and signal line).

The function also detects when the Up/uV-value of LMM is no longer within the normal operating range of 0.02 to 0.95.

In this case, the DME control unit operates with fixed substitute values, load signal tL = 3.5 to 4.5 ms and ignition angle = 20° crankshaft angle before TDC when the idle speed contact is open.

Troubleshooting: As displayed on screen. Carry out air flow meter testing with status monitoring ♦D♦200. The Up/Uv-value indicates the ratio of the potentiometer voltage (wiper) with respect to the supply voltage (5 V) in the air flow meter. Refer to Chapter – Component Testing – for technical data.

Defect code 10

♦D♦900 Defect code memory: 10 Emission (lambda) control

Explanation: This defect code is stored in the case of excessive deviations in the mixture composition (too rich or too lean mixture longer than 10 sec). A prerequisite is that the oxygen sensor must be ready for operation.

Possible cause:

- Incorrect fuel pressure
- Injector valves defective or coked
- Engine temperature sensor defective
- Secondary air in the intake duct
- Fuel evaporation control system defective

Troubleshooting: As displayed on screen. For test values, refer to Chapter – Component Testing –.

Defect code 15

♦D♦900 Defect code memory: 15 Fault lamp

Explanation: Applicable to US models only. This defect code is stored when shorts occur at the fault lamp or in its supply wire.

Troubleshooting: As displayed on screen.

Defect code 16

♦D♦900 Defect code memory: 16 Fuel injector valves cyl. 1+3+5

Explanation: This defect code is stored when shorts or breaks occur at the fuel injector valves or breaks in their supply wires.

Note: In the case of a short at one fuel injector valve or in its supply wire, the entire injector valve group is always deactivated. Three cylinders remain in operation.

Troubleshooting: As displayed on screen.

Defect code 17

♦D♦900 Defect code memory: 17 Fuel injector valves cyl. 2+4+6

Explanation: Diagnosis as for defect code 16.

Defect code 22

♦D♦900 Defect code memory: 22 Idle speed actuator (close)

Note: Diagnosis as for defect code 04.

Defect code 23

♦D♦900 Defect code memory: 23 Oxygen sensor heating relay

Explanation: In the case of DME M1.3, this defect code is stored when a short occurs at the relay or on the supply line from the DME control unit Pin 23.

Troubleshooting: As displayed on screen.

Defect code 28

♦D♦900 Defect code memory: 28 Oxygen sensor

Explanation: This defect code is stored when a short or a break occurs at the oxygen sensor or on its supply wires, or when no oxygen sensor is installed (Cat provision). A prerequisite for this is an engine temperature of 70° C and a load signal of > 3.5 ms for > 20 sec.

Troubleshooting: As displayed on screen. For oxygen sensor test values, refer to Chapter – Component Testing –.

Defect code 29

♦D♦900 Defect code memory: 29 Vehicle speed signal

Explanation: This defect code is stored when the following conditions are fulfilled simultaneously:

– Engine speed > 4500 rpm,
– Injection signal > 6.0 ms,
– Speed signal < 3 to 5 km/h.

This defect code can be ignored on models equipped with electronic throttle control. In these models, the vehicle speed signal is not routed to the DME control unit but rather to the EML control unit.

Troubleshooting: As displayed on screen.

Defect code 33

♦D♦900 Defect code memory: 33 Solenoid valve kick-down prevent

Explanation: Only applicable to models with DME M1.3 and hydraulic automatic transmission. This defect code is stored when shorts occur at the solenoid valve or on its supply wire.

Troubleshooting: As displayed on screen.

Defect code 37

♦D♦900 Defect code memory: 37 Control unit supply

Explanation: This defect code is stored when the voltage supply exceeds 16 V. A drop in the voltage below 10 V (M1.1) or 9 V (M1.3) is detected 3 minutes after the start at the earliest.

Possible cause:

- Contact resistances at the wire connections
- Insufficient V-belt tension
- Voltage regulator or alternator defective

Troubleshooting: As displayed on screen.

Defect code 38

♦D♦900 Defect code memory: 38 Automatic stability control

Explanation: Only applicable to models equipped with EML and DME M1.3. This defect code is stored when a short to battery voltage occurs (>1 sec) on the wire to Pin 38.

Troubleshooting: As displayed on screen.

Defect code 40

♦D♦900 Defect code memory: 40 A/C compressor

Explanation: This defect code is stored only in the case of DME M1.3 when the control unit simultaneously receives the signals 'compressor in operation' (Pin 40) and 'A/C switch not pressed' (Pin 41). In this case, there is either a break at Pin 41 or a short to battery voltage at Pin 40.

Troubleshooting: As displayed on screen.

Defect code 44

♦D♦900 Defect code memory: 44 Intake air temperature sensor

Explanation: This defect code is stored when shorts or breaks occur at the temperature sensor or on its supply wires. A prerequisite for detecting a break in the circuit is a 3 min interval after the start and the engine idling for a minimum of 30 sec.

After the defect code is set, the system operates with a substitute value of 20° C or 50° C at 3.5 l with M1.3.

Troubleshooting: As displayed on screen. For temperature sensor test values, refer to Chapter – Component Testing –.

Defect code 45

♦D♦900 Defect code memory: 45 Engine temperature sensor (water)

Explanation: This defect code is stored when shorts or breaks occur at the temperature sensor or on its supply wires.

In the case of fault, the intake air temperature is used as a substitute value, however, only for the first 3 minutes after starting when the air temperature is <11° C. Otherwise a substitute value of 50° C is used.

Troubleshooting: As displayed on screen. For temperature sensor test values, refer to Chapter – Component Testing –.

Defect code 50

♦D♦900 Defect code memory: 50 Engine drag torque control

Explanation: Only applicable to models equipped with EML and DME M1.3. This defect code is stored when a short to battery voltage occurs (>20 sec) on the wire to Pin 50.

Troubleshooting: As displayed on screen.

Defect code 51

♦D♦900 Defect code memory: 51 Ignition timing (ignition angle) intervention

Explanation: Applicable only to models equipped with EGS and DME M1.3. This defect code is stored when the wire from the EGS control unit Pin 24 to the DME control unit Pin 51 has a short to ground (>2.5 sec). In such a case, the ignition timing (angle) intervention occurs only once, the signal is then ignored.

Troubleshooting: As displayed on screen.

Defect code 52

♦D♦900 Defect code memory: 52 Idle switch

Explanation: This defect code is stored when the throttle switch or the wire to the DME control unit Pin 52 has a short to ground. A prerequisite for this is that the engine is at operating temperature (> 80° C) at an engine speed >1000 rpm and a load signal > 3.5 ms.

Troubleshooting: As displayed on screen. For test procedure, refer to Chapter – Component Testing –.

Defect code 53

♦D♦900 Defect code memory: 53 Full load switch

Explanation: This defect code is stored when the throttle switch or the wire to the DME control unit Pin 53 has a short to ground. A prerequisite for this is a load signal > 1.8 ms and the idle contact closed at the same time. If the load signal drops below 4.5 ms, the full load signal is ignored by the DME control unit.

Troubleshooting: As displayed on screen. For test procedure, refer to Chapter – Component Testing –.

Defect code 54

♦D♦900 Defect code memory: 54 Torque converter clutch

Explanation: Applicable only to models equipped with EGS and DME M1.3. This defect code is stored when the DME control unit detects a closed torque converter clutch (or short to ground) and the selector lever is in position P or N.

This defect code is also stored when the EGS control unit is in emergency (limited) operation mode. The EGS control unit is in emergency (limited) operation mode also in diagnostic mode!

Troubleshooting: As displayed on screen.

Defect code 100

♦D♦900 Defect code memory: 100 Output stage

Explanation: Only applicable to DME M1.3. This defect code is stored when there is a loose contact at an output of an output stage. In the majority of cases, one of the defect codes 3, 4, 5, 16, 17, 22 or 23 also occurs, to which the defect code 100 can be assigned. In these cases, the defect code 100 is only a consequential defect code.

Defect code 101

Malfunction: Engine operation not possible

Troubleshooting:

Prerequisites:

– Start system OK. (battery charged, ignition switch and starter OK. ....)
– Ground connection at battery, engine and body OK.
– Specified type of fuel in tank
– Engine OK mechanically (timing, compression ...)

a) Check voltage supply for DME control unit in accordance with schematics.

b) Check input signals.

– Engine speed signal from inductive pulse generator ♦D♦200 at starting speed.
– Air flow meter signals ♦D♦200.

c) Check output signals.

– Activation of fuel pump relay in accordance with schematics
– Injection output stage with ENGINE TEST test step 09
– Injector valves with ♦D♦300

d) Fuel pressure test
For technical data, refer to Chapter – Component Testing –.

Component Testing

Notes

Relevant safety codes and accident prevention regulations must be observed when carrying out tests and work on the engine electrical and electronic systems.

Caution!

Dangerous high voltage in the primary and secondary circuit of the ignition system.

Important!

Wherever possible, the battery should not be disconnected otherwise the defect codes stored in **all** the control units will be deleted.

Disconnect control unit from the wire harness **only** when the ignition is switched off.

Conduct wire tests **only** with the control unit or component connectors disconnected.

Test Equipment

The schematics can be found in the corresponding files in Section 1210. They are contained in Section 1360 for the 7 Series up to model year '89.

The universal adapter with corresponding connection leads should be used for testing the DME control unit or the engine wire harness. The universal adapter should only be connected between the control unit and wire harness when no diagnostic procedure (diagnostic connector not connected) is to be carried out since this can lead to malfunctions.

Use only suitable test leads, terminals and probe tips.

The test values for component testing are listed in the Appendix. For technical values, refer to the microfiche – Technical Data.

Removal and installation are described in the microfiche – Repair Instructions.

Overview of Defect Codes and Component Tests

Component/function	Quick test after entering ♦D♦ ...	Defect code after storage
DME control unit		1
Ignition coil 1)	see engine test	
Fuel pump relay (relay 1)	100 2)	3
Idle speed actuator 1)	300	4 / 22
Fuel evaporation valve 1)	100,300	5
Air mass meter	200	7
Pulse generator, cylinder reference point 1)	100 2)	
Emission control	100	10
Defect lamp		15
Injector valves 1)	300	16/17
Sensor heating relay		23 2)
Oxygen sensor	100	28
Vehicle speed signal	see instrument cluster/CC	29 2)
Solenoid valve kick-down prevent		33 2)
Main relay (relay 2)	100 2)	
Voltage supply	200	37
ASC	see ABS/ASC	38 2)
A/C compressor	100	40 2)
Intake air temperature sensor 1)	200	44
Engine temperature sensor 1)	200	45
Pulse generator, speed/position 1)	200	

Component/function	Quick test after entering ♦D♦ ...	Defect code after storage
MSR	see ABS/MSR	50 2)
Ignition timing (angle) intervention	100	51 2)
Throttle switch	100	52/53
Torque converter clutch		54 2)

1) The resistance values are listed in the Appendix.

2) Applicable to DME M1.3 only.

DME Control Unit

Check function:

Individual function blocks, e.g. ignition, injection, emission (lambda) control etc. can only be checked when the necessary input signals are applied beforehand at the control unit – see Chapter – Pin Assignments.

Ignition Coil

Check function:

Perform engine test, test step 09. With the engine at operating temperature, the ignition voltage is 10 ± 2 kV. The maximum difference between the individual cylinders should not exceed 3 kV.

Resistance test:

Refer to Technical Data in Appendix.

Fuel pump relay (DME relay 1)

Check function:

♦D♦100 – This status inquiry is only possible in the case of DME M1.3. The EKP relay must switch on during start or engine operation. (Display: ON).

Possible causes:

- Wire to DME control unit Pin 3 defective
- Relay 1 or voltage supply not OK
- Voltage supply for DME control unit not OK
- No signal from engine speed/position pulse generator
- The control unit is defective if not ground potential is output at DME control unit Pin 3 during start and engine operation although the above points are OK.

Idle Speed Actuator (LLS)

Check function:

♦D♦300 – The idle speed actuator is driven at intervals of one second – the orifice in the idle speed actuator must open and close completely.

Resistance test:

The resistance per winding can be measured directly at the component. Use special test lead, see Chapter Adapter. For wiring diagram, refer to Schematics.

Fuel Evaporation Valve

Check electrical function:

♦D♦300 – The fuel evaporation valve is driven at intervals of one second. The actuation cycles can be felt with the hand.

Check for leaks:

Detach hoses from valve, switch on vacuum pump at service tester and connect to valve (8 mm connection) (note arrow indicating direction of flow). Set vacuum to 600 mbar and apply a voltage of 12 V to the valve.

Switch off vacuum pump, after 20 sec, the pressure drop must not exceed 50 bar.

When power is not applied, the valve is closed by a non-return valve to a vacuum of 20 mbar.

Check activation phases:

♦D♦100 – The valve is activated at idle speed (display: ON or CLOSED) and is therefore closed. As soon as the emission control is active and the engine speed is increased, the valve can be seen to open step-by-step (display: OFF or OPEN). After switching off the engine, the valve is held closed for 3 to 5 sec.

Air Flow Meter (LMM)

Check LMM signal:

♦D♦200 – The value Up/Uv (Up = Potentiometer voltage, Uv = Supply voltage of 5 V) indicates the voltage ratio derived from the position of the air vane in the air flow meter. At idle speed, this value is at 0.2 to 0.3, at full load it increases to 0.9. The value 0.02 is indicated if the supply voltage or signal line is interrupted.

Check voltage supply:

With the ignition ON, the air flow meter is supplied with 5 V by the DME control unit Pin 12 (+) and Pin 26 (–). For wiring diagram of air flow meter, see Schematics.

Pulse Generator, Cylinder Reference Point

Check function:

♦D♦100 – This status inquiry is only possible in the case of DME M1.3. As soon as the control unit receives the cylinder reference point signals, a switchover takes place to semisequential injection. Further test options with multimeter test 23/24. Connect oscilloscope connections to component connector and run engine at idle speed. An AC voltage characteristic curve with positive and negative half wave should appear on the display screen.

Resistance test:

The resistance can be measured directly at the component connector (at the connector strip for injector valves). For wiring diagram, refer to Schematics. For technical data, see Appendix.

Emission Lambda Control

Check function:

♦D♦100 – Prerequisite for the procedure is that the oxygen sensor is at operating temperature. The engine must run for 30 to 40 sec before the control is implemented.

The control can compensate for wear-related deviations in the mixture composition and therefore conceal other defects. If necessary, disconnect the oxygen sensor during troubleshooting of the mixture composition.

Defect Lamp 'Check Engine' (US only)

Check function:

The control unit supplies the defect lamp with ground potential as soon as an exhaust emission-related defect is detected. As a check, the lamp lights constantly after ignition ON.

Injector Valves

Check electrical function:

♦D♦300 – In this case, the fuel injector valves are driven with a frequency of 10 Hz. The pulse period is 1 ms in order to avoid fuel being injected. Activation can be felt with the hand. The pulses can be tested with the multimeter at the injector valve connector.

Resistance test:

The resistance of an injector valve must be measured directly at the component. Only the entire injector valve group (e.g. 3 valves on 6-cylinder engine) can be measured from the DME control unit connector. For technical data, see Appendix.

Sensor Heating Relay (Engine M 20 only)

Check function:

♦D♦300 – This activation is only possible in the case of the DME M1.3, it takes place at one second intervals.

The relay remains switched on during normal operation until high engine speeds or load occur.

Possible causes:

– Wire to DME control unit Pin 23 defective
– Relay or voltage supply not OK.

Oxygen Sensor

Check function:

♦D♦200 – The prerequisite for carrying out this test is that the oxygen sensor must be at operating temperature. The indicated voltage signal is picked off in steps and fluctuates between 0.02 and 0.85 V.

When the oxygen sensor is not in operation, or a wire to the DME control unit has a break, a constant value of 0.45 V is indicated. This value is also indicated when no oxygen sensor is installed.

Solenoid Valve Kick-Down Prevent (for DME M1.3 and AG only)

Check function:

The solenoid valve in the automatic transmission receives its voltage supply (>10 V) when the engine is running. The positive connection is switched by the EKP relay and the negative signal comes from the DME control unit (Pin 33). This signal is switched off at excessively high speed thus preventing kick-down.

Effects of defect:

No downshift from 4th gear to 3rd gear no longer possible as of a speed of approx. 120 km/h.

Possible causes:

- Wire to DME control unit Pin 33 defective
- Solenoid valve or voltage supply not OK.

Resistance test:

Connect universal adapter. Measure resistance at Pins 33 and 19. For technical data, see Appendix.

Main Relay Control (DME Relay 2)

Check function:

♦D♦100 – This status inquiry is only possible in the case of DME M1.3. With ignition ON or during engine operation, the main relay is activated with ground potential at terminal 85 (display: ON). The relay switches on and supplies the control units DME, EGS, EML and ABS with voltage.

Possible cause:

- Wire to DME control unit Pin 36 defective
- Relay 2 or voltage supply not OK.
- Voltage supply for DME control unit not OK.
- The control unit is defective if no ground potential is output at control unit Pin 36 although the above points are OK.

Control Unit Voltage Supply

Check function:

♦D♦100 – The displayed voltage is currently applied at the control unit. It should not be below 10 V.

Intake Air Temperature Sensor (in LMM)

Check function:

♦D♦200 – With the engine at operating temperature, the intake air temperature is at 50 to 70° C (ambient air temperature 23 ± 5° C).

A display below –40° C indicates a break in the temperature sensor or in the supply wire to the DME control unit.

Resistance test:

Connect universal adapter, measure resistance across the terminals 44 and 26. For technical data, see Appendix.

Engine Temperature Sensor (Coolant)

Check function:

♦D♦200 – The indicated engine temperature should correspond to the coolant temperature. A value below –30° C indicates a break in the temperature sensor or in the wire to the DME control unit.

Resistance test:

Connect universal adapter to engine wire harness. Measure resistance across terminals 45 and 19. For technical data, see Appendix.

Engine Speed/Position Pulse Generator

Check function:

♦D♦200 – The engine speed signals can be monitored at starting speed or when the engine is running.
Further tests are possible with the multimeter test 23/24. Connect terminals for the oscilloscope at the component connector and crank engine. An AC voltage characteristic curve with positive and negative half waves should appear on the display screen.

Resistance test:

The resistance can be measured directly at the component connector (at the connector strip for injector valves). Refer to schematic for wiring diagram. For technical data, see Appendix.

Possible cause:

If wire, plug connection or resistance are OK:
Check distance of the pulse generator to the incremental wheel on the vibration damper – 0.15 to 1.5 mm.
Setting at adjustable holder – 1.0 ± 0.3 mm.

Throttle Switch

Check function:

♦D♦100 – Check the setting of the idle speed and full load switch by displacing the throttle valve. For setting, see microfiche – Repair Instructions.

Technical Data

Resistance values measured at 23 ± 5° C air temperature

Engine type	M20	M30
Idle speed actuator (one winding)	20 ± 2 Ω	20 ± 2 Ω
Injector valve	15...17 Ω	15...17 Ω
Pulse generator, engine speed/position	520 ± 30 Ω	520 ± 30 Ω
Pulse generator, cylinder reference point	0.2...1 Ω	0.2...1 Ω
Engine temperature sensor		
at coolant temperature 20 ± 3° C	2.3...2.7 kΩ	2.3...2.7 kΩ
at coolant temperature 80 ± 3° C	0.3...0.36 kΩ	0.3...0.36 kΩ
Intake air temperature sensor		
at air temperature 20 ± 3° C	2.2...2.7 kΩ	2.2...2.7 kΩ
at air temperature 50 ± 3° C	0.76...0.91 kΩ	0.76...0.91 kΩ
Fuel evaporation valve	45 ± 20 Ω	45 ± 20 Ω
Ignition coil		
Primary winding	0.4 ± 0.1 Ω	0.4 ± 0.1 Ω
Secondary winding	9.0 ± 1.0 kΩ	9.0 ± 1.0 kΩ
Solenoid valve KD prevent	22...60 Ω	22...60 Ω

Status inquiry 100	Nominal value	Signal comes from
EKP relay control	during start or engine operation = ON 3)	
Emission control	during engine operation = ON, when oxygen sensor at operating temperature	
Fuel evaporation valve	at idle speed = CLOSED or ON, until clock cycle begins	
Main relay control	during start or engine operation = ON 3)	
Compressor control	when compressor relay switched on = ON (not for EML)	
Air conditioner switch	with switch depressed and selector wheel for air flow not in position 0 = ON	
Drive stage P/N (AG only) 3)	in selector lever position P or N = ON	
Ignition timing intervention (AG only) 3)	at idle speed = OFF, only ON temporarily during downshifts	
Idle switch	if idle contact closed = ON	
Full load switch	if full load contact closed = ON	
Semisequential injection	after increasing engine speed once = ON	

3) Monitoring only possible together with DME M1.3.

Status monitoring 200	Nominal value	Signal comes from
LMM Up/Uv ratio 1)	0.2...0.3, interruption = 0.02	
Control unit voltage supply	> 10 V	
Voltage-oxygen sensor 1)	0.02...0.85 V, in case of break or defective oxygen sensor = 0.45 V	
Intake air temperature	dependent on ambient temperature, approx. –40° C = break	
Engine temperature	dependent on engine operation, approx. –30° C = break	
M 20 B20		
Ignition timing (angle) in ° crankshaft before TDC 1)	4 ± 5	
Engine speed in rpm 1)		
....Idle speed	760 ± 40	
....Cur-out speed	6400 ± 40	
Injection signal ti in ms 1)2)3)	4.9...5.3	
Load signal tL in ms 1)	2.1...2.8	
....CO volume % 1)4)	0.7 ± 0.5	
M 20 B25		
Ignition timing (angle) in ° crankshaft before TDC 1)	10 ± 5	
Engine speed in rpm 1)		
....Idle speed	760 ± 40	
....Cut-out speed	6400 ± 40	
Injection signal ti in ms 1)2)3)	4.4...4.8	
Load signal tL in ms 1)	2.1...2.8	
....CO volume % 1)4)	0.7 ± 0.5	

Status monitoring 200	Nominal value	Signal comes from
M 30 B30		
Ignition timing (angle) in ° crankshaft angle before TDC 1)	10 ± 3	
Engine speed in rpm 1) ....Idle speed ....Cut-out speed	 800 ± 50 6400 ± 40	
Injection signal ti in ms 1)2)3)	3.5...5.0	
Load signal tL in ms 1) ....CO volume % 1)4)	1.8...2.2 0.7 ± 0.5	
M 30 B35		
Ignition timing (angle) in ° crankshaft angle before TDC 1)	10 ± 3	
Engine speed in rpm 1) ....Idle speed ....Cut-out speed	 800 ± 50 6200 ± 40	
Injection signal ti in ms 1)2)3)	3.5...5.0	
Load signal tL in ms 1) ....CO volume % 1)4)	1.8...2.2 0.7 ± 0.5	

1) Oil temperature > 60° C or coolant temperature > 80° C, no load switched on, at idle speed.

2) Valid for semisequential injection. Half value applicable to M 30 up to 6/88 since only parallel injection is possible in diagnostic mode.

3) This status inquiry is only possible in the case of DME M1.3.

4) Measured before the catalytic converter – Engine test step 09.

Digital Motor Electronics (DME M1.2, 12-cylinder M 70)

Notes

The following description refers to the digital motor electronics DME M1.2 for the 12-cylinder M 70 engine (5.0 l).

Functional Description

Two DME control units operate **independently** each with six cylinders. If not otherwise specified, the explanations, therefore, refer to only one row of cylinders.

The DME control unit I supplies the cylinders 1...6, the identical control unit II the cylinders 7...12. To differentiate between them during diagnostic procedures, Pin 40 of the control unit II is connected to ground. The associated components are mainly provided double. Exceptions are:

– Relay for oxygen sensor heating and
– engine temperature sensor.

The oxygen sensor heating relay is assigned to the DME control unit I. The two engine temperature sensors are mounted together in one common housing.

The DME enables exact control of fuel injection and ignition also under variable operating conditions.

The DME can also operate in conjunction with the following systems:

– Electronic transmission control EGS
– Electronic throttle control EML
– Automatic stability control ASC
– Engine drag torque control MSR
– Instrument cluster
– Antitheft system DWA
– On–board computer BC

Corresponding to requirements, these systems can influence the entire engine management system.

The digital motor electronics system undertakes the functions which are listed below on brief and which are described in more detail in the following.

– Injection control
– Ignition timing control
– Dwell angle control
– Adaptive emission control
– Adaptive idle speed control
– Adaptive tank ventilation
– Idle speed control
– Maximum engine speed limitation
– Cold start control
– Acceleration enrichment
– Dynamic deceleration fuel cut–out
– Emergency (limited) operation control
– Characteristic map switchover for EH transmission
– Relay control
– Drive–away protection
– Self–diagnosis with defect code storage

Digital Motor Electronics (DME M1.2, 12-cylinder M 70)

The following components supply the DME control unit with input signals:

Components	Information
Digital motor electronics DME main relay	Voltage supply for a part of the digital motor electronics
Pulse generator, engine speed/position I and II	Engine speed and position of crankshaft
Pulse generator, cylinder reference point I and II	Feedback of ignition signal from a certain cylinder
Intake air temperature sensor I and II	Temperature of intake air (this feature takes into account the air density which decreases as the temperature increases)
Engine temperature sensor I and II (in **one** housing)	Temperature of engine coolant
Hot wire air mass meter I and II	Quantity of air or air mass drawn in
Oxygen sensor I and II	Oxygen content of the exhaust emission
Idle CO potentiometer (without catalytic converter)	Variable resistor for setting the CO content while idling
Instrument cluster	Vehicle speed signal
A/C, defroster or air recirculation switch	Air conditioning system in operation
A/C compressor	A/C compressor in operation
Battery	Current voltage rating of electrical system
Terminal 15	Ignition switched on

Components	Information
On–board computer BC	Code entered (engine operation not possible)
Antitheft system DWA	Antitheft system armed (engine operation not possible)
Electronic throttle control EML	Idle and full load signal
Electronic transmission control EGS	Shift procedures active, converter clutch engaged
Selector lever of electronic transmission control	Engaged drive range
Automatic stability control ASC	Signal for retarding ignition timing and signal for fading out ignition and injection
Engine drag torque control MSR	Signal for suppressing deceleration fuel cut–out during engine drag torque control

The outputs of the digital motor electronics are connected via output stages. They supply the following components with the necessary signals:

Components	Information
Injector valves	Injection timing
Ignition coils I and II	Ignition voltage
Fuel evaporation control valve I and II	Clock pulses for opening cycles
Digital motor electronics DME main relay I and II	Voltage supply
Electrical fuel pump relay I and II	Activation voltage
Oxygen sensor heating relay	Activation voltage
Instrument cluster	Engine speed signal, injection signal (for fuel consumption gauge indicator), fault lamp (US only)
Electronic transmission control EGS	Engine speed signal, engine temperature, throttle angle
Electronic throttle control EML	Injection signal
Automatic stability control ASC	Engine speed signal
Air mass meter I and II	Burn clear

Ignition Timing Control

The DME control unit determines the ignition timing (ignition angle) on the basis of the engine speed and load signals which are output via the ignition output stages. This function also takes into consideration other input signals such as the engine temperature, intake air temperature, position of the throttle valve and signals from the electronic throttle control EML, automatic stability control ASC, engine drag torque control MSR and from the electronic transmission control EGS.

Dwell Angle Control

The engine speed and the battery or system voltage are the decisive factors with respect to the time available to build up the primary voltage in the ignition coil. From these variables, the digital motor electronics determines the necessary dwell angle, thus ensuring sufficient ignition voltage under all operating conditions.

Injection Control

The DME control unit calculates the correct ignition timing on the basis of the engine speed, air flow or air mass, throttle position, oxygen sensor voltage, engine temperature and intake air temperature. The change in the fuel/air mixture is achieved by the opening duration of the injector valves. The battery voltage or voltage of the vehicle electrical system is also taken into consideration in calculating the injection timing since the pull–up and dropout times of the injector valves are extended as the voltage drops.

Types of Injection

Each injector valve group is activated by one output stage (power amplifier). This arrangement makes it possible to divide the injection cycle into cylinder groups (semisequential injection).

Arrangement of injector valve groups:

12-cylinder: Cylinders 1+3+5 and 2+4+6 or

Cylinders 7+9+11 and 8+10+12

Semisequential Injection

As of an engine speed of 600 rpm, fuel is injected only once per 720° crank angle into one cylinder group. This facilitates precise metering of the quantity of fuel since the injector valves need not be activated so often. It also enables restricted engine operation in the event of failure of one group.

Semisequential injection is only active when the DME control unit has received a signal from the pulse generator for the cylinder reference point. If this signal is not received during engine operation, the control system remains set to semisequential injection.

The cylinder reference point sensor is mounted on the injection lead of cylinder No. 6 at the distributor.

Parallel Injection

Parallel injection refers to simultaneous activation of all injector valves and takes place only when the cylinder reference point sensor (pulse generator) has supplied no signal since starting the engine. As soon as a signal is applied, the system switches over to semisequential injection after the next deceleration phase.

Emission Control on Models With Catalytic Converter

To maintain the optimum degree of efficiency of the catalytic converters, this system aims at achieving an ideal air-fuel ratio ($\lambda = 1$) for combustion. The heated oxygen sensor is used for this purpose which measures the residual oxygen content in the exhaust gas and sends a corresponding voltage signal to the control unit. Here, the mixture composition is corrected if necessary by changing the injection timing. In the case of failure of the oxygen sensor, the DME control unit controls the system with a substitute value (0.45 V) preprogrammed in the control unit.

Since a temperature of approx. 300 °C is necessary for efficient operation of the oxygen sensor, power is supplied via a relay to a heating resistor in the oxygen sensor. The relay is activated by the DME control unit.

On 12-cylinder engines, both heating resistors in the oxygen sensor are supplied with voltage via **one** relay. The relay is activated by the DME control unit I.

This relay will be phased out of series production. On models without oxygen sensor heating relays, the sensor heating is activated directly by the EKP relay.

CO Potentiometer

On models not equipped with a catalytic converter, the CO setting can be corrected by means of a potentiometer (on the air mass meter). Particular care must be taken to ensure that the plug connection for the CO potentiometer is connected in the wiring harness.

Idle Speed Control

On the 12-cylinder engine, the idle speed is not controlled by the digital motor electronics but rather by the electronic throttle control system. The idle speed is controlled directly by the position of the throttle valve.

Maximum Engine Speed Limitation

On the 12-cylinder engine, the maximum engine speed is limited by the electronic throttle control EML. The maximum speed is limited directly by reducing the throttle angle.

Cold Start Control

During the start phase, fuel is injected several times for each cylinder group per crankshaft revolution. The quantity of fuel is adapted dependent on the engine temperature and the engine speed.

In addition, the ignition timing is shifted in the retard direction the higher the temperature and the lower the start engine speed.

During the initial period after engine start, the initially injected quantity is reduced depending upon the temperature and engine speed in order to avoid and excessively rich mixture. If start is repeated within one minute, the complete initial quantity is no longer injected.

After starting (as of approx. 600 rpm), fuel is injected only once for each cylinder group per crankshaft revolution. This means that fuel is injected in the cylinders 2–4–6 and during the first revolution and in the cylinders 1–3–5 during the second revolution. The cylinders 8–10–12 and 7–9–11 are also supplied in the same way but offset by 60° crank angle.

During the warm–up phase, the injection timing and the ignition timing are correspondingly varied also dependent on engine speed and temperature.

These measures are intended to ensure a lower fuel consumption, good throttle response and smooth engine operation.

Deceleration Fuel Cut–out

To reduce fuel consumption, the deceleration fuel cut–out is activated when the throttle valve is closed and the engine speed is above approx. 1000...1200 rpm. The DME cuts out the injection and shifts the ignition timing in the retard direction until the engine speed has dropped below the cut–in speed. Below this engine speed, fuel injection cuts in once again and the ignition timing moves towards the advance direction once again. The cut–in speed is dependent upon the engine temperature and the drop in engine speed.

Acceleration Adaptation

In the case of a sudden change in the throttle position towards the full load direction, the digital motor electronics increases the quantity of injected fuel for the duration of the acceleration procedure and shifts the ignition timing in the advance direction. This function takes into account the criteria such as maximum torque, clean exhaust gas and no acceleration knocking.

Air Mass Measurement

During operation, a heated platinum wire is subjected to the flow of intake air in the inner tube of the hot–wire air mass meter (HLM). Heat is dissipated from the hot wire by the flow of air. This heat is compensated by controlling the heating current. At the same time, the supplied current also flows via a precision resistor whose voltage drop represents a direct measure for the air mass which is drawn in. Air-temperature fluctuations are detected by way of a compensation resistor and taken into account in the measurement. After switching off the engine, an increased current surge is applied to the hot wire for approx. 1 second in order to burn the wire clean of impurities.

The advantages offered by the air mass meter can be found in the fact that, in this case, the air mass is measured and not the air flow (volume). Fluctuations in the air density (different air pressure due to differences in altitude and weather situation) are already taken into account during initial measurement. In addition, less resistance is offered to the flow of air in the air mass meter since it is not equipped with an air sensor plate which needs to be pressed down.

The voltage value of the air mass meter in conjunction with the engine speed is a direct measure for the engine load.

Fuel Evaporation Control on Models With Catalytic Converter

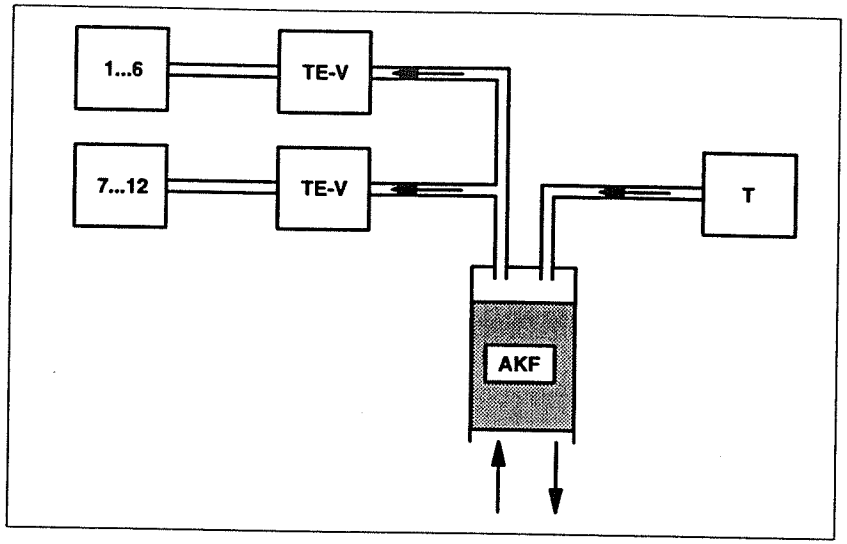

P31 12 001

1...6	Engine, cylinders 1...6
7...12	Engine, cylinders 7...12
AKF	Activated carbon filter
M	Engine
TE-V	Fuel evaporation control valve
T	Tank

The fuel evaporation control line of the fuel tank is connected to the activated carbon filter, in which the fuel vapours which accumulate in the tank are collected. The activated carbon filter is linked by means of a further line to the air manifold. A fuel evaporation control valve is installed in

every line. When the fuel evaporation control valve is open, the vacuum in the air manifold draws in fresh air to the activated carbon filter.The fresh air flushes out the fuel collected in the filter and routes it to the engine to the combustion process.

Since this additionally supplied mixture influences combustion to a considerable extent, the fuel evaporation control valve consists of a non–return valve and an electrically operated valve. Due to the non–return valve, the fuel evaporation control valve is closed initially when no power is applied. The non–return valve prevents fuel collecting in the air manifold when the vehicle is parked. The non–return valve opens as the vacuum in the air manifold increases. Electrical activation for both rows of cylinders takes place dependent on engine speed and load. The venting cycle (flushing phase) begins as soon as the emission (lambda) control system is active. On completion of one cycle, the valve is closed for approx. 1 minute (rest phase).

Adaptations

The fuel–air mixture formed in the intake tract requires a certain period of time until it reaches the oxygen sensor in the form of exhaust gas. This time decreases as load and engine speed increase. For this reason, the response time of the emission control system is also dependent on load and engine speed. Mixture deviation detected by the oxygen sensor result in storage of adaptation values (learned correction values). By way of these adaptations, the injection can be set close to the normal value in advance, thus achieving a reduction in the response time.

For instance, if the basic injection values for the DME characteristic map are too low during idling in order to maintain the ideal fuel-air mixture, the emission control system would have to constantly increase the injection timing. In this case, an adaptation value is learnt which corrects the basic injection value. The emission (lambda) control then only needs to undertake the fine adjustment.

Following adaptations are performed during engine operation:

Fuel Evaporation Control Adaptation

When the fuel evaporation control valve is open, an additional combustible mixture or air is supplied to the engine from the activated carbon filter. The shift in the air-fuel ratio detected by the oxygen sensor is almost completely compensated by way of the fuel evaporation control adaptation value.

Idle Air Adaptation

The EML undertakes idle air adaptation. By way of the throttle valve, it ensures constant idle speeds.

Idle Mixture Adaptation

If the idle signal is applied during the rest phase of the fuel evaporation control system, idle mixture adaptation takes place at certain intervals.

Part Load Mixture Adaptation

Also in the part load range, mixture adaptation takes place at certain intervals. The determined adaptation value is taken into account in all part load ranges.

Relay Control

The **DME main relay** is activated by the DME control unit as of ignition ON. After shutting down the engine, the relay remains on for a further 3 s in order to avoid post–ignition.

The **EKP relay** is activated as of ignition ON as soon as the DME control unit receives engine speed signals from the crankshaft pulse generator.

The **oxygen sensor heating relay** is activated as of ignition ON. It is switched off dependent on engine speed and load.

Emergency Operation Control

In the case of failure of sensors, substitute values are made available which enable further yet restricted engine operation. Further engine operation is no longer possible if the engine speed sensor fails.

Component	Substitute measure
Intake air temperature sensor	Substitute value active
Engine temperature sensor	Substitute value active
Air mass meter	Substitute values are derived from the position of the throttle valve
Inductive sensor, engine speed/position	None, engine operation not possible
Inductive sensor, cylinder reference point	Parallel injection
Oxygen sensor	Substitute value active, emission control not possible
CO potentiometer	Substitute value active

Transmission Intervention in EH Transmission

During the shift procedure, the EGS control unit sends the DME control unit a signal which has the effect of retarding the ignition timing and reducing the torque. This ensures smooth transmission to the next drive range.

As soon as the torque converter clutch has engaged, the DME control units switch over to another injection timing characteristic map.

Drive–away Protection

When the drive–away protection function is activated on the on–board computer (code entered) or when the antitheft system DWA is armed, a signal (>10 V) is sent to the DME control units which consequently switch off the ignition and injection.

This function can only be activated below an engine speed of approx. 500 rpm.

Automatic Stability Control ASC

The ASC controller is integrated in the ABS control unit, refer to 3450.1. It operates in conjunction with the DME and EML.

The peripheral speeds of the wheels are monitored by the wheel sensors. An excessive speed difference between the driven and non–driven (idle) wheels is detected as wheel slip. Consequently, the EML control unit is instructed to reduce the throttle opening. If excessively high wheel slip still occurs, the DME control unit is instructed to retard the ignition timing. The ignition and the injection can be temporarily switched off as a further measure.

Engine Drag Torque Control MSR

In the same way as the ASC, the MSR is integrated in the ABS control unit, refer to 3450.1. The engine is influenced via the DME and EML.

A signal is sent to the DME control unit when increased slip occurs at the drive wheels when the vehicle is coasting. Consequently, the deceleration fuel cut–out function is deactivated. In addition, the EML control unit is instructed to adapt the throttle position until the wheel slip is once again within the permissible range.

This function can only be activated at an engine speed below approx. 500 rpm.

Catalytic Converter Protection Function (Ignition Circuit Monitoring)

In the DME M1.2, the cylinder reference point sensors serve to monitor the ignition circuits. If the cylinder reference point sensor on the ignition lead 6 (or 12) fails to detect an ignition signal, the fuel supply is shut off by switching off the electrical fuel pump relay.

The cylinder reference point sensor therefore monitors the entire primary side and the cylinder 6 or 12 on the secondary side.

Self–diagnosis

The task of the self–diagnosis feature is to detect and store malfunctions in DME components, the associated lines or in the memory of the control unit (ROM, RAM).

The DME control unit makes available substitute values in the event of sensor failure (see troubleshooting - explanation). These substitute values are cancelled once again when normal operation can be resumed.

To facilitate fast and convenient troubleshooting, the stored defect codes or current values can be monitored from the DME control unit with the aid of the BMW DIAGNOSTIC SYSTEM.

For further information, refer to Notes on the BMW DIAGNOSTIC SYSTEM.

Interconnected System of Signals to the Drive Control Units

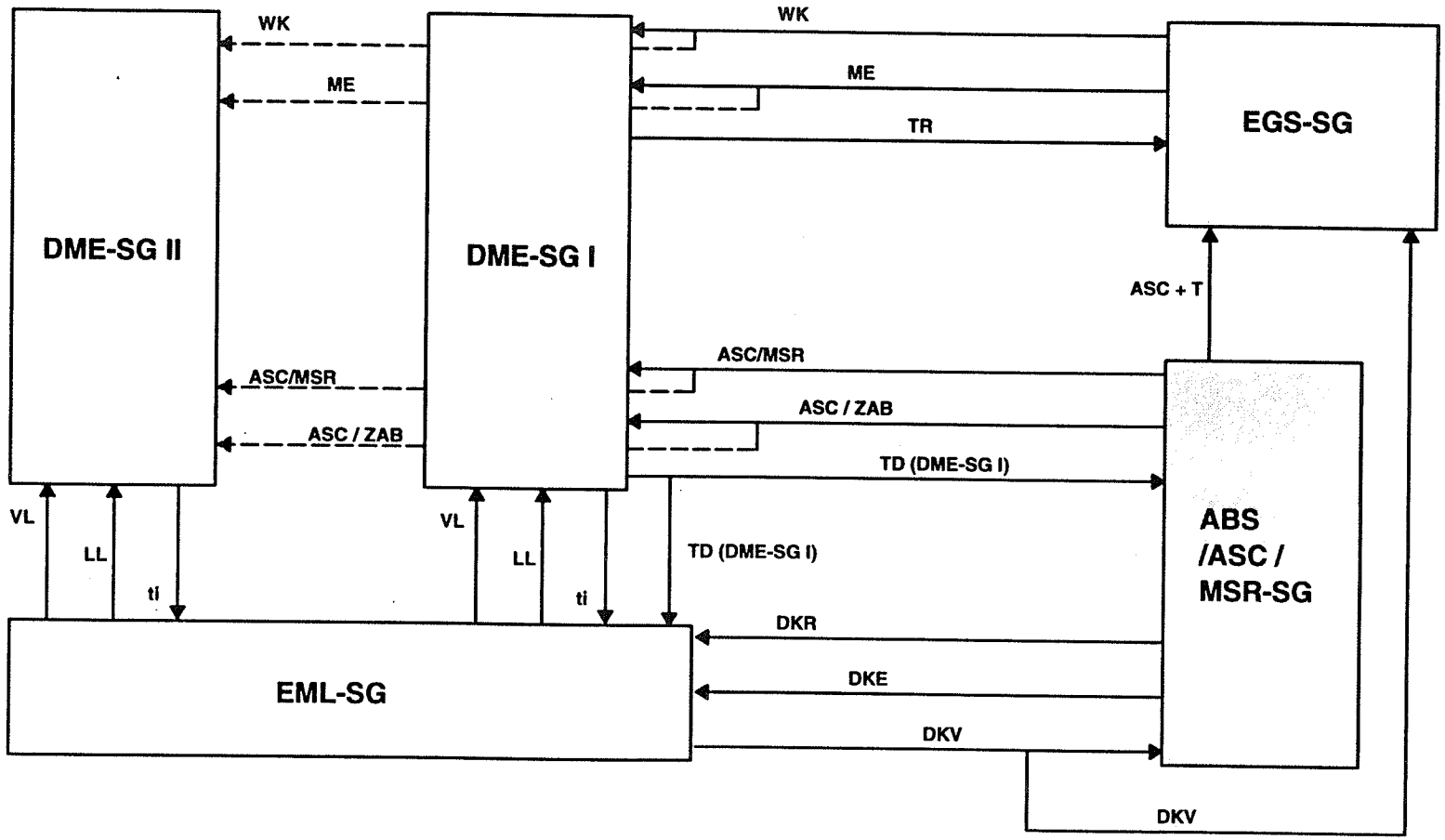

P31 12 002

Abbreviation	Signal description	Signal type	Effect
WK	Torque converter clutch	Ground = Torque converter clutch engaged (ON)	DME selects corresponding characteristic map.
ME	Engine intervention (ignition timing intervention)	Ground = ON	DME reduces torque during gearshift procedure (ignition timing in retard direction).
TR	Engine speed signal (3 times per crankshaft revolution)	Square–wave voltage	EGS receives information relating to applied engine speed.
ASC / MSR	Automatic stability control or engine drag torque control	U-Batt	2 functions within the DME control unit: Deactivate deceleration fuel cut–out if currently active (MSR). Otherwise shift ignition timing in retard direction (ASC).
ASC / ZAB	Automatic stability control, ignition fade–out	U-Batt	DME fades out ignition and injection.
TD	Engine speed signal (1 per ignition)	Square–wave voltage	EML undertakes idle control and engine speed limitation. ASC requires this information to ensure it does not stall the engine.
DKR	Throttle reduction	Square–wave voltage with fixed frequency and var. pulse duty factor	EML reduces the throttle opening angle
DKE	Throttle increase	Square–wave voltage with fixed frequency and var. pulse duty factor	EML increases the throttle opening angle
DKV	Preset throttle value	Square–wave voltage with fixed frequency and var. pulse duty factor	ASC / MSR receive information relating to current position of pedal position sensor (driver request).
LL	Idle signal	Ground = ON	DME selects corresponding characteristic map.
VL	Full load signal	Ground = ON	DME selects corresponding characteristic map.
ti	Injection signal	Square–wave voltage	EML synchronises the throttle valves.

Notes on the BMW DIAGNOSTIC SYSTEM

Initialisation of Diagnostic Procedure

Communication with the control unit via the DIAGNOSTIC SYSTEM can be set up after selecting the DME on the BMW SERVICE TESTER. If data transfer is interrupted, information appears on the display screen indicating the possible cause:

- Ignition not switched on
- Voltage supply for control unit <10 V
- DME relay not supplied with B+ (if not, bypass terminal 30 and 87)
- Control unit not connected
- Diagnostic link defective
- Data traffic inhibited by a defective control unit in the vehicle

Control Unit Assignment

The identification data appear first in order to determine whether the correct control unit is installed. The assignment can be made by means of the variant code (e.g. C01E) and the parts microfiche without having to remove the control unit.

Explanation of Control Unit Identification

The designation of the DME version and a note indicating, with which row of cylinders communication has been set up, appear in the first line.

Further data are displayed in the sequence shown below.

- Variant: Model designation, engine type
- With or without emission control
- Transmission variant: HG – manual transmission
  AG – Automatic transmission, hydraulic
  EH – Automatic transmission, electronic–hydraulic
- Type of fuel: leaded/unleaded or regular/premium
- Country version: international identification
- Control unit variant code: see Parts microfiche
- BMW hardware and software number,
- Bosch hardware and software number,
- Production code: used only on special request by 'Service Division'

Effective Range of the Self–diagnosis Function

The self–diagnosis function is an aid to facilitate fast fault tracing in the vehicle's electrical/electronic systems. The BMW DIAGNOSTIC SYSTEM (Service Tester, MoDiC) provides the necessary access for the user. Self–diagnosis of the control units detects defects provided the necessary conditions for this have been fulfilled (time, temperature, load etc.). However, defects can only be registered when there is an electrical connection to the control unit. If this is not the case, the check must be performed using conventional methods (e.g. ignition voltage, fuel pressure, mechanical functions etc.).

Refer to Chapter – Troubleshooting – for list of defects which can be detected by the self–diagnosis system.

Storage of Defect Codes

Defect codes are stored after the engine has been started. If several defect codes are detected, they appear in the order they first occurred.

The operating conditions as stored apply only to the conditions, under which the defect was detected for the first time. An intact voltage supply (charged battery) is the prerequisite for maintaining the memory contents.

Substitute values may be active if **no** malfunction can be found despite a defect code being stored. Troubleshooting should still, however, be carried out.

In US models, defects which influence the fuel/air mixture are indicated by a lamp (engine check) in the instrument cluster. As a check, this lamp lights constantly during the period of time between "ignition ON" and engine start.

If the defect code memory has no defect code stored although there is a defect in the vehicle, either the test conditions (e.g. temperature, time, load etc.) for defect code detection were not fulfilled or it was technically not possible to store a defect code. A list of monitored components and functions is given in the Chapter – Component testing –.

Defect Code Memory Monitoring ♦D♦900

The first step should always be to monitor the defect code memory. If one or several defect codes are stored, it is advisable to print out these data immediately (R key). Since it is often necessary during the test procedure to cut the power supply or to disconnect the connector from the control unit, the contents of the defect code memory will be deleted unintentionally as a consequence.

The learned adaptation values are lost if the battery or the DME control unit is disconnected. This may result in difficulties in starting the engine or the engine may stall when idling. These problems are generally rectified after a short test drive.

Clearing the Defect Code Memory ♦D♦999

Carry out this step only when **all** defects have been rectified or are attributed to simulation. When the battery or the DME control unit are disconnected, **all** stored defect codes, the substitute values (if active) as well as the adaptation values are lost. Current defects cannot be cleared.

Status Monitoring ♦D♦100 and ♦D♦200

Further current data can be called up independently of the defect code storage function. Current values or operating statuses are displayed. Refer to the Chapter – Component Testing – for the necessary comparison of nominal values.

Status inquiries can also be made from the blocks 100 and 200 as required. This selection (termed extract list) is made by entering the corresponding number followed by the acknowledgement. The selection is then displayed on the screen with the ♦⇓♦ key.

Component Activation -♦D♦300

To facilitate fast fault finding, various components can be activated from the SERVICE TESTER in conjunction with the DME control unit. The response of components in perfect working order, including their supply lines can therefore be indicated by acoustic means.

Activation is only possible when the component is connected. For this reason, signal testing is not possible at the disconnected component connector. This function provides a simple means of differentiation between defects in the control unit, on the supply wire or in the component itself. More detailed information on component activation is provided on the display screen.

Print out Check Code

If a printout of the identification page is requested, the printer prints out the check code. This printout contains the contents of the defect code memory in concise form and should be sent in together with the defective component in warranty cases.

Abbreviations

ABS	Antilock brake system
AG	Automatic transmission
ASC	Automatic stability control
CO	Carbon monoxide
DK	Throttle valve
DKB	Throttle-brake intervention
DKE	Throttle increase
DKR	Throttle reduction
DKV	Preset throttle value
DME	Digital motor electronics
DWA	Antitheft system
EGS	Electronic transmission control
EH	Electrohydraulic transmission
EKM	Electronic body module
EML	Electronic throttle control
EV	Injector valve(s)
HG	Manual transmission
HLM	Hot-wire air mass meter
Hz	Hertz
KD	Kick-down
KW	Crankshaft
LL	Idle
LMM	Air flow meter
MF	Microfiche
MSR	Engine drag torque control
MV	Solenoid valve
PWG	Pedal position sensor
RxD	Diagnosis initialisation line
SG	Control unit
TD	Engine speed signal once per ignition
TE	Fuel evaporation control
ti	Injection time
tL	Load signal
TL	Part load
TR	Engine speed signal once per revolution
TxD	Diagnostic data link
U-Batt	Battery voltage
U-Vers	Voltage supply
VL	Full load
WK	Torque converter clutch
ZAB	Ignition fade–out

Pin Assignments

Pin assignments at 55-pin DME control unit connector X1600

If no other measurement note is specified, the data given under signal type will apply to idle engine operation.

Pin	Type	Description/function	Connection	Signal type	Tester display	Measurement notes
1	A	Ignition terminal 1	Ignition coil	Primary signal	Engine test, test step 05	max. 150 V / max.0.2 A
2	M	Ground ignition	Ground terminal point	Ground		
3	A	EKP relay and crankshaft reference	Electrical fuel pump relay and electronic transmission control	Negative with overlaid engine speed signal	ON (Command from control unit)	Crankshaft rotating as of start speed
4		not used				
5	A	Evaporation control valve	Evaporation control valve	Negative clocked	CLOSED / OPEN	Perform component activation, negative => closed
6	A	Engine speed signal TD	Instrument cluster	Square–wave voltage		one signal per ignition
7	E	Air mass meter signal	Hot-wire air mass meter	0...5 V	Load signal in ms	see status monitoring
8	E	Pulse generator, cylinder reference point (ignition) cylinder 6 or 12	Pulse generator, cylinder reference point (terminal B)		ON / OFF	see status monitoring
9		not used				
10	M	Ground oxygen sensor	Oxygen sensor	Ground		
11		not used				
12		not used				

Pin	Type	Description/function	Connection	Signal type	Tester display	Measurement notes
13	E	RxD diagnostic data link	Diagnostic connector	> 10 V		when cover of diagnostic connector closed
14	M	Ground, injector valves	Ground point	Ground		
15	A	Fault lamp (US only)	Instrument cluster	Negative		Lights if emission–related defect code stored and for checking lamp at ignition ON
16	A	Injector valves (cyl. 1+3+5 or 7+9+11)	Injector valve	Negative clocked	Injection time t_i	Negative => Injector valve open, see component activation
17	A	Injector valves (cyl. 2+4+6 or 8+10+12)	Injector valve	Negative clocked	Injection time t_i	Negative => Injector valve open, see component activation
18	E	Permanent supply terminal 30	Terminal 30	> 10 V		
19	M	Ground for electronics and sensor shielding	Negative point	Ground		
20		not used				
21		not used				
22		not used				
23	A	Oxygen sensor heating (DME control unit I only)	Oxygen sensor heating relay, terminal 85	Negative	ON	Negative => Sensor heating activated
24	M	Ground remaining output stages (apart from ignition and injector valve)	Ground point	Ground		
25	A	Burn clear	Air mass meter	Voltage increase for approx. 0.5 sec		Signal is output for 4 s after engine shut–down

Pin	Type	Description/function	Connection	Signal type	Tester display	Measurement notes
26	M	Air mass meter ground	Air mass meter	Ground		
27	E	Ignition, terminal 15	Ignition lock	>10 V		
28	E	Oxygen sensor signal	Oxygen sensor	Pulsating voltage 0.1...1.2 V	Voltage value	Can only be measured with engine running at operating temperature
29	E	Vehicle speed signal	Instrument cluster	Square-wave signal		
30		not used				
31	E	Pulse generator, cylinder reference point (ignition)	Pulse generator, cylinder reference point (terminal A)		ON / OFF	see status monitoring
32	A	ti measuring signal (signal for fuel consumption indicator KVA)	Instrument cluster	Square–wave signal	Multimeter function pulse duration	Oscilloscope
33		not used				
34		not used				
35		not used				
36	A	DME main relay	DME main relay, terminal 85	Negative	ON	Diagnosis not possible if not fitted – connect jumper at relay terminal 30 and 87
37	E	> 10 V from DME main relay	Main relay, terminal 87	> 10 V	Voltage value	Perform status monitoring. Diagnosis not possible if no signal applied – connect jumper at terminal 30 and 87
38	E	Automatic stability control ASC and DWA	ASC and antitheft system DWA	Ground	OFF	If DWA armed, > 10 V applied
39	E	Programming voltage	Diagnostic connector	Voltage value		Activated only during programming

Pin	Type	Description/function	Connection	Signal type	Tester display	Measurement notes
40	E	DME control unit II identification	Ground point	Negative	DME cyl. 7...12	The DME control unit II can only be selected together with diagnosis when this link is set up.
41		not used				
42	E	Drive range P/N	Gear selector lever switch	Negative	ON	when in P/N position
43	E	Idle-CO potentiometer	Air mass meter	0...5 V	Voltage value	
44	E	Intake air temperature sensor	Intake air temperature sensor	0...5 V	° C	temperature–dependent
45	E	Engine temperature sensor	Engine temperature sensor	approx. 0 to 5 V	° C	temperature–dependent
46		not used				
47	E	Inductive pulse generator (terminal A)	Pulse generator engine speed/position	AC voltage	Engine speed	Between Pin 47 and 48 (can only be measured when crankshaft rotating)
48	E	Inductive pulse generator (terminal B)	Pulse generator for engine speed and crankshaft position	AC voltage	Engine speed	Status monitoring as of start speed
49		not used				
50	E	Engine drag torque control MSR	ABS/ASC control unit	> 10 V		> 10 V => Signal active
51	E	Ignition timing intervention	Electronic transmission control EGS	Negative	ON	Only active during shift procedure
52	E	Idle signal	Electronic throttle control EML	Negative	ON	when idling
53	E	Full load signal	Electronic throttle control EML	Negative	ON	under full load (no full load => U-Batt)

Pin	Type	Description/function	Connection	Signal type	Tester display	Measurement notes
54	E	Torque converter clutch WK	Electronic transmission control EGS	Negative	ON (with engine running)	If WK engaged, see status monitoring
55	E/A	TxD Diagnostic data link	Diagnostic connector	Negative		When cover of diagnostic connector closed

E = Input, A = Output, M = Ground

Adapter

Component	Connector No.	Description	Adapter number
Control unit	X1600, X1601	Universal adapter 55-pin	Universal adapter, HWB 81 12 9 425 091 Connection cable for periphery 55-pin, HWB 81 12 9 428 907 Connection cable for control unit 55-pin, HWB 81 12 9 428 908
Pulse generator (sensor) cylinder reference, pulse generator (sensor) engine speed/position	X1612, X1614 X1613, X1615	3-pin, black	V-adapter cable, Cartool 61 1 491
Injector valve, fuel evaporation control valve, temperature sensor	X1501...6, X1603, X1622	T-adapter, 2-pin	Cartool 61 1 440
Ignition coil		1-pin	Ignition lead adapter, Cartool 61 2 010
EKP relay/main relay	X1607, X1605 X1606, X1608	T-adapter	Cartool 61 30 10/20

Troubleshooting

Notes

Relevant safety codes and accident prevention regulations must be observed when carrying out all tests and work on the engine electrical and electronic systems.

Caution!

Dangerous high tension in the primary and secondary circuit of the ignition system.

Wherever possible, the battery should not be disconnected, otherwise the defect codes stored in **all** the control units will be deleted. Disconnect control units from the wire harness **only** when the ignition is switched off.

Conduct wire tests **only** with the control unit or component connectors disconnected.

Test Equipment

The schematics can be found in the corresponding files in Section 1210. The model year '87/'88 is contained in the Chapter 1366.

The universal adapter with the corresponding 55-pin connection leads should be used for testing the DME control unit or the engine wire harness. The universal adapter should only be connected between the control unit and wire harness when **no** diagnostic procedure (diagnostic connector not connected) is to be carried out since this can lead to malfunctions.

Use only suitable test leads, terminals and probe tips.

Display of Stored Defect Code on the Screen.

- **Defect location:** The number of the defect code indicates the pin assignments at the control unit. The defect can be in the vicinity of the component, the corresponding wiring or in the control unit.
- **Type of defect:** Short–circuits, breaks range transgressions or illogical functions are indicated.
- **Frequency:** Indication as to whether the defect is momentary or not (intermittent defect). Further indication is provided as to whether the defect occurred several times or only once.

As of model '89 an indication is provided as to how often the defect has already been detected. If the defect is no longer pending, the number of starts is indicated which have taken place since the defect was last detected.

- **Detected at:** Additional defect information on the operating status during defect detection.

Evaluation of Stored Defect Codes:

To facilitate effective troubleshooting, it is first advisable to print out the contents of the defect code memory.

During repairs, it is often necessary to disconnect plug connections, causing a defect code to be set in many cases. This may lead to incorrect diagnosis after monitoring the defect codes.

For this reason, all defect codes should be cleared after performing the necessary repairs (also EML, EGS). Monitor the defect code memory once again after a test run.

Some defects cause a defect code to be set in several systems (EML, EGS, ASC/MSR). Such interrelationships can be determined by comparing the ambient conditions (e.g. engine speed, temperature, etc.).

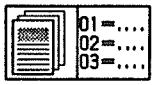

Defect Code Table

♦D♦900 Defect code memory – stored defect codes:

Defect codes stored in defect code memory → Defect code 01 to defect code 100

Malfunctions - Defect codes not stored:

Engine operation not possible → Defect code 101

Only one row of cylinders in operation → Defect code 102

Defect code 01

♦D♦900 Defect code memory: 01 DME control unit

Explanation: This defect code is stored when the internal self–test provides a negative result.

Possible cause: Program error or disturbed program run in the DME control unit.

Corrective measures: Carry out test run after clearing the defect code memory. If defect code is set once again, the DME control unit must be replaced.

Defect code 03

♦D♦900 Defect code memory: 03 TR-signal / EKP relay

Explanation: This defect code is stored when a short occurs at the relay I (EKP) or on the TR-signal line (control unit Pin 3).

Troubleshooting: As displayed on screen.

Defect code 05

♦D♦900 Defect code memory: 05 Fuel evaporation control valve

Explanation: This defect code is stored when a short occurs at the fuel evaporation control valve or in the supply wire.

Troubleshooting: As displayed on screen. For test values, see Chapter – Component Testing –.

Defect code 07

♦D♦900 Defect code memory: 07 Air mass meter (HLM)

Explanation: This defect code is stored when a short or break occurs at the air mass meter HLM or on the supply wires. In this case, the DME control unit operates with fixed substitute values:

– Load signal tL = 0 ms
– Ignition angle = 18...20° crank angle

When the engine is not idling.

The ignition angle (timing) does not change as the engine speed increases.

Troubleshooting: As displayed on screen. For test values, see Chapter – Component Testing –.

Defect code 10

♦D♦900 Defect code memory: 10 Emission (lambda) control

Explanation: This defect code is stored in the case of excessive deviations in the mixture composition (too rich or too lean mixture longer than 10 sec). A prerequisite is that the oxygen sensor must be ready for operation.

Possible causes:

– No fuel delivery
– Incorrect fuel pressure
– Injector valves defective or coked
– Engine temperature sensor defective
– Secondary air in the intake duct
– Fuel evaporation control system defective

Troubleshooting: As displayed on screen. For test values, see Chapter – Component Testing –.

Defect code 15

♦D♦900 Defect code memory: 15 Fault lamp

Explanation: Applicable to US models only. This defect code is stored when shorts occur at the fault lamp or in its supply wire.

Troubleshooting: As displayed on screen.

Defect code 16

♦D♦900 Defect code memory: 16 Fuel injector valves cyl. 1+3+5 or 7+9+11

Explanation: This defect code is stored when shorts occur at the fuel injector valves of breaks in the supply wires.

Note: In the case of a short at one fuel injector valve or in its supply wire, the entire injector valve group is always deactivated. The three intact valves of this cylinder group remain in operation.

Troubleshooting: As displayed on screen. For test values, see Chapter – Component Testing –.

If the defect codes 16/17 and 10 are stored, this indicates a fault in the ignition system (primary circuit or ignition coil). Consequently, the injector valves are deactivated, also resulting in defect detection.

Defect code 17

♦D♦900 Defect code memory: 17 Injector valve cyl. 2+4+6 or 8+10+12

Explanation: Diagnosis as for defect code 16.

Defect code 23

♦D♦900 Defect code memory: 23 Oxygen sensor heating relay

Explanation: The oxygen sensor heating relay is activated by the DME control unit I. A detected defect is therefore only stored in the DME control unit I. A defect code is stored when shorts or breaks occur at the relay or on its supply wire.

Troubleshooting: As displayed on screen.

Defect code 28

♦D♦900 Defect code memory: 28 Oxygen sensor

Explanation: This defect code is stored when a short or a break occurs at the oxygen sensor or on its supply wires.

A prerequisite for defect detection is an engine temperature of 70 °C and a load signal of > 2.3 ms for > 5 sec.

Troubleshooting: As displayed on screen. For test values, see Chapter – Component Testing –.

Defect code 37

♦D♦900 Defect code memory: 37 Control unit supply

Explanation: This defect code is stored when the voltage supply exceeds 16 V. A drop in the voltage below 10 V is detected 3 min after the start at the earliest.

Possible cause:

- Contact resistances at the wire connections
- Insufficient V–belt tension
- Voltage regulator or alternator defective

Troubleshooting: As displayed on screen.

Defect code 38

♦D♦900 Defect code memory: 38 ASC / DWA

Explanation: This defect code is stored when U–batt is applied at Pin 38 of the DME control unit for longer than 1 second while driving.

Troubleshooting: As displayed on screen

Defect code 43

♦D♦900 Defect code memory: 43 Idle CO potentiometer

Explanation: Only applicable to vehicles without catalytic converter. This defect code is stored when shorts or breaks occur at the potentiometer or on its supply wire. A substitute value of 1.25 V is used.

Troubleshooting: As displayed on screen. For test values, see Chapter – Component Testing –.

Defect code 44

♦D♦900 Defect code memory: 44 Intake air temperature sensor

Explanation: This defect code is stored when shorts or breaks occur at the temperature sensor or on its supply wires. A prerequisite for detecting a break in the circuit is a 3 min interval after the start and the engine idling for a minimum of 30 sec. After the defect code is set, the system operates with a substitute value of 20° C.

Troubleshooting: As displayed on screen. For temperature sensor test values, see Chapter – Component Testing –.

Defect code 45

♦D♦900 Defect code memory: 45 Engine temperature sensor

Explanation: This defect code is stored when shorts or breaks occur at the temperature sensor or on its supply wires. The prerequisite for detecting a short to positive or break is an intake air temperature of > 11° C.

If a defect code is set, a substitute value of 50° C is used.

Troubleshooting: As displayed on screen. For test values, see Chapter – Component Testing –.

Defect code 50

♦D♦900 Defect code memory: 50 MSR

Explanation: This defect code is stored when U–batt is applied at Pin 50 of the DME control unit for more than 5 seconds while driving.

Troubleshooting: As displayed on screen.

Defect code 51

♦D♦900 Defect code memory: 51 Ignition timing (ignition angle) intervention

Explanation: This defect code is stored when the wire from the EGS control unit Pin 24 to the DME control unit Pin 51 has a short to ground (>2.5 sec). In such a case, the ignition timing (angle) intervention occurs only once, the signal is then ignored.

Troubleshooting: As displayed on screen.

Defect code 54

♦D♦900 Defect code memory: 54 Torque converter clutch

Explanation: Applies only to model '89. This defect code is stored when the DME control unit detects a closed torque converter clutch (or short to ground) and the selector lever is in position P or N.

This defect code is also stored when the EGS control unit is in emergency (limited) operation mode. The EGS control unit is in emergency (limited) operation mode also in diagnostic mode!

Troubleshooting: As displayed on screen.

Defect code 100

♦D♦900 Defect code memory: 100 Output stage

Explanation: Only applicable to model '89. This defect code is stored when there is a loose contact at an output of an output stage. In the majority of cases, one of the defect codes 3, 5, 16, 17 or 23 also occurs, to which the defect code 100 can be assigned.

Defect code 101

Malfunction: Engine operation not possible

Prerequisites for troubleshooting:

– Start system OK. (battery charged, ignition switch and starter OK. ...)
– Ground connection at battery, engine and body OK.
– Specified type of fuel in tank
– Engine OK. mechanically (timing, compression, ...)

Troubleshooting:

a) Check voltage supply for DME control unit in accordance with schematic.

b) Check input signals.

– Check engine speed signal at start speed ♦**D**♦200.
– Check air mass meter signals♦**D**♦200.

c) Check output signals.

– Activation of fuel pump relay in accordance with schematic
– Ignition output stage with MOTORTEST, test step 09
– Injector valves with ♦**D**♦300

d) Fuel pressure test

For technical data, see Chapter – Component Testing –.

e) Check EML for defects.

For technical data, see Chapter – Component Testing –.

Defect code 102

Malfunction: Only one row of cylinders in operation

Note: No defect code stored in DME memory.

Prerequisites for troubleshooting: See defect code 101.

Possible cause:

– Fuel supply (immersion tube sending unit, fuel pump or pressure regulator defective)
– Voltage supply for DME defective
– EML defect –> see Section 1270.

Component Testing

Notes

Relevant safety codes and accident prevention regulations must be observed when carrying out tests and work on the engine electrical and electronic systems.

Caution!

Dangerous high voltage in the primary and secondary circuit of the ignition system.

Important!

Wherever possible, the battery should not be disconnected otherwise the defect code stored in **all** the control units will be deleted.

Disconnect control unit from the wire harness **only** when the ignition is switched off.

Conduct wire tests **only** with the control unit or component connectors disconnected.

Test Equipment

The schematics can be found in the corresponding files in Section 1366. From model year '89, they are contained in Section 1210.

The universal adapter can be used with the corresponding connection leads to pick off signals from the DME control unit or from the engine wire harness.

The universal adapter should only be connected between the control unit and wire harness when **no** diagnostic procedure (diagnostic connector not connected) is to be carried out since this can lead to malfunctions.

Use only suitable test leads, terminals and probe tips.

The test values for component testing are listed in the appendix. For further technical data, refer to the microfiche – Technical Data.

Removal and installation are described in the microfiche – Repair Instructions.

Overview of Defect Codes and Component Tests

Component/function	Quick test after entering ♦D♦ ...	Defect code after storage
DME control unit		1
Ignition coil 1)	see engine test	
TR-signal/EKP relay		3
Fuel evaporation control valve 1)	100,300	5
Air mass meter	200 2)	7
Emission control	100	10
Fault lamp		15
Injector valves 1)	300	16/17
Sensor heating relay		23 2)
Oxygen sensor	100/200	28
Main relay (relay 2)	100 2)	
Voltage supply	200	37
ASC	see ABS/ASC	38 2)
Idle CO potentiometer	200 2)	43 2)
Intake air temperature sensor 1)	200	44
Engine temperature sensor 1)	200	45
Pulse generator, engine speed/ position 1)	200	
MSR	see ABS/MSR	50 2)
Ignition timing (angle) intervention	see EGS	51 2)
Idle/full load signal	100	

Component/function	Quick test after entering ♦D♦ ...	Defect code after storage
Torque converter clutch	see EGS	54 2)

1) The resistance values are listed in the appendix.

2) Only applicable as of model '89.

DME Control Unit

Check function:

Individual function blocks, e.g. ignition, injection, emission (lambda) control etc. can only be checked when the necessary input signals are applied beforehand at the control unit – see Chapter – Pin Assignments.

Ignition Coil

Check function:

Perform engine test, test step 09. With the engine at operating temperature, the ignition voltage is 10 ±2 kV. The maximum difference between the individual cylinders should not exceed 3 kV.

Resistance test:

Refer to technical data in Appendix.

TR-signal/EKP Relay

Check function:

4-pin relay up to model '89

The EKP relay switches on for as long as the DME control unit outputs a ground signal with overlaid engine speed signal (one per crankshaft revolution) at Pin 3.

7-pin relay as of model year '89

The EKP relay switches only during the start (via terminal 50) or when ignition signal (terminal 1) is applied.

Possible causes:

- Wire to EKP relay defective
- EKP relay or main relay defective
- Voltage supply for DME control unit, relay 1 or 2 not OK.
- No signals from engine speed/position pulse generator (sensor)
- Ignition output stage or ignition coil defective (only model '89)
- Fuel evaporation control valve

Fuel Evaporation Control Valve

Check electrical function:

♦D♦300 – The fuel evaporation control valve is driven at intervals of one second. The actuation cycles can be felt with the hand.

Check for leaks:

Detach hoses from valve, switch on vacuum pump at service tester and connect to 8 mm connection (note arrow indicating direction of flow). Set vacuum to 600 mbar and apply a voltage of 12 V to the valve. Switch off vacuum pump – after 20 sec, the pressure drop must not exceed 50 mbar.

When power is not applied, the valve is closed by a non–return valve up to a vacuum of 20 mbar.

Check activation phases:

♦D♦100 – The valve is activated at idle speed (display: ON or CLOSED) and is therefore closed. As soon as the emission control is active and the engine speed is increased, the valve can be seen to open step–by–step (display: OFF or OPEN).

After switching off the engine, the valve is held closed for 3 to 5 sec.

Air Mass Meter (HLM)

Check HLM signal:

♦D♦200 – The load signal indicates the air throughput in the HLM. When idling, the value should be 2.0 ms ± 10%.

Check clear-burn function:

Increase engine speed once to above 2000 rpm (engine temperature >60° C). After shutting down the engine, a voltage increase to approx 3.5 V can be measured at the HLM between terminal 1 (+) and 4 (–).

Pulse Generator, Cylinder Reference Point

Check function:

♦M♦22 – Connect terminals for oscilloscope to component connector and operate engine at idle speed. An AC voltage characteristic curve with positive and negative half–wave should appear on the display screen.

As soon as the cylinder reference signals are detected during normal operation, the system switches over to semisequential injection. Only parallel injection is possible in diagnostic mode.

Resistance test:

The resistance can be measured directly at the component connector (at the connector strip for injector valves). For wiring diagram, refer to schematics. For technical data, see Appendix

Emission (Lambda) Control

Check function:

♦D♦100 – Prerequisite for this procedure is that the oxygen sensor is at operating temperature. The engine must run for 30 to 40 sec before the control is implemented.

The control can compensate for wear–related deviations in the mixture composition and therefore conceal other defects. If necessary, disconnect the oxygen sensor during troubleshooting of the mixture composition.

Fault Lamp 'Check Engine' (US only)

Check function:

The control unit supplies the fault lamp with ground potential as soon as an exhaust emission–related defect is detected. As a check, the lamp lights constantly after ignition ON.

Injector Valves

Check electrical function:

♦D♦300 – The fuel injector valves are driven with a frequency of 10 Hz. The pulse period is 1 ms in order to avoid fuel being injected. Activation can be felt with the hand.

Check pulse duration:

♦D♦200 – This status inquiry indicates the opening duration of the injector valves. The pulses can be checked with the aid of the multimeter ♦M♦15 at the injector valve connector. It must be borne in mind that only parallel injection is possible during diagnostic mode. Therefore, the pulse duration measured with the multimeter (not in diagnostic mode) is doubled since semisequential injection takes place.

Testing with oscilloscope♦M♦22 and universal adapter:

Connect terminal frequency OFF (+) with terminal 1 and enter a frequency of 70 Hz, connect terminal D+ (blue) to Pin 16 or 17. The injection signal should be displayed on the oscilloscope. In contrast to measuring the pulse duration, injection fade–out during coasting can also be seen on the oscilloscope.

Resistance test:

The resistance of an injector valve must be measured directly at the component. Only the entire injector valve group (e.g. 3 valves on 6-cylinder engine) can be measured at the universal adapter. For technical data, refer to Appendix.

Sensor Heating Relay

Check function:

♦D♦300 – This activation is only possible on cylinder bank 1 to 6, it takes place at one second intervals.

The relay remains switched on during normal operation until high engine speeds or loads occur.

Possible causes:

– Wire to DME control unit Pin 23 defective
– Relay or voltage supply not OK.
– Fuse F28 defective

Oxygen Sensor

Check function:

♦D♦200 – The prerequisite for carrying out this test is that the oxygen sensor must be at operating temperature. The indicated voltage signal is picked off in steps and fluctuates between 0.02 and 0.85 V.

When the oxygen sensor is not in operation, or a wire to the DME control unit has a break, a constant value of 0.45 V is indicated. This value is also indicated when no oxygen sensor is installed.

Main Relay Control (DME relay 2)

Check function:

♦D♦100 – This status inquiry is only possible as of model '89. With ignition ON or during engine operation, the main relay is activated with ground potential at terminal 85 (display: ON). The relay switches on and supplies the control units DME, EGS, EML and ABS with voltage.

Possible causes:

- Wire to DME control unit Pin 36 defective
- Relay 2 or voltage supply not OK.
- Voltage supply for DME control unit not OK.
- The control unit is defective if no ground potential is output at control unit Pin 36 although the above points are OK.

Control Unit Voltage Supply

♦D♦100 – The displayed voltage is currently applied at the control unit. It should not be below 10 V.

CO Potentiometer (on HLM)

Check function:

♦D♦200 – A voltage of 1.25 V should be indicated in the basic setting. Precise idle CO tuning (by turning the potentiometer) should be performed only in conjunction with CO measurement. The typical range is between 1.3 and 1.5 V.

Intake Air Temperature Sensor (in HLM)

Check function:

♦D♦200 – With the engine at operating temperature, the intake air temperature is at 50 to 70° C (ambient air temperature 23 ± 5° C). A display below –40° C indicates a break in the temperature sensor or in the supply wire to the DME control unit.

Resistance test:

Connect universal adapter, measure resistance across the terminals 44 and 26. For technical data, see Appendix.

Engine Temperature Sensor (Coolant)

Check function:

♦D♦200 – The indicated engine temperature should correspond to the coolant temperature. A value below –30° C indicates a break in the temperature sensor or in the wire to the DME control unit.

Resistance test:

Connect universal adapter to engine wire harness. Measure resistance across terminals 45 and 19. For technical data, see Appendix.

Engine Speed/Position Pulse Generator (Sensor)

Check function:

♦D♦200 – The engine speed signals can be monitored at starting speed or when the engine is running. Further tests are also possible with the oscilloscope ♦M♦23/24. Connect terminals for oscilloscope at component connector and start engine. An AC voltage characteristic curve with positive and negative half–waves should appear on the display screen.

Resistance test:

The resistance can be measured directly at the component connector (at the connector strip for injector valves). Refer to schematic for wiring diagram. For technical data, see Appendix.

Possible cause:

If wire, plug connection or resistance are OK.: check distance of the pulse generator to the incremental wheel on the vibration damper – 0.15 to 1.5 mm.
Setting at adjustable holder – 1.0 ± 0.3 mm.

Idle/Full Load Signal

Check function:

♦D♦200 – The signals are sent from the EML control unit to the DME. The full load signal is output before reaching the full load limit stop.

Technical Data

Resistance values measured at 23 ± 5° C air temperature

Engine type	M70 B50	Measurement notes
Injector valve	15...17 Ω	
Injector valve group (3 valves)	5.5 ± 0.5 Ω	
Pulse generator, engine speed/position	540 ± 50 Ω	
Pulse generator, cylinder reference point	0.1...1 Ω	
Engine temperature sensor		
at coolant temperature 20 ± 3° C	2.2...2.7 kΩ	
at coolant temperature 80 ± 3° C	300...360 Ω	
Intake air temperature sensor		
at air temperature 20 ± 3° C	2.2...2.7 kΩ	
at air temperature 50 ± 3° C	0.8...1.2 kΩ	
Fuel evaporation control valve	45 ± 20 Ω	
Ignition coil		
Primary winding (terminal 15/1)	0.5 ± 0.1 Ω	
Secondary winding (terminal 15/4)		
Manufacturer: May and Christe	9.0 ± 1.0 kΩ	
Manufacturer: Bosch	6.0 ± 1.0 kΩ	

Status inquiry 100	Nominal value	Signal comes from
Main relay control	when ignition switched on = EN	DME control unit
Emission control	during engine operation = ON, when oxygen sensor at operating temperature	DME control unit
Fuel evaporation control valve	at idle speed = CLOSED or ON, until clock cycle begins	DME control unit
Idle signal	at idle speed = ON	EML control unit
Full load signal	at idle speed = OFF, shortly before full load = ON	EML control unit

Status inquiry 200	Nominal value	Signal comes from
Engine speed in rpm 1)		DME control unit
Idle speed	700 ± 50	Control by EML
Cut–out speed	6000 ± 40	Control by EML
Load signal	2.0 ms ± 10%	DME control unit
Injection signal	3.8 ms ± 20% (semisequential)	DME control unit
Control unit supply	> 10 V	DME relay
Sensor voltage 1)	0.02...0.85 V in case of break or defective oxygen sensor = 0.45 V	Oxygen sensor
CO – Potentiometer (without cat.)	Basic setting = 1.25 V	CO potentiometer
Intake air temperature	dependent on ambient temperature, in case of break = approx. – 50° C	Intake air temperature sensor

Status inquiry 200	Nominal value	Signal comes from
Engine temperature	Dependent on engine operation, in case of break = approx. – 30° C	Engine temperature sensor
Ignition timing (angle) in ° crank angle before TDC 1)	15 ± 3 when idling	DME control unit

1) Oil temperature > 60° C or coolant > 80° C, no consumer load switched on

Notes

The following description refers to the digital motor electronics DME M1.2 for the 6-cylinder engine S 38 (3.6 l).

Functional Description

General

The digital motor electronic system (DME) enables precise control of injection and ignition under variable operating conditions.

This system can also operate in conjunction with other systems as follows:

- Instrument cluster
- Antitheft system DWA
- On-board computer BC

The digital motor electronics (DME) assumes functions which are listed briefly here and are described in more detail in the following.

- Injection control
- Ignition timing control
- Dwell angle control
- Adaptive emission control (lambda)
- Adaptive idle speed control
- Adaptive fuel tank ventilation
- Idle speed control
- Maximum speed limitation
- Cold start control
- Acceleration enrichment
- Dynamic deceleration fuel cut-out
- Emergency (limited) operation control
- Relay control
- Drive-away protection
- Self-diagnosis with defect code storage

The following components supply the DME control unit with input signals.

Components	Information
Digital motor electronics DME main relay	Voltage supply for a part of the digital motor electronics
Engine speed/position pulse generator	Engine speed and crankshaft position
Pulse generator, cylinder reference point	Feedback of ignition signal of a defined cylinder
Throttle switch	Position of throttle valve
Intake air temperature sensor	Temperature of intake air (in this way, the air density which is reduced as the temperature increases is taken into consideration)
Engine temperature sensor	Temperature of engine coolant
Hot-wire air mass meter	Quantity or mass of air drawn in
Oxygen sensor	Oxygen content of exhaust gas
Idle-CO potentiometer (without catalytic converter)	Variable resistor (varistor) for setting the CO-content at idle speed
Instrument cluster	Vehicle speed signal
Air conditioner, defroster or air recirculation switch	Air conditioner in operation
A/C compressor	A/C compressor in operation
Battery	Current system voltage
Terminal 15	Ignition switched on

Components	Information
On-board computer BC	Code entered (engine operation not possible)
Antitheft system DWA	Antitheft system armed (engine operation not possible)

The outputs of the digital motor electronics are switched via output stages. They supply the following components with the necessary signals:

Components	Information
Injector valves	Injection time
Ignition coil	Ignition voltage
Idle actuator	Pulse duty factor for degree of opening
Fuel evaporation control valve	Clock pulses for opening cycles
Digital motor electronics DME main relay	Voltage supply
A/C compressor relay	Cutting-out A/C compressor
Electrical fuel pump relay	Activation voltage
Air injection relay	Cold start (air pump starts up)
Instrument cluster	Engine speed signal, injection signal (for fuel consumption indicator), fault lamp (US only)
Air mass meter	Clear-burn

Ignition Timing Control

On the basis of the engine speed and load signals, the DME control unit determines the ignition angle (ignition timing) which is output via the ignition output stage. This function also takes into consideration other input signals such as the engine temperature, intake air temperature and position of the throttle valve.

Dwell Angle Control

The engine speed and the battery or voltage of the vehicle electrical system are the decisive factors with respect to the time available to build up the primary voltage in the ignition coil. From these variables, the digital motor electronics determines the necessary dwell angle, thus ensuring sufficient ignition voltage under all operating conditions.

Injection Control

The DME control unit calculates the correct injection time on the basis of the engine speed, air flow or air mass, throttle position, oxygen sensor voltage, engine temperature and intake air temperature. The mixture is varied by the opening time of the injector valves. The battery or system voltage is also taken into consideration in calculating the injection timing since the pull-up and drop-out times of the injector valves are extended as the voltage decreases.

Types of Injection

Each injector valve group is activated by one output stage (power amplifier). This arrangement makes it possible to divide the injection cycle into cylinder groups (semisequential injection).

Arrangement of injector valve groups:

6-cylinder: Cylinders 1+3+5 and cylinders 2+4+6

Semisequential Injection

As of an engine speed of 600 rpm, fuel is injected only once per 720° crank angle into one cylinder group. This facilitates precise metering of

the quantity of fuel since the injector valves need not be activated so often. It also enables restricted engine operation in the event of failure of one group.

Semisequential injection is only active when the DME control unit has received a signal from the pulse generator for the cylinder reference point. If this signal is not received during engine operation, the control system remains set to semisequential injection.

The cylinder reference point sensor is mounted on the injection lead of cylinder No. 6 at the distributor.

Parallel Injection

Parallel injection refers to simultaneous activation of all injector valves and takes place only when the cylinder reference point sensor has supplied no signal since the engine has been started. As soon as a signal is supplied, the system switches over to semisequential injection after the next deceleration phase.

Emission Control on Models with Catalytic Converter

To maintain the optimum degree of efficiency of the catalytic converter, this system aims at achieving the ideal air-fuel ratio ($\lambda = 1$) for combustion. The heated oxygen sensor is used for this purpose which measures the residual oxygen content in the exhaust gas and sends a corresponding voltage signal to the control unit. Here, the mixture composition is corrected if necessary by varying the ignition timing. In the case of failure of the oxygen sensor, the DME control unit controls the system with a substitute value (0.45 V).

Since a temperature of approx. 300° C is necessary for efficient operation of the oxygen sensor, power is supplied via a relay to a heating resistor in the oxygen sensor. The relay is activated by the DME control unit.

CO Potentiometer

On models not equipped with a catalytic converter, the CO setting can be corrected by means of a potentiometer (on the air mass meter). Particular care must be taken to ensure that the plug connection for the CO potentiometer is connected in the wiring harness.

Idle Speed Control

The idle speed is kept constant by an idle speed actuator which supplies the engine with the necessary amount of air. The control is effective as soon as the DME control unit detects the idle speed setting by way of the throttle switch or the throttle potentiometer. The preprogrammed engine speed values in the DME control unit are compared with the actual values and corrected. In this way, deviations in engine speed due to mechanical wear, leakages or different frictional resistances offered by the engine are compensated. Adjustment of the idle speed is therefore rendered unnecessary.

Vehicles with Air Conditioner System

On models equipped with an air conditioning system, the idle speed is increased after the system detects that the air conditioner has been switched on. After detecting the A/C compressor signals, the air required at idle speed is corrected to the optimum value.

Maximum Speed Limitation

The DME limits the maximum speed by cutting out the injector valves.

Cold Start Control

During the start phase, fuel is injected several times for each cylinder group per crankshaft revolution. The quantity of fuel is adapted dependent on the engine temperature and engine speed.

In addition, the ignition timing is shifted in the retard direction the higher the temperature and the lower the start engine speed.

During the initial period after engine start, the initially injected quantity is reduced depending upon the temperature and engine speed in order to avoid an excessively rich mixture. If start is repeated within one minuted, the complete initial start quantity is no longer injected.

During the warm-up phase, the injection timing and the ignition timing are correspondingly varied also dependent upon engine speed and temperature.

These measures are intended to ensure a lower fuel consumption, good throttle response and smooth engine operation.

Deceleration Fuel Cut-out

To reduce fuel consumption, the deceleration fuel cut-out is activated when the throttle valve is closed and the engine speed is above approx.1000...1200 rpm. The DME cuts out the injection and shifts the ignition timing in the retard direction until the engine speed has dropped below the cut-in speed. Below this engine speed, fuel injection cuts in once again and the ignition timing moves towards the advance direction once again. The cut-in speed is dependent upon the engine temperature and the drop in engine speed.

Acceleration Adaptation

In the case of a sudden change in the throttle position towards the full load direction, the digital motor electronics increases the quantity of injected fuel for the duration of the acceleration procedure and shifts the ignition timing in the advance direction. This function takes into account the criteria such as maximum torque, clean exhaust gas and no acceleration knocking.

Air Mass Measurement

During operation, a heated platinum wire is subjected to the flow of intake air in the inner tube of the hot-wire air mass meter (HLM). Heat is dissipated from the hot wire by the flow of air. This heat is compensated by correspondingly controlling the heating current. At the same time, the supplied current also flows via a precision resistor whose voltage drop represents a direct measure for the air mass which is drawn in. Air-temperature fluctuations are detected by way of a compensation resistor and taken into account in the measurement. After switching off the engine, an increased current surge is applied to the hot wire for approx. 1 second in order to burn the wire clean of impurities.

The advantages offered by the air mass meter can be found in the fact that, in this case, the air mass is measured and not the air flow (volume). Fluctuations in the air density (different air pressure due to differences in altitude and weather situation) are already taken into account during initial measurement. In addition, less resistance is offered to the flow of air in the air mass meter since it is not equipped with an air sensor plate which needs to be pressed down.

The voltage value of the air mass meter in conjunction with the engine speed is a direct measure for the engine load.

Throttle Switch

Mounted on the throttle valve shaft is a switch with two contacts which is operated in idle or full load position.

Resonance Charging

This control system is designed to improve the torque progression and engine performance. Vibrations in the air manifold are utilized to improve cylinder charging. The following components are used for this purpose:

- Control unit in the E-box
- Electrical switchover valve on left-hand side of engine
- Vacuum reservoir and non-return valve
- Vacuum cell on air manifold
- Resonance control valve in air manifold
- The resonance control valve is open in the rest status; the vacuum cell is vented. As soon as the full load contact is closed and the engine speed is below 4150 rpm or above 6750 rpm, the changeover valve is activated by the control unit. Vacuum is supplied to the vacuum cell, thus closing the resonance control valve. The non-return valve and the pressure reservoir maintain the vacuum supply even under the most unfavourable conditions (fast opening of throttle valve).

Air Injection

After a cold start at an engine temperature <40° C (<30° C for catalytic converter provisions) a pump injects filtered fresh air into the exhaust manifold for approx. 2.5 min (12 min for catalytic converter provision). As a result, the CO and HC contents in the exhaust gas are distinctly reduced.

The DME control unit activates the relay for the air pump (ground potential) which, in turn, switches on the magnetic clutch of the pump. At the same time, a changeover valve is switched which opens a shut-off valve by means of vacuum and enables the flow of air to the exhaust manifold. The air is routed via a non-return valve through a manifold and individual branches into the exhaust pipes.

Refer to BMW Technik 11 05 88 (1204) from Nov. 1988.

Drive-away Protection

When the drive-away protection function is activated on the on-board computer (code entered) or when the antitheft system DWA is armed, a signal (>10 V) is sent to the DME control unit which consequently switches off the ignition and injection.

This function can only be activated at an engine speed below 500 rpm.

Fuel Evaporation control on Models with Catalytic Converter

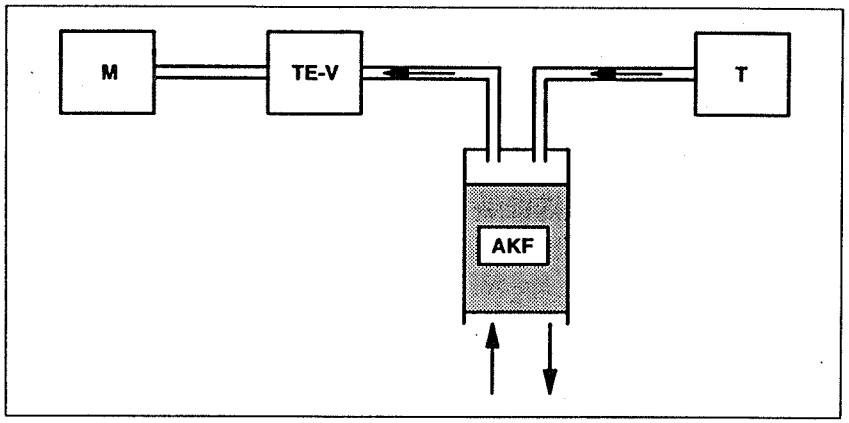

P32 12 001

M	Engine
TE-V	Fuel evaporation control valve
AKF	Activated carbon filter
T	Tank

The fuel evaporation control line of the fuel tank is connected to the activated carbon filter, in which the fuel vapours which accumulate in the tank are collected. The activated carbon filter is linked by means of a further line to the air manifold. A fuel evaporation control valve is installed in this line. When the fuel evaporation control valve is open, the vacuum in the air manifold draws in fresh air to the activated carbon filter. The fresh air flushes out the fuel collected in the filter and routes it to the engine to the combustion process.

Since this additionally supplied mixture influences combustion to a considerable extent, the fuel evaporation control valve consists of a non-return valve and an electrically operated valve. Due to the non-return valve, the fuel evaporation control valve is closed initially when no power is applied. The non-return valve prevents fuel collecting in the air manifold when the vehicle is parked. Electrical actuation takes place dependent on engine speed and load. The venting cycle (flushing phase) begins as soon as the emission (lambda) control system is active. On completion of one cycle, the valve is closed for approx. 1 min (rest phase).

Adaptations

The fuel-air mixture formed in the intake tract requires a certain period of time until it reaches the oxygen sensor in the form of exhaust gas. This time decreases as load and engine speed increase. For this reason, the response time of the emission control system is also dependent on load and engine speed. Mixture deviations detected by the oxygen sensor result in storage of adaptation values (learned correction values). By way of these adaptations, the injection can be set close to the nominal value in advance, thus achieving a reduction in the response time.

For instance, if the basic injection values for the DME characteristic map are too low during idling in order to maintain the ideal fuel-air mixture, the emission control system would have to constantly increase the injection timing. In this case, an adaptation value is learnt which corrects the basic injection value. The emission (lambda) control then only needs to undertake the fine adjustment.

Following adaptations are performed during engine operation:

Fuel Evaporation Control Adaptation

When the fuel evaporation control valve is open, an additional combustible mixture or air is supplied to the engine from the activated carbon filter. The shift in air-fuel ratio detected by the oxygen sensor is almost completely compensated by way of the fuel evaporation control adaptation value.

Idle Air Adaptation

In conjunction with the idle actuator, the idle air adaptation ensures constant idle speeds.

Idle Mixture Adaptation

If the idle signal is applied during the rest phase of the fuel evaporation control system, idle mixture adaptation takes place at certain intervals.

Part Load Mixture Adaptation

Also in the part load range, mixture adaptation takes place at certain intervals. The determined adaptation value is taken into account in all part load ranges.

The correction values stored in the control unit are intended as additional information **only in the case of acute engine problems**.

If problems occur during engine operation and no defect codes are stored in the defect code memory, the mixture adaptation value can be read out on the BMW Service Tester. These values can provide an indication as to which direction troubleshooting is to be continued.

The adaptation values are lost (forgotten) when the voltage supply to the DME is cut. This can lead to starting and idling problems. Depending on how far the adaptation values deviated from the basic values, a considerable period of time is required until the adaptation values are re-learned.

For this reason, idle operation or test runs are of little use in order to observe the change in the adaptation values.

Relay Control

The **DME main relay** is activated by the DME control unit as of ignition ON. After shutting down the engine, the relay remains on for a further 3 s in order to avoid post-ignition.

The **EKP relay** is activated as of ignition ON as soon as the DME control unit receives engine speed signals from the crankshaft pulse generator.

The **oxygen sensor heating relay** is activated as of ignition ON. It is switched off dependent on engine speed and load.

Emergency Operation Control

In the case of failure of sensors, substitute values are made available which enable continued yet restricted engine operation. Further engine operation is no longer possible if the engine speed sensor fails.

Component	Substitute measure
Intake air temperature sensor	Substitute value active
Engine temperature sensor	Substitute value active
Air mass meter	Substitute values are derived from the position of the throttle valve
Throttle switch	Substitute values for restricted engine operation
Engine speed/position inductive pulse generator (sensor)	None, engine operation no longer possible
Cylinder reference point inductive pulse generator (sensor)	Parallel injection
Oxygen sensor	Substitute value active, emission control not possible
CO potentiometer	Substitute value active

Self-diagnosis

The task of the self-diagnosis feature is to detect and store malfunctions in DME components, the associated lines or in the memory of the control unit (ROM, RAM).

The DME control unit makes available substitute values in the event of sensor failure (see troubleshooting - explanation). These substitute values are cancelled once again when normal operation can be resumed.

To facilitate fast and convenient troubleshooting, the stored defect codes or current values can be monitored from the DME control unit with the aid of the BMW DIAGNOSTIC SYSTEM.

For further information, refer to Notes on the BMW DIAGNOSTIC SYSTEM.

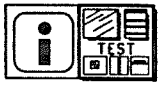

Notes on the BMW DIAGNOSTIC SYSTEM

Initialisation of Diagnostic Procedure

Communication with the control unit via the DIAGNOSTIC SYSTEM can be set up after selecting the DME on the BMW SERVICE TESTER. If data transfer is interrupted, information appears on the display screen indicating the possible cause:

- Ignition not switched on
- Voltage supply for control unit < 10 V
- DME relay not supplied with B+ (if not, bypass terminal 30 and 87)
- Control unit not connected
- Diagnostic link defective
- Data traffic inhibited by a defective control unit in the vehicle

Control Unit Assignment

The identification data appear first in order to determine whether the correct control unit is installed. The assignment can be made by means of the variant code (e.g. C01E) and the parts microfiche without having to remove the control unit.

Explanation of Control Unit Identification

The designation of the DME version and a note indicating with which row of cylinders communication is currently set up appear in the first line.

Further data are displayed in the sequence shown below:

- Variant: Model designation, engine type
- With or without emission control
- Transmission variant: HG – Manual transmission
  AG – Automatic transmission, hydraulic
  EH – Automatic transmission, electrohydraulic
- Type of fuel: leaded/unleaded or regular/premium
- Country version: International identification
- Control unit variant code: see parts microfiche
- BMW hardware and software number
- Bosch hardware and software number
- Production code: Used only on special request by 'Service Division'

Control Unit Identification

If necessary (factory requirement), the control unit can be quickly identified with the aid of these data. Automatic assignment of the diagnostic programs also takes place on the basis of these control unit numbers.

Effective Range of the Self-diagnosis Function

The self-diagnosis function is an aid to facilitate fast fault tracing in the vehicle's electrical/electronic systems. The BMW DIAGNOSTIC SYSTEM (Service Tester, MoDiC) provides the necessary access for the user. Self-diagnosis of the control units detects defects provided the necessary conditions for this have been fulfilled (time, temperature, load etc.). However, defects can only be registered when there is an electrical connection to the control unit. If this is not the case, the check must be performed using conventional methods (e.g. ignition voltage, fuel pressure, mechanical functions etc.).

Refer to Chapter – Troubleshooting – for list of defects which can be detected by the self-diagnostic system.

Storage of Defect Codes

Defect codes are stored after the engine has been started (exceptions defect codes 26 and 200). If several defect codes are detected, they appear in the order they first occurred.

The operating conditions as stored apply only to the conditions, under which the defect was detected for the first time. An intact voltage supply (charged battery) is the prerequisite for maintaining the memory contents.

Substitute values may be active if **no** malfunction can be found despite a defect code being stored. Troubleshooting should still, however, be carried out.

In US models, defects which influence the fuel/air mixture are indicated by a lamp (engine check) in the instrument cluster. As a check, this lamp lights constantly during the period of time between "ignition ON" and engine start.

If the defect code memory has no defect code stored although there is a defect in the vehicle, either the test conditions (e.g. temperature, time, load etc.) for defect detection were not fulfilled or it was technically not possible to store a defect code. A list of monitored components and functions is given in the Chapter – Component Testing –.

Defect Code Memory Monitoring ♦D♦900

The first step should always be to monitor the defect code memory. If one or several defect codes are stored, it is advisable to print out these data immediately (R key). Since it is often necessary during the testing procedure to cut the power supply or to disconnect the connector from the control unit, the contents of the defect code memory will be unintentionally deleted as a consequence.

The learned adaptation values are lost if the battery or the DME control unit is disconnected. This may result in difficulties in starting the engine or the engine may stall when idling. These problems are generally rectified after a short test drive.

Clearing the Defect Code Memory♦D♦999

Carry out this step only when **all** defects have been rectified or attributed to simulation. When the battery or the DME control unit are disconnected, **all** stored defect codes, the substitute values (if active) as well as the adaptation values are lost. Current defects cannot be cleared.

Status Monitoring ♦D♦100 and♦D♦200

Further current data can be called up independently of the defect code storage function. Current values or operating statuses are displayed. Refer to the Chapter – Component Testing – for the necessary comparison of nominal values.

Status inquiries can also be made from the blocks 100 and 200 as required. This selection (termed extract list) is made by entering the corresponding number followed by the acknowledgement. The selection is then displayed on the screen with the ♦⇓♦ key.

If status monitoring takes place while the engine is running, an engine speed of 2000 rpm should not be exceeded otherwise faults may be experienced in data transfer.

Component activation♦D♦300

To facilitate fast fault finding, various components can be activated from the Service Tester in conjunction with the DME control unit. The response of components in perfect working order, including their supply lines, can therefore be indicated by acoustic means.

Activation is only possible with the component connected. For this reason, signal testing is not possible at the disconnected component connector. This function provides a simple means of differentiation between defects in the control unit, on the supply wire or in the component itself. More detailed information on component activation is provided on the display screen.

Print out check code

If the printout of the identification page is requested, the printer prints out the check code. This printout contains the contents of the defect code memory in concise form and should be sent in together with the defective component in warranty cases.

Abbreviations

ABS	Antilock brake system
AG	Automatic transmission
ASC	Automatic stability control
CO	Carbon monoxide
DK	Throttle valve
DKB	Throttle-brake intervention
DKE	Throttle increase
DKR	Throttle reduction
DKV	Preset throttle value
DME	Digital motor electronics
DWA	Antitheft system
EGS	Electronic transmission control
EH	Electrohydraulic transmission
EKM	Electronic body module
EML	Electronic throttle control
EV	Injector valve(s)
HG	Manual transmission
HLM	Hot-wire air mass meter
Hz	Hertz
KD	Kick-down
KW	Crankshaft
LL	Idle
LMM	Air flow meter
MF	Microfiche
MSR	Engine drag torque control
MV	Solenoid valve
PWG	Pedal position sensor
RxD	Diagnosis initialisation line
SG	Control unit
TD	Engine speed signal once per ignition
TE	Fuel evaporation control
ti	Injection time
tL	Load signal
TL	Part load
TR	Engine speed signal once per revolution
TxD	Diagnostic data link
U-Batt	Battery voltage
U-Vers	Voltage supply
VL	Full load
WK	Torque converter clutch
ZAB	Ignition fade-out

Pin Assignments

Pin Assignments at 55-pin DME Control Unit Connector X6000

If no other measurement note is supplied, the data given under signal type will apply for idle engine operation.

Pin	Type	Description/function	Connection	Signal type	Tester display	Measurement notes
1	A	Ignition terminal 1	Ignition coil	Primary signal	Engine test, test step 05	max. 150 V / max.0.2 A
2	M	Ground ignition	Ground point	Ground		
3	A	EKP relay and crankshaft reference	Electrical fuel pump relay and electronic transmission control	Negative with overlaid engine speed signal	ON (command from control unit)	Crankshaft rotating as of start speed
4	A	Idle actuator opening winding	Idle actuator (LLS)	Negative clocked		Component activation
5	A	Evaporation control valve	Evaporation control valve	Negative clocked	CLOSED / OPEN	Perform component activation, negative => closed
6	A	Engine speed signal TD	Instrument cluster	Square-wave signal		One signal per ignition
7	E	Air mass meter signal	Hot-wire air mass meter	0...5 V	Load signal in ms	see status monitoring
8	E	Pulse generator, cylinder reference point (ignition)	Pulse generator, cylinder reference point (terminal B)		ON / OFF	see status monitoring
9		not used				
10	M	Ground, oxygen sensor	Oxygen sensor	Ground		
11		not used				
12		not used				

Pin	Type	Description/function	Connection	Signal type	Tester display	Measurement notes
13	E	RxD diagnostic data link	Diagnostic connector	> 10 V		When cover of diagnostic connector closed
14	M	Ground, injector valves	Ground point	Ground		
15	A	Fault lamp (US only)	Instrument cluster	Negative		Lights if emission-related defect code stored and for checking lamp at ignition ON
16	A	Injector valves (cyl. 1+3+5)	Injector valve	Negative clocked	Injection time t_i	Negative => Injector valve open, see component activation
17	A	Injector valves (cyl. 2+4+6)	Injector valve	Negative clocked	Injection time t_i	Negative => Injector valve open, see component activation
18	E	Permanent supply, terminal 30	Terminal 30	> 10 V		
19	M	Ground for electronics and sensor shielding	Negative point	Ground		
20		not used				
21		not used				
22	A	Idle actuator-closing winding	Idle actuator LLS	Negative clocked		see component activation
23	A	Air pump relay	Air pump relay	Negative		Negative => Air pump activated
24	M	Ground, remaining output stages (apart from ignition and injector valve)	Ground point	Ground		
25	A	Clear-burn	Air mass meter	Voltage increase for approx. 0.5 sec.		Signal output for 4 s after engine shut-down

Pin	Type	Description/function	Connection	Signal type	Tester display	Measurement notes
26	M	Air mass meter ground	Air mass meter	Ground		
27	E	Ignition, terminal 15	Ignition lock	>10 V		
28	E	Oxygen sensor signal	Oxygen sensor	Pulsating voltage 0.1...1.2 V	Voltage value	Can only be measured with engine running at operating temperature
29	A	Vehicle speed signal	Instrument cluster			
30		not used				
31	E	Pulse generator, cylinder reference point (ignition)	Pulse generator, cylinder reference point (terminal A)		ON / OFF	see status monitoring
32	A	ti-measuring signal (signal for fuel consumption indicator KVA)	Instrument cluster	Square-wave signal	Multimeter function pulse duration	Oscilloscope
33		not used				
34		not used				
35		not used				
36	A	DME main relay	DME main relay, terminal 85	Negative	ON	Diagnosis not possible if not fitted - connect jumper at relay terminal 30 and 87
37	E	> 10 V from DME main relay	Main relay, terminal 87	> 10 V	Voltage value	Perform status monitoring. Diagnosis not possible if no signal applied – connect jumper at terminal 30 and 87
38	E	Antitheft system DWA	Antitheft system DWA	Ground	OFF	If DWA armed, > 10 V applied
39	E	Programming voltage	Diagnostic connector	Voltage value		Activated only during programming

Pin	Type	Description/function	Connection	Signal type	Tester display	Measurement notes
40	E	A/C compressor switch	A/C compressor relay	Negative	ON/OFF	If compressor ON => Negative
41	E	Air conditioner switch	Air conditioner relay	> 10 V	ON	If relay ON => > 10 V
42		not used				
43	E	Idle-CO potentiometer	Air mass meter	0...5 V	Voltage value	
44	E	Intake air temperature sensor	Intake air temperature sensor	0...5 V	° C	Temperature-dependent
45	E	Engine temperature sensor	Engine temperature sensor	approx. 0 to 5 V	° C	Temperature-dependent
46		not used				
47	E	Inductive pulse generator (terminal A)	Pulse generator engine speed / position	AC voltage	Engine speed	between Pin 47 and 48 (can only be measured when crankshaft rotating)
48	E	Inductive pulse generator (terminal B)	Inductive pulse generator for engine speed and crankshaft position	AC voltage	Engine sped	Status monitoring as of start speed
49		not used				
50		not used				
51		not used				
52	E	Idle signal	Throttle switch	Negative	ON	at idle speed
53	E	Full load signal	Throttle switch	Negative	ON	Under full load (no full load => U-Batt)
54	E	Premium/regular switchover				
55	E/A	TxD diagnostic data link	Diagnostic connector	Negative		When cover of diagnostic connector closed

E = Input, A = Output, M = Ground

Adapter

Component	Connector No.	Description	Adapter number
Control unit	X1500	Universal adapter 55-pin	Universal adapter, HWB 81 12 9 425 091 Connection cable for peripherals 55-pin, HWB 81 12 9 428 907 Connection cable for control unit 55-pin, HWB 81 12 9 428 908
Pulse generator (sensor) cylinder reference, pulse generator (sensor), engine speed/position, idle actuator, throttle switch, oil level sensor	X1521, X1522, X1514, X1536, X1525	3-pin, black	V-adapter cable, Cartool 61 1 491
Injector valve, fuel evaporation control valve, temperature sensor	X1501...6, X1513, X1524	T-adapter 2-pin	Cartool 61 1 440
EKP relay/main relay	X1515, X1516	T-adapter	Cartool 61 30 10/20

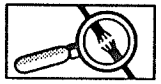

Troubleshooting

Notes

Relevant safety codes and accident prevention regulations must be observed when carrying out all tests and work on the engine electrical and electronic systems.

Caution!

Dangerous high voltage in the primary and secondary circuit of the ignition system.

Whenever possible, the battery should not be disconnected, otherwise the defect codes stored in **all** the control units will be deleted. Disconnect control units from the wire harness **only** when the engine is switched off.

Conduct wire tests **only** with the control unit or component connectors disconnected.

Test Equipment

The universal adapter can be used together with the 55-pin connection leads for picking-off signals from the DME control unit or from the engine wire harness. The universal adapter should only be connected between the control unit and wire harness when **no** diagnostic procedure (diagnostic connector not connected) is to be carried out since this can lead to malfunctions.

Use only suitable test leads, terminals and probe tips.

Display of a Stored Defect Code on the Screen.

- **Defect location:** The number of the defect code indicates the pin assignments at the control unit. The defect can be in the vicinity of the component, the corresponding wiring or in the control unit.
- **Type of defect:** Short-circuits, breaks, range transgressions or illogical functions are indicated.
- **Frequency:** Indication as to whether the defect is momentary or not (intermittent defect). Further indication is provided as to whether the defect occurred several times or only once.
- **Detected at:** Additional information on the operating status during defect detection.

Evaluation of Stored Defect Codes:

To facilitate effective troubleshooting, it is first advisable to print out the contents of the defect code memory.

During repairs, it is often necessary to disconnect plug connections, causing a defect code to be set in many cases. This may lead to incorrect diagnosis after monitoring the defect codes.

For this reason, all defect codes should be cleared after performing the necessary repairs (also EML, EGS). Monitor the defect code memory once again after a test run.

Some defects cause a defect code to be set in several systems (EML, EGS, ASC/MSR). Such interrelationships can be determined by comparing the ambient conditions (e.g. engine speed, temperature etc.).

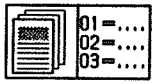

Defect Code Table

♦D♦900 Defect code memory – stored defect code:

Defect codes stored in defect code memory → Defect code 01 to Defect code 100

Malfunctions - defect codes not stored:

Engine operation not possible → Defect code 101

Defect code 01

♦D♦900 Defect code memory: 01 DME control unit

Explanation: This defect code is stored when the internal self-test provides a negative result.

Possible cause: Program error or disturbed program run in the DME control unit.

Corrective measures: Carry out test run after clearing the defect code memory. If defect code is set once again, the DME control unit must be replaced.

Defect code 03

♦D♦900 Defect code memory: 03 TR-signal / EKP relay

Explanation: This defect code is stored when a short occurs at the relay I (EKP) or on the TR-signal line (control unit Pin 3).

Troubleshooting: As displayed on screen.

Defect code 04

♦D♦900 Defect code memory: 04 Idle speed actuator (open)

Explanation: This defect code is stored when breaks or shorts occur at the idle speed actuator or on its supply wires (voltage supply and control lines). If the defect code 22 idle speed actuator (close) is also stored, then this is attributed to the link of both windings in the idle speed actuator.

Note: Defect codes 04 and 22 are also stored when engine operation is interrupted abruptly without the ignition being switched off beforehand. Such a defect is indicated by the identical operating statuses during defect code detection. This defect code can be ignored at an engine speed below 600 rpm.

Troubleshooting: As displayed on screen.

Defect code 05

♦D♦900 Defect code memory: 05 Fuel evaporation control valve

Explanation: This defect code is stored when a short occurs at the fuel evaporation control valve or on the supply wire.

Troubleshooting: As displayed on screen. For test values, refer to Chapter – Component Testing.

Defect code 07

♦D♦900 Defect code memory: 07 Air mass meter (HLM)

Explanation: This defect code is stored when a short or a break occurs at the air mass meter HLM. The DME control unit then operates with fixed substitute values – load signal tL = 3.0 ms and ignition angle = 18...20° crank angle – when engine is not running at idle speed.

Troubleshooting: As displayed on screen. For test values, refer to Chapter – Component Testing.

Defect code 10

♦D♦900 Defect code memory: 10 Emission (lambda) control

Explanation: This defect code is stored in the case of excessive deviations in the mixture composition (too rich or too lean mixture longer than 10 seconds). A prerequisite is that the oxygen sensor must be ready for operation.

Possible cause:

- Vehicle stops due to insufficient fuel (tank empty)
- No fuel delivery
- Incorrect fuel pressure
- Injector valves defective or coked
- Engine temperature sensor defective
- Secondary air in the intake duct
- Fuel evaporation control system defective

Troubleshooting: As displayed on screen. For test values, refer to Chapter – Component Testing.

Defect code 15

♦D♦900 Defect code memory: 15 Fault lamp

Explanation: Applicable to US models only. This defect code is stored when shorts occur at the fault lamp or on its supply wire.

Troubleshooting: As displayed on screen.

Defect code 16

♦D♦900 Defect code memory: 16 Fuel injector valves cyl. 1+3+5

Explanation: This defect code is stored when shorts or breaks occur at the fuel injector valves or breaks in their supply wires.

Note: In the case of a short at one fuel injector valve or on its supply wire, the entire injector valve group is always deactivated. Three cylinders remain in operation.

Troubleshooting: As displayed on screen.

Defect code 17

♦D♦900 Defect code memory: 17 Fuel injector valves cyl. 2+4+6

Explanation: Diagnosis as for defect code 16.

Defect code 22

♦D♦900 Defect code memory: 22 Idle speed actuator (close)

Note: Diagnosis as for defect code 04.

Defect code 23

♦D♦900 Defect code memory: 23 Air pump relay

Explanation: This defect code is stored when a short occurs at the relay or on the supply wire from the DME control unit Pin 23.

Troubleshooting: As displayed on screen.

Defect code 28

♦D♦900 Defect code memory: 28 Oxygen sensor

Explanation: This defect code is stored when a short or a break occurs at the oxygen sensor or on its supply wires.

A prerequisite for defect detection is an engine temperature of 70° C and a load signal of > 3 ms for > 3 sec.

Troubleshooting: As displayed on screen. For test values, refer to Chapter – Component Testing

Defect code 29

♦D♦900 Defect code memory: 29 Vehicle speed signal

Explanation: This defect code is stored when the following conditions are fulfilled simultaneously:
Engine speed > 4500 rpm,
Injection signal > 6.0 ms,
Speed signal < 3...5 km/h.

Troubleshooting: As displayed on screen.

Defect code 37

♦D♦900 Defect code memory: 37 Control unit supply

Explanation: This defect code is stored when the voltage supply exceeds 16 V. A drop in the voltage below 10 V is detected 3 min after the start at the earliest.

Possible cause:

- Contact resistances at the wire connections
- Insufficient V-belt tension
- Voltage regulator or alternator defective

Troubleshooting: As displayed on screen.

Defect code 40

♦D♦900 Defect code memory: 40 A/C compressor

Explanation: This defect code is stored when the control unit simultaneously receives the signals 'compressor in operation' (Pin 40) and 'A/C switch not pressed' (Pin 41). In this case, there is either a break at Pin 41 or a short to battery voltage at Pin 40.

Troubleshooting: As displayed on screen.

Defect code 43

♦D♦900 Defect code memory: 43 Idle CO potentiometer

Explanation: Only applicable to vehicles without catalytic converter. This defect code is stored when shorts or breaks occur at the potentiometer or on its supply wire. A substitute value of 1.25 V is used.

Troubleshooting: As displayed on screen. For test values, refer to Chapter – Component Testing.

Defect code 44

♦D♦ 900 Defect code memory: 44 Intake air temperature sensor

Explanation: This defect code is stored when shorts or breaks occur at the temperature sensor or on its supply wire. A prerequisite for detecting a break in the circuit is a 3 min interval after the start and the engine idling for a minimum of 30 sec. After the defect code is set, the system operates with a substitute value of 50° C.

Troubleshooting: As displayed on screen. For test values, refer to Chapter – Component Testing.

Defect code 45

♦D♦900 Defect code memory: 45 Engine temperature sensor

Explanation: This defect code is stored when shorts or breaks occur at the temperature sensor or on its supply wires. A prerequisite for detecting a short to positive or a break is an intake temperature of > 0° C.

A substitute value of 50° C is used in the case of defect.

Troubleshooting: As displayed on screen. For test values, refer to Chapter – Component Testing.

Defect code 51

♦D♦ 900 Defect code memory: 51 Ignition timing (ignition angle) intervention

Explanation: Only applicable to models equipped with EGS. This defect code is stored when a wire from the EGS control unit Pin 2 to the DME control unit Pin 51 has a short to ground (> 2.5 sec). In such a case, the ignition timing (angle) intervention occurs only once, the signal is then ignored.

Troubleshooting: As displayed on screen.

Defect code 52

♦D♦ 900 Defect code memory: 52 Idle switch

Explanation: This defect code is stored when the throttle switch or the wire to the DME control unit Pin 52 has a short to ground (corresponds to a closed idle contact). A prerequisite for this is that the engine is at operating temperature
(> 80° C) at an engine speed > 1200 rpm and a load signal > 3.5 ms.

Troubleshooting: As displayed on screen. For test procedure, refer to Chapter – Component Testing.

Defect code 53

♦D♦ 900 Defect code memory: 53 Full load switch

Explanation: This defect code is stored when the throttle switch or the wire to the DME control unit Pin 53 has a short to ground (corresponds to a closed full load contact). A prerequisite for this is a load signal < 3.5 ms and idle contact closed at the same time. If the load signal drops below 5.0 ms, the full load signal is ignored by the DME control unit.

Troubleshooting: As displayed on screen. For test procedure, refer to Chapter – Component Testing.

Defect code 100

♦D♦900 Defect code memory: 100 Output stage

Explanation: This defect code is stored when there is a loose contact at an output of an output stage. In the majority of cases, one of the defect codes 3, 4, 5, 16, 17, 22 or 23 also occurs. In these cases, the Defect code 100 is only a consequential defect code.

Defect code 101

Malfunction: Engine operation not possible

Prerequisites for troubleshooting:

– Start system OK. (Battery charged, ignition switch and starter OK. ...)
– Ground connection at battery, engine and body OK.
– Specified type of fuel in tank
– Engine OK. mechanically (timing, compression ...)

Troubleshooting:

a) Check voltage supply for DME control unit in accordance with schematics.

b) Check input signals.

– Check engine speed signals at start speed♦D♦200.
– Check air mass meter signals♦D♦200.

c) Check output signals.

– Activation of fuel pump relay in accordance with schematics
– Ignition output stage by means of ENGINE TEST, test step 09
– Injector valve with ♦D♦300

d) Fuel pressure test

For technical data, refer to Chapter – Component Testing.

e) Check EML for defects.

For technical data, refer to Chapter – Component Testing.

Component Testing

See Section 1210.3 for detailed description

Modifications compared to DME M1.2 12-cylinder

Component / function	Quick test after entering ♦D♦ ...	Defect code after storage
DME control unit		1
Ignition coil 1)	see engine test	
TR-signal/EKP relay		3
Idle speed actuator, open 1)	300	4
Fuel evaporation control valve 1)	100, 300	5
Air mass meter 1)	200	7
Emission control	100	10
Fault lamp		15
Injector valves 1)	300	16/17
Idle speed actuator, close 1)	300	22
Air pump relay	300	23
Oxygen sensor	100/200	28
Vehicle speed signal	see instrument cluster/CC	29
Voltage supply	200	37

Component / function	Quick test after entering ♦D♦ ...	Defect code after storage
LL CO potentiometer	200	43
Intake air temperature sensor 1)	200	44
Engine temperature sensor 1)	200	45
Pulse generator, engine speed/ position 1)	200	
Idle/full load signal	100	

1) The resistance values are listed in the Appendix.

TR-signal/EKP Relay

Check function:

The EKP relay switches on when the DME main relay is switched on and the DME control unit (Pin 3) outputs a ground signal with overlaid engine speed signal (once per crankshaft revolution). The prerequisite for this is the input signal from the engine speed sensor (pulse generator).

Possible cause:

- Wire to Ekp relay defective
- EKP relay or main relay defective
- Voltage supply for DME control unit, EKP relay or main relay defective
- No signal from engine speed/position pulse generator (sensor)

Air mass meter (HLM)

Check HLM signal:

♦D♦200 – The load signals provides an indication relating to the measured air throughput in the HLM, see Appendix for idle speed value. When air is injected in the HLM, the load signal can be seen to change when the engine is stationary.

Check 12 V voltage supply at the HLM Pin 2(+) and 4(–). Measure hot-wire resistance at Pin 5(+) and 3(–). For technical data, see Appendix.

Check burn-clear function:

Increase engine speed once to above 200 rpm (engine temperature >60° C). After switching off the engine, a voltage increase to approx. 3.5 V can be measured at the HLM between connection 1(+) and 5(–).

Air Pump

Check function:

The magnetic clutch for the air pump is activated below an engine temperature of 40° C (< 30° C for cat. provision) and at an engine speed < 4600 rpm (< 2600 rpm for cat. provision). Activation takes place by means of the air pump relay in the E-box for approx. 2.5 min (12 min for cat. provision).

Check vacuum supply for the changeover valve (approx. 200 mbar), otherwise the shut-off valves does not open.

A hose can be attached to the air cleaner housing (below the coolant expansion tank) to check whether the air pump is operating. The vacuum can be felt with the hand when the air pump is running.

Oxygen Sensor Heating

Note:

The voltage for the oxygen sensor heating is supplied via the EKP relay.

Intake Air Temperature Sensor

Check function:

♦D♦200 – The intake air temperature sensor is mounted in the air cleaner housing. The indicated temperature depends considerably on the ambient air temperature.
A display below –40° C indicates a break in the temperature sensor or on the supply wire to the DME control unit.

For resistance values, see Technical Data in Appendix.

Throttle Switch

Check function:

♦D♦100 – The setting of the idle and full load switch can be varied by correspondingly turning the switch housing. The idle contact should open as soon as the throttle is moved. The full load contact is closed already before reaching the full load limit stop.

Technical Data

Resistance values measured at 23 ±5° C air temperature

Engine type	S38 B36
Injector valve	15...17 Ω
Injector valve group (3 valves)	5.5 ± 0.5 Ω
Pulse generator, engine speed/ position	540 ± 50 Ω
Pulse generator, cylinder reference point	0.1...1 Ω
Engine temperature sensor	
at coolant temperature 20 ± 3° C	2.2...2.7 kΩ
at coolant temperature 80 ± 3° C	300...360 Ω
Intake air temperature sensor	
at air temperature 20 ± 3° C	2.2...2.7 kΩ
at air temperature 50 ± 3° C	760...910 Ω
Fuel evaporation control valve	45 ± 20 Ω
Ignition coil	
Primary winding (terminal 15/1)	0.5 ± 0.1 Ω
Secondary winding (terminal 1/4)	9.0 ± 1.0 kΩ
Idle adjuster (per winding)	20 ± 5 Ω
Hot wire in HLM	3...5 Ω
Switchover valve	20...40 Ω
Magnetic clutch air pump	5 ± 2 Ω

Overview of Defect Codes and Component Tests

Status monitoring 200	Nominal values
Engine speed in rpm 1)	
Idle speed	890± 50
Cut-out speed	6900± 40
Load signal 2)	2.3 ms ± 10%
Injection signal 2) (semisequential)	4.5 ms ± 10%
Control unit supply	>10 V
Sensor voltage 2)	0.02...0.85 V, in the case of break or defective oxygen sensor = 0.45 V
Intake air temperature	dependent on ambient temperature, in case of break = approx.–40° C
Engine temperature	dependent on engine operation, in case of break = approx.–30° C
Ignition angle in ° crank angle before TDC 1)	1 ± 3 when idling
CO potentiometer (without cat.)	Basic setting = 1.25 V
CO volume % (cat.) 2) 3)	0.8 ± 0.4
CO volume % (without cat.) 2)	1.0 ± 0.5
max. permissible deviation per cylinder	± 0.2%

1) Oil temperature > 60° C or coolant > 80° C, no consumer load switched on.
2) At idle speed, operating temperature as under 1)
3) Measured ahead of the catalytic converter - Engine test, test step 06

Notes

The following description refers to the digital motor electronics DME M1.3 for the 4-cylinder engine M 40 (1.6 l and 1.8 l).

Functional Description

General

The digital motor electronics system (DME) enables precise control of injection and ignition under variable operating conditions.

This system can also operate in conjunction with other systems asfollows:

- Instrument cluster K
- Antitheft system DWA
- On-board computer BC

These systems can influence the entire engine control system dependent on requirements.

The digital motor electronics (DME) assumes functions which are listed briefly here and are described in more detail in the following.

- Injection control
- Ignition timing
- Dwell angle
- Adaptive emission control (lambda)
- Adaptive idle speed control
- Adaptive fuel tank ventilation
- Idle speed control
- Maximum engine speed limitation
- Cold start control
- Acceleration enrichment
- Dynamic deceleration fuel cut-out
- Emergency (limited) operation control
- Characteristic map switchover for EH transmission
- Relay control
- Drive-away protection
- Self-diagnosis with defect code storage

The following components supply the DME control unit with input signals.

Components	Information
Digital motor electronics DME main relay	Voltage supply for a part of the digital motor electronics
Engine speed/position pulse generator	Engine speed and position of crankshaft
Pulse generator, cylinder reference point	Feedback of ignition signal of a defined cylinder
Throttle switch	Position of throttle valve
Intake temperature sensor	Temperature of intake air (in this way, the air density which is reduced as the temperature increases is taken into consideration)
Engine temperature sensor	Temperature of engine coolant
Air flow meter	Flow or mass of intake air
Oxygen sensor	Oxygen content of exhaust gas
Idle-CO potentiometer (without catalytic converter)	Variable resistor (varistor) for setting the CO-content at idle speed
Instrument cluster	Vehicle speed signal
Air conditioner, defroster or air recirculation switch	Air conditioner in operation
A/C compressor	A/C compressor in operation
Battery	Current system voltage
Terminal 15	Ignition switched on

Components	Information
On-board computer BC	Code entered (engine operation not possible)
Antitheft system DWA	Antitheft system armed (engine operation not possible)

The outputs of the digital motor electronics are switched via output stages. They supply the following components with the necessary signals:

Components	Information
Injector valves	Injection time
Ignition coil	Ignition voltage
Idle actuator	Pulse duty factor for degree of opening
Fuel evaporation control valve	Clock pulses for opening cycles
Digital motor electronics DME main relay	Voltage supply
A/C compressor relay	Cutting-out A/C compressor
Electrical fuel pump relay	Activation voltage
Oxygen sensor heating relay	Activation voltage
Instrument cluster	Engine speed signal, injection signal (for fuel consumption indicator), fault lamp (US only)
Air flow meter	Voltage supply 5 V
Kick-down prevent	Current operating status does not permit downshift since engine speed is too high

Ignition Timing Control

On the basis of the engine speed and load signals, the DME control unit determines the ignition angle (ignition timing) which is output via the ignition output stage. This function also takes into consideration other input signals such as the engine temperature, intake air temperature, throttle position and signals from the electronic throttle control EML, the automatic stability control ASC, engine drag torque control MSR and from the electronic transmission control EGS.

Dwell Angle Control

The engine speed and the battery or system voltage decide on the time available to build up the primary voltage in the ignition coil. From these variables, the digital motor electronics determines the necessary dwell angle, thus ensuring a sufficient ignition voltage under all operating conditions.

Injection Control

The DME control unit calculates the correct injection time on the basis of the engine speed, air flow or mass, throttle position, oxygen sensor voltage, engine temperature and intake air temperature. The mixture is varied by the opening time of the injector valves. The battery or system voltage is also taken into consideration in calculating the injection timing since the pull-up and drop-out times of the injector valves are extended as the voltage decreases.

Types of Injection

Each injector valve group is activated by one output stage (power amplifier). This arrangement makes it possible to divide the injection cycle into cylinder groups (semisequential injection).

Arrangement of injector valve groups:

4-cylinder: cylinders 1+3 and 2+4

Semisequential Injection

As of an engine speed of 600 rpm, fuel is injected only once per 720° into one cylinder group. This facilitates precise metering of the quantity of fuel since the injector valves need not be activated so often. It also enables restricted engine operation in the event of failure of one group.

Semisequential injection is only active when the DME control unit has received a signal from the pulse generator for the cylinder reference point. If this signal is not received during engine operation, the control system remains set to semisequential injection.

The cylinder reference point sensor is mounted on the ignition lead of cylinder No. 4 at the distributor.

Parallel Injection

Parallel injection refers to simultaneous activation of all injector valves and takes place only when the cylinder reference point sensor has applied no signal since starting the engine. As soon as a signal is applied, the system switches over to semisequential injection after the next deceleration phase.

Emission Control on Models with Catalytic Converter

To maintain the optimum degree of efficiency of the catalytic converter, this systems aims at achieving the ideal air-fuel ratio ($\lambda = 1$) for combustion. The heated oxygen sensor is used for this purpose which measures the residual oxygen content in the exhaust gas and sends a corresponding voltage signal to the control unit. Here, the mixture composition is corrected if necessary by varying the injection timing. In the case of failure of the oxygen sensor, the DME control unit controls the system with a substitute value (0.45 V) preprogrammed in the control unit.

Since a temperature of approx. 300° C is necessary for efficient operation of the oxygen sensor, power is supplied via a relay to a heating resistor in the oxygen sensor. The relay is activated by the DME control unit.

CO Potentiometer

On models not equipped with a catalytic converter, the CO setting can be corrected by means of a potentiometer (on the air flow meter). Particular care must be taken to ensure that the plug connection for the CO potentiometer is connected in the wiring harness.

Idle Speed Control

The idle speed is kept constant by an idle speed actuator which supplies the engine with the necessary amount of air. The control is effective as soon as the DME control unit detects the idle speed position by way of the throttle switch or the throttle potentiometer. The preprogrammed engine speed values in the DME control unit are compared with the actual values and corrected. In this way, deviations in engine speed due to mechanical wear, leakage or different frictional resistances offered by the engine are compensated. Adjustment of the idle speed is therefore rendered unnecessary.

Vehicles with Air Conditioner system

On models equipped with an air conditioning system, the idle speed is increased after the system detects that the air conditioner has been switched on. After detecting the A/C compressor signal, the air required at idle speed is corrected to the optimum value.

Maximum Speed Limitation

The DME limits the maximum engine speed by cutting out the injector valves.

Cold Start Control

During the start phase, fuel is injected several times for each cylinder group per crankshaft revolution. The quantity of fuel is adapted dependent on the engine temperature and engine speed.

In addition, the injection timing is shifted in the retard direction the higher the temperature and the lower the start engine speed.

During the initial period after engine start, the initially injected quantity is reduced depending upon the temperature and engine speed in order to avoid an excessively rich mixture. If start is repeated within one minute, the complete initial start quantity is no longer injected.

During the warm-up phase, the injection timing and the ignition timing are correspondingly varied also dependent upon engine speed and temperature.

These measures are intended to ensure a lower fuel consumption, good throttle response and smooth engine operation.

Deceleration Fuel Cut-out

To reduce fuel consumption, the deceleration fuel cut-out is activated when the throttle valve is closed and the engine speed is above approx. 1000...1200 rpm. The DME cuts out the injection and shifts the ignition timing in the retard direction until the engine speed has dropped below the cut-in speed. Below this engine speed, fuel injection cuts in once again and the ignition timing moves towards the advance direction once again. The cut-in speed is dependent upon the engine temperature and the drop in engine speed.

Acceleration Adaptation

In the case of a sudden change in the throttle position towards the full load direction, the digital motor electronics increases the quantity of injected fuel for the duration of the acceleration procedure and shifts the ignition in the advance direction. This function takes into account the criteria such as maximum torque, clean exhaust gas and no acceleration knocking.

Air Flow Measurement

The air drawn in by the engine is routed through the air flow meter. The flow of air acts against a spring-loaded air vane. The deflection of the air vane is a measure for the current air flow. The deflection is converted by a potentiometer, mounted on the outside, to a proportional voltage value and transferred to the digital motor electronics.

Throttle Switch

Mounted on the throttle valve shaft is a switch with two contacts which is operated in idle or full load position.

Fuel Evaporation Control on Models with Catalytic Converter

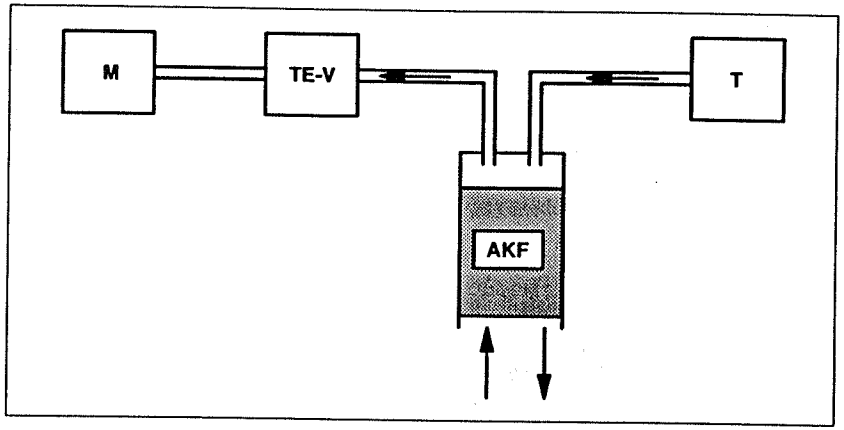

P32 12 001

M	Engine
TE-V	Fuel evaporation control valve
AKF	Activated carbon filter
T	Tank

The fuel evaporation control line of the fuel tank is connected to the activated carbon filter, in which the fuel vapours which accumulate in the tank are collected. The activated carbon filter is linked by means of a further line to the air manifold. A fuel evaporation control valve is installed in this line. When the fuel evaporation control valve is open, the vacuum in the air manifold draws in fresh air to the activated carbon filter. The fresh air flushes out the fuel collected in the filter and routes it to the engine, i.e. to the combustion process.

Since this additionally supplied mixture influences combustion to a considerable extent, the fuel evaporation control valve consists of a non-re-

turn valve and an electrically operated valve. Due to the non-returnvalve, the fuel evaporation control valve is closed initially when no power is applied. The non-return valve prevents fuel collecting in the air manifold when the vehicle is parked. Electrical actuation takes place dependent on engine speed and load. The venting cycle (flushing phase) begins as soon as the emission (lambda) control system is active. On completion of one cycle, the valve is closed for approx. 1 min (rest phase).

Adaptations

The fuel-air mixture formed in the intake tract requires a certain period of time until it reaches the oxygen sensor in the form of exhaust gas. This time decreases as load and engine speed increase. For this reason, the response time of the emission control system is also dependent on load and engine speed. Mixture deviations detected by the oxygen sensor result in storage of adaptation values (learned correction values). By way of these adaptations, the injection can be set close to the nominal values in advance, thus achieving a reduction in the response time.

For instance, if the basic injection values for the DME characteristic map are too low during idling in order to maintain the ideal fuel-air mixture, the emission control system would have to constantly increase the injection timing. In this case, an adaptation value is learnt which corrects the basic injection value. The emission (lambda) control then only needs to undertake the fine adjustment.

Following adaptations are performed during engine operation:

Fuel Evaporation Control Adaptation

When the fuel evaporation control valve is open, an additional combustible mixture or air is supplied to the engine from the activated carbon filter. The shift in the air-fuel ratio detected by the oxygen sensor is almost completely compensated by way of the fuel evaporation control adaptation value.

Idle Air Adaptation

In conjunction with the idle actuator, the idle air adaptation ensures constant idle speeds.

Idle Mixture Adaptation

If the idle signal is applied during the rest phase of the fuel evaporation control system, idle mixture adaptation takes place at certain intervals.

Part Load Mixture Adaptation

Also in the part load range, mixture adaptation takes place at certain intervals. The determined adaptation value is taken into account in all part load ranges.

Relay Control

The **DME main relay** is activated by the DME control unit as of ignition ON. After shutting down the engine, the relay remain on for a further 3 s in order to avoid post-ignition.

The **EKP relay** is activated as of ignition ON as soon as the DME control unit receives engine speed signals from the crankshaft pulse generator.

The **oxygen sensor heating relay** is activated as of ignition ON. It is switched off dependent on the engine speed and load.

Emergency Operation Control

In the case of failure of sensors, substitute values are made available which enable continued yet restricted engine operation. Further engine operation is no longer possible if the engine speed sensor fails.

Component	Substitute measure
Intake air temperature sensor	Substitute value active
Engine temperature sensor	Substitute value active
Air flow meter	Substitute values are derived from the position of the throttle valve
Throttle switch	Substitute values for restricted engine operation
Inductive sensor, engine speed/position	None, engine operation no longer possible
Inductive sensor, cylinder reference point	Parallel injection
Oxygen sensor	Substitute value active, emission control not possible
CO potentiometer	Substitute value active

Drive-away Protection

When the drive-away protection function is activated on the on-board computer (code entered) or when the antitheft system DWA is armed, a signal (>10 V) is sent to the DME control unit which consequently switches off the ignition and injection.

This function can only be activated at an engine speed below approx. 500 rpm.

Kick-down Prevent

This function is provided in this form only on the DME M1.3 and hydraulic automatic transmission (not EH transmission). As of a defined vehicle speed (dependent on engine and rear axle gear ratio) a downshift from 4th to 3rd gear is prevented in that the DME control unit deactivates a solenoid valve in the automatic transmission.

Self-diagnosis

The task of the self-diagnosis feature is to detect and store malfunctions in DME components, the associated lines or in the memory of the control unit (ROM, RAM).

The DME control unit makes available substitute values in the event of sensor failure (see troubleshooting - explanation). These substitute values are cancelled once again as soon as normal operation can be resumed.

To facilitate fast and convenient troubleshooting, the stored defect codes or current values can be monitored from the DME control unit with the aid of the BMW DIAGNOSTIC SYSTEM.

For further information, refer to Notes on the BMW DIAGNOSTIC SYSTEM.

Notes on the BMW DIAGNOSTIC SYSTEM

Initialization of Diagnostic Procedure

Communication with the control unit via the DIAGNOSTIC SYSTEM can be set up after selecting the DME on the BMW Service Tester. If data transfer is interrupted, information appears on the display screen indicating the possible cause:

- Ignition not switched on
- Voltage supply for control unit < 10 V
- DME relay not supplied with B+ (if necessary, bypass terminal 30 and 87)
- Control unit not connected
- Diagnostic link defective
- Data traffic inhibited by a defective control unit in the vehicle

Control Unit Assignment

The identification data appear first in order to determine whether the correct control unit is installed. The assignment can be made by means of the variant code (e.g. C01E) and the parts microfiche without having to remove the control unit.

Explanation of Control Unit Identification

The designation of the DME version and an indication referring to the row of cylinders with which communication is currently set up appear in the first line.

Further data are displayed in the sequence shown below:

- Variant: Model designation, engine type
- With or without emission control
- Transmission variant: HG – Manual transmission
  AG – Automatic transmission, hydraulic
  EH – Automatic transmission, electronic-hydraulic
- Type of fuel: leaded/unleaded or regular/premium
- Country version:international identification
- Control unit variant code:see parts microfiche
- BMW hardware and software number
- Bosch hardware and software number
- Production code: Used only on special request by 'Service Division'

Effective Range of the Self-diagnosis Function

The self-diagnosis function is an aid to facilitate fast fault tracing in the vehicle's electrical/electronic systems. The BMW DIAGNOSTIC SYSTEM (Service Tester, MoDiC) provides the necessary access for the user. Self-diagnosis of the control units detects defects provided the necessary conditions for this have been fulfilled (time, temperature, load etc.). However, defects can only be registered when there is an electrical connection to the control unit. If this is not the case, the check must be performed using conventional methods (e.g. ignition voltage, fuel pressure, mechanical functions etc.).

Refer to Chapter – Troubleshooting – for list of defects which can be detected by the self-diagnosis system.

Storage of Defect Codes

Defect codes are stored after the engine has been started (exceptions defect codes 26 and 200). If several defect codes are detected, they appear in the order they first occurred.

The operating conditions as stored apply only to conditions, under which the defect was detected for the first time. An intact voltage supply (battery charged) is the prerequisite for maintaining the memory contents.

Substitute values may be active if **no** malfunctions can be found despite a defect code being stored. Troubleshooting should still, however, be carried out.

In US models, defects which influence the fuel/air mixture are indicated by a lamp (engine check) in the instrument cluster. As a check, this lamp lights constantly during the period of time between "ignition ON" and engine start.

If the defect code memory has no defect code stored although there is a defect in the vehicle, either the test conditions (e.g. temperature, time, load etc.) for defect detection were not fulfilled or it was technically not possible to store a defect code. A list of monitored components and functions is given in the Chapter – Component Testing.

Defect Code Memory Monitoring-♦D♦900

The first step should always be to monitor the defect code memory. If one or several defect codes are stored, it is advisable to print out these data immediately (R key). Since it is often necessary during the testing procedure to cut the power supply or to disconnect the connector from the control unit, the contents of the defect code memory will be unintentionally deleted as a consequence.

The learned adaptation values are lost if the battery or the DME control unit is disconnected. This may result in difficulties in starting the engine or the engine may stall when idling. These problems are generally rectified after a short test drive.

Clearing the Defect Code Memory -♦D♦999

Carry out this step only when **all** defects have been rectified or attributed to simulation. When the battery or the DME control unit are disconnected, **all** stored defect codes, the substitute values (if active) as well as the adaptation values are lost. Current defects cannot be cleared.

Status Monitoring -♦D♦100 and♦D♦200

Further current data can be called up independently of the defect code storage function. Current values or operating statuses are displayed. Refer to Chapter – Component Testing – for the necessary comparison of nominal values.

Status inquiries can also be made from the blocks 100 and 200 as required. This selection (termed extract list) is made by entering the corresponding number followed by the acknowledgement. The selection is then displayed on the screen♦⇓♦ key.

Component Activation -♦D♦300

To facilitate fast fault finding, various components can be activated from the Service Tester in conjunction with the DME control unit. The response of components in perfect working order, including their supply lines, can therefore be indicated by acoustic means.

Activation is only possible with the component connected. For this reason, signal testing is not possible at the disconnected component connector. This function provides a simple means of differentiation between defects in the control unit, on the supply wire or in the component itself. More detailed information on component activation is provided on the display screen.

Print out Check Code

If a printout of the identification page is required, the printer prints out the check code. This printout contains the contents of the defect code memory in concise form and should be sent in together with the defective component in warranty cases.

Abbreviations

ABS	Antilock brake system
AG	Automatic transmission
ASC	Automatic stability control
CO	Carbon monoxide
DK	Throttle valve
DKB	Throttle-brake intervention
DKE	Throttle increase
DKR	Throttle reduction
DKV	Preset throttle valve
DME	Digital motor electronics
DWA	Antitheft system
EGS	Electronic transmission control
EH	Electrohydraulic transmission
EKM	Electronic body module
EML	Electronic throttle control
EV	Injector valve(s)
HG	Manual transmission
HLM	Hot-wire air mass meter
Hz	Hertz
KD	Kick-down
KW	Crankshaft
LL	Idle
LMM	Air flow meter
MF	Microfiche
MSR	Engine drag torque control
MV	Solenoid valve
PWG	Pedal position sensor
RxD	Diagnosis initialization line
SG	Control unit
TE	Fuel evaporation control
TD	Engine speed signal once per ignition
ti	Injection time
tL	Load signal
TL	Part load
TR	Engine speed signal once per revolution
TxD	Diagnostic data link
U-Batt	Battery voltage
U-Vers	Voltage supply
VL	Full load
WK	Torque converter clutch
ZAB	Ignition fade-out

Pin Assignments

Pin Assignments at the 55-pin DME Control Unit Connector X6000

If no other measurement note is specified, the data given under signal type will apply for idle engine operation.

Pin	Type	Description/function	Connection	Signal type	Tester display	Measurement notes
1	A	Ignition terminal 1	Ignition coil	Primary signal	Engine test, test step 05	max. 150 V / max. 0.2 A
2	M	Ground ignition	Ground point	Ground		
3	A	EKP relay and crankshaft reference	Electrical fuel pump relay and electronic transmission control	Negative with overlaid engine speed signal	ON (command from control unit)	Crankshaft rotating as of start speed
4	A	Idle actuator, opening winding	Idle actuator LLS	Negative clocked		Component activation
5	A	Fuel evaporation control valve	Fuel evaporation control valve	Negative clocked	CLOSED / OPEN	Perform component activation, negative => closed
6	A	Engine speed signal TD	Instrument cluster	Square-wave signal		One signal per ignition
7	E	Air flow meter signal	Air flow meter	0..5 V	UP/UV ratio, load signal in ms	see status monitoring
8	E	Pulse generator, cylinder reference point (ignition)	Pulse generator, cylinder reference point (terminal B)		ON / OFF	see status monitoring
9		not used				
10	M	Ground, oxygen sensor	Oxygen sensor	Ground		
11		not used				
12	A	Voltage supply LMM	Air flow meter LMM	approx. 5 V		

Pin	Type	Description/function	Connection	Signal type	Tester display	Measurement notes
13	E	RxD diagnosis data link	Diagnostic connector	> 10 V		When cover of diagnostic connector closed
14	M	Ground, injector valves	Ground point	Ground		
15	A	Fault lamp (US only)	Instrument cluster	Negative		Lights if emission-related defect code stored and for checking lamp at ignition ON
16	A	Injector valves (cylinder 2+4, as of model year '89 cylinder 1+3)	Injector valve	Negative clocked	Injection time t_i	Negative => Injector valve open, see component activation
17	A	Injector valves (cylinder 1+3, as of model year '89 cylinder 2+4)	Injector valve	Negative clocked	Injection time t_i	Negative => Injector valve open, see component activation
18	E	Permanent supply terminal 30	Terminal 30	> 10 V		
19	M	Ground for electronics and sensor shielding	Negative point	Ground		
20		not used				
21		not used				
22		not used				
23	A	Oxygen sensor heating	Oxygen sensor heating relay, terminal 85	Negative	ON	Negative => Sensor heating activated
24	M	Ground, remaining output stages (apart from ignition and injector valve)	Ground point	Ground		
25		not used				

Pin	Type	Description/function	Connection	Signal type	Tester display	Measurement notes
26	M	Ground, air flow meter	Air flow meter	Ground		
27	E	Ignition, terminal 15	Ignition lock	>10 V		
28	E	Oxygen sensor signal	Oxygen sensor	Pulsating voltage 0.1...1.2 V	Voltage value	can only be measured with engine running at operating temperature
29	E	Vehicle speed signal	Instrument cluster	Square-wave signal	km/h	
30		not used				
31	E	Pulse generator, cylinder reference point (ignition)	Pulse generator, cylinder reference point (terminal A)		ON / OFF	see status monitoring
32	A	ti-measuring signal (signal for fuel consumption indicator KVA)	Instrument cluster	Square-wave signal	Multimeter function pulse duration	Oscilloscope
33	A	Solenoid valve kick-down prevent	Kick-down prevent	U-Batt		(only in hydraulic automatic transmission), see component activation
34		not used				
35		not used				
36	A	DME main relay	DME main relay, terminal 85	Negative	ON	Diagnosis not possible if not fitted – connect jumper at relay terminal 30 and 87
37	E	> 10 V from DME main relay	Main relay, terminal 87	> 10 V	Voltage value	Perform status monitoring. Diagnosis not possible if no signal applied – connect jumper at terminal 30 and 87.
38	E	DWA	Antitheft system DWA	Ground	OFF	if DWA armed, > 10 V applied

Pin	Type	Description/function	Connection	Signal type	Tester display	Measurement notes
39	E	Programming voltage	Diagnostic connector	Voltage value		Activated only during programming
40	E	A/C compressor switch	A/C compressor relay	Negative	ON / OFF	if compressor ON => Negative
41	E	Air conditioner switch	Air conditioner relay	> 10 V	ON	if relay ON => > 10 V
42	E	Drive range P/N (AG only)	Gear selector lever switch	Negative	ON	when in P/N position
43	E	Idle-CO potentiometer	Air flow meter	0...5V	Voltage value	
44	E	Intake air temperature sensor	Intake air temperature sensor	0...5 V	° C	Temperature-dependent
45	E	Engine temperature sensor	Engine temperature sensor	approx. 0 to 5 V	° C	Temperature-dependent
46		not used				
47	E	Inductive pulse generator (terminal A)	Pulse generator (sensor) engine speed/position	AC voltage	Engine speed	Between Pin 47 and 48 (can only be measured when crankshaft rotating)
48	E	Inductive pulse generator (terminal B)	Inductive pulse generator (sensor) for engine speed and crankshaft position	AC voltage	Engine speed	Status monitoring as of start speed
49		not used				
50		not used				
51	E	Ignition timing intervention	Electronic transmission control	Negative	ON	Only active during shift procedure
52	E	Idle signal	Throttle switch	Negative	ON	When idling
53	E	Full load signal	Throttle switch	Negative	ON	Under full load (no full load => U-Batt)

Pin	Type	Description/function	Connection	Signal type	Tester display	Measurement notes
54	E	Torque converter clutch WK	Electronic transmission control EGS	Negative	ON (with engine running)	If WK engaged, see status monitoring
55	E/A	TxD diagnostic data link	Diagnostic connector	Negative		When cover of diagnostic connector closed

E = Input, A = Output, M = Ground

Adapter

Component	Connector No.	Description	Adapter number
Control unit	X1500	Universal adapter 55-pin	Universal adapter, HWB 81 12 9 425 091 Connection cable for peripherals 55-pin, HWB 81 12 9 428 907 Connection cable for control unit 55-pin, HWB 81 12 9 428 908
Pulse generator (sensor) cylinder reference, pulse generator (sensor) engine speed/position, idle actuator, throttle switch, oil level sensor	X 1521/X 1522 X 9514, X 9536	3-pin, black	V-adapter cable, Cartool 61 1 491
Injector valve, fuel evaporation control valve, temperature sensor	X 1501...6, X 1513, X 1524	T-adapter 2-pin	Cartool 61 1 440
EKP relay/main relay	X 1515, X 1516	T-adapter	Cartool 61 30 10/20

Troubleshooting

Notes

Relevant safety codes and accident prevention regulations must be observed when carrying out all tests and work on the engine electrical and electronic systems.

Caution!

Dangerous high voltage in the primary and secondary circuit of the ignition system.

Wherever possible, the battery should not be disconnected, otherwise the defect codes stored in **all** the control units will be deleted.

Disconnect control units from the wire harness **only** when the ignition is switched off.

Conduct wire tests **only** with the control unit or component connectors disconnected.

Test Equipment

The schematics can be found in the corresponding files in Section 1210.5.

The universal adapter with the corresponding connection leads should be used for picking off signals from the DME control unit or from the engine wire harness.

The universal adapter should only be connected between the control unit and wire harness when **no** diagnostic procedure (diagnostic connector not connected) is to be carried out since this can lead to malfunctions. Use only suitable test leads from terminals and probe tips.

Display of a Stored Defect Code on the Screen

- **Defect location:** The number of the defect code indicates the pin assignments at the control unit. The defect can be in the vicinity of the component, the corresponding wiring or in the control unit.
- **Type of defect:** Short-circuits, breaks, range transgressions or illogical functions are indicated.
- **Frequency:** Indication as to whether the defect is momentary or not (intermittent defect). Further indication is provided as to whether the defect occurred several times or only once. If the defect is no longer pending, the number of starts is indicated which have taken place since the defect was last detected.
- **Detected at:** Additional information on the operating statuses during defect detection.

Defect Code Table

♦D♦Defect code memory – stored defect codes:

One or several defect codes stored → Defect code 01 to defect code 100

Malfunctions – Defect codes not stored:

Engine operation not possible → Defect code 101

Defect code 1

♦D♦Defect code memory: 1 DME control unit

Explanation: This defect code is stored when the internal self-test has found a defect in the control unit.

Possible cause: Program error or disturbed program run in the DME control unit.

Corrective measures: Carry out test run after clearing the defect code memory. If the defect code is set once again, the DME control unit must be replaced.

Defect code 3

♦D♦Defect code memory: 3 Electrical fuel pump relay

Explanation: This defect code is stored when a short occurs at the relay 1 (EKP) or on the control line to the DME control unit Pin 3.

Troubleshooting: As displayed on screen.

Defect code 4

♦D♦Defect code memory: 4 Idle actuator (open)

Explanation: This defect code is stored when breaks or shorts occur at the idle actuator or on its supply wires (voltage supply and control lines).

Note: Defect code 4 is also stored when engine operation is interrupted abruptly without the ignition being switched off beforehand. This defect code can be ignored at an engine speed below 600 rpm.

Troubleshooting: As displayed on screen.

Defect code 5

♦D♦Defect code memory: 5 Fuel evaporation control valve

Explanation: This defect code is stored when a short occurs at the fuel evaporation control valve or on its supply wire.

Troubleshooting: As displayed on screen. For test values, see Chapter – Component Testing.

Defect code 7

♦D♦Defect code memory: 7 Air flow meter signal

Explanation: This defect code is stored when shorts or breaks occur at the air flow meter or on its supply wires (voltage supply and signal line). The function also detects when the U_p/U_v – value of the air flow meter is no longer within the normal operating range of 0.04.....0.95.
In this case, the DME control unit operates with fixed substitute values, load signal tL = 6.0 ms and ignition angle = 20° crank angle before TDC when the idle contact is open.

Troubleshooting: As displayed on screen.

Carry out air flow meter testing with status monitoring **♦D♦ 200** . The V_p/V_v-value indicates the ratio of the potentiometer voltage (wiper) with respect to the supply voltage (5 V) in the air flow meter.

For technical data, refer to Chapter – Component Testing.

Defect code 10

♦D♦Defect code memory: 10 Emission control (lambda)

Explanation: This defect code is stored in the case of excessive deviations in the mixture composition (too rich or too lean mixture longer than 10 sec). A prerequisite is that the oxygen sensor must be ready for operation.

Possible cause:

- Vehicle stops due to fuel deficiency (tank empty)
- Incorrect fuel pressure
- Injector valves defective or coked
- Engine temperature sensor defective
- Secondary air in the intake duct
- Fuel evaporation control system defective

Troubleshooting: As displayed on screen. For test values, refer to Chapter – Component Testing and microfiche Technical Data.

Defect code 15

♦D♦Defect code memory: 15 Fault lamp

Explanation: Applicable to US models only. This defect code is stored when shorts occur at the fault lamp or on its supply wire.

Troubleshooting: As displayed on screen.

Defect code 16

♦D♦Defect code memory: 16 Fuel injector valves cyl. 1+3

Explanation: This defect code is stored when shorts or breaks occur at the fuel injector valves cyl. 1+3 or on their supply wires.

Note: In the case of a short at one fuel injector valve or on its supply wire, the entire injector valve group is always deactivated. Two cylinders remain in operation.

Troubleshooting: As displayed on screen.

Defect code 17

♦D♦Defect code memory: 17 Fuel injector valves cyl. 2+4

Explanation: Diagnosis as for defect code 16.

Defect code 23

♦D♦Defect code memory: 23 Oxygen sensor heating relay

Explanation: This defect code is stored when a short occurs at the relay or on the supply line from the DME control unit Pin 23.

Troubleshooting: As displayed on screen.

Defect code 28

♦D♦Defect code memory: 28 Oxygen sensor

Explanation: This defect code is stored when short or a break occurs at the oxygen sensor or on its supply wires, or when no oxygen sensor is installed (cat. provision). A prerequisite for this is an engine temperature of > 70 °C and a load signal of > 4.5 ms for > 5 sec.

Troubleshooting: As displayed on screen.

For oxygen sensor test values, refer to Chapter – Component Testing.

Defect code 29

♦D♦Defect code memory: 29 Vehicle speed signal

Explanation: This defect code is stored when a high engine speed and a high load signal but no vehicle speed signal are applied at the DME control unit simultaneously.

Troubleshooting: As displayed on screen.

Defect code 33

♦D♦Defect code memory: 33 Solenoid valve kick-down prevent

Explanation: Only applicable to models with hydraulic automatic transmission. This defect code is stored when shorts occur at the solenoid valve or on its supply wire.

Troubleshooting: As displayed on screen.

Defect code 37

♦D♦Defect code memory: 37 Control unit supply

Explanation: This defect code is stored when the voltage supply exceeds 16 V. A drop in the voltage below 9 V is detected 3 min after the start at the earliest.

Possible cause:

- Contact resistances at the wire connections
- Insufficient V-belt tension
- Voltage regulator or alternator defective

Troubleshooting: As displayed on screen.

Defect code 43

♦D♦900 Defect code memory: 43 Idle CO potentiometer

Explanation: Only applicable to vehicles without catalytic converter. This defect code is stored when shorts or breaks occur at the potentiometer or on its supply wire. A substitute value of 2.77 V is used.

Troubleshooting: As displayed on screen. For test values, refer to Chapter – Component Testing.

Defect code 44

♦D♦Defect code memory: 44 Intake air temperature sensor

Explanation: This defect code is stored when shorts or breaks occur at the temperature sensor or on its supply wire. A prerequisite for detecting a break in the circuit is a 3 min time interval after the start and the engine idling for a minimum of 30 sec. After the defect code is set, the system operates with a substitute value of 50° C.

Troubleshooting: As displayed on screen. For temperature sensor test values, refer to Chapter – Component Testing.

Defect code 45

♦D♦Defect code memory: 45 Engine temperature sensor (water)

Explanation: This defect code is stored when shorts or breaks occur at the temperature sensor or on its supply wires.

In the case of fault, a substitute value of 80° C is used when the intake air temperature is > 20° C. If the intake air temperature is < 20° C, the intake air temperature is used as a substitute value for the first 3 min after start.

Troubleshooting: As displayed on screen. For temperature sensor test values, refer to Chapter – Component Testing.

Defect code 51

♦D♦Defect code memory: 51 Ignition timing (ignition angle) intervention

Explanation: Applicable only to models equipped with EGS. This defect code is stored when the wire from the EGS control unit Pin 24 to the DME control unit Pin 51 has a short to ground (> 2.5 sec). In such a case, the ignition timing (angle) intervention occurs only once, the signal is then ignored.

Troubleshooting: As displayed on screen.

Defect code 52

♦D♦Defect code memory: 52 Idle switch

Explanation: This defect code is stored when the throttle switch or the wire to the DME control unit Pin 52 has a short to ground. A prerequisite for this is that the engine is at operating temperature (> 80° C) at an engine speed > 1000 rpm and a load signal > 3.5 ms.

Troubleshooting: As displayed on screen. For test procedure, refer to Chapter – Component Testing.

Defect code 53

♦D♦Defect code memory: 53 Full load switch

Explanation: This defect code is stored when the throttle switch or the wire to the DME control unit Pin 53 has a short to ground (corresponds to a closed full load contact). A prerequisite for this is a load signal > 3.0 ms and the idle contact closed at the same time. If the load signal drops below 7.0 ms, the full load signal is ignored by the DME control unit.

Troubleshooting: As displayed on screen. For test procedure, refer to Chapter Component Testing).

Defect code 54

♦D♦Defect code memory: 54 Torque converter clutch

Explanation: Applicable only to models equipped with EGS. This defect code is stored when the DME control unit detects a closed torque converter clutch (or short to U-Batt) while the selector lever is in position P or N.

Troubleshooting: As displayed on screen.

Defect code 100

♦D♦Defect code memory: 100 Output stage

Explanation: Only applicable to DME M1.3. This defect code is stored when there is a loose contact at an output of an output stage. In the majority of cases, one of the defect codes 3, 4, 5, 16, 17, 22 or 23 also occurs, to which the defect code 100 can be assigned. In this case, the defect code 100 is only a consequential defect code.

Defect code 101

Malfunction: Engine operation not possible

Prerequisites:

- Start system OK. (battery charged, ignition switch and starter OK.)
- Ground connection at battery, engine and body OK.
- Specified type of fuel in tank
- Engine OK. mechanically (timing, compression, ...)

Troubleshooting:

a) Check voltage supply for DME control unit in accordance with schematic.

b) Check input signals:

- Engine speed signal from inductive pulse generator ♦D♦ 200 at starting speed
- Air flow meter signals ♦D♦ 200

c) Check output signals:

- Activation of fuel pump relay in accordance with schematics
- Injection output stage with ENGINE TEST, test step 09
- Injector valves with ♦D♦ 300

d) Fuel pressure test
For technical data, refer to Chapter – Component Testing.

Component Testing

Notes

Relevant safety codes and accident prevention regulations must be observed when carrying out tests and work on the engine electrical and electronic systems.

Caution!

Dangerous high voltage in the primary and secondary circuit of the ignition system.

Important!

Wherever possible, the battery should not be disconnected otherwise the defect codes stored in **all** the control units will be deleted.

Disconnect control unit from the wire harness **only** when the ignition is switched off.

Conduct wire tests **only** with the control unit or component connectors disconnected.

Test Equipment:

The schematics can be found in the corresponding file in Section 1210.5.

The universal adapter with corresponding connection leads should be used for testing the DME control unit or the engine wire harness. The universal adapter should only be connected between the control unit and wire harness when no diagnostic procedure (diagnostic connector not connected) is to be carried out since this can lead to malfunctions.

Use only suitable test leads, terminals and probe tips.

The test values for component testing are listed in the Appendix. For further technical values, refer to the microfiche – Technical Data.

Removal and installation are described in the microfiche – Repair Instructions.

Overview of Defect Codes and Component Tests

Component / function	Quick test after entering ♦D♦ ...	Defect code after storage
DME control unit		1
Ignition coil 1)	See engine test	
Fuel pump relay (relay 1)	100	3
Idle actuator 1)	300	4
Fuel evaporation control valve 1)	100, 300	5
Air flow meter	200	7
Pulse generator, cylinder reference point 1)	100	
Emission control	100	10
Fault lamp		15
Injector valves 1)	300	16 / 17
Sensor heating relay		23
Oxygen sensor	200	28
Vehicle speed signal		29
Solenoid valve, kick-down prevent	300	33
Main relay (relay 2)	100	
Voltage supply	200	37
A/C compressor	100	
Idle CO potentiometer	200	43
Intake air temperature sensor 1)	200	44

Component / function	Quick test after entering ♦D♦ ...	Defect code after storage
Engine temperature sensor 1)	200	45
Pulse generator, engine speed/ position 1)	200	
Ignition timing (angle) intervention	100	51
Throttle switch	100	52 / 53
Torque converter clutch		54
Drive range P/N	100	
Output stage		100

1) The resistance values are listed in the Appendix.

Refer to Section 1210.0B for all remaining component testing procedures.

Technical Data

Resistor values measured at 23 ± 5° C

Engine type	M 40
Idle actuator (one winding)	8 ± 2 Ω
Injector valve	15...17 Ω
Injector valve group (2 valves)	8 ± 0.5 Ω
Pulse generator, engine speed/ position	520 ± 30 Ω
Pulse generator, cylinder reference point	0.2...1 Ω
Engine temperature sensor	
at coolant temperature 20 ± 3° C	2.3...2.7 kΩ
at coolant temperature 80 ± 3° C	0.3...0.36kΩ
Intake air temperature sensor	
at air temperature 20 ± 3° C	2.2...2.7 kΩ
at air temperature 50 ± 3° C	0.76...0.91 kΩ
Fuel evaporation control valve	45 ± 20 Ω
Ignition coil	
Primary winding	0.5 ± 0.2 Ω
Secondary winding	6.0 ± 1.0 kΩ

Status monitoring 100	Nominal value	Signal comes from
103 EKP relay control	During start or engine operation = ON	DME control unit
105 Fuel evaporation control valve	At idle speed = CLOSED, until clock cycle begins	DME control unit
110 Emission control	During engine operation = ON when oxygen sensor at operating temperature	DME control unit
136 Main relay control	During start or engine operation = ON	DME control unit
140 Compressor control	When compressor relay switched on = ON	Magnetic clutch
141 Air conditioner switch	When A/C, defroster or air recirculation switch depressed and selector wheel for air flow not in position 0 = ON	Air conditioner relay
142 Drive stage P/N (AG only)	In selector lever position P or N = ON	Gear selector lever switch
151 Ignition timing intervention (AG only)	At idle speed = OFF, only ON temporarily during downshifts	EGS control unit
152 Idle switch	If idle contact closed = ON	Throttle switch
153 Full load switch	If full load contact closed = ON	Throttle switch
156 Semisequential injection	After increasing engine speed once = ON	Cylinder reference point sensor

Status monitoring 200	Nominal value	Signal comes from
207 LMM Up/Uv ratio 1)	0.2...0.3, break = 0.02	Air flow meter
237 Control unit voltage supply	>10 V	DME main relay
243 Oxygen sensor voltage 1)	0.02...0.85 V, in case of break or defective oxygen sensor = 0.45 V	Oxygen sensor
244 Intake air temperature	Dependent on ambient temperature, approx. –40° C = break	Air mass meter
276 CO potentiometer	(cat. provision) basic value = 2.8 V	Air flow meter
245 Engine temperature	Dependent on engine operation, approx. –30° C = break	Engine temperature sensor
M 40 B18		
201 Ignition timing (angle) in ° crank angle before TDC 1)	12 for cat., 17 without cat.	DME control unit
206 Engine speed in rpm 1) ....Idle speed ....Cut-out speed	 800±40 6200±40	DME control unit
232 Injection signal ti in ms 1)	3...5	DME control unit
277 Load signal tL in ms 1) ....CO volume % 1) 2)	approx. 2 0.7 ±0.5	DME control unit

1)Oil temperature > 60° C or coolant > 80° C, no consumer load switched on, at idle speed.

2)Measured before the catalytic converter – engine test, test step 09.

Digital Motor Electronics (DME M1.7, 12-cylinder M 70)

Notes

The following description refers to the digital motor electronics DME M 1.7 for the 12-cylinder engine M 70 (5.0 l).

Functional Description

Modifications

Modifications compared to the previous digital motor electronics system 1.2, 12-cylinder M 70

New:	Previous:
88-pin control unit connector	55-pin control unit connector
Integrated ignition circuit monitoring	
A/C compressor cut-out	

Two DME control units operate **independently**, each with six cylinders. If not otherwise specified, the explanations, therefore, refer to only one row of cylinders.

The DME control unit I supplies the cylinders 1...6, and the identical control unit II supplies the cylinders 7...12. To differentiate between them for diagnosis, Pin 40 of the control unit II is connected to ground. The associated components are mainly provided double. Exceptions are:

- Relay for oxygen sensor heating and
- Engine temperature sensor.

The oxygen sensor heating relay is assigned to the control unit I. The two engine temperature sensors are mounted together in one housing.

The DME system makes it possible to precisely control fuel injection and ignition under variable operating conditions.

The system can also operate in conjunction with other systems such as:

- Electronic transmission control EGS
- Electronic throttle control EML
- Automatic stability control ASC
- Engine drag torque control MSR
- Instrument cluster
- Antitheft system DWA
- On-board computer BC

Digital Motor Electronics (DME M1.7, 12-cylinder M 70)

The DME system assumes functions which are listed briefly below and are described in more detail in the following.

- Injection control
- Ignition timing control
- Cold start control
- Engine speed control
- Acceleration enrichment
- Dynamic torque deceleration fuel cut-out
- Catalytic converter protection function (ignition circuit monitoring)
- Adaptive emission (lambda) control
- Adaptive fuel evaporation control
- Intervention in ignition and injection with ASC or MSR active
- Characteristic map switchover for EH transmission
- Relay control
- A/C compressor cut-out
- Self-diagnosis with defect code storage

The following components supply the DME control unit with input signals.

Components	Information
Digital motor electronics DME main relay	Voltage supply for a part of the digital motor electronics
Pulse generator, engine speed/position I and II	Engine speed and crankshaft position
Pulse generator, cylinder reference point I and II	Feedback of injection signal of a defined cylinder
Intake temperature sensor I and II	Temperature of intake air (in this way, the air density which is reduced as the temperature increases is taken into consideration)
Engine temperature sensor I and II (in **one** housing)	Temperature of engine coolant
Hot-wire air mass meter I and II	Quantity or mass of air drawn in
Oxygen sensor I and II	Oxygen content of exhaust gas
Idle-CO potentiometer I and II (without catalytic converter)	Variable resistor (varistor) for setting the CO-content at idle speed
Instrument cluster	Vehicle speed signal
Air conditioning, defroster or air recirculation switch	Air conditioning in operation
A/C compressor	A/C compressor in operation
Battery	Current system voltage
Terminal 15	Ignition switched on
On-board computer BC	Code entered (engine operation not possible)

Components	Information
Antitheft system DWA	Antitheft system armed (engine operation not possible)
Electronic throttle control EML	Idle and full load signal
Electronic transmission control EGS	Shift procedures active, torque converter clutch engaged
Range selector lever for electronic transmission control	Engaged gear range
Automatic stability control ASC	Signal for retarding ignition timing and signal for blanking out ignition and injection
Engine drag torque control MSR	Signal for suppressing deceleration fuel cut-out during engine drag torque control

The outputs of the digital motor electronics are switched via output stages. They supply the following components with the necessary signals:

Components	Information
Injector valves	Injection time
Ignition coil I and II	Ignition voltage
Fuel evaporation control valve I and II	Clock pulses for operating cycles
Digital motor electronics DME main relay I and II	Voltage supply
A/C compressor relay	Switching off A/C compressor
Electrical fuel pump relay I and II	Activation voltage
Oxygen sensor heating relay	Activation voltage
Instrument cluster	Engine speed signal, injection signal (for fuel consumption indicator), fault lamp (US only)
Electronic transmission control EGS	Engine speed signal, engine temperature, throttle angle
Electronic throttle control EML	Injection signal
Automatic stability control ASC	Engine speed signal
Air mass meter I and II	Burn-clear

Injection Timing Control

On the basis of the engine speed and load signals, the DME control unit determines the ignition angle (ignition timing) which is output via the ignition output stage. This function also takes into consideration other input signals such as the engine temperature, intake air temperature, throttle position and signals from the electronic throttle control EML, automatic stability control ASC, engine drag torque control MSR and from the electronic transmission control EGS.

Dwell Angle Control

The engine speed and battery or system voltage decide on the time available to build up the primary voltage in the ignition coil. From these variables, the digital motor electronics determines the necessary dwell angle, thus ensuring a sufficient ignition voltage under all operating conditions.

Injection Control

The DME control unit calculates the correct injection timing on the basis of the engine speed, air flow or air mass, throttle position, oxygen sensor voltage, engine temperature and intake air temperature. The mixture is varied by the opening time of the injector valves. The battery or system voltage is also taken into consideration in calculating the injection timing since the pullup and dropout times of the injector valves are extended as the voltage decreases.

Types of Injection

Each injector valve group is driven by one output stage (power amplifier). This arrangement makes it possible to divide the injection cycle into cylinder groups (semisequential injection).

Arrangement of injector valve groups:

12-cylinder: Cylinders 1+3+5 and 2+4+6,
Cylinders 7+9+11 and 8+10+12

Semisequential Injection

At an engine speed of 600 rpm, fuel is injected only once per 720° crank angle into one cylinder group. This facilitates precise metering of the quantity of fuel since the injector valves need not be activated so often. It also enables restricted engine operation in the event of failure of one group.

Semisequential injection is only active when the DME control unit has received a signal from the cylinder reference point pulse generator. If this signal is not received during engine operation, the control system remains set to semisequential injection.

Two types of cylinder reference point sensor (pulse generator) are used:

The cylinder reference point sensor is mounted on the ignition lead of cylinder No. 6 at the distributor of the respective row of cylinders.

Parallel Injection

Parallel injection refers to simultaneous activation of all injector valves and takes place only when the cylinder reference point sensor has supplied no signal since starting the engine. As soon as a signal is applied, the system switches over to semisequential injection after the next deceleration phase.

Emission Control on Models with Catalytic Converter

To maintain the optimum degree of efficiency of the catalytic converter, this system aims at achieving the ideal air-fuel ratio ($\lambda = 1$) for combustion. The heated oxygen sensor is used for this purpose which measures the residual oxygen content in the exhaust gas and sends a corresponding voltage signal to the control unit. Here, the mixture composition is corrected if necessary by changing the injection timing. In the case of failure of the oxygen sensor, the DME control unit controls the system with a substitute value (0.45 V) preprogrammed in the control unit.

Since a temperature of approx. 300° C is necessary for efficient operation of the oxygen sensors, power is supplied via a relay to a heating resistor in the oxygen sensor. The relay is activated by the DME control unit.

On 12-cylinder engines, both heating resistors in the oxygen sensors receive their voltage supply via **one** relay. The relay is activated by the DME control unit I.

This relay will no longer be fitted in series production. On models without oxygen sensor heating relays, the sensor heating systems will be activated directly by the EKP relay.

CO-Potentiometer

On models not equipped with a catalytic converter, the CO setting can be corrected by means of a potentiometer (on the air mass meter). Particular care must be taken to ensure that the plug connection for the CO-potentiometer is connected in the wiring harness.

Maximum Speed Limitation

On 12-cylinder engines, the maximum engine speed is limited by the electronic control EML. Speed limitation takes place directly by reducing the throttle angle.

Cold Start Control

During the start phase, fuel is injected several times for each cylinder group per crankshaft revolution. The quantity of fuel is adapted dependent on the engine temperature and engine speed.

In addition, the injection timing is retarded the higher the temperature and the lower the start engine speed.

After the engine has started (as of approx. 600 rpm), fuel is injected only once per turn of the crankshaft and cylinder group. This means that during the first turn fuel is injected into cylinders 2+4+6 and during the second turn into cylinders 1+3+5. The cylinders 8+10+12 and 7+9+11 are supplied with fuel in the same way but offset by 60° crank angle.

During the initial period after engine start, the initially injected quantity is reduced depending upon the temperature and engine speed in order to avoid an excessively rich mixture. If start is repeated within one minute, the complete initial quantity is no longer injected.

During the warm-up phase, the injection timing and the ignition timing are correspondingly varied also dependent upon engine speed and temperature.

These measures are intended to ensure a lower fuel consumption, good throttle response and smooth engine operation.

Deceleration Fuel Cut-Out

To reduce fuel consumption, the deceleration fuel cut-out is activated when the throttle valve is closed and the engine speed is above approx. 1000...1200 rpm. The DME cuts out the injection and retards the ignition timing until the engine speed has dropped below the cut-in speed. Below this engine speed, fuel injection cuts in and the ignition timing is advanced once again. The cut-in speed is dependent upon the engine temperature and the drop in engine speed.

Acceleration Adaptation

In the case of a sudden change in the throttle position towards the full load direction, the digital motor electronics increases the quantity of injected fuel for the duration of the acceleration procedure and advances the ignition timing. This function takes into account the criteria such as maximum torque, clean exhaust gas and no acceleration knocking.

Air Mass Measurement

During operation, a heated platinum wire is subjected to the flow of intake air in the inner tube of the hot-wire air mass meter (HLM). Heat is dissipated from the hot wire by the flow of air. This heat is compensated by controlling the heating current. At the same time, the supplied current also flows via a precision resistor whose voltage drop represents a direct measure for the air mass which is drawn in. Air-temperature fluctuations are detected by way of a compensation resistor and taken into account in the measurement. After switching off the engine, an increased current surge is applied to the hot wire for approx. 1 second in order to burn the wire clean of impurities.

The advantages offered by the air mass meter can be found in the fact that, in this case, the air mass is measured and not the air flow (volume). Fluctuations in the air density (different air pressure due to differences in altitude and weather situation) are already taken into account during initial measurement. In addition, less resistance is offered to the flow of air in the air mass meter since it is not equipped with an air sensor plate which needs to be pressed down.

The voltage value of the air mass meter in conjunction with the engine speed is a direct measure for the engine load.

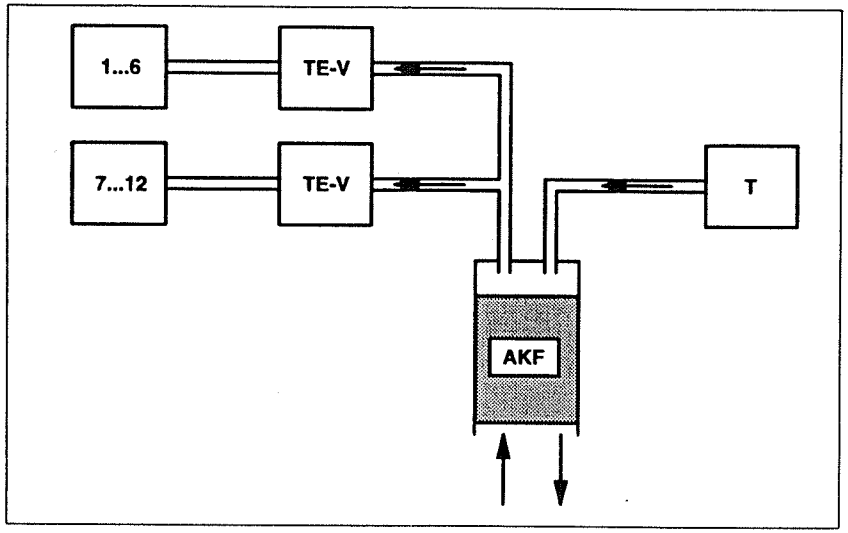

P31 12 001

1...6	Engine, cylinders 1...6
7...12	Engine, cylinders 7...12
AKF	Activated carbon filter
M	Engine
TE-V	Fuel evaporation control valve
T	Tank

Fuel Evaporation Control on Models with Catalytic Converter

The fuel evaporation control line of the fuel tank is connected to the activated carbon filter, in which the fuel vapours which accumulate in the tank are collected. The activated carbon filter is linked by means of two further lines to the air manifold. A fuel evaporation control valve is installed in these lines. When the fuel evaporation control valve is open, the vacuum in the air manifold draws in fresh air to the activated carbon filter. The fresh air flushes out the fuel collected in the filter and routes it to the engine, i.e. to the combustion process.

Since this additionally supplied mixture influences combustion to a considerable extend, the fuel evaporation control valve consists of a non-return valve and an electrically operated valve. Due to the non-return valve, the fuel evaporation control valve is closed initially when no power is applied. The non-return valve prevents fuel collecting in the air manifold when the vehicle is parked. This non-return valve opens as vacuum increases in the air manifold. Electrical activation takes place dependent on engine speed and load. The venting cycle (flushing phase) begins as soon as the emission (lambda) control system is active. On completion of one cycle, the valve is closed for approx. 1 min. (rest phase).

This function can only be activated below an engine speed of approx. 500 rpm.

Adaptations

The fuel-air mixture formed in the intake tract requires a certain period of time until it reaches the oxygen sensor in the form of exhaust gas. This time decreases as load and engine speed increase. For this reason, the response time of the emission control system is also dependent on load and engine speed. Mixture deviations detected by the oxygen sensor result in storage of adaptation values (learned correction values). By way of these adaptations, the injection can be set close to the nominal values in advance, thus achieving a reduction in the response time.

For instance, if the basic injection values for the DME characteristic map are too low during idling in order to maintain the ideal fuel-air mixture, the emission control system would have to constantly increase the injection timing. In this case, an adaptation value is learnt which corrects the basic injection value. The emission (lambda) control then only needs to undertake the fine adjustment.

Following adaptations are performed during engine operation:

Fuel Evaporation Control Adaptation

When the fuel evaporation control valve is open, an additional combustible mixture or air is supplied to the engine from the activated carbon filter. The shift in the air-fuel ratio detected by the oxygen sensor is almost completely compensated by way of the fuel evaporation control adaptation value.

Idle Air Adaptation

The EML undertakes idle air adaptation. By way of the throttle valve, it ensures constant idle speeds.

Idle Mixture Adaptation

If the idle signal is applied during the rest phase of the fuel evaporation control valve, idle mixture adaptation takes place at certain intervals.

Part Load Mixture Adaptation

Also in the part load range, mixture adaptation takes place at certain intervals. The determined adaptation value is taken into account in all part load ranges.

The correction values stored in the control unit are intended as additional information **only in the case of acute engine problems**.

If problems occur during engine operation and no defect codes are stored in the defect code memory, the mixture adaptation values can be read out on the BMW Service Tester. These values can provide an indication as to which direction troubleshooting is to be continued.

The adaptation values are lost (forgotten) when the voltage supply to the DME is interrupted. This can lead to starting and idle running problems. Depending on how far the adaptation values deviated from the basic values, a considerable period of time is required until the adaptation values are relearned.

For this reason, idle operation or test runs are of little use in order to observe the change in the adaptation values.

Relay Control

The **DME main relay** is activated by the DME control unit as of ignition ON. After shutting down the engine, the relay remains on for a further 3 sec in order to avoid post-ignition.

The **EKP relay** is activated as of ignition ON as soon as the DME control unit receives engine speed signals from the crankshaft pulse generator.

At ignition ON, power is briefly applied to EKP relay for approx. 0.5 sec in order to build up the fuel pressure. The fuel pump runs continuously after the engine has started.

The **oxygen sensor heating relay** is activated as of ignition ON. It is switched off dependent on engine speed and load.

Emergency Operation Control

In the case of failure of sensors, substitute values are made available which enable continued yet restricted engine operation. Further engine operation is no longer possible if the engine speed sensor fails.

Component	Substitute measure
Intake temperature sensor	Substitute value active
Engine temperature sensor	Substitute value active
Air mass meter	Substitute values are derived from the position of the throttle valve
Inductive sensor, engine speed/position	None, engine operation no longer possible
Inductive sensor, cylinder reference point	Parallel injection
Oxygen sensor	Substitute value active, emission control not possible
CO potentiometer	Substitute value active

Transmission Intervention in EH Transmission

During the shift procedure, the EGS control unit sends the DME control unit a signal which has the effect of retarding the ignition timing and reducing the torque. This ensures smooth transition to the next drive range.

As soon as the torque converter clutch has engaged, the DME control unit switches over to another ignition timing characteristic map.

Drive-Away Protection

When the drive-away protection function is activated on the on-board computer (code entered) or when the antitheft system DWA is armed, a signal (>10 V) is sent to the DME control unit which consequently switches off the ignition and injection.

This function can only be activated below an engine speed of approx. 500 rpm.

Automatic Stability Control ASC

Three different systems are installed:

- ASC with engine drag torque control
- ASC+T with engine drag torque control
- ASC+T without engine drag torque control (self-diagnosis only possible by means of flash code).

The peripheral speeds of the wheels are monitored by the wheel sensors. An excessive speed difference between the driven and non-driven (idle) wheels is detected as wheel slip. Consequently, the EML control unit is instructed to reduce the throttle opening. If excessively high wheel spin still occurs, the DME control unit is instructed to retard the ignition timing. As a further measure

- in ASC (without T), the ignition and the injection are temporarily switched off,
- whereas in the case of ASC+T, the spinning drive wheel is braked by way of the brake system.

The ASC is integrated in the ABS control unit, referred to Chapter 3450. It operates in conjunction with the digital motor electronics DME and the electronic throttle control EML.

Engine Drag Torque Control MSR

In the same way as the ASC, the MSR is integrated in the ABS control unit, refer to Chapter 3450. The engine is influenced via DME and EML.

A signal is sent to the DME control unit when increased slip occurs at the drive wheels when the vehicle is coasting. Consequently, the deceleration fuel cut-out function is deactivated. In addition, the EML control unit is instructed to adapt the throttle position until the wheel slip is once again within the permissible range.

A/C Compressor Cut-Out

When starting off at full load (below 8 km/h), the voltage supply to the magnetic clutch of the A/C compressor is temporarily cut by the A/C compressor cut-out relay. This ensures the full engine output is available for accelerating.

Catalytic Converter Protection Function (Ignition Circuit Monitoring)

In the DME M1.7 system, the cylinder reference point sensor is used for ignition circuit monitoring. If the cylinder reference point sensor detects no ignition signal on the ignition lead 6 (or 12), the supply of fuel is cut by shortening the injection signal. However, the signal is not cut completely to ensure that the EML system does not revert to the emergency program. The vehicle can still be driven with the remaining row of cylinders.

The cylinder reference point sensor therefore monitors the entire primary side and the cylinder 6 or 12 on the secondary side.

Overheating Protection Function

Consumer loads are switched off, the air conditioning system operates cyclically and the ignition timing is retarded dependent on the engine temperature.

Self-Diagnosis

The task of the self-diagnosis feature is to detect and store malfunctions in DME components, the associated lines or in the memory of the control unit (ROM, RAM).

The DME control unit makes available substitute values in the event of sensor failure (see Troubleshooting - Explanation). These substitute values are cancelled once again as soon as normal operation can be resumed.

To facilitate fast and convenient troubleshooting, the stored defect codes or current values can be monitored from the DME control unit with the aid of the BMW DIAGNOSTIC SYSTEM.

For further information, refer to notes on the BMW DIAGNOSTIC SYSTEM.

Activation of the injector valves should be kept as short as possible.

Compound System of Signals to the Drive Control Units

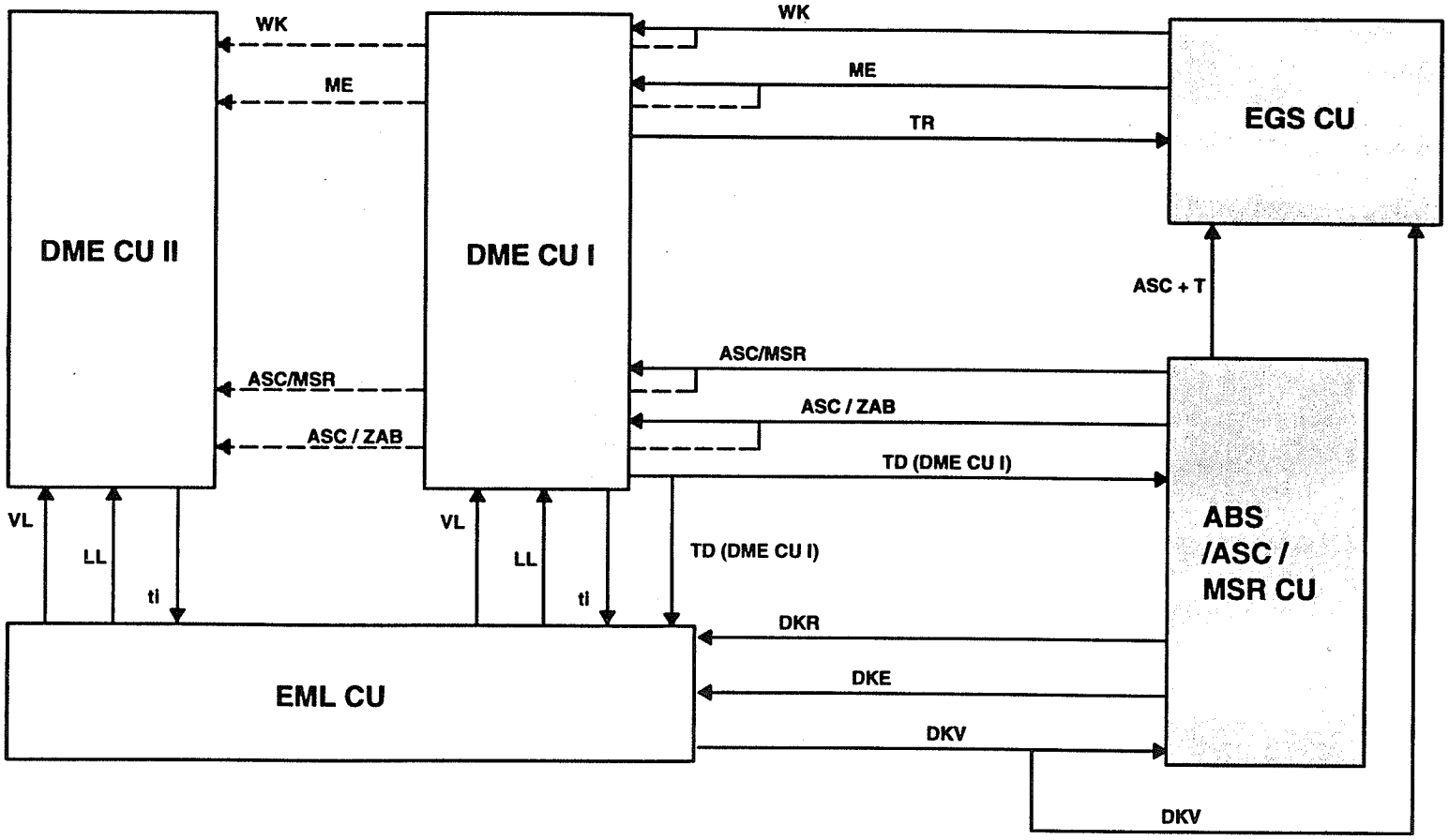

P32 12 002

Explanation of Abbreviations and Signals

Abbreviation	Signal description	Type of signal	Effect
WK	Torque converter clutch	Ground = Torque converter clutch engaged (ON)	DME selects corresponding characteristic map.
ME	Engine intervention (ignition angle intervention)	Ground = ON	DME reduces the torque during the gearshift procedure (ignition timing retarded).
TR	Engine speed signal (3 times per crankshaft revolution)	Square-wave voltage	EGS receives information relating to the engine speed.
ASC / MSR	Automatic stability control or engine drag torque control	U-Batt	2 functions within the DME control unit: Complete torque cut-out if currently active (MSR). Otherwise, ignition timing retarded (ASC).
ASC / ZAB	Automatic stability control, ignition fade-out	U-Batt	DME fades out the ignition and fuel injection (not in ASC + T).
TD	Engine speed signal (once per ignition cycle)	Square-wave voltage	EML undertakes idle control and engine speed limitation. ASC requires this information to ensure it does not stall the engine.
ASC + T	Automatic stability control + traction	U-Batt = ON	With ASC + T active, EGS prevents alternate gearshifts in transmission.
DKR	Throttle reduction	Square-wave voltage with fixed frequency and variable duty factor	EML reduces the throttle opening angle.
DKE	Throttle increase	Square-wave voltage with fixed frequency and variable duty factor	EML increases the throttle opening angle.
DKV	Preset throttle value	Square-wave voltage with fixed frequency and variable duty factor	ASC / MSR receives information on the current status of the pedal position sensor (driver requirements).
LL	Idle signal	Ground = ON	DME selects corresponding characteristic map.
VL	Full load signal	Ground = ON	DME selects corresponding characteristic map.
ti	Injection signal	Square-wave voltage	EML synchronizes the throttle valves.

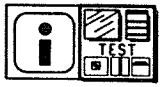

Notes on the BMW DIAGNOSTIC SYSTEM

Initialisation of Diagnostic Procedure

Communication with the control unit via the DIAGNOSTIC SYSTEM can be set up after selecting the DME on the BMW Service Tester. If data transfer is interrupted, information appears on the display screen indicating the possible cause:

- Ignition not switched on
- Voltage supply for control unit < 10 V
- DME relay not supplied with B+ (if not, bypass terminal 30 and 87).
- Control unit not connected
- Diagnostic link defective
- Data traffic inhibited by a defective control unit in the vehicle

Control Unit Assignment

The identification data appear first in order to determine whether the correct control unit is installed. The assignment can be made by means of the variant code (e.g. C01E) and the parts microfiche without having to remove the control unit.

Explanation of Control Unit Identification

The designation of the DME version and a note referring to the row of cylinders with which communication is currently set up, appear on the first line.

Further data are displayed in the sequence shown below.

- Variant: Model designation, engine type
- With or without emission control
- Transmission variant: HG – Manual transmission
  AG – Automatic transmission, hydraulic
  EH – Automatic transmission, electronic-hydraulic
- Type of fuel: leaded/unleaded or regular/premium
- Country version: International identification
- Control unit variant code: see parts microfiche
- BMW hardware and software number,
- Bosch hardware and software number,
- Production code: Used only on special request by 'Technical Service Division'

Effective Range of the Self-Diagnosis Function

The self-diagnosis function is an aid to facilitate fast fault tracing in the vehicle's electrical/electronic systems. The BMW DIAGNOSTIC SYSTEM (Service Tester, MoDiC) provides the necessary access for the user. Self-diagnosis of the control units detects defects provided the necessary conditions of this have been fulfilled (time, temperature, load etc.). However, defects can only be registered when there is an electrical connection to the control unit. If this is not the case, the check must be performed using conventional methods (e.g. ignition voltage, fuel pressure, mechanical functions etc.).

Refer to chapter – Troubleshooting – for list of defects which can be detected by the self-diagnosis system.

Defect Code Storage

Defect codes are stored after the engine has been started (exceptions defect codes 26 and 200). If several defects are detected, they appear in the order they first occurred.

The operating conditions as stored apply only to the conditions, under which the defect was detected for the first time. An intact voltage supply (battery charged) is the prerequisite for maintaining the memory contents.

Substitute values may be active if **no** malfunction can be found despite a defect code being stored. Troubleshooting should still, however, be carried out.

In US models, defects which influence the fuel/air mixture are indicated by a lamp (check engine) in the instrument cluster. As a check, this lamp lights constantly during the period of time between "ignition ON" and engine start.

If the defect code memory has no defect code stored although there is a defect in the vehicle, either the test conditions (e.g. temperature, time, load etc.) for defect detection were not fulfilled or it was technically not possible to store a defect code. A list of monitored components and functions is given in the chapter – Component Testing.

Defect Code Memory Monitoring -♦D♦1

The first step should always be to monitor the defect code memory. If one or several defect codes are stored, it is advisable to print out these data immediately (R key). Since it is often necessary during the testing procedure to cut the power supply or to disconnect the connector from the control unit, the contents of the defect code will be unintentionally deleted as a consequence.

The learned adaptation values are lost if the battery or the DME control unit is disconnected. This may result in difficulties in starting the engine or the engine may stall when idling. These problems are generally rectified after a short test drive.

Clearing the Defect Code Memory -♦D♦9

Carry out this step only when **all** defects have been rectified or caused by simulation. When the battery or the DME control unit are disconnected, **all** stored defect codes, substitute values (if active) as well as the adaptation values are lost. Current defects cannot be cleared.

Status Monitoring -♦D♦2

Further current data can be called up independently of the defect code storage function. Current values or operating statuses are displayed. Refer to the chapter – Component Testing – for the necessary comparison of nominal values.

The nominal values can be monitored with the key ♦D♦ # when status monitoring is selected on the tester.

Status inquiries can also be made as required. This selection (termed extract list) is made by entering the corresponding number followed by the acknowledgement. The selection is then displayed with the screen with the ♦⇓♦ key.

Component Activation -♦D♦3

To facilitate fast fault finding, various components can be activated from the Service Tester in conjunction with the DME control unit. The response of the components in perfect working order, including their supply lines, can therefore be indicated by acoustic means.

Activation is only possible with the component connected. For this reason, signal testing is not possible at the disconnected component connector. This function provides a simple means of differentiation between defects in the control unit, on the supply wire or in the component itself. More detailed information on component activation is provided on the display screen.

Print Out Test Code -♦D♦6

See Chapter 0150.

Abbreviations

ABS	Antilock brake system
AG	Automatic transmission
ASC	Automatic stability control
CU	Control Unit
CO	Carbon monoxide
DK	Throttle valve
DKB	Throttle-brake intervention
DKE	Throttle increase
DKR	Throttle reduction
DKV	Preset throttle value
DME	Digital motor electronics
DWA	Antitheft system
EGS	Electronic transmission control
EH	Electrohydraulic transmission
EKM	Electronic body module
EML	Electronic throttle control
EV	Injector valve(s)
HG	Manual transmission
HLM	Hot-wire air mass meter
Hz	Hertz
KD	Kick-down
KW	Crankshaft
LL	Idle
LMM	Air flow meter
MF	Microfiche
MSR	Engine drag torque control
MV	Solenoid valve
PWG	Pedal position sensor
RxD	Diagnosis initiation line
SG	Control unit
TE	Fuel evaporation control
TD	Engine speed once per ignition
ti	Injection time
tL	Load signal
TL	Part load
TR	Engine speed once per revolution
TxD	Diagnostic data line
U-Batt	Battery voltage
U-Vers	Voltage supply
VL	Full load
WK	Torque converter clutch
ZAB	Ignition fade-out

Pin Assignment

If not otherwise specified, the signal type information refers to engine operation at idle speed.

Pin assignments at the 88-pin DME control unit connectors X6010 (DME control unit I) and X6020 (DME control unit II)

Pin	Type	Description/function	Connection	Signal type	Tester display	Measurement notes
1	A	EKP relay and TR signal (crankshaft reference)	Electrical fuel pump relay and electronic transmission control	Negative with overlaid engine speed signal	ON	Can only be measured when crankshaft rotating (the electrical fuel pump relay does not switch off if the TR signal is not applied)
2		not used				
3	A	Injector valves cyl. 2+4+6 or cyl. 8+10+12	Injector valves	Negative clocked	Injection time ti	Negative => Injector valves open, see component activation
4		not used				
5		not used				
6	M	Ground, injector valve output stages	Ground point	Ground		
7		not used				
8	A	Fault lamp (US only)	Instrument cluster	Negative		Lights if emission-related defect stored and to check the lamp at ignition ON
9		not used				

Pin	Type	Description/function	Connection	Signal type	Tester display	Measurement notes
10		not used				
11		not used				
12	E	Full load signal VL	Electronic throttle control EML	Negative	ON	at full load (kick-down)
13	A	Burn-clear	Air mass meter	Voltage increase for approx. 0.5 sec		Signal is applied for 4 sec after shutting down engine
14	M	Ground air mass meter	Air mass meter	Ground		
15		not used				
16	E	Cylinder reference point sensor (pulse generator) (emission)	Cylinder reference point sensor (terminal B)		ON / OFF	see status monitoring
17	A	ti measuring signal (signal for fuel consumption indicator KVA)	Instrument cluster	Square-wave signal	Multimeter function pulse duration	Oscilloscope
18		not used				
19		not used				
20		not used				
21		not used				
22		not used				
23		not used				
24		not used				
25	A	Ignition terminal 1	Ignition coil	Primary signal	Oscillogramme	Engine test, test step 05
26	E	Continuous pulse, terminal 30	B+ terminal point	> 10 V		Diagnosis not possible if not applied

Pin	Type	Description/function	Connection	Signal type	Tester display	Measurement notes
27	A	DME main relay	DME main relay, terminal 85 (additionally: Jumper to second DME main relay)	Negative	ON	Diagnosis not possible if not fitted – connect jumper at relay terminal 30 and 87
28	M	Ground for electronics and shielding of sensors	Negative point	Ground		
29		not used				
30		not used				
31		not used				
32	A	Injector valves cyl. 1+3+5 or cyl. 7+9+11	Injector valves and electronic throttle control EML	Ground clocked	Injection time ti	Ground => Injector valves open, see component activation
33		not used				
34	M	Ground, remaining output stages (except for ignition and injector valve)	Ground point	Ground		
35		not used				
36	A	Fuel evaporation control valve	Fuel evaporation control valve	Negative clocked	CLOSED / OPEN	Perform component activation, negative => closed
37	A	Oxygen sensor heating	Oxygen sensor heating relay, terminal 85	Negative	ON	Negative => Sensor heating activated
38		not used				
39		not used				
40		not used				
41	E	Air mass meter signal	Hot-wire air mass meter	0...5 V	Load signal in ms	see status monitoring
42		not used				

Pin	Type	Description/function	Connection	Signal type	Tester display	Measurement notes
43	M	Ground for sensors	Temperature sensor	Ground		
44	E	Cylinder reference point sensor (pulse generator) (ignition)	Cylinder reference point sensor (terminal A)		ON / OFF	see status monitoring
45		not used				
46		not used				
47		not used				
48		not used				
49		not used				
50		not used				
51		not used				
52		not used				
53		not used				
54	E	> 10 V from DME main relay	Main relay terminal 87	> 10 V	Voltage value	Perform status monitoring. Diagnosis not possible if signal not applied – connect jumper at terminal 30 and 87.
55	M	Ignition ground	Ground point	Ground		
56	E	Ignition, terminal 15	Ignition lock	> 10 V		
57		not used				
58		not used				
59		not used				
60	E	Programming voltage	Diagnostic connector	Voltage value		Only activated during programming
61		not used				

Pin	Type	Description/function	Connection	Signal type	Tester display	Measurement notes
76	E	Idle-CO potentiometer	Air mass meter	0...5 V	Voltage value	
77	E	Intake air temperature sensor	intake air temperature sensor	0...5 V	° C	temperature-dependent
78	E	Engine temperature sensor	Engine temperature sensor	0...5 V	° C	temperature-dependent
79		not used				
80		not used				
81	E	DWA	Antitheft system DWA	Ground	OFF	> 10 V applied when DWA armed
82	E	ASC/MSR	ASC or ASC + T	> 10 V	ON	> 10 V => Signal active
83	E	ASC/ZAB	Only for ASC without T	> 10 V	ON	> 10 V => Signal active
84		not used				
85	E	Identifier DME control unit II	Ground point	Negative	DME cyl. 7...12	The DME control unit II can only be selected with the diagnostic procedure when this link is set up.
86		not used				
87	E	RxD diagnostic data link	Diagnostic connector	> 10 V		When cover of diagnostic connector closed
88	E/A	TxD diagnostic data link	Diagnostic connector	Negative		When cover of diagnostic connector closed

E = Input, A = Output, M = Ground

Adapter

Component	Connector No.	Description	Adapter number
Control unit	X6010	Test adapter 88-pin	Universal adapter, Cartool 61 4 410 Accessories Test lead, black, Cartool 61 4 412 Test lead, red, Cartool 61 4 413 Extensions (2), Cartool 61 4 430
Cylinder reference pulse generator, engine speed/position pulse generator, idle actuator, throttle switch, oil level sensor	X6211, X6212 X6221, X6222 X6101.....6	3-pin, black	V-adapter lead, Cartool 61 1 491
Injector valve, fuel evaporation control valve, temperature sensor	X6121, X6236	T-adapter, 2-pin	Cartool 61 1 440
Ignition coil		1-pin	Ignition lead adapter, Cartool 61 2 010
EKP relay/main relay	X6311, X6310	T-adapter	Cartool 61 30 10/20

Pin	Type	Description/function	Connection	Signal type	Tester display	Measurement notes
62	E	Idle signal LL	Electronic throttle control EML	Negative	ON	see status monitoring
63	E	Torque converter clutch WK	Electronic transmission control EGS	Negative	ON (with engine running)	When WK engaged, see status monitoring
64	E	Ignition timing intervention	Electronic transmission control	Negative	ON	Only active during gear-shift
65	E	Drive range P/N	Transmission selector lever switch	Negative	ON	when position P/N
66		not used				
67	E	Inductive pulse generator (terminal B)	Engine speed/ position pulse generator	Alternating voltage	Engine speed	between Pins 67 and 68 (can only be measured with crankshaft rotating)
68	E	Inductive pulse generator (terminal A)	Engine speed/ position pulse generator	Alternating voltage	Engine speed	between Pins 67 and 68 (can only be measured with crankshaft rotating)
69		not used				
70	E	Oxygen sensor signal	Oxygen sensor	Pulsating voltage 0.1...1.2 V	Voltage value	Can only be measured with engine running at operating temperature
71	M	Oxygen sensor ground	Oxygen sensor	Ground		
72		not used				
73	E	Vehicle speed signal	Instrument cluster	Square-wave signal	km/h	Status monitoring
74	A	Engine speed signal TD	Instrument cluster	Square-wave signal		One signal per ignition
75		not used				

Troubleshooting

Notes

Relevant safety codes and accident prevention regulations must be observed when carrying out tests and work on the engine electrical and electronic systems.

Caution!

Dangerous high tension in the primary and secondary circuit of the ignition system.

Wherever possible, the battery should not be disconnected, otherwise the defect codes stored in **all** the control units will be deleted.

Disconnect control units from the wire harness **only** when the ignition is switched off.

Conduct wire test **only** with the control unit or component connectors disconnected.

Test Equipment

The 88-pin universal adapter can be used for picking-off signals from the DME control unit or from the engine wire harness.

Only use suitable test leads, terminals and probe tips.

Display of stored defect codes on the screen.

- **Defect location:** The defect can be in the vicinity of the component, the associated wiring or in the control unit. The number of the defect code indicates the pin assignments at the control unit.
- **Type of defect:** Short-circuits, wire breaks or range transgressions are indicated. Further indication is provided as to whether the defect is momentary, or whether it occurred in the past and the code is presently not stored (intermittent defect).
- **Defect frequency:** Indication of how often the defect has been detected, or the number of starts is indicated which have taken place since the defect was last detected.
- **detected during:** Additional defect information on the operating status during defect detection.

Evaluation of Stored Defect Codes

To facilitate effective troubleshooting, it is first advisable to print out the contents of the defect code memory.

During repairs, it is often necessary to disconnect plug connections, causing a defect code to be set in many cases. This may lead to incorrect diagnosis after monitoring the defect codes.

For this reason, all defect codes should be cleared after performing the necessary repairs (also EML, EGS, ASC/MSR). Monitor the defect code memory once again after a test run.

Some defects cause a defect code to be set in several systems (EML, EGS, ASC/MSR). Such interrelationships can be determined by comparing the ambient conditions (e.g. engine speed, temperature etc.).

Defect Code Table

♦D♦Defect code memory – stored defect codes:

Defects stored in the defect code memory → Defect code 0 to Defect code 201

Malfunctions - defect codes not stored:

Engine operation not possible → Defect code 300

Defect Code 0

♦D♦1 Defect code memory: 0 Undefined defect

Explanation: Data has been stored in the defect code memory for no apparent reason.

Corrective measures: Perform test run after clearing the defect code memory. The defect code can be ignored if there are no noticeable effects in the system.

Defect Code 1

♦D♦ 1 Defect code memory: 1 TR signal/EKP relay

Explanation: This defect code is stored when a short occurs at the EKP relay or on the control wire (from control unit Pin 1).

Effect of defect: The fuel pump relay is not activated. If the defect occurs in the DME control unit for cylinders 1 to 6, the EGS takes up the emergency program.

Troubleshooting: The TR signal (engine speed signal once per revolution) is output, when the engine is running, at Pin 1 of the DME control unit for cylinders 1 to 6 and is routed via the EKP relay to the EGS control unit.

Possible cause: Wires, connector or EKP relay defective.

Defect Code 3

♦D♦ 1 Defect code memory: 3 Fuel injector valves cyl. 2+4+6 or 8+10+12

Explanation: This defect code is stored when shorts or breaks occur at the fuel injector valves cyl. 2+4+6 or 8+10+12 or on their supply wires.

Effect of defect: The entire group of injector valves is always deactivated when a short occurs at one injector valve or on its supply wire. The three other cylinders of the same row of cylinders remain in operation.

Troubleshooting:

– Activate injector valves (see Component testing).
– Check connections and wires in accordance with schematic.
– Replace failed injector valves.

For test values, see chapter – Component Testing.

Defect Code 8

♦D♦ 1 Defect code memory: 8 Fault lamp

Explanation: Applicable to US models only. This defect code is stored when shorts occur at the fault lamp or on its supply wire.

Effect of defect:

– The defect lamp does not light in the case of short to positive.
– The defect lamp lights continuously in the case of a short to ground.

Troubleshooting: Normally, the defect lamp is activated by the control unit (ground signal at Pin 8) when an emission-related defect code is stored in the defect code memory.

Test fault lamp: see Component Testing.

Defect Code 16

♦D♦ 1 Defect code memory: 16 Ignition

Explanation: This defect code is stored when the cylinder reference sensor on cylinder 6 or 12 no longer detects an ignition signal for a certain period of time.

Effect of defect: The injection signal is reduced to a minimum. Fuel is no longer injected (catalytic converter protection), however, the EML does not take up the emergency program since an injection signal is still applied.

Possible cause:

– Cylinder reference sensor or supply wires defective
– Cylinder 6 or 12 receives no ignition voltage signal
– No spark-over at the spark plug of cylinder 6 or 12
– Ignition coil defective
– Ignition output stage of DME control unit defective

For test values, see chapter – Component Testing.

Defect Code 18

♦D♦ 1 Defect code memory: 18 Output stage pin 18

Explanation: This defect code is stored when a short occurs at Pin 18. This defect code can be ignored since this pin is not connected to the wiring harness.

Defect Code 32

♦D♦ 1 Defect code memory: 32 Fuel injector valves cyl. 1+3+5, Cyl. 7+9+11

Explanation: Procedure as for defect code 3.

Defect Code 36

♦D♦ 1 Defect code memory: 36 Fuel evaporation control valve

Explanation: This defect code is stored when a short occurs at the fuel evaporation control valve or on its supply wire.

Effect of defect:

- Short to ground: No fuel evaporation control since the solenoid valve remains closed.
- Short to positive (or break): The solenoid constantly remains open. As a result, the fuel vapours supplied via the fuel evaporation control valve can lead to malfunctions when idling and during acceleration.

Troubleshooting: Activate fuel evaporation control valve with **♦D♦ 3** "Component activation".
Does the fuel evaporation control valve respond?

- YES: Check wire and connector for loose contact.
- NO: Connect test lamp (12 V 10 W) and activate component.

Does test lamp flash?

- YES: Check function of fuel evaporation control valve, see test instructions.
- NO: Check voltage supply at fuel evaporation control valve. Check wires.
  Check output at DME control unit (Pin 36).

Defect Code 37

♦D♦1 Defect code memory: 37 Sensor heating relay

Explanation: The oxygen sensor heating relay is activated by the DME control unit I. For this reason, a detected defect is only stored in the DME control unit I. The control unit detects a short or break at the relay or on its supply wire.

Effect of defect: After a cold start, operation of the oxygen sensor is delayed.

This defect code can be ignored if no sensor relay is installed.

Troubleshooting: Activate the sensor heating relay with **♦D♦ 3** "Component activation". When the relay is active, ground is applied to terminal 85 of the relay (check with 12 V 3 W lamp).

Defect Code 41

♦D♦ 1 Defect code memory: 41 Air mass meter (HLM)

Explanation: This defect code is stored when a short or a break occurs at the HLM or on its supply wires.

Effect of defect: The DME control unit operates with fixed substitute values:

- When idling, the load signal is TI = 2.2 ms.
- During part load and full load operation the load signal is TI = 0 ms. If engine speed increases above the idle speed, the engine only runs with the other row of cylinders.

Troubleshooting: Observe the load signal with **♦D♦ 2** Status monitoring. The nominal value is 1.8 to 2.2 ms when the battery is charged, air conditioning switched off and the gear selector lever in position P or N. If the nominal value is not attained:

- Check voltage supply of the HLM, wires and connector.
- Check HLM.

Defect Code 48

♦D♦ 1 Defect code memory: 48 A/C compressor shut-off

Explanation: This defect code is stored when a short occurs at Pin 48.

Effect of defect:

- Short to positive: Below a speed of 8 km/h, the A/C compressor is not switched off during acceleration with full load.
- Short to ground: The A/C compressor does not operate.

Troubleshooting:Check A/C compressor cut-out relay and supply wires

Defect Code 54

♦D♦ 1 Defect code memory: 54 Control unit power supply

Explanation: This defect code is stored when the voltage supply exceeds 16 V. A drop in the voltage supply below 9 V is detected 3 min after the start at the earliest.

Troubleshooting:

- Check battery acid level
- Check charged battery under load
- Check B+ wire to the DME relay
- Check charging current of alternator with consumer loads switched on
- Check voltage regulator

Defect Code 63

♦D♦ 1 Defect code memory: 63 Torque converter clutch

Explanation: The control unit receives simultaneously the signals gear selector lever in position P/N and torque converter clutch closed (ground signal). This operating status is impossible.

Effect of defect: A permanently applied ground signal is ignored by the DME control unit. EGS may be in the emergency program.

Troubleshooting: Check the plausibility of the signals gear selector lever and torque converter clutch with **♦D♦ 2** Status monitoring. The torque converter clutch inquiry is only displayed correctly when the engine is running.

Defect Code 64

♦D♦ 1 Defect code memory: 64 Ignition timing intervention

Explanation: This defect code is stored when a short to ground occurs on the wire from the EGS to DME control unit Pin 64 (>2.5 sec).

Effect of defect: The ignition timing (angle) intervention occurs in such a case only once. The signal is then ignored. The automatic transmission is in the emergency program.

Troubleshooting:

- Check wire and connector to the EGS.
- Perform defect monitoring on EGS. Monitor status once again after test run.

Defect Code 70

♦D♦ 1 Defect code memory: 70 Oxygen sensor

Explanation: This defect code is stored when a short or a break occurs at the oxygen sensor or on its supply wires, or when no oxygen sensor is installed (provisions for catalytic converter). A prerequisite for defect detection is an engine temperature of 70° C and a load signal of >3.5 ms for > 20 sec.

Effect of defect: Emission control is no longer possible, the control unit operates with a substitute value.

Troubleshooting: Observe the emission control and sensor voltage with **♦D♦ 2** Status monitoring. After the sensor has reached operating temperature, the sensor voltage must fluctuate between 0.02 and 0.85 Volt.

- If sensor voltage not OK.: Detach connector for oxygen sensor, switch on ignition and measure voltage at connector (control unit side) (nominal value = 0.45 V). As displayed on screen.
- Check wire and oxygen sensor.
- If the oxygen sensors have been interchanged (DME control unit I operates with sensor II and vice versa), this defect code will be stored in both control units. The mixture is too rich in one group of cylinders and too lean in the other.

Defect Code 73

♦D♦ 1 Defect code memory: 73 Vehicle speed signal

Explanation: This defect code is stored when, despite high load and engine speed, no vehicle speed signal is applied.

Effect of defect:

- For manual transmission: Irregularities at engine speeds close to the idle speed (EML controls the idle speed).
- Power loss (EML limits the throttle angle).
- FGR failure.

Troubleshooting:

- If vehicle speed signal is applied in instrument cluster: Check wire from DME Pin 73 to EKM.
- Otherwise: Check wire from instrument cluster to reed contact.

Defect Code 76

♦D♦ 1 Defect code memory: 76 Idle CO-potentiometer

Explanation: Only applicable to vehicles without a catalytic converter. This defect code is stored when shorts or breaks occur at the potentiometer or on its supply wire.

Effect of defect: A substitute value of 1.25 V is set. The emission CO value may deviate from the nominal value.

Troubleshooting:

- Read out CO-potentiometer actual value with **♦D♦ 2** Status monitoring.
- Check CO-potentiometer (in HLM) and supply wires.
- Measure CO content in exhaust emission.
  For test values, see chapter – Component Testing.

Defect Code 77

♦D♦ 1 Defect code memory: 77 Intake air temperature sensor

Explanation: This defect code is stored when shorts or breaks occur at the temperature sensor or on its supply wires. A prerequisite for detecting a break is a time interval of 3 min after start and idling for at least 30 sec.

Effect of defect: After defect detection, a substitute value of 50° C is used.

Troubleshooting: Read out the actual value with **♦D♦ 2** Status monitoring.

If not plausible: Check wire to DME Pin 77 and temperature sensor. For temperature sensor test value see chapter – Component Testing.

Defect Code 78

♦D♦ 1 Defect code memory: 78 Engine temperature sensor

Explanation: This defect code is stored when shorts or breaks occur at the temperature sensor or on its supply wires. A prerequisite for detecting a short to positive or break is an intake air temperature above minus 9° C.

Effect of defect: After defect detection, a substitute value of 50° C is used.

Troubleshooting: Read out the actual value with **♦D♦ 2** Status monitoring.

If not plausible: Check wire to DME Pin 78 and temperature sensor. For temperature sensor test values see chapter – Component Testing.

Defect Code 82

♦D♦ 1 Defect code memory: 82 MSR signal

Explanation: This defect code is stored when the MSR signal (U-Batt at DME Pin 82) is applied constantly for more than 5 sec.

Effect of defect: The MSR signal is subsequently ignored by the DME control unit.

Troubleshooting: With **♦D♦ 2** Status monitoring. With the ignition switched off or with the engine idling, the nominal value for the MSR signal = OFF. If the display shows ON, this indicates a short to positive.

Defect Code 83

♦D♦ 1 Defect code memory: 83 ASC signal

Explanation: This defect code is stored when the ASC signal (U-Batt at DME Pin 83) is applied for more than 1 sec.

Effect of defect: The ASC signal is subsequently ignored by the DME control unit.

Troubleshooting: With **♦D♦ 2** Status monitoring. With the ignition switched on or the engine idling, the nominal value for the ASC signal is = OFF. If the display shows ON, this indicates a short to positive at Pin 83 (ASC) or PIN 81 (DWA).

Defect Code 100

♦D♦ 1 Defect code memory: 100 Output stage

Explanation: This defect code is stored when the function of an output stage is not plausible and the control unit could not distinctly identify the output stage. If, at the same time, one of the following components is stored as being defective, then this is the cause of defect code 100 being set and can be ignored:

- Idle speed actuator
- Injector valves
- Sensor heating relay (only DME control unit for cylinders 1 to 6)
- Fuel evaporation control valve
- Fault lamp (US only)
- EKP relay

Troubleshooting: Activate the corresponding components with **♦D♦ 3** "Component activation" and check wires.

Defect Code 200

♦D♦ 1 Defect code memory: 200 DME control unit

Explanation: This defect code is stored when the internal self-test has found a defect in the control unit.

Possible cause: Program error or disturbed program run in the DME control unit. This defect code is also stored when manipulations have been made in the program of the control unit. In this case, the sealing tabs on the control unit housing will be damaged.

Corrective measures: Perform test run after clearing the defect code memory. If defect re-occurs, the DME control unit must be replaced.

Defect Code 201

♦D♦ 1 Defect code memory: 201 Emission control (lambda)

Explanation: This defect code is stored in the case of excessive deviations in the air-fuel mixture (mixture too rich or too lean for longer than 10 sec). The prerequisite is that the oxygen sensor is ready for operation.

Effect of defect: Poor engine response since the DME operates with a substitute value.

Possible cause:

- Vehicle stops due to lack of fuel (tank empty)
- Incorrect fuel pressure
- Injector valves defective or coked
- Engine temperature sensor defective
- Secondary air (lean mixture)
- Fuel evaporation control system defective
- Air mass meter defective
- Disturbed combustion (ignition or compression not OK.)

Troubleshooting: Perform exhaust emission test. For test values, see Section – Component Testing.

Defect Code 300

Malfunction: Engine operation not possible

Prerequisites for engine operation:

– Starting system OK.(battery charged, ignition switch ...)
– Ground connection from battery to engine or body OK.
– Specified fuel in tank
– Engine OK. mechanically (timing, compression ...)

Troubleshooting

a) Check voltage supply for DME control units in accordance with schematic

b) Measure input signals.

– Check engine speed signals of the pulse generators at starting speed -♦D♦ 2.
– Check air mass meter signals -♦D♦ 2.

c) Measure output signal.

– Drive fuel pump relay in accordance with schematic
– Ignition output stage by means of ENGINE TEST, test step 09
– Injector valves with ♦D♦ 3

d) Check fuel pressure

e) Check EML for defects

For technical data refer to chapter – Component Activation.

Component Testing

Notes

Relevant safety codes and accident prevention regulations must be observed when carrying out tests and work on the engine electrical and electronic systems.

Caution!

Dangerous high tension in the primary and secondary circuits of the ignition system.

Important!

Wherever possible, the battery should not be disconnected otherwise the defect codes stored in **all** the control units will be deleted. If the voltage supply to the DME is interrupted, the adaptation values will be additionally forgotten (lost). This can lead to problems in starting and idling. Depending on how far the adaptation values deviated from the basic values, some time will be required until the adaptation values are relearned.

Disconnect control units from the wire harness **only** when the ignition is switched off.

Conduct wire tests **only** with the control unit or component connectors disconnected.

Test Equipment

Refer to Section 1210 in the corresponding files for the schematics.

The 88-pin universal adapter can be used for picking-off signals from the DME control unit or from the engine wire harness.

Only use suitable test leads, terminals and probe tips.

The test values for component testing are listed in the Appendix. For further technical values, refer to the microfiche – Technical Data.

Removal and installation are described in the microfiche – Repair Instructions.

Overview of Defect Codes and Component Tests

Component / function	Quick test after entry♦D♦ ...	Defect code after storage
DME control unit		200
Ignition coil 1)	see engine test	
TR signal/EKP relay		1
Fuel evaporation control valve 1)	2, 3	36
Air mass meter	2	41
Pulse generator, cylinder reference 1) (ignition)	2	16
Emission (lambda) control	2	201
Fault lamp		8
Injector valves 1)	3	3, 32
Sensor heating relay	3	37
Oxygen sensor	2	70
Vehicle speed signal	2, also see instrument cluster/CC	73
DME main relay	2	
Voltage supply	2	54
ASC	2, also see ABS/ASC	83
Intake air temperature sensor 1)	2	77
Engine temperature sensor 1)	2	78
Pulse generator, engine speed/position 1)	2	

Component / function	Quick test after entry♦D♦ ...	Defect code after storage
MSR	2, also see ABS/MSR	82
Ignition timing intervention	2, also see EGS	64
Idle/full load signal	2	
Torque converter clutch	2, also see EGS	63
Drive range P/N		
A/C compressor cut-out		48
LL-CO potentiometer	2	76
Output stage		100

1) The resistance values are listed in the Appendix.

DME Control Unit

Check function:

Individual function blocks, e.g. ignition, fuel injection, emission control etc. can only be checked when the necessary input signals are applied beforehand at the control unit, see chapter – Pin Assignments.

Ignition Coil

Check function:

Perform engine test, test step 09. With the engine at operating temperature, the ignition voltage is 10 ± 2 kV. The maximum difference of the individual cylinders should not exceed 3 kV.

Resistance test:

See technical data in Appendix.

TR Signal / EKP Relay

Check function:

The EKP relay switches on as soon as the DME control unit outputs at Pin 1 a ground signal with overlaid engine speed signal (once per crankshaft revolution).

In addition, at ignition ON, the EKP relay is briefly activated by the DME in order to build up the necessary fuel pressure before starting. The voltage increase can be measured at fuse F23.

Possible cause:

- Wire to EKP relay defective
- EKP relay or main relay defective
- Voltage supply for DME control unit, DME relay 1 or 2 not OK.
- No signals from engine speed/position sensor

Fuel Evaporation Control Valve

Check electrical function:

♦D♦ 3 – The fuel evaporation control valve is activated at intervals of 1 sec. The actuation cycles can be heard at ignition ON and felt with the hand.

Check actuation phases:

♦D♦ 2 – The valve is actuated at idle speed (display: CLOSED) and is therefore closed. As soon as the emission control system is active the valve can be seen to open step-by-step (display: OPEN).

After switching off the engine, the valve is held closed for a further 3 to 5 sec.

Check for leaks:

Detach hoses from valve, switch on vacuum pump at the Service Tester and connect the 8 mm connection (note arrow indicating direction of flow). Set vacuum to 600 mbar and apply a voltage of 12 V to the valve.

Switch off vacuum pump – the pressure drop must not exceed 50 mbar after 20 sec.

When power is not applied, the fuel evaporation control valve is closed by a non-return valve to a vacuum of 20 mbar.

Air Mass Meter (HLM)

Check voltage supply HLM:

U-Batt supplied between Pins 2 and 4 at the HLM.

Check HLM signal:

♦D♦ 2 – The load signal TI provides an indication of the measured air flow rate in the HLM. When idling, the value should be 2.0 ms ± 20%. In the case of a break in the voltage supply or in the signal line, the value is a constant 2.20 ms (substitute value) at idle speed and 0 ms under part load and full load.

The load signal is formed dependent upon the voltage (< 5 V) applied at the hot wire of the HLM. The load signal is displayed in the BMW Service Tester only when the engine is in operation.

The voltage value of the hot wire can be measured between Pin 14 (sensor ground) and Pin 41 (signal HLM) of the DME control unit. The measurement can also be conducted with the ignition ON (nominal value approx. 1.4 V).

The load signals of the two rows of cylinders must scarcely deviate from each other. Check the burn-clear function if the load signal is permanently too low. A load signal which is too low tends to produce a lean mixture, thus reducing the engine output.

Check burn-clear function:

Increase engine speed once to above 200 rpm (engine temperature > 60° C). Approx. 5 seconds after switching off the engine, the hot wire can be seen to briefly light up (burn-clear) at the HLM (air cleaner cover removed).

Within 5 sec after switching off the engine, a voltage of approx. 3.5 V is applied at Pin 13 for 0.5 sec to burn clear the hot wire. This signal can be measured between Pin 13 and vehicle ground.

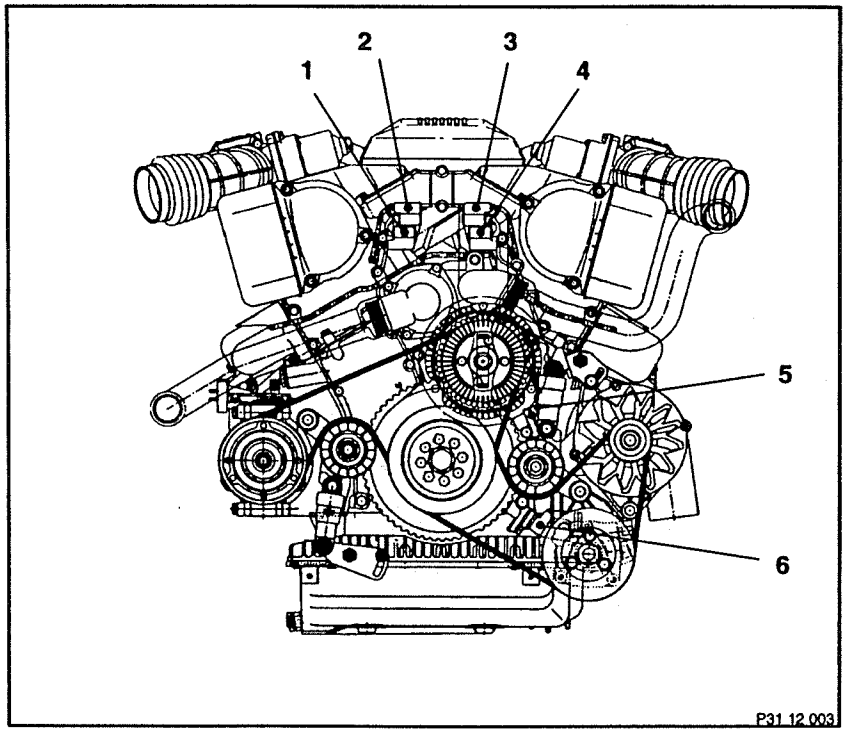

1	Connector cylinder reference	DME control unit I
2	Connector engine speed/position	DME control unit I
3	Connector cylinder reference	DME control unit II
4	Connector engine speed/position	DME control unit II
5	Pulse generator engine speed/position	DME control unit I
6	Pulse generator engine speed/position	DME control unit II

Pulse Generator – Engine Speed/Position

The DME does not output an ignition and injection signal if the engine speed signal is not applied.

Check function:

♦**D**♦ 2 – The engine speed signal can be monitored at starting speed or when the engine is running.

Further test options are possible with the oscilloscope ♦**M**♦ **23/24**. Disconnect terminals at the component connector and start engine. An alternating voltage characteristic curve with positive and negative half wave should appear on the display screen.

Possible cause:

If wire, plug connection and resistance are OK.: Check distance of pulse generator to the increment wheel on the vibration damper. Nominal value: 0.15 to 1.5 mm.

Pulse Generator Cylinder Reference (Ignition)

Check function:

♦**M**♦ **22** – Attach connections for oscilloscope at the component connector (adapter: Cartool 61 1 491) and operate engine at idle speed. From the point the engine starts, an alternating voltage characteristic curve with positive and negative half wave should appear on the display screen. If no signal is applied, the DME control unit cuts out fuel injection.

Resistance test:

The resistance can be measured directly at the component connector (at the connector strip for injector valves). For wiring diagram, refer to schematics. For technical data, see Appendix.

Fault Lamp 'Check Engine' (US only)

Check function:

The control unit supplies the fault lamp with ground potential as soon as an exhaust emission-related defect is detected. As a check, the lamp lights constantly after ignition ON and goes out as soon as the engine is running (if no exhaust emission-related defect code is stored).

Simulate defect: For example, detach connector from the air mass meter and start engine. The fault lamp must then light when the defect code 41 Air mass meter is detected by the control unit.

– Does the control unit output the ground signal?
– Are wires and fault lamp OK.?

Injector Valves

Check electrical function:

♦**D**♦ **3** – In this case, the fuel injector valves are actuated with a frequency of 10 Hz. The pulse period is 1 ms. Activation time should be kept as short as possible in order to avoid fuel being injected. Activation can be felt with the hand. The pulses can be checked with the multimeter ♦**M**♦ **15** at the injector valve connector or at the 88-pin universal adapter.

Testing with oscilloscope ♦**M**♦ **22** and universal adapter:

Connect terminal frequency OFF (+) to terminal 1 of the universal adapter leads of the BMW Service Tester and apply a frequency of 70 Hz. Connect the 88-pin universal adapter (Cartool 61 4 410) to the DME control unit and connect the terminal D+ (blue) to Pin 3 or 32. The injection signal should be displayed on the oscilloscope. In contrast to measuring the pulse duration, injection fade-out during coasting can also be seen on the oscilloscope.

Resistance test:

The resistance of an injector valve must be measured directly at the component. Only the entire group of injectors (3 valves) can be measured at the universal adapter. For technical data, see Appendix.

Sensor Heating Relay

This relay will not be fitted in series production! The voltage for sensor heating will then be supplied via the EKP relay.

Check function:

♦D♦ 3 – Activation is only possible at the cylinder row 1 to 6 (the relay supplies both sensor heaters) and takes place at one second intervals.

During normal operation, the relay remains switched on until higher speeds or loads occur.

Possible cause:

- Wire to DME control unit Pin 23 defective
- Relay or voltage supply not OK.
- Fuse F28 defective

Oxygen Sensor

Check function:

♦D♦ 2 – To carry out this check, the oxygen sensor must be at operating temperature. The indicated voltage signal is picked off in steps and fluctuates between 0.02 and 0.85 V.

When the oxygen sensor is not in operation, or the wire to the DME control unit is interrupted, the constant value of 0.45 V is indicated. This value is also indicated when no oxygen sensor is installed.

An oxygen sensor may be defective (e.g. due to deposits) and still indicate the required voltage signals. An indication for such cases is CO-measured values deviating from the nominal value despite the emission control system being active. Test option: Disconnect DME control unit from the voltage supply for at least 5 minutes. Then disconnect the oxygen sensor and perform CO measurement once again. If the CO value approaches the nominal value, the oxygen sensor should be replaced and CO measurement repeated.

Emission Control

Check function:

♦D♦ 2 – To carry out this check, the oxygen sensor must be at operating temperature. The emission control system is dependent on the engine temperature and can have a duration of up to 5 minutes (at – 30° C). At starting temperature > 20° C, the control can take up operation after approx. 30 seconds.

The control system can effectively compensate wear-related deviations in the air-fuel mixture and thus conceal other defects. If necessary, disconnect the oxygen sensor when checking the air-fuel mixture system.

Adaptations

The correction values stored in the control unit should **only be used as additional information in the case of acute engine problems**.

The correction values stored in the control unit can be of assistance in the case of acute engine problems.

If the set range is exceeded in the negative direction, the air-fuel mixture will be too rich and the DME attempts to adjust the mixture, i.e. make it leaner.

Reasons for an excessively rich mixture:

- Injector valves leaking
- Fuel pressure too high

If the set range is exceeded in the positive direction, the air-fuel mixture will be too lean and the DME attempts to adjust the mixture, i.e. make it richer.

Reasons for an excessively lean mixture:

- Leaks in intake or exhaust system (ahead of oxygen sensor). The oxygen sensor measures the additional oxygen and signals to the DME that the mixture is too lean.
- Hot wire in the HLM defective (load signal too low). The mixture is too lean.

The adaptation values are forgotten (lost) when the voltage supply to the DME is interrupted. This can lead to problems in the starting and idling. Depending on how far the adaptation values have deviated from the basic values, some time will be necessary until the adaptation values are relearned.

For this reason, idle operation or test runs are of little use in order to observe the change in adaptation values.

CO-Potentiometer (without Catalytic Converter)

Check function:

♦D♦ **2** – Measure CO content and set to nominal value with CO potentiometer (adjusting screw on HLM). The basic setting on the potentiometer is 1.25 V. For CO nominal values, see Technical Data at the end of this section.

Check voltage supply:

A voltage of approx. 5 V must be applied at the HLM connector between Pins 3 and 4.

Vehicle Speed Signal

♦D♦ **2** – With the drive wheels raised, the vehicle speed should be limited to max. 30 km/h. The road speed signal is sent by the EKM to the DME.

DME Main Relay

Check function:

♦D♦ 2 – With ignition ON or during engine operation, the main relay is actuated with ground potential at terminal 85 (display: ON). The relay switches on and supplies voltage to the control units DME, EGS, EML and ABS.

Possible cause:

- Wire to the DME control unit Pin 27 defective
- Relay or voltage supply not OK.
- Voltage supply for DME control unit not OK.
- The control unit is defective if no ground potential is output at control unit Pin 27 (display: OFF) although the above points are OK.

Control Unit - Voltage Supply

♦D♦ 2 – The indicated voltage is currently applied at the control unit. It should not be below 10 V.

Intake Air Temperature Sensor

Check function:

♦D♦ 2 – With the engine at operating temperature, the intake air temperature is at 50 to 70° C (ambient air temperature 23 ± 5° C).

A display below – 40° C indicates a break in the temperature sensor or in the supply wire to the DME control unit.

Resistance test:

For technical data, see Appendix.

Engine (Coolant) Temperature Sensor

Check function:

♦D♦ 2 – The indicated engine temperature should correspond to the coolant temperature. A value below – 30° C indicates a break in the temperature sensor or in the wire to the DME control unit.

Resistance test:

For technical data, see Appendix.

Idle/Full Load Signal

Check function:

♦D♦ 2 – The signals are sent by the EML control unit to the DME. The full load signal is sent shortly before the full load limit stop.

Technical Data

Resistance values measured at 23 ± 5° C

Engine type	M 70 B50
Injector valve	15...17 Ω
Injector valve group (3 valves)	5.5 ± 0.5 Ω
Pulse generator engine speed/position	540 ± 50 Ω
Pulse generator, cylinder reference	0.1...1 Ω
Engine temperature sensor	
at coolant temperature 20 ± 3° C	2.2...2.7 kΩ
at coolant temperature 80 ± 3° C	0.3...0.36 kΩ
Intake air temperature sensor	
at air temperature 20 ± 3° C	2.2...2.7 kΩ
at air temperature 50 ± 3° C	0.8...1.2 kΩ
Fuel evaporation control valve	45 ± 20 Ω
Injection coil	
Primary winding (terminal 15/1)	0.5 ± 0.1 Ω
Secondary winding (terminal 15/4)	6.0 ± 1.0 kΩ
Manufacturer: May and Christie	

Digital Motor Electronics (DME M1.7, 12-cylinder M 70)

The nominal values apply at: Idle speed, oil temperature > 60° C or coolant temperature > 80° C, no loads switched on.

Status inquiry	Nominal value	Signal comes from
67 Engine speed Idle speed Cut-out speed	 700 ± 50 rpm 6000 ± 40 rpm	DME control unit Control by EML Control by EML
17 Injection signal	3.8 ms ± 20 %	DME control unit
41 Load signal	2.0 ms ± 20 %	DME control unit
90 Ignition angle	15 ± 3° crank angle (automatic transmission) 10 ± 3° crank angle (manual transmission)	DME control unit
70 Oxygen sensor voltage	0.02...0.85 V; in the case of interruption or defective oxygen sensor = 0.45 V	Oxygen sensor
77 Intake air temperature sensor	Dependent on ambient temperature, break = approx. – 50° C	Intake air temperature sensor
78 Engine temperature	Dependent on coolant temperature, break = approx. – 30° C	Engine temperature sensor
91 Control unit voltage supply	> 10 V	DME relay
37 Oxygen sensor heating	ON	DME control unit
92 Emission control	ON, when oxygen sensor at operating temperature	DME control unit
93 Mixture adaptation LL	minus 48 to plus 32	DME control unit
94 Mixture adaptation TL	minus 16 to plus 16	DME control unit
16 Cylinder reference	ON	Cylinder reference sensor
36 Fuel evaporation control	as soon as clock cycle active = OPEN	DME control unit
76 CO potentiometer (without cat) CO volume (no status inquiry)	Basic setting = 1.25 V 0.7 ± 0.5 %	CO potentiometer measured ahead of the catalytic converter, – Engine test, test step 09

Status inquiry	Nominal value	Signal comes from
62 Idle signal	ON	EML control unit
12 Full load signal	OFF; at full load = ON	EML control unit
73 Vehicle speed	in km/h , with drive wheels raised, speed limited to max. 30 km/h	Instrument cluster
1 EKP relay	At start or during engine operation = ON	DME control unit
27 DME main relay	With ignition switched on = ON	DME control unit
63 Torque converter clutch	OFF	EGS control unit
64 Ignition timing intervention	OFF, briefly set to ON during gearshifts	EGS control unit
65 Drive range P/N	In selector lever position P or N = ON	Gear selector lever switch
81 DWA/ASC signal	OFF	DWA or ABS/ASC control unit
82 MSR signal	OFF	ABS/ASC/MSR control unit

Notes

The following description refers to the digital motor electronics system DME M3.1 for the 6-cylinder, 4-valve engine M 50 (2.0 l and 2.5 l).

Functional Description

New features compared to the digital motor electronics DME M1.3 for the 6-cylinder engines M 20 and M 30

new: (DME M3.1)	**former:** (DME M1.3)
– Static ignition distribution	– Distributor
– Throttle potentiometer	– Throttle switch
– Sequential injection	– Semisequential injection
– 88-pin control unit connector	– 55-pin control unit connector

The digital motor electronics system DME enables precise control of injection and ignition under variable operating conditions.

It can also operate in conjunction with other systems as follows:

– Electronic transmission control EGS
– Instrument cluster K
– Antitheft system DWA
– On-board computer BC

These systems can influence the entire engine management system depending on requirements.

The digital motor electronics (DME) assumes functions which are listed briefly below and are described in more detail in the following.

– Injection control
– Ignition timing (angle) control
– Ignition control with static high tension distribution
– Dwell angle control
– Adaptive emission control
– Adaptive idle speed control
– Adaptive tank ventilation
– Idle speed control
– Maximum speed limitation
– Cold start control
– Acceleration enrichment
– Dynamic deceleration fuel cut-out
– Emergency (limited) operation control
– Characteristic map switchover for EH transmission
– Relay controls
– Drive-away protection
– A/C compressor control
– Protection functions for catalytic converter and engine
– Self-diagnosis with defect code storage

Digital Motor Electronics (DME M3.1, 6-cylinder M 50)

The following components supply the DME control unit with input signals:

Components	Information
Digital motor electronics DME main relay	Voltage supply for a part of the digital motor electronics
Engine speed/position pulse generator	Engine speed and crankshaft position
Pulse generator, cylinder reference point (camshaft sensor)	Feedback of ignition signal of a defined cylinder
Throttle potentiometer	Position of throttle valve
Intake temperature sensor	Temperature of intake air (in this way, the air density which is reduced as the temperature increases is taken into consideration)
Engine temperature sensor	Temperature of engine coolant
Hot-wire air mass meter	Air quantity or air mass drawn in
Oxygen sensor	Oxygen content of exhaust gas
Idle-CO potentiometer (without catalytic converter)	Variable resistor (varistor) for setting the CO-content at idle speed
Instrument cluster	Vehicle speed signal
Air conditioner, defroster or air recirculation switch	Air conditioning in operation
A/C compressor	A/C compressor in operation
Battery	Current system voltage
Terminal 15	Ignition switched on

Components	Information
Antitheft system DWA	Antitheft system armed (engine operation not possible)
Electronic transmission control EGS	Shift procedures active and torque converter clutch engaged
Range selector lever of electronic transmission control	Engaged drive range

The outputs of the digital motor electronics are switched via output stages; they supply the following components with the necessary signals:

Components	Information
Injector valves	Injection time
Ignition coils 1...6	Ignition voltage
Idle actuator	Pulse duty factor for degree of opening
Fuel evaporation control valve	Clock pulses for opening cycles
Digital motor electronics DME main relay	Voltage supply
A/C compressor relay	Cut-out of A/C compressor
Electrical fuel pump relay	Activation voltage
Oxygen sensor heating relay	Activation voltage
Instrument cluster	Engine speed signal, injection signal (for fuel consumption indicator), fault lamp (US only)
Electronic transmission control EGS	Engine speed, engine temperature, throttle angle
Air mass meter	Burn-clear
Throttle potentiometer	Voltage supply 5 V

Ignition System with Static High Tension Distribution

A separate output stage-controlled ignition coil is provided for each cylinder which supplies high tension (up to 32 kV) via the spark plug connectors to the spark plugs. This makes it possible to quickly and independently control changes in the ignition timing (ignition angle).

Due to the lack of any rotating parts, the effective range for ignition timing (angle) control has been increased by approx. 10° crank angle to 59° crank angle per cylinder. A camshaft sensor is used to maintain the correct firing order.

The spark plugs feature sealed ground electrodes which reduce burn-off wear and increase the change intervals.

Ignition Timing (Angle) Control

On the basis of the engine speed and load signals, the DME control unit determines the ignition angle (ignition timing) which is output via the ignition output stages. This function also takes into consideration other input signals such as engine temperature, intake air temperature, throttle position and signals from the electronic transmission control EGS.

Dwell Angle Control

The battery or system voltage decides on the time available to build up the primary voltage in the ignition coils. From these variables, the digital motor electronics determines the necessary dwell angle, thus ensuring a sufficient ignition voltage under all operating conditions.

Injection Control

The DME control unit calculates the correct injection time on the basis of the engine speed, air mass, throttle position, oxygen sensor voltage, engine temperature and intake air temperature. The mixture is varied by the opening time of the injector valves. The battery or system voltage is also taken into consideration in calculating the injection timing since the pullup and dropout times of the injector valves are extended as the voltage decreases.

Sequential Ignition

Each injector valve is activated by its own output stage. This facilitates precise metering of the injected quantity and fast responds to load changes.

Injection takes place cylinder-specific at intervals of 120° crank angle during and after the start (as of approx. 600 rpm).

Emission Control on Models with Catalytic Converter

To maintain the optimum degree of efficiency of the catalytic converter, this system aims at achieving the idle air-fuel ratio ($\lambda = 1$) for combustion. The heated oxygen sensor is used for this purpose which measures the residual oxygen content in the exhaust gas and sends a corresponding voltage signal to the control unit. Here, the mixture composition is corrected if necessary by changing the injection timing. In the case of failure of the oxygen sensor, the DME control unit controls the system with a substitute value (0.45 V) programmed in the control unit.

Since a temperature of approx. 300°C is necessary for efficient operation of the oxygen sensor, power is supplied via a relay to a heating resistor in the oxygen sensor. The relay is activated by the DME control unit

CO Correction on Models Without Catalytic Converter

Correction can be achieved by varying an adjustment value in the DME control unit. This CO adjustment can only be made together with a BMW MoDiC. For further information, see Chapter Component Testing.

Idle Speed Control

The idle speed is kept constant by an idle speed actuator which supplies the engine with the necessary amount of air. The control is effective as soon as the DME control unit detects the idle speed setting by way of the throttle potentiometer. The preprogrammed engine speed values in the DME control unit are compared with the actual values and corrected. In this way, deviations in engine speed due to mechanical wear, leakages or different frictional resistances offered by the engine are compensated. Adjustment of the idle speed is therefore rendered unnecessary.

Vehicles with Air Conditioning System

The idle speed is increased after the system detects that the air conditioning system has been switched on. After detecting the A/C compressor signal, the air required at idle speed is corrected to the optimum value.

Vehicles with Automatic Transmission

On detecting the engaged drive range (1, 2, 3 or D) in models equipped with electronic transmission control (EGS), the idle actuator increases the amount of idle air in order to compensate for a drop in the engine speed caused by the torque converter. The nominal speed, however, is set slightly lower.

Special cases: 520i/A, 525i/A up to production 9/90 see Chapter Troubleshooting under Malfunctions.

Maximum Speed Limitation

The DME limits the maximum engine speed by cutting out the injector valves.

Cold Start Control

During the start phase, fuel is injected several times for each cylinder group per crankshaft revolution. The quantity of fuel is adapted dependent on the engine temperature and the engine speed.

In addition, the ignition timing (angle) is shifted in the retard direction the higher the temperature and the lower the start engine speed.

During the initial period after engine start, the initially injected quantity is reduced depending upon the temperature and engine speed in order to avoid an excessively rich mixture. If start is repeated within one minute, the complete initial quantity is no longer injected.

During the warm-up phase, the injection timing and the ignition timing are correspondingly varied also dependent upon engine speed and temperature.

These measures are intended to ensure a lower fuel consumption, good throttle response and smooth engine operation.

Deceleration Fuel Cut-Out

To reduce fuel consumption, the deceleration fuel cut-out is activated when the throttle valve is closed and the engine speed is above approx. 1000...1200 rpm. The DME cuts out the injection and shifts the ignition timing in the retard direction until the engine speed has dropped below the cut-in speed. Below this engine speed, fuel injection cuts in once again and the injection timing is advanced once again. The cut-in speed is dependent upon the engine temperature and the drop in engine speed.

Acceleration Adaptation

In the case of a sudden change in the throttle position towards the full load direction, the digital motor electronics increases the quantity of injected fuel for the duration of the acceleration procedure and advances the ignition timing. This function takes into account the criteria such as maximum torque, clean exhaust gas and no acceleration knocking.

Air Mass Measurement

During operation, a heated platinum wire,is subjected to the flow of intake air in the inner tube of the hot-wire air mass meter (HLM). Heat is dissipated from the hot wire by the flow of air. This heat is compensated by the heating current control. At the same time, the supplied current also flows via a precision resistor whose voltage drop represents a direct measure for the air mass which is drawn in. Air-temperature fluctuations are detected by way of a compensation resistor and taken into account in the measurement. After switching off the engine, an increased current surge is applied to the hot wire for approx. 1 second in order to burn the wire clean of impurities.

The advantages offered by the air mass meter can be found in the fact that, in this case, the air mass is measured and not the air flow (volume). Fluctuations in the air density (different air pressure due to differences in altitude and weather situation) are already taken into account during initial measurement. In addition, less resistance is offered to the flow of air in the air mass meter since it is not equipped with an air sensor plate which needs to be pressed down.

The voltage value of the air mass meter in conjunction with the engine speed is a direct measure for the engine load.

Throttle Potentiometer

A throttle potentiometer is installed instead of a throttle switch with idle and full load contact. This potentiometer requires no further adjustment since the DME itself learns the idle angle (idle switching point). The DME adds a fixed value to the learned idle value. The full load value is derived from the sum of these two values. The potentiometer must transfer this value to the DME in order to be processed by the DME as a full load signal.

If the throttle potentiometer is changed, the DME must be disconnected from the voltage supply for at least 1 minute. The DME then begins to learn the idle angle (voltage value) once again.

Fuel Evaporation Control on Models with Catalytic Converter

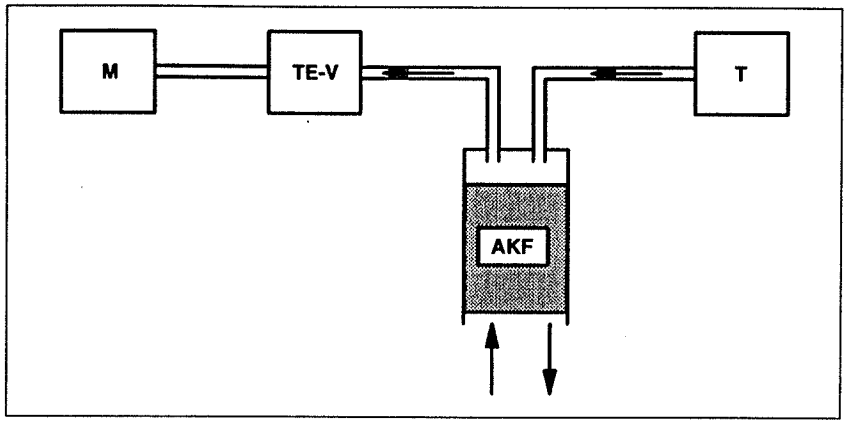

P32 12 001

M	Motor
TE-V	Fuel evaporation control valve
AKF	Activated carbon filter
T	Tank

The fuel evaporation control line of the fuel tank is connected to the activated carbon filter, in which the fuel vapours which accumulate in the tank are collected. The activated carbon filter is linked by means of a further line to the air manifold. A fuel evaporation control valve is installed in this line. When the fuel evaporation control valve is open, the vacuum in the air manifold draws in fresh air through the activated carbon filter. The fresh air flushes out the fuel collected in the filter and routes it to the engine, i.e. to the combustion process. Since this additionally supplied mixture influences combustion to a considerable extent, the fuel evaporation control valve consists of a non-return valve and an electrically operated valve. Due to the non-return valve, the fuel evaporation control valve is closed initially when no power is applied.

The non-return valve prevents fuel collecting in the air manifold when the vehicle is parked. This non-return valve opens as vacuum increases in the air manifold. Electrical actuation takes place dependent on engine speed and load. The venting cycle (flushing phase) begins as soon as the emission lambda, control system is active. On completion of one cycle, the valve is closed for approx. 1 minute (rest phase).

Adaptations

The fuel-air mixture formed in the intake tract requires a certain period of time until it reaches the oxygen sensor in the form of exhaust gas. This time decreases as load and engine speed increase. For this reason, the response time of the emission control system is also dependent on load and engine speed. Mixture deviations detected by the oxygen sensor result in storage of adaptation values (learned correction values). By way of these adaptations, the injection can be set close to the nominal values in advance, thus achieving a reduction in the response time. For instance, if the basic injection values for the DME characteristic map are too low during idling in order to maintain the ideal fuel-air mixture, the emission control system would have to constantly increase the injection timing.

In this case, an adaptation value is learnt which corrects the basic injection value. The emission (lambda) control then only needs to untertake the fine adjustment.

Following adaptations are performed during engine operation (fuel evaporation control adaptation:

Fuel Evaporation Adaptation

When the fuel evaporation control valve is open, an additional combustible mixture of air is supplied to the engine from the activated carbon filter. The shift in the air-fuel ratio detected by the oxygen sensor is almost completely compensated by way of the fuel evaporation control adaptation value.

Idle Air Adaptation

In conjunction with the idle actuator, the idle air adaptation ensures constant idle speeds.

Idle Mixture Adaptation

If the idle signal is applied during the rest phase of the fuel evaporation control system, idle mixture adaptation takes place at certain intervals.

Part Load Mixture Adaptation

Also in the part load range, mixture adaptation takes place at certain intervals. The determined adaptation value is taken into account in all part load ranges.

Relay Control

The **DME main relay** is activated by the DME control unit as of ignition ON. After shutting down the engine, the relay remains on for a further 3 sec in order to avoid post-ignition.

The **EKP relay** is activated as of ignition ON as soon as the DME control unit receives engine speed signals from the crankshaft pulse generator.

The **oxygen sensor heating relay** is activated as of ignition ON. It is switched off dependent on engine speed and load.

Emergency Operation Control

In the case of failure of sensors, substitute values are made available which enable further yet restricted engine operation. Further engine operation is no longer possible if the engine speed sensor fails.

Component	Substitute measure
Intake air temperature sensor	Substitute value active
Engine temperature sensor	Substitute value active
Air mass meter	Substitute values are derived from the position of the throttle valve
Throttle potentiometer	Substitute values for restricted engine operation
Inductive generator, engine speed/position	Engine operation not possible
Inductive generator, cylinder reference point (camshaft sensor)	Parallel injection
Oxygen sensor	Substitute value active, emission control not possible
CO potentiometer	Substitute value active

A/C Compressor Control as of 9/90

A circuit breaker relay temporarily switches off the magnetic clutch on the A/C compressor during acceleration. The DME control unit also switches off the compressor relay for 10 sec when driving off (full load at vehicle speeds below 13 km/h).

Protection Function for the Catalytic Converter

Malfunctions on the primary side of the ignition system are detected by the DME control unit and result in the injector valve on the relevant cylinder being switched off. This prevents an impermissible accumulation of uncombusted gasses in the catalytic converter.

Engine Protection Function (Knock Protection)

During engine operation at a high intake temperature and after exceeding the normal coolant temperature, the ignition timing is retarded in order to avoid knocking damage.

Drive-Away Protection

When the drive-away protection function is activated on the on-board computer (code entered) or when the antitheft system DWA is armed, a signal (>10 V) is sent to the DME control unit which consequently switches off the ignition and injection.

This function can only be activated at an engine speed below approx. 500 rpm.

Self-Diagnosis

The task of the self-diagnosis feature is to detect and store malfunctions in DME components, the associated lines or in the memory of the control unit (ROM, RAM).

The DME control unit makes available substitute values in the event of sensor failure (see troubleshooting - Explanation). These substitute values are cancelled once again as soon as normal operation can be resumed.

To facilitate fast and convenient troubleshooting, the stored defect codes or current values can be monitored from the DME control unit with the aid of the BMW DIAGNOSTIC SYSTEM.

For further information, refer to Notes on the BMW DIAGNOSTIC SYSTEM.

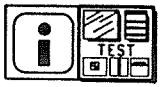

Notes on the BMW DIAGNOSTIC SYSTEM

Initialisation of Diagnostic Procedure

Communication with the control unit via the DIAGNOSTIC SYSTEM can be set up after selecting the DME on the BMW Service Tester. If data transfer is interrupted, information appears on the display screen indicating the possible cause:

- Ignition not switched on
- Voltage supply for control unit < 10 V
- DME relay not supplied with B+ (if not, bypass terminal 30 and 87)
- Control unit not connected
- Diagnostic link defective
- Data traffic inhibited by a defective control unit in the vehicle

Control Unit Identification

If necessary, the control unit can be quickly identified with the aid of these data (factory requirement). Automatic allocation of the diagnostic programs is also based on these control unit numbers.

Effective Range of the Self-Diagnosis Function

The self-diagnosis function is an aid to facilitate fast fault tracing in the vehicle's electrical/electronic systems. The BMW DIAGNOSTIC SYSTEM (Service Tester, MoDiC) provides the necessary access for the user. Self-diagnosis of the control units detects defects provided the necessary conditions for this have been fulfilled (time, temperature, load etc.). However, defects can only be registered when there is an electrical connection to the control unit. If this is not the case, the check must be performed using conventional methods (e.g. ignition voltage, fuel pressure, mechanical functions etc.).

Refer to chapter – Troubleshooting – for list of defects which can be detected by the self-diagnosis system.

Defect Code Storage

Defect codes are stored after the engine has been started (with the exception of defect codes 26 and 200). If several defects are detected, they appear in the order they first occurred.

The operating conditions as stored apply only to the conditions, under which the defect was detected for the first time. An intact voltage supply (battery charged) is the prerequisite for maintaining the memory contents.

Substitute values may be active if **no** malfunctions can be found despite a defect code being stored. Troubleshooting should still, however, be carried out.

In US models, defects which influence the fuel/air mixture are indicated by a lamp (check engine) in the instrument cluster. As a check, this lamp lights constantly during the period of time between "ignition ON" and engine start.

If the defect code memory has no defect code stored although there is a defect in the vehicle, either the test conditions (e.g. temperature, time, load etc.) for defect detection were not fulfilled or it was technically not possible to store a defect code. A list of monitored components and functions is given in the chapter – Component Testing.

Defect Code Memory Monitoring -♦D♦1

The first step should always be to monitor the defect code memory. If one or several defect codes are stored, it is advisable to print out these data immediately (R key). Since it is often necessary during the testing procedure to cut the power supply or to disconnect the connector from the control unit, the contents of the defect code memory will be unintentionally deleted as a consequence.

The learned adaptation values are lost if the battery or the DME control unit is disconnected. This may result in difficulties in starting the engine or the engine may stall when idling. These problems are generally rectified after a short test drive.

Clearing the Defect Code Memory -♦D♦9

Carry out this step only when **all** defects have been rectified or attributed to simulation. When the battery or the DME control unit are disconnected, **all** stored defect codes, the substitute values (if active) as well as the adaptation values are lost. Current defects cannot be cleared.

Status Monitoring -♦D♦2

Further current data can be called up independently of the defect code storage function. Current values or operating statuses are displayed. Refer to the chapter – Component Testing – for the necessary comparison of nominal values.

After selecting the status inquiries on the tester, the nominal values can be monitored with the key ♦D♦#.

If necessary, status inquiries can also be combined. This selection (termed extract list) is made by entering the corresponding number followed by the acknowledgement. The selection is then displayed on the screen with the ♦⇓♦ key.

Component Activation -♦D♦3

To facilitate fast fault finding, various components can be activated from the Service Tester in conjunction with the DME control unit. The response of components in perfect working order, including their supply lines, can therefore be indicated by acoustic means.

Activation is only possible with the component connected. For this reason, signal testing is not possible at the disconnected component connector. This function provides a simple means of differentiation between defects in the control unit, on the supply wire or in the component itself. More detailed information on component activation is provided on the display screen.

Print Out Check Code -♦D♦6

see Chapter 0150.

Abbreviations

ABS	Antilock brake system
AG	Automatic transmission
ASC	Automatic stability control
CO	Carbon monoxide
DK	Throttle valve
DKB	Throttle-brake intervention
DKE	Throttle increase
DKR	Throttle reduction
DKV	Preset throttle value
DME	Digital motor electronics
DWA	Antitheft system
EGS	Electronic transmission control
EH	Electrohydraulic transmission
EKM	Electronic body module
EML	Electronic throttle control
EV	Injector valve(s)
HG	Manual transmission
HLM	Hot-wire air mass meter
Hz	Hertz
KD	Kick-down
KW	Crankshaft
LL	Idle
LMM	Air flow meter
MF	Microfiche
MSR	Engine drag torque control
MV	Solenoid valve
PWG	Pedal position sensor
RxD	Diagnosis initialisation line
SG	Control unit
TD	Engine speed signal once per ignition
TE	Fuel evaporation control
ti	Injection time
tL	Load signal
TL	Part load
TR	Engine speed signal once per revolution
TxD	Diagnostic data link
U-Batt	Battery voltage
U-Vers	Voltage supply
VL	Full load
WK	Torque converter clutch
ZAB	Ignition fade-out

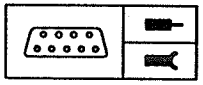

Pin Assignment

Pin Assignments at the 88-pin DME Control Unit Connector

If not otherwise specified, the signal type data apply to the engine when idling.

Pin	Type	Description/function	Connection	Signal type	Tester display	Measurement notes
1	A	EKP relay and TR signal (crankshaft reference)	Electrical fuel pump relay and electronic transmission control	Negative with overlaid engine speed signal	ON	Can only be measured with crankshaft rotating (electrical fuel pump relay does not switch if TR signal not applied)
2	A	Idle actuator-close winding	Idle actuator LLS	Negative clocked		See component activation
3	A	Injector valve cyl. 1	Injector valve	Negative clocked	Injection time ti	See component activation, check pulse duration
4	A	Injector valve cyl. 3	Injector valve	Negative clocked	Injection time ti	See component activation, check pulse duration
5	A	Injector valve cyl. 2	Injector valve	Negative clocked	Injection time ti	See component activation, check pulse duration
6	M	Ground injector valve output stages	Ground point	Ground		
7		not used				
8	A	Fault lamp (US only)	Instrument cluster	Negative		Lights only if emission-related defect code stored and for checking lamp at ignition ON
9		not used				

Pin	Type	Description/function	Connection	Signal type	Tester display	Measurement notes
10		not used				
11	A	Throttle position signal	Electronic transmission control EGS	Puls width-modulated signal for EGS	Voltage value	Dependent on throttle position, oscilloscope
12	E	Throttle potentiometer	Throttle potentiometer	approx. 0.4..4.2 V	Voltage value	Dependent on throttle position
13	A	Burn-clear	Air mass meter	Voltage increase for approx. 0.5 sec		Signal is sent 4 sec after shutting down engine
14	M	Ground-air mass meter	Air mass meter	Ground		
15		not used				
16	E	Camshaft sensor (pulse generator-cylinder reference point)	Camshaft sensor (connection 2)	Alternating voltage	Oscillogramme	Once per camshaft revolution
17	A	ti measurement signal (signal for fuel consumption indicator KVA)	Instrument cluster	Square-wave signal	Multimeter function pulse duration	Oscilloscope
18		not used				
19		not used				
20		not used				
21		not used				
22		not used				
23	A	Ignition terminal 1	Ignition coil for cyl. 2	Primary signal	Oscillogramme	Engine test, test step 05
24	A	Ignition terminal 1	Ignition coil for cyl. 3	Primary signal	Oscillogramme	Engine test, test step 05
25	A	Ignition terminal 1	Ignition coil for cyl. 1	Primary signal	Oscillogramme	Engine test, test step 05
26	E	Continuous pulse, terminal 30	B+ terminal point	> 10 V		Diagnosis not possible if not applied

Pin	Type	Description/function	Connection	Signal type	Tester display	Measurement notes
27	A	DME main relay	DME main relay terminal 85	Negative	ON	Diagnosis not possible if not applied – connect jumper at relay terminal 30 and 87
28	M	Ground for electronics and shielding of sensors	Negative terminal	Ground		
29	A	Idle actuator-opening winding	LLS	Negative clocked		Component activation
30		not used				
31	A	Injector valve cyl. 5	Injector valve	Negative clocked	Injection time ti	Component activation, check pulse duration
32	A	Injector valve cyl. 6	Injector valve	Negative clocked	Injection time ti	Component activation, check pulse duration
33	A	Injector valve cyl. 4	Injector valve	Negative clocked	Injection time ti	Component activation, check pulse duration
34	M	Ground, remaining output stages (except ignition and injector valve)	Ground point	Ground		
35		not used				
36	A	Fuel evaporation control valve	Fuel evaporation control valve	Negative clocked	CLOSE/OPEN	Perform component activation, negative => closed
37	A	Oxygen sensor heating	Oxygen sensor heating relay terminal 85	Negative	ON	Negative => Sensor heating activated
38		not used				
39		not used				
40		not used				
41	E	Air mass meter signal	Hot-wire air mass meter	0...5 V	Load signal in ms	See status monitoring
42		not used				

Pin	Type	Description/function	Connection	Signal type	Tester display	Measurement notes
43	M	Ground for sensors	Temperature sensor, throttle potentiometer	Ground		
44	E	Camshaft sensor (pulse generator-cylinder reference point)	Camshaft sensor (connection 1)	Alternating voltage	Oscillogramme	Once per camshaft revolution
45		not used				
46		not used				
47		not used				
48	A	A/C compressor cut-out (as of model year '90)	A/C compressor relay	Negative		Negative => Compressor OFF
49		not used				
50	A	Ignition terminal 1	Ignition coil for cyl. 4	Primary signal	Ignition oscillogramme	Engine test, test step 05
51	A	Ignition terminal 1	Ignition coil for cyl. 6	Primary signal	Ignition oscillogramme	Engine test, test step 05
52	A	Ignition terminal 1	Ignition coil for cyl. 5	Primary signal	Ignition oscillogramme	Engine test, test step 05
53		not used				
54	E	> 10 V from DME main relay	Main relay terminal 87	> 10 V	Voltage value	Perform status monitoring. Diagnosis not possible if signal not applied – connect jumper between terminal 30 and 87.
55	M	Ignition ground	Ground point	Ground		
56	E	Ignition, terminal 15	Ignition lock	>10 V		
57		not used				
58		not used				
59	A	5 V – component supply	Throttle potentiometer	5 V		

Digital Motor Electronics (DME M3.1, 6-cylinder M 50)

Pin Assignments

Pin	Type	Description/function	Connection	Signal type	Tester display	Measurement notes
60	E	Programming voltage	Diagnostic connector	Voltage value		Only activated during programming
61		not used				
62		not used				
63		not used				
64	E	Ignition timing (angle) intervention	Electronic transmission control	Negative	ON	Only active during gear-shift procedure
65	E	Drive range P/N	Gear selector lever switch	Negative	ON	If setting P/N
66		not used				
67	E	Inductive pulse generator (terminal A)	Pulse generator for engine speed and crankshaft position	Alternating voltage (in LL 750–850 Hz)	Engine speed	Status monitoring as of start speed
68	E	Inductive pulse generator (terminal B)	Pulse generator for engine speed and crankshaft position	Alternating voltage	Engine speed	Status monitoring as of start speed
69		not used				
70	E	Oxygen sensor signal	Oxygen sensor	Pulsating voltage 0.1...1.2 V	Voltage value	Can only be measured with engine running
71	M	Oxygen sensor ground	Oxygen sensor	Ground		
72		not used				
73	E	Vehicle speed signal	Instrument cluster	Square-wave signal	km/h	Status monitoring
74	A	Engine speed signal TD	Instrument cluster	Square-wave signal (in LL 30...40 Hz)		One signal per ignition
75		not used				

Pin	Type	Description/function	Connection	Signal type	Tester display	Measurement notes
76		not used				
77	E	Intake air temperature sensor	Intake air temperature sensor	0...5 V	° C	Temperature-dependent
78	E	Engine temperature sensor	Engine temperature sensor	0...5 V	° C	Temperature-dependent
79		not used				
80		not used				
81	E	Antitheft system DWA	Antitheft system DWA	Ground	OFF	When DWA armed > 10 V applied
82		not used				
83		not used				
84		not used				
85	E	A/C compressor switch	A/C compressor relay	Positive As of model year '91 Negative	ON / OFF	Positive => Compressor ON As of model year '91: Negative => Compressor ON
86	E	Air conditioning switch	Air conditioning relay	> 10 V	ON / OFF	When relay ON => > 10 V
87	E	RxD diagnostic data line	Diagnostic connector	> 10 V		When cover of diagnostic connector closed
88	E/A	TxD diagnostic data line	Diagnostic connector	Negative		When cover of diagnostic connector closed

E = Input, A = Output, M = Negative

Adapters

Component	Connector No.	Description	Adapter number
Control unit	X6010	Test adapter 88-pin	Universal adapter, Cartool 61 4 410 Accessories: Test lead, black, Cartool 61 4 412 Test lead, red, Cartool 61 4 413 Extensions (2), Cartool 61 4 430
Idle actuator, camshaft pulse generator, engine speed pulse generator, throttle potentiometer, oil level sensor	X1514, X1521, X1522, X1536, X1525	T-adapter 3-pin	Cartool 61 1 491
Injector valve, fuel evaporation control valve, temperature sensor	X1501...6, X1513, X1616	T-adapter 2-pin	Cartool 61 1 440
Ignition primary circuit	Ignition coil connector	3-pin, black	Primary adapter ignition, Cartool 12 70 20
Ignition secondary circuit	Spark plug connector	1-pin	Secondary adapter ignition, Cartool 12 70 30
EKP relay/main relay	X1515, X1516	T-adapter	Cartool 61 30 10/20

Troubleshooting

Notes

Relevant safety codes and accident prevention regulations must be observed when carrying out all tests and work on the engine electrical and electronic systems.

Caution!

Dangerous high tension in the primary and secondary circuit of the ignition system.

Important!

Disconnect control units from the wire harness **only with the ignition switched off**. After renewed operation, neutral basic values are set in the control unit for idle and emission control. Any irregularities in engine operation can be corrected by means of renewed adaptations (new learned values) during a test run, in which an engine temperature of > 80° C is reached.

Tests

The 88-pin universal adapter should be used for picking-off signals from the DME control unit and from the engine wire harness. Other recommended adapters are listed in the chapter – Pin Assignments. Perform wire checks **only with the control unit or component connectors** disconnected.

Defect Location Procedure

1. Quick Test with DIAGNOSTIC SYSTEM

This quick test can be used to check that other systems are operating correctly. Defects in EGS, DWA or BC can also effect the DME.

2. Defect Code Memory Inquiry

This is recommended for all systems which were found to be defective during the quick test. If several defect codes are stored, interrelationships can often be deduced, indicating whether the defect can be attributed to central causes. For example, a defective ground supply can lead to storage of the defect codes "temperature sensor, air mass meter, idle actuator, throttle potentiometer".

3. Status Monitoring and Component Activation

Irrespective of whether defect codes are stored or not, status monitoring and component activation should always be used for fault tracing.

4. Test Instructions and Schematics

The test instructions explain and supplement the self-diagnosis system. If defects occur for which no defect code is stored, they provide the opportunity of performing troubleshooting with the aid of the subsequent tests. The schematics should always be used since they clearly show the interaction of various components.

Defect Code Table

♦D♦Defect code memory – stored defect codes:

Defect codes stored in defect code memory → Defect code 0 to defect code 204

Malfunctions - defect codes not stored:

Engine operation not possible → Defect code 300

Starting inrush of A/C compressor too high → Defect code 301

Sporadic cut-out when idling → Defect code 301

No idle speed increase → Defect code 301

Engine cannot be turned off when air conditioning switched on → Defect code 301

Defect Code 0

♦D♦Defect code memory: 0 Undefined defect

Explanation: This defect code is displayed when an undefined defect code has been stored in the defect code memory.

Note: If the DME program was selected manually, check again that the correct program has been selected.

If the correct program has been selected or if selection took place automatically, data has been stored in the defect code memory for some unknown reason.

The defect code can be ignored if there are no apparent defects in the system.

Defect Code 1

♦D♦Defect code memory: 1 EKP relay

Explanation: This defect code is stored in the case of a break or short at:

– Relay for electrical fuel pump
– Wire from DME control unit Pin 1 to EKP relay
– Output stage in the DME control unit

Troubleshooting: The EKP relay must switch on from starting speed – check with test lamp 12 V 10 W at terminal 85/86.

Defect Code 2

♦D♦Defect code memory: 2 Idle actuator closing winding

Explanation: This defect code is stored in the case of a break or short at:

– Idle actuator
– Wire from DME control unit Pin 2 to idle actuator
– Output stage in the DME control unit

The defect code 29 is additionally stored in the case of a break in the voltage supply or plug-and-socket connection to the idle actuator.

Note: The defect codes 2 and 29 are also stored when engine operation is interrupted abruptly without the ignition being switched off beforehand. The defect is then detected at an engine speed < 600 rpm.

Troubleshooting: Perform component activation with tester. The idle actuator is then activated at one second intervals. If there is no response, connect test adapter 61 1 491 between the wire harness and idle actuator. A voltage of approx. 12 V should be measured at terminal 2. The value between terminal 1/2 and 2/3 is >10 V. See Component Testing for resistance values.

Defect Code 3

♦D♦Defect code memory: 3 Injector valve cyl. 1

Explanation: This defect code is stored in the case of a break or short at:

- Injector valve cyl. 1
- Wire from DME control unit Pin 3 to injector valve
- Output stage in the DME control unit

Note: The defect code 6 can be additionally stored since a cylinder cannot be assigned when the defect occurs temporarily. The defect code 6 can be ignored in the case of injector valve defect with cylinder assignment.

Troubleshooting: Perform component activation with tester. The activation cycle at a frequency of 10 Hz should be audible. See Component Testing for resistance value.

Defect Code 4

♦D♦Defect code memory: 4 Injector valve cyl. 3

Explanation: Procedure as for defect code 3.

Defect Code 5

♦D♦Defect code memory: 5 Injector valve cyl. 2

Explanation: Procedure as for defect code 3.

Defect Code 6

♦D♦Defect code memory: 6 Injector valve - output stage without cylinder reference

Explanation: This defect code is stored if a break or short occurs temporarily at:

– an injector valve
– wire from DME control unit to an injector valve
– injector valve output stage in the DME control unit

Note: Defect code 6 can be ignored if an injector valve defect code with cylinder assignment is also stored.

Troubleshooting: Perform component activation with tester at each injector valve. If the defect does not occur momentarily, check wires and terminals.

Defect Code 8

♦D♦Defect code memory: 8 Fault lamp

Explanation: Only applies to US models.

This defect code is stored if a break or short occurs at fault lamp or on its supply wire.

Troubleshooting: Connect wire (control unit Pin 8) to ground and switch on ignition. The fault lamp in the instrument cluster should light, if necessary, check lamp and voltage supply.

Defect Code 12

♦D♦Defect code memory: 12 Throttle potentiometer

Explanation: This defect code is stored in the case of:

– A break or short at the throttle potentiometer or on its supply wires
– Mechanical defect, e.g. defective connection to throttle valve

Substitute values are made available dependent on the current throttle (DK) position. A constant 14 % throttle opening is output at the DME control unit output Pin 11.

Troubleshooting: Perform status monitoring. Connect test adapter 61 1 491 between the wire harness and potentiometer. Check 5 V supply at terminal 1/3. Check resistance at potentiometer – see Component Testing for nominal values. Check mechanical connection of throttle valve.

Defect Code 16

♦D♦Defect code memory: 16 Camshaft pulse generator

Troubleshooting: Check signal with oscilloscope. Connect universal adapter to engine wire harness. Set up multimeter test M 13 (50 Hz) and M 24 (scope 25 ms) and measure at terminal 16. The signal is output once per camshaft revolution. See Component Testing for resistance values.

Explanation: This defect code is stored when the pulse generator signal is interrupted or faulty. The ignition coils for cylinders 1/6, 5/2 or 3/4 are then activated synchronously, resulting in ignition also during the exhaust stroke.

Defect Code 18

♦D♦Defect code memory: 18 Output stage pin 18

Explanation: This defect code is stored in the case of:

– A short to positive or negative of the output stage at PIN 18

Note: PIN 18 of the DME control unit is generally not used. Clear defect code if no other defect code is stored.

Defect Code 19

♦D♦Defect code memory: 19 Output stage

Explanation: This defect code is stored in the case of:

– A short to positive or negative of an output stage

Note: The defect occurred for such a short space of time that it could not be assigned to a certain output stage. It therefore frequently occurs in conjunction with other defects.

This defect code can be ignored if the engine is running properly.

Defect Code 23

♦D♦Defect code memory: 23 Ignition cylinder 2

Explanation: This defect code is stored in the case of:

– A break at the ignition output stage of this cylinder

Note: No fuel is injected in the cylinder for as long as the defect applies.

Troubleshooting: Check ignition signal with the aid of the primary adapter.

Defect Code 24

♦D♦Defect code memory: 24 Ignition cylinder 3

Explanation: Procedure as for defect code 23.

Defect Code 25

♦D♦Defect code memory: 25 Ignition cylinder 1

Explanation: Procedure as for defect code 23.

Defect Code 26

♦D♦Defect code memory: 26 Control unit – supply B+

Explanation: This defect code is stored if:

– the battery voltage is exceeded (with engine off)
– the battery is disconnected from vehicle

Note: After the correct battery voltage has been detected, the defect code is cleared automatically after the next test cycle (new start).

Defect Code 29

♦D♦Defect code memory: 29 Idle actuator opening winding

Explanation: Procedure as for defect code 2.

Defect Code 31

♦D♦Defect code memory: 31 Injector valve cyl. 5

Explanation: Procedure as for defect code 3.

Defect Code 32

♦D♦Defect code memory: 32 Injector valve cyl. 6

Explanation: Procedure as for defect code 3.

Defect Code 33

♦D♦Defect code memory: 33 Injector valve cyl. 4

Explanation: Procedure as for defect code 3.

Defect Code 36

♦D♦Defect code memory: 36 Tank ventilation

Explanation: This defect code is stored in the case of a break or short at:

- Fuel evaporation control valve
- Wire from DME control unit to fuel evaporation control valve
- Output stage in the DME control unit

Troubleshooting: Perform component activation with tester. The valve is activated at second intervals – this is audible. During normal operation, the valve is opened dependent on engine speed and load. See Component Testing for resistance values, use test adapter 61 1 440.

Defect Code 37

♦D♦Defect code memory: 37 Oxygen sensor heating

Explanation: This defect code is stored in the case of a break or short at:

- Oxygen sensor (heater part)
- Sensor heating relay
- Wire from DME control unit to sensor heating relay
- Wires to oxygen sensor
- Output stage in the DME control unit

Troubleshooting: Perform component activation with tester. The relay in the E-box is activated at second intervals – this is audible. In the case of defect "connection to sensor signal", check whether the defect is at the sensor or in its supply wire by monitoring the oxygen sensor.

Defect Code 41

♦D♦Defect code memory: 41 Air mass meter (HLM)

Explanation: This defect code is stored in the case of a break or short at:

- Air mass meter or its supply wires
- Voltage supply to air mass meter

The DME control unit then operates with substitute values which are calculated from the position of the throttle potentiometer.

Troubleshooting: Check signal by means of status monitoring – see Component Testing for nominal values.

The DME main relay supplies the HLM with 12 V at terminal 2 (+) and 4 (–).

Defect Code 46

♦D♦Defect code memory: 46 Output stage

Explanation: Procedure as for defect code 19.

Defect Code 48

♦D♦Defect code memory: 48 A/C compressor cut-out

Explanation: This defect code is stored in the case of a short to positive or negative.

In the case of a short to positive, the A/C compressor is not switched off at a speed below 8 km/h when accelerating with full load.

The A/C compressor never operates in the case of a short to negative.

Troubleshooting:

– Check wires to A/C compressor cut-out relay.
– Check relay.

Defect Code 50

♦D♦Defect code memory: 50 Ignition cylinder 4

Explanation: Procedure as for defect code 23.

Defect Code 51

♦D♦Defect code memory: 51 Ignition cylinder 6

Explanation: Procedure as for defect code 23.

Defect Code 52

♦D♦Defect code memory: 52 Ignition cylinder 5

Explanation: Procedure as for defect code 23.

Defect Code 54

♦D♦Defect code memory: 54 Control unit supply via main relay

Explanation: This defect code is stored if a break occurs in the supply voltage after start or when the voltage value is outside the permissible range between 10 V and 14 V.

If a break occurs, the supply is provided internally in the control unit via terminal 30.

Troubleshooting: If the voltage was outside the set range, check the alternator, voltage regulator and the battery.

The defect "break" refers to supply wires and ground connections to the control unit.

Defect Code 55

♦D♦Defect code memory: 55 Ignition output stage

Explanation: This defect code is stored in the case of a break at the ignition output stage. The defect, however, could not be assigned to any specific ignition output stage.

Troubleshooting: Check ignition signals with the aid of the **primary adapter.**

Defect Code 62

♦D♦Defect code memory: 62 Electronic throttle control signal (EML)

Explanation: This defect code is stored in the case of a short to positive.

Note: This defect code can be ignored if no EML control unit is installed.

Defect Code 64

♦D♦Defect code memory: 64 Ignition timing intervention during downshifts (with EGS only)

Explanation: This defect code is stored when the wire from the DME control unit Pin 64 to the EGS control unit has a short to ground (> 2.5 sec). In such a case, the ignition timing is retarded only **once**, the signal is then ignored. The ignition timing assumes its original value.

Troubleshooting: Check wire between DME control unit and EGS control unit.

Defect Code 67

♦D♦Defect code memory: 67 Crankshaft pulse generator

Explanation: This defect code is stored when the signal is not plausible. The ignition and injection cut out in the case of fault.

Troubleshooting: Check pulse generator and supply wire.

Defect Code 70

♦D♦Defect code memory: 70 Oxygen sensor

Explanation: This defect code is stored when a short or a break occurs at the oxygen sensor or on its supply wires. The prerequisite for this is an engine temperature of > 70° C.

The system sets lambda 1 as a substitute function.

Troubleshooting: Check the oxygen sensor signal at operating temperature with status monitoring. The voltage value should fluctuate between 0.02 and 0.85 V. A faulty or no sensor signal is sent to the DME control unit for as long as a constant value of 0.45 V is indicated.

Defect Code 73

♦D♦Defect code memory: 73 Vehicle speed sensor

Explanation: This defect code is stored when no plausible signal is detected while driving. The prerequisite for this is an engine speed > 2500 rpm at high load for at least 10 sec.

Troubleshooting: If the indicated speed (speedometer) is OK., check wire to the DME control unit - otherwise continue with diagnostic program instrument cluster.

Defect Code 77

♦D♦Defect code memory: 77 Intake air temperature sensor

Explanation: This defect code is stored in the case of a short or break at the temperature sensor or on its supply wires. The prerequisite for detecting a short to positive or a break is a time interval of 3 min after the start and idling. The system then operates with a substitute value of 30° C.

Troubleshooting: Check temperature values by means of status monitoring. For nominal values, see chapter – Component Testing.

Defect Code 78

♦D♦Defect code memory: 78 Engine temperature sensor (coolant)

Explanation: This defect code is stored in the case of a short or break occurring at the temperature sensor or on its supply wires. To detect a short to positive or a break, the plausibility of the engine and the intake air temperature is checked. The system then operates for 3 min with the intake air temperature and then with a substitute value of 114° C.

Troubleshooting: Check temperature values by means of status monitoring. For nominal values, see chapter – Component Testing.

Defect Code 81

♦D♦Defect code memory: 81 Antitheft system signal (DWA)

Explanation: This defect code is stored when the DWA is sensed as "armed" after starting.

Troubleshooting: Check wires to DME control unit and Pin 81 for a short. For further tests, see diagnostic program – DWA.

Defect Code 82

♦D♦Defect code memory: 82 Intervention in engine drag torque control (MSR)

Explanation: This defect code is stored in the case of a short to positive.

Note: This defect code can be ignored if no EML control unit is installed.

Troubleshooting: Check wire and control unit.

Defect Code 83

♦D♦Defect code memory: 83 Intervention in automatic stability control (ASC)

Explanation: This defect code is stored in the case of a short to positive.

Note: This defect code can be ignored if no EML control unit is installed.

Troubleshooting: Check wire and control unit.

Defect Code 85

♦D♦Defect code memory: 85 A/C compressor

Explanation: This defect code is stored when the A/C compressor is sensed as being switched on but no A/C switch signal is received.

Troubleshooting: Check wires to the DME control unit Pin 85 and 86 for a short and break.

Defect Code 100

♦D♦Defect code memory: 100 Output stage

Explanation: Procedure as for defect code 19.

Defect Code 200

♦D♦Defect code memory: 200 DME control unit

Explanation: This defect code is stored when a defect is detected in the RAM or in the ROM/EPROM.

Troubleshooting: After clearing the defect code memory, carry out test run. If the defect occurs once again, disconnect the DME control unit from the wire hardness for approx. 5 min in order to trigger a reset. The control unit must be replaced if the defect is repeated.

Defect Code 201

♦D♦Defect code memory: 201 Emission control

Explanation: This defect code is stored when the emission control reaches its control limit and no other defect which effects the mixture has been detected. This may be attributed to deviations in the mixture composition (mixture too rich or too lean for longer than 5 sec).

Troubleshocting: Measure CO content at exhaust manifold while observing the oxygen sensor voltage. For nominal values, see chapter – Component Testing. Establish operating condition at the time the defect was detected.

Possible causes:

- Vehicle stops due to lack of fuel (tank empty)
- Incorrect fuel pressure
- Defective or coked injector valves
- Incorrect output value from engine temperature sensor
- Secondary air in intake or exhaust tract
- Defect in tank ventilation
- Poor combustion (ignition, inlet/exhaust valves, compression etc. defective ...)

Defect Code 202

♦D♦Defect code memory: 202 Defect code memory

Explanation: This defect code is indicated if illogical data are stored in the defect code memory.

Troubleshooting: A defect should be simulated after clearing the defect code memory – e.g. start engine and disconnect plug from idle actuator. The control unit must be replaced if defect code 202 is stored repeatedly.

Defect Code 203

♦D♦Defect code memory: 203 Ignition circuit monitoring

Explanation: This defect code is stored if a break occurs in the primary circuit of the ignition system.

Troubleshooting: Check ignition signals with the aid of the **primary adapter.**

Defect Code 204

♦D♦Defect code memory: 204 Stall protection (idle speed increase)

Explanation: This defect code is stored when the signals are not plausible.

Note: This defect code can be ignored if no EML control unit is installed.

Defect Code 300

Malfunction: Engine operation not possible

Malfunction – without defect code storage:

Prerequisites:

- Start system OK. (battery charged, ignition switch OK, ...)
- Ground connection from battery to engine and body OK.
- Specified type of fuel in tank
- Engine OK. mechanically (timing, compression ...)

Troubleshooting:

a) Check voltage supply for DME control unit in accordance with schematic

b) Check input signals with ♦D♦Status monitoring

- Engine speed signal from inductive pulse generator at starting speed and
- Air mass meter signal

c) Check output signals

- Activation of fuel pump relay in accordance with schematic
- Check ignition output stages by means of ENGINE TEST and
- Injector valves with ♦D♦Component activation

d) Fuel pressure test in accordance with Repair Manual

For nominal values, refer to chapter – Component Testing and microfilm Technical Data.

Defect Code 301

Malfunctions:

- **Starting inrush of A/C compressor too high**
- **Sporadic cut-out when idling**
- **No increase in idle speed**
- **Engine cannot be turned off when air conditioning switched on**

Malfunctions – without defect code storage:

Concerns models 520i/A and 525i/A up to production 9/90:

Vehicles with manual transmission and without air conditioning system:

In order to achieve perfect idle characteristics, a diode module increases the idle speed of the engine when at operating temperature from 800 rpm to 900 rpm as electrical loads such as rear window defogger, low beam and fog lights or fan stage 4.

This diode module, colour blue, part number 61 35 8 351 298, is plugged in a black, 9-pin relay socket whose chamber 3 is not used.

Installation location: Left A-post behind footwell speaker.

Vehicle with automatic or manual transmission and with air conditioning system:

For reasons of greater convenience, the A/C compressor in these vehicles is connected via the air conditioning delay control unit, part number 61 35 1 394 114, colour black. With the engine at operating temperature, the idle speed is increased from 800 rpm to 840 rpm.

Installation location:

- 520i/A: Power distribution box
- 525i/A: Left A-post, behind footwell speaker in a black 9-pin relay socket whose chambers 1, 3 and 9 are not used.

Important!

The diode module, part number 61 35 8 351 298 must not be installed in automatic vehicles and vehicles with air conditioning system.

Component Testing

Overview of Defect Codes which can be Stored, Monitoring and Test Options

Defect code / defect path / area	Status monitoring	Component activation	see quick test list No.
1 EKP relay	X		1
2 Idle actuator (close)		X	8, 9
3 Injector valve cylinder 1		X	3
4 Injector valve cylinder 3		X	3
5 Injector valve cylinder 2		X	3
6 Injector valve – output stage			3
8 Fault lamp			
12 Throttle potentiometer	X		13
16 Camshaft pulse generator			12
18 Output stage Pin 18 (control units from 10/90)			
19 Output stage (control units from 10/90)			
23 Ignition cylinder 2 (control units from 10/90)			
24 Ignition cylinder 3 (control units from 10/90)			
25 Ignition cylinder 1 (control units from 10/90)			
26 Control unit supply	X		
29 Idle actuator (open)		X	9
31 Injector valve cylinder 5		X	3
32 Injector valve cylinder 6		X	3
33 Injector valve cylinder 4		X	3

Digital Motor Electronics (DME M3.1, 6-cylinder M 50)

Defect code / defect path / area	Status monitoring	Component activation	see quick test list No.
36 Tank ventilation	X	X	10
37 Oxygen sensor heating		X	6
41 Air mass meter	X		5
48 A/C compressor cut-out (control units from 10/90)			
50 Ignition cylinder 4 (control units from 10/90)			
51 Ignition cylinder 6 (control units from 10/90)			
52 Ignition cylinder 5 (control units from 10/90)			
54 Control unit supply via relay 2			
64 Ignition timing intervention from automatic transmission	X		
67 Crankshaft pulse generator	X		11
70 Oxygen sensor	X		6
73 Vehicle sped signal	X		
77 Intake air temperature sensor	X		
78 Engine temperature sensor	X		
81 Antitheft system signal			
82 Intervention in engine drag torque control			
83 Intervention in automatic stability control			
85 A/C compressor signal	X		
100 Output stage (control units from 10/90)			
200 Control unit			
201 Emission control	X		7
202 Defect code memory			

Digital Motor Electronics (DME M3.1, 6-cylinder M 50)

Defect code / defect path / area	Status monitoring	Component activation	see quick test list No.
203 Ignition circuit monitoring (control units from 10/90)			
204 Stall protection (idle speed increase) (control units from 10/90)			
Ignition timing (angle)	X		
Load signal (from HLM and temperature)	X		5
Idle and full load detection	X		13
Air conditioning switch	X		
Drive range P/N	X		

Component - Quick Test List

No.	Test	Conditions	Possible cause of defect	Test aids / remarks
1	Fuel pump relay	from starting speed	– Voltage supply for EKP relay defective – Activation (negative) via output stage in DME control unit defective – Signals from inductive pulse generator faulty	– Multimeter, schematic – Defect code memory, status monitoring – Status monitoring, oscilloscope
2	Fuel pump/fuel pressure	EKP relay ON	– Voltage supply defective – Fuel pump defective – Fuel lines/pressure regulator defective	– Multimeter, schematic – Pressure test to repair instructions
3	Injector valve	– as of starting speed – Ignition switch OK. on primary side otherwise catalytic converter protection function will be active (output stages do not switch) – Air mass meter OK.	– Voltage supply defective – Output stage in control unit defective – Injector valve defective	– Multimeter, schematic – Defect code memory – Component activation – Leakage test
4	Ignition coil	from starting speed	– Voltage supply defective – Signals from inductive pulse generator faulty – Wire 4a loose/broken – Output stage in control unit defective – Ignition coil defective	– Multimeter – Status monitoring "engine speed" – Engine test, oscilloscope

No.	Test	Conditions	Possible cause of defect	Test aids / remarks
5	Air mass meter/load signal	from starting speed (a load signal of 1.5 ms is set for starting)	– Voltage supply via DME main relay/ground terminal defective – Heating wire dirty – HLM defective – signal not plausible – Air cleaner dirty	Attention! Substitute value can be active – Status monitoring HLM/load signal – Multimeter, schematic – Check burn-clear function – Defect code memory, status monitoring
6	Oxygen sensor/sensor heating	Sensor signal with engine running and oxygen sensor at operating temperature, sensor heating from ignition ON	– Sensor dirty – Plug connection defective – Sensor heating defective – Oxygen sensor defective	Attention! Substitute value of 0.45 V may be active – Status monitoring – Component activation – Defect code memory
7	Emission control	Engine running and oxygen sensor at operating temperature	– Control at limit because mixture too lean/to rich – look for defect in mixture control system	– Defect code memory – Measure CO content
8	Idle actuator	from ignition ON	– Voltage supply defective – Idle actuator mechanically blocked or dirty – Idle actuator electrically defective	– Component activation and visual inspection of removed components – Defect code memory
9	Idle control	Engine running, when idle signal is detected and none of the defects opposite apply	If a defect is detected at – Oxygen sensor – Air mass meter – Engine temperature sensor – Intake air temperature sensor – Injector valve – Idle actuator or in the – Voltage supply of the DME control unit, the last idle setting remains valid	– Defect simulation by applying additional air to the manifold

No.	Test	Conditions	Possible cause of defect	Test aids / remarks
10	Fuel evaporation control valve	Emission control active, dependent on engine speed and load	– Voltage supply defective – Fuel evaporation control valve electrically/mechanically defective	– Component activation – Defect code memory – Leakage test
11	Crankshaft pulse generator	from starting speed	– Distance to increment wheel too great or generator loose/defective – Plug connection defective	– Status monitoring "engine speed" – Oscilloscope
12	Camshaft pulse generator	from starting speed	– Generator loose or defective – Plug connection defective	– Oscilloscope
13	Throttle potentiometer	from ignition ON	– Plug connection or component defective – Mechanical connection to throttle valve defective	Attention! Substitute value may be active – Status monitoring – Defect code memory

CO Correction on Models without Catalytic Converter

This correction can **only** be carried out with the BMW MoDiC. The prerequisite for this is the MoDiC program status V 2.1 or the subsequent versions.

CO correction is only effective in the idle range and is necessary under the following conditions:

- When deviations in the CO content are found with the engine at operating temperature and there are no other defects effecting the mixture
- After conversion of the vehicle to catalytic converter provisions (catalytic converter and oxygen sensor removed, control unit exchanged).

The CO content should be measured at the exhaust manifold before performing the correction.

The nominal CO value is 0.7 ± 0.5 vol.% at idle speed and a coolant temperature >80° C.

After ensuring the mixture control system is operating correctly, connect the MoDiC to the diagnostic connector in order to change the CO adjustment value in the DME control unit.

The necessary steps to be taken are shown in the MoDiC display:

- Switch on ignition and select DME (M 50)
- Go to selection overview and CO adjustment
- Start engine and wait until a coolant temperature of > 80° C is reached (inquiry via status monitoring)
- The current setting is indicated on a bar and numerically, the setting is changed with the left/right arrow keys
- Only change setting in steps, wait for response time of CO measuring instrument (one step = a change by approx. 0.2 vol.%)
- Adjustment can be continued until the nominal value is set
- Then shut down engine and switch on ignition again
- Store the newly set adjustment value by pressing the "Y" key. A maximum of 50 storage operations can be carried out. The remaining number of possible storage operations is displayed beforehand.
- Correct storage is confirmed with the message "storage completed"

Other messages can be:

- "Repeat entry"
- "Memory is full"
- "Program error"

The previously set CO adjustment value is not stored if these messages appear.

Resistance Values

Engine type	M50 B20 and B25
Injector valve	15...18 Ω
Engine speed/position pulse generator	540 ± 50 Ω
Camshaft pulse generator	1.45 ± 10% kΩ
Ignition coil – primary	0.4...0.8 Ω
Air mass meter – terminal 5/6	3...4 Ω
Air mass meter – terminal 5/1	16.3 kΩ
Throttle potentiometer – R total	4.6 kΩ
Idle actuator – per winding	20...25 Ω
Engine temperature sensor at –10 ± 3° C	8.26...10.56 kΩ
Engine temperature sensor at 20 ± 3° C	2.2...2.7 kΩ
Engine temperature sensor at 80 ± 3° C	290...364 Ω
Intake air temperature sensor at 20 ± 3° C	2.2...2.7 kΩ
Intake air temperature sensor at 50 ± 3° C	760...910 Ω
Fuel evaporation control valve	40...50 Ω

If not otherwise specified, the values refer to an air temperature of 23 ± 5° C.

Nominal Values for Status Monitoring

The nominal values apply at: idle speed, oil temperature > 60° C or coolant temperature > 80° C, no loads switched on.
If not otherwise specified, the values apply to both displacement variants B20 and B25 of the M 50 engine.

Status monitoring	Nominal value	Signal comes from:
67 Engine speed		DME control unit
Idle speed	700 ± 40 rpm	
Cut-out speed	6500 ± 40 rpm	
Special cases: 520i A, 525i A up to production 9/90, see chapter Troubleshooting under Malfunctions		
78 Engine temperature	Dependent on coolant temperature, break = below – 30° C	Engine temperature sensor
77 Intake temperature	Dependent on coolant temperature, break = below – 40° C	Intake air temperature sensor
92 Ignition timing (angle)	M50 B 20: 10 ± 3° crank angle M50 B 25: 9 ± 3° crank angle	DME control unit
12 DK potentiometer	0.5 ± 0.2 V in idle position, 4.5 ± 0.2 V in full load position	Throttle potentiometer
41 HLM signal	idle value with no load 2.5 ± 0.2 V, min. value 1.9 V value increases proportional to load, max. value 5.15 V	Hot-wire air mass meter
93 Load signal	Initial value at ignition ON = 1.5 ms, when idling: M50 B20: 1.8 ± 0.5 ms M50 B25: 1.7 ± 0.5 ms	DME control unit

Status monitoring	Nominal value	Signal comes from:
91 Emission control	Engine running and oxygen sensor at operating temperature, control = ON	DME control unit
36 Tank ventilation	Activation cycle dependent on engine speed and load, display = CLOSED / OPEN	DME control unit
70 Oxygen sensor	Engine running and oxygen sensor at operating temperature 0.02...0.85 V, no oxygen sensor signal = 0.45 V	Oxygen sensor
89 Idle signal	Detection by way of throttle potentiometer, display ON only when idling !	DME control unit
90 Full load signal	Shortly before accelerator pedal reaches ON	DME control unit
26 Control unit supply	> 10 V	DME relay
85 A/C compressor	Compressor magnetic clutch activated = ON	Compressor relay
86 Ar conditioning switch	With air conditioning, defroster or air recirculation switch depressed and control wheel for air quantity not set to 0 = ON	Air conditioning system
73 Vehicle speed	If drive wheels are moved when raised, limit speed to max. 30 km/h	Instrument cluster
64 Ignition timing intervention by EGS	Temporarily to ON only during gearshift	EGS control unit
65 Drive range P/N	With drive range engaged = ON	EGS control unit
– Injection signal (no status monitoring)	M50 B20: 4.1 ± 0.5 ms M50 B25: 3.9 ± 0.5 ms	Measure on lines to the injector valves

Notes

The following description refers to the Digital Motor Electronics DME M1.7 for the 4-cylinder, 2-valve engine M 40 (1.6 l and 1.8 l).

Functional Description

The new features compared to the previous Digital Motor Electronics System 1.3, 4-cylinder M 40

new:	previous:
88-pin control unit connector	55-pin control unit connector
Throttle potentiometer	Throttle switch

The digital motor electronics DME makes it possible to precisely control injection and ignition also under variable operating conditions.

This system also operates in conjunction with other systems as follows:

- Instrument cluster K
- Antitheft system DWA
- On-board computer BC

The digital motor electronics (DME) assumes functions which are listed briefly below and are described in more detail in the following.

- Injection control
- Ignition timing (angle) control
- Dwell angle control
- Adaptive emission control
- Adaptive idle speed control
- Adaptive tank ventilation
- Idle speed control
- Maximum speed limitation
- Cold start control
- Acceleration enrichment
- Dynamic deceleration fuel cut-out
- Emergency operation control
- Characteristic map switchover for EH transmission
- Relay control
- Drive-away protection
- Self-diagnosis with defect code storage

Digital Motor Electronics (DME M1.7, 4-cylinder M 40)

The following components supply input signals to the digital motor electronics control unit.

Component	Information
Digital motor electronics DME main relay	Voltage supply for a part of the digital motor electronics
Engine speed/position pulse generator	Engine speed and crankshaft position
Pulse generator, cylinder reference point	Feedback of ignition signal of a defined cylinder
Throttle potentiometer	Position of throttle valve
Intake temperature sensor	Temperature of intake air (in this way, the air density which is reduced as the temperature increases is taken into consideration)
Engine temperature sensor	Temperature of engine coolant
Air flow meter	Air quantity or air mass drawn in
Oxygen sensor	Oxygen content of exhaust gas
Idle-CO potentiometer (without catalytic converter)	Variable resistor (varistor) for setting the CO-content at idle speed
Instrument cluster	Vehicle speed signal
Air conditioning, defroster or air recirculation switch	Air conditioning in operation
A/C compressor	A/C compressor in operation
Battery	Current system voltage
Terminal 15	Ignition switched on

Component	Information
On-board computer BC	Code entered (engine operation not possible)
Antitheft system DWA	Antitheft system armed (engine operation not possible)

The outputs of the digital motor electronics are switched via output stages. They supply the following components with the necessary signals:

Components	Information
Injector valves	Injection timing
Ignition coil	Ignition voltage
Idle actuator	Pulse duty factor for degree of opening
Fuel evaporation control valve	Clock pulses for opening cycles
Digital motor electronics DME main relay	Voltage supply
A/C compressor relay	Switching off A/C compressor
Electrical fuel pump relay	Activation voltage
Oxygen sensor heating relay	Activation voltage
Instrument cluster	Engine speed, injection signal (for fuel consumption indicator), fault lamp (US only)
Air flow meter	5 V voltage supply
Kick-down prevent	Current operating status does not permit kick-down since engine speed is too high
Throttle potentiometer	5 V voltage supply

Ignition Timing Control

The ignition timing (ignition angle) is determined by the DME control unit on the basis of the engine speed and load signals and output via the ignition output stage. This function also takes into consideration other input signals such as engine temperature, intake air temperature, throttle position and signals from the electronic throttle control EML, automatic stability control ASC, engine drag torque control MSR and from the electronic transmission control EGS.

Dwell Angle Control

The engine speed and the battery or system voltage decide on the time available to build up the primary voltage in the ignition coil. From these variables, the digital motor electronics determines the necessary dwell angle, thus ensuring a sufficient ignition voltage under all operating conditions.

Injection Control

The DME control unit calculates the correct injection time on the basis of the engine speed, air flow or mass, throttle position, oxygen sensor voltage, engine temperature and intake air temperature. The mixture is varied by the opening time of the injector valves. The battery or system voltage is also taken into consideration in calculating the injection timing since the pullup and dropout times of the injector valves are extended as the voltage decreases.

Types of Injection

Each injector valve group is driven by one output stage (power amplifier). This arrangement makes it possible to divide the injection cycle into cylinder groups (semisequential injection).

Arrangement of injector valve groups:

4-cylinder: Cylinders 1+3 and 2+4

Semisequential Injection

As of an engine speed of 600 rpm, fuel is injected only once per 720° crank angle into one cylinder group. This facilitates precise metering of the quantity of fuel since the injector valves need not be activated so often. It also enables restricted engine operation in the event of failure of one group.

Semisequential injection is only active when the DME control unit has received a signal from the cylinder reference point pulse generator. If this signal is not received during engine operation, the control system remains set to semisequential injection.

There are two versions of the cylinder reference point pulse generator:

The cylinder reference point sensor is mounted on the ignition lead of cylinder No. 4 at the distributor.

Parallel Injection

Parallel injection refers to simultaneous activation of all injector valves and takes place only when the cylinder reference point sensor has applied no signal since starting the engine. As soon as a signal is applied, the system switches over to semisequential injection after the next deceleration phase.

Emission Control on Models with Catalytic Converter

To maintain the optimum degree of efficiency of the catalytic converter, this system aims at achieving the ideal air-fuel ratio ($\lambda = 1$) for combustion. The heated oxygen sensor is used for this purpose which measures the residual oxygen content in the exhaust gas and sends a corresponding voltage signal to the control unit. Here, the mixture composition is corrected if necessary by changing the injection timing. In the case of failure of the oxygen sensor, the DME control unit controls the system with a substitute value (0.45 V) programmed in the control unit.

Since a temperature of approx. 300° C is necessary for efficient operation of the oxygen sensor, power is supplied via a relay to a heating resistor in the oxygen sensor. The relay is activated by the DME control unit.

CO Potentiometer

On models not equipped with a catalytic converter, the CO setting can be corrected by means of a potentiometer (on the air flow meter). Particular care must be taken to ensure that the plug connection for the CO potentiometer is connected in the wiring harness.

Idle Speed Control

The idle speed is kept constant by an idle speed actuator which supplies the engine with the necessary amount of air. The control is effective as soon as the DME control unit detects the idle speed position by way of the throttle switch or the throttle potentiometer. The preprogrammed engine speed values in the DME control unit are compared with the actual values and corrected. In this way, deviations in engine speed due to mechanical wear, leakages or different frictional resistances offered by the engine are compensated. This therefore renders adjustment of the idle speed unnecessary.

Vehicles with Air Conditioning System

On models equipped with an air conditioning system, the idle speed is increased after the system detects that the air conditioning has been switched on. After detecting the A/C compressor signal, the air required at idle speed is corrected to the optimum value.

Maximum Speed Limitation

The DME limits the maximum speed by cutting out the injector valves.

Cold Start Control

During the start phase, fuel is injected several times for each cylinder group per crankshaft revolution. The quantity of fuel is adapted dependent on the engine temperature and the engine speed.

In addition, the ignition timing is retarded the higher the temperature and the lower the start engine speed.

During the initial period after engine start, the initially injected quantity is reduced depending upon the temperature and engine speed in order to avoid an excessively rich mixture. If start is repeated within one minute, the complete initial quantity is no longer injected.

During the warm-up phase, the injection timing and ignition timing are correspondingly varied also dependent on engine speed and temperature.

These measures are intended to ensure a lower fuel consumption, good throttle response and smooth engine operation.

Deceleration Fuel Cut-Out

To reduce fuel consumption, the deceleration fuel cut-out is activated when the throttle valve is closed and the engine speed is above approx. 1000...1200 rpm. The DME cuts out the injection and retards the injection timing until the engine speed has dropped below the cut-in speed. Below this engine speed, fuel injections cuts in once again and the injection timing is advanced once again. The cut-in speed is dependent upon the engine temperature and the drop in engine speed.

Acceleration Adaptation

In the case of a sudden change in the throttle position towards the full load direction, the digital motor electronics increases the quantity of injected fuel for the duration of the acceleration procedure and advances the ignition timing. This function takes into account the criteria such as maximum torque, clean exhaust gas and no acceleration knocking.

Air Flow Measurement

The air drawn in by the engine is routed through the air flow meter. The flow of air acts against a spring-loaded air vane. The deflection of the air vane is a measurement for the current air flow. The deflection is converted by a potentiometer, mounted on the outside, to a proportional voltage value and transferred to the digital motor electronics.

Throttle Potentiometer

A throttle potentiometer is installed instead of a throttle switch with idle and full load contact. This potentiometer needs no further setting since the DME automatically learns the idle angle (idle switching point). The DME adds a fixed value to the learned idle value. The full load value is derived from the sum of these two values. The potentiometer must send this full load value to the DME so that it can be processed as the full load signal.

The DME must be disconnected from the voltage supply for at least 1 minute when changing the throttle potentiometer. The DME then starts to learn the idle angle (voltage value) anew.

This function can only be activated below an engine speed of approx. 500 rpm.

Fuel Evaporation Control on Models with Catalytic Converter

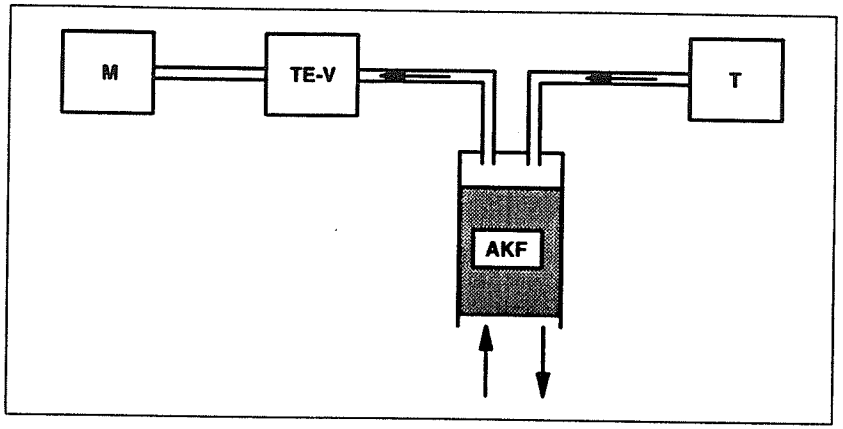

P32 12 001

M	Engine
TE-V	Fuel evaporation control valve
AKF	Activated carbon filter
T	Tank

The fuel evaporation control line of the fuel tank is connected to the activated carbon filter, in which the fuel vapours which accumulate in the tank are collected. The activated carbon filter is linked by means of a further line to the air manifold. A fuel evaporation control valve is installed in this line. When the fuel evaporation control valve is open, the vacuum in the air manifold draws in fresh air through the activated carbon filter. The fresh air flushes out the fuel collected in the filter and routs it to the engine to the combustion process.

Since this additionally supplied mixture influences combustion to a considerable extent, the fuel evaporation control valve consists of a non-

return valve and an electrically operated valve. Due to the non-return valve, the fuel evaporation control valve is closed initially when no power is applied. The non-return valve prevents fuel collecting in the air manifold when the vehicle is parked. The non-return valve opens as the vacuum in the air manifold increases. Electrical actuation takes place dependent on engine speed and load. The venting cycle (flushing phase) begins as soon as the emission (lambda) control system is active. On completion of one cycle, the valve is closed for approx. 1 min (rest phase).

Adaptations

The fuel-air mixture formed in the intake tract requires a certain period of time until it reaches the oxygen sensor in the form of exhaust gas. This time decreases as load and engine speed increase. For this reason, the response time of the emission control system is also dependent on load and engine speed. Mixture deviations detected by the oxygen sensor result in storage of adaptation values (learned correction values). By way of these adaptations, the injection can be set close to the nominal values in advance, thus achieving a reduction in the response time.

For instance, if the basic injection values for the DME characteristic map are too low during idling in order to maintain the ideal fuel-air mixture, the emission control system would have to constantly increase the injection timing. In this case, an adaptation value is learned which corrects the basic injection value. The emission (lambda) control then only needs to undertake the fine adjustment.

Following adaptations are performed during engine operation:

Fuel Evaporation Control Adaptation

When the fuel evaporation control valve is open, an additional combustible mixture or air is supplied to the engine from the activated carbon filter. The shift in the air-fuel ratio detected by the oxygen sensor is almost completely compensated by way of the fuel evaporation control adaptation value.

Idle Air Adaptation

In conjunction with the idle actuator, the idle air adaptation ensures constant idle speeds.

Idle Mixture Adaptation

If the idle signal is applied during the rest phase of the fuel evaporation control system, idle mixture adaptation takes place at certain intervals.

Part Load Mixture Adaptation

Also in the part load range, mixture adaptation takes place at certain intervals. The determined adaptation value is taken into account in all part load ranges.

Relay Control

The **DME main relay** is activated by the DME control unit as of ignition ON. After shutting down the engine, the relay remains on for a further 3 sec in order to avoid post-ignition.

The **EKP relay** is activated as of ignition ON as soon as the DME control unit receives engine speed signals from the crankshaft pulse generator.

The **oxygen sensor heating relay** is activated as of ignition ON. It is switched off dependent on engine speed and load.

Emergency Operation Control

In the case of failure of sensors, substitute values are made available which enable further yet restricted engine operation. Further engine operation is no longer possible if the engine speed sensor fails.

Component	Substitute measure
Intake air temperature sensor	Substitute value active
Engine temperature sensor	Substitute value active
Air flow meter	Substitute values are derived from the position of the throttle valve
Throttle potentiometer	Substitute values for restricted engine operation
Inductive sensor, engine speed/position	None, engine operation not possible
Inductive sensor, cylinder reference point	Parallel injection
Oxygen sensor	Substitute value active, emission control not possible
CO potentiometer	Substitute value active

Drive-Away Protection

When the drive-away protection function is activated on the on-board computer (code entered) or when the antitheft system DWA is armed, a signal (>10 V) is sent to the DME control unit which consequently switches off the ignition and injection.

This function can only be activated at an engine speed below 500 rpm.

Kick-Down Prevent

This function is provided in this form only on the DME M1.7 and hydraulic automatic transmission (not EH transmission). As of a defined vehicle speed (dependent on engine and rear axle gear ratio) a downshift from 4th to 3rd gear is prevented in that the DME control unit deactivates a solenoid valve in the automatic transmission.

A/C Compressor Cut-Out

When starting off at full load (below 8 km/h), the voltage supply to the magnetic clutch of the A/C compressor is temporarily cut by the A/C compressor cut-out relay. This ensures the full engine output is available for accelerating.

Self-Diagnosis

The task of the self-diagnosis feature is to detect and store malfunctions in DME components, the associated lines or in the memory of the control unit (ROM, RAM).

The DME control unit makes available substitute values in the event of sensor failure (see Troubleshooting - Explanation). These substitute values are cancelled once again when normal operation can be resumed.

To facilitate fast and convenient troubleshooting, the stored defect codes or current values can be monitored from the DME control unit with the aid of the BMW DIAGNOSTIC SYSTEM.

For further information, refer to Notes on the BMW DIAGNOSTIC SYSTEM.

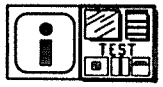

Notes on the BMW DIAGNOSTIC SYSTEM

Initialisation of Diagnostic Procedure

Communication with the control unit via the DIAGNOSTIC SYSTEM can be set up after selecting the DME on the BMW Service Tester. If data transfer is interrupted, information appears on the display screen indicating the possible cause:

- Ignition not switched on
- Voltage supply for control unit < 10 V
- DME relay not supplied with B+ (if not, connect jumper between terminal 30 and 87)
- Control unit not connected
- Diagnostic link defective
- Data traffic inhibited by a defective control unit in the vehicle

Control Unit Assignment

Initially, identification data appear in order to establish whether the correct control unit is installed. The assignment can be made by means of the variant code (e.g. C01E) and the parts microfiche without having to remove the control unit.

Explanation of Control Unit Identification

The designation of the DME version and information relating to the row of cylinders, to which communication is currently set up, appear in the first line.

Further data are displayed in the sequence shown below.

- Variant: Model designation, engine type
- With or without emission control
- Transmission variant:
  - HG – Manual transmission
  - AG – Automatic transmission, hydraulic
  - EH – Automatic transmission, electronic-hydraulic
- Type of fuel: leaded/unleaded or regular/premium
- Country version: International identification
- Control unit variant code: see Parts microfiche
- BMW hardware and software number
- Bosch hardware and software number
- Production code: Used only on special request by 'Technical Service Division'

Effective Range of the Self-Diagnosis Function

The self-diagnosis function is an aid to facilitate fast fault tracing in the vehicle's electrical/electronic systems. The BMW DIAGNOSTIC SYSTEM (Service Tester, MoDiC) provide the necessary access for the user. Self-diagnosis of the control units detects defects provided the necessary conditions for this have been fulfilled (time, temperature, load etc.). However, defects can only be registered when there is an electrical connection to the control unit. If this is not the case, the check must be performed using conventional methods (e.g. ignition voltage, fuel pressure mechanical functions etc.).

Refer to chapter – Troubleshooting – for list of defects which can be detected by the self-diagnosis system.

Defect Code Storage

Defect codes are stored after the engine has been started (exceptions defect codes 26 and 200). If several defects are detected, they appear in the order they first occurred.

The operating conditions as stored apply only to the conditions, under which the defect was detected for the first time. An intact voltage supply (battery charged) is the prerequisite for maintaining the memory contents.

Substitute values may be active if **no** malfunction can be found despite a defect code being stored. Troubleshooting should still, however, be carried out.

In US models, defects which influence the fuel/air mixture are indicated by a lamp (check engine) in the instrument cluster. As a check, this lamp lights constantly during the period of time between "ignition ON" and engine start.

If the defect code memory has no defect code stored although there is a defect in the vehicle, either the test conditions (e.g. temperature, time, load etc.) for defect detection were not fulfilled or it was technically not possible to store a defect code. A list of monitored components and functions is given in the chapter – Component Testing.

Defect Code Memory Monitoring -♦D♦1

The first step should always be to monitor the defect code memory. If one or several defect codes are stored, it is advisable to print out these data immediately (R key). Since it is often necessary during the testing procedure to cut the power supply or to disconnect the connector from the control unit, the contents of the defect code memory will be unintentionally deleted as a consequence.

The learned adaptation values are lost if the battery or the DME control unit is disconnected. This may result in difficulties in starting the engine or the engine may stall when idling. These problems are generally rectified after a short test drive.

Clearing the Defect Code Memory -♦D♦9

Carry out this step only when **all** defects have been rectified or caused by simulation. When the battery or the DME control unit are disconnected, **all** stored defect codes, the substitute values (if active) as well as the adaptation values are lost. Current defects cannot be cleared.

Status Monitoring -♦D♦2

Further current data can be called up independently of the defect code storage function. These data are acquired via switches and sensors and read out by the control unit. Refer to the chapter – Component Testing for the necessary comparison of nominal values. The nominal values can be selected with the key ♦D♦# after selecting status monitoring on the tester.

Status inquiries can also be made combined. This selection (termed extract list) is made by entering the corresponding number followed by the acknowledgement. The selection is then displayed on the screen with the ♦⇓♦ key.

Component Activation -♦D♦3

To facilitate fast fault finding, various components can be activated from the service tester in conjunction with the DME control unit. The response of components in perfect working order including their supply lines can therefore be indicated by acoustic means.

Activation is only possible with the component connected. For this reason, signal testing is not possible at the disconnected component connector. This function provides a simple means of differentiation between defects in the control unit, on the supply wire or in the component itself. More detailed information on component activation is provided on the display screen.

Print Out Test Code -♦D♦6

Refer to Chapter 0150.

Abbreviations

ABS	Antilock brake system
AG	Automatic transmission
ASC	Automatic stability control
CO	Carbon monoxide
DK	Throttle valve
DKB	Throttle-brake intervention
DKE	Throttle increase
DKR	Throttle reduction
DKV	Preset throttle value
DME	Digital motor electronics
DWA	Antitheft system
EGS	Electronic transmission control
EH	Electrohydraulic transmission
EKM	Electronic body module
EML	Electronic throttle control
EV	Injector valve(s)
HG	Manual transmission
HLM	Hot-wire air mass meter
Hz	Hertz
KD	Kick-down
KW	Crankshaft
LL	Idle
LMM	Air flow meter
MF	Microfiche
MSR	Engine drag torque control
MV	Solenoid valve
PWG	Pedal position sensor
RxD	Diagnosis initialisation line
SG	Control unit
TE	Fuel evaporation control
TD	Engine speed once per ignition
ti	Injection time
tL	Load signal
TL	Part load
TR	Engine speed once per revolution
TxD	Diagnostic data line
U-Batt	Battery voltage
U-Vers	Voltage supply
VL	Full load
WK	Torque converter clutch
ZAB	Ignition fade-out

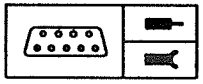

Pin Assignment

Pin assignment at 88-pin DME control unit connector

If no other measurement note is specified, the data given under signal type will apply for idle engine operation.

Pin	Type	Description/function	Connection	Signal type	Tester display	Measurement notes
1	A	EKP relay and TR signal (crankshaft reference)	Electrical fuel pump relay and electronic transmission control	Negative with overlaid engine speed signal	ON	Can only be measured with crankshaft rotating (the electrical fuel pump relay does not switch if there is no TR signal)
2		not used				
3	A	Injector valves cyl. 1+3	Injector valves	Negative clocked	Injection time ti	Negative => Injector valves open, see activation of injector valves
4		not used				
5		not used				
6	M	Ground injector valve output stages	Ground terminal	Ground		
7		not used				
8	A	Fault lamp (US only)	Instrument cluster	Negative		Lights if emission-related defect code stored and for checking lamp at ignition ON
9		not used				
10		not used				

Pin	Type	Description/function	Connection	Signal type	Tester display	Measurement notes
11	A	Throttle position signal	Electronic transmission control EGS	Pulse width-modulated signal for EGS	Voltage value	Dependent on throttle position, oscilloscope
12	E	Throttle potentiometer	Throttle potentiometer	approx. 0.4...4.2 V	Voltage value	Dependent on throttle position
13		not used				
14	M	Air flow meter ground	Air flow meter	Ground		
15		not used				
16	E	Cylinder reference pulse generator (ignition)	Cylinder reference pulse generator (terminal B)		ON / OFF	See status monitoring
17	A	ti measurement signal (signal for fuel consumption indicator KVA)	Instrument cluster	Square-wave signal	Multimeter function pulse duration	Oscilloscope
18		not used				
19		not used				
20		not used				
21		not used				
22		not used				
23		not used				
24		not used				
25	A	Ignition terminal 1	Ignition coil	Primary signal	Oscillogramme	Engine test, test step 05
26	E	Continuous pulse, terminal 30	B+ terminal point	> 10 V		Diagnosis not possible if no pulse obtained

Pin	Type	Description/function	Connection	Signal type	Tester display	Measurement notes
27	A	DME main relay	DME main relay terminal 85	Negative	ON	Diagnosis is not possible if not fitted – connect jumper between relay terminal 30 and 87
28	M	Ground for electronics and shielding of sensors	Negative terminal	Ground		
29	A	Idle actuator	Idle actuator	Square-wave signal		Component activation
30		not used				
31		not used				
32	A	Injector valves cyl. 2 + 4	Injector valves	Negative clocked	Injection time ti	Negative => Injector valves open, see component activation
33		not used				
34	M	Ground, remaining output stage (except ignition and injector valves)	Ground terminal	Ground		
35		not used				
36	A	Fuel evaporation control valve	Fuel evaporation control valve	Negative clocked	CLOSE / OPEN	Perform component activation, negative => closed
37	A	Oxygen sensor heating	Oxygen sensor heating relay terminal 85	Negative	ON	Negative => Sensor heating activated
38		not used				
39		not used				
40		not used				
41	E	Air flow meter signal	Air flow meter	0...5 V	UP / UV ratio, load signal in ms	See status monitoring

Pin	Type	Description/function	Connection	Signal type	Tester display	Measurement notes
42		not used				
43	M	Ground for sensors	Temperature sensor	Ground		
44	E	Cylinder reference pulse generator (ignition)	Cylinder reference pulse generator (terminal A)		ON / OFF	See status monitoring
45		not used				
46		not used				
47		not used				
48	A	A/C compressor cut-out	A/C compressor relay	Negative		Negative = Compressor off
49		not used				
50		not used				
51		not used				
52		not used				
53		not used				
54	E	> 10 V from DME main relay	Main relay terminal 87	> 10 V	Voltage value	Diagnosis not possible if no signal available – connect jumper between terminal 30 and 87.
55	M	Ignition ground	Ground terminal	Ground		
56	E	Ignition, terminal 15	Ignition lock	> 10 V		
57		not used				
58		not used				
59	A	Voltage supply LMM	Air flow meter LMM	5 V		
60	E	Programming voltage	Diagnostic connector	Voltage value		Only activated during programming

Pin	Type	Description/function	Connection	Signal type	Tester display	Measurement notes
61		not used				
62		not used				
63		not used				
64	E	Ignition timing intervention	Electronic transmission control	Negative	ON	Only active during gear-shift
65	E	Drive range P/N	Gear selector switch	Negative	ON	when position P/N
66		not used				
67	E	Inductive pulse generator (terminal B)	Engine speed/ position pulse generator	Alternating voltage	Engine speed	between Pin 67 and 68 (can only be measured with crankshaft rotating)
68	E	Inductive pulse generator (terminal A)	Engine speed/ position pulse generator	Alternating voltage	Engine speed	between Pin 67 and 68 (can only be measured with crankshaft rotating)
69		not used				
70	E	Oxygen sensor signal	Oxygen sensor	Pulsating voltage 0.1...1.2 V	Voltage value	Can only be measured with engine running at operating temperature
71	M	Oxygen sensor ground	Oxygen sensor	Ground		
72		not used				
73	E	Vehicle speed signal	Instrument cluster	Square-wave signal	km/h	Status monitoring
74	A	Engine speed signal TD	Instrument cluster	Square-wave signal		one signal per ignition
75		not used				
76	E	Idle CO potentiometer	Air flow meter	0...5 V	Voltage value	

Pin	Type	Description/function	Connection	Signal type	Tester display	Measurement notes
77	E	Intake air temperature sensor	Intake air temperature sensor	0...5 V	° C	dependent on temperature
78	E	Engine temperature sensor	Engine temperature sensor	0...5 V	° C	dependent on temperature
79		not used				
80		not used				
81	E	DWA	Antitheft system DWA	Ground	OFF	> 10 V applied when DWA armed
82		not used				
83		not used				
84		not used				
85	E	A/C compressor switch	A/C compressor relay	Negative	ON / OFF	When compressor ON => Negative
86	E	Air conditioning switch	Air conditioning relay	> 10 V	ON / OFF	When relay ON => > 10 V
87	E	RxD diagnostic data line	Diagnostic connector	> 10 V		When cover of diagnostic connector closed
88	E/A	TxD diagnostic data line	Diagnostic connector	Negative		When cover of diagnostic connector closed

E = Input, A = Output, M = Ground

Adapter

Component	Connector No.	Description	Adapter number
Control unit		Test adapter 88-pin	Universal adapter, Cartool 61 4 410 Accessories: Test lead, black, Cartool 61 4 412 Test lead, red, Cartool 61 4 413 Extensions (2), Cartool 61 4 430
Cylinder reference pulse generator, engine speed/position pulse generator, idle actuator, throttle switch, oil level sensor		3-pin, black	V-adapter lead, Cartool 61 1 491
Injector valve, fuel evaporation control valve, temperature sensor		T-adapter 2-pin	Cartool 61 1 440
EKP relay/main relay		T-adapter	Cartool 61 30 10/20

Troubleshooting

Notes

Relevant safety codes and accident prevention regulations must be observed when carrying out all tests and work on the engine electrical and electronic systems.

Important!

Dangerous high tension in the primary and secondary circuit of the ignition system.

Wherever possible, the battery should not be disconnected, otherwise the defect codes stored in **all the control units will be deleted. Disconnect control units from the wire harness only** when the ignition is switched off.

Conduct wire tests **only** with the control unit or component connectors disconnected.

Test Equipment

The 88-pin universal adapter can be used for picking-off signals from the DME control unit or from the engine wire harness.

Only use suitable test leads, terminals and probe tips.

Display of a stored error code on the screen.

– **Defect location:** The defect can be in the vicinity of the component, the associated wiring or in the control unit. The number of the defect code indicates the pin assignments at the control unit.

– **Type of defect:** Short-circuits, wire breaks or range transgressions are indicated. Further indication is provided as to whether the defect is momentary, or whether it occurred in the past and the code is presently not stored (intermittent defect).

– **Defect frequency:** Indication of how often the defect has been detected, or the number of starts is indicated which have taken place since the defect was last detected.

– **Detected during:** Additional information on the operating conditions, under which the defect was detected.

Evaluation of Stored Defect Codes

To facilitate effective troubleshooting, it is first advisable to print out the contents of the defect code memory.

During repairs, it is often necessary to disconnect plug connections, causing a defect code to be set in many cases. This may lead to incorrect diagnosis after monitoring the defect codes.

For this reason, all defect codes should be cleared after performing the necessary repairs (also in the electronic transmission control). Monitor the defect code memory once again after a test run.

Some defects cause a defect code to be set in the EGS control unit. Such interrelationships can be determined by comparing the ambient conditions (e.g. engine speed, temperature etc.).

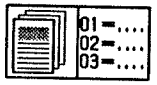

Defect Code Table

♦D♦ Defect code memory – stored defect codes:

Defect codes stored in defect code memory → Defect code 0 to Defect code 201

Malfunctions – defects not stored:

Engine operation not possible → Defect code 300

Defect Code 0

♦D♦1 Defect code memory: 0 Undefined defect

Explanation: Data have been stored in the defect code memory for no apparent reason.

Corrective measures: Perform test run after clearing the defect code memory. The defect code can be ignored if there are no noticeable effects in the system.

Defect Code 1

♦D♦1 Defect code memory: 1 TR signal/EKP relay

Explanation: This defect code is stored when a short occurs at the EKP relay or on the control wire to the DME control unit Pin 1. This defect code is only stored when another defect has already been detected.

Effects of defect: The fuel pump relay is not activated. The EGS control unit receives no TR signal.

Troubleshooting: The TR signal (engine speed signal once per revolution) is output, when the engine is running, at Pin 1 of the DME control unit and is routed via the electrical fuel pump relay to the EGS control unit.

Possible causes: Wires, connectors or electronic fuel pump relay defective.

Defect Code 3

♦D♦1 Defect code memory: 3 Injector valves cyl. 1+3

Explanation: This defect code is stored when shorts or breaks occur at the fuel injector valves cyl. 1+3 or on their supply wires.

Effects of defect: The entire group of injector valves is always deactivated when a short occurs at one injector valve or on its supply wire. The two other cylinders remain in operation.

Troubleshooting:

- Activate injector valves (see ♦D♦ Component Activation) as indicated on display screen.
- Check connections and wires in accordance with schematic.
- Replace failed injector valves

For test values, see chapter – Component Testing.

Defect Code 8

♦D♦1 Defect code memory: 8 Fault lamp

Explanation: Only applies to US models. This defect code is stored when shorts occur at the fault lamp or on its supply wire.

Effects of defect:

- The fault lamp does not light in the case of a short to positive when defect codes are stored.
- The fault lamp lights continuously in the case of a short to ground.

Troubleshooting: Normally, the fault lamp is activated by the control unit (ground signal at Pin 8) when an emission-related defect code is stored in the defect code memory.

Fault lamp test: Simulate defect, e.g. disconnect plug from air flow meter and start engine. The fault lamp must then light when the control unit detects the defect code 41 air flow meter.

- Does the control unit send the ground signal?
- Are wires and fault lamp OK.?

Defect Code 12

♦D♦ 1 Defect code memory: 12 Throttle potentiometer

Explanation: This defect code is stored when a break or shorts occur at the throttle potentiometer or on its supply wires.

Effects of defect:

- Increased idle speed
- Restricted operation, delayed reaction to accelerator pedal operation and loss in performance

Troubleshooting: Check throttle potentiometer with **♦D♦ 2** Status monitoring. Press accelerator pedal and observe throttle value, idle, part load and full load signals. The voltage value must increase uniformly when the accelerator pedal is depressed.

The idle setting of the throttle potentiometer must be detected as the idle speed. In the case of automatic transmission, full load must be detected just before the kick-down.

If not: Disconnect DME control unit. The control unit then relearns the throttle idle voltage.

Defect Code 29

♦D♦1 Defect code memory: 29 Idle actuator

Explanation: This defect code is stored when breaks or shorts occur at the idle actuator or on its supply wires (voltage supply or control wires).

Effects of defect:

- Incorrect or fluctuating idle speed.
- In the case of a break: Idle actuator assumes emergency operation setting.

Troubleshooting: Activate idle actuator with **♦D♦3** Component activation.

- Check signal at idle actuator (> 10 V). Signal is only sent when the power circuit is closed.
- Check wires and idle actuators.
- Check opening cross section of idle actuator.

Defect Code 32

♦D♦1 Defect code memory: 32 Injector valves cyl. 2 + 4

Explanation: Procedure as for defect code 3.

Defect Code 36

♦D♦1 Defect code memory: 36 Fuel evaporation control valve

Explanation: This defect code is stored when a short occurs at the fuel evaporation control valve or on its supply wire.

Effects of defect:

- Short to ground: No fuel evaporation control since the solenoid valve remains closed.
- Short to positive (or break): The solenoid valve constantly remains open. As a result, the fuel vapours supplied via the fuel evaporation control valve can lead to malfunctions when idling and during acceleration.

Troubleshooting: Activate TE-valve with **♦D♦ 3** Component activation. Does the TE-valve respond?

- YES: Check wire and connector for loose contact.
- NO: Connect test lamp (12 V 10 W) and activate component. Does test lamp flash?
- YES: Check function of TE-valve, see Troubleshooting Instructions.
- NO: Check voltage supply at TE-valve. Check wires. Check output at digital motor electronics control unit (Pin 36).

See chapter – Component Testing.

Defect Code 37

♦D♦1 Defect code memory: 37 Sensor heating relay

Explanation: The defect code for the oxygen sensor heating relay is stored when a short or a break occurs at the relay or on its supply wires.

Effects of defect: After a cold start, operation of the oxygen sensor is delayed.

Troubleshooting: Activate sensor heating relay by component activation with **♦D♦ 3**. When the relay is active, ground is applied to terminal 85 of the relay. (Check with 12 V 3 W lamp).

Defect Code 41

♦D♦1 Defect code memory: 41 Air flow meter (LMM)

Explanation: This defect code is stored when a short or a break occurs at the air flow meter or on its supply wires.

Effects of defect:

– The DME control unit operates with fixed substitute values:
– Poor acceleration response

Troubleshooting: Observe the air flow meter signal Up/Uv with **♦D♦ 2** Status monitoring. The nominal value is 0.1...0.3 when idling. If nominal value is not reached:

– Check voltage supply of air flow meter, wires and connectors.
– Check air vane in air flow meter.

Defect Code 48

♦D♦1 Defect code memory: 48 A/C compressor cut-out

Explanation: This defect code is stored when a short occurs at Pin 48.

Effects of defect:

– Short to positive: Below a speed of 8 km/h, the A/C compressor is not switched off during acceleration with full load.
– Short to ground: The A/C compressor does not operate.

Troubleshooting: Check A/C compressor cut-out relay and supply wires

Defect Code 54

♦D♦1 Defect code memory: 54 Control unit supply

Explanation: This defect code is stored when the voltage supply exceeds 16 V. A drop in the voltage supply below 9 V is detected 3 min after the start at the earliest.

Troubleshooting:

- Check battery acid level
- Check charged battery under load
- Check B+ wire to the DME relay
- Check charging current of alternator with loads switched on
- Check voltage regulator

Defect Code 64

♦D♦1 Defect code memory: 64 Ignition timing intervention

Explanation: This defect code is stored when a short to ground occurs on the wire from the electronic transmission control to the DME control unit Pin 64 (> 2.5 sec).

Effects of defect: In such a case, ignition timing intervention only occurs once, the signal is then ignored. The automatic transmission is in the emergency operation program.

Troubleshooting:

- Check wire and connector to the electronic transmission control.
- Perform defect code monitoring on the electronic transmission control. Monitor status once again after test run.

Defect Code 70

♦D♦1 Defect code memory: 70 Oxygen sensor

Explanation: This defect code is stored when a short or a break occurs at the oxygen sensor or on its supply wires or when no oxygen sensor is installed (catalytic converter provisions). The prerequisite for defect detection is an engine temperature of 70° C and a load signal of > 4.5 ms for > 5 sec.

Effects of defect: Emission control is no longer possible, the control unit operates with a substitute value.

Troubleshooting: Observe the emission control and sensor voltage with ♦D♦ 2 Status monitoring. After the sensor has reached operating temperature, the sensor voltage must fluctuate between 0.02 and 0.85.

- If sensor voltage not OK.: Detach connector for oxygen sensor, switch on ignition and measure voltage at the connector (control unit side), (nominal value = 0.45 V). As displayed on screen.
- Check wire and oxygen sensor.

Defect Code 73

♦D♦1 Defect code memory: 73 Vehicle speed signal

Explanation: This defect code is stored when despite high load and engine speed, no vehicle speed signal is applied.

Effects of defect:

- Idle adaptation not possible.

Troubleshooting:

- If vehicle speed signal is available in the instrument cluster, check wire from DME Pin 73 to instrument cluster. As displayed on screen.
- Otherwise: Check wire from instrument cluster to Reed contact.

Defect Code 76

♦D♦1 Defect code memory: 76 Idle CO potentiometer

Explanation: Only applicable to vehicles without catalytic converter. This defect code is stored when shorts or breaks occur at the potentiometer or on its supply wire.

Effects of defect: A substitute value of 2.77 V is set. The emission CO value may deviate from the nominal value.

Troubleshooting:

– Read out CO potentiometer actual value with **♦D♦ 2** Status monitoring.
– Check CO potentiometer (in LMM) and supply wires.
– Measure CO content in exhaust emission.

For test values see chapter – Component Testing.

Defect Code 77

♦D♦1 Defect code memory: 77 Intake air temperature sensor

Explanation: This defect code is stored when shorts or breaks occur at the temperature sensor or on its supply wires. A prerequisite for detecting a break is a time interval of 3 min after start and idling for at least 30 sec.

Effects of defect: After defect detection, a substitute value of 50° C is used.

Troubleshooting: Read out the actual value with **♦D♦ 2** Status monitoring. If not plausible: Check wire to DME Pin 77 and temperature sensor. For temperature sensor test values, see chapter – Component Testing.

Defect Code 78

♦D♦1 Defect code memory: 78 Engine temperature sensor

Explanation: This defect code is stored when shorts or breaks occur at the temperature sensor or on its supply wires. A prerequisite for detecting a short to positive or a break is an intake air temperature above 0° C.

Effects of defect: After defect detection a substitute value of 80° C is used.

Troubleshooting: Read out the actual value with **♦D♦ 2** Status monitoring. If not plausible: Check wire to DME Pin 78 and temperature sensor. For temperature sensor test values, see chapter – Component Testing.

Defect Code 85

♦D♦1 Defect code memory: 85 A/C compressor

Explanation: This defect code is stored when the digital motor electronics control unit detects A/C compressor relay ON although the A/C compressor relay is OFF.

Effects of defect:

– No increase in engine speed when idling although the A/C compressor is running.

Troubleshooting: Check compressor and air conditioning system with **♦D♦ 2** Status monitoring.

Possible causes:

– Break at DME Pin 86.
– Short to positive at DME Pin 85.

Defect Code 100

♦D♦1 Defect code memory: 100 Output stage

Explanation: This defect code is stored when the function of an output stage is not plausible and the control unit could not distinctly identify the output stage. If, at the same time, one of the following components is stored as being defective, then this is the cause of the defect code 100 being set and can be ignored:

- Idle actuator
- Injector valves
- Sensor heating relay
- Fuel evaporation control valve
- Fault lamp (US only)
- EKP relay
- Break at Pin 54

Troubleshooting: Activate the corresponding components with **♦D♦ 3** Component activation or check wires.

Defect Code 200

♦D♦1 Defect code memory: 200 DME control unit

Explanation: This defect code is stored when the internal self-test has found a defect in the control unit.

Possible causes: Program error or disturbed program run in the DME control unit. This defect code is also stored when manipulations have been made in the programming of the control unit. In this case, the sealing tabs on the control unit housing will be damaged.

Corrective measures: Perform test run after clearing the defect code memory. If defect reoccurs, the digital motor electronic control unit must be replaced.

Defect Code 201

♦D♦1 Defect code memory: 201 Emission (lambda) control

Explanation: This defect code is stored in the case of excessive deviations in the air-fuel mixture (mixture too rich or too lean for longer than 10 sec). The prerequisite for this is that the oxygen sensor is ready for operation.

Effects of defect: Poor engine reaction since the DME operates with a substitute value.

Possible causes:

- Vehicle stops due to lack of fuel (tank empty)
- Oxygen sensor defective
- Fuel pressure incorrect
- Injector valves defective or coked
- Engine temperature sensor defective
- Secondary air (lean mixture)
- Fuel evaporation control system defective
- Air mass meter defective
- Combustion disturbed (ignition or compression not OK.)

Troubleshooting: Perform emission test. Are nominal values reached as shown on the display screen? For test values see chapter – Technical Data.

Defect Code 300

Malfunction: Engine operation not possible

Prerequisites:

- Starting system OK. (battery charged, ignition switch ...)
- Ground connection from battery to engine or body OK.
- Specified fuel in tank
- Engine OK. mechanically (timing, compression ...)

Troubleshooting:

a) Check voltage supply to DME control units in accordance with schematic.

b) Measure input signals.

- Check engine speed signals from the pulse generators at starting speed -♦D♦200.
- Check air mass meter signals -♦D♦200.

c) Measure output signals.

- Drive fuel pump relay in accordance with schematics
- Ignition output stages by means of ENGINE TEST test step 09
- Injector valves with ♦D♦300

d) Check fuel pressure

e) Check electronic throttle control for defects

For technical data refer to chapter – Component Activation

Component Testing

Notes

Relevant safety codes and accident prevention regulations must be observed when carrying out tests and work on the engine electrical and electronic systems.

Caution!

Dangerous high tension in the primary and secondary circuit of the ignition system.

Important!

Wherever possible, the battery should not be disconnected otherwise the defect code stored in **all** the control units will be deleted. If the voltage supply to the DME is interrupted, the adaptation values will be additionally forgotten (lost). This can lead to problems in starting and idling. Depending on how far the adaptation values deviated from the basic values, some time will be required until the adaptation values are relearned. These problems are generally rectified after a short test run.

Disconnect control units from the wire harness **only** when the ignition is switched off.

Conduct wire tests **only** with the control unit or component connectors disconnected.

Test Equipment

Refer to Section 1210 in the corresponding files for the schematics.

The 88-pin universal adapter can be used for picking-off signals from the DME control unit or from the engine wire harness. See adapter table.

Use only suitable test leads, terminals and probe tips.

The test values for component testing are listed in the Appendix. For further technical values, refer to the microfiche – Technical Data.

Removal and installation are described in the microfiche – Repair Instructions.

Overview of Defect Codes and Component Tests

Component / function	Quick test after entry ♦D♦ ...	Defect code after storage
DME control unit		200
DME main relay	2	
Injector valves 1)	3	3, 32
Electrical fuel pump relay	2	1
Fault lamp		8
Vehicle speed signal	2	73
Engine speed/position pulse generator 1)	2	
Oxygen sensor	2	70
Emission control	2	201
Oxygen sensor heating relay	2,3	37
Idle CO-Potentiometer	2	76
Idle actuator		29
Air flow meter	2	41
Voltage supply	2	54
Intake air temperature sensor 1)	2	77
Engine temperature sensor 1)	2	78
Throttle potentiometer	2	12
A/C compressor cut-out	3	48
Drive range P/N	2	

Component / function	Quick test after entry ♦D♦ ...	Defect code after storage
DWA switch	2	
Air conditioning system	2	
A/C compressor	2	85
Fuel evaporation control valve 1)	2, 3	36
Ignition timing intervention	2	64
Ignition coil 1)	see engine test	
Cylinder reference pulse generator 1)	2	16
Output stage		100

1) For resistance values, refer to table of resistance values.

DME Control Unit

Check function:

Individual function blocks, e.g. ignition, fuel injection, emission control etc. can only be checked when the necessary input signals are applied beforehand at the control unit, see chapter – Pin Assignments.

Ignition Coil

Check function:

Perform engine test, step 09. With the engine at operating temperature, the ignition voltage is 10 ± 2 kV. The maximum difference of the individual cylinders should not exceed 3 kV.

Resistance test:

See table of resistance values.

TR Signal/EKP Relay

Check function:

The electrical fuel pump relay (EKP) switches on as soon as the DME control unit outputs at Pin 1 a ground signal with overlaid engine speed signal (once per crankshaft revolution).

In addition, at ignition ON, the electrical fuel pump relay is briefly activated by the DME in order to build up the necessary fuel pressure before starting. The voltage increase can be measured at fuse F23.

Possible causes:

- Wire to the electrical fuel pump relay defective
- Electrical fuel pump relay or main relay defective
- Supply voltage for DME control unit, DME relay not OK.
- No signals from engine speed/position pulse generator

Fuel Evaporation Control Valve

Check electrical function:

♦D♦ 3 – The fuel evaporation control valve is actuated at intervals of 1 second. The actuation cycle can be heard at ignition ON and felt with the hand.

Check actuation phase:

♦D♦ 2 – The valve is actuated at idle speed (display: CLOSED) and is therefore closed. As soon as the emission control system is active, the valve can be seen to open step-by-step (display: OPEN).

After switching off the engine, the valve is held closed for 3...5 sec.

Check for leaks:

Detach hoses from valve, switch on vacuum pump at the Service Tester and connect to the 8 mm connection (note arrow indicating direction of flow). Set vacuum to 600 mbar and apply a voltage of 12 V to the valve.

Switch off vacuum pump – the pressure drop must be exceed 50 mbar after 20 seconds.

When power is not applied, the fuel evaporation control valve is closed by a non-return valve to a vacuum of 20 mbar.

Air Flow Meter (LMM)

Check air flow meter signal:

Check air flow meter signal Up/Uv with ♦**D**♦ **2** Status monitoring (Up = potentiometer voltage, Uv = supply voltage 5 V).

When idling, the voltage value should be 0.2...0.3, increasing up to 0.9 V at full load. A value of 0.02 is indicated if the voltage supply or the signal line is interrupted.

Check voltage supply:

At ignition ON, the air flow meter is supplied with a voltage of 5 V by the DME control unit Pin 59 (+) and Pin 14 (–). See schematic for air flow meter wiring diagram.

Engine Speed/Position Pulse Generator

The DME does not supply an ignition and injection signal if the engine speed signal is not received.

Check function:

♦**D**♦ **2** – The engine speed signal can be monitored at starting speed or when the engine is running.

Further test options are possible with the oscilloscope ♦**M**♦ **23/24**. Connect terminals to component connector and start engine. An alternating voltage characteristic curve with positive and negative half wave should appear on the display screen.

Possible cause:

If wire, plug connection and resistance are OK.: Check distance of pulse generator to the increment wheel on the vibration damper – 0.15...1.5 mm.

Cylinder Reference Pulse Generator (Ignition)

Check function:

♦**M**♦ **22** – Attach connections for oscilloscope at the component connector (adapter: Cartool 61 1 491) and operate engine at idle speed. From the point the engine starts, an alternating voltage characteristic curve with positive and negative half wave should appear on the display screen. If no signal is applied, the fuel injection is set by the DME control unit.

If no ignition monitoring is implemented:

The system is switched over to semisequential fuel injection as soon as the control unit receives cylinder reference signal.

Resistance test:

The resistance can be measured directly at the component connector (at the connector strip for injector valves). See schematics for wiring diagram. See table of resistance values.

Fault Lamp 'Check Engine' (US only)

Check function:

The control unit supplies the fault lamp with ground potential as soon as an exhaust emission-related defect is detected. As a check, the lamp lights constantly after ignition ON and goes out as soon as the engine is running.

Simulate defect: For example, detach connector from the air flow meter and start engine. The fault lamp must then light when the defect code 41 Air Flow Meter is detected by the control unit.

– Does control unit output the ground signal?
– Are wires and fault lamp OK.?

Injector Valves

♦**D**♦ **3** – The fuel injector valves are actuated with a frequency of 10 Hz. The pulse period is 1 ms. Activation time should be kept as short as possible in order to avoid fuel being injected. Activation can be felt with the hand. The pulses can be checked with the multimeter ♦**M**♦ **15** at the injector valve connector or at the 88-pin universal adapter.

Testing with oscilloscope ♦**M**♦ **22** and universal adapter:

Connect terminal frequency OFF (+) to terminal 1 of the universal adapter lead of the BMW Service Tester and apply a frequency of 70 Hz. Connect the 88-pin universal adapter (Cartool 61 4 410) to the DME control unit and connect the terminal D+ (blue) to Pin 3 or 32. The injection signal should now be displayed on the oscilloscope. In contrast to measuring the pulse duration, injection fade-out during coasting can also be seen on the oscilloscope.

Resistance test:

The resistance of an injector valve must be measured directly at the component. Only the entire group of injector valves (2 valves) can be measured at the universal adapter. See table of resistance values.

Oxygen Sensor Heating Relay

Check function:

♦**D**♦ **3** Component activation.

During normal operation, the relay remains switched on until higher engine speeds or loads occur.

Possible causes:

– Wire to DME control unit Pin 37 defective
– Relay or voltage supply not OK.
– Fuse defective

Oxygen Sensor

Check function:

♦D♦ 2 – To carry out this check, the oxygen sensor must be at operating temperature. The indicated voltage signal is picked off in steps and fluctuates between 0.02 and 0.85 V.

When the oxygen sensor is not in operation, or there is a break in the wire to the DME control unit, the constant value of 0.45 V is indicated. This value is also indicated when no oxygen sensor is installed.

An oxygen sensor may be defective (e.g. due to deposits) and still indicate the required voltage signal. An indication for such cases is CO measured values deviating from the nominal value despite the emission control system being active. Test option: Disconnect DME control unit from the voltage supply for at least 5 minutes. Then disconnect the oxygen sensor and perform CO measurement once again. If the CO value approaches the nominal value, the oxygen sensor should be replaced and the CO measurement repeated.

Emission Control

Check function:

♦D♦ 2 – To carry out this check, the oxygen sensor must be at operating temperature. The emission control system is dependent on the engine temperature and can have a duration of up to 5 minutes (at – 30° C). At starting temperature > 20° C, the control can start up operation after approx. 30 sec.

The control system can effectively compensate wear-related deviations in the air-fuel mixture and thus conceal other defects. If necessary, disconnect the oxygen sensor when checking the air-fuel mixture system.

CO-Potentiometer (without catalytic converter)

Check function:

♦D♦ 2 – Measure CO content and set to nominal value with CO potentiometer (adjusting screw on air flow meter). The basic setting on the potentiometer is 2.77 V. For CO nominal values, see table – Nominal values for status monitoring.

Check voltage supply:

A voltage of approx. 5 V must be applied at the air flow meter connector between Pins 2 and 5.

Vehicle Speed Signal

Check function:

♦D♦ 2 – With the drive wheels raised, the engine speed should be limited to max. 30 km/h. The vehicle speed signal is sent by the body electronics module (EKM) to the DME.

DME Main Relay

Check function:

♦D♦ 2 – With ignition ON or during engine operation, the main relay is actuated with ground potential at terminal 85 (display: ON). The relay switches on and supplies voltage to the control units DME, EGS and ABS.

Possible causes:

- Wire to DME control unit Pin 27 defective
- Relay or voltage supply not OK.
- Voltage supply for DME control unit not OK.
- The control unit is defective if not ground potential is output at control unit Pin 27 (display: OFF) although the above points are OK.

Control Unit Voltage Supply

Check function:

♦D♦ 2 – The indicated voltage is currently applied at the control unit. It should not be below 10 V.

Intake Air Temperature Sensor

Check function:

♦D♦ 2 – With the engine at operating temperature, the intake air temperature is at 50...70° C (ambient air temperature 23 ± 5° C).

A display below – 40° C indicates a break in the temperature sensor or in the supply wire to the DME control unit.

Resistance test:

See table of resistance values.

Engine Temperature Sensor (Coolant)

Check function:

♦D♦ 2 – The indicated engine temperature should correspond to the coolant temperature. A value below – 30° C indicates a break in the temperature sensor or in the wire to the DME control unit.

Resistance test:

See table of resistance values.

Throttle Potentiometer

Check function:

♦D♦ 2 – Slowly operate throttle valve. The voltage of the throttle potentiometer must vary continuously. Use throttle position status monitoring to check that the control unit correctly detects the position of the throttle potentiometer.

Resistance test:

See table of resistance values.

Idle/Part Load/Full Load Signal

Check function:

♦D♦ 2 – The signals are formed by the DME control unit on the basis of the throttle potentiometer voltage. The full load signal is sent shortly before the full load limit stop.

Idle setting not detected:

- Check visually that the throttle valve really does close completely,
- Check visually that the operating cable assembly is not set too short,
- Check throttle potentiometer,
- Check wires,
- Disconnect battery for at least 1 minute. The idle setting should then be detected. The control unit is defective if the idle setting is not detected even after a longer interruption in the control unit voltage supply and when no defect has been found after performing the above tests.

Full load setting not detected:

- Check visually that the throttle valve really opens completely,
- Check visually that the operating cable assembly is not set too long,
- Check throttle potentiometer.

Component Testing

The pin assignments in the measurement notes are of assistance when using the 88-pin universal adapter. Note that only the wire harness is connected with the adapter. The control unit is not connected.

Resistance values measured at 23 ±5° C

Engine type	M 40 B16 and B18	Measurement notes
Throttle potentiometer		
Full load setting	4.0 ± 0.8 kΩ	Pin 12/43
Idle setting	1.0 ± 0.2 kΩ	Pin 12/43
Injector valve	15...17 Ω	
Injector valve group (2 valves)	8.0 ± 0.5 Ω	Pin 3/54 or 32/54
Engine speed/position pulse generator	540 ± 55 Ω	Pin 67/68
Cylinder reference pulse generator	0.1...1 Ω	Pin 16/44
Idle actuator	8.0 ± 2.0 Ω	Pin 29/54
Fuel evaporation control valve	45 ± 20 Ω (> 20)	Pin 36/54
Intake air temperature sensor		
at air temperature 20 ± 3° C	2.2...2.7 kΩ	Pin 14/77
at air temperature 50 ± 3° C	0.8...1.2 kΩ	Pin 14/77
Engine temperature sensor		
at coolant temperature 20 ± 3° C	2.2...2.7 kΩ	Pin 43/78
at coolant temperature 80 ± 3° C	0.3...0.36 kΩ	Pin 43/78
Ignition coil		
Primary winding (terminal 15/1)	0.5 ± 0.1 Ω	Pin 25/56
Secondary winding (terminal 15/4)	6.0 ± 1.0 kΩ	
Manufacturer: Bosch		

Nominal Values for Status Monitoring

The nominal values apply at: Idle speed, oil temperature > 60° C or coolant temperature > 80° C, no load switched on.

If not otherwise specified, the values apply to both displacement variants B16 and B18 of the M 40 engine.

Status inquiry	Nominal value	Signal comes from
67 Engine speed Idle speed Cut-out speed	 Manual transmission 800 ± 40 rpm Automatic transmission 800 ± 40 rpm (with drive range engaged 720 ± 40 rpm) 6200 ± 40 rpm	DME control unit
12 Throttle potentiometer	approx. 0.6 V (LL) ... 4.2 V (VL) , break = 4.9 V	Throttle potentiometer
93 Throttle position	Idle, part load, full load	DME control unit
16 Cylinder reference point	ON	Cylinder reference pulse generator
17 Injector signal	M 40 B16: 3.9...4.5 ms M 40 B18: 3.5...5.0 ms	DME control unit
94 Air flow meter Up/Uv ratio	M 40 B16: 0.15...0.22 M 40 B18: 0.1...0.3; break = 0.02	Air flow meter
41 Load signal	M 40 B16: 1.6...2.1 ms M 40 B18: 1.5...2.2 ms	DME control unit
90 Ignition angle (timing)	M 40 B16: 17 ± 3° crank angle (without catalytic converter) 12 ± 3° crank angle (with catalytic converter) M 40 B18: 17 ± 3° crank angle	DME control unit
77 Intake air temperature	Dependent on ambient temperature, break approx. –33° C	Intake air temperature sensor

Status inquiry	Nominal value	Signal comes from
78 Engine temperature	Dependent on coolant temperature, break approx. –33° C	Engine temperature sensor
37 Oxygen sensor heating	ON	DME control unit
70 Oxygen sensor voltage	0.02...0.85 V; break or defective oxygen sensor = 0.45 V	Oxygen sensor
92 Emission control	ON, when sensor at operating temperature	DME control unit
36 Fuel evaporation control	As soon as actuation cycle active = OPEN	DME control unit
76 CO potentiometer (without catalytic converter)	Basic setting = 2.77 V	CO potentiometer
CO volume (no status monitoring)	0.7 ± 0.5 %	measured ahead of catalytic converter, engine test, test step 09
91 Control unit voltage supply	> 10 V	DME relay
73 Vehicle speed	in km/h, limit speed to max. 30 km/h with drive wheels raised	Instrument cluster
1 Electrical fuel pump relay	during start or engine operation = ON	DME control unit
27 DME main relay	with ignition switched on = ON	DME control unit
64 Ignition timing intervention	OFF; temporarily set to ON during gearshift	EGS control unit
65 Drive range P/N	In selector lever position P or N = ON	Gear selector lever switch
81 DWA switch	OFF	DWA or ABS/ASC control unit
85 Compressor control	When compressor relay switched on = ON	Compressor relay
86 A/C switch	With A/C, defroster or air recirculation switch and selector wheel for air flow not set to 0 = ON	Air conditioning system

Notes

The following description refers to the Digital Motor Electronics DME MS 40 for the 6-cylinder, 4-valve engine M 50 (2.0 l).

Functional Description

New features compared to the digital motor electronics DME M 3.1 for the 6-cylinder engine M 50:

new MS 40:	former M 3.1:
Knock control	No knock control
Crankshaft angle pulse generator	Inductive pulse generator (sensor)
Camshaft angle pulse generator	Inductive pulse generator
Oxygen sensor with variable resistor	Sensor as voltage source
Hot-film air mass meter	Hot-wire air mass meter

– NTC coolant and intake air with different characteristic curves.

The digital motor electronics system DME enables precise control of injection and ignition under variable operating conditions.

It can also operate in conjunction with other systems as follows:

– Electronic transmission control (EGS)

– Instrument cluster

– Antitheft system (DWA)

– On-board computer (BC)

These system can influence the entire engine management system depending on requirements.

The digital motor electronics (DME) assumes functions which are listed briefly here and are described in more detail in the following.

- Injection control
- Ignition timing control
- Ignition controlwith static high tension distribution
- Ignition current monitoring
- Ignition timing (angle) modification during gearshift procedures (EH transmission)
- Dwell angle control
- Knock control
- Adaptive emission control
- Adaptive idle speed control
- Adaptive tank ventilation
- Idle speed control
- Maximum speed limitation
- Cold start control
- Acceleration enrichment
- Deceleration fuel cut-out
- Emergency (limited) operation control)
- Relay control
- Drive-away protection
- A/C compressor control
- Protection functions for catalytic converter and engine
- Self-diagnosis with defect code storage

The following components supply the digital motor electronics control unit with input signals.

Components	Information
Digital motor electronics DME main relay	Voltage supply for a part of the digital motor electronics
Crankshaft angle pulse generator	Engine speed and crankshaft position
Camshaft angle pulse generator	Camshaft position
Throttle potentiometer	Position of throttle valve
Throttle sensors	Knocking or normal combustion
Ignition current feedback sensor	Ignition normal or interrupts
Intake air temperature sensor	Temperature of intake air
Engine temperature sensor	Temperature of engine coolant
Hot-film air mass meter	Air mass drawn in
Oxygen sensor	Oxygen content of exhaust gas
Instrument cluster	Vehicle speed signal
Air conditioner, defroster or air recirculation switch	Air conditioner in operation
Air conditioner control unit	Request switch on A/C compressor
Terminal 15	Ignition switched on, current system voltage

Components	Information
On-board computer BC	Code entered (engine operation not possible)
Antitheft system DWA	DWA armed (engine operation not possible)
Electronic transmission control EGS	Gearshift procedures active
Range selector lever of electronic transmission control	Engaged gear range

The outputs of the digital motor electronics are switched via output stages. They supply the following components with the necessary signals:

Components	Information
Injector valves	Injection time
Ignition coils	Ignition voltage
Idle actuator	Pulse duty factor for degree of opening
Evaporation control valve	Clock pulses for opening cycles
Digital motor electronics DME main relay	Voltage supply
A/C compressor relay	Cut-out of A/C compressor
Electrical fuel pump relay	Activation voltage for fuel pump
Instrument cluster	Engine speed signal, injection signal (for fuel consumption indicator)
Electronic transmission control EGS	Engine speed signal, engine temperature, throttle angle
Throttle potentiometer	Voltage supply 5 V
Oxygen sensor	Voltage supply 5 V
Oxygen sensor heating	Pulse duty factor for different rates of oxygen sensor heating

Ignition System with Static High Tension Distribution

A separate output stage-controlled ignition coil is provided for each cylinder which supplies high tension (up to 32 kV) via the spark plug connectors to the spark plugs. This makes it possibleto quickly and independently control changes in the ignition timing.

Due to the lack of any rotating parts, the effective range for ignition timing (angle) control is increased by approx. 10° crank angle to 96° crank angle per cylinder. A camshaft sensor is used to maintain the correct firing order.

The spark plugs feature sealed ground electrodes which reduce burn-off wear and increase the change intervals.

Ignition Timing Control

On the basis of the engine speed and load signals, the DME control unit determines the ignition angle (ignition timing) which is output via the ignition output stages. This function also takes into consideration other input signals such as engine temperature, intake air temperature, throttle position and signals from the electronic transmission control EGS.

Dwell Angle Control

The battery or system voltage decides on the time available to build up the primary voltage in the ignition coil. From these variables, the digital motor electronics determines the necessary dwell angle, thus ensuring a sufficient ignition voltage under all operating conditions.

Ignition Current Feedback (ZSR)

An ignition monitoring system has been installed as an additional protection feature for the engine and catalytic converter. If a defect occurs in the ignition system (e.g. misfiring), the DME switches off the injection at the cylinder concerned. If defects occur at more than 2 cylinders, all injector valves are switched on again. The ZSR function is active as of a temperature of 85° C. The ZSR resistor is installed in the ground line of the ignition coils.

Note: The ZSR only functions in conjunction with May & Christe ignition coils.Therefore, only May & Christe coils may be used (MS 40). A defect code is stored in the case of all other ignition coils.

Knock Control

Prolonged knocking combustion can damage the engine because extremely high pressure pulses and temperatures are produced during knocking. Engines increasingly tend to knock when the compression ratio is increased in order to reduce fuel consumption and when the fuel quality is poor (octane number too low).

The knock control function prevents knocking under all operating conditions. A voltage which is evaluated in the DME control unit is produced in the knock sensors mounted on the water jacket of the engine block. If knocking occurs, the ignition timing is immediately retarded until knocking seizes. The ignition timing (angle) is then shifted in the "advance" direction in small steps. The knock control takes place individually for each cylinder, i.e. each cylinder is controlled separately.

Injection Control

The DME control unit calculates the correct injection time on the basis of the engine speed, air mass, throttle position, oxygen sensor voltage, engine temperature and intake air temperature. The mixture is varies by the opening time of the injector valves. The battery or system voltage is also taken into consideration in calculating the injection timing since the pullup and dropout times of the injector valves are extended as the voltage decreases.

Sequential Injection

Each injector valve is activated by its own output stage. This facilitates precise metering of the injected quantity and fast response to load changes.

Injection takes place cylinder-specific at intervals of 120° crank angle during and after the start.

Emission Control on Models with Catalytic Converter

To maintain the optimum degree of efficiency of the catalytic converter, this system aims at achieving the ideal air-fuel ratio (Lambda = 1). The oxygen sensor measures the oxygen content in the exhaust gas and

sends a voltage signal to the DME control unit. It is installed in the forked pipe ahead of the catalytic converter. In contrast to the M 3.1, in this case, the oxygen sensor is supplied with a 5V voltage. The voltage drop (change in resistance) at the sensor is a measure for the current oxygen value in the exhaust gas. If an excessively rich or lean mixture is detected, the injection timing is corrected, this also influencing the mixture composition.

The oxygen sensor heating activated by the control unit ensures the sensor element reaches its operating temperature within a short space of time.

As opposed to the DME 3.1, the heating capacity is controlled.

Camshaft Angle Pulse Generator (Sensor)

The camshaft sensor is installed in the cylinder head in the area of the camshaft drive. The control unit supplies the sensor with an AC voltage (110 kHz). The camshaft sensor wheel which turns in front of the sensor influences this signal. This feature makes it possible to detect the camshaft position even when the engine is stationary.

Crankshaft Angle Pulse Generator (Sensor)

The crankshaft sensor is installed next to the vibration damper in the front area of the engine. Its function corresponds to that of the camshaft sensor. The frequency of the AC voltage is, however, 150 kHz.

Idle Speed Control

The idle speed is kept constant by an idle actuator which supplies the engine with the necessary amount of air. The control is effective as soon as the DME control unit detects the idle speed setting by way of the throttle potentiometer. The preprogrammed engine speed value in the DME control unit are compared with the actual values and corrected. In this way, deviations in engine speed due to mechanical wear, leakages or different frictional resistances offered by the engine are compensated. Adjustment of the idle speed is therefore rendered unnecessary.

Vehicles with Air Conditioner System

On models equipped with an air conditioning system, the idle speed is increased after the system detects that the air conditioner has been switched on. After detecting the A/C compressor signal, the air required at idle speed is corrected to the optimum value.

Vehicles with Automatic Transmission

In the case of vehicles equipped with electronic transmission control (EGS), on detecting the engaged drive range (1, 2, 3, 4 or D), the amount of idle air is increased by the idle actuator in order to compensate for a drop in the engine speed caused by the torque converter. The nominal speed, however, is set slightly lower.

Maximum Speed Limitation

The DME limits the maximum engine speed by cutting out the injector valves.

Cold Start Control

During the start phase (when n > 0 detected) fuel is injected once for all cylinders. Fuel injection then takes place sequentially for each cylinder. The quantity of fuel is dependent on the engine temperature and engine speed.

In addition, the ignition timing is adapted corresponding to the engine temperature and start speed.

During the initial period after engine start, the initially injected quantity is reduced depending upon the engine temperature and speed in order to avoid an excessively rich mixture. If start is repeated within 10s, the complete initial start quantity is no longer injected.

During the warm-up phase, the injection timing and ignition timing are correspondingly varied also dependent upon engine speed and temperature.

These measures are intended to ensure a low fuel consumption, good throttle response and smooth engine operation.

Deceleration Fuel Cut-out

To reduce fuel consumption, the deceleration fuel cut-out is activated when the throttle valve is closed and the engine speed is above approx. 1000...1200 rpm. The DME cuts out the injection and shifts the ignition timing in the retard direction until the engine speed has dropped below the cut-in speed. Below this engine speed, fuel injection cuts in once again and the ignition timing moves towards the advance direction once again. The cut-in speed is dependent on the engine temperature and the drop in engine speed.

Acceleration Adaptation

In the case of a sudden change in the throttle position towards the full load direction, the digital motor electronics increases the quantity of injected fuel for the duration of the acceleration procedure and shifts the ignition timing in the advance direction. This function takes into account the criteria such as maximum torque, clean exhaust gas and no acceleration knocking.

Air Mass Measurement

The air mass flow drawn in by the engine is routed through the hot-film air mass meter. During operation, a resistor in the intake tube of the air mass meter is subjected to the flow of intake air. This resistor consists of a glass element which is coated with a resistive film. The current flow heats the resistor. This heat is dissipated from the resistor by the flow of air. This heat dissipation is compensated by correspondingly controlling the heating current. At the same time, the supplied current also flows via a precision resistor whose voltage drop represents a direct measure for the air mass which is drawn in.

Air temperature fluctuations are detected by way of a compensation resistor and taken into account in the measurement. The advantages offered by the air mass meter can be found in the fact that, in this case, the air mass is measured and not the air flow (volume). Fluctuations in air density (different air pressure due to differences in altitude and weather situation) are already taken into account during initial measurement. In addition, less resistance is offered to the flow of air in the air mass meter since it is not equipped with an air sensor plate which needs to be

pressed down. The voltage of the air mass meter in conjunction with the engine speed is a direct measure for the engine load.

Operational reliability of the hot-film air mass meter has been improved compared to the hot-wire air mass meter since it now no longer features a heating wire. This also renders the "burn clear" function unnecessary.

Throttle Potentiometer

A throttle potentiometer is installed instead of a throttle switch with idle and full load contact. This potentiometer requires no further adjustment since the DME itself learns the idle angle (idle switching point). The DME adds a fixed value to the learned idle value. The full load value is derived from the sum of these two values. The potentiometer must transfer this value to the DME in order to it to be processed by the DME as the full load signal.

If the throttle potentiometer is changed, the DME must be disconnected from the voltage supply for at least 1 minute. When voltage is applied again, the DME begins to learn the idle angle (voltage value) once again when terminal 15 is switched.

Fuel Evaporation Control on Models with Catalytic Converter

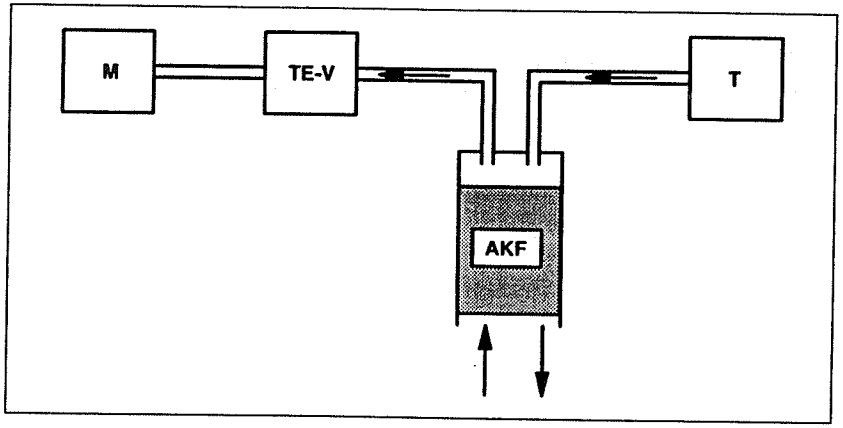

P32 12 001

M	Engine
TE-V	Fuel evaporation control valve
AKF	Activated carbon filter
T	Tank

The fuel evaporation control line of the fuel tank is connected to the activated carbon filter, in which the fuel vapours which accumulate in the tank are collected. The activated carbon filter is linked by means of a further line to the air manifold. A fuel evaporation control valve is installed in this line. When the fuel evaporation control valve is open, the vacuum in the air manifold draws in fresh air to the activated carbon filter. The fresh air flushes out the fuel collected in the filter and routes it to the engine, i.e. to the combustion process.

Since this additionally supplied mixture influences combustion to a considerable extent, the fuel evaporation control valve consists of a non-return valve and an electrically operated valve. Due to the non-return valve, the fuel evaporation control valve is closed initially when no power is applied. The non-return valve prevents fuel collecting in the air manifold when the vehicle is parked. This non-return valve opens as vacuum increases in the air manifold. Electrical actuation takes place dependent on engine speed and load. The venting cycle (flushing phase) begins as soon as the emission (lambda) control system is active.

Adaptions

The fuel-air mixture formed in the intake tract requires a certain period of time until it reaches the oxygen sensor in the form of exhaust gas. This time decreases as load and engine speed increase. For this reason, the response time of the emission control system is also dependent on load and engine speed. Mixture deviations detected by the oxygen sensor result in storage of adaptation values (learned correction values). By way of these adaptations, the injection can be set close to the nominal values in advance, thus achieving a reduction in the response time.

For instance, if the basic injection values for the DME characteristic map are too low during idling in order to maintain the idle fuel-air mixture, the emission control system would have to constantly increase the injection timing. In this case, an adaptation value is learned which corrects the basic injection value. The emission (lambda) control then only needs to undertake the fine adjustment.

Following adaptations are performed during engine operation:

Fuel Evaporation Control Adaptation

When the fuel evaporation control valve is open, an additional combustible mixture or air is supplied to the engine from the activated carbon filter. The shift in the air-fuel ratio detected by the oxygen sensor is almost completely compensated by way of the fuel evaporation control adaptation value.

Idle Air Adaptation

In conjunction with the idle actuator, the idle air adaptation ensures constant idle speeds.

Idle Mixture Adaptation

If the idle signal is applied during the rest phase of the fuel evaporation control system, idle mixture adaptation takes place at certain intervals.

Part Load Mixture Adaptation

Also in the part load range, mixture adaptation takes place at certain intervals. The determined adaptation value is taken into account in all part load ranges.

The correction values stored in the control unit are intended as additional information **only in the case of acute engine problems**.

If problems occur during engine operation and no defect codes are stored in the defect code memory, the mixture adaptation values can be read out

on the BMW Service Tester. These values can provide an indication as to which direction troubleshooting is to be continued.

The adaptation values are lost (forgotten) when the voltage supply to the DME is cut. This can lead to starting and idling problems. Depending on how far the adaptation values deviated from the basic values, a considerable period of time is required until the adaptation values are relearned.

Relay Control

The **DME main relay** is activated by the DME control unit as of ignition ON. After shutting down the engine, the main relay remains active for a further 10 s in order to avoid post-ignition.

The **EKP relay** is activated as of ignition ON as soon as the DME control unit receives engine speed signals from the crankshaft pulse generator.

At ignition ON, power is briefly applied to the EKP relay for approx. 0.5 s in order to build up the fuel pressure. The fuel pump runs on its own after the engine has started.

Emergency Operation Control

In the case of failure of sensors, substitute values are made available which enable continued yet restricted engine operation. Further engine operation is no longer possible if both angle pulse generators (camshaft and crankshaft) fail.

Component	Substitute measure
Intake air temperature sensor	Substitute value active
Engine temperature sensor	Substitute value active
Air mass meter	Substitute values are derived from the position of the throttle valve and engine speed
Throttle potentiometer	Substitute values for restricted engine operation (determined from the HFM signal and engine speed)
Crankshaft angle pulse generator (sensor)	Camshaft angle pulse generator signal
Camshaft angle pulse generator (sensor)	Double ignition, parallel injection with half injection time
Oxygen sensor	Emission control no possible

Transmission Intervention in EH Transmission

During the gearshift procedure, the EGS control unit sends the DME control unit a signal which has the effect of retarding the ignition timing and reducing the torque. This ensures smooth transmission to the next drive range.

Drive-away Protection

When the drive-away protection function is activated on the on-board computer (code entered) or when the antitheft system DWA is armed, a signal (>10 V) is sent to the DME control unit which consequently switches off the ignition and injection.

This function can only be activated at an engine speed below approx. 2000 rpm.

A/C Compressor Control

The DME control unit switches off the compressor relay for 10 s when driving off (full load at vehicle speeds below 13 km/h).

Self-diagnosis

The task of the self-diagnosis feature is to detect and store malfunctions in DME components, the associated lines or in the memory of the control unit (ROM, RAM).

The DME control unit makes available substitute values in the event of sensor failure (see Troubleshooting - Explanation). These substitute values are cancelled once again as soon as normal operation can be resumed.

To facilitate fast and convenient troubleshooting, the stored defect codes or current values can be monitored by the DME control unit with the aid of the BMW DIAGNOSTIC SYSTEM.

For further information, refer to Notes on the BMW DIAGNOSTIC SYSTEM.

Notes on the BMW DIAGNOSTIC SYSTEM

Effective Range of the Self-diagnosis Function

The self-diagnosis function is an aid to facilitate fast fault tracing in the vehicle's electrical/electronic systems. The BMW DIAGNOSTIC SYSTEM (Service Tester, MoDiC) provides the necessary access for the user. Self-diagnosis of the control units detects defects provided the necessary conditions for this have been fulfilled (time, temperature, load etc.). However, defects can only be registered when there is an electrical connection to the control unit. If this is not the case, the check must be performed using conventional methods (e.g. ignition voltage, fuel pressure, mechanical functions etc.).

Refer to chapter – Troubleshooting – for list of defects which can be detected by the self-diagnosis system.

Control Unit Identification

If necessary, the control unit can be quickly identified with the aid of these data (works requirement). Automatic assignment of the diagnostic programs is also based on these control unit identification numbers.

Storage of Defect Codes

Defect codes are stored after switching on terminal 15. If several defects are detected, they appear in the order they first occurred.

The operating conditions as stored apply only to the conditions, under which the defect was detected for the first time. An intact voltage supply (charged battery) is the prerequisite for maintaining the memory contents.

Substitute values may be active if **no** malfunctions can be found despite a defect code being stored. Nevertheless, troubleshooting should still be carried out.

If the defect code memory has no defect code stored although there is a defect in the vehicle, either the test conditions (e.g. temperature, time, load etc.) for defect detection were not fulfilled or it was technically not possible to store a defect code. A list of monitored components and functions is given in the chapter – Component testing.

The stored defect codes are lost when the battery is disconnected or the control unit removed. The defect code memory should therefore be read out before starting any troubleshooting procedures.

Clearing the Defect Code Memory

Carry out this step only when all defects have been rectified or when a special instruction has been given. After being cleared, current defect codes are immediately stored in the defect code memory again. When the battery or the DME control unit are disconnected, all stored defect codes as well as currently active substitute values are lost. The adapted values for idle control (idle air) and emission control (mixture composition) are neutralized. During a new start, this may result in temporary irregular engine operation. A test run, during which an engine temperature of > 85° C is reached, is therefore recommended.

Status Monitoring

Inputs and outputs can be monitored independently of the defect code storage function. In this case, current values or operating statuses are displayed. In order to better illustrate relevant relationships, several status inquiries can be combined to form a block.

Component Activation

To facilitate fast fault finding, various components can be activated with the DIAGNOSTIC SYSTEM. The response of components, including the supply line, in perfect working order can therefore be indicated by acoustic means. Activation is only possible with the component connected so that signal testing is not possible at the detached component connector.

Abbreviations

AG	Automatic transmission
DK	Throttle valve
DWA	Antitheft system
EGS	Electronic transmission control
EKP	Electrical fuel pump
EV	Injector valve
HG	Manual transmission
KD	Kick-down
KW	Crankshaft
LL	Idle
LLS	Idle actuator
HFM	Hot-film air mass meter
MF	Microfiche
MV	Solenoid valve
NW	Camshaft
RxD	Diagnosis initialization line
TD	Engine speed signal (at ignition interval)
TE	Tank ventilation
ti	Injection time
TL	Part load
tL	Load signal
TR	Crankshaft reference
TxD	Diagnostic data link
SG	Control unit
U-Batt	Battery voltage
U-Vers	Voltage supply
v-Signal	Vehicle speed signal
VL	Full load
WIG	Angle pulse generator
ZSR	Ignition current feedback

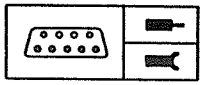

Pin Assignment

Pin Assignments at the 88-pin DME Control Unit Connectors X 6010 (DME Control Unit I) and X 6020 (DME Control Unit II).

Pin Assignments at the 88-pin DME Control Unit Connector

If no other measurement note is specified, the data given under signal type will apply for idle engine operation

Pin	Type	Description/function	Connection	Signal type	Tester display	Measurement notes
1	A	Ignition terminal 1	Ignition coil for cylinder 1	Primary signal	Oscillogram	Engine test, test step 05
2	A	Ignition terminal 1	Ignition coil for cylinder 3	Primary signal	Oscillogram	Engine test, test step 05
3	A	Ignition terminal 1	Ignition coil for cylinder 5	Primary signal	Oscillogram	Engine test, test step 05
4	M	Ground ignition	Ground point	Ground	–	–
5	A	Injector valve cyl. 6	Injector valve	Negative clocked	Injection time ti	see component activation, check pulse duration
6	A	Injector valve cyl. 4	Injector valve	Negative clocked	Injection time ti	see component activation, check pulse duration
7	–	–	–	–	–	–
8	E	Drive range P/N	Gear selector lever	Negative	ON	Status monitoring
9	E	A/C compressor	A/C control unit	Ground	ON	Status monitoring
10	E	A/C switch	A/C relay	>10 V	ON	Status monitoring
11	–	–	–	–	–	–

Pin	Type	Description/function	Connection	Signal type	Tester display	Measurement notes
12	E	Vehicle speed signal	Instrument cluster	Square-wave signal	Km/h	Status monitoring
13	–	–	–	–	–	–
14	E	Ignition timing intervention	EGS control unit	Ground	ON	Status monitoring
15	E	DWA signal	DWA control unit / BC	Negative	–	>10 V applied when DWA armed
16	–	–	–	–	–	–
17	A	ti measurement signal (signal for fuel consumption indicator KVA)	Electronic body module EKM	Square-wave signal	Multimeter function pulse duration	Oscilloscope
18	A	Engine speed signal Td	Instrument cluster	Square-wave signal	–	–
19	–	–	–	–	–	–
20	A	Throttle potentiometer	EGS	Pulse width-modulated signal	–	Oscilloscope
21	–	–	–	–	–	–
22	A	Injector valve cyl. 3	Injector valve	Negative clocked	Injection time ti	see component activation, check pulse duration
23	A	Injector valve cyl. 1	Injector valve	Negative clocked	Injection time ti	see component activation, check pulse duration
24	A	A/C compressor relay	A/C compressor relay	Negative	ON/OFF	–
25	–	–	–	–	–	–
26	E	Continuous pulse, terminal 30	B+ terminal point	> 10 V	–	If not applied, diagnosis not possible
27	A	Idle actuator	Idle actuator	Pulse width-modulated signal	–	–

Pin	Type	Description/function	Connection	Signal type	Tester display	Measurement notes
28	M	Ground for electronics	Ground point	Ground	–	–
29	A	Ignition terminal 1	Ignition coil for cyl. 2	Primary signal	Oscillogram	Engine test, test step 05
30	A	Ignition terminal 1	Ignition coil for cyl. 4	Primary signal	Oscillogram	Engine test, test step 05
31	A	Ignition terminal 1	Ignition coil for cyl. 6	Primary signal	Oscillogram	Engine test, test step 05
32	M	Ground injector valve output stages	Ground point	Ground	–	–
33	A	Injector valve cyl. 5	Injector valve	Negative clocked	Injection time ti	Component activation, check pulse duration
34	M	Ground, remaining output stages (apart from ignition and injector valve)	Ground point	Ground	–	–
35	M	Shielding, crankshaft angle pulse generator	Crankshaft pulse generator	Ground	–	–
36	M	Shielding, camshaft angle pulse generator	Camshaft angle pulse generator	Ground	–	–
37	–	–	–	–	–	–
38	–	–	–	–	–	–
39	M	Shielding, knock sensor 1 (cylinder 1–3)	Knock sensor 1	Ground	–	–
40	M	Shielding, knock sensor 2 (cylinder 4–6)	Knock sensor 2	Ground	–	–
41	–	–	–	–	–	–
42	M	Shielding, oxygen sensor	Oxygen sensor	Ground	–	–
43	–	–	–	–	–	–
44	–	–	–	–	–	–
45	–	–	–	–	–	–

Pin	Type	Description/function	Connection	Signal type	Tester display	Measurement notes
46	–	–	–	–	–	–
47	–	–	–	–	–	–
48	E	Freewheeling circuit idle actuator	Main relay	>10 V	–	–
49	E	Ignition terminal 15	Ignition lock	> 10 V	–	–
50	A	Injector valve cyl. 2	Injector valve	Negative clocked	Injection time ti	Component activation, check pulse duration
51	A	Evaporation control valve	Evaporation control valve	Negative clocked	Open/closed	Status monitoring
52	A	Fuel pump relay	Fuel pump relay	Negative clocked	–	If not clocked, battery voltage applied
53	A	Oxygen sensor heating	Oxygen sensor	Negative clocked	Value in %	Status monitoring
54	E	> 10 V from DME main relay	Main relay terminal 87	> 10 V	Voltage value	Perform status monitoring. If signal not applied, diagnosis not possible – bypass terminal 30 and 87.
55	A	DME main relay	Main relay, terminal 85	Negative clocked	–	–
56	–	–	–	–	–	–
57	–	–	–	–	–	–
58	–	–	–	–	–	–
59	–	–	–	–	–	–
60	E	Programming voltage	Diagnostic connector	Voltage value	–	Only active during programming
61	–	–	–	–	–	–
62	E	Ignition current feedback	Sensor ZSR	–	Normal/interrupted	–
63	E	Knock sensor 2 (cylinder 4–6)	Terminal 2, knock sensor 2	–	Active	–

Pin	Type	Description/function	Connection	Signal type	Tester display	Measurement notes
64	E	Knock sensor 1 (cylinder 1–3)	Terminal 2, knock sensor 1	–	Active	–
65	E	Knock sensor 1 (cylinder 1–3)	Terminal 1, knock sensor 1	–	Active	–
66	E	Knock sensor 2 (cylinder 4–6)	Terminal 1, knock sensor 2	–	Active	–
67	–	–	–	–	–	–
68	E	Air mass signal	Air mass meter, terminal 4	Pulsating voltage 0.5–5 V	Kg/h	Status monitoring
69	E	Ground air mass meter	Air mass meter, terminal 2	Ground	–	–
70	–	–	–	–	–	–
71	–	–	–	–	–	–
72	A	5V component supply	Throttle potentiometer	5 V	–	–
73	A	Oxygen sensor signal	Oxygen sensor	Pulsating voltage between Pin 73 and Pin 75	0–5 V	Status monitoring
74	A	Oscillator camshaft angle pulse generator	Camshaft angle pulse generator	Square-wave signal (110 kHz)	–	–
75	E	Oxygen sensor signal	Oxygen sensor	Pulsating voltage between Pin 73 and Pin 75	0–5V	Can only be measured with engine running at operating temperature
76	M	Ground, throttle potentiometer	Throttle potentiometer	Ground	–	–
77	E	Throttle position	Throttle potentiometer	Voltage value	0–5 V	Dependent on condition of throttle valve

Pin	Type	Description/function	Connection	Signal type	Tester display	Measurement notes
78	M	Ground, crankshaft angle pulse generator	Crankshaft angle pulse generator	Ground	–	–
79	E	Signal, crankshaft angle pulse generator	Crankshaft angle pulse generator	Square–wave signal (150 kHz)	–	–
80	M	Ground, engine temperature	Coolant temperature sensor	Ground	–	–
81	A	Signal, engine temperature	Coolant temperature sensor	Voltage value	0–5 V	Temperature–dependent
82	A	Oscillator crankshaft angle pulse generator	Crankshaft angle pulse generator	Square-wave signal	–	–
83	M	Ground, camshaft angle pulse generator	Camshaft angle pulse generator	Ground	–	–
84	E	Signal, camshaft angle pulse generator	Camshaft angle pulse generator	Square-wave signal	–	–
85	E	Intake air temperature sensor	Intake air temperature sensor	Voltage value	0–5 V	Status monitoring
86	M	Ground, intake air temperature sensor	Intake air temperature sensor	Ground	–	–
87	E	RxD diagnosis initialization line	Diagnostic connector	> 10 V	–	When cover of diagnostic connector closed
88	E/A	TxD diagnostic data link	Diagnostic connector	Negative	–	When cover of diagnostic connector closed

E = Input, A = Output, M = Negative

Adapter

Component	Connector No.	Description	Adapter number
Control unit	X 6010	Test adapter 88-pin	Universal adapter, Cartool 61 4 410 Accessories: Measuring line, black, Cartool 61 4 412 Measuring line, red, Cartool 61 4 413 Extensions (2), Cartool 61 4 430
Throttle potentiometer, oil level sensor	X 1514,X 1536, X 1525	T-adapter 3-pin	Cartool 61 1 491
Throttle switch, oil level sensor	X1521/1522 X 9514 X 9536	3-pin, black	V-adapter cable, Cartool 61 1 491
Injector valve, fuel evaporation control valve	X 6121, X 6236 X 1501...6, X 1513, X 1524	T-adapter 2-pin	Cartool 61 1 440, Cartool 61 2 050
Ignition primary circuit	Ignition coil connector	3-pin, black	Primary adapter, ignition, Cartool 12 70 20
Ignition secondary circuit	Spark plug connector	1-pin	Secondary adapter, ignition, Cartool 12 70 30
Ignition coil		1-pin	Ignition lead adapter, Cartool 61 2 010
EKP relay/main relay	X 6311, X 6310	T-adapter	Cartool 61 30 10/20

Troubleshooting

Notes

Relevant safety codes and accident prevention regulations must be observed when carrying out all tests and work on the engine electrical and electronic systems.

Caution!

Dangerous high voltage in the primary and secondary circuit of the ignition system.

Important!

Disconnect control unit from the wire harness **only with the ignition switched off** . After renewed operation, neutral basic values are set in the control unit for idle and emission control. Any irregularities in engine operation can be directed by means of renewed adaptations (new learned values) during a test run, in which an engine temperature of > 80 ° C is reached.

Tests

The 88-pole universal adapter should be used for picking up signals from the DME control unit and from the engine wire harness. Other recommended adapters are listed in Chapter – Pin assignments. Perform wire checks **only with the control unit or component connectors disconnected.**

Important!

Bosch and Siemens control units must under no circumstances be interchanged !

Notes

Defect Location Procedure

1. Quick test with DIAGNOSTIC SYSTEM

This quick test can be used to check that other systems are operating correctly. Defects in EGS, DWA or BC can also effect the DME.

2. Defect code memory inquiry

This is recommended for all systems which were found to be defective during the quick test. If several defect codes are stored, interrelationships can often be deduced, indicating whether the defect can be attributed to central causes – e.g. a defective ground supply can lead to storage of the defect codes "temperature sensor, air mass meter, idle actuator, throttle potentiometer".

3. Status monitoring and component activation

Irrespective of whether defect codes are stored or not, status monitoring and component activation should always be used for fault tracing.

4. Test instructions and schematics

The test instructions explain and supplement the self-diagnosis system. If defects occur, for which no defect code is stored, they provide the opportunity of performing troubleshooting with the aid of the subsequent tests. The schematics should always be used since they clearly show the interaction of various components.

Defect Code Table

♦D♦Defect code memory, no defect code stored

Malfunction: Engine operation not possible

♦D♦Defect code memory, defect codes stored

Defect code 0 to defect code 100 → Defect code 0 to defect code 100

Malfunction: Engine operation not possible

♦D♦ Defect code memory – No defect code stored

Malfunctions – Without stored defect codes:

Tests when engine operation is not possible. For further information refer to next chapter – Component testing.

Prerequisites:

– Start system OK. (battery charged, ignition switch OK., ...)
– Ground connection from battery to engine or body OK.
– Specified fuel in tank
– Engine mechanically OK. (timing, compression ...)

Troubleshooting:

a) Check voltage supply for DME control unit in accordance with schematic.

b) Measure input signals with ♦D♦status monitoring

– Check air mass meter signal

c) Measure output signals.

– Check fuel pump relay activation in accordance with schematic,
– ignition output stages by means of ENGINE TEST and
– injector valves with ♦D♦component activation

d) Fuel pressure tests in accordance with repair instructions

For nominal value see chapter – Technical Data.

Defect code 0

♦D♦Defect code memory: 0 UNDEFINED DEFECT

Explanation: This defect code is displayed when an undefined defect code has been stored in the defect code memory.

Note: If the DME program was selected manually, check again that the correct program has been selected.

If the correct program has been selected or if selection took place automatically, data has been stored in the defect code memory for some unknown reason.

The defect code can be ignored if there are no apparent effects in the system.

Defect code 1

♦D♦Defect code memory: 1 IGNITION CYLINDER 1

Explanation: This defect code is stored when the spark duration is below or above the specified time or if there is no spark at all.

Troubleshooting: Check secondary ignition patterns by means of the oscilloscope.

Possible cause:

Spark duration too short or too long:

- Ignition coil defective
- Spark plug defective (e.g. insulator break)
- Electrode gap of spark plug incorrect

No ignition sparks:

- Interruption in ignition coil activation (terminal 1)
- Interruption in ignition coil supply (terminal 15)
- Short to ground and battery voltage on primary and / or secondary side
- Break in ground on secondary side between ignition coil and ZSR precision resistor (terminal 4a)
- If several cylinders stored:
  If engine speed < 5000 rpm, then break in wire from ZSR precision resistor to control unit.
- If engine speed > 5000 rpm, then Bosch ignition coils installed

Defect code 2

♦D♦Defect code memory: 2 IGNITION CYLINDER 3

Explanation: Troubleshooting as for defect code 1.

Defect code 3

♦D♦Defect code memory: 3 IGNITION CYLINDER 5

Explanation: Troubleshooting as for defect code 1.

Defect code 5

♦D♦Defect code memory: 5 INJECTOR VALVE cyl. 6

Explanation: This defect code is stored in the case of a break or short-circuit at:

- Injector valve cyl. 6
- Wire from DME control unit Pin 5 to injector valve
- Output stage in the DME control unit

Troubleshooting: Perform component activation with tester. The activation cycle at a frequency of 10 Hz should be audible. See component testing for resistance value.

Defect code 6

♦D♦Defect code memory: 6 INJECTOR VALVE cyl. 4

Explanation: Troubleshooting as for defect code 5.

Defect code 10

♦D♦Defect code memory: 10 A/C COMPRESSOR SIGNAL

Explanation: This defect code is stored when the A/C compressor is detected as being switched on although the A/C switch signal is not applied.

Troubleshooting: Check wires to DME control unit Pin 10 for short and break.

Defect code 12

♦D♦Defect code memory: 12 VEHICLE SPEED SIGNAL

Explanation: This defect code is stored when no plausible signal is detected while driving. The prerequisite for this is an engine speed > 2500 rpm at high load for at least 10 s.

Troubleshooting: If the indicated speed (speedometer) is OK., check wire to the DME control unit – otherwise continue with diagnostic program – INSTRUMENT CLUSTER.

Defect code 14

♦D♦Defect code memory: 14 TRANSMISSION INTERVENTION during downshifts (with EGS only)

Explanation: This defect code is stored when the wire from the DME control unit Pin 14 to the EGS control unit has a short to ground (> 2.5 s). In such a case, the ignition timing is retarded only **once** and the signal is then ignored. The ignition timing (angle) returns to its original value.

Troubleshooting: Check wire between DME control unit and EGS control unit.

Defect code 22

♦D♦Defect code memory: 22 INJECTOR VALVE cyl. 3

Explanation: Troubleshooting as for defect code 5.

Defect code 23

♦D♦Defect code memory: 23 INJECTOR VALVE cyl. 1

Explanation: Troubleshooting as for defect code 5.

Defect code 24

♦D♦Defect code memory: 24 A/C COMPRESSOR CONTROL

Explanation: This defect code is stored in the case of a short to positive or negative.

The A/C compressor is constantly switched on in the case of a short to negative.

The A/C compressor does not operate in the case of a short to positive.

Possible cause:

– Check wires to A/C compressor relay
– Check relay

Defect code 27

♦D♦Defect code memory: 27 IDLE ACTUATOR ELECTRICAL SYSTEM

Explanation: This defect code is stored in the case of a break or short-circuit at:

– Idle actuator
– Wire from DME control unit Pin 27 to idle actuator
– Output stage in DME control unit

Troubleshooting: Perform component activation with tester. The idle actuator is then activated at one second intervals. If there is no response, connect test adapter between the wire harness and idle actuator. A voltage of approx. 12 V should be measured at terminal 2. The value between terminal 1/2 and 2/3 is >10 V. See component testing for resistance values.

Defect code 29

♦D♦Defect code memory: 29 IGNITION CYLINDER 2

Explanation: Troubleshooting as for defect code 1.

Defect code 30

♦D♦Defect code memory: 30 IGNITION CYLINDER 4

Explanation: Troubleshooting as for defect code 1.

Defect code 31

♦D♦Defect code memory: 31 IGNITION CYLINDER 6

Explanation: Troubleshooting as for defect code 1.

Defect code 33

♦D♦Defect code memory: 33 INJECTOR VALVE cyl. 5

Explanation: Troubleshooting as for defect code 5.

Defect code 49

♦D♦Defect code memory: 49 CONTROL UNIT SUPPLY FROM TERMINAL 15

Explanation: This defect code is stored:

– when the voltage drops below battery voltage (engine stationary)
– the battery is disconnected from the vehicle

Note: After detecting the correct battery voltage, the defect code is cleared automatically after the next test cycle (new start).

Defect code 50

♦D♦Defect code memory: 50 INJECTOR VALVE cyl. 2

Explanation: Troubleshooting as for defect code 5.

Defect code 51

♦D♦Defect code memory: 51 EVAPORATION CONTROL VALVE ELECTRICAL SYSTEM

Explanation: This defect code is stored in the case of a break or short-circuit at:

– Evaporation control valve
– Wire from DME control unit to evaporation control valve
– Output stage in the DME control unit

Troubleshooting: Perform component activation with tester. The valve is activated with 12Hz, – activation can be heard. During normal operation, the valve is opened dependent on load and engine speed. See component testing for resistance values. Use test adapter 61 1 440.

Defect code 52

♦D♦Defect code memory: 52 FUEL PUMP RELAY

Explanation: This defect code is stored in the case of a break or short-circuit at:

– Relay for the electrical fuel pump
– Wire from DME control unit Pin 52 to EKP relay
– Output stage in DME control unit

Troubleshooting: The EKP relay must switch on as of start speed – Check with test lamp 12 V 10 W at terminal 85/86.

Defect code 53

♦D♦Defect code memory: 53 OXYGEN SENSOR HEATING

Explanation: This defect code is stored in the case of a break or short-circuit at:

– Oxygen sensor (heating part)
– Wires to oxygen sensor
– Output stage in the DME control unit

Troubleshooting: Check voltage supply and supply wires for oxygen sensor.

Defect code 62

♦D♦Defect code memory: 62 IGNITION SIGNAL FEEDBACK

Explanation: This defect code is stored in the case of a break on the wires between the precision resistor for ignition current feedback and ground at the cylinder head

Possible cause: Break in current path from ZSR resistor to ground.

Troubleshooting: Check wires and measure resistance.

Defect code 63

♦D♦Defect code memory: 63 Knock sensor 2 (cyl. 4+5+6)

Explanation: This defect code is stored when:

- Short to ground or wire break
- Short to B+
- Sensor signal defective

Troubleshooting: Check wires and measure resistance.

Defect code 64

♦D♦Defect code memory: 64 Knock sensor 1 (cyl. 1+2+3)

Explanation: Troubleshooting as for defect code 63

Defect code 68

♦D♦Defect code memory: 68 HOT-FILM AIR MASS METER (HFM)

Explanation: This defect code is stored in the case of a break or short at:

– Air mass meter or its supply wires
– Voltage supply to air mass meter

The DME control unit operates with substitute values which are calculated from the position of the throttle potentiometer.

Troubleshooting: Check signal by means of status monitoring – See Component Testing for nominal values.

The DME main relay supplies the HFM with 12 V at terminal 3 (+) and 1 (–).

Defect code 75

♦D♦Defect code memory: 75 OXYGEN SENSOR VOLTAGE

Explanation: This defect code is stored in the case of:

– a break or short to battery voltage, ground
– Voltage stroke too small (voltage should oscillate between 0.04 and 4.7 V)

Troubleshooting:

– Check signal supply Pin 73 (5V)
– Check wires, measure resistance.

Defect code 77

♦D♦Defect code memory: 77 THROTTLE POTENTIOMETER

Explanation: This defect code is stored in the case of:

– Break or short at the throttle potentiometer or its supply wires
– Mechanical defects, e.g. deficient connection to throttle valve.
Substitute values are made available dependent on the current throttle position. In the case of a defect, a 4% throttle opening is constantly output at the DME control unit output Pin 68.

Troubleshooting: Perform status monitoring. Connect test adapter 61 1 491 between wire harness and potentiometer. Check 5 V supply at terminal 1/3. Check resistance at potentiometer – see component testing for nominal values. Check mechanical connection to throttle valve.

Defect code 79

♦D♦Defect code memory: 79 CRANKSHAFT ANGLE PULSE GENERATOR (SENSOR)

Explanation: This defect code is stored in the case of:

– Defective sensor signal

Possible cause:

– Wire break on signal lines
– Short on signal lines to battery voltage or ground
– Angle pulse generator set incorrectly

Troubleshooting: Check position of angle pulse generator. Check wires and measure resistance.

Defect code 81

♦D♦Defect code memory: 81 ENGINE TEMPERATURE SENSOR (coolant)

Explanation: This defect code is stored in the case of a short or break at the temperature sensor or on its supply wires. In order to detect a short to plus or a break, the plausibility of the engine and intake air temperature must be checked. The system then operates with the intake air temperature for 3 minutes followed by a substitute value of 114° C.

Troubleshooting: Check temperature values by means of status monitoring. For nominal values, see chapter – Component testing.

Defect code 84

♦D♦Defect code memory: 84 CAMSHAFT ANGLE PULSE GENERATOR (SENSOR)

Explanation: Troubleshooting as for defect code 79

Defect code 85

♦D♦Defect code memory: 85 INTAKE AIR TEMPERATURE SENSOR

Explanation: This defect code is stored in the case of a short or break at the temperature sensor or on its supply wires. The prerequisite for detecting a short to positive or a break is a time interval of 3 minutes after the start and idle operation. The system then operates with a substitute value of 30° C.

Troubleshooting: Check temperature values by means of status monitoring. For nominal values see chapter – Component Testing.

Defect code 97

♦D♦Defect code memory: 97 FUEL EVAPORATION CONTROL VALVE MECHANICS

Explanation: This defect code is stored when the fuel evaporation control valve is jammed mechanically.

Troubleshooting: Perform component activation with tester. The fuel evaporation control valve is activated at one second intervals. If no response is detected, connect test adapter 61 1 491 between wire harness and fuel evaporation control valve.

Defect code 98

♦D♦Defect code memory: 98 IDLE ACTUATOR MECHANICS

Explanation: This defect code is stored when the idle actuator is jammed mechanically.

- Idle actuator open too wide
- Idle actuator closed too wide

Troubleshooting: Perform component activation with tester. The idle actuator is activated at one second intervals. If no response is detected, connect test adapter 61 1 491 between wire harness and idle actuator. Check slide valve to ensure it moves smoothly.

Note: Defect code 98 is also stored when engine operation is interrupted abruptly without the ignition being switched off beforehand. The defect code is then stored at an engine speed < 600 rpm.

Defect code 99

♦D♦Defect code memory: 99 EMISSION CONTROL

Explanation: This defect code is stored when the emission control system has reached its control limit and no other defect influencing the mixture has been detected. The cause may be attributed to deviations in the mixture composition (mixture too rich or too lean for longer than 30s).

Troubleshooting: Measure CO content at exhaust manifold while observing oxygen sensor voltage. For nominal values, see chapter – Component testing. Set up operating condition, under which the defect was detected.

Possible causes:

- Fuel pressure incorrect
- Injector valves defective or coked
- Incorrect output value from engine temperature sensor
- Secondary air in intake or exhaust tract
- Tank ventilation defective
- Poor combustion (ignition, inlet/exhaust valves, compression etc. defective ...)

Defect code 100

♦D♦Defect code memory: 100 CONTROL UNIT

Explanation: This defect code is stored when a defect is found in the RAM or in the ROM/EPROM.

Troubleshooting: Perform test run after clearing the defect code memory. If the defect code is stored once again, the DME control unit should be disconnected from the wire harness for approx. 5 minutes in order to trigger a reset. The control unit must be replaced if the defect is detected repeatedly.

Component Quick Test List

No.	Test	Condition for function	Possible cause	Test aid / remark
1	Fuel pump relay	as of start speed	– Voltage supply for EKP relay defective – Activation (negative) via output stage in DME control unit defective – Signals from both angle pulse generators (sensors) defective	– Multimeter, schematic – Defect code memory, status monitoring – Status monitoring, oscilloscope
2	Fuel pump / fuel pressure	EKP relay ON	– Voltage supply defective – Fuel pump defective – Fuel lines /pressure regulator defective	– Multimeter, schematic – Pressure test in accordance with repair instructions
3	Injector valve	– as of start speed, – Ignition system primary OK. otherwise catalytic converter protection function active (output stages do not switch), – Air mass meter OK.	– Voltage supply defective – Output stage in control unit defective – Injector valve defective	– Multimeter, schematic – Defect code memory – Component activation – Leakage test

Component Quick Test List

No.	Test	Condition for function	Possible cause	Test aid / remark
4	Ignition coil **NOTE:** The ZSR only functions in conjunction with May & Christe ignition coils. Therefore, only May & Christe are permitted. A defect code is stored in the case of all other ignition coils.	as of start speed	– Voltage supply defective – Signals from camshaft and crankshaft angle pulse generator defective – Line 4a loose/break – Output stage in control unit defective – Ignition coil defective	– Multimeter – Status monitoring "engine speed" – Engine test, oscilloscope
5	Hot-film air mass meter / load signal	as of start speed (a load signal of 1.5 ms is set for the start procedure)	– Voltage supply via DME main relay/ ground point defective – HFM defective - signal not plausible – Air leaner dirty	Attention! Substitute value may be active – Status monitoring HFM / load signal – Multimeter, schematic – Defect code memory, status monitoring

Component Quick Test List

No.	Test	Condition for function	Possible cause	Test aid / remark
6	Oxygen sensor / sensor heating	Sensor signal with engine running and oxygen sensor at operating temperature, sensor heating as of start speed	– Sensor dirty – Plug connection defective /leaking – Sensor heating defective – Oxygen sensor defective – Voltage supply for oxygen sensor defective (output stage in control unit defective)	– Status monitoring – Defect code memory
7	Emission control	with engine running and oxygen sensor at operating temperature	– Control has reached limit stop because mixture too lean / too rich – look for defect in mixture preparation	– Defect code memory – Measure CO content
8	Idle actuator	as of ignition ON	– Voltage supply defective – Idle actuator blocked mechanically or dirty – Idle actuator electrically defective (output stage in control unit defective)	– Component activation and visual inspection on removed component – Defect code memory
9	Idle control	with engine running, when idle signal detected and none of the defects listed opposite are set	If a defect is detected at: – Oxygen sensor – Air mass meter – Engine temperature sensor – Intake air temperature sensor – Injector valve – Idle actuator or in the – Voltage supply of the DME control unit, the last idle adaptation remains valid	– Defect simulation by adding secondary air to the air manifold

Component Quick Test List

No.	Test	Condition for function	Possible cause	Test aid / remark
10	Evaporation control valve	Emission control active, dependent on engine speed and load	– Voltage supply defective – Evaporation control valve electrically/mechanically defective	– Component activation – Defect code memory – Leakage test
11	Crankshaft angle pulse generator (sensor)	as of ignition ON	– Spacing to incremental wheel too large or sensor loose/defective – Plug connection defective – Control unit signal supply defective	– Status monitoring "engine speed" – Oscilloscope
12	Camshaft angle pulse generator (sensor)	as of ignition ON	– Sensor loose or defective – Plug connection defective – Control unit signal supply defective	– Oscilloscope
13	Throttle potentiometer	as of ignition ON	– Plug connection or component defective – Mechanical connection to throttle valve defective	Attention! Substitute value may be active – Status monitoring – Defect code memory

Resistance Values

Engine type	M50 B20
Injector valve	15...18 Ω
Crankshaft angle pulse generator (sensor)	Primary: 0.4 Ω Secondary: 12.4 Ω
Camshaft angle pulse generator (sensor)	Primary: 0.4 Ω Secondary: 12.4 Ω
Ignition coil – primary	0.4...0.8 Ω
Throttle potentiometer – R total	4.6 kΩ
Idle actuator – per winding	20...25 Ω
Engine temperature sensor at –10±3 °C	11. 0...14.1 kΩ
Engine temperature sensor at 25±3 °C	2.05...2.47 kΩ
Engine temperature sensor at 80±3 °C	261...306 Ω
Intake air temperature sensor at 25±3 °C	4.56...5.48 kΩ
Intake air temperature sensor at 80±3 °C	580...679 Ω
Evaporation control valve	40...50 Ω

If not otherwise specified, the values refer to an air temperature of 23 ±5 ° C.

Nominal Values for Status Monitoring

The nominal values are valid at: Idle speed, oil temperature > 60 °C or coolant temperature > 80 °C, no consumer loads switched on.

Status monitoring	Nominal value	Signal comes from:
Engine speed		DME control unit
Idle speed	700 ± 40 rpm	
Cut-out speed	6500 ± 40 rpm	
Engine temperature	dependent on coolant temperature, in case of break = below – 30 ° C	Engine temperature sensor
Intake temperature	dependent on coolant temperature, in case of break = below – 40 ° C	Intake air temperature sensor
Acceleration enrichment	OFF / ON	DME control unit
Ignition timing (angle)	M50 B 20: 10 ± 3 ° crank angle	DME control unit
DK potentiometer	0.5 ± 0.2 V in idle position, 4.5 ± 0.2 V in full load position	Throttle potentiometer
HFM signal	Idle value without load 14–22 Kg/h	Hot-film air mass meter
Load signal	Start value at ignition ON = 1.5 ms, when idling: M50 B20: 1.8 ±0.5 ms	DME control unit
Emission control	With engine running and oxygen sensor at operating temperature control = ON	DME control unit
Oxygen sensor heating	Set data 0....100 %	DME control unit
Tank ventilation	Clock cycle dependent on engine speed and load, display = CLOSED / OPEN	DME control unit
Oxygen sensor	with engine running and oxygen sensor at operating temperature 0.04...4.7 V	Oxygen sensor

Status monitoring	Nominal value	Signal comes from:
Idle signal	Detection takes place via throttle potentiometer, the ON display is shown only at idle speed!	DME control unit
Full load signal	ON shortly before the limit stop of the accelerator pedal	DME control unit
Control unit supply	> 10 V	DME relay
A/C compressor	When compressor magnetic clutch activated = ON	Air conditioner control unit
Air conditioner switch	With air conditioner, defroster or air recirculation switch depressed and air flow control wheel not set to 0 = ON	Air conditioner control unit
A/C compressor cut-out	OFF / ON	DME control unit
Vehicle speed	If drive wheels are moved when raised, speed limited to max. 30 km/h	Instrument cluster
Ignition timing intervention with EGS	Temporarily at ON only during gearshift procedure	EGS control unit
Drive range P/N	Drive range engaged = ON	Selector lever switch
Injection signal	4.1 ±0.5 ms	Measured at the lines to the injector valves
Knock control	OFF / ON	Knock sensor
ZSR feedback	NORMAL / INTERRUPTED	ZSR resistor
Ground connection HFM	NORMAL / INTERRUPTED	DME control unit

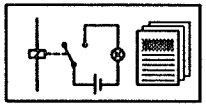

Functional Description

Components:

- Preheating time control unit
- Engine temperature sensor
- One glow plug per cylinder
- Indicator lamps in the instrument cluster

Operating Principle

The electronically controlled preheating system with heater current monitoring is used to shorten the starting times. In addition, the function of the glow plugs can also be monitored (preheating time is dependent upon the engine temperature). A safety circuit prevents the flow plugs from being overloaded. The fuel is ignited at the hot glow plugs at a temperature of up to 1000° C.

In ignition key position 2 (ignition ON), the electronic circuitry in conjunction with a temperature sensor (NTC) checks the engine temperature and initiates the preheating procedure. This status is indicated by the yellow indicator lamp lighting. After the required preheating time has elapsed, the indicator lamp goes out and the green indicator lamp shows that the vehicle is ready to be started. If the vehicle is not started immediately afterwards, the automatic safety cut–out feature interrupts the preheating procedure.

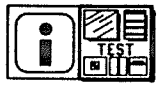

Notes on the BMW DIAGNOSTIC SYSTEM

This system is not capable of diagnostic procedures.

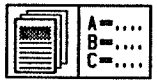

Abbreviations

not applicable

Preheating System (6-cylinder M21)

Basic Wiring Diagram

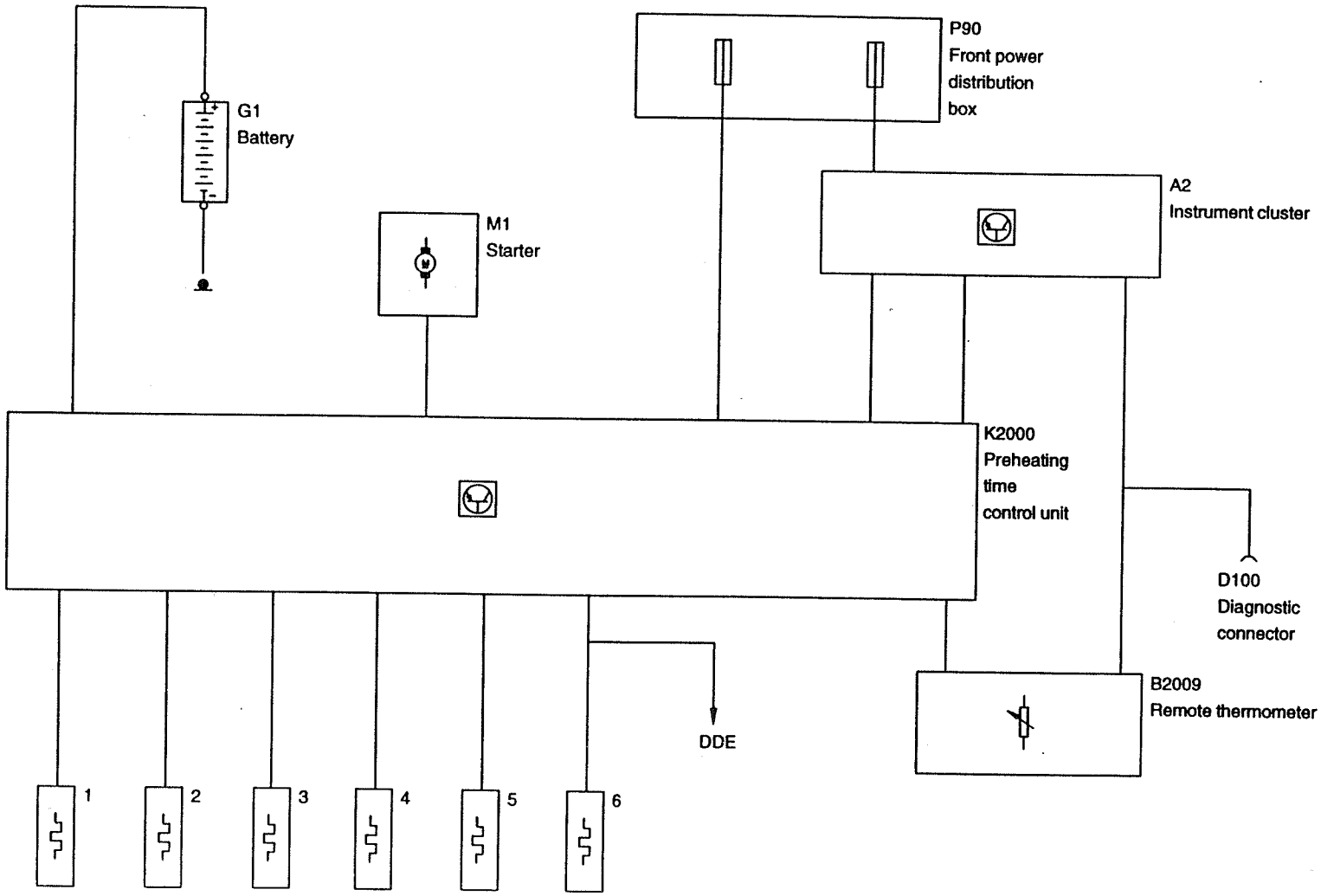

P34 12 006

Pin Assignments

Pin Assignments at Preheating Time Control Unit

Pin	Type	Description/function	Connection	Signal type	Tester display	Measurement notes
G1	A	Glow plug to cylinder 1				
G2	A	Glow plug to cylinder 2				
G3	A	Glow plug to cylinder 3				
G4	A	Glow plug to cylinder 4				
G5	A	Glow plug to cylinder 5				
G6	A	Glow plug to cylinder 6				
15	E	Battery voltage at ingition ON				
30	E	Battery voltage (positive)				
50	E	Start signal, ignition switch set to Pos. 3				
L2	A	Green indicator lamp				
L1	A	Orange indicator lamp				

Troubleshooting

Notes

Relevant safety codes and accident prevention regulations must be observed when carrying out all tests and work on the engine electrical/electronic systems.

Test prerequisites:

- Correct connections at the battery
- Good ground connection from engine to body
- Battery charged U-min = 12 V

Important!

Switch on ignition before each test (ignition key in position 2 – terminal 15)

Yellow and green indicator lamps do not light

Check fuse (80A) at preheating time control unit.
Check bulb(s) in instrument panel, replace if necessary – see Repair Instructions Section 62 99.

Detach small plug at preheating time control unit. Connect plug sleeve LA 1 (for yellow lamp) and LA 2 (for green lamp) to ground – the indicator lamps must light, if necessary, check voltage supply for indicator lamps.

Yellow and green indicator lamps do not light – coolant temperature < 60° C

Check coolant temperature sensor, replace if necessary – see Repair Instructions Section 12 62.

Green indicator lamp does not light

Difficulties in starting engine when cold.
One or several glow plugs defective. Detach connector at preheating time control unit (connections G1 to G6). Connect BMW SERVICE TESTER (♦M♦03) and apply battery voltage at connections G1 to G6 for 5 seconds each – refer to Technical Data. Replace defective glow plugs – see Repair Instructions Section 12 23.

Yellow indicator lamp flashes

Detach connector from preheating time control unit (connections G1 to G6).
Check glow plugs, replace if necessary – see Repair Instructions Section 12 23. Replace control unit.

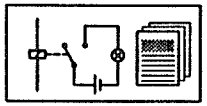

Functional Description

General

Version with integrated fresh air cooling. Three–phase alternators feature the following three current circuits:
The pre–exciter current circuit (external excitation through battery current)
The exciter current circuit (self–excitation)
The main alternator current circuit.

The Pre–Exciter Current Circuit

When the ignition is switched on, battery current flows via the alternator indicator lamp to the exciter winding of the rotor and via the regulator to ground. In this way, the battery current pre–excites the alternator.

The Alternator Indicator Lamp

The alternator indicator lamp is integrated in the pre–exciter current circuit and acts as a resistor when the ignition switch is switched on. At an adequate power consumption level of the lamp, when starting, the pre–exciter current induces a magnetic field which is sufficiently strong to initiate the necessary self–excitation.

Important!

The alternator indicator lamp goes out in the case of failure of a positive diode in the alternator despite there being a defect in the alternator. Therefore always determine the precise cause of the defect in the alternator with the aid of an oscillogram.

The Alternator Current Circuit

The alternator current induced in the three phases of the alternator must be rectified in the bridge circuit consisting of power diodes and then supplied to the battery and the various loads.

As of Model Year 1989

Terminal 61 Unloader Relay (K61)

An unloader relay terminal 61 is installed as of model year 1989. A large number of systems are switched off via this relay for as long as the engine is stationary but the ignition is switched on.

Operating Principle

With the ignition switched on and engine stationary, the relay receives B+ via the fuse and ground as well as via the alternator terminal 61 (D+). The relay picks up and switches ground to the systems. When the engine is running and the alternator begins to charge, battery positive is also applied to terminal 61 (D+) so that the relay switches off. B+ is switched through the systems.

BMW 7 Vehicles with Two Alternators

In vehicles with two indicator lamps in the instrument cluster, pre–excitation takes place via the indicator lamps.

In vehicles with only one indicator lamp, pre–excitation of the large alternator takes place with the indicator lamp. The second, small alternator is excited by means of a ballast resistor in the wire harness.

Checking the Alternators

Remove leads and regulators for one alternator each and check other alternator.

Notes on the BMW DIAGNOSTICSYSTEM

This system does not feature diagnostic capabilities.

Abbreviations

B+	Battery positive
B–	Battery negative
D+	Alternator positive
D–	Alternator negative
U-Batt	Battery voltage
U-Vers	Voltage supply

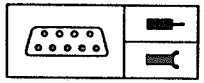

Pin Assignments

Pin	Type	Description/function	Connection	Signal type	Tester display	Measurement notes
15	E	Switched positive after battery, ignition switch output				
30	E	Battery positive				
31	A	Battery negative (ground)				
61	E	Battery charge control				

Pin Assignments at Relay K61

Pin	Type	Description/function	Connection	Signal type	Tester display	Measurement notes
2	A	Ground (87)	Ground point			
4	E	Terminal 15 (85)	Fuse			
5	E	Terminal 15 (87a)	Fuse			
6	A	Relay output (30)				
8	E	Terminal 61 (D+) (86)	Alternator			

Troubleshooting

Notes

Relevant safety codes and accident prevention regulations must be observed when carrying out all tests and work on the engine electrical/electronic systems.

Test Prerequisites:

- Correct connections at battery and alternator
- Good ground connection from engine to body
- V–belt or poly–V–belt correctly tensioned
- Battery charged, U-min = 12 V

Defect Code Table

Defect overview

Troubleshooting with BMW Service Tester:

Test program: 01 = Engine test, 02 = Alternator voltage

Malfunctions:

Battery charge indicator does NOT light when ignition is switched on → Defect code 01

Battery charge indicator lights when ignition is switched off → Defect code 02

Battery charge indicator FLICKERS or LIGHTS when engine is running → Defect code 03

Battery is INSUFFICIENTLY CHARGED, battery charge indicator goes out when engine is running → Defect code 04

– as of model year 1989 –

Check terminal 61 → Defect code 05

Defect Overview

	Battery charge indicator	Possible faults
Ignition ON, engine off	OFF	Pre–excitement interrupted – Battery charge indicator defective – Positive diode has short–circuit see Component Testing (oscillogram)
Ignition ON, engine running at idle speed, applied load approx. 30 A e.g.: light, blower, rear window defogger fully switched on	flickers	– Positive diode interrupted – Negative diode interrupted – Exciter diode interrupted – Phase interrupted see Component Testing (oscillogram)
	lights	– Negative diode (short–circuit) – Exciter diode (short–circuit) – Interturn short – Regulator conductive (defective) see Component Testing (oscillogram)

Troubleshooting with BMW Service Tester

Test program: 01 = Engine test, 02 = Alternator voltage

Applicable for the entire engine test, to next test step: ♦⇒♦

The completed test step is printed out for as long as the log printer button is pressed (locked in).

The connection display and the test step overview can be selected with ♦⇑♦ during the individual test steps (then enter the required test step number again).

Caution!

No gear or drive range must be engaged – apply hand brake!

Test Procedure:

Connections: Diagnostic connector, jaw–type probe, trigger probe

1. Engine must be started with the vehicle battery (no external aid otherwise incorrect measured values).
2. Switch off all switchable electrical loads.
3. Run engine at idler speed!
4. Read off harmonic ratio after waiting 20ÿsec.
5. If the display of the harmonic ratio is > 6%, the oscilloscope must be used to check whether a component on the alternator is defective. See Component Testing for oscillograms relating to defective alternator components.
6. If no clear decision can be made with regard to the component defect and the harmonic ratio (at idling speed) > 6%, charge battery. Repeat test procedure.

Attention! Only check harmonic ratio at idle speed.

Nominal Values for Alternator

Speed	Idle	Idle
U D+	Regulator voltage	13.5 ... 14.6 V
Harmonic ratio		< 6%
U B +	Battery voltage	12.0 ... 14.6 V
I battery	Charging current	Depending on battery charge status

Test step 02 – Test procedure:

1. Connections: Diagnostic connector, jaw–type probe, trigger probe
2. Start engine (e.g. remote control). Attention! Do not engage gear!
3. U D + > 13.5 V at < idle speed
4. I battery < 15 A, switch off electrical load

If values are not obtained: Check wires, regulator and alternator: For troubleshooting on alternator, refer to oscillograms/Component Testing. Note: Also refer to Technical Data (microfiche).

BMW voltage values

U B +	Battery voltage	> 11.2 V
U Kl. 15	Voltage at terminal 15 of ignition coil	> 10.8 V
U Kl. 1	Voltage at terminal 1 of ignition coil	> 10.0 V
I battery	Battery current	< – 8.0 A

Test step 01 – Test procedure:

1. Switch off electrical loads on vehicle such as ignition, fan etc.
2. Connections: Diagnostic connector, jaw–type probe
3. Switch on ignition (ignition switch)

If values not obtained: Check battery terminals, battery charge level with test step 03.

Defect code 01

Battery charge indicator does NOT light when ignition is switched on

Troubleshooting

Detach connector D+/61 and connect to ground (terminal 31).
Does battery charge indicator light?

— yes → Remove voltage regulator. Check carbon brushes, renew if necessary – see repair instructions. Check slip rings for wear or oxidation, then connect BMW Service Tester, carry out engine test – see: Component Testing.

— * —

no ↓

Check connections and wires for battery charge indicator lamp or replace bulb, see Repair Instructions.
Pre–excitation interrupted – Positive diode has a short–circuit.

— * —

Defect code 02

Battery charge indicator lights when ignition is switched off

Remove alternator. Replace diode plate, see Repair Instructions.

Defect code 03

Battery charge indicator FLICKERS or LIGHTS when engine is running

Troubleshooting

Connect BMW Service Tester, check control voltage and charging current, see Component Testing. Are results OK?

— yes → Check oscillogram and harmonic ratio – see Component Testing. Are results OK?

— yes → End of troubleshooting.

— * —

no ↓

Replace voltage regulator – see Repair Instructions.

— * —

no ↓

Replace alternator or disassemble and check individual parts.

— * —

Defect code 04

Battery is INSUFFICIENTLY CHARGED, battery charge indicator goes out when engine is running

Troubleshooting

Connect BMW Service Tester, carry out engine test (P 02). Is control voltage OK. (see Component Testing)?

— yes → Check battery, replace if necessary. Check power consumption when loads are switched off. Perform closed–circuit current test – see vehicle–specific Repair Instructions.

— * —

no ↓

Replace voltage regulator – see repair instructions. Is charging current OK. (see Technical Data)?

— yes → End of troubleshooting.

— * —

no ↓

Replace alternator, or disassemble and check individual parts – see Component Testing.

— * —

Defect code 05

Check terminal 61 relay (K61)

Note: Follow the specified sequence of tests.

Troubleshooting

1. Is fuse OK.?	– no →	Replace fuse.
2. Remove relay terminal 61 (K61). Switch on ignition. Is battery voltage applied at the relay Pin 5 and Pin 4 U-Batt.?	– no →	Repair defective wire.
3. Is ground applied at Pin 2?	– no →	Repair wire.
4. Start engine. Does the charge indicator lamp go out in the instrument cluster?	– no →	Go to defect code table for 5 Series.
5. Run engine. Is a minimum voltage of 12 Volt applied at Pin 8?	– no →	Repair wire to the alternator.
6. Switch off engine. Connect a fused jumper between Pin 5 and Pin 6. Switch on ignition! Can battery voltage be measured at the corresponding input of the defective system (e.g. seat heating, heated water jets, rear window defogger relay)?	– no →	Repair wire from Pin 6 to system.
7. Install terminal 61 relay (K61). Switch on ignition! Is ground applied at the corresponding input of the defective system when the engine is **not running**? Is battery voltage applied at the corresponding input of the defective system when the engine is **running**?	– no →	Replace terminal 61 relay (K61).

Component Testing

Caution!

Take care when cleaning components with flammable agents.

Capacitors with long storage times are installed to facilitate radio suppression.

When immersed in flammable liquids, discharge of the capacitors can cause sparking and ignite the liquid.

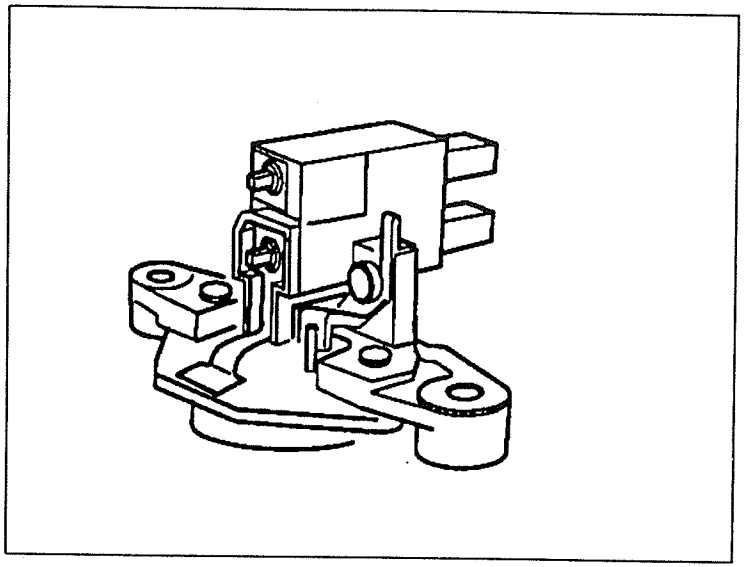

31 12 159

Check voltage regulator

Voltage regulator for alternators on vehicles with battery in luggage compartment.

Control voltage

at 20 °C = 14.5 – 14.6 V

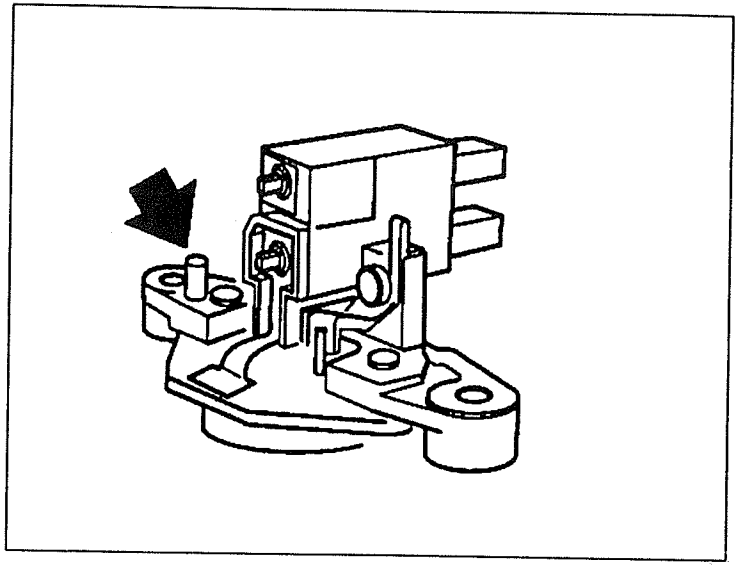

31 12 160

Constant voltage regulator

for alternators in vehicles with battery in luggage compartment or under rear seat.

Regulator is coded mechanically (arrow). It can only be installed in conjunction with the above specified alternator.

The constant voltage regulator must, under no circumstances, be installed in vehicles with the battery in the engine compartment (battery will boil over and be destroyed due to the high electrolyte temperature!)

Control voltage

14.3 V ± 0.1 V (over entire temperature range)

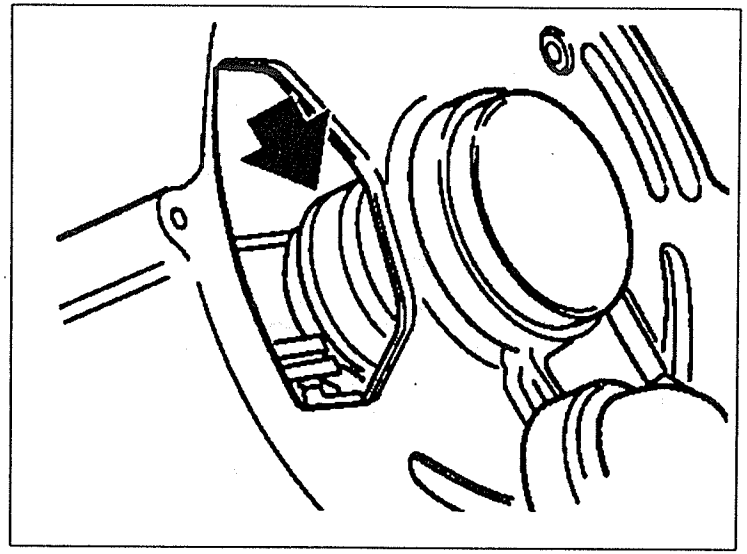

31 12 109

Check slip rings for wear

Check slip rings for wear, if necessary precision machine and polish.

Connect BMW SERVICE TESTER. Start engine and compare measured values (see Technical Data)

M 21 engine:
For measured values (control voltage – charging capacity), refer to Technical Data/Nominal Values.

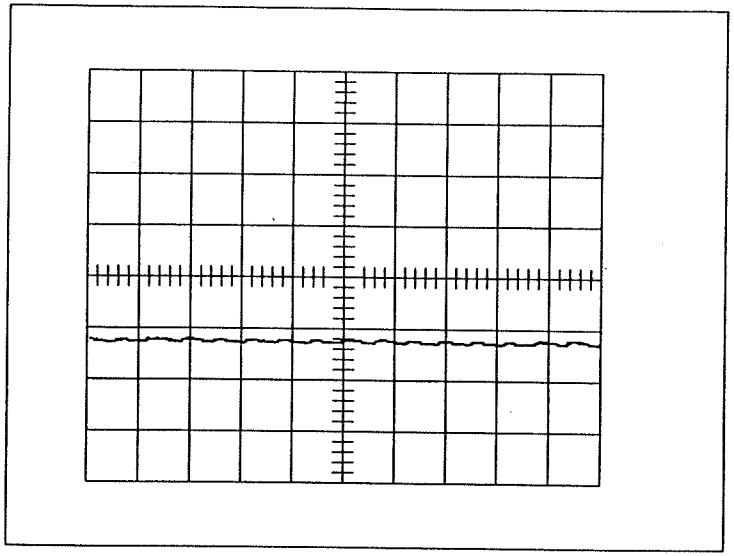

P32 12 050

Harmonic ratio

Measurement for BMW SERVICE TESTER (♦M♦ scope)

If the battery charge indicator goes out when the engine is running and the control voltage value *) is not reached but the harmonic ratio *) and oscillogram are OK (as shown in diagram), the voltage regulator must be replaced.

*) See Technical Data

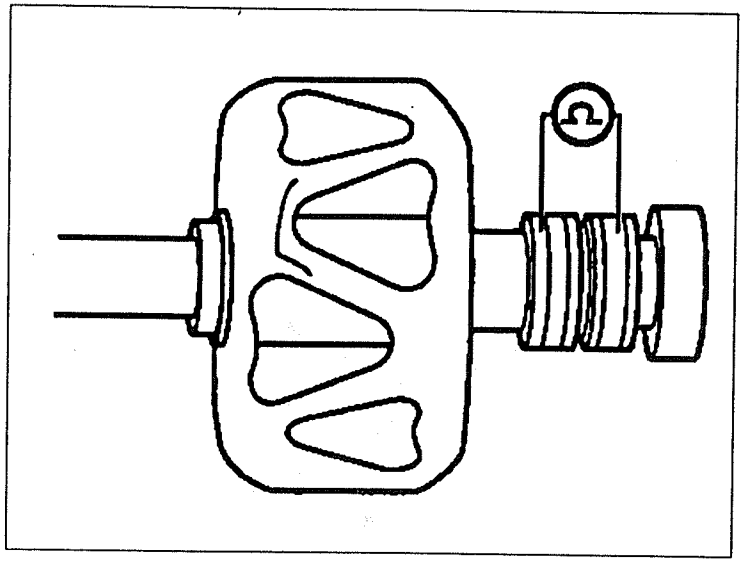

31 12 127

Check rotor winding for a break and interturn short.

Remove alternator

If the specified charging current is not reached, remove the alternator, disassemble (see Repair Instructions) and check individual parts.

Check rotor winding

Check rotor winding for break and interturn short. Measure resistance between the slip rings.

Nominal values

Bosch alternator:	80A – 2.8 Ω ±10%
	65A – 3.4 Ω ±10%
	90A – 2.9 Ω ±10%
	115A – 2.65 Ω ±10%
	140A – 2.65 Ω ±10%
Valeo alternator:	80A – 3.2 Ω ±10%
	90A – 3.0 Ω ±10%
	105A – 3.0 Ω ±10%
	115A – 3.0 Ω ±10%
	140A – 3.0 Ω ±10%

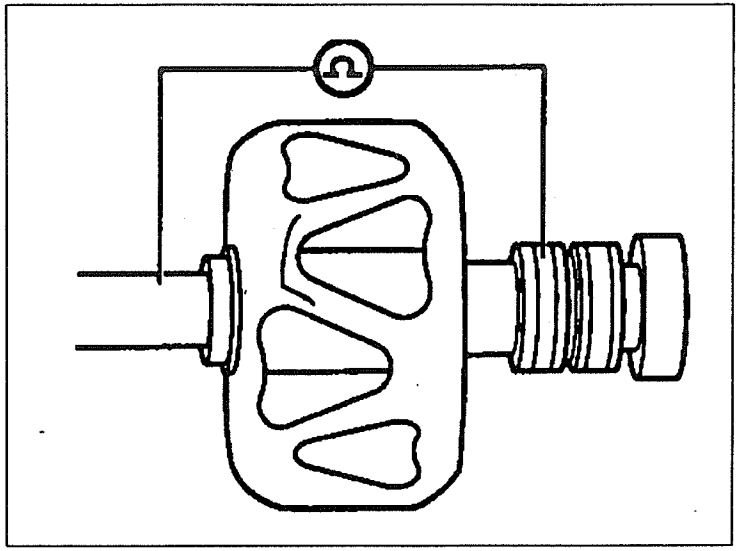

31 12 128

Check rotor winding for short to ground:

Measure resistance between slip ring and rotor shaft.

Nominal value

Resistance infinity.

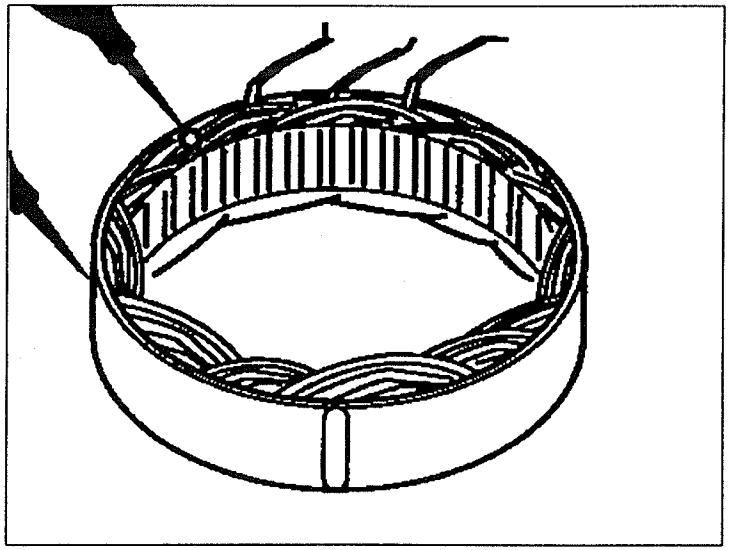

31 12 129

Check stator winding for short to ground:

Measure resistance between solder point and stator (winding carrier).

Nominal value

Resistance infinity.

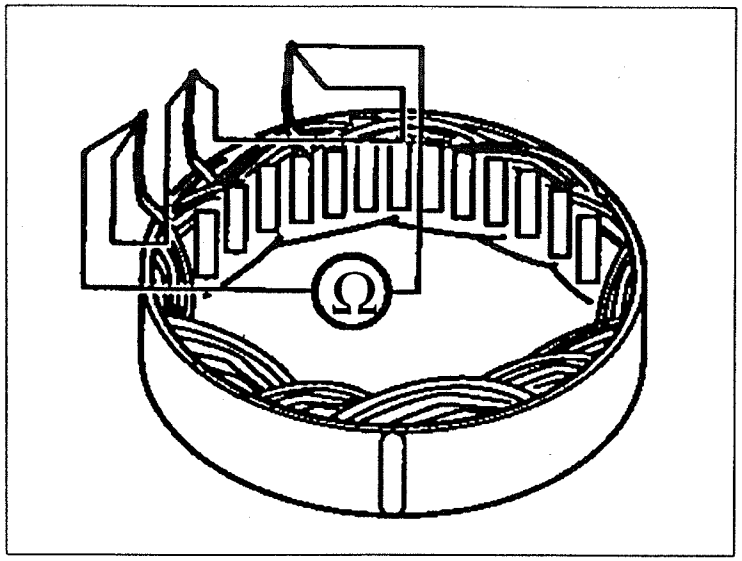

31 12 130

Check stator winding for a break.

Compare resistance values of wires 1/2, 1/3 and 2/3 with Ohmmeter.

Nominal values

Resistance values should be identical.

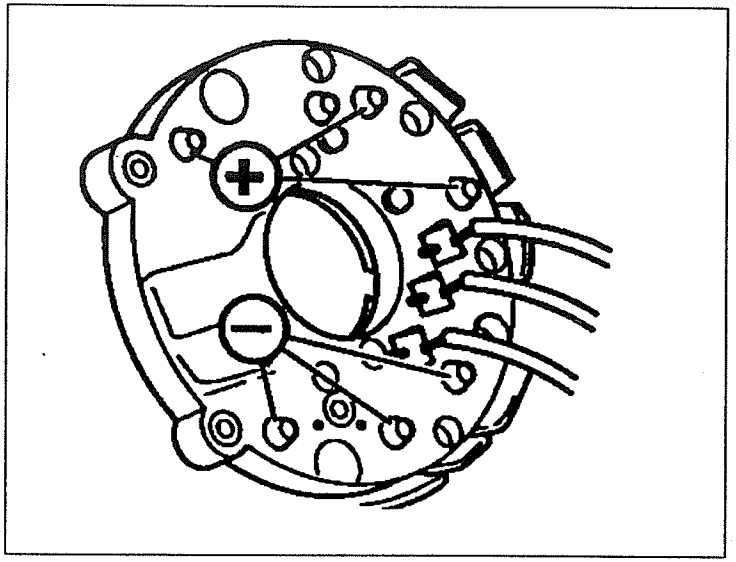

31 12 131

Check negative diode

Diode test with BMW SERVICE TESTER (♦M♦)

Connect measuring cable for diode test.
Connect negative cable to heat sink and positive cable to one of the negative diode connections.

Nominal values

Display for diodes functioning correctly: Polarity "–".

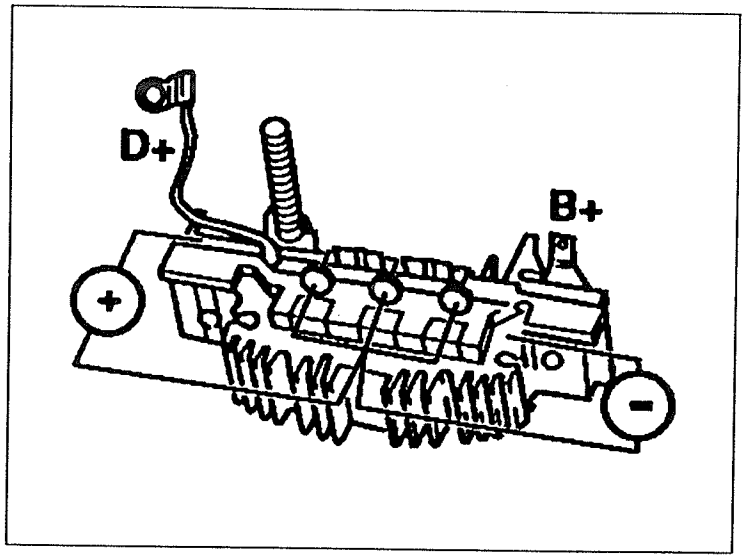

31 12 132

Check positive diodes

Diode test with BMW SERVICE TESTER (♦M♦)

Connect negative cable to B+ terminal pin and positive cable to one of the positive diode connections.

Nominal values

Display for diodes functioning correctly: Polarity "+".

Note

If one of the diodes is defective, the entire diode plate must be replaced (see Repair Instructions 12 31 691).

Oscillograms

Measurement for BMW SERVICE TESTER (♦M♦ scope)

Various oscillograms are illustrated below. Observe the following for all diagrams:

Important!

Different variable ratios due to power variants from 80 – 140 Amp!

An oscillogram for an alternator in perfect working order is shown opposite

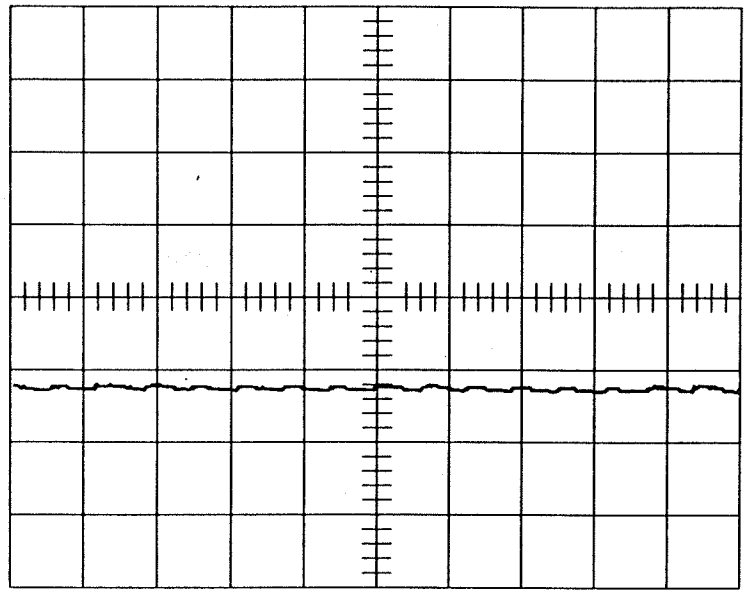

P32 12 051

No defect

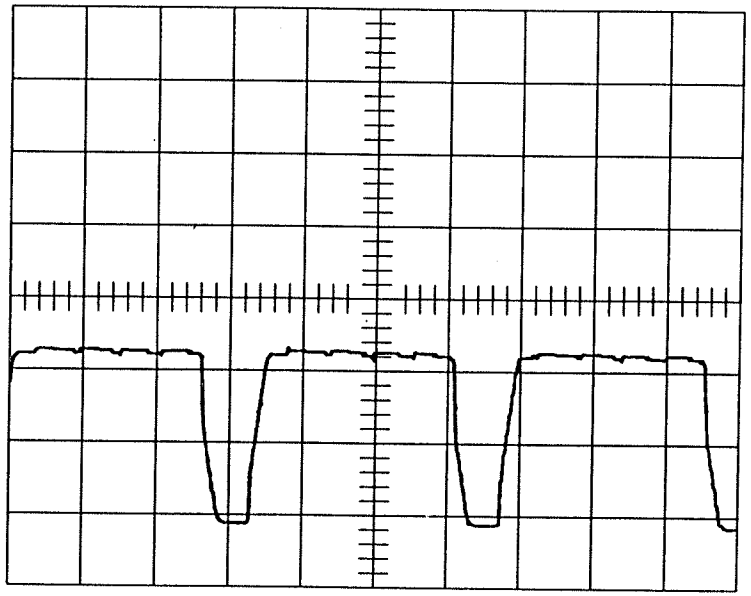

P32 12 052

Defect!

Exciter diode break

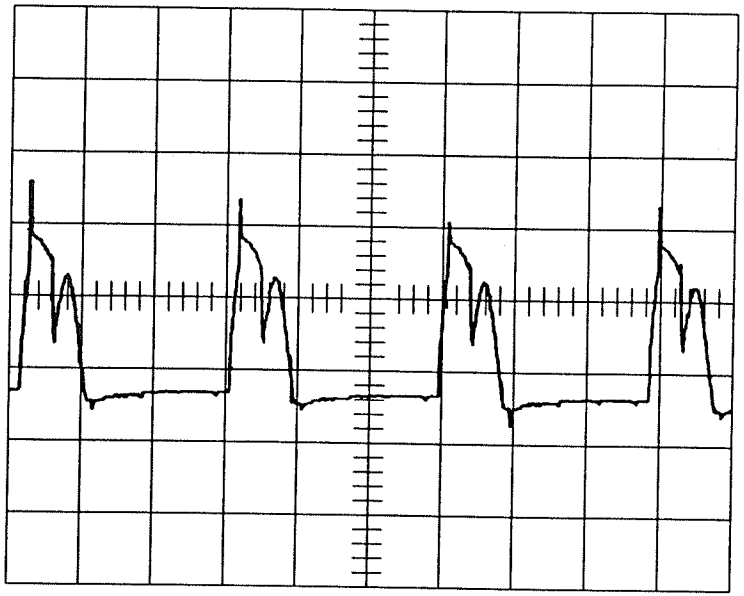

P32 12 053

Defect!

Positive diode break

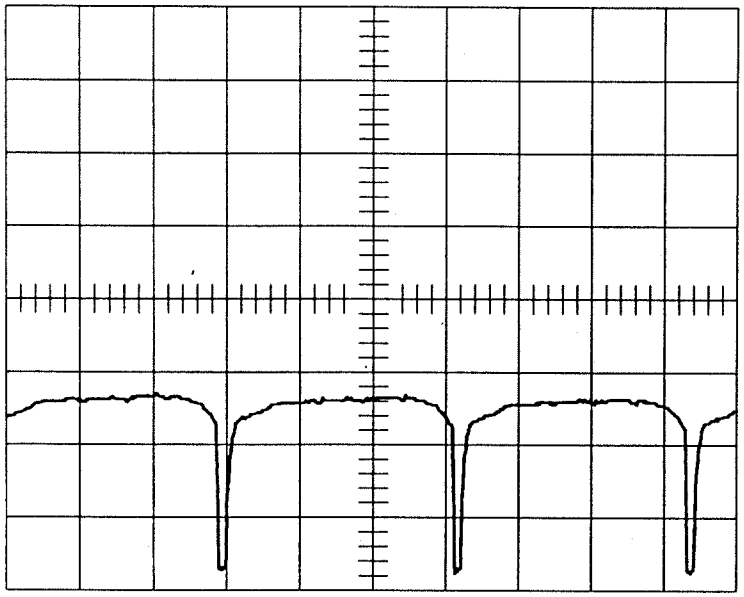

P32 12 054

Defect!

Negative diode break

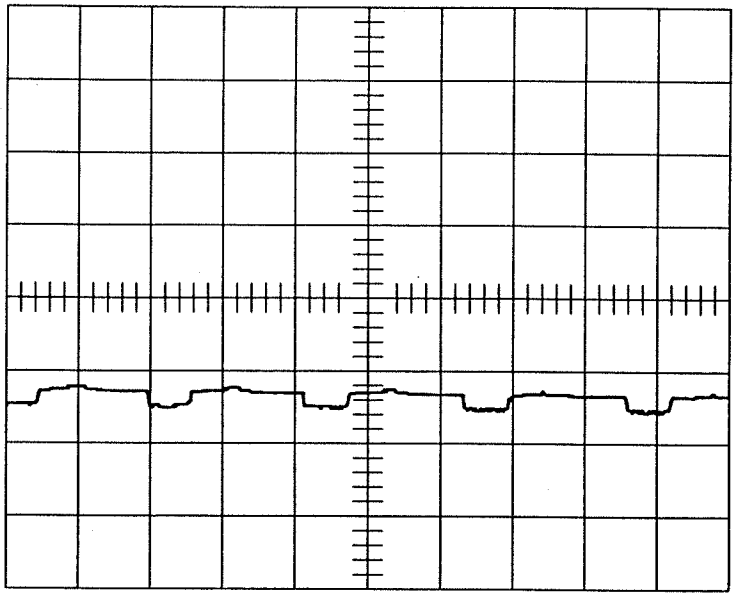

P32 12 055

Defect!

Positive diode short!

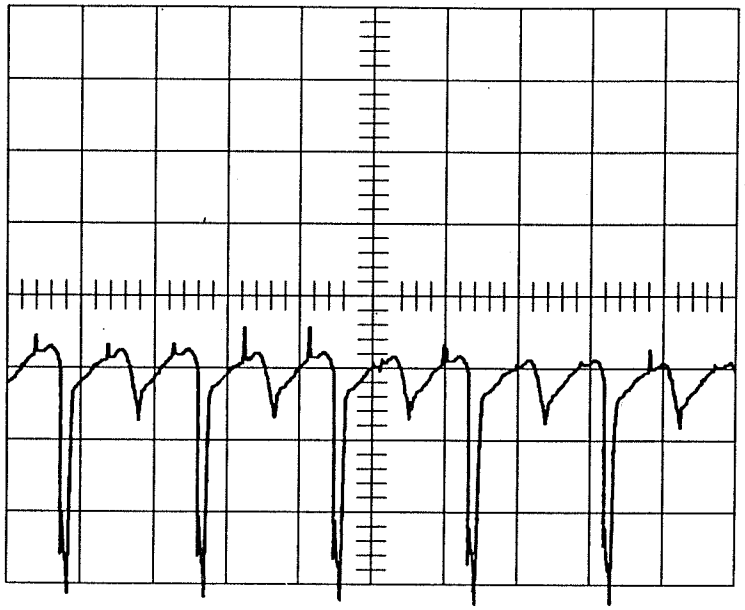

P32 12 056

Defect!

One phase has a break.

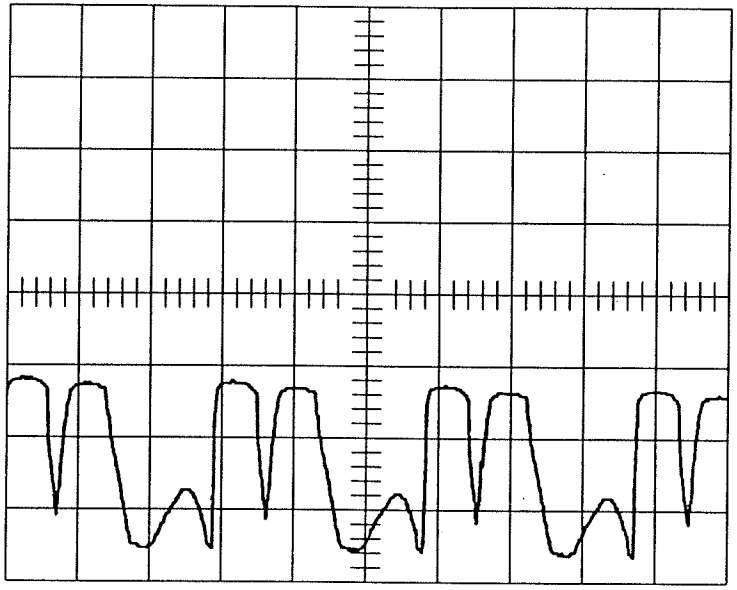

P32 12 057

Defect!

Interturn short.

Functional Description

Type: Countershaft/screw-push starter

With Manual Transmission

When the ignition switch is in position 3, battery voltage is supplied to the internal solenoid switch of the starter. The working contacts close and the starter receives power via the battery, leads thus cranking the engine.

With Automatic Transmission

When the transmission selector switch is in position P or N, power is supplied to the start prevent relay. The working contacts of the relay close and form a current path to the ignition switch. When the ignition switch is in position 3, battery voltage is supplied to the internal solenoid switch on the starter. The working contacts close and the starter receives current via the battery leads, thus cranking the engine.

Notes on the BMW DIAGNOSTIC SYSTEM

This system does not feature diagnostic capabilities

Abbreviations

U-Batt.	Battery voltage
U-Vers.	Voltage supply

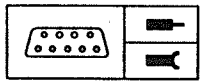

Pin Assignments

Pin	Type	Description/function	Connection	Signal type	Tester display	Measurement notes
15		Positive switched after battery, ignition coil output				
30	E	Input directly from battery positive				
31	M	Battery negative (ground)				
50	E	Direct starter control				

Troubleshooting

Notes

Safety codes and accident prevention regulations must be observed when carrying out all tests and work on the engine electrical/electronic systems.

Test prerequisites:

– Correct connection at battery and alternator.
– Good ground connection from engine to body.

Defect Code Table

Troubleshooting with the BMW SERVICE TESTER

Test program: 01 = Engine test – 03 = Starter

Malfunctions

Starter turns too slowly → Defect code 01

Starter does not turn, only the solenoid switch can be heard to klick → Defect code 02

Starter does not operate → Defect code 03

Starter does not engage → Repair Instructions for assembly

Troubleshooting with BMW SERVICE TESTER

Important!

Do not engage any gear or drive range – apply hand brake!

Test program: 01 = Engine test – 03 = Starter

Applicable to the entire engine test, to next test step: ♦⇒♦

The complete test step is printed out for as long as the log printer button is depressed (locked in).

The connection diagram and the test step overview can be displayed with ♦⇧♦ during the individual test steps (then enter the required test step number again).

Nominal values for starter and battery

Start speed		> 200 rpm
I Starter	Starter current	< – 170 A
U B +	Battery voltage during start	> 9.0 V
U Kl. 15/RV	Voltage at terminal 15 of ignition coil	> 9.0 V
Oil temperature	> 20°C	

Test step 03 – Test procedure:

1. Connections: Diagnostic connector, Jaw–type probe B+ (see direction of arrow),
   trigger probe, oil temperature sensor.
2. If test step 02 was not carried out, press the button with the "cylinder symbol" until the number of cylinders appears.
3. Start engine until actual values appear (approx. 6 to 8 sec). Ignition is reduced for this period.
4. This test step (not for CAT vehicles) is a prerequisite for the next test step 04 compression comparison. Repeat test step with printout 03 – no printout with acknowledgement.

If nominal values are not reached, check battery, wires, connections and relays.

For further notes: See Component Testing.

Defect code 01

Starter turns too slowly

Possible cause:

a) Bearings worn or heavily soiled

b) Electrical defect at solenoid switch, armature or winding

c) Drive pinion (free wheeling) worn

Defect code 02

Starter does not turn, only solenoid switch can be heard to klick

Possible cause:

1. Switch on lights. If lights go out when starting:
   a) Battery defective
   or
   b) short–circuit in the starter
2. Switch on lights. If lights do not go out when starting:
   a) Carbon brushes worn
   or
   b) solenoid switch defective

Defect code 03

Starter does not operate

Troubleshooting

Connect terminal 30 to terminal 50 at the solenoid switch. Does starter operate?

— no → Switch on lights, do lights go out during starting procedure?

— no → a) Solenoid switch defective
or
b) carbon brushes worn.

— * —

yes
↓

a) Wires and connections to the ignition switch faulty
or
b) ignition switch defective.

— * —

— no → a) Battery defective
or
b) short–circuit in the starter

— * —

Component Testing

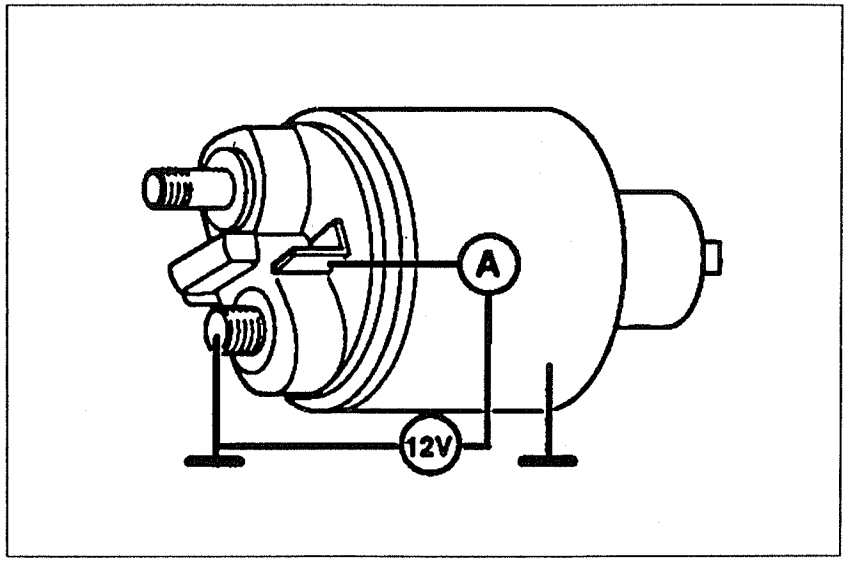

31 12 097

Check power consumption of the pulling and holding windings in the solenoid switch, check power consumption at terminal 50 (at rated voltage).

For nominal values, refer to Technical Data

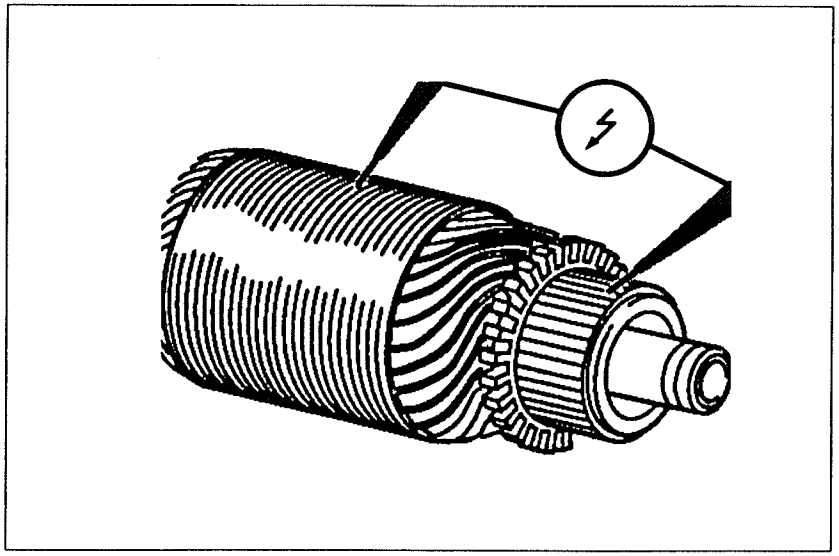

31 12 098

Check exciter winding, carbon brushes and armature winding for short to ground. Check armature for interturn short, use commercially available test probe.

It is not necessary to test the exciter winding in the case of a permanent magnet.

Notes

This diagnostic procedure applies only to the electronic throttle control EML on the 6-cylinder engine M 30 B35 / M30 B30.

Functional Description

The electronic throttle control system **EML** replaces the previous mechanical transmission and transfer linkage of the accelerator pedal angle between the accelerator pedal and throttle valve.

The most important components of the **EML** control unit are the pedal value sensor **PWG** and the EML throttle valve **DK**.

In addition to transmission of the accelerator pedal angle (position) from the accelerator pedal to the throttle valve, the EML system performs several other functions.

- Idle speed control
- Engine speed limitation
- Vehicle speed control (cruise control) **FGR**
- Throttle valve opening in accordance with various characteristic progression curves which are selected from a pedal characteristic map corresponding to the drive status
- Interfaces for data exchange with other control units (e.g. ASC, DME and EGS)
- Safety test of important components used by the EML system
- Maintaining vehicle operability in the event of component failure by making available substitute values
- Self–diagnosis

All functions are monitored by the control unit program. The program run is also controlled by the hardware.

Pedal Position Sensor PWG

The EML control unit supplies the pedal position sensor with a controlled voltage of 5V. As regards electrical functions, the pedal position sensor contains a potentiometer, a switch for monitoring the potentiometer, the kick-down switch and a switch for the external safety circuit.

Important!

The 5 V component supply voltage coming from the EML control unit is not short–circuit–proof.

The potentiometer of the pedal position sensor divides the voltage dependent upon the angle of rotation.The part voltage fed back by the potentiometer is converted in an analog/digital converter into a form which

can be processed by the microprocessor and converted into angle degrees. The valid angle range is from approx. –5° to approx. 87°.

The EML control unit performs a switching range check in that it compares the switch–on point of the switch (approx. 9°) with the angle setting of the pedal position sensor (PWG) potentiometer. If the EML control unit finds that the deviation is too great, the output is limited and the EML warning lamp lights.

A kick-down switch integrated in the pedal position sensor (PWG) is used for detecting "kick-down disengaged" in vehicles with automatic transmission. The switch closes at approx. 74°.

The switch for the external safety circuit opens at approx. 2.5°. The switch output is connected in series with a diode and arranged externally.

EML Throttle Valve DK

By way of a servomotor (actuator), the EML throttle valve is opened by the output stage in the EML control unit against the force of a spring. The output stage activates the servomotor with a square–wave voltage which has a fixed frequency. The different settings of the EML throttle valve are achieved by altering the ratio between the cut–in and cut–out duration.

When the EML control unit or the EML throttle valve are renewed, or power is cut to the control unit, the information relating to the lower throttle valve (DK) limit stop is lost or incorrect. The EML control unit therefore has a teach–in feature which learns the throttle valve (DK) limit stop position once again. When learning this throttle valve (DK) limit stop, the EML system establishes the relationship between the mechanical limit stop and the throttle valve (DK) potentiometer angle. The learning procedure assumes that the vehicle is in cruising mode, the detected water temperature is > 60° C and the engine speed is > 1800 rpm. When all these conditions are fulfilled, the servomotor (actuator) slowly moves the throttle valve against the lower mechanical limit stop. When this limit stop is reached, the EML system stores this teach–in value. This learning procedure is carried out during each vehicle start until the new value can be stored.

Important!

The output stage of the EML control unit for the throttle valve (DK) actuator is not short–circuit–proof.

By way of the throttle valve (DK) potentiometer, the EML control unit detects the position of the throttle valve and moves the throttle valve to the calculated position with the throttle valve actuator.

The EML control unit supplies the throttle valve (DK) potentiometer with a controlled voltage of 5 V. It divides this voltage depending upon the angle of rotation. The part voltage fed back by the potentiometer is converted in an analog/digital converter into a form which can be processed by the microprocessor and further converted into angle degrees. The valid angle range is from approx.– 3° to approx. 94°.

The EML control unit performs a switching range check in that it compares the cut–out point of the switch (approx. 17 °) with the angle setting of the throttle valve (DK) potentiometer. If the EML control unit finds that the deviation is too great, the output is limited and the EML warning lamp lights.

A further test of both switches, i.e. PWG switch and DK switch, is the switch plausibility check. The control unit logic checks whether one of the following conditions is fulfilled:

– PWG switch (closes at approx. 9°) closed
– DK switch (opens at approx. 17°) closed
– Cruise control FGR active

If one of the conditions is not fulfilled, all three cut–out paths which the EML control unit has available are activated.

The cut–out paths of the EML control unit all result in engine output limitation or deactivation of the throttle valve (throttle valve closed by actuator (servomotor) or by the return spring). The various cut–out paths are activated corresponding to the relevant defect in component operation. The control unit can activate three different cut–out paths:

- Output idle (LL) to the DME system. The idle (LL) is sent to the DME, this system deactivates cruise mode at an engine speed > approx. 1500 rpm.
- Deactivation of opening branch of the throttle valve (DK) actuator output stage. When this opening branch is deactivated, the throttle valve can only be closed via the return spring or the closing branch of the throttle valve (DK) actuator output stage.
- Output limitation by limiting throttle valve (DK) opening. The throttle valve (DK) opening speed is also limited when limiting DK opening.

A further cut–out path which passes the EML control unit is the external safety path. It sends idle signal (LL) to the DME when the pedal position sensor is not operated and the brake pedal is depressed. The brake light test switch switches this ground signal through to the DME via the switch for the external safety path in the pedal position sensor (switch opens at approx. 2.5°).

Idle Control

When the pedal position sensor is not operated, the idle speed of the engine is kept constant to the nominal engine speed by way of controlled opening of the throttle valve. The working range of the idle controller depends upon the coolant temperature which is detected by the EML coolant temperature sensor. The nominal idle speed is influenced by three data variables:

- By the coolant temperature (the nominal idle speed is increased at low temperatures)
- By the setting of the gear selector lever in vehicles equipped with automatic transmission (the nominal idle speed is reduced with gear engaged and at low temperature)
- By the opening status of the air conditioning system (the nominal idle speed is increased by approx. 100 rpm when the A/C compressor is switched on).

When starting the engine, the throttle valve opening is increased dependent on temperature to a start opening position (start is detected at < 20 rpm).

The idle control system is active at a speed of < 1600 rpm. Apart from this condition, either the speed must be < nominal speed, the vehicle speed < 8 km/h, clutch depressed (manual transmission) or the gear P or N engaged (automatic transmission).

The throttle valve opening is increased depending upon the engine speed in order to reduce the vacuum in the intake pipe during deceleration fuel cut–out.

Engine Speed Limitation

The EML control unit limits the engine speed by closing the throttle valve opening before reaching the limit speed of 6200 rpm. To avoid control problems between the EML and DME systems when limiting the engine speed, in the case of the DME control unit, the engine speed limitation is set to 6400 rpm. The EML control unit detects the engine speed by way of the engine speed signal (TD) from the DME control unit.

Cruise Control FGR

The cruise control is activated by the FGR switch. The control system uses the road speed signal (speed–A) from the instrument cluster. The five different switch positions of the FGR switch are detected by the EML control unit by way of different voltage values. In addition to the five different switch positions, the EML control unit also detects "interruption" or "short to ground" (♦D♦status list). The EML control unit assigns the following values to the different voltage values:

Voltage value	Function	♦D♦Display	Typical value	Remarks
4.58 – 5 V	None	♦D♦Interruption	5 V	FGR switched off
3.75 – 4.58 V	OFF	♦D♦OFF	4.23 V	FGR switches off
2.90 – 3.75 V	Not operated	♦D♦Not operated	3.47 V	FGR switch not operated
2.00 – 2.90 V	Set/decelerate	♦D♦Decelerate	2.64 V	Vehicle speed is set/reduced
1.25 – 2.00 V	Call–up	♦D♦Call–up	1.72 V	Reassume stored speed
0.41 – 1.25 V	Set/accelerate	♦D♦Accelerate	0.86 V	Vehicle speed is set/increased
0.00 – 0.41 V	None	♦D♦Short–circuit to ground		FGR switched off

In the function "set/accelerate", the cruise control system accelerates until the FGR switch is released. After releasing the FRG switch, the cruise control system maintains the speed constant to the achieved value plus 0.5 to 2 km/h. The achieved value plus 0.5 to 2 km/h forms the nominal FRG speed value which is stored in the EML control unit (♦D♦status list). After ignition "OFF" the stored nominal FGR speed value is 0 km/h once again.

In the function "set/decelerate", the cruise control system reduces the speed until the FGR switch is released. After releasing the FGR switch, the cruise control system maintains the speed constant to the achieved value minus 0.5 to 2 km/h. The achieved value minus 0.5 to 2 km/h forms the nominal FGR speed which is stored in the EML control unit.

In the "call" function, the cruise control systems sets the road speed to the nominal FGR speed value which is stored in the EML control unit.

In the "OFF" function, the cruise control system cuts out smoothly. Cruise control is also deactivated or cannot be activated when one of the following cut–out conditions occurs.

- Brake is operated
- Clutch is operated (manual transmission)
- Gear disengaged without clutch (manual transmission)
- Gear selector lever set in P or N or detected by control unit as engaged (automatic transmission)
- Control unit detects road speed < 36 km/h
- Actual speed is greater by 16 km/h or less by 8 km/h than the nominal FGR speed value
- Vehicle acceleration greater than 1.5 m/s*s (speed increase greater than 5.4 km/h per second)
- External safety path sends ground and therefore idle signal (LL) to DME and EML systems

If cruise control is deactivated by one of these conditions, it cannot be reactivated before the FGR switch has been set to "neutral position" and the cut–out condition no longer exists. This ensures that cruise control remains deactivated in the case of a permanently defective FGR switch (faulty control voltage).

In "neutral position" (FGR switch not operated), the last activated function of the cruise control system is retained.

All functions are activated by briefly pressing the switch. In the case of the "set/accelerate" and "set/decelerate" functions, by briefly pressing the switch (less than approx. 0.5 s) the speed is increased/decreased by 1 km/h each time the switch is pressed when "set/accelerate" or "set/decelerate" is already active.

Interfaces to Other Control Units

The EML control unit sends data to and receives data from other control units via various lines (interfaces). In many cases, data transfer requires more than simple "ON"/"OFF". Dynamic values must also be represented up–to–date. A square–wave voltage is therefore used for several lines to facilitate data exchange between EML, DME, EGS, ASC and the instrument cluster.

The EML control unit is linked via three lines to the ASC control unit. By way of the DKV signal (DKV = throttle valve setting) it informs the ASC control unit of the position of the throttle valve. The signal is a square–wave voltage with fixed frequency and variables pulse duty factor. Via the two other lines (DKR = throttle reduction, DKE = throttle increase), the ASC control unit informs the EML system when a change in the throttle valve angle is necessary. This status is also signalled to the EML control unit by way of a square–wave voltage with fixed frequency and variable pulse duty factor. In order to facilitate external data exchange, when the ignition is switched on, synchronization takes place between the EML and ASC control units on these three lines (DKV,DKR,DKE). If this synchronization does not take place, then throttle valve intervention by the ASC control unit is also not possible.

In the case of vehicles equipped with EML, the signals of the throttle valve (throttle switch) are not sent by the EML throttle valve to the EGS and DME control units. This information is sent from the EML control unit to the EGS and DME control unit.

The EGS control unit is informed by the EML as regards the position of the throttle valve via the DKV line (DKV = throttle valve setting). This line is the same as that leading to the ASC control unit. Also the kick-down position of the pedal position sensor (PWG) does not go from the switch to the EGS control unit, but rather via the EML control unit. The EML system switches over to a corresponding characteristic map for the S-program of the EGS control unit.The information "program switch at S-program" comes directly from the program switch to the EML control unit.

Direct data exchange between EML and DME takes place via four lines. One line provides the information "idle (LL)" and "full load (VL)" to the DME. Two further lines transfer the ti and TD signals from the DME control unit to the EML.

The EML system features a line link (3 lines) to the instrument cluster to facilitate operation of the cruise control (FGR) and to maintain the stored information in the EML control unit. The EML receives the current road speed from the instrument cluster by way of the speed-A signal. The EML memory receives a voltage supply in order to retain the stored information in the EML when the ignition is switched off. The voltage supply is routed via the two special lamps (EML warning lamp) soldered in the instrument cluster. The two lamps are linked to the EML system via two separate lines.

Providing Substitute Values/Self–diagnosis

Engine speed signal: The EML derives the current engine speed from the speed signal (TD) which comes from the DME. When this signal corresponds to an engine speed greater than 7000 rpm, a speed of 4000 rpm is used to calculate the characteristic map. The EML control unit recognizes the engine speed range from 500 rpm to 6800 rpm as valid for characteristic map calculations.

Road speed signal: The EML derives the current road speed from the road speed signal (speed–A signal) which comes from the instrument cluster. The EML recognizes the range from 0 to 270 km/h as valid. When the signal corresponds to a speed in excess of 270 km/h, a speed of 32 km/h is used for the function.

Engine temperature: The EML detects the engine temperature with the aid of its own temperature sensor. The EML recognizes the range from –40° C to 140° C as valid. A substitute value of approx. 40° C is used for the function outside this range (♦D♦status list).

Safety Check

After switching on the ignition, the EML control unit checks its vital components (safety check) and causes the EML warning lamps to light for approx. 2 seconds. The purpose of this is to check whether the EML warning lamp can be set in the event of a defect. If a defect of priority 8 to 15 (♦D♦# note) occurs, then the EML warning lamp lights. The EML system reduces the output if the EML warning lamp cannot be set due to a defect in the lamps or corresponding lines.

Electronic Throttle Control (EML, 6-cylinder)

Basic Wiring Diagram

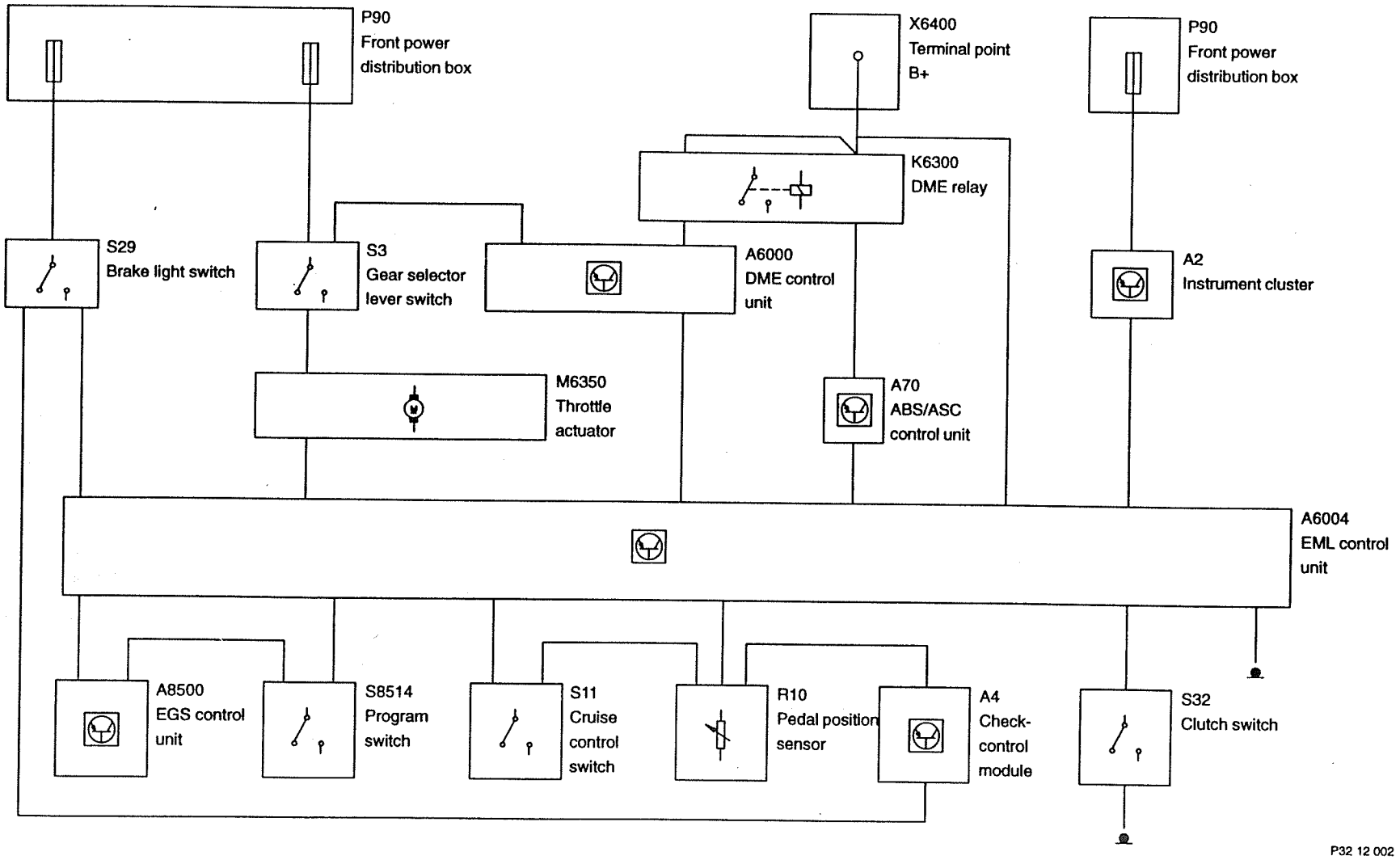

Notes on the BMW DIAGNOSTIC SYSTEM

Defect code memory

The component functions and signals listed below are processed or controlled by the EML control unit, but not stored in the case of defect:

- LL-signal (sends "idle" information to the DME)
- VL-signal (sends "full load" information to the DME)
- Kick-down switch
- Air conditioning switch
- A/C compressor clutch (relay output)
- Gear selector switch ("P" or "N" position in automatic transmission)
- Clutch switch (manual transmission)
- Brake light switch
- External safety path

The external safety path cannot be read out in the status lists of the BMW DIAGNOSTIC SYSTEM.

Defect code priority

The EML control unit stores a maximum of 5 defect codes. When the defect code memory is full, a new defect code with higher priority displaces an already existing defect code with lower priority (see ♦D♦# Note).

Status monitoring

Since not all inputs and outputs and their plausibility are covered by the defect code memory of the EML control unit, the status monitoring function must also be used for successful troubleshooting.

The nominal values and actual values specified in the status lists need not agree exactly. If the deviation between the nominal value and actual value is outside the permissible range, then the EML control unit stores this as a defect.

The permissible ranges are specified in the functional description or in the troubleshooting procedure in the BMW DIAGNOSTIC SYSTEM. When the permissible range is exceeded and the EML control unit has detected this as a defect, the actual value can be used to check the component and its system of lines without the need for extensive measurements.

Abbreviations

ABS	Antilock brake system
ASC	Automatic stability control
DME	Digital motor electronics
EGS	Electronic transmission control
EML	Electronic throttle control
MSR	Engine drag torque control
A	Output
E	Input
DK	EML throttle valve
DKV	Preset throttle value
DKR	Throttle reduction
DKE	Throttle increase
HG	Manual transmission
ME	Engine intervention
PWG	Pedal position sensor
Poti	Potentiometer
TD	Engine speed signal (once per ignition)
TR	Engine speed signal (3 times per crankshaft revolution)
TMOT	Engine temperature sensor
ti	Injection signal
LL	Idle signal
VL	Full load signal
WK	Torque converter clutch
ZAB	Ignition fade–out

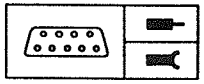

Pin Assignments

Pin Assignments at EML 6-cyl. Control Unit Connector X6004

Pin	Type	Description/function	Connection	Signal type	Tester display	Measurement notes
1	A	Activation, throttle actuator	Throttle actuator	Square–wave signal	None	Not short–circuit–proof
2		not used				
3	E	Vehicle speed signal	Instrument cluster	Square–wave signal	km/h	
4	A	Idle signal	DME control unit	approx. 0 V open	ON OFF	
5	A/E	Engine - coolant temperature	Engine temperature sensor	approx. 0 V – 5 V	°C	
6	E/A	Diagnosis	Diagnostic socket TxD			
7	E	Kick-down	Pedal position sensor	approx. 5 V open	ON OFF	
8	E	Air conditioning switch	Relay - air conditioning/DME	approx. 12 V open	ON OFF	
9	E	Diagnosis	Diagnostic socket RxD			
10	A	Activation, throttle (DK) actuator	Throttle actuator	Square–wave signal	None	Not short–circuit–proof
11	A	Electronics ground	Component ground		None	Not short–circuit–proof

Electronic Throttle Control (EML, 6-cylinder)

Pin Assignments

Pin	Type	Description/function	Connection	Signal type	Tester display	Measurement notes
12	A	EML warning lamp	Instrument cluster			
*)	E	Terminal 30 for defect code memory /learn values *) when ignition is switched off!				
13	A	Throttle signal (DKV)	ASC/EGS	Square–wave signal	Defect code is stored	♦M♦14 approx. 100 Hz
14	E	Power ground	Ground point		None	Not short–circuit–proof
15	E	Pedal position senor setting	PWG potentiometer	approx. 0.4 – 4 V	Angle/ voltage	
16	E	Throttle position	Throttle (DK) potentiometer	approx. 1 – 4.6 V	Angle	
17	A	5 V (not short–circuit–proof)	PWG switch /throttle potentio-meter	approx. 5 V	None	Not short–circuit–proof
18	E	P or N detection (EGS)	DME control unit	approx. 12 V (ON) approx. 0 V (OFF)	YES NO	
19	E/A	FGR detection	FGR switch	approx. 0 V – 5 V	Position	
20	E	Brake light switch	Lamp control module	approx. 12 V approx. 0 V	ON OFF	
21	E	PWG switch 9°	Pedal position sensor	approx. 5 V open	ON OFF	
22	E	Throttle switch 17° (EML)	Throttle valve	approx. 5 V open	ON OFF	
23	A	Electronics ground	Component ground		None	Not short–circuit–proof
24	E	Injection signal (ti)	DME control unit	Square–wave signal	YES/ NO	

Pin	Type	Description/function	Connection	Signal type	Tester display	Measurement notes
25	E	Terminal 30+	DME relay 2	approx. system voltage	Voltage	
26	E	Clutch pedal	Clutch pedal switch	approx. 0 V open	ON OFF	
27	A	Kick-down signal	EGS control unit	approx. 0 V approx. 12 V	ON OFF	
28	A	Full load signal	DME control unit	approx. 0 V open	ON OFF	
29	E	Engine speed signal (TD)	DME control unit	Square–wave signal	rpm	
30		not used				
31	E	S-program detection	EGS control unit	approx. 0 V open	YES NO	
32	A	5 V (not short–circuit–proof)	PWG potentiometer/throttle switch	approx. 5 V	None	Not short–circuit–proof
33	E	A/C compressor ON	Compressor clutch	approx. 12 V open	ON OFF	
34	E	Throttle angle reduction (DKR)	ABS/ASC control unit	Square–wave signal	Defect code is stored	♦M♦14 approx. 100 Hz
35	E	Throttle angle increase (DKE)	ABS/ASC control unit	Square–wave signal	Defect code is stored	♦M♦14 approx. 100 Hz

Adapter

Component	Connector No.	Description	Adapter number	
Control unit	X 6004	35–pin	Connection cable, peripheryals	HWB 81 12 9 425 092
			Connection cable, control unit	HWB 81 12 9 425 093
		35–pin	Universal adapter	HWB 81 12 9 425 091
		55–pin		
EML safety path		Safety path test	EML adapter	Cartool 12 7 010

Troubleshooting

Notes

- Relevant safety codes and accident prevention regulations must be observed when carrying out all tests and work on the engine electronics. Do not touch (insert fingers in) an EML throttle valve while in operation.
- The corresponding schematics for the 7 Series (E32), model year 1988 bear the designation: **1370 Electronic Throttle Control (EML 1.1)**

Important!

Wherever possible, the battery and the instrument cluster should not be disconnected otherwise all defect codes stored in the EML control unit will be deleted (see ♦D♦# Note).

Caution!

Disconnect control units from the wire harness **only** when the ignition is switched off. The output stage of the EML control unit for the throttle (DK) actuator is not short–circuit–proof. In the same way, the 5 V component supply voltage coming from the EML control unit is not absolutely short–circuit–proof.

Structure of Defect Code Pages on Display Screen.

- **Defect location:** The defect can be in the vicinity of the component, the corresponding lines or in the control unit. The number before the defect code indicates the priority of the defect (♦D♦# Note).
- **Defect type:** Range transgressions or illogical functions are detected.
- **Detected at:** Provides additional information relating to the operating statuses during defect detection (compare values to substitute values). This information can provide an indication relating to the plausibility (in correct sequence), short–circuits, breaks in circuits or range transgressions.

EML Warning Lamp

After switching on the ignition, the EML control unit checks its vital components (safety check) and causes the EML warning lamp to light for approx. 2 seconds. The EML reduces the output if the EML warning lamp cannot be set due to a defect in the lamps or lines. When one of the defect codes 8 to 15 occurs, after the safety check, the EML warning lamp lights once again (with ignition switched on) (♦D♦# Note).

Substitute Value Table

Not plausible	Substitute value
Engine speed signal	4000 rpm
Vehicle speed signal (speed-A signal)	32 km/h
Engine temperature	approx. 40° C

Defect Code Table

♦D♦900 Defect code memory - stored defect codes

One or several defect codes stored → Defect code 15 to 1

Defect code 15

♦D♦900 Defect code memory: 15 Throttle switch

Explanation: This defect code is stored when the control unit determines opening or closing of the throttle switch and this does not comply with the calculated throttle valve angle or does not correspond to the switch plausibility.

Effect when defect code set (EML warning lamp ON): Output reduction by limited throttle valve (DK) opening angle.

Note: Particular care must be taken when checking the DK switch and the PWG switch with the ♦D♦ status list to ensure that one of the two switches ♦D♦ "ON" (both switches can also be ♦D♦ "ON").

Troubleshooting:

1) Check DK switch and DK potentiometer with ♦D♦ status list.
2) Check voltage supply for potentiometer and throttle (DK) switch (approx. 5 Volt) from the EML control unit to the throttle valve at the throttle valve.
3) Check wires from the EML control unit to the throttle valve.
4) Check component: Check DK switch and DK potentiometer for continuity (potentiometer test with oscilloscope).

Defect code 14

♦D♦900 Defect code memory: 14 Throttle potentiometer

Explanation: This defect code is stored when the control unit detects opening or closing of the throttle (DK) switch and this does not comply with the calculated throttle (DK) angle or the throttle (DK) angle is outside the valid angle range (approx. –3° to approx. 94°).

Effect when defect code is set (EML warning lamp ON): Output reduction by limited throttle (DK) opening angle and controlling the maximum throttle opening about the throttle (DK) switch opening point.

Note: Particular care must be taken when checking the throttle (DK) potentiometer with the ♦D♦ status list to ensure that the throttle (DK) switch is ♦D♦ "OFF" > approx. 17° DK potentiometer value.

Troubleshooting:

1) Check throttle (DK) switch and throttle (DK) potentiometer with ♦D♦ status list.
2) Check voltage supply for potentiometer and throttle (DK) switch (approx. 5 Volt) from the EML control unit to the throttle valve at the throttle valve.
3) Check wires from the EML control unit to the throttle valve.
4) Check component: Check throttle DK switch and throttle (DK) potentiometer for continuity (potentiometer test with oscilloscope).

Defect code 13

♦D♦900 Defect code memory: 13 Pedal position sensor switch

Explanation: This defect code is stored when the control unit detects opening or closing of the pedal position sensor (PWG) switch and this does not comply with the calculated PWG angle or does not correspond to the switch plausibility.

Effect when defect code is set (EML warning lamp ON): Output reduction by limited throttle (DK) opening angle.

Note: Take particular care when checking the PWG switch and the DK switch with the ♦D♦ status list to ensure that one of the two switches is always ♦D♦ "ON" (both switches can also be ♦D♦ "ON").

Troubleshooting:

1) Check PWG switch and PWG potentiometer with ♦D♦ status list.
2) Check voltage supply for PWG potentiometer and PWG switch (approx. 5 Volt) from EML control unit to the pedal position sensor at the pedal position sensor.
3) Check wires from the EML control unit to the pedal position sensor.
4) Check component: Check PWG switch and PWG potentiometer for continuity (potentiometer test with oscilloscope).

Defect code 12

♦D♦900 Defect code memory: 12 Pedal position sensor potentiometer

Explanation: This defect code is stored when the control unit detects opening or closing of the PWG switch and this does not comply with the calculated PWG angle or the PWG angle is outside the valid angle range (approx. –5° to approx. 87°).

Effect when defect code is set (EML warning lamp ON): Power reduction by limited throttle (DK) opening angle and reduced throttle (DK) opening speed.

Note: Take particular care when checking the PWG potentiometer with the ♦D♦ status list to ensure that the PWG switch is ♦D♦ "ON" at > approx. 9° PWG potentiometer value.

Troubleshooting:

1) Check PWG switch and PWG potentiometer with ♦D♦ status list
2) Check voltage supply for PWG potentiometer/PWG switch and kick-down
   switch (approx. 5 V) from the EML control unit to the pedal position sensor at the
   pedal position sensor.
3) Check wires from the EML control unit to the pedal position sensor.
4) Check component: Check PWG switch and PWG potentiometer for continuity (potentiometer test with oscilloscope).

Defect code 11

♦D♦900 Defect code memory: 11 Injection signal ti not plausible

Explanation: This defect code is stored when, during deceleration fuel cut–out, the EML control unit receives a ti signal (EML sends an idle signal to the DME and engine speed is > approx. 1500 rpm) or an engine speed > approx. 2600 rpm no ti signal is sent over a period of > approx. 4 sec.

Effect when defect code is set (EML warning lamp ON): Power reduction by limited throttle (DK) opening angle and reduced throttle (DK) opening speed.

Note: A check can be made in the ♦D♦ status list as to whether the ti signal exists in the EML control unit.

Troubleshooting:

1) Check ti signal with♦D♦ status list or load display.
2) Check wire from the EML control unit to the DME.

Defect code 10

♦D♦900 Defect code memory: 10 Control for throttle actuator

Explanation: This defect code is stored when, despite an increase in power, the EML control unit cannot move the throttle actuator into the required position via the output stage for the throttle actuator. This defect code is also stored when the voltage supply drops to such an extent that the EML can no longer move the throttle valve in the required position.

Effect when defect code is set (EML warning lamp ON): Power reduction by limited throttle (DK) opening angle and reduced throttle (DK) opening speed.

Troubleshooting:

1) Check throttle (DK) switch and throttle (DK) potentiometer with ♦D♦ status list
2) Check EML voltage supply, battery charge status and note additional information relating to the defect code (♦D♦ detected at:).
3) Check wires from the EML control unit to the throttle valve.
4) Check component: Check throttle valve for stiff movement.

Defect code 9

♦D♦900 Defect code memory: 9 EML system defect

Explanation: This defect code is stored when the program of the EML control unit detects no defect, but a defect code is detected by the hardware of the EML control unit. This defect code is also stored in the case of a defect at the EML warning lamp.

Note: The EML warning lamp cannot light in the case of a short to plus on the EML warning lamp line, thus not defect code is stored.

Troubleshooting:

1) See tester information ♦D♦ EML defect code memory in the defect page.
2) Check EML voltage supply and battery charge status.
3) If no defect can be found but the customer complains of faults in the EML system which cannot be found and the defect code counter reading is > 10, renew the EML control unit.

Defect code 8

♦D♦900 Defect code memory: 8 Control unit

Explanation: This defect code is stored when the program of the EML control unit detects a defect in one of the memory modules of the EML control unit.

Note: The defect code can also be stored as the result of a temporary defect in the EML warning lamp.

Troubleshooting:

1) Check EML voltage supply and battery charge status.
2) If no defect can be found but the customer complains of faults in the EML system and the defect code counter reading is > 10, renew the EML control unit.

♦D♦900 Defect code memory: 8 Power not cut at power stage

Explanation: This defect code is stored when the EML control unit cannot cut the power supply at the output stage for the throttle (DK) actuator.

Note: Switch–off of the output stage is checked before the learning procedure for the mechanical throttle valve limit stop when coasting. (Reset by the throttle (DK) return spring).

Troubleshooting:

1) Check whether throttle valve moves stiffly.
2) Check condition of throttle return spring.
3) Clear defect code memory and check whether defects are repeated (test drive when coasting as long as possible and with engine at operating temperature). If the defect code ♦D♦ 8 power not cut at output stage is stored once again, renew the EML control unit.

Defect code 7

♦D♦900 Defect code memory: 7 Control unit analog/digital converter

Explanation: This defect code is stored when the program of the EML control unit detects a defect on the analog/digital converter module.

Troubleshooting:

As displayed on screen ♦D♦ EML-Defect code memory on the defect page.

Defect code 6

♦D♦900 Defect code memory: 6 Incorrect setting of pedal position sensor limit stop

Explanation: This defect code is stored when the pedal position sensor limit stop is set above approx. 4.5 V .

Note: The pedal position sensor limit stop must be set as described in the Repair Instructions.

Troubleshooting:

1) Fully depress accelerator pedal (over the kick-down point for automatic transmission and compare the PWG potentiometer value in the ♦D♦ status list with the values specified in the Repair Instructions.
2) Note additional information relating to the defect (♦D♦detected at:).

Defect code 5

♦D♦900 Defect code memory: 5 Link from EML to ASC faulty

Explanation: This defect code is stored when a fault occurs after switching on the ignition and during synchronization of the EML and ASC. If synchronization was successful, then this defect code is stored in the event of termination.

Note: If no synchronization is started between EML and ASC because, for example, the ASC is not connected, then this ist not stored as a defect code. In this case, there is no ASC provided for the EML. In vehicles with automatic transmission, the DKV signal can be read out in the ♦D♦status list of the EGS based on the throttle (DK) angle.

Troubleshooting:

1) As displayed on screen ♦D♦ EML-Defect code memory on the defect page.
2) Check DKV signal (from EML to ASC) by ♦M♦ frequency measurement (approx. 100 Hz).
3) Check DKR and DKE signals (from ASC to EML) by ♦M♦ frequency measurement (approx. 100 Hz).

Defect code 4

♦D♦900 Defect code memory: 4 Engine speed signal TD value not plausible

Explanation: This defect code is stored when the engine speed signal TD corresponds to a value > 7000 rpm.

Note: As long as the TD signal corresponds to a value > 7000 rpm, the EML uses a substitute value of 4000 rpm for calculating the pedal characteristic map. A learned value (throttle) (DK) opening is used for idle speed control.

Troubleshooting:

1) Compare screen display♦D♦ EML STATUS LIST with ♦D♦ DME STATUS LIST or tachometer display.
2) Check engine speed signal line TD from the DME to the EML.
3) Check signal form and time progression of the engine speed signal TD with ♦M♦ scope.

Defect code 3

♦D♦900 Defect code memory: 3 Engine temperature TMOT value not plausible

Explanation: This defect code is stored when the EML engine temperature sensor signals a temperature outside the valid range from –40° C to 140° C.

Note: The current signal can be read off in the ♦**D**♦ STATUS LIST (note additional information relating to defect code ♦**D**♦ detected at:).

Troubleshooting:

1) Compare screen display♦**D**♦ EML STATUS LIST with ♦**D**♦ DME STATUS LIST or tachometer display.
2) Check engine speed signal line TD from the DME to the EML.
3) Check signal form and time progression of the engine speed signal TD with♦**M**♦ scope.

Defect code 2

♦D♦900 Defect code memory: 2 Vehicle speed signal value not plausible

Explanation: This defect code is stored when the vehicle speed signal corresponds to a value > 270 km/h.

Note: for as long as the vehicle speed signal (speed–A) is detected as being defective, the EML uses a substitute value of 32 km/h for the function.

Troubleshooting:

1) Feed in vehicle speed signal and compare with screen display ♦**D**♦EML STATUS LIST with speedometer display. Attention! Do not apply signal before the diagnostic link is set up.
2) Check wire (speed–A) from the instrument cluster to the EML control unit.
3) Check signal form and time progression of the speed–A signal with♦**M**♦ scope.

Defect code 1

♦D♦900 Defect code memory: 1 FGR control button

Explanation: This defect code is stored when the EML control unit detects, via the FGR switch, a voltage outside the valid range from approx. 0.4 Volt to approx. 4.6 Volt.

Note: The current signal can be read off in the ♦D♦ STATUS LIST (note additional information relating to defect code ♦D♦ detected at:).

Troubleshooting:

1) Compare the FGR switch with the switch position as displayed on the screen ♦D♦ EML STATUS LIST with the actual position.
2) If the displayed switch position does not agree with the actual position, then the FGR switch is defective.
3) Disconnect FGR switch when the display indicates "short to ground". If "break" is displayed, then the FGR switch is defective. Both lines must be checked if the display continued to indicate "short to ground".
4) If "break" is displayed, detach FGR switch and connect both lines to the FGR wire harness connector. If "short to ground" is still displayed, the FGR switch is defective. If, on the other hand, "break" is displayed, both lines must be checked.

Notes

This diagnostic procedure applies only to the electronic throttle control EML on the 12-cylinder engine M 70 B50.

Functional Description

The electronic throttle control system **EML** replaces the previous mechanical transmission and transfer linkage of the accelerator pedal angle between the accelerator pedal and throttle valve.

The most important components involved in the **EML** control unit ate the pedal position sensor **PWG** and the EML throttle valves **DK**.

In addition to the transmission of the accelerator pedal angle from the accelerator pedal to the throttle valve, the EML system performs several other functions.

- Idle speed control
- Engine speed limitation
- Vehicle speed limitation
- Cruise control **FGR**
- Throttle valve opening in accordance with various characteristic progression curves which are selected from a pedal characteristic map corresponding to the drive status.
- Synchronisation of the throttle valves
- Interface for data exchange with other control units (e.g. ASC, DME and EGS).
- Safety test of important components used by the EML system
- Maintaining vehicle operability in the event of component failure by making available substitute values
- Self-diagnosis

All functions are monitored by the control unit program. This monitoring function also includes the program run of the control unit. The program run is controlled by the hardware. When the hardware detects a defect, the program run is terminated and then restarted.

Pedal Position Sensor PWG

The pedal position sensor is supplied by the EML control unit with a controlled voltage of 5 V. As regards electrical functions, the pedal position sensor contains a potentiometer, a switch for monitoring the potentiometer and a switch for the external safety circuit.

Important!

The output "component supply (5 V)" on the EML control unit is not short-circuit-proof.

The potentiometer (voltage divider) of the pedal position sensor divides the voltage dependent upon the angle of rotation. The part voltage fed back to the potentiometer is converted in an analog/digital converter into a form which can be processed by the microcomputer and converted into angle degrees. The valid angle range is from approx. minus 4.7 degrees to approx. 100.8 degrees.

The EML control unit performs a switching range check in that it compares the switch-on point of the switch (typical value approx. 9 ° PWG angle) with the angle setting of the PWG potentiometer. If the EML control unit finds that the deviation is too great, the output is limited and the EML warning lamp lights.

The position "kick-down depressed" is derived from the PWG angle. When the EML control unit detects that the PWG angle is > 70 degrees, it sends the "kick-down" signal to the EGS control unit.

The switch for the external safety circuit opens at approx. 2.5 °. The switch output is connected in series with a diode and arranged externally.

EML Throttle Valve DK

By way of a servo motor, the EML throttle valve is opened by the output stage in the EML control unit against the force of a spring. The output stage activates the servo motor with a square-wave voltage which has a fixed frequency. The different settings of the EML throttle valve are achieved by altering the ratio between the cut-in and cut-out duration.

When the EML control unit or the EML throttle valve are renewed or power is cut to the control unit, the information relating to the lower throttle valve (DK) limit stop is lost or incorrect. The EML control unit therefore has a teach-in feature which learns the throttle valve (DK) limit stop position once again. When learning this throttle valve (DK) limit stop, the EML system determines the relationship between the mechanical limit stop and the throttle valve (DK) potentiometer angle. The learning procedure assumes that the vehicle is in cruising mode, the detected water temperature is > 60 °C and the engine speed is > 1920 rpm. When all these conditions are fulfilled, the servo motor slowly moves the throttle valve against the lower mechanical limit stop. When this limit stop is reached, the EML system stores this learned value. This learning procedure is carried out during each vehicle start until the new value can be stored.

Throttle Valve Synchronisation

Synchronisation of both throttle valves is conducted at idling speed by the EML control unit. Both ti signals of the DME control unit are used for the synchronisation procedure. The EML control unit can set a maximum difference of ± 1.7 degrees. It starts the synchronisation procedure when

- the EML coolant temperature sensor detects > 80° C
- the engine speed is within the range from 600 rpm to 800 rpm
- the pedal position sensor (PWG) is not operated
- 20 min have elapsed since the start
- the two ti signals are sent by the DME control unit
- the EML warning lamp does not light
- the throttle limit stop (DK) has been taught-in

Synchronisation takes approx. 3 minutes and is repeated after 20 min at the earliest. The condition "20 min have elapsed after the start" is no longer applicable if the teach-in values are cleared by a longer interruption in the voltage supply (control unit, instrument cluster or battery disconnected).

Important!

The output stage of the EML control unit for the throttle valve DK actuator is not short-circuit-proof.

By way of the throttle valve (DK) potentiometer, the EML control unit detects the position of the throttle valve and moves the throttle valve to the calculated position with the throttle valve actuator.

The throttle valve (DK) potentiometer (voltage divider) is supplied by the EML control unit with a controlled voltage of 5 V. It divides this voltage depending on the angle of rotation. the part voltage fed back by the potentiometer is converted in an analog/digital converter into a form which can be processed by the microcomputer and is further converted into angle degrees. The valid angle range is from approx. minus 3 degrees to approx. 94 degrees.

The EML control unit performs a switching range check in that it compares the shut-down point of the switch (approx. 17 °) with the angle setting of the throttle valve (DK) potentiometer. If the EML control unit finds that the deviation is too great, the output is limited and the EML warning lamp lights.

A further test of both switches, PWG switch and DK switch, is the switch plausibility check. The control unit logic checks whether **one** of the following conditions is fulfilled:

- PWG switch (closes at approx. 9 °) closed
- DK switch (opens at approx. 17 °) closed
- Cruise control FGR active

If one of the conditions is not fulfilled, all three shut-down paths which the EML control unit has available are activated.

The shut-down paths of the EML control unit all result in engine output limitation or deactivation of the throttle valve (throttle valve closed by actuator (servo motor) or by return spring).The various shut-down paths are activated corresponding to the relevant defect in component operation. The control unit can activate three different shut-down paths:

- Output idle (LL) to the DME system. The idle (LL) is sent to the DME, this system deactivates cruise mode at a speed > approx. 1500 rpm.
- Deactivation of the opening branch of the throttle valve (DK) actuator output stage. When this operating branch is deactivated, the throttle valve can only be closed via the return spring or the closing branch of the throttle valve (DK) actuator output stage.
- Output limitation by limiting throttle valve (DK) opening range. The throttle valve (DK) opening speed is also limited when limiting DK opening.

A further shut-down path which passes the EML control unit is the external safety path. This sends idle signal (LL) to the DME 1...6 cylinder and 7..12 cylinder when pedal position sensor is not operated and the brake pedal is depressed. The brake light test switch switches the ground signal through to the DME via the switch for the external safety path in the pedal position sensor (switch opens at approx. 2.5 °).

Idle Control

When the pedal position sensor is not operated, the idle speed of the engine is kept constant to the nominal engine speed by way of controlled opening of the throttle valve. The working range of the idle controller depends upon the coolant temperature which is detected by the EML coolant temperature sensor. The nominal idle speed is influenced by three data variables:

- By the coolant temperature (the nominal idle speed is increased at low temperatures)
- By the setting of the gear selector lever in vehicles equipped with automatic transmission (the nominal idle speed is reduced with gear engaged and at low temperatures)
- By the operating status of the air conditioning system (the nominal idle speed is increased by approx. 100 rpm when the A/C compressor is switched on)

When starting the engine, the throttle valve opening is increased dependent on temperature to a start opening position.

The idle control system is active at an engine speed of < 1600 rpm. Apart from this condition, either the engine speed must be < nominal speed, the vehicle speed < 8 km/h, or gear P or N engaged.

The throttle valve opening is increased depending upon the engine speed in order to reduce the vacuum in the intake pipe during deceleration fuel cut-out.

Engine Speed Limitation

The EML control unit limits the engine speed by closing the throttle valve before reaching the limit speed. The limit speed is 6000 rpm. To avoid control problems between the EML and DME systems when limiting the engine speed, in the case of the DME control unit the engine speed limitation is set to 6200 rpm. The EML control unit detects the engine speed by way of the engine speed signal (TD) from the DME control unit. Engine speed limitation by the EML control unit is only active when a drive range is engaged.

Vehicle Speed Limitation

The EML control unit limits the vehicle speed by closing the opening position of the throttle valve before reaching the maximum speed. If no vehicle speed signal is received, the throttle valves are limited to 30 degrees by way of the idle opening function.

Cruise Control FGR

The cruise control is activated by the FGR switch. The vehicle speed signal (speed-A) from the instrument cluster is used for the cruise control system. The various switch positions of the FGR switch are detected by the EML control unit by way of different voltage values.

In addition to the various switch positions, the EML control unit also detects "break" and "short to ground" (♦D♦Status list).

The EML control unit assigns the following values to the various voltage values:

Voltage value	Function	♦D♦display	Typical value	Remarks
4.58 – 5 V	None	♦D♦Interruption	5 V	FGR switched off
3.75 – 4.58 V	OFF	♦D♦OFF	4.23 V	FGR switched off
2.90 – 3.75 V	Not operated	♦D♦Not operated	3.47 V	FGR switch not operated
2.00 – 2.90 V	Set/decelerate	♦D♦Decelerate	2.64 V	Vehicle speed is set/reduced
1.25 – 2.00 V	Call-up	♦D♦Call-up	1.72 V	Re-assume stored speed
0.41 – 1.25 V	Set/accelerate	♦D♦Accelerate	0.86 V	Vehicle speed is set/increased
0.00 – 0.41 V	None	♦D♦Short to ground		FGR switched off

In the functions "set/accelerate", the cruise control system accelerates until the FGR switch is released. After releasing the FGR switch, the cruise control system maintains the speed constant to the achieved value plus 0.5 to 2 km/h. The achieved value plus 0.5 to 2 km/h forms the nominal FGR speed value which is stored in the EML control unit (♦D♦Status list). After ignition "OFF", the stored FGR speed value is 0 km/h once again.

In the functions "set/decelerate", the cruise control system reduces the speed until the FGR switch is released. After releasing the FGR switch, the cruise control system maintains the speed constant to the achieved value minus 0.5 to 2 km/h. The achieved value minus 0.5 to 2 km/h forms the nominal FGR speed which is stored in the EML control unit.

In the "call" function, the cruise control system sets the vehicle speed to the nominal FGR speed value which is stored in the EML control unit.

In the "OFF" function, the cruise control system switches off smoothly. Cruise control is also deactivated or cannot be activated when one of the shut-down conditions occurs.

- Brake is operated
- Clutch is operated (manual transmission)
- Gear disengaged without clutch (manual transmission)
- Gear selector lever set in P or N range or detected by control unit as engaged (automatic transmission)
- Control unit detects vehicle speed < 36 km/h
- Actual speed is greater by 16 km/h or less by 8 km/h than the nominal FGR speed value.
- Vehicle acceleration greater than 1.5 m/s*s (speed increase greater than 5.4 km/h per second)
- External safety path sends ground and therefore idle signal (LL) to DME and EML systems.

If cruise control is deactivated by one of these conditions, it cannot be reactivated before the FGR switch has been set to "neutral" and the shut-down condition no longer exists. This ensures the cruise control remains deactivated in the case of a permanently defective FGR switch (faulty control voltage).

In "neutral" (FGR switch not operated), the function of the cruise control system last activated is retained.

All functions are activated by briefly pressing the switch. In the case of the "set/accelerate" and "set/decelerate" functions, by briefly pressing the switch (leass than approx. 0.5 s), the speed is increased/decreased by 1 km/h each time this switch is pressed when "set/accelerate" or "set/decelerate" is already active.

Interfaces to Other Control Units

General

The EML control unit sends data and receives data from other control units via various lines (interfaces). In many cases, data transfer requires more than simple "ON"/"OFF" functions. Dynamic values must also be represented up-to-date. A square-wave voltage is therefore used for several lines to facilitate data exchange between EML, DME, EGS, ASC and the instrument cluster.

In vehicles with EML, the signals of the throttle valve (throttle switch) are not sent from the EML throttle valve to the EGS and DME control units. This information is routed from the EML control unit to the EGS and DME control units.

Interface to ASC

The EML control unit is linked via three lines to the ASC control unit. By way of the DKV signal (DKV = preset throttle position) it informs the ASC control unit of the position of the throttle valve. The signal is a square-wave voltage with fixed frequency and variable pulse duty factor. Via the two other lines (DKR = throttle reduction, DKE = throttle increase), the ASC control unit informs the EML system when a change in the throttle angle is necessary. This status is also signalled to the EML control unit by way of a square-wave voltage with fixed frequency and variable pulse duty factor.

In order to facilitate external data exchange, when the ignition is switched on, synchronisation takes place between the EML and ASC control units on these three lines (DKV, DKR, DKE). If this synchronisation does not take place, then throttle valve intervention by the ASC control unit is also not possible.

Interface to EGS

The EGS control unit is informed by the EML as regards the position of the throttle valve via the DKV line (DKV = preset throttle position). This line is the same as that leading to the ASC control unit. Also the kick-down position of the pedal position sensor (PWG) is routed from the EML control unit to the EGS control unit. The EML system switches over to the corresponding characteristic map for the S program of the EGS control unit. The information "program switch at S program" comes directly from the program switch to the EML control unit.

Interface to DME

Direct data exchange between EML and DME takes place via seven lines. One line each is provided for the information "idle (LL)" and "full load (VL)" to the DME 1...6 cylinder and DME 7..12 cylinder. Three further lines receive the ti signal 1...6 cylinder and the tD signal from the DME control unit 1...6 cylinder. The ti signal 7...12 cylinder comes from the DME control unit 7...12 cylinder.

Interface to Instrument Cluster

The EML system has a line link (3 lines) to the instrument cluster to facilitate operation of the cruise control (FGR) and to maintain the stored information in the EML control unit.

The EML receives the current vehicle speed from the instrument cluster by way of the speed-A signal. The EML memory receives a voltage supply in order to retain the stored information in the EML when the ignition is switched off.

The voltage supply is routed via the two special lamps (EML warning lamp) soldered in the instrument cluster. The two lamps are linked to the EML system via two separate lines.

Interconnected System of Signals to the Drive Control Units (CU)

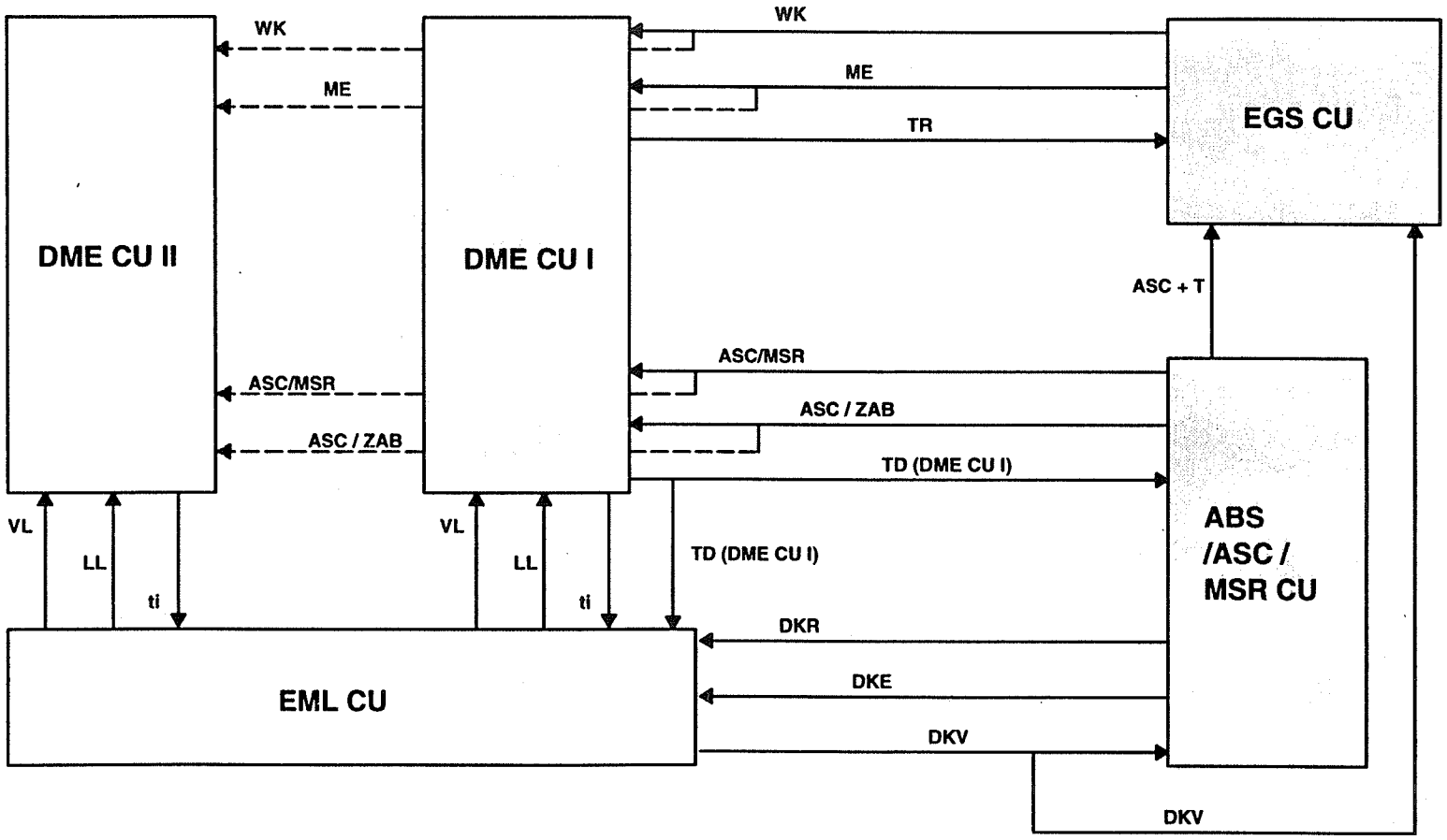

P31 12 002

Providing Substitute Values/Self-Diagnosis

Engine Speed Signal

The EML derives the current engine speed from the speed signal (tD) which comes from the DME 1...6 cylinder. When this signal corresponds to an engine speed greater than 6900 rpm, a speed of 4000 rpm is used to calculate the characteristic map. The EML control unit recognizes the engine speed range > 600 rpm as being valid for characteristic map calculations.

Vehicle Speed Signal

The EML derives the current vehicle speed from the vehicle speed signal (speed-A) which comes from the instrument cluster. The EML recognizes the range from 0 to 280 km/h as being valid. When the signal corresponds to a speed in excess of 280 km/h, a speed of 32 km/h is used for the function.

Engine Temperature

The EML detects the engine temperature with the aid of its own temperature sensor. The EML recognizes the range from –40 °C to 140 °C as being valid. A substitute value of approx. 40 °C is used for the function outside this range (♦D♦Status list).

Safety Check

After switching on the ignition, the EML control unit checks its vital components (safety check) and causes the EML warning lamps to light for approx. 2 seconds. The purpose of this is to check whether the EML warning lamp can be set in the event of defect. If a defect of priority 8 to 22 (♦D♦# Note) occurs, then the EML warning lamp lights. The EML system reduces the output if the EML warning lamp cannot be set due to a defect in the lamps or associated lines.

Table of Substitute Values

Not plausible	Substitute value
Engine speed	4000 rpm
Vehicle speed (speed-A signal)	32 km/h
Engine temperature	approx. 40°C

Electronic Throttle Control (EML, 12-cylinder)

Block Diagram

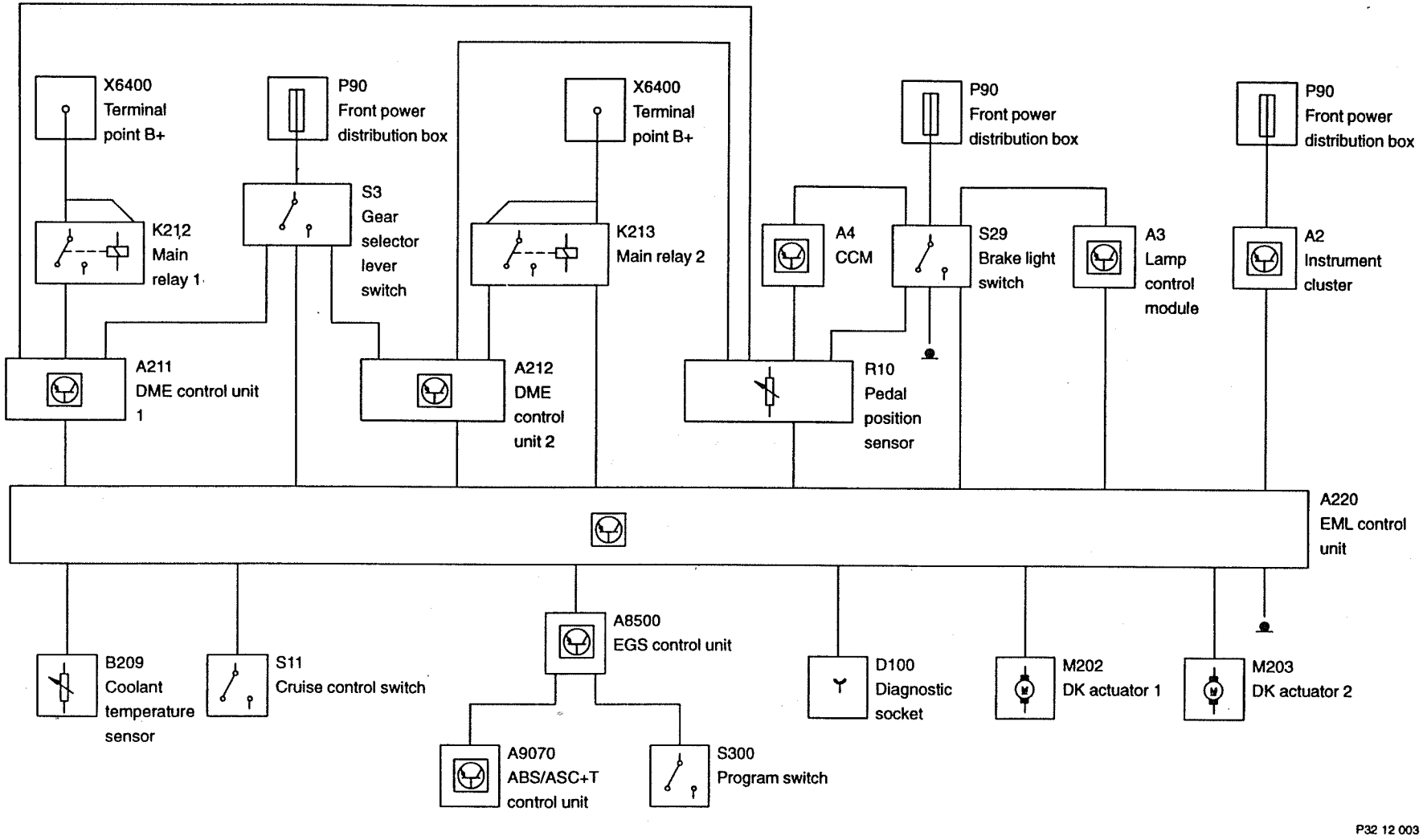

Notes on the BMW DIAGNOSTIC SYSTEM

Defect Code Memory

The component functions and signals listed below are processed or controlled by the EML control unit, but not stored as a defect code in the event of defect:

- LL-signal (sends the "idle" information to the DME)
- VL-signal (sends the "full load" information to the DME)
- Air conditioning switch
- A/C compressor clutch (lock sensor)
- Range selector switch ("P"or "N" position in automatic transmission)
- Brake light switch
- External safety path

The external safety path cannot be read out in the status lists of the BMW DIAGNOSTIC SYSTEM.

Defect Code Priority

The EML control unit stores a maximum of 5 defect codes. When the defect code memory is full, a new defect code with higher priority displaces a lower priority defect code already stored (see ♦D♦# Note).

Status Monitoring

Since all inputs and outputs and their plausibilities are not covered by the defect code memory of the EML control unit, the status monitoring function must be used to facilitate troubleshooting.

The nominal values and actual values indicated in the status lists need not necessarily agree exactly. The EML control unit stores a defect code if the deviation between the nominal value and the actual value is outside the permissible range.

For the permissible ranges, refer to the functional description or the troubleshooting description in the BMW DIAGNOSTIC SYSTEM. If the permissible range has been exceeded and the EML control unit has detected this as a defect, the component and its line connection can be checked without complex measurements with the aid of the actual value display.

Abbreviations

A	Output
ABS	Antilock brake system
ASC	Automatic stability control
CU	Control Unit
DK	EML throttle
DKE	Throttle increase
DKR	Throttle reduction
DKV	Preset throttle value
DME	Digital motor electronics
E	Input
EGS	Electronic transmission control
EML	Electronic throttle control
HG	Manual transmission
LL	Idle signal
ME	Engine intervention
MSR	Engine drag torque control
Poti	Potentiometer
PWG	Pedal position sensor
TD	Engine speed signal (once per ignition)
ti	Injection signal
TMOT	Engine temperature sensor
TR	Engine speed signal (3 times per crankshaft revolution)
VL	Full load signal
WK	Torque converter clutch
ZAB	Ignition fade-out

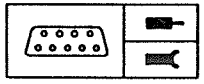

Pin Assignment

Pin Assignments at the EML 12-Cylinder Control Unit Connector X6004

Pin	Type	Description/function	Connection	Signal type	Tester display	Measurement notes
1	A	5V (not short-circuit-proof)	PWG switch	approx. 5 V	None	not short-circuit-proof
2	A	Electronic ground	Component ground PWG		None	not short-circuit-proof
3		not used				
4	E	DK angle reduction (DKR)	ABS/ASC+T control unit	Square-wave signal	Defect is stored	♦M♦14 approx. 100 Hz
5	A	Full load signal	DME control unit cylinder 1 - 6	approx. 0 V open	ON OFF	
6	A	Idle signal	DME control unit cylinder 1 - 6	approx. 0 V open	ON OFF	
7	E	PWG setting	PWG potentiometer	approx. 0.4 V to 4 V	Angle	
8	E	Vehicle speed signal	Instrument cluster	Square-wave signal	None	♦M♦14
9	A	5 V (not short-circuit-proof)	PWG potentiometer	approx. 5 V	None	not short-circuit-proof
10	A	Electronic ground	Component ground DK cylinder 7 - 12		None	
11	A	5V (not short-circuit-proof)	DK potentiometer DK cylinder 7 - 12	approx. 5 V	None	not short-circuit-proof
12	A	5V (not short-circuit-proof)	DK potentiometer DK cylinder 1 - 6	approx. 5 V	None	not short-circuit-proof
13	E	Diagnosis	Diagnostic socket RxD			

Electronic Throttle Control (EML, 12-cylinder)

Pin Assignments

Pin	Type	Description/function	Connection	Signal type	Tester display	Measurement notes
14	E	Output ground	Ground DK cylinder 1 - 6		None	
15	A	EML warning lamp	Instrument cluster	approx. 0 V	ON	*) with ignition switched off
*)	E	Terminal 30 for defect code memory		open	OFF	
16	A	Drive, throttle (DK) actuator	DK actuator cylinder 7 - 12	Square-wave signal	Defect is stored	not short-circuit-proof
17	A	Drive, throttle (DK) actuator	DK actuator cylinder 1 - 6	Square-wave signal	Defect is stored	not short-circuit-proof
18	E	Voltage supply	DME main relay cylinder 1 - 6	On-board voltage	None	
19	E	Ground	Ground terminal			
20	A	Kick-down signal	EGS control unit	approx. 0 V approx. 12 V	ON OFF	
21		not used				
22	E	DK angle increase (DKE)	ABS/ASC+T control unit	Square-wave signal	Defect is stored	♦M♦14 approx. 100 Hz
23	A	Throttle signal (DKV)	ASC/EGS	Square-wave signal	Defect is stored	♦M♦14 approx. 100 Hz
24		not used				
25		not used				
26	A	Electronic ground	Component ground DK cylinder 1 - 6		None	
27	E	Throttle position	DK potentiometer cylinder 1 - 6	approx. 1 V to 4.6 V	Angle	
28	E	Throttle position	DK potentiometer cylinder 7 - 12	approx. 1 V to 4.6 V	Angle	
29		not used				

Electronic Throttle Control (EML, 12-cylinder)

Pin Assignments

Pin	Type	Description/function	Connection	Signal type	Tester display	Measurement notes
30	E	Output ground	Ground DK cylinder 7 - 12		None	
31	A/E	Electronic ground	TMot/FGR switch		None	
32	A	Idle signal	DME control unit cylinder 7 - 12	approx. 0 V open	ON OFF	
33	A	Full load signal	DME control unit cylinder 7 - 12	approx. 0 V open	ON OFF	
34	A	Drive, throttle (DK) actuator	DK actuator cylinder 7 - 12	Square-wave signal	Defect is stored	
35	A	Drive, throttle (DK) actuator	DK actuator cylinder 1 - 6	Square-wave signal	Defect is stored	
36	E	Voltage supply	DME main relay cylinder 7 - 12	On-board voltage	None	
37	E	Ignition ON terminal 15	DME main relay cylinder 7 - 12	On-board voltage	None	
38	E	DK switch 17°	DK switch cylinder 1 - 6	approx. 5 V open	ON OFF	
39		not used				
40	E	DK switch 17°	DK switch cylinder 7 - 12	approx. 5 V open	ON OFF	
41	E	A/C compressor ON	Lock sensor	On-board voltage open	ON OFF	
42	E	P or N detection (EGS)	Gear selector lever switch	approx. 12 V (ON) open (OFF)	YES NO	

Electronic Throttle Control (EML, 12-cylinder)

Pin Assignments

Pin	Type	Description/function	Connection	Signal type	Tester display	Measurement notes
43	A/E	FGR detection	FGR switch	approx. 0 V to 5 V	Detected position	
44	E	Air conditioning switch	A/C relay/DME	approx. 12 V	ON	
				open	OFF	
45	A/E	Engine - coolant temperature	TMot-EML sensor	approx. 0 V to 5 V	°C	
46	E	PWG switch 9°	PWG switch	approx. 5 V	ON	
				open	OFF	
47	E	Engine speed signal (TD)	DME control unit cylinder 1 - 6	Square-wave signal	None	
48		not used				
49	E	Injection signal (ti)	DME control unit cylinder 1 - 6	Square-wave signal	Defect is stored	
50	E	Injection signal (ti)	DME control unit cylinder 7 - 12	Square-wave signal	Defect is stored	
51		not used				
52	E	S program identifier (EGS)	EGS control unit	approx. 0 V	ON	
				open	OFF	
53	E	Brake light switch	Brake light switch	approx. 12 V	ON	
				open	OFF	
54		not used				
55	A/E	Diagnosis	Diagnostic socket TxD			

Adapters

Component	Connector No.	Description	Adapter number	
Control unit	X 6004	55-pin	Connection lead, periphery	HWB 81 12 9 428 907
		55-pin	Connection lead, control unit	HWB 81 12 9 428 908
		55-pin	Universal adapter	HWB 81 12 9 425 091
EML safety path		Safety path testing	EML adapter	Cartool 12 7 010

Troubleshooting

Notes

Troubleshooting takes place in accordance with the data provided in the BMW DIAGNOSTIC SYSTEM.

Important!

- Relevant safety codes and accident prevention regulations must be observed when carrying out all tests and work on the engine electronic system. Do not touch an EML throttle valve when it is in operation.

Wherever possible, the battery and the instrument cluster should not be disconnected otherwise all defect codes and teach-in values stored in the EML control unit will be deleted (see ♦D♦# Notes).

Disconnect control unit from the wire harness **only** when the ignition is switched off.

Caution!

The stage outputs of the EML control unit for the throttle (DK) actuators are not short-circuit-proof. In the same way, the 5 V component supply voltage coming from the EML control unit is not absolutely short-circuit-proof.

Structure of the Defect Code Pages on the Display Screen

- **Defect location:** The defect can be in the vicinity of the component, the associated wires or in the control unit. The number before the defect code indicates the priority of the defect code (♦D♦ # Note).
- **Type of defect:** Range transgression or illogical (wrong sequence) functions are indicated.
- **Detected at:** Additional defect information on the operating statuses during defect detection (compare values with substitute values). This information indicates relationships to other defects.

EML Warning Lamp

After switching on the ignition, the EML control unit performs a safety check and causes the EML warning lamp to light for approx. 2 seconds. The engine output (throttle setting) is reduced if the warning lamp is defective. The warning lamp lights permanently if a defect with high priority (defect code 8 to 22) occurs (♦D♦ # Notes).

Table of Substitute Values

Not plausible	Substitute value
Engine speed signal	4000 rpm
Vehicle speed signal (Speed-A signal)	32 km/h
Engine temperature	approx. 40° C

Defect Code Table

One or several defect codes stored → Troubleshooting in accordance with BMW DIAGNOSTIC SYSTEM

Functional Description

The E-box fan serves to cool the DME, EML and ABS control units. The intake air is drawn in from the passenger compartment and transferred to the E-box. The fan is powered with battery voltage via a fuse. If the temperature in the E-box increases to above 44° C, a temperature switch connects ground to the fan. The fan then remains switched on until the temperature has dropped to 36° C.

The fan is also activated by an oil pressure switch when the engine is stationary. The fan is therefore switched on every time the engine is started and remains on until the engine oil pressure has built up.

E-box Fan

Circuit Schematic

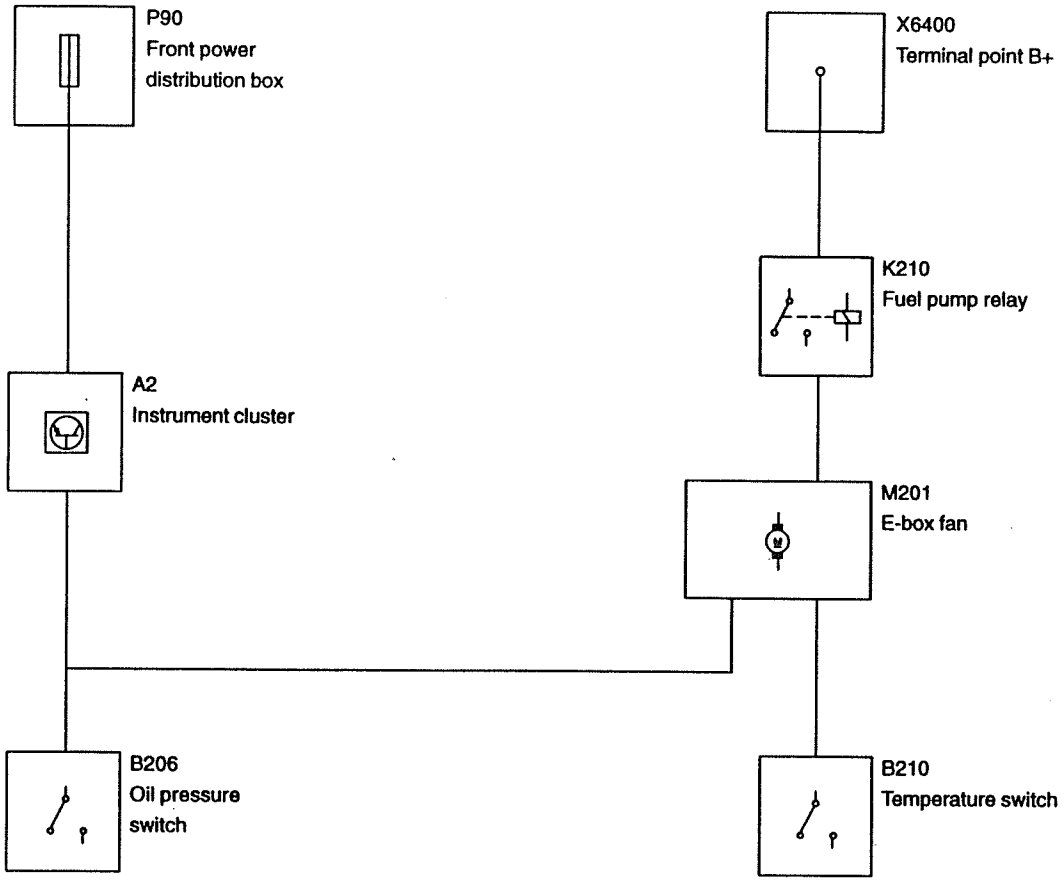

P34 12 001

Notes on the BMW DIAGNOSTIC SYSTEM

This system does not feature diagnostic capabilities

Abbreviations

not applicable

Pin Assignment

not applicable

Troubleshooting

Notes

The control units of the E-box must be removed in order to remove and install the E-box fan. Refer to general information in Section 0130.0. After reinstallation, check the safety path of the EML – see Repair Instructions.

Power consumption of fan = 235 mA
Speed = 4800 ± 480 rpm

General Malfunction

1. Check fuse F28. If fuse is defective, the Servotronic will also be faulty
2. Check wires in accordance with schematic
3. Check oil pressure switch – see 6200 Instrument cluster/check-control
4. Check temperature switch
5. If necessary, renew E-box fan

Notes

The following description refers to the digital diesel electronics system DDE 1 on the 6-cylinder turbo engine M 21 D24 WA.

Functional Description

The primary functions of the DDE 1 are to facilitate exact control of the injection quantity and the injection timing under all operating conditions. This results in a further improvement in the torque, running characteristics and operating comfort. Compared to the hydraulic control, a reduction in fuel consumption and exhaust emissions has been achieved.

The components of the DDE system can be subdivided into three groups: Control unit, sensors and actuators (servo components).

The DDE system operates with two control units which are installed above the glove box: i.e. injection start control unit (SB-SG 25-pole) and injection quantity control unit (ME-SG 35-pole). They process the input signals with their microprocessors and calculate the necessary output variables based on fixed programmed data.

In the case of malfunctioning in the DDE system, either substitute values are provided; for example in the case of failure of temperature sensors (for engine, air or fuel) charge pressure sensor or injection start sensor, or restricted operation with limited engine speed is enabled. This applies in the case of a defective pedal position sensor (PWG), solenoid valve injection timing device, the injection timing control system or the computer in the injection timing control unit.

Serious defects are indicated by a fault lamp. The substitute values or the emergency operation program are cancelled as soon as trouble–free operation of the system is resumed.

The following function blocks are provided in the injection timing control unit:

- Injection timing control (start of injection)
- Exhaust gas recirculation (country–specific version)
- Self–diagnosis output

The following function blocks are provided in the injection quantity control unit:

- Injection quantity control with special start quantity control and full load quantity limitation
- Charge pressure control
- Engine speed control
- Running stability control and jolt damping
- Exhaust emission limitation and overheating protection
- Cruise control (special equipment)
- Downshift prevent (on automatic transmission as of 9/88)

The DDE is also linked to the following components which either receive or send input and output signals (I/O) (for more detailed information refer to Chapter – Pin Assignments):

- Instrument cluster (I/O)
- Antitheft system (O)
- Fuel consumption indicator (O)
- Automatic transmission (O)
- Air conditioning system (I)

The following components and sensors supply the DDE control units with information relating to the various operating statuses of the engine and vehicle:

- Pulse generator for engine speed and position at the flywheel
- Injection timing (start of injection) sensor in the injection nozzle holder at cylinder No. 4
- Engine temperature sensor (coolant) on cylinder head
- Intake air temperature sensor at air manifold
- Fuel temperature sensor in the injection pump
- Control potentiometer on injection quantity control unit in the injection pump
- Atmosphere/charge pressure sensor linked to the air manifold
- Pedal position sensor linked to the accelerator pedal
- Vehicle speed sensor at rear axle gearbox
- Selector lever for cruise control on steering column (special equipment)
- Clutch switch(for FGR optional equipment only)
- Brake test switch
- Air conditioning switch (optional equipment)
- Battery

The actuators (servo components) include:

- Servo control unit in the injection pump
- Solenoid valve injection timing device in the injection pump
- Electrical changeover valve for exhaust gas recirculation
- Electrical changeover valve for vacuum actuator (for AG and FGR only)

Distributor – Injection Pump

The components, working unit with fuel pump, hydraulic and high pressure sections, have been adopted on the injection pump of theDDE system from the previously installed version. The mechanical regulator has been replaced by an electrical servo control unit.

Injection Timing (Start of Injection) Control

The start of injection is controlled by the injection timing device in the injection pump. A clocked solenoid valve modulates the internal pump pressure on one side of the piston in the injection timing device so that a defined start of injection is set. When no power is applied, the solenoid valve is closed, resulting in advanced injection timing (start of injection).

Injection Quantity Control

Injection quantity control is made possible by a servo control unit in the injection pump. An electromagnetic actuator is driven such that it moves an eccentrically arranged spherical pin. This rotary motion is converted into linear motion which acts on the control valve, thus making it possible to vary the effective stroke of the piston pump (injection quantity).

The position of the control valve is fed via the servo potentiometer back to the ME control unit. Here, the nominal value is compared with the actual value and, if necessary, adjustment is carried out until the nominal injection quantity value is achieved. The servo control unit is set to zero delivery when no power is applied.

Dependent upon the engine temperature and speed, by way of the start quantity control, an injection quantity is released which is necessary for starting and running the engine. The fuel temperature is also used to facilitate correction.

The required quantity of fuel which is injected during operation depends on the position of the pedal position sensor.

Charge Pressure Control

As soon as the charge pressure sensor detects the maximum permissible charge pressure, the injection quantity is reduced by the control unit. At the same time, the bypass valve on the exhaust turbocharger is opened via a pressure cell, thus reducing or limiting the charge pressure.

Engine Speed Control

After starting, the idle speed control function cuts in after a certain engine speed threshold has been exceeded. This is calculated by the control unit dependent on the coolant temperature and the active loads, thus maintained at a constant value.

The maximum engine speed is limited by the ME control unit by reducing the injection quantity.

Running Stability Control and Jolt Damping

The running stability control system is used for engine speed stabilization when idling (vehicle speed = 0). Controlled injection quantity correction counteracts irregularities in engine operation which occur as the result of dispersion of the injected fuel quantity in the individual cylinders.

In the case of spontaneous changes in the position of the accelerator pedal or a sudden change in the driving resistance, vibrations occur which, in conjunction with the control frequency of the injection hydraulics, can result in jolts and jerks.

Due to their temporal offset in the input sequence, the engine speed signals from the pulse generator provide the information necessary to correspondingly control the servo quantity control unit.

Exhaust Emission Limitation and Overheating Protection

Impermissible exhaust smoke emission is avoided by limiting the injection quantity dependent on the charge pressure and engine speed. By taking the absolute air pressure into account (with the charge pressure sensor) exhaust emission limitation is always effective irrespective of the height (altitude) above sea level.

Cruise Control FGR (Optional Equipment)

As of a vehicle speed of approx. 40 km/h, the required statuses – acceleration, deceleration or resume vehicle speed – can be set or selected with the aid of the operating unit (control lever) on the steering column.

If an automatic transmission is installed, the components electrical changeover valve, vacuum actuator and feedback contact on the operating cable assembly are also necessary.

If the speed set at the FGR operating unit can no longer be maintained due to increased load, the SB control unit activates the electrical changeover valve which supplies the vacuum actuator with vacuum. This acts on the transmission operating cable, thus causing a downshift, consequently the contact switch signals the downshift to the ME control unit. The injection quantity can be adapted in this way.

Downshift Protection (for Automatic Transmission Only)

This function is integrated in the DDE as of 9/88. Before this date, a separate control unit was necessary – see Section 2460.1.

As of a defined speed (dependent on the rear axle gear ratio), a downshift from 4th to 3rd gear is prevented, in that a solenoid valve in the automatic transmission is switched off by the ME control unit.

Exhaust Gas Recirculation AGR (Country–specific Version)

The combustion temperature is reduced by partial recirculation of the exhaust gas during idling or partial load operation, which also results in a reduction of nitrogen oxide emission.

The SB control unit activates an electrical changeover valve dependent upon the engine speed, load and coolant temperature. In this way, vacuum is applied in the pressure cell on the AGR control unit so that the working diaphragm is lifted against a spring and the AGR valve opens. A part of the exhaust gasses is then returned in the intake duct corresponding to the open cross section and the differential pressure.

Self–diagnosis

The purpose of self–diagnosis is to detect malfunctions in the DDE system, to provide substitute functions and to subsequently store defect codes as well as output via the DIAGNOSTIC SYSTEM. To facilitate troubleshooting, current inputs and outputs can be monitored by the DDE control units.

For further information, refer to notes on the BMW DIAGNOSTIC SYSTEM.

Notes on the BMW DIAGNOSTIC SYSTEM

Initialization

Communication with the control units can be set up after selecting the DDE system on the BMW Service Tester or BMW MoDiC. If data transfer does not take place, the necessary information is provided on the display screen relating to the possible reasons for this:

- Ignition not switched on
- Voltage supply for control units < 10V
- Control unit not connected
- Diagnostic lines or links defective
- Diagnostic lines inactive due to defective control unit in the vehicle

The data transfer rate of the DDE self–diagnosis system is slower than is the case in other systems. However, this does not affect the functions of the DDE system.

Control unit identification

As soon as the data transfer between the tester and control unit has been set up, the identification data of both control units appear on the display screen. These data indicate which control unit versions are installed. The identification can be compared with the data provided in the microfilm – Technical data or parts.

Some lines may be padded with ***. This depends on the type of control unit and has no influence on the function of the control unit.

Sequence of identification output:

- BMW software number
- Control unit version
- Bosch code number
- Bosch software number
- Production code

The printout of the control unit identification is followed after a few seconds by the control unit test code which contains important information and should therefore accompany the control unit if replaced.

Storing Defect Codes

Defect codes may be stored during testing of the relevant component (at ignition ON or during engine operation). Always clear the defect code memory after completing or repairs. If several defect codes are stored they will appear in chronological order. The defect code memory can store a maximum of 5 defect codes. Defect codes with high priority are given preference if the defect code memory is full. The stored operating conditions apply only to the first time the defect was detected.

Monitoring Defect Code Memory

Monitoring the defect code memory should be given initial priority. If one or several defect codes are stored, it is advisable to immediately print out these data (R key). Since it is often necessary during testing to disconnect the voltage supply or the connector from the control unit, the contents of the defect code memory are unintentionally deleted as a result.

Substitute values may be active if **no** malfunctions can be found despite a defect code being stored. These substitute values are cancelled again when the DDE resumes proper operation. For more detailed information refer to the chapter – Troubleshooting. Nevertheless, troubleshooting should still be carried out.

If the defect code memory has no defect code stored although there is a defect in the vehicle, either the test conditions (e.g. temperature, time, load etc.) for defect code detection were not reached or it was technically not possible to store a defect code. A list of monitored components and functions is given in the chapter – Component Testing.

Clearing Defect Code Memory

Carry out this step only when the defect code has been rectified or when the defect code was stored as the result of defect simulation. All stored defect codes as well as the substitute values are also cleared by disconnecting the battery or one of the DDE control units.

Currently existing defect codes cannot be cleared.

Status monitoring

Independent of defect code storage, further information relating to defect elimination can be called with this function. In this case, actual values or current operating statuses are displayed. In the interests of improved understanding of relevant relationships, several status inquiries can be combined to form a block.

Component Activation

As a further aid during compression testing, the electrical cut–out can be switched off from the tester.

Abbreviations

AG	Automatic transmission
AGR	Exhaust gas recirculation
BRL	Brake light switch
BRT	Brake test switch
DWA	Antitheft system
DZG	Engine speed sensor
ELAB	Electrical cut–out
EKP	Electrical fuel pump
EP	Injection pump
EU	Electrical changeover valve
FGR	Cruise control
HG	Manual transmission
KD	Kick-down
KTF	Fuel temperature sensor
KW	Crankshaft
LL	Idle
LDF	Charge pressure sensor
LTF	Air pressure sensor
ME	Injection quantity
MES	Quantity actuator
MF	Microfilm
mg/H	Milligram per stroke
MM	Measuring ground
MV	Solenoid valve
PWG	Pedal position sensor
RxD	Diagnosis initialization line
SB	Start of injection
SG	Control unit
TQ	Injection quantity measurement signal
TxD	Diagnostic data line
U-Batt	Battery voltage
U-Vers	Voltage supply
VL	Full load
WTF	Water temperature sensor

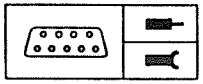

Pin Assignments

If not otherwise specified, the signal type data apply to engine operation while idling.

Assignments at the 35-pin Injection Quantity Control Unit (ME control unit)

Pin	Type	Description/function	Connection	Signal type	Tester display	Measurement notes
1	A	Quantity servo unit +	Injection pump	>10 V		Multimeter, defect code memory
2	E	Voltage supply +	Polarity protection relay	>10 V	Voltage	Status monitoring, multi-meter
3	E	Voltage supply +	Polarity protection relay	>10 V	Voltage	Status monitoring, multi-meter
4	A	Electrical cut–out	Cut–out on injection pump	>10 V		Multimeter
5	E	Brake light test switch	Brake light switch	>10 V when brake pedal depressed	ON	Status monitoring, defect code memory
6	E	Servo potentiometer signal	Injection pump	approx. 2.8 V	Voltage	Status monitoring, defect code memory
7	A	Fuel consumption signal	Fuel gauge in instrument cluster	Square–wave signal 12 V		Oscilloscope
8	A/E	Computer link	Injection timing control unit	Digital signals		Defect code memory
9	E	Vehicle speed signal	Instrument cluster	Square–wave signal	km/h	Status monitoring
10	A	Servo potentiometer and pedal position sensor supply –	Injection pump	Negative	Voltage	Status monitoring
11	E	Brake light switch	Brake light switch	>10 V when brake pedal depressed	ON	Status monitoring

Digital Diesel Electronics (DDE 1, 6-cylinder M 21)

Pin Assignments

Pin	Type	Description/function	Connection	Signal type	Tester display	Measurement notes
12	E	Pedal position sensor switch	Pedal position sensor	>4 V when brake pedal depressed	ON	Status monitoring, defect code memory
13	E	PWG potentiometer signal	Pedal position sensor	0.3...3.3 V (LL...VL)	Voltage	Status monitoring, defect code memory
14	E/A	Computer link	Injection timing control unit	Digital signals		Defect code memory
15	E/A	Computer link	Injection timing control unit	Digital signals		Defect code memory
16	E	Air conditioning switch	Heater	>10 V when switch depressed	ON	Status monitoring
17	A	PWG supply +	Pedal position sensor	5 V	Voltage	Status monitoring, defect code memory
18		not used				
19	E	Negative supply	Central ground point in engine compartment	Negative		Multimeter
20	E	Negative supply	Central ground point in engine compartment	Negative		Multimeter
21	A	Quantity servo unit –	Injection pump	Square–wave signal 12 V		Oscilloscope, frequency
22	E	Feedback switch (for AG and FGR only)	Control cable – lever	Negative during downshift	Voltage, 5 V = switch open	Status monitoring
23	E	Coolant temperature sensor +	on cylinder head	Analog signal	Temperature in ° C	Status monitoring, defect code memory
24	E	Fuel temperature sensor +	in injection pump	Analog signal	Temperature in ° C	Status monitoring, defect code memory
25		not used				
26	E	Cruise control	FGR operating unit	0...5 V	Voltage	Status monitoring, defect code memory

Pin	Type	Description/function	Connection	Signal type	Tester display	Measurement notes
27	E	Clutch switch	HG: Clutch switch for AG: Connection at switch open, line leads to selector lever	HG: Negative when clutch pedal in rest position	ON	Status monitoring
28	A	Charge pressure sensor supply +	Charge pressure sensor	5 V	Pressure in hPa	Status monitoring, defect code memory
29	A	Servo potentiometer supply +	Injection pump	5 V	Voltage	Status monitoring, defect code memory
30		not used				
31	E	Engine speed sensor signal	Engine speed sensor	Alternating voltage	Engine speed	Status monitoring, defect code memory
32	E	Battery positive	Solder point in cable harness, starter	>10 V	Voltage	Status monitoring
33	A	Solenoid valve downshift protection (for AG only)	Solenoid valve on automatic transmission	Negative		Multimeter
34	E	Charge pressure sensor signal	Charge pressure sensor	0...4.5 V	Pressure in hPa	Status monitoring, defect code memory
35	A	Negative supply, sensors	Temperature sensor, switch, FGR operating unit, water level sensor, engine speed sensor	Negative		Multimeter

E = Input, A = Output

Assignments at the 25-pin injection timing control unit

Pin	Type	Description/function	Connection	Signal type	Tester display	Measurement notes
1	A	Voltage supply +, clock and changeover valves	Solder point, injection pump, electrical changeover valves	>10 V		Multimeter, defect code memory
2	A	Solenoid valve, injection timing device –	Injection pump	Negative clocked		Multimeter, frequency, defect code memory
3	E	Start of injection sensor –	Injector cyl. 4	Voltage pulse per needle stroke	Voltage	Status monitoring, defect code memory
4	E	Air temperature sensor –	Air manifold	Analog signal	Temperature in ° C	Status monitoring, defect code memory
5	E	Voltage supply +	Solder point, polarity protection relay	>10 V	Voltage	Status monitoring, multimeter
6	E/A	Computer link	Injection quantity control unit	Digital signals		Defect code memory
7	A	Exhaust gas recirculation	AGR electrical changeover valve	Negative clocked		Multimeter
8	A	Vacuum actuator for AG downshift	AG electrical changeover valve	Negative when downshift necessary in FGR mode		Multimeter
9	E/A	Computer link	Injection quantity control unit	Digital signals		Defect code memory
10	E	Water level sensor (fuel filter)				
11	A	Fault lamp	Connector in instrument cluster	Negative in case of fault (only serious faults)	Indication in instrument cluster	Multimeter
12	E/A	Computer link	Injection quantity control unit	Digital signals		Defect code memory
13		not used				

Pin	Type	Description/function	Connection	Signal type	Tester display	Measurement notes
14	E	Negative supply	Central ground point in engine compartment	Negative		Multimeter
15	E	Negative supply	Central ground point in engine compartment	Negative		Multimeter
16		not used				
17	E	Air temperature sensor +	Air manifold	Analog signal	Temperature in ° C	Status monitoring, defect code memory
18	E	Data link RxD	Diagnostic socket, to other control units with diagnostic capabilities	>10 V when cover closed	as soon as communication with control unit set up	Oscilloscope
19	E	Voltage supply +	Solder point, polarity protection relay	>10 V	Voltage	Status monitoring, multimeter
20	E	Start of injection sensor +	Injector cyl. 4	Voltage pulse per needle stroke	Voltage	Status monitoring, defect code memory
21	E/A	Data link TxD	Diagnostic socket, to other control units with diagnostic capabilities	Negative when cover closed	as soon as communication with control unit set up	Oscilloscope
22		not used				
23		not used				
24		not used				
25	A	Engine speed TD	Tachometer, diagnostic socket	Square–wave signals	see tachometer	Oscilloscope

E = Input, A = Output

Adapter

Component	Connector number	Description	Adapter number
Control units, engine cable harness	X9933, X9945	Universal adapter (terminal box)	HWB 81 12 9 425 091
Injection quantity control unit (ME-SG)	X9945	Connection lead, 35-pole	HWB 81 12 9 425 093
Engine wire harness	X9945	Connection lead, 35-pole	HWB 81 12 9 425 092
Injection timing control unit (SB-SG)	X9933	Connection lead, 25-pole	HWB 81 12 9 425 095
Engine wire harness	X9933	Connection lead, 25-pole	HWB 81 12 9 425 094
Engine speed sensor, charge pressure sensor	X1522, X9942	V-adapter, 3-pole	Cartool 61 1 491
Water/air temperature sensor, start of injection sensor	X1524, X9931, X1532	V-adapter, 2-pole	Cartool 61 1 440

Troubleshooting

Notes

The battery should not be disconnected before a quick test has been performed. If disconnected, important data will be deleted.

Important!

Disconnect control units from the wire harness **only when the ignition is switched off** .

Conduct wire tests **only with the control unit or component connectors disconnected.** Recommended adapters are listed in chapter – Pin Assignments.

Defect Location Procedure

1. Defect Code Memory Inquiry

If no defect code is stored, the subsequent test must be performed on the basis of the symptoms (effect in vehicle), see quick check list in chapter – Component Testing.

1.1 Display of Stored Defect Code on the Display Screen

– **Defect location:** This data indicates the area in which the defect has occurred. The defect can therefore be in the vicinity of the component, the corresponding wires or in the control unit. It may also be stored as the result of illogical conditions – see in Defect Code Table.

– **Type of defect:** Shorts, breaks, range transgressions or illogical functions are displayed. Indication is also provided as to whether the defect currently exists or whether it occurred only once in the past but is not applicable at present (intermittent defect).

– **Defect frequency:** Indication is provided as to how often the defect has been detected. This does not apply to momentary defects.

– **detected at:** Here additional defect information is provided on the operating status during defect detection.

2. Status monitoring

Irrespective of whether defect codes are stored or not, current monitoring procedures can be used for fault tracing.

3. Test Instructions and Schematics

The test instructions explain the use of the self–diagnosis system (marked by ♦D♦) and make it accessible by corresponding test notes. If defects occur, for which no defect code is stored, troubleshooting can still be carried out with the aid of the subsequent tests. The schematics should always be used since they clearly show the interaction of various components.

Defect Code Table

♦D♦ Defect code memory – defect codes which can be stored when corresponding conditions are fulfilled:

Engine speed sensor (inductive pulse generator)	Defect code 1
Fuel temperature sensor	Defect code 2
Engine temperature sensor (coolant)	Defect code 3
Pedal position sensor	Defect code 4
Charge pressure sensor	Defect code 5
Servo potentiometer	Defect code 6
Charge pressure control	Defect code 7
Quantity servo unit	Defect code 8
FGR operating unit	Defect code 10
Computer link	Defect code 11
Air temperature sensor	Defect code 12
Engine speed data line	Defect code 13
Start of injection sensor	Defect code 14
Exhaust gas recirculation control	Defect code 15
Injection timing control/solenoid valve	Defect code 16
Brake test switch	Defect code 17
Water level sensor	Defect code 36

Malfunctions – without defect code storage:

Engine operation not possible	→ Defect code 60
Irregular engine operation	→ Defect code 61
Rated engine output not reached	→ Defect code 62
Engine cuts out	→ Defect code 63
Engine cannot be shut down	→ Defect code 64
Excessive black smoke during acceleration or at full load	→ Defect code 65
No cruise control possible – no speed display – fuel consumption gauge fluctuates or at full deflection – jolting	→ Defect code 66

Detailed component–related tests are given in chapter – Component Testing.

Defect code 1

♦D♦ Defect code memory: Engine speed sensor

Explanation: This defect code is stored when breaks or shorts occur at the engine speed sensor or on its supply lines. The signals from the engine speed sensor (signal generator) are compared with the signals from the start of injection sensor. Illogical engine speed signals (fault, too few or too many) are also detected. If no engine speed signals are available, the signal from the start of injection sensor is used as a substitute.

Effect of defect: The lamp in the instrument cluster lights up in the case of control unit versions t1 to t5. A substitute value is derived from the start of injection sensor signal.

- System operates with emergency start of injection
- Poor start and response characteristics
- Idle speed increased/fluctuating
- Tachometer does not operate
- Black smoke during hot start
- Stalling when coasting
- Exhaust gas recirculation and cruise control are deactivated

Possible cause: Engine speed sensor loos in holder, distance to flywheel to great or pins on flywheel defective.

Troubleshooting: Observe engine speed by means of status monitoring. Check wires/plug connection. Incorrect or faulty engine speed signals can lead to engine stalling. Refer to chapter on component testing for test values.

Defect code 2

♦D♦ Defect code memory: Fuel temperature sensor

Explanation: This defect code is stored when breaks, range transgressions below – 40° C or above + 130° C or shorts occur at the temperature sensor (in the injection pump) or on its supply lines.

Effect of defect: A temperature of 0° C is used as a substitute value. There is a low injection quantity limit at full load.

Troubleshooting: Observe temperature by means of status monitoring. Check wires/plug connection. The injection pump must be replaced if the temperature sensor is defective. Refer to chapter on Component Testing for test values.

Defect code 3

♦D♦ Defect code memory: Engine temperature sensor (coolant)

Explanation: This defect code is stored when breaks, range transgressions below – 40° C or above + 135° C or shorts occur at the temperature sensor or on its supply wires.

Effect of defect: A temperature of 50° C is used as a substitute value for the injection timing (start of injection) control. The injection quantity control operates at –20° C.

– Poor cold start characteristics

– Increased idle speed after start (approx. 30 seconds)

– AGR is deactivated

Troubleshooting: Observe temperature by means of status monitoring. Check wire/plug connection. Refer to chapter on Component Testing for test values.

Defect code 4

♦D♦ Defect code memory: Pedal position sensor (PWG)

Explanation: This defect code is stored when breaks, range transgressions > 4600 mV or < 255 mV or shorts occur at the pedal position sensor or on its supply lines. Illogical values (accelerator pedal positions) are compared and detected with the PWG switch. The defect detection criteria have been increased as of version t7.

Effect of defect: The idle position is assumed as a substitute in the case of failure of the PWG signal.

– Vehicle operation only possible with constant engine speed, for model with manual transmission: 1200 rpm and for model with automatic transmission: 1450 rpm.

Troubleshooting: observe the PWG value for idle and full load position by means of status monitoring. Refer to the chapter on Component Testing for test values and correct setting if necessary. Check wires/plug connections.

Defect code 5

♦D♦ Defect code memory: Charge pressure sensor

Explanation: This defect code is stored when breaks, range transgressions > 2015 hPa or < 439 hPa for > 3 sec or shorts occur at the charge pressure sensor or on its supply lines.

Effect of defect: The system operates with a substitute value of 980 hPa. The full load injection quantity is reduced. The engine output then corresponds to approximately that of the "naturally aspirated engine".

Troubleshooting: Observe the charge pressure at increased engine speed by means of status monitoring. Refer to chapter Component Testing for test values. Check pressure sensor and hoses for leaks.

Defect code 6

♦D♦ Defect code memory: Servo potentiometer (in injection pump)

Explanation: This defect code is stored when breaks or shorts occur at the servo potentiometer or on its supply lines. A further check is made as to whether the start of injection sensor signals are plausible with respect to the position of the potentiometer.

Effect of defect: Misfiring or engine cut–out occur due to fuel supply being switched off (electrical cut–out). As as result of defect code 6, the defect code 8 – QUANTITY SERVO CONTROL UNIT may also be stored.

– Check pump connector for leaks.
– Check servo potentiometer connector for corrosion.

Troubleshooting: Observe potentiometer value by means of status monitoring. The value reduces as the engine speed increases. Refer to chapter on Component Testing for test values.

Defect code 7

♦D♦Defect code memory: Charge pressure control

Explanation: This defect code is stored when the charge pressure drops below or exceeds the set value under load at an engine speed > 3000 rpm for t > 10 sec. The permissible charge pressure under load is between 1400 and 1980 hPa.

Effect of defect: The injection quantity is reduced so that the maximum speed is limited to approx. 150 km/h. The regular engine output is available once again after a short delay and renewed acceleration.

Note: Due to the overlap of component tolerances, under unfavourable marginal conditions, e.g. driving at sea level or during high pressure weather conditions, the maximum permissible load pressure may be temporarily exceeded (up to version t6).

Troubleshooting: Check hose to charge pressure sensor as well as pressure cell at exhaust turbocharger for leaks. Measure output of exhaust turbocharger and check bypass valve for freedom of movement and correct operation.

If the pressure sensor is operating correctly, this can be checked by means of status monitoring, extend the control rod between the control cell (diaphragm cell) and bypass valve on the turbocharger by half a turn. In this way, the maximum charge pressure is corrected so that the tolerances can no longer be exceeded.

Defect code 8

♦D♦Defect code memory: Quantity servo control unit (in injection pump)

Explanation: This defect code is stored when the control deviation exceeds a fixed limit value. This may involve both electrical or mechanical defects in the injection pump. The fuel supply is interrupted by the electrical cut–out.

Effect of defect: Misfiring or engine cut–out are possible due to the activated safety circuit. The warning lamp lights up.

Troubleshooting: Activation of the quantity servo control unit with approx. 300 Hz can be checked after switching on the ignition (approx. 20 sec long). Check wires and resistance, refer to chapter – Component Testing. Check pump connector for leaks, check connector for corrosion.

Defect code 10

♦D♦Defect code memory: Cruise control operating unit (optional equipment)

Explanation: This defect code is stored when breaks or shorts occur at the operating unit or on its supply lines. If no operating unit is installed, then this is also detected.

Effect of defect: No cruise control.

Troubleshooting: Check the values in various switch positions by means of status monitoring. Refer to chapter Component Testing for test values.

Defect code 11

♦D♦Defect code memory: Computer link (link injection timing control unit to injection quantity control unit)

Explanation: This defect code is stored when breaks or shorts occur on the link lines between both control units. The defect may also be in one of the control units.

Effect of defect: The injection quantity is reduced, reflected in poor performance and reduced maximum speed.

Troubleshooting: Perform wire test in accordance with Schematic.

Defect code 12

♦D♦Defect code memory: Air temperature sensor

Explanation: This defect code is stored when breaks, range transgressions below – 35° C or above + 135° C or shorts occur at the temperature sensor or on its supply lines.

Effect of defect: The system operates of a substitute value of 140° C. There is low injection quantity limitation at full load.

Troubleshooting: Observe temperature by means of status monitoring. Check wire/plug connection. Refer to chapter Component Testing for test values.

Defect code 13

♦D♦Defect code memory: Engine speed data line (link injection timing control unit to ME control unit)

Explanation: This defect code is stored when breaks or shorts occur on the link line from the injection timing control unit to the injection quantity control unit Pin 8.

Effect of defect: The system operates with emergency start injection, resulting in harder engine operation at low engine speeds. There is a slight reduction in injection quantity at full load. The tachometer does not operate.

Troubleshooting: Perform wire test in accordance with Schematic.

Defect code 14

♦D♦Defect code memory: Start of injection sensor (in injector nozzle cylinder No. 4)

Explanation: This defect code is stored when breaks occur at the start of injection sensor or on its supply lines. The start of injection signals are compared to the engine speed signal. The defect code is stored in the case of illogical signals – the warning lamp lights. The defect can also be triggered by malfunctions of the servo potentiometer.

Effect of defect: The system operates with emergency start of injection, resulting in harder engine operation at low speeds. There is a slight reduction in the injection quantity at full load.

Troubleshooting: Perform wire and Component Testing. Refer to chapter on Component Testing for test values.

Defect code 15

♦D♦Defect code memory: Exhaust gas recirculation (country–specific version only)

Explanation: This defect code is stored when malfunctions occur in the control or shorts on the line to the electrical changeover valve.

Effect of defect: Exhaust gas recirculation does not operate.

Troubleshooting: Check wires and electrical changeover valve. Check hoses at bypass valve actuator (diaphragm cell) and solenoid valve for leaks. Exhaust gas recirculation should be active when idling and at an engine speed between 1000 ... 3000 rpm.

Defect code 16

♦D♦Defect code memory: Injection timing (start of injection) control/injection timing device solenoid valve

Explanation: This defect code is stored when there is a defective solenoid valve in the injection pump or the actual start of injection value deviates from the nominal value by more than 4° crank angle (for t > 4 sec). A defect code is also stored when the fuel filter is clogged.

Effect of defect: The system operates with emergency start of injection, resulting in harder engine operation at low engine speeds. There is a slight reduction in the injection quantity at full load.

Troubleshooting: Observe the start of injection nominal/actual values by means of status monitoring. Check injection pump internal pressure and solenoid valve. Refer to chapter on Component Testing for test values.

Defect code 17

♦D♦Defect code memory: Brake test switch

Explanation: This defect code is stored when the signals from the brake light and brake test switch are not plausible (for t > 16 sec), i.e. when the brake pedal is depressed, only one of the two switches provides a signal.

Effect of defect: Cruise control cuts out or does not function.

Troubleshooting: Observe the switching points of the brake switches by means of status monitoring and correct setting of bracket if necessary. Check wires and switches.

Defect code 36

♦D♦Defect code memory: Water level sensor

Explanation: This defect code is stored as soon as water is detected in the fuel filter. Breaks in wires cannot be detected.

Effect of defect: The warning lamp lights.

Troubleshooting: Drain filter.

Defect code 60

Engine operation not possible

Fault	Cause	Corrective measures
	Following conditions must be fulfilled: – Starter system OK. (battery, ignition switch, starter) – Ground connection at battery, engine, body OK. – Specified fuel in tank – Fuel supply up to injection pump OK. – Preheater system OK. – Engine mechanically OK. (ignition timing, compression)	
	Voltage supply	Terminal points of B+ wires and positive and ground supply for DDE control units in accordance with schematics
	Input signals	♦D♦ Check engine speed signal at start speed
	Output signals	– ♦D♦ Check activation of electrical cut–out – ♦D♦ Check activation of quantity servo control unit
	Injection pump and nozzles	Perform pressure test (see Repair Instructions)

Fault	Cause	Corrective measures
	Electrical cut–out ELAB – Break at Pin 4 of injection quantity control unit – Coil of electrical cut–out defective	– ♦D♦ Check activation of electrical cut–out – replace electrical cut–out if necessary
Diagnosis lamp lights	Short to positive at Pin 21 of injection quantity control unit	– ♦D♦ Check activation of electrical cut–out – Check wires and contacts – Replace injection pump if necessary

Defect code 61

Irregular engine operation

Fault	Cause	Corrective measures
Engine runs hard – knocking	Injection nozzles dirty or defective	– Check for leaks and spray pattern – Clean or replace if necessary
	Injection pump does not permit fuel return	– Check internal pressure – If necessary clean OUT screw on injection pump or return hose
	Injection timing (start of injection) control unit (25-pole) defective	♦D♦ Check start of injection (for test values see Component Testing)
	Control unit computer link –Line break –Injection quantity or injection timing control unit defective	– Check wires, plug connections – Replace control unit if necessary
Engine runs at increased idle speed	Accelerator pedal jammed	♦D♦ Check pedal setting and freedom of movement
Engine cuts out or jolts during operation	Polarity protection relay – Insufficient contact pressure – Insufficient B+ supply	– Check B+ supply/relay output – Replace polarity protection relay if necessary
	Voltage supply for DDE control unit	Check supply wires and connector
	Air in fuel system	Perform leakage test and bleed
	Electrical cut–out on injection pump faulty	Break in coil in cut–out or supply wire
	No vehicle speed signal at injection quantity control unit (ME-SG)	♦D♦ Check signal or supply with simulator directly at the disconnected connector of the sensor

Fault	Cause	Corrective measures
	Pedal position sensor PWG – Loose contact at Pin 12 of injection quantity control unit	– Observe signal with oscilloscope – Replace pedal position sensor if necessary
Engine cuts out or jolts while driving	Battery voltage too low – Contact problems	– Check wires, contacts – Retighten all connections
Starting problems – severe jolting – engine cut–out under all operating conditions	Battery voltage too low – Contact problems – Battery too old/defective/discharged	– Voltage measurement – Check wires, contacts, connections – Charge/replace battery as required

Defect code 62

Nominal engine output not reached

Fault	Cause	Corrective measures
Loss of output	Injector nozzles dirty or defective	Check for leaks, spray pattern, flow rate, clean/ replace if necessary
	Air cleaner/fuel filter dirty	Replace filter
	Insufficient charge pressure of exhaust turbo-charger	♦D♦ Check charge pressure sensor Check system for leaks Check charge pressure under load Replace exhaust turbocharger if necessary
Loss of output – engine knocking – black smoke – emergency start of injection	Exhaust recirculation valve remains open – Hose incorrectly connected or kinked at electrical changeover valve – Short to ground during activation of electrical changeover valve	– Function check of exhaust recirculation valve – Repair connection – If necessary replace exhaust recirculation valve or electrical changeover valve – Check wires and contacts
	Injection timing (start of injection) control unit defective	– Check wires, plug connections – Replace injection timing (start of injection) control unit if necessary
Output loss – knocking	Nozzle needle jammed	Check start of injection sensor – Replace start of injection sensor if necessary
Output loss – Start–off problems	Exhaust recirculation output stage – No exhaust gas recirculation in the case of a break – Short to negative at Pin 7 of injection timing (start of injection) control unit	– Check wires, contacts – Measure resistance – Measure voltage – Also see defect code 15 – Replace control unit if necessary

Fault	Cause	Corrective measures
Output loss – no response to pedal position sensor when starting off up to approx. 45 s after start	Automatic transmission – Engine speed threshold after start not reached – DDE remains in start routine	– Check transmission
Output loss – start–off difficulties during trailer operation or on ramps	Fuel system leaking – Engine speed only up to approx. 1200 rpm	– Check fuel system for leaks – Check components carrying intake air for leaks
Output loss – start–off difficulties – idle speed fluctuations when engine cold	Toothed drive belt slipped – Start of injection out of tolerance range	– Check static basic setting – Correct belt tension

Defect code 63

Engine cuts out on own accord

Fault	Cause	Corrective measures
Engine cut–out	Main relay or voltage supply defective	Check inputs/outputs at relay
	Electrical cut–out (ELAB) stops fuel supply (or is jammed or switches off) – Break or short at Pin 4 of injection quantity control unit – Electrical cut–out jammed due to dirt – Coil of electrical cut–out defective	– Defect code 1 engine speed or start of injection sensor stored – Check wires, contacts – Defect code 14 start of injection sensor stored – Measure voltage – Measure resistance – Check electrical cut–out (MoDiC or tester) – If necessary replace ELAB or control unit
	Signals from engine speed sensor temporarily interrupted	Check engine speed sensor and connections
	Signals from servo potentiometer temporarily interrupted	– Check wires, connections – If necessary, replace injection pump
	Safety cut–out activated	♦D♦ Check quantity adjuster and potentiometer in injection pump
Engine cut–out – jolting	Polarity protection relay – Insufficient contact pressure – Insufficient B+ supply	– Knock test – Check B+ supply – Replace polarity protection relay if necessary
Engine cut–out – starting problems – jolting	Voltage supply – Connection to main relay or control unit has a break – Contact problems – Battery voltage too low	– Check wires, connections, contacts, links – Check battery under load – Check alternator/voltage regulator – Measure voltage

Defect code 64

Engine cannot be shut down

Fault	Cause	Corrective measures
Engine cannot be shut down by turning back or removing the ignition key	Under unfavourable marginal conditions, residual voltages of the alternator from terminal 61 can influence the polarity protection relay to such an extent that the power supply to the control unit is not cut at Pin 2 and 3. The engine continues operation despite the ignition key being turned back. The engine shuts down when additional loads are switched on such as handbrake indicator lamp or interior lights.	In the case of complaint, the existing DDE polarity protection relay, part number 12 63 2 241 899 should be replaced by the new electronic DDE relay, part number 12 63 2 243 338. **Note:** – For technical reasons, the new DDE relay must only be installed in conjunction with the unloader relay, part number 61 36 8 350 565. It is therefore absolutely necessary to check the part number of the unloader relay and replace it if necessary. – Since June 90, only a relay combination is installed in series production, consisting of a new DDE relay and a new unloader relay.

Defect code 65

Excessive black smoke when accelerating or under full load

Fault	Cause	Corrective measures
Excessive black smoke when accelerating or under load	Signals from start of injection sensor temporarily interrupted	– Check wires, connections – ♦D♦ Start of injection sensor – Refer to Component Testing
	AGR valve does not close – Electrical changeover valve hose connected incorrectly	– Check AGR valve both electrically and mechanically – Repair connection – If necessary replace AGR valve or electrical changeover valve
	Servo potentiometer in injection pump temporarily interrupted	– Check lines, contacts – Replace injection pump if necessary

Defect code 66

Cruise control FGR not possible – no speed indication – fuel consumption indication fluctuates or at full deflection – jolting

Fault	Cause	Corrective measures
Function up to downshift OK.	Vacuum adjuster for downshift of automatic transmission (no response to vacuum) – Break in wire – Short – Leak in vacuum supply	– Check wires, contacts – Check valve assignments – Check hoses, diaphragm cell and solenoid valve for leaks – Replace control unit if necessary
	Electrical changeover valve for downshift of automatic transmission – Does not switch – Break – Short	– Check wires, contacts – DIA: AG control contact – Check switch
FGR operation not possible	Break or short of vehicle speed signal (speed–A signal) from instrument cluster	– Check wires, contacts – Measure pulses with oscilloscope – Measure resistance – Check Reed contact at rear axle or speed–A signal

Component Testing

Notes

This chapter describes the test facilities available for the individual components of the DDE and engine electrical system. The identification ♦D♦ indicates the use of self–diagnosis.

The test values for component testing are listed in the Appendix. For further information on testing (mechanical, hydraulic) and installation, refer to the microfilm – Repair Instructions and Technical Data.

Overview of Tests

Test by means of self–diagnosis

Component	Page	Status monitoring	Defect code storage
Engine speed sensor	2	♦D♦	♦D♦
Fuel temperature sensor	2	♦D♦	♦D♦
Engine temperature sensor (coolant)	3	♦D♦	♦D♦
Pedal position sensor	3	♦D♦	♦D♦
Charge pressure sensor	3	♦D♦	♦D♦
Servo potentiometer	4	♦D♦	♦D♦
Quantity adjuster	4	♦D♦	♦D♦
Vehicle speed signal	5	♦D♦	
Cruise control	5	♦D♦	♦D♦
Air temperature sensor	7	♦D♦	♦D♦
Start of injection sensor	8	♦D♦	♦D♦
Exhaust gas recirculation	8		♦D♦
Solenoid valve – injection timing device	9	♦D♦	♦D♦
Electrical cut–out	9	♦D♦	♦D♦

Engine Speed Sensor

Function check:

♦D♦ The engine speed signals can be checked both at starting speed as well as when the engine is running.

Additional test option by means of test line 61 1 491 and oscilloscope.

Resistance test:

The resistance can be tested directly at the component connector – Wiring Diagram as shown in schematic. See Appendix for test values.

Possible cause:

If wire, plug connection and resistance are OK.:

- Check distance of pulse generator to the six pins on the flywheel, nominal value = 1.3± 0.1 mm, reset if necessary
- Check pin on flywheel for damage
- The engine speed sensor should be removed in the case of sporadic faults in the engine speed signals (temporary defects); then check coil resistance under the effects of contact bounce.

Fuel temperature Sensor

Function check:

♦D♦ The temperature sensor is located in the injection pump. The fuel temperature is also influenced by the injection pump temperature. A temporary increase in temperature can be observed after the warm engine has been shut down.

A value of –40 °C or below indicates a break in the temperature sensor or the line to the ME control unit.

Resistance test:

Disconnect 7-pin connector at the injection pump and measure the resistance at the Pins 5 and 6; see Appendix for test values.

Engine Temperature Sensor

♦D♦ The indicated temperature should correspond to the coolant temperature. A value of –40 °C or below indicates a break at the temperature sensor or on the wire to the ME control unit.

Resistance test:

Measure resistance at the temperature sensor by means of test lead 61 1 440. See Appendix for test values.

Pedal Position Sensor

Check electrical function:

♦D♦ The indicated value should be between 353 ...451 mV at idle speed, 3150...3300 mV (model with manual transmission) or 3700...3800 mV (model with automatic transmission) at full load. For setting refer to microfilm – Repair instructions.

Connect universal adapter between engine wire harness and the ME control unit; switch on ignition, check voltage supply for the pedal position sensor at Pin 10 and 17 – 5 Volt.

Resistance test:

Measure resistance of the pedal position sensor potentiometer at Pin 10 and 13 (on ME control unit). The value should increase continuously when the accelerator pedal is depressed.

Charge Pressure Sensor

Function check:

♦D♦ The indicated value when the engine is stationary should correspond to the current atmospheric pressure. The value must increase after starting and increasing the engine speed. A value of <100 mbar indicates a break in the sensor or on the wire to the ME control unit.

Check voltage supply at component connector – 5 Volt.

Servo Unit Potentiometer

Function check:

♦D♦ The nominal value at idle speed is 2.7...2.9 Volt; the value reduces as the accelerator pedal is further depressed.

Connect universal adapter between engine wire harness and the ME control unit; switch on ignition, check voltage supply for the potentiometer at Pin 10 and 29 – 5 Volt.

Resistance test:

Measure resistance of the servo unit potentiometer at the detached connector of the injection pump, Pins 2 and 3. The wiper is connected to Pin 1. See Appendix for test values.

Quantity adjuster

Function check:

The quantity adjuster is activated by the injection quantity control unit by a square–wave signal (pulse width–modulated). The frequency of 300 Hz can be measured from ignition ON (20 s long) or during engine operation by means of ♦M♦14 or the oscilloscope. Connect universal adapter between engine wire harness and the control unit. Measure at Pin 1 and 21.

Resistance test:

Measure resistance of quantity adjuster at detached connector of the injection pump, Pins 7 and 4. See Appendix for test values.

Vehicle speed signal

Function check:

With the rear wheels rotating, the signal is routed from the signal generator (sensor) on the rear axle transmission via the instrument cluster to the ME control unit.

♦D♦ Status monitoring can be performed with the rear wheels turning (max. deviation 10%). The check can also be performed by means of frequency entry ♦M♦13 at the detached connector of the vehicle speed sensor with the ignition ON. If the display is faulty, check the wire to the instrument support bracket in accordance with the Schematic.

For further diagnostic procedure of the signal (speed–A) refer to Section 6200 – Instrument Cluster.

Cruise Control

Function check: Operating unit

♦D♦ Monitor values from operating unit in various settings:

Nominal value in setting:	Normal	3.4...3.6 Volt,
	Front	0.8...0.9 Volt,
	Rear	2.6...2.7 Volt,
	Top	1.6...1.9 Volt,
	Bottom	4.1...4.3 Volt.

A correct vehicle speed signal is the prerequisite for effective operation of the cruise control system.

Additional function check on models with automatic transmission:

Vacuum adjuster

The prerequisite for this check is that the throttle cable is set correctly – see Repair Instructions Group 24.

Detach vacuum hose from vacuum adjuster, connect vacuum pump and apply a vacuum of min. 250 mbar. Check whether the tie rod of the vacuum adjuster is pulled. It must be possible to attach it free of tension in the idle position, adjust tie rod if necessary.

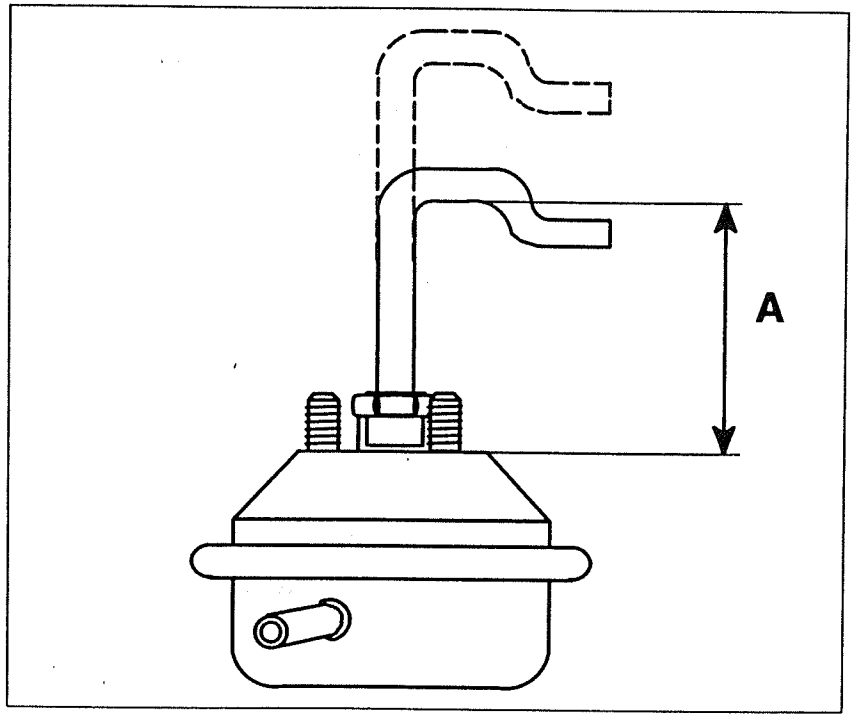

P34 13 001

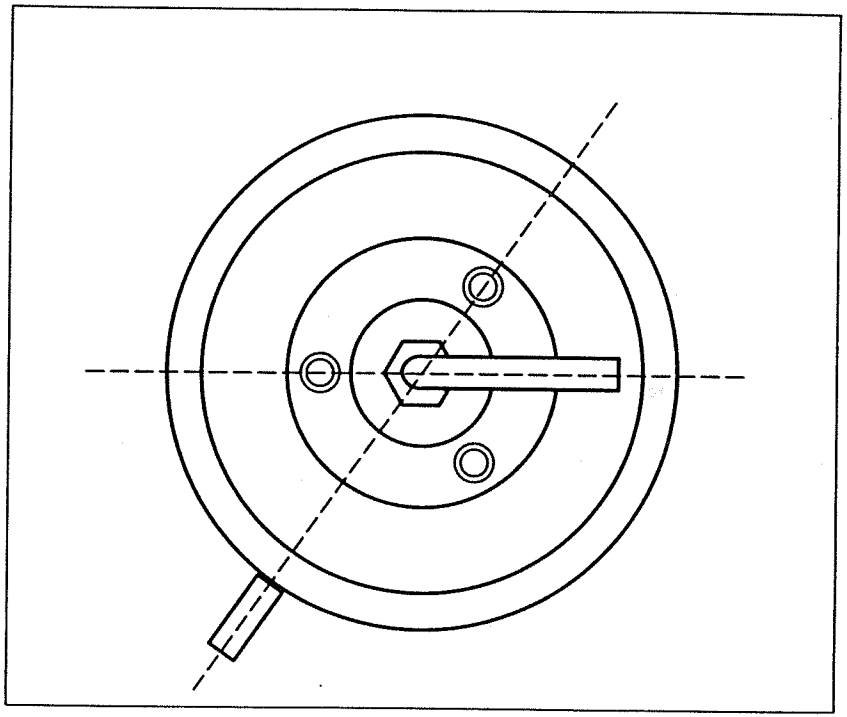

P34 13 002

Setting

Remove vacuum adjuster and apply vacuum of min. 250 mbar; the dimension A must amount to 36 ±0.5 mm, adjust if necessary by turning the tie rod.

Observe position of tie rod.

Changeover valve for vacuum adjuster

Detach connector from valve, run engine and apply battery voltage to the valve. Check whether the vacuum adjuster moves the throttle cable assembly, replace changeover valve if necessary.

Check voltage supply (+ 12 V) at terminal 1, wire from terminal 2 to SB control unit Pin 8.

Feedback contact on deflection mechanism

♦D♦ Check switching point with deflection lever operated, if necessary detach connector at microswitch and check for continuity; check wires in accordance with the Schematic.

Air Temperature Sensor

Function check:

♦D♦ The temperature sensor is located in the air manifold. The indicated value should correspond approximately to the ambient temperature. A value of –40 °C indicates a break in the temperature sensor or on the line to the SB control unit.

Resistance test:

Measure resistance by means of test lead 61 1 440 at temperature sensor; see Appendix for test values.

Start of Injection Sensor

Function check:

♦D♦ The indicated value should be > 5 V at idle speed (see note below); a value of 10 V indicates a break in the start of injection sensor or on the wire to the SB control unit.

The SB control unit supplies the sensor with a voltage of 5 V as of ignition ON.

Notes

As of the BMW Service Tester disk V 8.0, the conversion for the start of injection sensor has been increased by a factor of 2. As of this disk, the voltages indicated on the tester correspond to the voltage values applied at the start of injection sensor.

Up to and including BMW Service Tester disk V 7.0	As of BMW Service Tester disk V8.0
Nominal values at idle speed 2.2...2.5 V approx. 5 V in the case of break	Nominal values at idle speed > 5 V approx. 10 V in the case of break

Resistance test:

The resistance can be measured directly at the component connector, see Appendix for test values.

Exhaust Gas Recirculation

Function check:

♦D♦ The exhaust gas recirculation can be checked at idle speed and at engine speed between 1000...3000 rpm.

Connect the universal adapter between the engine wire harness and SB control unit. Check pulse duty factor ♦M♦16 at Pin 1 and 7 – 65...75% . When the engine temperature sensor is disconnected, the value drops to 0...10% .

If the values deviate, replace the SB control unit.

Also check operation of the electrical changeover valve and its vacuum supply – see microfilm – Repair Instructions.

For the resistance of the electrical changeover valve, refer to the test values in the Appendix.

Solenoid Valve – Injection Timing Device

Function check:

♦D♦ Compare nominal and actual value for start of injection; the difference must not exceed 3° crank angle; the defect code is stored as of a deviation of 4° crank angle.

Connect universal adapter between engine wire harness and SB control unit. A frequency of 50 Hz should be measured between Pin 1 and 2 with the engine running.

If the value deviates, the solenoid valve for the injection timing device or the SB control unit may be defective.

For further hydraulic tests, see Repair Instructions, Group 13.

For the electrical resistance of the solenoid valve – refer to test values in the Appendix.

Electrical Cut–out

Function check:

The electrical cut–out is located on the high pressure unit of the injection pump and receives voltage supply (>10 V) when the ignition is on; the fuel supply is cut as soon as no voltage is applied.

♦D♦ The electrical cut–out device can also be switched on and off from the service tester.

Resistance Values

Component		Resistance in Ohm	Test temperature in °C	Control unit pins
Engine speed sensor		840...960	15...50	ME 35/31
Fuel temperature sensor		2280...2720	20 ±2	ME 35/24
		800...900	50 ±2	
		290...350	80 ±2	
Coolant temperature sensor		2280...2720	20 ±2	ME 35/23
		750...900	50 ±2	
		290...353	80 ±2	
Pedal position sensor		800...1400	15...30	ME 10/17
Servo unit potentiometer		1100...1800	20...60	ME 10/29
		800...1400	20...60	ME 10/6
Quantity adjuster		0.3...0.7	20...50	ME 21/1
Operator unit for cruise control				
Switch position	Normal	388±1%	15...30	ME 35/26
	Forward	64±1%	15...30	
	Rear	469±1%	15...30	
	Top	1085±1%	15...30	
	Bottom	1596±1%	15...30	
Electrical cut–out		5...10	20...50	ME 19/4

Resistance Values

Component	Resistance in Ohm	Test temperature in °C	Control unit pins
Air temperature sensor	2280...2750	20 ±1	SB 4/17
	800...1000	50 ±1	
	290...364	80 ±1	
Start of injection sensor	90...110	15...30	SB 3/20
Electrical changeover valve – exhaust gas recirculation	20...40	15...30	SB 7/1
Solenoid valve-injection timing device	10...20	20...50	SB 2/1
Electrical changeover valve automatic transmission/cruise control	20...40	15...30	SB 1/8

Nominal Values for Status Monitoring from the Injection Timing (Start of Injection) Control Unit

Inquiry	Condition	Display
151 Switch position quantity adjustment	Basic setting	Position 3
152 Switch position idle adjustment	Basic setting	Position 3
105 Brake test switch	Brake pedal depressed	ON
111 Brake switch	Brake pedal depressed	ON
	The brake switch is first activated when the brake pedal is depressed. The brake test switch is activated when the brake pedal is depressed a little further. Test note: The switch positions are displayed on the tester after a time delay. Therefore, move the brake pedal only in short steps and hold in the various positions for a longer period of time. There must be a position where only the brake switch is ON.	
112 PWG switch (pedal position switch)	When accelerator pedal depressed > 9°	ON
116 Air conditioning switch	When air conditioning, defroster or air recirculation switch operated and selector wheel for air quantity not set to 0	ON
127 Clutch switch	When clutch pedal depressed	OFF
203 Start of injection sensor (in injection nozzle holder)		
As of the BMW Service Tester disk V 8.0, the display of the voltage value for the start of injection sensor has been doubled. As of this disk, the voltages displayed on the tester correspond to the voltage values applied at the start of injection sensor.		
	Up to and including BMW Service Tester disk V 7.0	Nominal values at idle speed 2.2...2.5 V approx. 5 V in case of break
	As of BMW Service Tester disk V8.0	Nominal values at idle speed > 5 V approx. 10 V in case of break

Inquiry	Condition	Display
204 Intake air temperature	Dependent on temperature in air manifold	–39 °C ... +130 °C –40 °C = break
205 Voltage supply for control unit	At idle speed	>12.5 V
220 Start of injection – actual value (from start of injection sensor)	Engine operation	Deviation to SB nominal value max. 3° crank angle
230 Start of injection – nominal value (from control unit)	AT idle speed, engine at operating temperature	3.2 ± 0.5° crank angle before TDC

Nominal Values for Status Monitoring from the Injection Quantity Control Unit

Inquiry	Condition	Display
206 Servo unit potentiometer	At idle speed, engine at operating temperature	2700...2900 mV, 5000 mV = break
209 Vehicle speed signal	Dependent on wheel speed	0...200 km/h
213 Pedal position sensor	Accelerator pedal in idle position	353...451 mV
	Accelerator pedal in full load position	3150...3300 mV for manual transmission, 3700...3800 mV for automatic transmission
222 AG control contact (automatic transmission control contact)	Automatic transmission operating cable pulled by pressure adjuster	< 100 mV, 5 V = break or not installed
223 Engine temperature (coolant)	Dependent on engine temperature	–39° C ... 130° C, –40° C = break
224 Fuel temperature	Dependent on fuel temperature in the injection pump	–39° C ... 130° C, –40° C = break
226 FGR operating unit (cruise control)	Switch position – Normal	3.4...3.6 V
	Front	0.8...0.9 V
	Rear	2.6...2.7 V
	Top	1.6...1.9 V
	Bottom	4.1...4.3 V
		Break or not installed = 5 V
231 Engine speed	Engine operation	Dependent on engine speed
232 Voltage supply for control unit	Dependent on condition of battery	>10 V
234 Charge pressure sensor	Dependent on pressure in air manifold	When engine stationary = atmospheric pressure <100 mbar = break

Notes

Note: The following description refers to the digital diesel electronics system DDE 2 on the 6-cylinder turbo engine M51.

Functional Description

The digital diesel electronics system (DDE) facilitates exact control of the injection quantity and of the injection timing under all operating conditions. As a result, fuel consumption and exhaust emissions can be kept to a minimum.

The components of the DDE 2 system can be subdivided into 3 groups - control unit, sensors and actuators (servo components).

The DDE system operates with one control unit (55-pin) in conjunction with 2 computers based on hybrid technology.

The DDE processes the input signals by means of microprocessors and calculates the necessary output variables on the basis of fixed programmed data.

In the case of malfunctions in the DDE system, either substitute values are provided; – for example in the case of failure of sensors (for water, air, fuel, pressure or injection timing) –, or continued yet restricted operation is enabled. This applies in the case of a faulty pedal position sensor (PWG), solenoid valve injection timing device, engine speed sensor, computer I or faulty injection timing (start of injection) control.

If sensors (e.g. pump potentiometer) or servo units (e.g. pump servo unit) fail which can damage the engine or which can result in uncontrolled operation, the injection system is deactivated and the engine shut down as a result.

The substitute values or the emergency operation program are cancelled as soon as trouble–free operation of the system is resumed.

The following function blocks are provided in the computer I:

- Injection timing (start of injection) control
- Exhaust gas recirculation (country–specific version)
- Output of self–diagnosis results

The following function blocks are provided in the computer II:

- Injection quantity control with special start quantity control and full load quantity limitation
- Engine speed control
- Running stability control and vibration damping
- Exhaust emission limitation and overheating protection
- Cruise control (optional equipment)

Digital Diesel Electronics (DDE 2, 6-cylinder M51)

The following components supply the digital diesel electronic system with input signals or receive output signals.

1 Fuel injection pump
2 Engine speed sensor
3 Start of injection sensor in injection nozzle holder on cylinder No. 4
4 Coolant temperature sensor on cylinder head
5 Intake air temperature sensor on air manifold
6 Charge pressure sensor
7 Vehicle speed signal
8 Pedal position sensor linked to the accelerator pedal
9 Selector lever for cruise control on steering column (optional equipment)
10 Brake light and brake test switch
11 Clutch switch
12 Fuel consumption indicator and engine speed signal TD
13 Diagnosis and preheater lamp
14 Heater time relay
15 Electropneumatic changeover valve for exhaust gas recirculation
16 Solenoid valve injection timing device in the injection pump
17 Electrical cut–out
18 Quantity servo control unit
19 Servo unit potentiometer on quantity servo control unit
20 Fuel temperature sensor
21 DDE control unit
22 Inputs
23 Outputs (output stages)
24 Water level sensor

Air conditional system (optional equipment)
Voltage supply (battery, vehicle ground)
Antitheft system (optional equipment)
Electronic transmission control (optional equipment)

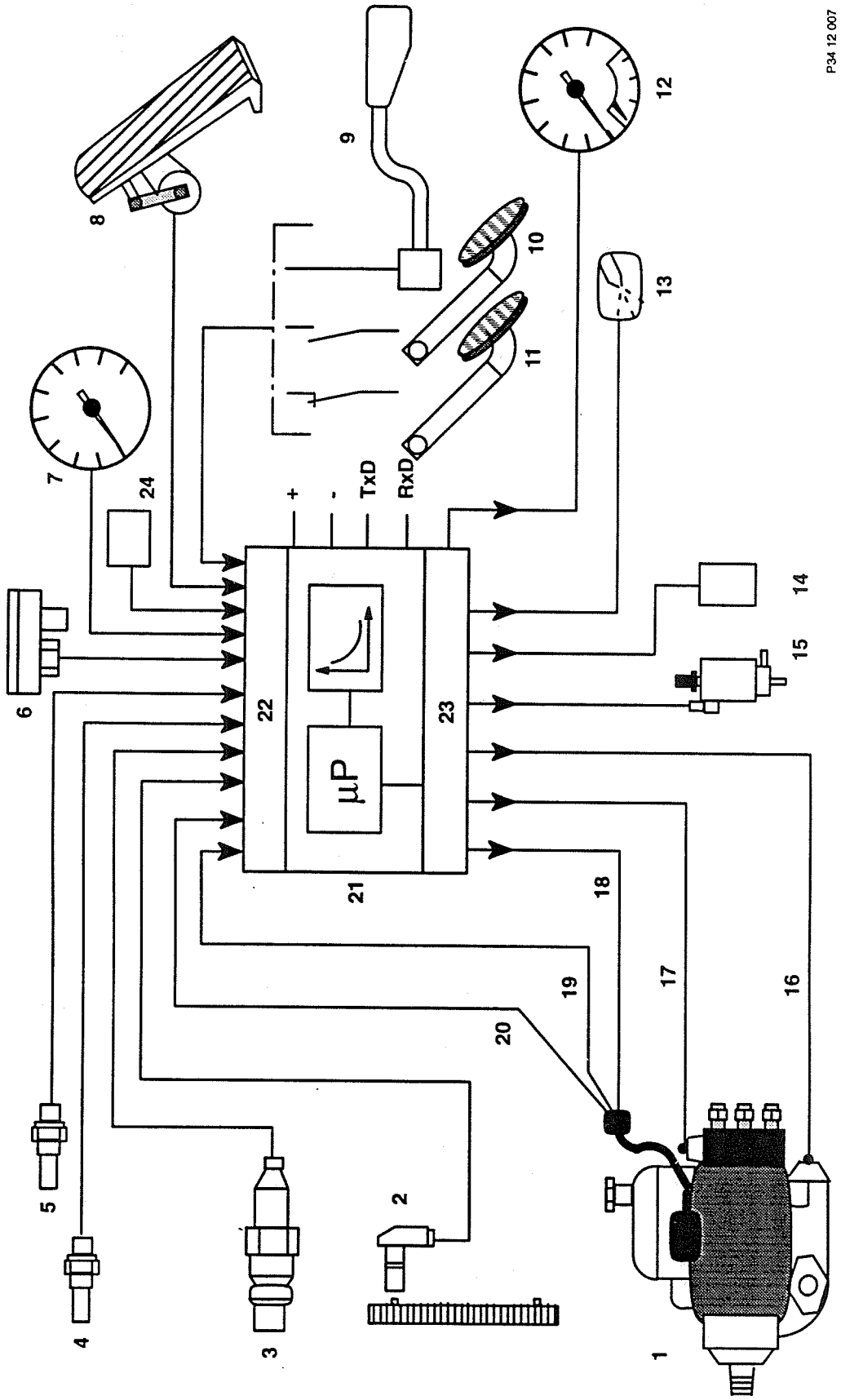
P34 12 007
1
2
3
4
5
6
7
8
9
10
11
12
13
14
15
16
17
18
19
20
21
22
23
24
+
-
TxD
RxD
µP

Distributor-injection Pump

The design of the injection pump in the DDE 2 system corresponds in principle to that of the DDE 1.

Injection timing (Start of Injection) Control

The start of injection is controlled by the injection timing device in the injection pump. A clocked solenoid valve modulates the internal pump pressure on one side of the system in the injection timing device so that a defined start of injection is set. When no power is applied, the solenoid valve is closed, resulting in advanced injection timing (start of injection). The start of injection sensor sends the actual start of injection value back to the DDE control unit.

Injection Quantity Control

Injection quantity control is made possible by a quantity servo control unit in the injection pump. An electromagnetic actuator is driven such that it moves an eccentrically arranged spherical pin. This rotary motion is converted into linear motion which acts on the control valve, thus making it possible to vary the effective stroke of the pump piston (injection quantity).

The position of the control valve is fed back via the servo potentiometer to the control unit. Here, the nominal value is compared with the actual value and, if necessary, adjustment is carried out until the nominal injection quantity value is achieved. The servo control unit is set to zero delivery when no power is applied.

Dependent on the engine temperature, time and engine speed, the start quantity control makes available an injection quantity which is necessary for starting and running the engine. The fuel temperature is also used to facilitate correction.

The required quantity of fuel which is injected during operation depends on the position of the pedal position sensor.

Engine Speed Control

After starting, the idle speed control function cuts in after a certain engine speed threshold has been exceeded. This is calculated by the control unit dependent on the coolant temperature and the active loads, thus maintained at a constant value. The idle speed can be adjusted by means of the SERVICE TESTER.

The maximum engine speed is limited by the control unit by reducing the injection quantity.

Running Stability Control and Jolt Damping

The running stability control system is used for engine speed stabilization when idling. Controlled injection quantity correction counteracts the irregularities which occur in the individual cylinders as the result of dispersion of the injected fuel quantity.

In the case of spontaneous change in the position of the accelerator pedal or a sudden change in the driving resistance, vibrations occur which, in conjunction with the control frequency of the injection hydraulics, can result in jolts and jerks.

On the basis of their segment–by–segment angle evaluation in the input sequence, the engine speed signals provide the information which is used for corrective control (rotation irregularities) in the quantity servo control unit. The prerequisite for this function is the input of the vehicle speed signal.

Exhaust Emission Limitation and Overheating Protection

At high ambient air temperatures and at increasing altitude, the full load quantity is reduced in order to limit exhaust emission. The full load quantity is also reduced when the permissible water temperature is exceeded in the high speed range.

Cruise Control FGR (Optional Equipment)

The required driving statuses: Acceleration, deceleration or resume driving speed can be set or selected with the aid of the operating unit (control lever) on the steering column.

These functions are active as of a vehicle speed of >40 km/h.

A/C Compressor Cut–out (on Vehicles with Air Conditioning System)

The DDE control unit switches off the A/C compressor during driving conditions demanding high torque requirements (starting off, accelerating). The compressor is also cut–out at high water temperatures (>110 °C) in order to protect the engine.

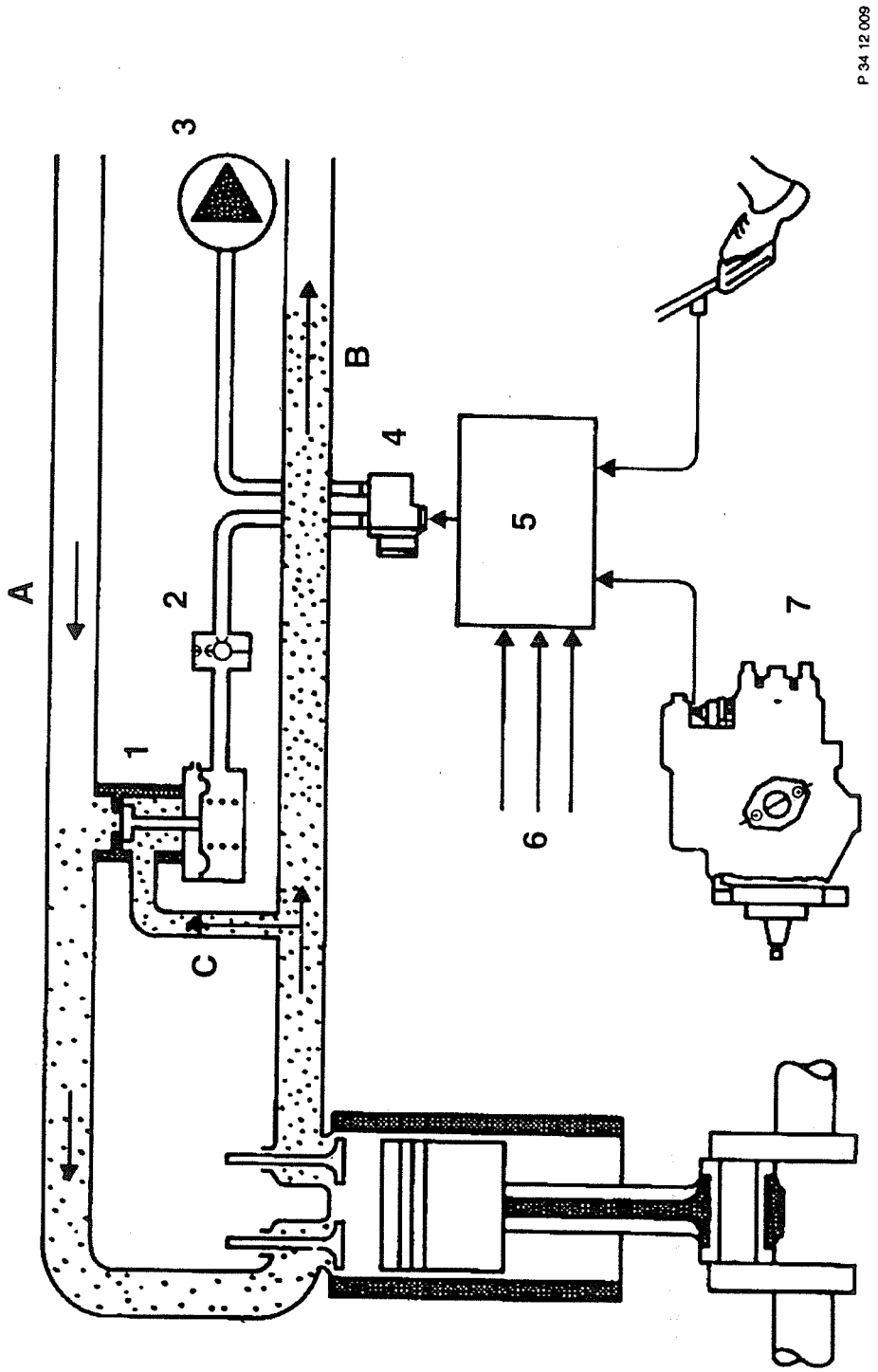
A
B
C
1
2
3
4
5
6
7
P 34 12 009

A	Fresh air
B	Exhaust gasses
C	Exhaust gas recirculation
1	Exhaust gas recirculation valve
2	Reducer valve
3	Vacuum pump
4	Electrical changeover valve
5	DDE control unit
6	Engine speed, coolant temperature, air pressure
7	Injection pump

Exhaust Gas Recirculation AGR (Country–specific Version)

The combustion temperature is reduced by partial recirculation of the exhaust gas in the part load range, thus reducing nitrogen oxide emissions as a result.

The DDE control unit activates an electrical changeover valve dependent on engine speed, load and coolant temperature. In this way, vacuum is applied in the pressure cell on the AGR control unit so that the working diaphragm is lifted against a spring and the AGR valve opens. A part of the exhaust gasses is then returned into the intake duct corresponding to the open cross section and the differential pressure.

Torque Limitation

If the electronic transmission control detects excessively high slip in the torque converter, the DDE is instructed via the PWG line (Pin 43) to reduce the injection quantity (applies only to E36).

Self–diagnosis

The task of the self–diagnosis function is to detect malfunctions in the DDE system and to make available substitute values and emergency programs in conjunction with subsequent storage of the defect code as well as output via the SERVICE TESTER.

To facilitate troubleshooting, current inputs and outputs can be monitored by the DDE control unit.

For further information, refer to Notes on the BMW DIAGNOSTIC SYSTEM.

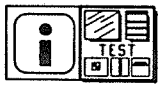

Notes on the BMW DIAGNOSTIC SYSTEM

Introduction

Communication with the control unit can be set up after selecting the DDE system on the BMW Service Tester or BMW MoDiC. If data transfer does not take place, the necessary information is provided on the display screen relating to the possible reasons for this.

- Ignition not switched on
- Voltage supply of control unit < 10V
- Control unit not connected
- Diagnostic lines or links defective
- Diagnostic lines made inactive due to defective control unit in the vehicle

The data transfer rate of the DDE self-diagnosis system is slower than is the case in other systems. The functions of the DDE system are, however, not impaired.

Control Unit Identification

As soon as the data transfer between the tester and control unit has been set up, the identification data of the control unit appear on the display screen. These data indicate which control unit version is installed. The identification can be compared with the data provided in the microfilm - Technical data or Parts.

Sequence of identification output:

- BMW software number
- Control unit version
- Bosch code number
- Bosch software number
- Production code
- Hardware number or type test number

Defect Code Storage

In the majority of cases, defect codes are stored as soon as the ignition is switched on. If several defect codes are stored they will appear in chronological order. The defect code memory can store a maximum of 5 defect codes. Defect codes with high priority are given preference if the defect code memory is full. The stored operating conditions apply only to the first time the defect was detected.

Monitoring Defect code Memory

Monitoring the defect code memory should be given initial priority. If one or several defect codes are stored, it is advisable to immediately print out these data (R key).

Substitute values may be active if **no** malfunctions can be found despite a defect code being stored. These substitute values are cancelled again when the DDE resumes proper operation. For more detailed information refer to Chapter - Troubleshooting. Nevertheless, troubleshooting should still be carried out.

If the defect code memory has no defect code stored although there is a defect in the vehicle, either the test conditions (e.g. temperature, time, load etc.) for defect code detection were not reached or it was technically not possible to store a defect code. A list of monitored components and functions is given in the Chapter – Component Testing.

Clearing Defect Code Memory

Carry out this step only when the defect has been rectified or when the defect code was stored as the result of defect simulation.

Currently existing defect codes cannot be cleared.

Status Monitoring

Independent of defect code storage, further information relating to defect repair can be called up with this function. In this case, actual values or current operating statuses are displayed. In order to better illustrate relevant relationships, several status inquiries can be combined to form a block. Refer to Chapter - Component Testing - for the necessary comparison of nominal values.

Component Activation

As further aid various components can be activated from the tester. This function enables acoustic or visual testing.

Abbreviations

AG	Automatic transmission
AGR	Exhaust gas recirculation
EP	Injection pump
FGR	Cruise control
DWA	Antitheft system
EKP	Electrical fuel pump
HG	Manual transmission
KD	Kick–down
KW	Crankshaft
LL	Idle
MF	Microfilm
MV	Solenoid valve
RxD	Diagnosis initialization line
ME	Injection quantity
SB	Injection timing (start of injection)
PWM	Pulse width–modulated signal
PWG	Pedal position sensor
TQ	Injection quantity measurement signal
TxD	Diagnostic data line
SG	Control unit
U–Batt	Battery voltage
U–Vers	Voltage supply
mg/H	Milligram per stroke
VL	Full load

Pin Assignment

If not otherwise specified, the signal type data applies to the engine when idling.

Assignments at the 55–pin DDE Control Unit

Pin	Type	Description/function	Connection	Signal type	Tester display	Measurement notes
1	A	Quantity servo unit –	Injection pump	Square–wave signal		Oscilloscope, frequency
2	A	Quantity servo unit +	Injection pump		–	Oscilloscope, defect code memory
3	A	Electrical cut–out ELAB	Cut–out on injection pump	>10 V	–	Multimeter, defect code memory
4	A	Fault lamp	Instrument cluster	Negative in the case of defect (only serious defects)	Display in instrument cluster	Multimeter
5	E	Start of injection sensor +	Injection nozzle cylinder No. 4	sinusoidal	Voltage	Status monitoring
6	A	Preheating time control	Heater plug	Negative in heating phase		Multimeter, defect code memory
7	–	–	–	–	–	–
8	A	Exhaust gas recirculation AGR	Electrical changeover valve for exhaust gas recirculation pressure cell	Negative when exhaust gas recirculation active	–	Multimeter, defect code memory
9	A	A/C compressor	A/C compressor relay	Negative when active		Multimeter, defect code memory

Pin	Type	Description/function	Connection	Signal type	Tester display	Measurement notes
10	A	Solenoid valve injection timing device	Injection pump	Frequency	Start of injection in ° crank angle	Status monitoring, frequency, component activation, defect code memory
11	A	Preheating lamp	Instrument cluster	Negative in heating phase		
12	E	Start of injection sensor –	Injector nozzle cylinder No. 4	sinusoidal	Voltage	Status monitoring
13	A	Measuring ground	Negative supply for sensors	Negative	–	Multimeter
14	A	Negative supply	Servo unit potentiometer and pedal position sensor	Negative	–	Multimeter
15	E	Voltage supply +	Polarity protection relay	>10 V	–	Multimeter, defect code memory
16	E	Voltage supply +	Polarity protection relay	>10 V	–	Multimeter
17	E	Voltage supply +	Polarity protection relay	>10 V	–	Multimeter
18	E	Negative supply	Central ground point in engine compartment	Negative	–	Multimeter
19	E	Negative supply	Central ground point	Negative	–	Multimeter
20	E	Cruise control	FGR operating unit	0...5 V	Voltage	Status monitoring, defect code memory
21	E	Servo unit potentiometer signal	Injection pump	0...4.5 V	Voltage	Status monitoring, defect code memory
22	–	–	–	–	–	–
23	–	–	–	–	–	–
24	E	A/C compressor request	Air conditioning control unit	Negative, when compressor ON	–	Defect code memory

Digital Diesel Electronics (DDE 2, 6-cylinder M 51)

Pin	Type	Description/function	Connection	Signal type	Tester display	Measurement notes
25	E	Pedal position sensor switch	Pedal position sensor	>4 V when accelerator pedal depressed	OPEN = Idle or CLOSED = Not idle	Status monitoring, defect code memory
26	E	Brake light switch	Brake light switch	>10 V when brake pedal depressed	OPERATED when brake pedal depressed	Status monitoring
27	E	Data line RxD	Diagnostic socket, to other control units with diagnostic capability	>10 V when cover closed	As soon as communication with the control unit set up	Oscilloscope
28	E	Clutch switch	HG: Clutch switch for AG: Connection at switch open, line leads to selector lever	HG: Negative when clutch pedal in rest position	OPERATED when clutch pedal depressed	Status monitoring, defect code memory
29	E	Vehicle speed signal	Instrument cluster	Square–wave signal	km/h	Status monitoring, defect code memory
30	–	–	–	–	–	–
31	E	Brake test switch	Brake light switch	Negative when brake pedal depressed	OPERATED when brake pedal depressed	Status monitoring, defect code memory
32	–	–	–	–	–	–
33	A	Pedal position sensor supply +	Pedal position sensor	5 V	Voltage	Status monitoring, defect code memory
34	–	–	–	–	–	–
35	E	Fuel temperature sensor +	in injection pump	Analog signal	Temperature in ° C	Status monitoring, defect code memory
36	E	Water level sensor	Fuel filter	5 V	–	Defect code memory
37	E	PWG potentiometer signal	Pedal position sensor	0.3 ... 4 V (LL ... VL)	Voltage	Status monitoring, defect code memory

Pin	Type	Description/function	Connection	Signal type	Tester display	Measurement notes
38	–	–	–	–	–	–
39	A	Servo unit potentiometer supply +	Injection pump	5 V	Voltage	Status monitoring, defect code memory
40	A	Data line for PWG,ME,temperature-water	Electronic transmission control	Multiplex-signal	–	Defect code memory in EGS
41	E	Heating time diagnosis	Heating time relay			
42	E/A	Data line TxD	Diagnostic socket, to other control units with diagnostic capabilities	Negative when cover closed	As soon as communication with control unit set up	Oscilloscope
43	E	Data line for quantity intervention	Electronic transmission control unit	Pulse width–modulated signal	–	Defect code memory in EGS
44	E	Air conditioning switch	Heater	>10 V when switch depressed	ON	Status monitoring
45	E	Antitheft system	Antitheft system	> 10 V (when DWA armed)		
46	–	–	–	–	–	–
47	E	Engine speed sensor signal	Engine speed sensor	Alternating voltage	Engine speed	Status monitoring, defect code memory
48	–	–	–	–	–	–
49	A	Fuel consumption signal	Consumption gauge in instrument cluster	Square–wave signal 12 V	–	Oscilloscope
50	A	Engine speed signal TD	Tachometer, diagnostic socket	Square–wave signal	see tachometer	Oscilloscope
51	A	Charge pressure sensor supply +	Charge pressure sensor	5 V	Pressure in hPa	Status monitoring, defect code memory

Pin	Type	Description/function	Connection	Signal type	Tester display	Measurement notes
52	E	Air temperature sensor +	at air manifold	Analog signal	Temperature in ° C	Status monitoring, defect code memory
53	E	Coolant temperature sensor +	on cylinder head	Analog signal	Temperature in ° C	Status monitoring, defect code memory
54	E	Charge pressure sensor signal	Charge pressure sensor	0...4.5 V	Pressure in hPa	Status monitoring, defect code memory
55	–	–	–	–	–	–

E = Input, A = Output

Adapter

Components	Connector No.	Description	Adapter number
Control unit	X 2019	Universal adapter 55-pin	Universal adapter, HWB 81 12 9 425 091 Connection lead for periphery 55-pin, HWB 81 12 9 428 907 Connection lead for control unit 55-pin, HWB 81 12 9 428 908
Engine speed sensor, charge pressure sensor	X 2013, X 2014	V–adapter 3–pin	HWB 81 12 9 425 091
Water/air temperature sensor, start of injection sensor	X 2015, X 2012, X 2008	V–adapter 2–pin	Cartool 61 1 440

Troubleshooting

Notes

The battery should not be disconnected before a quick test has been performed. If disconnected, important data will be deleted.

Important!

Disconnect control units from the wire harness **only when the ignition is switched off** .

Conduct wire tests **only with the control unit or component connectors disconnected**. Recommended adapters are listed in chapter – Pin Assignments.

Defect Location Procedure

If no defect code is stored, the subsequent test must be performed on the basis of the symptoms (effect in vehicle) – see quick test in chapter on – Component Testing

1. Display of a Stored Defect code on the Display Screen

– **Defect location:** This data indicates the area in which the defect has occurred. The defect can therefore be in the vicinity of the component, the corresponding wires or in the control unit. It may also be stored as the result of illogical conditions – see defect code table.

The defect code number refers to the control unit pin provided assignment is possible.

– **Type of defect:** Shorts, breaks, range transgressions or illogical functions are displayed. Indication is also provided as to whether the defect currently exists or whether it occurred only once in the past but is not applicable at present (intermittent defect).

– **Defect frequency:** Indication is provided as to how often the defect has been detected. This does not apply to momentary defects.

– **detected at:** Here additional defect information is provided on the operating statuses during defect detection.

2. Status Monitoring

Irrespective of whether defect codes are stored or not, status monitoring can always be used for fault tracing.

3. Test Instructions and Schematics

The test instructions explain the use of the self–diagnosis system (marked by ♦D♦) and make it accessible by corresponding test notes. If defects occur for which no defect code is stored, troubleshooting can still be carried out with the aid of the subsequent tests. The schematics should always be used since they clearly show the interaction of various components.

Detailed component–related tests are described in the chapter – Component Testing.

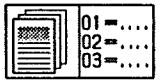

Defect Code Table

♦D♦ Defect code memory – defect codes which can be stored when corresponding conditions are fulfilled:

		Diagnosis lamp ON
Quantity servo control unit – control deviation	→ Defect code 1 *	X
Electrical cut–out	→ Defect code 3	X
Start of injection sensor	→ Defect code 5	X
Heating time control	→ Defect code 6	–
Injection timing (start of injection) control/solenoid valve	→ Defect code 10	–
Control unit supply	→ Defect code 15	–
FGR operating unit	→ Defect code 20	–
Servo unit potentiometer	→ Defect code 21	X
Clutch switch	→ Defect code 28	–
Vehicle speed signal	→ Defect code 29	–
Brake switch	→ Defect code 31	–
Fuel temperature sensor	→ Defect code 35	–
Water level sensor	→ Defect code 36	–
Pedal position sensor	→ Defect code 37	–
Antitheft system	→ Defect code 45	–
Engine speed sensor (inductive pulse generator)	→ Defect code 47	X
Charge air temperature sensor	→ Defect code 52	–
Coolant temperature sensor (engine)	→ Defect code 53	–
Charge pressure sensor	→ Defect code 54	–
Computer link (control unit–internal)	→ Defect code 56	–
Output stage – actuators	→ Defect code 58	–
Charge pressure deviation	→ Defect code 59	–

*** The defect code numbers refer to the relevant pin on the DDE control unit.**

Malfunctions – without defect code storage:

Engine operation not possible	→ Defect code 300
Irregular engine operation	→ Defect code 301
Rated engine output not reached	→ Defect code 302
Engine cuts out	→ Defect code 303

Defect code 1

♦D♦Defect code memory: QUANTITY SERVO CONTROL UNIT (in injection pump)

Explanation: This defect code is stored when the control deviation exceeds a fixed limit value. This may involve both electrical or mechanical defects in the injection pump.

Effect of defect: Misfiring or engine cut–out are possible due to the activated safety circuit. The warning lamp lights up for as long as the defect exists. The fuel supply is interrupted by the electrical cut–out. The quantity servo unit is set to zero delivery. The engine cannot be started for as long as the defect exists.

Troubleshooting: Activation of the quantity servo unit with approx. 300 Hz can be checked after switching on the ignition (approx. 20s long). Check wires and resistance, refer to chapter – Component Testing.

Note: The defect code "start of injection sensor" may also be stored. This is attributed to the monitoring concept of the sensors.

Defect code 3

♦D♦Defect code memory: ELECTRICAL CUT–OUT

Explanation: This defect code is stored when a short occurs at the electrical fuel cut–out, the output stage in the control unit or on its supply lines, or the safety circuit cannot be activated.

Effect of defect: The engine cuts out or shuts down.

Troubleshooting: The electrical cut–out must be supplied with a voltage of > 10 V as of ignition ON. There must be no afterrunning of the engine after the ignition has been switched off.

Defect code 5

♦D♦Defect code memory: START OF INJECTION SENSOR (in injector nozzle cylinder No. 4)

Explanation: Storage of this defect code can be triggered by the following causes,

a) Break or short on the line, plug connection or at the start of injection sensor

b) By comparison with the engine speed sensor signal, i.e., **only** one of the two sensors supplies signals (signal not plausible)

This type of defect may be attributed to several causes:

1. Failure of the start of injection sensor signal

- Signal amplitude too low
- Opening pressure of injector nozzle not reached (leakages on the injection lines or at the injection pump)
- Needle jammed in injector nozzle
- No injection because servo control unit set to zero delivery, thus nozzle needle does not lift
- Interference pulses due to loose contact at the plug connections

2. Disturbed engine speed sensor signal due to loose contact or electromagnetic interference due to starting procedure.

3. Breaks or short at electrical cut–out, including supply lines, or output stage defective in control unit – injection not possible as a result.

4. Break or short at quantity servo control unit, including supply lines, or output stage defective in control unit – consequently no injection.

5. Sporadic contact resistances at the servo unit potentiometer – therefore no injection.

6. Temporary control deviation at quantity servo control unit and deactivation of the electrical cut–out as a result up to a certain engine speed threshold – no injection during this period.

7. Fuel supply faulty (e.g. tank empty, fuel line leaking).

Effect of defect:

If defect a) applicable, the system operates with emergency start of injection, resulting in harder engine operation at low speeds.

If defect b) applicable, engine operation is not possible.

Troubleshooting:

Perform wire and component testing. Refer to chapter on component testing for test values. If further defect codes relating to the start if injection sensor are still stored, they must be dealt with first. Consequently, replacement of the start of injection sensor is **only** justified in the case of cause a) and mechanical defects.

Defect code 6

♦D♦ Defect code memory: HEATING TIME CONTROL

Explanation: This defect code is stored when one or several heat plugs are detected as being faulty during the heating phase, or the relay in the heating time control unit is defective. Breaks in the control or supply voltages are also detected. The prerequisite for this is a battery voltage of > 9 V and a test duration of at least 3 s.

Effect of defect: Extension of the cold start time.

Troubleshooting: Check connections at heating time control unit in accordance with schematic. Check resistance and power consumption of the individual heater plugs. The working current circuit is fuse–protected with an 80 A fuse at the heating time control unit.

Defect code 10

♦D♦ Defect code memory: START OF INJECTION CONTROL / INJECTIONTIMING DEVICE

Explanation: This defect code is stored when there is a defective solenoid valve in the injection pump or the actual start of injection value deviates from the nominal value by more than 2° crank angle for more than 20 s. A defect code is also stored when the fuel filter is clogged or the injection pump internal pressure is no longer reached.

Effect of defect: The system operates with emergency start of injection, resulting in harder engine operation at low engine speeds. There is a slight reduction in the injection quantity at full load.

Troubleshooting: Observe start of injection nominal and actual values by means of status monitoring. Check injection pump internal pressure and solenoid valve. Refer to chapter on Component Testing for test values. Check function of fuel pump. If malfunctioning, air can enter the fuel lines, preventing the pump internal pressure from being reached.

Defect code 15

♦D♦ Defect code memory: DDE CONTROL UNIT SUPPLY

Explanation: This defect code is stored the supply voltage drops below 8.5 Volt for a period of time >5 s .

Troubleshooting: Check wires and connections for DDE control unit, and voltage supply in accordance with schematics. Check battery charge status.

Defect code 20

♦D♦Defect code memory: CRUISE CONTROL OPERATING UNIT (optional equipment)

Explanation: This defect code is stored when breaks, range transgressions or shorts occur at the operating unit or on its supply lines. If no operating unit is installed, then this is also detected.

Effect of defect: No cruise control.

Troubleshooting: Check the values in various switch positions by means of status monitoring – refer to chapter on Component Testing for test values.

Ensure operating lever moves freely.

Defect code 21

♦D♦ Defect code memory: SERVO UNIT POTENTIOMETER (in injection pump)

Explanation: This defect code is stored when breaks, range transgressions or shorts occur at the servo potentiometer or on its supply lines. A further check is made as to whether the start of injection sensor signals are plausible with respect to the position of the potentiometer.

Effect of defect: Misfiring or engine cut–out occur due to fuel supply (electrical cut–out) and the quantity servo control unit (zero delivery) switched off. As a result, defect code 1 QUANTITY SERVO CONTROL UNIT may also be stored – however, it can be ignored. The warning lamp lights up.

Troubleshooting: Observe the potentiometer value by means of status monitoring. The value decreases as the engine speed increases. Refer to chapter on Component Testing for test values.

Defect code 28

♦D♦ Defect code memory: CLUTCH SWITCH

Explanation: This defect code is stored when a vehicle speed of 50 km/h is exceeded for longer than 8.5 min and no clutch signal was detected up to this point.

Effect of defect: The increase in engine speed is deactivated when cruise control is in operation.

Troubleshooting: Check switching point of the switch.

Defect code 29

♦D♦ Defect code memory: VEHICLE SPEED SIGNAL

Explanation: This defect code is stored when too many vehicle speed pulses are detected or when no vehicle speed pulses are detected for >10 s although the engine is running under load. The prerequisite for the latter condition is an engine speed > 1980 rpm.

Effect of defect: The DDE operates with a substitute value of 150 km/h. There are no other noticeable effects provided only the transfer from the instrument cluster to the DDE control unit is disturbed.

Troubleshooting: Check wires and plug connections to the instrument cluster. Monitor defect code memory in the instrument cluster.

Defect code 31

♦D♦Defect code memory: BRAKE SWITCH

Explanation: This defect code is stored when the signals from the brake light switch and brake test switch are not plausible with respect to each other for a period of time > 60 s.

Effect of defect: Cruise control is deactivated or does not operate.

Troubleshooting: Observe the switching points of the brake switches by means of status monitoring and correct setting if necessary. The brake light test switch should switch when the pedal is depressed by at least 5 mm (in switch height). Check wires and switch.

Defect code 35

♦D♦ Defect code memory: FUEL TEMPERATURE SENSOR

Explanation: This defect code is stored when breaks, range transgressions (–40.....130° C) or shorts occur at the temperature sensor (in the injection pump) or on its supply wires.

Effect of defect: A temperature of 60° C is used as s substitute value. There is a low injection quantity limit at full load.

Troubleshooting: Observe the temperature by means of status monitoring. Check wires/plug connections. The injection pump must be replaced if the temperature sensor is defective.

Note: The injection pump must not be opened!

Defect code 36

♦D♦Defect code memory: WATER LEVEL SENSOR

Explanation: This defect code is stored as soon as water is detected in the fuel filter. Breaks in wires cannot be detected.

Effect of defect: None

Troubleshooting: Drain fuel filter – see Repair Instructions.

Defect code 37

♦D♦ Defect code memory: PEDAL POSITION SENSOR (PWG)

Explanation: This defect code is stored when breaks, range transgressions (> 4.6 V) or shorts occur at the pedal position sensor or on its supply lines. Illogical values (accelerator pedal positions) are compared and detected with the PWG switch. The injection quantity is reduced in steps when the brake pedal and accelerator pedal are depressed (defect: brake pedal jammed)

Effect of defect: The idle position is assumed as a substitute in the case of failure of the PWG signal.

In other cases, vehicle operation is only possible with a constant engine speed, i.e. for model with manual transmission: 1390 rpm and for model with automatic transmission: 1460 rpm.

Troubleshooting: Observe the PWG value from idle to full load position by means of status monitoring, check PWG switch setting. Refer to chapter on component testing for test values and correct setting if necessary. Check wires/plug connections.

Note: This defect is also detected by the EGS – clear defect code memory on completion of repairs.

Defect code 45

♦D♦ Defect code memory: ANTITHEFT SYSTEM (DWA)

Explanation: This defect code is stored when a voltage > 9 V is applied at the DWA input of the control unit and an engine speed threshold has been exceeded.

Effect of defect: The quantity servo unit is set to zero delivery – the engine cannot be started or cuts out.

Troubleshooting: Check wire to the DWA control unit and DWA.

Defect code 47

♦D♦ Defect code memory: ENGINE SPEED SENSCR

Explanation: This defect code is stored when breaks or shorts occur at the engine speed sensor or on its supply lines. Illogical engine speed signals (faulty, too few or too many) are also detected. If no engine speed signals are available, the signal from the start of injection sensor are used as a substitute.

Effect of defect: The lamp in the instrument cluster lights up. A substitute engine speed value is derived from the start of injection sensor signal.

- System operates with start of injection control
- Poor start and response characteristics
- Idle speed increased /approx. 1300 rpm)
- Max. engine speed is not reached
- Tachometer has no function
- AGR and FGR are deactivated

Possible cause: Engine speed sensor loose in holder, distance to flywheel pins too great or pins on flywheel defective.

Troubleshooting: Observe engine speed by means of status monitoring. Check wires / plug connection. Incorrect or faulty engine speed signals can lead to misfiring. Refer to chapter on Component Testing for test values.

Note: The emergency program in the transmission is triggers on models equipped with EGS.

Defect code 52

♦D♦Defect code memory: CHARGE AIR TEMPERATURE SENSOR

Explanation: This defect code is stored when breaks, range transgressions (–35....180° C) or shorts occur at the temperature sensor or on its supply lines.

Effect of defect: The system operates with a substitute value of 125° C. There is a low injection quantity limit at full load.

Troubleshooting: Observe temperature by means of status monitoring. Check wires / plug connection. Refer to chapter on Component Testing for test values.

Defect code 53

♦D♦ Defect code memory: COOLANT TEMPERATURE SENSOR (engine)

Explanation: This defect code is stored when breaks, range transgressions (–40....145° C) or shorts occur at the temperature sensor or on its supply lines.

Effect of defect: A temperature of 50° C is used as a substitute value for the start of injection control, AGR and preheating system while the injection quantity control operates with a temperature of –20° C .

– Poor cold start characteristics

– Increased idle speed after start (approx. 30s)

– AGR is deactivated

Troubleshooting: Observe temperature by means of status monitoring. Check wires / plug connections. Refer to chapter on Component Testing for test values.

Defect code 54

♦D♦ Defect code memory: CHARGE PRESSURE SENSOR

Explanation: This defect code is stored when breaks, range transgressions for > 3 s (< 480 or > 2300 hPa) or shorts occur at the charge pressure sensor or on its supply lines.

Effect of defect: The system operates with a substitute value of 500 hPa. The full load injection quantity is reduced. The engine output then corresponds to approximately that of a "naturally aspirated engine".

Troubleshooting: Observe charge pressure at various engine speeds by means of status monitoring. Refer to chapter on Component Testing for test values. Check pressure sensor and hoses for leaks.

Defect code 56

♦D♦Defect code memory: COMPUTER LINK (CONTROL UNIT–INTERNAL)

Explanation: This defect code is stored when the data transfer in the control unit is not plausible.

Effect of defect: Drop in output possible.

Corrective measures: Replace control unit

Defect code 58

♦D♦Defect code memory: OUTPUT STAGES – ACTUATORS

Explanation: This defect code is stored when shorts occur at the outputs at the control unit Pin 6...11, in the control unit or outside.

Effect of defect: Malfunctions in

- solenoid valve for start of injection or
- relay for A/C compressor or
- heating time control (indicator lamp, control line) or
- electrical changeover valve for AGR

Troubleshooting: The defect may be in the component, on the supply lines or in the control unit output stage. Perform tests in accordance with schematics.

Defect code 59

♦D♦Defect code memory: CHARGE PRESSURE DEVIATION

Explanation: This defect code is stored when, compared to the calculated nominal value, the charge pressure is lower by ≥ 500 hPa or higher by ≥ 160 hPa for > 1 s.

Effect of defect: The injection quantity is reduced accompanied by a noticeable drop in output. The reduction in quantity is cancelled as soon as the charge pressure drops below 1820 hPa or the engine speed drops below 3000 rpm.

Troubleshooting: Check charge pressure sensor, pressure cell on exhaust turbocharger and connection hose for leaks. Check output of exhaust turbocharger and ensure bypass valve moves freely.

Defect code 300

Engine operation not possible

Following conditions must be fulfilled:

- Start system OK. (battery charged, ignition switch, starter OK.)
- Ground connection at battery, engine and body OK.
- Specified fuel in tank
- Fuel supply up to injection pump OK.
- Preheater system OK.
- Engine mechanically OK. (ignition timing, compression ...)

Troubleshooting:

a) Check voltage supply

- Check terminal points of B+ wires and positive/ground supply for DDE control units in accordance with schematics.

b) Measure input signals.

- Check digital signals at start speed –♦D♦

c) Measure output signals.

- Check activation of electrical cut–out –♦D♦
- Check activation of quantity servo unit –♦D♦

d) Perform pressure tests on injection pump and injector nozzles – see Repair Instructions.

Defect code 301

Irregular engine operation

Fault	Possible cause	Test / corrective measures
Engine runs hard – knocking	Injection nozzles dirty or defective	– Check for leaks and spray pattern – Clean or replace if necessary
	Injection pump does not permit fuel return	– Check pump internal pressure – If necessary clean OUT screw on injection pump or return hose
	Control unit defective	♦D♦ Check start of injection (for test values see Component Testing)
Engine runs with increased idle speed	Accelerator pedal jammed	♦D♦ Check pedal setting and freedom of movement
Engine cuts out or jolts during operation	Voltage supply for DDE control unit faulty	Check supply lines and connector
	Air in fuel system	Perform leakage test and bleed system
	Electrical cut–out on injection pump defective	Temporary break in coil in cut–out or supply line
	No vehicle speed signal	♦D♦ Check signal or feed in with simulator directly at detached sensor connector

Defect code 302

Nominal engine output not reached

Fault	Possible cause	Test / corrective measures
Loss of output	Injector nozzle dirty or defective	– Check for leaks, spray pattern, flow rate – Clean/replace if necessary
	Air cleaner dirty	Replace air cleaner
	Insufficient charge pressure of exhaust turbocharger	– ♦D♦ Check charge pressure sensor – Check system for leaks – Check charge pressure under load – Replace exhaust turbocharger if necessary – Check and adjust setting of outlet valve

Defect code 303

Engine cuts out on own accord

Fault	Possible cause	Test / corrective measures
Engine cut–out	Main relay defective	Check inputs/outputs at relay
	Electrical cut–out (ELAB) stops fuel supply (or is jammed or does not switch off) – Break or short – Electrical cut–out jammed due to dirt – Coil of electrical cut–out defective	– Check wires, contacts – Measure voltage – Measure resistance – Check electrical cut–out (MoDiC or Tester)
	Signals from engine speed sensor temporarily interrupted	Check engine speed sensor and connections
	Signal from servo potentiometer temporarily interrupted	– Check wires, connections – If necessary replace injection pump
	Safety cut–out activated	♦D♦ Check quantity servo unit and potentiometer in injection pump

Component Testing

This chapter describes the test facilities available for the individual components of the DDE and engine electrical system. The identification ♦D♦ indicates the use of self–diagnosis.

The test values for component testing are listed in the Appendix. For further information on testing (mechanical, hydraulic) and installation, refer to the microfilm – Repair Instructions and Technical Data.

Notes

Disconnect control units from the wire harness ***only*** when the ignition is switched off.

Conduct wire tests only with the control units or component connectors disconnected.

The test values for component testing are listed in the Appendix. For further data and information on hydraulic testing of the injection pump, refer to microfilm – Repair Instructions and Technical Data.

Removal and installation are described in the microfilm – Repair Instructions.

Overview of Tests

Test by means of self–diagnosis

Component	Status monitoring	Component activation	Defect code storage
Engine speed sensor	♦D♦	–	♦D♦
Fuel temperature sensor	♦D♦	–	♦D♦
Engine temperature sensor (coolant)	♦D♦	–	♦D♦
Pedal position sensor/switch	♦D♦	–	♦D♦
Charge pressure sensor	♦D♦	–	♦D♦
Servo unit potentiometer	♦D♦	–	♦D♦
Quantity servo control unit	♦D♦	–	♦D♦
Vehicle speed signal	♦D♦	–	♦D♦
Cruise control	♦D♦	–	♦D♦
Air temperature sensor	♦D♦	–	♦D♦
Start of injection sensor	–	–	♦D♦
Exhaust gas recirculation	–	♦D♦	♦D♦
Solenoid valve – injection timing device	♦D♦	♦D♦	♦D♦

Component	Status monitoring	Component activation	Defect code storage
Electrical cut–out	–	♦D♦	♦D♦
Heating time relay/ control	–	♦D♦	♦D♦
A/C compressor circuit	–	♦D♦	♦D♦
Preheater lamp	–	♦D♦	♦D♦
Control unit supply	♦D♦	–	♦D♦
Clutch switch	♦D♦	–	♦D♦
Brake light test switch	♦D♦	–	♦D♦
Brake light switch	♦D♦	–	–
Water level sensor	–	–	♦D♦
Antitheft system	–	–	♦D♦
Computer link	–	–	♦D♦
Charge pressure deviation	♦D♦	–	♦D♦
Air conditioning switch	♦D♦	–	–

Engine Speed Sensor

Function check:

♦D♦200 – The engine speed signals can be checked both at starting speed as well as when the engine is running.

Resistance check:

The resistance can be checked directly at the component connector – wiring diagram as shown in schematic. See Appendix for test values.

Possible cause:

If wire, plug connection and resistance are OK.:

- Check distance of the pulse generator to the six pins on the flywheel, nominal values – 1.3 ± 0.1 mm, reset if necessary.
- If further engine speed signal faults are encountered, check the pins on the flywheel for damage.

Fuel Temperature Sensor

Function check:

♦D♦200 – The temperature sensor is located in the injection pump. The fuel temperature is also influenced by the injection pump temperature which is particularly significant after starting the engine.

A value of –40 °C indicates a break in the temperature sensor or in the line to the DDE control unit.

Resistance check:

Detach connector from the control unit and connect to the universal adapter. Measure resistance at Pins 35 and 13. See Appendix for test values.

Engine Temperature Sensor (Coolant)

Function check:

♦D♦200 – The indicated temperature should correspond to the coolant temperature. A value of –40 °C indicates a break at the temperature sensor or the wire to the DDE control unit.

Resistance check:

Detach connector from the control unit and connect to the universal adapter. Measure resistance at Pins 53 and 13. The resistance can also be measured directly at the temperature sensor with a test lead. See Appendix for test values.

Air Temperature Sensor

Function check:

♦D♦200 – The temperature sensor is located on the air manifold. The indicated value should correspond approximately to the ambient temperature. A value of –40 °C indicates a break in the temperature sensor or on the wire to the DDE control unit.

Resistance check:

The resistance can be measured directly at the temperature sensor. See Appendix for test values.

Pedal Position Sensor

Check electrical function:

♦D♦200 – The indicated value should be 353 ...451 mV at idle speed, 3150...3300 mV (HG), or 3700...3800 mV (AG) at full load. For setting, refer to microfilm – Repair Instructions.

Connect universal adapter between engine wire harness and the control unit. Switch on ignition, check voltage supply for the pedal position sensor at Pin 33 and 14 – 5 Volt.

Resistance check:

Measure resistance at the PWG potentiometer at Pin 37 and 14. When the accelerator pedal is depressed, the value should increase continuously.

Servo Unit Potentiometer

Function check:

♦D♦200 – The nominal value at idle speed is 2.7...2.9 Volt. The value reduces as the accelerator pedal is further depressed.

Connect universal adapter between engine wire harness and the control unit. Switch on ignition, check voltage supply for the potentiometer at Pin 39 and 14 – 5 Volt.

Resistance check:

Check resistance of the servo unit potentiometer at the detached connector of the injection pump – wiring diagram as shown in schematic. See Appendix for test values.

Quantity Servo Control Unit

Function check:

Detach connector from the control unit and connect to universal adapter. Measure resistance at the Pins 1 and 16. See Appendix for test values.

The resistance can also be measured at the connector of the injection pump. Wiring diagram as shown in schematic.

Vehicle Speed Signal

Function check:

♦D♦200 – The check must be carried out with the rear wheels turning (approx. 20 km/h). The displayed speed should correspond to the speedometer indication. The maximum deviation is 10 %. If the display is faulty, check the wire to the instrument panel in accordance with the schematics.

For further diagnostic procedure, refer to 6200 – Instrument cluster.

Cruise Control Operating Unit

Function check:

♦D♦200 – Monitor values from operating unit in various positions.

Nominal values in position

Neutral	3.4...3.6 Volt
Accelerate	0.8...0.9 Volt
Decelerate	2.6...2.7 Volt
Resume speed	1.6...1.9 Volt
OFF	4.1...4.3 Volt

The values can also be measured with a multimeter directly at the connector of the operating unit. Wiring diagram as shown in Schematics.

A correct vehicle speed signal is the prerequisite for effective operation of the cruise control system.

Start of Injection Sensor

If possible, perform signal test with oscilloscope!

Resistance check:

The resistance can be measured directly at the component connector. See Appendix for test values.

Only use high impedance measuring instrument!

Exhaust Gas Recirculation

Function check:

♦D♦200 – Exhaust gas recirculation is effective and can be checked at idle speed and at engine speed between 1000...3000 rpm.

Connect the universal adapter between the engine wire harness and control unit. Check pulse duty factor ♦M♦16 at Pin 16 and 8 – 65...75%. When the engine temperature sensor is disconnected, the value drops to 0...10%.

Conditions for AGR operation → DDE in perfect working order! (see Troubleshooting).

If the values are obtained, check the electrical changeover valve and its vacuum supply – see microfilm – Repair Instructions.

For the resistance of the electrical changeover valve, refer to the test values in the Appendix.

Solenoid Valve – Injection Timing Device

Function check:

♦D♦200 – Compare nominal and actual value for start of injection. The difference must not exceed 2 ° crank angle.

Connect universal adapter between engine wire harness and the control unit. The solenoid valve is clocked at a frequency of 50 Hz – check at Pin 10/17.

The control unit must be replaced if malfunctioning.

If activation is OK., check the solenoid valve for the injection timing device. For further hydraulic tests, see Repair Instructions, Group 13.

For electrical resistance of the solenoid valve – see test values in the Appendix.

Electrical Cut–out

Function check:

The electrical cut–out is located on the high pressure section of the injection pump and receives voltage supply (>10 V) when the ignition is on. The fuel supply is cut as soon as no voltage is applied.

♦D♦300 – The electrical cut–out device can also be switched on and off from the SERVICE TESTER.

Resistance Values

Components	Resistance in Ohm	Test temperature in °C	Control unit pins
Engine speed sensor	1270 ± 10%	20	47/13
Fuel temperature sensor	2280...2720	20 ±2	35/13
	800...900	50 ±2	
	290...350	80 ±2	
Coolant temperature sensor	2280...2720	20 ±2	53/13
	750...900	50 ±2	
	290...353	80 ±2	
Air temperature sensor	15600 ± 890	0	52/13
	6200 ± 170	20	
	208 ± 24	120	
	661 ± 20	80	
Pedal position sensor	800...1400	15...30	37/33
Servo unit potentiometer (R–total)	1100...1800	20...60	39/14
(Wiper in end position)	800...1400	20...60	39/21
Quantity servo control unit	0.3...0.7	20...50	1/2
Cruise control operating unit			20/13
Switch position –neutral	665±1%	15...30	
–accelerate	64±1%	15...30	
–decelerate	330±1%	15...30	
–resume setting	155±1%	15...30	
–OFF	1596±1%	15...30	

Resistance Values

Component	Resistance in Ohm	Test temperature in °C	Control unit pins
Electrical cut–out	5...10	20...50	3/18
Start of injection sensor	90...110	15...30	5/12
Electrical changeover valve – exhaust gas recirculation	20...40	15...30	8/17
Solenoid injection timing device	10...20	20...50	10/17

Nominal values for status monitoring

Inquiry	Condition	Display
47 Engine speed	Engine operation	Dependent on engine speed
21 Servo unit potentiometer	At idle speed, engine at operating temperature	2500....2700mV, 5000 mV = break
59 Idle adjustment	If necessary, the idle speed can be varied with the aid of the BMW Service Tester.	Current deviation from basic value: -114...+114 rpm
90 Injection quantity		mg/stroke
25 Pedal position sensor switch	When accelerator pedal depressed > 9°	CLOSED = No idle
37 Pedal position sensor potentiometer	Accelerator pedal in idle position	353...451 mV
	Accelerator pedal in full load position	3150...3450 mV for manual transmission, 3700...3950 mV for automatic transmission (kick–down position), the kick–down threshold is at approx. 3450 mV
53 Engine temperature sensor	Dependent on engine temperature	–39 °C ... 145 °C, –40 °C = break
Voltage at sensor		5000 mV = break
52 Intake air temperature sensor	Dependent on temperature	–39 °C ... +120°C, –40 °C = break
Voltage at sensor		5000 mV = break
35 Fuel temperature sensor	Dependent on fuel temperature in the injection pump	–39 °C ... 130 °C, –40 °C = break
Voltage at sensor		5000 mV = break
56 Start of injection – actual value (from start of injection sensor)	Engine operation	Deviation with respect to start of injection – nominal value max. 2° crank angle
57 Start of injection – nominal value (from the control unit)	At idle speed, engine at operating temperature	2.9 ± 0.5° crank angle before TDC
89 Atmospheric pressure		hPa
54 Charge pressure sensor	Dependent on pressure in air manifold	When engine stationary = atmospheric pressure

Inquiry	Condition		Display
15 Control unit voltage supply	At idle speed		>12.5 V
20 FGR operating unit (cruise control)	Switch position	Neutral	3.4...3.6 V
		Accelerate	0.8...0.9 V
		Decelerate	2.6...2.7 V
		Resume setting	1.6...1.9 V
		OFF	4.1...4.3 V
			Break or not installed = 5V
29 Vehicle speed	Dependent on wheel speed		0...200 km/h
26 Brake light switch	Brake pedal depressed		OPERATED
	The brake light switch is first activated when the brake pedal is depressed. The brake test switch is activated when the brake pedal is depressed a little further. Test note: The switch positions are displayed on the tester after a time delay. Therefore, move the brake pedal only in short steps and hold in the various positions for a longer period of time. There must be a position where only the brake light switch is ON.		
31 Brake test switch	Brake pedal depressed		OPERATED
28 Clutch or P/N switch	Clutch pedal depressed or drive range engaged		OPERATED
44 Air conditioning switch	Air conditioning, defroster or air recirculation switch depressed and selector wheel for air flow not set to 0		ON

BMW NA

Electrical Troubleshooting Manual

Diagnosis for 5 Series—E34 and 7 Series—E32

from Model Year 1988

NOTE: Sections marked with a black bar pertain to systems not currently installed in U.S. vehicles.

Part 2

2460.0A Electronic Transmission Control (EGS 4 HP-22/24)
2460.0B —Component Testing

2460.2A Electronic Transmission Control A4S 310 R (former designation THM R1)
2460.2B —Component Testing

2460.4A Electronic Transmission Control EGS: A5S 310 Z (former designation 5 HP 18)
2460.4B —Component Testing

2460.6A Electronic Transmission Control A5S 300 J (former designation Jatco RLA)
2460.6B —Component Testing

3231.1A Steering Column Memory (LSM)

3234.0A Airbag (AB)

3240.0A Servotronic

3450.0A Antilock Brake System (ABS)

3450.1A Automatic Stability Control (ASC)

3450.2A Automatic Stability Control plus Traction (ASC +™ T)

3450.3A Microprocessor-controlled Antilock Brake System (μC-ABS)

Group 24—54

3715.0A Electronic Control (EDC)

3715.1A Electronic Damper Control III (EDC III)

5116.0A Power Mirrors

5120.0A Door Lock Heating (TSH/ZKE)

5120.1A Door Lock Heating (TSH/ZVM)

5120.2A Door Lock Heating (TSH/ZVM II)

5125.0A Automatic Soft Close Function (SCA)

5126.0A Central Locking System (ZV/ZKE)
5126.0B —Component Testing

5126.1A Central Locking Module (ZVM)

5126.2A Central Locking Module II (ZVM II)

5133.0A Power Windows (FH/ZKE)

5200.0A Electrical Seat Adjustment

5200.1A Seat/Mirror Memory (SM/SPM)

5203.0A Heated Seats

5410.0A Sun Roof (SHD/ZKE)

© **BMW of North America, Inc.**

Woodcliff Lake, NJ
May 1992

Part Number 91 00 0 000 029

Notes

This diagnostic procedure applies to the electrohydraulic transmission 4 HP-22 EH and 4HP-24 EH for the 5 and 7 Series in conjunction with the control units GS 1.2x. These control units differ in the use of the A-button (US), the P/N shift-lock, P/N shift-lock with ASC+T, switching logic of the solenoid valves and downshift inhibit valve.

Control unit	ASC+T	P/N shift-lock	US version (A-button)	Downshift prevent valve
GS 1.2	no	no	no	yes
GS 1.21	possible	no	no	no
GS 1.22	possible	yes	no	no
GS 1.23 (Japan)	yes	yes	no	no
GS 1.25 (US M 30)	no	no	yes	no
GS 1.26	no	no	yes	no
GS 1.27	yes	yes	yes	no
GS 1.29 (US M 70)	yes	yes	yes	no

Different pin assignments of the transmission control units

Control unit	BLS	BTS	ASC	A-button
GS 1.23 (Japan)	26	10	31	
GS 1.25 (US M 30)	26	31		10
GS 1.29 (US M 70)		26	31	10

BLS: Brake light switch

BTS: Brake light test switch

ASC: Automatic Stability Control

A-button: Drive program button A (automatic), US version only

Functional Description

The transmission control unit communicates with the following components:

- Gear selector lever switch: L1, L2, L3, L4
- Program switch: E, M, S, (US version: A, M)
- Instrument cluster
- Kick-down switch
- Brake light switch (with P/N shift-lock only)
- Brake light test switch (with P/N shift-lock only)
- Lifting solenoid P/N shift-lock (with P/N shift-lock only)
- Solenoid valves: MV 1, MV 2
- Pressure regulator
- Vehicle speed sensor
- DME control unit
- EML control unit
- Throttle potentiometer (without EML)
- Solenoid valve downshift lock (GS 1.2 only)
- Downshift failure protection unit (GS 1.2 only)

Functional Requirement

The control unit sends the shift pulses for upshifts and downshifts to the transmission control unit (solenoid valves, modulation pressure) and decides upon the corresponding torque converter lockup clutch engagement, taking comfort and safety into consideration. For this purpose it processes in a computer program the input variables such as engine speed, output speed, injection signal, throttle (accelerator pedal) position, kick-down switch, drive program and selector lever position.

Torque Converter Lockup Clutch Control

The converter lockup clutch is activated dependent upon the accelerator pedal position, transmission output speed, drove program, as well as the engaged gear (only in 3rd and 4th gear). The torque converter clutch opens when coasting.

Adaptive Gearshift Characteristic Control

When pulling a trailer or driving on steep gradients, the changed acceleration capacity of the vehicle is evaluated by the control unit. For this purpose, the control unit selects (adapts) suitable gearshift programs to avoid alternating gearshifts in the transmission. The changed gearshift points are intentional and normal.

Gearshift Comfort Control

The gearshift quality is controlled by way of the modulation pressure and the engine intervention function (torque reduction by retarding the ignition timing). The main pressure is constantly calculated by way of an algorithm with tuning-specific parameters (engine torque, differential speed [engine speed difference before and after shifting], output speed and constant pressure component).

Drive Programs

The shift points for the economy and sports program as well as for kick-down are stored in the form of characteristic curves in the control unit. Selection can be made with the program switch between these programs and manual gearshift.

The program switch is designed as a push button connected with respect to ground.

ECE version: 3 programs selected via push button (E/S/M).

US version: 2 programs selected via push button (A/M).

- E-program: Characteristic curves, based on consumption and comfort.
- S-program: Characteristic curves, based on performance.
- M-program: Manual drive program
- A-program (US only):
  Characteristic curves in position "D", based on consumption and comfort.
  Characteristic curves in position "3" and "2", based on performance.

Assignment of the gears to the selector lever position in the manual drive program:

Position:	→	D	3	2	1
Gear:	→	3	3	2	1

Drive program display: The drive programs are displayed in the instrument cluster via the lines L6 (E) Pin 10 and L 7 (M) Pin 12. The line L5 (S) is only evaluated by the EML control unit and not by the instrument cluster.

Instrument cluster display	L6 (E) Pin 10	L7 (M) Pin 12
E	low	high
M	high	low
S	high	high
	low	low

Safety Functions

Manually engaged downshifts are not carried out at excessively high speeds. At a vehicle speed above approx. 8 km/h, the reverse lock prevents reverse gear being shifted hydraulically.

By way of plausibility checks and checking the line connections for shorts or breaks, the control unit can detect and store defects (see Trouble-shooting).

In the event of failure of the transmission control or when defects are detected which lead to critical driving situations (e.g.: impermissible downshifts), the mechanical emergency program is activated, i.e. the power supply to the solenoid valves in the transmission control unit is switched off (emergency program) and the failure display activated. The main pressure assumes its maximum value. The reverse lock and P/N shift-lock, if installed, of the selector lever are not active.

In the event of failure of the control system, the power supply to the solenoid valves is cut (emergency program).

To ensure the engine cannot be overrevved when shifting down in the emergency program (3rd gear) in the case of failure of the control system (E7, GS 1.2) in 4th gear at high vehicle speed (high engine speed), the downshift failure protection unit activates the solenoid valve 1 until the vehicle speed drops below the critical speed for 3rd gear. The vehicle

then only drives in 3rd gear in the emergency program.

In the case of the new control system (E9, GS 1.2x), if the control unit fails the transmission shifts to 4th gear (emergency program) while driving, thus rendering the downshift failure protection unit unnecessary. After restarting the engine, a hydraulic forced gearshift function ensures the vehicle drives in the emergency program also in 3rd gear again as in the E7 control system.

Fault Display

Activation of the fault display is switched by the control unit at Pin 33. Normally (engine running, no fault), the level is referred to ground. If there is a break or a short to positive on the corresponding wire, the error message (transmission) is output by the instrument cluster as of an engine speed greater than 500 rpm or the fault indicator lights.

P/N Shift-Lock (only in GS 1.22 and GS 1.27)

It is only possible to shift out of the position "P" or "N" after evaluation of the signals

- brake
- vehicle speed
- engine speed
- time.

The selector lever is locked when no brake signal is detected with the engine running and the vehicle stationary. A time delay function of approx. 0.5 sec is used for operation under winter conditions. The brake switch is designed as a normally open contact referred to 12 V and the brake light test switch as a normally closed contact referred to ground. The shift lever is locked by way of a solenoid on the selector lever switch.

Reverse Lock

The reverse lockout function prevents hydraulic shifting of the reverse gear at a vehicle speed greater than 8 km/h. Neutral is engaged instead of reverse. If the selector lever is moved to position R, reverse gear is not shifted hydraulically before the vehicle speed has dropped below 8 km/h.

A separate solenoid valve (reverse lockout solenoid) is installed in the transmission control unit GS 1.2 (E7 control) for this function. This function is performed by the solenoid valve 2 in transmissions with E9 control, GS 1.21, GS 1.22, GS 1.26 and GS 1.27.

Downshift Failure Protection Unit (only in GS 1.2)

The power to the solenoid valves is cut (emergency program) if the transmission control fails. This switching logic corresponds to the 3rd gear. To ensure the engine cannot overrev in the event of failure of the transmission control at high vehicle speeds, the downshift failure protection unit activates the solenoid valve 1 (corresponds to 4th gear) until the speed drops below the critical vehicle speed. The transmission then remains in the 3rd gear emergency program.

Switching Logic of Solenoid Valves (only in GS 1.2) E7 Control

	Solenoid valve 1	Solenoid valve 2
	Pin 16 + (Pin 54 –)	Pin 17 + (Pin 54 –)
1st gear	12 V	12 V
2nd gear	0 V	12 V
3rd gear	0 V	0 V
4th gear	12 V	0 V

Switching Logic of Solenoid Valves (GS 1.2x) E9 Control

	Solenoid valve 1	Solenoid valve 2
	Pin 19 + (Pin 54 –)	Pin 17 + (Pin 54 –)
1st gear	0 V	12 V
2nd gear	12 V	12 V
3rd gear	12 V	0 V
4th gear	0 V	0 V

Switching Logic of Selector Lever Switch

Coding table for gear switch (switch referred to 12 V).
"1" corresponds to approx. 12 V and "0" to approx. 0 V.

Conductor	L1	L2	L3	L4
Selector lever position	Pin 23	Pin 26	Pin 8	Pin 33
P	1	1	0	0
R	1	0	0	1
N	0	1	1	0
D	0	0	0	1
3	0	0	1	0
2	1	0	0	0
1	1	0	1	0

Notes on the BMW DIAGNOSTIC SYSTEM

The diagnostic software of the EGS control units will be modified and improved during the course of production.

For users of the BMW Service Tester, the "new" diagnostic procedure differs primarily in the more convenient, uniform operator structure. In addition to more extensive defect detection functions, component activation is also improved. It is no longer necessary that the selector lever position "N" or "P" is detected in order to initiate the diagnostic procedure.

In the following description, the different software statuses are identified by the terms "diagnosis version 1" and "diagnosis version 2". Wherever not otherwise specified, both versions do not differ.

Conditions for Initialisation of the Diagnostic Procedure

- Ignition ON
- n-ab < 300 rpm
- "Diagnosis version 1": Selector lever position "P" or "N"
- "Diagnosis version 2": Any selector lever position

Select EH transmission EGS with ♦D♦ 3.

After successfully setting up communication between the tester and control unit, the EGS control unit is in diagnostic mode and behaves as follows:

- Transmission relay in control unit has picked up (ground supply for solenoid valves and pressure regulator is active)
- All solenoid valves are switched off (control unit does not switch positive)
- The lifting solenoid P/N shift-lock is switched off (control unit does not switch positive)
- A pressure regulator current of 200 mA is applied
- The condition n-ab less than 300 rpm no longer applies

Conditions for Component Activation

- Data transfer OK
- Selector lever in position P or N
- Output speed less than 300 rpm
- "Diagnosis version 2": If the message "current defect detected and stored" is indicated, first print out the contents of the defect code memory then clear the defect code memory and repeat component activation.
- In GS 1.2, activation takes place permanently in P and N. Activation is clocked (audible) if the selector lever is in a drive position (R D 3 2 1).

Abbreviations

A	Output
AG	Automatic transmission
BLS	Brake light switch
Brs	Brake signal
BTS	Brake light test switch
DK	Throttle valve
DKV	Preset throttle angle
DME	Digital motor electronics
DR	Pressure regulator
DZF	Output speed sensor
E	Economy
E	Input
EGS	Electronic transmission control
KD	Kick-down
Lx	Conductor x
M	Manual
ME	Engine intervention
MV	Solenoid valve
n-ab	Output speed
n-mot	Engine speed
PWM	Pulse width-modulated
R-Sperre	Reverse lock
RxD	Diagnosis initialisation line
S	Sports
SG	Control unit
TD	Engine speed signal
ti	Injection signal
TR	Crankshaft reference (once per revolution)
TxD	Diagnostic link, telegram
U-Batt	Battery voltage
U-Vers	Supply voltage
WK	Torque converter clutch

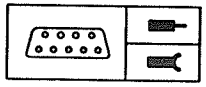

Pin Assignment

Pin Assignments at Control Unit Connector (35-pin)

Pin	Type	Description/function	Connection	Signal type	Tester display	Notes
1	A	Positive supply, solenoid valves and pressure regulator	Gearshift unit	active high	Component activation	This supply is switched off during mechanical emergency program, i.e. transmission relay in control unit drops out.
2	E	Kick-down	Kick-down switch	n/o contact referred to ground	Status display	
2	E	Kick-down	EML control unit			With EML only
3	A	Fault indication	Low instrument cluster	Break contact transmission relay		Only in standard version
4	E/A	S-program	Program button, EML	active low	Status display	Not in US version
5	E	Control unit ground				
6	A	Ground, program button and throttle potentiometer				DK(–) only without EML
7	E	Throttle signal		analog	Status display	Corresponding to accelerator pedal position
8	E	n-ab (+)	Gearshift unit		Status display	
9	A	Voltage supply Throttle potentiometer				DK (+) only without EML

Pin	Type	Description/function	Connection	Signal type	Tester display	Notes
10	E	A-program button	Program button	active low		only in US version (GS 1.26 / 1.27)
10	E	Brake light test switch	Brake	active low		only in Japan version (GS 1.23)
11	E	Fuel consumption indicator (ti signal)			Status display	
12	E/A	TxD				
13	E	RxD				
14	E/A	E-program	Program button, instrument cluster		Status display	
15	E/A	M-program	Program button, instrument cluster		Status display	
16	A	Solenoid valve 1	Gearshift unit	active low	Component activation	
17	A	Solenoid valve 2	Gearshift unit	active low	Component activation	
18	E	Position switch L1	Selector lever	active high	Status display	
19	E	Terminal 31, ground pressure regulator and solenoid valves				
20	A	Solenoid valve reverse lock	Gearshift unit	active low	Component activation	only in GS 1.2 (E7 control)
20	A	Lifting solenoid P/N shift-lock	Selector lever	active low	Component activation	only in GS 1.22 / 1.27 / 1.29
20						not in GS 1.21 / 1.26
21	E	Engine speed n-mot (T(r)-signal)	DME control unit		Status display	
22	A	Solenoid valve pressure regulator	Gearshift unit	Power control	Component activation	
23	A	Shield speed sensor		Ground		
24	A	Engine intervention	DME control unit	active low	Component activation	

Pin	Type	Description/function	Connection	Signal type	Tester display	Notes
25	A	Solenoid valve torque converter clutch	Gearshift unit	active low	Component activation	
26	E	Brake light switch		active high		only in GS 1.22 / 1.23 / 1.29
27	E	n-ab (–)			Status display	
28	E	Position switch L2	Selector lever	active high	Status display	
29	E	Position switch L3	Selector lever	active high	Status display	
30	E	Position switch L4	Selector lever	active high	Status display	
31	E	Brake light test switch				only in GS 1.25
31	E	ASC-controlled	ABS/ASC+T	active low		only in GS 1.23 / 1.27 / 1.29
32	E	Preset throttle signal	EML control unit	Pulse width-modulated	Status display	Only in conjunction with EML. Corresponds to accelerator pedal position
33	A	Fault indicator	High instrument cluster	active high		only in high version
34	E	Voltage supply, terminal 30				Permanent pulse supply
35	E	Voltage supply from relay 2				Holding circuit DME

Adapters

Component	Connector No.	Description	Adapter number
Control unit	X8500	35-pin	Universal adapter HWB 81 12 9 425 091 Connection lead for control unit HWB 81 12 9 425 093 Connection lead for periphery HWB 81 12 9 425 0 92
Gearshift unit	X2005	T-adapter 8-pin	Cartool 246 000

Troubleshooting

Notes

- Troubleshooting with the BMW DIAGNOSTIC SYSTEM
- Battery charged, U-min = 12 V
- The diagnosis versions can be distinguished by way of the display of the BMW Service Tester
- Diagnosis version 1:→ 3-digit selection numbers
- Diagnosis version 2:→ 1-digit selection numbers

Explanation of Defect Code Memory

The EGS control unit can detect up to 30 different defect codes with a series of additional information. It has room for 5 different locations and their additional information in its defect code memory.

Defect location: Here, the defect text from the table of defect codes is supplemented by the corresponding pin numbers of the control unit.

Type of defect: Indicated here is whether the defect is a break, a short to positive, a short to ground or a plausibility error.

Defect currently set ("Diagnosis version 2"): The response of the control unit to this statement can be in the affirmative, negative or conditionally affirmative or conditionally negative. In the case of a restricted reply to the question as to whether the defect code is currently set, the additional information "statement not sure since test condition is not currently fulfilled" appears. This means that the control unit cannot currently check the indicated defect code since, for example, the component is not active. However, the defect code was set or not set the last time the test condition was fulfilled.

Intermittent defect ("Diagnosis version 2"): The reply to this statement is in the affirmative when the defect disappeared at least once and then reappeared. Intermittent defect codes additionally indicate how often the defect code disappeared and reappeared.

Defect codes which can be detected and stored by the control unit

Transmission relay	→ Defect code 1
Checksum EPROM	→ Defect code 2
Kick-down switch	→ Defect code 3
Program switch	→ Defect code 4
Throttle signal, accelerator pedal signal	→ Defect code 5
Solenoid valve MV 1	→ Defect code 6
Solenoid valve MV 2	→ Defect code 7
MV 1, MV 2	→ Defect code 8
Lifting solenoid P/N shift-lock	→ Defect code 9
MV 1, lifting solenoid P/N shift-lock	→ Defect code 10
MV 2, lifting solenoid P/N shift-lock	→ Defect code 11
MV 1, MV 2, lifting solenoid P/N shift-lock	→ Defect code 12
MV-WK	→ Defect code 13
MV 1, MV-WK	→ Defect code 14
MV 2, MV-WK	→ Defect code 15
MV 1, MV 2, MV-WK	→ Defect code 16
Lifting solenoid P/N shift-lock, MV-WK	→ Defect code 17
MV 1, lifting solenoid P/N shift-lock, MV-WK	→ Defect code 18
MV 2, lifting solenoid P/N shift-lock, MV-WK	→ Defect code 19
Voltage supply for MV and DR	→ Defect code 20
Engine speed signal n-mot (TR)	→ Defect code 21
Pressure regulator	→ Defect code 22
Ignition timing intervention	→ Defect code 23
Speed sensor n-ab, downshift lock	→ Defect code 24
Overrev protection	→ Defect code 25
Injection signal ti	→ Defect code 26
DZF or torque converter	→ Defect code 27
Fault indicator (not GS 1.2)	→ Defect code 28
Checksum program	→ Defect code 29
Battery voltage	→ Defect code 30
Selector lever position	→ Defect code 31

Defect codes which can be defined by way of status monitoring but do not appear in the defect code memory

No kick-down shifts	→ Defect code 200
Only kick-down shifts	→ Defect code 201
No S-program	→ Defect code 202
No M-program	→ Defect code 203
No program switchover	→ Defect code 204
No engine intervention	→ Defect code 205
Incorrect fault display	→ Defect code 206
Only full load shifts (without EML)	→ Defect code 207

Possible causes if diagnostic procedure cannot be initiated

Diagnostic link defective	→ Defect code 300
Power supply to control unit defective	→ Defect code 301
Selector lever position	→ Defect code 302
Selector lever position not detected	→ Defect code 303

Defect Code 1

♦D♦Defect code memory: 1 Transmission Relay

Explanation: This defect code is stored when the relay in the transmission control unit cannot pull up or drop out. Activation or deactivation of the solenoid valves no longer possible.

Effect of defect: Mechanical emergency program

Possible cause: Relay sticking

Troubleshooting: Replace control unit.

Defect Code 2

♦D♦Defect code memory: 2 Checksum Eprom

Explanation: This defect code is stored when the checksum no longer agrees with the original sum. Diagnostic procedure not possible for currently detected defect.

Effect of defect: Mechanical emergency program

Possible cause: Change in transmission program (software).

Troubleshooting: Replace control unit.

Defect Code 3

♦D♦Defect code memory: 3 KD Switch

Explanation: This defect code is stored when ground is constantly applied at Pin 2. As a result, only kick-down shifts are performed.

Effect of defect:

"Diagnosis version 1": Only kick-down shifts.
"Diagnosis version 2": Kick-down shifts are suppressed.

Possible cause: Line to control unit Pin 2 or KD switch defective.

Troubleshooting: As displayed on screen.

Defect Code 4

♦D♦Defect code memory: 4 Program switch

Explanation: This defect code is stored when, at the same time, two or three of the wires to the control unit Pins 4, 14, 15 (S-E-M) are applied to ground. As a result, no program switchovers are possible.

Effect of defect: The E-program is set by the control unit.

Possible cause: Wires from the program switch to the EGS control unit or to the instrument cluster defective, or program switch defective.

Note: Observe display in instrument cluster during troubleshooting.

Troubleshooting: As displayed on screen.

Defect Code 5

♦D♦Defect code memory: 5 Throttle Signal, Accelerator Pedal Signal

Explanation: This defect code is stored when the control unit receives no signal from the EML control unit relating to the set throttle angle or no signal is received from the throttle potentiometer in vehicles without EML. Consequently, the upshift takes place too early.

Effect of defect:

"Diagnosis version 1": Incorrect shifting points
"Diagnosis version 2": Mechanical emergency program

Possible cause: Wire to Pin 32 or EML control unit defective. Or throttle potentiometer and wire defective.

Troubleshooting: Check wires to EML and ASC control unit in accordance with schematic. Refer to component testing for vehicles without EML.

Defect Code 6

♦D♦Defect code memory: 6 Solenoid valve MV 1

Explanation: This defect code is stored when the wire from the control unit Pin 16 to MV 1 has a break or a short to ground.

Effect of defect: Mechanical emergency program

Possible cause: Wire or winding of solenoid valve MV 1 defective.

Troubleshooting: As displayed on screen.

Defect Code 7

♦D♦Defect code memory: 7 Solenoid valve MV 2

Explanation: This defect code is stored when the wire from the control unit Pin 17 to MV 2 has a break or a short to ground.

Effect of defect: Mechanical emergency program

Possible cause: Wire or winding of solenoid valve MV 2 defective.

Troubleshooting: As displayed on screen.

Defect Code 8

♦D♦Defect code memory: 8 MV 1, MV 2

Explanation: This defect code is stored when the wires from the control unit Pin 16 and Pin 17 to MV 1 and MV 2 are interconnected or have a short to ground.

Effect of defect: Mechanical emergency program

Possible cause: Wires or winding of solenoid valves MV 1 and MV 2 defective.

Troubleshooting: As displayed on screen.

Defect Code 9

♦D♦Defect code memory: 9 Lifting Solenoid P/N Shift-Lock or Solenoid Valve R-Lock

Explanation: This defect code is stored when the wire from the control unit Pin 20 to the lifting solenoid P/N shift-lock or solenoid valve R-lock has a break or a short to ground or is linked to MV 1 or MV 2.

Effect of defect: Mechanical emergency program

Possible cause: Wire or winding of the lifting solenoid P/N shift-lock or solenoid valve R-lock defective.

Troubleshooting: As displayed on screen.

Defect Code 10

♦D♦Defect code memory: 10 MV 1, Lifting Solenoid P/N Shift-Lock or Solenoid Valve R-Lock

Explanation: This defect code is stored when the wires from the control unit Pin 16 and Pin 20 to MV 1 and lifting solenoid P/N shift-lock or solenoid valve R-lock are interconnected or have a short to ground.

Effect of defect: Mechanical emergency program

Possible cause: Wires or winding of solenoid valve MV 1 and lifting solenoid P/N shift-lock or solenoid valve R-lock defective.

Troubleshooting: As displayed on screen.

Defect Code 11

♦D♦Defect code memory: 11 MV 2, Lifting Solenoid P/N Shift-Lock or Solenoid Valve R-Lock

Explanation: This defect code is stored when the wires from the control unit Pin 17 and Pin 20 to MV 2 and lifting solenoid P/N shift-lock or solenoid valve R-lock are interconnected or have a short to ground.

Effect of defect: Mechanical emergency program

Possible cause: Wires or winding of solenoid valve MV 2 and lifting solenoid P/N shift-lock or solenoid valve R-lock defective.

Troubleshooting: As displayed on screen.

Defect Code 12

♦D♦Defect code memory: 12 MV 1, MV 2, Lifting Solenoid P/N Shift-Lock or Solenoid Valve R-Lock

Explanation: This defect code is stored when the wires to the specified valves have a break or a short to ground. It is also set when one or several solenoid valves have a short to positive or a short among each other.

Effect of defect: Mechanical emergency program

Possible cause: Wires defective or winding short of solenoid valves.

Troubleshooting: As displayed on screen.

Defect Code 13

♦D♦Defect code memory: 13 MV Torque Converter Clutch

Explanation: This defect code is stored when the wire from the control unit Pin 25 to the MV-WK has a break or a short to ground.

Effect of defect: Mechanical emergency program

Possible cause: Wire or winding of the solenoid valve torque converter clutch (MV-WK) defective.

Troubleshooting: As displayed on screen.

Defect Code 14

♦D♦Defect code memory: 14 MV 1, MV-WK

Explanation: This defect code is stored when the wires from the control unit Pin 16 and Pin 25 to MV 1 and MV-WK are interconnected or have a short to ground.

Effect of defect: Mechanical emergency program

Possible cause: Wires or winding of solenoid valves MV 1 and MV-WK defective.

Troubleshooting: As displayed on screen.

Defect Code 15

♦D♦Defect code memory: 15 MV 2, MV-WK

Explanation: This defect code is stored when the wires from the control unit Pin 17 and Pin 25 to MV 2 and MV-WK are interconnected or have a short to ground.

Effect of defect: Mechanical emergency program

Possible cause: Wires or winding of solenoid valves MV 2 and MV-WK defective.

Troubleshooting: As displayed on screen.

Defect Code 16

♦D♦Defect code memory: 16 MV 1, MV 2, MV-WK

Explanation: This defect code is stored when the wires from the control unit Pin 16, Pin 17 and Pin 25 to MV 1, MV 2 and MV-WK are interconnected or have a short to ground or in the case of a winding short in lifting solenoid P/N shift-lock or solenoid valve R-lock.

Effect of defect: Mechanical emergency program

Possible cause: Wires or winding of solenoid valves MV 1, MV 2, MV-WK or lifting solenoid P/N shift-lock or solenoid valve R-lock defective.

Troubleshooting: As displayed on screen.

Defect Code 17

♦D♦Defect code memory: 17 Lifting Solenoid P/N Shift-Lock or Solenoid Valve R-Lock, MV-WK

Explanation: This defect code is stored when the wires from the control unit Pin 20 and Pin 25 to the lifting solenoid P/N shift-lock or solenoid valve R-lock and MV-WK are interconnected or have a short to ground.

Effect of defect: Mechanical emergency program

Possible cause: Wires or winding of lifting solenoid P/N shift-lock or solenoid valve R-lock and MV-WK defective.

Troubleshooting: As displayed on screen.

Defect Code 18

♦D♦Defect code memory: 18 MV 1, Lifting Solenoid P/N Shift-Lock or Solenoid Valve R-Lock, MV-WK

Explanation: This defect code is stored when the wires to the specified valves have a break or a short to ground. It is also set when one or several solenoid valves have a short to positive or a short among each other.

Effect of defect: Mechanical emergency program

Possible cause: Wires defective or winding short of solenoid valves.

Troubleshooting: As displayed on screen.

Defect Code 19

♦D♦Defect code memory: 19 MV 2, Lifting Solenoid P/N Shift-Lock or Solenoid Valve R-Lock, MV-WK

Explanation: This defect code is stored when the wires to the specified valves have a break or a short to ground. It is also set when one or several solenoid valves have a short to positive or a short among each other.

Effect of defect: Mechanical emergency program

Possible cause: Wires defective or winding short of solenoid valves.

Troubleshooting: As displayed on screen.

Defect Code 20

♦D♦Defect code memory: 20 Voltage Supply for MV and DR

Explanation: This defect code is stored when all solenoid valves are interconnected or have a break, or when one or several solenoid valves or the pressure regulator or the voltage supply have a short to positive.

Effect of defect: Mechanical emergency program

Possible cause: Wires, windings of solenoid valves or voltage supply at Pin 1 defective.

Troubleshooting: As displayed on screen.

Defect Code 21

♦D♦Defect code memory: 21 Speed Signal n-mot (TR)

Explanation: This defect code is stored when the control unit receives no engine speed signal.

Effect of defect: Mechanical emergency program

Possible cause: Wire to Pin 21 defective or wire to DME control unit Pin 3 defective.

Troubleshooting: As displayed on screen.

Defect Code 22

♦D♦Defect code memory: 22 Pressure Regulator

Explanation: This defect code is stored when the wire from the control unit Pin 22 to the pressure regulator in the transmission control unit has a break or a short to positive or ground.

Effect of defect: Mechanical emergency program

Possible cause: Wire or winding of pressure regulator defective.

Troubleshooting: As displayed on screen.

Defect Code 23

♦D♦Defect code memory: 23 Ignition Timing (Angle) Intervention

Explanation: This defect code is stored when the wire from the control unit Pin 24 has a break or is applied to ground for longer than 3 sec. It can also be set when the wires to the program switch Pin 4, 14 or 15 have a short to U-Batt.

Effect of defect: Mechanical emergency program

Possible cause: Wire defective.

Troubleshooting: As displayed on screen and observe status monitoring of the program switch. If display incorrect, check wires from Pin 4, 14 and 15 in accordance with schematic for a short or break.

Defect Code 24

♦D♦Defect code memory: 24 Speed Sensor n-ab, Downshift Protection

Explanation: This defect code is stored when the output speed fails at high engine speeds and the downshift protection facility is active.

Effect of defect: Mechanical emergency program

Possible cause: Wire from control unit Pin 8 to speed sensor or engine speed sensor defective.

Troubleshooting: As displayed on screen.

Defect Code 25

♦D♦Defect code memory: 25 Overrev Protection

Explanation: This defect code is stored when the DME does not cut out at maximum engine speed.

Possible cause: DME control unit defective.

Troubleshooting: As displayed on screen.

Defect Code 26

♦D♦Defect code memory: 26 Injection Signal ti

Explanation: This defect code is stored when the increase in engine speed depending on the throttle position is not plausible.

Effect of defect: Mechanical emergency program

Possible cause: Wire to Pin 11 or injection signal from DME defective.

Troubleshooting: As displayed on screen.

Defect Code 27

♦D♦Defect code memory: 27 DZF or Torque Converter

Explanation: This defect code is stored when, at engine speeds above 3000 rpm, the control unit receives no output speed signal in a drive range (R, D, 3, 2, 1).

Effect of defect: Mechanical emergency program

Possible cause: Wire from the control unit Pin 8 and 27 to speed sensor, engine speed sensor, torque converter or clutch defective.

Troubleshooting: As displayed on screen.

Defect Code 28

♦D♦Defect code memory: 28 Fault Display (not GS 1.2)

Explanation: This defect code is stored when the fault display wire has a short to positive or ground.

Effect of defect: No or incorrect fault display

Possible cause: Wire from Pin 33 to instrument cluster defective.

Troubleshooting: The fault display is activated by the control unit at Pin 33. Normally (engine running, no fault), the level is referred to ground. If the line has a break or a short to positive the instrument cluster sends the error message (transmission) at an engine speed greater than approx. 500 rpm. Check wire in accordance with schematic.

Defect Code 29

♦D♦Defect code memory: 29 Checksum Program Area (not GS 1.2)

Explanation: This defect code is stored when a change occurs in part of the memory area (program).

Effect of defect: Mechanical emergency program

Possible cause: Change in transmission program (software).

Troubleshooting: Replace control unit.

Defect Code 30

♦D♦Defect code memory: 30 Battery Voltage

Explanation: This defect code is stored when the on-board voltage is within the range 8.0 V and 9.5 V at engine speeds greater than 1600 rpm.

Effect of defect: Mechanical emergency program

Possible cause: Alternator or battery defective.

Troubleshooting: Check voltage supply.

Defect Code 31

♦D♦Defect code memory: 31 Selector Lever Position

Explanation: This defect code is stored when the engine can be started although there is no positive supply at Pin 28 (position P or N).

Effect of defect: Vehicle can be started with gear range engaged.

Possible cause: Wire to Pin 28 has a break or start relay defective.

Troubleshooting: Check wire in accordance with schematic.

Defect Code 200

No Kick-Down Shifts

Explanation: No kick-down shifts are performed.

Possible cause: Wire from EML control unit to EGS control unit Pin 2 has a break or a short to positive or pedal position sensor defective.

Troubleshooting: ♦D♦ Status monitoring kick-down switch. If display incorrect, check wire to Pin 2 or pedal position sensor.

Defect Code 201

Only kick-down shifts

Explanation: Only kick-down shifts are performed.

Possible cause: The wire from the EML control unit to control unit Pin 2 has a short to ground or pedal position sensor or EML control unit defective.

Troubleshooting: ♦D♦ Status monitoring kick-down switch. If display incorrect, check wire to Pin 2 and pedal position sensor.

Defect Code 202

No S-Program

Explanation: S-program cannot be switched.

Possible cause: Wire from program switch to control unit Pin 4 has a break.

Troubleshooting: ♦D♦ Status monitoring program switch. Ground must be applied at Pin 4 when program switch S is operated.

Defect Code 203

No M-Program

Explanation: M-program cannot be switched.

Possible cause: Wire from program switch to control unit Pin 15 has a break.

Troubleshooting: ♦D♦ Status monitoring program switch. Ground must be applied at Pin 15 when the program switch M is operated.

Defect Code 204

No Program Switchover

Explanation: Program switchover is not possible. Only E-program.

Possible cause: No ground from control unit Pin 6 to program switch, connector of program switch detached, program switch defective, wire has a break.

Troubleshooting: ♦D♦ Status monitoring. Operate program switch and compare to test display.

Defect Code 205

No Engine Intervention

Explanation: No torque reduction due to retarded ignition during gear-shift. This results in long slip times and premature wear of the clutch.

Possible cause: Wire from control unit Pin 24 has a short to positive.

Troubleshooting: ♦D♦ Activate components. Activate engine intervention (ignition timing intervention). A short drop in engine speed can be detected when the engine is running at operating temperature, if not, connect universal adapter and check wire Pin 24.

Defect Code 206

Incorrect Fault Display

Explanation: The error message **transmission** appears in the instrument cluster despite normal operation of the transmission.

Possible cause: The wire from control unit Pin 33 to the instrument cluster has a break or a short to positive.

Troubleshooting: Connect universal adapter and check wire.

– With ignition on measure between:
– Pin 33 and 19 – U-Batt.
– With engine on measure between:
– Pin 33 and 19 – approx. 0 V

Defect Code 207

Only Full Load Shifts (without EML)

Explanation: The control unit does not detect the throttle position correctly.

Possible cause: The wires of the throttle switch or of the throttle switches are defective.

Troubleshooting: ♦**D**♦ Status monitoring. Check the throttle angle. In the case of illogical values, check whether ground applied at Pin 6 and U-Batt at Pin 9. Ground is applied at Pin 7 when idling and U-Batt at full load.

Defect Code 300

Diagnostic Link Defective

Explanation: The diagnostic link TxD or RxD has a break or has a short to positive or ground.

The TxD link leads from the diagnostic socket Pin 20 to the EGS control unit Pin 13 and is bypassed to ground when the cover is closed.

The RxD link leads from the diagnostic socket Pin 15 to the EGS control unit Pin 25 and is bypassed to terminal 30 when the cover is closed.

Troubleshooting: Check wire.

Defect Code 301

Voltage Supply to Control Unit Defective

Explanation: The power supply to the EGS control unit Pin 35 is interrupted.

Troubleshooting: Check wire.

Defect Code 302

Selector Lever Position

Explanation: The selector lever is not in position P or N.

Troubleshooting: Set selector lever to correct position.

Defect Code 303

Selector Lever Position not Detected

Explanation: The selector lever position must be detected by the EGS control unit. As a result, the diagnostic procedure cannot be initiated in "diagnosis version 1".
Compare display of selector lever position in instrument cluster.

Possible causes:

- The wires from the selector lever switch to control unit Pin 18, 28, 29, 30 have a break or a short to positive.
- The voltage supply to the selector lever switch is interrupted.
- The selector lever switch (conductors) is defective.

Troubleshooting: Check fuse F17.
Check selector lever switch (see component testing).
Check wires to EGS control unit Pin 18, 28, 29, 30 (see component testing).

Explanation: The power supply to the EGS control unit Pin 34 is interrupted.

Troubleshooting: Check wire.

Component Testing

The instructions given in the following serve as a supplement to EGS self-diagnosis and assume that the BMW Service Tester is used to monitor the system statuses.

Notes

Observe relevant safety codes and accident prevention regulations when performing all work on the engine and transmission electrical systems.

If not otherwise specified, always switch off the ignition.

Important!

Before disconnecting the control unit or the battery, read out the defect code memory and print out complete with troubleshooting. Detach control unit connector only when the ignition is switched off.

Check wires only with the control unit connector or component connector detached.

Always check in accordance with the schematics (note connector and pin numbers).

The specified nominal values refer to a room temperature of 23 ± 5° C.

Refer to Repair Instructions for information on removal and installation as well as technical data (→ microfiche).

Tests during the troubleshooting procedure are performed at the universal adapter with the transmission wire harness or EGS control unit connected. Ensure good contacting in order to avoid contact resistances.

Only use suitable test equipment (test leads, terminals, probe tips etc.).

Kick-Down Signal

Check the kick-down signal (from the EML control unit or from the kick-down switch) by way of the universal adapter with the ignition switched on and control unit connected.

Pin No.	Accelerator pedal fully depressed	Nominal value
19–/2+	Yes	< 1 V
	No	> 10 V

If values deviate, perform ♦D♦Status monitoring EML control unit.

Connector at gearshift unit (8-pin for E-7 control)

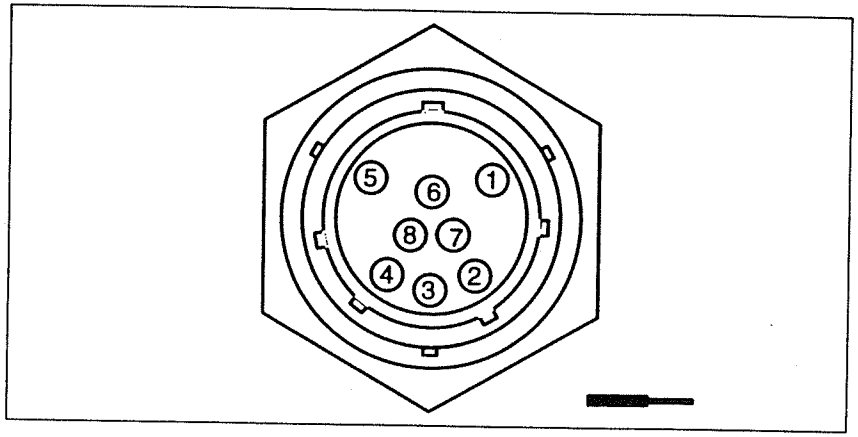

P31 24 001

Connector at gearshift unit (7-pin for E-9 control)

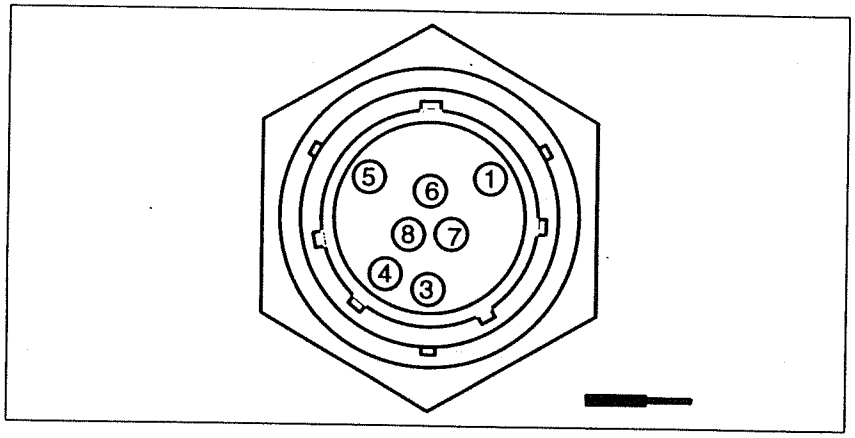

P31 24 006

Solenoid Valves, Speed Sensors and Hydraulic Pressure Regulator in the Gearshift Unit

Measure resistance of solenoid valves, speed sensors and of the hydraulic pressure regulator by way of the universal adapter with the control unit disconnected and ignition switched off (reverse lock only in GS 1.2).

Component	Pin No. at universal adapter	Pin No. at transmission connector	Nominal value
MV 1	16 / 1	5 / 8	22....60 Ω
MV 2	17 / 1	6 / 8	22....60 Ω
MV-WK	25 / 1	7 / 8	22....60 Ω
MV R-lock	20 / 1	2 / 8	22....60 Ω
MV-DR	22 / 1	1 / 8	1.7....6.5 Ω
DZF	27 / 8	3 / 4	0.7...1.8 kΩ

If values deviate, repeat test at gearshift unit, if OK. replace wire, if not, remove gearshift unit and repair defective component, replace if necessary, see Repair Instructions.

Use the T-adapter, Cartool No. **24 6 000** to perform measurements at the 8-pin and 7-pin connector of the gearshift unit.

Selector lever switch, left-hand drive

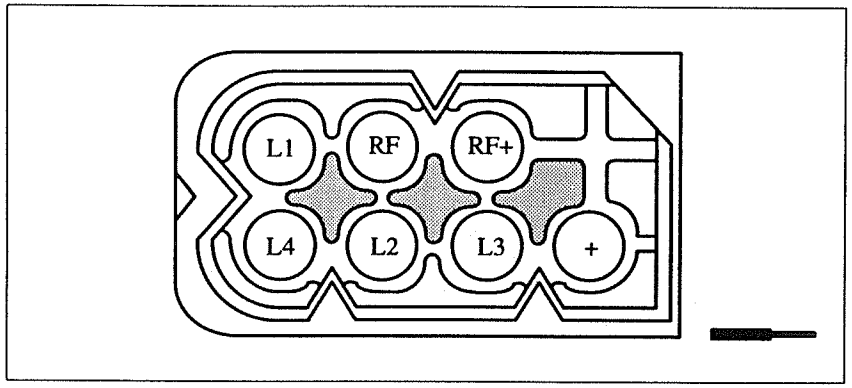

P31 24 002

Selector lever switch, right-hand drive

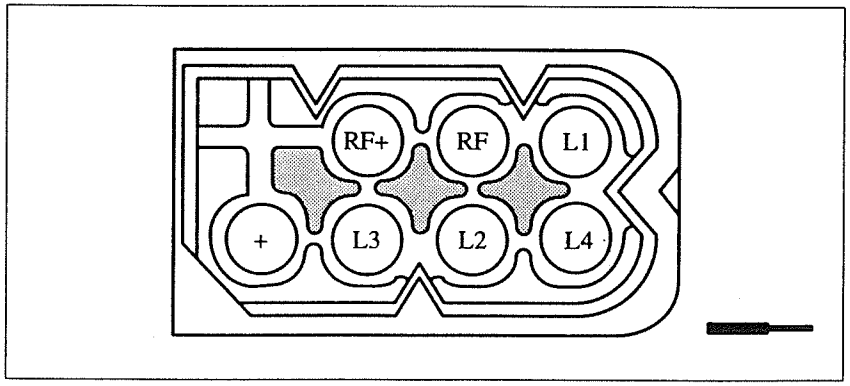

P31 24 003

Gear Selector Lever Switch

Check the gear selector lever switch by means of the universal adapter with the control unit connected and ignition switched on. Measure between Pin 19 and the specified pins. 0 corresponds to approx. 0 V, 1 corresponds to approx. 12 V.

Selector lever in position	Pin 18 (L1)	Pin 28 (L2)	Pin 29 (L3)	Pin 30 (L4)
P	1	1	0	0
R	1	0	0	1
N	0	1	1	0
D	0	0	0	1
3	0	0	1	0
2	1	0	0	0
1	1	0	1	0

If a voltage is not measured in any position, check positive supply of the selector lever switch. If activation is defective, remove selector lever switch and check in accordance with table, replace if necessary. (Pin + referred to Pin L1...L4; "1" corresponds to approx. 0 Ω and "0" more than 10 kΩ). If OK., repair wires or plug connections.

The reversing light is switched via the pins RF and RF+ in the selector lever position R.

Program button E-M-S with switching diagram (new type)

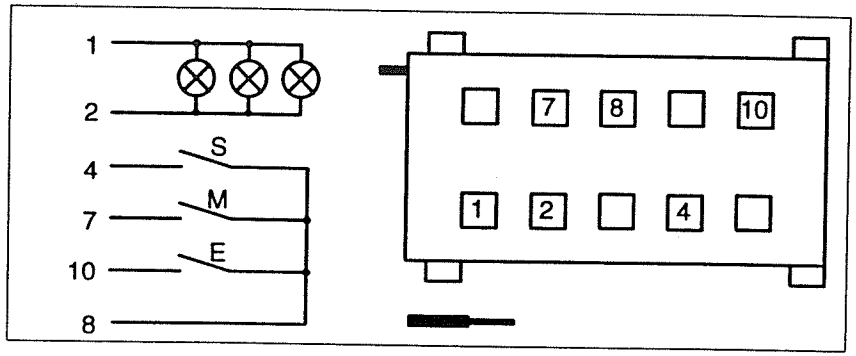

P31 24 004

Program button A-M with switching diagram (US version new type)

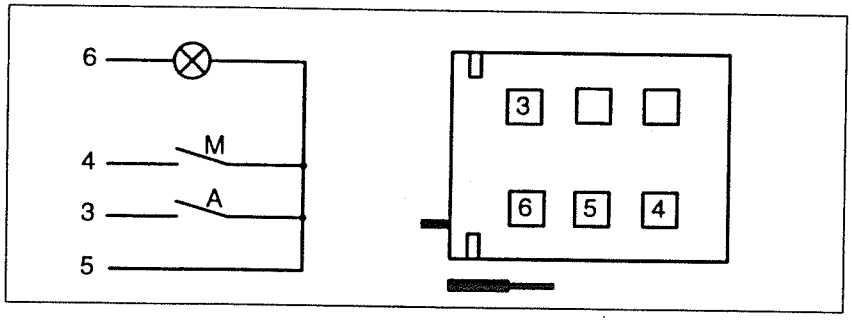

P31 24 005

Program button E-M-S (old types)

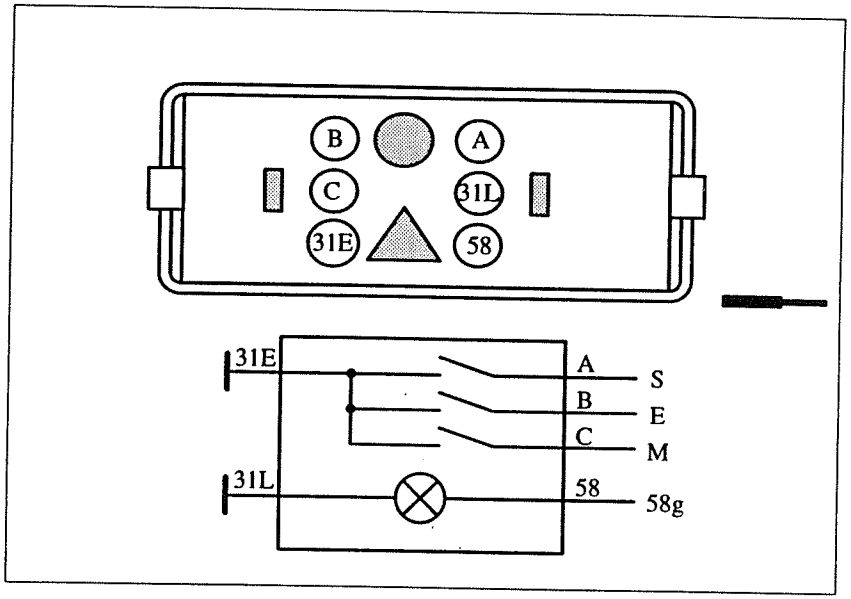

P34 24 002

Program Button

Check the program button with the aid of the universal adapter with the control unit disconnected and ignition switched off. The pin assignments are identical for all control units, only the program buttons may differ. Measure between Pin 19 and the specified pins. "0" corresponds to approx. 0 Ω, "1" corresponds to approx. > 10 kΩ.

Program button depressed			Pin No. at universal adapter		
E	M	S	14	4	15
yes	–	–	0	1	1
no	–	–	1	1	1
–	yes	–	1	0	1
–	no	–	1	1	1
–	–	yes	1	1	1
–	–	no	1	1	1

If measured values are illogical, check ground connection of the program button and repair if necessary. If OK., remove program button, check to switching diagram and switch layout, replace if necessary. If OK., check wire and plug connection, repair if necessary.

Connector layout throttle potentiometer (without EML)

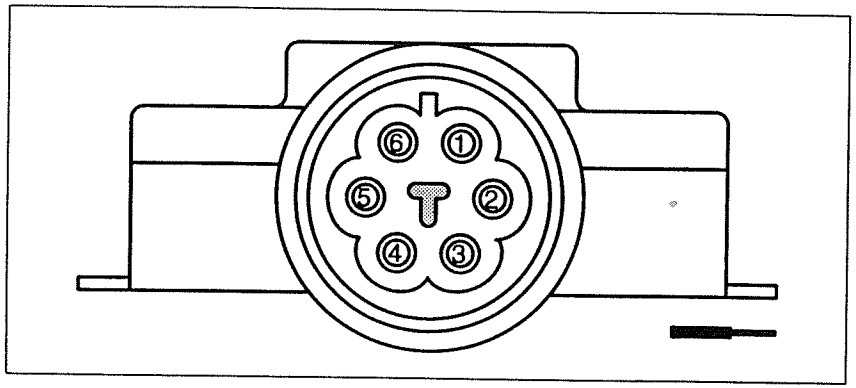

P34 24 003

Switching diagram throttle potentiometer

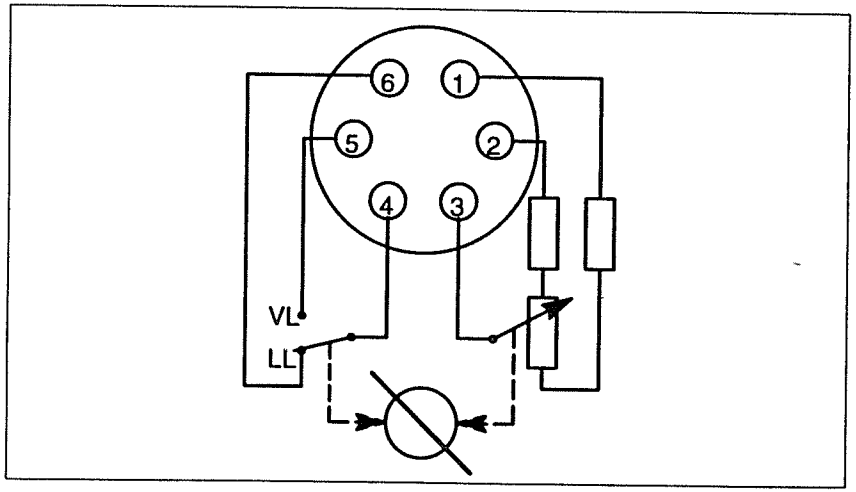

P34 24 004

Throttle Potentiometer (Vehicles without EML)

Check the throttle potentiometer with the aid of the status monitoring function in the BMW Service Tester or MoDiC. If value shown on tester display are not plausible, using universal adapter with control unit disconnected and ignition switched off, check resistances at full load and idle switch.

Throttle position	Pin No. at universal adapter	Pin No. at throttle potentiometer	Nominal value
any	9 / 6	1 / 2	3...5 kΩ
any	6 / 7	2 / 3	0.5...3.5 kΩ

The Pins 4, 5 and 6 of the throttle potentiometer are only connected to the DME control unit and not to the EGS control unit.

If values deviate, disconnect throttle potentiometer and check. If OK., repair wires and plug connections. Otherwise replace throttle potentiometer.

Electronic Transmission Control A4S 310 R (former designation THM R1)

Notes

These test instructions apply to the electrohydraulic transmission A4S 310 R (THM R1). It is operated in conjunction with control units of the generation GS 4.x.

GS 4.14	**with P/N shift-lock**
GS 4.15	**without P/N shift-lock**
GS 4.16	**Standard control unit with/without P/N shift-lock, petrol/diesel**
GS 4.19	**without P/N shift-lock from 9/90**
GS 4.21	**with interference suppression officials (authorities) vehicles**

Functional Description

The transmission control unit communicates with the following components:

- Gear selector lever switch : L1, L2, L3, L4
- Program switch: E, M, S
- Instrument cluster
- Kick-down switch
- Brake light switch (only with P/N shift-lock)
- Brake light test switch (only with P/N shift lock)
- Lifting solenoid P/N shift-lock (only with P/N shift lock)
- Solenoid valves: MV 1, MV 2, MV band, MV-WK
- Pressure regulator
- Oil sump temperature sensor
- Vehicle speed sensor
- DME control unit

Functional Requirements

The control unit sends the shift pulses for upshifts and downshifts to the gearshift unit (solenoid valves, modulation pressure). It makes decisions as regards engagement of the torque converter lockup clutch, taking comfort and safety into consideration. For this purpose, it processes in a computer program the input variables such as engine speed, output speed, injection signal, throttle (accelerator pedal) position, kick-down switch, drive program, selector lever position, A/C compressor and oil sump temperature.

Converter Lockup Clutch Control

The converter lockup clutch (WK) is activated dependent upon the accelerator pedal position, transmission output speed, drive program as well as the engaged gear (only in 3rd and 4th gear). The converter lockup clutch opens in coasting mode. After starting the engine, it is not possible to engage the converter lockup clutch by way of temperature-dependent activation.

Adaptive Gearshift Characteristic Control

When pulling a trailer or driving on steep gradients, the changed acceleration capacity of the vehicle is evaluated by the control unit. For this purpose, the control unit selects (adapts) suitable gearshift programs to avoid pedal shifts. The changed gearshift points are intentional and normal.

Gearshift Comfort Control

The gearshift quality is controlled by way of the modulation pressure and the engine intervention function (torque reduction by retarding the ignition timing). The main pressure is constantly calculated by way of an algorithm with tuning-specific parameters (engine torque, differential speed [engine speed difference before and after shifting], output speed and constant pressure component). The signal "A/C compressor ON/OFF" is supplied by the digital motor electronics (DME). The engine torque characteristic map is corrected in order to avoid a loss of gearshift comfort when the A/C compressor is switched on.

Drive Programs

The shift points for the E-(Economy)- and S-(Sports) program as well as for kick-down are stored in the form of characteristic curves in the control unit. Selection can be made with the program switch between the programs and manual shifting.

The program switch is designed as a push button connected with respect to ground.
ECE version: 3 programs selected via push button (E/S/M).
US version: 2 programs selected via push button (A/M).

- E-program: Characteristic curves based on consumption and comfort.
- S-program: Characteristic curves based on performance.
- M-program: Manual drive program
  Assignment of gears to the selector lever position in the manual drive program:

Position:	→	D	3	2	1
Gear:	→	3	3	2	1

- A-program (US only):
  Characteristic curves in position "D" based on consumption and comfort.
  Characteristic curves in position "3" and "2" based on performance.

Notes

To ensure the engine reaches its operating temperature as fast as possible, the transmission shifts on the basis of the performance-oriented

characteristic curves of the S-program in accordance with the following criteria:

- New start with transmission oil temperature less than 60° C
- Time span maximum 195 s
- up to maximum 60 km/h

The E-program is, however, indicated in the instrument cluster. After a period of 195 s has elapsed or the speed of 60 km/h has been exceeded the system switches over to the E-characteristic curves. This function can be prematurely deactivated by pressing the program button.

Drive program indication: The drive program is indicated in the instrument cluster coded via the lines L6 (E) Pin 10 and L7 (M) Pin 12. The line L5 (S) is not evaluated separately.

Instrument cluster display	L6 (E) Pin 10	L7 (M) Pin12
E	low	high
M	high	low
S	high	high
	low	low

Notes

The drive programs cannot be switched over by the EGS control unit before engine start since the control unit can only complete its initialisation phase after it has detected an engine speed.

Safety Functions

By way of plausibility checks and checking the line connections for shorts or breaks, the control unit can detect and store defects (see troubleshooting).

In the event of failure of the transmission control or when defects are detected which lead to critical driving situations (e.g. impermissible downshift), the mechanical emergency program is activated, i.e. the transmission control unit is switched off and the failure indicator activated.

A self-test of the entire safety hardware takes place during each new start.

The vehicle can only be driven with restrictions in the mechanical emergency program, i.e. only the 3rd, 4th gears and reverse can be shifted. In this case, 3rd gear is engaged in the selector lever position "2" and "1", 4th gear in position "D" and "3" and reverse in position "R". The main pressure assumes its maximum value. The reverse lock and P/N shiftlock, if installed, of the selector lever ate not active.

Notes

Downshifts engaged manually at a vehicle speed which is too high are generally not performed (Caution! A downshift from 4th to 3rd can be triggered by pulling back the selector lever to position "2" or "1"). The reverse lock prevents reverse being shifted hydraulically at a speed above approx. 8 km/h.

Fault Display (only GS 4.15)

Activation of the fault display is switched by the control unit at Pin 29. Normally (engine running, no fault), the level is referred to ground. If there is a break or a short to positive on the wire from the instrument cluster, the error message "transmission" is indicated by the instrument cluster as of an engine speed greater than approx. 500 rpm.

The error message is indicated in the instrument cluster as of an engine speed of approx. 500 rpm.

Fault Indication with Serial Data Transfer

The transmission control unit transfers data on the fault indicator line (Pin 29) relating to the transmission oil temperature and the selector lever coding (4th or 5th gear) to the instrument cluster.

The fault lamp is activated by the instrument cluster when a voltage of 12 V is applied on this line for longer than 1 s. This is the case when the EGS control unit is still in its initialisation phase (ignition ON, engine still not started), or in the emergency program or when the wire has a break (pull-up resistor in the instrument cluster).

DKT Interface

The throttle angle and the engine temperature are transferred via the DKT interface. This involves a pulse width-modulated signal (square-wave voltage with fixed frequency and variable duty factor).

At terminal 15 ON, the DME control unit transmits the engine temperature and the throttle angle half a second after detecting an engine speed greater than 500 rpm.

Faults on this line are detected by the receiver (EGS).

Transmission Oil Temperature Sensor

The transmission oil sump temperature is sensed by a temperature-dependent resistor which is soldered in the transmission wire harness.

The transmission temperature data are used for comfort control (gearshift 2–3 / 3–2 and engagement jolt) dependent on the temperature, for activation of the converter lockup clutch as well as for activation of the S-program after a new start.

The transmission oil sump temperature can be displayed with the BMW SERVICE TESTER under ♦D♦ 2 Status monitoring.

Oil Level Measurement

The permissible minimum and maximum transmission oil level is indicated with ♦D♦ 5 Special functions.

Oil temperature + °C	Oil level = H (mm)	
	Min.	Max.
20	4	14
30	9	19
40	14	24
50	16	26
60	19	29
70	23	33
80	27	37
90	32	42

This level is greatly dependent on the transmission oil temperature and is indicated corresponding to the table above.

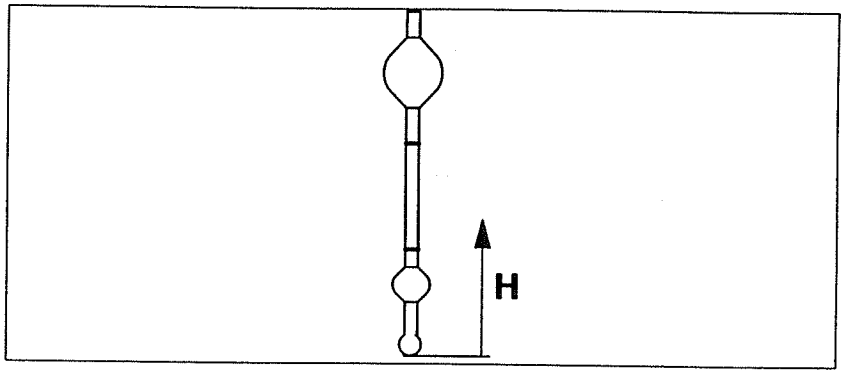

P36 24 006

The oil level should be measured as shown with the engine idling in position P on the dipstick.

P/N Shift-Lock (only in GS 4.14)

It is only possible to shift out of the positions "P" or "N" after evaluation of the signals

- brake
- vehicle speed
- engine speed
- time.

The selector lever is locked when no brake signal is detected with the engine running and the vehicle stationary.

A time delay function of approx. 0.5 sec is used for operation under winter conditions. The brake light switch is designed as a normally open contact referred to 12 V and the brake light test switch as a normally open contact referred to ground.

The shift lever is locked by way of a solenoid on the selector lever switch.

Switching Logic of Solenoid Valves

	Solenoid valve 1 Pin 48 + (Pin 54 –)	Solenoid valve 2 Pin 43 + (Pin 54 –)
1st gear	0 V	12 V
2nd gear	12 V	12 V
3rd gear	12 V	0 V
4th gear	0 V	0 V

Switching Logic on Selector Lever Switch

Coding table for the gear switch (switch referred to 12 V).
"1" corresponds to approx.12 V and "0" to approx. 0 V.

Conductors	L1	L2	L3	L4
Pin No. at EGS control unit	Pin 23	Pin 26	Pin 8	Pin 33
Selector lever position				
P	1	1	0	0
R	1	0	0	1
N	0	1	1	0
D	0	0	0	1
3	0	0	1	0
2	1	0	0	0
1	1	0	1	0

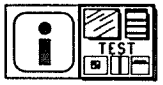

Notes on the BMW DIAGNOSTIC SYSTEM

Connect BMW Service Tester in accordance with operating instructions.

Conditions for Initialisation of the Diagnostic Procedure

- Ignition ON
- n-ab < 300 rpm
- Any selector lever position

Select EH transmission EGS with ♦D♦3.

After successfully setting up communication between the tester and control unit, the EGS control unit is in diagnostic mode and behaves as follows:

- Transmission relay in control unit has pulled up (ground supply for solenoid valves and pressure regulator is active)
- All solenoid valves are switched off (control unit does not switch positive)
- The lifting solenoid P/N shift-lock is switched off (control unit does not switch positive)
- A pressure regulator current of 200 mA is applied
- All outputs are deactivated (e.g. no information is transferred to the instrument cluster relating to which program (E-M-S) is active)
- The condition n-ab < 300 rpm no longer applies

Conditions for Component Activation

- Data transfer OK.
- Selector lever in position P or N
- Output speed < 300 rpm
- If the message "current defect detected and stored" is indicated, first print out the contents of the defect code memory then clear the defect code memory and repeat component activation.

Abbreviations

A	Output
AG	Automatic transmission
Brs	Brake signal
DK	Throttle valve
DME	Digital motor electronics
DR	Pressure regulator
DZF	Output speed signal
E	Economy
E	Input
EGS	Electronic transmission control
KD	Kick-down
Lx	Conductor x
M	Manual
ME	Engine intervention
MF	Microfiche
MV	Solenoid valve
MV-B	Solenoid valve band brake
n-ab	Output speed
n-mot	Engine speed
PWM	Pulse width-modulated
R-Sperre	Reverse lock-out
RxD	Diagnostic link initialisation
S	Sports
SG	Control unit
TD	Engine speed signal
ti	Injection signal
TR	Crankshaft reference (one per revolution)
TxD	Diagnostic link telegram
U-Batt	Battery voltage
U-Vers	Supply voltage
WK	Torque converter clutch

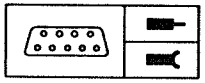

Pin Assignment

Pin Assignments at Control Unit Connector (55-pin)

Pin	Type	Description/function	Connection	Type of signal	Tester display	Notes
1	A	Lifting solenoid P/N shift-lock	Selector lever	active high	Component activation	
2	E	E-program	Program button	active low	Status display	
2	E	A-program	Program button	active low	Status display	for US version
3		Not used				
4	A	Engine intervention	DME control unit	active high	Component activation	
5		Not used				
6		Not used				
7	A	S-program indicator		active low	Component activation	not evaluated in instrument cluster at present
8	E	Position switch L3	Selector lever	active high	Status display	
9	E	Fuel consumption indication (ti-signal)			Status display	
10	A	E-program indicator	Instrument cluster	active low	Component activation	
11	E	Engine speed n-mot (TR-signal)			Status display	
12	A	M-program indicator	Instrument cluster	active low	Status display	
13	E/A	TxD				
14	E	n-ab (–)			Status display	
15	E	Brake light test switch		active low	Status display	only with P/N shift-lock

Electronic Transmission Control A4S 310 R (former designation THM R1)

Pin Assignments

Pin	Type	Description/function	Connection	Type of signal	Tester display	Notes
16		Not used				
17	E	Analog ground (temperature sensor)				
18	A	Shield speed sensor	Speed sensor	Ground		
19	E	Power ground				
20	E	n-ab (+)			Status display	
21	E	A/C compressor		active high	Status display	only in GS 4.15
21	E	A/C compressor		active low	Status display	
22	E	Oil temperature sensor (+)		NTC	Status display	
23	E	Position switch L1	Selector lever, instrument cluster	active high	Status display	
24	E	Kick-down	DDE	active low	Status display	Diesel only
25	E	RxD				
26	E	Position switch L2	Selector lever, instrument cluster	active high	Status display	
27		Not used				
28	E	Voltage supply, terminal 30			Status display	
29	A	Fault indicator	Instrument cluster		Component activation	Signal not indicated in instrument cluster before engine running
30	E	Kick-down		active low	Status display	
31	E	M-program button	Program button	active low	Status display	
32		Not used				
33	E	Position switch L4	Selector lever	active high	Status display	

Electronic Transmission Control A4S 310 R (former designation THM R1)

Pin Assignments

Pin	Type	Description/function	Connection	Type of signal	Tester display	Notes
34	E	S-program button	Program button	active low	Status display	Not in US version
35	A	Ground lifting solenoid P/N shift-lock			See component activation	
36	E	Electronic ground				
37	E	Voltage supply			Status display	Holding circuit DME control unit
38	A	Solenoid valve, torque converter clutch	Gearshift unit	active high	Component activation	
39	E	Brake light switch		active high	Status display	only for P/N shift-lock
40	A	Pressure regulator (+)	Gearshift unit		Component activation	
41	A	Pressure regulator (–)	Gearshift unit		Component activation	
42		Not used				
43	A	Solenoid valve 2	Gearshift unit	active high	Component activation	
44		Not used				
45	A	Solenoid valve band	Gearshift unit	active high	Component activation	
46		Not used				
47		Not used				
48	A	Solenoid valve 1	Gearshift unit	active high	Component activation	
49		Not used				
50		Not used				
51		Not used				
52		Not used				
53		Not used				

Pin	Type	Description/function	Connection	Type of signal	Tester display	Notes
54	A	Ground solenoid valves	Gearshift unit	active low	Component activation	The ground supply is switched off during mechanical emergency operation, i.e transmission relay in control unit drops out
55	E	Throttle signal	DME control unit	Pulse width-modulated	Status display	Only in GS 4.15
55	E	DKT interface	DME control unit	Pulse width-modulated	Status display	

Adapters

Component	Connector No.	Description	Adapter number	
Control unit	X8500	55-pin	Universal adapter. HWB 81 12 9 425 091 Connection lead for control unit HWB 81 12 9 428 908 Connection lead for periphery HWB 81 12 9 428 907	
Gearshift unit	X8521	9-pin	Test adapter	Cartool 24 06 010

Troubleshooting

Notes

- Troubleshooting with the BMW DIAGNOSTIC SYSTEM
- Battery charged, U-min = 12 V
- For hydraulic and mechanical components; see Repair Instructions for troubleshooting and testing

Explanation of Defect Code Memory:

The EGS control unit can detect 22 different defect codes with a series of additional information. It has room for 5 different locations and their additional information in its defect code memory.

Defect location: Here, the defect text from the table of defect codes is supplemented by the corresponding pin numbers of the control unit.

Type of defect: Indicated here is whether the defect is a break, a short to positive, a short to ground or a plausibility error.

Defect currently set: The response of the control unit to this statement can be in the affirmative, negative or conditionally affirmative or conditionally negative. In the case of a restricted reply to the question as to whether the defect code is currently set, the additional information "statement not sure since test conditions is not currently fulfilled" appears. This means that the control unit cannot currently check the indicated defect code since, for example, the component is not active. However, the defect code was set or not set the last time the test condition was fulfilled.

Intermittent defect: The reply to this statement is in the affirmative when the defect disappeared at least once and then reappeared. Intermittent defect codes additionally indicate how often the defect disappeared and reappeared.

Defect detected during: Here additional information is given on the operating conditions, under which the defect was detected for the first time, e.g.:

- Output speed
- Engine speed
- Oil temperature
- Battery voltage
- Pressure regulator current
- Selector lever position L1 to L4
- Transmission
- Throttle angle, accelerator pedal position
- Kick-down active yes/no
- A/C compressor
- Engine intervention
- Solenoid valves

Defect Code Table

Defect code	Type of defect	Stored by control unit
000 – 099	Defect can be assigned to one or several pins at the control unit	yes
100 – 199	Defect can be assigned to no pin at control unit (→ Plausibility)	yes
200 – 299	Defect can be localised by way of status lists and component activation	no
300 – 399	Diagnostic procedure cannot be used	no

Defect code	Defect description
1	Lifting solenoid P/N shift-lock
2	Program button
4	Engine intervention
9	KVA signal
11	Speed signal n-mot
20	Speed signal n-ab
22	Oil sump temperature sensor
23	Selector lever position
28	Battery voltage supply (perm.)
30	Kick-down switch
37	Battery voltage supply
38	Solenoid valve WK
40	Pressure regulator
43	Solenoid valve 2
45	Solenoid valve band brake
48	Solenoid valve 1
54	Ground solenoid valves
55	Throttle signal
100	Gear monitoring
101	Downshift protection
102	Overrev protection
103	EPROM
200	No kick-down shifts
201	No S-program
202	No M-program
203	No display E-program
204	No display M-program
205	No program switchover
206	No engine intervention (→ long slip times)
207	Adaptation air conditioning system defective
208	Brake light switch detection defective
209	Incorrect fault indication
300	Diagnostic link defective
301	Control unit voltage supply defective

Defect Code 1

♦D♦Defect code memory: 1 Lifting Solenoid P/N Shift-Lock

Explanation: The lifting solenoid P/N shift-lock is checked completely by the control unit during the initialisation phase by temporarily activating it. The following defects can be detected during operation depending on the condition of the lifting solenoid:

– active: Short to ground, plausibility (driver transistor defective)
– passive: Short to positive, break

Effect of defect: Mechanical emergency program.

Possible cause: Wire or winding of the lifting solenoid defective, or driver transistor defective.

Troubleshooting: ♦D♦Component activation. Measure signals. Ground is constantly applied at Pin 35, when active control unit switches positive (approx. battery voltage) to Pin 1.

Defect Code 2

♦D♦Defect code memory: 2 Program Button

Explanation: This defect code is stored when two or three of the wires to the control unit Pin 2 (E-program), 31 (M-program), 34 (S-program) are applied simultaneously to ground. Consequently, program switchover is not possible.

Effect of defect: The control unit sets the E-program.

Possible cause: Wires from program button to EGS control unit defective or program button defective.

Troubleshooting: ♦D♦Status monitoring program button. Press program button and compare with tester display. When the button is not depressed, all displays on the tester must indicate "open" and when depressed "ground" must be detected.

Defect Code 4

♦D♦Defect code memory: 4 Engine Intervention

Explanation: This defect code is stored when the wire from the control unit Pin 4 has a break or is applied to ground for longer than 3 s. If the wire is applied to ground, this defect code is also stored in the DME control unit.

Effect of defect: The ignition timing can no longer be retarded by the DME control unit and consequently the torque is no longer reduced during gearshift. To protect the clutches from excessively long slip times (→ wear), gearshifts are only carried out at maximum pressure (→ hard gearshifts) at an earlier point (→ i.e. earlier upshift).

Possible cause: Wire defective.

Troubleshooting: ♦D♦Component activation. Measure signal in accordance with text displayed on screen.

Defect Code 9

♦D♦Defect code memory: 9 KVA Signal

Explanation: There is a defect if no or 100% KVA signal (ti-signal) is detected at an engine speed between approx. 1000 rpm and 5000 rpm and at an accelerator pedal position between approx. 35% and 70%.

Possible cause: Wire to Pin 9 or injection signal from DME defective.

Troubleshooting: ♦D♦Status monitoring. Observe injection signal on display screen with engine running.

Defect Code 11

♦D♦Defect code memory: 11 Speed Signal n-mot (TR)

Explanation: This defect code is stored when the control unit receives no engine speed signal in a drive range (R, D, 3, 2, 1) at an accelerator pedal position greater than 12% and an output speed greater than 1000 rpm. The control unit can differentiate between the following types of defect:

– Break or short to ground
– Short to positive

Effect of defect: Mechanical emergency program.

Possible cause: Wires defective.

Troubleshooting: ♦D♦Status monitoring, check engine speed signal n-mot from DME control unit and EGS control unit.

Defect Code 20

♦D♦Defect code memory: 20 Speed Signal n-ab

Explanation: This defect code is stored when the control unit receives no output speed signal at an engine speed above approx. 3000 rpm in a drive range (R, D, 3, 2, 1).

Effect of defect: Mechanical emergency program.

Possible cause: Wire from EGS control unit Pin 14 and 20 to speed sensor, speed sensor, torque converter or clutches defective.

Troubleshooting:

– Jack up vehicle
– Start engine
– Engage drive range D
– ♦D♦ Status monitoring – Speed signal n-ab
(Note: The EGS speed signal n-ab is not identical to the speed-A signal)

1. Speed signal is indicated and vehicle has poor power transmission after new start.
   → Torque converter or clutches defective (automatic transmission fluid ATF burnt).
2. Speed signal n-ab equal to 0 and vehicle has good power transmission after new start.
   → Speed sensor or wires to speed sensor defective.

Defect Code 22

♦D♦Defect code memory: 22 Oil Sump Temperature Sensor

Explanation: For this defect code, the control unit can differentiate between three different types of defect.

a) Break or short to positive (→ Minimum temperature)

b) Short to ground (→ Maximum temperature)

c) Transmission temperature too high (greater than 165° C)

Effect of defect:

a), b) A substitute value of 100° C is used.

c) The transmission oil has overheated or aged prematurely. It is recommended to change the transmission oil.

Possible cause:

a), b) Wire from control unit Pin 17 and 22 to oil sump temperature sensor defective, or oil sump temperature sensor (soldered in wire harness of gearshift unit) defective.

c) Transmission overloaded.

Troubleshooting: ♦D♦Status monitoring. Compare displayed transmission oil temperature to actual temperature. A temperature of 100° C indicates the use of the substitute value.

Defect Code 23

♦D♦Defect code memory: 23 Selector Lever Position

Explanation: This defect code is stored when the engine can be started although positive is not applied at Pin 26 (→ Conductor 2 - only active in position "P" or "N").

Possible cause: Break in lines or start interlock relay defective.

Troubleshooting: Set selector lever positions P, R, N, D, 3, 2, 1 and compare with ♦D♦Status monitoring. Switching logic:

Conductor	L1	L2	L3	L4	corresponds to selector lever position
Pin	23	26	8	33	
	1	1	0	0	**P**
	1	0	0	1	**R**
	0	1	1	0	**N**
	0	0	0	1	**D**
	0	0	1	0	**3**
	1	0	0	0	**2**
	1	0	1	0	**1**

0 = 0 V, 1 = 12 V

Defect Code 28

♦D♦Defect code memory: 28 Battery Voltage Supply (permanent)

Explanation: This defect code is stored when the permanent voltage supply of the control unit is interrupted.

Effect of defect: Diagnosis information is lost, i.e. any stored defect codes are cleared from the control unit.

Possible cause: Wire break.

Troubleshooting: Check voltage supply at Pin 28.

Defect Code 30

♦D♦Defect code memory: 30 Kick-Down Switch

Explanation: This defect code is stored when the kick-down signal does not agree with the signal of the accelerator pedal position.

Effect of defect: The control unit suppresses kick-down detection.

Possible cause: Wire has short to ground or switch is defective.

Troubleshooting: ♦D♦Status monitoring. Compare displayed kick-down switch with actual situation.

Defect Code 37

♦D♦Defect code memory: 37 Battery Voltage Supply

Explanation: This defect code is stored when the voltage value is outside the valid range (9 V...16 V).

Possible cause: Voltage supply defective.

Troubleshooting: ♦D♦Status monitoring. Compare displayed voltage supply for control unit with actual situation. Check battery and alternator.

Defect Code 38

♦D♦Defect code memory: 38 Solenoid Valve Converter Clutch

Explanation: The solenoid valve for the torque converter clutch is checked completely by the control unit during the initialisation phase by briefly activating it. The following defects can be detected during operation depending on the status of the solenoid valve:

– active: Short to ground, plausibility (driver transistor defective)
– passive: Short to positive, break

Effect of defect: Mechanical emergency program.

Possible cause: Wire or winding of solenoid valve WK defective, or driver transistor defective.

Troubleshooting: ♦D♦Component activation. Measure signals. Ground is constantly applied at control unit Pin 54, when active, control unit switches positive (approx. battery voltage) to Pin 38

Defect Code 40

♦D♦Defect code memory: 40 Pressure Regulator

Explanation: The pressure regulator is checked completely by the control unit during the initialisation phase by briefly activating it. During operation, the defect is detected by internal feedback of the signal.

Effect of defect: Mechanical emergency program.

Possible cause: Wire or winding of pressure regulator defective.

Troubleshooting: ♦D♦ Component activation. Measure signals. Ground is constantly applied at the control unit Pin 41, when active, control unit switches positive current-controlled to Pin 40.

Defect Code 43

♦D♦Defect code memory: 43 Solenoid Valve 2

Explanation: The solenoid valve 2 is checked completely by the control unit during the initialisation phase by briefly activating it. The following defects can be stored during operation depending on the status of the solenoid:

– active: Short to ground, plausibility (driver transistor defective)
– passive: Short to positive, break

Effect of defect: Mechanical emergency program.

Possible cause: Wire or winding of solenoid valve 2 defective, or driver transistor defective.

Troubleshooting: ♦D♦Component activation. Measure signals. Ground is constantly applied at control unit Pin 54, when active, control unit switches positive (approx. battery voltage) to Pin 43.

Defect Code 45

♦D♦Defect code memory: 45 Solenoid Valve Brake Band

Explanation: This solenoid valve brake band is checked completely by the control unit during the initialisation phase by briefly activating it. The following defects can be detected during operation depending on the status of the solenoid valve:

– active: Short to ground, plausibility (driver transistor defective)
– passive: Short to positive, break

Effect of defect: Mechanical emergency program.

Possible cause: Wire or winding of solenoid valve band defective, or driver transistor defective.

Troubleshooting: ♦D♦Component activation. Measure signals. Ground is constantly applied at control unit Pin 54, when active, control unit switches positive (approx. battery voltage) to Pin 45.

Defect Code 48

♦D♦Defect code memory: 48 Solenoid Valve 1

Explanation: The solenoid valve 1 is checked completely by the control unit during the initialisation phase by briefly activating it. The following defects can be detected during operation dependent on the status of the solenoid valve:

– active: Short to ground, plausibility (driver transistor defective)
– passive: Short to positive, break

Effect of defect: Mechanical emergency program.

Possible cause: Wire or winding of solenoid valve 1 defective, or driver transistor defective.

Troubleshooting: ♦D♦Component activation. Measure signals. Ground is constantly applied at control unit Pin 54, when active, control unit switches positive (approx. battery voltage) to Pin 48.

Defect Code 54

♦D♦Defect code memory: 54 Ground Solenoid Valves

Explanation: This defect code is stored when it is not possible to connect or disconnect ground for solenoid valves.

Effect of defect: Mechanical emergency program.

Possible cause: Wire of ground supply to Pin 54 defective.

Troubleshooting: ♦D♦Component activation. Measure signals. Ground is constantly applied at control unit Pin 54 or ground is switched off.

Defect Code 55

♦D♦Defect code memory: 55 Throttle Signal

Explanation: This defect code is stored when the EGS control unit receives no signal or a defined defect signal (duty factor 4%) from the DME control unit relating to the throttle angle. The throttle signal is pulse width-modulated and is always monitored completely by the control unit. The control unit can differentiate between the following types of defect:

- Break or short to positive
- Short to ground
- Throttle defect detected by DME control unit.

Effect of defect: A substitute value of approx. 15% accelerator pedal position is used, i.e. the EGS control unit shifts up at a much earlier point.

Possible cause: Wire from DME control unit to EGS control unit Pin 55 defective or wires from throttle potentiometer to DME control unit defective.

Defect Code 100

♦D♦Defect code memory: 100 Gear Monitoring

Explanation: This defect code is stored when a speed ratio n-ab to n-mot for the current gear is outside the permissible slip tolerance. Monitoring is only effective at engines speeds greater than 3500 rpm.

Effect of defect: Mechanical emergency program.

Possible cause: Electrically selected gear and hydraulically engaged gear to not agree. Disturbances in hydraulic shift unit. Solenoid valves connected incorrectly.

Troubleshooting: Check solenoid valves. Check hydraulic shift unit.

Defect Code 101

♦D♦Defect code memory: 101 Downshift Protection

Explanation: This defect code is stored when the engine speed is too great for the downshift to be performed by the control unit.

Effect of defect: Mechanical emergency program.

Possible cause: Faults on the TR signal line. Defect in EGS control unit.

Troubleshooting: Check TR signal line from DME control unit to EGS control unit Pin 11.

Defect Code 102

♦D♦Defect code memory: 102 Overrev Protection

Explanation: This defect code is stored when the engine speed is too great in 1st or 2nd gear.

Effect of defect: Mechanical emergency program.

Possible cause: Vehicle was accelerated (towed) in manually engaged 1st or 2nd gear to such an extent that the engine speed was 300 rpm above the limit speed.

Defect Code 103

♦D♦Defect code memory: 103 Checksum EPROM

Explanation: This defect code is stored when a change has taken place in the EPROM.

Effect of defect: Mechanical emergency program.

Possible cause: EPROM defective.

Troubleshooting: Replace control unit

Defect Code 200

No Kick-Down Shifts

Explanation: No kick-down shifts are performed.

Possible cause: KD switch defective or wire from KD switch to control unit Pin 2 has a break or a short to positive.

Troubleshooting: ♦D♦Status monitoring. Compare displayed kick-down switch with actual situation.

Defect Code 201

No S-Program

Explanation: S-program cannot be switched.

Possible cause: Wire from program button to control unit Pin 34 has a break.

Troubleshooting: ♦D♦Status monitoring. Press program button and compare with tester display. If button is not depressed, all displays on tester must indicate "open".

Defect Code 202

No M-Program

Explanation: M-program cannot be switched.

Possible cause: Wire from program button to control unit Pin 31 has a break.

Troubleshooting: ♦D♦Status monitoring. Press program button and compare with tester display. When button not depressed, all displays on the tester must indicate "open".

Defect Code 203

No Display E-Program

Explanation: Economy program is performed but S-program is indicated in the instrument cluster.

Possible cause: Wire from control unit Pin 10 has a break or a short to positive.

Troubleshooting: ♦D♦Component activation. Activate E-display, ground must be applied at Pin 10. Trace signal to instrument cluster.

Defect Code 204

No Display M-Program

Explanation: Economy program is performed but S-program is indicated in the instrument cluster.

Possible cause: Wire from control unit Pin 12 has a break or a short to positive.

Troubleshooting: ♦D♦Component activation. Activate M-display, ground must be applied at Pin 12. Trace signal to instrument cluster.

Defect Code 205

No Program Switchover

Explanation: Program switchover is not possible. Only E-program.

Possible cause: No ground at program button. Program button defective.

Troubleshooting: ♦D♦Status monitoring. Press program button and compare to tester display. If button is not depressed, all displays on the tester must indicate "open". If button is depressed, the corresponding display on the tester must indicate "ground".

Defect Code 206

No Engine Intervention

Explanation: Torque is not reduced by retarding ignition during gearshift procedure. This results in longer slip times and premature wear of the clutches.

Possible cause: The wire from the control unit Pin 4 has a short to positive.

Troubleshooting: ♦D♦Component activation. Activate engine intervention (ignition timing [angle] intervention). A temporary drop in engine speed can be determined with the engine running at operating temperature, if not, connect universal adapter and check wire Pin 4.

Defect Code 207

Adaptation Air Conditioning System Defective

Explanation: Alternate gearshifts can occur when the air conditioning system is activated.

Possible cause: The wire from control unit Pin 21 is defective.

Troubleshooting: ♦D♦Status monitoring. Compare displayed A/C compressor to actual situation. A voltage of 12 V is applied to Pin 21 when the A/C compressor is active.

Defect Code 208

Detection Brake Light Switch Defective

Explanation: The selector lever cannot be engaged in a drive range despite the brake pedal being depressed (only with P/B shift-lock).

Possible cause: The wire to the control unit Pin 39 is defective.

Troubleshooting: ♦D♦2 Status monitoring. Compare displayed brake light switch to actual situation.

- A voltage of 12 V is applied at Pin 39 when the brake light switch is active
- Ground is applied at Pin 15 when the brake light test switch is active

Defect Code 209

Incorrect Fault Display

Explanation: The transmission fault lamp lights in the instrument cluster despite the transmission operating normally.

Possible cause: The wire from the control unit Pin 29 to the instrument cluster has a break or a short to positive.

Troubleshooting: ♦D♦ 3 Component activation. Activate fault display. Ground must be applied at Pin 29. Trace signal to instrument cluster.

Connect universal adapter and check wires.
During normal operation (not diagnostic mode), following levels must be applied:

- With ignition ON measure between:
  Pin 29 and 19 – approx. battery voltage
- With engine ON measure between:
  Pin 29 and 19 – approx. 0 V

Defect Code 300

Diagnostic Link Defective

Explanation: The diagnostic link TxD or RxD has a break or has a short to positive or ground.

The TxD link leads from the diagnostic socket Pin 20 to the EGS control unit Pin 13 and is bypassed to ground when the cover of the diagnostic socket is closed.

The RxD link leads from the diagnostic socket Pin 15 to the EGS control unit Pin 25 and is bypassed to terminal 30 when the cover of the diagnostic socket is closed.

Troubleshooting: Check wire.

Defect Code 301

Control Unit Voltage Supply Defective

Explanation: The power supply to the EGS control unit Pin 37 is interrupted.

Troubleshooting: Check wire.

Component Testing

The following instructions serve as a supplement to the EGS self-diagnosis and assume that the BMW Service Tester is used to monitor the system statuses.

Notes

Observe safety codes and accident prevention regulations when performing all work on the engine and transmission electrical systems.

If not otherwise specified, always switch off the ignition.

Important!

Before disconnecting the control unit or the battery, read out the defect code memory and print out complete with troubleshooting. Detach control unit connector only when the ignition is switched off.

Check wires only with the control unit connector or component connector detached.

Always proceed in accordance with the schematics (note connector and pin numbers).

The specified nominal values refer to a room temperature of 23 ± 5° C.

Refer to Repair Instructions for information on removal and installation as well as Technical Data (→ microfiche).

Tests during troubleshooting are performed at the universal adapter with the transmission wire harness or EGS control unit connected. Ensure good contact in order to avoid contact resistances.

Only use suitable test equipment (test leads, terminals, probe tips etc.).

Kick-Down Switch

Check the kick-down switch by means of the universal adapter with the ignition switched on and control unit connected.

Pin No.	Operation	Nominal value
30+/19–	Yes	< 1 V
	No	> 10 V

If values deviate, check wire as well as plug-and-socket connection from control unit to kick-down switch and repair if necessary.
If OK.: Remove kick-down switch, check and repair if necessary.

Oil Temperature Sensor

If the displayed oil temperature in ♦D♦2 Status monitoring does not agree with the actual status, measure resistance of the oil temperature sensor with the control unit disconnected and ignition switched off.

Pin No. at universal adapter	Pin No at 9-pin transmission connector	Nominal value at 20° C	Nominal value at 80° C
22/17	3/4	14...44 kΩ	1.5...4 kΩ

If values deviate, check wire and plug-and-socket connection from control unit to transmission and repair if necessary. If OK.: Replace wire harness in transmission control unit.

Solenoid Valves and Hydraulic Pressure Regulator

Check resistance of solenoid valves and of the hydraulic pressure regulator by means of the universal adapter with the control unit disconnected and ignition switched off.

Valve	Pin No. at universal adapter	Pin No. at 9–pin transmission connector	Nominal value
MV 1	48/54	8/5	14...22 Ω
MV 2	43/54	6/5	14...22 Ω
MV-WK	38/54	7/5	14...22 Ω
MV-B	45/54	2/5	6...20 Ω
MV-DR	40/41	9/1	2...6 Ω

If values deviate, repeat test at gearshift unit, if OK. repair wire, if not OK. remove gearshift unit and repair or replace solenoid valves. See Repair Instructions.

9-pin connector on gearshift unit

Use the T-adapter Cartool order No. 24 6 010 to make measurements at the 9-pin connector

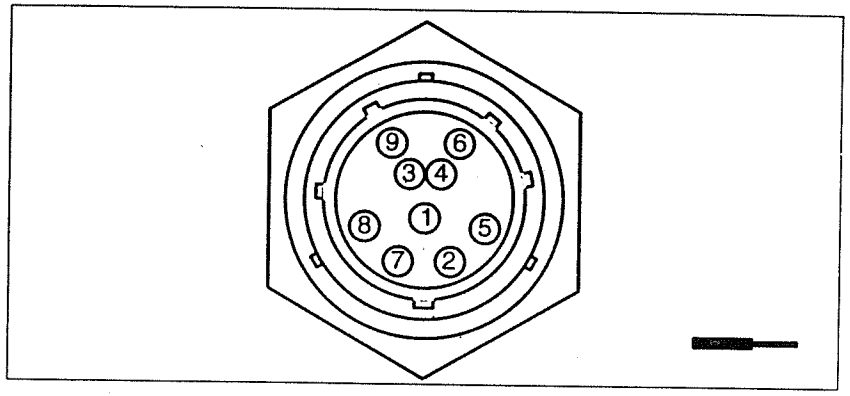

P36 24 007

Selector lever switch, left-hand drive

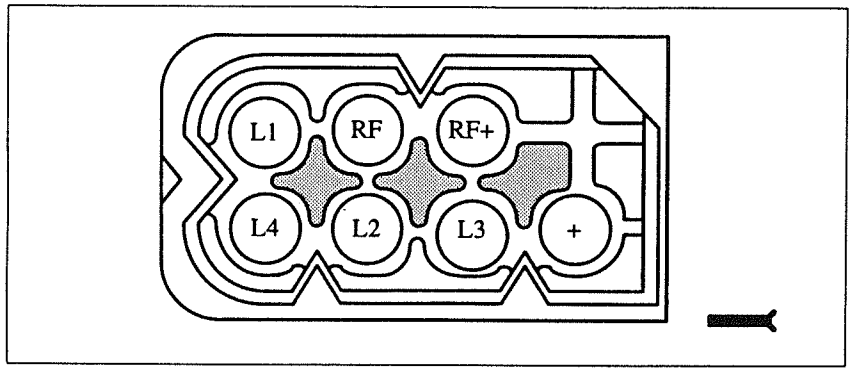

P36 24 004

Selector lever switch, right-hand drive

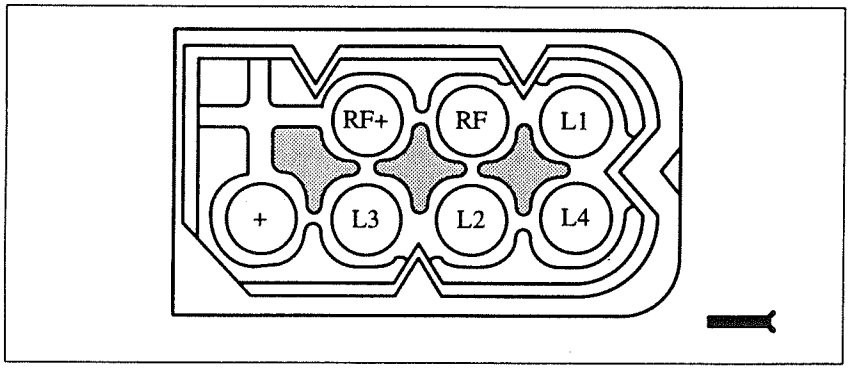

P36 24 005

Gear Selector Lever Switch

Check the gear selector lever switch by means of the universal adapter with the control unit connected and ignition switched on. Measure between Pin 1 and the specified pins. "0" corresponds to approx. 0 V, "1" corresponds to approx. 12 V.

Selector lever in position	Pin 23 (L1)	Pin 26 (L2)	Pin 8 (L3)	Pin 33 (L4)
P	1	1	0	0
R	1	0	0	1
N	0	1	1	0
D	0	0	0	1
3	0	0	1	0
2	1	0	0	0
1	1	0	1	0

If a voltage is not measured in any position, check positive supply to the selector lever switch. If activation is defective, remove selector lever switch and check in accordance with table, replace if necessary. (Pin + referred to Pin L1...L4; "1" corresponds to approx. 0 Ω and "0" to more than 10 kΩ). If OK., replace wires or plug connections.

The reversing light is switched via the pins RF and RF+ in the selector lever position R.

Program Button

Check the program button with the aid of the universal adapter with the control unit connected and ignition switched on. Measure between Pin 19 (–) and the specified pins. "0" corresponds to approx. 0 V, "1" corresponds to approx. 12 V.

Program button depressed			Input in control unit Pin No.			Output from control unit Pin No.		
E	M	S	2	31	34	10	12	7
yes	–	–	0	1	1	0	1	1
no	–	–	1	1	1	0	1	1
–	yes	–	1	0	1	1	0	1
–	no	–	1	1	1	1	0	1
–	–	yes	1	1	0	1	1	0
–	–	no	1	1	1	1	1	0

If inputs in control unit are not plausible: Check ground connection to program button (Pin 31 E at socket, see diagram) and repair if necessary. If OK., remove program button, check in accordance with switch diagram and replace if necessary. If OK., check wire and plug connection, repair if necessary. Otherwise replace control unit.

If outputs from the control unit are not plausible, the program display in the instrument cluster indicates incorrect reading or does not function.

Program button S-E-M with switching diagram

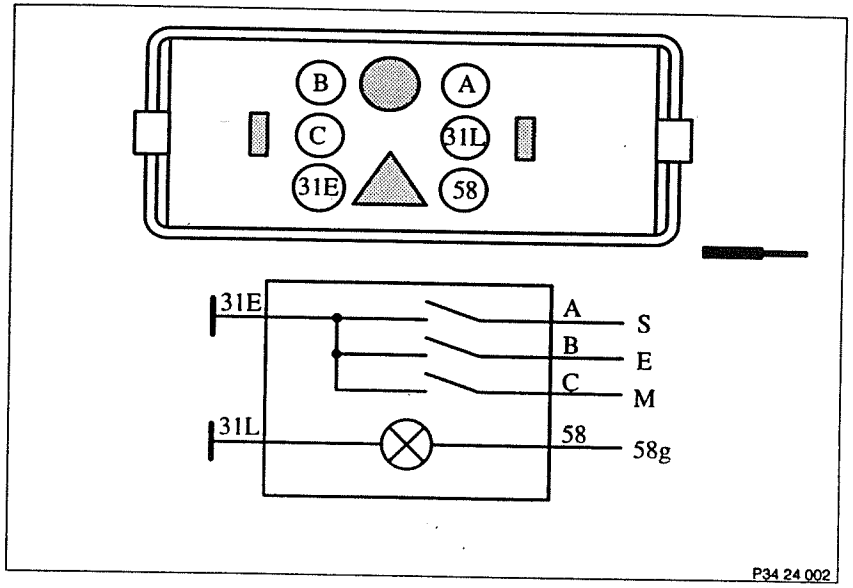

Program button A-M with switching diagram (US-version)

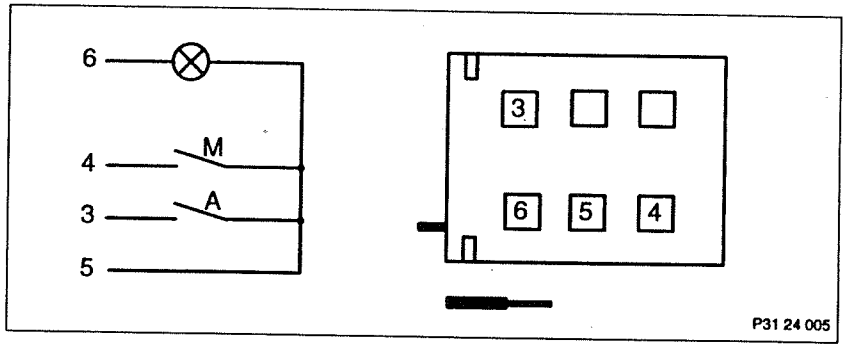

Speed Sensor n–ab

If the displayed output speed in ♦D♦2 Status monitoring does not agree with the actual status, measure the resistance of the DZF by means of the universal adapter with the control unit disconnected and ignition switched off.

Pin No. at universal adapter	Pin No. at 2-pin transmission connector	Operation	Nominal value
20/14	1/2	None	approx. 3 kΩ

If value deviates, check wire as well as plug-and-socket connection from control unit to speed sensor and repair if necessary. If OK.: Repair or replace speed sensor.

Notes

These test instructions apply to the electrohydraulic transmission A5S 310Z. It is operated in conjunction with control units of the generation GS7.1x.

Functional Description

Functional Requirements

The control unit sends the shift pulses for upshifts and downshifts to the gearshift control unit (solenoid valves, modulation pressure) and decides upon the corresponding torque converter clutch engagement, taking comfort and safety into consideration. For this purpose, it processes in a computer program the input variables such as engine speed, output speed, turbine speed, injection signal, throttle (accelerator pedal) position, kickdown switch, drive program, selector lever position and oil sump temperature.

Converter Lockup Clutch Control

The converter lockup clutch is activated dependent upon the accelerator pedal position, transmission output speed, drive program, transmission oil temperature as well as the engaged gear (only in 4th and 5th gear).

Adaptive Gearshift Characteristic Control

When pulling a trailer or driving on steep gradients, the changed acceleration capacity of the vehicle is evaluated by the control unit. For this purpose, the control unit selects (adapts) suitable gearshift programs to avoid pedal shifts. **The changed gearshift points are intentional and normal.**

Adaptive Pressure Control

The adaptive pressure control improves the gearshift quality over the lift of the vehicle. During an upshift, the slip times are measured and compared to a nominal value range. The mean deviations are then stored. As soon as a programmed limit value is exceeded, the pressure is increased or reduced in steps of 0.1 bar. In this way, the control system corrects engine scatter, compensates for differences in the friction lining and adapts to altitude.

Gearshift Comfort Control

The gearshift quality is controlled by way of the modulation pressure and the engine intervention function (torque reduction by retarding the injection timing). The main pressure is constantly calculated by way of an al-

gorithm (methodical computing) with tuning-specific parameters (engine torque, differential speed [engine speed difference before and after shifting], output speed and constant pressure component).

Transmission Oil Temperature Sensor

The transmission oil sump temperature is sensed by a temperature-dependent resistor which is soldered in the transmission wire harness. Engagement of the torque converter clutch is controlled dependent on the transmission oil temperature.

The transmission oil sump temperature can be displayed with the BMW Service Tester under ♦D♦ 2 Status monitoring.

Oil Level Measurement with Dipstick

The permissible minimum and maximum transmission oil level is indicated with ♦D♦ 5 Special functions.

Oil temperature + ° C	Oil level = H (mm)	
	Min.	Max.
30	3	16
40	8	23
50	12	31
60	16	39
70	21	46
80	26	53
90	31	59

This level is greatly dependent on the transmission oil temperature and is indicated corresponding to the table above.

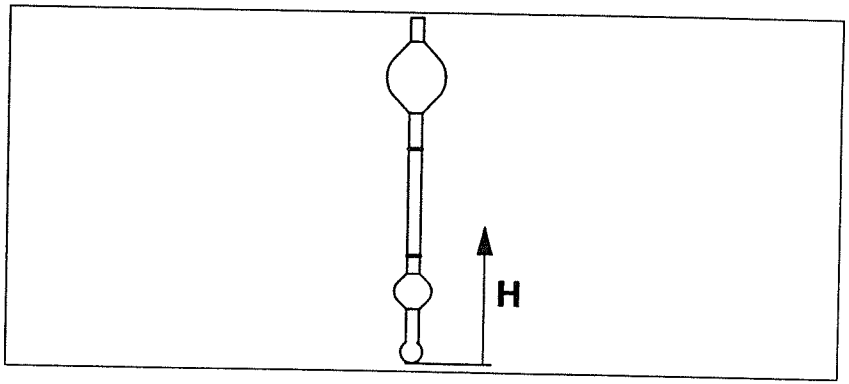

P34 24 007

The oil level should be measured as shown with the engine idling in position P on the dipstick.

Oil Level Measurement with Filler/Overflow Screw Plug

Checking oil level:

The vehicle must be positioned horizontally and the transmission hand warm (between 30° C and 55° C).

The transmission oil sump temperature can be displayed and checked with ♦D♦ 2 Status monitoring.

Run engine in selector lever position P. Open filler screw and if necessary top up oil till it flows out of the filler/overflow opening.

Oil Change during Inspection or Filling after Repair

After screwing in the drain plug, with the engine stationary, the system is filled with ATF oil up to overflow (do not close off overflow opening). Start engine, shift transmission several times from P to drive range 2 and immediately afterwards top up oil via the filler opening until overflow in selector lever position P. Close off filler/overflow screw plug.

Conditions

– Transmission hand warm (between 30° C and 55° C)
– Topping up oil at room temperature

DKT Interface

The throttle angle and the engine temperature are transferred via the DKT interface. This involves a pulse width-modulated signal (square-wave voltage with fixed frequency and variable duty factor).

At terminal 15 ON, the DME control unit transmits the engine temperature and the throttle angle half a second after detecting an engine speed greater than 500 rpm.

Faults on this line are detected by the receiver (EGS).

Drive Programs

3 drive programs can be selected with the program switch.

– E-program: Characteristic curves based on consumption and comfort
– S-program: Characteristic curves based on performance
– * -program: Winter program (starting off in 2nd gear)

Selector lever position	*-program	E-program	S-program
D	2-5	1-5	1-4 (5)
4	Hold 4th gear	1-4	1-4
3	Hold 3rd gear	1-3	1-3
2	Hold 2nd gear	1-2 trailer program	1-2 trailer program

The **E-program** is activated automatically after each new engine start. All gears are shifted based on consumption and comfort.

In the **S-program**, the 5th gear is only shifted when the engine speed leaves the range for 4th gear.

In the **winter program** *, 1st gear is not shifted in position D and the upshift takes place much earlier, the positions 2 to 4 correspond to the M-program of the previous transmission control systems.

In the **trailer program**, 2nd gear is engaged after the first gear has left its respective range.

Drive program indication: The current drive program is displayed in the instrument cluster. For this purpose, only the signals of the lines L6 (E) Pin 39 at the control unit and L7 (*) Pin 13 are evaluated.

Display in instrument cluster	Pin 39 E-program	Pin 13 *-program
S	open	open
E	Ground	open
*	open	Ground
	Ground	Ground

Notes

The drive programs cannot be switched over by the EGS control unit before engine start since the control unit can only complete its initialisation phase after it has detected an engine speed.

Depending on the engine temperature which is signalled to the EGS control unit when the vehicle is started, the part load shift points are shifted such that the engine reaches its operating temperature as fast as possible.

Fault Indication with Serial Data Transfer

Via the fault indication line (Pin 25), the transmission control unit transfers information relating to the transmission oil temperature and the selector lever coding (4th or 5th gear) to the instrument cluster.

The instrument cluster sends the "transmission" error message when a voltage of 12 V is applied to this line for longer than 1 sec. This is the case when the EGS control unit has assumed the emergency program or when the line has a break (pull-up resistor in the instrument cluster).

Safety Functions

By way of plausibility checks and checking the line connections for shorts or breaks, the control unit can detect and store defects (see Troubleshooting 2460.4A-20).

Manually engaged downshifts are not carried out at excessively high speeds. At a vehicle speed above approx. 8 km/h, the reverse lock (solenoid valve 3) prevents reverse being shifted hydraulically.

In the event of failure of the transmission control or when defects are detected which lead to critical driving situations (e.g. impermissible downshifts), the mechanical emergency program is activated, i.e. the transmission control unit is switched off and the failure display activated. A self-test of the entire safety hardware is performed during each new start.

Restricted driving of the vehicle is still possible in the emergency program (→ 4th gear). Various substitute programs are also made available depending on the type of defect which has occurred. For instance, in the case of solenoid valve 1 having a short to positive, only restricted gearshifts from 2nd to 4th gear are performed and the fault indicator is activated.

P/N Shift-Lock (Japan and US Version Only)

It is only possible to shift out of the position "P" or "N" after evaluation of the signals

- Brake (brake light switch or brake light test switch)
- Vehicle speed
- Engine speed
- Time

The selector lever is locked when no brake signal is detected with the engine running and the vehicle stationary. A time delay function of approx. 0.5 sec is used for operation under winter conditions. The brake light switch is designed as a normally open contact referred to 12 V and the brake light test switch as a normally open contact referred to ground. The shift lever is locked by way of a solenoid on the selector lever switch.

Interlock (Japan and US Version Only)

It is only possible to remove the ignition key when the selector lever is in position "P".

After the ignition key has been removed, the selector lever is locked in position "P".

This locking function takes place on a purely mechanical basis with a cable assembly.

Compound system of signals for transmission control

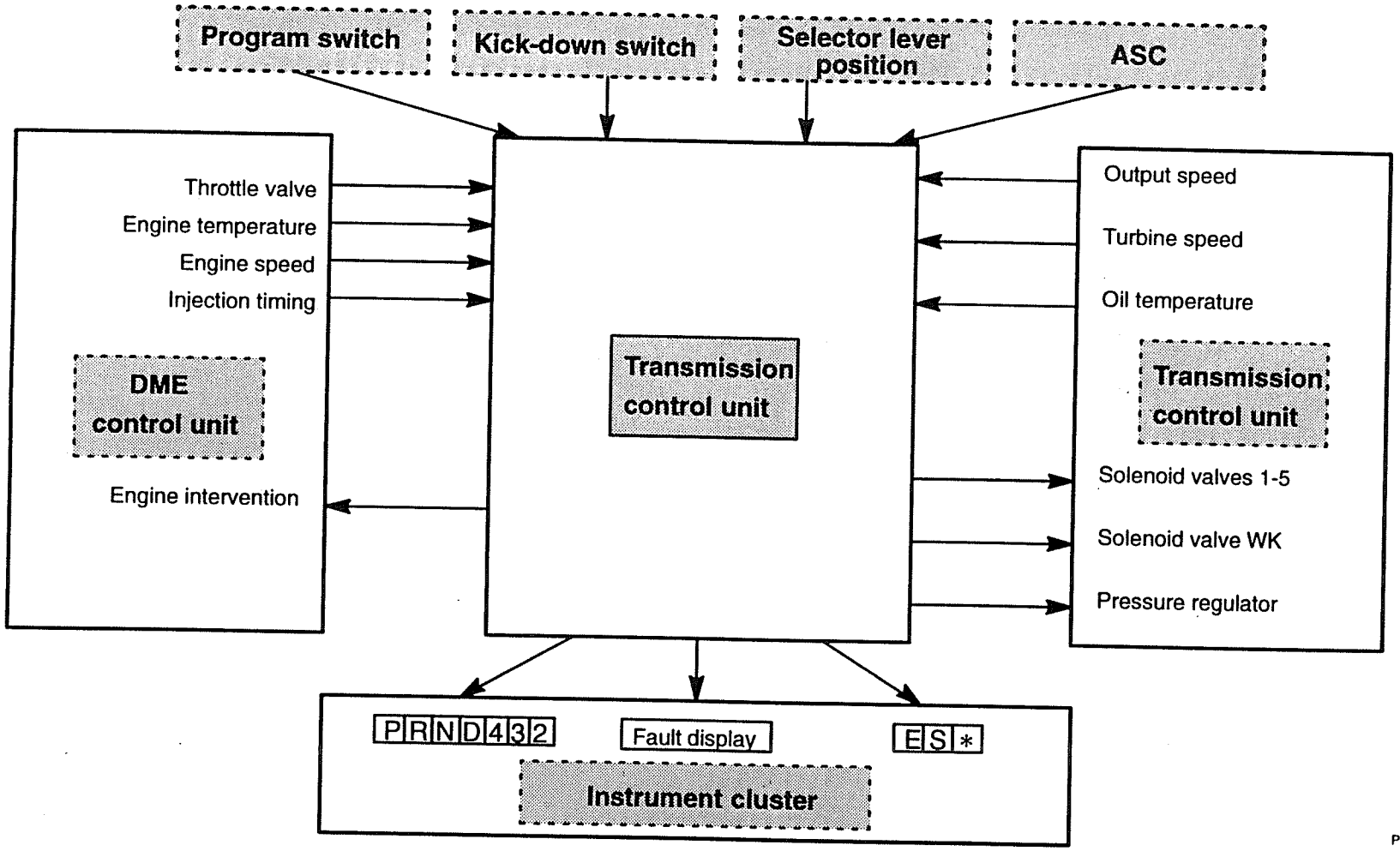

P34 24 003

Switching Logic of Solenoid Valves

Pos.	Gear	MV 1	MV 2	MV 3	MV 4	MV 5	MV-WK
	1	+	+	+	–	–	–
	2	–	+	+	–	–	–
D	3	–	–	+	+/–	–	–
	4	–	–	–	–	–	+/–
	5	+	–	–	–	+/–	+/–

+ = Solenoid valve ON (current flowing
– = Solenoid valve OFF (current not flowing)

The solenoid valves 1, 2 and 3 are the actual shift valves of the transmission.
The solenoid valves 4 and 5 are gear change valves. They are only used as auxiliary valves for upshifts and downshifts to facilitate "smooth" gearshift.
Power is cut to all the solenoids in the event of the transmission control failing.

Switching Logic of Position Inputs

Conductor	L1	L2	L3	L4
Pin No. at EGS control unit	Pin 36	Pin 8	Pin 37	Pin 9
Selector lever position				
P	1	1	0	1
R	1	0	0	0
N	1	1	1	0
D	0	0	0	1
4	0	0	1	1
3	1	0	1	1
2	0	0	1	0

Coding table for selector lever switch (switch referred to 12 V).
"1" corresponds to approx. 12 V and "0" to approx. 0 V.

Notes on the BMW DIAGNOSTIC SYSTEM

Load diagnosis disks for the E-34 Series and connect BMW Service Tester in accordance with operating instructions.

Conditions for Initiating the Diagnostic Procedure

– Ignition ON
– n-ab < 300 rpm
– Any selector lever position

Select EH transmission EGS with ♦D♦ 3.

After successfully setting up communication, the control unit operates as in normal operation and the condition n-ab < 300 rpm need no longer be observed.

Diagnosis with BMW Service Tester

After the identification page you will reach the selection overview with ♦⇓♦ . You will recognize the possible program options by the inverse selection numbers:

– 1 Read defect code memory
– 2 Status monitoring
– 3 Activate components
– 5 Special functions
– 6 Output check code
– 9 Clear defect code memory

In addition to the possible branch functions with the selection numbers, the inverse arrows (bottom right of display screen, top right on MoDiC display) indicate which other branches are additionally possible. Generally, the branch numbers agree with the pin numbers on the EGS control unit.

Generally applicable:

With ♦⇑♦ or ♦⇓♦ you will move one level higher or lower. This means the statements become more general or specific.

With ♦⇐♦ or♦⇒♦ you will go to the previous or next page in the level.

1 Read Defect Code Memory

In this program part, the contents of the defect code memory in the EGS control unit are displayed in plain text. In addition, condition variables are indicated, under which the defect occurred the first time. Refer to defect code table page 2460.4A-21 for defects which can be stored by the control unit.

2 Status Monitoring

In this program part, inputs and outputs on the EGS control unit can be checked.

Drive program indication

Program button (input)		
12 (Pin 12 on control unit)	S	open
45 (Pin 45 on control unit)	E	open
Program button (output)		
17 (Pin 17 on control unit)	S	open
39 (Pin 39 on control unit)	E	Ground
Program button (input/output)		
13 (Pin 13 on control unit)	*	open

Program button input: This indicates which program button has been depressed. This means the control unit detects which line from the program button is connected to ground.

Program button output: This indicates the drive program which the EGS control unit signals to the instrument cluster or which drive program is active.

The instrument cluster (E34) only receives the signal E (Pin 39 on control unit) and * (Pin 13 on control unit). The corresponding program is indicated in accordance with this logic:

Display in instrument cluster	Pin 39 E-program	Pin 13 *-program
S	open	open
E	Ground	open
*	open	Ground
	Ground	Ground

Important!

If the control unit detects ground at two or three of the Pins 12, 45 or 13 at the same time, this is entered in the defect code memory and only the E-program is active.

Selector lever position

36 L1 (Pin 36 on control unit)	12 V
8 L2 (Pin 8 on control unit)	12 V
37 L3 (Pin 37 on control unit)	open
9 L4 (Pin 9 on control unit)	12 V

corresponds to
1 selector lever position: P

Indicated here is the Pin 36 (L1), 8 (L2), 37 (L3) and 9 (L4) at which the control unit detects "positive". The engaged drive range is then derived corresponding to the table (1 corresponds to battery voltage).

Conductor	L1	L2	L3	L4
Pin No. at EGS control unit	Pin 36	Pin 8	Pin 37	Pin 9
Selector lever position				
P	1	1	0	1
R	1	0	0	0
N	1	1	1	0
D	0	0	0	1
4	0	0	1	1
3	1	0	1	1
2	0	0	1	0

Accelerator Pedal Position

This display shows the throttle information the EGS control unit (Pin 35) receives from the DME control unit.

Kick-Down Switch

Pin 18 must be applied to ground when the kick-down switch is depressed. The input is open at Pin 18 when kick-down is not active.

Brake light switch, brake light test switch (only for P/N shift-lock)

The brake light switch Pin 10 is designed as a normally open contact referred to battery voltage and the brake light test switch Pin 50 as a normally open contact referred to ground.
The EGS control unit requires the brake signal to deactivate the solenoid P/N shift-lock. When slowly depressing the brake pedal, the brake light switch must close first followed by the brake light test switch.

Transmission Oil Temperature

The transmission oil temperature detected by the control unit is indicated here. The substitute value is indicated if no temperature sensor is installed or if there is a break or short on the wire to Pin 21/22.

Control Unit Supply Voltage

The EGS control unit supply voltage is indicated here.

Engine Speed, Web Speed, Output Speed

The specified engine speed is output here with a resolution of 32 rpm.

Injection Signal

The injection signal received by the EGS control unit from the DME control unit is indicated here.

Solenoid Valves Output – Feedback

30 MV 1 (output) (Pin 30 on control unit)	OFF Open
33 MV 2 (output) MV 2 (feedback) (Pin 33 on control unit)	ON Ground
32 MV 3 (output) MV 3 (feedback) (Pin 32 on control unit)	ON Ground
6 corresponds to: Gear	2

The solenoid valve which is (should be) activated by the control unit is indicated here. The feedback (internally in control unit) indicates whether activation is output.

The feedback must be applied to ground when the solenoid valve is activated.

The feedback must be open when the solenoid valve is not activated.

Otherwise a defect is present.

The corresponding gear is assigned in accordance with the table:

	Solenoid valve 1	Solenoid valve 2	Solenoid valve 3
1st gear	1	1	1
2nd gear	0	1	1
3rd gear	0	0	1
4th gear	0	0	0
5th gear	1	0	0

1 corresponds to "ON" or active,
0 corresponds to "OFF" or not active.

The first four gears can only be activated when the vehicle is stationary with the engine running (**Attention!** Apply handbrake). For this purpose the drive program and selector lever position must be selected in accordance with the table.

	Program	Selector lever position
1st gear (P/N/1)	E or S	P, R, N, D, 4, 3, 2
2nd gear	*	P, N, D, 2
3rd gear	*	3
4th gear	*	4

The comparison of the display on the BMW Service Tester with the actual status provides an indication as regards the function of the solenoid valves.

Status List

You can use the status list if you wish to display two statuses together on one screen page.

For example you wish to display

"1 Selector lever position: ***"
and
"6 corresponds to: *th gear"

on one screen page.

For this purpose enter 1 on the screen page "EGS Status monitoring 2/7" and acknowledge
and enter 6 on screen page "EGS Status monitoring 6/7"
and acknowledge.

With ♦⇓♦ you then reach the status list, in which the required status monitoring is displayed. If you have still not selected any numbers, with ♦⇓♦ you can call up an information page which explains how to compile the status list.

3 Activate Components

In this program part, you can have the control unit activate a specific component (e.g. solenoid valve).

You can choose between permanent or periodical (at second intervals) activation of the component. The advantage offered by periodical activation is that the solenoid valves can be heard to click. Permanent activation should be used for measuring signals.

Component activation is interrupted immediately if you

- Leave position P or N
- Turn to next component on the display screen

Activation of the ignition timing intervention takes place approx. every three seconds. A drop in speed is then discerned when the engine is running.

Conditions for Component Activation

- Data transfer OK.
- Selector lever in position P or N
- Output speed < 300 rpm
- If the message "current defect detected and stored" is indicated, first print out the contents of the defect code memory then clear the defect code memory and repeat component activation.

5 Special Functions

Special functions are offered in this program part.

1 Oil level check

On vehicles equipped with a dipstick, the transmission oil temperature must be at approx. 80° C for correct oil level measurement since the oil level depends greatly on temperature.

The EGS control unit receives the transmission oil temperature via a temperature sensor. These level fluctuations are taken into consideration in the table, Page 2460.4A-2. They are specified by the program automatically corresponding to the transmission oil temperature.

The prerequisites for oil level measurement:

- Idle speed
- Selector lever in position P
- Transmission oil temperature within range 30° C to 90° C

are monitored by the program.

Note:
The prerequisites for transmissions equipped with filler/overflow screw plug

- Idle speed
- Selector lever position P
- Transmission oil temperature within range 30° C to 50° C

are also monitored automatically by the program.

2 Sensing P/N Shift-Lock

A "learn function" is integrated in the EGS control unit. This means the control unit must first learn whether the solenoid of the P/N shift-lock is installed or not.

If no solenoid is installed, the output for this is not included in the diagnostic procedure. This means a break at Pin 2 is not stored in the defect code memory.

This output is included in the diagnostic procedure when the control unit has detected at least once that a solenoid is connected. This means that the EGS control unit enters a break at Pin 2, for instance, in the defect code memory and also triggers the emergency program.

Detection of a P/N shift-lock by the control unit is also indicated on the screen page of the control unit information.

Important!

On completion of work on the solenoid of the P/N shift-lock, check that the EGS control unit has sensed that the solenoid is installed.

This learn function is no longer a feature of control units as of generation number 000 020 G 711.

6 Output Check Code

Here an explanation is provided indicating that after pressing the R-key you will receive a check code printout which must be sent in as part of a warranty claim. Enter the date and your dealer number on this check code.

Also printed out are the identification data of the EGS control unit as well as the contents of the defect code memory in hexadecimal code.

9 Clear Defect Code Memory

On completion of repairs, clear the defect code memory with this function. If a defect is stored immediately by the control unit, the defect code memory can be cleared before all defects have been rectified.

Abbreviations

A	Output
AG	Automatic transmission
Brs	Brake signal
DK	Throttle valve
DKT	Signal for transfer of throttle angle and engine temperature during start
DME	Digital motor electronics
DR	Pressure regulator
DZF	Output speed sensor
E	Economy
E	Input
EGS	Electronic transmission control
KD	Kick-down
Lx	Conductor x
ME	Engine intervention
MF	Microfiche
MV	Solenoid valve
n-ab	Output speed
n-mot	Engine speed
PWM	Pulse width-modulated
R-Sperre	Reverse lock
RxD	Diagnostic link, initialisation
S	Sports
SG	Control unit
TD	Engine speed signal
ti	Injection signal
TR	Crankshaft reference (once per revolution)
TxD	Diagnostic link, telegram
U-Batt	Battery voltage
U-Vers	Supply voltage
WK	Torque converter clutch (WK)
*	Symbol ice crystal (winter program)

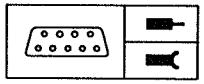

Pinbelegung

Pin Assignments at Control Unit Connector (88-pin)

Pin	Type	Description/function	Connection	Signal type	Tester display	Notes
1		Not used				
2	A	Ground lifting solenoid P/N shift-lock		active low	Component activation	
3	A	Solenoid valve 5	Gearshift unit	active low	Component activation	
4	A	Solenoid valve, torque converter clutch	Gearshift unit	active low	Component activation	
5	A	Pressure regulator (+)	Gearshift unit		Component activation	
6		Not used				
7		not used				
8	E	Position switch L2	Selector lever, Instrument cluster	active high	Status display	
9	E	Position switch L4	Selector lever, Instrument cluster	active high	Status display	
10	E	Brake light switch (54)		active high	Status display	only for P/N shift-lock
11		Not used				
12	88	L5 S-Prog	Program button, Instrument cluster	active low	Status display	
13	88	L7 *-Prog	Program button, Instrument cluster	active low	Status display	

Electronic Transmission Control EGS: A5S 310Z (former designation 5 HP 18)

Pin Assignments

Pin	Type	Description/function	Connection	Signal type	Tester display	Notes
14	E	Speed sensor n-ab (–)			Status display	
15	A	Shield speed sensor n-ab/n-turbine	Speed sensor	Ground		
16	E	Speed sensor n-turbine (+) blade speed			Status display	
17		not used				
18	E	Kick-down		active low	Status display	
19	E	ASC	ASC control unit	active low		
20		Not used				
21	E	Ground, oil temperature sensor				
22	E	Oil temperature sensor NTC			Status display	
23		Not used				
24		Not used				
25	A	Fault display	Instrument cluster			with serial data transfer
26	E	Voltage supply terminal 30			Status display	
27		Not used				
28	E	Ground, electronics				
29		Not used				
30	A	Solenoid valve 1	Gearshift unit	active low	Component activation	
31	A	Solenoid valve 4	Gearshift unit	active low	Component activation	
32	A	Solenoid valve 3	Gearshift unit	active low	Component activation	
33	A	Solenoid valve 2	Gearshift unit	active low	Component activation	
34	E	Power ground				

Pin Assignments

Pin	Type	Description/function	Connection	Signal type	Tester display	Notes
35	E	DKT interface	DME control unit	pulse width-modulated	Status display	Preset throttle angle. Engine temperature is signalled during start.
36	E	Position switch L1	Selector lever, Instrument cluster	active high	Status display	
37	E	Position switch L3	Selector lever, Instrument cluster	active high	Status display	
38		Not used				
39	A	L7 E-Program	Program button, Instrument cluster		Status display	connected in control unit with Pin 45
40	A	Engine intervention	DME control unit	active low	Component activation	
41	E	Fuel consumption indicator (ti signal)			Status display	
42	E	Speed sensor n-ab (+)			Status display	
43	E	Engine speed n-mot (TD* signal)	DME control unit		Status display	Signal synchronous with crankshaft, once per revolution
44	E	Speed sensor n-turbine (–)			Status display	
45	E	L6 E-Prog	Program button, Instrument cluster	active low	Status display	Connected in control unit with Pin 39
46		Not used				
47		Not used				
48		Not used				
49		Not used				
50	E	Brake light test switch		active low	Status display	only for P/N shift-lock
51		Not used				

Electronic Transmission Control EGS: A5S 310Z (former designation 5 HP 18)

Pin Assignments

Pin	Type	Description/function	Connection	Signal type	Tester display	Notes
52		Not used				
53	A	Positive supply solenoid valves	Gearshift unit, P/N shift-lock	active high	Component activation	Positive supply is switched off during mechanical emergency operation, i.e. transmission relay in control unit drops out.
54	E	Voltage supply			Status display	Holding circuit DME control unit
55		Not used				
56		Not used				
57		Not used				
58		Not used				
59		Not used				
60		Not used				
61		Not used				
62		Not used				
63		Not used				
64		Not used				
65		Not used				
66		Not used				
67		Not used				
68		Not used				
69		Not used				
70		Not used				

Pin	Type	Description/function	Connection	Signal type	Tester display	Notes
71		Not used				
72		Not used				
73		Not used				
74		Not used				
75		Not used				
76		Not used				
77		Not used				
78		Not used				
79		Not used				
80		Not used				
81		Not used				
82		Not used				
83		Not used				
84		Not used				
85		Not used				
86		Not used				
87	E	RxD (L-line)				
88	E/A	TxD (K-line)				

Adapters

Component	Connector No.	Description	Adapter number
Control unit	X7000	Test adapter 88-pin	Cartool 61 4 410
Gearshift unit	X8505	T-adapter 14-pin	Cartool 24 6 020

Troubleshooting

Notes

- Troubleshooting with the BMW DIAGNOSTIC SYSTEM
- Battery charged, U-min = 12 V
- For hydraulic and mechanical components; see Repair Instructions for troubleshooting and testing

Explanation of Defect Code Memory:

The EGS control unit can detect 29 different defect codes with a series of additional information. It has room for 5 different locations and their additional information in its defect code memory.

Defect location: Here, the defect text from the table of defect codes is supplemented by the corresponding pin numbers of the control unit.

Type of defect: Indicated here, is whether the defect is a break, a short to positive, a short to ground or a plausibility error.

Defect currently set: The response of the control unit to this statement can be in the affirmative, negative or conditionally affirmative or conditionally negative. In the case of a restricted reply to the question as to whether the defect code is currently set, the additional information "statement not sure since test condition is not currently fulfilled" appears. This means that the control unit cannot currently check the indicated defect code since, for example, the component is not activated. However, the defect code was set or not set the last time the test condition was fulfilled.

Intermittent defect: The reply to this statement is in the affirmative when the defect disappeared at least once and the re-appeared. Intermittent defect codes additionally indicate how often the defect disappeared and re-appeared.

Defect detected during: Here additional information is given on the operating conditions, under which the defect was detected for the first time, e.g.:

- Output speed
- Engine speed
- Oil temperature
- Battery voltage
- Pressure regulator current
- Selector lever position L1 ... L4
- Transmission
- Throttle angle, accelerator pedal position
- Kick-down active yes/no
- Engine intervention
- Solenoid valves

Defect Code Table

Defect code	Types of defect	Stored by control unit
000 – 099	Defect can be assigned to one or several pins at the control unit	yes
100 – 199	Defect cannot be assigned to a pin at the control unit (→ plausibility)	yes
200 – 299	Defect can be localised by way of status lists and component activation	no
300 – 399	Diagnostic procedure cannot be used	no

Defect code	Defect code description
2	Lifting solenoid P/N shift-lock
3	Solenoid valve 5
4	Solenoid valve torque converter clutch
5	Pressure regulator
8	Selector lever position L2
9	Selector lever position L3, L4
12	Program button
16	Stall speed monitoring
18	Kick–down switch
22	Oil temperature sensor
26	Battery voltage supply (permanent)
30	Solenoid valve 1
31	Solenoid valve 4
32	Solenoid valve 3
33	Solenoid valve 2
35	Throttle signal (DKT)
36	Selector lever position L1
40	Engine intervention
41	KVA signal
42	Output speed signal
43	Engine speed signal
53	Voltage supply solenoid valves
54	Battery voltage supply
100	Gear monitoring
101	Checksum Eprom
102	Checksum program group
103	Transmission relay
104	Temperature information (DKT signal)
105	Load information (DKT signal)
200	No kick-down shifts
201	No S-program
202	No *-program
203	No program switchover
204	No engine intervention (→ long slip times)
205	Brake light switch and brake light test switch detection defective
206	Incorrect fault indication
300	Diagnostic link defective
301	Control unit voltage supply defective

Defect Code 2

♦D♦Defect code memory: 2 Lifting Solenoid P/N Shift-Lock (Japan or US Version Only)

Explanation: The lifting solenoid P/N shift-lock is checked completely by the control unit during the initialisation phase by way of brief activation. The following defects can be detected during operation depending on the status of the lifting solenoid:

– active: Short to positive
– passive: Short to ground, break

Substitute program:

– Short to ground: – Faulty display, – maximum pressure, – emergency operation.
– Short to positive or break: – fault display.

Possible cause: Wire or winding of lifting solenoid defective.

Troubleshooting: ♦D♦Component activation. Measure signals. Positive is applied at Pin 53 – when active, control unit switches ground to Pin 2.

Defect Code 3

♦D♦Defect code memory: 3 Solenoid Valve 5

Explanation: The solenoid valve 5 is checked completely by the control unit during the initialisation phase by way of brief activation. The following defects can be detected during operation with the transmission relay switched on and depending on the status of the solenoid valve:

– active: Short to positive
– passive: Short to ground or break

Substitute program:

– short to ground or break: – Fault indication, – maximum pressure, – emergency operation.
– short to positive: – Fault indication, – no 5th gear.

Possible cause: Wire or winding of solenoid valve 5 defective.

Troubleshooting: ♦D♦Component activation. Measure signals. Positive is applied at Pin 53 – when active, control unit switches ground to Pin 3. Check wires and resistance in accordance with 2460.4B-3.

Defect Code 4

♦D♦Defect code memory: 4 Solenoid Valve Torque Converter Clutch

Explanation: The solenoid valve torque converter clutch is checked completely by the control unit during the initialisation phase by way of brief activation. The following defect can be detected during operation depending on the status of the solenoid valve:

– active: Short to positive.
– passive: Short to ground or break.

Substitute program:

– Short to ground or break: – Fault indication, – maximum pressure, – emergency operation.
– Short to positive: – Fault indication.

Possible cause: Wire or winding of solenoid valve WK defective.

Troubleshooting: ♦D♦Component activation. Measure signals. Positive is applied at Pin 53 – when active, control unit switches ground to Pin 4. Check wires and resistance in accordance with 2460.4B-3.

Defect Code 5

♦D♦Defect code memory: 5 Pressure Regulator

Explanation: The pressure regulator is checked completely by the control unit during the initialisation phase by way of brief activation. During operation, a defect is detected by internal feedback of the signal.

Substitute program:

– Fault indication, – maximum pressure, – emergency operation.

Possible cause: Wire or winding of pressure regulator defective.

Troubleshooting: ♦D♦Activate components in clock cycle. Connect test lamp between Pin 53 and Pin 5 (→ Lamp should flicker slightly). Check wires and resistance in accordance with 2460.4B-3.

Defect Code 8

♦D♦Defect code memory: 8 Selector Lever Position L2

Explanation: During the engine start, the control unit checks that battery voltage is applied at Pin 8. In operation, battery voltage must not be applied at Pin 8 during acceleration.

Substitute program:

– Short to ground or break: – no substitute program.
– Short to positive: – Fault indication, – maximum pressure, – emergency operation.

Possible cause: Wire to selector lever or selector lever defective.

Troubleshooting: ♦D♦Status monitoring selector lever position. Operate selector lever and compare with tester display.

Defect Code 9

♦D♦Defect code memory: 9 Selector Lever Position L3, L4

Explanation: During the engine start, the control unit checks that battery voltage is applied either at Pin 9 or at Pin 37.

Substitute program:

– Fault indication, – maximum pressure, – emergency operation.

Possible cause: Wire to selector lever or selector lever defective.

Troubleshooting: ♦D♦Status monitoring selector lever position. Operate selector lever and compare with tester display.

Defect Code 12

♦D♦Defect code memory: 12 Program Button

Explanation: This defect code is stored when two or three of the lines to the control unit Pins 12 (S-program), 13 (E-program), 45 (∗ -program) are simultaneously connected to ground. Consequently, program switch-over is not possible.

Substitute program:

– E-program is set by the control unit.

Possible cause: Wires from program button to EGS control unit defective or program button defective.

Troubleshooting: ♦D♦Status monitoring program button. Press program button and compare with tester display.

Defect Code 16

♦D♦Defect code memory:16 Stall Speed Monitoring

Explanation: During operation, a check is made as to whether the ratio engine speed/output speed is plausible for the engaged drive range.

Substitute program:

– Fault indication, – maximum pressure, – emergency operation.

Possible cause: One of the speed sensors or wires is defective, or one of the clutches in the transmission slips.

Troubleshooting: Component testing speed sensor and test stall speed (→ Caution, not longer than five seconds).

Defect Code 18

♦D♦Defect code memory: 18 Kick-Down Switch

Explanation: This defect code is stored when the kick-down signal does not agree with th signal of the accelerator pedal position while driving.

Substitute program:

– Control unit suppresses kick-down shifts.

Possible cause: Wire at EGS control unit Pin 18 has short to ground or switch is defective or only the push button alone was pressed.

Troubleshooting: ♦D♦Status monitoring. Compare displayed kick-down switch with actual situation.

Defect Code 22

♦D♦Defect code memory: 22 Oil Temperature Sensor

Explanation: This defect code is stored when the temperature sensor value exceeds or falls below the limit value.

– Break or short to positive (→ Minimum temperature)
– Short to ground (→ Maximum temperature)

Effect of defect:

a), b) A substitute value of 100° C is used.

c) The transmission oil overheats and ages prematurely. A gear oil change is recommended.

Possible cause: Wire from control unit Pin 21 and 22 to oil sump temperature sensor defective, or oil sump temperature sensor (soldered in wire harness of the gearshift unit) defective.

Troubleshooting: ♦D♦Status monitoring. Compare displayed transmission oil temperature with actual situation. The temperature of 100° C indicates the use of the substitute value. Check wires and resistance in accordance with 2460.4B-3.

Defect Code 26

♦D♦Defect code memory: 26 Battery Voltage Supply (permanent)

Explanation: This defect code is stored when the permanent voltage supply of the control unit is interrupted.

Substitute program:

– Diagnostic information and defect codes are lost, no substitute program.

Possible cause: Wire break, battery or control unit has been disconnected.

Troubleshooting: Check voltage supply at Pin 26.

Defect Code 30

♦D♦Defect code memory: 30 Solenoid Valve 1

Explanation: The solenoid valve 1 is checked completely by the control unit during the initialisation phase by way of brief activation. The following defects can be detected during operation depending on the status of the solenoid valve:

– active: Short to positive.
– passive: Short to ground or break.

Substitute program:

– Short to positive: – Fault indication, – only 2nd-4th gear
– Short to ground or break: – Fault indication, – maximum pressure, – emergency operation.

Possible cause: Wire or winding of solenoid valve 1 defective.

Troubleshooting: ♦D♦Component activation. Measure signals. Positive is applied at Pin 53. When active, control unit switches ground to Pin 30. Check wires and resistance in accordance with 2460.4B-3.

Defect Code 31

♦D♦Defect code memory: 31 Solenoid Valve 4

Explanation: The solenoid valve 4 is checked completely by the control unit during the initialisation phase by way of brief activation. The following defects can be detected during operation depending on the status of the solenoid valve:

– active: Short to positive.
– passive: Short to ground or break.

Substitute program:

– Fault indication, – maximum pressure, – emergency operation.

Possible cause: Wire or winding of solenoid valve 4 defective.

Troubleshooting: ♦D♦Component activation. Measure signals. Positive is applied at Pin 53. When active, control unit switches ground to Pin 31. Check wires and resistance in accordance with 2460.4B-3.

Defect Code 32

♦D♦Defect code memory: 32 Solenoid Valve 3

Explanation: The solenoid valve 3 is checked completely by the control unit during the initialisation phase by way of brief activation. The following defects can be detected during operation depending on the status of the solenoid valve:

– active: Short to positive.
– passive: Short to ground or break.

Substitute program:

– Fault indication, – maximum pressure, – emergency operation.

Possible cause: Wire or winding of solenoid valve 3 defective.

Troubleshooting: ♦D♦Component activation. Measure signals. Positive is applied at Pin 53. When active, control unit switches ground to Pin 32. Check wires and resistance in accordance with 2460.4B-3.

Defect Code 33

♦D♦Defect code memory: 33 Solenoid Valve 2

Explanation: The solenoid valve 2 is checked completely by the control unit during the initialisation phase by way of brief activation. The following defects can be detected during operation depending on the status of the solenoid valve:

– active: Short to positive.
– passive: Short to ground or break.

Substitute program:

– Fault indication, – maximum pressure, – emergency operation.

Possible cause: Wire or winding of solenoid valve 2 defective.

Troubleshooting: ♦D♦Component activation. Measure signals. Positive is applied at Pin 53. When active, control unit switches ground to Pin 33. Check wires and resistance in accordance with 2460.4B-3.

Defect Code 35

♦D♦Defect code memory: 35 Throttle Signal (DKT)

Explanation: When the engine is running, the control unit checks whether the DKT line sends a pulse width-modulated signal.

Substitute program:

– Fault indication, – substitute value for preset throttle position 15%.

Possible cause: Wire or plug-and-socket connections of the DKT signal line at the EGS control unit Pin 35 defective.

Troubleshooting: ♦D♦Status monitoring accelerator pedal position. Press accelerator pedal and compare with tester display.

Defect Code 36

♦D♦Defect code memory: 36 Selector Lever Position L1

Explanation: During engine start, the control unit checks that battery voltage is applied at the EGS control unit Pin 36.

Substitute program:

– Short to ground or break: – no substitute program.
– Short to positive: – Fault indication, – maximum pressure, – emergency operation.

Possible cause: Wire to selector lever or selector lever defective.

Troubleshooting: ♦D♦Status monitoring selector lever position. Operate selector lever and compare with tester display.

Defect Code 40

♦D♦Defect code memory: 40 Engine Intervention

Explanation: This defect code is stored when the wire from the control unit Pin 40 has a break or is connected to ground for longer than 3 seconds. If the wire is connected to ground, this defect code will also be stored in the DME control unit.

Substitute program:

– Fault indication, – maximum pressure, – emergency operation.

Possible cause: Wire defective.

Troubleshooting: ♦D♦Component activation. Measure signal in accordance with text on the display screen.

Defect Code 41

♦D♦Defect code memory: 41 KVA Signal

Explanation: This defect code is stored if no edge change of the signal takes place within 0.5 seconds at an engine speed between approx. 2000 rpm and 4000 rpm and an accelerator pedal position between approx. 20% and 50%.

Substitute program:

– Fault indication, – maximum pressure, – emergency operation.

Possible cause: Wire to Pin 41 or injection signal from DME defective.

Troubleshooting: ♦D♦Status monitoring. Observe injection signal on display screen with engine running.

Defect Code 42

♦D♦Defect code memory: 42 Speed Signal n-ab

Explanation: This defect code is stored when the EGS control unit receives no output speed signal at engine speeds above approx. 2700 rpm in a drive range (R, D, 4, 3, 2).

Substitute program:

– Fault indication, – maximum pressure, – emergency operation.

Possible cause: Wire from EGS control unit Pin 42 or 14 to speed sensor, speed sensor, torque converter or clutches defective. Check wires and resistance in accordance with 2460.4B-3.

Troubleshooting:

– Jack up vehicle
– Start engine
– Engage drive range D
– ♦D♦Status monitoring – output speed signal n-ab
(Note: EGS speed signal n-ab is not equal to the speed-A signal)

1. Output speed signal is indicated and vehicle has poor power transmission after new start.
   → Torque converter or clutch is defective (automatic transmission fluid ATF burnt).
2. Speed signal n-ab equal to 0 and vehicle has good power transmission after new start.
   → Speed sensor or wires to speed sensor defective.

Defect Code 43

♦D♦Defect code memory: 43 Speed Signal n-mot (TD*)

Explanation: This defect code is stored when the control unit receives no engine speed signal at an output speed greater than 400 rpm. At lower output speeds, the engine would stall so that only the substitute program is active but the defect code is not stored.

Substitute program:

– Fault indication, – maximum pressure, – emergency operation.

Possible cause: Wires defective.

Troubleshooting: Check speed signal n-mot in ♦D♦Status monitoring from DME control unit and from EGS control unit.

Defect Code 53

♦D♦Defect code memory: 53 Voltage Supply MV

Explanation: The control unit checks during the initialisation phase whether the transmission relay has picked up or dropped out. During operation with the relay switches off (emergency operation) the control unit checks whether the relay has dropped out.

Substitute program:

– Fault indication, – maximum pressure, – emergency operation.

Possible cause: Relay winding defective, relay sticking or contact broken.

Troubleshooting: ♦D♦Clocked component activation. → Listen to check whether relay ticks and check whether test lamp flashes between Pin 53 and Pin 34. Check wires and resistance in accordance with 2460.4B-3.

Defect Code 54

♦D♦Defect code memory: 54 Battery Voltage Supply

Explanation: This defect code is stored when a battery voltage of less than 9 V is measured at an engine speed greater than 1600 rpm.

Substitute program:

– Fault indication, – maximum pressure, – emergency operation.

Possible cause: Power supply faulty.

Troubleshooting: ♦D♦Status monitoring. Compare displayed voltage supply for control unit with actual situation. Check battery and alternator.

Defect Code 100

♦D♦Defect code memory: 100 Gear Monitoring

Explanation: This defect code is stored when the speed ratio between the turbine speed and output speed does not agree with the engaged gear range.

Substitute program:

– Fault indication, – maximum pressure, – emergency operation.

Possible causes:

– Electrically selected and hydraulically engaged gear do not agree.
– Faults in hydraulic gearshift unit
– Solenoid valves connected incorrectly
– One of the speed sensors has a loose contact or a clutch in the transmission is defective.

Troubleshooting: Check speed sensors ♦D♦Status list
Check solenoid valves. Check hydraulic gearshift unit.

Defect Code 101

♦D♦Defect code memory: 101 Checksum Eprom

Explanation: This defect code is stored when a change has occurred in the Eprom.

Substitute program:

– Fault indication, – maximum pressure, – emergency operation.

Possible cause: Eprom defective.

Troubleshooting: Replace control unit.

Defect Code 102

♦D♦Defect code memory: 102 Checksum Program Group

Explanation: This defect code is stored when a change has occurred in a part of the memory area (program group).

Substitute program:

– Fault indication, – maximum pressure, – emergency operation.

Possible cause: Change in transmission program (software).

Troubleshooting: Replace control unit.

Defect Code 103

♦D♦Defect code memory: 103 Transmission Relay

Explanation: This defect code is stored when the pickup or dropout time of the transmission relay does not agree with the values stored in the control unit.

Substitute program:

– Fault indication, – maximum pressure, – emergency operation.

Possible cause: Relay sticking or dirt between the contacts.

Troubleshooting: Replace control unit.

Defect Code 104

♦D♦Defect code memory: 104 Temperature Information (DKT-Signal)

Explanation: This defect code is stored when the DME control unit detects a faulty temperature sensor. The DME control unit signals this to the EGS control unit by sending on the DKT line a pulse width-modulated signal with a duty factor of 4% at a frequency of approx. 200 Hz.

Substitute program:

– Fault indication, – maximum pressure, – emergency operation.

Possible cause: Engine temperature sensor or its wires to the DME control unit defective.

Troubleshooting: ♦D♦Status monitoring, compare displayed engine temperature with actual situation. Perform status monitoring in the DME as well as in the EGS program.

Defect Code 105

♦D♦Defect code memory: 105 Load Information (DKT-Signal)

Explanation: This defect code is stored when the DME control unit detects a faulty throttle signal. The DME control unit signals this to the EGS control unit by sending on the DKT line a pulse width-modulated signal with a duty factor of 4% at a frequency of approx. 100 Hz.

Substitute program:

– Fault indication, – maximum pressure, – emergency operation.

Possible cause: Throttle potentiometer or its wires to the DME control unit defective.

Troubleshooting: ♦D♦Status monitoring, compare displayed accelerator pedal position with actual situation. Perform status monitoring in the DME as well as in the EGS program.

Defect Code 200

No Kick-Down Shifts

Explanation: Kick-down shifts are not performed.

Possible cause: KD switch defective or the wire from KD switch to control unit Pin 18 has a break or a short to positive.

Troubleshooting: ♦D♦Status monitoring. Compare displayed kick-down switch with actual situation.

Defect Code 201

No S-Program

Explanation: S-program cannot be switched.

Possible cause: Wire from program button to Pin 12 at EGS control unit has a break.

Troubleshooting: ♦D♦Status monitoring. Press program button and compare with tester display.

Defect Code 202

No ∗ -program

Explanation: ∗ -program cannot be switched.

Possible cause: Wire from program button to Pin 13 at EGS control unit has a break.

Troubleshooting: ♦D♦Status monitoring. Press program button and compare with tester display.

Defect Code 203

No Program Switchover

Explanation: Program switchover is not possible. Only E-program.

Possible cause: No ground at program button. Program button defective.

Troubleshooting: ♦D♦Status monitoring. Press program button and compare to tester display.

Defect Code 204

No Engine Intervention

Explanation: The torque cannot be reduced by retarding the ignition timing during gearshift. This results in long slip times and premature wear of clutches.

Possible cause: The wires from the DME control unit to the EGS control unit Pin 40 has a short to positive.

Troubleshooting: ♦D♦Component activation. Activate engine intervention (ignition timing intervention). A temporary drop in engine speed should occur with the engine running at operator temperature. If not, connect universal adapter and check wire Pin 40.

Defect Code 205

Detection, Brake Light Switch and Brake Light Test Switch Defective

Explanation: The selector lever cannot be engaged in a drive position despite the brake pedal being depressed (P/N shift-lock for Japan and US version only).

Possible cause: Brake test switch and brake light switch inputs to the control unit are both defective.

Troubleshooting: ♦**D**♦**2** Status monitoring. Compare displayed brake light switch and brake light test switch with actual situation. A voltage of 12 V is applied at Pin 10 when the brake light switch is active. Ground is applied at Pin 50 when the brake test switch is active.

Defect Code 206

Incorrect Fault Indication

Explanation: The transmission fault lamp lights in the instrument cluster despite normal operation of the transmission.

Possible cause: The wire from the EGS control unit Pin 25 to the instrument cluster has a break or a short to positive.

Troubleshooting: Check signal at EGS control unit Pin 25.

- Ground is applied at Pin 25 after ignition ON.
- A data telegram is transferred after engine start. (Clocked change between high and low level at approx. 0.5 sec intervals).
- If EGS control unit signals a fault (defect code detected), it switches battery voltage to Pin 12.

Defect Code 300

Diagnostic Link Defective

Explanation: The diagnostic link TxD or RxD has a break or has a short to positive or ground.

The TxD link leads from the diagnostic socket Pin 20 to the EGS control unit Pin 88 and is connected to ground when the cover of the diagnostic socket is closed.

The RxD link leads from the diagnostic socket Pin 15 to the EGS control unit Pin 87 and is connected to terminal 30 when the cover of the diagnostic socket is closed.

Troubleshooting: Check wire. After tester display, check that the levels of the diagnostic links are OK., if not, a control unit can disturb the diagnostic procedure. In this case, disconnect control units one after the other and re-initiate the diagnostic procedure.

Defect Code 301

Control Unit Voltage Supply Defective

Explanation: The power supply to the EGS control unit Pin 54 is interrupted.

Troubleshooting: Check wire.

Component Testing

The following instructions serve as a supplement to transmission self-diagnosis and assume that the BMW Service Tester is used to monitor the system.

Notes

Observe safety codes and accident prevention regulations when performing all work on the engine and transmission electrical systems.

If not otherwise specified, always switch off the ignition.

Important!

Before disconnecting the control unit or the battery, read out the defect code memory and print out complete with troubleshooting. Detach control unit connector only when the ignition is switched off.

Check wires only with the control unit connector or component connector detached.

Always proceed in accordance with the schematics (note connector and pin numbers).

The specified nominal values referred to a room temperature of 23 ± 5° C.

Refer to Repair Instructions for information on removal and installation as well as technical data.

Tests during troubleshooting are performed at the universal adapter with the transmission wire harness or EGS control unit connected. Ensure good contact in order to avoid contact resistances.

Only use suitable test equipment (test leads, terminals, probe tips etc.).

Use the T-adapter Cartool order No. 24 6 020 for measurements at the 14-pin connector of the gearshift unit.

Use the universal adapter Cartool order No. 61 4 410 for measurements at the 88-pin connector of the transmission control unit.

Transmission Component Location Chart

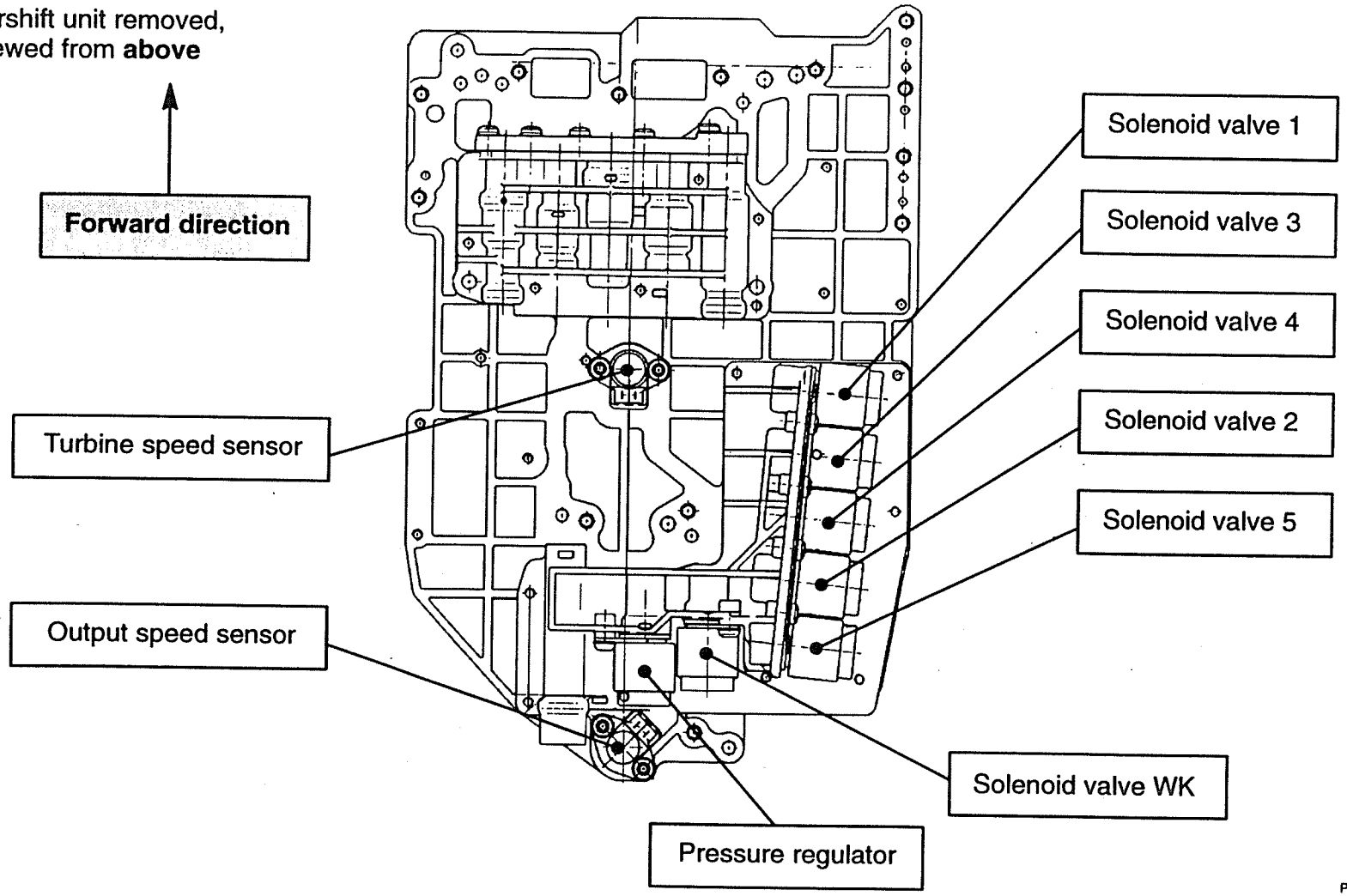

Components in the Gearshift Unit

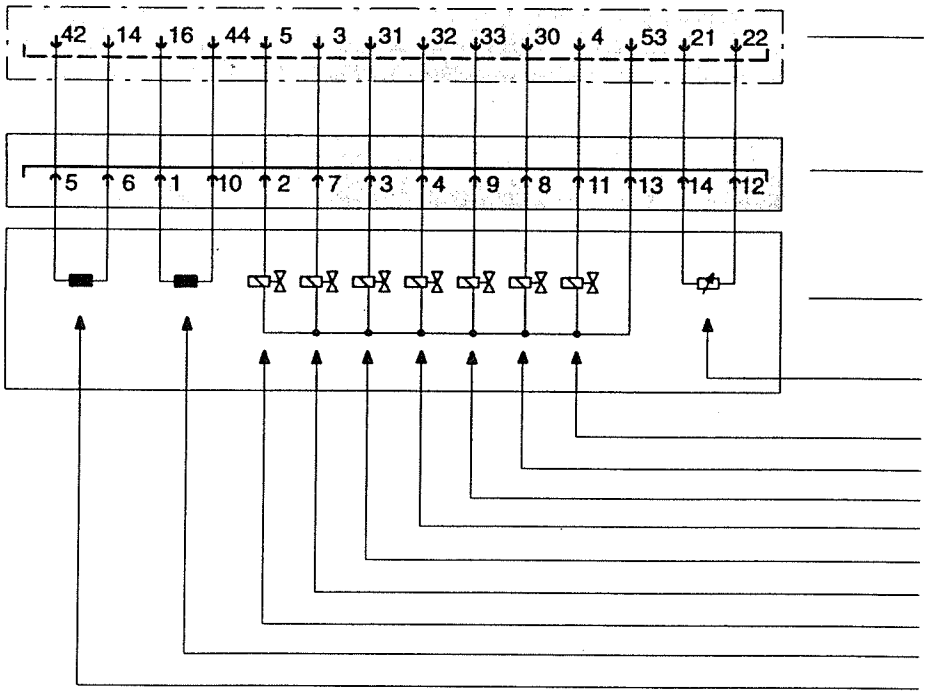

Connector X8500 (88-pin) on transmission control unit
Use the universal adapter, Cartool order No. 61 4 410 for measurements.

Connector X8505 (14-pin) on gearshift unit
Use the T-adapter, Cartool order No. 24 6 020 for measurements.

Gearshift unit

	Nominal values (at 20° C)	
Oil temperature sensor	approx.	1.1 kΩ (at 80° C approx. 1.5 kΩ)
Torque converter clutch	approx.	33 Ω
Solenoid valve MV-1	approx.	33 Ω
Solenoid valve MV-2	approx.	33 Ω
Solenoid valve MV-3	approx.	33 Ω
Solenoid valve MV-4	approx.	33 Ω
Solenoid valve MV-5	approx.	33 Ω
Solenoid valve pressure regulator	approx.	6 Ω
Turbine speed sensor	approx.	200..300 Ω
Output speed sensor	approx.	200..300 Ω

P34 24 014

Connector on gearshift unit

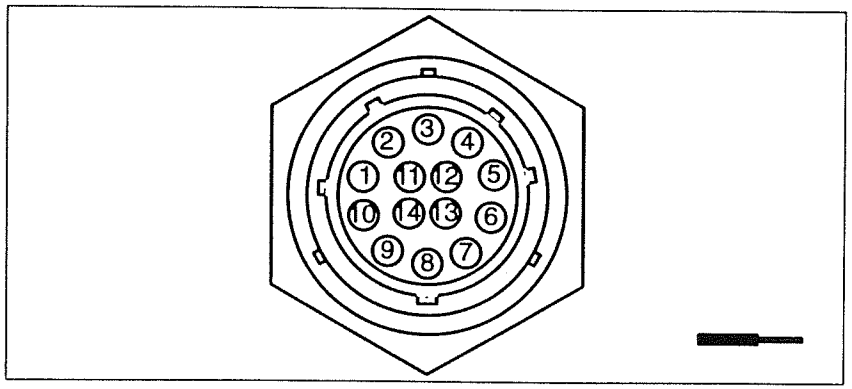

P34 24 005

Use the T-adapter Cartool order No. **24 6 020** for measurements at the 14-pin connector of the gearshift unit.

Oil Temperature Sensor

If the displayed oil temperature in ♦D♦2 Status monitoring does not agree with the actual status, measure resistance of the oil temperature sensor with the control unit disconnected and ignition switched off.

Pin No. at universal adapter	Pin No. at transmission connector	Nominal value at 20° C	Nominal value at 80° C
22 / 21	12 / 14	approx.1.1 kΩ	approx.1.5 kΩ

If values deviate, check wire and plug-and-socket connection from control unit to transmission and repair if necessary. If OK.: Replace wire harness in transmission control unit.

Speed Sensor n–ab

If the displayed output speed in ♦D♦2 Status monitoring does not agree with the actual status, measure the resistance of the DZF by means of the universal adapter with the control unit disconnected and ignition switched off.

Pin No. at universal adapter	Pin No. at transmission connector	Operation	Nominal value approx.
42 / 14	5 /6	None	200-300 Ω

If values deviate, check wire as well as plug-and-socket connection from control unit to speed sensor and repair if necessary. If OK.: Repair or replace speed sensor.

Turbine Speed Sensor

When the defect code "gear monitoring" or "fixed brake speed" is stored, it may be possible that the turbine speed sensor is defective. Measure resistance of the sensor with universal adapter and, if necessary, transmission adapter with the control unit disconnected and ignition switched off.

Pin No. at universal adapter	Pin No. at transmission connector	Operation	Nominal value approx.
44 / 16	10 / 11	None	200-300 Ω

If values deviate, check wire as well as plug-and-socket connection from control unit to speed sensor and repair if necessary. If OK.: Repair or replace speed sensor.

Solenoid Valves and Hydraulic Pressure Regulator

Check resistance of solenoid valves and of the hydraulic pressure regulator with universal adapter and, if necessary, transmission adapter with control unit disconnected and ignition switched off.

Valve	Pin No. at universal adapter	Pin No. at transmission connector	Nominal value approx.
MV 1	30 / 53	8 / 13	33 Ω
MV 2	33 / 53	9 / 13	33 Ω
MV 3	32 / 53	4 / 13	33 Ω
MV 4	31 / 53	3 / 13	33 Ω
MV 5	3 / 53	7 / 13	33 Ω
MV-WK	4 / 53	11 / 13	33 Ω
MV-DR	5 / 53	2 / 13	6 Ω

If values deviate, remove gearshift unit and repair or replace solenoid valve, see Repair Instructions.

Selector lever switch left-hand drive

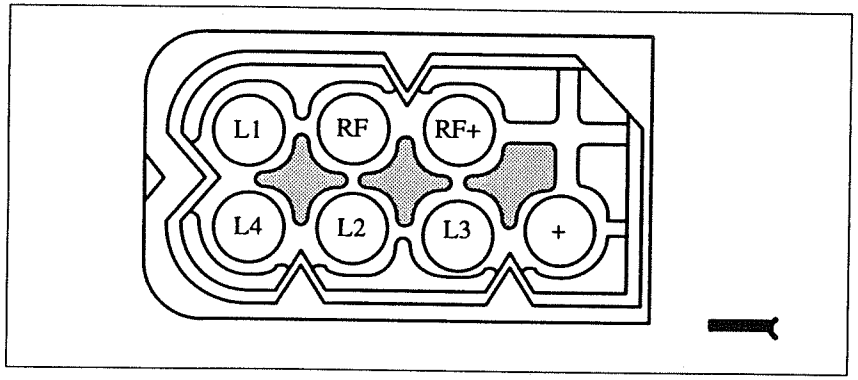

P36 24 004

Selector lever switch right-hand drive

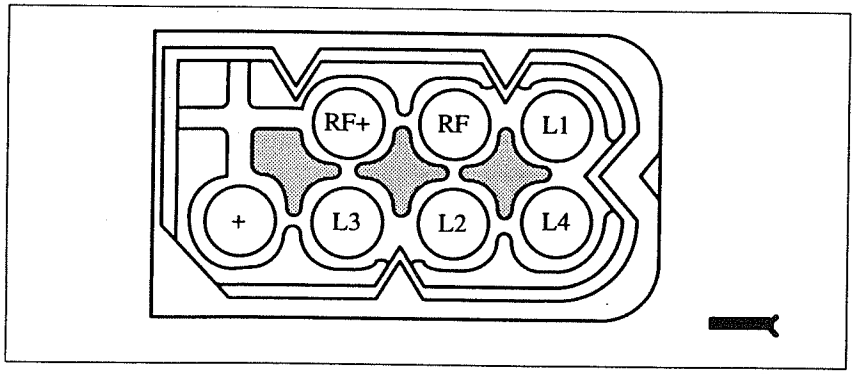

P36 24 005

Gear Selector Lever Switch

Check the gear selector lever switch by means of the universal adapter with the control unit connected and ignition switched on. Measure between Pin 28 and the specified pins; "0" corresponds to approx. 0 V, "1" corresponds to approx.12 V.

Conductor	L1	L2	L3	L4
Pin No. on EGS control unit	Pin 36	Pin 8	Pin 37	Pin 9
Selector lever position				
P	1	1	0	1
R	1	0	0	0
N	1	1	1	0
D	0	0	0	1
4	0	0	1	1
3	1	0	1	1
2	0	0	1	0

If a voltage is not measured in any position, check positive supply of the selector lever switch. If activation is defective, remove selector lever switch and check in accordance with table. Replace if necessary. (Pin + referred to Pin L1...L4; "1" corresponds to approx. 0 Ω and "0" to more than 10 kΩ). If OK.: Replace wires or plug connections.

The reversing light is switched via the pins RF and RF+ in the selector lever position R.

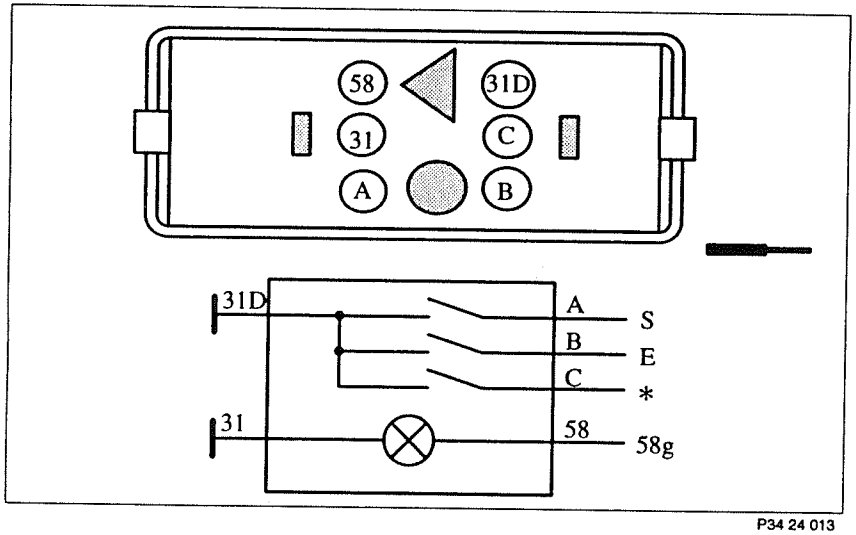

Program button S-E-* with circuit diagram

Program Button

The program button switches one pin at a time to ground, The corresponding output pin is switched to ground in the control unit until another program has been selected or the vehicle is restarted (holding circuit). Check the program button by means of the universal adapter with the control unit connected and ignition switched on (measure between Pin 28 (–) and the specified pins; "0" corresponds to
approx. 0 V, "+" corresponds to approx. 12 V).

Current program			Pin No. at EGS control unit (input)			Pin No. at EGS control unit (output)			Symbol in instrument cluster		
E	S	*	45	12	13	39	17	13	E	S	*
ON	–	–	0	+	+	0	+	+	ON	–	–
–	ON	–	+	0	+	+	0	+	–	ON	–
–	–	ON	+	+	0	+	+	0	–	–	ON

If the values are not plausible, check ground connection of the program button and repair if necessary, If OK.: Remove program button, check to block diagram and switch views and repair if necessary. If OK.: Check wire and connector, repair if necessary. The holding circuit in the control unit is defective if the current symbol lights in the program button only when the relevant program is depressed.

Kick-Down Switch

Check the kick-down switch by means of the universal adapter with the ignition switched on and control unit connected.

Pin No.	Operation	Nominal value
18+/28–	Yes	< 1 V
	No	> 10 V

If values deviate, check wire as well as plug-and-socket connection from the control unit to the kick-down switch and repair if necessary.
If OK.: Remove kick-down switch, check and repair if necessary.

Notes

These test instructions apply to the electrohydraulic transmission Jatco. It is operated in conjunction with Jecs control units.

Important!

With model year '92 an improved transmission tuning will be introduced together with the changeover to a new connector on the gearshift control unit. As a consequence, the new transmission and old transmission control unit and vice versa must not be combined.

Functional Description

Functional Requirements

The control units sends the shift pulses for upshifts and downshifts to the gearshift control unit (solenoid valves, controlled main pressure) and decides on engagement of the corresponding torque converter lockup clutch, taking comfort and safety into consideration. For this purpose, it processes in a computer program the input variables such as engine speed, output speed, throttle (accelerator pedal) position, kick-down switch, drive program, selector lever position and oil sump temperature.

Converter Lockup Clutch Control

The converter lockup clutch is activated dependent upon the accelerator pedal position, transmission output speed, drive program, transmission oil temperature as well as the engaged gear (only in 4th and 5th gear). After starting the engine, it is not possible to engage the converter lockup clutch by way of temperature-dependent activation.

Adaptive Pressure Control

The adaptive pressure control improves the gearshift quality over the life of the vehicle. During an upshift, the slip times are measured and compared to a nominal value range. The mean deviations are then stored. As soon as a programmed limit value is exceeded, the pressure is increased or reduced in steps of 0.1 bar. In this way, the control system corrects engine scatter, compensates for differences in the friction lining and adapts to altitude.

Gearshift Comfort Control

The gearshift quality is controlled by way of the controlled main pressure and the engine intervention function (torque reduction by retarding the ignition timing). The main pressure is calculated by way of characteristic curves dependent on the throttle angle, type of gearshift (e.g. 1–2 shift),

temperature and engine torque (before, during or after engine intervention. To ensure the main pressure regulator features improved control characteristics, it is activated by the control unit with and without ballast resistance.

DKT Interface

The throttle angle and engine temperature are transferred via the DKT interface. This involves a pulse width-modulated signal (square-wave voltage with fixed frequency and variable duty factor).

At terminal 15 ON, the DME control unit transmits the engine temperature and the throttle angle half a second after detecting an engine speed greater than 500 rpm.

Faults on this line are detected by the receiver (EGS).

Transmission Oil Temperature Sensor

The transmission oil sump temperature is sensed by a temperature-dependent resistor which is soldered in the transmission wire harness. The following functions are controlled dependent on the transmission oil temperature.

- Shift comfort for all gearshift operations and engagement jolt.
- Preventing engagement of 5th gear and of the torque converter lockup clutch at low temperatures.
- Activation of the S-program at low temperatures after a new start.

The transmission oil sump temperature can be displayed with the BMW Service Tester under ♦D♦Status monitoring.

Drive Programs

3 drive programs can be selected with the program switch.

- E-program: Characteristic curves based on consumption and comfort.
- S-program: Characteristic curves based on performance.
- ∗ -program: Winter program (starting off in 2nd gear)

Selector lever position	*-program	E-program	S-program
D	2-5	1-5	1-5
4	Hold 4th gear	1-4	1-4
3	Hold 3rd gear	1-3	1-3
2	Hold 2nd gear	1-2 Trailer program	1-2 Trailer program

The E-program is activated automatically after each new engine start (all gears are shifted). In the winter program, 1st gear is not shifted in position D and the upshift takes place much earlier, the positions 2 to 4 correspond to the M-program of the previous transmission control systems. In the trailer program, 2nd gear is engaged after the 1st gear has left its respective range.

Drive program indication: The current drive program and the selector lever position are displayed in the instrument cluster.

Depending on the transmission temperature when starting the vehicle, gearshifts are performed in accordance with the S-program for approx. 2 minutes (the E-program is, however, indicated in the instrument cluster). This ensures the engine reaches its operating temperature as fast as possible.

Safety Functions

By way of plausibility checks and checking the line connections for shorts or breaks, the control unit can detect and store defects (see troubleshooting).

Manually engaged downshifts are not carried out at excessively high vehicle speeds. At a vehicle speed above approx. 8 km/h, the reverse lock (solenoid valve RS) prevents reverse being shifted hydraulically.

In the event of failure of the transmission control or when defects are detected which lead to critical driving situations (e.g. impermissible downshift), the mechanical emergency program is activated, i.e. the transmission control unit is switched off and the failure display activated. A self-test of the entire safety hardware is performed during each new start.

Restricted driving of the vehicle is still possible in the emergency program (→ 4th gear). Various substitute programs are also made available depending on the type of defect which has occurred. For instance, if no throttle signal is received, the shift points are carried out corresponding to the characteristic curves for the substitute value of 35 degrees throttle angle at maximum pressure and fault indicator activated. If kick-down is detected, the gearshifts are performed in accordance with the kick-down characteristic curves.

P/N Shift-Lock

It is only possible to shift out of the positions "P" or "N" after evaluation of the signals

- Brake (brake light switch or brake light test switch)
- Vehicle speed
- Engine speed
- Time

The selector lever is locked when no brake signal is detected when the vehicle is stationary or the engine speed is greater than 2500 rpm. A time delay function of approx. 0.5 sec is used for operation under winter conditions. The brake light switch is designed as a normally open contact referred to 12 V and the brake light test switch as a normally closed contact referred to ground. The shift lever is locked by way of a solenoid on the selector lever.

Fault Indication with Serial Data Transfer

The transmission control unit transfers data on the fault indicator line (Pin 11) relating to the transmission oil temperature and the selector lever coding (4th or 5th gear) to the instrument cluster.

The fault lamp is activated by the instrument cluster when a voltage of 12 V is applied on this line for longer than 1 sec. This is the case when the EGS control unit is in the emergency program or when the wire has a break (pull-up resistor in the instrument cluster).

Compound system of signals for transmission control

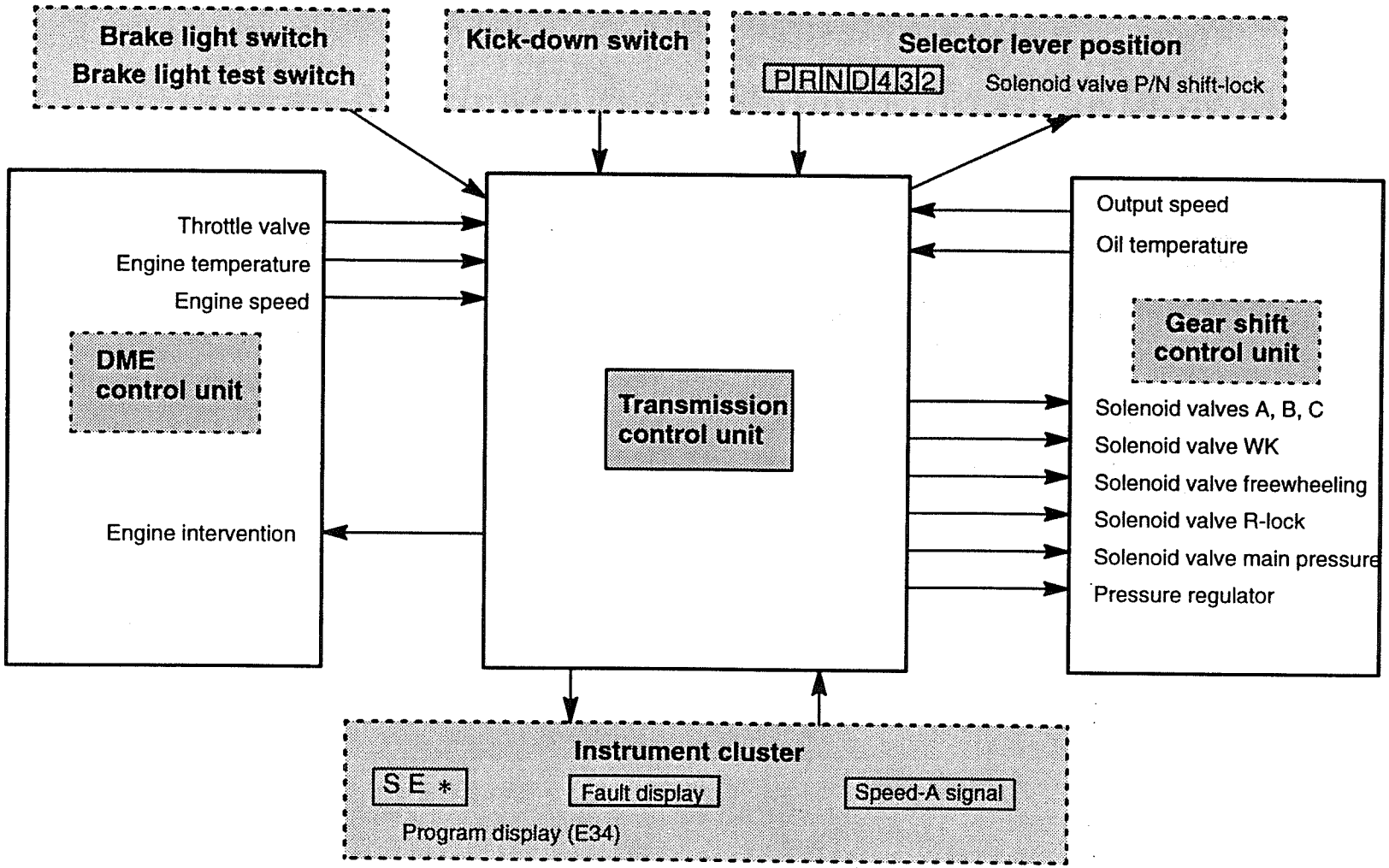

P 34 24 009

Switching Logic of Solenoid Valves

Pos.	Gear	MV A	MV B	MV C	MV WK	MV free-wheeling
	1	+	+	+	–	+/–
	2	–	+	+	–	+/–
D	3	–	–	+	–	+/–
	4	–	–	–	+/–	+/–
	5	+	–	–	+/–	+/–

+ = Solenoid valve ON (current flowing)
– = Solenoid valve OFF (current not flowing)

The solenoid valves A, B and C are the actual gearshift valves of the transmission.

The freewheeling solenoid valve is used to determine whether the engine torque is to be transferred or not during coasting (throttle closed).

– MV FR ON: No coasting torque = freewheeling
– MV FR OFF: With coasting torque = engine brake

This feature is used to improve the shift comfort. In 5th gear, the coasting torque is always transmitted irrespective of the solenoid valve setting. In the S-program, torque is transmitted in all gears (MV freewheeling OFF), in the E-program and ∗ -program torque is only transmitted in the highest gear (selector lever position D in 5th gear, at 4 in 4th gear, at 3 in 3rd gear, at 2 in 2nd and 2st gear)

Power is cut to all solenoid valves in the event of the transmission control failing.

Switching Logic of Position Inputs

Conductor	L1	L2	L3	L4
Pin No. on EGS control unit	Pin 18	Pin 19	Pin 17	Pin 16
Selector lever position				
P	1	1	0	1
R	1	0	0	0
N	1	1	1	0
D	0	0	0	1
4	0	0	1	1
3	1	0	1	1
2	0	0	1	0

Coding table for selector lever switch (switch referred to 12 V).
"1" corresponds to approx. 12 V and "0" to approx. 0 V.

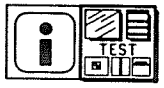

Notes on the BMW DIAGNOSTIC SYSTEM

Load diagnosis disks for E 34 Series and connect BMW Service Tester in accordance with operating instructions.

Conditions for Initialisation of Diagnostic Procedure

– Ignition ON
– n-ab < 160 rpm
– Selector lever position P or N

Select EH transmission EGS with ♦**D**♦ 3.

After successfully setting up communication, the control unit operates as in normal operation and the condition n-ab < 160 rpm need no longer be observed.

Diagnosis with BMW Service Tester

After the identification page you will reach the selection overview with ♦⇓♦ . You will recognize the possible program options by the inverse selection numbers:

– 1 Read defect code memory
– 2 Status monitoring
– 6 Output check code
– 9 Clear defect code memory

In addition to the possible branch functions with the selection numbers, the inverse arrows indicate which other branches are additionally possible. Generally, the branch numbers agree with the pin numbers on the EGS control unit.

Generally applicable:

With ♦⇑♦ or ♦⇓♦ you will move one level higher or lower. That means the statements become more general or specific.

With ♦⇐♦ or ♦⇒♦ you will go to the previous or next page in a level.

1 Read Defect Code Memory

In this part program, the contents of the defect code memory in the EGS control unit are displayed in plain text. In addition, condition variables are indicated, under which the defect occurred for the first time. Refer to defect code table Page 2460.6A-16 for defects which can be stored by the control unit.

2 Status Monitoring

Since the EGS control unit is already fully operable at "ignition ON", all inputs and outputs can be checked with the program part "2 Status monitoring".

Drive program indication

Program	Display
(control unit output) 45 (Pin 45 on control unit)	S OFF
12 (Pin 12 on control unit)	E ON
13 (Pin 13 on control unit)	* OFF

This indicates the drive program which the EGS control unit signals to the instrument cluster or which drive program is active.

The instrument cluster (E34) only receives the signals E (Pin 12) and * (Pin 13). The corresponding program is indicated in accordance with this logic:

Display in instrument cluster	Pin 12 E-program	Pin 13 *-program
S	open	open
E	Ground	open
*	open	Ground
	Ground	Ground

Program button	depressed
(control unit input) 42 (Pin 42 on control unit)	S No
20 (Pin 20 on control unit)	E No
38 (Pin 38 on control unit)	* No

This indicates the program requirements signalled to the EGS control unit from the program button.

Important!

The input and output pins are separated from each other so that the message program button depressed can only be answered in the affirmative when the button is actually depressed. Otherwise the corresponding wire has a short to ground.

Program button	depressed
(control unit input) 42 (Pin 42 on control unit)	S No
20 (Pin 20 on control unit)	E Yes
38 (Pin 38 on control unit)	* No

– If the control unit detects ground at two or three of the Pins 42, 20 or 38, this is entered in the defect code memory and only the E-program is active.

Selector Lever Position

Indicated here is the Pin 18 (L1), 19 (L2), 17 (L3) and 16 (L4) at which the control unit detects "positive". The engaged drive range is then derived corresponding to the table (1 corresponds to battery voltage).

Conductor	L1	L2	L3	L4
Pin No. at EGS control unit	Pin 18	Pin 19	Pin 17	Pin 16
Selector lever position				
P	1	1	0	1
R	1	0	0	0
N	1	1	1	0
D	0	0	0	1
4	0	0	1	1
3	1	0	1	1
2	0	0	1	0

Throttle Angle, Load Signal

These displays show the throttle information which the EGS control unit (Pin 34) receives from the DME control unit and the load signal used as a basis for selecting its gearshift points.

Kick-Down Switch

Pin 41 must be applied to ground when the kick-down switch is depressed. The input is open at Pin 41 when kick-down is not active.

Brake Light Switch, Brake Light Test Switch

The brake light switch Pin 21 is designed as a normally open contact referred to battery voltage and the brake light test switch Pin 37 as a normally open contact referred to ground.
The EGS control unit requires the brake signal to deactivate the lifting solenoid P/N shift-lock. When slowly depressing the brake pedal, the brake light switch must close first followed by the brake light test switch.

Transmission Oil Temperature

The transmission oil temperature detected by the control unit is indicated here. The substitute value of 110 °C is indicated if no temperature sensor is installed or if there is a break or short on the wire to Pin 33.

Control Unit Voltage Supply

The EGS control unit supply voltage is indicated here.

Engine Speed

The specified engine speed is output here with a resolution of 32 rpm.

Drive Shaft Speed, Speed-A Signal

The drive shaft speed and the speed-A signal are indicated in "km/h". The maximum difference between both speeds must not exceed 5 km/h otherwise a defect will be indicated and stored in the defect code memory. Comparison of both speed signals provides an indication as to which of the two signals is faulty.

Solenoid Valves Output Feedback

The solenoid valves which are (should be) activated by the control unit are indicated here.
The corresponding gear is assigned in accordance with the table:

	Solenoid valve A	Solenoid valve B	Solenoid valve C
1st gear	1	1	1
2nd gear	0	1	1
3rd gear	0	0	1
4th gear	0	0	0
5th gear	1	0	0

1 corresponds to "ON" or active,
0 corresponds to "OFF" or not active.

The first four gears can also be activated when the vehicle is stationary.

	Program	Selector lever position
1st gear	E or S	P, R, N, D, 4, 3, 2
2nd gear	*	P, N, D, 2
3rd gear	*	3
4th gear	*	4

The comparison of the display on the BMW Service Tester with the actual status provides an indication as regards the function of the solenoid valves.

Status List

You can use the status list if you wish to display two statuses together on one screen page.

For example you wish to show the display

"1 Selector lever position: ***"
and
"2 corresponds to: *th gear"

on one screen page.

Enter 1 on the screen page "monitor EGS status 2/5" 1 and acknowledge, and enter 2 on the screen page "monitor EGS status 5/5" 2 and acknowledge.

With ♦⇓♦ you will then reach the status extract list, in which the status inquiries are displayed in accordance with your configuration. If you have still not selected any numbers, with ♦⇓♦ you will reach an information page which explains how to compile the status extract list.

6 Output Check Code

Here an explanation is provided indicating that after pressing the R-key you will receive a check code printout which must be sent in as part of a warranty claim. Enter the date and your dealer number on this check code.

Also printed out are the identification data of the EGS control unit as well as the contents of the defect code memory in hexadecimal code.

9 Clear Defect Code Memory

On completion of repairs, clear the defect code memory with this function. If a defect is stored immediately by the control unit, the defect code memory can be cleared before all defects have been rectified.

Abbreviations

A	Output
AG	Automatic transmission
BLS	Brake light switch
BTS	Brake light test switch
DK	Throttle valve
DKT	Signal for determining throttle angle and engine temperature when starting
DME	Digital motor electronics
DZF	Output speed sensor
E	Economy
E	Input
EGS	Electronic transmission control
KD	Kick-down
Lx	Conductor x
ME	Engine intervention / ignition timing intervention
MF	Microfiche
MV	Solenoid valve
n-ab	Output speed
n-mot	Engine speed
PWM	Pulse width-modulated
R-Sperre	Reverse lock
RxD	Diagnostic link initialisation (Read Data)
S	Sports
SG	Control unit
TD	Ignition measuring signal (Tacho Diagnosis)
ti	Injection signal (Time Injection)
TR	Crankshaft reference (3 times per revolution on 6-cyl. engine)(Tacho Rotation)
TxD	Diagnostic link telegram (Transmit Data)
U-Batt	Battery voltage
U-Vers	Voltage supply
WK	Torque converter clutch (WK)
*	Symbol ice crystal (winter program)

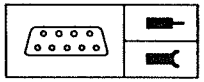

Pin Assignment

Pin Assignments at 48-pin connector X8550 on Jecs control unit

Pin	Type	Description/function	Connection	Type of signal	Tester display	Notes
1	A	Ground solenoid valve	Gearshift unit	active low		During emergency operation, the ground supply is switched off via power transistor
2	A	Solenoid valve main pressure	Ballast resistor	PWM		
3	A	Solenoid valve main pressure	Gearshift unit	PWM		
4	E	Voltage supply terminal 87			Status display	Holding circuit DME control unit
5	E	Ground electronics				
6	A	Solenoid valve A	Gearshift unit	active high	Status display	
7	A	Solenoid valve B	Gearshift unit	active high	Status display	
8	E	Power ground				
9		Not used				
10	A	Engine intervention	DME control unit	active low		
11	A	Fault indicator/serial interface	Instrument cluster	PWM		
12	A	L6 E-program	Instrument cluster	active low	Status display	Instrument cluster
13	A	L7 *-program	Instrument cluster	active low	Status display	Instrument cluster
14		Not used				
15	E	RxD (L-line)				

Pin	Type	Description/function	Connection	Type of signal	Tester display	Notes
16	E	Position switch L4	Selector lever	active high	Status display	
17	E	Position switch L3	Selector lever	active high	Status display	
18	E	Position switch L1	Selector lever	active high	Status display	
19	E	Position switch L2	Selector lever	active high	Status display	
20	E	L6 E-program	Program button	active low	Status display	
21	E	Brake light switch terminal 54	Brake light switch	active high	Status display	
22	E/A	TxD (K-line)				
23	E	Voltage supply terminal 30				Continuous positive
24	E	Engine speed (TD-signal)	DME control unit		Status display	
25	E	Speed sensor n-ab (+)	Speed sensor transmission		Status display	
26		Not used				
27	E	Speed-A signal				
28		Not used				
29	A	Solenoid valve WK	Gearshift unit	PWM		
30		Not used				
31		Not used				
32		Not used				
33	E	Oil temperature sensor NTC	Gearshift unit		Status display	
34	E	DKT interface	DME control unit	PWM	Status display	Preset throttle angle. Engine temperature is transferred during start.
35	E	Sensor ground	Oil temperature sensor, speed sensor			
36		Not used				

Pin	Type	Description/function	Connection	Type of signal	Tester display	Notes
37	E	Brake light test signal	Brake light test switch	active low	Status display	
38	E	L7 *-program	Program button	active low	Status display	
39		Not used				
40		Not used				
41	E	Kick-down	Kick-down switch	active low	Status display	
42	E	L5 S-program	Program button	active low	Status display	
43	A	Solenoid valve freewheeling	Gearshift unit	active high	Status display	
44	A	Solenoid valve R-lock	Gearshift unit	active high	Status display	
45		Not used				
46	A	Solenoid valve C	Gearshift unit	active high	Status display	
47	A	Lifting solenoid P/N shift-lock	Lifting solenoid	active high	Status display	
48		not used				

Troubleshooting

Notes

- Troubleshooting with the BMW DIAGNOSTIC SYSTEM
- Battery charged, U-min = 12 V
- For hydraulic and mechanical components, see Repair Instructions for troubleshooting and testing

Explanation of Defect Code Memory

The EGS control unit can detect 23 different defect codes with a series of additional information. It has room for 5 defect locations and their additional information in its defect code memory.

Defect location: Here, the defect text from the table of defect codes is supplemented by the corresponding pin numbers of the control unit.

Type of defect: Indicated here is whether the defect is a break, a short to positive, a short to ground or a plausibility error.

Defect currently set: Indicated here is whether the control unit currently detects the defect.

Intermittent defect: The reply to this statement is in the affirmative when the defect disappeared at least once. Intermittent defect codes additionally indicate how often the defect disappeared and reappeared.

Defect detected during: Here additional information is given on the operating conditions, under which the defect was detected for the first time, e.g.:

- Output speed
- Engine speed
- Oil temperature
- Battery voltage
- Pulse duty factor main pressure solenoid valves
- Pulse duty factor solenoid valve torque converter lockup clutch
- Program button (input)
- Program display (output)
- Throttle angle (accelerator pedal position)
- Kick-down active yes/no
- Solenoid valves (set position)

Defect Code Table

Defect code	Type of defect	Stored by control unit
000 – 049	Defect can be assigned to one or several pins at the control unit	yes
050 – 199	Defect cannot be assigned to a pin at the control unit (→ plausibility)	yes
200 – 299	Defect can be localised by way of status lists and component activation	no
300 – 399	Diagnostic procedure cannot be used	no

Defect code	Defect description
1	Solenoid valve monitoring
2	Solenoid valve main pressure
4	Voltage supply
6	Solenoid valve A
7	Solenoid valve B
10	Engine intervention
20	Program button
23	Battery voltage supply (permanent)
24	Engine speed signal n-mot (TD*)
25	Drive shaft speed n-ab
27	Speed-A signal
29	Solenoid valve WK
33	Oil temperature sensor
34	Throttle signal (DKT)
41	Kick-down switch
43	Solenoid valve freewheeling
44	Solenoid valve R-lock
46	Solenoid valve C
47	Lifting solenoid P/N shift-lock
50	Slip monitoring WK
51	Gear monitoring
52	Engine overrev
53	A/D converter
200	No kick-down shifts
201	No S-program
202	No *-program
203	No program switchover
204	No engine intervention
205	Detection brake light switch defective
206	Incorrect fault display
300	Diagnostic link defective
301	Control unit voltage supply defective

Defect Code 1

♦D♦Defect code memory: 1 Solenoid Valve Monitoring

Explanation: During initialisation, the control unit checks whether the power transistor switches correctly.

Substitute program:

– Fault display, – maximum pressure, – emergency operation.

Possible cause: Power transistor or ground feedback of solenoid valves (Pin 1) has short or break.

Defect Code 2

♦D♦Defect code memory: 2 Solenoid Valve Main Pressure

Explanation: The main pressure solenoid valve is checked during the initialisation phase by the control unit by way of brief activation. Following defects can be detected during operation depending on the status of the solenoid valve:

– active: Short to ground.
– passive: Short to positive or break.

Substitute program:

– Short to ground: – Fault display, – maximum pressure
– Short to positive or break: – Fault indication, – maximum pressure, – emergency operation

Possible cause: Wire from Pin 2 and/or Pin 3 or winding of solenoid valve main pressure defective.

Troubleshooting: Check solenoid valves and supply line by measuring resistance with control unit disconnected. Refer to chapter - Component testing. If several solenoid valve defects are stored simultaneously with the same ambient conditions, this indicates a drop in the ground supply (Pin 1) while driving. All solenoid valves which were not active when the defect occurred are stored as defective.

Defect Code 4

♦D♦Defect code memory: 4 Voltage Supply

Explanation: This defect code is stored when a battery voltage less than 8 V or greater than 18 V is measured at an engine speed greater than 420 rpm.

Substitute program:

– Fault display, – maximum pressure, – emergency operation

Possible cause: Voltage supply defective.

Troubleshooting: Check voltage supply at pin.

Note: This defect code is cleared when the voltage supply is OK. again.

Defect Code 6

♦D♦Defect code memory: 6 Solenoid Valve A

Explanation: The solenoid valve A is checked completely by the control unit during the initialisation phase by way of brief activation. The following defects can be detected during operation depending on the status of the solenoid valve:

– active: Short to ground.
– passive: Short to positive or break.

Substitute program:

– Short to ground: – Fault display, – 4th gear only
– Short to positive or break: – Fault display, – maximum pressure, – emergency operation

Possible cause: Wire Pin 6 at EGS control unit or winding of solenoid valve A defective.

Troubleshooting: Check solenoid valves and supply wire by measuring resistance with control unit disconnected. Refer to chapter - Component testing. If several solenoid valve defect codes are stored simultaneously with the same ambient conditions, this indicates a drop in the ground supply (Pin 1) while driving. All solenoid valves which were not active when the defect occurred are stored as defective.

Defect Code 7

♦D♦Defect code memory: 7 Solenoid Valve B

Explanation: The solenoid valve B is checked completely by the control unit during the initialisation phase by way of brief activation. The following defects can be detected during operation depending on the status of the solenoid valve:

– active: Short to ground.
– passive: Short to positive or break.

Substitute program:

– Short to ground: – Fault display, – 4th gear only
– Short to positive or break: – Fault display, – maximum pressure, – emergency operation

Possible cause: Wire Pin 7 at EGS control unit or winding of solenoid valve B defective.

Troubleshooting: Check solenoid valves and supply wire by measuring resistance with control unit disconnected. Refer to chapter - Component testing. If several solenoid valve defect codes are stored simultaneously with the same ambient conditions, this indicates a drop in the ground supply (Pin 1) while driving. All solenoid valves which were not active when the defect occurred are stored as defective.

Defect Code 10

♦D♦Defect code memory: 10 Engine Intervention

Explanation: The following defects can be detected during operation depending on the shift status:

– active: Short to positive.
– passive: Short to ground or break.

Substitute program:

– Fault display, – increased main pressure.

Possible cause: Wire defective.

Troubleshooting: Check wire from EGS control unit Pin 10 to DME control unit for break or short in accordance with schematic.

Effect of defect: The ignition timing (angle) can no longer be retarded via the DME control unit so that the torque is no longer reduced during gearshift. To protect the transmission clutches from excessively long slip times (→ wear) the gearshifts are carried out at increased main pressure (→ hard gearshifts).

Defect Code 20

♦D♦Defect code memory: 20 Program Button

Explanation: This defect code is stored when two or three of the wires to the control unit Pin 42 (S-program), 20 (E-program) or 38 (∗ -program) are connected to ground simultaneously. Program switchover is not possible as a result.

Substitute program:

– E-program is specified by control unit.

Possible cause: Wires from program button to EGS control unit defective or program button defective.

Troubleshooting: ♦D♦Status monitoring program button. Depress program button and compare with tester display. If the button is not depressed, all displays on the tester must show "open" and "ground" must be detected when depressed.

Defect Code 23

♦D♦Defect code memory: 23 Battery Voltage Supply (permanent)

Explanation: This defect code is stored when the permanent voltage supply of the control unit is interrupted.

Substitute program:

– Diagnostic information and contents of defect code memory are lost, and no substitute program.

Possible cause: **Wire break.**

Troubleshooting: Check voltage supply at Pin 23.

Note: This defect code is cleared automatically when the permanent voltage supply is OK. again.

Defect Code 24

♦D♦Defect code memory: 24 Speed Signal n-mot (TD*)

Explanation: This defect code is stored when the control unit receives no engine speed signal at an output speed greater than 600 rpm and a throttle angle greater than 17 degrees.

Substitute program:

– Fault display, – no engine intervention

Possible cause: Wires defective.

Troubleshooting: Check speed signal n-mot in ♦D♦Status monitoring of DME control unit and of EGS control unit.

Note: This defect code is cleared automatically, when the engine speed signal is OK. again.

Defect Code 25

♦D♦Defect code memory: 25 Drive Shaft Speed n-ab

Explanation: This defect code is stored when the EGS control unit receives a drive shaft speed n-ab of less than 5 km/h at a speed-A signal greater than 20 km/h.

Substitute program:

– Fault display, – gearshifts to speed-A signal

Possible cause: Wire from EGS control unit Pin 25 or 5 to speed sensor has a break or speed sensor defective.

Troubleshooting: ♦D♦ Status monitoring. With vehicle jacked up and drive range engaged compare drive shaft speed with speed-A signal.

Defect Code 27

♦D♦Defect code memory: 27 Speed-A Signal

Explanation: This defect code is stored when the EGS control unit receives a speed-A signal less than 5 km/h at a drive shaft speed greater than 20 km/h.

Substitute program:

– Gearshifts to drive shaft speed

Possible cause: Wire from EGS control unit Pin 27 has a break or tachogenerator in rear axle gear unit defective.

Troubleshooting: ♦D♦ Status monitoring. With vehicle jacked up and drive range engaged compare drive shaft speed with speed-A signal.

Defect Code 29

♦D♦Defect code memory: 29 Solenoid Valve WK

Explanation: The solenoid valve of the torque converter lockup clutch is checked completely by the control unit during the initialisation phase by way of brief activation. The following defects can be detected during operation depending on the status of the solenoid valve:

– active: Short to ground.
– passive: Short to positive or break.

Substitute program:

– Short to ground: – Fault display, – no WK function
– Short to positive or break: – Fault display, – maximum pressure, – emergency operation

Possible cause: Wire Pin 29 at EGS control unit or winding of solenoid valve WK defective.

Troubleshooting: Check solenoid valves and supply wire by measuring resistance with control unit disconnected. Refer to chapter - Component testing. If several solenoid valve defect codes are stored simultaneously with the same ambient conditions, this indicates a drop in the ground supply (Pin 1) while driving. All solenoid valves which were not active when the defect occurred are stored as defective.

Defect Code 33

♦D♦Defect code memory: 33 Oil Temperature Sensor

Explanation: In the case of this defect, the control unit can differentiate between two types of defects:

– Break or short to positive (→ Minimum temperature detection)
– Short to ground (→ Maximum temperature detection)

Substitute program:

– A substitute value of 110 °C is specified.

Possible cause: Wire from control unit Pin 33 or Pin 35 to oil sump temperature sensor defective, or oil sump temperature sensor (soldered in wire harness of gearshift unit) defective.

Troubleshooting: ♦D♦Status monitoring. Compare transmission oil temperature in display with actual status. A temperature of 110 °C indicates the use of the substitute value.

Note: This defect code is cleared automatically, when the temperature signal is OK. again.

Defect Code 34

♦D♦Defect code memory: 34 Throttle Signal (DKT)

Explanation: When the engine is running, the control unit checks whether a pulse width-modulated signal is sent on the DKT line, i.e. whether the value of the throttle angle (accelerator pedal position) is within the permissible range (pulse duty factor 9% – 91%).

Substitute program:

– Fault display, – maximum pressure
– Shift points:
  – 37% throttle angle (when KD OFF)
  – KD corresponding to 100% throttle angle (when KD ON)

Possible cause: Wire or plug-and-socket connections of the DKT signal line at EGS control unit Pin 34 defective, or DME control unit detects throttle potentiometer defect (→ substitute value 4%).

Troubleshooting: ♦D♦Status monitoring throttle angle, depress accelerator pedal with engine running and compare with tester display.

Defect Code 41

♦D♦Defect code memory: 41 Kick-Down Switch

Explanation: This defect code is stored when the kick-down signal does not agree with the throttle angle value (accelerator pedal position).

Substitute program:

– Control unit suppresses kick-down shifts.

Possible cause: Wire at EGS control unit Pin 41 has short to ground or switch is defective or only the switch (behind pedal) alone was depressed.

Troubleshooting: ♦D♦Status monitoring. Compare displayed kick-down switch with actual situation.

Defect Code 43

♦D♦Defect code memory: 43 Solenoid Valve Freewheeling

Explanation: The solenoid valve freewheeling is checked completely by the control unit during the initialisation phase by way of brief activation. The following defects can be detected during activation depending on the status of the solenoid valve:

– active: Short to ground.
– passive: Short to positive or break.

Substitute program:

– Short to ground: – Fault display, – no freewheeling function
– Short to positive or break: – Fault display, – maximum pressure, – emergency operation

Possible cause: Wire Pin 43 at EGS control unit or winding of solenoid valve freewheeling defective.

Troubleshooting: Check solenoid valves and supply wire by measuring resistance with control unit disconnected. Refer to chapter - Component testing. If several solenoid valve defect codes are stored simultaneously with the same conditions, this indicates a drop in the ground supply (Pin 1) while driving. All solenoid valves which were not active as the defect occurred are stored as being defective.

Defect Code 44

♦D♦Defect code memory: 44 Solenoid Valve R-Lock

Explanation: The solenoid valve R-lock is checked completely by the control unit during the initialisation phase by way of brief activation. The following defects can be detected during operation depending on the status of the solenoid valve:

– active: Short to ground.
– passive: Short to positive or break.

Substitute program:

– Short to ground: – Fault display, – no RS function
– Short to positive or break: – Fault display, – maximum pressure, – emergency operation

Possible cause: Wire Pin 44 at EGS control unit or winding of solenoid valve R-lock defective.

Troubleshooting: Check solenoid valves and supply wire by measuring resistance with control unit disconnected. Refer to chapter - Component testing. If several solenoid valve defect codes are stored simultaneously with the same conditions, this indicates a drop in the ground supply (Pin 1) while driving. All solenoid valves which were not active as the defect occurred are stored as being defective.

Defect Code 46

♦D♦Defect code memory: 46 Solenoid Valve C

Explanation: The solenoid valve C is checked completely by the control unit during the initialisation phase by way of brief activation. The following defects can be detected during operation depending on the status of the solenoid valve:

– active: Short to ground.
– passive: Short to positive or break.

Substitute program:

– Short to ground: – Fault display, – 4th gear only
– Short to positive or break: – Fault display, – maximum pressure, – emergency operation

Possible cause: Wire or winding of solenoid valve C defective.

Troubleshooting: Check solenoid valves and supply wire by measuring resistance with control unit disconnected. Refer to chapter - Component testing. If several solenoid valve defect codes are stored simultaneously with the same conditions, this indicates a drop in the ground supply (Pin 1) while driving. All solenoid valves which were not active as the defect occurred are stored as being defective.

Defect Code 47

♦D♦Defect code memory: 47 Lifting Solenoid P/N Shift-Lock

Explanation: The lifting solenoid P/N shift-lock is checked completely by the control unit during the initialisation phase by way of brief activation. The following defects can be detected during operation depending on the status of the solenoid valve:

– active: Short to ground.
– passive: Short to positive or break.

Substitute program:

– Short to ground: – Fault display, – no shift-lock function
– Short to positive or break: – Fault display, – maximum pressure, – emergency operation

Possible cause: Wire or winding of lifting solenoid defective.

Troubleshooting: Check solenoid valves and supply wire by measuring resistance with control unit disconnected. If several solenoid valve defect codes are stored simultaneously with the same conditions, this indicates a drop in the ground supply (Pin 1) while driving. All solenoid valves which were not active as the defect occurred are stored as being defective.

Defect Code 50

♦D♦Defect code memory: 50 Slip Monitoring WK

Explanation: This defect code is stored when impermissibly high slip occurs with the torque converter lockup clutch closed. This defect code can also be stored when one of the solenoid valves A, B, or C has failed.

Substitute program:

– No WK function

Possible cause: Main pressure too low or torque converter lockup clutch worn.

Troubleshooting: If a solenoid valve defect code is additionally stored, first remedy this defect and clear the defect code memory.

Measure main pressure.

– If main pressure OK.: Replace torque converter.
– If main pressure too low: Replace transmission.

Note: The WK function is activated during each new start.

Defect Code 51

♦D♦Defect code memory: 51 Gear Monitoring

Explanation: This defect code is stored when, with a drive range engaged (D, 4, 3, 2), the speed ratio between the engine speed and output speed does not agree with the engaged gear range.

Substitute program:

– Fault display

Possible causes:

– Electrically selected and hydraulically engaged gear do not agree (operating cable set incorrectly or selector lever switch defective).
– Solenoid valves connected incorrectly.
– Faults in hydraulic gearshift unit.
– A clutch in the transmission is defective.

Troubleshooting:

– Check selector lever switch setting (position N must be detected also when the selector lever is pressed slightly to the rear).
– Check solenoid valves.
– Check hydraulic gearshift unit.
– Replace transmission.

Defect Code 52

♦D♦Defect code memory: 52 Engine Overrev

Explanation: This defect code is stored when an engine speed of 7000 rpm is exceeded with a drive range engaged (D, 4, 3, 2).

Substitute program:

– Fault display

Possible causes:

– Electrically selected and hydraulically engaged gear do not agree (operating cable set incorrectly or selector lever switch defective).
– Solenoid valves connected incorrectly.
– Faults in hydraulic gearshift unit.
– A clutch in the transmission is defective.

Troubleshooting:

– Check selector lever switch setting (position N must be detected also when the selector lever is pressed slightly to the rear).
– Check solenoid valves.
– Check hydraulic gearshift unit.
– Replace transmission.

Defect Code 53

♦D♦Defect code memory: 53 Analog/Digital Converter

Explanation: This defect code is stored when the analog/digital converter in the EGS control unit is found to be defective.

Substitute program:

– Oil temperature substitute value 110 °C, – only E-program

Possible cause: Analog/digital converter defective. If an intermittent defect is indicated, this indicates excessively high temperatures in the control unit which has resulted in temporary failure of the A/D converter (no control unit defect).

Troubleshooting: Replace control unit if defect found (not intermittent defect).

Defect Code 200

No Kick-Down Shifts

Explanation: Kick-down shifts are not performed.

Possible cause: Kd switch defective or the wire from the KD switch to control unit Pin 41 has a break or short to positive.

Troubleshooting: ♦D♦Status monitoring. Compare displayed kick-down switch with actual status.

Defect Code 201

No S-Program

Explanation: S-program cannot be switched.

Possible cause: Wire from program button to Pin 42 at EGS control unit has a break.

Troubleshooting: ♦D♦Status monitoring. Press program button and compare with tester display.

Defect Code 202

No * -Program

Explanation: * -program cannot be switched.

Possible cause: Wire from program button to Pin 38 at EGS control unit has a break.

Troubleshooting: ♦D♦Status monitoring. Press program button and compare with tester display.

Defect Code 203

No Program Switchover

Explanation: Program switchover is not possible. Only E-program.

Possible cause: No ground at program button. Program button defective.

Troubleshooting: ♦D♦Status monitoring. Press program button and compare to tester display.

Defect Code 204

No Engine Intervention

Explanation: The torque cannot be reduced by retarding the ignition timing during gearshift.

Possible cause: The wire from the control unit Pin 10 has a short to positive.

Troubleshooting: ♦D♦ Component activation. Activate engine intervention (ignition timing (angle) intervention). A temporary drop in engine speed should occur with the engine running at operating temperature, if not, connect universal adapter and check wire Pin 10.

Defect Code 205

Detection Brake Light Switch and Brake Light Test Switch Defective

Explanation: The selector lever cannot be engaged in a drive position despite the brake pedal being depressed and engine speed less than 2500 rpm (P/N shift-lock).

Possible cause: Brake light switch and brake light test switch inputs to control unit simultaneously defective.

Troubleshooting: ♦**D**♦**2** Status monitoring. Compare displayed brake light switch and brake light test switch with actual status. A voltage of 12 V is applied at Pin 21 when the brake light switch is active. Ground is applied at Pin 37 when the brake light test switch is active. When the brake pedal is depressed slowly, the brake light switch must close first then followed by the brake light test switch.

Defect Code 206

Incorrect Fault Indication

Explanation: The transmission fault lamp lights in the instrument cluster despite normal operation of the transmission.

Possible cause: The wire from the EGS control unit Pin 11 to the instrument cluster has a break or a short to positive.

Troubleshooting: Check signal at EGS control unit Pin 11.

- After ignition ON, a data telegram is transferred by the EGS control unit to the instrument cluster (clocked change between high and low level at approx. 0.5 sec intervals).
- If the EGS control unit signals a fault (defect detected), it switches battery voltage to Pin 12.

Defect Code 300

Diagnostic Link Defective

Explanation: The diagnostic link TxD or RxD has a break or has a short to positive or ground.

The TxD link leads from the diagnostic socket Pin 20 to the EGS control unit Pin 22 and is connected to ground when the cover of the diagnostic socket is closed.

The RxD link leads from the diagnostic socket Pin 15 to the EGS control unit Pin 15 and is connected to terminal 30 when the cover of the diagnostic socket is closed.

Troubleshooting: Check wires. After tester display, check that the levels of the diagnostic links are OK., if not, a control unit can disturb the diagnostic procedure. In this case, disconnect control units one after the other and re-initiate the diagnostic procedure.

Defect Code 301

Control Unit Voltage Supply Defective

Explanation: The power supply to the EGS control unit Pin 4 is interrupted.

Troubleshooting: Check wire.

Component Testing

The following instructions serve as a supplement to transmission self-diagnosis and assume that the BMW Service Tester is used to monitor the system.

Notes

Observe safety codes and accident prevention regulations when performing all work on the engine and transmission electrical systems.

If not otherwise specified, always switch off the ignition.

Important!

Before disconnecting the control unit or the battery, read out the defect code memory and print out complete with troubleshooting. Detach control unit connector only when the ignition is switched off.

Check wires only with the control unit connector or component connector detached.

Always proceed in accordance with the schematics (note connector and pin numbers).

The specified nominal values refer to a room temperature of 23 ± 5° C.

Refer to Repair Instructions for information on removal and installation as well as technical data.

Tests during troubleshooting must be performed with suitable equipment (test leads, terminals, probe tips etc.). Ensure good contact in order to avoid contact resistances.

Important!

Take particular care when reconnecting the control unit to ensure that the control unit connector is screwed on correctly. This means the red inspection pin must be clearly visible!

Component Nominal Values and Plug Connections

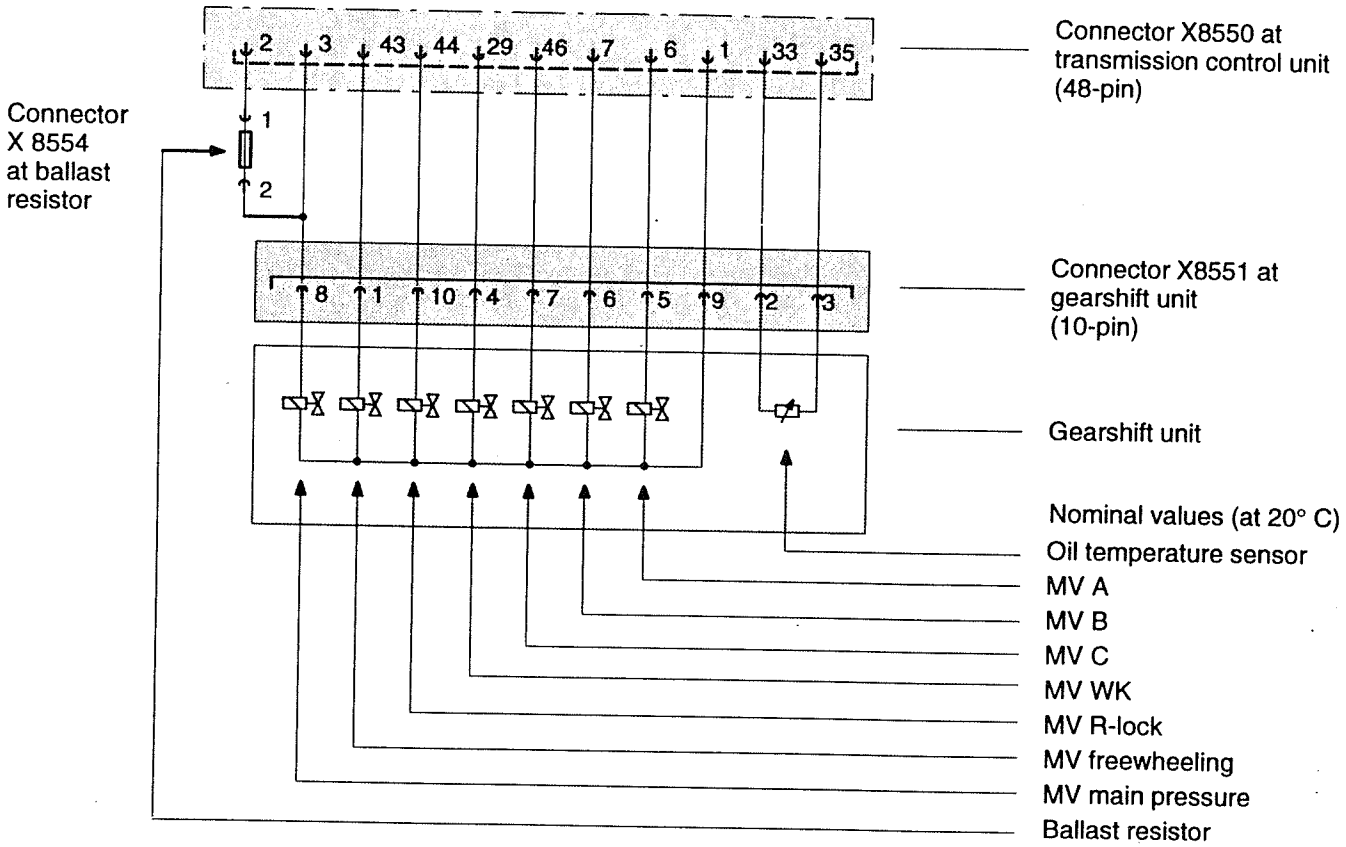

P34 24 019

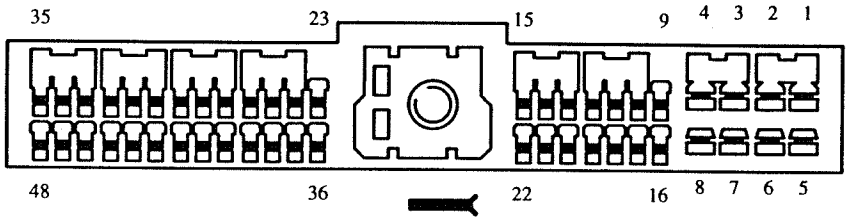

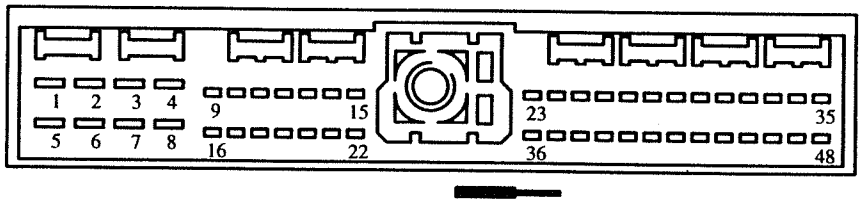

Connector X8550 at transmission control unit (48-pin)

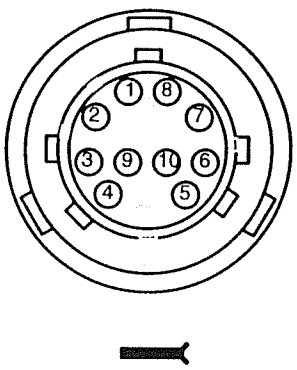

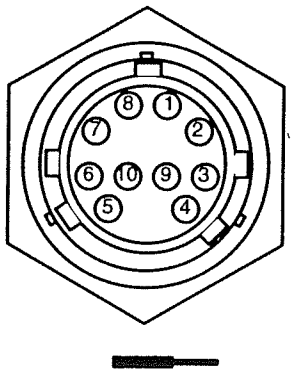

Connector X8551 at gearshift unit (10-pin) up to model year '91

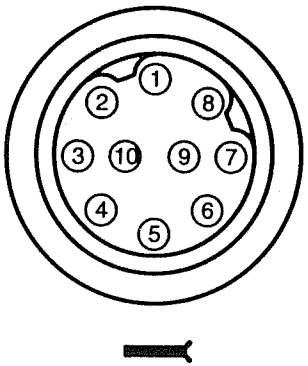

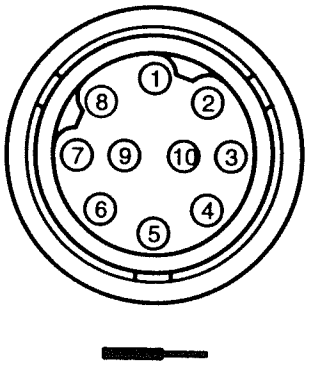

Connector X8551 at gearshift unit (10-pin) from model year '92

P34 24 020

Oil Temperature Sensor

If the displayed oil temperature in ♦D♦2 Status monitoring does not agree with the actual status, measure resistance of the oil temperature sensor with suitable test equipment in accordance with chapter - Component testing - at the transmission connector with the control unit disconnected and ignition switched off.

Pin No. at EGS control unit	Pin No. at transmission connector	Nominal value at 20° C
33 / 35	2 / 3	approx. 2.5 kΩ

If values deviate, check wires and plug-and-socket connection from control unit to transmission and repair if necessary.

Speed Sensor n–ab

If the displayed output speed in ♦D♦2 Status monitoring does not agree with the actual status, measure the resistance of the DZF with suitable test equipment with the control unit disconnected and ignition switched off.

Pin No. at EGS control unit	Nominal value approx.
5 / 25	560 Ω

If values deviate, check wire as well as plug-and-socket connection from control unit to speed sensor and repair if necessary. If OK.: Repair or replace speed sensor.

Solenoid Valves

Check resistance of solenoid valves and hydraulic pressure regulator with suitable test equipment in accordance with chapter - Component testing - at the transmission connector with the control unit disconnected and ignition switched off.

Valve	Pin No. at EGS control unit	Pin No. at transmission connector	Nominal value at 20° C approx.
MV A	6 / 1	5 / 9	25 Ω
MV B	7 / 1	6 / 9	25 Ω
MV C	46 / 1	7 / 9	25 Ω
MV WK	29 / 1	4 / 9	13.4 Ω
MV main pressure	3 / 1	8 / 9	3.2 Ω
MV freewheeling	43 / 1	1 / 9	25 Ω
MV R-lock	44 / 1	10 / 9	25 Ω

If values deviate, check wires and plug-and-socket connections from the control unit to the transmission and repair if necessary.

Selector lever switch, left-hand drive

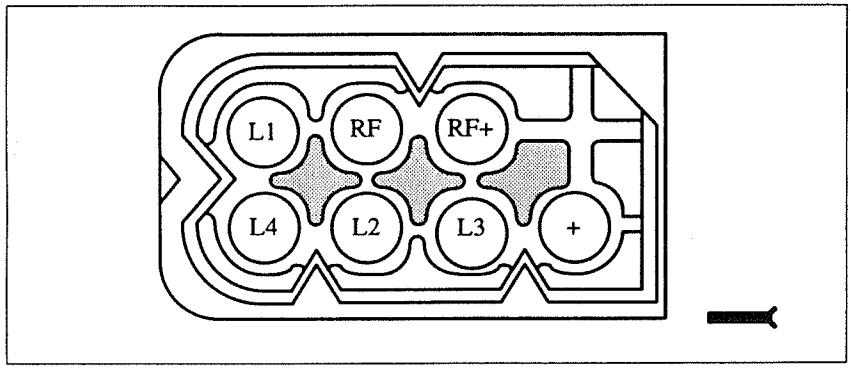

P34 24 010

Selector lever switch, right-hand drive

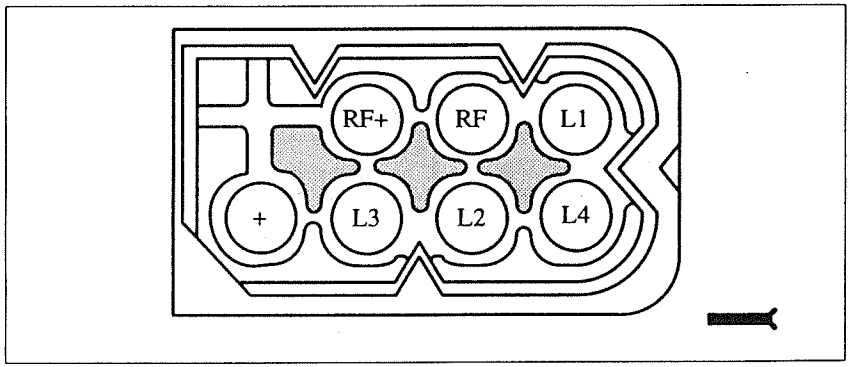

P34 24 011

Gear Selector Lever Switch

Check the gear selector lever switch by means of suitable test equipment with the control unit connected and ignition switched on. (Measure between Pin 8 (–) and the specified pins; "0" corresponds to approx. 0 V, "1" corresponds to approx.12 V).

Conductor	L1	L2	L3	L4
Pin No. at EGS control unit	Pin 18	Pin 19	Pin 17	Pin 16
Selector lever position				
P	1	1	0	1
R	1	0	0	0
N	1	1	1	0
D	0	0	0	1
4	0	0	1	1
3	1	0	1	1
2	0	0	1	0

If a voltage is not measured in any position, check positive supply of the selector lever switch. If activation is defective, remove selector lever switch and check in accordance with table , replace if necessary. (Pin + referred to Pin L1...L4; "1" corresponds to approx. 0 Ω and "0" to more than 10 kΩ). If OK.: Replace wires or plug connections.

The reversing light is switched via the pins RF and RF+ in the selector lever position R.

Program Button

The program button switches one input pin to ground. The corresponding output pin is switched to ground in the control unit until another program has been selected or the vehicle is restarted. Check the program button by means of suitable equipment with the control unit connected and ignition switched on (at EGS control unit measure between Pin 8 (–) and the specified pins; "0" corresponds to approx. 0 V, "+" corresponds to approx. 12 V).

Current program			Pin No. at EGS control unit (input)			Pin No. at EGS control unit (output)			Symbol in instrument cluster		
E	S	*	20	42	38	12	45	13	E	S	*
ON	–	–	0	+	+	0	+	+	ON	–	–
–	ON	–	+	0	+	+	0	+	–	ON	–
–	–	ON	+	+	0	+	+	0	–	–	ON

If the values are not plausible, check ground connection of the program button and repair if necessary. If OK.: Remove program button, check to switching diagram and switch fuse and repair if necessary. If OK.: Check wire and connector, repair if necessary. The control unit or the wire harness (shorts) is defective if the current symbol lights in the program button only when the relevant program is depressed.

The input and output pins are arranged independently so that the input pins are applied to ground only for as long as the program button is depressed.

Program button S-E-* with switching diagram

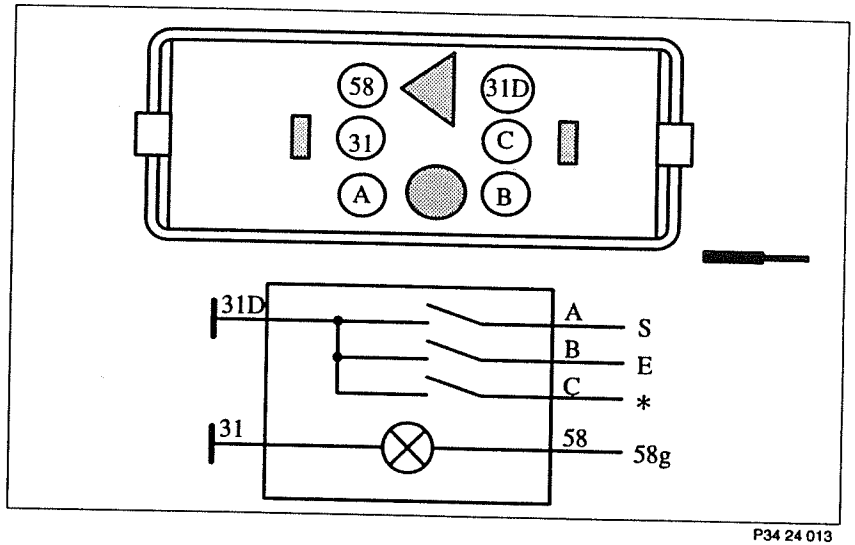

P34 24 013

Kick-down Switch

Check the kick-down switch using suitable test equipment with the ignition switched on and control unit connected.

Pin No. at EGS control unit	Operation	Nominal value
18+/28–	Yes	< 1 V
	No	> 10 V

If values deviate, check wire as well as plug-and socket connection from the control unit to the kick-down switch and repair if necessary.
If OK.: Remove kick-down switch, check and repair if necessary.

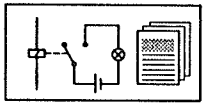

Functional Description

The steering column memory (LSM) represents an extension of the seat-mirror memory. The position of the steering wheel (inclination and longitudinal adjustment) can be set to an optimum driving position by means of two electric motors. The switch mounted on the left-hand side of the steering column is used for this purpose. The control unit activates the motors via a relay corresponding to the required adjustment direction.
A set steering column position can be stored by the LSM control unit. The voltage values of the feedback potentiometers serve as data for the control unit indicating the relevant status of the steering column. The corresponding voltage is stored fail-safe in an EEPROM. A certain steering column position can be programmed and called up via the keypad (three position keys, one memory key) of the SM/SPM system. The LSM system also includes an entry/exit function: For description, refer to Section "Entry/Exit Function" (Page 2).

System Components

- Electrically adjustable steering column with two electric motors for inclination and longitudinal adjustment
- Two feedback potentiometers flanged onto the electric motors
- Steering column switch for operation
- Wire harness LSM

Notes

The steering column memory control unit is only installed in conjunction with the seat/mirror memory. This steering column memory function is not possible in vehicles without a seat/mirror memory, only manual adjustment is possible in this case. A relay module (without self-diagnosis capabilities!) is installed instead of the LSM control unit.

Entry/Exit Function

To provide convenient entry and exit for the driver, at the end of a trip, the steering column is moved to the topmost inclination position (= entry/exit position). The drive position is reassumed when the vehicle is used once again.

In order to detect whether the driver wishes to enter/exit the vehicle (entry/exit position) or whether he wishes to drive (drive position), the control unit uses the following inputs for evaluation: Driver's door, handbrake, terminal R, terminal 15. Certain signals must be applied at these inputs in order to inform the control unit whether the steering column is in the drive position or entry/exit position. The table below shows the ten combinations relevant for the control unit:

	1	2	3	4	5	6	7	8	9	10
Handbrake	applied	applied	applied	applied	applied	released	released	released	released	released
Terminal 15	OFF	OFF	OFF	ON	ON	OFF	OFF	OFF	ON	ON
Terminal R	OFF	OFF	ON	ON	ON	OFF	OFF	ON	ON	ON
Door contact	closed	open	open	closed	open	closed	open	open	closed	open
Drive position	**no**	**no**	**no**	**yes**	**no**	**no**	**no**	**no**	**yes**	**yes**

Notes

In the event of faults in the entry/exit function, refer to Chapter "Troubleshooting" **Defect code 21**, function test with subsequent troubleshooting.

Definition of Potentiometer Voltages

To ensure perfect operation of the LSM, the following potentiometer voltage progressions are defined for the adjustment procedure:

During positive direction of movement of the drives, the voltages of the corresponding feedback potentiometer must increase and decrease in negative direction of movement. Positive direction of movement is defined as: Inclination adjustment up, longitudinal adjustment towards the driver.

Adjustment Procedure

The effective adjustment range (manual and memory adjustment) is restricted in order to relief the load on the mechanical limit stops of the steering column. The drive motors are switched off before reaching the mechanical limits.

The mechanical limits are determined by the control unit in an adjustment procedure. Call: Via diagnosis request or during initial operation of the system.

Procedure: After a delay period of approx. 6 seconds, the following directions of movement are each activated for 6 seconds one after the other.

1. Inclination down
2. Longitudinal adjustment forward (towards driver)
3. Inclination up
4. Inclination down
5. Longitudinal adjustment back

On completion of the adjustment procedure, the steering column stops in the "zero position", the assumed position is stored as the zero position in the EEPROM of the control unit. The adjustment procedure has a duration of approx. 50 seconds.

Important!

The adjustment procedure must also be carried out on completion of work on the steering system which has an effect on the LSM!

Steering Column Memory (LSM)

General Block Diagram

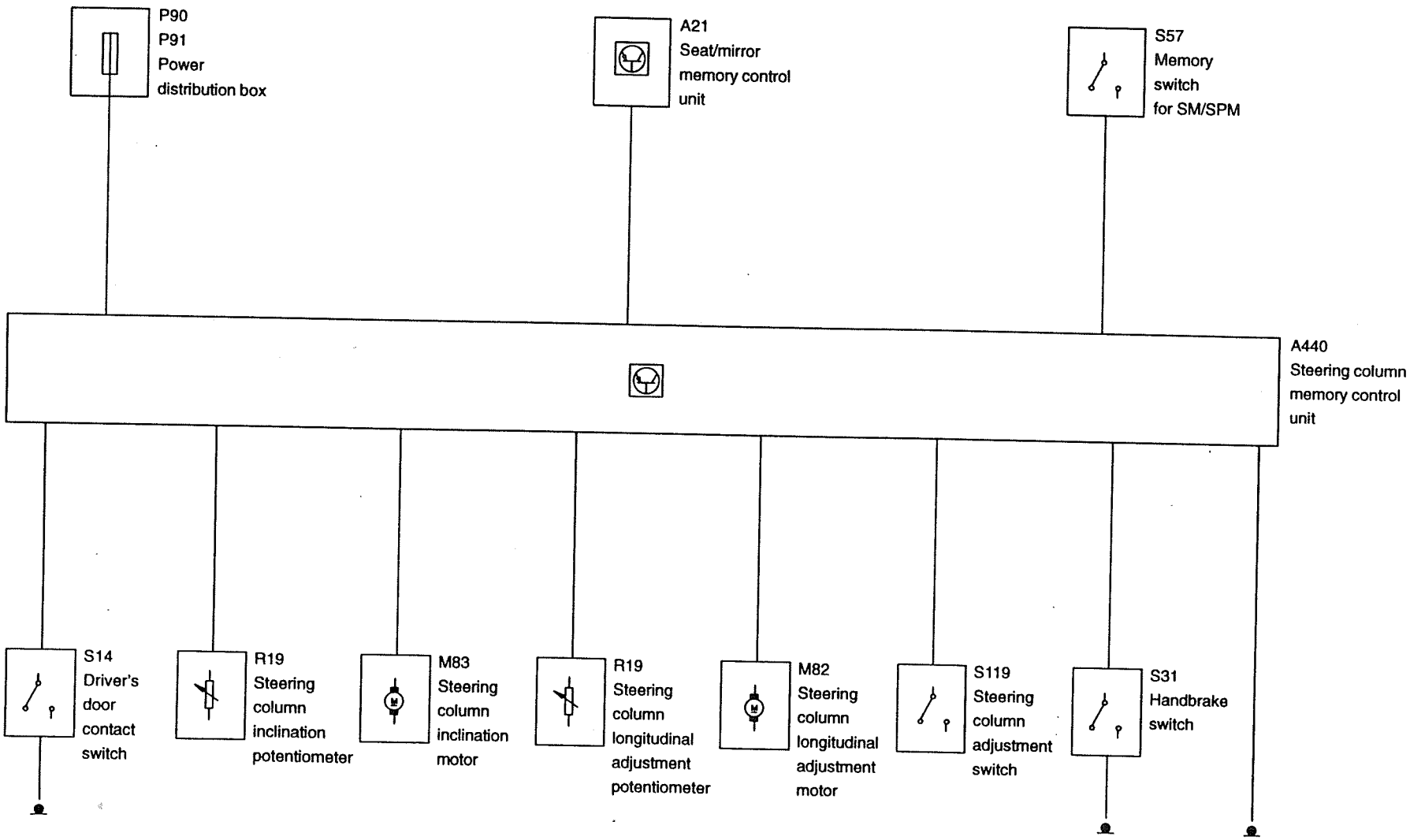

Notes on the BMW DIAGNOSTIC SYSTEM

Caution!

Accident risk in adjustment range of the steering column during the adjustment procedure!

Abbreviations

LSM	Steering column memory
LSS	Steering column switch
SG	Control unit

Pin Assignment

Pin Assignments at Connector X1229 (4-pin)

Pin	Type	Description/function	Connection	Type of signal	Tester display	Measurement notes
1	E	Terminal 31	Load ground for adjustment motors			
2	E	Terminal 30	Fuse	12 V		
3	E	Input handbrake contact	Handbrake	12 V	♦D♦Status monitoring	active low
4	E	Terminal 31	Electronic ground			

Pin Assignments at Connector X18098 (5-pin)

Pin	Type	Description/function	Connection	Type of signal	Tester display	Measurement notes
1	A	Motor connection, inclination down	Inclination adjustment motor	+/–12 V		
2	A	Motor connection, inclination up	Inclination adjustment motor	+/–12 V		
3	A	Motor connection, longitudinal adjustment forward	Longitudinal adjustment motor	+/–12 V		
4		not used				
5	A	Motor connection, longitudinal adjustment back	Longitudinal adjustment motor	+/–12 V		

Pin Assignments at Connector X18099 (12-pin, black)

Pin	Type	Description/function	Connection	Type of signal	Tester display	Measurement notes
1	A	Potentiometer supply	Longitudinal adjustment forward	5 V	Potentiometer measured value	
2	A	Potentiometer supply	Inclination up	5 V	Potentiometer measured value	
3	A	Potentiometer ground	Longitudinal adjustment back	> 0 V		
4	A	Potentiometer ground	Inclination down	> 0 V		
5	A	Potentiometer feedback	Potentiometer inclination	5 V		
6	A	Potentiometer feedback	Potentiometer longitudinal adjustment	5 V		
7		not used				
8	A	Switch signal	Switch inclination up	12 V	♦D♦Status monitoring	active low
9	A	Switch signal	Switch inclination down	12 V	♦D♦Status monitoring	active low
10	E	Switch signal	Switch longitudinal adjustment forward	12 V	♦D♦Status monitoring	active low
11	E	Switch signal	Switch longitudinal adjustment back	12 V	♦D♦Status monitoring	active low
12	A	Ground	Steering column switch			

Pin Assignments at Connector X18131 (12-pin, white)

Pin	Type	Description/function	Connection	Type of signal	Tester display	Measurement notes
1	A	Diagnosis TxD	Diagnostic connector			
2	E	Diagnosis RxD	Diagnostic connector			
3	E	Connection terminal 15	Connector memory	12 V		
4	E	Connection terminal R	Connector Memory	12 V		
5		not used				
6		not used				
7		not used				
8	A	Memory-LED	LED	2 V		active high
9	A	Connection keypad	Keypad	5 V		
10	E	Connection door contact	Door contact	12 V	♦D♦Status monitoring	active low
11		not used				
12		not used				

Adapters

Component	Connector No.	Description	Adapter No.
Control unit	X18099	12-pin black	HWB 614 4 80
Control unit	X18131	12-pin white	HWB 614 4 80

Troubleshooting

Notes

- Troubleshooting with BMW Diagnostic System
- Battery charged, U-min = 12 Volt
- Removal and installation of control unit only with the ignition switched off

Defect Code Table

♦D♦Defect code memory – Defect codes which can be stored by the control unit:

Defect code 1 : Inclination adjustment
Defect code 2 : Longitudinal adjustment
Defect code 3 : Calibration error adjustment logic
Defect code 4 : Relay monitoring inclination
Defect code 5 : Relay monitoring longitudinal adjustment
Defect code 6 : Position-time monitoring inclination
Defect code 7 : Position-time monitoring longitudinal adjustment
Defect code 8 : Signal steering column switch
Defect code 9 : Signal steering column switch
Defect code 10: Signal steering column switch
Defect code 11: Signal steering column switch
Defect code 12: Keypad
Defect code 13: Terminal R
Defect code 14: Memory-LED
Defect code 15: Relay monitoring
Defect code 16: Relay monitoring

Malfunctions – Defect codes which cannot be stored:

Defect code 20: LSM not in operation
Defect code 21: Entry/exit function

Defect Code 1

♦D♦Defect code memory: 1 Inclination Adjustment

Explanation: This defect code is stored when the adjustment system moves beyond the operating range of inclination adjustment. Steering column adjustment is no longer accepted if the defect code is set (inclination and longitudinal adjustment).

Possible cause: The measured voltage value of the potentiometer feedback is outside the permissible range.

Troubleshooting: Check wires to the adjustment motor for inclination adjustment, repair if necessary:

Adjustment direction "down": From control unit connector X18098 Pin 1 to connector X18096 Pin 2.

Adjustment direction "up": From control unit connector X18098 Pin 2 to connector X18096 Pin 1.

If defect is not repaired, check wires from the LSM control unit to potentiometer for inclination adjustment and repair if necessary:

Potentiometer connection "feedback": From control unit connector X18099 Pin 5 to connector X18904 Pin 2.

Potentiometer connection supply adjustment direction "up": From control unit connector X18099 Pin 2 to connector X18094 Pin 3.

Potentiometer connection supply adjustment direction "down": From control unit connector X18099 Pin 4 to connector X18094 Pin 1.

If all wires and connections are OK., check potentiometer and drive motors for inclination adjustment and repair if necessary.

Defect Code 2

♦D♦Defect code memory: 2 Longitudinal Adjustment

Explanation: This defect code is stored when the adjustment system moves beyond the operating range of longitudinal adjustment. Steering column adjustment is no longer accepted if the defect code is set (inclination and longitudinal adjustment).

Possible cause: The measured voltage value of the potentiometer feedback is outside the permissible range.

Troubleshooting: Check wires from the LSM control unit to the adjustment motor for longitudinal adjustment, repair if necessary:

Adjustment direction "forward": From control unit connector X18098 Pin 3 to connector X18097 Pin 1.

Adjustment direction "back": From control unit connector X18098 Pin 5 to connector X18097 Pin 2.

If the defect is not repaired, check wires from LSM control unit to potentiometer for longitudinal adjustment and repair if necessary:

Potentiometer connection "feedback": From control unit connector X18099 Pin 6 to connector X18905 Pin 2.

Potentiometer connection supply adjustment direction "forward": From control unit connector X18099 Pin 1 to connector X18095 Pin 3.

Potentiometer connection supply adjustment direction "back": From control unit connector X18099 Pin 3 to connector X18095 Pin 1.

If all wires and connections are OK., check potentiometer and drive motors for longitudinal adjustment and repair if necessary.

Defect Code 3

♦D♦Defect code memory: 3 Error Adjustment Logic

Explanation: This defect code is stored when the inclination adjustment potentiometer moves although no activation command for the corresponding adjustment motor has been given.

Possible cause: Potentiometer or motor connections interchanged.

Troubleshooting: Ensure all motor and potentiometer connections are correct in accordance with pin assignments/schematics (longitudinal and inclination adjustment) and correct/repair if necessary.

Defect Code 4

♦D♦Defect code memory: 4 Relay Monitoring Inclination

Possible cause: Relay for inclination adjustment defective.

Troubleshooting: Replace control unit.

Defect Code 5

♦D♦Defect code memory: 5 Relay Monitoring Longitudinal Direction

Possible cause: Relay for longitudinal adjustment defective.

Troubleshooting: Replace control unit.

Defect Code 6

♦D♦Defect code memory: 6 Position-Time Monitoring Inclination

Possible cause: Change in potentiometer voltage during adjustment no correct. Can be cause, for instance, by blocking of the steering column adjustment due to external obstruction (objects) or stiffness in the adjustment kinematics.

Effect of defect: Steering column adjustment is deactivated in the blocked inclination direction.

Troubleshooting: Check adjustment motors and adjust kinematics for inclination adjustment and repair if necessary. Clear the defect code memory if no defect is found.

Defect Code 7

♦D♦Defect code memory: 7 Position-Time Monitoring Longitudinal Adjustment

Possible cause: Change in potentiometer voltage during adjustment not correct. Can be caused, for instance, by blocking of the steering column adjustment due to external obstruction (objects) or stiffness in the adjustment kinematics.

Troubleshooting: Check adjustment motors and adjustment kinematics for longitudinal adjustment and repair if necessary. Clear the defect code memory if no defect is found.

Defect Code 8

♦D♦Defect code memory: 8 Signal Steering Column Switch, Adjustment Direction Back

Possible cause: Input of steering column switch signal active for longer than 24 seconds.

Effect of defect: The corresponding signal is ignored for the time the defect code is set.

Troubleshooting: Check wire and repair if necessary.

From steering column switch connector X18093 Pin 2 to 12-pin black control unit connector Pin 11; if wire is OK., check steering column switch and renew if necessary.

Also check the ground wire from the control unit to the steering column switch and repair if necessary:

From steering column switch connector X18093 Pin 3 to 12-pin black control unit connector Pin 12.

Defect Code 9

♦D♦Defect code memory: 9 Signal Steering Column Switch, Adjustment Direction Forward

Possible cause: Input of steering column switch signal active for longer than 24 seconds.

Effect of defect: The corresponding signal is ignored for the time the defect code is set.

Troubleshooting: Check wire and repair if necessary:

From steering column switch connector X18093 Pin 1 to 12-pin black control unit connector Pin 10; if wire is OK., check steering column switch and renew if necessary.

Also check the ground wire from the control unit to the steering column switch and repair if necessary:

From steering column switch connector 18093 Pin 3 to 12-pin black control unit connector Pin 12.

Defect Code 10

♦D♦Defect code memory: 10 Signal Steering Column Switch, Adjustment Direction Inclination Down

Possible cause: Input of steering column switch signal active for longer than 24 seconds.

Effect of defect: The corresponding signal is ignored for the time the defect code is set.

Troubleshooting: Check wire and repair if necessary:

From steering column switch connector X18093 Pin 5 to 12-pin black control unit connector 18099 Pin 9; if wire is OK., check steering column switch and renew if necessary.

Also check the ground wire from the control unit to the steering column switch and repair if necessary:

From steering column switch connector X18093 Pin 3 to 12-pin black control unit connector Pin 12.

Defect Code 11

♦D♦Defect code memory: 11 Signal Steering Column Switch, Adjustment Direction Inclination Up

Possible cause: Input of steering column switch signal active for longer than 24 seconds.

Effect of defect: The corresponding signal is ignored for the time the defect code is set.

Troubleshooting: Check wire and repair if necessary:

From steering column switch connector X18093 Pin 4 to 12-pin black control unit connector Pin 8; if wire is OK., check steering column switch and renew if necessary.

Also check the ground wire from the control unit to the steering column switch and repair if necessary:

From steering column switch connector X18093 Pin 3 to 12-pin black control unit connector Pin 12.

Defect Code 12

♦D♦Defect code memory: 12 Keypad

Possible cause: Short to ground

Effect of defect: Keypad signal is ignored

Troubleshooting: Check wire from 12-pin white control unit connector Pin 9 via connector memory X678 B Pin 12 to keypad (memory switch) and repair if necessary.

If wire is OK., check keypad (memory switch) and repair if necessary.

Defect Code 13

♦D♦Defect code memory: 13 Terminal R

Possible cause: Control unit does not detect terminal R when terminal 15 is active.

Effect of defect: Defect is ignored, unit operates as for terminal 15.

Troubleshooting: Check wire and repair if necessary.

From terminal R (connector memory X394 B Pin 8) to 12-pin white control unit connector Pin 4.

If wire is OK., check ignition lock/wires and repair if necessary.

Defect Code 14

♦D♦Defect code memory: 14 Memory-LED

Possible cause: The voltage which corresponds to the "memory" function is not detected by the control unit.

Effect of defect: Defect is ignored. Memory standby is not derived from the LED itself but rather from the LED signal.There are no restrictions in operation.

Troubleshooting: Check wire and repair if necessary.

From 12-pin white control unit connector Pin 8 to connector memory X678 B Pin 11 and further to memory-LED.

If wire/contacts OK., check LED and renew if necessary.

Defect Code 15

♦D♦Defect code memory: 15 Relay Monitoring

Possible cause: Relay monitoring signal detected as active although no relay activation command was given.
Reason: Relay defective

Effect of defect: Relay remains in operating position after activation.

Troubleshooting: Renew control unit.

Defect Code 16

♦D♦Defect code memory: 16 Relay Monitoring

Possible cause: No signal during relay activation.

Effect of defect: Relays do not respond during activation or internal defect in control unit.

Troubleshooting: Renew control unit.

Defect Code 20

Malfunction: LSM Failure

Effect of defect: Partial/total failure of LSM

Troubleshooting: The following causes are possible and should be investigated:

- Fuse No. 40
- Terminal 30 – Connection of the control unit: 4-pin control unit connector Pin 2
- Terminal 15 – Connection of the control unit: 12-pin white control unit connector Pin 3
- Ground connection of the control unit: 4-pin control unit connector Pin 1 (Terminal 31 L = Load ground for motor current) and Pin 4 (Terminal 31 D = Control ground; connected to E-ground of the SM/SPM control unit)

Defect Code 21

Malfunction: Entry/Exit Function

Effect of defect: Entry/exit function defective

Function check: Sequence of steps must be followed!:

Operating step	Set position of steering wheel
1. Sit in driver's seat	Entry/exit position
2. Close driver's door	Entry/exit position
3. Apply handbrake	Entry/exit position
4. Switch on terminal R	Entry/exit position
5. Switch on terminal 15	Drive position
6. Open driver's door	Entry/exit position
7. Release handbrake	Drive position

Troubleshooting: If, during the individual operating steps, the actual status of the steering wheel position does not correspond to the set status, check the corresponding inputs with the aid of the status monitoring function in the diagnostic program. Check the inputs not detected by the control unit:

- Input terminal R: Check wire and repair if necessary.
  From terminal R (connector memory X394 B Pin 8) to 12-pin white control unit connector Pin 4.
  If wire is OK., check ignition lock/wires and repair if necessary.
- Input terminal 15: Check wire and repair if necessary.
  From terminal 15 (connector memory X394 B Pin 9) to 12-pin white control unit connector Pin 3.
- Input driver's door: Check wire and repair if necessary.
  From driver's door contact via connector memory X394 B Pin 12 to 12-pin white control unit connector Pin 10.
  If wire is OK. and defect not rectified, check driver's door contact and renew if necessary (see Repair Instructions Group 61).
- Handbrake contact: Check wire and repair if necessary.
  From handbrake contact to 4-pin control unit connector Pin 3.
  If wire is OK. and defect not rectified, check handbrake contact and renew if necessary (see Repair Instructions Group 61).

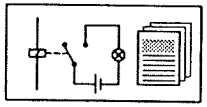

Functional Description

General

The airbag is an integral part of the passive safety system.

Three different versions of the system are available:

- Driver's airbag
- Driver's airbag with passengers belt tensioner
- Full airbag (driver's airbag and passenger's airbag)

The systems basically consist of the following components:

- Diagnostic unit with ignition capacitor
- 2 crash sensors
- Crash sensor wire harness
- Airbag unit for driver (in steering wheel)
- Passenger's belt tensioner (only for passenger's belt tensioner)
- Passenger's airbag unit (only full airbag)
- Cover plate (only full airbag)
- Wire harness for passenger's belt tensioner
- Wire harness for passenger's airbag unit (only full airbag)

The airbag is triggered in the event of a head-on collision at a speed in excess of 30 km/h within the range from 30° to the left and right with respect to the longitudinal axis of the vehicle.

The ignition current flows when at least one front crash sensor and the safety sensor in the diagnostic unit are closed simultaneously.

The ignition energy is made available by and ignition capacitor (35 V voltage).

Function of Failure Warning Lamp

As of terminal R (ignition lock position 1), the failure warning lamp begins to light for approx. 6 seconds and then goes out. The airbag system is in standby mode. If a defect occurs in the airbag system, the failure warning lamp begins to flash for approx. 60 seconds and then lights with a steady light. This shows the driver that the airbag system is not in standby mode. The airbag system does not resume standby mode until the defect is rectified and the defect code memory in the diagnostic unit has been cleared.

Important!

The safety regulation in accordance with Repair Instructions Group 32 must be observed when working on the airbag system.

Airbag (AB)

General Block Diagram

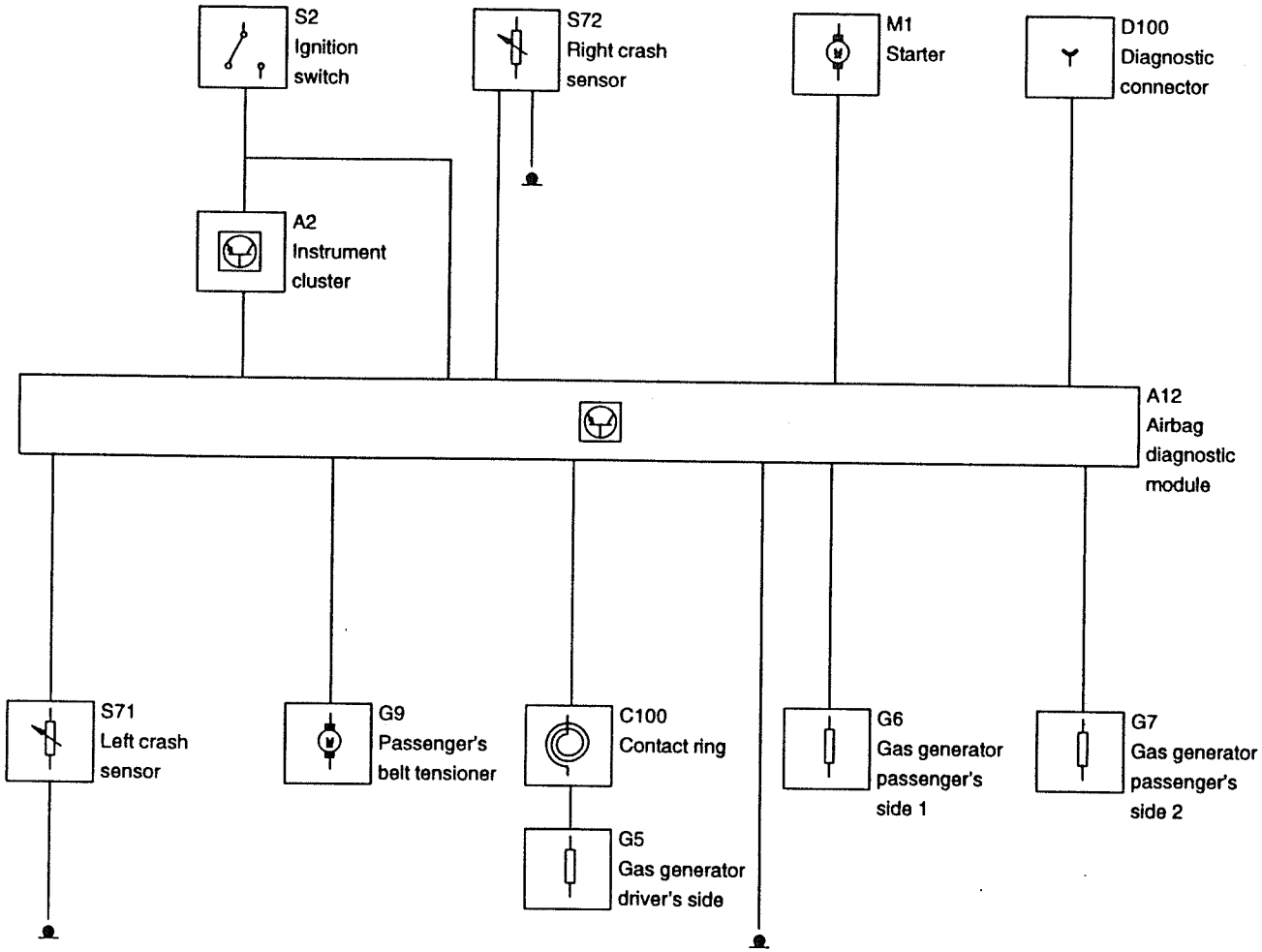

P32 32 001

Notes on the BMW DIAGNOSTIC SYSTEM

The diagnostic procedure is not possible if the plug connection X74 is interrupted.

Performing the diagnostic procedure without sufficient ground connection (by way of screw connection) at the casing of the diagnostic unit can cause damage to the diagnostic unit.

The diagnostic program detects which version of the airbag system is installed in the vehicle and automatically assigns the corresponding troubleshooting procedure.

The text "data transfer error" which may appear in the last line during troubleshooting can be ignored (appears when battery disconnected).

If the text "airbag control unit found" appears on the identification page, this indicates that although the diagnostic program has detected an airbag control unit, the troubleshooting procedure has been allocated incorrectly.

Abbreviations

AB	Airbag
E	Input
A	Output

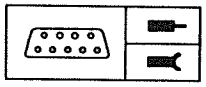

Pin Assignment

Overview of Connectors

Number	Type	Description
X74	8-pin, orange	Plug connection airbag diagnostic unit
X75	6-pin, orange	Plug connection sensors airbag diagnostic unit
X81	3-pin, orange	Plug connection left front crash sensor
X86	3-pin, orange	Plug connection right front crash sensor
X781	2-pin, orange	Plug connection passenger's belt tensioner or plug connection generator passenger I (full airbag)
X782	2-pin, orange	Generator passenger II (full airbag)
X783	2-pin, orange	Plug connection generator driver
X784	2-pin, orange	Plug connection, airbag diagnostic unit connection line generator driver
X9997	2-pin, red	Plug connection driver's airbag unit

Pin Assignments at Connector X74 (Plug Connection Airbag Diagnostic Unit)

Pin	Type	Description/function	Connection	Type of signal	Tester display	Measurement notes
1	E	B+ (terminal R not fuse–protected)	Wire harness	approx. 12 V		Ignition lock position 1 (terminal R)
2	E	Start signal	Wire harness	approx. 12 V		During start procedure
3		Not used				
4	A	Failure warning lamp signal	Instrument cluster	approx. 12 V		Ignition lock position 1 (terminal R)
5		Not used				
6	E	Diagnostic link RxD	Diagnostic bus			
7	A	Diagnostic link TxD	Diagnostic bus			
8		Not used				

Adapters

Component	Connector No.	Description	Adapter No.
Two-pin wire harness connector on diagnostic unit	X781, X782, X784	Lead for airbag in conjunction with airbag test connector	Cartool 62 1 280 / Cartool 62 1 260
Two-pin wire harness connector in steering column trim panel	X783	Airbag test connector	Cartool 62 1 260

Troubleshooting

Defect Code Storage

Defect Code Detection

When in standby mode, all components of the airbag system (as of terminal R) are constantly monitored for defects. Depending on the type of defect, every fault must be applied for a certain period of time (200 ms to 80 sec) in order to be detected as a fault and to be stored. If a defect code is stored, the airbag system remains out of operation until the defect code is cleared by an external diagnostic unit (BMW DIAGNOSTIC SYSTEM, BMW MoDiC, airbag diagnostic reset). The diagnostic unit, however, still continues to monitor the system.

If the defect conditions no longer exist while diagnosis is being performed, the defect is indicated as a long-term defect. If the defect no longer exists, the type of defect is changed to an intermittent defect. The defect code, however, still remains in the defect code memory.

Intermittent Defect

In this case, measuring the relevant defect path is of little use since the defect no longer exists at the time the test is carried out. In the case of wire defects, troubleshooting could be carried out in accordance with the instructions provided on the display screen. Wherever possible, the complete wire as well as all plug connections on the defect path should be visually inspected. Repair or renew any pinched wires and defective or loose plug connections.

Attention! When elements of the system, such as steering wheel or instrument cluster are removed when the airbag system is in standby mode (as of terminal R), this is also detected by the diagnostic system as a defect and stored in the defect code memory. Therefore, it is absolutely necessary to clear the airbag defect code memory after installation of these components.

After selecting "read defect code memory", a note appears on the screen indicating whether the first defect code entry took place more than or less than an hour ago. This helps to determine whether a defect occurred in the workshop by removing system components.

Long-Term Defects

In this case, perform troubleshooting as displayed on the screen. If no defect can be found in the periphery, check the disconnected plug connection for dirt and defects and if necessary repair or renew defective parts.

Defect Code Table

Defects which can be stored by the airbag diagnostic unit

Code number	Driver's airbag	Driver's airbag with passenger's belt tensioner	Full airbag
01	Ignition capacitor defective	Ignition capacitor defective	Ignition capacitor defective
02	Diagnostic unit malfunction	Diagnostic unit malfunction	Diagnostic unit malfunction
03	Driver's airbag supply line, insufficient insulation	Driver's airbag supply line, insufficient insulation	Driver's airbag supply line, insufficient insulation
04	Driver's airbag supply line defective	Driver's airbag supply line defective	Driver's airbag supply line defective
05		Insufficient insulation on belt tensioner supply line	
06		Belt tensioner supply line defective	
07	Left front crash sensor, faulty contact	Left front crash sensor, faulty contact	Left front crash sensor, faulty contact
08	Left front crash sensor defective	Left front crash sensor defective	Left front crash sensor defective
09	Left front crash sensor, ground contact defective	Left front crash sensor, ground contact defective	Left front crash sensor, ground contact defective
10	Right front crash sensor, faulty contact	Right front crash sensor, faulty contact	Right front crash sensor, faulty contact
11	Right front crash sensor defective	Right front crash sensor defective	Right front crash sensor defective
12	Right front crash sensor, ground contact defective	Right front crash sensor, ground contact defective	Right front crash sensor, ground contact defective
13	Left front crash sensor supply line, insufficient insulation	Left front crash sensor supply line, insufficient insulation	Left front crash sensor supply line, insufficient insulation
14	Left front crash sensor supply line defective	Left front crash sensor supply line defective	Left front crash sensor supply line defective

Code number	Driver's airbag	Driver's airbag with passenger's belt tensioner	Full airbag
15	Right front crash sensor, insufficient insulation	Right front crash sensor, insufficient insulation	Right front crash sensor, insufficient insulation
16	Right front crash sensor supply line defective	Right front crash sensor supply line defective	Right front crash sensor supply line defective
17	Warning lamp short-circuit	Warning lamp short-circuit	Warning lamp short-circuit
18	Warning lamp defective	Warning lamp defective	Warning lamp defective
19	Defect code memory set	Defect code memory set	Defect code memory set
20	Dignostic unit defective	Dignostic unit defective	Dignostic unit defective
21			Passenger's airbag supply line, insufficient insulation
22			Passenger's supply line defective

Functional Description

Basically, the Servotronic system consists of the following components:

- Instrument cluster (vehicle speed signal output)
- Servotronic control unit
- Electrohydraulic converter (solenoid valve flange-mounted on steering gearbox)

When the ignition is switched on, the Servotronic control unit receives battery voltage via a fuse and the vehicle speed signal from the instrument cluster (see schematic).

When the vehicle is stationary (engine idling), the Servotronic control unit sends a pulsating signal to the electrohydraulic converter. The solenoid valve closes such that complete steering assistance is active (the steering wheel turns very easily). As the vehicle speed increases, the control unit reduces the signal output to the electrohydraulic converter and the solenoid valve begins to open. The extent the valve opens is determined by the vehicle speed. As the solenoid valve opens, hydraulic oil flows from the reaction chamber of the steering gearbox into the return, thus reducing the power assistance. Greater effort is now necessary to turn the steering wheel.

Notes on the BMW DIAGNOSTIC SYSTEM

This system does not feature diagnostic capabilities

Abbreviations

not applicable

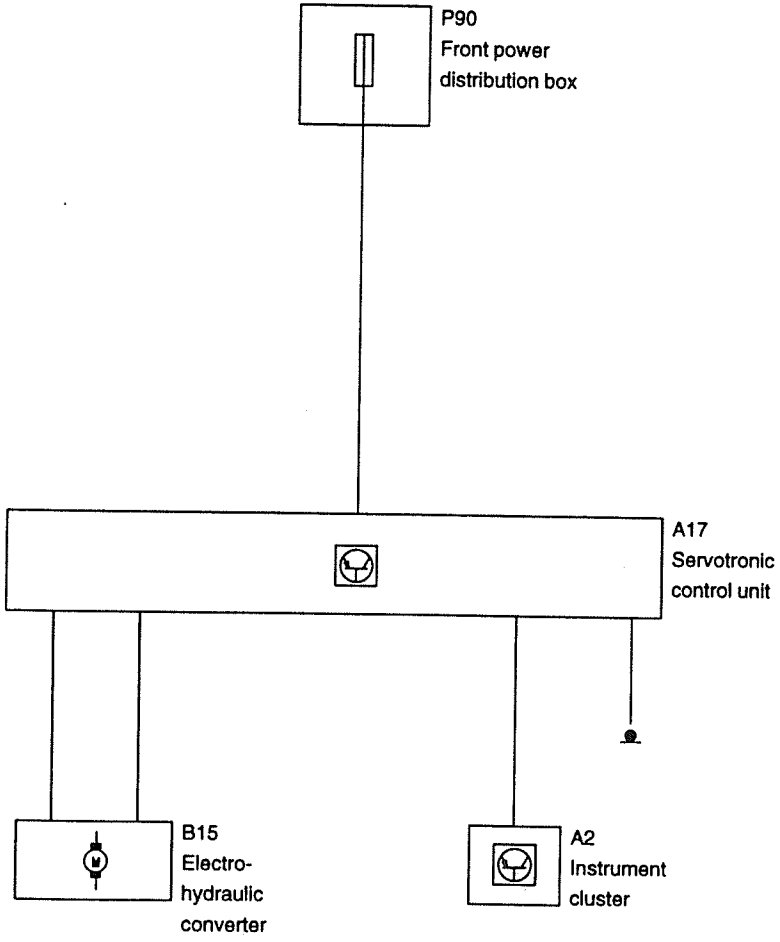
P90
Front power
distribution box
A17
Servotronic
control unit
B15
Electro-
hydraulic
converter
A2
Instrument
cluster

P32 32 003

Pin Assignment

Connector Numbers

Number	Type	Description
X83	3-pin, yellow	Control unit A17
X84	3-pin, yellow	Control unit A17

Pin Assignments at Connector X83

Pin	Type	Description/function	Connection	Type of signal	Tester display	Measurement notes
1		Not used				
2		Control line	Electrohydraulic converter			
3		Control line	Electrohydraulic converter			

Pin Assignments at Connector X84

Pin	Type	Description/function	Connection	Type of signal	Tester display	Measurement notes
1		Vehicle speed signal	A2, instrument cluster			
2		Control unit ground	Diagnostic connector			
3		Battery voltage	Fuse			

Troubleshooting

Notes

Function Check

The Servotronic system is OK. when

a) with the vehicle stationary and the engine running, the steering wheel can be turned with one finger at the spoke of the steering wheel. If the fuse F28 is removed, the necessary steering effort increases considerably.

b) the necessary effort at the steering wheel increases continuously at the vehicle speed increases.

Prerequisites for Troubleshooting

Function of power assisted steering system checked, see Repair Instructions

Fuse OK.

Battery charged U > 11.5 V

Speedometer OK.

Ignition switched on

Troubleshooting

Detach connector X120 at the converter (steering gearbox). Clean connections or replace connector. Repeat function check. Is system OK.?

|
no
↓

Interconnect adapter for current measurement. Connect BMW Service Tester and simulator (see 0130). Does
a) a current > 500 mA flow at a frequency of 0 – 20 Hz?
b) a current of < 200 mA at above 250 Hz?

— yes → Remove converter and blow out return holes with compressed air. Re-install converter and check function. Is system OK.?

|
no
↓

Replace converter.

|
no
↓

— * —

Remove panel trim of the left-hand A-column. Detach connector X83 (2-pin) at the control unit and check both lines to the connector X120 for a break or a short. Is wire OK.?

— no → Repair wire.

|
yes
↓

— * —

Detach connector X84 (3-pin) at the control unit. Is the speedometer signal (frequency) – supplied by simulator (see 0130) – applied at Pin 1 of the connector X84?

— no → Repair wire to instrument cluster.
Note: For other systems which process the speed signal, refer to chapter 6200.

—*—

yes
↓

Is a voltage > 11.5 V applied at Pin 2 of connector X484 and ground at Pin 3?

— no → Repair wire to power distribution box or ground terminal.

—*—

yes
↓

Replace control unit.

—*—

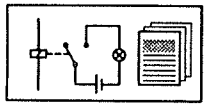

Functional Description

Operating Principle

The decisive factor during the braking procedure is the friction between the tyres and the road surface. In order to brake the vehicle, the tyre must transmit a frictional force to the road surface. This results in a slip between the tyre and the road surface, i.e. the peripheral speed of the wheel lags behind the vehicle speed. When the wheel is locked, i.e. at 100% slip, the frictional force is generally lower than is the case when the wheels are still rolling.

The antilock brake system (ABS) must therefore control the brake pressure in the wheel brake cylinder such that the slip remains within a range, in which the highest frictional force is available. This also ensures sufficiently high lateral traction remains for effective steerability and directional stability of the vehicle.

The amount of slip, at which the maximum frictional force occurs as well as the amount of frictional force itself basically depend upon the tyres (type, tread, rubber mixture), the road (material, surface, wetness, icing), the vehicle speed and the slip angle of the wheels.

The antilock brake system (ABS) detects the current frictional condition between the tyres and road surface. It reacts automatically to any change in the road-tyre adhesion and utilises the maximum coefficients of friction without the vehicle slipping or skidding as the result of the wheels locking. Irregular frictional conditions between the individual wheels are also well coped with in the same way as sudden changes in the road surface, e.g. sheets of ice.

Design

The antilock brake system (ABS) consist of the components: Control unit, hydraulic unit, wheel speed sensors and wire harness. The components in detail:

B1, B2, B3, B4 Wheel Speed Sensors

The wheel sensor comprises a gearwheel which runs past the permanent magnetic edge of the speed sensor and which is mounted in the wheel hubs. The rotary motion of the wheels is detected by inductive measuring sensors and the resulting electrical signal is sent to the electronic control unit.

ABS Control Unit A7

The ABS control unit is accommodated in a special box in the engine compartment.

In a small multichannel electronic computer, the acceleration, deceleration and slip variables are derived from the electrical signals of the pulse generators which are proportional to the wheel speed. The expected high degree of reliability is ensured by the use of digital technology with highly integrated circuits. The control unit contains electronic monitoring circuits which ensure complete operability before starting each trip and which constantly monitor the ABS wire harness and its units during the trip. If the control unit detects a fault in the wire harness or in the electrical section of the units, the monitoring circuit deactivates ABS, thus ensuring that normal operation of the brake system is retained. The driver's attention is drawn to this status by an ABS indicator lamp in the dashboard.

ABS Hydraulic Unit

The hydraulic unit is located in the engine compartment and is integrated in the conventional brake system.

To control the brake pressure in the wheel brake cylinders, the hydraulic unit contains three-way directional control valves which permit three brake pressure statuses:
Pressure build-up, pressure retension and pressure reduction. These three pressure phases are adapted as regards their sequence and length to the requirements of the relevant control characteristics and the adhesion between road and tyre.

In principle, the control procedure is as follows:
As soon as a wheel lag or slip indicates wheel locking is imminent, initially the brake pressure is kept constant. If the wheel continues to tend towards locking, the pressure is reduced until the wheel accelerates or the slip limit is exceeded once again. The pressure is then built up once again, the control cycle is repeated.

An electrically driven return pump routes brake fluid from the wheel brake cylinder during the pressure reduction phase back into the corresponding brake circuit. The pump is designed as a two-piston pump so that the brake circuits of a dual-circuit brake system remain completely separated.

Wire Harness

To ensure that signals can be entered and commands given, the control unit is linked via wires to the pulse generators and the electrical section of the hydraulic unit. These wires as well as the power supply are integrated in the main wire harness. When the ignition is switched on, the supply voltage is applied to the control unit via relay K10.

Antilock Brake System (ABS)

General Block Diagram

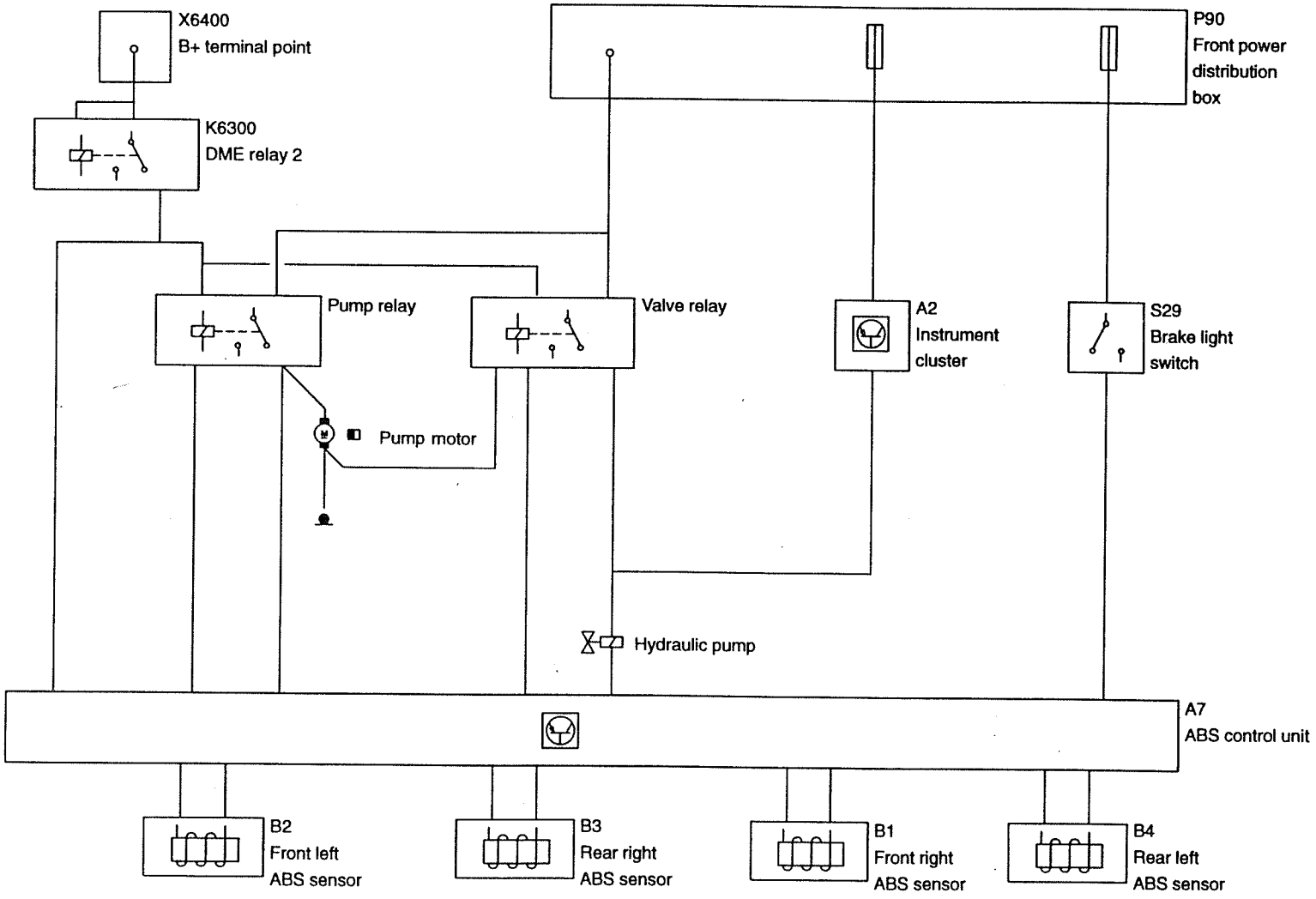

P32 34 005

Notes on the BMW DIAGNOSTIC SYSTEM

This system does not feature diagnostic capabilities.

Abbreviations

not applicable

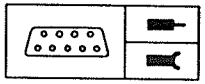

Pin Assignment

Pin Assignments at Connector X11 (35-pin)

Pin	Type	Description/function	Connection	Type of signal	Tester display	Measurement notes
1	E	Battery voltage	ABS relay			
2	A	Controlled ground	Front left solenoid valve			
3		not used				
4	E	Ground	Wheel speed sensor			
5		not used				
6	E	Wheel speed sensor	Front left wheel speed sensor			
7	E	Wheel speed sensor	Rear right wheel speed sensor			
8		not used				
9	E	Ground	Rear left wheel speed sensor			
10	E	Ground	Ground point			
11	E	Wheel speed sensor	Front right wheel speed sensor			
12		not used				
13		not used				
14	E	Pump relay input	Pump relay			
15	E	Battery voltage	Alternator			

Pin	Type	Description/function	Connection	Type of signal	Tester display	Measurement notes
16		not used				
17		not used				
18	A	Controlled ground	Rear left solenoid valve			
19	A	Controlled ground	Rear right solenoid valve			
20	E	Ground	Ground point			
21	E	Ground	Front right wheel speed sensor			
22		not used				
23		not used				
24	E	Wheel speed sensor	Rear right wheel speed sensor			
25	E	Brake pedal	Brake light switch			
26	E	Ground	Rear right wheel speed sensor			
27	A	Controlled ground	Valve relay			
28	A	Controlled ground	Pump relay			
29	A	Indicator ground	Instrument cluster			
30		not used				
31		not used				
32	E	Indicator valve relay	Valve relay			
33		not used				
34	E	Ground	Ground point			
35	A	Controlled ground	Front right solenoid valve			

Function Check

After switching on the ignition, the ABS indicator lamp lights. After the engine has started, the indicator lamp must go out when the antilock brake system (ABS) is OK.

This procedure is repeated every time the ignition is switched off and on. If an electrical or electronic defect is found, the control unit automatically switches over to "normal brake". This means the car can still be braked but without the antilock control (wheel locking possible!). This situation is indicated by the ABS indicator lamp lighting constantly in the instrument cluster.

It is necessary to check the function when the ABS warning lamp does not go out, if it lights during driving or it does not light when the ignition is switched on or when working on the ABS system.

The function check is carried out with the BMW Service Tester. By way of a corresponding connector, the test unit is connected to the wire harness and to the control unit. Refer to microfilm - ABS Nominal Values.

Important!

The device connector must be detached and attached only when the ignition is switched off. Refer to Wiring Diagram in the ABS Nominal Value microfilm.

Care must be taken before carrying out the function test to ensure the conventional brake system (hydraulics, brake pads, lines etc.) is in working order. In addition, the power supply must be ensured (battery voltage, alternator function, relay function). The relay drive is fuse protected.

Troubleshooting

Notes

General Notes on Repair Work and the Brake System

Basically, the antilock brake system (ABS) requires no maintenance, however, the following points must be observed when carrying out any work on vehicles equipped with ABS:

The connector must be disconnected from the electronic control unit (ignition switched off) in order to carry out welding work with an electric welding set.

During painting work, the electronic control unit can be temporarily subjected to a load of max. 95° C and max. 85° C over a longer period of time (approx. 2 hours).

The entire antilock brake system (ABS) must be checked with the BMW Service Tester after replacing the hydraulic unit, the control unit, the speed sensors and the wire harness as well as after work involving the ABS units (e.g. accident repair).

Take particular care to ensure the brake lines are arranged correctly.

After all work on the brake system, the system must be bled and low pressure and high pressure testing carried out. All connection points must be checked for leaks.

Troubleshooting Instructions

Connect ABS to the BMW Service Tester. Insert microfilm ABS Nominal Values. Observe note. Carry out test steps in accordance with instructions and compare with nominal values. If the nominal values are not obtained, follow troubleshooting instructions in accordance with the corresponding test steps on the following pages. The individual measurements can be carried out with the Service Tester Multimeter. The universal adapter with 35-pin connector is used for connection to the wire harness connector X11. Particular care must be taken to ensure that the ignition is switched off during all tests not concerning the supply voltage (e.g. resistance measurements). For removal and installation of ABS components, refer to Repair Instructions E 34 Main group 34.

Test Step 01

Wires/Speed Sensor

Speed sensor	Switch off ignition for all individual measurements, control unit not connected.
front left B2	1. Check connector VL X114 (visual inspection).
	2. Detach connector VL, DF display must then be > 999 kΩ, if the DF display is less: Defect in wire harness.
	3. Check Pin 4 and 6, X11 for continuity: Bypass wire harness side of VL connector, DF display must be < 1 Ω, if DF display is greater: Defect in wire harness.
	4. Measure resistance at the DF side of the connector (M 06). If nominal value is not obtained: Replace speed sensor VL.
front right B1	1. and 2. as above, but with connector VR X113.
	3. Check Pin 11 and 21, X11 for continuity: Bypass wire harness side of connector VR, DF display must be < 1 Ω, if DF display is greater: Defect in wire harness.
	4. As above: Replace speed sensor VR.
rear left B4	1. and 2. as above, but with connector HL X377, ♦7♦ X142.
	3. Check Pin 7 and 9, X11 for continuity: Bypass wire harness side of connector HL, DF display must be < 1 Ω, if DF display is greater: Defect in wire harness.
	4. As above: Replace speed sensor HL.
rear right B3	1. and 2. as above, but with connector HR X376, ♦7♦ X143.
	3. Check Pin 24 and 26, X11 for continuity: Bypass wire harness side of connector HR, DF display must be < 1 Ω, if DF display is greater: Defect in wire harness.
	4. As above: Replace speed sensor HR.

Speed sensor Resistance to ground	1. Visually check for damage to wires and lines (connection to vehicle ground – insulation resistance). 2. Disconnect DF connections one after the other. If display > 999 kΩ: Replace corresponding speed sensor.
Speed sensor Resistance to B+	3. If display remains < 999 kΩ: Defect in wire harness. Also refer to test step 03 for DF testing!
Safety lamp	Display > 80 Ω: ABS indicator lamp defective or check for poor contact of lamp, renew if necessary. Check connections at lamp and terminal 15. Display < 10 Ω: Check wire 1 and 29 for a short. Measure resistance between Pin 29 and fuse F 17 output. Display 999 kΩ = Lamp defective or break in wire.

Test Step 02

Wire Harness, Relays, Valves

Switch off ignition for all individual measurements, control unit not connected.

Valve relay Coil resistance	Check connections at hydraulic unit, Y1 (connector, relay). Renew valve relays. Measure value display > 100 Ω: Break in wire to valve relay, (from ignition switch, wire 27, lines in the hydraulic unit). Measured value display < 70 Ω: Short in wire to valve relay (Pin 1 and 27, lines in the hydraulic unit).
Motor relay Coil resistance	Check connection at hydraulic unit, Y1 (connector, relay). Renew motor relay. Measured value display > 58 Ω: Break in wire to motor relay (from Pin 1 to Pin 28, lines in the hydraulic unit). Measured value display < 34 Ω: Short in wire to motor relay (Pin 1 and 28, lines in hydraulic unit).
Valve resistance	If the nominal values are not obtained for all four valves: Check wire 32 for a break or a short. Detach connector X31 at the hydraulic unit Y1.
front left	Measure resistance directly at the hydraulic unit Y1 between wire 1 and 4, if the nominal value is not obtained: Renew hydraulic unit. Check wire 2 from the connector X11 control unit to connector X31 hydraulic unit Y1 for a break or a short.

front right	Measure resistance directly at the hydraulic unit Y1 between wire 3 and 4 . If nominal value is not obtained: renew hydraulic unit. Check wire 35 from connector X11 control unit to connector X31 hydraulic unit Y1 for a break or a short.
rear left	Measure resistance directly at the hydraulic unit Y1 between wire 5 and 4 . If nominal value is not obtained: renew hydraulic unit. Check wire 18 from connector X11 control unit to connector X31 hydraulic unit Y1 for a break or a short.
rear right	Measure resistance directly at the hydraulic unit Y1 between wire 7 and 4 . If nominal value is not obtained: renew hydraulic unit. Check wire 19 from connector X11 control unit to connector X31 hydraulic unit Y1 for a break or a short.

Test Step 03

Dynamic Speed Sensor Test

Speed sensor	DF wire harness **and** control unit connected
	(Note switch position at the adapter)
front left	1. Periods
front right	
rear left	Periods < SW: Wheel turns too fast
rear right	Periods > SW: Wheel turns too slow

a) Visual inspection:

Air gap clearance between speed sensor and pulse wheel too great, speed sensor loose, dirty, check installation.

Check assignment of the wheel with the display.

Firmly hold opposite wheel at the rear axle.

Renew speed sensor.

2. Pulses

Wheel rotation too irregular.

Check teeth of pulse wheel (condition, dirt build-up).

Check air gap clearance between speed sensor and pulse wheel.

Renew pulse wheel.

The speed sensor pulses can also be checked individually with the BMW Service Tester Oscilloscope. Connection with universal adapter at wire harness connector X11.

Connect terminal 1 black wire to frequency OFF (+) blue, frequency OFF (–) sw to speed sensor (–) e.g. Pin 4, D+ to speed sensor (+), e.g. Pin 6. ♦**M**♦ 22 and ♦**M**♦ 13, enter frequency, e.g. 80 Hz. Refer to Operating Instructions BMW Service Tester.

Turn corresponding wheel. The curve on the oscilloscope increases as the wheel speed increases. Ensure uniformity between shafts.

Test Step 04

Dynamic, Voltages

Attention! Before detaching the connector and measuring the resistance: Switch off ignition!

Voltage between wire 1 and line 10	Switch on ignition. Run engine. Repeat this test step with diagnostic connector D100 connected for ground transfer to vehicle tester. Recharge, check battery. Check voltage drop at: Battery terminal (+ and –), terminal 15 and from the ignition lock to the electronic relay connection from relay to control unit Pin 1, X11.
Stab. voltage between line 12 and 10	Check function of electronic relay. Check ground connection to Pin 10, X11. Replace control unit.
	See test step 05, measuring line 2
Valve relay Normally closed contact Voltage drop	1. Replace valve relay. 2. Contact resistance of ground connection too high or is interrupted. 3. Check following wires for continuity: From ground to Pin 87a at valve relay socket, continuity from Pin 4, X31 to valve relay terminal 30, from Pin 4, X31 to Pin 32, X11.
Valve relay	1. Replace valve relay.

Working contact Voltage drop	2. Check following lines for continuity: from terminal B+ to connector hydraulic unit, X31 from Pin 6 to valve relay line 87, from Pin 2 X31, to Pin 27 X11, from Pin 2 to valve relay line 85, from line 86 valve relay to line 86 motor relay and Pin 8. From hydraulic unit X31, Pin 8 to Pin 1 X11.
Motor relay Working contact Voltage drop	1. Replace motor relay. 2. Check ground terminals of pump motor to ensure they are firmly tightened and check contact resistance. 3. Check following lines for continuity: from terminal B+ to hydraulic unit connector X31, Pin 10 from multiple connector X11, Pin 14 to hydraulic unit connector, from Pin 9 in hydraulic unit to motor relay terminal 30 and positive terminal at pump motor. 4. Pump motor defective: Replace hydraulic unit.
Safety Circuit	Check Pin 29 from multiple connector X11 to hydraulic unit connector X31, Pin 11 for a break and voltage drop.
Lamp, Diode	Check connection at indicator lamp. Is valve relay connected? Detach control unit connector, measure diode at valve relay L1 and Pin 30 (09 Test). Renew valve relay.

If voltage drop is too great or if a break is found in the wires: Check wire harness.

Test Step 05

Dynamic Ground, Overvoltage, Bite

Attention! Before detaching a connector and measuring the resistance: Switch off ignition!

Voltage between line 1 and line 10	Switch on ignition. Run engine. Repeat this test step with diagnostic connector D100 connected. Charge, check battery.
Ground line 10	Check ground connection at ground terminal point. Check multiple connector X11, Pin 10 to ground connection X497, X1160 on E34, for continuity. Check connections at electronic relay. Replace electronic relay if necessary.
Ground line 20	Check ground connection at ground terminal point, check multiple connector X11, Pin 20 to ground connection X166 for continuity.
Ground line 34	Check ground connection in control unit compartment. Check multiple connector X11 Pin 34 to ground connection X166 for continuity.
Wire 14/Return pump Ground	Check ground connection at battery support bracket. Check ground connection at the return pump. Check ground wire for continuity. Check multiple connector X11, Pin 14 to connector X31 and Pin 9 to Pin 30 in the hydraulic unit for continuity. If wire is broken: Check wire harness. If wire continuity is OK., renew diagnostic unit, see test step 08 ABS pump.

Overvoltage protection	Replace control unit (refer to previous test steps!).
Test cycle	Replace control unit (refer to previous test steps!).
	If the motor relay only switches in intervals (clicks) without the pump motor starting, the voltage drop is temporarily too excessive due to high inrush currents on the supply lines from the battery. Repeat test with engine running. Refer to test step 04 as well as test step 06/07.
Defect simulation	Replace control unit (refer to previous test steps!).

Test Step 06

Control unit, front wheel simulation

Voltage between line 1 and 10	Switch on ignition. Run engine. Check/charge battery.
(Solenoid valve) left pressure build-up - reduction - retension	Due to high inrush currents, repeat test step several times with engine running. Replace control unit and repeat test step. If valves do not switch during test step 08, 09, 10 or the pump does not operate: Replace hydraulic unit.
right pressure build-up - reduction - retension	Due to high inrush currents, repeat test step several times with engine running. Replace control unit and repeat test step. If valves do not switch during test step 08, 09, 10 or the pump does not operate: Replace hydraulic unit.

Test Step 07

Control Unit, Rear Wheel Simulation

Voltage between line 1 and 10	Switch on ignition. Run engine. Check/charge battery.
(Solenoid valve) left pressure build-up - reduction - retension	Due to high inrush currents, repeat test step several times with engine running. Replace control unit and repeat test step. If valves do not switch during test step 08, 09, 10 or the pump does not operate: Replace hydraulic unit.
right pressure build-up - reduction - retension	Due to high inrush currents, repeat test step several times with engine running. Replace control unit and repeat test step. If valves do not switch during test step 08, 09, 10 or the pump does not operate: Replace hydraulic unit.

Test Step 08

Return Pump

Voltage between line 1 and 10	Switch on ignition. Run engine. Recharge, check battery.
Front left - right - right/left Rear left - right - left/right	Due to high inrush currents, repeat test step with engine running. Refer to test step 05/06/07. A prerequisite for the ABS test is that the conventional brake system is in working order: System well bled, no leaks at brake line connections, brake pads OK., master and wheel brake cylinders OK. Ensure uniformity of wheels on one axle. Note assignment wheel – display.
	Brake line at hydraulic unit Y1 interchanged. Replace hydraulic unit.

Test Step 09

Hydraulic Unit Pressure Build-Up

Voltage between line 1 and 10	Switch on ignition. Run engine. Recharge, check battery.
Front left - right - left/right	Due to high inrush currents, repeat test step with engine running. Refer to test step 05/06/07. A prerequisite for the ABS test is that the conventional brake system is in working order: System well bled, no leaks at brake line connections, brake pads OK.
Rear left - right - left/right	Ensure uniformity of wheels on one axle. Replace hydraulic unit Y1.

Test Step 10

Hydraulic Unit Pressure Build-Up, Pressure Retension

Voltage between line 1 and 10	Switch on ignition. Run engine. Recharge, check battery.
Front left - right - left/right	Due to high inrush currents, repeat test step with engine running. Refer to test step 05/06/07. A prerequisite for the ABS test is that the conventional brake system is in working order: System well bled, no leaks at brake line connections, brake pads OK.
Rear left - right - left/right	Ensure uniformity of wheels on one axle. Check the lines to and from the hydraulic unit Y1 for leaks. Replace hydraulic unit.

Notes

These test instructions apply when an automatic stability control system (ASC) is installed. The Section 3450.0 is additionally applicable to the antilock brake system (ABS)

Functional Description

Operating Principle

Automatic stability control (ASC) is a control system to increase active vehicle safety which prevents slip of the power wheels on roads which offer insufficient adhesion (prevents wheel spin).

The control system operates in conjunction with the electronic throttle control and the digital motor electronics.

The sensors of the antilock brake system (ABS) are used to detect the speed of the individual wheels.

The ASC is combined with the ABS in one control unit although it is a completely independent system.

While the antilock brake system (ABS) utilises the maximum frictional force during braking, with the ASC system this is achieved during acceleration.

As soon as the driven wheels turn 0.25 km/h faster than the non-driven wheels, the ASC regulates the position of the throttle valve in conjunction with the EML system. In order to achieve fast control, the ignition angle (timing) is reduced step-by-step via the DME or the ignition is faded out. To protect the engine and the catalytic converter, the injection signal is correspondingly adapted at the same time with the DME system.

The ASC is combined with an engine drag torque control system (MSR) which prevents the power wheels from sliding during sudden engine thrust.

Engine Drag Torque Control (MSR)

Also by way of the wheel speed sensors, the ASC detects the speed difference between the driven (braked by the engine) and non-driven (not braked) wheels. The ASC deactivates the deceleration fuel cut-out if the slip drops below the slip thresholds.

Failure of the MSR is indicated in the same way as a failure of the ASC in the display unit of the instrument cluster with "ASC defective".

Overvoltage Protection Relay K10

The ABS overvoltage protection relay K10 is no longer installed as of model year 1989. The voltage for the ABS/ASC control unit in the **7 and 5** Series is then supplied via the DME relay 2 or DDE pole protection relay (542td).

Important!

The ABS/ASC control unit installed in conjunction with the overvoltage protection relay must <u>not</u> be installed in vehicles <u>without</u> an overvoltage protection relay.

Automatic Stability Control (ASC)

General Block Diagram

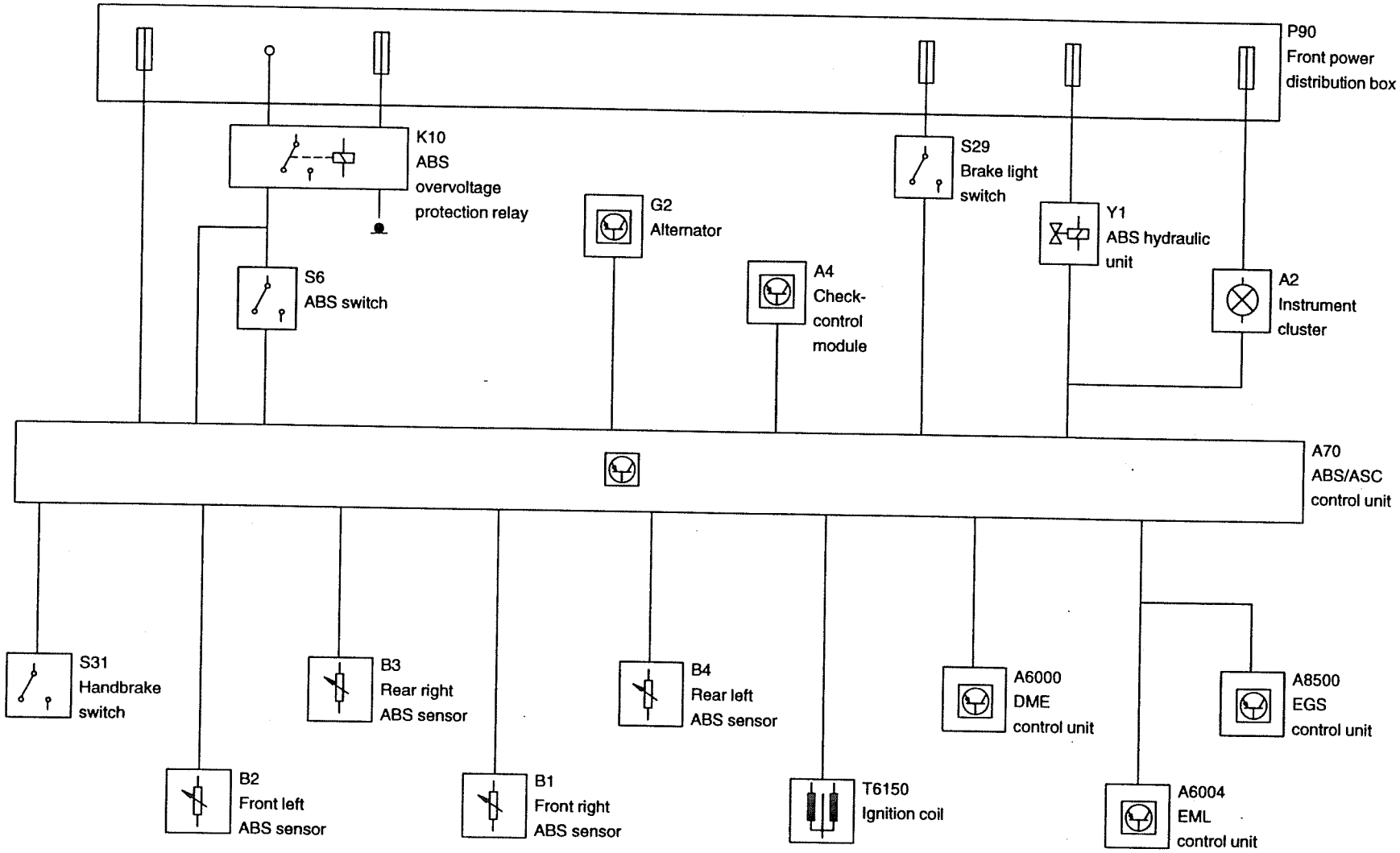

Notes on the BMW DIAGNOSTIC SYSTEM

This system does not feature diagnostic capabilities.

Abbreviations

ABS	Antilock brake system
ASC	Automatic stability control
DF	Wheel speed sensor
PALA	ASC passive lamp (in switch)
PATA	ASC passive button (ASC switch)
Stgt.	Control unit
EML	Electronic throttle control
MSR	Engine drag torque control
DKV	Preset throttle value
DKR	Throttle reduction
DKE	Throttle increase
ZA	Ignition fade-out
ZAR	Ignition fade-out - feedback

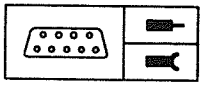

Pin Assignment

Pin Assignments at ABS/ASC Control Unit (A70)

Pin	Type	Description/function	Connection	Type of signal	Tester display	Measurement notes
1	E	Battery voltage	ABS relay			
2	A	Controlled ground	Rear right solenoid valve			
3	E	Ground	Ground X167			
4	E	Ground	Wheel speed sensor			
5	A	Controlled ground	Pump relay			
6	A	Indicator ground	Instrument cluster			
7		Not used				
8	E	Wheel speed sensor	Front left wheel speed sensor			
9		Not used				
10	E	Wheel speed sensor	Rear right wheel speed sensor			
11		Not used				
12	E	Ground	Front right wheel speed sensor			
13	E	Wheel speed sensor	Front right wheel speed sensor			
14		Not used				
15	E	Brake pedal	Brake light switch			

Pin	Type	Description/function	Connection	Type of signal	Tester display	Measurement notes
16		Stabilised voltage				
17		Not used				
18	E	Ground	Ground X167			
19	A	Controlled ground	Rear left solenoid valve			
20	A	Supply relay	Pump relay			
21	A	Controlled ground	Front left solenoid valve			
22		Not used				
23	A	Controlled ground	Valve relay			
24		Stabilised voltage				
25	E	Engine monitoring	Pump relay			
26	E	Ground	Front left wheel speed sensor			
27		Not used				
28	E	Ground	Rear right wheel speed sensor			
29	E	Ground	Rear left wheel speed sensor			
30	E	Wheel speed sensor	Rear left wheel speed sensor			
31		Not used				
32		Not used				
33	E	Battery voltage	Alternator			
34	A	ASC defective				
35		Not used				
36	E	Ground	Ground X167			

Pin	Type	Description/function	Connection	Type of signal	Tester display	Measurement notes
37	A	Controlled ground	Front right solenoid valve			
38	E	Signal terminal 1	Motronic control unit			
39		Not used				
40		Not used				
41	E	Ground shield	Shield terminal 1 Motronic control unit			
42	E	Battery voltage	Front power distribution box			
43	E	DKV signal	EML control unit			
44		Not used				
45	A	ZA signal	Motronic control unit			
46	A	DKR signal	EML control unit			
47	A	ZWV signal	Motronic control unit			
48	A	DKE signal	EML control unit			
49	A/E	Diagnostic line				
50		Not used				
51	A	PALA/ground	Instrument cluster			
52	E	Handbrake signal	Handbrake switch			
53	A	ASC active				
54	E	PATA signal	Instrument cluster			
55		not used				

Troubleshooting

General

This troubleshooting program is used only on vehicles equipped with ASC (Automatic Stability Control) and a 55-pin connector at the ABS/ASC control unit. The ABS warning lamp in the instrument cluster and the lamp in the passive button for the ASC light after switching on the ignition. The ABS warning lamp must go out once again after the engine has started. Only the ASC passive lamp (PALA) lights until the ASC system is intentionally deactivated with the passive button (PATA). The PALA lamp flushes during an ASC function and "ASC" appears in the display unit of the instrument cluster.

The causes of fault displays in the instrument cluster or the warning/passive lamps not lighting, not switching off or lighting during a trip (also occasionally) can be determined with the aid of the troubleshooting procedure. The defect sources are located with the defect code overview and reference is made to individual tests.

For each defect symptom, for which "ASC defect" appears in the display unit of the instrument cluster, initially the flash code should be read out at the passive lamp, **see flash code.**

Generally, the electronic circuitry (control units) is extremely reliable therefore this troubleshooting program is mainly designed for the periphery voltage supply, signals, function of the relays and valves. Before replacing a control unit when a defect code is indicated, it is therefore always advisable to initially carry out the relevant periphery tests as described in the following. The majority of these tests can be carried out with a multimeter (e.g. Service Tester multimeter program). The universal adapter with a 55-pin connector is used for connection to the wire harness connector. If only the pin number is specified in the test instructions, this always refers to the 55-pin wire harness connector X7 or the pin number at the universal adapter.

Important!

The ground terminal point of the battery (under right rear seat) must be disconnected when measuring the resistance on current-carrying wires (Attention! The memories of all systems will be cleared!). Always switch off the ignition first before disconnecting and connecting the 55-pin connector.

Caution!

High voltage pulses are applied at Pin 38 (control unit connector/universal adapter) when the engine is running.

Defect Code Overview

Vehicle cond.	ABS lamp	ASC display	ASC-PALA	see test
Ignition ON	ON	None	ON	OK. (see engine in LL)
	not ON	None	ON	1.1
	ON	None	not ON	1.2
	not ON	None	not ON	1.3
Engine in LL	not ON	None	ON	OK. (see vehicle speed > 25 km/h)
	ON	None	ON	2.1
	not ON	defective *)	not ON	2.2
	ON	defective *)	not ON	2.3
Vehicle speed > 25 km/h	not ON	None	ON	OK. (see vehicle speed > 100 km/h)
	ON	None	ON	3.1
	not ON	defective *)	not ON	3.2
	ON	defective *)	not ON	3.3
Vehicle speed > 100 km/h	not ON	None	ON	OK. (see after ABS control)
	ON	None	ON	4.1
	not ON	defective *)	not ON	4.2
	ON	defective *)	not ON	4.3
After ABS control	not ON	None	ON	OK. (see after ASC control)
	ON	None	ON	5.1

During ASC control	not ON	"ASC"	flashes (during control)	OK.
After ASC control	not ON	defective *)	not ON	6.1
	not ON	None	ON	OK.
Brake lights, handbrake switch				7.1

*) see flash code

ASC Flash Code

Activate flash code:

Press brake pedal, at the same time press PATA and switch on ignition.

Clear flash code:

On completion of the flash code, the PALA button remains on for 3 sec, press PATA for at least 1 sec during this time.

Output of diagnostic information:

Flash code output via PALA. The number of flash pulses corresponds to the type of defect. Only the defect which occurs last is indicated.
If 2 defects have occurred simultaneously, the defect with the highest priority is indicated.

Indicated types of defect:

			see test
1 Flash pulse =	No defect		
2 Flash pulses =	EML defect	(DKR, DKE, DKV) – highest priority	10.1
			10.2
			10.3
3 Flash pulses =	Motronic defect	(ZA)	11.1
			11.2
4 Flash pulses =	Sensor defect	(rear left)	12.1
5 Flash pulses =	Sensor defect	(rear right)	12.2
6 Flash pulses =	Sensor defect	(front right)	12.3
7 Flash pulses =	Sensor defect	(front left)	12.4
8 Flash pulses =	Motronic defect	(ZAR)	13.1
9 Flash pulses =	Motronic defect	(Terminal 1)	14.1
10 Flash pulses =	Control unit defect	Lowest priority	15.1

Test 1.1

Ignition ON: ABS lamp not ON, PALA ON

– Other indicator lamps (battery charge indicator etc.) are OK. (ON):
no:

Check battery voltage, supply wire to ignition lock (terminal 15), fuses F1 and F17, connection at instrument cluster.

yes:

Renew ABS lamp, check lamp contacts, check wire from ignition lock terminal 15 to the instrument cluster for a break, defect in instrument cluster.

– ABS lamp current circuit test: Resistance between Pin 1 and 6 (bypass voltage protection relay at socket terminal 15 and 87) approx. 60 ... 120 Ω.
– Additional safety circuit test: Detach 55-pin control unit connector X7, ignition ON: If the ABS lamp lights, the defect is on the control unit side. If the ABS lamp does not light, check the hydraulic unit (diode). See test 3.1.

Test 1.2

Ignition ON: ABS lamp not ON, ASC-PALA not ON

– Are other indicator lamps ON? (e.g. battery charge indicator)
– Check power supply.
– Does engine start?
– Defect combination of test 1.1 and 1.3.

Test 1.3

Ignition ON: ASC-PALA not ON, ABS lamp ON

– Check 55-pin connector X7 that it is firmly fitted and connect it correctly at the ABS/ASC control unit. Check fuse F29. (Rear window defogger check?)

Detach connector X7 and use universal adapter for the following tests.

Ignition ON

Check voltage between:

– Pin 1 and 3 11.5 ... 12.5 V
– Pin 1 and Pin 18 11.5 ... 12. 5 V
– Pin 1 and Pin 36 11.5 ... 12.5 V
If voltage is not OK. only in one test, check ground terminal point, check wire in accordance with schematic.

If voltage is not OK. in all three tests, check overvoltage protection relay, check wire from Pin 1 to overvoltage protection relay.

Check overvoltage protection relay: (ignition OFF)

– Connect Pin 1 and Pin 42
– Connect Pin 51 and Pin 18
If PALA lights, the overvoltage protection relay is defective.

If PALA does not light: (ignition OFF)

Measure resistance between Pin 1 and Pin 51 approx. 120 Ω
at display > 999 KΩ lamp defective, check wire from Pin 87 at overvoltage protection relay to PALA, check wire from Pin 51 to PALA.

Check PATA:
Measure resistance between Pin 1 and Pin 54,
PATA not depressed > 999 KΩ, PATA depressed < 1 Ω

Check voltage between Pin 54 and Pin 18
PATA not depressed approx. 0 V
PATA depressed 11. 5 ... 12. 5 V

If PALA lights with ignition ON, but goes out after approx. 150 msec, start engine, see test 2.2

Test 2.1

Engine in LL: ABS lamp remains on or immediately comes on again; PALA ON

Test with engine running:

– Does battery charge indicator lamp go out? Charge current OK.?
– Engine running at idle speed:
Measure voltage between Pin 33 (+) and 3 (–) > 12.5 V
– (Switch off ignition) Measure resistance between Pin 4 and Pin 18
< 1 Ω

Measure resistance between Pin 23 and Pin 20, 70 ... 100 Ω

– Check function of valve relay:
Connect Pin 23 to Pin 42
Connect Pin 20 to Pin 3

If relay clicks, then:

– Measure voltage between Pin 4 (+) and Pin 36 (–) > 11.5 V

If relay does not click, then:

– Renew valve relay, refer to Operating Instructions Group 34.
– Check supply wires from the control unit connector X7 to the hydraulic unit X31 for continuity, a short to ground (–) or a short to positive (+) in accordance with schematic.
– Check connections in the hydraulic unit in accordance with schematic.

Other indicators:

- After starting engine, "ASC defect" appears in the display of the instrument cluster. ABS lamp and ASC/PALA lamp remain on, but no D+ signal from terminal 61 (alternator) to Pin 33.
- During a test drive, determine whether the ABS control (wheels do not lock) and the ASC control (wheels do not spin) are operating correctly despite the defect displays.
- If the ABS lamp goes out, the PALA remains on only "ASC defect" appears in the display, then the defect is a check-control defect: See instrument cluster/check-control.

Test 2.2

Engine in LL: ASC display "defect", PALA OFF, ABS lamp goes out

Do not run engine, carry out ASC check:

Measure resistance

Ground terminal	Pin 3 to Pin 18 to Pin 36 < 1 Ω
Shield terminal 1	Pin 41 to Pin 18 (–) 3 ... 5 Ω
Measure voltage with ignition ON	Pin 1 (+) to Pin 18 (–) > 11.5 V
Terminal 1 wire 38 ignition ON	Pin 38 (+) to Pin 18 (–) > 11.5 V
DKE wire, ignition ON	Pin 48 (+) to Pin 18 (–) 7.5 ... 9.0 V Check wire 48 to EML control unit for a break or short to ground
DKR wire, ignition ON	Pin 46 (+) to Pin 18 (–) 7.5 ... 9.0 V Check wire 46 to EML control unit for a break of short to ground

DKV wire, ignition ON

Accelerator pedal in LL
Pin 43 (+) to Pin 18 (–) 0 ... 0.5 V (3 ... 4 V alternating voltage). Check wire 46 to EML control unit for a break or short to ground.

Press accelerator pedal
Pin 43 (+) to Pin 18 – voltage increases.

Check EML control unit
Also refer to: EML self-diagnosis with BMW Service Tester

PATA wire – PATA pressed – Pin 54 (+) to Pin 18 (–) > 11.5 V – check wire 43 to EML control unit for a break or short to ground.

If the PALA goes out after approx. 150 ms with the ignition on, remains off and the display "ASC defect" appears after starting the engine, the problem is in the engine management system.

See test 10.1

Handbrake switch (ignition ON)

– Check handbrake switch:
– Handbrake not applied Pin 52 (+) to Pin 18 (–) > 10.5 V
– Handbrake applied Pin 52 (+) to Pin 18 (–) < 0.5 V

Test 2.3

Engine in LL: ABS lamp remains on or immediately comes on again, ASC display "defect", PALA OFF

– Is connector OK.? –
Do other indicator lamps (e.g. battery charge indicator) go out?
– Check ground terminal point Pin 3, Pin 18, Pin 36 with respect to vehicle ground, approx. 0 Ω

Engine in LL

– Check battery charge current Pin 33 to Pin 18 > 12.5 V
– Replace electronic protection relay. – See Repair Instructions Group 34.

For these voltage checks only:

– Connect universal adapter between wire harness and control unit.

Ignition ON

– Pin 1 to Pin 18 > 11.5 V
– V stab. ASC Pin 16 to Pin 18 4.8 – 5.2 V
– V stabv ABS Pin 24 to Pin 18 4.8 – 5.2 V

Test 3.1

Vehicle speed above 25 km/h: ABS lamp comes on, no ASC display, PALA ON

Check 55-pin connector that it is firmly fitted and connected correctly at the ABS/ASC control unit.

Remove cover at hydraulic unit. Disconnect valve relay (see Repair Instructions Group 34). Check valve relay, measure resistance between terminal No. 30 and No. 87 a (at relay) < 1Ω as well as at terminal No. 86 (–) to No. 85 (+) 12 V, relay clicks, resistance now between terminal No. 30 and 87 (at relay) < 1 Ω.
If necessary replace relay valve.

Resistance measurement	at hydraulic unit	at 55-pin ABS/ASC control unit connector
	Pin 2 to Pin 8 70...100Ω	Pin 1 to Pin 27 70...100Ω

Detach engine relay (see Repair Instructions Group 34)
Check engine relay:

At terminal No. 86 (–) to No. 85 (+) 12 V (at relay)
relay clicks, resistance now between terminal No. 30 and 87 < 1 Ω.
Replace engine relay.

Resistance measurement	at hydraulic unit X31	at 55-pin ABS/ASC control unit X7
	Pin 8 to Pin 2 34 ... 58 Ω	Pin 23 to Pin 20 34...58 Ω

Diode measurement with BMW Service Tester

	at hydraulic unit	at control unit
Direction of flow	Pin 4 → Pin 11	Pin 4 → Pin 6 (see Operating Instructions BMW Service Tester)
Blocking direction	Pin 11 ← Pin 4 Pin L1 to Pin 30 17Ω	Pin 6 ← Pin 4

Test 3.2

Vehicle speed above 25 km/h: ABS lamp OFF, ASC display "defect", PALA OFF

Check 55-pin connector that it is firmly fitted and connected correctly at the ABS/ASC control unit.

- Caution! Detach connector at the EML and DME control units for measurements. Read out defect code memories of EML and DME beforehand with BMW Diagnostic System.

Check wire from

- Pin 43 to EML control unit Pin 13
- Pin 48 to EML control unit Pin 35
- Pin 46 to EML control unit Pin 34
- Pin 47 to DME control unit Pin 50: Check for correct connection, continuity (resistance) or short to ground (–) or positive (+)
- Check protection of Pin 1, Pin 41 to Pin 3 < 1 Ω
- Caution! **High voltage pulses** at Pin 38 when engine is running.
- With the oscilloscope of the BMW Service Tester, record signal at Pin 38, level peaks 300 V, signal level 12 V
- (see Operating Instructions, BMW Service Tester, connect Pin 1 to terminal 61) 3 signal pulses per revolution
- EML control defect, refer to BMW DIAGNOSTIC SYSTEM♦**D**♦EML Defect Code Memory.

Test 3.3

Vehicle speed greater than 25 km/h: ABS lamp ON, ASC display "defect", PALA OFF

- Ground connection Pin 3, Pin 18, Pin 36 to vehicle ground approx. 0 Ω
- Voltage supply Pin 1 to Pin 18 > 11.5 V
  (to measure voltage supply, use jumper connector from ABS adapter for electronic relay)

Read out flash code = determining speed sensor

4 Flash pulses, rear left, test 12.1

5 Flash pulses, rear right, test 12.2

6 Flash pulses, front right, test 12.3

7 Flash pulses, front left, test 12.4

- Speed sensor test with BMW Service Tester Multimeter (see Operating Instructions BMW Service Tester)
- UD+ at speed sensor + (e.g. front left) Pin 8
  B– at speed sensor – (e.g. front left) Pin 26
- Terminal 1 (black) together with Service Tester frequency output
  (Press multimeter ♦M♦)
  Enter 22 and 13, press acknowledgement
  Enter 80 Hz, press acknowledgement
  Turn corresponding wheel uniformly
  Sinusoidal curve must also appear uniformly on the oscilloscope
  If necessary move speed sensor wires, observe oscilloscope.

Test 4.1

Vehicle speed above 100 km/h or during long trip: ABS lamp ON, ASC display OFF, PALA ON

- Check 55-pin connector that it is firmly fitted and connected correctly at the ABS/ASC control unit. Check 13-pin connector that it is firmly fitted and correctly connected at the ABS hydraulic unit.
- Check hydraulic unit connections in accordance with schematic for continuity.
- Check valve relay, see 3.1
- Check engine relay, see 3.1
- Check valve resistance in hydraulic unit.
  - Valve FL – Pin 4 and Pin 21 – 0.8–1.9 Ω
  - Valve FR – Pin 4 and Pin 37 – 0.8–1.9 Ω
  - Valve RL – Pin 4 and Pin 19 – 0.8–1.9 Ω
  - Valve RR – Pin 4 and Pin 2 – 0.8–1.9 Ω

If the valve resistance is greater or less – at all four valves:

- Check wire 4 to hydraulic unit connector wire 4 – < 1 Ω
- Diode check with Service Tester Multimeter (see BMW Service Tester Operating Instructions)
- Blocking direction Pin 6 (+) to Pin 4 – direction of flow Pin 4 (+) to Pin 6 –
- at FL valve: – Pin 21 to hydraulic unit connector Pin 1 < 1 Ω
- at FR valve: – Pin 37 to hydraulic unit connector Pin 3 < 1 Ω
- at RL valve: – Pin 19 to hydraulic unit connector Pin 5 < 1 Ω
- at RR valve: – Pin 2 to hydraulic unit connector Pin 7 < 1 Ω

Check resistance directly at the hydraulic unit (see schematic).

If necessary replace hydraulic unit.

Test 4.2

Vehicle speed above 100 km/h or during long trip: ABS lamp OFF, ASC display "defect", PALA OFF

- Engine speed signal (see test 3.2)
- DME ignition fade-out (see BMW DIAGNOSTIC SYSTEM. ♦D♦ Defect

Code Memory DME)		
Ignition ON	Pin 43 and Pin 18	6 – 12 % battery voltage
	Pin 48 and Pin 18	Battery voltage
Throttle valve in LL	Pin 46 and Pin 18	Battery voltage
Throttle valve in VL	Pin 46 and Pin 18	88,94 % battery voltage

- Pedal position sensor test, (see BMW DIAGNOSTIC SYSTEM.♦D♦Defect Code Memory EML).
- Pedal position sensor setting (see Repair Instructions 12 72 ...).
- During test drive, check for other DME or EML-specific defects.
- Does "ASC defect" appear in display during ASC control (extreme acceleration)?
  Check wire Pin 45 to Pin 38 DME control unit X1500 for continuity or a short.
- Check the external safety path (see Repair Instructions 12 70 500).

Test 4.3

Vehicle speed above 100 km/h or during long trip: ABS lamp ON, ASC display "defect", PALA OFF

- For speed sensor test, refer to test 3.3

Test 5.1

After ABS control of the vehicle (heavy braking, noticeable control at pedal): ABS lamp lights, ASC display OFF, PALA ON

- Switch off ignition, start engine once again, ABS lamp?
- Hydraulic unit test: see 4.1
- Check brake light switch:
- Ignition ON – Brake lights ON when pedal depressed?
- Ignition ON – Pin 15 and 18 when pedal depressed, battery voltage.
- Also refer to: Checking the external safety path (Repair Instruction 12 70 500).

Test 6.1

Check after ASC control of vehicle (distinct reduction in output at extreme full throttle)

- ASC display "defect" appears, PALA goes out /ABS lamp off.
- Switch off ignition, start engine, observe display/indicator.
- Check during test drive whether ASC display appears before a control procedure? See test 4.2.
- Continue with troubleshooting procedure for DME.

Test 7.1

Jack up vehicle at rear, start engine, engage 1st gear, allow rear wheels to turn, PALA flashes since front wheels are not turning.

- Lightly press brake (until BLS switches, do not stall engine, if necessary also lightly press accelerator pedal).
- 1. PALA remains on (no longer flashes), signal brake light switch to/in ABS/ASC control unit OK.
- 2. PALA continues to flash. Check wires and connections from brake light switch to Pin 15.
- Voltage check:
- Ignition ON Pin 15 (+) and Pin 18 (–)
- Brake pedal released 0 ... 1 V
- Brake pedal depressed 11.5 ... 15.5 V
- If necessary, replace brake light switch.
- Handbrake switch voltage check:
- Pin 52 (–) and 42 (+)
- Handbrake applied 11.5 ... 12.5 V
- Check wires from handbrake switch to Pin 52.
- If necessary replace handbrake switch.

Test 10.1

EML defect code (throttle valve reduction, increase, preset value)

Other indicators:

- In the case of a static defect, when the ignition is switched on, ASC-PALA lights briefly (approx. 150 msec) then remains off. After starting the engine "ASC defect" appears in the display unit of the instrument cluster.

See:

- BMW DIAGNOSTIC SYSTEM. ♦D♦DME and EML defect code memories

Check:

Wires from

- Pin 43 to EML control unit Pin 13
- Pin 48 to EML control unit Pin 35
- Pin 46 to EML control unit Pin 34
- Pin 47 to DME control unit Pin 50

DME

- Check for correct connection, continuity (resistance) or a short to ground (–) or positive (+).
- Caution: Detach connector at the EML and DME control units for measurements (defect code memories are cleared).

Test 10.2

EML defect code (throttle valve reduction, increase, preset value)

Other indicators

– If a defect occurs temporarily outside the control, the system is switched off immediately and "ASC defect" appears in the instrument cluster display, PALA goes out.

Test:

– Refer to test 10.1
– Check connectors, wires and connections that they are firmly fitted (no loose contacts).
– Clear defect code, observe "ASC defect" display during test drive.
– Read out defect code memory once again.

Also refer to:

– BMW DIAGNOSTIC SYSTEM. ♦ **D** ♦ Defect Code Memory EML.

Test 10.3

EML defect code (throttle valve reduction, increase, preset value)

Other indicators:

– In the case of a defect during the control phase, control can be continued via the DME system (ignition fade-out, ignition angle (timing) adjustment).
– Excessive vehicle jolts. "ASC defect" appears immediately in the instrument cluster display.

Test:

– Refer to test 10.1
– Check connectors, wires and connects that they are firmly fitted (no loose contacts).
– Clear defect code, check for other EML defect codes during test drive. Observe engine drag torque control.
– Read out defect code memory once again.

Also refer to:

– BMW DIAGNOSTIC SYSTEM. ♦ **D** ♦ Defect code memory EML.

Test 11.1

DME defect code (ignition fade-out)

An ignition fade-out (ZA) command given by the ASC is not executed by the DME.

Other indicators:

– Single static defect code: The ZA wire has a short to ground. "ASC defect" appears in the instrument cluster display after engine was restarted at engine speed when cruising above 2500 rpm for approx. 1 sec (test ZA in cruising phase).

Test:

– Check wire from Pin 45 to DME control unit Pin 38 for a short to ground (–).

See:

– BMW DIAGNOSTIC SYSTEM. ♦**D**♦ Defect code memory DME.
– If necessary, replace A200 DME control unit.

Test 11.2

DME defect code (ignition fade-out)

An ignition fade-out command (ZA) given by the ASC is not executed by the DME.

Other indicators:

– Defect only during the ASC control phase, control can be continued via EML, "ASC defect" appears immediately in the instrument cluster display.

Test:

– Clear defect code, check for other DME defect codes during test drive, check function of ASC control (via EML).
– BMW DIAGNOSTIC SYSTEM. ♦**D**♦ Defect code memory DME.
– If necessary, replace A200 DME control unit.

Test 12.1

Sensor defect (rear left), faults at speed sensor, pulse wheel or rear left wires.

Other indicators:

- Static defect with and without control:
- After restarting engine and driving off "ASC defect" appears in the instrument cluster display.
- Static defect during trip at speed below 44 km/h "ASC defect" appears in the display of the instrument cluster after 20 sec (not if speed drops below 12 km/h within 20 sec). Or after stopping the vehicle and driving off again "ASC defect" appears in the instrument cluster display at a speed of 24 km/h.
- ABS lamp ON until the ignition is switched off, ABS lamp OFF when engine restarted.

Test:

Resistance measurement:

- Pin 30 and 29, 650 Ω ... 1.6 KΩ
- Detach speed sensor connection under left rear seat. Check Pin 30 and 29 for a short to ground (–) and positive (+), move wires if necessary. Renew rear left speed sensor. Visually inspect pulse wheel.

Other indicators:

Intermittently occurring defect with and without control:

- Defect occurs at a speed above 44 km/h, "ASC defect" appears immediately in the instrument cluster display, further control on side of vehicle not effected possible (e.g. loose contact at sensor/wire).
- ABS lamp ON until ignition is switched off. ABS lamp off when engine restarted.

Test:

- Detach speed sensor connection under left rear seat. Bypass wire harness side of connector, measure resistance Pin 30 and 29, 0 ... 1.5 Ω (move wires). Check wires for a short to ground (–) and positive (+). Renew rear left speed sensor. Visually inspect pulse wheel. If teeth damaged, renew pulse wheel. See Repair Instructions Group 34.

Test 12.2

Sensor defect (rear right), faults at rear right speed sensor, pulse wheel or wires

Other indicators:

- Static defect with and without control:
- After restarting engine and driving off, "ASC defect" appears in the instrument cluster display.
- In the case of a static defect during the trip at a speed below 44 km/h, "ASC defect" appears in the instrument cluster display after 20 sec (not if the speed drops below 12 km/h within 20 sec), or after stopping the vehicle and driving off once again, "ASC defect" appears in the instrument cluster display at a speed of 24 km/h.
- ABS lamp ON until ignition is switched off, ABS lamp off when engine restarted.

Test:

- Measure resistance between Pin 10 and Pin 28, 650 Ω ... 1.6 kΩ
- Detach speed sensor connection under right of rear seat.
- Check Pin 10 and 28 for short to ground (–) and positive (+), if necessary move wires.
- Renew rear right speed sensor. Visual inspection of pulse wheel.

Other indicators:

Intermittently occurring defect with and without control:

- Defect occurs at speed above 44 km/h, "ASC defect" appears immediately in the instrument cluster display, further control possible on the vehicle side not effected. (e.g. loose contact in the sensor/wire).
- ABS lamp ON until ignition is switched off. ABS lamp off when engine restarted.

Test:

- Detach speed sensor connection under right of rear seat. Connect jumper to wire harness side connector. Measure resistance Pin 10 and 28, 0 ... 1.5 Ω (move wires). Check wires for a short to ground (–) and positive (+). Renew rear right speed sensor. Visually inspect pulse wheel, renew pulse wheel if teeth damaged. See Repair Instructions Group 34.

Test 12.3

Sensor defect (front right), faults at front right speed sensor, pulse wheel or wires

Other indicators:

- Static defect with or without control:
- After restarting engine and driving off, "ASC defect" appears in the instrument cluster display
- In the case of static defect during a trip at a speed below 44 km/h "ASC defect" appears in the instrument cluster display after 20 sec (not if speed drops below 12 km/h during the 20 sec), or after stopping vehicle and starting off once again, "ASC defect" appears in the instrument cluster display at a speed of 24 km/h.
- ABS lamp ON until ignition is switched off, ABS lamp off when engine restarted.

Test:

- Measure resistance between Pin 13 and 12, 650 Ω ... 1.6 KΩ
- Detach speed sensor connection in front right engine compartment. Check Pin 13 and 12 for a short to ground (–) and positive (+), move wires if necessary. Renew front right speed sensor. Visual inspection of pulse wheel.

Other indicators:

Intermittently occurring defect with and without control:

- Defect occurs at a speed above 44 km/h, "ASC defect" appears immediately in the instrument cluster display, further control possible on vehicle side not effected (e.g. loose contact at sensor/wire).
- ABS lamp ON until ignition is switched off. ABS lamp off when engine restarted.

Test:

- Detach speed sensor connection in front right engine compartment. Bypass wire harness side of connector, measure resistance Pin 13 and 12, 0 ... 1.5 Ω (move wires). Check wires for a short to ground (–) and positive (+). Renew front right speed sensor. Visual inspection of pulse wheel, replace pulse wheel if teeth damaged. See Repair Instructions Group 34.

Test 12.4

Sensor defect (front left), faults at front left speed sensor, pulse wheel or wires

Other indicators:

- Static defect with and without control:
- After engine restart and driving off, "ASC defect" appears in the instrument cluster display at a speed of 12 km/h.
- In the case of static defect during a trip at a speed below 44 km/h, "ASC defect" appears in the instrument cluster display after 20 sec (not if speed drops below 12 km/h during the 20 sec), or after stopping vehicle and driving off once again, "ASC defect" appears in the instrument cluster display at a speed of 24 km/h.
- ABS lamp ON until ignition is switched off, ABS lamp off when engine restarted.

Test:

- Measure resistance between Pin 8 and 26, 650 Ω . . . 1.6 KΩ
- Detach speed sensor connection in front left engine compartment. Measure Pin 8 and 26 for a short to ground (–) and positive (+), move wires if necessary. Renew front left speed sensor. Visual inspection of pulse wheel.

Other indicators:

- Intermittently occurring defect with and without control:
- Defect occurs at a speed above 44 km/h, "ASC defect" appears immediately in the instrument cluster display, further control possible on the vehicle side not effected (e.g. loose contact at sensor/wire).
- ABS lamp ON until ignition is switched off. ABS lamp off when engine restarted.

Test:

- Detach speed sensor connection in front left engine compartment. By-pass wire harness side of connector.Measure resistance Pin 8 and 26, 0 ... 1.5 Ω (move wires). Check wires for a short to ground (–) and positive (+). Renew front left speed sensor. Visual inspection of pulse wheel, renew pulse wheel if teeth damaged. See Repair Instructions Group 34.

Test 13.1

DME defect code (ignition fade-out feedback)

Incorrect voltage potential (high) at ZA output of the ASC control unit due to fault in the ZA wire.

In the case of static defect: The ASC push button light remains off when the ignition is switched on. After starting the engine, "ASC defect" appears in the instrument cluster display.

Test:

- Check 55-pin connector that it is firmly fitted and connected correctly at the ABS/ASC control unit. Clear defect code, start engine, read out flash code once again.
- If necessary, renew ABS/ASC control unit.
- In the case of intermittently occurring defect:
- With control, further control possible via the EML, without control, system is switched off immediately.
  "ASC defect" appears immediately in the instrument cluster display.
- Check 55-pin connector X7 that it is firmly fitted and connected correctly at the ABS/ASC control unit. Clear defect code, carry out test drive. Read out flash code once again.
- If necessary, replace ABS/ASC control unit.

Test 14.1

DME defect code (terminal 1)

No engine speed due to wire fault

Other indicators:

- In the case of static defect without control, "ASC defect" appears in the instrument cluster display 1 sec after a speed of 26 km/h has been exceeded.
- In the case of intermittently occurring defect: No effect on current control phase. "ASC defect" appears in the instrument cluster display after 1 sec above a speed of 25 km/h.

Test:

- Check wire from Pin 38 to A200 DME control unit,
  Pin 1 for continuity, a break or a short to ground (–) .
- Check shield Pin 41 to Pin 3 for continuity, a break or a short to positive (+).
- If necessary replace DME control unit.

Test 15.1

ABS/ASC control unit defect

Other indicators:

- Computer-internal defect, control unit-specific.
- In the case of static defect: The ASC push button light remains off after the ignition is switched on. After starting engine "ASC defect" appears in the instrument cluster display.

Test:

- Check 55-pin control unit connector that it is firmly fitted and connected correctly.
  Clear defect code, start engine, read out flash code once again.
- If necessary, replace ABS/ASC control unit.

Other indicators:

- In the case of temporarily occurring defect: A current control phase is terminated immediately, "ASC defect" appears immediately in the instrument cluster display, the EML safety functions are activated.

Test:

- Check that terminals and ground connections are firmly fitted.
  Clear defect code, carry out test drive. Read out flash code once again.
- If necessary, renew ABS/ASC control unit.

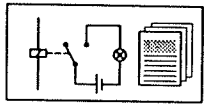

Functional Description

General

The task of the system is to control the slip of the drive wheels, irrespective of the condition of the road surface and corresponding to the coefficient of friction with the aim of achieving optimum driving stability at propulsion.

During a control phase, the engine torque is reduced by way of the DME (ignition intervention) and EML (throttle control system). If this measure is not sufficient, the drive wheel which is spinning too fast is additionally braked by means of the wheel brake in conjunction with a hydraulic actuator (plunger).

Display and Switching Logic

The ASC multi-function lamp in the instrument cluster lights constantly when the ignition is switched on (lamp check). The system is switched on after engine start and can be switched off as required with the passive button. The ASC lamp is off when the system is switched on.

The ASC lamp flashing in the instrument cluster indicates to the driver that the ASC+T control is active.

If the ASC lamp lights permanently with the engine running, this indicates that the system has switched off automatically due to a defect or it was switched off by hand.

Safety Information

The ASC+T system must be switched off before testing the vehicle on a brake or performance test stand.

The ignition must be switched off before towing a vehicle with the front axle raised.

Throttle Control via EML

The throttle is controlled by means of the electronic throttle control system (EML).

If impermissibly high wheel spin occurs in a certain driving situation, the ASC+T determines the maximum drive torque which can be transmitted and constantly signals the necessary throttle position to the EML for the duration of the control phase.

The EML constantly signals the current throttle angle (set by driver) to the ASC+T via the DKV line. If the throttle angle is to be reduced, the EML receives this information via the DKR line. If the ASC+T requires that the throttle angle is increased, engine (engine drag torque control), this information is signalled to the EML via the DKE line.

Ignition Timing Control via DME

A further measure to reduce the engine torque is to retard the ignition timing.

In ASC+T mode (control) the digital motor electronics (DME) receives a digital signal from the ASC+T and consequently retards the ignition timing.

Transmission Intervention via EGS

When the ASC+T is active, a digital signal is sent to the electronic transmission control. As a result, the gearshift characteristic is changed within the EGS in order to facilitate smooth shifting or to temporarily suppress pending gearshifts.

Brake Intervention via the Plunger Hydraulic Unit

General

The fastest way of reducing the slip of a drive wheel is direct braking of the spinning wheel with the relevant wheel brake.

This brake intervention increases the stability and steerability of the vehicle and supplements the measures: Throttle control and ignition angle adjustment. In addition, individual wheel-controlled braking can achieve a differential lock effect on the power axle on road surfaces with different grip conditions.

Individual braking of the drive wheels occurs only within a speed range of 0 to 40 km/h. When starting off on a regular road surface and generally at speeds above 40 km/h, the brake is used only temporarily to reduce the drive torque.

Operating Principle

The brake pressure necessary for braking the wheel is applied via the two-plunger hydraulic unit. This hydraulic component is installed between the ABS hydraulic unit and the rear wheel brakes.

Via two solenoid valves, compressed oil (mineral oil) is applied from the pressure accumulator to the primary side of the plungers, thus displacing them. Due to this displacement, brake pressure is built up in the relevant wheel brake on the secondary side (brake fluid). If the brake pressure is to be reduced once again, the pressure in the primary circuit is reduced by way of the solenoid valves and the plunger moves back to its initial position.

Block Diagram of Hydraulic Plunger System

1,2	Rear brake line
3,4	Front brake line
5	Plunger
6	Solenoid valves
7	Pressure accumulator
8	Pressure switch
9	Accumulator charge valve
10,11	Rear wheel brakes
12,13	Front wheel brakes
14	Hydraulic tandem pump
15	Level control
16	Oil reservoir (mineral oil)

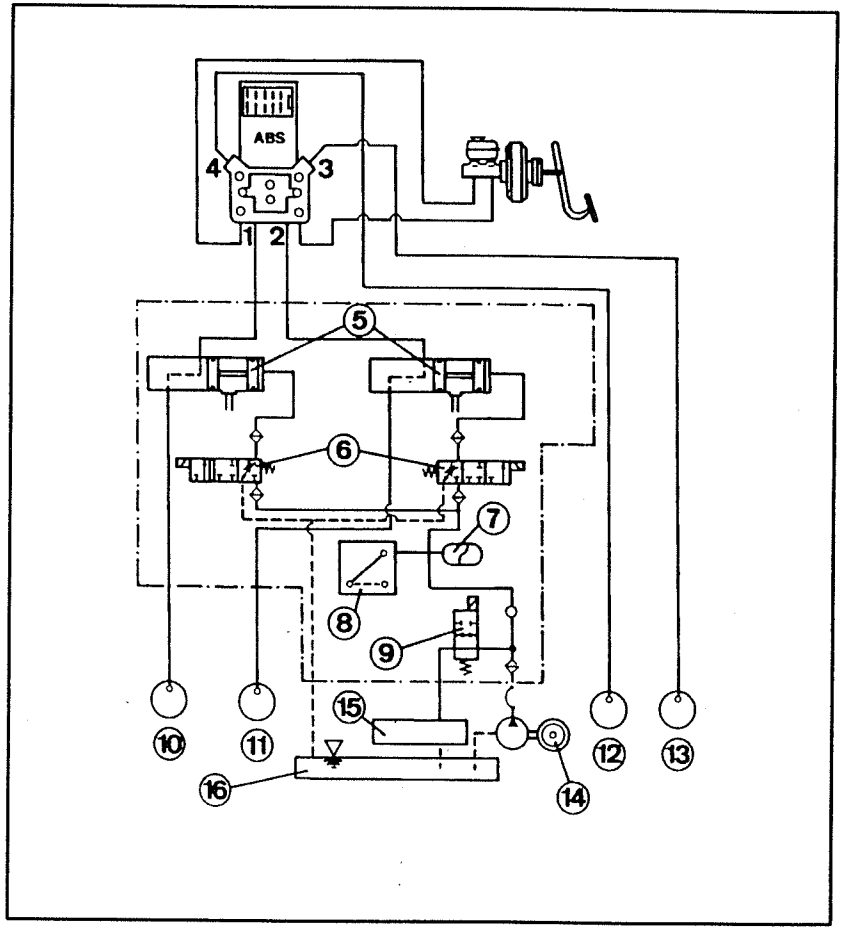

P31 34 004

Safety Circuit

The control unit itself, as well as all components of the ASC+T system are constantly monitored for defects irrespective of the switching status of the ASC passive button. In the same way, the connections (interfaces) to other systems (DME, EML, EGS) are constantly checked or checked during a control procedure. If a fault occurs in the overall system, the ASC lamp in the instrument cluster is activated and the system switched off. If a defect occurs during a control procedure, the control function can be completed via the intact control circuit depending on the severity of the defect. The ABS/ASC+T control unit concept allows for separate deactivation of both individual systems, whereby any ABS defect results in deactivation of the ASC+T system.

System components	Monitoring mode	Reaction of control circuit in the case of system component faults			
		Throttle control	Brake control	Ignition angle adjust-ment	ABS
EML interface	Constant monitoring	X	X	X	–
Speed sensor	Constant monitoring	O	O	O	O
Ignition angle adjustment	Constant monitoring	O	O	X	–
EGS intervention	Constant monitoring	O	O	O	–
Solenoid valve plunger:					
– Break, short to ground	Constant monitoring	X	X	X	X
– Short to +12 V, power output stage defective	Monitoring only during control	X	X	X	X
Pressure supply	Constant monitoring	O	O	O	–
Control unit defect (processor defect)	Constant monitoring	X	X	X	X

X Immediate shut-down of the control circuit

O Emergency control can be performed via this control circuit up to the end of the ASC+T control phase

– No switch-off

ASC+T Interconnected System

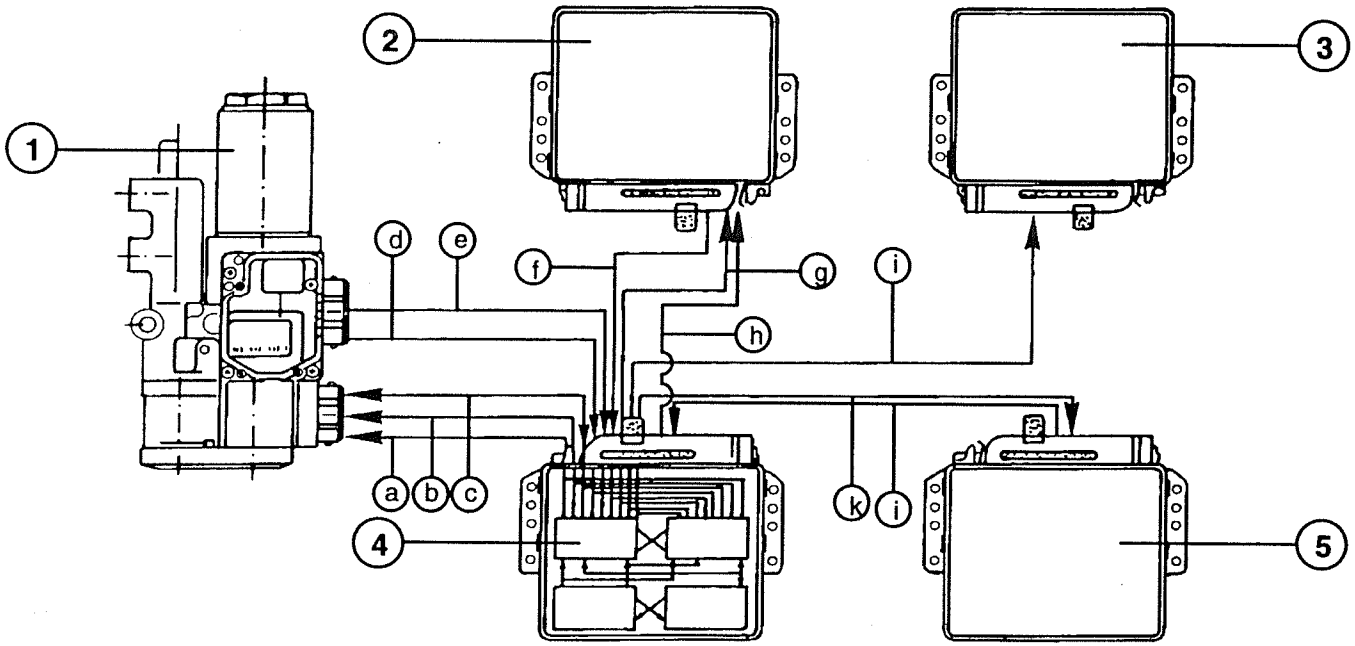

P31 34 005

System components		Signal routing between the individual system components			
1	ASC+T plunger hydraulics	a	Charging valve	g	DKR (throttle reduction)
2	EML	b	Control valve 1	h	DKE (throttle increase)
3	EGS	c	Control valve 2	i	Transmission intervention
4	ABS/ASC+T	d	Warning pressure	k	Ignition angle adjustment
5	DME	e	Accumulator pressure	l	Engine speed (T_D)
		f	DKV (preset throttle value)		

Automatic Stability Control plus Traction (ASC + T)

General Block Diagram

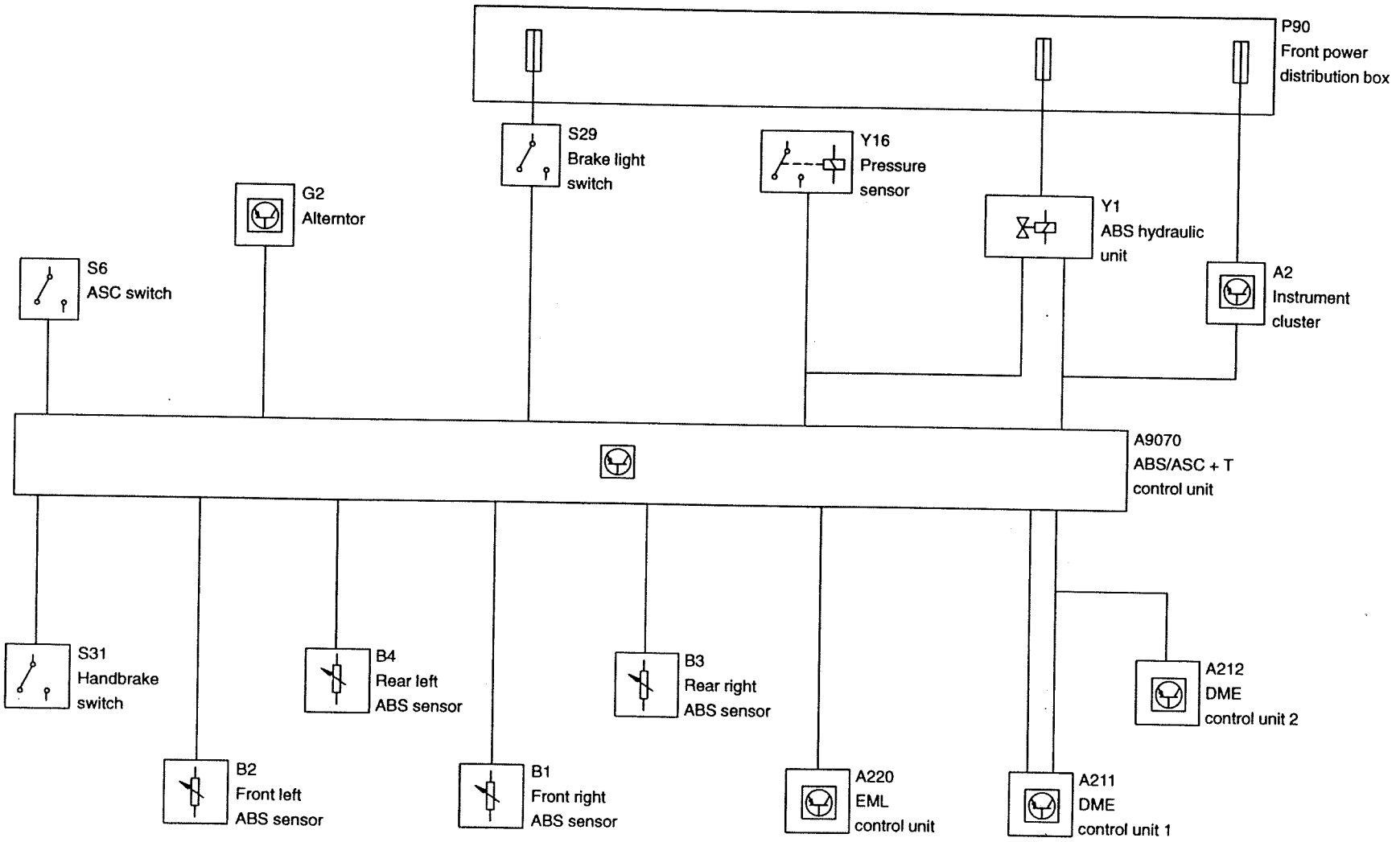

Notes on the BMW DIAGNOSTIC SYSTEM

Important!

Only the ABS/ASC+T control unit with the BMW No. 1 159 494 (crimson red adhesive label) can be read out with the BMW DIAGNOSTIC SYSTEM.

This variant is installed in vehicles with manual transmission and as of approx. 9/90 also in vehicles with electronic transmission control.

The following diagnostic functions are possible with this control unit:

- Read control unit identification
- Read defect code memory
- Clear defect code memory

Diagnosis with the ABS/ASC+T control unit with the BMW No. 1 158 804 (red-violet adhesive label) is only possible via the flash code.

If a defect occurs in the vicinity of the interfaces to the other systems (DME, EML, EGS), the defect code memory of the system concerned should always be read out with the BMW DIAGNOSTIC SYSTEM in the case of both control unit variants.

In addition to the ABS/ASC+T control unit, the EGS is also supplied by the EML with the DKV signal. This signal can be read out with the BMW DIAGNOSTIC SYSTEM using the EGS diagnostic program under point "Status display".

Abbreviations

ASC + T	Automatic stability control plus traction
ABS	Antilock brake system
DME	Digital motor electronics
EML	Electronic throttle control
EGS	Electronic transmission control
DKV	Preset throttle value
DKR	Throttle reduction
DKE	Throttle increase
ZWV	Ignition timing adjustment
VL	Front left
VR	Front right
HL	Rear left
HR	Rear right
SG	Control unit
E	Input
A	Output
Sila	Safety lamp

Pin Assignment

Connector Overview

Number	Type	Description
X11	55-pin	ABS/ASC+T unit connector
X31	12-pin, black	ABS hydraulic unit connector
X113	2-pin, white	Plug connection, front part front right ABS sensor
X114	2-pin, white	Plug connection, front part front left ABS sensor
X376	2-pin, white	Plug connection, front part rear left ABS sensor
X377	2-pin, white	Plug connection, front part rear right ABS sensor
X18024	4-pin, black	Plug connection, ASC+T plunger
X18025	6-pin, black	Plug connection, ASC+T pressure sensor

Pin Assignments at Connector X11 (ABS/ASC+T Unit Connector)

Pin	Type	Description/function	Connection	Type of signal	Tester display	Measurement notes
1	E	B + (terminal 15)	DME main relay	approx. 12 V		Ignition ON
2	A	Rear left solenoid valve activation	ABS hydraulic unit	Ground		cannot be measured statically
3	E	Control unit ground	Body ground	Ground		None
4	E/A	Diagnostic link TxD	Diagnostic bus			
5	A	Motor relay activation	ABS hydraulic unit	Ground		cannot be measured statically
6	A	Throttle reduction	EML	Pulse width-modulated square-wave signal		cannot be measured statically
7	A	Valve relay activation	ABS hydraulic unit	approx. 0 V		Ignition ON
8	A	Throttle valve increase	EML	Pulse width-modulated square-wave signal		cannot be measured statically
9		Not used				
10		Not used				
11	E	B+ (terminal 30)	Battery	approx. 12 V		only for control unit with BMW No. 1 158 804 (red-violet adhesive label)
12		Not used				
13	E	Operating pressure signal	Plunger hydraulic unit	< 1.5 V/ > 3.5 V		Ignition ON
14	E	Preset throttle value	EML	Pulse width-modulated square-wave signal		cannot be measured statically

Pin	Type	Description/function	Connection	Type of signal	Tester display	Measurement notes
15	A	Coding jumper manual transmission	Pin 34 (stabilised voltage)	5 V		None
16		Not used				
17	E	Voltage signal valve relay	Plunger/ABS hydraulic unit	approx. 12 V		Ignition ON
18	A	Rear right solenoid valve activation	Plunger hydraulic unit	Ground		cannot be measured statically
19	A	Front left solenoid valve activation	Plunger hydraulic unit	Ground		cannot be measured statically
20	A	Voltage signal motor relay	ABS hydraulic unit	approx. 12 V		None
21	A	Rear left solenoid valve activation	Plunger hydraulic unit	Ground		cannot be measured statically
22	A	Front right solenoid valve activation	Plunger hydraulic unit	Ground		cannot be measured statically
23	E	Voltage signal solenoid valves	Plunger hydraulic unit	approx. 12 V		Ignition ON
24	E	Voltage signal ABS-Sila	Instrument cluster	approx. 0 V/approx. 12 V		Ignition ON/engine ON
25	E	Accumulator warning pressure threshold	Plunger hydraulic unit	< 1.5 V/ > 3.5 V		Ignition ON
26		Not used				
27	E	Terminal 61d D+	Alternator	> 12 V		Engine ON
28	E	ASC button signal	ASC button	approx. 0 V/approx. 12 V		Ignition ON/ASC button depressed
29	E	Brake light switch signal	Brake light switch	approx. 12 V		Ignition ON
30	E	Diagnostic link RxD	Diagnostic bus			
31	E	Motor relay signal	ABS hydraulic unit	approx. 12 V		cannot be measured statically

Pin	Type	Description/function	Connection	Type of signal	Tester display	Measurement notes
32	E	Handbrake switch signal	Handbrake switch	approx. 12 V		Ignition ON
33	A	Accumulator charging valve activation	Plunger hydraulic unit	Ground		cannot be measured statically
34	E	Coding jumper manual transmission	Pin 15			
35		Not used				
36	A	Rear right solenoid valve activation	ABS hydraulic unit	Ground		cannot be measured statically
37	E	Control unit ground	Body ground	Ground		None
38		Not used				
39	A	Ignition angle adjustment	DME	approx.12 V		cannot be measured statically
40	A	ASC multi-function lamp	Instrument cluster	approx. 0 V/approx. 12 V		Ignition ON/engine ON
41		Not used				
42	A	Rear right speed sensor ground	Speed sensor	Ground		None
43	E	Rear right wheel speed signal	Speed sensor	Alternating voltage		cannot be measured statically
44	A	Rear left speed sensor ground	Speed sensor	Ground		None
45	E	Rear left wheel speed signal	Speed sensor	Alternating voltage		cannot be measured statically
46	A	Front right speed sensor ground	Speed sensor	Ground		None
47	E	Rear left wheel speed signal	Speed sensor	Alternating voltage		cannot be measured statically
48	A	Front left speed sensor ground	Speed sensor	Ground		None
49		Not used				

Pin	Type	Description/function	Connection	Type of signal	Tester display	Measurement notes
50	E	Front left wheel speed signal	Speed sensor	Alternating voltage		cannot be measured statically
51		Not used				
52	E	Control unit ground	Body ground	Ground		None
53		Not used				
54	A	Signal transmission intervention	EGS	approx. 12 V		Ignition ON
55	E	Engine speed signal	DME	Square–wave signal		cannot be measured statically

Pin Assignments at Connector X31 (ABS Hydraulic Unit Connector)

Pin	Type	Description/function	Connection	Type of signal	Tester display	Measurement notes
1		Front left solenoid valve activation	ABS/ASC+T control unit	Ground		
2		Valve relay activation	ABS/ASC+T control unit	Ground		
3		Front right solenoid valve activation	ABS/ASC+T control unit	Ground		
4		Voltage signal valve relay	Solder point in wiring harness	approx. 12 V		
5		Rear left solenoid valve activation	ABS/ASC+T control unit	Ground		
6		B+ (terminal 30)	Battery	approx. 12 V		
7		Rear right solenoid valve activation	ABS/ASC+T control unit	Ground		
8		Motor relay voltage	ABS/ASC+T control unit	approx. 12 V		
9		Motor relay signal	ABS/ASC+T control unit	approx. 12 V		
10		B+ (terminal 30)	Battery	approx. 12 V		

Pin	Type	Description/function	Connection	Type of signal	Tester display	Measurement notes
11		Signal ABS-Sila	Instrument cluster	Ground		Ignition ON
12		Motor relay activation	ABS/ASC+T control unit	Ground		

Pin Assignments at Connector X18024 (Plug Connection Plunger ASC+T)

Pin	Type	Description/function	Connection	Type of signal	Tester display	Measurement notes
1		Voltage signal plunger solenoid valves	Solder point in wiring harness	approx. 12 V		
2		Accumulator charging valve activation	ABS/ASC+T control unit	Ground		
3		Rear right solenoid valve activation	ABS/ASC+T control unit	Ground		
4		Rear left solenoid valve activation	ABS/ASC+T control unit	Ground		

Pin Assignments at Connector X18025 (Plug Connection Pressure Sensor)

Pin	Type	Description/function	Connection	Type of signal	Tester display	Measurement notes
1		Operating pressure signal		< 1.5 V / > 3.5 V		
2		Pressure sensor ground connection	Body ground	Ground		
3		Not used				
4		Not used				
5		Voltage signal pressure sensor	ABS/ASC+T control unit	approx. 12 V		
6		Accumulator warning pressure threshold	ABS/ASC+T control unit	< 1.5 V / > 3.5 V		

Adapters

Component	Connector No.	Description	Adapter No.
ABS/ASC+T control unit	X7	Universal adapter	HWB 81 12 9 425 091
		Connection lead for periphery, 55-pin	HWB 81 12 9 428 907
		Connection lead for control unit, 55-pin	HWB 81 12 9 428 908

Troubleshooting

Notes on Differentiation between ABS/ASC and ABS/ASC+T

The ABS/ASC+T system can be identified by the plunger hydraulic unit which is arranged in the engine compartment above the left-hand engine mount or by its vent connection on the left-hand side in the engine compartment.

The following test instructions are to be used corresponding to the variant:

ABS/ASC: 3450.1A

ABS/ASC+T: 3450.2A

Defect Code Storage

If a defect occurs in the ABS or ASC+T system when the control unit is active (ignition ON), this defect is stored permanently and the relevant system or the entire system is switched off. Defects at the wheel sensors can only be stored when the vehicle is driving at speeds in excess of 12 km/h. All faults which result in the ABS system switching off also cause the ASC+T system to switch off, i.e. all ABS components are monitored by the ASC+T system.

However, the ABS system is not switched off in the case of every defect in the ASC+T system. If two or more defects occur simultaneously, the one with the highest priority is stored. The lower the number of flash pulses, the higher the priority of the defect.

The ABS/ASC+T system is fully operable once again if the defect no longer exists at the next start (ignition ON). The defect code still remains stored in the defect code memory until it is either cleared (see "Clearing defect code memory") or it is overwritten by another defect code.

There are 20 different defect codes, however, only one can be stored at a time.

With the ABS/ASC+T control unit BMW No. 1 159 494 (diagnostic capabilities via the diagnostic links), 3 different defect codes from a total of 22 can be stored at any one time.

Note:

In extreme driving situations (skidding) with the ASC+T system switched off, it is possible that the ABS system cuts out and the defect code 14 (valve relay) is stored. Simply clear the defect code memory in this case.

Defect Code Memory Readout

Activating the flash code

- Switch off ignition
- Press ASC button and depress brake pedal simultaneously
- Hold ASC button and brake pedal depressed simultaneously and switch on ignition
- Keep depressed for at leas 1 second and then release ASC button and brake pedal

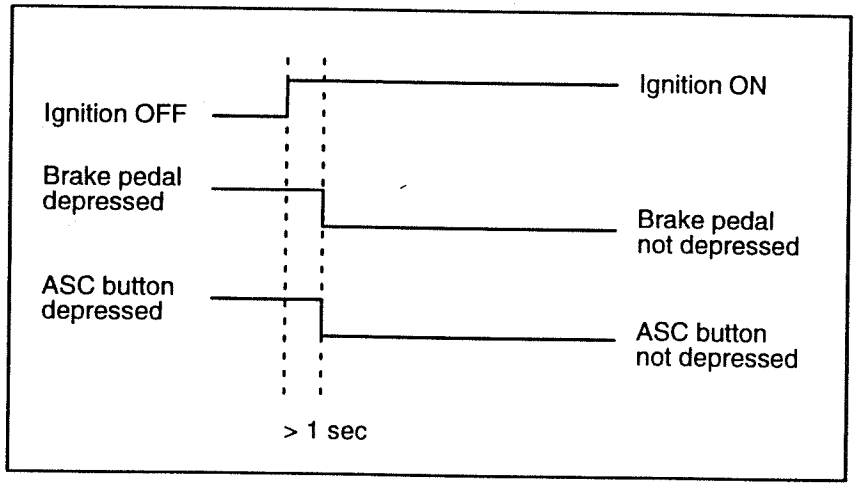

P31 34 001

Notes

The steps to activate the flash code must be repeated if the ASC lamp remains on.

Reading out the flash code

The flash code is output for approx. 47 seconds irrespective of which defect code is stored.

After activation of the defect code, the ASC lamp goes out for 3 seconds and then begins outputting the flash pulses at a flash frequency in a pulse/pause ratio of 1sec/1sec.

The number of flash pulses indicates which defect code is stored. Refer to the table of defect codes below.

Example:

2 flash pulses (BI) = Defect code 02

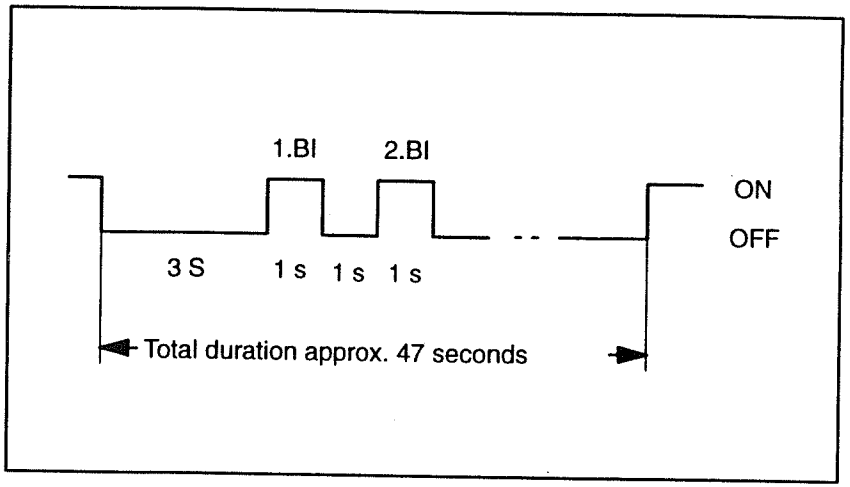

P31 34 004

Clearing Defect Code Memory

There are three possible ways of clearing the defect code memory:

Within 3 seconds after the end of the flash code output (after 47 seconds) when the ASC lamp lights permanently once again, press the ASC button for at least 1 second.

Disconnect vehicle battery (Attention! Defect code memories of other systems may be cleared).

Disconnect control unit (Attention! Ignition must be switched off).

In the case of ABS/ASC+T control unit with BMW No. 1 159 494 (diagnostic capabilities via the diagnostic links), the contents of the defect code memory can be cleared with the BMW DIAGNOSTIC SYSTEM. The contents of the defect code memory are **not** deleted if the control unit is disconnected.

Troubleshooting Procedure

- Check system for mechanical and hydraulic defects (refer to Repair Instructions Group 34)
- Read out defect code memory via flash code

  Note:

  If the defect code cannot be read out, then continue troubleshooting as described under point "Other system defects".

- Note down number of flash pulses
- In order to exclude the possibility of any counting errors, read out the defect code memory once again
- Clear defect code memory
- Perform troubleshooting with schematic
- Rectify defect
- Perform test run

  Note:

  During the test run, the car should be driven for at least 20 sec at a speed in excess of 30 km/h or for at least 3 seconds at a speed above 50 km/h.

- If defect code is stored once again, repeat procedure until no defect code is stored.

Simulating ASC Control Mode

- Raise vehicle on floor jack (all wheels must turn freely)
- Set automatic selector lever to "neutral (N)"
- Start engine
- Set engine speed by means of accelerator pedal or adapter EML No. 12.7010 (see Repair Instructions 12 70 500) to approx. 2000 rpm
- Quickly accelerate rear left or rear right wheel by hand in forward direction

Reaction: Braking of the turned wheel must be felt.

Dynamic Testing of the Speed Sensors

Connect oscilloscope of BMW Service Tester as follows:

– Terminal D+ blue to speed sensor signal
– Frequency (–) black to speed sensor ground
– Frequency (+) blue to terminal 1 black

♦M♦ 13 select frequency and enter 80 Hz

♦M♦ 22 select oscilloscope

Uniformly turn wheel by hand. A sinusoidal curve must appear (amplitude and period duration change depending upon the rotary speed).

Example:

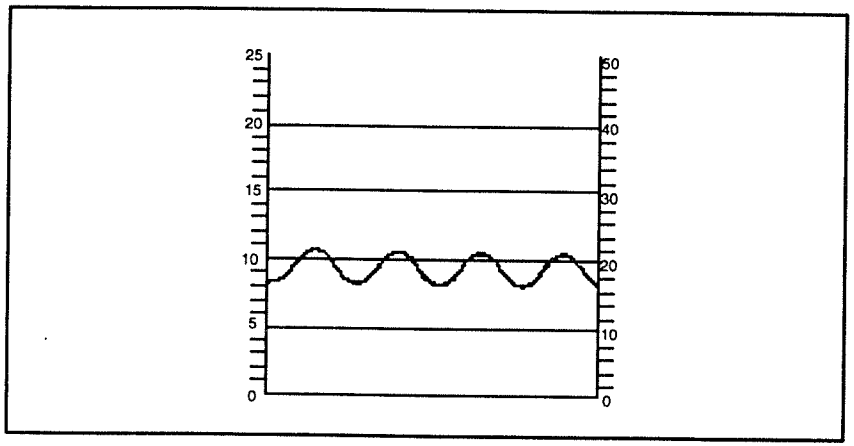

P31 34 003

Uniform progression of speed signal (signal OK.)

Checking for Interchanged Wheel Speed Sensors

Perform dynamic wheel speed sensor test in accordance with Schematics or to "Pin Assignments" at each wheel.

If no signal can be seen on the oscilloscope from one wheel, turn the opposite wheel. If a signal is displayed, this indicates that the wheel speed sensor wiring has been interchanged.

Defect codes which can be stored by the control unit (BMW No. 1 158 804 – red-violet adhesive label)

Number of flash pulses	Defect description	Defect code
1	No defect code stored	–
2	EML interface defect	Defect code 02
3	DME interface defect	Defect code 03
4	Rear left wheel sensor defect	Defect code 04
5	Rear right wheel sensor defect	Defect code 05
6	Front right wheel sensor defect	Defect code 06
7	Front left wheel sensor defect	Defect code 07
8	Rear left ABS valve defect	Defect code 08
9	Rear right ABS valve defect	Defect code 09
10	Front right ABS valve defect	Defect code 10
11	Front left ABS valve defect	Defect code 11
12	Rear left plunger valve defect	Defect code 12
13	Rear right plunger valve defect	Defect code 13
14	ABS valve relay defect	Defect code 14
15	ABS return pump defect	Defect code 15
16	ASC+T accumulator charging valve defect	Defect code 16
17	Charging time defect, plunger accumulator	Defect code 17
18	Leakage defect, plunger accumulator	Defect code 18
19	Accumulator warning pressure threshold defect	Defect code 19
20	EGS interface defect	Defect code 20
21	Internal control unit defect	Defect code 21

Additional defects, control unit (BMW No. 1 159 494 – crimson red adhesive label)

Number of flash pulses	Defect description	Defect code
22	Speed signal defect	Defect code 22
23	Transmission coding defect (option pin)	Defect code 23

Defect Code 02

Explanation:

Defect on the connection links (interface) to EML (DKV, DKE, DKR signal)

Possible cause:

Short or break on one of the wires to the EML

Defect during synchronisation with the EML control unit

Troubleshooting:

Switch off ignition and detach control unit connector.

Check DKV, DKR, DKE line from ABS/ASC+T Pin 14, 6, 8 to the EML.

Connect control unit and switch on ignition.

Measure frequency of the DKV, DKR, DKE signal with ♦**M**♦, nominal value approx. 100 Hz.

Repair defective wire if necessary.

If no defect can be found, clear defect code memory.

Note:

The same DKV signal is supplied to the EGS control unit. Read out EGS defect code memory and, if necessary, also check wire to the EGS.

Defect Code 03

Explanation:

Defect on the connection link (interface) to the DME (ignition timing adjustment)

Possible cause:

Short or break on the wire to the DME control unit

Troubleshooting:

Switch off ignition and detach control unit connector.

Check ZWV wire from ABS/ASC+T Pin 39 to the DME and repair if necessary.

Connect control unit and switch on ignition.

Read out ignition angle (dynamic) by way of the DME diagnostic program ♦**D**♦ 200 Status monitoring for both DME control units.

Simulate ASC+T control mode; the ignition angle must be set towards retard.

If the ignition timing is not adjusted, there is a defect either in the ABS/ASC+T or in a DME control unit.

Defect Code 04

Explanation:

No or faulty sensor signal from rear left wheel sensor

Possible cause:

Short or break to ground or the signal lines to/from the speed sensor

Different tyres on rear axle (different wheel circumferences)

Defective pulse wheel (corrosion, dirt, tooth damage)

Incorrect number of teeth on pulse wheel

Air gap (clearance) too large or too small

Wheel speed sensor defective or dirty

Troubleshooting:

Perform following checks and repair or renew defective components as necessary:

- Check tyres for correct tyre size on all four wheels
- Check wheel bearing play at all four wheels and renew bearings if necessary
- Check pulse wheel (number of teeth 48, damage, corrosion, dirt build-up)
- Check air gap (clearance) (nominal value 0.05...0.9 mm)
- Check wheel speed sensors (mechanical damage, dirt build-up, e.g. metal particles)
- Check wheel speed sensor line (mechanical damage, e.g. pinched points)
- Check plug connections under the left rear seat (firm connection, corrosion, connection interchanged).

Switch off ignition and disconnect the ABS/ASC+T control unit.

Perform following measurements and in the case of deviation renew defective components:

Resistance wire harness side Pin 44/45; nominal value: 650...1600 Ohm; move wires and plug connection (loose contact); if necessary detach plug connection and repeat resistance measurement to locate defect.

Perform dynamic speed signal test at Pin 44/45.

Ensure pulse waves are uniform, if necessary, renew pulse wheel or wheel speed sensor.

Defect Code 05

Explanation:

No or faulty sensor signal from rear right wheel sensor

Possible cause:

Short or break to ground or the signal line to/from the speed sensor

Different tyres on rear axle (different wheel circumferences)

Defective pulse wheel (corrosion, dirt, tooth damage)

Incorrect number of teeth on pulse wheel

Air gap (clearance) too large or too small

Wheel speed sensor defective or dirty

Troubleshooting:

Perform following checks and repair or renew defective components as necessary:

- Check tyres for correct tyre size on all four wheels
- Check wheel bearing play at all four wheels and renew bearings if necessary
- Check pulse wheel (number of teeth 48, damage, corrosion, dirt build-up)
- Check air gap (clearance) (nominal value 0.05...0.9 mm)
- Check wheel speed sensors (mechanical damage, dirt build-up, e.g. metal particles)
- Check wheel speed sensor line (mechanical damage e.g. pinched points)
- Check plug connections under the right rear seat (firm connection, corrosion, connection interchanged)

Switch off ignition and disconnect the ABS/ASC+T control unit.

Perform following measurements and in the case of deviation renew defective components:

Resistance wire harness side Pin 42/43; nominal value: 650...1600 Ohm; move wires and plug connection (loose contact); if necessary detach plug connection and repeat resistance measurement to locate defect.

Perform dynamic speed signal test at Pin 42/43.

Ensure pulse waves are uniform, if necessary, renew pulse wheel or wheel speed sensor.

Defect Code 06

Explanation:

No or faulty sensor signal from front right wheel sensor

Possible cause:

Short or break to ground or the signal line to/from the speed sensor

Different tyres on front axle (different wheel circumference)

Defective pulse wheel (corrosion, dirt, tooth damage)

Incorrect number of teeth on pulse wheel

Air gap (clearance) too large or too small

Wheel speed sensor defective or dirty

Troubleshooting:

Perform following checks and repair or renew defective components as necessary:

- Check tyres for correct tyre size on all four wheels
- Check wheel bearing play at all four wheels and renew bearings if necessary
- Check pulse wheel (number of teeth 48, damage, corrosion, dirt build-up)
- Check air gap (clearance) (nominal value 0.05...0.9 mm)
- Check speed sensor wire (mechanical damage, e.g. pinched points)
- Check plug connection in right of engine compartment (firm connection, corrosion, connection interchanged)
- Check speed sensor (mechanical damage, dirt build-up, e.g metal particles)

Switch off ignition and disconnect the ABS/ASC+T control unit.

Perform following measurements and in the case of deviation renew defective components:

Resistance wire harness side Pin 46/47; nominal value: 650...1600 Ohm; move wires and plug connections (loose contact); if necessary detach plug connection and repeat resistance measurement to locate defect.

Perform dynamic speed signal test at Pin 46/47.

Ensure pulse waves are uniform, if necessary, renew pulse wheel or wheel speed sensor.

Defect Code 07

Explanation:

No or faulty sensor signal from front left wheel sensor

Possible cause:

Short or break to ground or the signal line to/from the speed sensor

Different tyres on front axle (different wheel circumferences)

Defective pulse wheel (corrosion, dirt, tooth damage)

Incorrect number of teeth on pulse wheel

Air gap (clearance) too large or too small

Wheel speed sensor defective or dirty

Troubleshooting:

Perform following checks and repair or renew defective components as necessary:

- Check tyres for correct tyre size on all four wheels
- Check wheel bearing play at all four wheels and renew bearings if necessary
- Check pulse wheel (number of teeth 48, damage, corrosion, dirt build-up)
- Check air gap (clearance) (nominal value 0.05...0.9 mm)
- Check speed sensor wire (mechanical damage e.g. pinched parts)
- Check plug connections in left of engine compartment (firm connection, corrosion, connection interchanged)
- Check speed sensor (mechanical damage, dirt build-up, e.g. metal particles)

Switch off ignition and disconnect the ABS/ASC+T control unit.

Perform following measurements and in the case of deviation renew defective components:

Static:

Resistance wire harness side Pin 48/50; nominal value: 650...1600 Ohm; move wires and plug connection (loose contact); if necessary detach plug connection and repeat resistance measurement to indicate defect.

Perform dynamic speed signal test at Pin 48/50.

Ensure pulse waves are uniform, if necessary, renew pulse wheel or wheel speed sensor.

Defect Code 08

Explanation:

Rear left ABS solenoid valve malfunction

Possible cause:

Short or break on the wire to the ABS hydraulic unit

Solenoid valve defective

Troubleshooting:

Ensure plug connection is firmly fitted at the ABS hydraulic unit and check for corrosion.

Switch off ignition and detach control unit connector.

Detach connector X31 at the ABS hydraulic unit.

Check wire from the ABS/ASC+T control unit Pin 2 to ABS hydraulic unit Pin 5 and repair if necessary.

Attach connector X31 at ABS hydraulic unit.

Measure resistance at the control unit connector (X11) Pin 2/17;

Nominal value: 0.8...1.5 Ohm

Measure inductance at the control unit connector (X11) Pin 2/17 (see SVT Operating Instructions);

Nominal value: approx. 3 mH

Replace ABS/ASC+T control unit if no defect can be found on the wiring harness side.

Defect Code 09

Explanation:

Rear right ABS solenoid valve malfunction

Possible cause:

Short or break on the wire to the ABS hydraulic unit

Solenoid valve defective

Troubleshooting:

Ensure plug connection is firmly fitted at the ABS hydraulic unit and check for corrosion.

Switch off ignition and detach control unit connector.

Detach connector X31 at the ABS hydraulic unit.

Check wire from the ABS/ASC+T control unit Pin 36 to ABS hydraulic unit Pin 7 and repair if necessary.

Attach connector X31 at ABS hydraulic unit.

Measure resistance at the control unit connector (X11) Pin 36/17;

Nominal value: 0.8...1.5 Ohm

Measure inductance at the control unit connector (X11) Pin 36/17 (see SVT Operating Instructions);

Nominal value: approx. 3 mH

Replace ABS/ASC+T control unit if no defect can be found on the wiring harness side.

Defect Code 10

Explanation:

Front right ABS solenoid valve malfunction

Possible cause:

Short or break on the wire to the ABS hydraulic unit

Solenoid valve defective

Troubleshooting:

Ensure plug connection is firmly fitted at the ABS hydraulic unit and check for corrosion.

Switch off ignition and detach control unit connector.

Detach connector X31 at the ABS hydraulic unit.

Check wire from the ABS/ASC+T control unit Pin 22 to ABS hydraulic unit Pin 3 and repair if necessary.

Attach connector X31 at ABS hydraulic unit.

Measure resistance at the control unit connector (X11) Pin 22/17;

Nominal value: 0.8...1.5 Ohm

Measure inductance at the control unit connector (X11) Pin 22/17 (see SVT Operating Instructions);

Nominal value: approx. 3 mH

Replace ABS/ASC+T control unit if no defect can be found on the wiring harness side.

Defect Code 11

Explanation:

Front left ABS solenoid valve malfunction

Possible cause:

Short or break on the wire to the ABS hydraulic unit

Solenoid valve defective

Troubleshooting:

Ensure plug connection is firmly fitted at the ABS hydraulic unit and check for corrosion.

Switch off ignition and detach control unit connector.

Detach connector X31 at the ABS hydraulic unit.

Check wire from the ABS/ASC+T control unit Pin 19 to ABS hydraulic unit Pin 1 and repair if necessary.

Attach connector X31 at ABS hydraulic unit.

Measure resistance at the control unit connector (X11) Pin 19/17;

Nominal value: 0.8...1.5 Ohm

Measure inductance at the control unit connector (X11) Pin 19/17 (see SVT Operating Instructions);

Nominal value: approx. 3 mH

Replace ABS/ASC+T control unit if no defect can be found on the wiring harness side.

Defect Code 12

Explanation:

Rear left plunger solenoid valve malfunction

Possible cause:

Short or break on control wire to plunger hydraulic unit

Short or break on B+ supply wire from ABS hydraulic unit to plunger hydraulic unit

Solenoid valve defective

Troubleshooting:

Switch off ignition and detach control unit connector.

Measure resistance at the control unit connector (X11) Pin 21/23;
Nominal value: 0.8...1.8 Ohm

Measure inductance at the control unit connector (X11) Pin 21/23 (see SVT Operating Instructions);
Nominal value: approx. 20 mH

If necessary, remove plunger hydraulic unit (see Repair Instructions Group 34), ensure plug connections is firmly fitted and check for corrosion, measure internal resistance of the solenoid valve directly at the plunger hydraulic unit.

Replace ABS/ASC+T control unit if no defect can be found on the wiring harness side.

Defect Code 13

Explanation:

Rear right plunger solenoid valve malfunction

Possible cause:

Short or break on control wire to plunger hydraulic unit

Short or break on B+ supply wire from ABS hydraulic unit to plunger hydraulic unit

Solenoid valve defective

Troubleshooting:

Switch off ignition and detach control unit connector.

Measure resistance at the control unit connector (X11) Pin 18/23;
Nominal value: 0.8...1.8 Ohm

Measure inductance at the control unit connector (X11) Pin 18/23 (see SVT Operating Instructions);
Nominal value: approx. 20 mH

If necessary, remove plunger hydraulic unit (see Repair Instructions Group 34), ensure plug connections is firmly fitted and check for corrosion, measure internal resistance of the solenoid valve directly at the plunger hydraulic unit.

Replace ABS/ASC+T control unit if no defect can be found on the wiring harness side.

Defect Code 14

Explanation:

Valve relay not operating or defective

Possible cause:

Short or break on the control wire to the ABS hydraulic unit

Short or break on B+ supply wire from return pump motor relay to valve relay

Short or break on monitoring wire from ABS hydraulic unit to ABS/ASC+T control unit

Valve relay defective

See Note on Page 3450.2A – 14

Troubleshooting:

Ensure valve relay is firmly fitted and check for corrosion at the contacts, renew if necessary

Switch on ignition and check whether the valve relay pulls up.

Valve relay pulls up:

- Switch off ignition and detach control unit connector
- Check monitoring wires from ABS hydraulic unit Pin 4 to ABS/ASC+T control unit Pin 17 and Pin 23 and repair if necessary

Valve relay does not pull up:

- Switch off ignition and detach control unit connector
- Check B+ supply wire from the ABS/ASC+T control unit Pin 20 to valve relay Pin 86 and repair if necessary
- Check control wire from the ABS/ASC+T control unit Pin 7 to ABS hydraulic unit Pin 2 and repair if necessary

Replace ABS/ASC+T control unit if no defect can be found on the wiring harness side.

Defect Code 15

Explanation:

Return pump defective or not operating

Possible cause:

Short or break on the control wire to ABS hydraulic unit (motor relay)

Short or break on the B+ supply wire from ABS/ASC+T control unit to ABS hydraulic unit

Short or break on a monitoring wire from ABS hydraulic unit to ABS/ ASC+T control unit

Motor relay defective

Ground connection for pump motor defective

Pump motor defective

Troubleshooting:

Switch off ignition and detach control unit connector.

Ensure motor relay is firmly fitted and check for corrosion at the contacts, renew if necessary.

Check B+ supply wire from the ABS/ASC+T control unit connector (X11) Pin 20 to ABS hydraulic unit Pin 8 and repair if necessary.

Check control wire from the ABS/ASC+T control unite connector (X11) Pin 5 to ABS hydraulic unit Pin 12 and repair if necessary.

Check ground connection to ABS hydraulic unit and repair if necessary.

Replace ABS/ASC+T control unit if no defect can be found on the wiring harness side.

Defect Code 16

Explanation:

Accumulator charging valve malfunction

Possible cause:

Short or break on control wire to plunger hydraulic unit

Short or break on B+ supply wire from ABS hydraulic unit to plunger hydraulic unit

Solenoid valve defective

Troubleshooting:

Switch off ignition and detach control unit connector.

Measure resistance at the control unit connector (X11) Pin 33/23;
Nominal value: 3.3...4.3 Ohm

Measure inductance at the control unit connector (X11) Pin 33/23 (see SVT Operating Instructions);
Nominal value: approx. 20 mH

If necessary, remove plunger hydraulic unit (see Repair Instructions Group 34), ensure plug connections is firmly fitted and check for corrosion, measure internal resistance of the solenoid valve directly at the plunger hydraulic unit.

Replace ABS/ASC+T control unit if no defect can be found on the wiring harness side.

Defect Code 17

Explanation:

Plunger accumulator charging longer than 15 seconds or incorrect pressure signal

Possible cause:

Mechanical or hydraulic defect in plunger system

Short to ground or break on the pressure signal wire from the hydraulic plunger unit to the ABS/ASC+T control unit

Accumulator charging valve does not open

Pressure sensor defective

Troubleshooting:

Switch on ignition and measure voltage at the control unit connector (X11) Pin 13; nominal value: < 1.5 V or > 3.5 V;

Nominal value OK.:

- Visually inspect all hydraulic lines and connections, renew defective parts if necessary
- Check function of tandem hydraulic pump in accordance with Repair Instructions Group 32/34 and renew defective parts if necessary

Nominal value not OK.:

- Remove plunger hydraulic unit in accordance with Repair Instructions Group 34
- Ensure plug connections are firmly fitted and checked for corrosion
- Check B+ supply wire from control unit connector (X11) Pin 17 to pressure sensor connector (X18025) Pin 5 and repair if necessary
- Check pressure signal wire from control unit connector (X11) Pin 13 to pressure sensor connector (X18025) Pin 1 and repair if necessary
- Check ground wire to pressure sensor connector (X18025) Pin 2 and repair if necessary

Defect Code 18

Explanation:

Drop in plunger accumulator pressure

Possible cause:

Plunger accumulator leaking due to internal or external leaks

Troubleshooting:

Remove plunger hydraulic unit in accordance with Repair Instructions Group 34

Visually inspect plunger hydraulic unit and, if necessary, renew in accordance with Repair Instructions Group 34

Ensure plug connections are firmly fitted and check for corrosion.

Check pressure signal wire from control unit connector (X11) Pin 13 to pressure sensor connector (X18025) Pin 1 and repair if necessary.

Defect Code 19

Explanation:

Plunger accumulator pressure too low or signal for plunger warning pressure threshold faulty

Possible cause:

Short to positive on the pressure signal wire from plunger hydraulic unit to the ABS/ASC+T control unit

Break or short to ground on the warning pressure signal wire from plunger hydraulic unit to the ABS/ASC+T control unit

Troubleshooting:

Switch on ignition and measure voltage at the control unit connector (X11) Pin 13; nominal value: < 1.5 V or > 3.5 V;

Nominal value OK.:

- Remove plunger hydraulic unit in accordance with Repair Instructions Group 34
- Ensure plug connections are firmly fitted and check for corrosion
- Check warning pressure signal wire from control unit connector (X11) Pin 25 to pressure sensor connector (X18025) Pin 6 and repair if necessary

Nominal value not OK.:

- Remove plunger hydraulic unit in accordance with Repair Instructions Group 34
- Ensure plug connections are firmly fitted and check for corrosion
- Check B+ supply wire from control unit connector (X11) Pin 17 to pressure sensor connector (X18025) Pin 5 and repair if necessary
- Check pressure signal wire from control unit connector (X11) Pin 13 to pressure sensor connector (X18025) Pin 1 and repair if necessary
- Check ground wire to pressure sensor connector (X18025) Pin 2 and repair if necessary

Defect Code 20

Explanation:

Defect on connecting link (interface) to the EGS (transmission intervention)

Possible cause:

Short or break on the wire to the EGS control unit

Troubleshooting:

Switch on ignition and measure voltage at control unit connector (X11) Pin 54; nominal value: approx. 12 V

Nominal value OK.:

- Check wire from control unit connector (X11) Pin 54 to the EGS for continuity and repair if necessary
- Simulate control mode
- Voltage must drop to approx. 0 V, if necessary, renew ABS/ASC+T control unit

Nominal value not OK.:

- Repair wire, if necessary renew ABS/ASC+T control unit

Defect Code 21

Explanation:

ABS/ASC+T control unit defective

Possible cause:

Hardware defect in the control unit

Troubleshooting:

Switch off ignition, renew ABS/ASC+T control unit

Defect Code 22

Explanation:

Ineffective control when starting off due to lack of engine speed

In vehicles with manual transmission, the engine may stall in control mode

Possible cause:

Short or break on the wire from the DME control units to the ABS/ASC+T control unit

The defect code can be stored due to deactivation of terminal 15 during driving (e.g. ignition switch off and on during driving)

Troubleshooting:

Check speed signal wire from ABS/ASC+T control unit Pin 55 to the DME control units and repair if necessary.

Clear defect code memory if no defect can be found.

Defect Code 23

Explanation:

The ABS/ASC+T does not detect wether an EGS or a manual transmission is installed. Incorrect switchover of the transmission characteristic may result. This can cause less effective ASC operation when starting off.

Possible cause:

Short to positive or to ground at the option pin

Incorrect option pin coding is detected in the case of manual transmission with defect code 20

Troubleshooting:

EGS:

Connecting wire at ABS/ASC+T control unit from Pin 15 to Pin 34 (wire jumper) must be open.

Check wires (Pin 15, 34) for a short and repair if necessary.

Manual transmission:

Check connecting wire at ABS/ASC+T control unit from Pin 15 to Pin 34 for a short and repair if necessary.

Attention:

A break in this wire in vehicles with manual transmission is detected by way of defect code 20.

Other System Defects

The system defect is not stored by the ABS/ASC+T control unit or the flash code cannot be read out.

Troubleshooting

Can the flash code be read out?

— yes → Start engine. Is a voltage of more than 12 V applied at control unit connector Pin 27?

— yes → Replace ABS/ASC+T control unit. If necessary, remove plunger hydraulic unit in accordance with Repair Instructions Group 34. Measure voltage at pressure sensor connector (X18025) Pin 2 and Pin 5 and repair or replace wires as necessary.

— * —

no ↓

no ↓

Repair D+ wire.

— * —

Is a voltage of approx. 12 V applied at control unit Pin 11?

— no → Repair wire.

— * —

yes ↓

Are system functions OK.?

— no → Switch on ignition. Measure voltage at control unit Pin 1. Is approx. 12 V applied?

— no → Check fuse and wire from DME main relay to ABS/ASC+T control unit Pin 1, repair or renew defective part.

— * —

yes ↓

yes ↓

Renew ABS/ASC+T control unit.

— * —

Switch on ignition. Does ASC lamp light?

— no → Measure voltage at control unit Pin 40. Is ground applied?

— no → Check wire to instrument cluster (short to positive) if necessary renew ABS/ASC+T control unit.

— * —

yes ↓

Check wire from control unit Pin 40 to instrument cluster, wire terminal 15 and ASC lamp, repair or renew defective part.

— * —

Does ASC lamp flash in control mode?

— no → Renew ABS/ASC+T control unit.

— * —

yes ↓

Switch off ASC system. Does ASC lamp light?

— no → Press ASC button and measure voltage at control unit Pin 28. Is approx. 12 V applied?

— no → Check wires to ASC button and repair or renew defective part.

— * —

— * —

yes ↓

Replace ABS/ASC+T control unit.

— * —

Notes

These troubleshooting instructions only refer to the microprocessor-controlled antilock brake system

Functional Description

System Design and Function

The individual components of the microprocessor-controlled ABS system correspond to those of the conventional 4-channel ABS system (Bayreuth). – also refer to Section 3450.0A

Difference between "Bayreuth"– and microprocessor-controlled ABS control unit

The "Bayreuth" ABS control unit can be identified by the green adhesive label on the front end of the control unit housing and has the BMW No. 1 158 958 or 1 160 046 (US version).

The microprocessor-controlled ABS control unit can be identified by the orange adhesive label on the front end of the control unit housing and has the BMW No. 1 160 410 or 1 160 411 (US version).

Compared to the previous ABS control unit, the scope of functions of the microprocessor-controlled ABS control unit has been extended by the self-diagnosis functions.

The microprocessor-controlled ABS control unit is connected to the diagnostic bus of the vehicle and can be addressed by means of the BMW DIAGNOSTIC SYSTEM.

Indication Logic of the ABS Lamp

After ignition ON (terminal 15), the ABS lamp is activated for 2 seconds and then goes out (lamp check).

When the ABS control unit detects a defect, the defect code is stored and the ABS lamp activated (steady light).

If the defect no longer exists after the next system start (ignition OFF/ ON), the ABS lamp goes out after the lamp check, however, the defect code remains stored in the defect code memory.

The ABS lamp lights constantly during data exchange between the ABS control unit and the BMW DIAGNOSTIC SYSTEM (diagnostic mode in the workshop). The ABS lamp goes out on completion of communication – after return to overview of control units –.

Microprocessor-Controlled Antilock Brake System (µC-ABS)

General Block Diagram

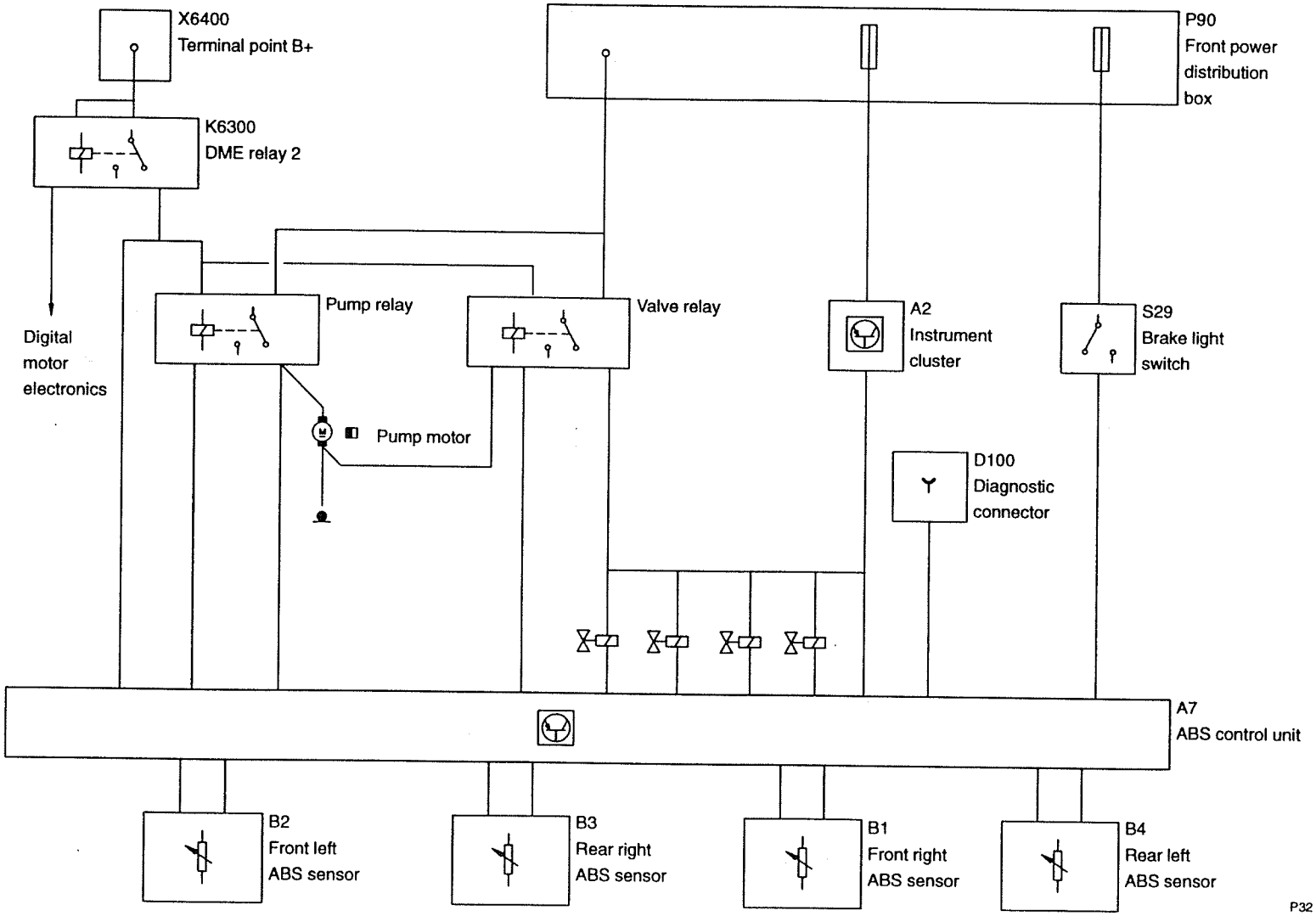

Notes on the BMW DIAGNOSTIC SYSTEM

General

The ABS warning lamp lights constantly during the diagnostic procedure.

Use the 35-pin universal adapter for troubleshooting.

Defect Code Memory

Certain defects are not stored before a certain speed threshold has been exceeded although they may already exist when the vehicle is stationary.

If three speed sensor defect codes are stored simultaneously with the same ambient/storage conditions, this may be an indication that a "finish-balancer" was used to balance the wheels. In this case, there is no real defect in the ABS system, i.e. the defect code memory can be cleared.

Other Diagnostic Program Functions

When a defect exists, only the function "read/clear defect code memory" can be activated; diagnostic mode is not fully operable before switching the ignition off and on again, provided the defect detection criteria still do not or no longer exist.

On vehicles equipped with a differential lock, application of the test procedures "speed sensor interchange test" and "function test hydraulic unit" are of little use on the rear axle since the rear wheels cannot be turned separately.

Abbreviations

ABS	Antilock brake system
VL	Front left
VR	Front right
HL	Rear left
HR	Rear right
SG	Control unit
E	Input
A	Output

Pin Assignment

Connector numbers

Number	Type	Description
X11	35-pin	ABS unit connector
X31	12-pin, black	ABS hydraulic unit connector
X113	2-pin, white	Plug connection, front part, front right ABS sensor
X114	2-pin, white	Plug connection, front part, front left ABS sensor
X142	2-pin, white	Plug connection, front part, rear left ABS sensor
X143	2-pin, white	Plug connection, front part, rear right ABS sensor

Pin Assignments at Connector X11 (ABS Connector)

Pin	Type	Description/function	Connection	Type of signal	Tester display	Measurement notes
1	E	Control unit voltage supply	ABS relay	Battery voltage		None
2	A	Activation of front left solenoid valve	ABS hydraulic block	approx. 12 V / < 1 V		Rest position/activated with BMW Diagnostic System
3		Not used				
4	A	Ground, front left speed sensor	Front left speed sensor	Ground		
5		Not used				
6	E	Signal, front left speed sensor	Front left speed sensor	Alternating voltage (AC)		see Component Testing, speed sensor
7	E	Signal, rear left speed sensor	Rear left speed sensor	Alternating voltage (AC)		see Component Testing, speed sensor
8		Not used				
9	A	Ground, rear left speed sensor	Rear left speed sensor	Ground		
10	E	Ground	Body ground	Ground		
11	A	Signal, front right speed sensor	Front right speed sensor	Alternating voltage (AC)		see Component Testing, speed sensor
12		Not used				
13		Not used				
14	E	Voltage monitoring pump relay	ABS hydraulic block	<1 V / approx. 12 V		Rest position/activated with BMW Diagnostic System
15		Not used				
16		Not used				

Pin	Type	Description/function	Connection	Type of signal	Tester display	Measurement notes
17	A	Relay voltage	Motor/valve relay	approx. 12 V		None
18	A	Activation of rear left solenoid valve	ABS hydraulic block	approx. 12 V / <1 V		Rest position/activated with BMW Diagnostic System
19	A	Activation of rear right solenoid valve	Rear right solenoid valve	approx. 12 V / < 1 V		Rest position/activated with BMW Diagnostic System
20	E	Ground	Body ground	Ground		
21	A	Ground, front right speed sensor	Front right speed sensor	Ground		
22		Not used				
23		Not used				
24	E	Signal, rear right speed sensor	Rear right speed sensor	Alternating voltage (AC)		see Component Testing, speed sensor
25	E	Brake light switch	Brake light switch	approx. 12 V		Brake pedal depressed
26	A	Ground, rear right speed sensor	Rear right speed sensor	Ground		
27	A	Valve relay activation	ABS hydraulic block	approx. 12 V / < 1 V		Rest position/activated with BMW Diagnostic System
28	A	Pump motor relay activation	ABS hydraulic block	approx. 12 V / < 1 V		Rest position/activated with BMW Diagnostic System
29	A	ABS warning lamp activation	Instrument cluster	approx. 12 V		ABS warning lamp OFF
30	E	Diagnostic link RxD	Diagnostic connector	> 10.5 V		Diagnostic socket not closed

Pin	Type	Description/function	Connection	Type of signal	Tester display	Measurement notes
31	A	Diagnostic link TxD	Diagnostic connector	Dependent on number of control units with diagnostic capabilities installed > 2.0 V		Diagnostic socket not closed
32	E	Valve relay monitoring	ABS hydraulic block	Ground/approx. 12 V		Rest position/activated with BMW Diagnostic System
33		Not used				
34	E	Control unit ground	Body ground	Ground		
35	E	Activation of front right solenoid valve	ABS hydraulic block	12 V / <1 V		Rest position/activated with BMW Diagnostic System

Pin Assignments at Connector X31 (ABS Hydraulic Unit Connector)

Pin	Type	Description/function	Connection	Type of signal	Tester display	Measurement notes
1		Front left solenoid valve activation		approx. 12 V		Valve not activated
2		Valve relay activation		< 1 V		Valve relay ON
3		Front right solenoid valve activation		approx. 12 V		Valve not activated
4		+12 V	Main relay	approx. 12 V		
5		Rear left solenoid valve activation		approx. 12 V		Valve not activated
6		+12 V		approx. 12 V		
7		Rear right solenoid valve activation		approx. 12 V		Valve not activated

Pin	Type	Description/function	Connection	Type of signal	Tester display	Measurement notes
8		Relay voltage		approx. 12 V		
9		Pump motor activation		< 1 V		Pump motor OFF
10		+12 V		approx. 12 V		
11		ABS warning lamp activation		approx. 12 V		Valve relay ON
12		Pump motor relay activation		approx. 12 V		Pump motor OFF

Overview of all Defect Codes which can be Read Out:

Number	Defect description
4	Rear left speed sensor defect
5	Rear right speed sensor defect
6	Front right speed sensor defect
7	Front left speed sensor defect
8	Rear left ABS valve defect
9	Rear right ABS valve defect
10	Front right ABS valve defect
11	Front left ABS valve defect
14	Valve relay defect
15	ABS return pump defect
21	ABS control unit defect
24	Incorrect gearwheel on one of the four wheels
25	Break in line brake light switch

Troubleshooting

Troubleshooting for the above specified defects is performed with the diagnostic program in the BMW DIAGNOSTIC SYSTEM in accordance with the screen display.

Refer to chapter "Notes on the BMW DIAGNOSTIC SYSTEM".

Notes

If the ABS lamp flickers while driving but no defect code is stored in the defect code memory, then this indicates temporary undervoltage in the ABS system.

Defect

ABS not functioning, ABS lamp ON

Possible cause: Break or short on the voltage supply lines (Pin 1, 20, 34), DME main relay defective

Troubleshooting

Is the diagnostic procedure possible with the ABS control unit?

— no → Is microprocessor-controlled ABS installed?

— no → Continue with test procedure 3450.0A.

yes ↓

Continue with troubleshooting in BMW DIAGNOSTIC SYSTEM.

— * —

yes ↓

Are diagnostic links RxD and TxD implemented?

— no → Replace microprocessor-controlled ABS control unit by a "Bayreuth" control unit.

— * —

yes ↓

Are diagnostic links OK.? (See notes on the BMW DIAGNOSTIC SYSTEM)?

— no → Repair diagnostic links.

yes ↓

Check control unit voltage supply (Pin 1, 20, 34) and DME main relay and repair or renew as required.

Checking the Speed Sensor

Disconnect control unit.

Measure resistance of speed sensor. It must be between 0.65 and 1.6 kΩ.

Check pulse wheel for damage, freedom of movement and eccentricity defect.

Connect oscilloscope from BMW Service Tester as follows:

– Terminal D+ blue to speed sensor signal
– Frequency (–) black to speed sensor ground
– Frequency (+) blue to terminal 1 black

♦M♦ 13 Select frequency and enter 80 Hz

♦M♦ 22 Select oscilloscope

Evenly turn wheel by hand. A sinusoidal curve should appear whose amplitude and period duration are dependent on the rotary speed. (See example in drawing.)

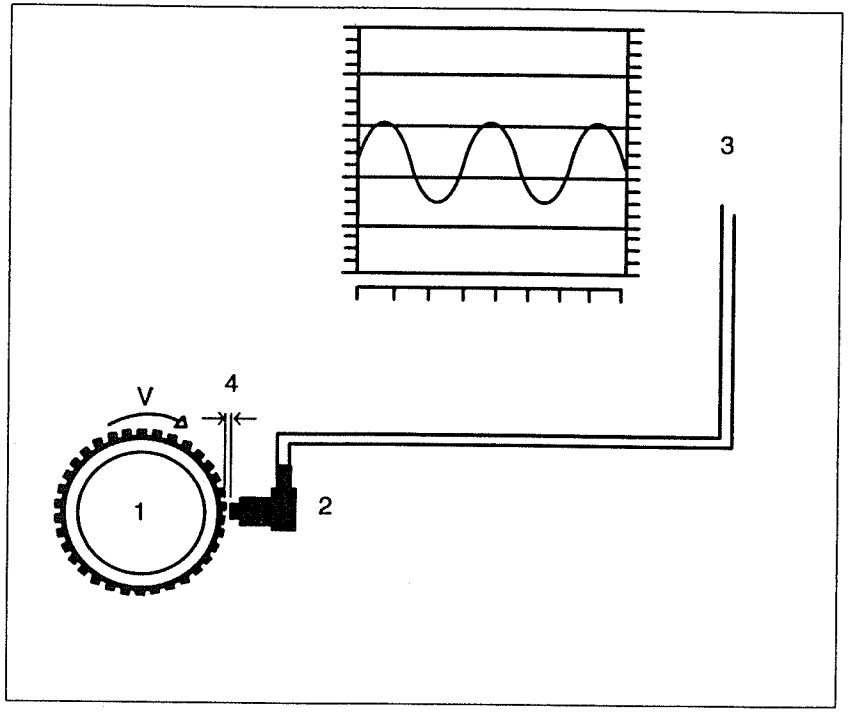

P32 34 003

1: Pulse wheel

2: Speed sensor

3: Oscilloscope in BMW DIAGNOSTIC SYSTEM

4: Air gap (clearance)

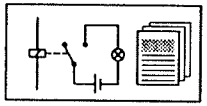

Functional Description

The EDC (electronic damper control) basically consists of the following components:

- Selector switch
- EDC control unit
- Electric motors with control valves in the shock absorbers

With the ignition switched on, selection can be made with the selector switch between the comfort and sports setting. The control unit is mounted under the rear seat on the battery holder with the inputs of the power supply and the selector switch as well as the outputs to the shock absorbers and the indicator lamps in the selector switch. Depending on the selection of the damper setting, the electric motors integrated in the shock absorbers turn the control valves to one of their end positions. In each end position, the control valves release different openings for the oil flow, thus influencing the damper force in the tension and compression stages.

Faults must have a duration of more than 3 sec for them to result in defect signalling. A defect is signalled by the indicator lamp in the selector switch going out.

BMW 5 BMW 7

Electronic Damper Control (EDC)

General Block Diagram

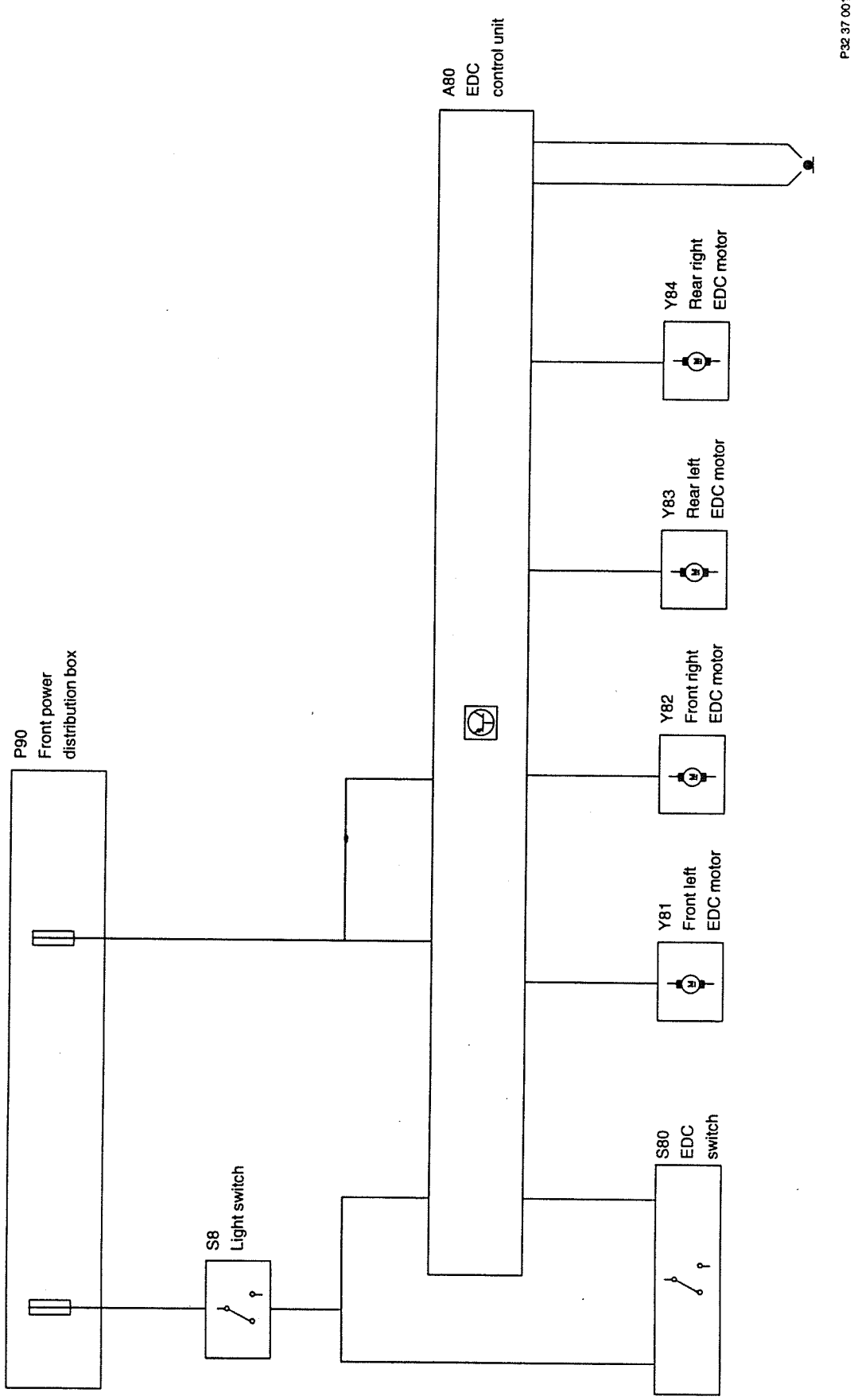

Notes on the BMW DIAGNOSTIC SYSTEM

This system does not feature diagnostic capabilities.

Abbreviations

VL	Front left shock absorber (damper)
VR	Front right shock absorber (damper)
HL	Rear left shock absorber (damper)
HR	Rear right shock absorber (damper)

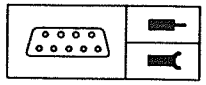

Pin Assignment

Pin Assignments at Control Unit Connector X263, 26-pin

Pin	Type	Description/function	Connection	Type of signal	Tester display	Measurement notes
1	E	Battery voltage	Fuse F12			
2	A	Control wire	Shock absorber HR			
3	A	Control wire	Shock absorber HR			
4	A	Control wire	Shock absorber HL			
5	A	Control wire	Shock absorber HL			
6		Not used				
7		Not used				
8		Not used				
9	A	Control wire	Shock absorber VL			
10	A	Control wire	Shock absorber VL			
11	A	Control wire	Shock absorber VR			
12	A	Control wire	Shock absorber VR			
13	A	Control unit ground	Ground point			
14	E	Battery voltage	Fuse F12			
15	A	Lamp, sports	Selector switch plug connection			
16	A	Lamp, comfort	Selector switch plug connection			

Pin	Type	Description/function	Connection	Type of signal	Tester display	Measurement notes
17		Not used				
18		Not used				
19		Not used				
20		Not used				
21		Not used				
22	E	Switch lighting	Selector switch plug connection			
23	A	Switch, sports	Selector switch plug connection			
24	A	Switch, comfort	Selector switch plug connection			
25		Not used				
26	A	Control unit ground	Ground point			

Pin Assignments at Selector Switch X529, 6-pin

Pin	Type	Description/function	Connection	Type of signal	Tester display	Measurement notes
1	E	Switch, comfort	Control unit plug connection			
2	E	Switch, sports	Control unit plug connection			
3	A	Ground	Ground point			
4	E	Switch lighting	Control unit plug connection			
5	E	Lamp, sports	Control unit plug connection			
6	E	Lamp, comfort	Control unit plug connection			

Troubleshooting

Notes

Function Check

- Switch on ignition
- Switch in comfort setting
- Rock at all 4 shock absorbers of the car
- Switch in sports setting
- Rock at all 4 shock absorbers of the car

The EDC is OK. when a distinct difference can be felt.

Prerequisites for troubleshooting

- Fuse 12 OK.
- Unloader relay K9 OK.
- Battery charged U>11.5 V
- Ignition switched on
- 26-pin adapter connected at control unit connector
- Control unit disconnected

Defect

Troubleshooting

Is voltage (= battery voltage) applied between vehicle ground and Pin 1 as well as vehicle ground and Pin 14?

— no → Repair wire.

—*—

yes ↓

Is Pin 13 as well as Pin 26 connected to vehicle ground?

— no → Repair ground wire.

—*—

yes ↓

Check wire to selector switch. Is wire OK.?

— no → Repair wire.

—*—

yes ↓

Press comfort setting of selector switch. Is Pin 24 now connected to vehicle ground?

— no → Check ground wire from selector switch. Is wire OK.?

— no → Repair wire.

—*—

yes ↓

Renew selector switch, see Repair Instructions.

—*—

yes ↓

Press sports setting of selector switch. Is Pin 23 now connected to vehicle ground?

— no → Check ground wire from selector switch. Is wire OK.?

— no → Repair wire.

— * —

yes ↓

Renew selector switch, see Repair Instructions.

— * —

yes ↓

Check individual wires to the shock absorbers. Are wires OK.?

— no → Repair defective wire.

— * —

yes ↓

Measure resistance between pins:
2 – 3 (RR)
4 – 5 (RL)
9 – 10 (FL)
11 – 12 (FR)
Is the resistance between 14 Ω and 38 Ω?

— no → Repair corresponding shock absorber, see Repair Instructions.

— * —

yes ↓

Replace control unit.

— * —

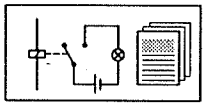

Functional Description

The electronic damper control III (EDC III) is an electronic control system for the running gear. The characteristics of the shock absorbers are adapted to the dynamic driving requirements depending on the driving conditions recorded by system sensors and the program (sports/comfort) selected by the driver.

The following sensors integrated in the EDC system supply data to the EDC control unit

Sensor	Recorded data
Front acceleration sensor	Front body acceleration
Rear acceleration sensor	Rear body acceleration
Longitudinal acceleration sensor	Longitudinal acceleration
Speed sensor	Vehicle speed
Steering angle sensor	Steering angle and steering angle speed

On the basis of the influencing sensor measured values, the EDC control unit activates the solenoid valves integrated in the damper with stages "soft", "medium" and "hard". Activation takes place separately for each axle. To avoid unnecessary power consumption, the damper valves are switched off when the vehicle is stationary (vehicle speed 0 km/h), i.e. power is cut ("hard" setting). After starting off, the dampers are set in the "medium" stage up to approx. 5 km/h, irrespective of the selected EDC program. With the comfort program selected, the dampers assume the "soft" setting at speeds in excess of 5 km/h. "Medium" is the basic stage for the damper setting in the sports program. To avoid unnecessary switching of the damper valves in town traffic (many changes in steering angle but low speeds), the steering angle sensor is ignored up to a speed of approx. 40 km/h. In the "comfort" (K) program, the damper stages "soft", "medium" and "hard" are activated, in the "sports" (S) program, only the stages "medium" and "hard" are activated. The programs are selected by way of the EDC program switch in the centre console.

Safety Circuit

The EDC control unit and all components of the system are constantly monitored for malfunctions. Faults which occur in the EDC system are stored in the defect code memory. In addition, defects – depending on type and severity – lead to certain reactions of the control unit (safety circuit) in order to maintain complete driving safety even in the event of serious faults.

Table of Defect Reactions EDC III

Defect	System reaction
Longitudinal acceleration sensor	Acceleration signal is ignored
Rear vertical acceleration sensor	Dampers are only operated in the "medium" stage
Front vertical acceleration sensor	Dampers are only operated in the "medium" stage
Speed sensor	Dampers are only operated in the "medium" stage
Steering angle sensor	Dampers are only operated in the "medium" stage
"Soft" damper stage electrically defective	Damper stage "soft" replaced by "medium"
"Medium" damper stage electrically defective	Damper stage "medium" replaced by "hard"
Control unit defective	System is switched off, dampers fixed in "hard" setting

Electronic Damper Control III (EDC III)

General Block Diagram

B40: Steering angle sensor
B41: Front right acceleration sensor
B48: Rear right acceleration sensor
B49: Longitudinal acceleration sensor

Y401: Front left EDC motor
Y402: Front right EDC motor
Y403: Rear left EDC motor
Y404: Rear right EDC motor

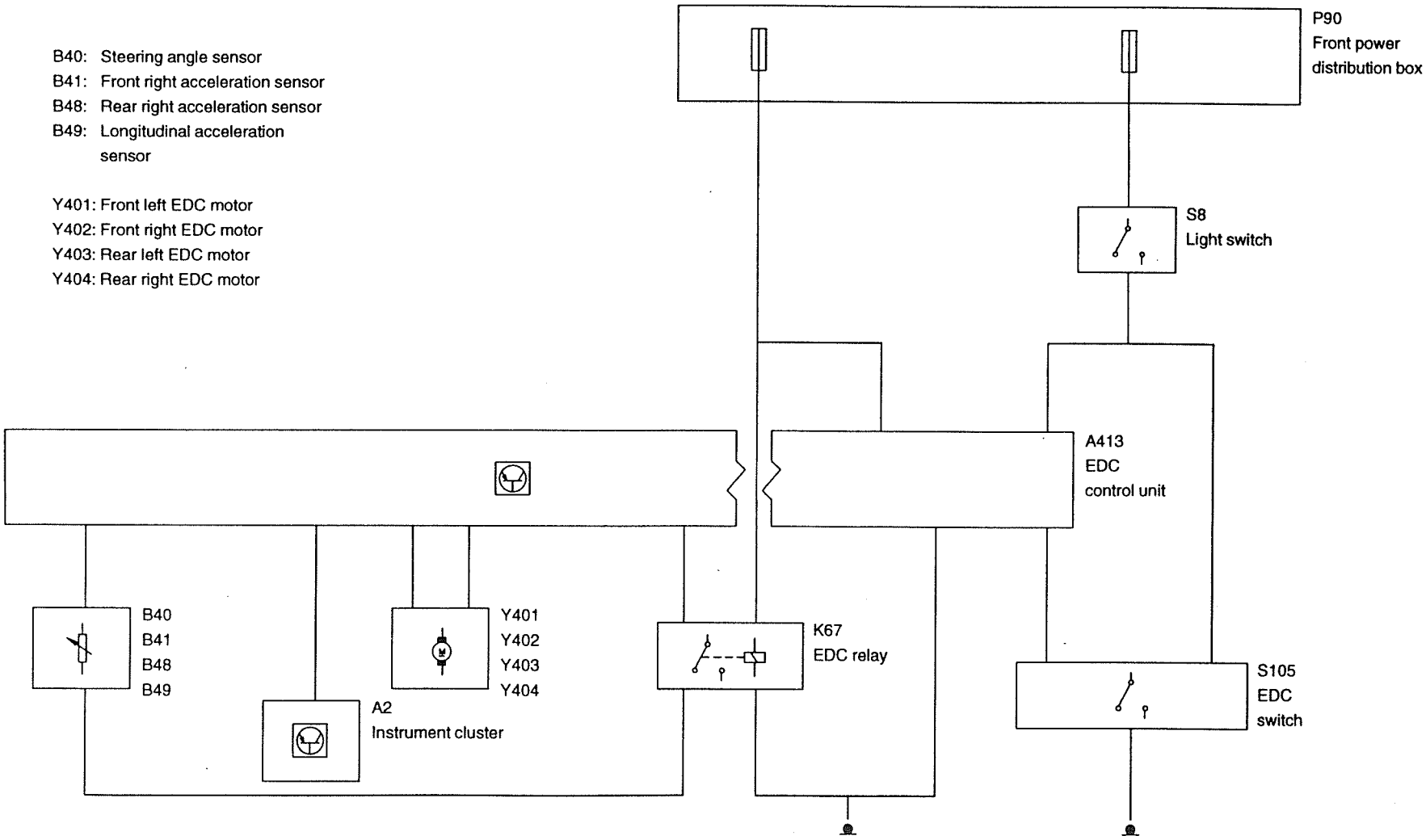

P32 37 002

Notes on the BMW DIAGNOSTIC SYSTEM

The vehicle variant is also specified on the identification page (model/engine type, e.g. E 32 M70).

Abbreviations

EDC	Electronic damper control
SG	Control unit
VL	Front left
HL	Rear left
VR	Front right
HR	Rear right

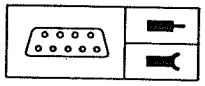

Pin Assignment

Pin Assignments at Connector X263 (10-pin)

Pin	Type	Description/function	Connection	Type of signal	Tester display	Measurement notes
1	A	Front control line, comfort	Damper valve	approx. 4.5 V	Voltage value	switched off max. 1 V
2	A	Front control line, normal	Damper valve	approx. 4.5 V	Voltage value	switched off max. 1 V
3	A	Rear control line, comfort	Damper valve	approx. 4.5 V	Voltage value	switched off max. 1 V
4	A	Terminal 15	Sensors	U-Batt		
5	A	Rear control line, normal	Damper valve	approx. 4.5 V	Voltage value	switched off max. 1 V
6	E	Ground connection	Body ground			
7		Not used				
8	A	Rear valve coil supply	Rear valve coils	approx. 2 A holding current	Current value	switched off 0 A
9	A	Front valve coil supply	Front valve coils	approx. 2 A holding current	Current value	switched off 0 A
10		Not used				

Pin Assignments at Connector X945 (26-pin)

Pin	Type	Description/function	Connection	Type of signal	Tester display	Measurement notes
1	E	Acceleration sensor	Acceleration sensor	0–5 V	♦D♦Status monitoring	a = 0 = 2.5 V
2	A	Sports lamp	Sports indicator lamp	12 V		
3		Not used				
4		Not used				
5		Not used				
6	E	Comfort switch	Program switch	Ground	♦D♦Status monitoring	
7	E	Sports switch	Program switch	Ground	♦D♦Status monitoring	
8		Not used				
9		Not used				
10	E	Inquiry headlight ON/OFF	Terminal 58	12 V		
11	E	Terminal 15 connection	Rear part Fuse F12	12 V		
12	E	Diagnostic link RxD	Diagnostic connector			
13	E	Speed signal	Instrument cluster	Square–wave signal	Speed value	
14	E	Steering angle signal connection, red	Steering angle sensor	0–5 V	♦D♦Status monitoring	
15	E	Steering angle signal connection, green	Steering angle signal	0–5 V	♦D♦Status monitoring	
16	E	Longitudinal acceleration signal	Acceleration sensor	0–5 V	♦D♦Status monitoring	a = 0 = 2.5 V
17	A	Comfort lamp	Comfort indicator lamp	12 V		
18		Not used				

Pin	Type	Description/function	Connection	Type of signal	Tester display	Measurement notes
19	A	Diagnostic link TxD	Diagnostic connector			
20	E	Ground connection	Analog ground			
21		Not used				
22		Not used				
23	E	EDC relay activation	EDC relay	12 V		Ignition ON
24	E	Front acceleration signal	Acceleration sensor	0–5 V	♦D♦Status monitoring	a = 0 = 2.5 V
25	A	Supply voltage steering angle sensor	Steering angle sensor	5 V		Ignition ON
26	E	Terminal 30 connection	Fuse F45	12 V		

Adapter

Component	Connector No.	Description	Adapter number
Control unit	X945	26-pin, black	HWB 61 4 460

Troubleshooting

Notes

- Troubleshooting with BMW Diagnostic System
- Battery charged, U-min = 12 Volt
- Removal and installation of control unit only with ignition switched off

Notes

The EDC system is protected by way of the EDC relay K67. The EDC does not operate if this relay fails. The EDC system is deactivated by means of the safety circuit integrated in the software of the control unit. Operation is then only possible in the fixed stage "hard" of the dampers.

Notes on working on the EDC system:

After all work on the EDC system which renders disconnection of connectors, removal/installation of electrical/electronic components necessary, the defect code memory of the EDC system must be monitored and cleared if a defect code has been entered relating to the above specified work. On completion of work on the front axle system (front wheel suspension, shock absorbers, steering), implement the steering angle offset with the aid of the diagnostic program. For description and implementation of steering wheel offset see diagnostic program.

Defect Code Table

♦D♦Defect code memory – Defects which can be stored by the control unit:

Defect codes 10, 11, 12, 13	: Steering angle signal
Defect code 20	: Road speed signal
Defect codes 30, 31, 32	: Front axle acceleration signal
Defect codes 40, 41, 42	: Rear axle acceleration signal
Defect codes 50, 51, 52	: Longitudinal acceleration signal
Defect codes 60, 61, 62, 63	: Valve coil defects
Defect codes 70, 71, 72, 73	: Front axle valve defects
Defect codes 80, 81, 82, 83	: Rear axle valve defects

♦D♦Malfunctions – Defect code which cannot be stored:

EDC does not operate	: Defect code 90
Malfunction program selector switch	: Defect code 91

Defect Codes 10, 11, 12, 13

♦D♦Defect code memory: 10, 11, 12, 13 Steering Angle Signal

Explanation: This defect code is stored when the steering angle signal received by the control unit is faulty.

Possible causes: Loose contact, contact corrosion, steering angle sensor installed in wrong position, short of sensor supply wire (5 Volt) to ground, sensor defective.

Troubleshooting: Check installation position of steering angle sensor and correct if necessary; refer to Repair Instructions "EDC III".

If installation position is OK., check steering angle sensor and renew if necessary (Repair Instructions "EDC III").

If steering angle sensor is OK., measure voltage at 26-pin control unit connector Pin 25 (voltage supply of steering angle sensor) Is a voltage of 5 V applied?

If no, check connections at the control unit (connection terminal 30: 26-pin control unit connector Pin 26).

If yes, check signal wire of steering angle sensor to the EDC control unit and repair if necessary: From 26-pin control unit connector Pins 14 and 15 to steering angle sensor.

Is defect rectified?

If no, check ground connection to steering angle sensor and repair if necessary: From steering angle sensor to ground point.

Note: After defect has been repaired, perform steering angle offset (in diagnostic program) and check function of steering angle sensor in accordance with screen display (test procedure).

Defect Code 20

♦D♦Defect code memory: 20 Speed Signal

Explanation: This defect code is stored when the speed signal received by the control unit is faulty.

Possible cause: Wire from rear axle contact to instrument cluster damaged, wire from instrument cluster to EDC control unit damaged.

Troubleshooting: Check wire and repair if necessary: From 26-pin control unit connector Pin 13 to instrument cluster.

If defect is not rectified, check rear axle contact and renew if necessary.

If defect is still not rectified, check speed-A signal: Simulation in diagnostic program instrument cluster.

Defect Code 30

♦D♦Defect code memory: 30 Acceleration Signal Front Axle (Vertical)

Troubleshooting: Check wire and repair if necessary: From 26-pin control unit connector Pin 24 to acceleration sensor. If defect is not rectified, check acceleration sensor:

Procedure: Remove acceleration sensor (see Repair Instructions "EDC III").

The acceleration sensor features 3 connections: Terminal 15, ground, signal output to the control unit.

In order to check outside the vehicle, a voltage of approx. 12 V must be applied at terminal 15 - input of sensor, the ground input must be connected to negative.

Now measure the voltage at the signal output: At rest (acceleration = 0), a voltage of approx. 2.5 Volt must be measured if the acceleration sensor is intact.

During movement of the sensor (acceleration > zero), the measured value must be greater than or less than 2.5 Volt. For the sensor, maximum acceleration means 0 Volt or 5 Volt depending on the direction of acceleration.

Replace defective sensors.

Note: The 3 acceleration sensors of the EDC system (1 sensor for front body acceleration, 1 sensor for rear body acceleration, 1 sensor for longitudinal acceleration) are of identical design.

Defect Code 31

♦D♦Defect code memory: 31 Acceleration Signal Front Axle (Vertical)

Troubleshooting: Check wire and repair if necessary: From EDC relay connector X18068 to acceleration sensor.

If wire OK., measure voltage at the EDC relay. Is a voltage of 12 Volt?

If yes, check acceleration sensor and renew if necessary. For checking the acceleration sensor refer to defect code 30.

If no, check wire from EDC relay to fuse 45 and repair if necessary. Is defect rectified?

If no, renew EDC relay.

Defect Code 32

♦D♦Defect code memory: 32 Acceleration Signal Front Axle (Vertical)

Troubleshooting: Renew acceleration sensor.

Defect Code 40

♦D♦Defect code memory: 40 Acceleration Signal Rear Axle (Vertical)

Troubleshooting: Check wire and repair if necessary: From 10-pin control unit connector Pin 1 to the acceleration sensor; is defect rectified?

If no, check acceleration sensor and renew if necessary (for type of testing, please refer to defect code 30).

Defect Code 41

♦D♦Defect code memory: 41 Acceleration Signal Rear Axle (Vertical)

Troubleshooting: Check wire and repair if necessary: From EDC relay connector X18068 to acceleration sensor.

If wire OK., measure voltage at the EDC relay: Is a voltage of 12 V applied?

If yes, check acceleration sensor and renew if necessary: (For check, please refer to defect code 30).

If no, check wire from EDC relay to fuse 45 and repair if necessary.

If defect has still not been rectified, renew EDC relay.

Defect Code 42

♦D♦Defect code memory: 42 Acceleration Signal Rear Axle (Vertical)

Troubleshooting: Renew acceleration sensor.

Defect Code 50

♦D♦Defect code memory: 50 Longitudinal Acceleration Signal

Troubleshooting: Check wire and repair if necessary: From 26-pin control unit connector Pin 16 to the acceleration sensor; is defect rectified?

If no, check acceleration sensor and renew if necessary (for type of testing, please refer to defect code 30).

Defect Code 51

♦D♦Defect code memory: 51 Longitudinal Acceleration Signal

Troubleshooting: Check wire and repair if necessary: from EDC relay connector X18068 to the acceleration sensor.

If wire is OK., measure voltage at the EDC relay connector X18068 Pin 2. Is a voltage of 12 V applied?

If yes, check acceleration sensor and renew if necessary (for type of testing, please refer to defect code 30).

If no, check wire from EDC relay to fuse 45 and repair if necessary. If defect has still not been rectified, renew EDC relay.

Defect Code 52

♦D♦Defect code memory: 52 Longitudinal Acceleration Signal

Troubleshooting: Renew acceleration sensor.

Defect Codes 60, 61

♦D♦Defect code memory: 60, 61 Valve Coil Defects

Note: The EDC control unit can only register faults in the electrical/electronic system. Mechanical damage of the damper valves (e.g. catching) cannot be detected by the control unit.

Determine damper valve in question by reading out the measured values (status monitoring or during troubleshooting) and by alternately detaching the connections at the damper (connector at front right/left and rear right/left on damper).

If the cause of the defect is not found with the aid of the following troubleshooting procedure, there could be mechanical damage to the damper system (e.g. solenoid valves). Refer to Repair Instructions EDC III.

Troubleshooting: Check valve control wires and repair if necessary:

- Comfort front: From 10-pin control unit connector Pin 1 to corresponding left/right damper valve.
- Comfort rear: From 10-pin control unit connector Pin 3 to corresponding left/right damper valve
- Normal front: From 10-pin control unit connector Pin 2 to corresponding left/right damper valve
- Normal rear: From 10-pin control unit connector Pin 5 to corresponding left/right damper valve.

Defect Code 63

♦D♦Defect code memory: 63 Valve Coil Defect

Note: See defect code 60, 61.

Troubleshooting: See defect code 90.

Defect Codes 70, 71, 72, 73

♦D♦Defect code memory: 70, 71, 72, 73 Front Axle Valve Defects

Determine damper valve in question by reading out the measured value tables (appear in the diagnostic program, during troubleshooting or the relevant defect or in the status lists) and by alternately detaching the connections at the dampers (connector of front left or front right damper).

Troubleshooting defect code 70

Check wire, and repair if necessary: From 10-pin control unit connector Pin 1 via connector of activation lines to corresponding device connector and further to the damper.

Troubleshooting defect code 71

Check wire, and repair if necessary: From 10-pin control unit connector Pin 9 via connector of supply lines to corresponding device connector and further to the damper

Troubleshooting defect code 72

Check wire, and repair if necessary: From 10-pin control unit connector Pin 2 via connector of activation lines to corresponding device connector and further to the damper.

Troubleshooting defect code 73

Check wire, and repair if necessary: From 10-pin control unit connector Pin 9 via connector of supply lines to corresponding device connector and further to the damper.

Defect Codes 80, 81, 82, 83

♦D♦Defect code memory: 80, 81, 82, 83 Rear Axle Valve Defects

Determine damper valve in question by reading out the measured value tables (appear in the diagnostic program, during troubleshooting of the relevant defect or in the status lists) and by alternately detaching the connections at the dampers (connector of rear left or rear right damper).

Troubleshooting defect code 80

Check wire, and repair if necessary: From 10-pin control unit connector Pin 3 via connector of activation lines to corresponding device connector and further to the damper.

Troubleshooting defect code 81

Check wire, and repair if necessary: From 10-pin control unit connector Pin 8 via connector of supply lines to corresponding device connector and further to the damper.

Troubleshooting defect code 82

Check wire and repair if necessary: From 10-pin control unit connector Pin 5 via connector of activation lines to corresponding device connector and further to the damper.

Troubleshooting defect code 83

Check wire and repair if necessary: From 10-pin control unit connector Pin 8 via connector if supply lines to corresponding device connector and further to the damper.

Defect Code 90

Malfunction: Malfunction in EDC

Effect of defect: Partial/total failure of the EDC

Troubleshooting: The following causes are possible and should be investigated:

Fuse No. F12 and F45

Fault in 12 V supply to control unit:

Terminal 15: Check wire and repair if necessary: From 10-pin control unit connector Pin 4 via link connector to EDC relay K 67.

Terminal 30: From 26-pin control unit connector Pin 26 to link connector.

Ground connection of control unit faulty:

Check wire and repair if necessary: From 10-pin control unit connector Pin 6 to ground and from 26-pin control unit connector Pin 20 to analog ground.

Defect Code 91

Malfunction: Lighting of EDC Program Selection Buttons Defective

Possible effect of defect: Function light of selected program does not operate. Search light (light switched on) does not operate.

Troubleshooting: Check EDC program switch with lighting unit by activating as described in the test procedure section in the diagnostic program. Does lighting operate?

If no, check following wires and repair if necessary: From 26-pin control unit connector Pins 2, 6, 7, 17 to the EDC program selector switch. Is defect rectified?

If no, check wire and repair if necessary: From 10-pin control unit connector Pin 10 to terminal 58 k. If defect is not rectified, check wire from EDC program switch connector to linking connector and repair if necessary.

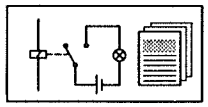

Functional Description

Mirror Adjustment

The adjustable power mirror can be operated as of ignition switch position 2 and has the following settings:

– Switchover from left to right outside mirror.
– Continuously variable setting of vertical and horizontal planes.

Mounted in the outside mirror housing are an electric motor and a magnetic clutch.

The swivel movement (left, right, up, down) of the outside mirror is determined by the direction of rotation of the electric motor, i.e. the polarity of the applied voltage.

When voltage is applied to the magnetic clutch, the mirror can be moved vertically. When no voltage is applied to the clutch, the motor adjusts the mirror horizontally.

Mirror Heating

Mirror heating is controlled by a thermostat mounted on the mirror glass. The heating conductor is integrated in the mirror glass.

The heating is switched on at temperatures below + 15° C ± 5° C at the mirror. The heating is switched off at a temperature of 60° C ± 10° C.

A new heating cycle starts when the temperature at the mirror has once again dropped below + 15° C ± 5° C.

The defrosting rate at – 10° C (icing) is approx. 5 min at a power consumption of approx. 1.5 A.

Interior Rear-View Mirror with Automatic Dip Function

General

Automatic dipping of the mirror is only effective when the parking light is switched on.

Operating Principle

Two photoelectric cells are integrated in the mirror housing. One photoelectric cell is arranged at the front (on the mirror glass side) and determines the incidence of light from the rear window of the vehicle, e.g. caused by following vehicles. The second photoelectric cell is located at the rear of the mirror housing and determines the incidence of light over the windscreen.

The difference in brightness is constantly determined by the electronic circuitry in the mirror housing. If the incidence of light from the rear window is greater than the incidence of light from the front (dazzling from rear), an electric motor moves the interior mirror upward into the dipped position. A green LED indicates that the interior mirror is dipped.

When the driver can no longer be dazzled, the mirror returns to its normal position after a delay time of approx. 3 seconds.

Slide Potentiometer

The sensitivity of the dip function can be influenced with the aid of the slide potentiometer. The automatic dip function is made inactive when the potentiometer is moved completely to the left. The mirror is constantly dipped in the right end position.

Function Test

Test A:

a) Switch on parking light, slide potentiometer set to AUTO (mid-position).

b) Cover photoelectric cell in rear of mirror housing.

c) Shine pocket lamp on front photoelectric cell (mirror side) (at a distance of approx. 40 cm). Interior mirror must dip. Green LED must light.

Test B:

a) Switch on parking light, move slide potentiometer to right-hand end position.

b) Interior mirror must dip. Green LED must light.

c) Move slide potentiometer to left-hand end position. Interior mirror moves to normal position. Green LED goes out.

Power Mirrors

General Block Diagram

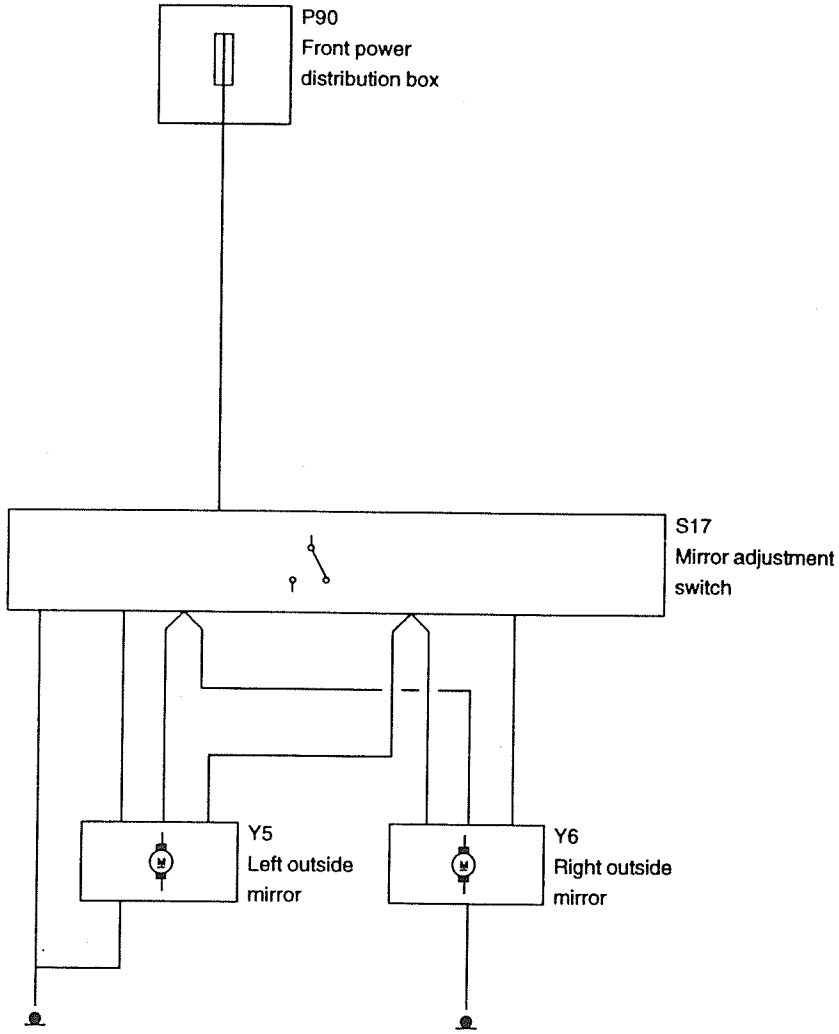

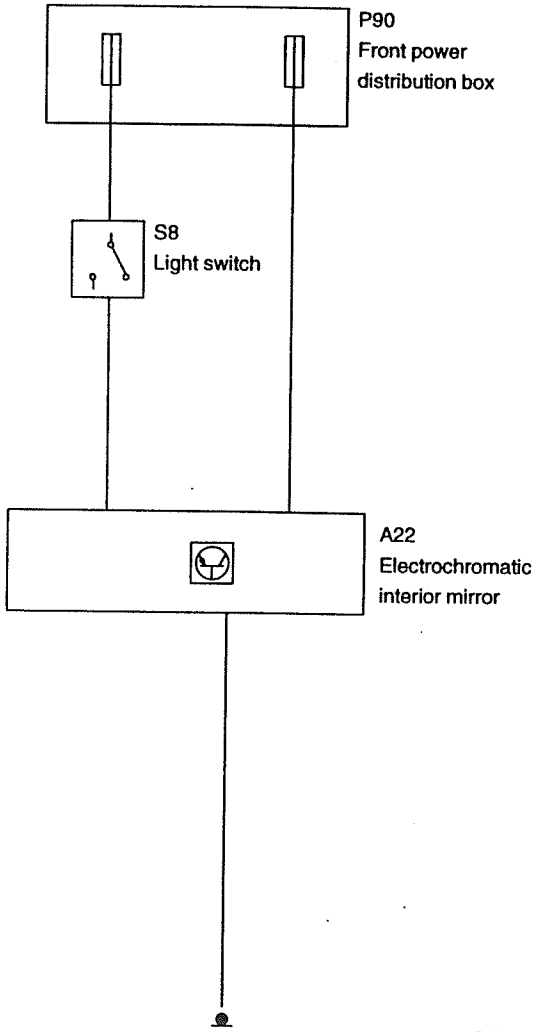

P32 51 001

Notes on the BMW DIAGNOSTIC SYSTEM

This system does not feature diagnostic capabilities.

Abbreviations

not applicable

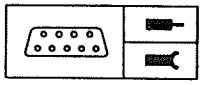

Pin Assignment

Pin Assignment at Connector X625, 6-pin

Pin	Type	Description/function	Connection	Type of signal	Tester display	Measurement notes
1	A	Changeover switch, left outside mirror adjustment	Left adjustment motor			
2	A	Ground	Ground point			
3	A	Mirror switch, motor drive	Adjustment motors, left and right outside mirror			
4	E	Terminal 15	Fuse F12			
5	A	Mirror switch, clutch drive	Clutches, left and right outside mirror			
6	A	Changeover switch, right outside mirror adjustment	Adjustment motor, right outside mirror			

Pin Assignments at Connector X623 and X624, 10-pin

Pin	Type	Description/function	Connection	Type of signal	Tester display	Measurement notes
1	E	Motor	Changeover switch			
2		Not used				
3		Not used				
4		Not used				

Pin	Type	Description/function	Connection	Type of signal	Tester display	Measurement notes
5	E	Motor and heating element	Mirror switch, motor activation			
6	A	Ground	Ground point			
7		Not used				
8		Not used				
9		Not used				
10	E	Clutch power supply	Mirror switch, clutch activation			

Pin Assignments at Connector X360, BMW 7 X18246

Pin	Type	Description/function	Connection	Type of signal	Tester display	Measurement notes
1	A	Ground	Ground point			
2	E	Terminal 30	Fuse F30			
3	E	Parking light	Light switch			

Troubleshooting

Notes

- Before replacing mirrors → check that mechanical elements move smoothly. → Repair Instructions Group 51.
- Before replacing components → check connections and contacts.
- Check fuse F12 or fuse F30.

Defect Code Table

The entire system has failed → Defect code 01

Right or left outside mirror has failed → Defect code 02

Only horizontal or vertical adjustment plane has failed → Defect code 03

Mirror heating has failed → Defect code 04

Interior mirror has failed → Defect code 05

Defect Code 01

The entire system has failed

Troubleshooting

Is fuse F12 OK.? With the ignition switch in position 2, is battery voltage applied at Pin 4 of the mirror switch?

— no → Check wire, if necessary repair voltage supply.

—*—

yes ↓

Is ground applied at Pin 2 of mirror switch?

— no → Repair wire.

—*—

yes ↓

Move setting knob to right and downward. Is battery voltage applied at Pin 3 of mirror switch?

— no → Replace mirror switch.

—*—

yes ↓

Move setting knob to left and upward. Is approx. 0 V applied at Pin 3 of the mirror switch?

— no → Replace mirror switch.

yes ↓

Continue with defect code 02.

—*—

Defect Code 02

Right or left outside mirror has failed

Troubleshooting

Setting knob pressed down and to the right (left-hand mirror set). Is approx. battery voltage applied at Pin 6 of the mirror switch? — no → Replace mirror switch.

↓ yes

Setting knob pressed down and to the left (left mirror set). Is ground applied at Pin 6 of the mirror switch? — no → Replace mirror switch.

↓ yes

Is ground applied in chamber No. 2 at the mirror (mirror glass removed)? — no → Repair wire.

↓ yes

Is voltage applied at the mirror in chamber No. 1, setting knob up/down and ground at setting knob right/left? — no → Repair wire.

↓ yes

Is voltage applied at mirror in chamber No. 3 at setting knob left/up and ground at setting knob right/down? — no → Repair wire.

yes ↓

Is ground applied at mirror in chamber No. 4 at setting knob up/left and voltage at setting knob right/down? — no → Repair wire.

yes ↓

Replace mirror.

— * —

Defect Code 03

Only horizontal or vertical adjustment plane has failed

Troubleshooting

Is voltage applied at Pin 5 of mirror switch at setting knob up/down and ground at setting knob right/left?

— no → Replace mirror switch.

yes ↓

Is voltage applied at mirror (mirror glass removed) in chamber No. 1 at setting knob up/down and ground at setting knob right/left?

— no → Repair wire.

yes ↓

Clutch at mirror motor defective. Replace mirror.

— * —

Defect Code 04

Mirror heating has failed

Lift out mirror glass.

At a temperature below + 10° C, the resistance of the mirror heater must be approx. 12 Ω.

If this is not the case → replace mirror glass.

If the resistance value is reached → repair wires.

Defect Code 05

Interior mirror has failed

Remove interior mirror. Remove plastic cover at base of mirror and disconnect plug connection X360, BMW 7 X18246.

Troubleshooting

Is ground applied at Pin 1? — no → Repair wire.

yes ↓

Is battery voltage applied at Pin 2? — no → Check fuse, renew is necessary. If fuse OK., repair wire.

yes ↓

no ↓

Is battery voltage applied at Pin 3 with parking light switched on? — no → Repair wire.

no ↓

Renew interior mirror.

— * —

Door Lock Heating (TSH/ZKE)

Notes

These instructions apply only when a ZKE general module is installed.

Functional Description

The door lock heating system (TSH) is controlled by the general module (GM) of the central body electronics (ZKE). The door lock heating relay is located in the relay module (RM). The working circuit is protected by the external fuse relay. Also refer to Section 6100.0A Central Body Electronics (ZKE).

Operating Principle

The door lock heating is activated by the door handle contact of the driver's door. Mounted on the door lock of the driver's door is a heating ring which heats up and prevents the lock from icing up. Certain switch-on conditions must be met to activate the door lock heating system.

Switch-On Conditions

1. Vehicle locked with central locking system.
2. At least 35 seconds must have elapsed after locking.
3. Driver's door handle lifted.

After lifting the handle for 5 seconds, the door lock heating system switches on for approx. 40 seconds. After this period, it can be switched on again by lifting the handle. However, the door lock heating system can be activated only 3 times within a period of 10 minutes. An inhibit function is then active for 16 minutes but it can be reset prematurely by unlocking and locking the vehicle.

Switch–Off Conditions

1. Automatically after 40 seconds.
2. Vehicle is unlocked.
3. Ignition lock in position R or 15.

Door Lock Heating (TSH/ZKE)

General Block Diagram

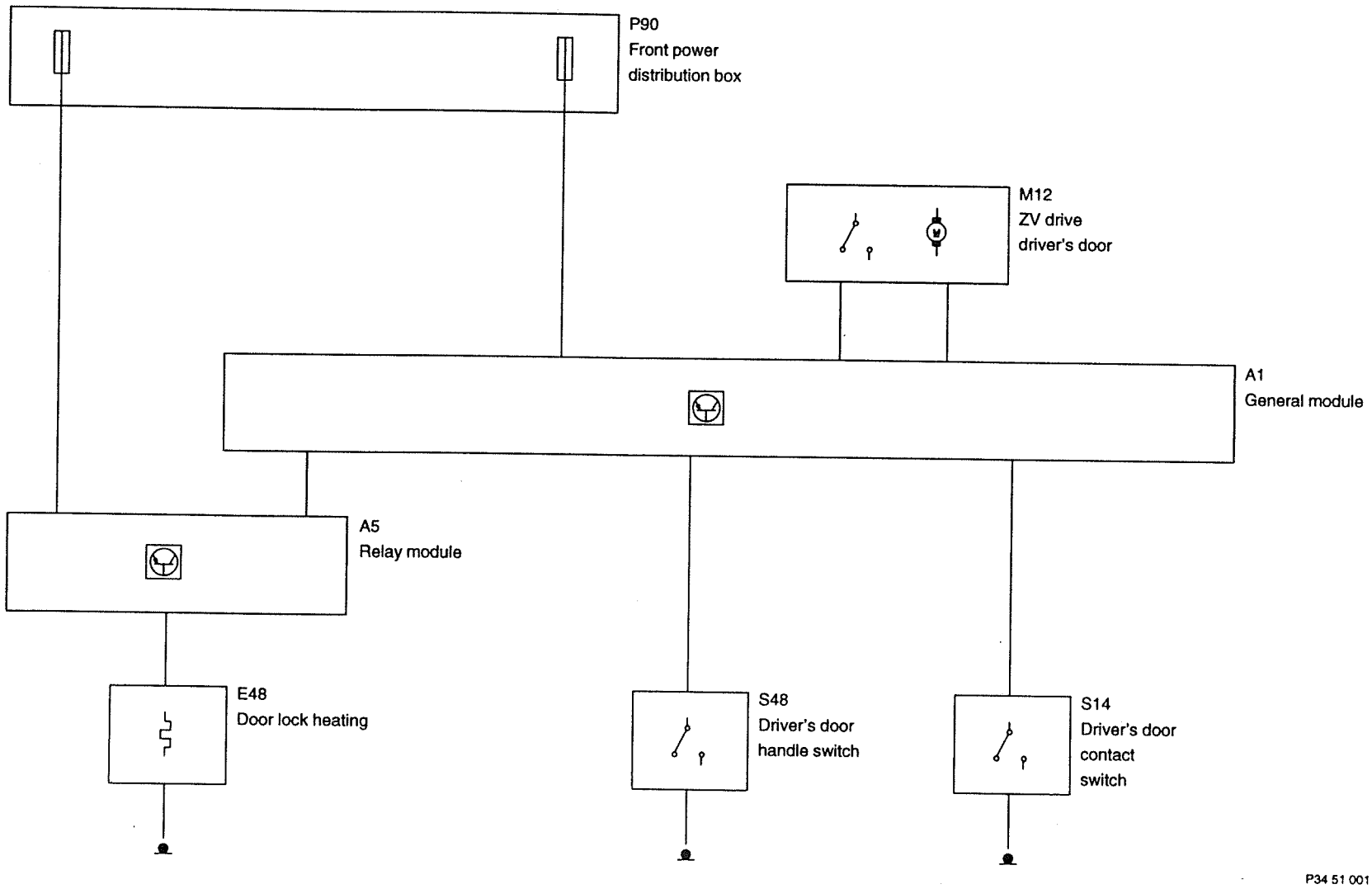

Notes on the BMW DIAGNOSTIC SYSTEM

With ♦D♦ MONITOR OUTPUTS, a check can be made as to whether the door lock heating is switched on. The ignition can be switched off despite diagnostic mode. The switch-on conditions must, however be observed.

During simulation, the door lock heating system is stored as defective. The defect code memory is therefore cleared automatically after simulation. Redetection of a defect code: Activate door lock heating from vehicle (normal operation – precisely comply with switch-on conditions).

If defective, the door lock heating system can be detected and stored by the defect code memory. On the other hand, however, a defective door handle contact can be detected only via the status lists.

TSH detected as "not installed"

After receiving its voltage supply (terminal 30 at Pin A1), the ZKE general module checks whether the diagnostic link for the TSH (Pin C14 or B26) is connected to ground, If the input is open, the TSH will be detected as not being installed.

If the general module is installed with the vehicle battery connected, undefined contacting when plugging in the module may result in the input being detected as open and thus indicating the TSH as "not installed".

The door lock heating system does not function in this case!

If a TSH system is installed in the vehicle but not detected by the general module, disconnect the vehicle battery for at least 5 seconds.

If the TSH is still detected as "not installed" after reconnecting the vehicle battery (and reselection of ZKE!), perform troubleshooting in accordance with **defect code 01** (door lock heating defect code is stored).

Abbreviations

ZKE	Central body electronics
TSH	Door lock heating
TGK	Door handle contact
ZV	Central locking system
GM	General module
RM	Relay module
GM-A	General module connector A, 5-pin, colour white
GM-B	General module connector B, 26-pin, colour green
GM-C	General module connector C, 26-pin, colour white
GM-D	General module connector D, 26-pin, colour yellow
RM-A	Relay module connector A, 20-pin, colour white
RM-B	Relay module connector B, 20-pin, colour black
E	Input
A	Output

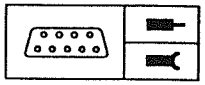

Pin Assignment

Connector Numbers

Number	Type	Description
X332	5-pin, white	GM-A
X253	26-pin, green	GM-B
X254	26-pin, white is only installed in conjunction with power windows	GM-C
X255	26-pin, yellow	GM-D
X258	20-pin, black	RM-A up to model year '88 RM-B as of model year '89
X259	20-pin, white	RM-B up to model year '88 RM-A as of model year '89

Pin Assignments at General Module

Pin	Type	Description/function	Connection	Type of signal	Tester display	Measurement notes
D2	E	Driver's door handle contact	Driver's door handle	Ground	ON	
C14 or B26	A	Diagnostic link for TSH	Relay module Pin A19	B–/B+	Defect code is stored	
B4	E	Activation TSH relay in RM	Relay module Pin B17	B–	Defect code is stored	

Pin Assignments at Relay Module

Pin	Type	Description/function	Connection	Type of signal	Tester display	Measurement notes
B17	A	Activation, TSH relay	General module Pin B4	B–	Defect code is stored	
B16	A	Activation, TSH heating ring	TSH heating ring	B–	Defect code is stored	
A19	E	Diagnostic link for TSH	General module Pin B26/C14	B+/B–	Defect code is stored	

Troubleshooting

Notes

- Troubleshooting with BMW DIAGNOSTIC SYSTEM.
- Battery charged, U-min = 12 V.
- If all functions of the central body electronics (ZKE) have failed, perform troubleshooting in accordance with the diagnostic procedure 6100.0A ZKE central locking system.
- If the central locking system is defective, perform troubleshooting in accordance with diagnostic procedure 5126.0A ZKE central locking system.
- If the electronic power fuse is indicated as being faulty or the fuse is OFF despite the ignition being switched on (♦D♦027 Electronic power fuse), continue with diagnostic procedure 6100.0A central body electronics (ZKE).

Important!

When the supply voltage is applied (terminal 30 at Pin A1), the general module detects which part systems are installed in the vehicle. Undefined contacting when plugging in the module can result in systems not being detected. Therefore:

Disconnect vehicle battery before installing the ZKE general module!

or

After installing the ZKE general module, disconnect the vehicle battery for at least 5 seconds.

Refer to Section 6100.0A Central Body Electronics (ZKE), Functional Description.

Defect Code Table

♦D♦900 Defect code memory – stored defect codes:

♦D♦Door lock heating defect code stored → Defect code 01

Malfunctions:

Door lock heating has failed → Defect code 02

Defect Code 01

♦D♦900 Defect code memory: Door lock heating defect code stored

Explanation: The general module detects whether the door lock heating system is defective via the diagnostic link from RM-A19 to the general module B26/C14.

Possible cause: Wires GM-RM, TSH relay in relay module, lines RM-TSH heating ring, TSH heating ring, ground wire to heating ring.

Troubleshooting

♦D♦SIMULATE OUTPUTS. Does the door lock heat up during simulation?

— yes → Repair wire from general module B26/C14 to relay model A19.

— * —

no ↓

Remove relay module. Check resistance between relay module connector A (black) Pin 16 and ground. Is the measured value between 2 Ω and 3 Ω?

— yes → Is wire from general module connector B (green) Pin 4 to relay module connector A (black) Pin 17 OK.?

— no → Repair wire.

— * —

yes ↓

Renew relay module.

— * —

no ↓

no ↓

Door Lock Heating (TSH/ZKE)

Detach plug connection of TSH (2-pin white connector). Measure resistance of heating ring. Is measured value between 2 Ω and 3 Ω?

— no → Renew heating ring.

—*—

|
yes
↓

Is ground connection for TSH heating ring OK.?

— no → Repair wire.

—*—

|
yes
↓

Is wire from TSH heating ring to relay module connector A (black) Pin 16 OK.?

— no → Repair wire.

—*—

|
yes
↓

Renew relay module.

—*—

Defect Code 02

Door lock heating has failed

Troubleshooting

♦**D**♦MONITOR INPUTS. Lift handle of driver's door. Does the door handle contact (TGK) display ON?

— no → Disconnect 2-pin blue connector for door handle contact (TGK). Measure resistance of TGK. Lift door handle. Nominal value:
Resistance < 1 Ω. Is door handle contact OK.?

— no → Replace door handle contact.

— * —

yes ↓

Is ground connection to door handle contact OK:?

— no → Repair wire.

— * —

yes ↓

Repair wire from TGK to general module connector D (yellow) Pin 2.

— * —

yes ↓

Door Lock Heating (TSH/ZKE)

♦**D**♦MONITOR INPUTS. **Do not** lift driver's door handle. Does the door handle contact (TGK) display OFF?

— no → Disconnect 2-pin blue connector for door handle contact. Measure resistance of door handle contact. Do not lift door handle. Nominal value: Interruption. Is door handle contact OK.?

— no → Renew door handle contact.

— * —

yes ↓

Wire from door handle contact to general module D2 has a short to ground. Repair wire.

— * —

yes ↓

♦**D**♦MONITOR OUTPUTS. Switch off ignition! Lock vehicle with central locking system. Wait at least 45 seconds. Lift door handle for at least 5 seconds. Does door lock heating display ON?

— yes → ♦**D**♦900 Defect code memory. Is the door lock heating stored as defective?

— yes → Continue with defect code 01.

— * —

no ↓

Defect not in the area of the door lock heating. Continue with Section ZKE 6100.0.

— * —

no ↓

There is no defect in the electrical system.

— * —

Notes

These instructions apply only when a central locking module is installed in the 5 Series E34 up to and including model year 1991.

In this system, the central locking drive is blocked after the vehicle system has been armed.

If a ZKE general module is installed, perform troubleshooting in accordance with Section 5120.0 door lock heating (TSH/ZKE).

Refer to Section 5126.1A central locking module (ZVM) for the operating principle of the central locking module.

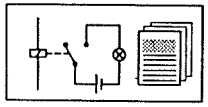

Functional Description

The door lock heating system (TSH) is controlled by the central locking module (ZVM). The door lock heating system features its own relay (installed in rear power distribution box).

Operating Principle

The door lock heating is activated by the door handle contact of the driver's door. Mounted on the door lock of the driver's door is a heating ring which heats up and prevents the lock from icing up. Certain switch-on conditions must be met to activate the door lock heating system.

Switch-On Conditions

1. Vehicle locked with central locking system.
2. At least 35 seconds must have elapsed after locking.
3. Driver's door handle lifted.

After lifting the handle for 5 seconds, the door lock heating system (TSH) switches on for approx. 40 seconds. After this period, it can be switched on again by lifting the handle. However, the door lock heating system can be activated only 3 times within 10 minutes. An inhibit function is then active for 16 minutes but it can be reset prematurely by unlocking and locking the vehicle.

Switch-Off Conditions

1. Automatically after 40 seconds.
2. Vehicle is unlocked.
3. Ignition lock in position R or 15.

Door Lock Heating (TSH/ZVM)

General Block Diagram

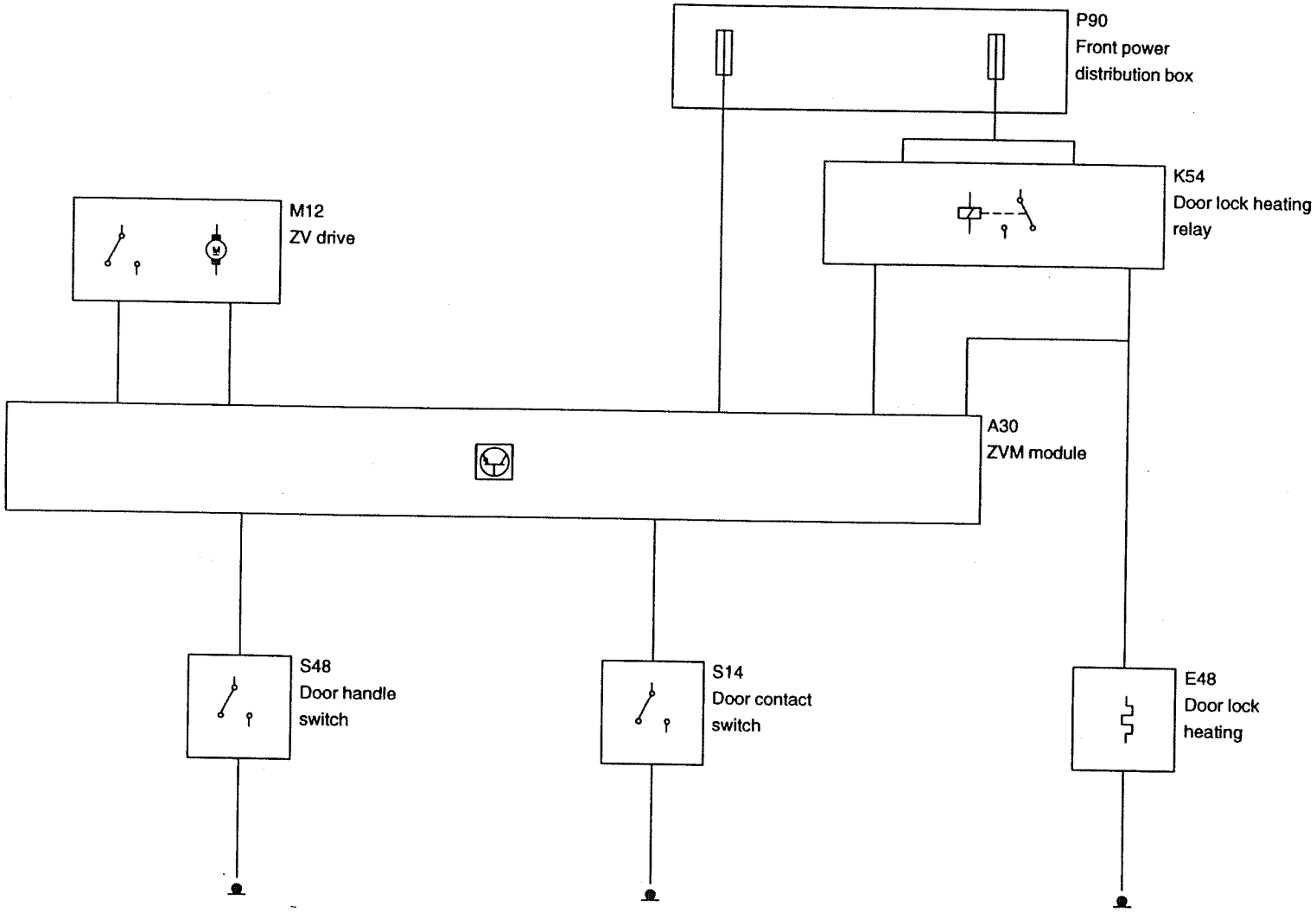

P34 51 003

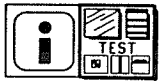

Notes on the BMW DIAGNOSTIC SYSTEM

The door lock heating system is an optional extra. If a vehicle is not equipped with the system, then the defect code **01 TSH defective** is always stored (ignore defect code in this case!).

A faulty door lock heating system (relay or heating ring) is detected by the ZVM via the diagnostic link to Pin B23 and stored in the defect code memory. A defective door handle contact (TGK) is, however, detected only via the status lists.

Also refer to the notes on the BMW DIAGNOSTIC SYSTEM in the Section 5126.1 Central Locking Module.

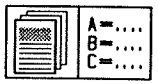

Abbreviations

ZVM	Central locking module
ZVM-A	Central locking module connector, 15-pin, colour black
ZVM-B	Central locking module connector, 26-pin, colour white
TSH	Door lock heating
TGK	Door handle contact
TSH-Relais	Relay for door lock heating
E	Input
A	Output

Pin Assignment

Connector Numbers

Number	Type	Description
X1216	15-pin, black	ZVM-A
X1217	26-pin, white	ZVM-B
X288	9-pin, white	Relay socket TSH

Pin Assignments at ZVM Connector

Pin	Type	Description/function	Connection	Type of signal	Tester display	Measurement notes
A11	A	Door lock heating	Relay for TSH Pin 4	B–	Defect code is stored	
B23	E	TSH diagnostic link	Relay for TSH Pin 2	B+	Defect code is stored	
B9	E	Door handle contact	Driver's door microswitch	B–	ON	

Pin Assignments at TSH Relay X288

Pin	Type	Description/function	Connection	Type of signal	Tester display	Measurement notes
2	A	Heating	Heating ring	B–	Defect code is stored	
4	A	Activation	ZVM connector A, Pin 11	B–	Defect code is stored	
6	E	B+ for working circuit	Fuse (terminal 30)	B+	Defect code is stored	
8	E	B+ for control circuit	Fuse (terminal 30)	B+	Defect code is stored	

Troubleshooting

Notes

- Troubleshooting with the BMW DIAGNOSTIC SYSTEM
- Battery charged, U-min = 12 V
- If all functions of the central locking system have failed, perform troubleshooting in accordance with Section 5126.1 Central Locking System.

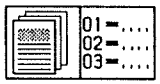

Defect Code Table

♦D♦900 Defect code memory – stored defect codes:

♦D♦Defect code 01 stored → Defect code 01

♦D♦Defect code 02 stored → Defect code 02

Malfunctions:

TSH has failed → Defect code 03

Defect Code 01

♦D♦900 Defect code memory: Defect code 01 stored

– only applicable if door lock heating system (TSH) installed –

Explanation: The central locking module (ZVM) detects the following defects via its own diagnostic link from the ZVM connector B Pin 23 to the output side of the door lock heating system (TSH) (relay - heating ring):

- TSH heating ring broken or
- Wire to TSH heating ring broken or
- Wire from ZVM to TSH relay broken or
- Diagnostic link from ZVM to TSH broken or
- TSH relay does not pull up or
- TSH relay sticking

Troubleshooting: As displayed on screen.

Note:

Check heating ring. The heating ring should have an electrical resistance of approx. 2 Ω.

If the defect code 01 cannot be cleared although the door lock heating system (TSH) is operating correctly, then the diagnostic link from the ZVM connector B Pin 23 to the door lock heating system (TSH) is interrupted.

Defect Code 02

♦D♦900 Defect code memory: Defect code 02 stored

Explanation: The ZVM detects a short to B+ at the connector A Pin 11.

Troubleshooting: As displayed on screen.

Defect Code 03

TSH malfunctioning

Troubleshooting:

1. Do not start up diagnostic mode! Activate door lock heating system (TSH) in accordance with the switch-on conditions (see functional description). Then start diagnostic procedure with ZVM and monitor TSH defect code memory. If a defect code is stored, continue troubleshooting in accordance with instructions displayed on screen.

2. No defect code is stored. Using the status lists, check whether door handle contact is OK.? If necessary, check all ZVM part systems with status lists. Rectify defect in accordance with instructions displayed on screen.

Note: Check heating ring. The heating ring should have an electrical resistance of approx. 2 Ω.

Notes

These instructions apply only when a central locking module II (E36 system) is installed in the 5 Series E34 as of model year 1992.

For description of central locking module II (ZVM II) refer to Section 5126.2A.

In this system, the central locking drive is decoupled internally from the locking linkage when the vehicle system is armed.

If a ZKE general module is installed, perform troubleshooting on the door lock heating system in accordance with Section 5120.0 Door Lock Heating (TSH/ZKE).

Functional Description

General

The door lock heating system (TSH) is activated and monitored by the central locking module II (ZVM II). Refer to Section 5126.2A for description of the central locking module II (ZVM II).

The door lock heating is activated by way of a microswitch on the door handle of the driver's door (door handle contact). A heating coil which heats the lock is mounted on the locking cylinder of the driver's door. Power is supplied to the heating coil via an external relay.

Switch-On Conditions

– 1. Vehicle locked for at least 35 seconds.
– 2. Lift door handle of driver's door for at least 5 seconds.

The door lock heating switch is on for approx. 35 seconds.

The door lock heating can be activated 3 times within 16 minutes. An inhibit function is then active for 16 minutes. This function can only be reset prematurely by unlocking the vehicle.

Switch-Off Conditions

– 1. Automatically after 35 seconds.
– 2. Vehicle is unlocked.

Notes on the BMW DIAGNOSTIC SYSTEM

General

The terminal R (ignition switch in position 1 or 2) must be switched on in order to start the diagnostic procedure. The ignition can, however, be switched off after output of the identification page and the ignition key can be removed from the ignition switch.

Important!

In a series of modules, the diagnostic procedures can only be started when the vehicle is unlocked and terminal R is switched on. Also in this case, however, the ignition can be switched off and the vehicle locked after output of the identification page.

Test Procedure

The door lock contact can be checked by way of ♦**D**♦ test procedure (BMW MoDiC ♦**D**♦ Status monitoring)

Door Lock Heating Activation

Activation of the door lock heating system is possible within the user-guided test procedure. However, activation is only possible when:

– the vehicle is unlocked,
– the ignition switch is in position 1 or 2.

Activation in the BMW MoDiC takes place via ♦**D**♦ Component activation.

Defect Detection

The door lock heating system is constantly monitored for defects by the central locking module II (ZVM II). Monitoring takes place via a diagnostic link (diagnostic feedback) which is connected to the ZV module (26-pin connector, Pin 10) and to the load circuit of the door lock heating system. The following defect statuses can be detected:

– Relay of door lock heating system does not pick up
– Relay of door lock heating system sticking
– Ground line to heating ring has a break or heating ring defective
– Activation line from ZV module to relay has a break
– Diagnostic feedback itself has a break

The defect code is stored in the defect code memory of the central locking module.

Abbreviations

IB	Interior lights
SG	Control unit
TSH	Door lock heating
ZVM	Central locking module
ZV	Central locking system

Pin Assignment

Connector Overview

Number	Type	Description
X13014	4-pin	ZVM connector A
X13013	5-pin	ZVM connector B
X13012	26-pin	ZVM connector C

Pin Assignments at ZVM Connector C, X13012, in Vicinity of Door Lock Heating

Note: The complete pin assignments for the central locking module II can be found in Section 5126.2A.

Pin	Type	Description/function	Connection	Type of signal	Tester display	Measurement notes
1	E	Ground for ZVM electronics	Ground connection	Battery voltage		
3	E	B+ for ZVM electronics	Fuse, terminal 30	Battery voltage	Diagnostic procedure not possible in the case of fault	
5	E	Diagnostic link, RxD	Diagnostic socket, Pin 15	Square-wave		
6	A	Diagnostic link, TxD	Diagnostic socket, Pin 20	Square-wave		
8	E	Door handle contact	Microswitch on door handle	Diagnostic connector	ON	

Pin	Type	Description/function	Connection	Type of signal	Tester display	Measurement notes
10	E	Diagnostic link for door lock heating	Relay for door lock heating	0 V 12 V	Defect code is stored	0 V when door lock heating is OFF 12 V when door lock heating is ON
13	A	Door lock heating activation	Relay for door lock heating	B–	(Activation)	

Adapters

Component	Connector No.	Description	Adapter No.
ZV module	X13012	26-pin	Cartool 61 4 460 in conjunction with periphery box Cartool 61 1 459

Troubleshooting

Notes

Troubleshooting is mainly performed in accordance with information provided by the BMW Diagnostic System. See information provided on the display screen!

If a defect or a signal has occurred several times, this is indicated on the display screen by the following overlay:

"Defect has occurred temporarily x–times"

A defect is designated "occurred temporarily several times" when, in the meantime, it was OK. again!

The door handle contact can be checked in ♦D♦ test procedure for door lock heating!

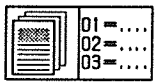

Defect Code Table

♦D♦ Defect code memory – stored defect codes:

Relay for door lock heating faulty → Defect code 16

Door lock heating faulty → Defect code 17

Wire to TSH relay has short to positive → Defect code 18

Fuse or wire to TSH relay defective → Defect code 19

Defect Code 16

♦D♦ Defect code memory: Relay for door lock heating faulty

Explanation: This defect code is stored when the relay for the door lock heating does not switch on.

Troubleshooting:

- Check fuse for door lock heating and renew if necessary.
- Check wire from fuse to relay for door lock heating.
- If fuse and wire are OK., renew relay for door lock heating.

Note: The wire from the ZV module to the relay for door lock heating is monitored separately. See defect codes 18 and 19.

Defect Code 17

♦D♦ Defect code memory: Door lock heating defective

Explanation: This defect code is stored when a defect is found via the diagnostic link (diagnostic feedback).

Troubleshooting

Exit defect code memory, ♦D♦ select test procedure, select door lock heating and activate door lock heating (in BMW MoDiC via component activation!). Perform activation twice to ensure the door lock is thoroughly heated.

If door lock is heated:

- Clear defect code memory
- Then lock vehicle and wait 35 seconds
- Lift door handle, wait 10 seconds
- Unlock vehicle, switch on ignition, ♦D♦ select defect code memory again
- If the defect code 17 has been stored once again, the diagnostic link (diagnostic feedback) from the load circuit of the door lock heating to the ZVM, connector 26-pole Pin 10 has a break. Repair line.
- If the defect code is not stored, the cause of the defect is no longer applicable.

Door lock is not heated during activation:

- Check heating ring on door lock by measuring resistance. The resistance of a heating ring when operating correctly is 2 – 3 Ω.
- Check ground wire to heating ring.
- Check wire from heating ring to relay
- If heating ring and wires are OK., renew relay for door lock heating.

Defect Code 18

♦D♦ Defect code memory: Wire to TSH relay has short to positive

Explanation: The wire from the ZV module, connector 26-pole Pin 13 to the relay for door lock heating has a short to B+.

Defect Code 19

♦D♦ Defect code memory: Fuse or wire to TSH relay defective

Explanation: This defect code is stored when a break is detected in the activation circuit.

Troubleshooting

- Is fuse for door lock heating OK.?
- Is wire from fuse to relay for door lock heating OK.?
- Is wire from ZVM, connector 26-pole Pin 13 to relay for door lock heating OK.?
- If fuse and all wires are OK., renew relay.

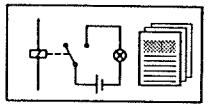

Functional Description

General

The automatic soft-close function enables automatic closing and opening of the security locks on all doors and on the rear lid.

All locks are connected to servo drives (electric motors). The servo drive is switches on via a relay when the door to be closed is pressed beyond the first detent position (initial detent position) against the locking pin. The turn-catch is turned and the door closed.

Caution!

Danger of injury!

The servo drives produce very high closing forces!

Reaching into the turn-catch as it is turning can cause severs injuries!

Objects which fall into the turn-catch can be damaged or may cause damage to the vehicle!

The system also operates when the ignition is switched off!

Therefore!

On no account turn the turn-catch by hand or with a tool in the "close" direction!

When performing all work on the turn-catch lock, disconnect the battery or deactivate the system by disconnecting the modules!

Modules

Control Module (SM)

Installation location: Module support bracket above the rear axle (in luggage compartment).

The control module (SM) contains the entire electronic circuitry of the system. It controls and monitors the functional sequence.

Relay Module (RM)

Installation location: Module support bracket above the rear axle (in luggage compartment).

The relay module (RM) contains the relays for the turn-catch lock drives.

All relays in the relay module are monitored for defects by means of diagnostic feedback (diagnostic links) to the control modules. A defect code is stored in the defect code memory when a defect is detected.

A relay is assigned to each drive. It is switched on until the motor has reached its relevant end position (feedback from limit switch). Normally, the direction of rotation of the motor is the same for both closing and opening.

A reversing relay is additionally provided for the two function groups (group 1: Driver's door, group 2: Other doors and rear lid). It is connected when the control module detects blocking of the drive and reverses the polarity of the turn-catch lock drive – the direction of rotation of the motor changes.

Turn-Catch Lock Drives

The turn-catch lock drives are electric motors which are connected directly to the turn-catches. Normally, the direction of rotation is the same for closing and opening. The corresponding end position is sensed by a limit switch.

The direction of rotation is only changed when the closing procedure is obstructed. The obstruction is detected by the control module in that the "closed" position is not reached within a certain period of time. The relay for reversing the motor is then activated by the control module. The servo drive changes its direction of rotation and opens the door.

Important!

Due to the high closing forces, only very hard objects can obstruct the closing procedure. Even the car body may be damaged by jammed objects. Under no circumstances whatsoever must attempts be made to reverse the operation of the motor by jamming in hard objects!

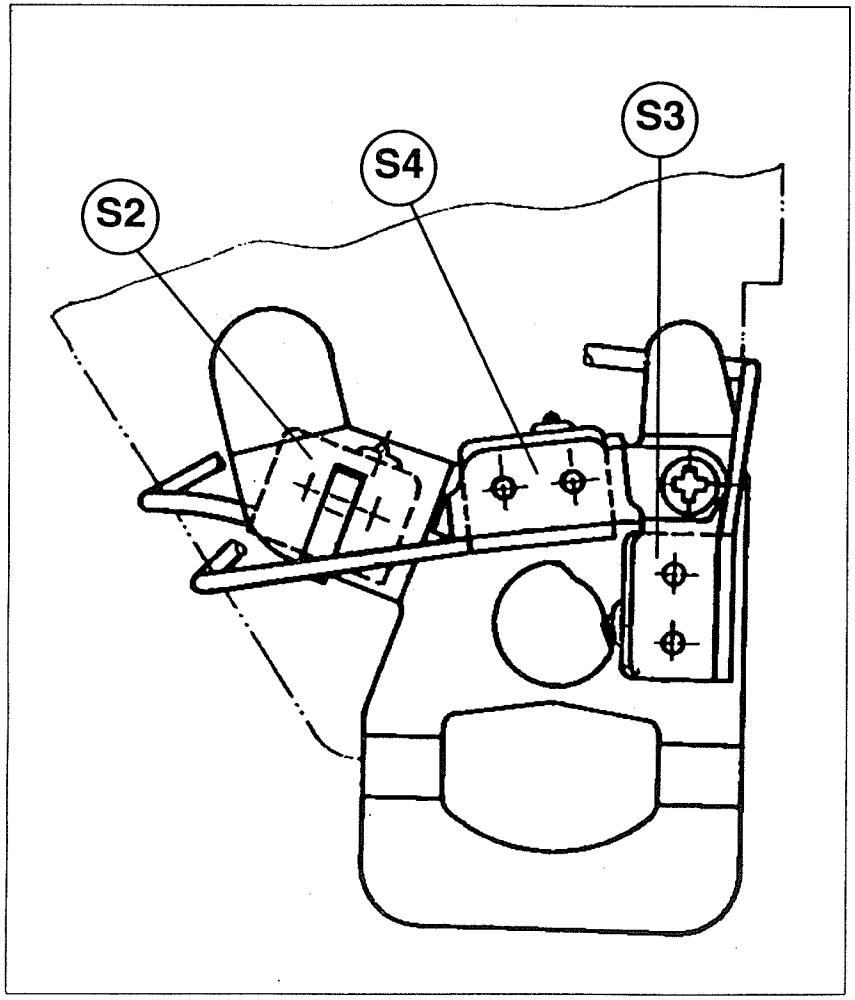

P32 51 001

Microswitches in safety turn-catch lock

Switches

Four microswitches are necessary for the functional sequence. All switches switch to positive (B+).

S1 Door Handle Switch (not illustrated)

Installation location: Above the turn-catch lock.

The door handle switch is operated by means of the inside or outside door handles. When a door handle is raised, the switch switches B+ to the control module. The lock servo drive is switched on and moves to the "open" end position.

Raising the door handle does not open the turn-catch when the vehicle has been locked by means of the central locking system or the vehicle speed is greater than 5 km/h.

S2 Turn-Catch Switch

Installation location: In safety turn-catch lock (see Fig.).

The turn-catch switch is operated when the vehicle door is pressed beyond the first detent position. The switch signals to the control module that the servo drive is to be activated. The turn-catch is turned in the "close" direction.

S3 Limit switch

Installation location: In safety turn-catch lock (see Fig.).

The limit switch is operated by a trip cam which is connected directly to the servo drive. By way of the switch position, the control module senses the end position which the servo drive has assumed.

S4 Initial Detent Switch

Installation location: In safety turn-catch lock (see Fig.).

The command "close turn-catch" can only be triggered when the door was completely open for a short period of time after opening the door.

By way of the initial-detent switch, the control module detects that the driver's door has been opened, i.e. the turn-catch has been completely turned out of the locking pin.

Notes

Mechanical System

Opening the driver's door uncouples the turn-catch from the servo drive when the door handle is raised beyond the mechanical detent point. The turn-catch snaps open irrespective of whether the lock servo drive is activated or not. This feature makes it possible to open and close the door even in the case of system failure.

Central Locking System

When the vehicle has been locked by means of the central locking system, raising the door handle or pressing the rear lid catch does not cause the turn-catch to open.

Driving

The SCA system is deactivated at a vehicle speed greater than 5 km/h. Electrical opening/closing of the turn-catches is therefore not possible.

Due to the fact that the mechanical and electrical systems are uncoupled, all doors can be opened while driving. The turn-catch is opened mechanically after raising the door handle beyond the mechanical detent point.

Defect Detection

The control module constantly monitors all components of the system. If a defect occurs which could endanger safe operation, the module switches off either the faulty servo drive or the entire system.

Operation is resumed when the defect has been rectified and the defect code memory of the system has been cleared by means of the BMW DIAGNOSTIC SYSTEM or by disconnecting the battery.

Refer to the chapter "Troubleshooting" for the scope of the defect monitoring facility and the system responses.

Automatic Soft-Close Function (SCA)

General Block Diagram

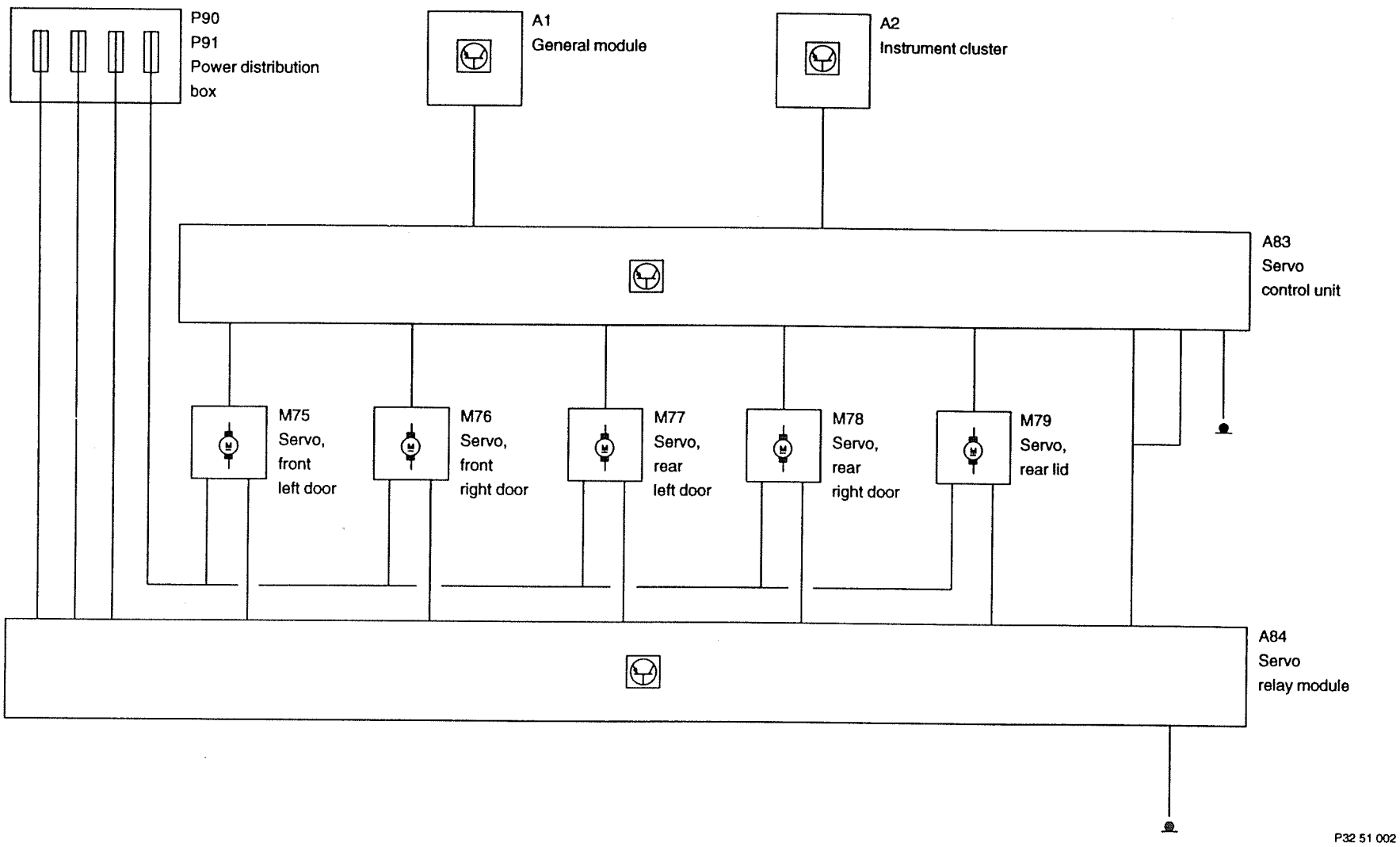

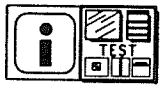

Notes on the BMW DIAGNOSTIC SYSTEM

♦D♦Defect Code Memory

Scope

The following components are monitored by the system for defects:

- All relays in the relay module
- The turn-catch switches S2
- The limit switches S3

If a defect occurs, the corresponding defect code is stored in the defect code memory.

Clearing

The defect code memory can be cleared by means of the BMW DIAGNOSTIC SYSTEM. The memory can also be cleared by cutting the power supply to the control module (detach cable or disconnect vehicle battery).

Defects which are attributed to relay sticking cannot be cleared by means of the BMW DIAGNOSTIC SYSTEM. They can only be cleared by disconnecting the power supply to the control module.

Relay defects

The relays in the relay module are monitored by means of diagnostic lines (diagnostic feedback) between the relay module and control module. In this way it is possible to distinguish whether a relay does not pull up or does not drop out (sticking) after switching off.

♦D♦Test Procedure

General

System components cannot be monitored for defects by way of the defect code memory. Therefore, the defects can be specifically tested following the test procedure.

The diagnostic functions "Status monitoring" and "Component activation" are combined in the test procedure.

Refer to the section "Troubleshooting" for a detailed description of the individual test steps (see defect code 27).

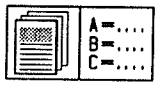

Abbreviations

A	Output
E	Input
S1	Switch S1, door handle switch
S2	Switch S2, turn-catch switch
S3	Switch S3, limit switch
S4	Switch S4, initial-detent switch
SM	Control module
RM	Relay module

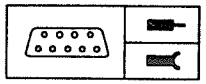

Pin Assignment

Connector Overview

Number	Type	Description
X1207	26-pin, yellow	Control module connector A (SM-A)
X1208	26-pin, green	Control module connector B (SM-B)
X1209	15-pin, black	Relay module connector A (RM-A)
X1210	26-pin, blue	Relay module connector B (RM-B)

Pin Assignments at Control Module Connector A (26-pin, yellow), X1207

Pin	Type	Description/function	Connection	Type of signal	Tester display	Measurement notes
1	E	Close turn-catch lock of rear lid	Rear lid, turn-catch switch S2	B+	ON/OFF	
2	E	Open turn-catch lock of rear lid	Rear lid, door handle switch S1	B+	ON/OFF	
3	E	Turn-catch lock of rear lid in initial-detent position	Rear lid, initial-detent switch S4	B+	OPEN/NOT OPEN	

Automatic Soft-Close Function (SCA)

Pin Assignments

Pin	Type	Description/function	Connection	Type of signal	Tester display	Measurement notes
4	E	Position or turn-catch drive	Rear lid, limit switch S3	B+	Defect code 19 is stored	Test by activation (= test run)
5	E	Close turn-catch lock of driver's door	Driver's door, turn-catch switch S2	B+	ON/OFF	
6	E	Open turn-catch lock of driver's door	Driver's door, door handle switch S1	B+	ON/OFF	
7	E	Turn-catch of driver's door in initial-detent position	Driver's door, initial-detent switch S4	B+	OPEN/NOT OPEN	
8	E	Position of turn-catch drive	Driver's door, limit switch S3	B+	Defect code 15 is stored	Test by activation (= test run)
9	E	Close turn-catch of passenger's door	Passenger's door, turn-catch switch S2	B+	ON/OFF	
10	E	Open turn-catch of passenger's door	Passenger's door, door handle switch S1	B+	ON/OFF	
11	E	Turn-catch of passenger's door in initial-detent position	Passenger's door, initial-detent switch S4	B+	OPEN/NOT OPEN	
12	E	Position of turn-catch drive	Passenger's door, limit switch S3	B+	Defect code 16 is stored	Test by activation (= test run)
13	E	Close turn-catch of rear door (driver's side)	Rear door (driver's side), turn-catch switch S2	B+	ON/OFF	
14		Diagnostic link RxD	Diagnostic socket Pin 15	Square-wave		(diagnostic mode not possible in the case of defect)
15		Diagnostic link TxD	Diagnostic socket Pin 20	Square-wave		(diagnostic mode not possible in the case of defect)

Pin	Type	Description/function	Connection	Type of signal	Tester display	Measurement notes
16	E	Speed A signal	Instrument cluster	Square-wave		
17		Not used				
18		Not used				
19		Not used				
20	E	Position of turn-catch drive	Rear door (passenger's side), limit switch S3	B+	Defect code 18 is stored	Test by activation (= test run)
21	E	Turn-catch of rear door (passenger's side) in initial-detent position	Rear door (passenger's side), initial-detent switch S4	B+	OPEN/NOT OPEN	
22	E	Close turn-catch of rear door (passenger's side)	Rear door (passenger's side), turn-catch switch S2	B+	ON/OFF	
23	E	Open turn-catch of rear door (passenger's side)	Rear door (passenger's side), door handle switch S1	B+	ON/OFF	
24	E	Turn-catch of rear door (driver's side) in initial-detent position	Rear door (driver's side), initial-detent switch S4	B+	OPEN/NOT OPEN	
25	E	Position of turn-catch drive	Rear door (driver's side), limit switch S3	B+	Defect code 17 is stored	Test by activation (= test run)
26		Open turn-catch of rear door (driver's side)	Rear door (driver's side), door handle switch S1	B+	ON/OFF	

Pin Assignments at Control Module Connector B (26-pin, green), X1208

Pin	Type	Description/function	Connection	Type of signal	Tester display	Measurement notes
1	A	Relay for turn-catch drive, rear door (driver's side)	Relay module, connector B, Pin 14	B–	Defect code 04 or 11 is stored	
2	A	Relay for turn-catch drive, rear door (passenger's side)	Relay module, connector B, Pin 1	B–	Defect code 03 or 10 is stored	
3	A	Relay for turn-catch drive, rear lid	Relay module, connector B, Pin 2	B–	Defect code 05 or 12 is stored	
4	A	Relay for turn-catch drive, passenger's door	Relay module, connector B, Pin 3	B–	Defect code 02 or 09 is stored	
5	A	Relay for turn-catch drive, driver's door (reverse in case of blocking)	Relay module, connector B, Pin 4	B–	Defect code 07 or 14 is stored	
6	E	Status detection of central locking system	ZV drive rear lid	B+	Locked/unlocked	
7	E	Status detection of central locking system	ZV drive, driver's door	B+	Locked/unlocked	
8	E	Diagnostic feedback from relay, passenger's door, rear doors, rear lid – reverse	Relay module, connector B, Pin 9	B–, B+	Defect code 06 or 13 is stored	
9	E	Diagnostic feedback from relay, rear door (driver's side) – normal operation	Relay module, connector B, Pin 5	B–, B+	Defect code 04 or 11 is stored	
10	E	Diagnostic feedback from relay, passenger's door – normal operation	Relay module, connector B, Pin 8	B–, B+	Defect code 02 or 09 is stored	
11	E	Diagnostic feedback from relay, driver's door – normal operation	Connector B, Pin 10	B–, B+	Defect code 01 or 08 is stored	

Pin	Type	Description/function	Connection	Type of signal	Tester display	Measurement notes
12	E	Terminal 30 for electronics	Relay module, connector B, Pin 12	B+		
13	E	Ground for electronics	Ground	B–		
14	A	Relay for turn-catch drive, driver's door	Relay module, connector B, Pin 16	B–	Defect code 01 or 08 is stored	
15	A	Relay for turn-catch drive, passenger's door, rear doors, rear lid (reverse in case of blocking)	Relay module, connector B, Pin 15	B–	Defect code 06 or 13 is stored	
16		Not used				
17		Not used				
18	E	Diagnostic feedback from relay, driver's door – (reverse)	Relay module, connector B, Pin 11	B–, B+	Defect code 01 or 08 is stored	
19	E	Diagnostic feedback from relay rear lid – normal operation	Relay module, connector B, Pin 6	B–, B+	Defect code 05 or 12 is stored	
20		Not used				
21	E	Diagnostic feedback from relay rear door (passenger's door) – normal operation	Relay module, connector B, Pin 7	B–, B+	Defect code 02 or 09 is stored	
25	E	Terminal 30 for electronics	Fuse	B+		
26	E	Ground for electronics	Ground	B–		

Pin Assignments at Relay Module Connector A (15-pin, black), X1209

Pin	Type	Description/function	Connection	Type of signal	Tester display	Measurement notes
1	E	Ground load circuit, driver's door	Ground	B–	Defect code 01 or 08 is stored	
2	E	Terminal 30 for load circuit, driver's door	Fuse	B+	Defect code 01 or 08 is stored	
3		Not used				
4		Not used				
5		Not used				
6		Not used				
7	E	Terminal 30 for load circuit, passenger's door, rear door, rear lid	Fuse	B+	All relay defect codes are stored	
8	A	Turn-catch drive – Rear door lock (driver's side)	Turn-catch drive	B–, B+		Test by activation (= test run)
9	A	Turn-catch drive – driver's door lock	Turn-catch drive	B–, B+		Test by activation (= test run)
10	A	Turn-catch drive – passenger's door lock	Turn-catch drive	B–, B+		Test by activation (= test run)
11	A	Turn-catch drive – driver's door lock (reverse)	Turn-catch drive	B–, B+		Test by activation (= test run)
12	A	Turn-catch drive – rear lid lock	Turn-catch drive	B–, B+		Test by activation (= test run)
13	A	Turn-catch drive – passenger's door, rear doors, rear lid lock (reverse)	Turn-catch drive	B–, B+		Test by activation (= test run)

Pin	Type	Description/function	Connection	Type of signal	Tester display	Measurement notes
14	A	Turn-catch drive – rear door lock (passenger's side)	Turn-catch drive	B–, B+		Test by activation (= test run)
15	E	Ground load circuit, passenger's door, rear doors, rear lid	Ground	B–	All relay defect codes are stored	

Pin Assignments at Relay Module Connector B (26-pin, blue), X1210

Pin	Type	Description/function	Connection	Type of signal	Tester display	Measurement notes
1	A	Relay for turn-catch drive, rear door (passenger's door)	Control module, connector B, Pin 2	B–	Defect code 03 or 10 is stored	
2	A	Relay for turn-catch drive, rear lid	Control module, connector B, Pin 3	B–	Defect code 05 or 12 is stored	
3	A	Relay for turn-catch drive, passenger's door	Control module, connector B, Pin 4	B–	Defect code 02 or 09 is stored	
4	A	Relay for turn-catch drive driver's door (reverse)	Control module, connector B, Pin 5	B–	Defect code 07 or 14 is stored	
5	E	Diagnosis rear door (driver's side) – normal operation	Control module, connector B, Pin 9	B–, B+	Defect code 04 or 11 is stored	
6	E	Diagnosis rear lid – normal operation	Control module, connector B, Pin 19	B–, B+	Defect code 05 or 12 is stored	
7	E	Diagnosis rear door (passenger's side) – normal operation	Control module, connector B, Pin 21	B–, B+	Defect code 02 or 09 is stored	
8	E	Diagnosis passenger's door – normal operation	Control module, connector B, Pin 10	B–, B+	Defect code 02 or 09 is stored	

Pin	Type	Description/function	Connection	Type of signal	Tester display	Measurement notes
9	E	Diagnosis passenger's door, rear doors, rear lid (reverse)	Control module, connector B, Pin 8	B–, B+	Defect code 06 or 13 is stored	
10	E	Diagnosis driver's door – normal operation	Control module, connector B, Pin 11	B–, B+	Defect code 01 or 08 is stored	
11	E	Diagnosis driver's door – reverse	Control module, connector B, Pin 18	B–, B+	Defect code 01 or 08 is stored	
12	A	B+ supply for control module	Control module, connector B, Pin 12 and Pin 25	B+	Diagnostic mode not possible in the case of defect	
13		Not used				
14	A	Relay for turn-catch drive, rear door (driver's side)	Control module, connector B, Pin 1	B–	Defect code 04 or 11 is stored	
15	A	Relay for turn-catch drive, passenger's door, rear doors, rear lid (reverse)	Control module, connector B, Pin 15	B–	Defect code 06 or 13 is stored	
16	A	Relay for turn-catch drive, driver's door	Control module, connector B, Pin 14	B–	Defect code 01 or 08 is stored	
17		Not used				
18		Not used				
19		Not used				
20		Not used				
21		Not used				
22		Not used				
23		Not used				

Pin	Type	Description/function	Connection	Type of signal	Tester display	Measurement notes
24		Not used				
25	E	Terminal 30, working circuits of relays and B+ supply for control module	Fuse	B+	Diagnostic mode not possible in the case of defect	

Adapter

Component	Connector-Nr.	Description	Adapter No.
Control module	X1207	26-pin, yellow	Cartool 61 1 451
Control module	X1208	26-pin, green	Cartool 61 1 454
Relay module	X1210	26-pin, blue	Cartool 61 1 453

All adapters in conjunction with periphery box Cartool 61 1 459

Troubleshooting

Notes

Refer to safety instructions in chapter "Functional Description"!

Troubleshooting is mainly carried out together with the BMW DIAGNOSTIC SYSTEM. Observe information provided on the screen pages.

Before commencing with troubleshooting, ensure that the vehicle battery is charged.

Defect Code Table

♦D♦Defect code memory – stored defect codes

Relay for motor ... does not pick up → Defect codes 01 to 07

Relay or ground for motor ... → Defect codes 08 to 14

Limit switch (S3) signals defect → Defect codes 15 to 19

Turn-catch switch (S2) signals defect → Defect codes 20 to 24

Malfunctions

Electrical closing/opening also while driving → Defect code 25

Diagnostic mode not possible → Defect Code 26

General malfunction (troubleshooting with **♦D♦**Test procedure) → Defect code 27

Defect Codes 01 to 07

♦D♦Defect code memory: Relay for motor ... does not pick up

Explanation

The control module detects that the relay does not pull up in the relay module via the diagnostic feedback (diagnostic link).

Effect of defect

Power is not supplied to the turn-catch lock drive. It is also not possible to close the vehicle doors electrically.

Troubleshooting

- Check fuse for SCA relay module.
- Check B+ supply for load circuits.
  Driver's door: Relay module connector A, Pin 2
  Others: Relay module connector A, Pin 7
- Check activation line between control module (SM) and relay module (RM) for a break or a short to positive.
- Check diagnostic feedback (diagnostic link) between control module (SM) and relay module (RM) for short to ground.
- If fuse and all lines are OK., then the relay in the relay module is defective. In this case, renew the relay module.

Defect Codes 08 to 14

♦D♦Defect code memory: Relay or ground for motor ...

Explanation

The control module detects one of the following defects by way of diagnostic feedback (diagnostic link):

- Relay in relay module sticks in working position
- Ground line for load circuits has a break
- Diagnostic feedback (diagnostic link) has a break or wire short to positive.

Effect of defect

For the control module, this defect always means that a relay in the relay module does not drop out (relay sticks).

As a result, the control module activates a potential equalisation function in the relay module. This means: Both the relay for normal operation (close/open turn-catch) as well as the relay for motor reverse (emergency opening in the case of blocking) are switched on so that B+ is applied to both outputs for the turn-catch drive. This prevents the servo drive being switched on permanently. The potential equalisation remains active until the control module detects that the defective relay has dropped out.

Since two relays are constantly switched on during potential equalisation (also after ignition OFF!), this results in increased closed-circuit current consumption (approx. 300mA).

Troubleshooting

- Check ground wire for load circuits.
  Driver's door: Relay module connector A, Pin 1
  Others: Relay module connector A, Pin 15
- Check diagnostic feedback (diagnostic link) between control module (SM) and relay module (RM) for a break or short to positive.
- Check activation line between control module (SM) and relay module (RM) for a short to ground.
- If all wires are OK., then the relay in the relay module is defective. In this case, renew the relay module.

Note

The defect code cannot be cleared via the diagnostic system!

The defect code is cleared when the control module is disconnected from the power supply.

Defect Codes 15 to 19

♦D♦Defect code memory: Limit switch (S3) signals defect

Explanation

The control module detects the end position of the turn-catch by way of the limit switch. After activation of a drive, the control module expects a signal change at the switch (switch switches B+). A second signal change takes place when the turn-catch has reached its end position (open/closed) (switch interrupts).

This defect code is stored when one of the signal changes does not take place.

Effect of defect

Initially, the control unit evaluates failure of the signal change as a drive blocking. The relay for motor reverse is switched on, the turn-catch drive moves in the opposite direction of rotation.

The drive is switched off if the signal change also fails during this procedure. Operation is resumed when:

- The defect is eliminated and the defect code memory has been cleared and
- a ♦D♦test run has been performed for the turn-catch drive.

Note

As a result of the test run, the turn-catch drive which was switched off now assumes a defined end position. During the test run, the control module once again checks the limit switch.

Possible causes

- Blocking of the turn-catch drive.
- Stiff movement of the turn-catch drive.
- Failure of turn-catch drive (electric motor defective or wires from relay module to electric motor have a break).
- Relay in relay module defective (see defect codes 01 to 07 or 08 to 14).
- Fuse for limit switch defective.
- Wire from fuse to limit switch defective.
- Limit switch (microswitch) defective (electrically or mechanically).
- Wire from limit switch to control module defective.

Troubleshooting

- Clear defect code memory.
- ♦D♦ Select test procedure.
- Skip test step "ZV detection".
- Perform test run for the turn-catch drive.
- Troubleshooting as displayed on screen.

For further information on test run, see defect code 27.

Defect Codes 20 to 24

♦D♦ Defect code memory: Turn-catch switch (S2) signals defect

Explanation

This defect code is stored when the turn-catch switch constantly switches B+ to the control module or when no B+ signal is detected with the turn-catch open (detection via limit switch S3).

Effect of defect

The turn-catch drive is not activated after pressing the vehicle door. The door cannot be closed electrically.

Troubleshooting

- ♦D♦ Select test procedure
- Skip test step "ZV detection" and test run (♦⇒♦).
- Check defective turn-catch switch.
- Troubleshooting as displayed on screen.

For further notes on testing of switches in the test procedure, see defect code 27.

Defect Code 25

Electrical closing/opening possible also during driving

Note

The SCA system is deactivated at a vehicle speed above 5 km/h. It is therefore not possible to close/open the turn-catches electrically.

Due to the decoupling of the mechanical and electrical systems, all doors can be opened while driving. The turn-catch is opened mechanically after lifting the door handle beyond the mechanical detent point.

The door handle should only be lifted slightly in order to determine whether the SCA is deactivated while driving. The electrical switching point of the door handle switch can, if necessary, be determined by way of ♦D♦test procedure "check switch".

Following check is recommended:

♦D♦Select diagnostic program for instrument cluster and simulate vehicle speed signal (e.g. 20 km/h). During activation, check whether the turn-catches are closed or opened electrically by the SCA.

Troubleshooting

In the case of defect, check wire (speed-A signal) from control module connector A Pin 16 to the instrument cluster and repair if necessary.

Defect Code 26

Diagnostic mode not possible

Possible causes: Power supply, diagnostic links

Note: The B+ supply for the control module is routed via the relay module so that the power supply to the control module is interrupted when the relay module is removed!

Troubleshooting

Has the system failed completely (all turn-catch drives not operating)? — no → Check diagnostic links RxD and Txd from control module connector A Pin 14 and 15 to diagnostic socket and repair if necessary. See screen display for further information.

yes ↓

— * —

Are all fuses for the SCA OK.? — no → Renew faulty fuse.

yes ↓

— * —

Remove control module. Do not remove relay module! Is approx. battery voltage applied at connector B of control module at Pin 12 and Pin 25? (Measure voltage with respect to vehicle ground). — no → Remove relay module. Is battery voltage applied at relay module connector B Pin 25? — no → Repair wire from relay module to fuse.

yes ↓

yes ↓

— * —

Check relay module. Measure resistance between connector B Pin 25 and Pin 12. Is resistance less than 1 Ω?

— no → Renew relay module.

—*—

yes ↓

Repair wire from relay module connector B Pin 12 to control module connector B Pin 25 and Pin 12.

—*—

yes ↓

Check ground lines to control module. Connector B of control module Pin 13 and Pin 26. Is ground connection OK.?

— no → Repair faulty wire.

—*—

yes ↓

If all wires and connections are OK. and all turn-catch drives do not operate after re-installation of control and relay modules and diagnostic mode not possible, renew control module.

—*—

Defect Code 27

General malfunction (Troubleshooting with ♦D♦test procedure)

General

The ♦D♦test procedure facilitates complete inspection of all system components.

If the system is malfunctioning and there is no defect code stored in the defect code memory, specific and reliable troubleshooting is made possible by means of the ♦D♦test procedure.

On all screen displays, check that the status indicated on the screen agrees with the actual status on the vehicle, e.g. vehicle is centrally locked – is "locked" displayed on the screen?

Further information on troubleshooting can be called up on the display screen by pressing the ♦⇓♦ key.

The test procedure is subdivided into several test steps.

Test step 1: ZV Identification

Test

Lock and unlock the vehicle with the central locking system. The status detected by the control module is displayed on the screen. There is a defect in the system is the status displayed on the screen does not agree with the actual status on the vehicle.

Important!

If the vehicle cannot be locked or unlocked perfectly (all doors and the rear lid) then the central locking system is defective. In this case, check the central locking system – see ZKE central locking system.

Troubleshooting

Symptom	Remedy
The status of the central locking system at the doors is not displayed correctly.	Repair wire from control module connector B Pin 7 to ZV drive of driver's door (pin contact).
The status of the central locking system and the rear lid is not indicated correctly.	Repair wire from control module connector B Pin 6 to ZV drive of rear lid (pin contact).

Test step 2: Test run

Explanation

The test run facilitates specific activation of the turn-catch lock drives. The relays in the relay module and the limit switch S3 are checked for defects during the test run.

During the test run, the turn-catch drive turns twice thus moving in the "close" and "open" end positions.

By entering a number on the selection page, the turn-catch drive, for which the test run is to be performed, is selected.

Caution!

Danger of injury!

Reaching into the turn-catch as it turns causes serious injuries!
No protection facilities are active during the test run!
Take particular care to ensure that no objects fall into the turn-catch!
Before performing the test run, the vehicle door must be opened completely otherwise the turn-catch will damage the closing pin.

Notes

The test run cannot be carried out when one of the following conditions exists:

Condition	Remedy
Limit switch (S3) stored as defective in defect code memory (defect codes 15 – 19).	Clear defect code memory. The system checks the limit switch during the test run.
A relay defect is stored in the defect code memory (defect codes 01 – 14).	Rectify defect in accordance with instructions. Then clear defect code memory.

Test

Open vehicle door! Start test run with 300 and acknowledgement key. Observe the turn-catch during the test run and check that the turn-catch actually turns.

On completion of the test run, whether the turn-catch was turned or not is entered at the tester. After this entry, the diagnostic program automatically checks whether the control module had detected a defect and indicates this defect if necessary.

Important!

Due to the mechanics of the lock it is possible that the turn-catch does not snap back automatically to the "open" position when the vehicle door is open although the turn-catch drive returns to this position! This is not a fault!

In these cases, the turn-catch must be **carefully** pressed back to the "open" position with a tool while **completely lifting** the door handle.

Troubleshooting

Defect	Tester display	Corrective measures
Turn-catch is turned. Limit switch has short to B+	Defect is indicated on tester after entry that the turn-catch has turned.	Check wire from limit switch (S3) to the control module for a short to B+ and repair if necessary. Check microswitch – Is switch constantly depressed?Renew faulty microswitch.
Turn-catch is turned. Limit switch has a break.	Defect is indicated on tester after entry that the turn-catch has turned.	Check fuse for limit switch (S3) and wire from the fuse to the limit switch and renew or repair if necessary. Check wire from limit switch (S3) to control module for a break and repair if necessary. Check microswitch – Perform continuity test. Renew faulty microswitch.
Relay defective.	Defect is indicated automatically.	See defect codes 01 to 08 or defect codes 09 to 14.
Turn-catch does not turn. Relay OK.	Defect information after entry that turn-catch has not turned.	Check wires from relay module to servo drive for turn-catch and repair if necessary. Check turn-catch lock for mechanical defects and repair if necessary. If wires and mechanical system OK., renew servo drive for turn-catch (electric motor).

Test step 3: Switches

The turn-catch drive, whose switches are to be checked, is selected by entering a number on the selection page.

Test

Door handle switch (S1):
Slightly raise inside or outside door handle. "ON" should appear on the display screen when the door handle is raised.

Initial-detent switch (S4):
Close vehicle door and then open again. The turn-catch must now be completely open. "OPEN" should be displayed on the screen.
Then close the vehicle door so that the turn-catch engages in the first detent position (initial-detent position). "NOT OPEN" should be displayed on the screen.

Turn-catch switch (S2):
Close vehicle door and then open again. The turn-catch must now be completely open. "OFF" should be displayed on the screen.
Then close the vehicle door and lightly press on reaching the first detent position. "ON" should be displayed on the screen.

Effect of defect

Switch failure:

Door handle switch:
After opening the vehicle door, the turn-catch drive does not move to the "OPEN" end position. Electrical closing is then no longer possible.

Initial-detent switch:
The position "door completely open" is not detected. After opening, electrical closing is not possible before the vehicle door was completely opened. Electrical closing is therefore no longer carried out.

Turn-catch switch:
The SCA function detects no "close turn-catch" signals.

Troubleshooting

Applicable to all switches in the case of defect:

- Is fuse OK.?
- Is wire from fuse to microswitch OK.?
- Is microswitch mechanically OK.? (Terminals, mounting, etc.)
- Is microswitch electrically OK.? (Continuity, short-circuit)
- Is plug connection at microswitch OK.?
- Is wire from microswitch to control module OK.?

End

The system is electrically OK. if no defects are found during the test procedure.

Notes

This section is only applicable when a ZKE general module is installed. Both central locking systems (ZV) are dealt with.
ZV with blocking of ZV drives
and
ZV with decoupling of ZV drives

Functional Description

The central locking system (ZV) is controlled by the general module (GM) of the central body electronics (ZKE). The relays for locking, unlocking and arresting are located in the relay module (RM). The system circuits are fuse-protected by means of an external fuse relay (refer to Section 6100.0A Central Body Electronics).

A differentiation is made between two locking systems:

1. Central Locking (ZV) with Blocking of ZV Drives

The ZV drives are blocked internally in the arrest setting. In this case, it is not possible to pull out the locking buttons and thus unlock the door locks.

Installed in:

– 7 Series, E32: all models
– 5 Series, E34: all models up to and including model year 1991

2. Central Locking (ZV) with Decoupling of ZV Drives

The ZV drives are decoupled internally in the arrest setting. Although it is possible to pull out the locking buttons, the door locks are still not unlocked (central locking system of 3 Series, E36)

Installed in:

– 5 Series, E34: all models as of model year 1992

1. Central Locking (ZV) with Blocking of ZV Motor Drives

1.1. Components

Lock contacts

Microswitches on door handles of the driver's door and passenger's door. Depending on the position of the door lock, they are activated via cams, they switch battery voltage (B+) to the general module and signal lock, unlock or arrest.

Pin contacts

Microswitches in the ZV motor drive (integral component). The pin contacts of the driver's door and passenger's door are activated by means of the lock buttons, the contact of the rear lid via the rear lid lock.

The contacts switch battery voltage (B+) to the ZKE general module and signal lock or unlock. From the passenger's door they signal only the unlock status. The pin contacts indicate the actual status of the doors (locked, unlocked). The rear doors are not equipped with pin contacts.

General module

Processes the signals from the contacts and switches the relays in the relay module

Relay module

Three relays are provided in the relay module for the central locking system.

ZV motor drives

Electrical servo drive motors on the door locks. They are powered via the ZV relays in the relay module. The ZV drive is blocked internally in the arrest status.

1.2. Central Locking (ZV) Functions

The following functions are possible:

- Lock/arrest/unlock via door locks of driver's/passenger's door
- Unlock/lock via locking button of driver's door
- Unlock via locking button of passenger's door
- Lock/unlock via rear lid lock
- Workshop setting of rear lid (= vehicle unlocked, rear lid remains locked)
- Release via door locks of driver's/passenger's door

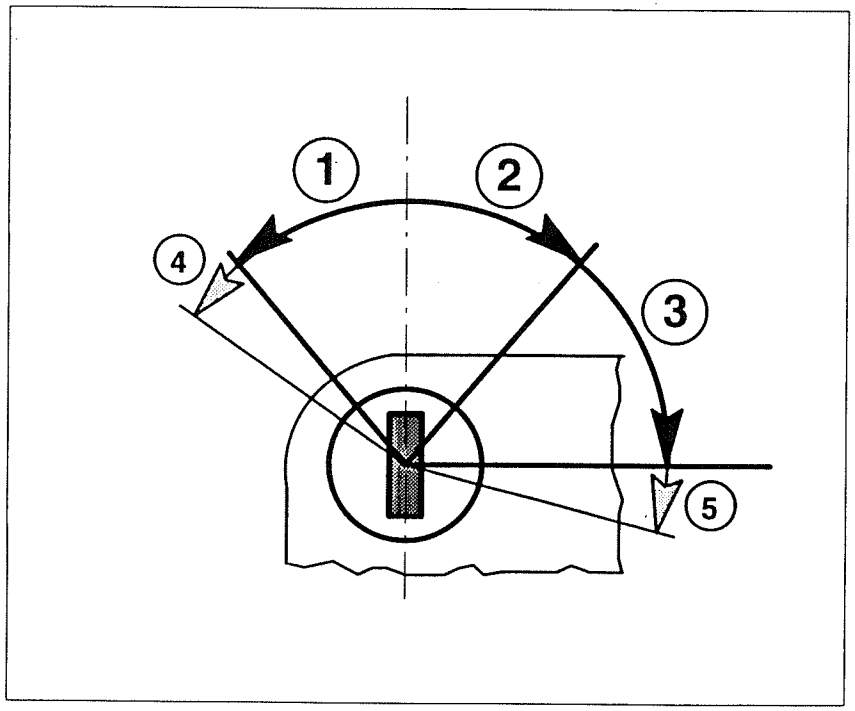

P34 51 005

1.3. Door Lock of Driver's and Passenger's Door

The lock contacts are operated by means of the door locks of the driver's and passenger's door. The following key positions are possible:

"1" Unlock/release

The vehicle is unlocked and released, if applicable, the antitheft system is disarmed.

"2" Lock

The vehicle is locked without being arrested. The lock buttons on the driver's and passenger's door can be pulled up from the inside and thus unlock the vehicle.

The lock system is blocked mechanically to prevent locking when the driver's door is open. Locking can result in asynchronous setting of the door lock, see "5 Synchronisation".

"3" Arrest

The vehicle is arrested, the locking buttons are blocked and cannot be pulled out.

"4" Emergency unlocking, only passenger's door

The passenger's door can be opened mechanically in the event of electrical faults. Raise door handle and turn door lock with vehicle key in "unlock" direction beyond the hard pressure point (position 4). To lock door, turn to right beyond hard pressure point (position 5).

After restoring normal electrical operation, the ZV drive must be synchronised (synchronisation between linkage and servo drive), see "5 Synchronisation".

"5" Synchronisation, driver's and passenger's door

Turn door lock to right beyond hard pressure point (lock).

Synchronisation is necessary when:

- Vehicle was locked with driver's door open (= driver's door asynchronous)
- Passenger's door was unlocked in emergency unlock mode (e.g. driver's door asynchronous)

1.4. Rear Lid Lock

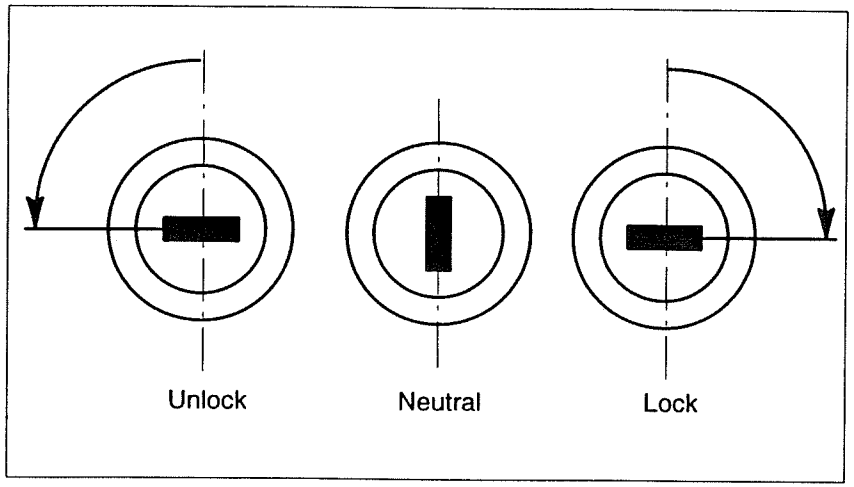

P34 51 006

Function

The pin contact in the ZV drive is operated by means of the rear lid lock. The vehicle can be locked and unlocked. If the vehicle is in arrest mode, the rear lid itself can be unlocked but the doors are not unlocked.

Workshop setting

The key can be removed in the key position locked (90° to right). The rear lid can then be permanently locked even when the vehicle is unlocked electrically by means of the central locking system (workshop setting).

1.5. Locking Buttons

The pin contacts in the ZV drives are operated by the locking buttons. The vehicle can be:

- Locked and unlocked via the locking button of the driver's door (driver's door closed!)
- Unlocked via the locking button of the passenger's door

Rear doors

The locking buttons at the rear doors have no influence on the central locking system.

Important!

Driver's door

The locking linkage of the central locking system is locked mechanically for as long as the driver's door is open.

Repeat lockout

To avoid overloading, the central locking system is inhibited when the system is operated very often within a short period of time. The lockout feature is cancelled after a defined waiting time.

Defect information:

If a defect occurs in the central locking system (ZV), the driver is made aware of this by the central locking system reverting automatically to its initial status. The required function is performed only after operation for a second time.

Example: Vehicle is locked – driver's door defective, it is not locked – the central locking system (ZV) locks the doors, the doors are unlocked once again a short time later.

Crash sensor:

(Inertia switch) installation location: Under left rear seat. The crash sensor is effective only when the ignition switch is set to R or 15 (position 1 or 2). At the point of impact, the sensor briefly switches a ground signal to the general module. The vehicle is unlocked/released, the interior lights are switched on (only in switch position automatic interior lights), the hazard warning system is activated (only if crash and alarm sensor is installed) and the central locking system is disabled.

Cancelling the lockout function: By turning the door lock in the unlock direction.

Switching off the hazard warning system: Switch on and off hazard warning system in vehicle.

2. ZV with Decoupling of ZV Motor Drives

2.1. Components

Lock contacts

Microswitch on door lock of driver's and passenger's door. Depending on the position of the door lock, they are activated via cams, they switch battery voltage (B+) to the general module and signal the arrest command.

The model "E34 touring" features lock contacts also on the tailgate.

Pin contacts

Microswitch in ZV servo motor drive (integral component). The pin contacts of the driver's and passenger's door are activated by means of the locking buttons. The contact of the rear lid is operated via the rear lid lock.

The contacts switch battery voltage (B+) to the general module and signal lock or unlock/release. The pin contacts indicate the actual status of the doors (locked, unlocked). The rear doors are note equipped with pin contacts.

General module

Processes the signals from the contacts and switches the relays in the relay module

Relay module

Three relays are provided in the relay module for the central locking system.

ZV motor drives

Electrical servo drive motors on the door locks. They are powered by means of the ZV relays in the relay module.

2.2. ZV Functions

The following functions are possible:

- Lock/arrest/unlock/release via door locks of driver's/passenger's door
- Lock/unlock via locking buttons of driver's and passenger's door
- Lock/unlock via rear lid lock
- Workshop setting of rear lid (= vehicle unlocked, rear lid remains locked)

5 Series, E34, touring model:

Lock contacts are operated by means of the lock on the tailgate. The vehicle can therefore be

- locked
- unlocked
- arrested
- released
  via the tailgate lock.

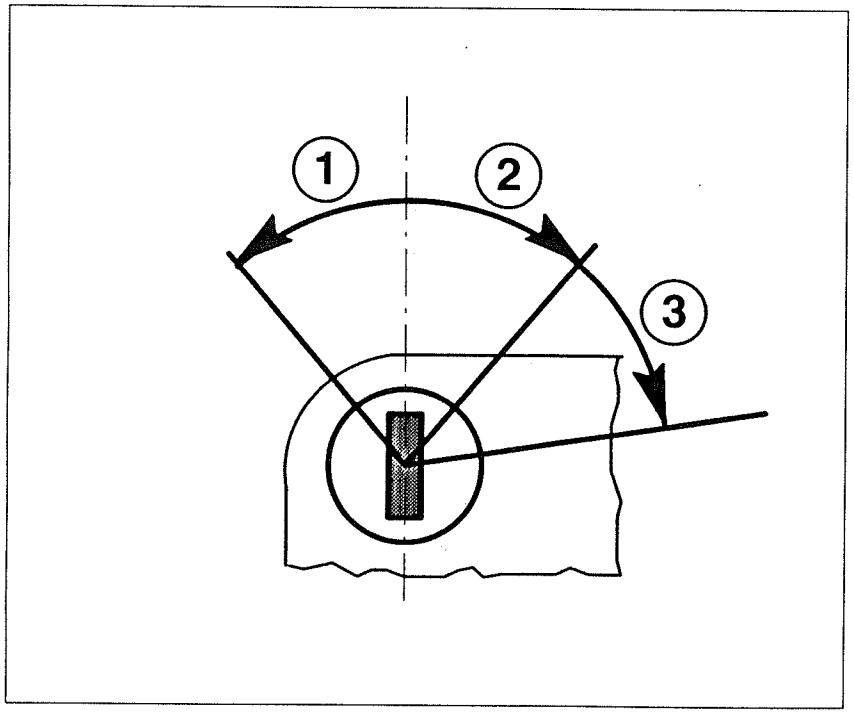

P34 51 007

The vehicle can be locked, arrested and unlocked/released via the door lock of the driver's and passenger's door.

2.3. Door Lock of Driver's and Passenger's Door

The following functions can be performed:

"1" Unlock/release

The vehicle is unlocked and released, if applicable, the antitheft system is disarmed.

"2" Lock

The vehicle is locked without being arrested. The locking buttons on the driver's and passenger's door can be pulled up from the inside, thus unlocking the vehicle.

The lock system is inhibited electrically to prevent locking when the driver's door is open (immediately unlocked after locking).

Only the passenger's door can be locked with the passenger's door open, the other doors are not locked.

"3" Arrest

The vehicle is set in arrest mode, the locking buttons are uncoupled in the turn-catch lock from the opening mechanism. The door is not unlocked when the locking buttons are pulled up.

Emergency unlocking

The driver's and passenger's door can be unlocked mechanically (position "1") in the event of electrical faults. An uncoupled locking button (after arresting) remains uncoupled also after emergency unlocking.

2.4. Rear Lid Lock

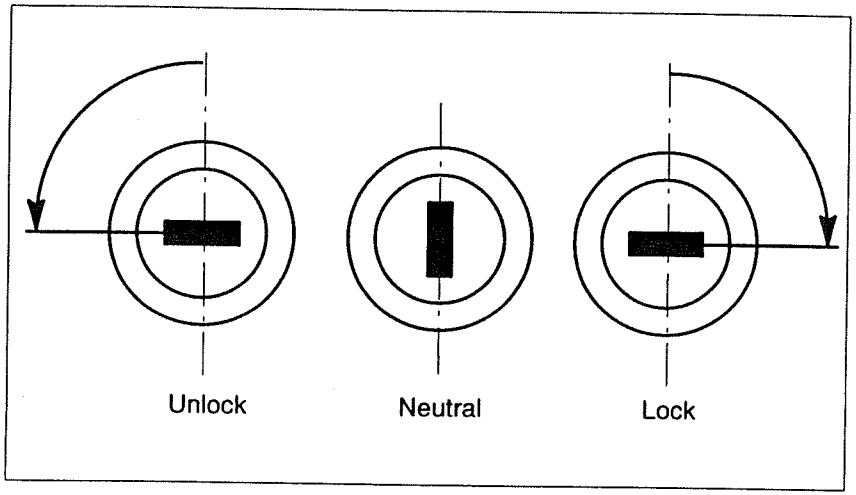

P34 51 006

The pin contact in the ZV motor drive is operated by the rear lid lock. The vehicle can be locked and unlocked. If the vehicle is in arrest mode, the rear lid itself can be unlocked but the doors are not unlocked.

The key can be removed in the key position locked (90° to right). The rear lid can then be permanently locked even when the vehicle is unlocked electrically by means of the central locking system (workshop setting).

2.5. Tailgate Lock on "E34 touring"

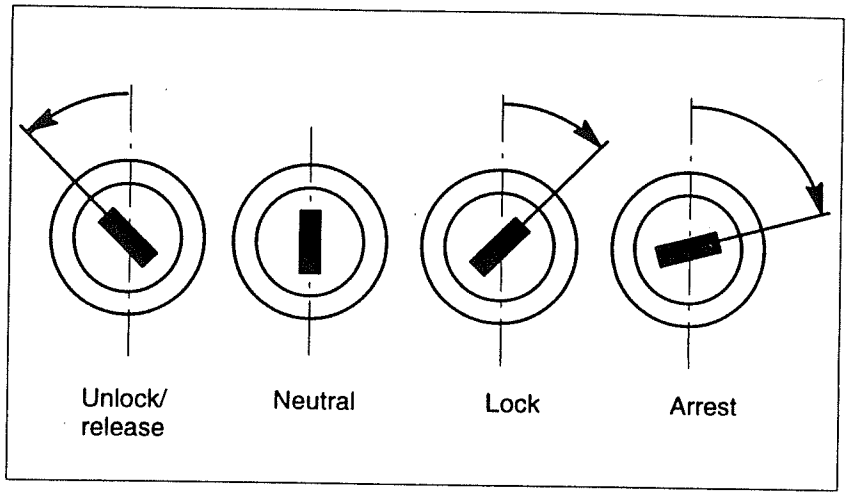

P34 51 008

Lock contacts (microswitches) are operated by the tailgate lock of the "E34 touring". The vehicle can be locked, arrested and unlocked/released.

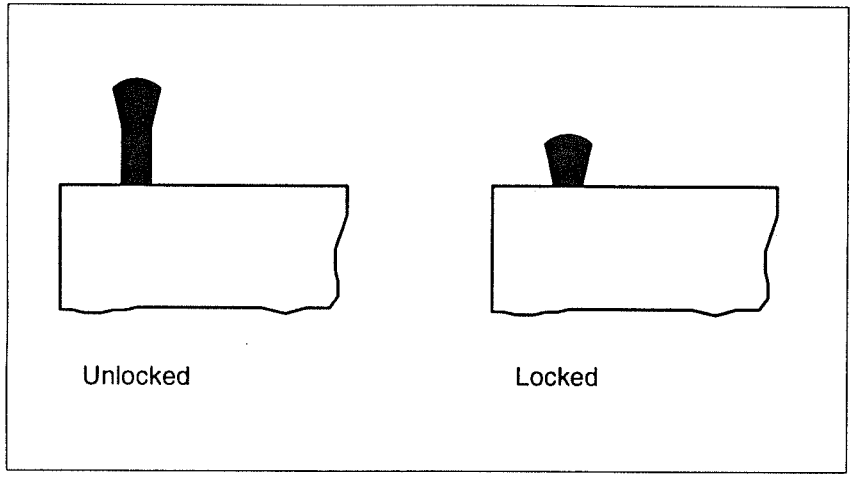

P34 51 009

The vehicle can be locked and unlocked electrically by means of the locking buttons on the passenger's and driver's door. The locking buttons on the rear doors have no influence on the central locking module.

2.6. Locking Buttons

Vehicle in arrest mode

The locking buttons are uncoupled mechanically from the ZV motor drives when the vehicle is centrally arrested. This means:

Although the locking button can be pulled up the door is not unlocked. This function is effective on all doors.

Door open

Driver's door:

If the locking button is pressed down when the driver's door is open, the vehicle is locked electrically and then unlocked automatically. This feature avoids the vehicle being locked unintentionally.

Passenger's door:

Only the passenger's door is locked mechanically if the locking button is pressed down while the passenger's door is open. Electrical locking of the vehicle does not take place.

Rear doors

The locking buttons on the rear doors have no influence on the central locking system.

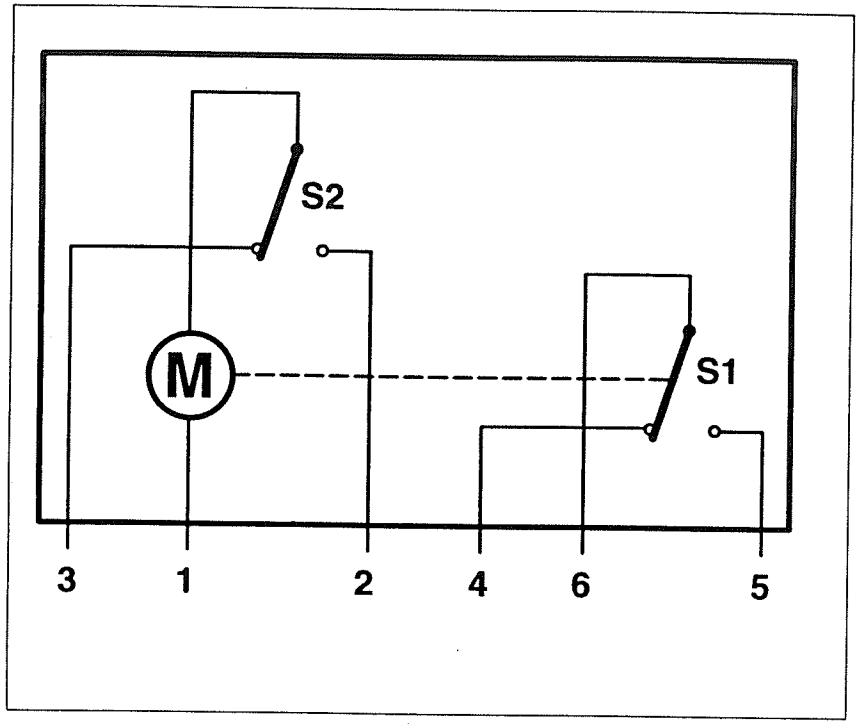

P34 51 010

Block diagram of ZV motor drive. Drawn in unlocked position.

S1 Pin contact (microswitch)
S2 Internal position switch

2.7. ZV Motor Drive

Pin Assignments

Pin	Explanation
1, 2, 3	Wires to relay module, electric motor activation
4, 5	Wires to general module, signalling lock/unlock
6	Wire to fuse, B+ for pin contact

Switching logic

Pin	Unlock	Lock	Arrest
1	from module B+	from module B–	from module B–
2	from module B–	from module B–	from module B+
3	from module B–	from module B+	from module B+
4	B+	open	open
5	open	B+	B+
6	B+ from fuse	B+ from fuse	B+ from fuse

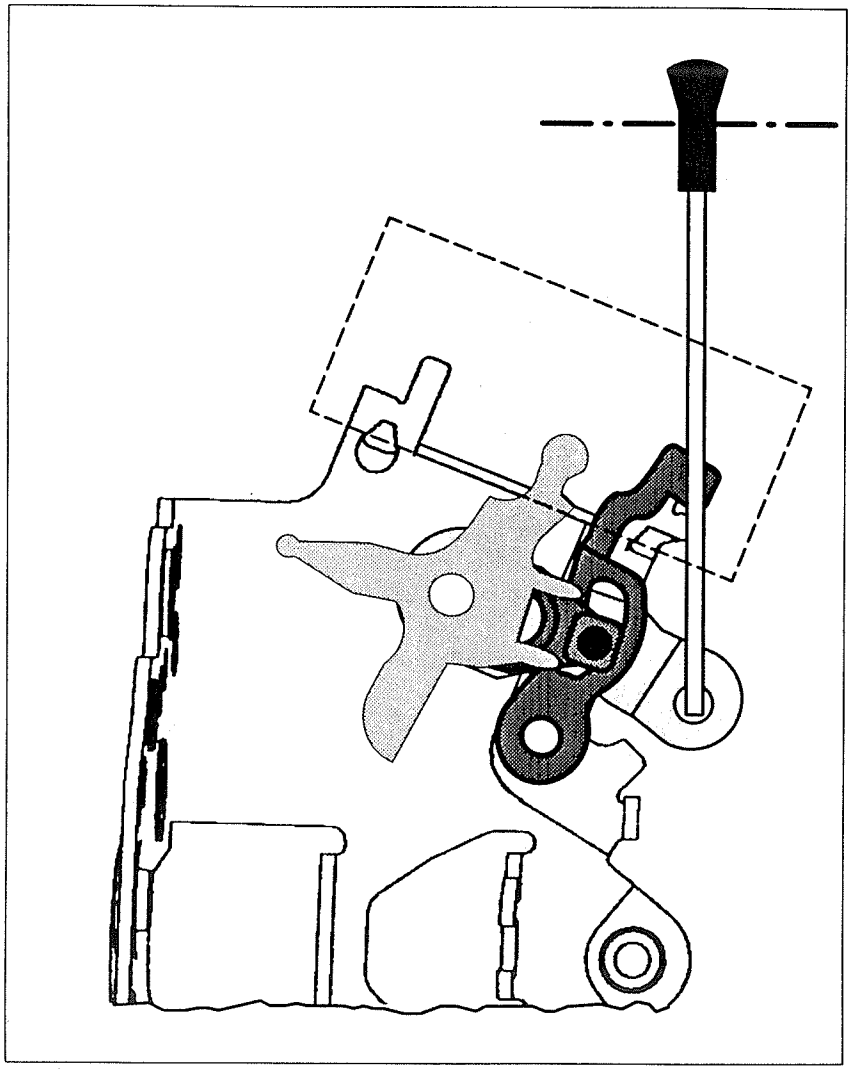

P34 51 014

2.8. Arrest Vehicle

General

The "arrested" status is intended to prevent the vehicle being opened by way of impermissible manipulation.

Since it is not possible to unlock and therefore open the doors from the inside in arrested status, this function is linked to a series of conditions.

Conditions

Arresting is only possible when:

- Ignition and terminal R are switched off, i.e. ignition switch in position "0",
- The driver's door was opened at least once after switching off the ignition,
- The driver's door is closed.

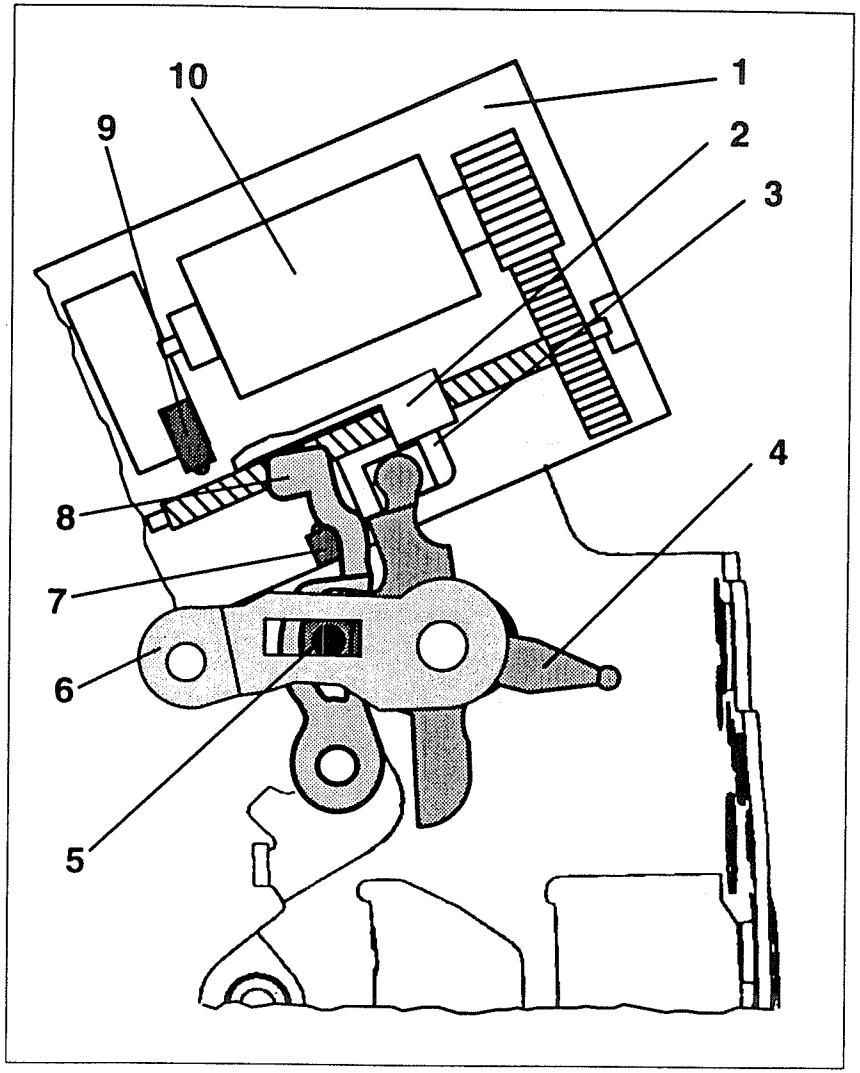

P34 51 011

2.9. Central Locking Functions

Fig. 1: Unlocked status

The figure opposite shows the ZV motor drive "1" and the corresponding mechanics in the turn-catch lock in unlocked status.

The connecting piece "4" can be turned from the door lock or by the locking button in conjunction with the connecting piece "5" and "6". When the part "4" is turned it uncouples the door outer handle from the opening mechanism.

Explanation

1	ZV motor drive
2	Spindle nut
3	Slide
4	Connecting piece to door lock and door outer handle
5	Slide piece, connecting piece between Part 4 and Part 6
6	Connecting piece to locking button
7	Pin contact (microswitch)
8	Lever, uncouples mechanism during arrest
9	Position switch (microswitch)
10	Electric motor

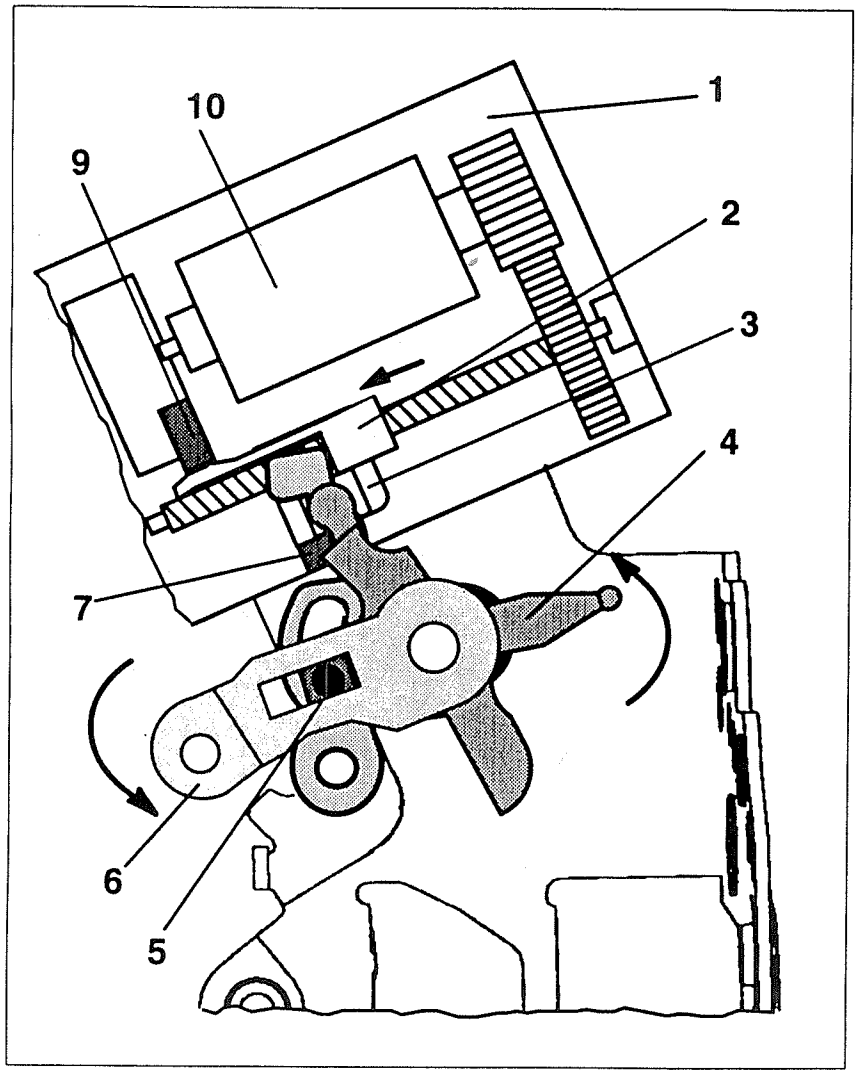

P34 51 012

Fig. 2: Locked status

The figure opposite shows the ZV motor drive and the corresponding mechanics in the turn-catch lock when locked.

The part "4" has been turned. Consequently, the slide "3" has been moved. The pin contact "7" is switched. It switches B+ to the ZKE general module and signals "lock".

Sequence of electrical central locking:

The electric motors "10" in the ZV motor drives "1" receive their power supply. The spindle nuts "2" in the ZV motor drives are moved by means of a spindle. They are connected to the slide blocks "3" and thus cause the connecting piece "4" to rotate. The motors switch off as soon as the limit switches "9" are reached.

As a result, the outer door handles on all doors are uncoupled from the opening mechanism. A locked door can be unlocked by way of the inner door handle. The handle must be pulled twice for this purpose.

The vehicle can be unlocked once again by pulling up the locking button. Part "4" is turned back by means of parts "5" and "6". The slide block "3" is moved away from the pin contact "7". This signals "unlock" and initiates the power supply to the ZV motors. The part "4" is turned back to the unlock position.

The vehicle can also be unlocked by means of the door lock. In this case, the part "4" is turned by the door lock.

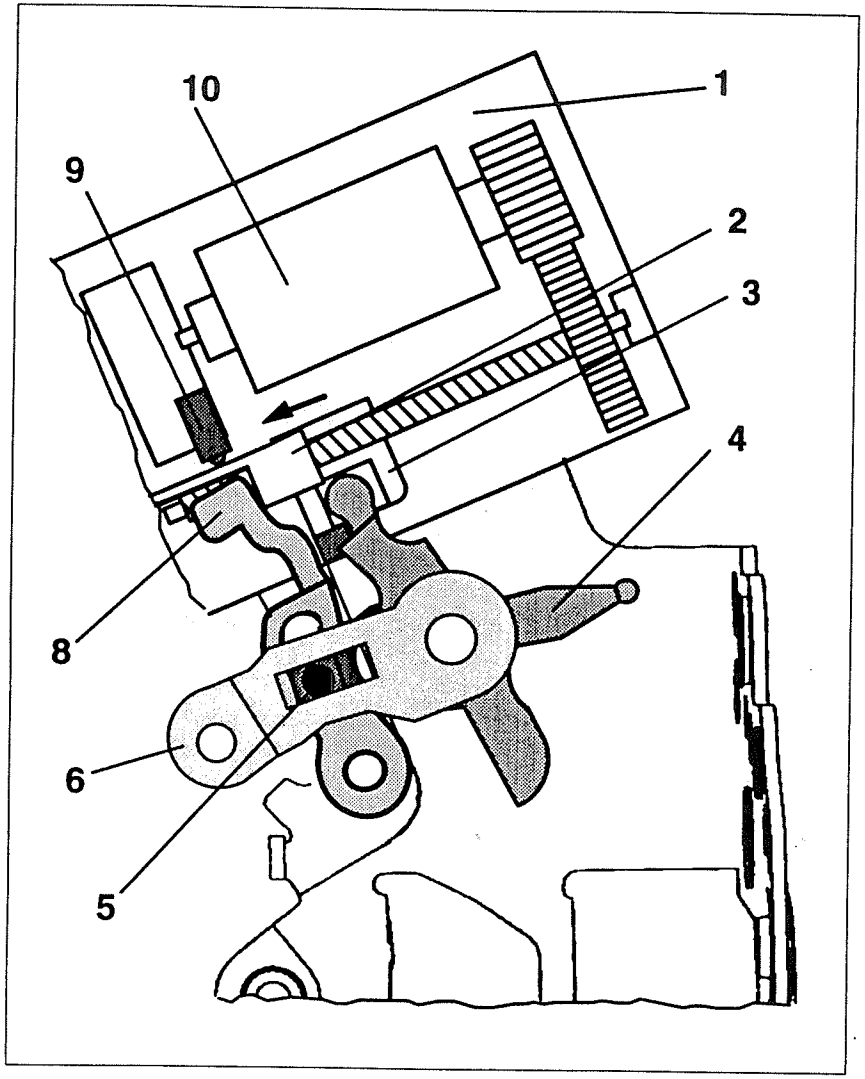

P34 51 013

Fig. 3: Arrested status

Explanation:

In arrest mode, the locking button is mechanically uncoupled from the ZV motor drive.

When the vehicle is arrested, it can only be unlocked via the door locks of the driver's door or passenger's door.

Although the locking buttons can still be pulled up in arrest mode, they do not unlock the doors.

The rear lid can be unlocked also in arrest status, however, no doors are unlocked in this case.

Procedure:

A microswitch is operated by the driver's door (also the tailgate lock in E34 touring) when it is turned to the "arrest" position.

The electric motors "10" receive their power supply. The spindle nut "2" is moved. It uncouples from the slide blocks "3" and moves the lever "8". This lever uncouples the locking button from the "unlocking mechanism" in the turn-catch lock.

Unlocking is now only possible via the door locks. They are connected to part "4". Part "4" moves back the sliding block "3" when the door lock is turned to the "unlock" position. The slide block "3" is moved away from the pin contact "7". This signals "unlock" and triggers the power supply to the ZV motors. The spindle nuts "2" in all ZV motor drives are moved back to the "unlock" position.

Important!

Emergency operation

If the central locking system fails due to an electrical fault, the driver's and passenger's doors can be unlocked via the door locks even when arrested.

Defect information

If one of the following defects occur:

- driver's or passenger's door is not locked or unlocked,
- ZV motor drive for driver's or passenger's door faulty,
- rear lid is not locked,

this is signalled to the operator by the following sequence:

- After locking, the vehicle is automatically unlocked once again. This function is carried out on the second unlocking attempt.

or

- After unlocking, the vehicle is automatically locked once again. This function is carried out on the second unlocking attempt.

Repeat lockout

If the central locking system is operated more than 30 times within 2 min, the entire system is switched off by a repeat lockout function for approx. 2 minutes. This function prevents overloading of the ZV motor drives.

Crash sensor:

(Inertia switch) installation location: Under left rear seat. The crash sensor is effective only when the ignition switch is set to R or 15 (position 1 or 2). At the point of impact, the sensor briefly switches a ground signal to the general module. The vehicle is unlocked/released, the interior lights are switched on (only in switch position automatic interior lights), the hazard warning system is activated (only if a crash and alarm sensor is installed) and the central locking system (ZV) is disabled.

BMW 5 BMW 7

Central Locking System (ZV/ZKE)

General Block Diagram

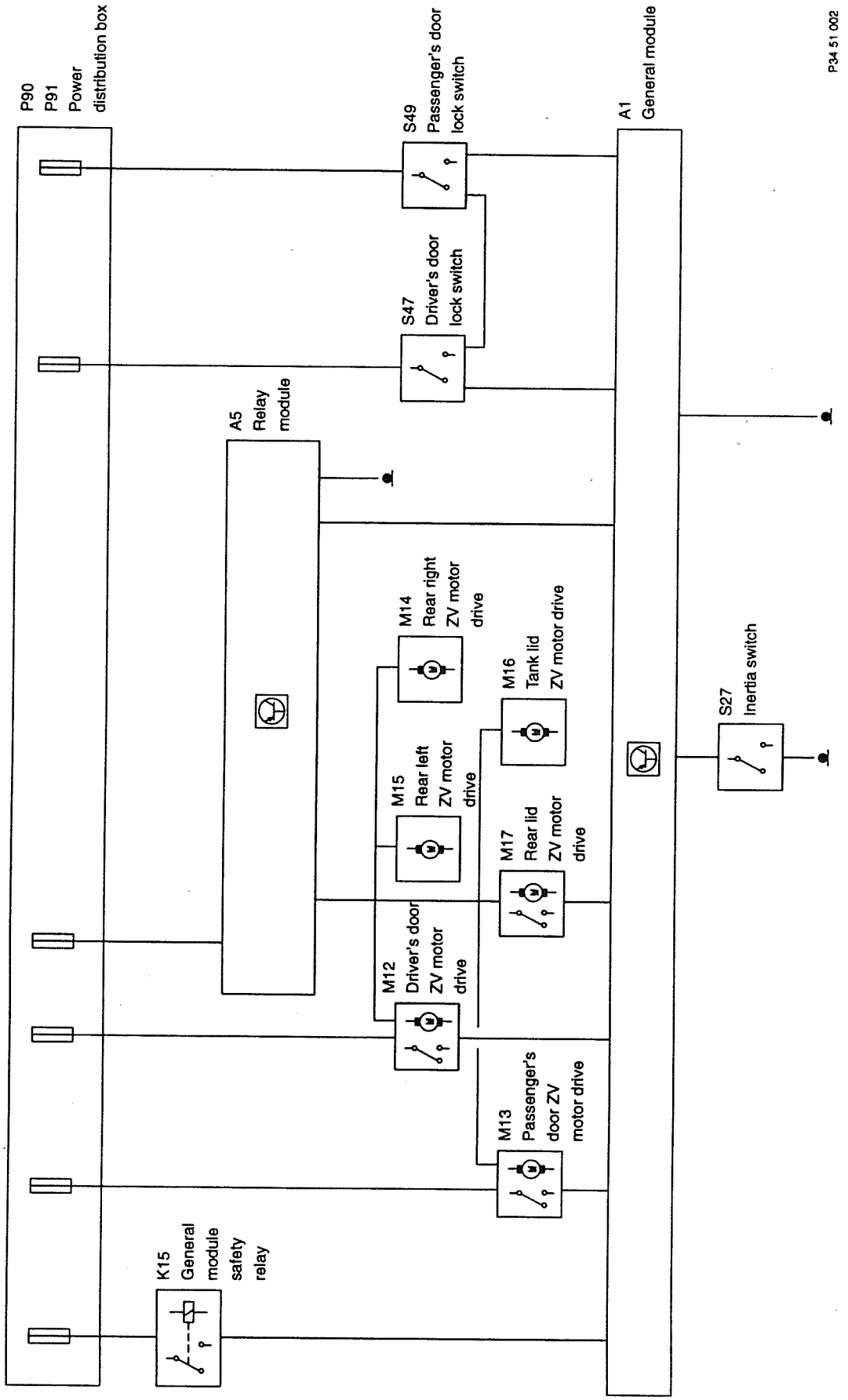

Notes on the BMW DIAGNOSTIC SYSTEM

ZV Systems

The diagnostic program automatically detects which ZV system (decoupling of locking of the locking button) is installed.

Status Monitoring

The program incorporates precise instructions and notes relating to the tests and troubleshooting.

The ignition can be switched off when testing the door lock and pin contacts.

During simulation of the central locking system ZV outputs, the ZV relays are set as defective. For this reason, the defect code memory is cleared automatically after simulation. Re-detection of defects: Operate central locking system from the vehicle (normal operation with key).

Simulation of the central locking system ZV outputs should be performed only with the ignition ON.

Since attempting to open a locked vehicle from the outside poses considerable problems, at least one window or one of the rear doors should be kept open during simulation of the outputs.

Abbreviations

ZKE	Central body electronics
ZV	Central locking system
GM	General module
RM	Relay module
GM-A	General module connector A, 5-pin, colour white
GM-B	General module connector B, 26-pin, colour green
GM-C	General module connector C, 26-pin, colour white
GM-D	General module connector D, 26-pin, colour yellow
RM-A	Relay module connector A, 20-pin, colour black
RM-B	Relay module connector B, 20-pin, colour white
E	Input
A	Output

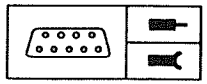

Pin Assignment

Connector Numbers

Number	Type	Designation
X332	5-pin, white	GM-A
X253	26-pin, green	GM-B
X254	26-pin, white	GM-C, installed only in conjunction with power windows
X255	26-pin, yellow	GM-D
X258	20-pin, black	RM-A up to model year '88 RM-B as of model year '89
X259	20-pin, white	RM-B up to model year '88 RM-A as of model year '89

Pin Assignments at General Module for ZV with Blocking of ZV Drive

Pin	Type	Description/function	Connection	Type of signal	Tester display	Measurement notes
D24	E	Arrest/unlock detection	Driver's door lock contact	B+	ON	
D16	E	Arrest/unlock detection	Passenger's door lock contact	B+	ON	
D7	E	Lock detection	Driver's and passenger's door lock contacts	B+	ON	

Central Locking System (ZV/ZKE)

Pin Assignments

Pin	Type	Description/function	Connection	Type of signal	Tester display	Measurement notes
D20	E	Lock detection	Driver's door pin contact	B+	Locked	
D23	E	Unlock detection	Driver's door pin contact	B+	Unlocked	
D11	E	Lock detection	Rear lid pin contact	B+	Locked	
D17	E	Unlock detection	Driver's door and rear lid pin contact	B+	Unlocked	
D15	E	Driver's door contact	Door contact	Ground	OPEN	
B23	E	Crash sensor	Crash sensor	Ground	ON	Only on impact
B8	A	QZV signal of ZV	DWA control unit	B+		When vehicle locked or in arrest mode
B9	A	Output of crash information	Crash sensor/alarm generator	B–		
B17	A	Relay activation, lock	Relay module Pin B3	B–	(activation)	Duty cycle approx. 700 ms
B18	A	Relay activation, unlock	Relay module Pin B2	B–	(activation)	Duty cycle approx. 700 ms
B5	A	Relay activation, arrest	Relay module Pin B4	B–	(activation)	Duty cycle approx. 700 ms
B25	E	Diagnostic link for ZV relay, arrest	Relay module Pin A10	B+/B–	Defect code is stored	
B13	E	Diagnostic link for ZV relay	Relay module Pin A9	B+/B–	Defect code is stored	

Pin Assignments at General Module for ZV with Decoupling of ZV Drive

Pin	Type	Description/function	Connection	Type of signal	Tester display	Measurement notes
D24	E	Arrest detection	Lock contact	B+	Arrest	
D16	E	Arrest/unlock detection	Tailgate lock contact (E34 touring only) or infrared locking system	B+	Unlock arrest	
D7	E	Lock detection	Tailgate lock contact (E34 touring only) or infrared locking system	B+	Lock	
D11	E	Lock detection	Passenger's door pin contact	B+	Lock	
D20	E	Lock detection	Driver's door pin contact	B+	Lock	
D23	E	Lock detection	Rear lid pin contact	B+	Lock	
D17	E	Unlock detection	Driver's door, passenger's door and rear lid pin contact	B+	Unlock	
D15	E	Driver's door contact	Door contact	Ground	OPEN	
D1	E	Passenger's door contact	Door contact	Ground	OPEN	
B23	E	Crash sensor	Crash sensor	Ground	ON	Only on impact
B8	A	QZV signal of ZV	DWA control unit	B+		Only when vehicle locked and in arrest mode
B9	A	Output of crash information	Crash sensor/alarm generator	B–		
B17	A	Relay activation, lock	Relay module Pin B3	B–	(activation)	Duty cycle approx. 700 ms
B18	A	Relay activation, unlock	Relay module Pin B2	B–	(activation)	Duty cycle approx. 700 ms
B5	A	Relay activation, arrest	Relay module Pin B4	B–	(activation)	Duty cycle approx. 700 ms
B25	E	Diagnostic link for ZV relay, arrest	Relay module Pin A10	B+/B–	Defect code is stored	
B13	E	Diagnostic link for ZV relay	Relay module Pin A9	B+/B–	Defect code is stored	

Pin Assignments at Relay Module (applicable to both systems)

Pin	Type	Description/function	Connection	Type of signal	Tester display	Measurement notes
B3	E	Relay activation, lock	General module Pin B17	B–	(activation)	Duty cycle approx. 700 ms
B2	E	Relay activation, unlock	General module Pin B18	B–	(activation)	Duty cycle approx. 700 ms
B4	E	Relay activation, arrest	General module Pin B5	B–	(activation)	Duty cycle approx. 700 ms
B12	E	Ground for ZV servo drive	Ground	B–		
B15	E	B+ for relay and general module	Fuse No. F30	B+		
B11	E	Electronic power fuse	General module Pin A5	B+	ON	
B5	A	B+ for general module	General module Pin A1	B+		
A10	A	Diagnostic link for ZV relay, arrest	General module Pin B25	B–/B+	Defect code is stored	
A9	A	Diagnostic link for ZV relay	General module Pin B13	B–/B+	Defect code is stored	
B1	A	Actuation of servo drives	ZV servo drives	B–/B+	(activation).	Duty cycle approx. 700 ms
B13	A	Activation of servo drives	ZV servo drives	B–/B+	(activation)	Duty cycle approx. 700 ms
B14	A	Activation of servo drives	ZV servo drives	B–/B+	(activation)	Duty cycle approx. 700 ms

Troubleshooting

Notes

- Troubleshooting with BMW DIAGNOSTIC SYSTEM, refer to information provided on screen pages!
- Battery charged, U-min = 12 V
- If all functions of the central body electronics (ZKE) have failed, perform troubleshooting in accordance with the Section ZKE 6100.0.
- If the electronic power fuse is signalled as defective or if the fuse is OFF despite the ignition being ON (♦D♦027 Electronic power fuse), continue with Section ZKE 6100.0A.
- Set the ZV motor drives mechanically as described in the Operating Instructions, Group 51.

ZV System with Blocking of ZV Drives

Before starting the troubleshooting procedure, check whether the locking linkage of the driver's and passenger's door is synchronized. Refer to functional description Point 1.3. Door lock of driver's and passenger's door.

Important!

When the supply voltage is applied (terminal 30 at Pin A1), the ZKE general module detects which part systems are installed in the vehicle. Undefined coding when plugging in the module can result in systems not being detected. Therefore:

Disconnect vehicle battery before installing the ZKE general module!

or

Disconnect the vehicle battery for at least 5 sec after installing the ZKE general module.

Refer to Section 6100.0A Central Body Electronics (ZKE), Functional Description.

Defect Code Table

For both systems:

♦D♦ Defect code memory: Defect codes 01, 02, 03 stored → Defect code 01, 02, 03

For both systems:

A door is not locked, unlocked and/or arrested → Defect code 04

For ZV system with blocking of ZV motor drives:

General malfunction at all doors → Defect code 05

For ZV with decoupling of ZV motor drives:

General malfunction at all doors → Defect code 06

For ZV with blocking of ZV motor drives:

Mechanical defect at front door → Defect code 07

Mechanical defect at rear door → Defect code 08

For both systems:

Mechanical defect at rear lid or tank lid → Defect code 09

Defect Codes 01, 02, 03

♦D♦900 Defect code memory: Defect code 01, 02, 03 stored

– one or several defects –

Explanation: With the aid of the diagnostic links, the general module detects whether the ZV relays in the relay module pick up and drop out again when the central locking system is activated.
Diagnostic lines:
With connector GM-C: From RM-A 10 to GM-C 1 and from RM-A 9 to GM-C 15.
Without connector GM-C: From RM-A 10 to GM-B 25 and from RM-A 9 to GM-B 13.
A defect code is also stored if the wires themselves are broken.

Note: The diagnostic link from GM-C 1/B 25 to RM-A 10 also serves the purpose of checking the wiper relay in the relay module (RM).

Possible cause: Wires GM-RM, relay in RM, ground wire RM-B 12.

Troubleshooting

– 1. If all central locking functions are defective, continue with diagnostic procedure ZKE 6100.0A, Defect code 03.

– 2. If no defect can be detected despite a defect code being store, check diagnostic link from the general module (GM) to the relay module (RM) (see above). Repair defective wires.

– 3. Only defect code 01 is stored, arrest function faulty: Check wire from RM-B Pin 4 to GM-B Pin 5, repair as necessary. If wire is OK., replace relay module.

– 4. Only defect code 03 is stored, unlocking function faulty: Check wire from RM-B Pin 2 to GM-B Pin 18, repair as necessary. If wire is OK., replace relay module.

– 5. Defect codes 01 and 02 are stored, locking function faulty: Check wire from RM-B Pin 3 to GM-B Pin 17, repair if necessary. If wire is OK., replace relay module.

ZV Systems with Decoupling of ZV Motor Drive

1. Check ZV locking linkage for mechanical defects, repair if necessary.
2. Check wires from defective ZV motor drive to ZKE relay module, repair if necessary.
3. If wires and mechanical systems OK., replace defective ZV motor drive.

Defect Code 04

A door is not locked, unlocked and/or arrested

Note: This defect may cause the central locking system (ZV) to unlock again immediately after locking or arresting (or lock again after unlocking). See functional description – Defect information.

Troubleshooting

ZV with Blocking of ZV Motor Drives

1. Front doors: Synchronise central locking system (ZV).
   Procedure: Close door. Turn door lock to right with vehicle key beyond hard pressure point.
2. Check ZV motor drive and renew if necessary.
   A defective ZV motor drive has a play of 1 – 2 mm also in the "arrested" position.
3. Check ZV system for mechanical defects and repair if necessary – refer to Section 5126.0B Component Testing.
4. Check wires from defective ZV motor drive to ZKE relay module, and repair if necessary.
5. If wires and mechanics are OK., replace defective ZV motor drive.

ZV with Decoupling of ZV Motor Drives

1. Check ZV system for mechanical defects and repair if necessary.

– Linkage detached?
– Turn catch lock defective?
– Locking cylinder defective?

2. Check wires from defective ZV motor drive to ZKE relay module and repair if necessary.
5. If wires and mechanics OK., replace defective ZV motor drive.

Defect Code 05

General Malfunction at all Doors

Applicable to ZV with blocking of ZV motor drives

Troubleshooting

♦D♦MONITOR INPUTS
Lock contacts
Switch door lock with vehicle key in all positions. Are door lock contacts detected correctly?

— no → Is at least one contact detected at a door?

— no → Repair power supply for lock contacts.

yes ↓

— * —

yes ↓

Check lock contacts. Refer to Component Testing 5126.0B. Are lock contacts OK.?

— no → Replace microswitch.

yes ↓

— * —

yes ↓

Are wires from lock contact to GM connector D (yellow) OK.?
Driver's door: Lock GM-D7, unlock/arrest GM-D24.
Passenger's door: Lock GM-D7, unlock/arrest GM-D16.

— no → Repair defective wire.

yes ↓

Check mechanics of door lock, repair if necessary.

— * —

yes ↓

♦D♦ MONITOR INPUTS
Driver's door pin contact
Close door. Locking knob must not be locked in position (if necessary, synchronise or repair mechanical fault)! Operate locking button. Is LOCKED and UNLOCKED indicated correctly?

— no → Detach 6-pin connector at ZV motor drive. Is power supply to Pin 5 OK.?

— no → Repair power supply.

yes ↓

— * —

yes ↓

Check pin contact in ZV motor drive. Refer to Component Testing 5126.0B. Is pin contact OK.?

— no → Replace ZV motor drive.

yes ↓

— * —

yes ↓

Repair defective wire from 6-pin connector of ZV motor drive to GM.
Lock: From Pin 3 to GM-D20.
Unlock: From Pin 6 to GM-D23.

— * —

yes ↓

♦D♦MONITOR INPUTS
Rear lid pin contact
Turn rear lid lock with vehicle key in position locked and unlocked. Is LOCKED and UNLOCKED indicated correctly?

— no → Detach 6-pin connector at ZV motor drive. Power supply to Pin 3 OK.?

— no → Repair power supply.

— * —

yes ↓

Check pin contact in ZV motor drive. Refer to Component Testing 5126.0B. Is pin contact OK.?

— no → Replace ZV motor drive.

— * —

yes ↓

Repair defective wire from 6-pin connector of ZV motor drive to GM.
Lock: From Pin 1 to GM–D11.
Unlock: From Pin 2 to GM–D17.

— * —

yes ↓

yes ↓

yes ↓

♦D♦MONITOR INPUTS
Passenger's door pin contact
Close passenger's door. Locking button must not be locked in position (if necessary, synchronise or repair mechanical defect)! Operate locking button. Is LOCKED and UNLOCKED indicated correctly?

— no → Detach 6-pin connector at ZV motor drive. Is power supply to Pin 5 OK.?

— no → Repair power supply.

—*—

yes ↓

Check pin contact in ZV motor drive. Refer to Component Testing 5126.0B. Is pin contact OK.?

— no → Replace ZV motor drive.

—*—

yes ↓

Repair wire from 6-pin connector of ZV motor drive Pin 6 to GM-D17.

—*—

yes ↓

♦D♦MONITOR INPUTS
Door contact
Open and close driver's door. Does the display OPEN, CLOSE of driver's door contact agree with the actual status on the vehicle?

— no → Check door contact for mechanical defect (jamming, break, etc.)! Is contact OK. mechanically?

— no → Replace door contact.

— * —

yes ↓

Is ground connection to door contact OK.?

— no → Repair wire.

— * —

yes ↓

Check door contact for continuity. Resistance < 1 Ω, when contact not depressed (door open). Is contact OK.?

— no → Replace door contact.

— * —

yes ↓

Repair wire to GM-D 15.

— * —

yes ↓

yes ↓

yes ↓

♦D♦MONITOR INPUTS
Terminal R
Briefly switch on ignition then switch off again. Is terminal R indicated as OFF?

— no → Remove wiper contact K11 in component support bracket. Is OFF now indicated?

— yes → Relay K11 sticking. Replace relay.

—*—

no ↓

Check wire to GM connector D (yellow) Pin 10 for short to B+, repair if necessary.

—*—

yes ↓

♦D♦MONITOR INPUTS.
Crash sensor
Is status OFF with ignition switched on and vehicle stationary?

— no → Crash status ON. Detach 2-pin plug connection to crash sensor. Is OFF now indicated?

— yes → Replace crash sensor.

—*—

no ↓

Wire from crash sensor to GM connector B (green) Pin 23 has short to ground. Repair wire.

—*—

yes ↓

♦D♦SIMULATE OUTPUTS.
Can at least one door be properly locked, arrested, unlocked?

— no → ♦D♦900 Defect code memory. Operate all central locking functions from the vehicle with the door lock? Is a defect indicated?

— yes → Continue with defect codes 01, 02, 03.

— * —

no ↓

Are all ZV functions defective?

— yes → Check fuse No. 47 and electronic power fuse, Section 6100.0.

— * —

no ↓

Are wires from RM connector B (white) to the ZV motor drives OK.?

— no → Repair wires.

— * —

yes ↓

Replace relay module.

— * —

yes ↓

yes ↓

yes ↓

Central locking system is OK. electrically. If a defect code is still set, the fault must be of a mechanical nature.

— * —

Defect Code 06

General Malfunction at all Doors

Applicable to ZV with decoupling of ZV motor drives

Troubleshooting

♦D♦MONITOR INPUTS
Lock contact
Using vehicle key, switch door lock in "arrest" position. Is "arrest" detected?

— no → Are fuse and wire from fuse to microswitch OK.?

— no → Repair power supply for lock contacts.

— * —

yes ↓

Check lock contact (microswitch) electrically and mechanically. Is lock contact OK.?

— no → Replace microswitch.

— * —

yes ↓

yes ↓

Are wires from lock contact to GM connector D (yellow) Pin 24 OK.? — no → Repair defective wire.

yes ↓

Check mechanics of door lock, repair if necessary.

— * —

yes ↓

♦D♦MONITOR INPUTS
Driver's door pin contact
Passenger's door pin contact
Operate locking button. Is LOCKED and UNLOCKED indicated correctly? — no → Detach 6-pin connector at ZV motor drive. Is power supply to Pin 6 OK.? — no → Repair power supply.

yes ↓

— * —

yes ↓

Check pin contact in ZV motor drive. Refer to Component Testing 5126.0B. Is pin contact OK.? — no → Replace ZV motor drive.

yes ↓

— * —

yes ↓

Repair defective wire from 6-pin connector of ZV motor drive to GM.
Driver's door:
Lock: From Pin 5 to GM-D20.
Unlock: From Pin 4 to GM-D17.
Passenger's door:
Lock: From Pin 3 to GM-D20.
Unlock: From Pin 5 to GM-D17.

— * —

yes ↓

This test step does not apply to the E34 touring:

♦D♦MONITOR INPUTS
Rear lid pin contact
Using vehicle key, turn rear lid lock in position locked and unlocked. Are LOCKED and UNLOCKED displayed correctly?

— no → Detach 6-pin connector at ZV motor drive. Is power supply to Pin 3 OK.?

— no → Repair power supply.

yes ↓

— * —

yes ↓

Check pin contact in ZV motor drive. Refer to Component Testing 5126.0B. Is pin contact OK.?

— no → Replace ZV motor drive.

— * —

yes ↓

yes ↓

Repair defective wire from 6-pin connector of ZV motor drive to GM.
Lock: From Pin 1 to GM–D23.
Unlock: From Pin 2 to GM–D17.

— * —

yes ↓

This test step <u>only</u> applies to E34 touring:

♦**D**♦MONITOR INPUTS
Tailgate lock contact
Using vehicle key, turn tailgate lock in positions locked, arrest and unlock. Are all positions indicated correctly?

— no → Are fuse and power supply for pin contact OK.

— no → Repair power supply.

— * —

yes ↓

Check lock contact (microswitch) electrically and mechanically. Is lock contact OK.?

— no → Replace microswitch.

— * —

yes ↓

Are wires from lock contact to GM connector D (yellow) Pin 16 and Pin 7 OK.?

— no → Repair defective wire.

— * —

yes ↓

Check mechanics of tailgate lock and repair if necessary.

— * —

yes ↓

♦D♦MONITOR INPUTS
Door contacts
Open and close driver's door and passenger's door. Do the indicated OPEN, CLOSED settings agree with the actual status on the vehicle?

— no → Check door contact for mechanical defect (jamming, break, etc.)! Is contact OK. mechanically?

— no → Replace door contact.

yes ↓

— * —

yes ↓

Is ground connection to door contact OK.?

— no → Repair wire.

yes ↓

— * —

yes ↓

Check door contact for continuity. Resistance < 1 Ω, when contact is not depressed (door open). Is contact OK.?

— no → Replace door contact.

yes ↓

— * —

yes ↓

Repair wire to GM. Driver's door: GM-D15, Passenger's door: GM-D1.

— * —

♦D♦MONITOR INPUTS
Terminal R
Briefly switch on ignition, then switch off again. Is terminal R indicated as OFF?

— no → Remove wiper relay K11 in rear of component support bracket. Is OFF now indicated?

— yes → Relay K11 sticking. Replace relay.

—*—

no ↓

Check wire to GM connector D (yellow) Pin 10 for short to B+ and repair if necessary.

—*—

yes ↓

♦D♦MONITOR INPUTS.
Crash sensor
Is status OFF with ignition switched on and vehicle stationary?

— no → Crash status ON. Detach 2-pin plug connection to crash sensor. Is OFF now indicated?

— yes → Replace crash sensor.

—*—

no ↓

Wire from crash sensor to GM connector B (green) Pin 23 has short to ground. Repair wire.

—*—

yes ↓

♦D♦SIMULATE OUTPUTS.
Can at least one door be properly locked, arrested, unlocked?

— no → ♦D♦900 Defect code memory. Operate all central locking functions from the vehicle with the door lock. Is a defect indicated?

— yes → Continue with defect codes 01, 02, 03.

—*—

no ↓

Are all ZV functions defective?

— yes → Check fuse No. 47 and electronic power fuse, Section 6100.0.

—*—

no ↓

Are wires from RM connector B (white) to the ZV motor drives OK.?

— no → Repair wires.

—*—

yes ↓

Replace relay module.

—*—

yes ↓

yes ↓

yes ↓

Central locking system is OK. electrically. If a defect code is still set, the fault must be of a mechanical nature.

—*—

Defect Code 07

Mechanical Defects at the Front Door

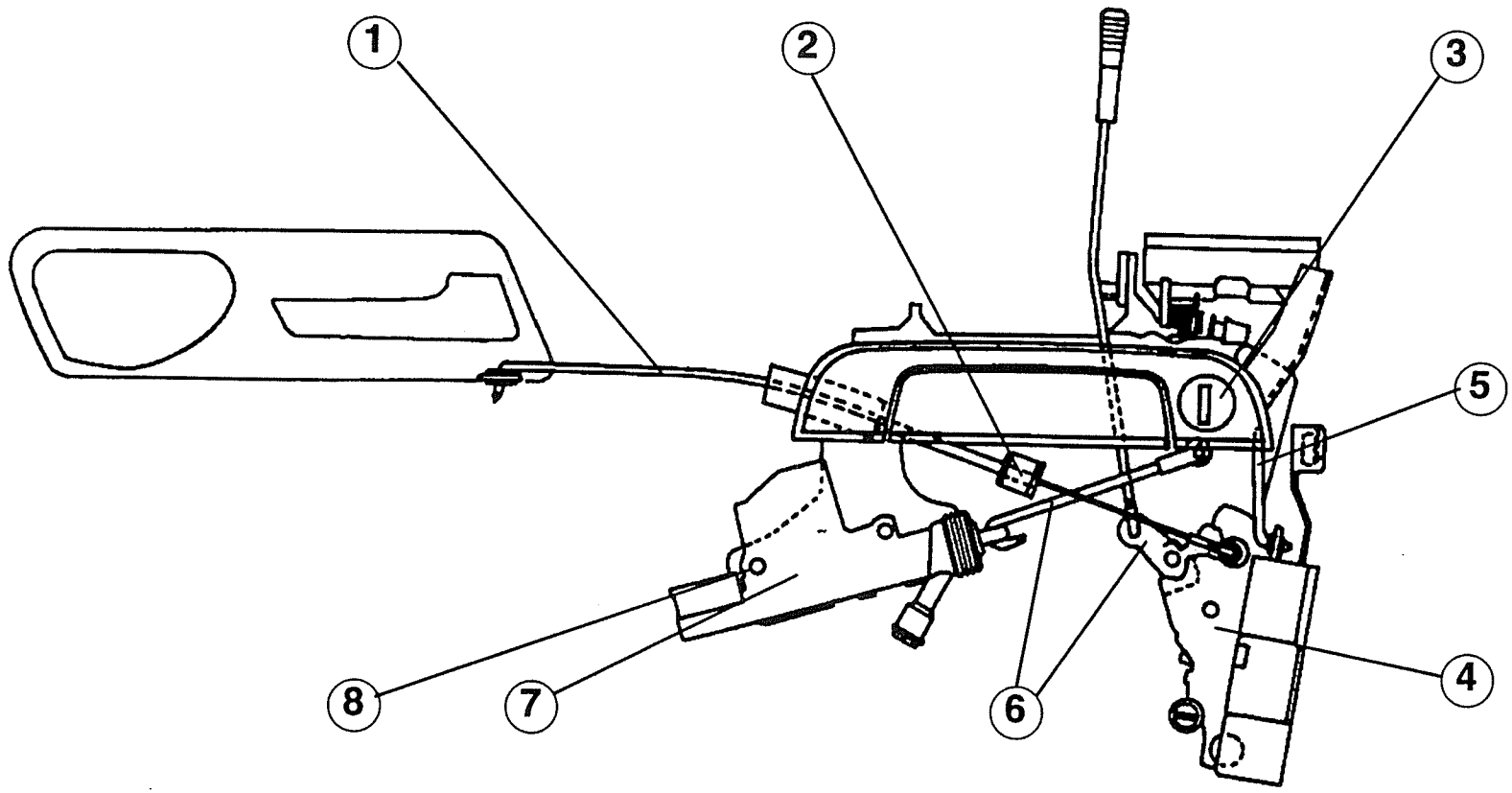

ZV System with Blocking of ZV Motor Drives

P34 51 023

No.	Fault	Effect	Corrective measures
1	Interior operating cable detached	Door cannot be opened from the inside	Clip in operating cable correctly. If necessary, bend crimp or replace operating cable.
2	Operating cable guide sleeve not correctly locked in clip.	a) Driver's door cannot be locked. b) Driver's door cannot be synchronised.	Lock operating cable guide sleeve against limit stop in the retaining clip on the inner door panel.
3	Locking cylinder defective.	Locking cylinder stiff or cannot be turned.	Disassemble locking cylinder in accordance with repair instructions. Replace corroded or damaged parts. Grease locking cylinder with locking cylinder grease.
4	Safety turn-catch lock defective.	a) The locking button can be pressed when the driver's door is open. b) Driver's or passenger's door cannot be unlocked in the emergency function (see Functional Description) c) Door cannot be locked. d) Turn-catch does not engage.	Replace safety door-catch lock.
5	Tie rod between door handle and turn-catch lock detached.	Door cannot be locked.	Attach tie rod. Check that plastic bush has not fallen out.
6	ZV at driver's door asynchronous.	Driver's door cannot be locked.	Synchronise ZV. **Procedure:** Close driver's door. Using vehicle key, turn lock cylinder to right beyond hard pressure point and lock door mechanically.
7	ZV motor drive blocked in position locked or arrested. **Indication:** A ZV motor drive in working order has a play of 1 – 2 mm also in the "arrested status".	Door cannot be unlocked or released.	Replace ZV motor drive. **Note:** A defective drive must not be re-installed even if it is OK. in the meantime.

No.	Fault	Effect	Corrective measures
8	ZV drive adjusted incorrectly.	a) Door cannot be locked. b) ZV locked or unlocked of own accord.	Adjust ZV drive correctly. **Perform testing and adjustment in accordance with Repair Instructions Group 51–...**

Defect Code 08

Mechanical Defects at Rear Door

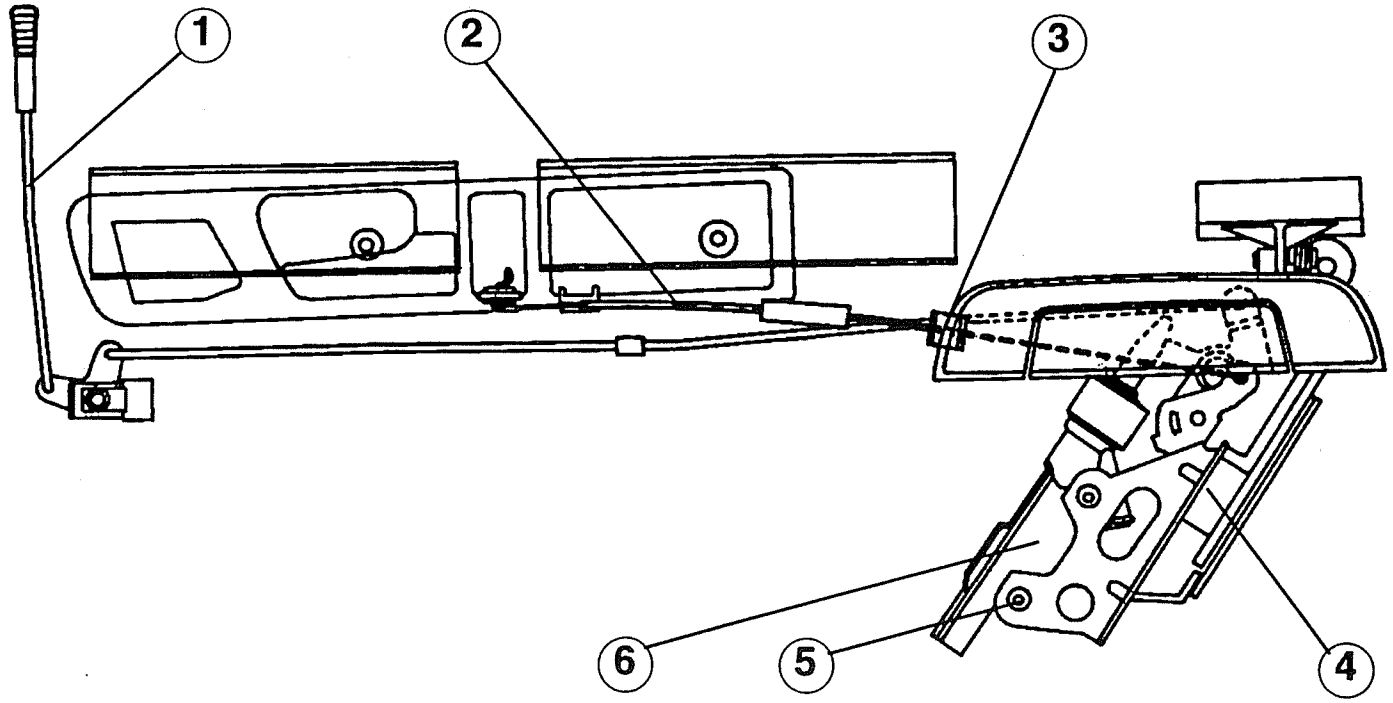

ZV System with Blocking of ZV Motor Drive

P34 51 024

No.	Fault	Effect	Corrective measures
1	Linkage between locking button and turn-catch lock detached or bent or joint stiff.	a) Door cannot be locked with locking button. b) Locking button is not or only partly pulled down during central locking function.	Attach or repair linkage.
2	Interior operating cable detached.	Door cannot be opened from the inside.	Clip in operating cable correctly. If necessary bend crimp or replace operating cable.
3	Operating cable guide sleeve not locked in correctly in clip.	Driver's door cannot be locked.	Lock operating cable guide sleeve in position at stop in securing clip on inner door panel.
4	Safety turn-catch lock defective.	a) Door cannot be locked. b) Lock-catch does not engage.	Replace safety turn-catch lock.
5	ZV drive adjusted incorrectly.	Door cannot be locked.	Adjust ZV drive correctly. **Perform test and adjustment in accordance with Repair Instructions Group 51–...**
6	ZV drive blocked in position locked or arrested. **Indication:** A ZV drive in working order has a play of 1 – 2 mm also in the "arrest" status.	Door cannot be unlocked or released.	Replace ZV motor drive. **Note:** A defective motor drive must not be re-installed even if OK. in the meantime.

Defect Code 09

Mechanical Defects at Rear Lid and Tank Flap

Fault	Effect	Corrective measures
ZV motor drive for rear lid adjusted incorrectly. **Indication:** The switching points for lock and unlock are symmetrical when the setting is correct (see Repair Instructions Group 51–...)	ZV locked or unlocked of own accord.	Adjust ZV drive correctly. Perform adjustment work in accordance with Repair Instructions Group 51–...
ZV motor drive blocked.	Rear lid cannot be unlocked.	Replace ZV motor drive. **Note:** A defective motor drive must not be re-installed even if OK. in the meantime.

Component Testing

ZV with Blocking: Test Lock Contacts of Driver's/Passenger's Door

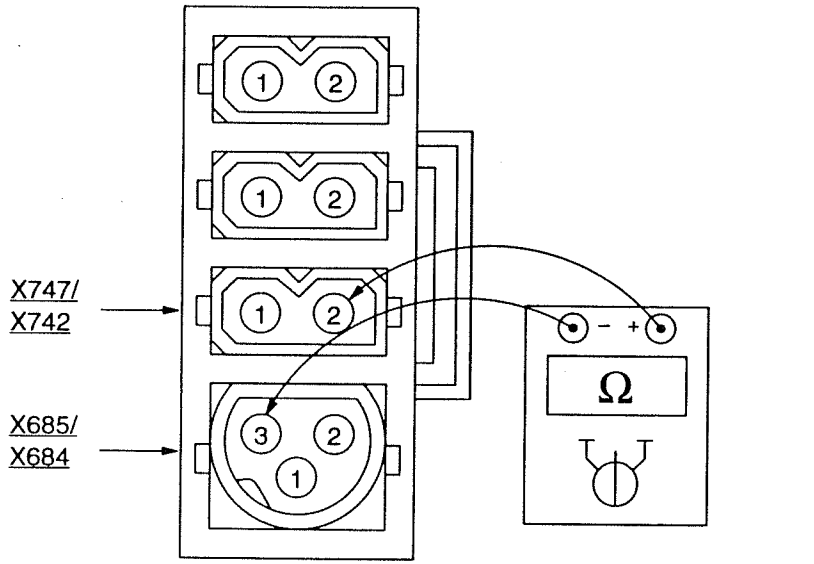

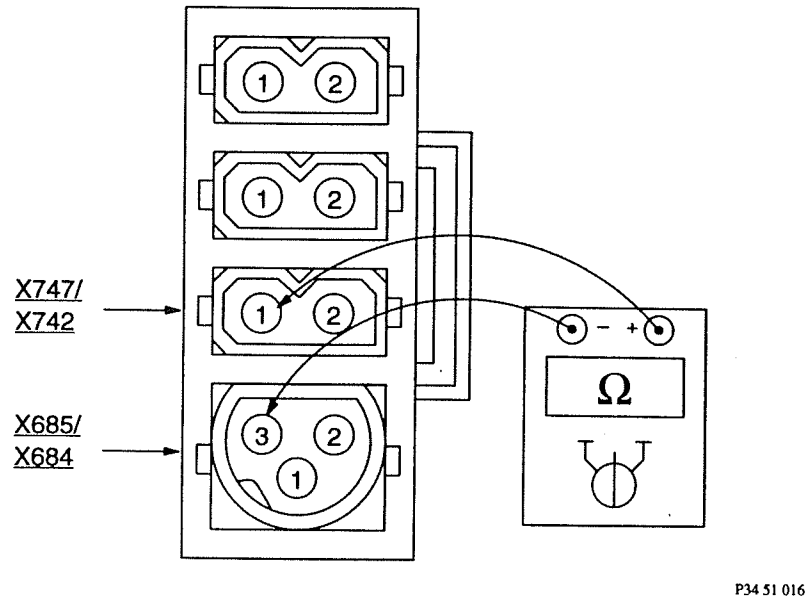

Test lock contact for lock/arrest:

Resistance measurement at the connector combination of the door lock. Detach plug connection to the wire harness. Measure between **Pin 3** (3-pin connector, black) and **Pin 2** (2-pin connector yellow). Operate door lock with car key. Resistance < 1 Ω in lock setting: Lock and arrest. In neutral setting resistance = ∞.
Renew microswitch (lock contact) if defective.

Test lock contact for unlock/arrest:

Resistance measurement at the connector combination of the door lock. Detach plug connection to the wire harness. Measure between **Pin 3** (3-pin connector, black) and **Pin 1** (2-pin connector, yellow). Operate door lock with car key. Resistance < 1 Ω in lock setting: Unlock and arrest. In neutral setting resistance = ∞.
Renew microswitch (lock contact) if defective.

ZV Motor Drive with Blocking: Test Pin Contacts of ZV Motor Drive, Driver's/Passenger's Door

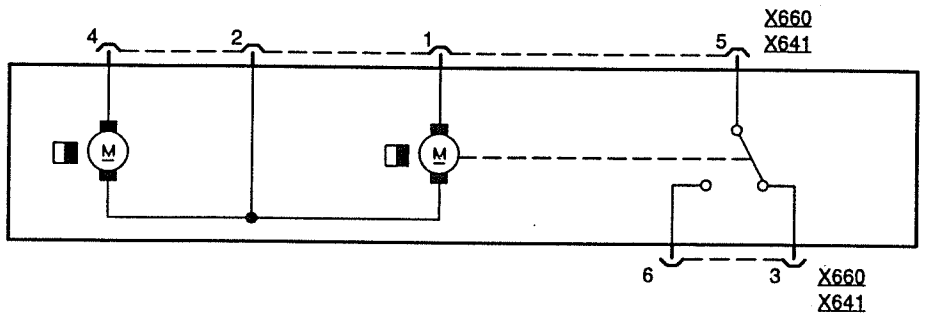

P34 51 017

Block Diagram

Central locking (ZV) drives for driver's and passenger's door. Locked status.

Pin 3 (lock) at the passenger's door is not connected to the wire harness.
– Chamber 3 in connector X641 is not assigned –.

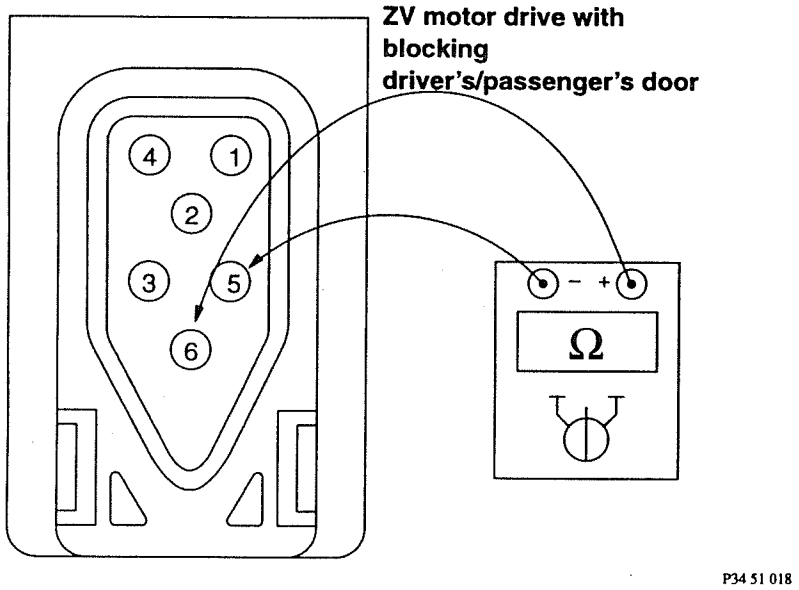

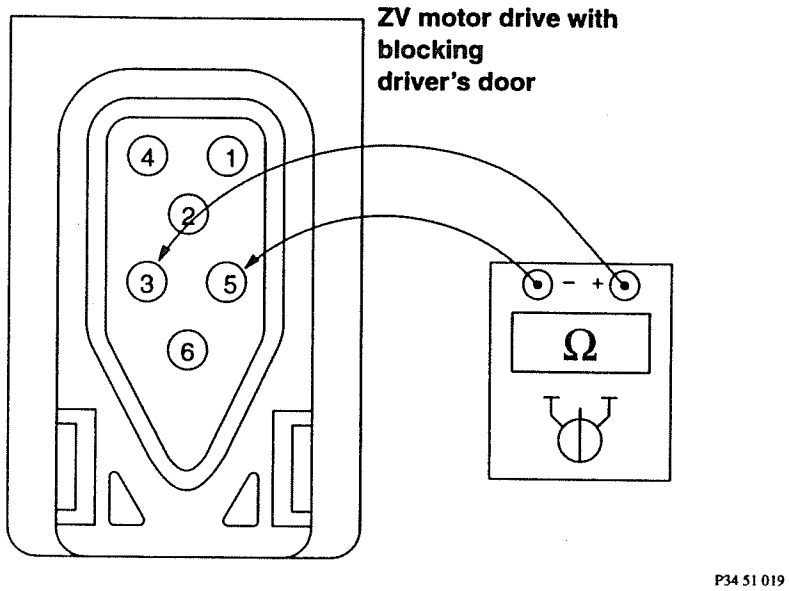

Test pin contact for unlock:

Measure resistance at ZV motor drive between **Pin 6** and **Pin 5**.

Pull apart ZV motor drive (unlocked position).

Nominal value: Resistance < 1 Ω.

Renew central locking (ZV) drive if defective.

– driver's door only –

Test pin contact for lock:

Measure resistance at ZV drive motor between **Pin 3** and **Pin 5**.

Push together ZV motor drive (locked position)

Nominal value: Resistance < 1 Ω.

Renew central locking (ZV) drive if defective.

ZV Motor Drive with Decoupling: Test Pin Contacts of ZV Motor Drives, driver's/Passenger's Door

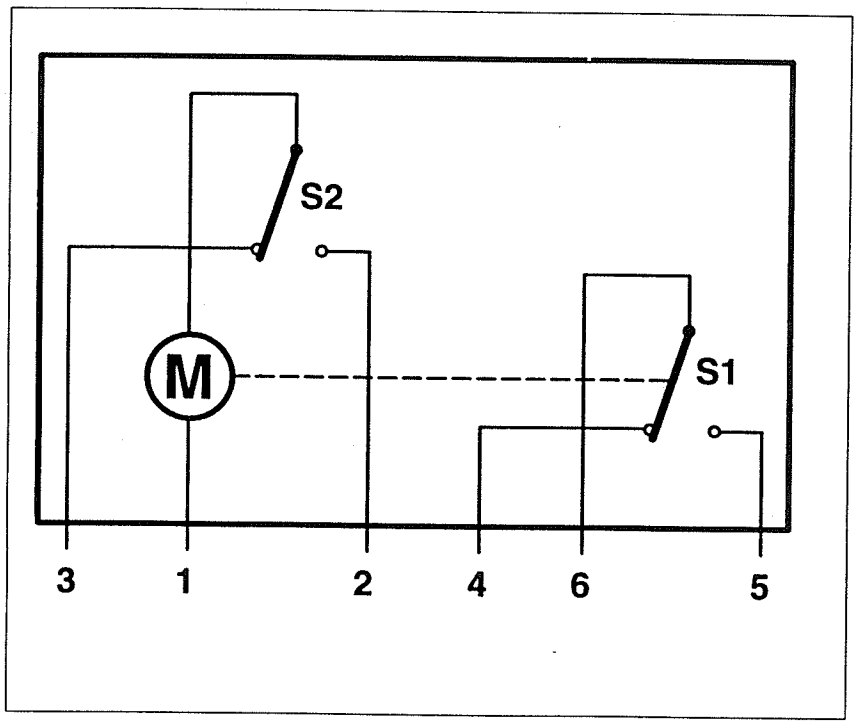

P34 51 010

Block diagram of ZV motor drive. Drawn in unlocked position.

S1	Pin contact (microswitch)
S2	Internal position switch

Pin Assignments

Pin	Explanation
1, 2, 3	Wires to relay module, electric motor activation
4, 5	Wires to general module, signalling lock/unlock
6	Wires to fuse, B+ for pin contact

Test of pin contact (S1)

Measure at ZV motor drive, connector unplugged.

ZV motor drive in locked status: Measure resistance between Pin 6 and Pin 5

ZV motor drive in unlocked status: Measure resistance between Pin 6 and Pin 4

Nominal value: Resistance < 1 Ω.

Renew central locking (ZV) drive if defective.

Pin Contact of ZV Motor Drive for Rear Lid

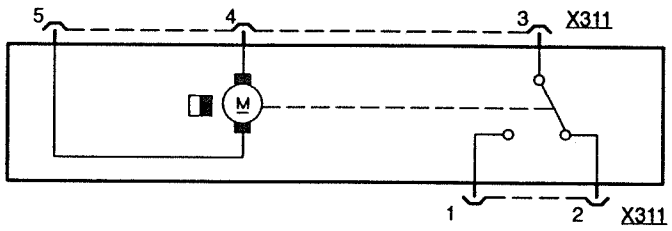

P34 51 020

Block Diagram

ZV motor drive for rear lid. Unlocked status.

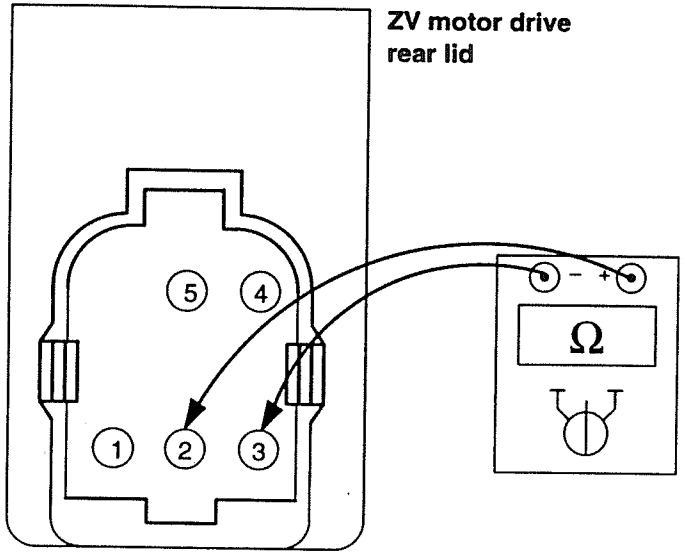

P34 51 021

Test pin contact for unlock:

Measure resistance at ZV motor drive between **Pin 2** and **Pin 3**. Push together ZV motor drive (unlocked position).
Nominal value: Resistance < 1 Ω.
Renew central locking (ZV) drive if defective.

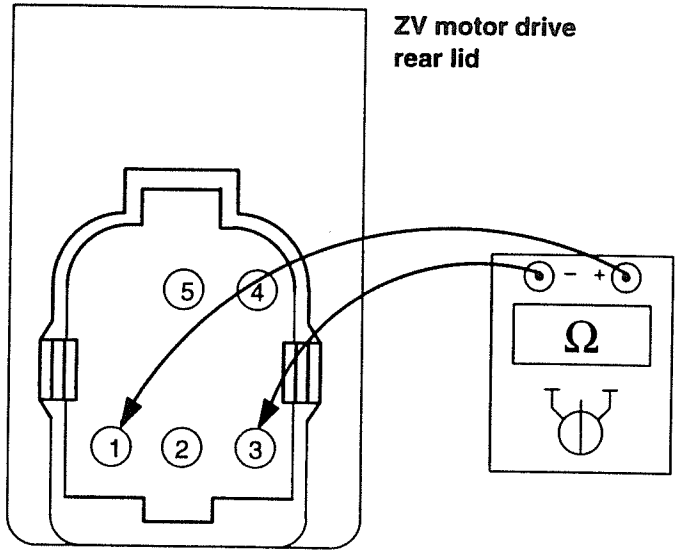

P34 51 022

Measure pin contact for lock:

Measure resistance at ZV drive between **Pin 1** and **Pin 3**. Pull apart ZV motor drive (locked position).
Nominal value: Resistance < 1 Ω.
Renew central locking (ZV) drive if defective.

Notes

These instructions apply only when a central locking module is installed in the 5 Series, E34 up to and including model year 1991.

In this system, the ZV motor drive is blocked after arresting the vehicle.

If a ZKE general module is installed, perform troubleshooting on the central locking system in accordance with Section 5126.0 Central Locking System (ZV/ZKE).

Functional Description

General

The central locking module (ZVM, installed in rear power distribution box) controls the function sequences for the following systems:

- Central locking system
- Door lock heating (diagnostic procedure 5120.1.)
- Interior light control (diagnostic procedure 6330.1)

The relays for lock, unlock and arrest are installed in the central locking module (ZVM). The systems door lock heating (TSH) and interior lights (IB) feature their own relays outside the ZV module.

Components for the Central Locking System

Lock contacts

Microswitches on door lock of driver's and passenger's door. Depending upon the position of the door lock, they are activated via cams, they switch battery voltage (B+) to the central locking module and signal lock, unlock or arrest.

Pin contacts

Microswitch in the ZV motor drive (integral component). The pin contacts of the driver's door and passenger's door are activated via the lock buttons, the contact of the rear lid via the rear lid lock.

The contacts switch battery voltage (B+) to the central locking module and signal lock or unlock. Only unlock from the passenger's door. The pin contacts indicate the actual status of the doors (locked, unlocked). The rear doors are not equipped with pin contacts.

Central locking module

Processes the signals from the contacts and switches the ZV motor drives via the three relays.

ZV motor drives

Electrical servo drives at the door locks. They receive their power supply via the ZV relays in the central locking module. The ZV motor drive is blocked internally in arrest mode.

Central Locking Functions

The following functions are possible:

- Lock/arrest/unlock via door locks of driver's/passenger's door
- Lock/unlock via locking button of driver's door
- Unlock via locking button of passenger's door
- Lock/unlock via rear lid lock
- Workshop setting of rear lid (= vehicle unlocked, rear lid remains locked)
- Release via door locks of driver's/passenger's door

Door Lock of Driver's and Passenger's Door

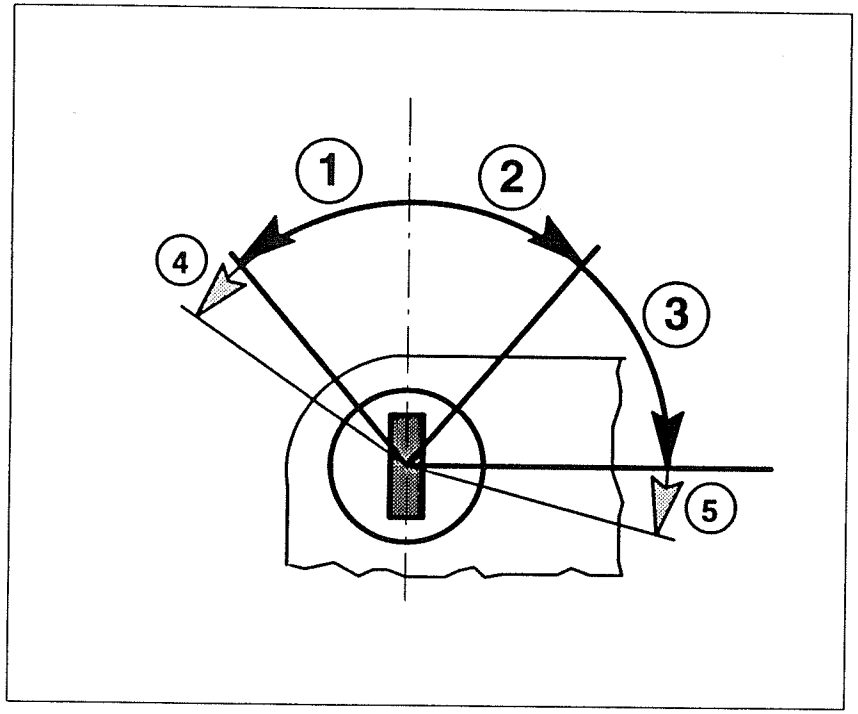

P34 51 005

The lock contacts are operated via the door locks of the driver's and passenger's door. The following key positions are possible:

"1" Unlock/release

The vehicle is unlocked and released, if applicable, the antitheft system is disarmed.

"2" Lock

The vehicle is locked without the arrest function. The locking buttons at the driver's and passenger's door can be pulled up from the inside thus unlocking the vehicle.

The lock system is blocked mechanically to prevent locking when the driver's door is open. Locking can cause asynchronisation of the door lock, see "5 Synchronisation".

"3" Arrest

The vehicle is arrested, the locking buttons cannot be pulled up.

"4" Emergency unlocking, passenger's door only

The passenger's door can be opened mechanically in the event of electrical faults. Raise door handle and using car key, turn door lock in unlock direction beyond the hard pressure point (position 4). To lock door, turn to right beyond hard pressure point (position 5).

After normal electrical function has been restored, the ZV drive system must be synchronised (synchronisation between linkage and servo drive), see "5 Synchronisation".

"5" Synchronisation, driver's and passenger's door

Turn door lock to right beyond hard pressure point (lock).

Synchronisation is necessary when:

- Vehicle has been locked with driver's door open (= driver's door asynchronous)
- Passenger's door was unlocked in the emergency function (= passenger's door asynchronous)

Rear Lid Lock

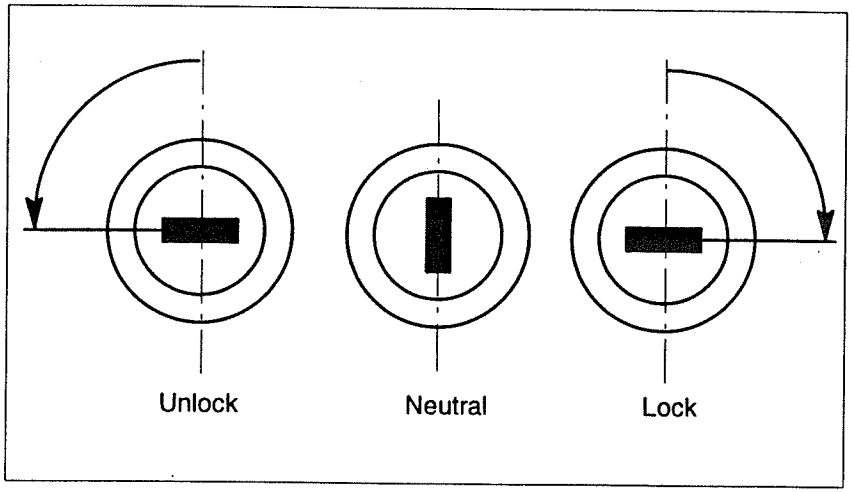

P34 51 006

The pin contact in the ZV motor drive is operated via the rear lid lock. The vehicle can be locked and unlocked. If the vehicle is in arrest mode, the rear lid itself can be unlocked but the doors are not unlocked.

The key can be removed in the key position locked (90° to right). The rear lid can then be permanently be locked even when the vehicle is unlocked electrically by means of the central locking system (workshop setting).

Locking Buttons

The pin contacts in the ZV motor drives are operated by the locking buttons. The vehicle can be:

- locked and unlocked via the locking button of the driver's door (driver's door closed!)
- unlocked by the locking button of the passenger's door

Rear doors

The locking buttons on the rear doors have no influence on the central locking system.

Important!

Driver's door

The locking linkage of the central locking system is blocked mechanically for as long as the driver's door is open.

Repeat lockout

To avoid overloading, the central locking system is inhibited when the system is operated very often within a short period of time. The lockout feature is cancelled after a defined waiting time.

Defect information:

If a defect occurs in the central locking system (ZV), the driver is made aware of this by the central locking system reverting automatically to its initial status. The required function is performed only after operation for a second time.

Example: Vehicle is locked – driver's door defective, it is not locked – the central locking system (ZV) locks the doors, however, the doors are unlocked again a short time later.

Crash sensor:

(Inertia switch) installation location: Beneath the left rear seat. The crash sensor is effective only when the ignition switch is set to R or 15 (position 1 or 2). At the point of impact, the sensor briefly switches a ground signal to the general module. The vehicle is unlocked/released, the interior lights are switched on (only in switch position automatic interior lights) and the central locking system is disabled.

Cancelling the ZV lockout: By turning the door lock in the unlock direction.

BMW 5

Central Locking Module (ZVM)

General Block Diagram

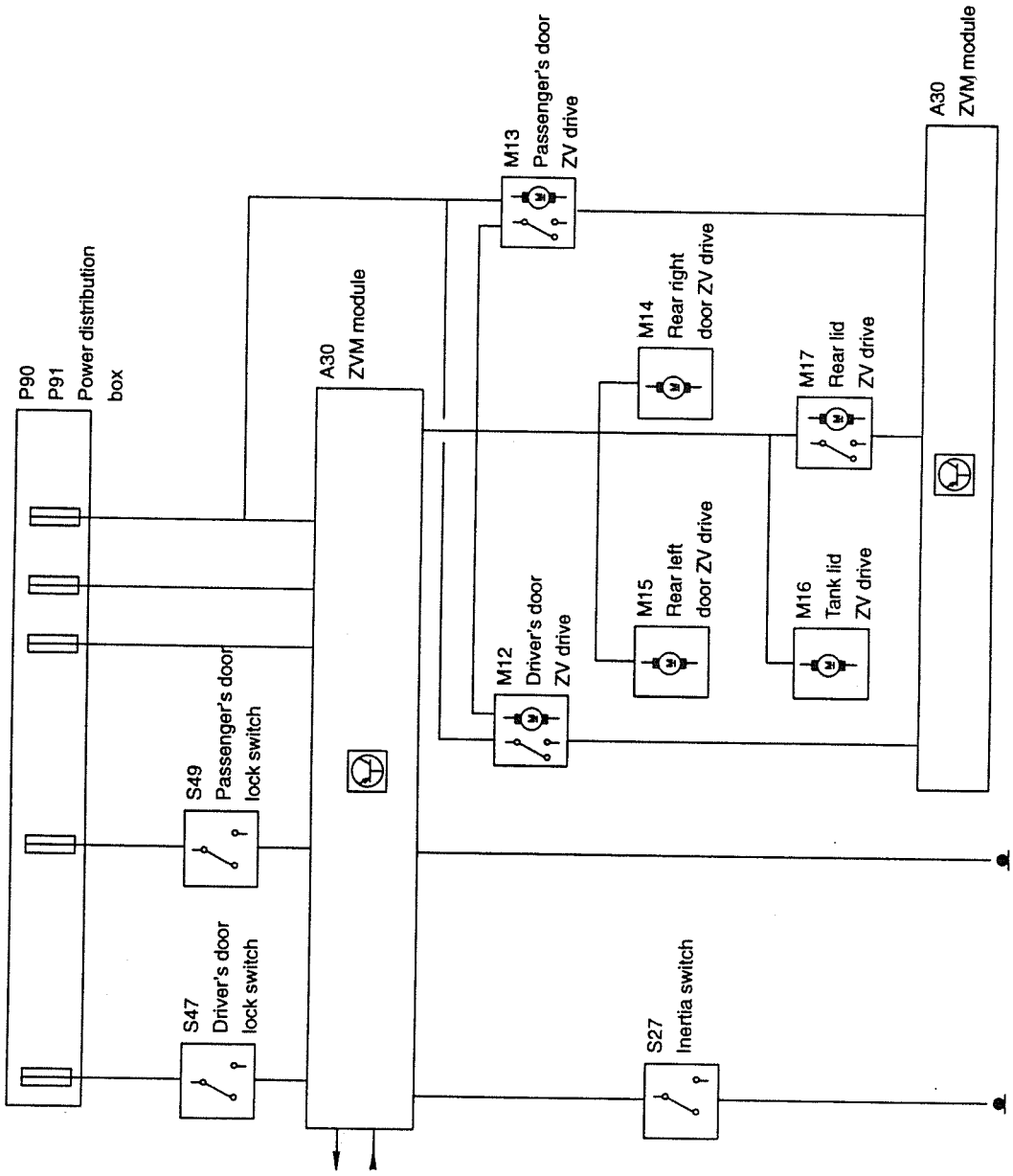

P34 51 004

Notes on the BMW DIAGNOSTIC SYSTEM

Control unit identification: The designations "ROM" or "Emulator" identify different versions of the ZV module.

ZVM part systems: When a system is displayed inversely (white background), then there is a defect code stored for this system (♦**D**♦900 Defect code memory). If the vehicle is not equipped with a door lock heating system, the defect code **01 TSH defective** is always stored (ignore defect code in this case!).

Defect code memory: No defect codes are stored within diagnostic mode. After clearing the defect code memory (♦**D**♦999) diagnostic mode is therefore terminated with the ZVM program. An information page is displayed on the screen. Defects are detected within this phase and stored in the defect code memory.

It is possible that the defect code memory is cleared on its own accord within diagnostic mode. Therefore, always print out the contents of the defect code memories!

Switch off ignition: After starting the diagnostic procedure, it is possible that the ignition is switched off within the status lists. If diagnostic mode is terminated when the ignition is switched off (e.g. due to fault or detaching the diagnostic connector), the ignition must be switched on in the vehicle in order to resume the diagnostic procedure.

Abbreviations

ZVM	Central locking module
ZV	Central locking system
TSH	Door lock heating
IB	Interior lights, automatic interior light function
ZVM-A	ZVM connector A, 15-pin, black
ZVM-B	ZVM connector B, 26-pin, white
E	Input
A	Output

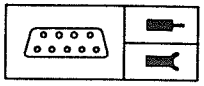

Pin Assignment

Connector Numbers

Number	Type	Description
X1216	15-pin, black	ZVM connector A
X1217	26-pin, white	ZVM connector B

Pin Assignments at the ZVM Module, Connector A, 15-pin black, X1216

Pin	Type	Description/function	Connection	Type of signal	Tester display	Measurement notes
A1	E	Ground - working circuit	Ground	B–		
A2	E	Ground - electronics	Ground	B–		
A3		Not used				
A4	E	B+ - electronics	Fuse	B+		
A5		Not used				
A6	A	Interior lights control	Relay for interior light	B–	(activation)	Note switch-on conditions
A7	A	ZV drive - unlock	all ZV drives	B–/B+	(activation)	Duty cycle approx. 700 ms
A8	A	ZV drive - lock	all ZV drives	B–/B+	(activation)	Duty cycle approx. 700 ms
A9		Not used				
A10	A	ZV drive - arrest	all ZV drives	B–/B+	(activation)	Duty cycle approx. 700 ms
A11	A	Door lock heating	Relay for door lock heating	B–	(activation)	Note switch-on conditions

Pin	Type	Description/function	Connection	Type of signal	Tester display	Measurement notes
A12		Not used				
A13		Not used				
A14	E	B+ - working circuit ZV relay	Fuse	B+		
A15		Not used				

Pin Assignments at ZVM Module, Connector B, 26-pin white, X1217

Pin	Type	Description/function	Connection	Type of signal	Tester display	Measurement notes
B1	E	Lock contact, unlock, arrest	Driver's door	B+	ON	
B2	E	Lock contact, lock	Driver's door	B+	ON	
B3	E	Pin contact, unlock	ZV drive, driver's door	B+	Unlocked	
B4	E	Pin contact, lock	ZV drive, driver's door	B+	Locked	
B5	E	Lock contact, unlock, arrest	Passenger's door	B+	ON	
B6	E	Lock contact, lock	Passenger's door	B+	ON	
B7	E	Pin contact, unlock	ZV drive, passenger's door	B+	Unlocked	
B8	E	Pin contact, unlock	ZV drive, rear lid	B+	Locked	
B9	E	Door handle contact	Microswitch, driver's door	Ground	ON	only installed for TSH
B10	E	Driver's door contact	Door contact switch	Ground	OPEN	
B11	E	Passenger's door contact	Door contact switch	Ground	OPEN	
B12		Not used				
B13		Not used				
B14	E	Pin contact, lock	ZV drive, rear lid	B+	Locked	

Central Locking Module (ZVM)

Pin Assignments

Pin	Type	Description/function	Connection	Type of signal	Tester display	Measurement notes
B15	E	Diagnostic link RxD	Diagnostic socket Pin 15			
B16	A	Diagnostic link TxD	Diagnostic socket Pin 20			
B17	E	Crash sensor	Crash sensor	Ground	ON	
B18		Not used				
B19		Not used				
B20	E	Signal, terminal 15	Fuse	B+	ON	
B21	E	Signal, terminal R	Fuse	B+	ON	
B22	E	Parking light detection	Light switch terminal 58	B+	ON	
B23	E	TSH diagnostic link	Relay for door lock heating	B–/B+	Defect code is stored	
B24		Not used				
B25		Not used				

Troubleshooting

Notes

- Troubleshooting with the BMW DIAGNOSTIC SYSTEM
- Battery charged, U-min = 12 V
- Remove and install the central locking module (ZVM) only when the ignition is off.
- Generally, troubleshooting is performed in accordance with the instructions given in the BMW DIAGNOSTIC SYSTEM.
- For notes and instructions relating to repair work on the central locking system (ZV), as well as notes on mechanical setting, refer to Repair Instructions Group 51.

Important!

- Test lock and pin contacts in accordance with Component Testing 5126.0B (ZKE central locking system).
- For mechanical defects, see troubleshooting in Section 5126.0A Central locking system (ZV/ZKE)

Defect Code Table

♦D♦900 Defect code memory – stored defect codes:

♦D♦One or several defect codes stored → Defect codes 01 ...11

Malfunctions:

One door cannot be locked, unlocked and/or arrested → Defect code 12

ZV unlocks on its own accord after locking → Defect code 13

ZV locks on its own accord after unlocking → Defect code 13

General malfunction → Defect code 14

Diagnostic procedure with ZVM not possible → Defect code 15

All ZV functions at all doors failed → Defect code 16

Defect Code 01

♦D♦900 Defect code memory: Defect code 01 is stored

Explanation: Power supply to load circuits cut.

Troubleshooting: As displayed on screen.

Defect codes 02 – 05

♦D♦900 Defect code memory: One or several defect codes between 02 and 05 are stored

Explanation: The central locking module (ZVM) detects the pin contacts of the driver's door or rear lid as being defective (break or short-circuit).

Troubleshooting: As displayed on screen.

Note: Check pin contacts with status lists and in accordance with Component Testing instructions 5126.0B (ZKE central locking system).

Defect codes 06 – 11

♦D♦900 Defect code memory: One or several defect codes between 06 and 11 are stored

Explanation: The ZVM detects a ZV relay as faulty.

Troubleshooting: As displayed on screen.

Defect Code 12

A door cannot be locked, unlocked and/or arrested

Note: This defect may cause the central locking system to unlock once again immediately after locking or arresting (or to lock after unlocking). Refer to Functional Description – defect information.

Troubleshooting

1. For front doors: Synchronise central locking system (ZV).
   Procedure: Close door. With the car key, turn door lock to right beyond hard pressure point.
2. Check ZV locking linkage for mechanical defect, repair if necessary – refer to Repair Instructions Group 51.
3. Check wired from defective ZV motor drive to the central locking module (ZVM), repair if necessary.
4. If wires and mechanics OK., replace defective ZV motor drive.

Defect Code 13

ZV unlocks on its own accord after locking

or

ZV locks on its own accord after unlocking

Note: This symptom acts as intended operation information. It indicates that the central locking system is not operating properly.

Troubleshooting

1. For front doors: Synchronise central locking system (ZV).
   Procedure: Close door. With car key, turn door lock to the right beyond hard pressure point.
2. Troubleshooting with BMW DIAGNOSTIC SYSTEM. ♦**D**♦ Monitor defect code memory. If no defect code is stored, perform troubleshooting with the aid of the status lists (guided test sequence!). Carefully work through all test points.

Defect Code 14

General Malfunction

Troubleshooting:

Troubleshooting with BMW DIAGNOSTIC SYSTEM. ♦D♦Monitor defect code memory. If no defect code is stored, perform troubleshooting with the aid of the status lists (♦D♦200, guided test sequence!). Carefully work through all test points.

Note: Check the lock and pin contacts in accordance with Component Testing instructions 5126.0B (ZKE central locking system). For notes on mechanical setting, refer to Repair Instructions Group 51.

Defect Code 15

Diagnosis with ZVM not possible

Note: Refer to Notes in the BMW DIAGNOSTIC SYSTEM.

Possible cause: Data lines, ignition detection (fuse, wire)

Troubleshooting

Have all central locking (ZV) functions failed at all doors? — yes → Continue with defect code 16.

—*—

no ↓

Remove central locking module (ZVM). Connect 26-pin adapter. Switch on ignition. Is approx. battery voltage applied at Pin B21 (terminal R)? — no → Check fuse and wire, repair if necessary.

—*—

yes ↓

Switch on ignition! Is approx. battery voltage applied at Pin B20 (terminal 15)? — no → Check fuse and wire, repair if necessary.

—*—

yes ↓

Is data link RxD from ZVM-B15 to diagnostic socket Pin 15 OK.? — no → Repair wire.

—*—

yes ↓

Is data link TxD from ZVM-B16 to diagnostic socket Pin 20 OK.? — no → Repair wire.

—*—

yes ↓

Perform remaining troubleshooting in accordance with instructions displayed on screen. If no defect is found, replace central locking module (ZVM).

—*—

Defect Code 16

All central locking (ZV) functions have failed at all doors

Possible cause: Voltage supply

Troubleshooting

Remove central locking module (ZVM). Is ground applied at Pin A1 and at Pin A2? — no → Repair faulty wire.

—*—

yes ↓

Is approx. battery voltage applied at Pin A4? — no → Check fuse and wire, repair if necessary.

—*—

yes ↓

Is approx. battery voltage applied at Pin A14? — no → Check fuse and wire, repair if necessary.

—*—

yes ↓

Replace central locking module (ZVM).

—*—

Notes

These instructions only apply when a central locking module II (E36 system) is installed in the E34 5 Series as of model year 1992.

In this system, the ZV motor drive is uncoupled internally from the locking linkage after setting the vehicle in arrest mode.

If a ZKE general module is installed, perform troubleshooting on the central locking system in accordance with Section 5126.0 Central Locking System (ZV/ZKE).

Functional Description

General

The central locking module II (ZVM II), as well as the closing system have been adopted from the E36 3 Series. They control the following functions:

- Central locking system
- Door lock heating (see Section 5120.2A)
- Interior lights (see Section 6330.2A)

The relays for the ZV functions "lock", "unlock" and "arrest" are installed in the central locking module II.

The interior lights are switched via a transistor which is also installed in the module.

The door lock heating system features its own relay outside the module.

Central Locking System

The following functions are possible:

- Lock/arrest/unlock via door locks of driver's/passenger's door
- Lock/unlock via locking buttons of driver's/passenger's door
- Lock/unlock via rear lid lock
- Release via door locks of driver's/passenger's door

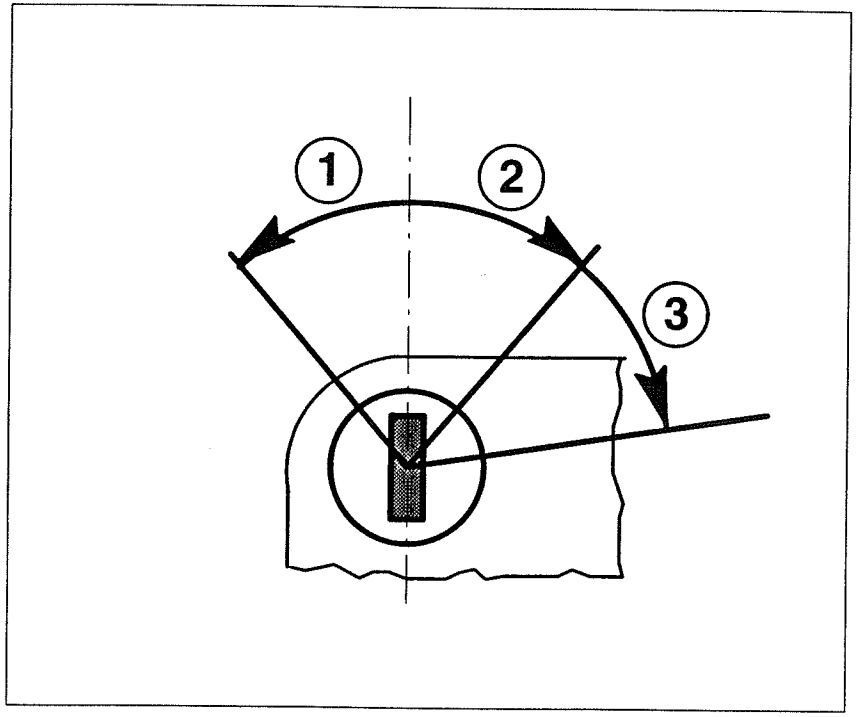

P34 51 007

The vehicle can be locked, arrested and unlocked/released via the door lock of the driver's and passenger's door.

Door Lock of Driver's and Passenger's Door

Following operating steps can be carried out:

"1" Unlock/release

The vehicle is unlocked and released, if applicable, the antitheft system is disarmed.

"2" Lock

The vehicle is locked without the arrest function. The locking buttons at the driver's and passenger's door can be pulled up from the inside, thus unlocking the vehicle.

The lock system is inhibited electrically to prevent locking when the driver's door is open (the system unlocks immediately after locking).

Only the passenger's door can be locked when the passenger's door is open, however, the other doors are not locked.

"3" Arrest

The vehicle is set in arrest mode, the locking buttons are uncoupled from the opening mechanism in the turn-catch lock. The door is not unlocked when the locking buttons are pulled up.

Emergency unlocking

The driver's and passenger's door can be unlocked mechanically in the event of electrical faults (setting "1"). The uncoupled locking button (after arrest) remain uncoupled also after emergency unlocking.

Rear Lid Lock

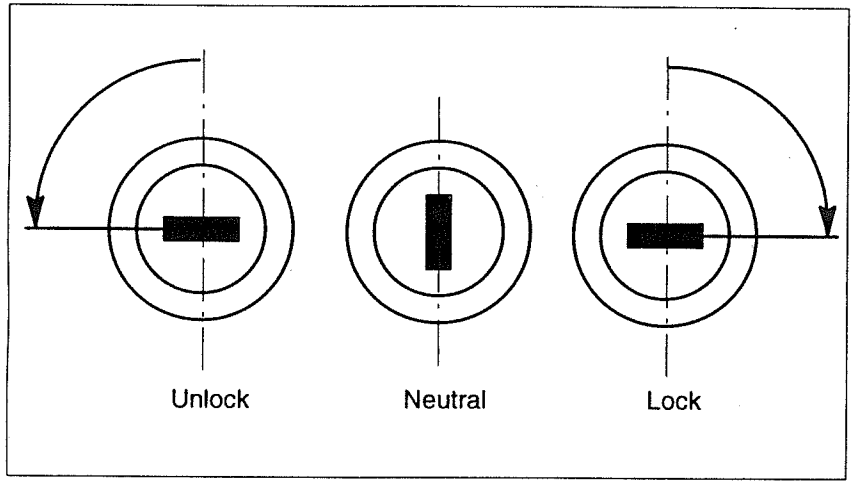

P34 51 005

The pin contact in the ZV drive is operated by the rear lid lock. The vehicle can be locked and unlocked. If the vehicle is in arrest mode, the rear lid itself can be unlocked but the doors are not unlocked.

The key can be removed in the key position (90° to right). The rear lid can then be permanently locked even when the vehicle is unlocked electrically by means of the central locking system (workshop setting).

Tail Gate Lock on "E34 touring"

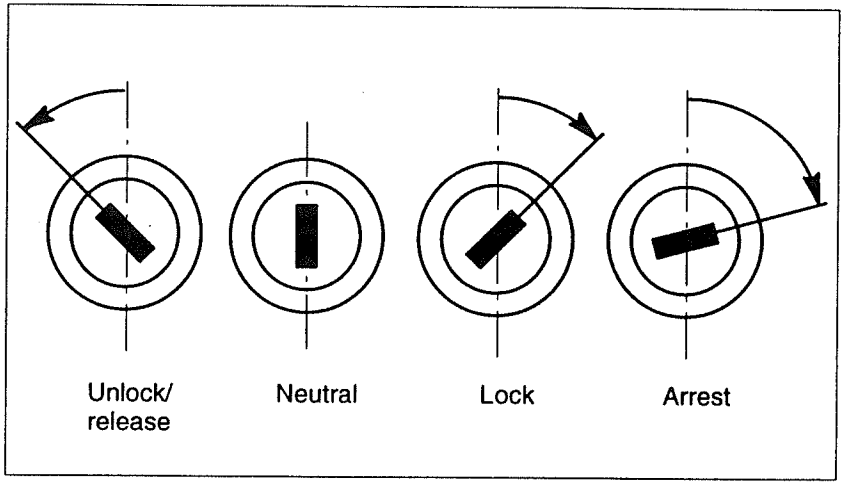

P34 51 008

Lock contacts (microswitches) are operated by means of the tail gate lock of the "E34 touring". The vehicle can be locked, arrested and unlocked/released.

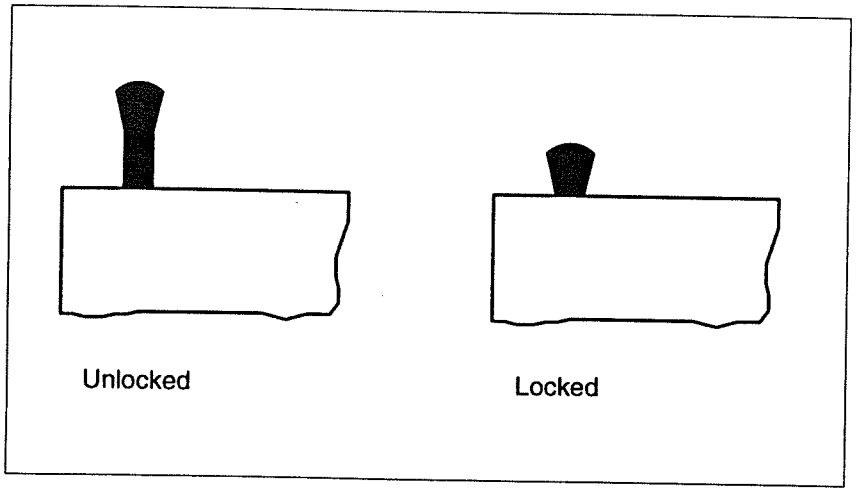

P34 51 009

The vehicle can be locked and unlocked electrically by means of the locking buttons on the passenger's and driver's door. The locking buttons on the rear door have no influence on the central locking module.

Locking Buttons

Vehicle in arrest mode

The locking buttons are uncoupled mechanically from the ZV drives when the vehicle is centrally arrested. This means:

Although the locking button can be pulled up the door is not unlocked. This function is effective on all doors.

Door open

Driver's door:

If the locking button is pressed down when the driver's door is open, the vehicle is locked electrically and then unlocked automatically. This feature avoids the vehicle being locked unintentionally.

Passenger's door:

If the button is pressed down while the passenger's door is open, only the passenger's door is locked mechanically. Electrical locking of the vehicle does not take place.

Rear doors

The locking buttons on the rear doors have no influence on the central locking system.

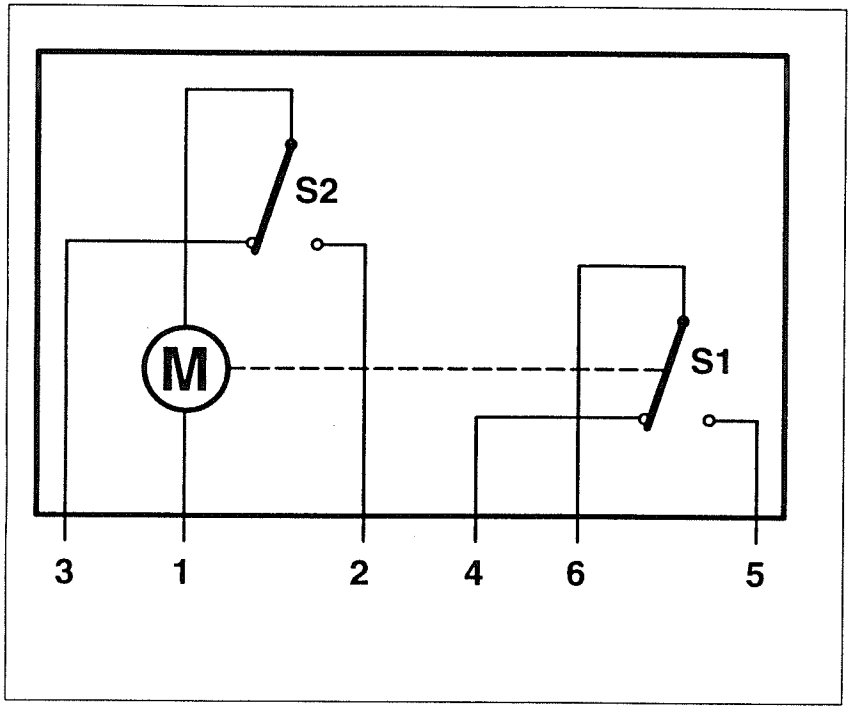

P34 51 010

Block diagram of ZV motor drive drawn in unlocked position.

S1 Pin contact (microswitch)

S2 Internal position switch

ZV motor drive

Pin Assignments

Pin	Explanation
1, 2, 3	Wires to ZV module, electric motor activation
4, 5	Wires to ZV module, signalling lock/unlock
6	Wire to fuse, B+ for pin contact

Switching logic

Pin	Unlock	Lock	Arrest
1	from module B+	from module B–	from module B–
2	from module B–	from module B–	from module B+
3	from module B–	from module B+	from module B+
4	B+	open	open
5	open	B+	B+
6	B+ from fuse	B+ from fuse	B+ from fuse

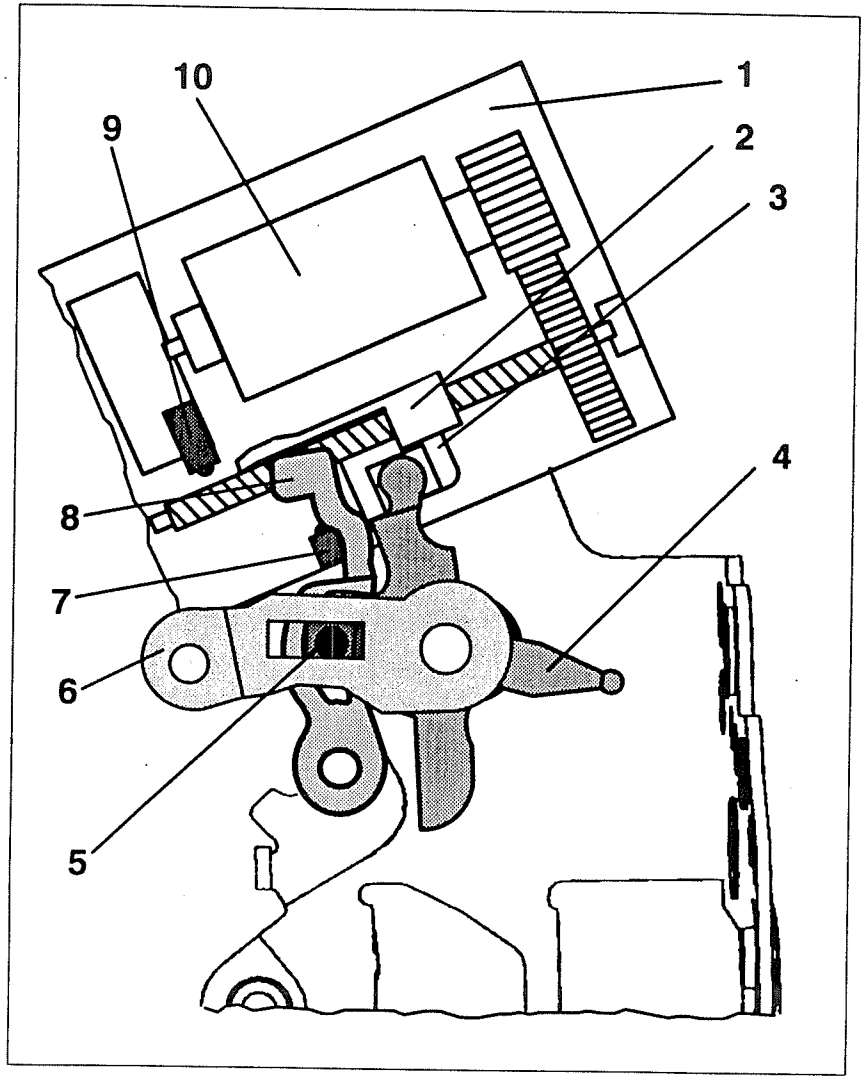

P34 51 011

Central Locking Functions

Fig. 1: Unlocked status

The figure opposite shows the ZV motor drive "1" and the corresponding mechanics in the turn-catch lock in unlocked status.

The connecting piece "4" can be turned from the door lock or by the locking button in conjunction with the connecting pieces "5" and "6". When the part "4" is turned it uncouples the door outer handle from the opening mechanism.

Explanation

1	ZV motor drive
2	Spindle nut
3	Slide
4	Connecting piece to door lock and door outer handle
5	Slide piece, connecting piece between part 4 and part 6
6	Connecting piece to locking button
7	Pin contact (microswitch)
8	Lever, uncouples mechanism during arrest
9	Position switch (microswitch)
10	Electric motor

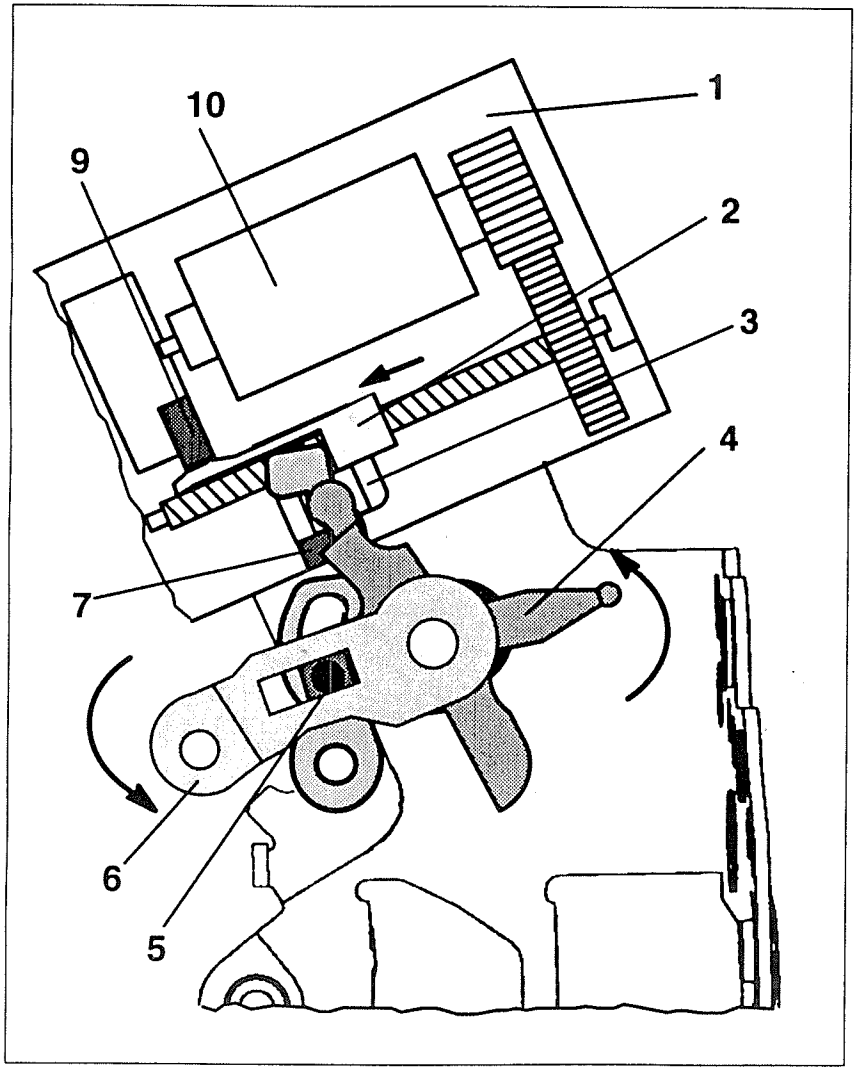

P34 51 012

Fig. 2: Locked status

The figure opposite shows the ZV motor drive and the corresponding mechanics in the turn-catch lock when locked.

The part "4" has been turned. Consequently, the slide "3" has been moved. The pin contact "7" is switched. It switches B+ to the ZV module and signals "lock".

Sequence of electrical central locking:

The electric motors "10" in the ZV motor drives "1" receive their power supply. The spindle nuts "2" in the ZV motor drives are moved by means of a spindle. They are connected to the slide blocks "3" and thus cause the connecting piece "4" to rotate. The motors switch off as soon as the limit switches "9" are reached.

As a result, the outer door handles on all doors are uncoupled from the opening mechanism. A locked door can be unlocked by way of the inner door handle. The handle must be pulled twice for this purpose.

The vehicle can be unlocked once again by pulling up the locking button. Part "4" is turned back by means of parts "5" and "6". The slide block "3" is moved away from the pin contact "7". This signals "unlock" and initiates the power supply to the ZV motors. The part "4" is turned back to the unlock position.

The vehicle can also be unlocked by means of the door lock. In this case, the part "4" is turned from the door lock.

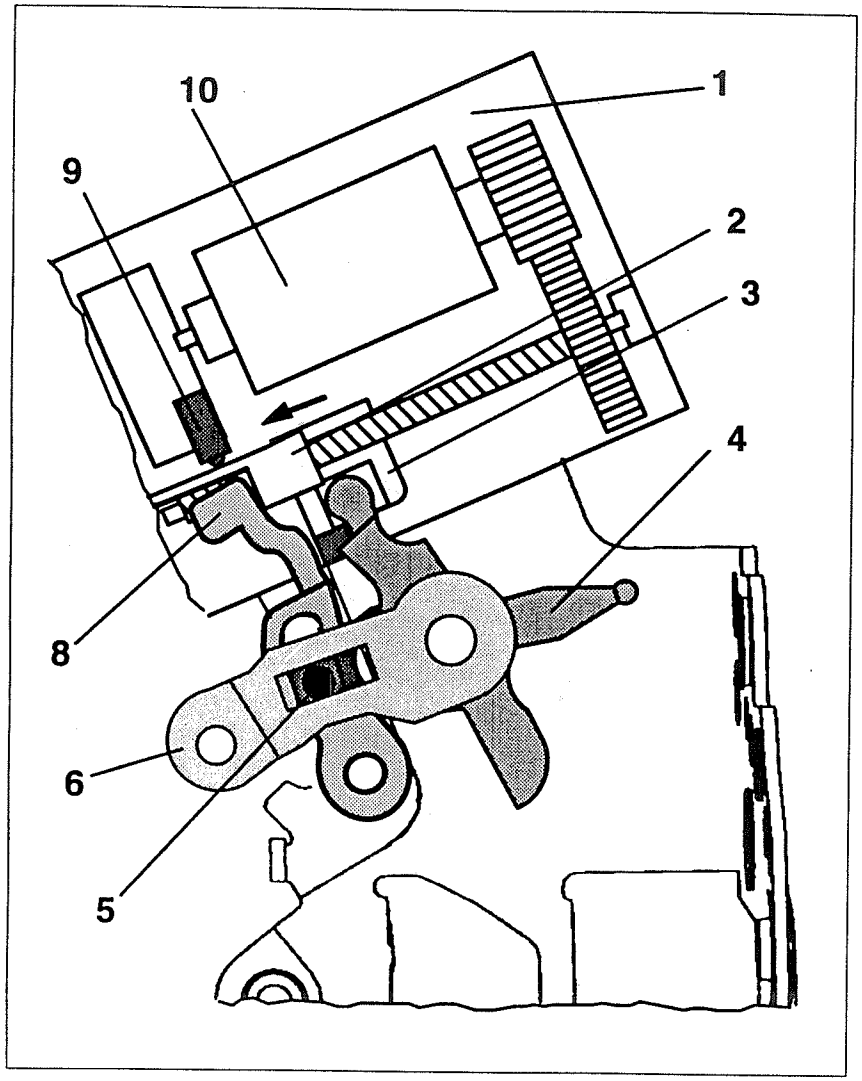

P34 51 013

Fig. 3: Arrested status

Explanation:

In arrest mode, the locking button is automatically uncoupled from the ZV motor drive.

When the vehicle is arrested, it can only be unlocked via the door locks of the driver's door or passenger's door.

Although the locking buttons can still be pulled up in arrest mode, they do not unlock the doors.

The rear lid can be unlocked also in arrest status however, the doors are not unlocked in this case.

Procedure:

A microswitch is operated by the driver's door lock or passenger's door lock when it is turned to the "arrest" position. The ZV module powers the electric motors "10" in the ZV motor drives "1". The spindle nut "2" is moved. It uncouples from the slide blocks "3" and moves the lever "8". This lever uncouples the locking button from the "unlocking mechanism" in the turn-catch lock.

Unlocking is now only possible via the door locks. They are connected to part "4". Part "4" moves back the sliding block "3" when the door lock is turned to the "unlock" position. The slide block "3" is moved away from the pin contact "7". This signals "unlock" and triggers the power supply to the ZV motors. The spindle nuts "2" in all ZV motor drives are moved back to the "unlock" position.

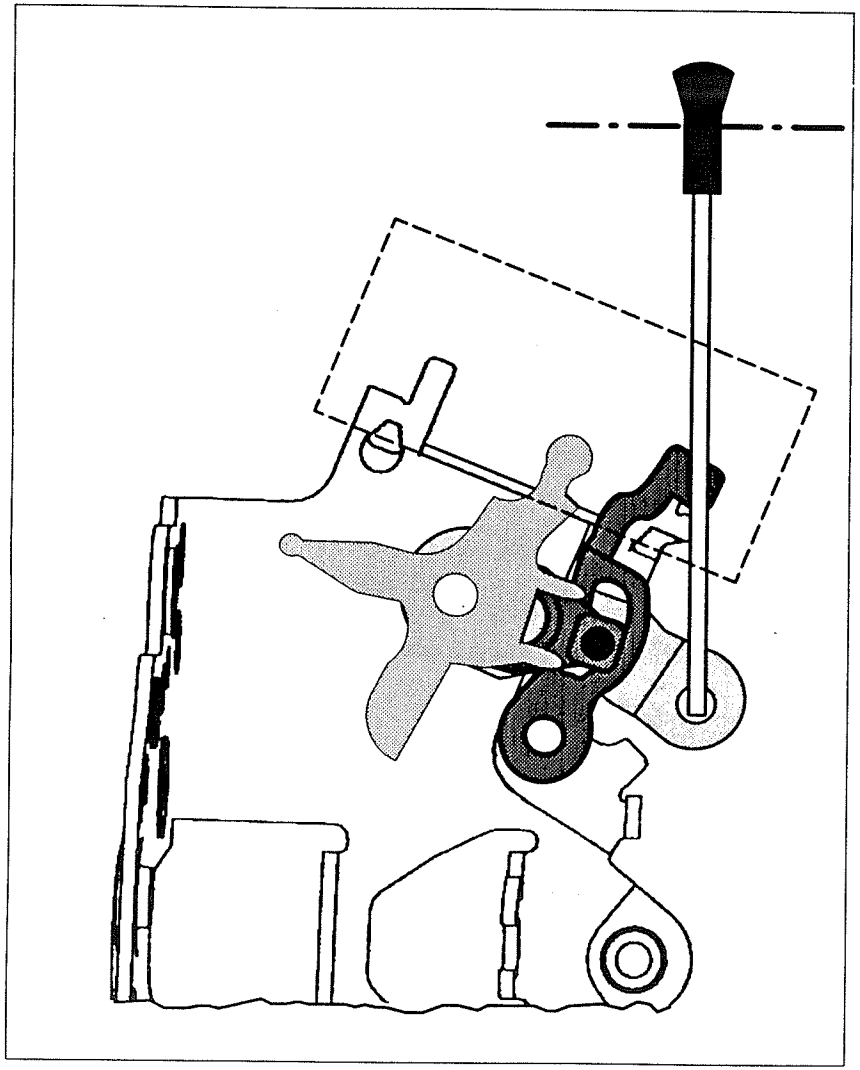

P34 51 014

Arrest Vehicle

General

The "arrested" status is intended to prevent the vehicle being opened by way of impermissible manipulation.

Since it is not possible to unlock and therefore open the doors from the inside in arrest mode, this function is linked to a series of conditions.

Conditions

Arresting is only possible when:

- Ignition and terminal R are switched off, i.e. ignition switch in position "0",
- the driver's door was opened at least once after switching off the ignition,
- the driver's door is closed.

Arrest and release are possible from the driver's and passenger's door.

Crash Sensor

A crash sensor which connects ground to the module in the case of excessive deceleration (e.g. impact or collision) is connected to the ZV module. When this signal is detected, the module activates all ZV drives and the vehicle is unlocked.

In addition, the interior lights are switched on (only with special option interior light package!) and a ground signal is sent to the crash alarm (not installed in all models, see schematics). The hazard warning system is switched on by this module.

Initially, the central locking system is inhibited after the crash sensor has triggered. The lockout is cancelled by locking and unlocking the vehicle with the locking button or the door lock.

Special Features

Emergency operation

If the central locking system fails due to an electrical fault, the driver's and passenger's doors can be unlocked via the door locks even when arrested.

Defect information

If one of the following defects occurs:

- Driver's or passenger's door is not locked or unlocked.
- ZV motor drive for driver's or passenger's door faulty,
- Rear lid is not locked,

this is signalled to the operator by the following sequence:

- After locking, the vehicle is automatically unlocked once again. The function is carried out on the second locking attempt.

or

- After unlocking, the vehicle is automatically locked once again. The function is carried out on the second unlocking attempt.

Repeat lockout

If the central locking system is operated more than 30 times within 2 minutes, the entire system is switched off by a repeat lockout function for approx. 2 minutes. This function prevents overloading of the ZV motor drives.

Coding

The central locking module II is designed to cope with a large number of equipment variants and different country-specific versions.

If a new control unit is installed, it must either be precoded in accordance with the "central code" or it must be coded in the vehicle.

Coding is performed with the current coding program of the BMW MoDiC

Important!

A central locking module must be recoded if taken from a different vehicle!

Coding can be performed as often as necessary.

Notes on the BMW DIAGNOSTIC SYSTEM

General

The terminal R (ignition switch in position 1 or 2) must be switched on in order to start the diagnostic procedure. The ignition can, however, be switched off again and the ignition key removed from the ignition switch after output of the identification page. In this way, it is possible to check the door locks for instance without the need for a second key.

Note

In a series of modules, the diagnostic procedures can only be performed when the vehicle is unlocked and the terminal R is switched on. Also in this case, the ignition can be switched off again and the vehicle locked after output of the identification page.

Defect Code Memory

The module can detect a large number of defects and store them in a defect code memory. The stored defect codes are retained even after disconnecting the battery or removing the module.

A defect code counter indicates how often a defect has occurred.

The defect code memory does not, however, indicate whether the defect is a current defect or not.

Test Procedure

All electrical components of the central locking system can be checked by means of the ♦D♦ Test procedure.

In the BMW MoDiC, the components are checked by way of ♦D♦ Status monitoring or by ♦D♦ Component activation.

Activate ZV Motor Drives

Activation of the ZV drives is possible within the guided test procedure. However, to prevent unauthorized manipulations, this function is linked to a series of conditions. Activation is only possible when

- the vehicle was unlocked before the first activation,
- the ignition switch is in position 1 or 2,
- at least one door (front or rear) is open.

Abbreviations

FH	Power windows
IB	Interior lights
SG	Control unit
TSH	Door lock heating
ZVM	Central locking module
ZV	Central locking system

Pin Assignment

Connector Overview

Number	Type	Description
X13014	4-pin	ZVM connector A
X13013	5-pin	ZVM connector B
X13012	26-pin	ZVM connector C

Pin Assignments at Connector A, X13014

Pin	Type	Description/function	Connection	Signal type	Tester display	Measurement notes
1	A	Activation of interior lights	Interior light switch	B– (active status)	(activation)	Vehicle must be unlocked for activation
2	E	Rear door contacts	Rear door contacts	0 V 12 V	OPEN CLOSED	
3	E	Ground for interior lights	Ground connection	B–	(activation)	
4	E	Parking light detection	Light switch	Battery voltage	ON	

Pin Assignments at Connector B, X13013

Pin	Type	Description/function	Connection	Signal type	Tester display	Measurement notes
1	A	ZV motor drives, arrest	ZV motor drive	Battery voltage	(activation)	Vehicle must be unlocked for activation
2	E	B+ for ZV motor drives	Fuse, terminal 30	Battery voltage	Defect code is stored	
3	E	Ground for interior lights	Ground connection	B–	Defect code is stored	
4	A	ZV motor drives, lock	ZV motor drive	Battery voltage	(activation)	Vehicle must be unlocked for activation
5	A	ZV motor drives, unlock	ZV motor drive	Battery voltage	(activation)	Vehicle must be unlocked for activation

Pin Assignments at Connector C, X13012

Pin	Type	Description/function	Connection	Signal type	Tester display	Measurement notes
1	E	Ground for electronics	Ground connection	Battery voltage		
2	E	Passenger's door contact	Door contact	0 V 12 V	OPEN CLOSED	
3	E	B+ for electronic	Fuse, terminal 30	Battery voltage	Diagnostic procedure not possible in the case of fault	
4	E	Driver's door contact	Door contact	0 V 12 V	OPEN CLOSED	
5	E	Diagnostic link, RxD	Diagnostic socket, Pin 15	Square-wave		
6	A	Diagnostic link, TxD	Diagnostic socket, Pin 20	Square-wave		
7	E	Ignition lock, terminal R	Fuse	Battery voltage 0 V	ON OFF	

Pin	Type	Description/function	Connection	Signal type	Tester display	Measurement notes
8	E	Door handle contact	Microswitch on door handle	0 V 12 V	ON OFF	
9	A	Output for power windows and sun roof	Relay	B–		B– corresponding to switch-on conditions
10	E	Diagnostic link for door lock heating	Relay for door lock heating	0 V 12 V	Defect code is stored	0 V when door lock heating OFF 12 V when door lock heating ON
11		Not used				
12		Not used				
13	A	Door lock heating activation	Relay for door lock heating	B–	(activation)	
14	E	Crash signal	Crash sensor	B–	Defect code is stored	
15	E	Pin contact passenger's door	ZV motor drive	0 V 12 V	UNLOCKED LOCKED	
16	E	Pin contact driver's door	ZV motor drive	0 V 12 V	UNLOCKED LOCKED	
17	E	Pin contact passenger's door	ZV motor drive	0 V 12 V	LOCKED UNLOCKED	
18	E	Pin contact driver's door	ZV motor drive	0 V 12 V	LOCKED UNLOCKED	
19	E	Lock contact for arrest	Microswitch driver's door	0 V 12 V	Neutral Arrest	
20	E	Pin contact rear lid	ZV motor drive	0 V 12 V	LOCKED UNLOCKED	
22	A	QZV signal for antitheft system	DWA control unit	12 V		Vehicle locked and arrested!
23		Not used				

Pin	Type	Description/function	Connection	Signal type	Tester display	Measurement notes
24	E	Interface to infrared locking system	IR control unit	Pulse (B+)		
25	E	Interface to infrared locking system	IR control unit	Pulse (B+)		
26	A	Crash signal	Crash alarm sensor	Pulse (B+)		When crash sensor switches B–

Adapter

Component	Connector No.	Description	Adapter No.
ZV module	X13012	26-pin	Cartool 61 4 460 in conjunction with periphery box Cartool 61 1 459

Troubleshooting

Notes

Troubleshooting is mainly performed in accordance with instructions given by the BMW Diagnostic System. See notes given on the display screen!

If a defect or message has occurred several times, this is indicated on the display screen by the following overlay:

"Defect has occurred temporarily x–times"

A defect is marked as "occurred temporarily several times" when, in the meantime, it was OK. again!

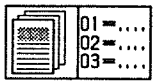

Defect Code Table

♦D♦ Defect code memory – Stored defect codes:

One or several defect codes stored → Defect codes 01 to 29

Malfunctions:

Diagnostic procedure not possible → Defect code 30

General malfunction → Defect code 31

Defect Codes 01 – 06

♦D♦ Defect code memory: Pin contact defective

Explanation: Two inputs are provided for each pin contact at the module. The command lock or unlock is performed only when different levels are applied at both inputs.

A defect code is stored if the same level (12 V or 0 V) is applied at both inputs.

Troubleshooting

The pin contacts can be checked in ♦D♦ Test procedure (BMW MoDiC ♦D♦ Status monitoring).

Check in the case of fault:

Break displayed:

– Is B+ for pin contacts OK. (fuse, wire)?
– Has wire from pin contact to ZVM a break?
– Is pin contact in ZV motor drive OK.?

Short to B+ displayed:

– Has one of the wires from the pin contact to the ZVM a short to B+?

If display does not change:

– Is mechanical system OK. (linkage detached)?
– Is ZV motor drive OK. (check by means of ♦D♦ Test procedure, activate ZV motor drives)
– Is pin contact in ZV motor drive OK.?

Note: This defect code is also stored when the ZV motor drive does not reach the positions unlock or lock due to a mechanical fault.

Defect Codes 07, 09, 11

♦D♦ Defect code memory: ZV relay sticking

Explanation: This defect code is stored when a ZV relay in the ZV module sticks.

Troubleshooting: Renew central locking module.

Defect Codes 08, 10, 12

♦D♦ Defect code memory: ZV relay does not pick up

Explanation: This defect code is stored when a ZV relay in the ZV module does not switch on. Central locking is inactive on all doors when this defect occurs.

Troubleshooting:

- Clear defect code memory
- Operate central locking several times from the vehicle (note repeat lock-out!)
- Replace the central locking module if a malfunction occurs on the vehicle (all doors cannot be locked, arrested or unlocked) and the defect code has been stored once again.

Defect Code 13

♦D♦ Defect code memory: Crash sensor was active

No defect!

Note: This information does not refer to a defect in the vehicle but rather it indicates that the crash sensor has temporarily switched ground to the ZVM due to a bump or impact.

The crash sensor is connected to Pin 14 of the 26-pin connector. If the crash sensor switches ground, the vehicle is unlocked, the interior lights (optional extra interior light package) are switched on and a signal is sent to the crash alarm generator.

Defect Code 14

♦D♦ Defect code memory: Crash sensor or wire to ZVM defective

Explanation: This defect code is stored when the crash sensor switches ground for longer than 5 seconds.

Troubleshooting:

- Check crash sensor for continuity. When installed in position, the crash sensor should only have continuity under the effects of impact. Replace sensor if defective.
- Check wire to the ZVM, 26-pin connector Pin 14 for a short to ground.

Defect Code 15

♦D♦ Defect code memory: ZV repeat lockout was active

No defect!

Note: This information does not refer to a defect in the vehicle but rather it indicates that the repeat lockout of the central locking system was active.

The repeat lockout switches off the central locking system. It is activated when the central locking system is operated more than 30 times within 2 minutes.

The lockout is cancelled automatically.

Defect Codes 16 – 19

♦D♦ Defect code memory: Defect in vicinity of door lock heating

Note: See Section 5120.2A ZVM Door Lock Heating

Defect Code 20

♦D♦ Defect code memory: Wire to interior light switch

Note: See Section 6330.2A ZVM Interior Lights

Defect Code 21

♦D♦ Defect code memory: Undervoltage

Note: This information does not refer to a defect in the area of the central locking system but rather it indicates that the voltage in the vehicle has dropped to below 8 V.

If this message occurs several times, it is displayed on the screen by the following overlay:

"Undervoltage occurred x–times"

The cause should be examined in this case.

Defect Codes 22, 23

♦D♦ Defect code memory: Current limit has been exceeded

Explanation: The current of the load circuit of the relays for the central locking system is constantly measured within the ZV module. If an increased value occurs, an internal, electronic overcurrent protection facility switches off the load circuit. The defect code is stored in this case.

Troubleshooting:

- Check wires from ZV module to the ZV motor drives for a short to positive or short to ground
- Check ZV motor drives for faults – is the short caused by a ZV motor drive?

Defect Code 24

♦D♦ Defect code memory: Voltage supply for ZV interrupted

Explanation: This defect code is stored when the fuse for the central locking system or the wire from the fuse to the ZV module has a break.

Troubleshooting:

- Check fuse for central locking system
- Check wire from the fuse to the ZV module 5–pin connector Pin 2
- If fuse and wire are OK., the load circuit has an internal break. If all ZV functions are permanently or temporarily malfunctioning, renew the ZV module.

Defect Code 25

♦D♦ Defect code memory: Ground for ZV interrupted

Explanation: This defect code is stored when the ground line for the load circuit of the central locking system has a break.

Troubleshooting: Check ground line to ZM module 5–pin connector, Pin 3.

Defect Code 26

♦D♦ Defect code memory: Internal defect

Troubleshooting: Clear defect code memory. Operate central locking system several times from the vehicle (lock, unlock, arrest).

If the defect reoccurs, renew the central locking module.

Defect Codes 27 – 29

♦D♦ Defect code memory: Door contact was active over 16 minutes.

No defect!

Note: This information does not refer to a defect in the vehicle but rather it indicates that the vehicle door was open for longer than 16 minutes. The interior lights were switched off via the ZVM (optional extra interior light package) in line with the switch–off conditions for the interior light control.

Defect Code 30

Diagnostic procedure not possible

Troubleshooting

All functions of the central locking system failed:

- Check all fuses
- Check wires from fuse to ZVM, 26-pin connector Pin 3 (measure voltage with respect to ground, is approx. 12 V applied?)
- Check ground connection to ZVM. 26-pin connector pin 1
- If fuses and wires are OK., renew central locking module

All functions of central locking system OK.:

- Observe general information on display screen
- Check RxD link to ZVM, 26-pin connector Pin 5
- Check TxD link to ZVM, 26-pin connector Pin 6

Defect Code 31

General Malfunction

Note: The BMW diagnostic system provides the option of checking the entire function range of the central locking module via the symbol ♦**D**♦ Test procedure (BMW MoDiC ♦**D**♦ Status monitoring and♦**D**♦ Component activation).

Troubleshooting

Proceed as follows in the case of malfunctions:

- ♦**D**♦ Defect code memory: is a defect code stored? If necessary, rectify defect as shown on display screen.
- If no defect code is stored, select ♦**D**♦ Test procedure. Select central locking system in the test procedure. Carefully read and observe all information provided on screen. Perform all checks. If a defect is found, more detailed information can be called up with ♦⇓♦ .

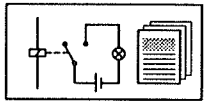

Functional Description

General

The power windows (FH) are controlled by the general module (GM) of the central body electronics (ZKE). The power window relays are in the relay module (RM). The working circuits are provided by the external fuse relay (see Section 6100.0 ZKE).

Operation

The power windows can be operated by the front control switch (centre console) or the rear control switch (in the doors). The switches connect the general module to ground.

It is possible to operate the power windows (and the sunroof) for as long as the switch lights are on. The lights switch on when the ignition is switched on (terminal 15) and, depending upon the country-specific coding, go out when the ignition is switched off or after ignition OFF and opening/closing the driver's or passenger's door.

Child Lock

The rear switches are made inoperable by pressing the safety switch in the front operating unit. The switch lights go out.

Operating Principle

The power window system and the sunroof are switched by a total of seven relays. The circuit is designed in such a way that several relays are driven simultaneously for the direction "close window" or "open/lower sunroof". All five motor drives are connected to one common relay only for the direction "open window" or "close/raise sunroof".

Automatic Strike Feature

General Module up to Model Year '91

Only effective at the driver's door.

The window is completely opened or closed automatically by briefly striking the switch for the driver's power window. Operation of any other power window switch interrupts this opening/closing sequence immediately.

General Module as of Model Year '92

The automatic strike function in the direction "open window" is effective at all doors. The opening procedure is interrupted when the corresponding switch is pressed once again.

The automatic strike feature at the driver's door is also effective in the "close" direction.

Central Closing

The windows and the sunroof can be closed with the door locks. For this purpose, the key must be held in the lock and arrest position for approx. 2 seconds. The power window motor drives are activated in the sequence: Passenger's side – driver's side – sunroof. The general module detects when a window is completely closed by way of end position sensors. The sensors switch ground for as long as the window is open.

Country-Specific Variants

In the ECE/US models, country-specific coding is accomplished with the general module via D13 (yellow connector, Pin 13) which, in the case of the US version, is connected to ground. The Finland and Australia models have their own software versions (♦**D**♦Control unit identification).

ECE version: Windows can still be operated after switching off the ignition. Operation is deactivated after opening or closing the driver's or passenger's door.

US version: Operation is deactivated after switching off the ignition and opening the driver's or passenger's door.

Scandinavia: Switch-off conditions as ECE model, but no automatic strike function for driver's window and sunroof.

Australia: Windows and sunroof can still be operated after switching off the ignition. Operation is deactivated after opening the driver's door (as ECE). Automatic strike function only at driver's door.

BMW 5 BMW 7

Power Windows (FH/ZKE)

General Block Diagram

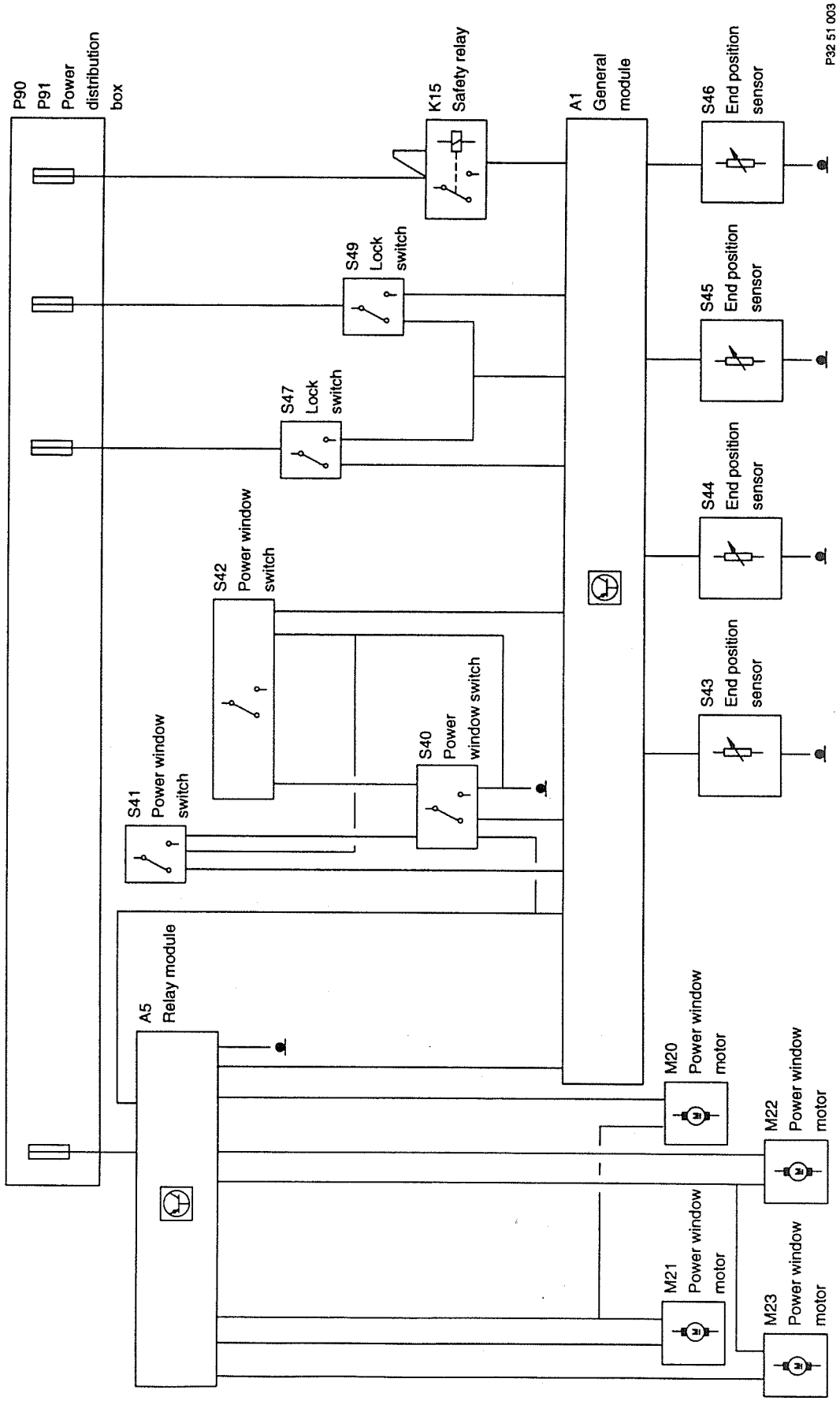

Notes on the BMW DIAGNOSTIC SYSTEM

The relays are stored as being defective during simulation of the outputs. For this reason, the defect code memory is cleared automatically after simulation. Re-detection of the defect codes: Operate power windows from the vehicle.

The OFF display for the end position sensors signifies window open. The sensors switch ground to the general module.

The defect code memory can detect and store the following defect codes:

1. Power window/sunroof relays in relay module do not pick up or stick.
2. Power windows deactivated by position/time monitoring (end position sensor defective).

Power windows are detected as "not installed"

After the supply voltage is applied (terminal 30 at Pin A1), the ZKE general module checks whether the diagnostic links for FH and SHD (Pin C16 or C3) are applied to ground. If the inputs are open, the power windows and sunroof will be detected as not installed.

If the general module is installed with the vehicle battery connected, the undefined contacting when plugging in the module can result in the inputs being detected as open and thus the FH/SHD as "not installed".

The power windows do not operate in this case!

If the vehicle is equipped with power windows but they are not detected by the general module, disconnect the vehicle battery for at least 5 seconds.

If the power windows are still detected as "not installed" after reconnecting the vehicle battery (and reselection of ZKE!), perform troubleshooting in accordance with **defect codes 01– 07** (relay defect stored).

Caution! Danger of injury!

Observe caution in the area of the power windows during simulation of the outputs! Danger of injury by closing window!

Abbreviations

ZKE	Central body electronics
FH	Power window
SHD	Sunroof
Endpos. Geb.	End position sensor
GM	General module
RM	Relay module
E	Input
A	Output

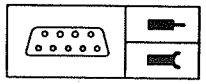

Pin Assignment

Connector Numbers

Number	Type	Description
X332	5-pin, white	GM-A
X253	26-pin, green	GM-B
X254	26-pin, white	GM-C
X255	26-pin, yellow	GM-D
X258	20-pin, black	RM-A up to model year '88 RM-B as of model year '89
X259	20-pin, white	RM-B up to model year '88 RM-A as of model year '89

Pin Assignments at General Module

Pin	Type	Description/function	Connection	Signal type	Tester display	Measurement notes
C11	E	End position sensor, driver's door	End position sensor			
C9	E	End position sensor, passenger's door	End position sensor			
C7	E	End position sensor, rear driver's side	End position sensor			

Pin	Type	Description/function	Connection	Signal type	Tester display	Measurement notes
C22	E	End position sensor, rear passenger's side	End position sensor			
C20	E	Power window switch, driver's window open	Front switch			
C21	E	Power window switch, driver's window closed	Front switch			
C6	E	Power window switch, passenger's window open	Front switch			
C8	E	Power window switch, passenger's window closed	Front switch			
C5	E	Power window switch, rear driver's side window open	Front/rear switch			
C12	E	Power window switch, rear driver's side window closed	Front switch			
C24	E	Power window switch, rear driver's side window closed	Rear switch			
C4	E	Power window switch, rear passenger's side window open	Front/rear switch			
C23	E	Power window switch, rear passenger's side window closed	Front switch			
C10	E	Power window switch, rear passenger's side window closed	Rear switch			
B1	A	FH relay activation in RM	Relay module Pin A3			
B2	A	FH relay activation in RM	Relay module Pin A1			
B15	A	FH relay activation in RM	Relay module Pin A2			
C25	A	FH relay activation in RM	Relay module Pin A7			

Pin	Type	Description/function	Connection	Signal type	Tester display	Measurement notes
C13	A	FH relay activation in RM	Relay module Pin A5			
C26	A	FH relay activation in RM	Relay module Pin A6			
B14	A	SHD relay activation in RM	Relay module Pin A4			
C16	E	Diagnostic link for FH/SHD relay in RM	Relay module Pin B18			
C3	E	Diagnostic link for FH/SHD relay in RM	Relay module Pin A8			
D9	E	Detection of terminal 15	Fuse			
B10	A	Electronic power fuse	Fuse relay			
A4	E	Electronic power fuse	Fuse relay			
A5	A	Electronic power fuse	Relay module Pin B11			
D13	E	ECE/US coding for FH/SHD	Ground for US			

Pin Assignments at Relay Module

Pin	Type	Description/function	Connection	Signal type	Tester display	Measurement notes
A3	E	FH relay activation in RM	General module Pin B1			
A1	E	FH relay activation in RM	General module Pin B2			
A2	E	FH relay activation in RM	General module Pin B15			
A7	E	FH relay activation in RM	General module Pin C25			
A5	E	FH relay activation in RM	General module Pin C13			
A6	E	FH relay activation in RM	General module Pin C26			
A4	E	SHD relay activation in RM	General module Pin C14			

Pin	Type	Description/function	Connection	Signal type	Tester display	Measurement notes
A18	A	Diagnostic link for FH/SHD relay in RM	General module Pin C16			
A8	A	Diagnostic link for FH/SHD relay in RM	General module Pin C3			
A20	E	Ground for FH/SHD drives	Ground			
A11	A	Activation FH drives, passenger's side	FH motor			
A13	A	Activation FH drives, passenger's side	FH motor			
A12	A	Activation FH drives, passenger's side	FH motor			
A14	A	Activation SHD motor	SHD-Motor			
A15	A	Activation FH drives, driver's side	FH motor			
A17	A	Activation FH drives, driver's side	FH motor			
A16	A	Activation FH drives, driver's side and SHD	FH/SHD motor			
B11	E	Electronic power fuse	General module Pin A5			

Troubleshooting

Notes

- Troubleshooting with BMW DIAGNOSTIC SYSTEM
- Battery charged, U-min = 12 V
- If all functions of the central body electronics (ZKE) are defective, perform troubleshooting in accordance with Section 6100.0A Central Body Electronics (ZKE).
- If the electronic power fuse is indicated as being defective or if the fuse is OFF despite the ignition being switched on (♦D♦027 Electronic power fuse), continue with Section 6100.0A Central Body Electronics (ZKE).

Important!

When the supply voltage is applied (terminal 30 at Pin A1), the ZKE general module detects which partial systems are installed in the vehicle. Undefined contacting when plugging in the module can result in systems not being detected. Therefore:

Disconnect the vehicle battery before installing the ZKE general module!

or

Disconnect the vehicle battery for at least 5 seconds after installing the ZKE general module.

Refer to Section 6100.0A Central Body Electronics (ZKE), Functional Description.

Defect Code Table

♦D♦900 Defect code memory - stored defect codes:

♦D♦One or several defect codes between 01 and 07 stored → Defect codes 01 – 07

♦D♦One or several defect codes between 08 and 11 stored → Defect code 08 – 11

♦D♦Defect code 12 stored → Section 5410.0A ZKE Sunroof

Malfunctions

All power window functions at all doors have failed→ Defect code 13

Power windows malfunctioning → Defect code 14

Defect Codes 01 – 07

♦D♦900 Defect code memory: One or more defect codes between 01 and 07 stored

Explanation: The general module detects via the diagnostic links whether the FH/SHD relay in the relay module picks up and switches off again when the power windows are operated.

Possible cause: Wires GM-RM, relay in RM, wire ground RM-A20.

Note: If, in addition, all functions of the central locking system have failed, continue with Section ZKE 6100.0.

Troubleshooting

Are **all** defect codes between 01 and 07 stored? — yes → Check ground line to RM connector A (black) Pin 20, repair if necessary. Is wire OK.? — yes → Renew relay module.

—*—

—*—

no ↓

Are defect code 01 **and** defect code 07 stored? — yes → Check diagnostic link from GM-C3 to RM-A8, repair if necessary. Is link OK.? — yes → Renew relay module.

—*—

—*—

no ↓

Are defect codes 02, 03, 04, 05 **and** 06 simultaneously stored?

— yes → Check diagnostic link from GM-C16 to RM-A18, repair if necessary. Is link OK.?

— yes → Renew relay module.

— * —

— * —

no ↓

Is defect code 01 stored?

— yes → Check wire from GM-B15 to RM-A2, repair if necessary. Is wire OK.?

— yes → Renew relay module.

— * —

— * —

no ↓

Is defect code 02 stored?

— yes → Check wire from GM-B1 to RM-A3, repair if necessary. Is wire OK.?

— yes → Renew relay module.

— * —

— * —

no ↓

Is defect code 03 stored?

— yes → Check wire from GM-B14 to RM-A4, repair if necessary. Is wire OK.?

— yes → Renew relay module.

— * —

— * —

no ↓

Is defect code 04 stored?

— yes → Check wire from GM-B2 to RM-A1, repair if necessary. Is wire OK.?

— yes → Renew relay module.

— * —

— * —

no ↓

Is defect code 05 stored?

— yes → Check wire from GM-C13 to RM-A5, repair if necessary. Is wire OK.?

— yes → Renew relay module.

— * —

— * —

no ↓

Is defect code 06 stored?

— yes → Check wire from GM-C25 to RM-A7, repair if necessary. Is wire OK.?

— yes → Renew relay module.

— * —

— * —

no

↓

Is defect code 07 stored?

— yes → Check wire from GM-C26 to RM-A6, repair if necessary. Is wire OK.?

— yes → Renew relay module.

— * —

— * —

— * —

Defect Codes 08 – 11

♦D♦900 Defect code memory: One or more defect codes between 08 and 11 are stored

Explanation: The general module detects no end position sensor for central locking or the automatic strike feature. After approx. 20 seconds, the power window motor drive is switched off by position-time monitoring.

Possible cause: End position sensor, drive defective or stiff, FH relay in RM

Note: ♦D♦MONITOR INPUTS. End position sensor OFF signifies that sensor switches ground to general module.

Troubleshooting

Does the power window motor drive function correctly when operated with the power window switch? — no → Continue with defect code 14.

—*—

yes ↓

♦D♦MONITOR INPUTS. End position sensor: Completely close window indicated as being defective. Does the display for the corresponding end position sensor show ON? — yes → Does the power window drive motor run stiff compared to the other correctly operating drives? — yes → Repair power window motor drive.

—*—

no ↓

no ↓

Cause of fault no longer exists (dirt accumulation, icing). Clear defect code memory.

— * —

|
no
↓

Detach door trim.
♦D♦MONITOR INPUTS.
End position sensor:
Operate microswitch by hand! Is the sensor now displayed as being ON?

— yes → Is the switch OK. mechanically (jamming, break)?

— yes → Correct setting of microswitch. Power window must activate switch correctly.

— * —

|
no
↓

Replace microswitch.

— * —

|
no
↓

Detach plug connection from microswitch. Is the display now ON?

— no → Wire to general module has short to ground. Repair wire.

— * —

|
yes
↓

Replace microswitch.

— * —

Defect Code 13

All power window functions at all doors have failed

Possible cause: Ground wire, power window switch, ground for switches, switch lighting

Note: If, in addition, all functions of the central locking system have failed, continue with diagnostic procedure ZKE 6100.0.

Troubleshooting

♦D♦900 DEFECT CODE MEMORY. Is a defect code between 01 and 07 stored? — yes → Continue with defect code 01 – 07.

—*—

no ↓

Remove front power window switch. Is ground connection Pin 3 OK.? — no → Repair wire.

—*—

yes ↓

Is central locking system operating correctly? — yes → Switch ignition off and on. Is approx. battery voltage applied at Pin 4 of the power window switch when the ignition is switched on? (Switch lighting) — no → Repair wires.

—*—

no ↓

Continue with diagnostic procedure ZKE 6100.0.

—*—

yes ↓

Replace power window switch.

—*—

Defect Code 14

Power windows malfunctioning – general defect

Troubleshooting

♦D♦SIMULATE OUTPUTS. Activate defective motor drive. Does the power window function correctly during activation?

— no → ♦D♦900 DEFECT CODE MEMORY. Operate defective power window motor drive from vehicle. Is a defect code between 01 and 07 stored?

— yes → Continue with defect code 01 – 07.

— * —

no ↓

Remove door trim panel. Detach 2-pin connector at power window motor. Measure voltage between Pin 1 and Pin 2. Switch on ignition! ♦D♦027 Electronic fuse: Fuse relay must be ON. Operate power window from vehicle. Is voltage value approx. battery voltage?

— yes → Replace power window motor.

— * —

no ↓

yes ↓

yes ↓

Repair wires to relay module.
Driver: RM-A17 and RM-A16.
Rear driver's side: RM-A15 and RM-A16.
Passenger: RM-A13 and RM-A12.
Rear passenger's side: RM-A11 and RM-A12.

— * —

yes ↓

♦**D**♦MONITOR INPUTS.
Switch:
Switch on ignition! Safety switch must not be pressed. Switch on ignition! Operate **rear** window switch in the vehicle. Are all switch positions detected?

— no → Remove defective switch. Operate switch and measure resistance between the specified pins. Nominal value: Resistance < 1 Ω. Measurements: Rest position = Pin 5 – Pin 6, window open = Pin 1 – Pin 4, window closed = Pin 6 – Pin 4. Is switch OK.?

— no → Replace switch.

— * —

yes ↓

Check wires to general module. Repair defective wires (see Pin assignments).

— * —

yes ↓

♦**D**♦MONITOR INPUTS.
Switch:
Switch on ignition! Operate **front** window switch in vehicle. Are all switch positions detected?

— no → Remove switch. Operate switch and measure resistance between Pin 3 and, depending upon the switch position, Pin 1 to Pin 12/6. Nominal value: Resistance < 1 Ω. Is switch OK.?

— no → Replace switch.

— * —

yes ↓

yes ↓

Check wires to general module. Repair defective wire (see Pin assignments).

— * —

yes ↓

♦D♦MONITOR INPUTS.
End position sensor:
Completely close windows. Does end position sensor display ON?

— no → Continue with defect code 08 – 11 (also when no defect code is stored).

— * —

yes ↓

♦D♦MONITOR INPUTS.
End position sensor:
Open window. Does the end position sensor display OFF?

— no → Remove door trim panel. Detach 2-pin connector at end position sensor (microswitch). Connect jumper between Pin 1 and Pin 2 at connector (wire harness). Does display show OFF?

— yes → Replace microswitch.

— * —

no ↓

Is ground connection to microswitch OK.?

— no → Repair wire.

— * —

yes ↓

Repair wire to general module.

— * —

yes ↓

Power windows are OK. electrically.

— * —

Notes

This section applies only when no seat/mirror memory is installed.

Functional Description

Adjustment Features

Seat	Inclination
	Height
	Length
Backrest	Inclination
Headrest	Height
Seat cushion	Length

Electric motors are driven via switches arranged on the side of the seat. Both poles of the motor are connected to ground when the switch is in its basic setting. When the switch is operated, one pole is connected to B+ corresponding to the selected adjustment direction (direction of rotation), the other pole remains connected to ground. A rack and pinion system converts the rotary motion of the motors into a linear displacement motion.

BMW 7 Rear Seat Adjustment

– E32 7 Series only –

As of ignition lock position 2 (terminal 15), the rear seats can be adjusted in longitudinal direction by means of switches arranged on the side of the seat. Adjustment is performed by electric motors.

In the basic setting of the switches, both poles of the motors are connected to ground. When a switch is operated, one pole is connected to B+ corresponding to the selected adjustment direction (direction of rotation), the other pole remains connected to ground. A rack and pinion system converts the rotary motion of the motors into a linear displacement motion.

The B+ supply of the motors is provided via the seat heating/adjustment relays (installation location: rear component support bracket.

Electrical Seat Adjustment

General Block Diagram

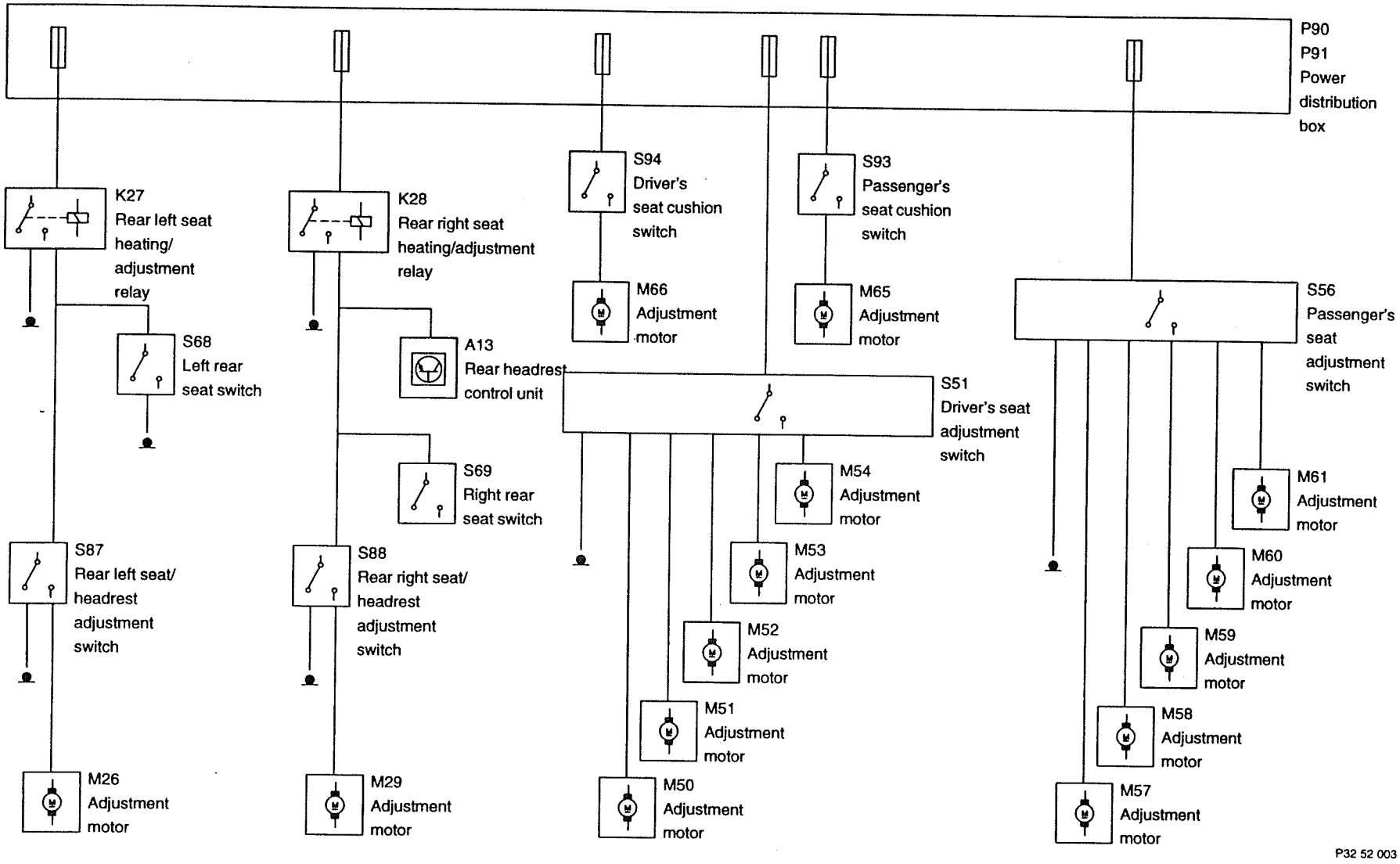

Notes on the BMW DIAGNOSTIC SYSTEM

This system does not feature diagnostic capabilities.

Abbreviations

Not applicable

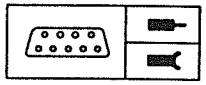

Pin Assignment

Pin Assignments for S51 Driver's Seat Adjustment Switch or S56 Passenger's Seat Adjustment Switch

Pin	Type	Description/function	Connection	Signal type	Tester display	Measurement notes
1	E	Seat tilt switch LOWER	Seat tilt motor			
2	E	Seat tilt switch RAISE	Seat tilt motor			
3	E	Seat switch input FORWARD	Longitudinal adjustment motor			
4	E	Seat switch BACK	Longitudinal adjustment motor			
5	E	Battery voltage	Fuse			
6	A	Ground	Ground point			
7	E	Seat height adjustment switch RAISE	Seat height motor			
8	E	Seat height adjustment switch LOWER	Seat height motor			
9	E	Headrest adjustment switch LOWER	Headrest motor			
10	E	Seat back rest switch FORWARD	Back rest motor			

Pin	Type	Description/function	Connection	Signal type	Tester display	Measurement notes
11	E	Headrest adjustment switch RAISE	Headrest motor			
12	E	Seat back rest switch BACK	Back rest motor			

Pin Assignments for S93 Driver's Seat Cushion Switch or S94 Passenger's Seat Cushion Switch

Pin	Type	Description/function	Connection	Signal type	Tester display	Measurement notes
1	E	Seat cushion switch BACK	Seat cushion motor			
2	E	Lighting	Light switch power circuit			
3	A	Ground	Ground point			
4	E	Seat cushion switch FORWARD	Seat cushion motor			
5	E	Battery voltage	Fuse			
6	A	Ground	Ground point			

BMW 7 Pin Assignments for S87 Rear Left Seat Adjustment Switch and S88 Rear Right Seat Adjustment Switch

Pin	Type	Description/function	Connection	Signal type	Tester display	Measurement notes
3	A	Seat adjustment	Adjustment motor			
4	A	Seat adjustment	Adjustment motor			

Pin	Type	Description/function	Connection	Signal type	Tester display	Measurement notes
5	E	Battery voltage	Pin 2 of seat heating/ adjustment relay			
6	A	Ground	Ground point			

BMW 7 Pin Assignments for Seat Heating/Adjustment Relay Connector X631 or X632

Pin	Type	Description/function	Connection	Signal type	Tester display	Measurement notes
2	E	Load circuit	Pin 5 of rear seat adjustment switch			
4	A	Ground, control circuit	Ground point			
6	E	Load circuit	Fuse			
8	E	B+, control circuit	Fuse			

Troubleshooting

Notes

- Check that mechanical components move smoothly before replacing adjustment motors. See Repair Instructions, Group 52.
- Check contacts of the plug connections before replacing components.

Defect Code Table

Driver's or passenger's seat cannot be adjusted → Defect code 01

A certain function of the driver's or passenger's seat adjustment switch does not operate correctly → Defect code 02

Driver's seat or passenger's seat cushion does not operate correctly → Defect code 03

Switch for driver's or passenger's seat cushion is not illuminated → Check wire GR/SW to Pin 2 of the switch.

Driver's or passenger's seat height adjustment does not operate correctly → Defect code 04

BMW 7 Rear seat adjustment does not operate → Defect code 05

Defect Code 01

Driver's or passenger's seat cannot be adjusted

Possible cause: Power failure or no ground connection, seat adjustment switch defective

Troubleshooting

Detach connector from switch. Measure voltage between Pin 5 of the connector and ground. Is voltage applied?

— yes → Measure voltage at connector between Pin 5 and Pin 6. Is voltage applied?

— yes → Check plug connections for good pin contact. If contact OK. → Replace seat adjustment switch.

— * —

no ↓

Check fuse and wire for a break or a short to negative.

— * —

no ↓

Check BR and ground X492 for a break.

— * —

Defect Code 02

A certain function of the driver's or passenger's seat adjustment switch does not operate correctly

Possible cause: Defective switch in the seat adjustment switch, defect in motor or in the wires to the motor

Troubleshooting

Check whether the suspect motor can be turned freely in both directions. Measure voltage at motor connector. Operate switch in both functions. Is voltage applied in at least one switch position?

— no → Check wire between switch and motor. Is wire OK.?

yes ↓ Replace adjustment motor.

— * —

yes ↓ Replace switch.

— * —

Defect Code 03

Driver's or passenger's seat cushion does not operate correctly

Possible cause: Break in the wire to the switch, switch defective, defect in motor or in the wires to the motor

Troubleshooting

Detach connector from suspect switch. Measure voltage at connector between Pin 5 and Pin 6. Is voltage applied?

— no → Measure voltage between Pin 5 of the connector and ground. Is voltage applied?

— no → Check fuse and wire for a break or a short to B–.

— * —

yes ↓

yes ↓

Measure voltage at connector between Pin 5 and Pin 3. Is voltage applied?

— no → Check wire for a break.

— * —

yes ↓

Reattach connector. Measure voltage at the connector of the seat cushion adjustment motor between Pin 4 and Pin 1. Hold switch in BACK position. Is voltage applied?

— yes → Measure voltage at connector of seat cushion adjustment motor between Pin 4 and Pin 1. Hold switch in FORWARD position. Is voltage applied?

— no → Replace seat cushion switch.

— * —

no ↓

yes ↓

Check wire between motor and switch for a break or a short to B–. If wire is OK. → Replace seat cushion switch.

— * —

Replace seat cushion adjustment motor.

— * —

Defect Code 04

Driver's or passenger's seat height adjustment switch does not operate correctly

Possible cause: Break in the wire to the switch, switch defective, defect in motor or in the wires to the motor

Troubleshooting

Detach connector from suspect switch. Measure voltage at connector between Pin 4 and Pin 2. Is voltage applied?

— no → Measure voltage between Pin 4 of the connector and ground. Is voltage applied?

— no → Check fuse and wire for a break or a short to negative.

— * —

yes ↓

yes ↓

Measure voltage at connector between Pin 4 and Pin 5. Is voltage applied?

— no → Check wire for a break.

— * —

yes ↓

Reattach connector. Measure voltage at connector of the height adjustment motor between Pin 2 and Pin 1. Hold switch in LOWER setting. Is voltage applied?

— yes → Measure voltage at connector of height adjustment motor between Pin 2 and Pin 1. Hold switch in RAISE setting. Is voltage applied?

— no → Replace seat height adjustment switch.

— * —

no ↓

yes ↓

Check wire between switch and motor for a break or a short to negative. If wire is OK. → Replace seat height adjustment switch.

— * —

Replace seat height adjustment motor

— * —

Defect Code 05

Rear seat adjustment does not operate

Troubleshooting

Are fuses in front power distribution box OK.? — no → Renew defective fuse.

— * —

yes ↓

Switch on ignition! Have both rear electrically adjusted seats failed? — yes → Remove rear left seat. Switch on ignition! Check ground and B+ supply for seat heating/adjustment relay (installation location: Rear component mount). Renew defective fuse, repair faulty wire.

— * —

no ↓

Remove seat adjustment switch of defective seat. Detach connector from switch. Switch on ignition! Measure voltage between Pin 5 of the connector and ground. Is battery voltage applied? — no → Remove rear left seat. Interchange left and right seat heating/adjustment relays. Switch on ignition! Is battery voltage now applied at Pin 5 of the connector of the seat adjustment switch? — yes → Replace defective seat heating/adjustment relay.

— * —

no ↓

Are ground and B+ supply for the control circuit of the seat heating/adjustment relay OK.? — no → Repair faulty wire.

— * —

yes ↓

yes ↓

Check fuse and wire to relay Pin 6 and wire from relay to the switch. Repair defective wire.

— * —

|
yes
↓

Is ground applied at Pin 6 of the connector of the seat adjustment switch? — no → Repair wire.

— * —

|
yes
↓

Check switch. Can continuity be measured between:
a) Pin 5 and Pin 4 as well as Pin 6 and Pin 3 in switch position "seat forward"
and
a) Pin 5 and Pin 3 as well as Pin 6 and Pin 4 in switch position "seat back"
Is switch OK.? — no → Renew seat adjustment switch.

— * —

|
yes
↓

Are wires from switch to adjustment motor OK.? — no → Repair defective wire.

— * —

|
yes
↓

Check seat adjustment for mechanical defects, if OK. mechanically, replace adjustment motor.

— * —

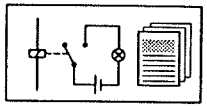

Functional Description

Operation

Set seat and mirror positions with the adjustment switches. Switch on ignition and press red "memory" button on the memory switch. Red LED lights, indicating the position can be stored (for a maximum of 10 sec). Press any selection button (1, 2 or 3), LED goes out after the seat and mirror positions have been stored.

The stored setting can be called as follows:

1. By briefly depressing the required button at:

– Ignition lock in R (position 1)
– Ignition lock in 0 and driver's door open

If any button is pressed once again, the setting procedure is terminated.

2. By pressing the required button until the position is reached at:

– Ignition lock in 0 and driver's door closed
– Ignition lock in 15 (position 2)

The setting procedure is stopped immediately when the button is released.

Operating Principle

A set seat/mirror position is signalled to the control unit via a potentiometer (flange-mounted to each servo drive) in the form of a voltage where it can be stored if necessary. Voltage ranges: seat = 0.1 V to 4.5 V; mirror: 0 V to 4.5 V. When the stored position is called up, the currently applied voltage is compared in the control unit with the stored voltage. The control unit then implements adjustment with the aid of the servo drive until both voltage values are equal.

Relay Monitoring

– For seat motor drives only –

All seat relays are switched off if one relay is held in the working position (relay sticking). The relay status is monitored every time the adjustment switch is operated. The relays are activated once again when the jammed relay is released.

Switching off the seat relays by the relay monitoring facility results in a closed-circuit current consumption of 1.4 A to 2 A (normal case: 10 sec after adjustment < 1 mA).

The BMW DIAGNOSTIC SYSTEM indicates whether the seat relays are OK. or defective.

Seat/Mirror Memory (SM/SPM)

General Block Diagram

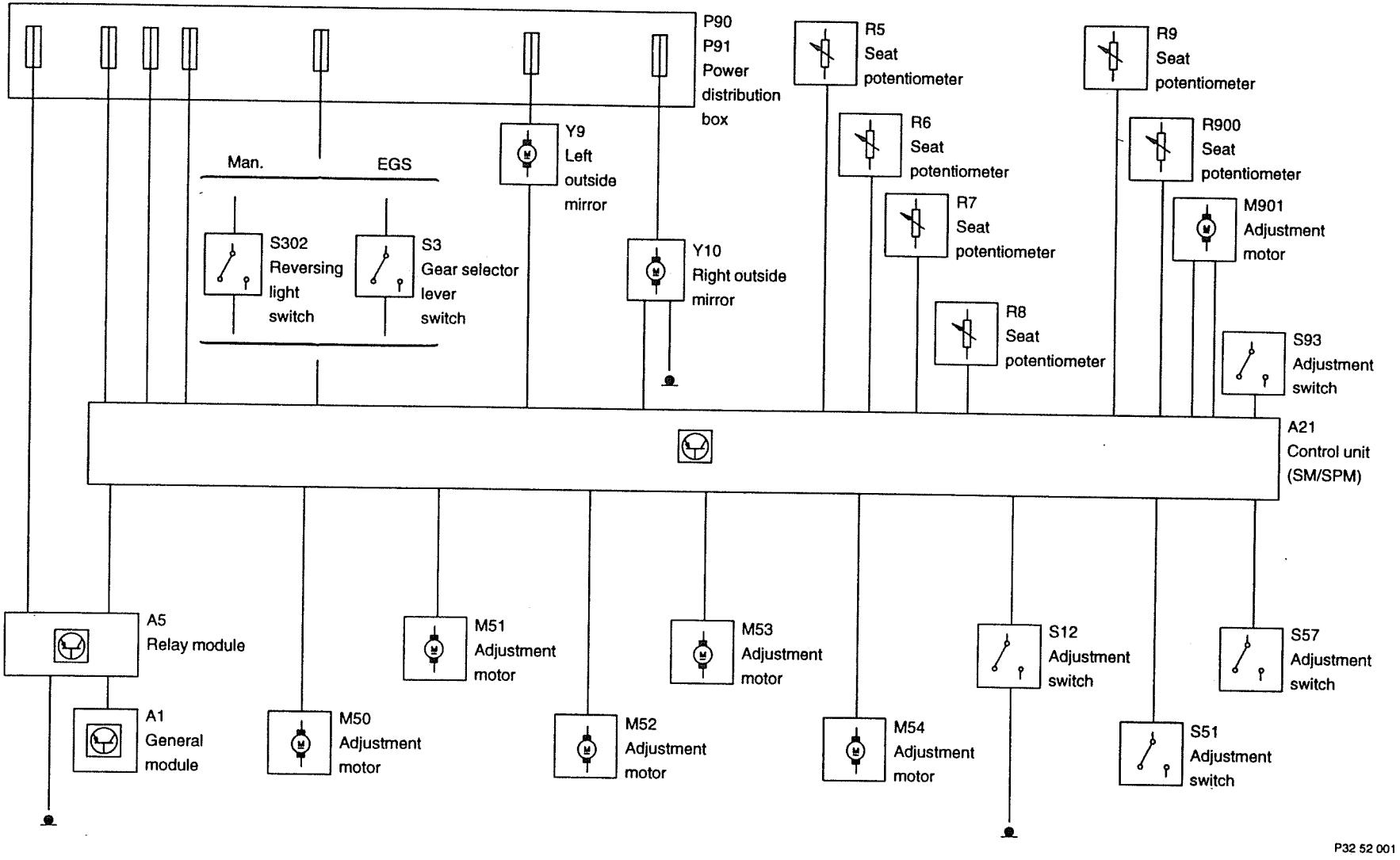

Notes on the BMW DIAGNOSTIC SYSTEM

After being selected, the seat/mirror memory control unit (SM/SPM) assumes a fixed diagnostic mode. It is not possible to adjust the seat/mirror positions with the adjustment switches and store or recall the settings. Defect codes are not stored.

The diagnostic mode is terminated by returning to the general control unit overview.

In the status lists, the corresponding function is displayed after a delay of up to 5 seconds. When checking, the buttons in the vehicle must be pressed for a corresponding amount of time.

Stored in the defect code memories are only defect codes which occur during automatic adjustment (call of stored positions). Defect codes which occur during manual adjustment are not registered by the control unit. After automatic adjustment and detection of a fault, the defect codes are stored after the control unit has assumed its rest position (approx. 10 sec after completion of adjustment).

The defect code memory can detect and store the following defect codes:

1. Motor drives defective
2. Potentiometer defective
3. Drive or potentiometer incorrectly connected
4. Read-only memory defective
5. Memory switch, short to ground

Abbreviations

SM/SPM	Seat/mirror memory

Pin Assignment

Connector Numbers

Number	Type	Description
X648	6-pin, black	Diagnosis, reverse gear
X649	6-pin, white	Terminal 30, 15, R, 31
X601	26-pin, white	Mirror adjustment, mirror motor drives
X602	26-pin, yellow	Memory switch, seat adjustment switch
X653	6-pin, black	Headrest motor drive
X654	6-pin, white	Seat height motor drive
X655	6-pin, blue	Back rest motor drive
X656	6-pin, green	Seat recliner motor drive
X657	6-pin, brown	Seat longitudinal motor drive
X921	6-pin, yellow	Seat cushion motor drive

Pin Assignments at Connector X601

Pin	Type	Description/function	Connection	Signal type	Tester display	Measurement notes
1	E	Driver's mirror potentiometer	Driver's mirror			
2	E	Driver's mirror potentiometer	Driver's mirror			
3	A	Driver's mirror potentiometer	Driver's mirror			

Seat/Mirror Memory (SM/SPM)

Pin Assignments

Pin	Type	Description/function	Connection	Signal type	Tester display	Measurement notes
4	E	Driver's mirror potentiometer	Driver's mirror			
5		not used				
6	E	Passenger's mirror potentiometer	Passenger's mirror			
7		not used				
8		not used				
9		not used				
10	E	Passenger's mirror potentiometer	Passenger's mirror			
11	A	Mirror adjustment switch Pin 5	Mirror adjustment switch			
12	A	Mirror adjustment switch Pin 3	Mirror adjustment switch			
13	A	Mirror adjustment switch Pin 2	Mirror adjustment switch			
14	E/A	Driver's mirror motor	Driver's mirror			
15	E/A	Driver's mirror motor	Driver's mirror			
16	E/A	Driver's mirror motor	Driver's mirror			
17		not used				
18		not used				
19		not used				
20		not used				
21	E	Passenger's mirror potentiometer	Passenger's mirror			
22	E/A	Passenger's mirror motor	Passenger's mirror			
23	E/A	Passenger's mirror motor	Passenger's mirror			
24	E/A	Passenger's mirror motor	Passenger's mirror			
25	A	Passenger's mirror potentiometer	Passenger's mirror			
26		not used				

Pin Assignments at Connector X602

Pin	Type	Description/function	Connection	Signal type	Tester display	Measurement notes
1	A	Headrest down	Driver's seat adjustment switch			
2	A	Recliner back	Driver's seat adjustment switch			
3	A	Height up	Driver's seat adjustment switch			
4	A	Headrest up	Driver's seat adjustment switch			
5	A	Recliner forward	Driver's seat adjustment switch			
6	A	Height up	Driver's seat adjustment switch			
7	A	Seat cushion back	Driver's seat cushion switch			
8	A	Seat back	Driver's seat adjustment switch			
9	A	Seat back rest back	Driver's seat adjustment switch			
10	A	Seat forward	Driver's seat adjustment switch			
11	A	Seat cushion forward	Driver's seat cushion switch			
12	A	Memory switch	Memory switch Pin 2			
13	A	Back rest forward	Driver's seat adjustment switch			
14		not used				
15	A	Ground for seat adjustment switch	Seat adjustment switch			

Pin	Type	Description/function	Connection	Signal type	Tester display	Measurement notes
16	E	Seat cushion forward or back	Driver's seat cushion switch			
17		not used				
18	E	Lighting	Memory switch Pin 4			
19	A	Lighting	Memory switch Pin 3			
20		not used				
21		not used				
22		not used				
23		not used				
24	E	LED	Memory switch Pin 5			
25	A	LED	Memory switch Pin 1			
26	E	Memory switch	Memory switch Pin 6			

Pin Assignments at Connector X648

Pin	Type	Description/function	Connection	Signal type	Tester display	Measurement notes
1	E	Reverse gear	Reverse gear switch			
2	E	Driver's door contact	Driver's door contact			
3		not used				
4		not used				
5	A	Diagnosis	Diagnosis RxD link			
6	E	Diagnosis	Diagnosis TxD link			

Pin Assignments at Connector X649

Pin	Type	Description/function	Connection	Signal type	Tester display	Measurement notes
1	E	Terminal 15	Fuse			
2		not used				
3	E	Terminal R	Fuse			
4	E	Terminal 30	Fuse			
5	A	Ground	Ground point			
6	A	Ground	Ground point			

Troubleshooting

Notes

- Troubleshooting with BMW DIAGNOSTIC SYSTEM
- Battery charged, U-min = 12 V
- Manual adjustment, storing and recalling settings and defect code stored are not possible in diagnostic mode.
- The schematics for the 7 Series (E32), model year 1988 bear the designation:
  5119 Mirror Memory and **5201 Seat Memory.**

The numbers and designations used here apply as of model year 1989.

Defect Code Table

♦D♦900 Defect code memory – stored defect codes:

♦D♦Defect code 01 is stored → Defect code 01

♦D♦Defect code 02 is stored → Defect code 02

♦D♦One or more defect codes between 03 and 14 are stored → Defect code 03 – 14

♦D♦One or more defect codes between 15 and 26 are stored → Defect code 15 – 26

♦D♦One or more defect codes between 27 and 44 are stored → Defect code 27 – 44

♦D♦Defect code 45 is stored → Defect code 45

Malfunctions

Failure of all adjustment functions for seat and mirror → Defect code 46

Failure of all adjustment functions for seat → Defect code 47

Failure of all adjustment functions for mirror → Defect code 48

Failure of individual adjustment functions for seat or mirror → Defect code 49

Storage and recall of settings not possible → Defect code 50

Diagnostic procedure not possible with control unit → Defect code 51

Other defects → Defect code 52

Defect Code 01

♦D♦900 Defect code memory: Defect code 01 is stored

Explanation: Input of the memory switch has a short to ground.

Troubleshooting:

1. Check wires from memory switch Pin 2 and Pin 6 to the 26-pin yellow connector Pin 12 and Pin 26 for a short to ground, repair if necessary.
2. If wires are OK., replace memory switch.

Defect Code 02

♦D♦900 Defect code memory: Defect code 02 is stored

Explanation: Relay of relay monitoring facility switched off since once relay is sticking.

Troubleshooting:

Replace SM/SPM control unit.

Defect Codes 03 – 14

♦D♦900 Defect code memory: One or more defect codes between 03 and 14 are stored

Explanation: During automatic adjustment, the control unit checks whether the voltage value of the feedback potentiometer changes within a certain time.

Possible cause: Motor drive stiff or defective, potentiometer faulty.

Troubleshooting:

Continue with defect code 49.

Defect Codes 15 – 26

♦D♦900 Defect code memory: One or more defect codes between 15 and 26 are stored

Explanation: Motor or potentiometer polarity interchanged.

Note: It is possible that the connectors at the adjustment switch have also been interchanged. Check switch with ♦D♦211 Manual buttons or ♦D♦212 Mirror adjustment.

Troubleshooting:

1. Checking the motor polarity: ♦D♦300 Activate motor drives. If the polarity is wrong, the motor will run in the opposite direction. Correct polarity.
2. Checking the potentiometer polarity: ♦D♦300 Activate motor drives. Observe the change in the voltage value between two settings. The voltage must increase at: Seat height up, backrest forward, recliner up, seat forward, headrest up, mirror vertical up, horizontal right. Correct polarity.

Defect Code 27 – 44

♦D♦900 Defect code memory: One or more defect codes between 27 and 44 are stored

Explanation: The potentiometer voltage (0.1 V to 4.5 V) drops below or exceeds the permissible voltage range.

Possible cause: The wire has a short or a break, potentiometer defective.

Troubleshooting:

1. Check wires from the control unit to potentiometer, repair if necessary.
2. If wires are OK., renew potentiometer.

Defect Code 45

♦D♦900 Defect code memory: Defect code 45 is stored

Explanation: Seat/mirror positions are not stored correctly over a longer period of time.

Troubleshooting:

♦D♦999 Clear defect code memory. Terminate diagnostic mode. Store and recall settings several times. If the defect occurs once again, replace the control unit.

Defect Code 46

Failure of all seat and mirror adjustment functions

Possible cause: Power supply, ground

Troubleshooting

Is fuse OK.? — no → Renew fuse.

— * —

yes ↓

Remove driver's seat. Disconnect 6-pin white power supply connector. Is battery voltage applied at Pin 4 (terminal 30)? — no → Repair wire.

— * —

yes ↓

Is ground at Pin 6 and Pin 5 OK.? — no → Repair faulty wire.

— * —

yes ↓

Renew control unit.

— * —

Defect Code 47

Failure of all seat adjustment functions

Possible cause: Relays, adjustment switches

Note: Mirror adjustment OK., otherwise go to defect code 46

Troubleshooting

♦**D**♦210 Power supply. Does the relay monitor show the seat motor relays are OK.?

— no → If "defect" is displayed: Renew control unit.

—*—

yes ↓

♦**D**♦211 Manual buttons. Operate seat adjustment switch in the vehicle! **(Attention! Keep switch depressed for at least 5 seconds until display appears).** Are all switch positions detected?

— yes → Continue with defect code 49.

—*—

no ↓

Remove seat adjustment switch. Check switch. Depending upon the switch position, the resistance between Pin 5 and Pin 1, 2, 3, 4, 7, 8, 9, 10, 11 or 12 is < 1 Ω. Is switch OK.? — no → Renew switch.

—*—

yes ↓

Is wire from switch Pin 5 to the 26-pin yellow connector Pin 15 OK.? — no → Repair wire.

—*—

yes ↓

Are all wires from the switch to the 26–pin yellow connector OK.? — no → Repair faulty wires.

—*—

yes ↓

Renew control unit.

—*—

Defect Code 48

Failure of all mirror adjustment functions

Possible cause: Wires, adjustment switch, control unit

Note: Seat adjustment OK., otherwise go to defect code 46

Troubleshooting

♦D♦212 Mirror adjustment. Operate adjustment switch in vehicle! **(Attention! Keep switch pressed for at least 5 seconds until display appears).** Are all switch positions detected?

— yes → Continue with defect code 49.

|

no

↓

— * —

Is ground connection to mirror adjustment switch Pin 4 OK.?

— no → Repair wire.

|

yes

↓

— * —

Are wires from the switch to the 26-pin white connector at the control unit OK.?

— yes → Renew switch.

|

no

↓

— * —

Repair faulty wires.

— * —

Defect Code 49

Failure of individual seat or mirror adjustment functions

Possible cause: Switch, motor drive, potentiometer, wires

Troubleshooting

SM/SPM control unit not in diagnostic mode! Is it possible to adjust the defective motor drive with the adjustment switches?

— no → ♦D♦Start diagnostic mode for seat/mirror memory.♦D♦300 Activate motor drives. Does the suspect motor drive operate correctly when activated?

— no → Check wires to the motor drive, repair if necessary. If wires are OK., remove motor, test run, renew defective motor. If motor is OK., renew control unit.

— * —

yes ↓

— yes → ♦D♦211/212 Adjustment switches. Operate adjustment switches in the vehicle! Are all functions displayed correctly?

— yes → Malfunction is not of an electrical nature. Check motor drive for mechanical fault.

— * —

yes ↓

no ↓

Are wires from the adjustment switch to the control unit OK.?

— no → Repair faulty wires.

— * —

yes ↓

yes ↓

Renew adjustment switch.

— * —

yes ↓

♦D♦Start diagnostic mode for seat/mirror memory. ♦D♦900 Defect code memory. Is a defect code stored?

— no → ♦D♦300 Activate motor drives. Activate defective motor drive. Note displayed potentiometer voltage. Does the voltage change after motor activation?

— no → Renew potentiometer.

— * —

yes ↓

Terminate diagnostic mode. Change, store and call seat/mirror settings.
♦D♦900 Recall defect code memory.

— * —

yes ↓

♦D♦Does the display show a potentiometer defect for the motor drive? (Defect code 27 to 44)

— yes → Continue with defect codes 27 – 44.

— * —

no ↓

♦D♦Does the display show a defect code between 03 and 14 for the motor drive?

— yes → Check motor drive for stiff movement. Dirt accumulation or icing can cause intermittent stiff movement in the motor drives. Repair motor drive.

— * —

no ↓

Go to defect code table.

— * —

Defect Code 50

It is not possible to store and recall settings

Possible cause: Memory switch, wires

Note: Manual adjustment of all motor drives OK., otherwise go to defect codes 46, 47, 48 or 49

Troubleshooting

♦**D**♦213 Memory/call keypad. Press button on memory switch. **(Attention! Keep switch pressed for at least 5 sec. until display appears).** Are all buttons detected? — yes → Renew control unit.

|

no

↓

—*—

Remove memory switch. Measure resistance at switch between Pin 6 and Pin 2. Nominal values: Button 1 = 500 – 600 Ω, button 2 = 170 – 210 Ω, button 3 = 60 – 80 Ω, memory = 0 –1 Ω. Are measured values OK.? — no → Renew switch.

|

yes

↓

—*—

Repair wires from memory switch to the 26–pin yellow connector.

—*—

Defect Code 51

Diagnostic procedure not possible with control unit

Possible cause: Power supply, ground, RxD link, TxD link

Note: Refer to notes given in the BMW DIAGNOSTIC SYSTEM

Troubleshooting

Is it possible to adjust the seat and mirror settings from the vehicle?

— yes → Check RxD and TxD links from the diagnostic socket to the 6-pin black connector, repair faulty wire. RxD: Pin 5, TxD: Pin 6.

— * —

|
no
↓

Continue with defect code 46.

— * —

Defect Code 52

Other Defects

♦D♦210 Power supply. Terminal R is not detected:

Check fuse and wire to 6-pin white connector Pin 3 and repair if necessary.

♦D♦210 Power supply. Terminal 15 is not detected:

Check fuse and wire to 6-pin white connector Pin 1 and repair if necessary.

♦D♦212 Mirror adjustment. Reverse gear 15 is not detected:

Repair wire to 6-pin black connector Pin 1.

♦D♦213 Memory call keypad. Driver's door open is not detected:

Repair wire from driver's door contact to the 6–pin black connector Pin 2.

Notes

This description applies up to and including 1990.

Functional Description

The seat heating system is effective in the seat cushion and back rest of the driver's and passenger's seat. Rear seat heating is also available as an optional extra.

The heated seats consist of the following components:

- Back rest heating element
- Seat cushion heating element
- Seat heating switch

Additionally for rear heated seats:

- Seat heated relay

Additionally as of model year 1989:

- Seat heating relay, also for front heated seats

Operation Standby up to Model Year 1989

The seat heating system is ready for operation as of ignition switch position "ignition ON". The green indicator lamp in the switch indicates that the seat heating is on.

Operation Standby as of Model Year 1989

The seat heating system for the driver's seat is ready for operation only when the engine is running (detected by terminal 61).

In addition, the seat belt must be buckled (detected by microswitch in belt buckle).

The green indicator lamp in the switch signals that the seat heating is active.

Operating Principle

- Switch setting 1 continuous heating – symbol 1 heating coil element – the heating elements of the seat cushion and back rest are connected in series = reduced heating capacity.
- Switch setting 2 heating-up – symbol 3 heating coil elements – the heating elements of the seat cushion and back rest are connected in parallel and therefore receive the full battery voltage = full heating capacity.

The seat heating switches are illuminated when the parking light is switched on. The switch light becomes brighter when seat heating is switched on.

Notes on the BMW DIAGNOSTIC SYSTEM

This system does not feature diagnostic capabilities.

Abbreviations

Not applicable

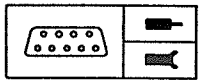

Pin Assignment

Pin Assignments at the Seat Heating Switch

Pin	Type	Description/function	Connection	Signal type	Tester display	Measurement notes
1		Ground	Ground			
3		Heating-up setting	Seat cushion and back rest heating			
4		Lichting	Light switch			
5*)		Terminal 15/30 *) Function and connection depend on the model year up to 89 or as of 89; see schematics	Fuse or relay			
6		Continuous heating setting	Seat cushion and back rest heating			

Troubleshooting

Notes

- Battery charged, U_{min} = 12 Volt
- Note differences in the operational standby as of model year 1989, see functional description.
- The unloader relay K61 (terminal 61) can be checked in accordance with Section 1230.A (alternator).

The defect description is only applicable up to and including model year 1990.

Defect Code Table

Up to model year 1989:

Failure of switch lighting → Defect code 01

Failure of heating function → Defect code 02

As of model year 1989 up to model year 1991

Failure of switch lighting → Defect code 03

Failure of heating function at driver's seat → Defect code 04

Failure of heating function at passenger's seat → Defect code 05

Failure of heating function at rear seats → Defect code 06

Defect Code 01

Failure of Switch Lighting (up to model year 1989)

Troubleshooting

Switch on light. Is voltage applied at Pin 4 of the connector (X651, X658)? — no → Repair wire.

— * —

yes ↓

Is ground applied at Pin 1 of the connector (X651, X658)? — no → Repair wire.

— * —

yes ↓

Replace switch.

— * —

Defect Code 02

Failure of Heating Function (up to model year 1989)

Troubleshooting

Switch on ignition. Is voltage applied at Pin 5 of the connector (X651, X658)? — no → Repair wire.

—*—

yes ↓

Is ground applied at Pin 1 of connector (X651, X658)? — no → Repair wire.

—*—

yes ↓

Disconnect 2-pin plug connections (X732, X733) under seat and in back rest. Check resistance of each heating element (at ambient temperature). Is resistance 5...8 Ω ? — no → Replace heating element.

—*—

yes ↓

Is ground applied at Pin 2 (wire colour brown) of connector (X732) of back rest? — no → Repair wires.

—*—

yes ↓

Check wires from switch to plug connections of heating element for continuity. Is continuity measured?

— no → Repair wires.

— * —

yes ↓

Replace switch.

— * —

Defect Code 03

Failure of Switch Lighting (model year 1989 up to 1991)

Troubleshooting

Switch on light. Is battery voltage applied at Pin 4 at heating switch? — no → Repair wire.

—*—

yes ↓

Is ground applied at Pin 1 of heating switch? — no → Repair wire.

—*—

yes ↓

Replace switch.

—*—

Defect Code 04

Failure of Heating Function at Driver's Seat (model year 1989 to 1991)

Troubleshooting

Are fuses OK.? — no → Renew defective fuse.

—*—

yes ↓

Remove heating switch. Check for continuity. — no → Replace switch.

Setting 1 – Continuous heating: Continuity between 15 (Pin 5) and HS (Pin 6)
Setting 2 – Heating-up: Continuity between 15 (Pin 5) and HL (Pin 3) and between 31 (Pin 1) and HS (Pin 6)
Is switch OK.?

—*—

yes ↓

Is ground applied at Pin 1 of the 6-pin connector for the heating switch? — no → Repair wire.

—*—

yes ↓

Start engine. Charge indicator lamp must go out. Is battery voltage applied at Pin 5 of the 6-pin connector?

— no → Is wire from Pin 5 to driver's seat heating relay (K65) Pin 5 (87) OK.?

— no → Repair wire.

—*—

yes ↓

Switch on ignition! Is battery voltage applied at the driver's seat heating relay (K65) at Pin 6 (30) and Pin 8 (86)?

— no → Repair faulty wire.

—*—

yes ↓

Start engine. Charge indicator lamp must go out. Is battery voltage applied at Pin 9 (85)?

— yes → Renew driver's seat heating relay (K65).

—*—

yes ↓

Have other systems using terminal 61 failed (e.g. passenger's seat heating, rear defogger)?

— yes → Continue with diagnostic procedure 1230 Alternator. Check terminal 61 relay.

—*—

yes ↓

Repair wire from Pin 9 to terminal 61 relay.

—*—

yes ↓

Disconnect 2-pin plug connections under the seat and in the back rest. Measure resistance of each heating element (at ambient temperature). Is resistance 5 – 8 Ω ? — no → Replace heating element.

—*—

yes ↓

Is ground applied at Pin 2 (wire colour brown) of 2-pin connector for the back rest? — no → Repair wires.

—*—

yes ↓

Repair wires from the switch to the plug connections of the heating elements.

—*—

Defect Code 05

Failure of Heating Function at Passenger's Seat (model year 1989 to 1991)

Note: If the driver's seat heating has also failed, first repair fault at driver's seat.

Troubleshooting

Remove heating switch. Check switch for continuity.
Setting 1 – Continuous heating: Continuity between 15 (Pin 5) and HS (Pin 6)
Setting 2 – Heating-up: Continuity between 15 (Pin 5) and HL (Pin 3) and between 31 (Pin 1) and HS (Pin 6)
Is switch OK.?

— no → Replace switch.

—*—

yes ↓

Is ground applied at Pin 1 of 6-pin connector for the heating switch?

— no → Repair wire.

—*—

yes ↓

Start engine. Charge indicator lamp must go out. Buckle passenger's seat belt. Is battery voltage applied at Pin 5 of the 6-pin connector?

— no → Is wire from Pin 5 to passenger's seat heating relay (K66) Pin 2 (30) OK.?

— no → Repair wire.

|
yes
↓

|
yes
↓

|
yes
↓

|
yes
↓

Disconnect 2-pin plug connections under the seat and in the back rest. Measure resistance of each heating element (at ambient temperature). Is resistance 5 – 8 Ω ? — no → Replace heating element.

|
yes
↓

Engine running! Is battery voltage applied at the passenger's seat heating relay (K66) at Pin 6 (87) and Pin 8 (85)? — no → Repair faulty wire.

|
yes
↓

Engine off! Seat belt buckled! Is ground applied at the passenger's seat heating relay (K66) at Pin 4 (86)? — yes → Replace passenger's seat heating relay (K66).

|
no
↓

Check belt buckle microswitch for continuity. Check ground wire to belt buckle microswitch and wire to relay Pin 4. Repair fault.

— * —

— * —

— * —

— * —

Is ground applied at Pin 2 (wire colour brown) of the 2-pin connector of the backrest?

— no → Repair wires.

—*—

|

yes

↓

Repair wires from the switch to the plug connections of the heating elements.

—*—

Defect Code 06

Failure of Heating Function at Rear Seats (model year 1989 to 1991)

Note: The troubleshooting procedure applies analogously for left and right heated seats.
If the driver's seat heating has also failed, first repair fault at driver's seat.
If power seats are installed and seat functions have failed, continue with diagnostic procedure 5200.0 Electrical Seat Adjustment.

Troubleshooting

Are fuses OK.? — no → Replace defective fuse.

—*—

yes ↓

Remove heating switch. Check switch for continuity. — no → Replace switch.
Setting 1 – Continuous heating: Continuity between 15 (Pin 5) and HS (Pin 6)
Setting 2 – Heating-up: Continuity between 15 (Pin 5) and HL (Pin 3) and between 31 (Pin 1) and HS (Pin 6)
Is switch OK.?

—*—

yes ↓

Is ground applied at Pin 1 of the 6-pin connector for the heating switch? — no → Repair wire.

—*—

yes ↓

Start engine. Charge indicator lamp must go out. Buckle seat belts. Is battery voltage applied at Pin 5 of the 6-pin connector?

— yes → Remove seat. Is ground applied at Pin 2 (wire colour brown) of the 2-pin connector of the seat heating element?

— no → Repair wires.

— * —

yes ↓

Disconnect 2-pin plug connection for heating elements. Measure resistance of each heating element (at ambient temperature). Is resistance 5 – 8 Ω ?

— no → Renew heating element.

— * —

yes ↓

Repair wires from switch to the connectors of the heating elements.

— * —

no ↓

Remove seat heating relay K68 or K69. Start engine. Charge indicator lamp must go out. Is battery voltage applied at Pin 4?

Repair wire to driver's seat heating relay (K65) Pin 5.

— * —

yes ↓

no ↓

Switch off engine. Switch on ignition! Is battery voltage applied at Pin 6?

— no → **With electrical seat adjustment:** Repair wire to seat heating/adjustment relay (K27 or K28).
Without electrical seat adjustment: Check wire to seat heating relay (K17) Pin 2. Is wire OK.?

— no → Repair wire.

— * —

yes ↓

Remove seat heating relay K17. Switch on ignition! Is battery applied at Pin 6 and Pin 8? Is ground applied at Pin 4?

— no → Check fuse, renew if necessary. Check wire, repair if necessary.

— * —

yes ↓

Renew seat heating relay K17.

— * —

yes ↓

Buckle seat belt. Is ground applied at relay K68 (left side) or at relay K69 (right side) at Pin 5?

— no → Check buckle microswitch for continuity. Check ground wire to buckle microswitch and wire to relay Pin 5. Repair defect.

— * —

yes ↓

Renew defective relay K68 (left) or K69 (right).

— * —

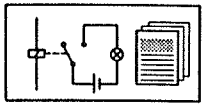

Functional Description

The electrically operated sunroof (SHD) is controlled by the general module (GM) of the central body electronics (ZKE). The sunroof relay (SHD) is located in the relay module (RM). The working circuits are protected by the external fuse relay (see 6100.0).

Operation

The sunroof is operated with the sunroof switch (SHD). The switch connects ground to the general module.

Operation of the sunroof is possible for as long as the power windows can be operated (see Section 5133.0A ZKE Power Windows).

Operating Principle

The sunroof and power windows are switched with a total of seven relays. The circuit is designed in such a way that several relays are activated simultaneously for the directions "close window" or "open/lower sunroof". All five motor drives have one common relay only for the direction "open window" or "close/lift sunroof".

With the aid of two position sensors, the general module can detect whether the sunroof has reached its end positions. The sensors switch to ground when the sunroof is open. Based on the sequence of the ground signals, the general module detects whether the sunroof is raised or open (slid).

Automatic Strike Feature

When the switch for opening and closing is struck briefly, the sunroof is completely opened or closed automatically. Operation of a power window switch interrupts this function immediately. The automatic strike feature is ineffective for the "raise" function.

Central Closing

The windows and the sunroof can be closed via the door locks. For this purpose, the key must be held for approx. 2 seconds in the position lock or arrest. The power window motor drives are activated in the sequence: passenger's side – driver's side – sunroof. On the basis of the end position sensor, the general module detects when a window is completely closed.

The sunroof is not activated before all windows are closed

Country-Specific Variants

Refer to Section 5133.0A ZKE Power Windows.

Sunroof (SHD/ZKE)

General Block Diagram

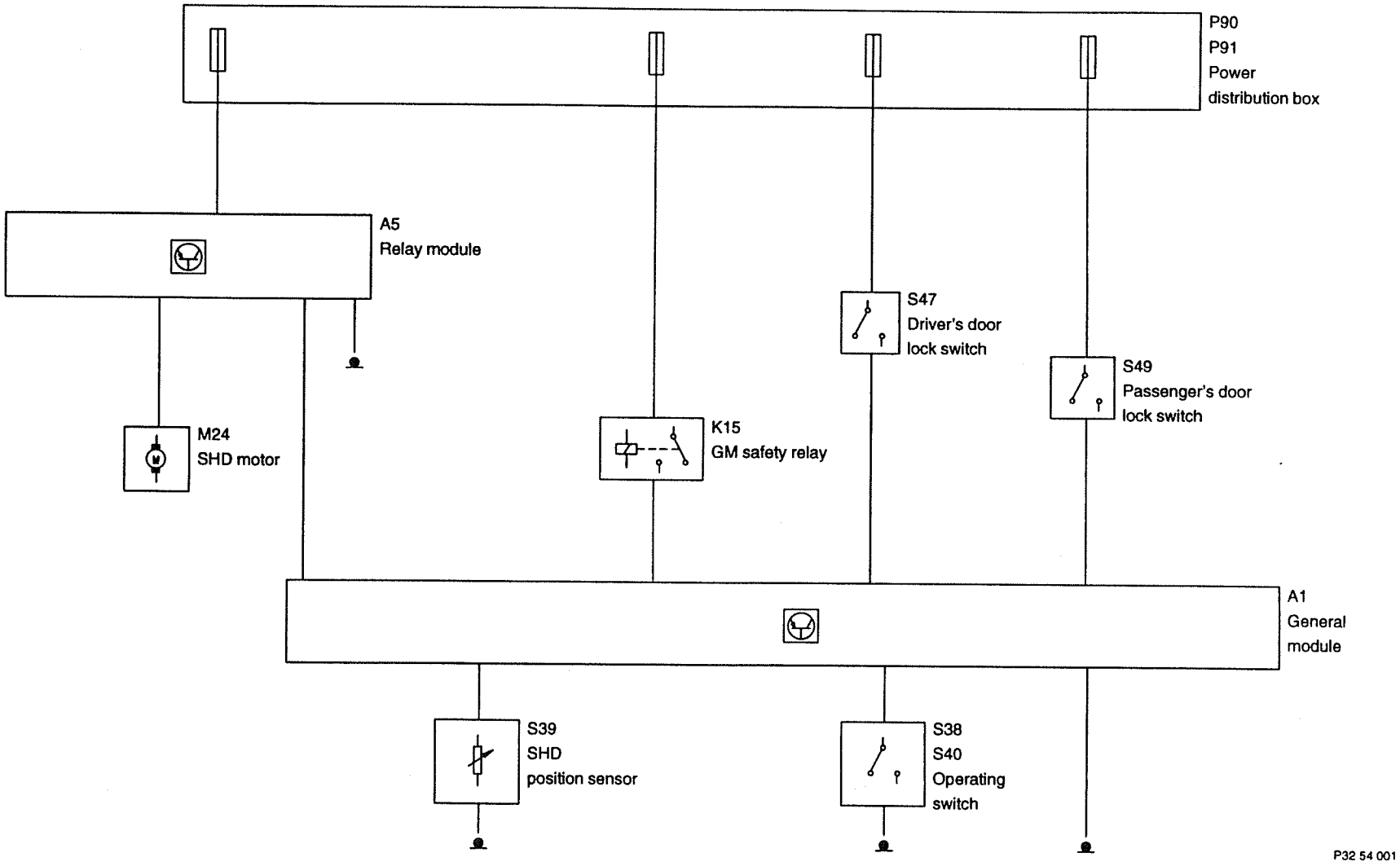

Notes on the BMW DIAGNOSTIC SYSTEM

The relays are stored as defective during simulation of the outputs. For this reason, the defect code is cleared automatically after simulation. Redetection of the defect codes: Operate the sunroof from the vehicle.

The ON display for the position sensors indicates that the sunroof is open. The position sensors switch ground to the general module.

The defect code memory can register and store the following defect codes:

1. FH/SHD relays in relay module do not pick up or they stick.
2. Sunroof switched off by position/time monitoring facility (position sensor defective).

Sunroof detected as "not installed"

After applying the supply voltage (terminal 30 at Pin A1), the ZKE general module checks whether the diagnostic links for FH and SHD (Pin C16 or C3) are applied to ground. If the inputs are open, the sunroof will be detected as "not installed".

If the general module is installed with the vehicle battery connected, undefined coding when plugging in the module can result in the inputs being detected as open and thus, the sunroof as "not installed".

The electric sunroof does not operate in this case!

If the vehicle is equipped with an electrically operated sunroof but is not detected by the general module, disconnect the vehicle battery for at least 5 seconds.

If the sunroof (SHD) is still detected as "not installed" after reconnecting the vehicle battery (and reselecting ZKE!), perform troubleshooting in accordance with **defect codes 01– 07** (relay defect code stored) in Section 5133.0A (ZKE Power Windows).

Important!

Take care in the vicinity of the sunroof during simulation of outputs! Danger of injury by closing sunroof!

The general module does not detect any end positions during simulation. Therefore, ensure the sunroof does not run up to its mechanical limit stop. This may result in maladjustment of the sunroof.

Abbreviations

ZKE	Central body electronics
SHD	Sunroof
FH	Power window
GM	General module
RM	Relay module

Pin Assignment

Connector Numbers

Number	Type	Description
X332	5-pin, white	GM-A
X253	26-pin, green	GM-B
X254	26-pin, white	GM-C
X255	26-pin, yellow	GM-D
X258	20-pin, black	RM-A up to model year '88 RM-B as of model year '89
X259	20-pin, white	RM-B up to model year '88 RM-A as of model year '89

Pin Assignments at the General Module

Pin	Type	Description/function	Connection	Type of signal	Tester display	Measurement notes
D14	E	Front position sensor	Position sensor			
C2	E	Rear position sensor	Position sensor			
C19	E	SHD switch, slide open	SHD switch			
C17	E	SHD switch, lift open	SHD switch			
C18	E	SHD switch, close	SHD switch			

Pin	Type	Description/function	Connection	Type of signal	Tester display	Measurement notes
C26	A	SHD/FH relay activation in RM	Relay module Pin A6			
B14	A	SHD relay activation in RM	Relay module Pin A4			
C16	E	Diagnostic link for FH/SHD relay	Relay module Pin A18			
C3	E	Diagnostic link for FH/SHD relay	Relay module Pin A8			
D9	E	Detection of terminal 15	Fuse			
B10	A	Electronic power fuse	Fuse relay			
A4	E	Electronic power fuse	Fuse relay			
A5	A	Electronic power fuse	Relay module Pin B11			
D13	E	ECE/US coding for FH/SHD	Ground for US			

Pin Assignments at Relay Module

Pin	Type	Description/function	Connection	Type of signal	Tester display	Measurement notes
A6	E	SHD/FH relay activation in RM	General module Pin C26			
A4	E	SHD relay activation in RM	General module Pin B14			
A18	A	Diagnostic link for FH/SHD relay	General module Pin C16			
A8	A	Diagnostic link for FH/SHD relay	General module Pin C3			
A20	E	Ground for FH/SHD motor drives	Ground point			
A4	A	SHD motor activation	SHD motor			
A16	A	FH motor drive activation, driver's side and SHD	FH/SHD motor			
B11	E	Electronic power fuse	General module Pin A5			

Troubleshooting

Notes

- Troubleshooting with BMW DIAGNOSTIC SYSTEM
- Battery charged, U-min = 12 V
- If all functions of the central body electronics (ZKE) have failed, carry out troubleshooting in accordance with Section 6100.0A Central Body Electronics (ZKE).
- If the electronic power fuse is indicated as being defective or if the fuse is OFF despite the ignition being switched on (♦D♦027 Electronic power fuse), continue with Section 6100.0A Central Body Electronics (ZKE).

Important!

When the supply voltage is applied (terminal 30 at Pin A1), the ZKE general module detects which part systems are installed in the vehicle. Undefined coding when plugging in the module can result in systems not being detected. Therefore:

Disconnect the vehicle battery before installing the ZKE general module!

or

Disconnect the vehicle battery for at least 5 seconds after installing a ZKE general module.

Refer to Section 6100.0A Central Body Electronics (ZKE), functional description.

Defect Code Table

♦D♦900 Defect code memory – stored defect codes:

♦D♦One or more defect codes between 01 and 07 are stored → continue with Section 5133.0A ZKE Power Windows.

♦D♦Defect code 12 is stored → Defect code 12

Malfunctions:

Sunroof malfunctioning → Defect code 13

Defect Code 12

♦D♦900 Defect code memory: Defect code 12 stored

Explanation: The general module registers no position sensors during the automatic strike feature or central closing. The sunroof motor drive is switched off after approx. 20 seconds by the position/time monitoring feature.

Possible cause: Position sensor, motor drive defective or stiff, SHD/FH relay in relay module.

Note: ♦D♦MONITOR INPUTS. Position sensor OFF means that the position sensors do not switch ground to the general module

Troubleshooting

Continue with defect code 13.

Defect Code 13

Sunroof malfunctioning

Note: The Repair Instructions Group 54 contain the instructions for mechanical adjustment of the sunroof and troubleshooting for mechanical defects.

Troubleshooting

♦**D**♦SIMULATE OUTPUTS. Activate SHD motor drive. Does the sunroof operate correctly during activation?

— no → ♦**D**♦900 DEFECT CODE MEMORY. Operate sunroof from vehicle. Is a defect code between 01 and 07 stored?

— yes → Continue with Section 5133.0A ZKE Power Windows.

— * —

no ↓

Remove cover for SHD motor drive. Detach 8-pin connector at sunroof motor. ♦**D**♦SIMULATE OUTPUTS and measure voltage between Pin 1 and Pin 2. Does the voltage value approximately reach battery voltage during activation?

— yes → Renew sunroof motor.

— * —

no ↓

Check wires to RM connector A (white) Pin 14 and Pin 16. Repair faulty wire.

— * —

yes ↓

yes ↓

yes ↓

♦D♦MONITOR INPUTS.
SHD switch:
Switch on ignition! Operate sunroof switch in vehicle. Are all switch positions detected?

— no → Remove switch. Operate switch and measure resistance of the switch between Pin 31D and, depending on the switch position, Pin A, Pin B or Pin C. Nominal value: Resistance < 1 Ω. Is switch OK.?

— no → Renew switch.

yes ↓

— * —

Is ground wire to Pin 6 at the connector OK.?

— no → Repair wire.

yes ↓

— * —

Check wires to general module. Repair faulty wires. (see Pin Assignments)

— * —

— * —

yes ↓

♦D♦ MONITOR INPUTS.
Position sensor:
Completely open sunroof! Are both position sensors displayed as ON?

— no → Remove cover for sunroof motor drive. Detach 8-pin connector for sunroof motor drive. Is ground connection to Pin 5 OK.?

— no → Repair wire.

— * —

yes ↓

yes ↓

Measure resistance at connector to sunroof motor drive (check position sensor). Is the resistance between Pin 5 and Pin 6, as well as between Pin 5 and Pin 7 < 1 Ω ?

— yes → Check wires to GM-D14 and GM-C2. Repair faulty wire.

—*—

no ↓

Check mechanical setting to Repair Instructions. Is setting OK.?

— no → Adjust SHD as described in Repair Instructions.

—*—

yes ↓

Renew position sensor (microswitch).

—*—

yes ↓

yes ↓

yes ↓

♦D♦MONITOR INPUTS.
Position switch.
Completely close sunroof! Are both position sensors displayed as OFF?

— no → Remove cover for sunroof motor drive. Detach 8-pin connector at sunroof motor. ♦D♦MONITOR INPUTS. Are both position sensors now displayed as OFF?

— no → Check wires to GM-D14 and GM-C2 for short to ground. Repair faulty wire.

—*—

yes ↓

Check mechanical setting as described in Repair Instructions. Is setting OK.?

— no → Adjust sunroof as described in Repair Instructions.

—*—

yes ↓

Renew position sensor (microswitch).

—*—

yes ↓

Sunroof is OK. electrically. For notes on mechanical troubleshooting refer to Repair Instructions Group 54.

—*—

BMW NA

Electrical Troubleshooting Manual

Diagnosis for 5 Series—E34 and 7 Series—E32

from Model Year 1988

NOTE: Sections marked with a black bar pertain to systems not currently installed in U.S. vehicles.

Part 3 Group 61—99

6100.0A	Central Body Electronics (ZKE)
6160.0A	Windscreen Wiper Control (SWS/ZKE)
6160.0B	—Component Testing
■ 6160.1A	Wipe/Wash Module (WWM)
6164.0A	Windscreen Wiper Pressure Control (ADV/ZKE)
6167.0A	Headlight Washer System (SRA/ZKE)
6200.0A	Instrument Cluster/Check Control Module (K/CC)
■ 6200.1A	Instrument Cluster (Standard Version)
6200.2A	Instrument Cluster (Redesign)/ Check Control Module (K/CC)
■ 6200.3A	Instrument Cluster (Redesign Standard Version)
6301.0A	Lamp Control Module (LKM)
6313.0A	Hazard Warning System
■ 6328.0A	Trailer Module (AHM)
6330.0A	Interior Lights (IB/ZKE)
■ 6330.1A	Interior Lights (IB/ZVM)
■ 6330.2A	Interior Lights (IB/ZVM II)
6350.0A	Crash and Alarm Sensor (CAG)
6400.0A	Overview of Heating and Air Conditioning Systems
■ 6410.0A ■ 6410.0B	Heating Control (HR 34)-Analog —Component Testing
■ 6410.2A ■ 6410.2B	Heating Control (HR32) —Component Testing
■ 6410.3A	Automatic Heating Control (IHR)
6412.0A	Independent Heating/Ventilation **NOTE: Independant heating is not installed on U.S. vehicles.**
6412.0B	—Component Testing
■ 6430.0A	Automatic Recirculated Air Control (AUC)
6450.0A 6450.0B	Automatic Climate Control (IHKA) —Component Testing
6450.1A	Automatic Climate Control (IHKR)
■ 6450.2A	Rear Climate Control System (FHK)
6450.3A	Automatic Climate Control (IHKR2)(IHKR3)
6501.0A 6501.0B	Cellular Phone Programming Cellular Phone Troubleshooting
■ 6561.0A	Cellular Phone
6571.0A 6571.0B	Cruise Control (Tempomat) —Component Testing
6575.0A	Antitheft System (DWA)
6575.1A	Antitheft System III (DWA III)
6581.0A	On-Board Computer (BC IV)
6610.0A	Infrared Locking System (IR)
■ 6621.0A	Park Distance Control (PDC)

© BMW of North America, Inc.
Woodcliff Lake, NJ
May 1992

Part Number 91 00 0 000 029

Notes

This section describes the ZKE system in general. If a defect occurs only in a part system of the central body electronics (ZKE), then follow the diagnostic procedure for the corresponding part system.

- Windscreen wiper control defective → Section 6160.0A
- Power windows defective → Section 5133.0A
- Sunroof defective → Section 5410.0A
- Central locking system defective → Section 5126.0A
- Door lock heating defective → Section 5120.0A
- Headlight washer system defective → Section 6167.0A
- Windscreen wiper pressure control defective → Section 6164.0A
- Interior lights defective → Section 6330.0A

Functional Description

Components of the Central Body Electronics (ZKE)

General module (GM): controls and monitors all functions.

Relay module (RM): contains the relays for power windows, sunroof, door lock heating, interior lights, central locking system and windscreen wipers.

Electronic power fuse: Fuse protection of working circuits.

Changeover relay intensive wash/wash pump: If intensive wash feature is installed.

ADV module (ADM): Relay for windscreen wiper pressure control.

SRA module (SRM): Relay for headlight washer system.

Central Body Electronics (ZKE) Part Systems

The general module controls the functional sequence of the following systems:

- Windscreen wiper and washer system
- Headlight washer system (SA)
- Windscreen wiper pressure control (SA)
- Interior lights
- Door lock heating (SA)
- Central locking system
- Power windows (SA)
- Sunroof (SA)

The systems marked with "SA" are optional extras. Detection of which part systems are installed in the vehicle takes place automatically – see "Automatic detection of optional extras" at the end of this functional description.

General Module Variants

A differentiation must be made between the following main variants:

1. General module for 5 and 7 Series up to model year '91

- Automatic strike feature for power windows only on driver's door.
- Central locking system with blocking of ZV motor drives when "vehicle in arrest mode"

2. General module for 5 Series without power windows and sunroof up to model year '91

- General module without connector C (26-pin, white)
- Central locking system with blocking of ZV motor drives when "vehicle in arrest mode"

3. General module for 7 Series as of model year '92

- Automatic strike feature for power windows in "open" direction on all windows ("close" direction only on driver's door).
- Central locking system with blocking of ZV motor drives when "vehicle in arrest mode"

This general module replaces the variant "1". However, it must not be installed in the 5 Series as of model year '92 (modified ZV system)!

4. General module for 5 Series as of model year '92

- Automatic strike feature for power windows in "open" direction on all windows ("close" direction only on driver's door).
- ZV system with uncoupling of ZV motor drives when "vehicle in arrest mode" (ZV system of E36 Series)

5. General module for 5 Series without power windows and sunroof as of model year '92

- General module without connector C (26-pin, white)
- ZV system with uncoupling of ZV motor drives when "vehicle in arrest mode"

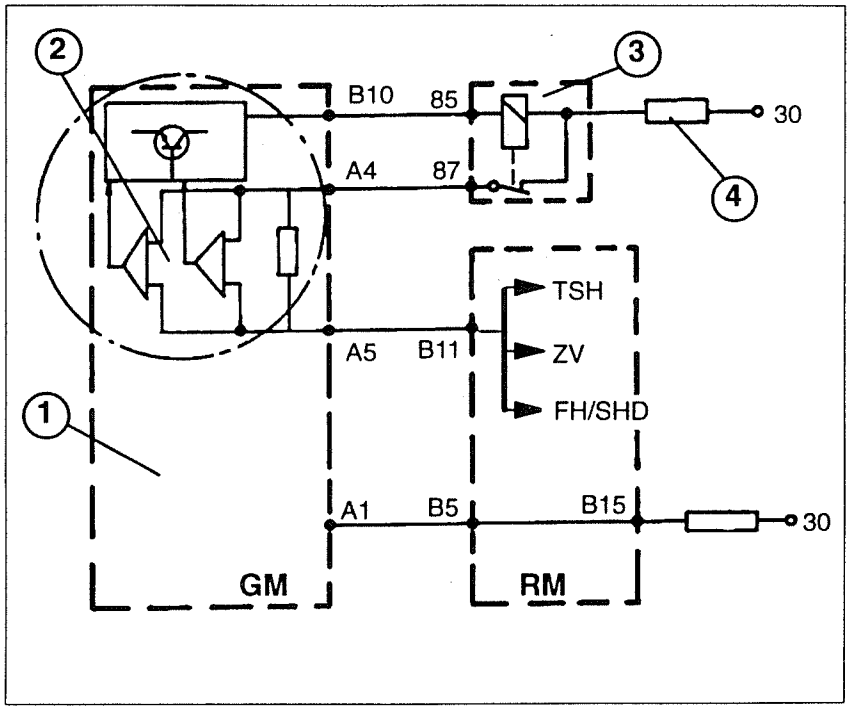

P32 61 006

General block diagram: Voltage supply of general module and electronic power fuse.

Electronic Power Fuse

The power circuits for the door lock heating and motor drives of the power windows, sunroof and central locking system are protected by the electronic power fuse.

It consists of the following components:

General module (1) with measuring circuit (2): Constant circuit measurement. If the current exceeds certain values, the external fuse relay is deactivated.

Fuse relay (3): External relay which is switched by the general module. The relay switches battery voltage to the working circuits in the relay module.

Fuse link (4): Additional fuse protection (30 A) of the working circuits and of the measuring circuit in the general module should the protection (fuse) relay (3) not switch reliably.

Function

The general module deactivates the fuse protection relay when a short or overloading occurs in the area of the connected systems. The relay switches on again automatically after 60 sec. It is switched off again if the fault has still not been rectified. Automatic reactivation takes place 6 times in succession. The relay is always switched on again every time the ignition is switched off/on (terminal 15).

Defect Detection in the Relay Module

Diagnostic Links

In addition to the connection to the engine, links are also provided from the load circuits in the relay module to the general module. These lines serve as diagnostic links. They are used to monitor the relays for defects. The monitoring principle is as follows:

- Relay in rest position (not activated). The diagnostic link is connected to ground.
- Relay activated. B+ is switched via the diagnostic link to the general module.

The general module evaluates the signals from the diagnostic links and can detect the following defects:

- Relay does not pick up
- Relay sticking
- Ground line interrupted
- Diagnostic link interrupted

After detection of a defect, its defect code is stored in the defect code memory.

External Relays

In addition to the relays in the relay module, the following external relays are also monitored for defects via the diagnostic links:

- ADV relay in the ADV module (ADV = Windscreen wiper pressure control)
- SRA relay in the SRA module (SRA = Headlight washer system)

General Schematic

The general schematic on the next page shows the internal design of the relay module.

Abbreviations:

TSH	Door lock heating
WS	Windscreen wiper motor
IB	Interior lights
ZV	Central locking system
FH	Power windows
SHD	Sunroof
GM	General module
RM	Relay module

Diagnostic links:

DSH	Diagnosis door lock heating
DWZS	Diagnosis windscreen wiper motor and relay for central arrest
DZV	Diagnosis central locking system
DFHA	Diagnosis power windows – open direction
DFHZ	Diagnosis power windows – close direction

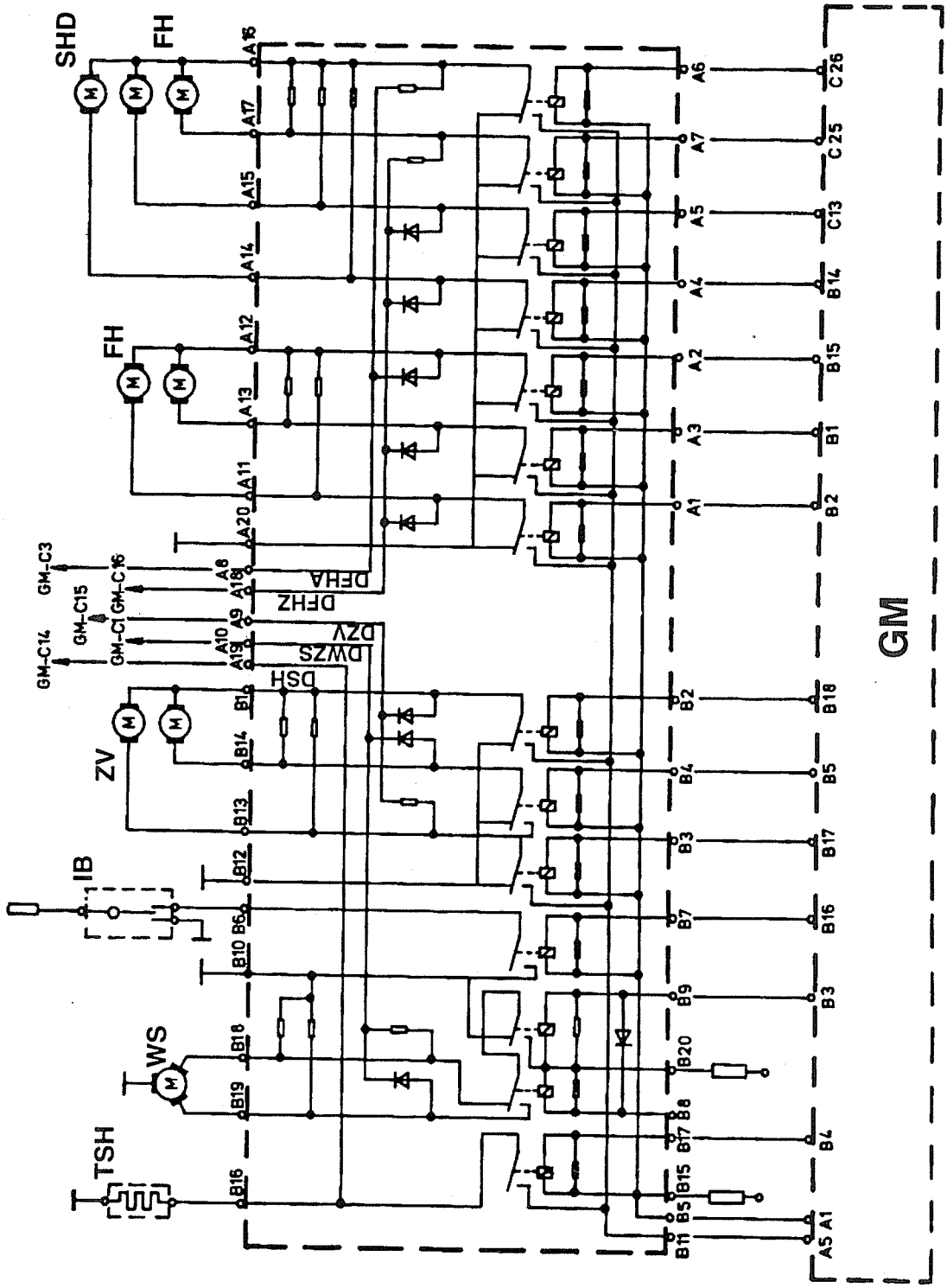
SHD
FH
FH
ZV
IB
WS
TSH
GM-C3
GM-C16
GM-C15
GM-C1
GM-C14
DEHA
DEHZ
DZV
DWZS
DSH
GM

P32 61 007

Removal of the General Module

The battery power supply for the general module (GM electronics) is routed via the relay module. From the protection fuse via relay module Pin B15 and Pin B5 to the general module connector A Pin 1.

The power supply to the general module is interrupted when the relay module is removed.

This ensures short-circuits cannot occur on the open lines at the general module.

Automatic Detection of Optional Extras

Explanation

After the supply voltage has been applied (terminal 30 at Pin A1), the ZKE general module checks whether all diagnostic links are connected to ground. If the input is open, the corresponding part system is detected as not installed.

Systems which are not installed are not included within the functional sequences in the general module.

The part systems detected by the general module can be monitored via the BMW Diagnostic System.

Defects

If the general module is installed with the vehicle battery connected, undefined contacting when plugging in the module can result in an input being detected as open although the system is installed in the vehicle.

If a system is installed in the vehicle but not detected by the general module, disconnect the vehicle battery for at least 5 seconds.

If the system is still detected as "not installed" after reconnecting the vehicle battery (and reselecting ZKE!), the following defects may apply:

- Diagnostic link to relay interrupted
- Ground line to relay interrupted
- Relay sticking

Notes on the BMW DIAGNOSTIC SYSTEM

Control Unit Identification

Control units up to model year '91 can be identified by the hardware version 1.1 or 1.2.

Control units as of model year '92 can be identified by the hardware version 2.x.

Various country-specific versions only effect the FH/SHD system. Refer to Section 5133.0A. The differentiation between ECE or US version is made by way of an additional cable (GM Pin D13).

ZKE Part Systems

"*" indicates whether a part system is recognized by the general module as "installed". If a defect code is stored for the system it is represented in inverse form (white background).

Defect Code Memory

In software versions 4.2 and 4.3 (see identification page) the defect code memory is cleared when ZKE is selected (reasons: incorrect storage during operation). The defect code memory is no longer cleared as of version 5.0.

The activated relay is stored as defective during simulation of the outputs. For this reason, the defect code memory is cleared automatically after simulation (in all versions). The defect codes are stored once again when the systems are operated from the vehicle.

Current defects are indicated by the text display **current defect** or **blocking protection active**. These defect codes cannot be cleared from the memory.

Abbreviations

ZKE	Central body electronics
SWS	Windscreen wiper control
ADV	Windscreen wiper pressure control
SRA	Headlight washer system
TSH	Door lock heating
IB	Interior lights
FH	Power windows
SHD	Sunroof
GM	General module
RM	Relay module
GM-A	General module connector A, 5-pin, colour white
GM-B	General module connector B, 26-pin, colour green
GM-C	General module connector C, 26-pin, colour white
GM-D	General module connector D, 26-pin, colour yellow
RM-A	Relay module connector A, 20-pin, colour black
RM-B	Relay module connector B, 20-pin, colour white
E	Input
A	Output

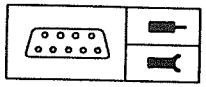

Pin Assignment

Connector Numbers

Number	Type	Description
X332	5-pin, white	GM-A
X253	26-pin, green	GM-B
X254	26-pin, white	GM-C is only installed in conjunction with power windows.
X255	26-pin, yellow	GM-D
X258	20-pin, black	RM-A up to model year '88 RM-B as of model year '89
X259	20-pin, white	RM-B up to model year '88 RM-A as of model year '89

Pin Assignments at General Module, Voltage Supply, Diagnosis, General Functions

Pin	Type	Description/function	Connection	Signal type	Tester display	Measurement notes
A1	E	B+ for general module electronics	via RM-B5/B15 to fuse	B+	No diagnostic mode in the case of defect	
D10	E	Terminal R for general module	Auxiliary wiper relay and fuse	B+	ON	
D9	E	Terminal 15 for general module	Fuse	B+	ON	
D19	E	Terminal 50 - load cut-out	Starter	B+	ON	
A3	E	Ground for general module, relay activation	Ground	Ground	Defect code is stored	
A2	E	Ground for general module electronics	Ground	Ground		
A4	E	Electronic power fuse	Protection relay	B+	ON	
B10	A	Electronic power fuse	Protection relay	B+	ON	
A5	E	Electronic power fuse	Relay module Pin B11	B+		
B11	E	Position signal	Instrument cluster, output speed-A	Square–wave		12 V when vehicle stationary and ignition ON
D13	E	ECE/US coding for FH/SHD	Ground for US	Ground		See Section 5133.0A
B12	A	Diagnostic link TxD	Diagnostic connector Pin 20	Square–wave		
B24	E	Diagnostic link RxD	Diagnostic connector Pin 15	Square–wave		

Pin Assignments at Relay Module, Voltage Supply

Pin	Type	Description/function	Connection	Signal type	Tester display	Measurement notes
A20	E	Ground for power windows and SHD	Ground	Ground	Defect codes are stored	
B5	A	Terminal 30 for general module	General module Pin A1	B+		
B10	E	Ground for wipers and interior light	Ground	Ground	Defect code is stored	
B11	E	B+ for relay module working circuits	General module Pin A5	B+	Defect codes are stored	
B12	E	Ground for central locking system	Ground		Defect codes are stored	
B15	E	Terminal 30 for relay module control circuits and general module electronics	Fuse	B+		

Troubleshooting

Notes

- Troubleshooting with the BMW DIAGNOSTIC SYSTEM
- Battery charged, U-min = 12 V
- When switched off and in working order, a protection relay switches on again when ignition is switched off and on.
- The power supply to the general module is interrupted when the relay module is removed.

The following sections apply to the individual part systems:

- Windscreen wiper control defective → Section 6160.0
- Power windows defective → Section 5133.0
- Sunroof defective → Section 5410.0
- Central locking system defective → Section 5126.0
- Door lock heating defective → Section 5120.0
- Headlight washer system defective → Section 6167.0
- Windscreen wiper pressure control defective → Section 6164.0
- Interior lights control defective → Section 6330.0

Important!

When the supply voltage is applied (terminal 30 at Pin A1), the ZKE general module detects which part systems are installed in the vehicle. Undefined contacting when plugging in the module can result in systems not being detected. Therefore:

Disconnect the vehicle battery before installing a ZKE general module!

or

Disconnect the vehicle battery for at least 5 seconds after installing a ZKE general module.

Defect Code Table

Diagnostic procedure not possible with ZKE → Defect code 01

All functions have failed → Defect code 01

Power windows and central locking system and door lock heating have failed → Defect code 02

Electronic power fuse defective → Defect code 02

All functions of central locking system have failed → Defect code 03

Defect Code 01

Diagnostic procedure not possible with ZKE
All ZKE functions have failed

Possible cause: Power supply, RxD or TxD link, load cut-out

Note: Refer to notes in the BMW DIAGNOSTIC SYSTEM

Troubleshooting

Are all functions of the ZKE defective?

— no → Is RxD link from GM connector B (green) Pin 24 to diagnostic socket OK?

— no → Repair wire.

— * —

yes ↓

Is TxD link from GM-B12 to diagnostic socket OK?

— no → Repair wire.

— * —

yes ↓

Perform checks to instructions in BMW DIAGNOSTIC SYSTEM

— * —

yes ↓

Are fuses OK.?

— no → Renew defective fuse.

— * —

yes ↓

Remove general module. Do **not** remove relay module! Measure voltage between ground and general module connector A Pin 1. Is measured value approx. battery voltage?

— no → Remove relay module. Measure resistance at relay module! Is the resistance between Pin A5 and Pin A15 < 1 Ω?

— no → Renew relay module.

— * —

yes ↓

Measure voltage between ground and RM connector A (black) Pin 15 (wire harness). Is measured value approx. battery voltage?

— no → Repair wire to fuse.

— * —

yes ↓

Repair wire from RM-A5 to GM-A1.

— * —

yes ↓

yes ↓

Are ground connections to GM connector A Pin 2 and Pin 3 OK?

— no → Repair faulty wire.

— * —

yes ↓

Switch on ignition! Measure voltage between ground and GM connector D (yellow) Pin 9, as well as between ground and GM-D Pin 10. Is approx. battery voltage applied?

— no → Repair wire to fuse.

— * —

yes ↓

General module not connected! Measure voltage between ground and GM connector D (yellow) Pin 19 (load cut-out). Is a voltage > 1 V measured?

— yes → Check wire to starter and starter, repair if necessary.

—*—

no

↓

Renew general module.

—*—

Defect Code 02

Power Windows and Central Locking System and Door Lock Heating have Failed

Electronic power fuse defective

Possible cause: Fuse link, protection relay, wires, general module

Troubleshooting

Is fuse link OK? — no → Renew fuse link.

—*—

yes ↓

Measure voltage at protection relay. Is the measured value between ground and Pin 6 approx. battery voltage? — no → Repair wire to fuse.

—*—

yes ↓

Measure voltage at protection relay. Is the measured value between ground and Pin 8 approx. battery voltage? — no → Repair wire between Pin 8 and Pin 6.

—*—

yes ↓

As a check, replace protection relay (e.g. by wiper relay). Switch ignition off and on. Has the fault been rectified? — yes → Renew protection relay.

—*—

no ↓

Are wires from power protection relay to general module A4 and B10 OK? — no → Repair faulty wire.

—*—

yes ↓

Is wire from GM-A5 to RM-A11 OK? — no → Repair wire.

—*—

yes ↓

Renew general module.

—*—

Defect Code 03

All Functions of Central Locking System have Failed

Possible cause: Ground connection, power supply relay module, electronic fuse

Troubleshooting

Are power windows installed?

— yes → Are the power windows also defective?

— no → Repair ground wire from central locking system to RM connector A (black) Pin 12.

— * —

yes ↓ Continue with defect code 02.

— * —

no ↓

no ↓

Is ground wire from central locking system to RM connector A (black) Pin 12 OK?

— no → Repair wire.

— * —

yes ↓ Continue with defect code 02.

— * —

Notes

These instructions apply only when a ZKE general module is installed.

Functional Description

The windscreen wiper and washer system is controlled by the general module (GM) of the central body electronics (ZKE). The individual functions can be switched on and off with the combined wiper/washer switch. The ignition switch must be set in position 1 or 2 (R or 15) for this purpose.
The wiper functions intermittent wipe and stage 1 are additionally dependent on the vehicle speed.

Wipe/Wash Functions

General: Ground is switched to the general module in all wipe/wash positions.
The wiper blades are returned to their park position by means of a microswitch which is installed in the wiper motor. This switch switches ground to the general module provided the wiper is outside the park position.

Single wipe: Press down the wiper/washer switch. The switch does not lock in position. The wiper motor operates in stage 1 for as long as the wiper switch is held in this position.

Intermittent wipe: Pull up wiper/washer switch to the first position. The switch locks in position. The wiper operates in intermittent mode. The intermittent wipe cycle time depends upon the vehicle speed.

Speed:	Intermittent wipe cycle time:
0 – 5 km/h	14 seconds
5 – 30 km/h	8 seconds
30 – 70 km/h	7 seconds
70 –100 km/h	6 seconds
100 –140 km/h	5 seconds
above 140 km/h	4 seconds

Example: The wipe function is activated once every 7 seconds at a vehicle speed of 50 km/h.

The intermittent wipe cycle time can also be freely programmed. Procedure: Switch off wiper → briefly switch on intermittent wipe function and immediately switch off again → the time counter now begins to run → wait at least 2 seconds (1 second if vehicle driving) → switch on intermittent wipe function once again → the time from switching off the intermittent wipe function up to switching it on again is stored as the intermittent wipe time cycle. This time is retained until the wiper is switched off.

The programmed intermittent wipe cycle time is doubled when the vehicle is stationary.

Wipe function in stage 1: Pull the wipe/washer switch up to the second position. The switch locks in position. When the vehicle is stationary, the wiper operates in intermittent mode. The wiper operates continuously in stage 1 at a vehicle speed in excess of 5 km/h.

Wipe function in stage 2: Pull wiper/washer switch up to third position. The switch locks in position. The wiper operates in stage 2 irrespective of the vehicle speed.

Wash function: Pull wiper/washer switch towards driver. Switch does not lock in position. The wash function is performed by the general module of the ZKE.
Wash sequence: Wash pump operates → the wiper starts after a delay in stage 1 → wash pump stops → wiper continues running and wipes the windscreen dry.
The wash pump operates for as long as the switch is operated.

Intensive wash: – Optional Extra –
Operate rocker switch on front end. The "intensive wash" function is controlled by the general module of the ZKE.
Procedure: Intensive wash pump operates, a special intensive wash fluid is applied to windscreen → wiper starts time-delayed in stage 1 → intensive wash pump stops → wash pump starts up → wash pump stops → wiper continues to operate and wipes the windscreen dry.

Note: *If an intensive wash system is installed, the pumps for wash and intensive wash are switched via a switchover relay (installation location: front power distribution box). If no intensive wash system is installed, the wash pump is switched without a relay.*

Important!

Stage 2: The ZKE general module is bypassed in wiper stage 2. Wiper operation is therefore possible in stage 2 (emergency operation) even in the case of failure of the electronic system or when the anti-blocking function is active. In this case, however, the wiper does not return automatically to the park position.

Anti-blocking function: The signal of the reset contact is used for monitoring operation of the wiper motor. The anti-blocking function is activated if the contact constantly switches ground for 30 seconds. Reasons for this could be mechanical stiffness of the wiper or breaks in the wiring. With the exception of stage 2, all wiper functions are blocked when the anti-blocking function is active. The wiper does not return to the park position.

Clearing the anti-blocking function:
Up to 10 times in succession by switching off the wiper for approx. 3 minutes
or
by switching off the wiper and ignition for approx. 3 minutes.

Windscreen Wiper Control (SWS/ZKE)

General Block Diagram

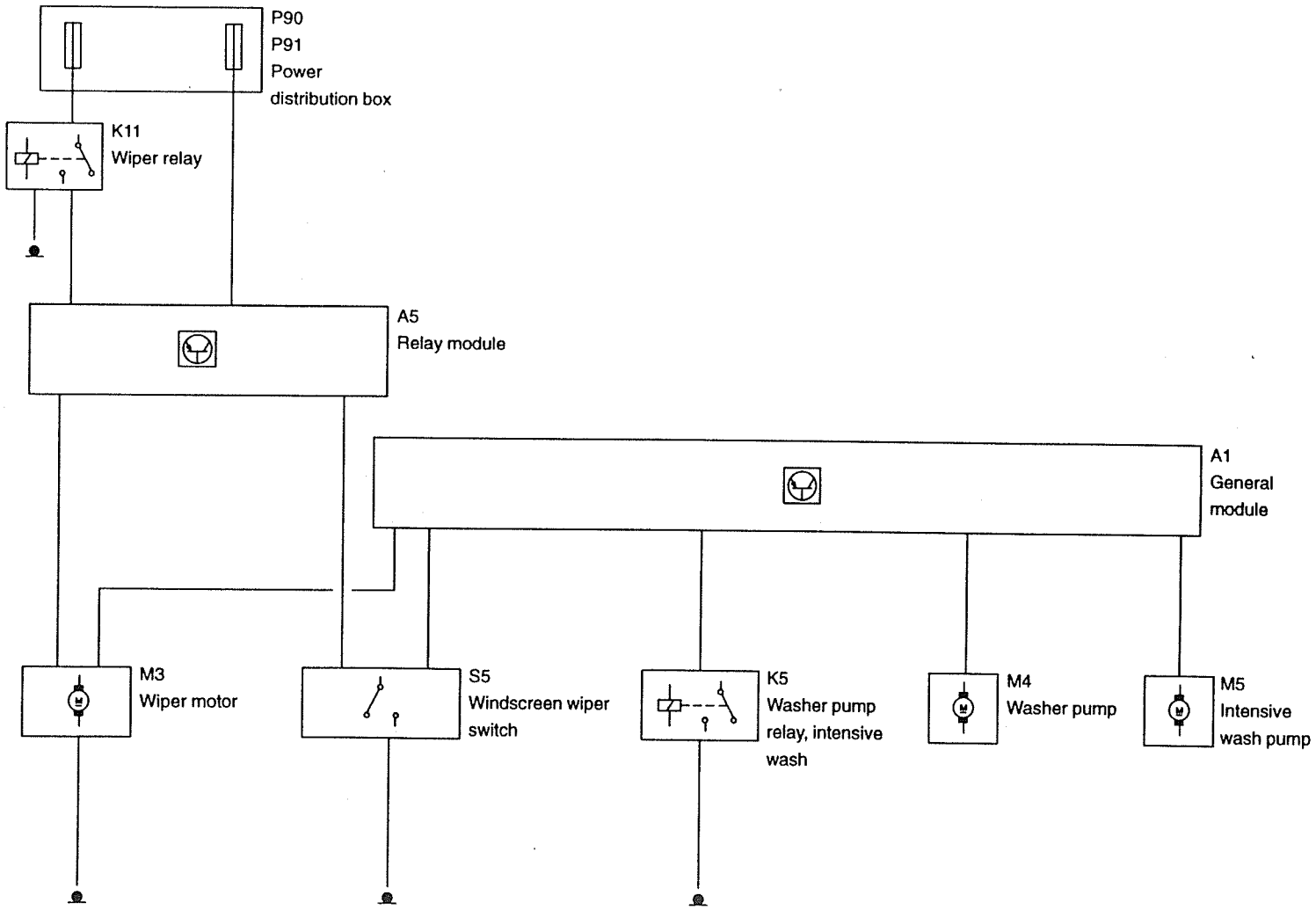

P32 61 001

Notes on the BMW DIAGNOSTIC SYSTEM

The input GM-D8 (switch position intensive wash) is not included in the diagnostic procedure.

The wash pump can only be activated when an intensive wash function is installed.

The general module (GM) detects no statuses in the vehicle during simulation of inputs or outputs. As a result, the wiper does not return to the park position and intermittent mode operates uncontrolled.

The component concerned is stored as defective during simulation. The ZKE defect code memory is therefore cleared automatically during each simulation.

Redetection of a cleared defect code:

– a) Automatically if defect still exists (e.g. anti-blocking function active)
– b) All wiper stages switched through with wiper/washer switch.

The following defects can be detected and stored by the defect code memory:

1. Ground applied at both GM-D4 and GM-D5 (stage 1 and intermittent wipe function activated at same time).
2. Wiper switched off by anti-blocking function.
3. Relay in relay module defective.

Abbreviations

ZKE	Central body electronics
SWS	Windscreen wiper control
GM	General module
RM	Relay module
GM-A	General module connector A, 5-pin, colour white
GM-B	General module connector B, 26-pin, colour green
GM-C	General module connector C, 26-pin, colour white
GM-D	General module connector D, 26-pin, colour yellow
RM-A	Relay module connector A, 20-pin, colour black
RM-B	Relay module connector B, 20-pin, colour white
E	Input
A	Output

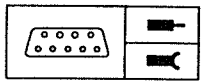

Pin Assignment

Connector Numbers

Number	Type	Description
X332	5-pin, white	GM-A
X253	26-pin, green	GM-B
X254	26-pin, white	GM-C is installed only in conjunction with power windows
X255	26-pin, yellow	GM-D
X258	20-pin, black	RM-A up to model year '88 RM-B as of model year '89
X259	20-pin, white	RM-B up to model year '88 RM-A as of model year '89

Pin Assignments at the General Module

Pin	Type	Description/function	Connection	Signal type	Tester display	Measurement notes
D4	E	Switch position stage 1, 2, single wipe	Wiper switch	Ground	ON	Switch test, see Component Testing
D5	E	Switch position intermittent wipe	Wiper switch	Ground	ON	
D6	E	Switch position wash	Wiper switch	Ground	ON	

Pin	Type	Description/function	Connection	Signal type	Tester display	Measurement notes
D8	E	Switch position intensive wash	Wiper switch	Ground		Not covered in diagnostic procedure
B3	A	Wiper relay activation in RM	Relay module Pin B9	B–	(activation)	only stage 1
B22	A	Wash pump relay activation	Wash pump relay	B–	(activation)	Can only be operated if intensive wash feature installed.
C1	E	Diagnostic link for wiper relay in RM	Relay module Pin A10	B–/B+	Defect code is stored	
D10	E	Detection of terminal R	Fuse	B+	ON	
B11	E	Position signal	Instrument cluster, output speed-A	Square–wave		
D22	E	Reset contact	Wiper motor	Ground	ON	Indicator delayed in time

Pin Assignments at the Relay Module

Pin	Type	Description/function	Connection	Signal type	Tester display	Measurement notes
B9	E	Wiper relay activation (stage 1)	General module Pin B3	B–	(activation)	
B8	E	Wiper relay activation (stage 2)	Wiper switch	B–		Activation not possible by tester
B10	E	Ground for wiper and interior light	Ground	B–		
B18	A	B+ for wiper motor stage 1	Wiper motor	B+	Defect code is stored	
B19	A	B+ for wiper motor stage 2	Wiper motor	B+		
A10	A	Diagnostic link for wiper and ZV relay	General module Pin C1	B–/B+	Defect code is stored	

Troubleshooting

Notes

- Troubleshooting with BMW DIAGNOSTIC SYSTEM
- Battery charged, U-min = 12 V
- If all central body electronics (ZKE) functions have failed (central locking system, power windows, windscreen wiper pressure control and windscreen wiper and washer system), carry out troubleshooting in accordance with Section 6100.0A Central Body Electronics (ZKE).

Important!

After applying the supply voltage (terminal 30 at Pin A1), the ZKE general module detects which part systems are installed in the vehicle. Undefined contacting when plugging in the module result in systems not being detected. Therefore:

Disconnect vehicle battery before installing a ZKE general module!

or

Disconnect vehicle battery for at least 5 seconds after installing a ZKE general module

Also refer to Section 6100.0A Central Body Electronics (ZKE), Functional Description.

Defect Code Table

♦D♦900 Defect code memory – stored defect codes:

♦D♦Defect code 01 stored → Defect code 01

♦D♦Defect code 02 stored → Defect code 02

♦D♦Defect code 03 stored → Defect code 03

Malfunctions

All wipe and wash functions failed → Defect code 04

All wiper functions failed → Defect code 05

Individual wiper functions failed → Defect code 06

Wiper does not return to park position → Defect code 07

Wiper cannot be stopped → Defect code 07

Stage 1 runs in intermittent mode when vehicle is moving → Defect code 08

No intensive wash feature installed:
Wash pump or automatic wash feature do not operate → Defect code 09

Intensive wash feature installed:
Wash or wash and intensive wash do not operate → Defect code 10

Intensive wash faulty → Defect code 11

Defect Code 01

♦D♦900 Defect code memory: Defect code 01 stored

Explanation: This defect code is stored when ground is applied simultaneously at ZKE general module Pin D4 and D5. The general module detects both stage 1 and intensive wipe as switched on.

Possible cause: Wiper switch defective, one of the wires has a short to ground.

Troubleshooting:

1. Check wiper switch (see chapter - Component Testing), replace switch if necessary.
2. Check wires to Pin D4 and D5 (connector D, yellow) of general module for short to ground and repair wire if necessary.

Defect Code 02

♦D♦900 Defect code memory: Defect code 02 stored

– This defect is not detected in all ZKE versions –

Explanation: By way of a separate diagnostic link from the relay module, Pin A10 to the general module, Pin C1 or B25, the general module detects whether the wiper relays in the relay module switch on (pull up) when the corresponding switch is switched on. If the wiper is switched off again, the general module checks via the diagnostic link whether the relays have switched off again. Defect code 02 is also stored if the diagnostic link itself has a break.

Possible cause: Power supply, wires GM-RM, relay in RM, diagnostic link.

Notes:

1. The diagnostic link for the wiper relays also serves as a test facility of the relay for central arrest. A defect in the windscreen wiper control system can therefore result in storage of a defect code in the central locking system and vice versa.
2. The defect code is also stored when the wiper operates in stage 2 with the anti-blocking function active.

Troubleshooting:

1. If all wiper functions have failed, continue with defect code 04.
2. Check following wires: From RM connector A (black) Pin 9 to GM connector B (green) Pin 3, from RM connector A Pin 20 to fuse. Repair defective wire.
3. If no malfunction can be found despite a defect code being stored (also check central locking system), check diagnostic link from RM connector B (black) Pin 10 to GM–C1 and repair if necessary.
4. If fuses, power unloader relay and wires are OK, renew relay modules.

Defect Code 03

♦D♦900 Defect code memory: Defect code 03 stored

Explanation: The defect code 03 is stored when the wiper motor is switched off by the anti-blocking function. Only stage 2 still operates as an emergency function. The anti-blocking function is activated when the reset contact constantly switches ground for more than 30 seconds.

Possible cause: Mechanical stiffness of wiper motor, reset contact defective, wiper motor, wiper relay in RM, corresponding wires.

Note: The test "anti-blocking function active" is displayed on the screen when the wiper is currently switched off by the anti-blocking function. To cancel the anti-blocking function, switch off wiper and ignition until text display disappears.

Troubleshooting:

Cancel anti-blocking function!

1. If the wiper operates stiff, repair mechanical fault.
2. If all or individual wiper functions are faulty, continue with defect codes 04 or 05.
3. If the wiper cannot be stopped when the anti-blocking function is cleared, continue with defect code 07.
4. If defect code 02 is also stored, continue with defect code 02.

Defect Code 04

All Wiper and Wash Functions have Failed

Possible cause: Ground wire to wiper/washer switch, wiper/washer switch, fuses, power unloader relay

Note: The defect can activate the anti-blocking function .

Troubleshooting

♦D♦MONITOR INPUTS. Switch on ignition! Is terminal R displayed as ON?

— no → Are fuses OK?

— no → Renew fuses.

— * —

yes ↓

Switch on terminal R! Is battery voltage applied to fuse No. 44?

— yes → Repair wire to general module connector D (yellow) Pin 10.

— * —

no ↓

Check unloader relay for wipe/wash system at rear of component support bracket and corresponding wires. Renew defective relay, repair faulty wire.

— * —

yes ↓

yes ↓

yes ↓

♦D♦MONITOR INPUTS. Switch through all positions of the wiper/washer switch. Are all positions OK?

— no → Is ground connection to switch OK?

— no → Repair wire.

— * —

yes ↓

Replace wiper/washer switch.

— * —

yes ↓

Continue with defect code 05.

— * —

Defect Code 05

All Wiper Functions Failed

Possible cause: Wiper motor, ground wire to wiper motor, wiper relay in relay module, wiper switch

Note: The defect can activate the anti-blocking function.

Troubleshooting

♦D♦MONITOR INPUTS. Switch on ignition! Is terminal R displayed as ON?

— no → Continue with defect code 04.

— * —

yes ↓

♦D♦SIMULATE OUTPUTS. Simulate wiper stage 1. Does wiper operate?

— no → ♦D♦900 DEFECT CODE MEMORY. Briefly switch on all wiper stages. Is defect code 02 displayed?

— yes → Continue with defect code 02.

— * —

no ↓

Is power supply for wiper at RM connector A (black) Pin 20 OK?

— no → Repair wire.

— * —

yes ↓

yes ↓

Is ground wire to wiper motor OK? — no → Repair wire.

—*—

yes ↓

Install RM. Detach 4-pin connector at wiper motor. Switch on ignition! Measure voltage between Pin 3 (stage 2) and ground. Switch on stage 2. Does voltage value reach approx. battery voltage? — yes → Renew wiper motor.

—*—

no ↓

Is wire to RM connector A (black) Pin 19 OK? — no → Repair wire.

—*—

yes ↓

Renew relay module.

—*—

yes ↓

yes ↓

yes ↓

Continue with defect code 06.

—*—

Defect Code 06

Individual Wiper Functions Failed

– Wash OK, otherwise defect code 04 –

Possible cause: Wiper/washer switch, wiper motor, wiper relay in RM, corresponding wires

Note: The defect can activate the anti-blocking function.

Troubleshooting

♦**D**♦SIMULATE OUTPUTS. Switch on ignition! Simulate wiper stage 1. Does wiper operate?

— no → ♦**D**♦900 Defect code memory. Briefly switch on all wiper stages. Is defect code 02 displayed?

— yes → Continue with defect code 02.

— * —

no ↓

Detach 4-pin connector at wiper motor. ♦**D**♦SIMULATE OUTPUTS. Measure voltage between Pin 2 and ground. Is battery voltage reached as long as stage 1 is simulated? (Attention, clocked voltage)

— yes → Check plug connection for good contact. If contacting OK, replace wiper motor.

— * —

no ↓

yes ↓

yes ↓

Is wire to RM connector A (black) Pin 18 OK? — no → Repair wire.

—*—

yes ↓

Is wire from GM connector B (green) Pin 3 to RM connector A Pin 9 OK? — no → Repair wire.

—*—

yes ↓

Replace relay module.

—*—

yes ↓

♦D♦MONITOR INPUTS. Switch wiper switch in all positions. Are all switch positions detected.? — no → Check wiper/washer switch. (see chapter - Component Testing) Is switch OK? — no → Replace wiper/washer switch.

—*—

yes ↓

Check wire from wiper/washer switch to GM connector D (yellow). Intermittent wipe Pin 5, stage 1 Pin 4. Are wires OK? — no → Repair wire.

—*—

yes ↓

Replace general module.

—*—

yes ↓

Does wiper operate in stage 2?

— no → ♦D♦900 DEFECT CODE MEMORY. Briefly switch on all wiper functions. Is defect code 02 displayed?

— yes → Continue with defect code 02.

— * —

no ↓

Check wiper/washer switch (see chapter - Component Testing). Is switch OK?

— no → Renew switch.

— * —

yes ↓

Is wire from wiper/washer switch Pin 3 to RM connector A (black) Pin 8 OK?

— no → Repair wire.

— * —

yes ↓

Detach 4-pin connector at wiper motor. Connect wiper switch such that it is operable. Measure voltage between ground and Pin 3 of wiper motor. Switch on ignition! Switch on stage 2, does voltage value reach approx. battery voltage?

— yes → Replace wiper motor.

— * —

no ↓

Is wire from Pin 3 at wiper motor to RM connector A (black) Pin 19 OK?

— no → Repair wire.

— * —

yes ↓

Renew relay module.

— * —

yes ↓

yes ↓

yes ↓

yes ↓

yes ↓

More exact localisation of the defect is required. See Defect Code Table.

— * —

Defect Code 07

Wiper does not Return to Park Position
Wiper cannot be Switched OFF

Possible cause: Reset contact in wiper motor, stage 1 defective, short-circuit, ground wire to relay module for wiper

Note: The defect can activate the anti-blocking function.

Troubleshooting

♦D♦SIMULATE OUTPUTS. Simulate stage 1. Does wiper operate in stage 1?

— no → Continue with defect code 06.

— * —

yes ↓

♦D♦MONITOR INPUTS. Operate wiper in stage 1. Note display of reset contact (display time-delayed!). (OFF = park position, ON = outside park position). Does display always show OFF?

— yes → Stop wiper outside park position. Detach 4-pin connector at wiper motor. Measure continuity between Pin 1 and Pin 4. Is resistance < 1 Ω?

— no → Replace wiper motor.

— * —

yes ↓

Is wire to GM connector D (yellow) Pin 22 OK?

— no → Repair wire.

— * —

yes ↓

Replace general module.

no ↓

no ↓

—*—

no ↓

Switch off wiper switch. Operate wipers. Is the anti-blocking function activated after approx. 30 seconds? — no → Is ground wire to RM connector A (black) Pin 10 OK? — no → Repair wire.

yes ↓

—*—

yes ↓

Check wires to wiper relay in RM for short to ground and wires to wiper motor for short to B+. Are wires OK? — no → Repair wire.

yes ↓

—*—

Replace relay module.

—*—

yes ↓

Check wire to GM connector D (yellow) Pin 22 for short to ground. Is wire OK? — no → Repair wire.

yes ↓

—*—

Reset contact in wiper motor constantly switches ground. Replace wiper motor.

—*—

Defect Code 08

Stage 1 operates in intermittent mode when vehicle moving

Possible cause: Vehicle speed signal from instrument cluster (speed-A)

Troubleshooting

Measure voltage between ground and GM connector B (green) Pin 11. Switch on ignition! Does voltage value reach at least 7 V?

— no → Voltage value = 0 V

— yes → Repair wire to instrument cluster.

— * —

yes
↓
Renew general module.

— * —

no
↓
Defect not in the vicinity of the ZKE. Possible defects: Instrument cluster defective, other control unit connected to position signal defective.

— * —

Defect Code 09

Wash Pump or Automatic Wipe Feature does not Operate after Wash

– No intensive wash installed –

Possible cause: Wash switch, wash pump, wire to general module

Troubleshooting

Does wash pump operate?

— yes → Is wire from wash switch to GM connector D (yellow) Pin 6 OK?

— no → Repair wire.

— * —

yes ↓

Check wiper/wash switch, renew if necessary.

— * —

no ↓

Detach 2-pin connector at the wash pump. Is battery voltage applied at Pin 1?

— no → Repair wire.

— * —

yes ↓

Is battery voltage applied between Pin 1 and Pin 2 for as long as wash is operated?

— yes → Renew wash pump.

— * —

no ↓

Check wiper/washer switch (see chapter - Component Testing). Is switch OK? — no → Renew switch.

— * —

yes ↓

Is jumper at 8-pin connector of wiper/washer switch between Pin 5 and Pin 8 OK? — no → Repair wire.

— * —

yes ↓

Repair wire from switch to pump.

— * —

Defect Code 10

Wash or Wash and Intensive Wash Failed

– Intensive wash installed –

Possible cause: Wash switch, wire to general module, switchover relay intensive wash/wash, wash pump

Troubleshooting

♦D♦MONITOR INPUTS. Operate washer switch. Is wash detected?

— no → Check wiper/washer switch (see chapter - Component Testing). Is switch OK?

— no → Renew switch.

— * —

yes ↓

Repair wire to GM connector D (yellow) Pin 6.

— * —

yes ↓

Does intensive wash pump operate?

— yes → Detach 2-pin connector at wash pump (for water). Is approx. battery voltage applied at Pin 1?

— no → Repair wire.

— * —

yes ↓

no ↓

Measure voltage between Pin 1 and Pin 2. Operate wash function. Is voltage approx. battery voltage for as long as wash is operated?

— yes → Replace wash pump.

—*—

no ↓

Check wires to switchover relay intensive wash/wash. Are wires OK?

— no → Repair defective wire.

—*—

yes ↓

Replace switchover relay intensive wash/wash.

—*—

no ↓

Is ground wire to switchover relay intensive wash/wash OK?

— no → Repair wire.

—*—

yes ↓

Replace switchover relay intensive wash/wash.

—*—

no ↓

no ↓

Defect Code 11

Intensive Wash Defective

Possible cause: Pump, switchover relay intensive wash/wash, wiper/washer switch

Troubleshooting

Does intensive wash pump operate? — yes → Repair wire to GM connector D Pin 8.

— * —

no ↓

Remove wash pump for intensive wash, short test run. Is pump OK? — no → Replace wash pump.

— * —

yes ↓

Detach 2-pin connector at the pump. Is approx. battery voltage applied at Pin 1? — no → Repair wire.

— * —

yes ↓

Disconnect switchover relay intensive wash/wash. Is ground applied at Pin 5 when intensive wash is depressed? — no → Check wiper/washer switch (see chapter - Component Testing). Is switch OK? — no → Replace switch.

— * —

yes ↓

Replace switchover relay intensive wash/wash.

— * —

yes ↓

Repair wire from switch to relay.

— * —

Component Testing

Checking Wipe/Wash Switch

Test: Check for continuity at the 8-pin connector X295, wiper switch connector side. The switch must be removed if a resistance greater than 5 Ω is measured in any switch position.

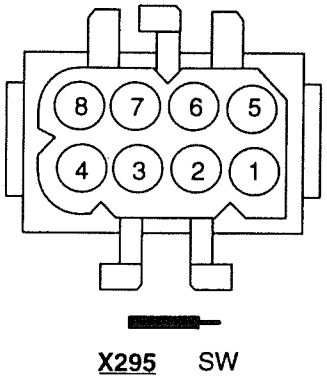

P32 61 002

Wipe/wash switch with intensive wash

Switch position	Measure between:
Wash	Pin 1 and Pin 5
Intensive wash	Pin 6 and Pin 7
Single wipe	Pin 1 and Pin 2
Intermittent	Pin 1 and Pin 4
Wiper stage 1	Pin 1 and Pin 2
Wiper stage 2	Pin 1 and Pin 3

Wipe/wash switch without intensive wash

Switch position	Measure between:
Wash	Pin 1 and Pin 5
Single wipe	Pin 1 and Pin 2
Intermittent	Pin 1 and Pin 4
Wiper stage 1	Pin 1 and Pin 2
Wiper stage 2	Pin 1 and Pin 3

Notes

This section applies only if a wipe/wash module (WWM) is installed. If a ZKE general module is installed, perform troubleshooting in accordance with Section 6160.0 ZKE Windscreen wiper control.

Functional Description

The windscreen wiper and wash system is controlled by the wipe/wash module (WWM). The individual functions can be switched on and off with the combined wipe/wash switch. The ignition switch must be in position 1 or 2 (R or 15) for this purpose.

The wipe/wash system consists of the following components:

- Wipe/wash switch
- Wash pump
- Wipe/wash module (WWM)
- Wiper motor
- Wiper relay K52 (diode relay, 6-pin)
- Wiper motor relay K53 (5-pin)

Wipe/Wash Functions

General: Ground is switched in all wipe/wash positions.
The wiper blades are returned to their park position by means of a micro-switch which is installed in the wiper motor. This switch switches ground to the wipe/wash module provided the wiper is outside the park position.

Single wipe: Press down the wipe/wash switch. Switch does not lock in position.

Intermittent wipe: The wiper runs in intermittent mode (at 5 second intervals). The wiper intervals are doubled when the vehicle is stationary (speed less than 30 km/h).

Stage 1: When the vehicle is stationary, the wiper runs in intermittent mode (5 second intervals). The wiper runs continuously in stage 1 at a road speed in excess of 30 km/h.

Stage 2: The wipe/wash module is bypassed. Wiper operation is therefore possible in stage 2 (emergency operation) in the event of failure of the electronic system or when the anti-blocking function is active. In this case, the wiper does not return automatically to the park position.

Wash: The wash procedure is controlled by the wipe/wash module (WWM).
Wash sequence: Wash pump operates → the wiper starts after a delay at stage 1 → washer pump stops → wiper continues running and wipes the windscreen dry.
The washer pump operates for as long as the switch is operated.

Anti–Blocking Function

The functions, intermittent wipe, stage 1, single wipe and wash are protected against blocking.

The anti-blocking function is active after 16 seconds when:

a) the wiper motor blocks during operation

b) the wiper motor blocks in rest position.

Clearing anti-blocking function:

a) Automatically after 3 minutes when wiper switch is in OFF position (maximum 9 times in succession).

b) By switching off the ignition (also switch off the wiper switch!).

Wipe/Wash Module (WWM)

General Block Diagram

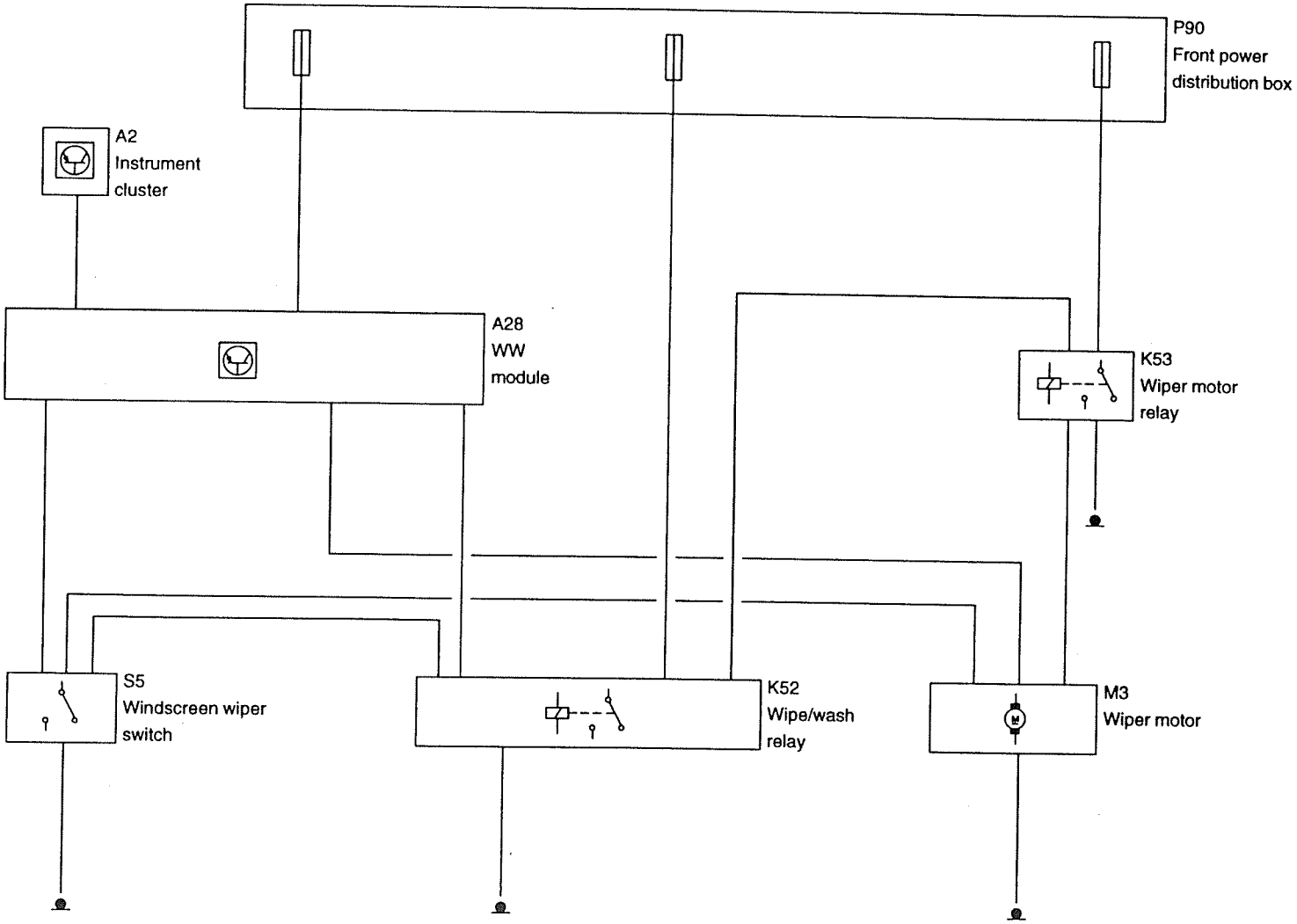

P34 61 001

Notes on the BMW DIAGNOSTIC SYSTEM

This system does not feature diagnostic capabilities.

Abbreviations

Not applicable

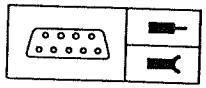

Pin Assignment

Connector Numbers

Number	Type	Description
X285	26-pin, green	Connector at WWM
X289	5-pin	Relay socket for relay K53
X296	6-pin	Relay socket for relay K52

Pin Assignments at the Wipe/Wash Module (WWM)

Pin	Type	Description/function	Connection	Signal type	Tester display	Measurement notes
1	E	Return contact	Wiper motor			
2	E	WWM voltage supply	Fuse, terminal R			
4	E	Switch position wash	Wiper switch			
5	E	Ground for WWM	Ground			
6	A	Wiper relay activation	Relay K52, Pin 4			
7	E	Position signal	Instrument cluster, output speed-A			
8	E	Switch position intermittent wipe	Wiper switch			
9	E	Switch position stage 1, single wipe	Wiper switch			

Pin Assignments at Relay K52

Pin	Type	Description/function	Connection	Signal type	Tester display	Measurement notes
2	E	B+, working circuit	Fuse			
4	E	Wiper stage 1	WWM Pin 1			
5	E	Ground	Ground			
6	A	Output	Relay K53, Pin 6			
8	E	B+, control circuit	Fuse			
9	E	Wiper stage 2	Wiper switch			

Pin Assignments at Relay K53

Pin	Type	Description/function	Connection	Signal type	Tester display	Measurement notes
2	A	Output stage 2	Wiper motor			
4	E	Switchover stage 2	Wiper switch			
5	A	Output stage 1	Wiper motor			
6	E	B+, working circuit	Relay K52, Pin 6			
8	E	B+, control circuit	Fuse			

Troubleshooting

Notes

- Battery charged, U-min = 12 V
- The prerequisite for electrical troubleshooting is that the wiper motor and the wiper linkage are OK mechanically.
- The wiper switch can be checked in accordance with the component testing instructions 6160.0B (Diagnostic procedure ZKE windscreen wiper control).

Installation location:

- WWM rear device support bracket
- K52/K53 wiper relays - left footwell under foot support

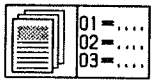

Defect Code Table

Wiper fails in stage 1 and/or intermittent wipe → Defect code 01

All wiper functions failed → Defect code 02

Wiper failed in stage 2 → Defect code 03

Wiper cannot be stopped → Defect code 04

Wiper does not return to park position → Defect code 05

Stage 1 runs in intermittent wipe mode when vehicle is moving → Defect code 06

Washer pump or automatic wash feature do not operate → Defect code 07

Defect Code 01

Wiper Failed in Stage 1 and/or Intermittent Wipe

Possible cause: K52 wiper relay, wires, wiper motor, wiper switch, wires

Note: The defect code can cause activation of the anti-blocking function. The anti-blocking function can also be activated during measurements. To cancel the anti-blocking function, switch off wiper and ignition.

Troubleshooting

Does stage 2 operate? — no → Continue with defect code 02.

—*—

yes ↓

Remove wipe/wash module (WWM). Connect adapter for 26-pin connector. Switch on ignition. Is approx. battery voltage applied at Pin 2? — no → Repair wire to fuse.

—*—

yes ↓

Is ground applied at Pin 5? — no → Repair wire.

—*—

yes ↓

Switch wiper switch alternately in intermittent wipe and stage 1 setting. Is ground switched to the following pin corresponding to the switch position: Intermittent/stage 1 = Pin 9

— no → Check wiper/washer switch (Component Testing 6160.0B). Is switch OK?

— no → Replace wiper/washer switch.

—*—

yes ↓

yes ↓

Repair wire from wiper/washer switch to wipe/wash module.

—*—

yes ↓

Connect wipe/wash module (WWM) to the adapter such that it is operable. **Clear anti-blocking function!** Switch on ignition. Set wiper switch to wiper stage 1. Can a ground signal be measured at the WWM Pin 6 every 5 seconds? (Note: The anti-blocking function is activated after 3 minutes!)

— no → Replace wipe/wash module (WWM).

—*—

yes ↓

Remove K52 wiper relay (6-pin). **Clear anti-blocking function!** Switch on ignition. Set wiper switch to wiper stage 1. Can a ground signal be measured at the relay Pin 4 every 5 seconds?

— no → Repair wire to wipe/wash module (WWM).

—*—

yes ↓

Install K52 wiper relay (6-pin). Detach 4-pin connector X333 at the wiper motor. Measure voltage between ground and Pin 2 (wire harness side). **Clear anti-blocking function!** Switch on ignition! Set wiper switch to wiper stage 1. Is a B+ signal measured every 5 seconds?

— no → Is wire from wiper motor X333, Pin 2 to wiper motor relay K53 (5-pin), Pin 5 OK?

— no → Repair wire.

— * —

yes ↓

Replace wiper motor.

— * —

yes ↓

Replace K53 wiper motor relay (5-pin).

— * —

Defect Code 02

All Wiper Functions have Failed

Possible cause: Wiper motor, ground wire to the wiper motor, wiper relay, ground wire to the wiper switch

Note: Clear the anti-blocking function before starting troubleshooting (switch of ignition and wiper) and check whether all wiper functions have actually failed!

Troubleshooting

Have all wiper/washer functions – including the washer pump – failed?

— yes → Repair ground connection to wiper/wash switch, 8-pin connector X295, Pin 1.

— * —

no ↓

Washer pump OK: Remove K53 wiper motor relay K53 (5-pin). Switch on wiper stage 2 at wiper switch. Is battery voltage measured at Pin 6?

— yes → Detach 4-pin connector X333 at the wiper motor. Is ground applied at Pin 1?

— no → Repair wire.

— * —

no ↓

yes ↓

Check connector X333 at wiper motor, repair if necessary. Check wires to the K53 wiper relay, repair if necessary. If all wires OK, replace wiper motor.

— * —

|

no

↓

Remove K52 wiper relay (6-pin). Is approx. battery voltage applied at Pin 2? — no → Check fuse and wire to the fuse, repair if necessary.

— * —

|

yes

↓

Switch on ignition! Is approx. battery voltage applied at Pin 8? — no → Check fuse and wire to the fuse, repair if necessary.

— * —

|

yes

↓

Is wire between K52 wiper relay Pin 6 and K53 wiper motor relay Pin 6 OK? — no → Repair wire.

— * —

|

yes

↓

Replace K52 wiper relay (6-pin, diode relay).

— * —

Defect Code 03

Wiper Failed in Stage 2

Possible cause: Wiper motor, wiper motor relay, wires

Troubleshooting

Remove K52 wiper relay (6-pin). Switch on wiper stage 2 at wiper switch. Is ground switched to Pin 9?

— no → Remove K53 wiper motor relay (5-pin). Switch on wiper stage 2 at wiper switch. Is ground switched to Pin 4?

— no → Check Pin 3 of the connector X295 at the wiper switch and repair if necessary. If connection OK, replace wiper/washer switch.

— * —

yes ↓

Repair wire from K52 relay to the wiper switch, connector X295 Pin 3.

— * —

— yes → Replace K53 wiper motor relay.

yes ↓

Remove K53 wiper motor relay (5-pin). Is approx. battery voltage applied at Pin 8?

— yes → Switch on wiper stage 2 at wiper switch. Is ground switched to Pin 4?

yes ↓

Repair wire to fuse.

— * —

no ↓

Repair wire to the wiper switch, connector X295 Pin 3.

— * —

Defect Code 04

Wiper cannot be stopped

Possible cause: Return contact, K52 wiper relay, short-circuit of a wire

Note: The defect code can cause activation of the anti-blocking function.

Troubleshooting

Detach 4-pin connector X333 at the wiper motor. Try removing Pin 4 (return contact) from the connector housing so that no connection can be made between the return contact and the wipe/wash module (WWM). Switch wiper on and off. Can the wiper now be stopped?

— yes → Return contact defective. Replace wiper motor.

— * —

no ↓

Check wire to WWM Pin 1 for short to ground. Is wire OK?

— no → Repair wire.

— * —

yes ↓

Remove wipe/wash module (WWM). Briefly switch on wiper in stage 2. Switch off wiper. Does the wiper stop?

— yes → Check wires from the wiper switch to the wipe/wash module (WWM) for a short to ground. Are wires OK?

— no → Repair faulty wire.

— * —

yes ↓

no ↓

Check wiper/washer switch (Component Testing 6160.0B). Is switch OK?

— no → Replace wiper/washer switch.

—*—

yes ↓

Replace wipe/wash module.

—*—

no ↓

no ↓

Remove K52 wiper relay (6-pin). Is ground applied at Pin 4 with wipe/wash module (WWM) removed?

— yes → Wire to WWM Pin 1 has a short to ground. Repair wire.

—*—

no ↓

Wiper switch in OFF position. Is ground applied at K52 wiper relay Pin 9?

— yes → Check wire to the wiper switch for a short to ground. Is wire OK?

— no → Repair wire.

—*—

yes ↓

Replace wiper/washer switch.

—*—

no ↓

no ↓

Is ground applied at K52 wiper relay Pin 5?

— no → Repair wire.

—*—

yes ↓

Replace K52 wiper relay.

—*—

Defect Code 05

Wiper does not return to park position

Possible cause: Return contact, wire to wipe/wash module (WWM)

Note: The defect code can cause activation of the anti-blocking function.

Troubleshooting

Stop the wiper outside the park position by switching off the ignition. Detach 4-pin connector X333 at the wiper motor. Measure resistance (motor side) between Pin 1 and Pin 4. Is resistance < 1Ω?

— no → Return contact defective. Replace wiper motor.

—*—

yes
↓

Repair wire to wipe/wash module (WWM) Pin 1.

—*—

Defect Code 06

Stage 1 runs in intermittent mode even when vehicle is moving

Possible cause: Vehicle speed signal from instrument cluster (speed-A)

Troubleshooting

Measure voltage between ground and wipe/wash module (WWM) Pin 7. Switch on ignition! Does the voltage value reach at least 7 V?

— no → Voltage value = 0 V?

— yes → Repair wire to the instrument cluster (speed-A).

— * —

yes
↓
Replace wipe/wash module (WWM).

— * —

no
↓
Defect not in the area of the wiper system. Continue diagnostic procedure instrument cluster 6200.

— * —

Defect Code 07

Washer pump or automatic wash feature does not operate.

Troubleshooting

Are all wiper functions OK?
— no → Continue with defect codes 01, 02 or 03.
— * —

yes ↓

Does the washer pump operate?
— yes → Repair wire from the wiper/washer switch connector X295 Pin 5 to the wipe/wash module (WWM) Pin 4.
— * —

no ↓

Detach 2-pin connector at the washer pump. Is approx. battery voltage applied at Pin 1?
— no → Check fuse and wire to the fuse, repair if necessary.
— * —

yes ↓

Is ground connected to Pin 5 when wash mode is operated on switch?
— no → Is wire to wiper/washer switch connector X295 Pin 5 OK?
— no → Repair wire.
— * —

yes ↓

Replace wiper/washer switch.
— * —

yes ↓

Replace washer pump.
— * —

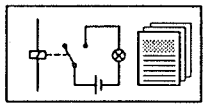

Functional Description

The windscreen wiper pressure control system (ADV) is controlled by the general module (GM) of the central body electronics (ZKE). The relays are located in the ADV module. Installation location: Rear power distribution box.

Operating Principle

The contact pressure of the windscreen wiper arm on the driver's side is varied by a DC motor depending upon the vehicle speed.

After a speed of 5 km/h has been reached, the contact pressure control (ADV) begins to raise the windscreen wiper arm (increase in contact pressure). As the vehicle speed increases, the contact pressure is increased in stages. The speed stages are: 100 km/h, 140 km/h, 180 km/h.

The windscreen wiper returns to its initial position after switching off the ignition (wiper arm released).

The "wash" function results in an increase in the contact pressure also when the vehicle is stationary. When driving, the "wash" function increases the contact pressure by one stage.

Installed in the contact pressure control motor (ADV) is a microswitch which is actuated by a cam wheel. The switch signals to the general module (GM) when the relevant increase in contact pressure has been reached. The switch switches ground to the general module for as long as the ADV motor is running. When the windscreen wiper pressure control (ADV) reaches the corresponding increase in contact pressure, a cam of the cam wheel interrupts the ground connection and the motor stops.

Function Monitoring

The general module uses the signal from the microswitch in the contact pressure control motor (ADV) for function monitoring. If no signal is received or if a ground signal is applied at the general module for too long, this situation is evaluated as a defect and the ADV motor is switched off by an active block guard.

The two ADV relays in the contact pressure control module (ADV) are monitored via a diagnostic link. If one of the relays sticks the second relay is also switched on (potential balance) in order to stop the ADV motor. The balance is cancelled when the vehicle drives faster than 5 km/h and the ADV relays are in working order once again.

Important!

The potential balance is activated when the ADV module is removed and installed.

The potential balance is also active when the ignition is switched off. This results in increased closed-circuit current consumption (approx. 300 mA).

Automatic cut-out only takes place when the vehicle is driving.

Remove and install the ADV module only with its fuse removed.

Anti–Blocking Function

As soon as the general module of the windscreen wiper pressure control (ADV) system detects a fault, it activates an anti-blocking function which switches off the ADV motor. The anti-blocking function is cancelled automatically when the vehicle drives at a speed above 5 km/h and the fault is no longer pending. When the vehicle is stationary, the anti-blocking function can be cancelled only by disconnecting the battery.

Windscreen Wiper Pressure Control (ADV/ZKE)

General Block Diagram

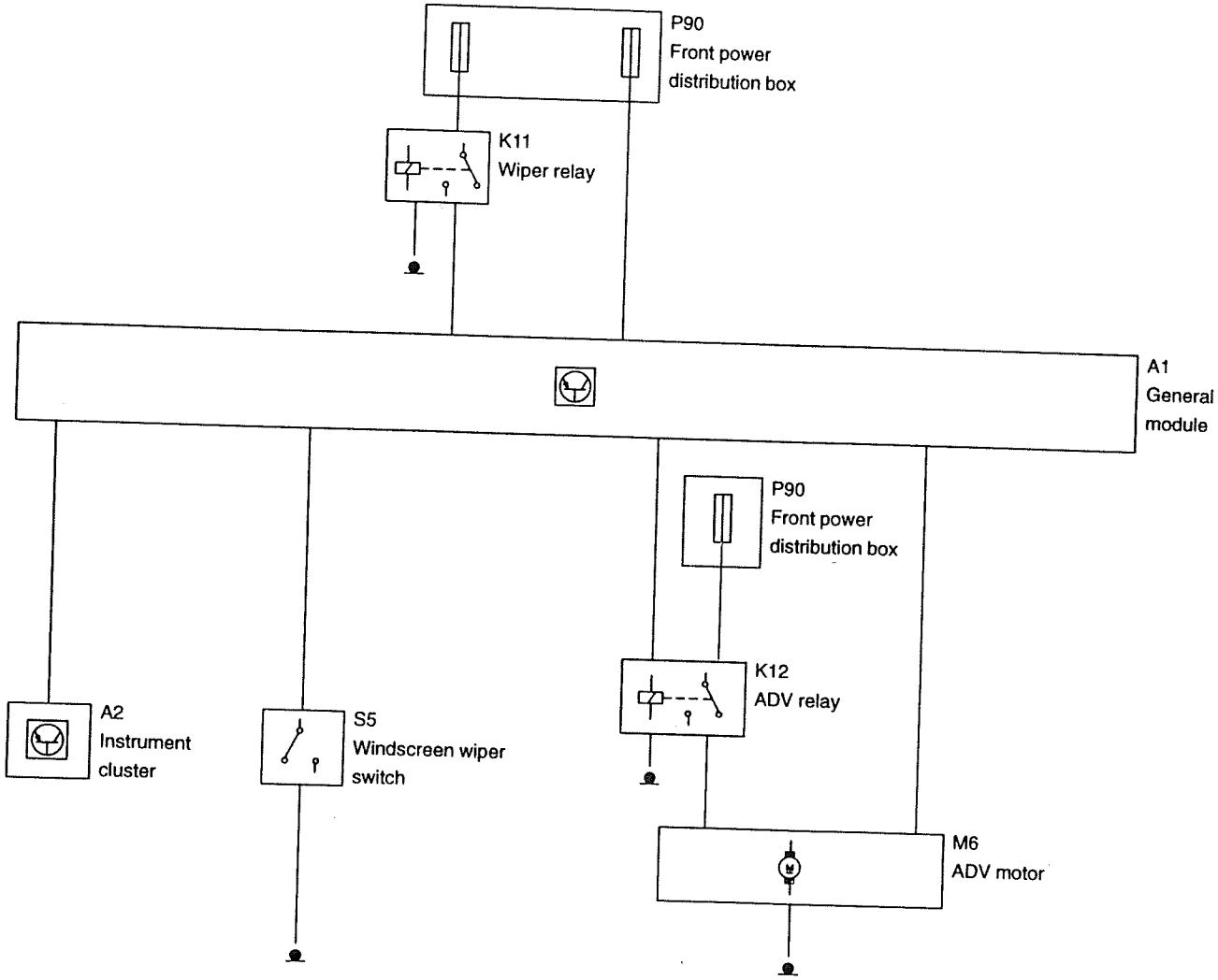

P 32 61 004

Notes on the BMW DIAGNOSTIC SYSTEM

Ensure the ADV motor does not run with the anti-blocking function active during simulation of the outputs ♦D♦SIMULATE OUTPUTS.

The defect code memory of the central body electronics (ZKE) is cleared automatically during simulation of the outputs. Redetection of a defect code is then possible only when the ADV motor is activated by operating "wash" in the vehicle with the anti-blocking function.

An active anti-blocking function cannot be cancelled by the BMW DIAGNOSTIC SYSTEM (see Functional Description).

The defect code memory can detect and store the following defect codes:

1. ADV switched off by anti-blocking function.
2. ADV relay does not pull up or sticks.

The text display **anti-blocking function active** in defect code 01 indicates that the anti-blocking function is currently defective.

ADV detected as "not installed"

After the supply voltage has been applied (terminal 30 at Pin A1), the ZKE general module checks whether the diagnostic link for the ADV module (Pin D25) is connected to ground. If the input is open, the ADV is detected as "not installed".

If the general module is installed with the vehicle battery connected, undefined contacting when plugging in the module can result in the input being detected as open and thus the ADV as "not installed".

If an ADV system is installed in the vehicle but is not detected by the diagnostic program, disconnect the vehicle battery for at least 5 seconds.

If the ADV system is still detected as "not installed" after reconnecting the vehicle battery (and reselecting ZKE!), perform troubleshooting in accordance with **defect code 02** (relay in ADV module defective).

Abbreviations

ZKE	Central body electronics
ADV	Windscreen wiper pressure control
ADM	ADV module
SWS	Windscreen wiper control
GM	General module
RM	Relay module
E	Input
A	Output

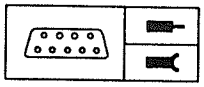

Pin Assignment

Connector Numbers:

Number	Type	Description
X332	5-pin, white	GM-A
X253	26-pin, green	GM-B
X254	26-pin, white	GM-C, is installed only when vehicle is equipped with power windows
X255	26-pin, yellow	GM-D

Pin Assignments at the General Module

Pin	Type	Description/function	Connection	Signal type	Tester display	Measurement notes
B20	A	ADV relay activation	ADV module Pin 6/AR+			
B6	A	ADV relay activation	ADV module Pin 9/AR–			
D25	E	Diagnostic link for ADV relay	ADV module Pin 7/DA			
D12	E	ADV microswitch (cam switch)	ADV motor Pin 2			
B11	E	Position signal	Instrument cluster, output speed-A			

Pin Assignments at the ADV Module Connector X291

Pin	Type	Description/function	Connection	Signal type	Tester display	Measurement notes
1		Not used				
2	A	AM+, ADV motor activation	ADV motor Pin 4			
3		Not used				
4	E	Terminal 30	Fuse			
5	A	AM–, ADV motor activation	ADV motor Pin 3			
6	E	AR+, relay activation	General module Pin B20			
7	A	DA, diagnostic link for relay	General module Pin D25			
8	E	31, ground	Ground			
9	E	AR–, Relay activation	General module Pin B6			

Troubleshooting

Notes

- Troubleshooting with the BMW DIAGNOSTIC SYSTEM
- Battery charged, U-min = 12 V
- If all central body electronics (ZKE) functions have failed (central locking system, power windows, windscreen wiper pressure control and windscreen wiper and washer system), carry out troubleshooting in accordance with Section 6100.0A Central Body Electronics (ZKE).
- If, in addition, the windscreen wiper or the windscreen washer system has failed, carry out troubleshooting in accordance with Section 6160.0A.

Important!

When the supply voltage is applied (terminal 30 at Pin A1), the ZKE general module detects which part systems are installed in the vehicle. Undefined contacting when plugging in the module can result in systems not being detected. Therefore:

Disconnect vehicle battery before installing a ZKE general module!

or

Disconnect vehicle battery for at least 5 seconds after installing a ZKE general module.

Also refer to Section 6100.0A Central Body Electronics (ZKE), Functional Description.

Defect Code Table

♦D♦900 Defect code memory – stored defect codes:

♦D♦Defect code 01 is stored → Defect code 01

♦D♦Defect code 02 is stored → Defect code 02

Malfunction:

Windscreen wiper pressure control failure → Defect code 03

Defect Code 01

♦D♦900 Defect code memory: Defect code 01 is stored

Explanation: This defect code is stored when the ADV motor is switched off by the anti-blocking function.

Possible cause: ADV relay or fuse defective, ADV motor defective, stiffness in ADV motor due to dirt or icing.

Note: The text display "anti-blocking function active" appears on the screen when the anti-blocking function is currently effective.

Troubleshooting:

Continue with defect code 03.

Defect Code 02

♦D♦900 Defect code memory: Defect code 02 is stored

Explanation: The general module detects via the diagnostic link from the ADV module Pin 7 to the general module connector D (yellow) Pin 25 whether the ADV relay pulls up and drops out again when the windscreen wiper pressure control (ADV) is activated. The defect code is also stored when the line itself has a break or when the ADV module (ADM) is removed.

Possible cause: Wires GM-ADV module, ADV module (ADM), fuse for ADV, ground connection.

Troubleshooting:

1. Check fuse and power supply for ADV module Pin 4, repair if necessary.
2. Check ground wire to ADV module Pin 8, repair is necessary.
3. Check wires from general module to ADV module (ADM), repair if necessary. From general module B20 to ADM Pin 6, from general module B6 to ADM Pin 9, from general module D25 to ADM Pin 7.
4. If the fuse and all wires are OK, renew ADV module (ADM).

Defect Code 03

Windscreen wiper pressure control failure – general malfunction –

Troubleshooting

Cancel active anti-blocking function by disconnecting the battery. Select ♦D♦900 Defect code memory. Switch on ignition! Operate "wash" in vehicle. Is defect code 02 displayed?

— yes → Continue with defect code 02.

— * —

no ↓

♦D♦SIMULATE OUTPUTS. Does the ADV motor operate correctly when activated?

— no → Check wires from the 4-pin connector at the ADV motor to the ADV module (ADM). From motor Pin 4 to ADM Pin 2 and from motor Pin 3 to ADM Pin 5. Are wires OK?

— no → Repair faulty wire.

yes ↓

yes ↓

Renew ADV motor.

— * —

— * —

Cancel active anti-blocking function! Operate "wash" in vehicle. Is the anti-blocking function defect code 01 activated once again?

— yes → Is ground wire to Pin 1 of the 4-pin connector at the ADV motor OK?

— no → Repair wire.

no ↓

yes ↓

— * —

Is wire from Pin 2 of the 4-pin connector at the ADV motor to GM connector D (yellow) Pin 12 OK?

— no → Repair wire.

— * —

yes ↓

Microswitch in ADV motor defective. Renew ADV motor.

— * —

no ↓

Does the windscreen wiper only operate in intermittent mode when wiper stage 1 is on and the vehicle running?

— yes → Speed-A signal to general module defective. Continue with Section 6160.0A, defect code 08.

— * —

no ↓

Is windscreen wiper pressure control (ADV) OK electrically? The anti-blocking function can also be activated by icing or an accumulation of dirt.

— * —

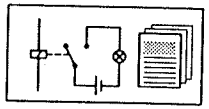

Functional Description

The headlight washer system (SRA) is controlled by the general module (GM). The relays are located in the SRA module. Installation location: Front relay box.

Operating Principle

When the "wash" function is operated in the vehicle and the parking light is also switched on, the headlight washer pump is briefly switched on twice in succession. A high pressure water jet cleans the headlight lenses.

If switched on, the fog lights are also washed.

In order to avoid excessive water consumption, the headlight washer system (SRA) is inhibited for approx. 30 seconds after each wash cycle.

SRA Pumps

5 Series (E34)

Only one pump is installed to wash the headlights and fog lights. Depending on the direction of rotation of the pump, either the headlights or the fog lights are washed.

7 Series (E32)

Two pumps are installed for washing the headlights and fog lights.

SRA Module

The SRA module contains the relays for control of the SRA pumps. A diagnostic link (from the SRA module to the general module) monitors the relays for defects.

Also refer to Section 6100.0A Central Body Electronics (ZKE).

Important!

The SRA modules of the 5 Series (E34) and 7 Series (E32) are not mutually interchangeable (see modified pin assignments!)

Due to a modified operating sequence with respect to time when using two SRA pumps, ZKE general modules with the **software version 4.2** must not be installed in the E34 when an SRA system is installed.

Headlight Washer System (SRA/ZKE)

General Block Diagram

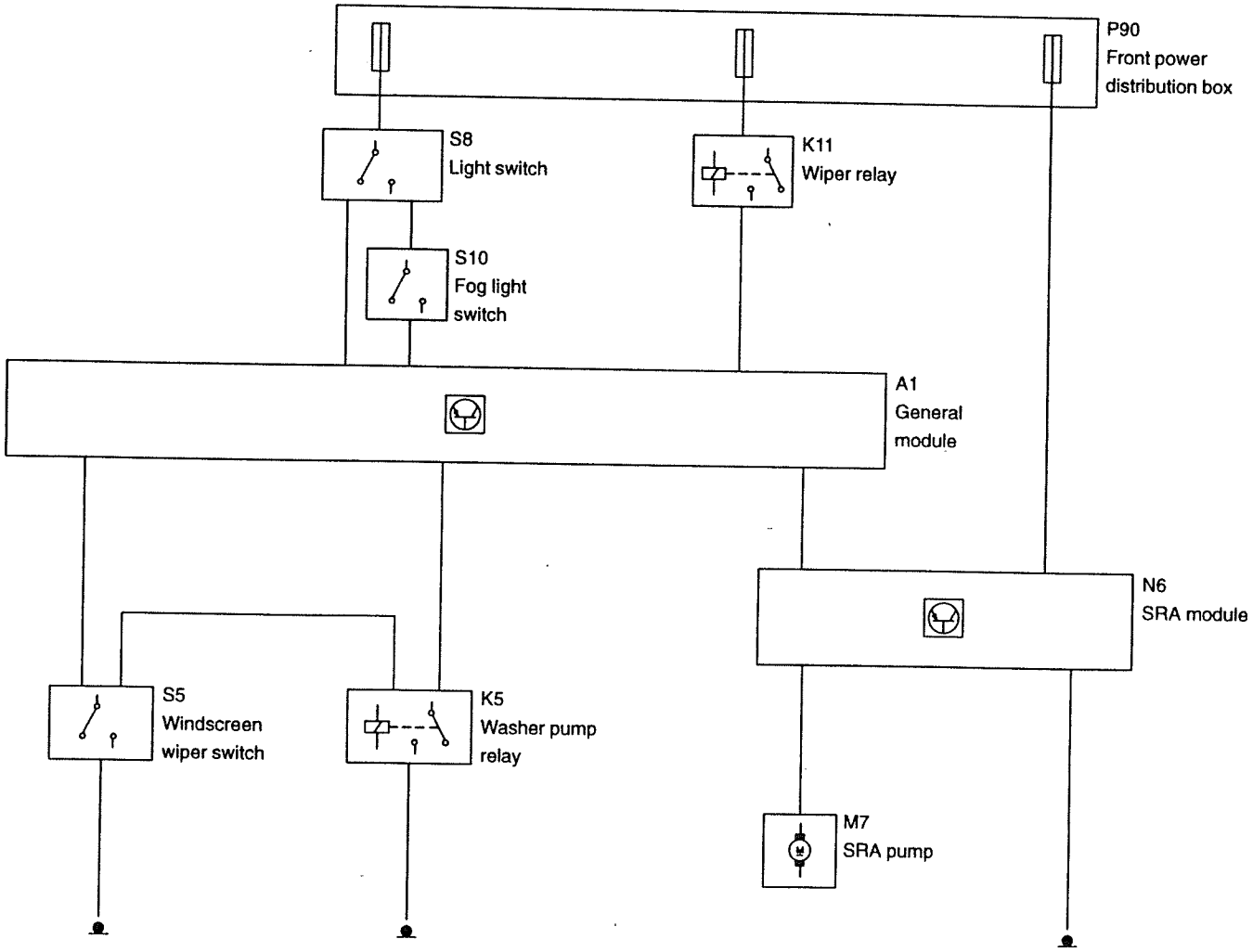

P 32 61 005

Notes on the BMW DIAGNOSTIC SYSTEM

The defect code memory of the central body electronics ZKE is cleared during simulation of the outputs. To redetect the defect code, activate the headlight washer pump from the vehicle by selecting "wash" function.

The defect code memory registers a defective SRA relay.

If the SRA pump runs without water, the SRA relay may be stored mistakenly as being defective due to afterrunning of the pump.

SRA is detected as "not installed"

After the supply voltage has been applied (terminal 30 at Pin A1), the ZKE general module checks whether the diagnostic link for the SRA module (Pin D21) is connected to ground. If the input is open, the SRA is detected as "not installed".

If the general module is installed with the vehicle battery connected, undefined coding when plugging in the module may result in the input being detected as open and thus the SRA as "not installed".

If an SRA system is installed in the vehicle but not detected by the diagnostic program, disconnect the vehicle battery for at least 5 seconds.

If the SRA is still detected as "not installed" after reconnecting the vehicle battery (and reselecting ZKE!), carry out troubleshooting in accordance with **defect code 01** (defect code SRA relay stored).

Abbreviations

ZKE	Central body electronics
SRA	Headlight washer system
SRM	SRA module
SWS	Windscreen washer control
GM	General module
RM	Relay module
GM-A	General module connector A, 5-pin, white
GM-B	General module connector B, 26-pin, green
GM-C	General module connector C, 26-pin, white
GM-D	General module connector D, 26-pin, yellow
RM-A	Relay module connector A, 20-pin, black
RM-B	Relay module connector B, 20-pin, white
E	Input
A	Output

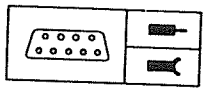

Pin Assignment

Connector numbers:

Number	Type	Description
X332	5-pin, white	GM-A
X253	26-pin, green	GM-B
X254	26-pin, white	GM-C, is installed only when the vehicle is equipped with power windows
X255	26-pin, yellow	GM-D

Pin Assignments at the General Module

Pin	Type	Description/function	Connection	Signal type	Tester display	Measurement notes
B7	A	SRA relay activation, headlight	SRA module Pin 6/SR	B–	(activation)	
B19	A	SRA relay activation, fog light	SRA module Pin 9/MV	B–	(activation)	
D6	E	Switch position wash	Wiper switch	Ground	ON	
D18	E	Parking light detection	Light switch	B+	ON	
D21	E	Diagnostic link for SRA relay	SRA module Pin 7/DS	B–/B+	Defect code is stored	
D26	E	Fog light detection	Fog light switch	B+	ON	

Pin Assignments at the SRA Module for 5 Series (E34), Connector X61

Pin	Type	Description/function	Connection	Signal type	Tester display	Measurement notes
1		Not used				
2	A	PN, SRA pump activation, fog lights	SRA pump Pin 1			
3		Not used				
4	E	Terminal 30	Fuse			
5	A	PS, SRA pump activation, headlight	SRA pump Pin 2			
6	E	SR, relay activation (headlights)	General module Pin B7			
7	A	DS, diagnostic link for relay	General module Pin D21			
8	E	31, ground	Ground			
9	E	MV, Relay activation (fog light)	General module Pin B19			

Pin Assignments at the SRA Module for 7 Series (E32), Connector X61

Pin	Type	Description/function	Connection	Signal type	Tester display	Measurement notes
1		Not used				
2	E	Terminal 30	Fuse			
3		Not used				
4	E	SR, relay activation (headlights)	General module Pin B7			
5	A	PN, SRA pump activation, fog lights	SRA pump Pin 1			
6	A	PS, SRA pump activation, head-lights	SRA pump Pin 2			
7	A	DS, diagnostic link for relay	General module Pin D21			
8	E	MV, Relay activation (fog lights)	General module Pin B19			
9	E	31, Ground	Ground			

Troubleshooting

Notes

- Troubleshooting with the BMW DIAGNOSTIC SYSTEM
- Battery charged, U-min = 12 V
- If all central body electronics (ZKE) functions have failed (central locking system, power windows, windscreen wiper pressure control and windscreen wiper/washer system), carry out troubleshooting in accordance with Section 6100.0A Central Body Electronics (ZKE).
- If, in addition, the windscreen wiper or the windscreen washer system has failed, carry out troubleshooting in accordance with Section 6160.0A ZKE Windscreen Wiper Control.

Important!

When the supply voltage is applied (terminal 30 at Pin A1), the ZKE general module checks which part systems are installed in the vehicle. Undefined contacting when plugging in the module can result in systems not being detected. Therefore:

Disconnect vehicle battery before installing a ZKE general module!

or

Disconnect vehicle battery for at least 5 seconds after installing a ZKE general module.

Also refer to Section 6100.0A Central Body Electronics (ZKE), Functional Description.

Defect Code Table

♦D♦900 Defect code memory – stored defect codes:

♦D♦SRA relay defect code stored → Defect code 01

Malfunction:

SRA malfunctioning → Defect code 02

Defect Code 01

♦D♦900 Defect code memory: SRA relay defect code is stored

Explanation: The general module detects via the diagnostic link from the SRA module Pin 7 to GM connector D (yellow) Pin 21 whether the SRA relay picks up and drops out again when the headlight washer system (SRA) is activated. This defect code is also stored when the line itself has a break or the SRA module is removed.

Possible cause: Wires GM-SRA module, SRA module (SRM), fuse for SRA, ground connection.

Note: The defect code may also be stored when the SRA pump runs without water. In this case, there is no electrical fault.

Troubleshooting:

1. If no defect can be found despite a defect code being stored, check diagnostic link from GM connector D (yellow) Pin 21 to SRA module Pin 7 and repair if necessary.
2. Check fuse and power supply for SRA module and repair if necessary.
3. Check ground wire to SRA module and repair if necessary.
4. Check wires from general module to SRA module and repair if necessary.
5. If fuse and all wires are OK, renew SRA module (SRM).

Defect Code 02

Headlight washer system (SRA) malfunctioning – general malfunction –

Note: Observe system differences between 7 Series and 5 Series (see Functional Description and Pin Assignments)

Troubleshooting

♦D♦SIMULATE OUTPUTS. Does the pump operate correctly during simulation?

— no → ♦D♦900 Defect code memory. Switch on headlights and fog lights in the vehicle. Switch on ignition! Operate "wash" function in the vehicle. **Attention! 30 seconds must elapse since last operating of the wash function.** Is the SRA relay defect code stored?

— yes → Continue with defect code 01.

— * —

no ↓

Are wires from SRA module to SRA pump OK?

— no → Repair faulty wire.

— * —

yes ↓

Renew SRA pump.

— * —

yes ↓

yes ↓

♦D♦MONITOR INPUTS. Switch on parking light and fog lights. Are both positions displayed as ON?

— no → Repair faulty wire from GM connector D (yellow) to the switch. Parking light GM–D18, fog light GM–D26.

|

yes

↓

♦D♦MONITOR INPUTS. Operate "wash" function in the vehicle. Is wash displayed as ON?

— no → Continue with Section 6160.0A ZKE Windscreen Washer Control (SWS).

— * —

|

yes

↓

Headlight washer system (SRA) is OK electrically. Check washer jets and headlight washer pump for dirt, water hoses for damage and pinched points.

— * —

Notes

This section applies only to the instrument cluster with check control up to February 1989.

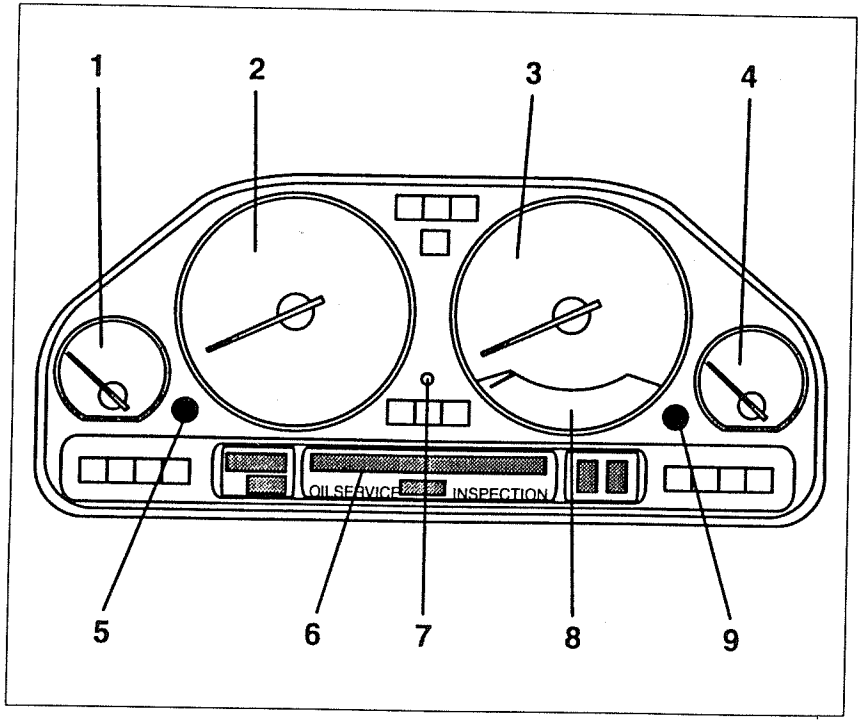

P32 62 002

Functional Description

Instrument Cluster

With the aid of analog instruments, indicator lamps and text messages, the instrument cluster (K) informs the driver of important operating statuses. It communicates with the check control module (CCM) via data lines.

Analog Instruments

Fuel gauge (1): The immersion tube sending unit in the fuel tank indicates the amount of fuel in the tank. An indicator lamp in the fuel gauge lights when the fuel level drops below approx. 8 litre.

Speedometer (2): The signals from the rear axle Reed contact (speedometer) are processed in the instrument cluster. The signals are processed separately for displaying speed and distance covered.

Tachometer (3): The TD signal (engine speed signal) is processed by the DME control unit.

Temperature gauge (4): This gauge indicates the engine coolant temperature.

KVA gauge (fuel consumption indicator) (8): The TI signal (injection signal) of the DME control unit and the vehicle speed signal are processed. The current fuel consumption is calculated from both values.

Note: Ti and tD signal on M70

The instrument cluster processes the signals ti (for KVA) and tD (for tachometer) only from the DME control unit I (A211). In order to calculate the exact fuel consumption, the ti-signal is doubled in the instrument cluster.

Buttons in the Instrument Cluster

Left button (5): Trip odometer reset

Right button (CC button) (9): Clearing check-control displays or on-board computer texts. If several check-control messages are sent at the same time, the individual messages are called one after the other by pressing this button.

Display Unit (6)

The display unit, also referred to as the **instrument cluster display** consists of an LCD module (LCD = Liquid Crystal Display). It contains:

- Service interval display
- Total mileage (kilometre) display
- Trip mileage (kilometre) display
- Program and range display (automatic transmission)
- Check-control texts
- Text output on on-board computer

Photoelectric Sensor (7)

The brightness of the display unit is adjusted electronically to the ambient light. The brightness in the vehicle is detected by the photoelectric sensor. In addition, the brightness can be adjusted by means of the manual dimmer when the vehicle lights are switched on.

Service Interval Display (SI)

Display of maintenance service intervals dependent on load and time. The service intervals are calculated in the instrument cluster. The display is reset with the SI reset button.

Coding Plug

The coding plug is a voltage-independent, electronic memory permanently connected to the wire harness. This memory contains all specific vehicle data which the instrument cluster requires to process and display signals.

The total mileage (kilometre reading) and the service interval data are also stored in the memory.

The coding plug can be renewed only by breaking out the brown housing cover. This cover is then replaced by a cover supplied with the replacement coding plug. Installation of a replacement coding plug is indicated by a red dot in the display unit and by a corresponding coding plug code.

Coding Plug Code

The code of the coding plug is printed on a label on the reverse side of the coding plug. It can also be read out via the display unit.

Operation: Switch off ignition. Press left button (trip odometer reset) and switch ignition lock to position 1 (terminal R) (keep button depressed). The code number appears in the display field for the mileage (kilometre reading).

Languages

The check-control messages are displayed in text form in the selected language.

The German language is preselected in the instrument cluster after disconnecting and reconnecting the battery. A different language can also be selected.

The languages available are German, US English, UK English, French, Italian and Spanish.

Operation:

- Switch ignition lock to position R (position 1)
- Press CC button (right) until the designation of a language appears in the display unit
- Release CC button
- Depress CC button once again, next language is displayed
- Repeat procedure until required language is selected

This language is retained until the battery is disconnected and reconnected.

Position of indicator lamps

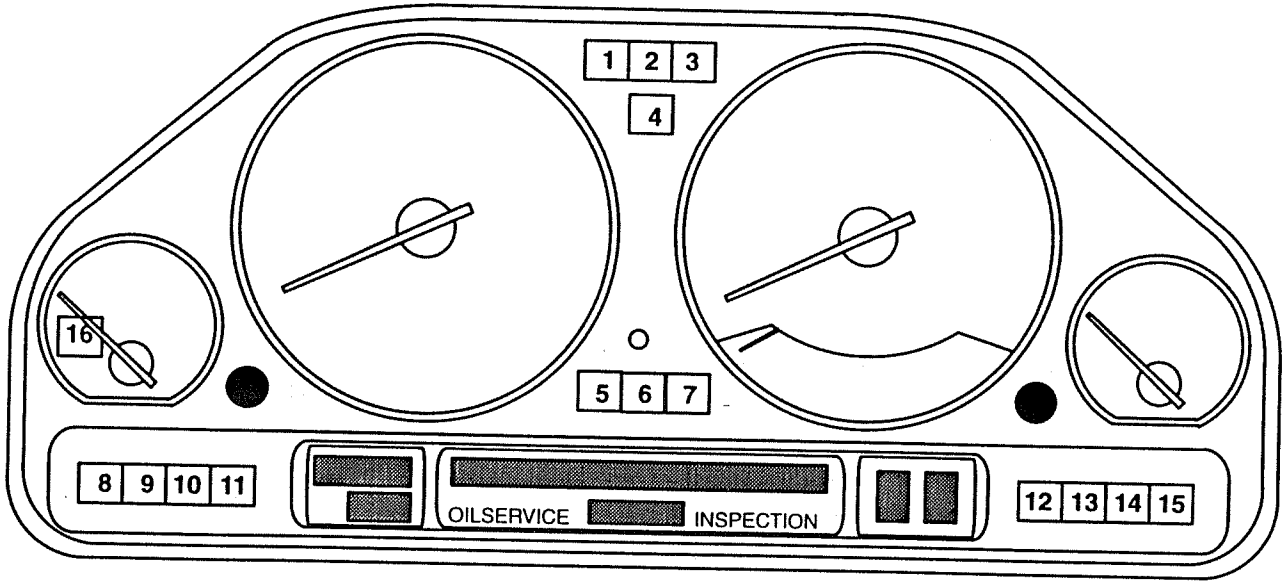

P32 62 003

Indicator lamps

Number	Indicator lamp	Source
1	Left turn signal indicator	Relay
2	High beam	Light switch
3	Right turn signal indicator	Relay
4	Trailer turn signal indicator	Relay
5	Battery charge indicator	Alternator
6	EML warning lamp	EML control unit
7	Oil pressure	Pressure switch
8	Seat belt (only USA and Gulf States)	Belt contact switch
9	Check engine (only USA)	DME control unit
10	Fog light	Fog light switch
11	Rear fog light	Fog light switch
12	Handbrake	Handbrake switch
13	General brake warning	Pressure switch and level switch for brake fluid
14	ABS indicator	ABS control unit
15	Airbag	Airbag control unit
16	Tank reserve	Immersion tube sending unit

Lamp self-test:

The lamps for **ABS (14), brake warning (13), handbrake (12), oil pressure (7)** and **battery charge indicator (5)** light when the ignition is switched on. They go out when the engine starts.

The **airbag (15)** indicator lamp lights for approx. 6 seconds after switching on the ignition. The **EML (6)** indicator lamp lights for approx. 1 second after switching on the ignition.

Check-Control

General

The check-control (CC) is a comprehensive system of messages which inform the driver of various operating statuses in the vehicle. The display is provided in the form of a text message in the display unit and is accompanied by an acoustic signal (gong).

A large number of sensors monitor the individual vehicle systems and components. Three systems are responsible for acquiring and outputting the data to the evaluation logic:

Instrument cluster (K): Covers all systems which also include an indicator lamp in addition to the text message. All acquired data are evaluated in the instrument cluster and, after fulfilling the display conditions, are output in the form of a text message in the display unit.

Check-control module (CCM): Covers a large number of systems. Connection to the instrument cluster is made via three data links. By way of data transfer, the check control module constantly informs the instrument cluster of the status of the connected systems.

Lamp control module (LKM): The light relays are accommodated in the light control module. The lighting system and the brake light switch are monitored for defects. The lamp control module communicates with the check-control module via data links. The check-control module transfers the data to the instrument cluster (refer to Diagnostic Procedure LKM 6301.0).

Priority Groups

The CC messages are subdivided into three priority groups.

- Priority 1: Faults which directly endanger driving safety. Indicated by flashing indicator arrows. Message cannot be cancelled with CC button.
- Priority 2: Faults which do not directly endanger driving safety. Message can be cancelled with CC button and is also cancelled automatically after 2 minutes.
- Priority 3: Messages relating to liquid/fuel levels. They are displayed only when switching the ignition on and off and are cancelled after 20 seconds.

Door Contacts

The door contacts and the rear lid contact are monitored by the check-control module (CCM). The contacts switch ground to the CCM when the door or the rear lid is open. A message (with gong signal) appears in the display unit if a door or the rear lid is open at a vehicle speed in excess of 5 km/h.

A detailed overview of all messages can be found at the end of this functional description.

Warning Switch for Wheel Camber

A wheel camber warning switch is additionally installed if the car is equipped with a self-levelling suspension system.

The task of the switch is to warn when the wheel camber reaches impermissible values despite the self-levelling suspension system. The changes in the wheel camber are registered by a contactless, optical sensor. A ground signal is applied at the CCM input for as long as the wheel camber is OK.

The error signal in the display unit (message: Self-levelling system) is provided dependent on speed and time.
Message:

- after 8 minutes at speed < 180 km/h
- after 1 minute at speed > 180 km/h

List of Check-Control Messages

The following list provides an overview of the check-control messages. Listed are the contents of the message and not the text in the display unit. Individual messages which have the same preconditions (e.g. lamps) are listed in combined form. The "condition" column indicates which prerequisite are required in addition to the defect status so that the message is displayed. The message and rest signal columns indicate the type of signal from the generator system.

Abbreviations: n = engine speed, v = vehicle speed, Prio. = message priority, Interr. = Interruption

Message content	Acquisition	Prio.	Generator system	Condition	Message signal	Rest signal
Brake pressure	K	1	Pressure switch	n > 400 rpm	Ground	Interr.
Brake fluid	K	1	Level switch	None	Ground	Interr.
Handbrake	K	1	Switch	v > 10 km/h	Ground	Interr.
Brake light	LKM	1	Measuring circuit	Brake	Interr.	B+
Oil pressure	K	1	Pressure switch	n > 400 rpm	Ground	Interr.
Catalytic converter	CCM	1	Temperature switch	Japan only	Ground	Interr.
Level control	CCM	1	Warning switch	after 8 minutes	Interr.	Ground
Coolant temperature	CCM	1	Temperature sensor	Temp. > 115° C	Ω value	Ω value
ASC defect	CCM	1	Control unit	None	Ground	Interr.
ASC controls	CCM	1	Control unit	None	Ground	Interr.
Lighting	LKM	2	Measuring circuit	None	Interr.	B+
Trailer light	CCM	2	AHM	None	Interr.	Ground
Brake pads	K	1	Pad sensor	None	Interr.	Ground
Cooling water level	CCM	3	Level switch	None	Interr.	Ground
Wash water level	CCM	3	Level switch	None	Interr.	Ground
Power steering fluid level	CCM	3	Level switch	None	Interr.	Ground
EGS defect	CCM	2	Control unit	n > 400 rpm	B+	Ground
Ignition switch	CCM		Switch	US models only	Ground	Interr.

Message content	Acquisition	Prio.	Generator system	Condition	Message signal	Rest signal
Engine oil level	CCM	3	Level switch	None	Interr.	Ground
Oil level sensor	CCM	3	Level switch	None	Interr.	Ground

Brake light switch: System is OK. when brake light switch switches battery voltage to the lamp control module (LKM) and the test switch switches ground to the check-control module (CCM). Message **brake light switch**, when test switch switches ground but brake light switch does not switch battery voltage.

Check Control: Message displayed when the check-control module (CCM), the lamp control module (LKM), the corresponding power supply or the data links are defective (refer to Troubleshooting).

Instrument Cluster/Check-Control Module (K/CC)

General Block Diagram

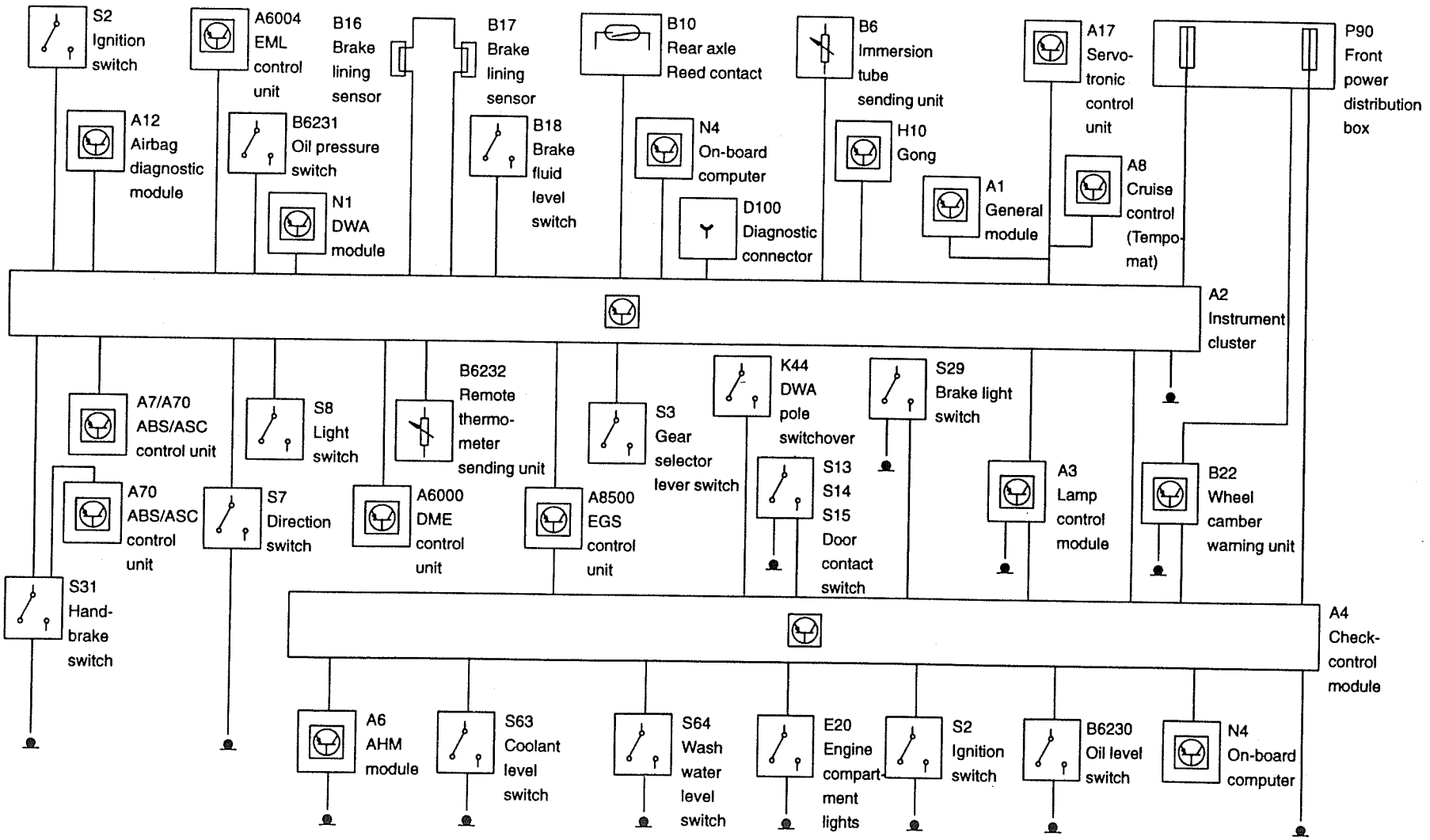

Notes on the BMW DIAGNOSTIC SYSTEM

♦D♦Status Lists

In contrast to the text message in the instrument cluster display, the diagnostic program indicates the status of the signal generator systems without any additional condition (e.g. engine speed, vehicle speed).

The diagnostic program only takes into account the maximum equipment level on the vehicle. If not installed, the corresponding signal generator systems must be displayed as "OK".

Simulation of the Speed (Tacho) Signal

Simulation is not possible via the diagnostic program

Note the following during simulation of the speed (tacho) signal by way of frequency input:

- Only restricted use of the BMW Service Tester ♦M♦Frequency OFF is possible. The speedometer function can be checked, no mileage reading, no speed-A output signal, no vehicle speed display in the BMW DIAGNOSTIC SYSTEM.
- The use of the BMW simulator for the instrument cluster is possible without restrictions. Connect 25-pin bypass connector for frequency simulation to the simulator. Connect simulator to vehicle battery. A continuously variable frequency can be entered via the frequency output (yellow socket).

The screen displays for vehicle speed and engine speed deviate from the instrument displays. Reason: Advance setting of instruments.

Abbreviations

AHM	Trailer module
ASC	Automatic stability control
CCM	Check-control module
EGS	Electronic transmission control
K	Instrument cluster
KVA	Fuel consumption indicator
LKM	Lamp control module
TD-Signal	Engine speed signal
ti-Signal	Injection signal

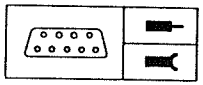

Pin Assignment

Connector Numbers

Number	Type	Description
X17	6-pin, brown	Instrument cluster connector 1
X16	26-pin, beige	Instrument cluster connector 2
X502	26-pin, white	Instrument cluster connector 3
X271	12-pin, grey	Instrument cluster connector 4
X18	26-pin, blue	CCM connector blue
X19	26-pin, green	CCM connector green
X12	35-pin, black	LKM connector

Pin Assignments at the Instrument Cluster Connector 1, X17

Pin	Type	Description/function	Connection	Signal type	Tester display	Measurement notes
1	E	Ground	Ground	B–	None	
2	E	RxD diagnostic link	Diagnostic socket 15	Square-wave		No diagnostic mode in the event of defect
3	E	Terminal R	Fuse	B+	Voltage	
4 to 12		Coding plug connection	Coding plug			cannot be checked

Pin	Type	Description/function	Connection	Signal type	Tester display	Measurement notes
13	E	Ground, terminal 31	Ground			
14	A	TxD diagnostic link	Diagnostic socket Pin 20	Square-wave		No diagnostic mode in the event of defect
15	E	Terminal R	Fuse	B+	Voltage	
16 to 24		Coding plug connection	Coding plug			cannot be checked

Pin Assignments at Instrument Cluster Connector 2, X16

Pin	Type	Description/function	Connection	Signal type	Tester display	Measurement notes
1	E	Airbag indicator lamp	Airbag diagnostic module	B–	None	
2	E/A	Data link to CCM	CCM X18, Pin 13	Square-wave 0 – 5 V	None	
3	E/A	Data link to CCM, BC and LKM	CCM X18, Pin 25 and BC, LKM	Square-wave 0 – 5 V	None	
4	E/A	Data link to CCM	CCM X18, Pin 9	Square-wave 0 – 5 V	None	
5	E	Battery charge indicator lamp, terminal 61	Alternator	B+	None	
6	E	Oil pressure switch	Pressure switch	B–	OK/not OK	
7	E	Terminal 15	Fuse	B+	Voltage	
8	E	ASC indicator lamp	ASC control unit	B–	OK/not OK	
9		Not used				

Instrument Cluster/Check-Control Module (K/CC)

Pin Assignments

Pin	Type	Description/function	Connection	Signal type	Tester display	Measurement notes
10	A	Ground brake pad sensor	Rear brake pad sensor	Ground	OK/not OK	Sensors at front and rear are interlinked
11	E	Trailer turn signal indicator	Relay	B+	None	
12	E	Terminal 30	Fuse	B+	None	
13	E	Terminal 30	Fuse	B+	None	
14	E	Brake pressure	Pressure switch	B–	OK/not OK	only in H31 brake systems
15	E	Brake fluid level	Level switch	B–	OK/not OK	
16	E	SIA reset	Diagnostic socket Pin 7	B–	None	at B– SIA reset
17	E	ti-signal from DME	DME control unit	Square-wave	0 ms/applied	
18	E	tD-signal from DME	DME control unit	Square-wave	Engine speed value	
19		Not used				
20	E	ABS indicator lamp	ABS control unit	B–	None	
21	E	Terminal R for airbag indicator lamp	Ignition switch	B+	None	
22	E	High beam indicator	Light switch	B+	None	
23	E/A	Data link DAC to CCM and BC	CCM X18, Pin 7	Square-wave 0 – 5V	None	
24	A	Coolant temperature sensor, ground	Temperature sensor	B–	Temperature range	
25	E	Brake pad sensor, input	Front brake pad sensor	approx.12 V	not OK	Sensors at front and rear are interlinked
26	E	Coolant temperature input	Temperature sensor	0 – 12 V	Temperature range	

Pin Assignments at Instrument Cluster Connector 3, X502

Pin	Type	Description/function	Connection	Signal type	Tester display	Measurement notes
1	E	Fog light indicator lamp	Fog light switch	B+	None	
2	A	Output for gong signal	Acoustic generator	B–	None	
3	E	Check engine lamp	DME control unit	B–	None	USA version only
4	E	Automatic transmission range indicator	Selector lever	B+	Gear	
5	E	Automatic transmission range indicator	Selector lever	B+	Gear	
6	E	Automatic transmission range indicator	Selector lever	B+	Gear	
7		Not used				
8	E	EGS program indicator	EGS control unit	B–	Program	
9	E	EGS program indicator	EGS control unit	B–	Program	
10		Not used				
11	E	Automatic transmission range indicator	Selector lever	B+	Gear	
12		Not used				
13		Not used				
14	E	Terminal 58g, lights	Dimmer	Pulses	None	
15	E	Rear fog light indicator lamp	Fog light switch	B+	None	
16	E	EML indicator lamp	EML control unit	B–	None	
17	E	EML indicator lamp	EML control unit	B–	None	
18	A	Output speed-A signal	various control units	Square-wave	None	approx. 12 V can be measured when at rest.

Pin	Type	Description/function	Connection	Signal type	Tester display	Measurement notes
19		Not used				
20		Not used				
21		Not used				
22		Not used				
23	A	CC button for BC	BC, Pin 14	B–	None	B– clears BC display in instrument cluster display
24		Not used				
25	E	Left turn signal indicator	Relay	B+	None	
26	E	Right turn signal indicator	Relay	B+	None	

Pin Assignments at Instrument Cluster Connector 4, X271

Pin	Type	Description/function	Connection	Signal type	Tester display	Measurement notes
1		Not used				
2	E	Tank reserve indicator lamp	Tank sending unit	B–	None	
3		Not used				
4	E	Tank content	Tank sending unit	0 – 12 V	Measuring ranges	
5		Not used				
6		Not used				
7	E	Handbrake	Handbrake switch	B–	ON/OFF	
8	E	Tachogenerator input	Tachogenerator	Square-wave 0 to 12 V	Vehicle speed	
9	A	Position pulse DWA		Square-wave 0 to 12 V	None	

Pin	Type	Description/function	Connection	Signal type	Tester display	Measurement notes
10	A	Tachogenerator ground		B–	Vehicle speed	
11		Not used				
12		Not used				

Pin Assignments at LKM Connector, X12 (Pin Assignments in Area of Check-Control)

Pin	Type	Description/function	Connection	Signal type	Tester display	Measurement notes
4		Data link to CCM	CCM X18, Pin 4	Square-wave 0 – 5 V	None	
5		Data link to CCM	CCM X19, Pin 14	Square-wave 0 – 5 V	None	
23		Data link to CCM and instrument cluster	CCM X18, Pin 25	Square-wave 0 – 5 V	None	
24		Ground for lamp test	Ground	B–	None	
25		Operating voltage for lamp test	CCM X 18, Pin 11	B+	None	

Pin Assignments at CCM Connector blue, X18

Pin	Type	Description/function	Connection	Signal type	Tester display	Measurement notes
1	E	Driver's door contact switch	Door contact switch	B–	OPEN/CLOSED	
2	E	ASC defect	ASC control unit	B–	OK/not OK	
3		Not used				
4	E	ASC controls	ASC control unit	B–	control	
5	E	Door contact, rear doors	Door contact switch	B–	OPEN/CLOSE	connected only on E32 and E34/M5.

Pin	Type	Description/function	Connection	Signal type	Tester display	Measurement notes
6	E	Terminal 31, ground	Ground	B–		
7	E/A	Data link to instrument cluster and BC	Instrument cluster X16, Pin 23	Square-wave 0 – 5 V	None	
8	E	Terminal 30	Fuse	B+	None	
9		internal				
10	E/A	Data link to LKM	LKM Pin 4	Square-wave 0 – 5 V	None	
11	A	Battery voltage for LKM (lamp test)	LKM Pin 25	B+	None	
12	E	Terminal R	Fuse	B+	None	
13	E/A	Data link to instrument cluster	Instrument cluster X16, Pin 2	Square-wave 0 – 5 V	None	
14	E	Catalytic converter temperature	Catalytic converter temperature switch	B–	OK/not OK	Japan version only
15 to 24		not used				
25	E/A	Data link to instrument cluster, LKM and BC	Instrument cluster X16, Pin 3	Square-wave 0 – 5 V	None	
26	E	Dynamic engine oil level	Level switch	B–	Status texts	

Pin Assignments at CCM Connector green, X19

Pin	Type	Description/function	Connection	Signal type	Tester display	Measurement notes
1		Wheel camber warning (self-levelling system)	Wheel camber warning switch	B–	OK/not OK	Ground jumper when no warning switch installed
2		Power steering oil level	Level switch	B–	OK/not OK	

Instrument Cluster/Check-Control Module (K/CC)

Pin Assignments

Pin	Type	Description/function	Connection	Signal type	Tester display	Measurement notes
3		Wash water level	Level switch	B–	OK/not OK	
4		Coolant level	Level switch	B–	OK/not OK	
5		EGS	EGS control unit	B–	OK/not OK	Ground jumper when no EGS installed
6		Not used				
7		Brake light test switch	Brake light test switch	B–	ON/OFF	
8		Static engine oil level,	Level switch	B– via 1KΩ resistor	Status texts	
9		Trailer module	Trailer module	B–	OK/not OK	Ground jumper when no AHM installed
10		Ignition key	Ignition lock switch	B–	Status texts	In USA version only
11		Seat belt	Belt switch	B–	Status texts	USA and KSA only
12		Not used				
13		Rear lid	Rear lid switch	B–	OPEN/CLOSED	
14		Data link to LKM	LKM Pin 5	Square-wave 0 – 5 V	None	
15 to 23		Not used				
24		Data link to instrument cluster and LKM	Instrument cluster X16, Pin 3, LKM Pin 23	Square-wave 0 – 5 V	None	
25		Not used				
26	E	Passenger's door contact	Door contact switch	B–	OPEN/CLOSE	Connected only on E32 and E34/M5.

Troubleshooting

Notes

- Troubleshooting with the BMW DIAGNOSTIC SYSTEM
- Battery charged, U-min = 12 V
- **If EML is installed:** The defect code memory of the EML control unit is cleared when the connector 3 (X502, colour white) is removed. Always monitor the EML defect code memory beforehand!
- Frequent installation and removal of the coding plug (X17, colour brown) subjects the connection to unnecessary load. Remove and carry out checks only when specified in the troubleshooting procedure. Never carry out measurements at the NV-RAM (black component in coding plug).
- Remove and install the instrument cluster, check control module and lamp control module only when the ignition is switched off.
- The plug-in connections can be very easily damaged when unsuitable measuring equipment is used. Therefore, only carry out checks at the connectors using the special adapter leads provided for this purpose.
- Take particular care when renewing indicator lamps to ensure that only replacement lamps with the specified ratings are used.

Defect Code Table

Malfunctions:

Failure of individual check-control signal generator systems → Defect code 01

Simultaneous failure of several instrument cluster functions → Defect code 02

Diagnostic procedure not possible with instrument cluster → Defect code 03

Failure of check-control → Defect code 04

Text message check-control in display unit → Defect code 04

Fuel consumption display defective → Defect code 05

Fuel gauge defective → Defect code 06

Tank reserve light failure → Defect code 07

Temperature display defective → Defect code 08

Tachometer defective → Defect code 09

Speedometer or odometer defective → Defect code 10

Speed-A signal defective → Defect code 11

E32, M5 wheel camber warning unit defective → Defect code 12

Defect Code 01

Failure of individual check-control signal generator systems

Note:

A complete list of signal generator systems is provided in the chapter - Functional Description.

In compliance with this diagnostic procedure, there is a fault when the signal generator signals a system as being defective although the system is OK in the vehicle or when the system in the vehicle is defective but the signal generator does not detect a fault.

The check-control text display in the instrument cluster is mainly linked to a series of additional conditions (engine speed, vehicle speed, time conditions). The signal generator system should therefore only be checked with the BMW DIAGNOSTIC SYSTEM (display without additional conditions)

Troubleshooting with the diagnostic program – general

– not applicable to oil level switch, EGS, ASC, AHM –

- Disconnect plug connections at signal generator. Connect wire to check control module (CCM) or instrument cluster directly to ground or interrupt. The display should change between "OK" and "not OK". If the display does not change, check wire and repair if necessary. If wire is OK, renew check control module or instrument cluster electronic assembly.
- Using suitable lead, alternately bypass or interrupt Pin 1 and Pin 2 of the plug connection. The display should change between "OK" and "not OK". If the display does not change, the ground connection is defective. Repair wire.
- If the display changes correctly when bypassing Pin 1 and Pin 2, the signal generator is defective.

Troubleshooting engine oil level switch

- Complete defect detection with BMW DIAGNOSTIC SYSTEM.
- If both sensors (static and dynamic) are displayed as being defective, check ground wire to the 3-pin connector of the oil level switch Pin 2 and repair if necessary.
- Checking engine oil level switch: Detach 3-pin connector. Measure resistance at plug part of oil level switch.
  Nominal values:
  Between Pin 2 and Pin 3 < 1 Ω.
  Between Pin 2 and Pin 1 = approx. 1 kΩ.
- Renew defective sensor.

Troubleshooting trailer module (AHM)

- Error message although no AHM installed: Check short-circuit jumper at 6-pin connector in luggage compartment (rear left trim), repair if necessary. If jumper is OK, repair wire to CCM connector green Pin 9.
- Trailer module (AHM) installed: Check AHM main fuse in front power distribution box, repair if necessary.
- AHM main fuse OK: Check all light fuses in the AHM and repair defective fuses. Installation location AHM: Left of luggage compartment, behind trim panel.
- Fuses OK: Detach 6-pin connector between trailer module (AHM) and vehicle wire harness. Connect jumper between Pin 5 and Pin 6 (wire end vehicle wire harness). If the trailer module (AHM) is now shown as OK, renew trailer module.
- Defect displayed despite bypass: Check ground wire to trailer module (AHM) and check wire to CCM connector green Pin 9, repair if necessary.

Troubleshooting EGS, ASC messages

- Check EGS (Diagnostic Procedure 2460.0) or ASC (Diagnostic Procedure 3450.1).
- If EGS or ASC OK: Check wire from CCM to control unit and repair if necessary.

Defect Code 02

Simultaneous failure of several instrument cluster functions

Possible cause: Fuses, wires, coding plug, electronic assembly

Troubleshooting

Are all fuses OK?

— no → Renew defective fuse.

— * —

yes ↓

Switch on ignition. ♦D♦ Is diagnostic mode possible with instrument cluster?

— yes → ♦D♦210 Instrument cluster status lists. Switch on ignition! Is approx. battery voltage displayed at terminal 15?

— no → Repair wire to connector 2 (beige) Pin 7.

— * —

yes ↓

Check individual functions (see Defect Code Table).

— * —

no ↓

Remove instrument cluster. is approx. battery voltage applied at connector 2 (beige) Pin 12 and Pin 13?

— no → Repair wire to fuse.

— * —

yes ↓

Remove connector 1 (brown, coding plug). Switch on ignition! Is approx. battery voltage applied at Pin 3 and Pin 15?

— no → Repair wire to fuse.

no ↓

|

yes

↓

Is ground to connector 1 Pin 1 and Pin 13 OK? — no → Repair wire.

— * —

|

yes

↓

Check plug connection for visible damage. Is connector 1 OK? — no → Repair plug connection.

— * —

|

yes

↓

Renew coding plug.

— * —

Defect Code 03

Diagnostic procedure not possible with instrument cluster

Possible cause: Fuses, RxD or TxD link

Note: Refer to notes in the BMW DIAGNOSTIC SYSTEM (screen display).

Troubleshooting

Are all indicator instruments of the instrument cluster operating correctly? — no → Continue with defect code 02.

—*—

yes ↓

Remove instrument cluster. Detach connector 1 (brown). Is RxD link from connector 1 Pin 2 to diagnostic connector Pin 15 OK? — no → Repair wire.

—*—

yes ↓

Is TxD link from connector 1 Pin 14 to diagnostic connector Pin 20 OK? — no → Repair wire.

—*—

yes ↓

Continue troubleshooting as displayed on screen.

—*—

Defect Code 04

Failure of Check-Control

Text message check-control in display unit

Possible cause: Power supply to CCM or LKM, data links from instrument cluster, CCM or LKM

Troubleshooting

Are fuses for CCM and LKM OK? — no → Renew defective fuses.

—*—

yes ↓

Remove CCM. Switch on ignition! Is approx. battery voltage applied at blue connector, Pin 8? — no → Repair wire to fuse.

—*—

yes ↓

Is approx. battery voltage applied at blue connector Pin 12? — no → Repair wire to fuse.

—*—

yes ↓

Is ground connection to blue CCM connector, Pin 6 OK? — no → Repair wire.

—*—

yes ↓

Is a voltage of at least 5 V applied at the blue CCM connector, Pin 7? — no → Repair wire to instrument cluster connector 2 (beige) Pin 23.

—*—

yes ↓

Is a voltage of at least 3 V applied at blue CCM connector, Pin 25 (clocked voltage!)?

— no → Remove LKM. Is a voltage of at least 3 V now applied?

— yes → Renew lamp control module (LKM).

—*—

no ↓

Repair wire to instrument cluster connector 2 (beige) Pin 3.

—*—

yes ↓

Install CCM! Remove LKM. Switch on ignition! Is ground to LKM Pin 24 OK?

— no → Repair wire.

—*—

yes ↓

Is approx. battery voltage applied at LKM Pin 25?

— no → Is wire to CCM connector blue Pin 11 OK?

— no → Repair wire.

—*—

yes ↓

Renew check-control module.

—*—

yes ↓

Is a voltage of at least 5 V applied at LKM Pin 4 (clocked voltage!)?

— no → Is wire to CCM connector blue Pin 10 OK?

— no → Repair wire.

yes ↓

Renew check-control module.

— * —

yes ↓

Is a voltage of at least 5 V applied at LKM Pin 5? — no → Is wire to CCM connector green Pin 14 OK? — no → Repair wire.

yes ↓

Renew check-control module.

— * —

yes ↓

Is a voltage of at least 3 V applied at LKM Pin 23 (clocked voltage!)? — no → Remove CCM. Is a voltage of at least 3 V now applied at LKM Pin 23? — no → Repair wire to instrument cluster connector 2 (beige) Pin 3.

— * —

yes ↓

Renew check-control module.

— * —

yes ↓

Install LKM. Remove CCM. Is wire from CCM connector blue Pin 13 to instrument cluster connector 2 (beige) Pin 2 OK? — no → Repair wire.

— * —

yes ↓

Renew check-control module as a check, if defect occurs again, replace lamp control module.

Defect Code 05

Fuel Consumption Display Defective

Possible cause: Display instrument, ti-wire

Troubleshooting

♦**D**♦300 System test. Does the pointer of the fuel consumption gauge deflect excessively?

— no → Continue as displayed on screen.

— * —

yes ↓

♦**D**♦210 Instrument cluster status lists. With ♦⇒♦to fuel consumption gauge (KVA). Start engine. Is ti-signal detected?

— no → Repair ti wire from instrument cluster connector 2 (beige) Pin 17 to DME control unit.

— * —

yes ↓

Renew fuel consumption gauge (KVA).

— * —

Defect Code 06

Fuel Gauge Defective

Possible cause: Immersion tube sending unit, ground wire, wires to instrument cluster, indicator/display instrument

Troubleshooting

♦D♦300 System test. Does the pointer of the fuel gauge deflect excessively?

— no → Continue as displayed on screen.

— * —

yes ↓

♦D♦210 Instrument cluster status lists. With ♦⇒♦ to fuel gauge. Is **short** displayed on the screen?

— yes → Wire from instrument cluster connector 4 (grey) Pin 4 has a short to ground. Repair wire.

— * —

no ↓

Is **break** displayed on screen?

— yes → Detach 6-pin connector at immersion tube sending unit. Connect jumper between Pin 3 and Pin 2 (wire harness). Is **short** now displayed on the screen?

— yes → If wires OK, renew sending unit.

— * —

no ↓

no ↓

Connect Pin 2 directly to vehicle ground. Is **short** now displayed on the screen?

— yes → Repair ground wire to Pin 3.

— * —

no ↓

no ↓

Repair wire from Pin 2 of connector at immersion tube sending unit to instrument cluster connector 4 (grey) Pin 4.

— * —

|

no

↓

Does the screen display (0–1/2, 1/2–1/1) agree with the fuel tank display in the vehicle? — no → Renew fuel gauge.

— * —

|

yes

↓

Check immersion tube sending unit in accordance with technical data (microfiche), renew if necessary. If immersion tube sending unit is OK, renew indicator/display instrument.

— * —

Defect Code 07

Tank Reserve Light Failure

Possible cause: Lamp, wire, immersion tube sending unit

Troubleshooting

Does fuel gauge operate correctly? — no → Continue with defect code 06.

— * —

yes ↓

Detach 6-pin connector at immersion tube sending unit. Pin 1 and Pin 2 (wire harness). Does the reserve lamp light? — yes → Renew immersion tube sending unit.

— * —

no ↓

Remove instrument cluster, open. Is lamp for reserve light OK? — no → Renew lamp.

— * —

yes ↓

Repair wire from instrument cluster connector 4 (grey) Pin 2 to the immersion tube sending unit Pin 1.

— * —

Defect Code 08

Temperature Gauge Defective

Possible cause: Indicator instrument, temperature sensor, wires

Note: It is possible to compare the temperature display in the instrument cluster (divided into areas) with the temperature display in the DME program.

Troubleshooting

♦**D**♦300 System test. Does the pointer of the temperature gauge deflect excessively?

— no → Continue as displayed on screen.

—*—

yes ↓

♦**D**♦210 Instrument cluster status list. With ♦⇒♦to temperature gauge. Is **short** displayed on the screen?

— yes → Detach 2-pin connector at temperature sensor for instrument cluster. Is display not **break**?

— yes → Renew temperature sensor.

—*—

no ↓

Check wires to instrument cluster connector 2 (beige) Pin 24 and Pin 26 for a short to ground, repair faulty wire.

—*—

no ↓

Is **break** displayed?

— yes → Detach 2-pin connector at temperature sensor for instrument cluster. Connect jumper between Pin 1 and Pin 2 (wire harness). Is **short?** now displayed?

— yes → Renew temperature sensor.

|
no
↓

|
no
↓

Do the temperature ranges displayed on the screen (< 60° C, 60–110° C, > 110° C) agree with the actual engine temperature (compare temperature range with temperature display in ♦D♦DME program)?

— yes → Renew temperature gauge.

|
no
↓

Renew temperature sensor for instrument cluster.

— * —

|
no
↓

Check wires to instrument cluster connector 2 (beige) Pin 24 and Pin 26 for a break, repair faulty wire.

— * —

— * —

— * —

Defect Code 09

Tachometer defective

Possible cause: Instrument, wires

Troubleshooting

♦D♦210 Instrument cluster status list. With ♦⇒♦ to engine speed. Start engine. Run at various engine speeds. (Observe indicator delay!) Are the engine speeds correctly displayed on the screen?

— yes → Do the screen display and instrument display agree? (Note: Permissible instrument error +/– 2 percent of final scale value)

— no → Renew tachometer (instrument).

—*—

yes ↓

Does instrument pointer get stuck?

— yes → Renew tachometer (instrument).

—*—

no ↓

End of troubleshooting.

—*—

no ↓

no ↓

no ↓

Remove instrument cluster. Detach connector 2 (beige). Connect special adapter.

♦**M**♦ Scope ST. Connect universal measuring lead to tester. Connect brown lead B– to vehicle ground, blue lead D+ together with black lead terminal 1 to instrument cluster connector 2 Pin 18. Start engine. Is a square-wave signal measured (note distortion on scope instrument!)?

— no → Repair wire from instrument cluster connector 2 Pin 18 to DME control unit.

—*—

|

yes

↓

Renew instrument cluster electronic assembly (pc-board).

—*—

Defect Code 10

Speedometer or Odometer Defective

Possible cause: Tachogenerator, wires, speedometer, instrument cluster electronic assembly

Note: Frequency input only with simulator for instrument cluster (for connection see systematic troubleshooting, Section 0130.0)

Troubleshooting

Is speedometer OK but no distance reading?

— yes → ♦**D**♦300 Carry out system test. Do all segments of the LC display light for distance covered?

— no → Renew LCD module.

— * —

yes ↓

Renew instrument cluster electronic assembly (pc-board).

— * —

no ↓

no ↓

Have the odometer **and** speedometer failed?

— yes → Detach 2-pin connector at rear axle Reed contact. Switch on ignition! Is a voltage of at least 5 V applied between Pin 1 and Pin 2?

— yes → Replace rear axle Reed contact (tachogenerator).

— * —

no ↓

no ↓

Is a voltage of at leas 5 V applied between vehicle ground and Pin 1 (wire colour brown/red)?

— yes → Repair wire (wire colour brown/red) to instrument cluster connector 4 (grey) Pin 10.

— * —

no ↓

no ↓

Is wire (wire colour brown/red) to instrument cluster connector 4 (grey) Pin 8 OK?

— yes → Renew instrument cluster electronic assembly (pc-board).

— * —

no ↓

Repair wire.

— * —

no ↓

Only speedometer defective. Detach 2-pin plug connection at tachometer. Simulate speed signal with simulator for instrument cluster by way of frequency input. Is speedometer OK?

— no → Renew speedometer.

— * —

yes ↓

♦D♦210 Instrument cluster status lists. Select speed display with ♦⇒♦. Input any frequency (with simulator), compare screen display and speedometer display. Is the measuring tolerance of the speedometer within the permissible range?

— no → Renew speedometer.

— * —

yes ↓

Renew rear axle Reed contact (tachogenerator).

— * —

Defect Code 11

Speed-A Signal Defective

Note: This troubleshooting procedure is used to check whether the instrument cluster correctly makes available a speed-A signal.

Troubleshooting

Are the speedometer and odometer operating correctly? — no → Continue with defect code 10.

—*—

yes ↓

Approx. battery voltage is applied on the speed-A line when at rest. Measure voltage at wire. Is battery voltage applied? — no → Check wire to instrument cluster connector 3 (white) Pin 18 for a break and repair if necessary.

—*—

yes ↓

Remove instrument cluster. Connect special adapter to instrument cluster connector 3, connect instrument cluster to the adapter so that it is fully operable. Do not connect connector 3 to wire harness.

♦**M**♦ Scope ST. Connect universal adapter to tester. Connect brown lead B– to vehicle ground. Blue lead D+ and black lead terminal 1 to connector 3 Pin 18. Switch on ignition! Detach 2-pin connector at rear axle Reed contact. Simulate speed signal with simulator for instrument cluster by way of frequency input (for connection refer to Systematic TroubleShooting 0130).

♦**M**♦ Is square-wave signal measured? (Note distortion in scope instrument!)

— no → Renew instrument cluster electronic assembly.

|

yes

↓

Instrument cluster OK If there is still a defect in the vehicle, check whether the speed-A signal is distorted by a defective control unit connected to the speed-A line.

— * —

— * —

Defect Code 12

Wheel Camber Warning Unit Defective

Note: Carry out mechanical check of the wheel camber warning switch in accordance with Repair Instructions Group 37.

Troubleshooting

Is fuse OK?
— no → Renew fuse.
—*—
yes
↓
Detach plug connection X696 at warning switch. Is battery voltage applied at Pin 2?
— no → Repair wire.
—*—
yes
↓
Is ground applied at Pin 3?
— no → Repair wire.
—*—
yes
↓
Is wire from Pin 1 to CCM connector green Pin 1 OK?
— no → Repair wire.
—*—
yes
↓
Renew warning switch.
—*—

Notes

This section applies to the instrument cluster without check-control up to September 1990.

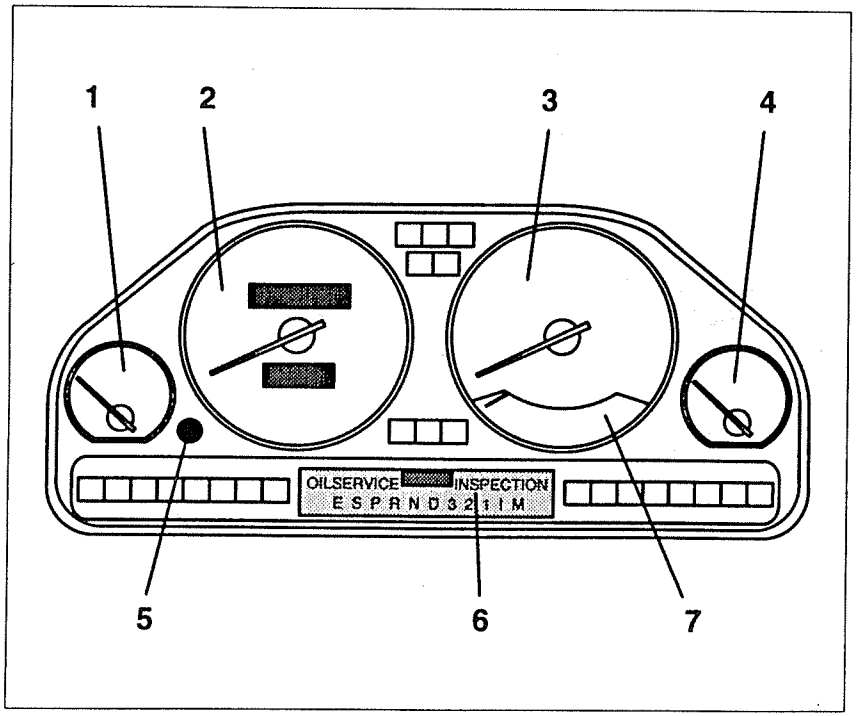

P34 62 002

Functional Description

Main Components

1	Fuel gauge with indicator lamp
2	Speedometer with display for total distance covered and trip odometer
3	Tachometer
4	Coolant temperature gauge
5	Reset button for trip odometer
6	Lamp module with service interval display and gear display for automatic transmission
7	Fuel consumption indicator

Re: No. 6, Lamp Module:

The lamp module consists of 7 lamps for the 4 HP 22 transmission and 11 lamps for the 4 HP 22 EH transmission.

The module with 7 lamps is installed in vehicles with manual transmission and the gear display "blanked".

Position of Indicator Lamps

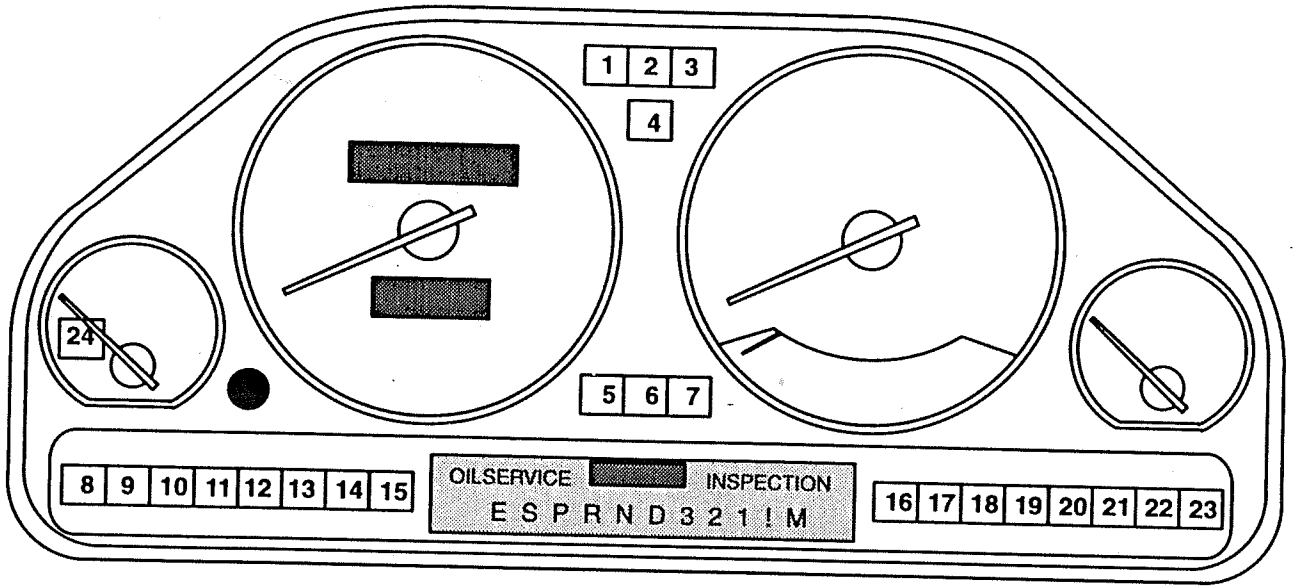

P34 62 003

Indicator Lamps

Number	Indicator lamp	Source
1	Left turn signal indicator	Relay
2	High beam	Light switch
3	Right turn signal indicator	Relay
4	Trailer turn signal indicator	Relay
5	Battery charge indicator	Generator
6	Not used	
7	Oil pressure	Pressure switch
8	Fog light	Fog light switch
9	Rear fog light	Fog light switch
10	Not used	
11	Not used	
12	Fuel filter (524td only)	Sensor on filter
13	DDE diagnosis (524td only)	DDE control unit
14	Preheating (524td only)	Preheating control unit
15	Start enable (524td only)	Preheating control unit
16	Brake pad wear	Brake pad contact
17	Handbrake	Handbrake switch
18	Brake fluid	Level switch on brake fluid reservoir
19	ABS indicator	ABS control unit
20	Airbag	Airbag control unit
21	Seat belt (Gulf States only)	Seat belt relay
22	Self-levelling system	
23	Not used	
24	Fuel reserve	Immersion tube sending unit

Lamp self-test:

The lamps for **ABS (19), handbrake (17), brake fluid (18), Oil pressure (7)** and **battery charge indicator (5)** light when the ignition is switched on. They go out when the engine is started.

The **brake pad wear indicator (16)** lights when starting the engine.

The lamps for **airbag (20)** and **DDE (13)** light for approx. 6 seconds when the ignition is switched on.

In the case of the diesel, the **preheating lamp (14)** additionally lights when the ignition is switched on. It goes out after preheating and the **start lamp (15)** lights. If the vehicle is not started the **start lamp** will also go out after a short time. The **preheating lamp** lights once again when the ignition is switched on.

Coding Plug

The coding plug is plugged into the instrument cluster from the rear. When installed, the code digit is indicated between the KVA and DZM gauge.

The coding plug contains the following data:

- 4/6 cylinder
- Measuring range value 02 M
- SI mode petrol/diesel
- Inspection limit value
- Distance pulse number K for SI

Instrument Cluster (Standard Version)

General Block Diagram

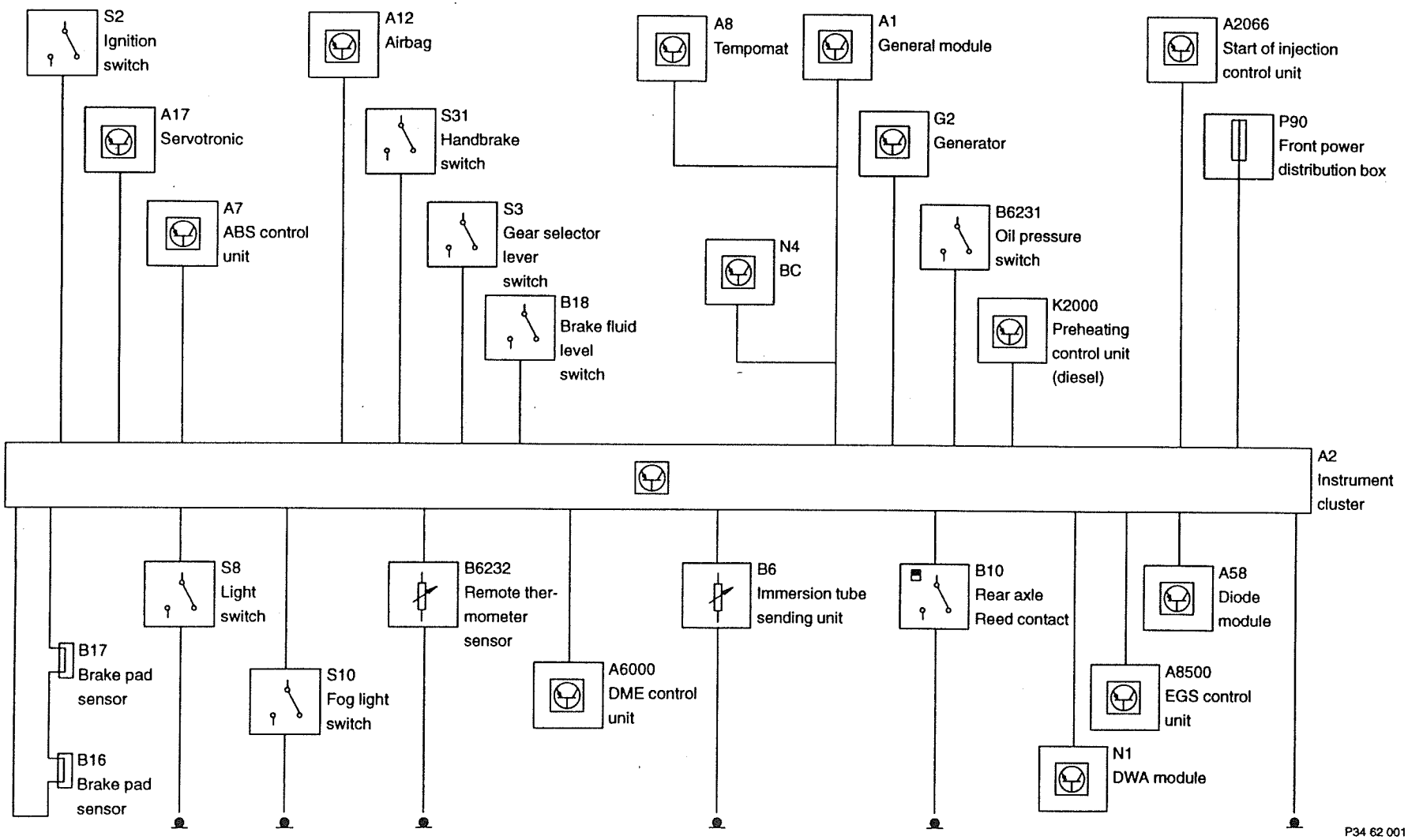

Notes on the BMW DIAGNOSTIC SYSTEM

This system does not feature diagnostic capabilities.

Abbreviations

BC	On-board computer
KVA	Fuel consumption gauge
SB	Start of injection
DME	Digital motor electronics
EML	Electronic throttle control
EGS	Electronic transmission control
ABS	Antilock brake system
DZM	Tachometer
SI	Service interval indicator

Pin Assignments at Instrument Cluster Connector 2, X271

Pin	Type	Description/function	Connection	Signal type	Tester display	Measurement notes
1		Terminal 58g (instrument lighting)	Light switch, dimmer	B+, pulse width-modulated		
2		Terminal 31 for speedometer	Speedometer	B–		
3		Tank reserve lamp	Immersion tube sending unit	B–		
4		(Temperature warning lamp	Temperature switch	B–		Not used at present)
5		Position signal for DWA	DWA control unit	Square-wave 0V to 12 V		
6		Not used				
7		Rear fog light	Fog light switch	B+		
8		Fog light	Fog light switch	B+		
9		Brake pad sensor	Front left	B–		
10		Brake pad sensor	Rear right	B–		
11		Terminal 31 (instruments)	Ground	B–		
12		Speed output A	Various control units	Square–wave		
13		Terminal 31 b (tachogenerator)	Tachogenerator	12 V		Plug connection at tacho-generator disconnected
14		Tank gauge sensor	Immersion tube sending unit	0 to 12V		
15		Terminal 31 (instruments)	Ground	B–		
16		Not used				
17		Not used				
18		Not used				
19		Right turn signal indicator	Relay	B+		
20		Left turn signal indicator	Relay	B+		

Pin	Type	Description/function	Connection	Signal type	Tester display	Measurement notes
21		Not used				
22		Not used				
23		Not used				
24		Handbrake	Handbrake switch	B–		
25		Not used				
26		Seat belt	Seat belt relay	B–		KSA only

Pin Assignments at Instrument Cluster Connector Gear Display, X507

Pin	Type	Description/function	Connection	Signal type	Tester display	Measurement notes
1		L 7, gear program	EGS control unit	B–		
2		L 6, gear program	EGS control unit	B–		
3		L 1, gear	Selector lever	B+		
4		L 4, gear	Selector lever	B+		
5		L 3, gear	Selector lever	B+		
6		L 2, gear	Selector lever	B+		
7		Terminal 58g	Light switch	B+		
8		Terminal 15	Fuse	B+		
9		Terminal 58k	Dimmer	B+		
10		Not used				
11		Not used				
12		Not used				

Pin	Type	Description/function	Connection	Signal type	Tester display	Measurement notes
13		L5, gear program	EGS control unit	B–		
14		Terminal 31, ground	Ground	B–		

Troubleshooting

Notes

- Battery charged, U-min = 12 V
- Remove and install instrument cluster only when the ignition is switched off.
- The test unit **simulator for instrument cluster** is used with suitable connection plate for testing the instrument cluster.
- The plug connections can be very easily damaged when unsuitable measuring equipment is used. Therefore, only carry out checks at the connectors using the special adapter leads provided for this purpose.
- Take particular care when renewing indicator lamps to ensure that only replacement lamps with the specified ratings are used (destruction of plastic housing).

Defect Code Table

Failure of individual indicator lamp pickups → Defect code 01

Fuel consumption display defective → Defect code 02

Fuel gauge defective → Defect code 03

Tank reserve light failure → Defect code 04

Temperature gauge/display defective → Defect code 05

Tachometer defective → Defect code 06

Speedometer and odometer failure → 07

Speed-A signal defective → Defect code 08

Defect Code 01

Failure of Individual Indicator Lamp Pickups

Note:

The relevant pickups are specified in the list "Indicator Lamps" provided in the chapter - Functional Description.

For connector pin assignments, refer to chapter - Pin Assignments.

General Troubleshooting

– not applicable to turn signal indicators, high beam, fog light, rear fog lights, gear display (automatic transmission), water level sensor (diesel) –

1. Check indicator lamps with self-test, refer to chapter - Functional Description **lamp self-test**. If a lamp does not light → disconnect wire at the corresponding pickup and connect to ground. If the lamp now lights, the pickup is defective.
2. If the lamp does not light, check wire to the instrument cluster and indicator lamp. Is wire and indicator lamp OK? → Replace pc-board assembly in the instrument cluster.

Troubleshooting for turn signal indicators, high beam, fog light, rear fog light and gear indicator

Switch on ignition, operate corresponding switch of the individual functions. If the function is OK but the indicator lamp does not light → remove instrument cluster, connect adapter lead and measure voltage at corresponding pin (see chapter - Pin Assignments). If battery voltage is applied → replace pc-board assembly in the instrument cluster.

Troubleshooting for Water Level Sensor (Diesel)

Function:

Mounted in the screw plug of the fuel filter is a sensor which detects water in the diesel fuel and activates the warning lamp in the instrument cluster. Due to the conductance of the water, a semi-conductor element becomes conductive, thus switching on the warning lamp. The lamp acts as a reminder to drain the filter in order to prevent damage to the sensitive mechanical and electronic components of the DDE system as the result of excessively high water content in the fuel.

Checking the sensor:

Immerse removed sensor in a metal container filled with water which is connected to vehicle ground, switch on ignition, the indicator lamp must light.

If sensor Ok., continue with general troubleshooting.

Defect Code 02

Fuel Consumption Display Defective

Possible cause: Speed signal, coding plug, pc-board

Troubleshooting

Is the speedometer and tachometer display OK?

— no → Continue with defect code 06 or 07.

— * —

yes ↓

Is the correct coding plug installed?

— yes → Remove instrument cluster and activate the fuel consumption display with the aid of the simulator. Does the pointer deflect?

— no → Replace pc-board or display (indicator).

— * —

yes ↓

Repair wire for ti-signal or TQ-signal to the DME/DDE control unit (connector 1, X16, Pin 20).

— * —

no ↓

Replace coding plug.

— * —

Defect Code 03

Fuel Gauge Defective

Possible cause: Immersion tube sending unit, ground wire, wires to instrument cluster, indicator/display instrument

Troubleshooting

Detach 6-pin connector from the immersion tube sending unit. Connect jumper between Pin 3 and Pin 2 (wire harness). Switch on ignition. Does the tank gauge pointer indicate full? — yes → Replace sending unit.

—*—

no ↓

Connect Pin 2 directly to vehicle ground. Does the gauge now indicate full? — yes → Repair ground wire to Pin 3.

—*—

no ↓

Is wire from Pin 2 of connector on immersion tube sending unit to instrument cluster connector 2 Pin 14 OK? — no → Repair wire.

—*—

yes ↓

Connect instrument cluster to simulator and activate fuel gauge. Does the pointer deflect?

— no → Replace indicator instrument or pc-board.

—*—

|

yes

↓

If the fuel gauge shows an incorrect tank content reading during operation, check immersion tube sending unit (see Technical Data). Repair if necessary.

—*—

Defect Code 04

Tank Reserve Light Failed

Possible cause: Lamp, wire, immersion tube sending unit

Troubleshooting

Does the fuel gauge operate correctly? — no → Continue with defect code 03.

— * —

yes ↓

Detach 6-pin connector at the immersion tube sending unit. Connect jumper between Pin 1 and Pin 2 (wire harness). Does the reserve lamp light? — yes → Replace immersion tube sending unit.

— * —

no ↓

Remove instrument cluster. Is lamp for reserve light OK? — no → Replace lamp.

— * —

yes ↓

Repair wire from instrument cluster connector 2 (blue) Pin 3 to immersion tube sending unit Pin 1.

— * —

Defect Code 05

Temperature gauge defective

Possible cause: Temperature sensor, indicator (display) instrument, wires

Troubleshooting

Detach 2-pin connector from the temperature sensor. Connect wire to vehicle ground. Does the pointer deflect?

— yes → Replace temperature sensor.

— * —

no ↓

Remove instrument cluster. Is wire from sensor to instrument cluster connector 1 (yellow) Pin 4 OK?

— no → Repair wire.

— * —

yes ↓

Connect instrument cluster do simulator and activate temperature gauge. Does pointer deflect?

— no → Replace indicator instrument or pc-board.

— * —

yes ↓

If the temperature gauge shows a false engine temperature reading during operation, replace temperature sensor.

— * —

Defect Code 06

Tachometer Defective

Possible cause: Instrument, wires

Troubleshooting

Remove instrument cluster and activate tachometer with simulator. Does pointer deflect?

— no → Replace indicator instrument or pc-board.

—*—

yes ↓

Check the engine speed signal at instrument cluster connector 1 (yellow) Pin 26 with BMW Service Tester: Remove instrument cluster. Connect special adapter between instrument cluster connector 1 and instrument cluster. ♦M♦Scope ST, connect universal lead to tester. Connect brown wire B – to vehicle ground. Connect blue wire D + and black wire terminal 1 to adapter Pin 26. Start engine! Is a square-wave signal measured? (Observe distortion through oscilloscope).

— no → Check wire to DME control unit (520 i) or SB control unit (524 td) Pin 25. Is wire OK?

— yes → Replace DME or SB control unit.

yes ↓

End of troubleshooting.

—*—

no ↓

Repair wire.

Defect Code 07

Speedometer and Odometer Defective

Possible cause: Tachogenerator, wires, instrument, pc-board

Note: If only speedometer **or** odometer has failed → replace speedometer instrument.

Troubleshooting

Detach 2-pin connector at tachogenerator. Switch on ignition! Is a voltage of at least 5 V applied between Pin 1 and Pin 2 (wire harness)?

— yes → Simulate vehicle speed signal with instrument simulator by way of frequency input (for connection, refer to Systematic Troubleshooting 0130). Uniformly drive through the indication range of the speedometer. Is speedometer OK?

— yes → Replace tachogenerator.

— * —

no ↓

Replace speedometer instrument or pc-board.

— * —

no ↓

Is a voltage of at least 5 V applied between vehicle ground and Pin 1 (wire colour brown/red)?

— yes → Repair wire (colour brown/red) to the instrument cluster connector 2 (blue) Pin 13.

— * —

no ↓

Is wire (colour brown) to instrument cluster connector 2 (blue) Pin 2 OK?

— yes → Replace instrument cluster pc-board assembly or speedometer instrument.

— * —

no

↓

Repair wire.

— * —

Defect Code 08

Speed-A Signal Defective

Troubleshooting

Are the speedometer and odometer operating correctly?

— no → Continue with defect code 07.

— * —

yes ↓

Remove instrument cluster. Connect special adapter between instrument cluster connector 2 and instrument cluster. ♦**M**♦ Scope ST, connect universal lead to tester. Connect brown wire B – to vehicle ground. Connect blue wire D + and black wire terminal 1 to adapter Pin 12. Switch on ignition! Detach 2-pin plug connection at rear axle Reed contact. Simulate vehicle speed signal with instrument simulator by way of frequency input (for connection refer to Systematic Troubleshooting 0130). ♦**M**♦ Is a square-wave signal measured? (Observe distortion through oscilloscope).

— no → Disconnect any installed control units for special equipment (e.g. Tempomat, wipe/wash module, BC). Can the square-wave signal be measured?

— no → Renew instrument cluster pc-board.

— * —

yes ↓

End of troubleshooting.

— * —

yes ↓

Instrument cluster OK One of the disconnected control units is defective. It applies the speed-A signal to ground so that no square-wave signal can be measured.

— * —

Notes

This section applies to the instrument cluster with check-control as of February 1989 (instrument cluster redesign high).

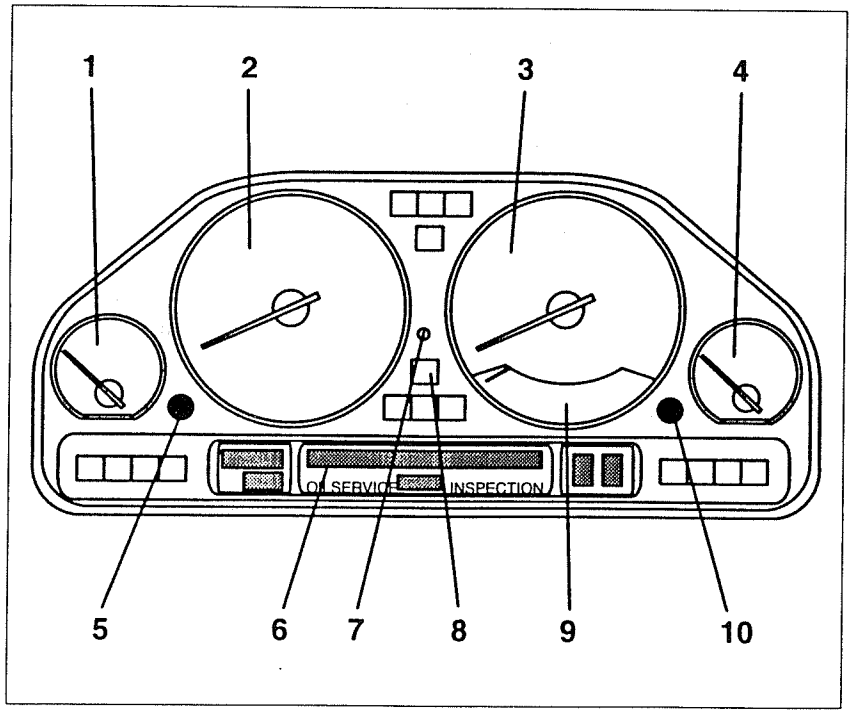

P32 62 004

Functional Description

General

The instrument cluster "instrument cluster redesign high" is a further development of the instrument cluster installed up to February 1989 (described in Section 6200.0A).

Important modifications compared to old version

- Additional ASC indicator lamp (8) between tachometer and speedometer
- Coding plug no longer in wire harness, but now integrated in unit.
- Turn signal indicator sound generator on pc-board
- Km/miles reading is indicated with the ignition switched off when the trip odometer reset button (5) is depressed
- Integrated system test
- Improved diagnostic facilities

Modifications as of September 1990

Further modifications have been introduced on the instrument cluster as of September 1990. The individual chapters in this section provide relevant information. The units as of 9/90 have a software status greater than 0.90 (read out with BMW Diagnostic System or Label on reverse side of unit).

Analog Instruments

Fuel gauge (1): The immersion tube sensing unit in the fuel tank displays the amount of fuel in the tank. An indicator lamp in the fuel gauge lights when the fuel level drops below approx. 8 litre. The fuel gauge reading is switched to zero when the reserve lamp lights.

The indicator lamp is damped "electronically", i.e. flutter of the lamp due to movements of the fuel is suppressed.

As of 9/90, the reserve lamp is switched on for approx. 2 seconds after switching on the ignition (lamp test)

Speedometer (2): The signals from the rear axle Reed contact (tachogenerator) are processed in the instrument cluster. The signals are processed separately for displaying vehicle speed and distance covered.

Tachometer (3): The TD-signal (engine speed signal) is processed by the DME control unit.

Temperature gauge (4): This gauge indicates the coolant temperature.

KVA gauge (fuel consumption indicator) (9): The TI-signal (injection signal) of the DME control unit and the vehicle speed signal are processed here. The current fuel consumption is calculated from both values.

As of September 1990 (= introduction of a new engine wire harness), the fuel consumption on the M 70 engine will be calculated from both ti-signals.

Oil temperature gauge (9): An oil temperature gauge is installed in models E34/M5 instead of the KVA indicator.

Buttons in the Instrument Cluster

Left button (5): Reset of trip odometer. Indication of the km/miles reading for 25 seconds when the button is depressed with the ignition switched off.

Right button (CC button) (10): Clearing check-control display or BC texts. If several check-control messages are pending simultaneously, the individual messages are called up by successfully pressing the button. Start of system test.

Display Unit (6)

The display unit, also referred to as the **instrument cluster display**, consists of an LCD module (LCD = Liquid Crystal Display). It contains:

- Service interval display
- Total mileage (km) display
- Trip mileage (km) display
- Program and range display (automatic transmission)
- Check-control texts
- Text output of on-board computer

Photoelectric sensor (7)

The brightness of the display unit is adjusted electronically to the ambient light. The brightness in the vehicle is sensed by the photoelectric sensor. The brightness can also be varied with the manual dimmer when the vehicle lights are switched on.

Coding Plug

The coding plug is plugged into the instrument cluster. It basically consists of a voltage-independent electronic memory. This memory contains all specific vehicle data which the instrument cluster requires to process and display the signals.

The total mileage and the service interval data are also stored in the memory.

The coding plug can be renewed only by breaking off the plug cover. This cover is then replaced by a cover supplied with the replacement coding plug. Installation of a replacement plug is indicated in the diagnostic program (♦D♦Status lists: Instrument Cluster) and during the integrated test.

Coding plug as of 9/90 (Software > 0.9)

The memory has been extended to cope with additional data. The coding plugs up to 9/90 and as of 9/90 have different part numbers, the coding plugs as of 9/90 feature a blue housing. Due to mechanical coding, it is not possible to interchange the pc-board and coding plug.

Coding Plug Code

The code is printed on a label on the reverse side of the coding plug.

The code is also indicated in the diagnostic program (♦D♦210 Status lists: Instrument Cluster) and during the integrated test.

Languages

The German language (for messages in the display unit) is preset in the instrument cluster after disconnecting and reconnecting the battery. Any other language can be selected by operation.

Operation:

- Switch ignition lock to position R (position 1)
- Press CC button (right) until a language designation appears in the display unit
- Release CC button
- Press CC button again, next language is displayed
- Repeat procedure until the required language is selected

This language remains stored until the battery is disconnected and reconnected.

The languages available are German, US English, UK English, French, Italian and Spanish.

Position of Indicator Lamps

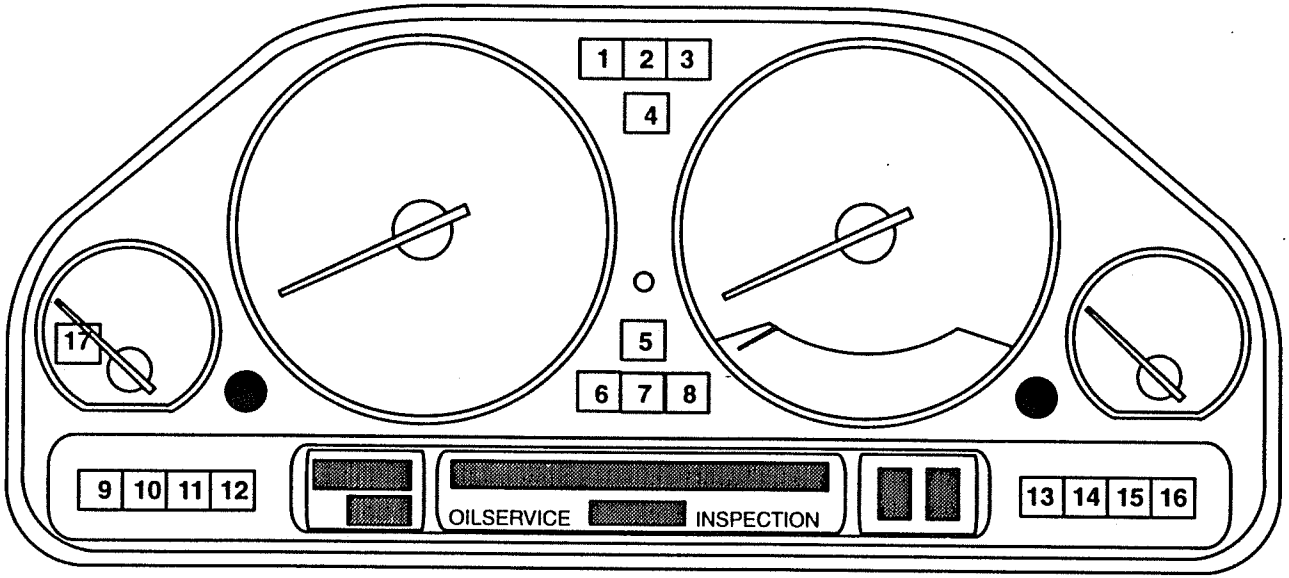

Note! Modified indicator lamp functions as of September 1990

P32 62 005

Indicator lamps up to September 1990

Number	Indicator lamp	Source
1	Left turn signal indicator	Relay
2	High beam	Light switch
3	Right turn signal indicator	Relay
4	Trailer turn signal indicator	Relay
5	ASC lamp	ASC control unit
5 on M5 engine	Sports symbol	
6	Battery charge indicator	Alternator
7	EML warning lamp	EML control unit
8	Oil pressure	Pressure switch
9	Seat belt (USA and Gulf States only)	Belt contact switch
10	Check engine (USA only)	DME control unit
11	Fog light	Fog light switch
12	Rear fog light	Fog light switch
13	Handbrake	Handbrake switch
14	General brake warning	Pressure switch and level switch for brake fluid
15	ABS indicator	ABS control unit
16	Airbag	Airbag control unit
17	Tank reserve	Immersion tube sending unit with electronic damping in instrument cluster

Indicator lamps as of September 1990

Number	Indicator lamp	Source
1	Left turn signal indicator	Relay
2	High beam	Light switch
3	Right turn signal indicator	Relay
4	Trailer turn signal indicator	Relay
5	ASC lamp	ASC control unit
5 on M5 engine	Sports symbol	
6	Seat belt (USA and Gulf States only)	Belt contact switch
7	EML warning lamp	EML control unit
8	Oil pressure	Pressure switch
9	Battery charge indicator	Alternator
10	Check engine (USA only)	DME control unit
11	Fog light	Fog light switch
12	Rear fog light	Fog light switch
13	Handbrake	Handbrake switch
14	General brake warning	Pressure switch and level switch for brake fluid
15	ABS indicator	ABS control unit
16	Airbag	Airbag control unit
17	Tank reserve	Immersion tube sending unit with electronic damping in instrument cluster

Lamp Self-Test

The lamps for **brake warning (14), handbrake (13), oil pressure (8)** and **battery charge indicator (6/9)** light when the ignition is switched on. They go out when the engine starts.

The **airbag (16)** indicator lamp lights for approx. 6 seconds after the ignition has been switched on. The **EML (7)** and **ASC (5)** indicator lamps light for 1 second after the ignition has been switched on.

Depending on the ABS system installed, the indicator lamp for **ABS (15)** is either switched on permanently till the engine starts or for 2 seconds after switching on the ignition.

As of **9/90** (software status greater than 0.9), the **tank reserve lamp (17)** will switch on for approx. 2 seconds after switching on the ignition.

Integrated Test Facilities

Important data and the system test can be read out or triggered without diagnosis.

Procedure:

- Switch off ignition.
- Press CC button (right button) and hold depressed.
- Switch on ignition.
- Release CC button when the first output appears in the display unit.

Display	Explanation
BMW No.	Internal number
CODE No.	Code number of coding plug
K-NUMBER	Distance factor for speedometer
F.G. No.	Chassis number
SW. VERS.	Software version
Rev. INDEX	Revision index (hardware version)

- If the coding plug is a replacement plug, the red replacement marking lights during the display (red LED).

A system test is triggered on completion of these outputs.

System Test

- All segments and the lighting of the instrument cluster display unit are switched on. Also the red LED for replacement identification!
- The pointers of the speedometer and tachometer are set to the centre position.
- The pointers of the fuel gauge, temperature gauge and consumption gauge (KVA) (oil temperature for M5) each move, within 5 seconds, from the zero position to the end position and back.
- The warning lamps for brakes, tank reserve and seat belt (seat belt only for US version) are switched on.
- Corresponding to the display in the speedometer, a vehicle speed signal (speed-A signal) is transferred to other control units.

The internal test procedure is terminated on completion of the system test. It can, however, be terminated at any time by pressing the CC button.

Check-Control

General

The check-control (CC) is a comprehensive system of messages which inform the driver of various operating statuses. The display is provided as a text message in the display unit and is accompanied by an acoustic signal (gong).

A large number of sensors monitor the individual vehicle systems and components. Three systems are responsible for acquiring and outputting the data to the evaluation logic:

Instrument cluster (K): Covers all systems which also include an indicator lamp in addition to the text message. All acquired data are evaluated in the instrument cluster and, after fulfilling the display conditions, are output in the form of a text message on the display unit.

Check-control module (CCM): Covers a large number of systems. Connection to the instrument cluster is made via three data links. By way of data transfer, the check-control module constantly informs the instrument cluster of the status of the connected systems.

Lamp control module (LKM): The light relays are accommodated in the light control module. The lighting system and the brake light switch are monitored for defects. The lamp control module (LKM) communicates with the CCM via data links. The CCM forwards the data to the instrument cluster (refer to Diagnostic Procedure LKM 6301.0).

Priority Groups

The CC messages are subdivided into three priority groups.

- **Priority 1:** Faults which directly endanger driving safety. Indicated by flashing indicator arrows. Message cannot be cancelled with CC button.
- **Priority 2:** Faults which do not directly endanger driving safety. Message can be cancelled with CC button and is also cancelled automatically after 2 minutes.
- **Priority 3:** Messages relating to liquid/fluid levels. They are displayed only when switching the ignition on and off and are cancelled after 20 seconds.

List of Check-Control Messages

The following list provides an overview of check-control messages. Listed are the contents of the message and not the defect in the display unit. Individual messages which have the same preconditions (.e.g. lamps) are listed in combined form. The "condition" column indicates which prerequisites are required in addition to the defect status so that the message is displayed. The message and reset signal columns indicate the type of signal of the generator system.

Abbreviations: n = speed, v = vehicle speed, Prio. = message priority, Interrup. = Interruption

Message content	Acquisition	Prio.	Generator system	Condition	Message signal	Rest signal
Brake pressure	K	1	Pressure switch	n > 400 rpm	Ground	Interrup.
Brake fluid	K	1	Level switch	None	Ground	Interrup.
Handbrake	K	1	Switch	v > 10 km/h	Ground	Interrup.
Brake light	LKM	1	Measuring circuit	Brakes	Interrup.	B+
Oil pressure	K	1	Pressure switch	n > 400 rpm	Ground	Interrup.
Catalytic converter	CCM	1	Temperature switch	Japan only	Ground	Interrup.
Level control	CCM	1	Warning switch	after 8 minutes	Interrup.	Ground
Coolant temperature	CCM	1	Temperature sensor	Temp. > 115° C	Ω value	Ω value
ASC defect	CCM	2	Control unit	None	Ground	Interrup.
ASC controls	CCM	1	Control unit	None	Ground	Interrup.
Lights	LKM	2	Measuring circuit	None	Interrup.	B+
Trailer light	CCM	2	AHM	None	Interrup.	Ground
Brake pads	K	2	Pad sensor	None	Interrup.	Ground
Coolant level	CCM	3	Level switch	None	Interrup.	Ground
Wash water level	CCM	2	Level switch	None	Interrup.	Ground
Steering fluid level	CCM	2	Level switch	None	Interrup.	Ground
EGS defect	CCM	2	Control unit	n > 400 rpm	B+	Ground
Ignition switch	CCM	1	Switch	US model only	Ground	Interrup.
Engine oil level	CCM	3	Level switch	None	Interrup.	Ground

Message content	Acquisition	Prio.	Generator system	Condition	Message signal	Rest signal
Oil level sensor	CCM	3	Level switch	None	Interrup.	Ground

Brake light switch: System is OK. when brake light switch switches B+ to LKM and the test switch switches ground to the CCM. Message **brake light switch**, when test switch switches ground but brake light switch does not switch B+.

Check-control: Message displayed when the check-control module (CCM), the lamp control module (LKM), the corresponding power supply or the data links are defective (see troubleshooting).

Instrument Cluster (Redesign)/Check-Control Module (K/CC)

General Block Diagram

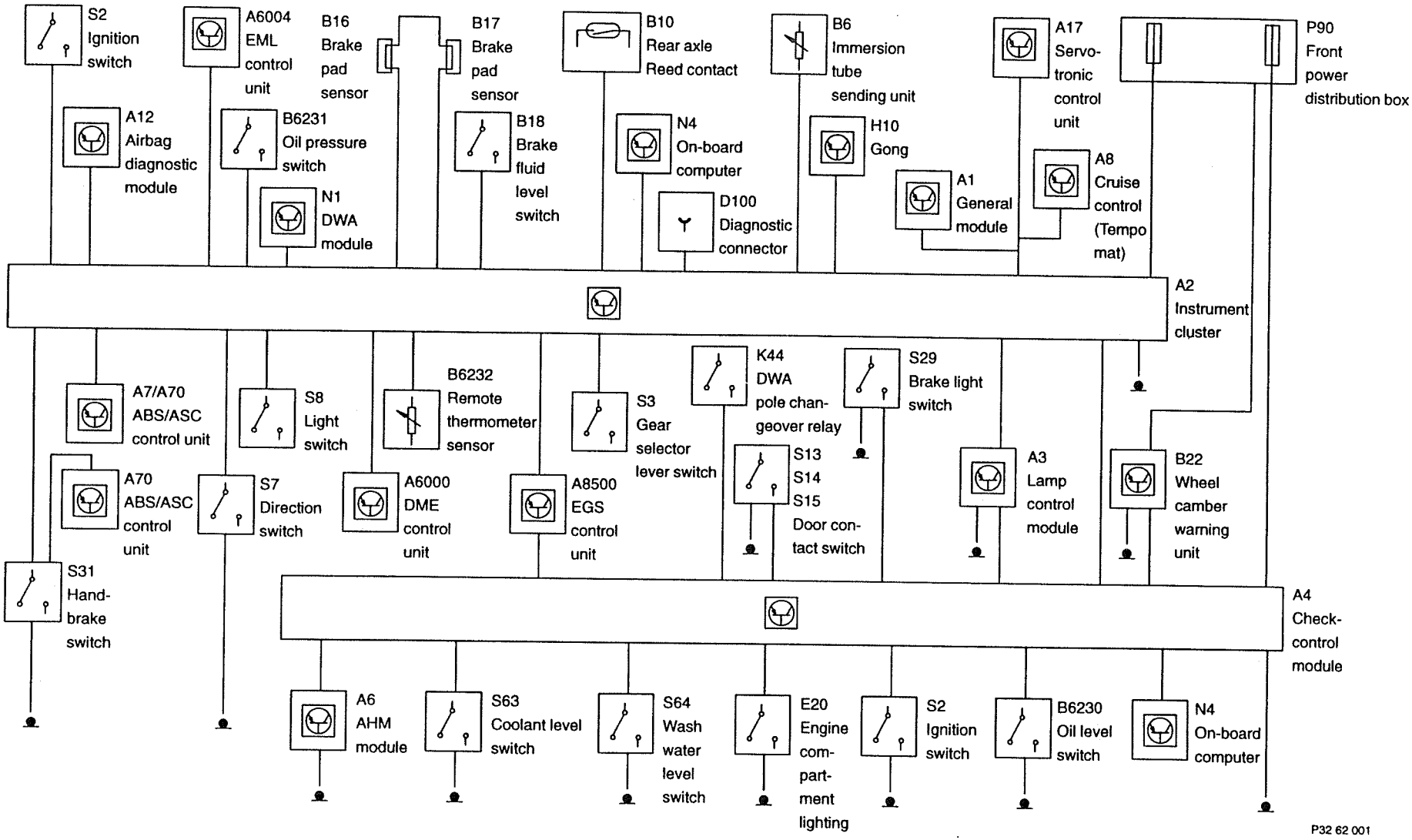

Notes on the BMW DIAGNOSTIC SYSTEM

Following control unit identification, the following branches listed below are made available:

♦D♦Status lists: Check-Control

– In contrast to the text message in the instrument cluster display unit, the diagnostic program indicates the status of the sensor systems without the necessity for additional operation (e.g. engine speed, vehicle speed).

– Automatic defect detection and defect evaluation when the text message "CHECK CONTROL" appears in the instrument cluster display unit.

Identification of the systems with "*", which triggered a check-control message during past vehicle operation.

♦D♦Status lists: Instrument Cluster

– Output of important coding data.

– Monitoring of important inputs of the instrument cluster.

– Defect detection break/short of all temperature sensors and the immersion tube sending unit.

♦D♦System Test

Internal system test is activated.

♦D♦Speed Signal Simulation

– Any arbitrary vehicle speed or frequency can be specified. The road speed is indicated in the speedometer and transferred to the other control units in the form of a speed-A signal.

– High frequency or speed values are transferred by the BMW Service Tester in steps (2 to 3 part steps) to the instrument cluster.

– Simulation is terminated automatically after 60 seconds.

Important!

Various control units store defect codes when the speed signal is simulated. Therefore, a ♦D♦ quick test must be performed after each simulation of the vehicle speed signal. If a defect code is stored in a control unit (e.g. DME, EML) and this is caused by a faulty speed-A signal, then this defect code must be cleared (♦D♦999).

♦D♦Activate Gong

The gong is activated.

♦D♦Defect Code Memory

All defect codes which occur in the area of the coding plug are stored in the defect code memory.

♦D♦Clear Defect Code Memory

Clearance of the defect code memory and the "*" identifier in the status lists check-control.

♦D♦Read Out Engine Test Code

In the case of all type of engine and clutch damage in vehicles with the S38 B36 engine (model M5), the engine test code must be printed out and accompanied with the warranty or goodwill application. The engine test code contains engine and vehicle data.

Abbreviations

AHM	Trailer module
ASC	Automatic stability control
CCM	Check-control module
EGS	Electronic transmission control
K	Instrument cluster
KVA	Fuel consumption indicator
LKM	Lamp control module
TD-Signal	Engine speed signal
ti-Signal	Injection signal
tQ-Signal	Injection quantity diesel
SIA	Service interval indicator

Pin Assignment

Connector Numbers

Number	Type	Description
X17	6-pin, brown	Instrument cluster connector 1
X16	26-pin, beige	Instrument cluster connector 2
X502	26-pin, white	Instrument cluster connector 3
X271	12-pin, grey	Instrument cluster connector 4
X18	26-pin, blue	CCM connector blue
X19	26-pin, green	CCM connector green
X12	35-pin, black	LKM connector

Pin Assignments at Instrument Cluster Connector 1, X17

Pin	Type	Description/function	Connection	Signal type	Tester display	Measurement notes
1	E	Ground	Ground	B–	None	
2	E	RxD diagnostic link	Diagnostic socket 15	Square–wave		no diagnostic mode in the event of defect
3	E	Terminal R	Fuse	B+	None	
13	E	Ground, terminal 31	Ground			
14	A	TxD diagnostic link	Diagnostic socket Pin 20	Square–wave		no diagnostic mode in the event of defect
15	E	Terminal R	Fuse	B+	None	

Pin Assignments at Instrument Cluster Connector 2, X16

Pin	Type	Description/function	Connection	Signal type	Tester display	Measurement notes
1	E	Airbag indicator lamp	Airbag diagnostic module	B–	None	
2	E/A	Data link to CCM	CCM X18, Pin 13	Square-wave 0 – 5 V	Message	Test program in BMW Service Tester
3	E/A	Data link to CCM, BC and LKM	CCM X18, Pin 25 and BC, LKM	Square-wave 0 – 5 V	Message	Test program in BMW Service Tester
4	E/A	Data link to CCM	CCM X18, Pin 9	Square-wave 0 – 5 V	None	Test program in BMW Service Tester
5	E	Battery charge indicator lamp Terminal 61	Alternator	B+	None	
6	E	Oil pressure switch	Pressure switch	B–	OK/not OK	
7	E	Terminal 15	Fuse	B+	Voltage	
8	E	ASC indicator lamp	ASC control unit	B–	OK/not OK	
9	E	Oil temperature	Temperature sensor	0 – 12 V	Temperature ranges	only on E34/M5
10	A	Ground brake pad sensor	Rear brake pad sensor	Ground	OK/not OK	Front and rear sensors are interconnected
11	E	Trailer turn signal indicator	Relay	B+	None	
12	E	Terminal 30	Fuse	B+	None	
13	E	Terminal 30	Fuse	B+	None	
14	E	Brake pressure	Pressure switch	B–	OK/not OK	only on H31 brake system
15	E	Brake fluid level	Level switch	B–	OK/not OK	
16	E	SIA reset	Diagnostic socket Pin 7	B–	None	at B– SIA reset
17	E	ti-signal from DME	DME control unit	Square–wave	0 ms/applied	
18	E	tD-signal from DME	DME control unit	Square–wave	Engine speed value	

Pin	Type	Description/function	Connection	Signal type	Tester display	Measurement notes
19	E	ti-signal 2 from DME II	DME II control unit	Square–wave	0 ms/applied	Line connected as of model year 1990
20	E	ABS indicator lamp	ABS control unit	B–	None	
21	E	Terminal R for airbag indicator lamp	Ignition switch	B+	None	
22	E	Main beam indicator	Light switch	B+	None	
23	E/A	Data link DAC to CCM and BC	CCM X18, Pin 7	Square-wave 0–5V	None	Test program in BMW Service Tester
24	A	Coolant temperature ground	Temperature sensor	B–	Temperature range	
25	E	Brake pad sensor input	Front brake pad sensor	approx.12 V	not OK	Front and rear sensors are interconnected
26	E	Coolant temperature input	Temperature sensor	0 – 12 V	Temperature range	

Pin Assignments at Instrument Cluster Connector 3, X502

Pin	Type	Description/function	Connection	Signal type	Tester display	Measurement notes
1	E	Fog light indicator lamp	Fog light switch	B+	None	
2	A	Output for gong signal	Acoustic generator	B–	None	
3	E	Check engine lamp	DME control unit	B–	None	USA versions only
4	E	Automatic transmission range indicator	Selector lever	B+	Gear	
5	E	Automatic transmission range indicator	Selector lever	B+	Gear	
6	E	Automatic transmission range indicator	Selector lever	B+	Gear	

Instrument Cluster (Redesign)/Check-Control Module (K/CC)

Pin Assignments

Pin	Type	Description/function	Connection	Signal type	Tester display	Measurement notes
7		Not used				
8	E	EGS program indicator	EGS control unit	B–	Program	
9	E	EGS program indicator	EGS control unit	B–	Program	
10		Not used				
11	E	Automatic transmission range indicator	Selector lever	B+	Gear	
12		Not used				
13		Not used				
14	E	Terminal 58g, lights	Dimmer	Pulses	Voltage value	
15	E	Rear fog light indicator lamp	Fog light switch	B+	None	
16	E	EML indicator lamp	EML control unit	B–	None	
17	E	EML indicator lamp	EML control unit	B–	None	
18	A	Output speed-A signal	Various control units	Square–wave	None	approx. 12 V can be measured when at rest
19		Not used				
20		Terminal 61 auxiliary alternator	Auxiliary alternator	B+	None	as of software 0.90 only
21		Not used				
22		Not used				
23	A	CC-button for bc displays	BC, Pin 14	B–	None	B– clears BC display in instrument cluster display
24		Not used				
25	E	Left turn signal indicator	Relay	B+	None	
26	E	Right turn signal indicator	Relay	B+	None	

Pin Assignments at Instrument Cluster Connector 4, X271

Pin	Type	Description/function	Connection	Signal type	Tester display	Measurement notes
1		Not used				
2	E	Tank reserve lamp	Tank sensor	B–	ON/OFF	Lamp lighting is controlled via electronics.
3		Not used				
4	E	Tank contents	Tank sensor	0 – 12 V	Measuring bar	
5		Not used				
6		Not used				
7	E	Handbrake	Handbrake switch	B–	ON/OFF	
8	E	Tachogenerator input	Tachogenerator	Square-wave 0 to 12 V	Vehicle speed	
9	A	Position pulse DWA		Square-wave 0 to 12 V	None	
10	A	Tachogenerator ground		B–	Vehicle speed	
11		Not used				
12		Not used				

Pin Assignments at LKM Connector, X12 (Pin Assignments in Area of Check-Control)

Pin	Type	Description/function	Connection	Signal type	Tester display	Measurement notes
4		Data link to CCM	CCM X18, Pin 4	Square-wave 0 – 5 V	Message	
5		Data link to CCM	CCM X19, Pin 14	Square-wave 0 – 5 V	Message	
23		Data link to CCM and instrument cluster	CCM X18, Pin 25	Square-wave 0 – 5 V	Message	
24		Ground for lamp test	Ground	B–	Message	
25		Operating voltage for lamp test	CCM X 18, Pin 11	B+	Message	

Pin Assignments at CCM Connector blue, X18

Pin	Type	Description/function	Connection	Signal type	Tester display	Measurement notes
1	E	Driver's door contact	Door contact switch	B–	OPEN/CLOSE	
2	E	ASC defect	ASC control unit	B–	OK/not OK	
3		Not used				
4	E	ASC controls	ASC control unit	B–	controls	
5	E	Door contact, rear doors	Door contact switch	B–	OPEN/CLOSE	Connected only for E32 and E34/M5.
6	E	Terminal 31, ground	Ground	B–		
7	E/A	Data link to instrument cluster and BC	Instrument cluster X16, Pin 23	Square-wave 0 – 5 V	Message	Test program in BMW Service Tester
8	E	Terminal 30	Fuse	B+	None	

Pin	Type	Description/function	Connection	Signal type	Tester display	Measurement notes
9		internal				
10	E/A	Data link to LKM	LKM Pin 4	Square-wave 0 – 5 V	Message	Test program in BMW Service Tester
11	A	Operating voltage for LKM (lamp test)	LKM Pin 25	B+	Message	Test program in BMW Service Tester
12	E	Terminal R	Fuse	B+	None	
13	E/A	Data link to instrument cluster	Instrument cluster X16, Pin 2	Square-wave 0 – 5 V	Message	Test program in BMW Service Tester
14	E	Catalytic converter temperature	Catalytic converter temperature switch	B–	OK/not OK	Japan versions only
15 to 24		Not used				
25	E/A	Data link to instrument cluster, LKM and BC	Instrument cluster X16, Pin 3	Square-wave 0 – 5 V	Message	Test program in BMW Service Tester
26	E	Dynamic engine oil level	Level switch	B–	Status texts	

Pin Assignments at CCM Connector green, X19

Pin	Type	Description/function	Connection	Signal type	Tester display	Measurement notes
1		Wheel camber warning (for level control)	Wheel camber warning switch	B–	OK/not OK	Ground jumper, when no warning switch installed
2		Oil level, level control	Level switch	B–	OK/not OK	
3		Wash water level	Level switch	B–	OK/not OK	
4		Coolant level	Level switch	B–	OK/not OK	

Instrument Cluster (Redesign)/Check-Control Module (K/CC)

Pin Assignments

Pin	Type	Description/function	Connection	Signal type	Tester display	Measurement notes
5		EGS	EGS control unit	B–	OK/not OK	Ground jumper, when no EGS installed
6		Not used				
7		Brake light test switch	Brake light test switch	B–	ON/OFF	
8		Static engine oil level,	Level switch	B– via 1KΩ resistor	Status texts	
9		Trailer module	Trailer module	B–	OK/not OK	Ground jumper when no AHM installed
10		Ignition key	Ignition lock switch	B–	Status texts	In USA version only
11		Seat belt	Belt switch	B–	Status texts	USA and KSA only
12		Not used				
13		Rear lid	Rear lid switch	B–	OPEN/CLOSED	
14		Data link to LKM	LKM Pin 5	Square-wave 0 – 5 V	Message	Test program in BMW Service Tester
15 to 23		Not used				
24		Data link to Instrument cluster and LKM	Instrument cluster X16, Pin 3, LKM Pin 23	Square-wave 0 – 5 V	Message	Test program in BMW Service Tester
25		Not used				
26	E	Passenger's door contact	Door contact switch	B–	OPEN/CLOSE	Connected only for E32 and E34/M5.

Troubleshooting

Notes

- Troubleshooting with the BMW DIAGNOSTIC SYSTEM
- Battery charged, U-min = 12 V
- **If EML is installed:** The defect code memory of the EML control unit is cleared when the connector 3 (X502, colour white) is removed. Always monitor EML defect code memory beforehand.!
- Remove and install the instrument cluster, check-control module and lamp control module only when the ignition is off.
- The plug connections can be very easily damaged when unsuitable measuring equipment is used. Therefore, only carry out checks at the plug connections using the special adapter leads provided for this purpose.
- Take particular care when renewing indicator lamps to ensure that only replacement lamps with the specified rating are used.

Defect Code Table

♦D♦900 Defect code memory – stored defect codes:

One or several defect codes stored → Defect codes 01 – 05

Malfunctions:

Failure of individual check-control signal generator systems → Defect code 06

Failure of tank indicator lamp → Defect code 07

Temperature display defective → Defect code 08

Fuel consumption indicator (KVA) defective → Defect code 09

Oil temperature gauge defective → Defect code 10

Tachometer defective → Defect code 11

Speedometer defective → Defect code 12

Failure of check-control → Defect code 13

Text message check-control in display unit → Defect code 13

Simultaneous failure of several functions in the instrument cluster → Defect code 14

Diagnostic procedure not possible with instrument cluster → Defect code 14

Text message "Code Unit" in instrument cluster → Defect code 14

Fuel gauge defective → Defect code 15

Speed-A signal defective → Defect code 16

Defect Codes 01 – 05

One or several defect codes between 01 and 05 stored.

Explanation: These defect codes are stored when incorrect data are stored in the coding plug or when the coding plug is defective.

Troubleshooting:

1. Clear defect code memory.
2. Switch ignition off and on.
3. If the defect code is stored once again, renew coding plug.

Defect Code 06

Failure of Individual Check-Control Signal Generator Systems

Notes

A complete list of signal generator systems is provided in the chapter - Functional Description.

In compliance with this diagnostic procedure, there is a fault when the signal generator signals a system as being defective although the system is OK in the vehicle or when the system in the vehicle is defective but the signal generator does not detect a fault.

The check-control text display in the instrument cluster is mainly linked to a series of additional conditions (engine speed, vehicle speed, time conditions). The signal generator system should therefore only be checked with the BMW DIAGNOSTIC SYSTEM (display without additional conditions).

General Troubleshooting

– not applicable to oil level switch, EGS, ASC, AHM –

– 1. Detach connector at signal generator. Alternately connect wire to check control module (CCM) or instrument cluster directly to ground or interrupt. The display should change between "OK" and "not OK". If the display does not change, check wire to the CCM or to the instrument cluster and repair if necessary. If wire is OK, renew CCM or instrument cluster electronic assembly.

– 2. Using suitable lead, alternately bypass or interrupt Pin 1 and Pin 2 of connector. The display should change between "OK" and "not OK". If the display does not change, the ground connection is defective. Repair wire.

– 3. If the display changes correctly when bypassing Pin 1 and Pin 2, the signal generator is defective.

Troubleshooting Engine Oil Level Switch

– 1. Complete defect detection with BMW DIAGNOSTIC SYSTEM.

– 2. If both sensors (static and dynamic) are displayed as being defective), check ground wire to the 3-pin connector of the oil level switch Pin 2 and repair if necessary.

– 3. Checking the engine oil level switch: Detach 3-pin connector.
Measure resistance at plug part of oil level switch.
Nominal values:
Between Pin 2 and Pin 3 < 1 Ω.
Between Pin 2 and Pin 1 = approx. 1kΩ.

Renew defective oil level switch.

Troubleshooting Trailer Module (AHM)

– 1. Defect signal although no trailer module (AHM) installed: Check short-circuit jumper at 6-pin connector in luggage compartment (on left, behind trim panel), repair if necessary. If jumper is OK, repair wire to CCM connector (green) Pin 9.

– 2. Trailer module (AHM) installed: Check trailer module (AHM) main fuse in the front power distribution box and repair if necessary.

– 3. Trailer module (AHM) main fuse OK: Check all light fuses in the AHM, repair defective fuses. Installation location AHM: Left of luggage compartment, behind trim panel.

– 4. Fuses OK: Detach 6-pin connector between AHM and vehicle wire harness. Connect jumper between Pin 5 and Pin 6 (wire end vehicle wire harness). If the trailer module (AHM) is now shown as OK, replace trailer module.

– 5. Defect displayed despite bypass: Check ground wire to trailer module (AHM) and wire to CCM connector (green) Pin 9 and repair if necessary.

Troubleshooting EGS/ASC Messages

– 1. Check EGS (Section 2460) or ASC (Section 3450).

– 2. If EGS or ASC OK: Check wire from CCM to control unit and repair if necessary.

Defect Code 07

Failure of Tank Indicator Lamp

Possible cause: Lamp, wire, reserve contact in immersion tube sending unit

Note: The indicator lamp is electronically damped. The indication, however, is not damped in the instrument cluster ♦D♦Status displays.

Troubleshooting:

1. If the fuel gauge is also defective, continue with defect code 15.
2. Check the lamp with ♦D♦System test. Replace defective lamp.
3. If lamp OK, connect wire from immersion tube sending unit (Pin 2) to instrument cluster directly to ground. Is the reserve contact indicated as ON in ♦D♦Instrument cluster status displays?
If no: Repair wire.
If yes: Replace immersion tube sending unit.

Defect Code 08

Temperature Gauge Defective

Possible cause: Indicator instrument, temperature sensor, wires

Note: It is possible to compare the temperature display in the instrument cluster (divided into areas) with the temperature display in the DME program.

Troubleshooting:

1. Check temperature indicator instrument with ♦D♦System test. Renew defective instrument.
2. ♦D♦Instrument cluster status displays. With ♦⇒♦ to temperature display. If short is displayed: Check wires from temperature sensor to the instrument cluster connector 2 (beige) Pin 24 and Pin 26 for a short to ground, repair defective wire.
If a break is displayed: Check plug connection and wires from the temperature sensor to the instrument cluster connector 2 (beige) Pin 24 and Pin 26 for a break, repair if necessary.
3. Start engine. Compare temperature display on the screen with the temperature indication in the ♦D♦DME program. In the case of deviations, renew temperature sensor.

Defect Code 09

Fuel Consumption Indicator (KVA) Defective

Possible cause: KVA indicator instrument, ti-signal to DME

Troubleshooting:

1. Check instrument with ♦**D**♦ System test. Renew defective instrument.

2. Check the ti-signal with ♦**D**♦ Instrument cluster status lists. Start engine for check. Repair defective wire.
Note for M 70: The wire for the ti-signal 2 from the DME 2 will be installed as of model year 1990.

Defect Code 10

Oil Temperature Gauge Defective – *M5 only* –

Possible cause: Indicator instrument, temperature sensor, wires

Note: In the M5 model, an oil temperature gauge is installed instead of the fuel consumption indicator.

Troubleshooting:

1. Check the oil temperature indicator instrument with ♦**D**♦ System test. Renew defective instrument.

2. ♦**D**♦ Instrument cluster status displays. With ♦⇒♦ to oil temperature.
If short is displayed: Check wire from the temperature sensor to the instrument cluster connector 2 (beige) Pin 9 for a short to ground. Repair defective wire.
If a break is displayed: Check ground wire for oil temperature sensor and wire from temperature sensor to the instrument cluster connector 2 (beige) Pin 9 for a break, repair if necessary.

3. If wires are OK, renew sensor.

Defect Code 11

Tachometer Defective

Possible cause: Instrument, wires

Troubleshooting:

1. Check instrument with ♦**D**♦System test. Renew defective instrument.
2. Check the TD-signal with ♦**D**♦Instrument cluster status lists. Start engine for the test. Test at various engine speeds (note indication delay!). If the speeds are not displayed on the screen, repair wire for the instrument cluster connector 2 (beige) Pin 18 (TD-signal) to the DME control unit.
3. If the engine speed values displayed on the screen and in the tachometer do not agree (permissible deviation +/– 2% of final scale value), renew tachometer.

Defect Code 12

Speedometer Defective

Possible cause: Tachogenerator, wires, speedometer

Troubleshooting:

1. Simulate instrument test with ♦**D**♦speed signal. If the speed value indicated by the speedometer is not within the permissible range (for nominal values, see microfiche 'Technical Data'), renew speedometer.
2. If speedometer is OK during simulation, but defective during driving, check wires to the tachogenerator and repair if necessary.
3. If wires and speedometer are OK, replace tachogenerator.

Defect Code 13

Failure of Check-Control

Text message check-control in display unit

Possible cause:
Power supply from CCM or LKM defective.
Data links between instrument cluster and CCM (or BC) defective.
Data links between CCM and LKM defective.

Troubleshooting: As displayed on screen (BMW Service Tester) or in accordance with Section 6200.0A Instrument Cluster/Check-Control – Chapter Troubleshooting, Defect code 04.

Defect Code 14

Simultaneous failure of several instrument cluster functions

Diagnosis with instrument cluster not possible

Text message "Code Unit" in the instrument cluster display unit

Possible cause: Fuses, wires, RxD or TxD link, electronic assembly

Note: Observe notes in BMW DIAGNOSTIC SYSTEM (screen display).

Troubleshooting

Is the message "Code Unit" indicated in the instrument cluster display?

— yes → Check installation of coding plug. Renew coding plug if necessary.

— * —

no ↓

Are all fuses OK?

— no → Renew defective fuse.

— * —

yes ↓

Switch on ignition. ♦D♦ Is diagnostic mode possible with instrument cluster?

— yes → ♦D♦ Instrument cluster status lists. Switch on ignition! Is battery voltage displayed for terminal 15?

— no → Repair wire to connector 2 (beige) Pin 7.

— * —

yes ↓

no ↓

♦D♦ Defect code memory. Is a defect code stored? — yes → Clear defect code memory. Then switch ignition off and on. If the defect code is stored once again, renew coding plug.

—*—

no ↓

Check individual defective functions (see defect code table).

—*—

no ↓

Remove instrument cluster. Is approx. battery voltage applied at connector 2 (beige) Pin 12 and Pin 13? — no → Repair wire to fuse.

—*—

yes ↓

Remove connector 1 (brown). Switch on ignition! Is approx. battery voltage applied at Pin 3 and Pin 15? — no → Repair wire to fuse.

—*—

yes ↓

Is ground to connector 1 Pin 1 and Pin 13 OK? — no → Repair wire.

—*—

yes ↓

Are RxD link to connector 1 Pin 2 and TxD diagnostic link to connector 1 Pin 14 OK? — no → Repair defective wire.

|

yes

↓

Is diagnosis with other control units possible? — no → Continue troubleshooting as displayed on screen.

— * —

|

yes

↓

Renew instrument cluster pc-board.

— * —

Defect Code 15

Fuel Gauge Defective

Possible cause: Immersion tube sending unit, ground wire, wires to instrument cluster, indicator instrument

Troubleshooting

Perform system test. Does the fuel gauge instrument function correctly during system text? — no → Renew fuel gauge indicator instrument.

— * —

yes ↓

♦D♦ Instrument cluster status lists. With ♦⇒♦ to fuel gauge. Is "**short?**" indicated on display screen? — yes → Check wire from instrument cluster connector 4 (grey) Pin 4 for a short to ground, repair if necessary. If wire is OK, renew immersion tube sending unit.

— * —

no ↓

Is "**break?**" indicated on the display screen?

— yes → Detach 6-pin connector at the immersion tube sending unit. Connect jumper between Pin 1 (ground) and Pin 3 (to instrument cluster) (wire harness side). Is "**short?**" now indicated on the display screen?

— yes → Renew immersion tube sending unit.

— * —

no ↓

Connect Pin 3 directly to vehicle ground. Is "**short?**" now indicated on the display screen?

— yes → Repair ground wire to Pin 1.

— * —

no ↓

Repair wire from Pin 3 of the connector at the immersion tube sending unit to the instrument cluster connector 4 (grey) Pin 4.

— * —

no ↓

Check immersion tube sending unit in accordance with specifications provided in the Technical Data (microfiche), renew if necessary.

— * —

Defect Code 16

Speed-A Signal Defective

Note: This troubleshooting procedure is used to check whether the instrument cluster correctly makes available a speed-A signal at other control units.

Troubleshooting

Is the speedometer operating correctly? — no → Continue with defect code 12.

— * —

yes ↓

Approx. battery voltage is applied at the speed-A line when at rest. Measure voltage at wire. Is battery voltage applied? — no → Check wire to instrument cluster connector 3 (white) Pin 18 for a break, repair if necessary.

— * —

yes ↓

Remove instrument cluster. Connect special adapter to instrument cluster connector 3. Connect instrument cluster to the adapters so that it is fully operable. Do not connect connector 3 to wire harness. ♦**M**♦Frequency measurement at Pin 18. ♦**D**♦Simulate speed signal – enter any frequency or speed via the diagnostic system. Is the entered frequency measured in the BMW Service Tester? (Switchover is possible between diagnosis and multimeter functions with the "D" button).

— no → Renew instrument cluster pc-board.

—*—

|

yes

↓

Instrument cluster OK If there is still a defect in the vehicle check whether the speed-A signal is distorted by a defective control unit connected to the speed-A line.

—*—

Notes

This section applies to the instrument cluster without check-control as of September 1990.

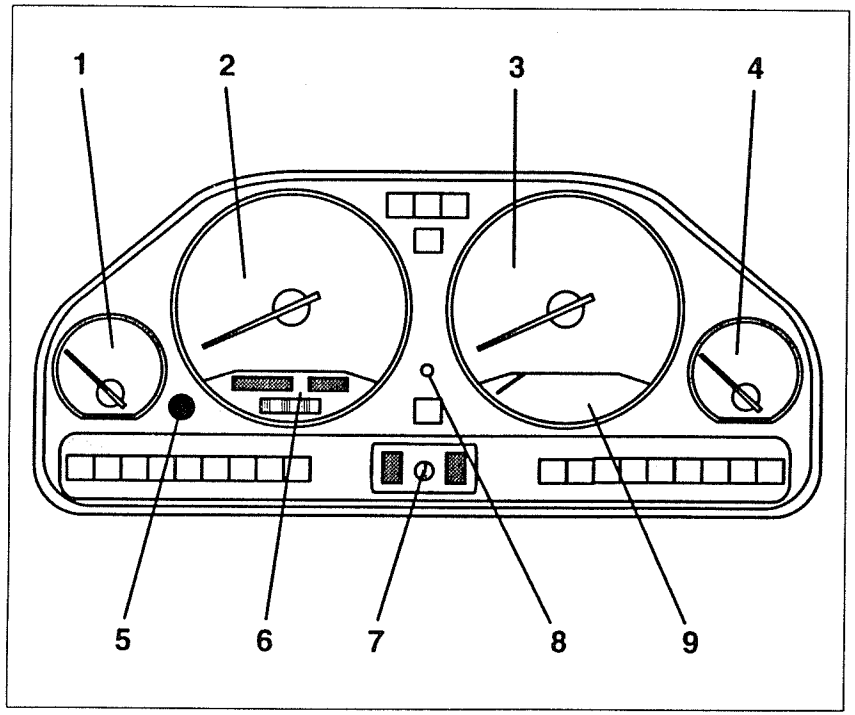

P34 62 004

Functional Description

General

The instrument cluster "Instrument Cluster Redesign Standard Version" is a further development (=Redesign) of the instrument cluster standard version installed up to September 1990 (described in Section 6200.1A).

Important modifications compared to old version

- LCD module for odometer displays (6)
- LCD module for gear indicator with automatic transmission (7)
- Control unit has diagnostic capabilities
- Integrated test facilities

Analog Instruments

Fuel gauge (1): The immersion tube sending unit in the fuel tank indicates the amount of fuel in the tank. An indicator lamp in the fuel gauge lights when the fuel level drops below 8 litre. The tank indicator is set to zero when the reserve lamp lights.

This indicator lamp is damped "electronically", i.e. flicker of the lamp caused by movements of the fuel is suppressed.

Speedometer (2): The signals from the rear axle Reed contact (tacho-generator) are processed in the instrument cluster.

Tachometer (3): The TD-signal (engine speed signal) is processed by the DME or DDE control unit.

Temperature gauge (4): This gauge indicates the coolant temperature.

KVA indicator (fuel consumption indicator) (9): The ti-signal (injection signal) of the DME control unit or the tQ-signal of the DDE control unit and the vehicle speed signal are processed. The current fuel consumption is calculated from both values.

Button (5)

The trip odometer can be reset with the button (5). If the button is pressed when the ignition is switched off, the total distance covered and the trip odometer are displayed for approx. 5 seconds.

The system test can also be started with this button.

LCD Module (6)

The total distance covered, the trip odometer and the service intervals are displayed in the LCD module (LCD = Liquid Crystal Display). The LCD module is lit by two 1.2 W lamps.

The brightness of the module is controlled automatically. A **photoelectric sensor (8)** senses the brightness in the vehicle and adjusts the illumination of the LCD module accordingly.

The brightness of the LCD module can also be adjusted by means of the dimmer when the vehicle lights are switched on. The dimmer also acts on the lighting in the analog instruments.

The brightness value determined by the **photoelectric sensor (8)** can be used as an output signal by other control units.

Program and Gear Indicator (7)

A further LCD module with separate connector is installed in vehicles equipped with automatic transmission. The program and gear are displayed in this module.

A fault symbol is displayed if the EGS control unit detects a fault.

Acoustic Relay

A sound-generating relay is installed in the instrument cluster. The relay can be activated by the electronic circuitry with alternating frequencies.

The relay is used as:

- Turn signal sound generator
- Light warning (e.g. ignition OFF and parking light ON)
- Belt warning (USA and KSA only)

Coding Plug

The coding plug is plugged into the instrument cluster. It basically consists of a voltage-independent electronic memory. This memory contains all specific vehicle data which the instrument cluster requires to process and display signals.

The total mileage and the service interval data are also stored in the memory.

Coding Plug Code

The code is printed on a label on the reverse side of the coding plug.

The code is also indicated in the diagnostic program (♦D♦Special functions: Coding Data) and during the integrated test.

Integrated Test Facilities

Important data and the system test can be read out or triggered without diagnosis.

Procedure:

- Switch off ignition.
- Press instrument cluster button and hold depressed.
- Switch ignition switch to **position R (position 1)** .
- Release instrument cluster button when the first output appears in the field for the mileage (total distance covered) in the LCD module.

Displays:

- 1: Internal number for monitoring purposes
- 2: Code number of coding plug
- 3: k-number (factor) for speedometer
- 4: Chassis number (last 7 digits)
- 5: Software version
- 6: Revision index

The corresponding numbering appears in the trip odometer field

If the coding plug is a replacement plug, the red replacement marking lights during the display (red LED).

A system test is triggered on completion of these outputs.

System Test

– All segments and the lighting of the LCD module are switched on. Also the red LED for replacement identification!

– The pointers of the speedometer, tachometer, fuel gauge, temperature gauge and KVA move, within 5 seconds, from the zero position to the end position and back.

– The warning lamps for brakes, tank reserve and belt (belt only in US/KSA version) are switched on.

The internal test procedure is terminated on completion of the system test. It can, however, be interrupted at any time by switching on the ignition (ignition switch in position 2).

Position of Indicator Lamps

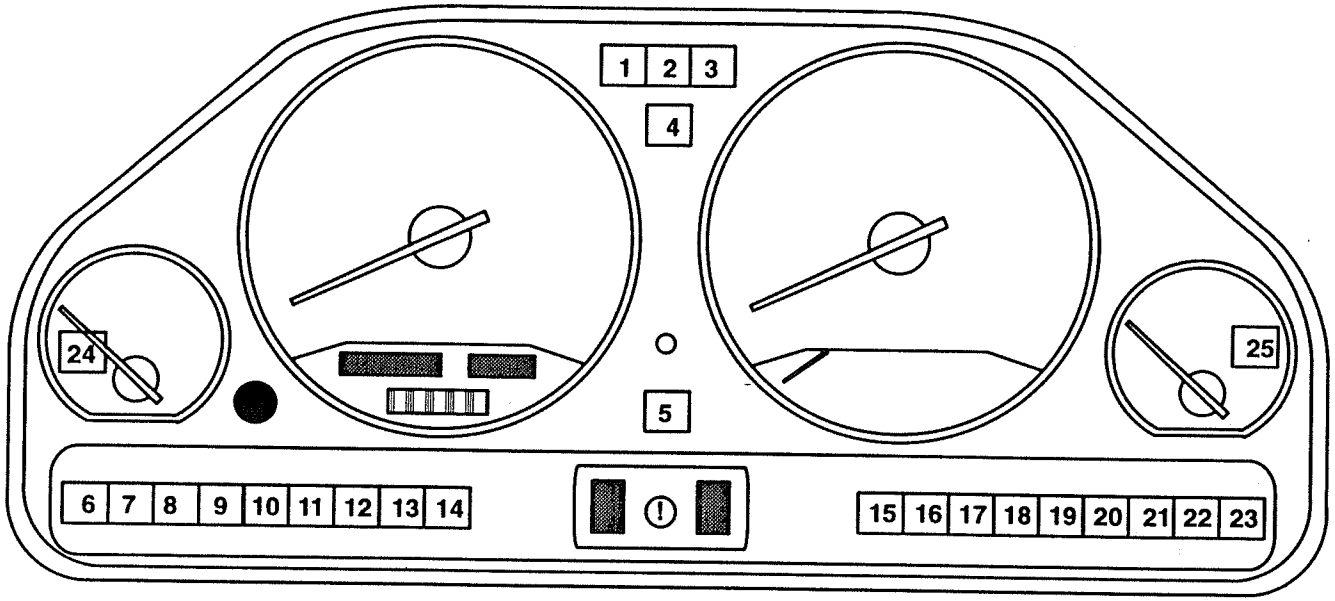

P34 62 005

Indicator Lamps

Number	Indicator lamp	Source
1	Left turn signal indicator	Relay
2	High beam	Light switch
3	Right turn signal indicator	Relay
4	Trailer turn signal indicator	Relay
5	ASC (provisions)	(ASC control unit)
6	Fog light	Fog light switch
7	Rear fog light	Fog light switch
8	Not used	
9	Not used	
10	Fuel filter (diesel only)	Sensor on filter
11	DDE diagnosis (diesel only)	DDE control unit
12	Preheating (diesel only)	Preheating control unit
13	Start enable (diesel only)	Preheating control unit
14	Battery charge indicator	Alternator
15	Oil pressure	Pressure switch
16	ABS indicator	ABS control unit
17	Airbag	Airbag control unit
18	Brake fluid	Brake fluid level switch
19	Brake pad wear	Brake pad contact
20	Handbrake	Handbrake switch
21	Seat belt (USA and Gulf States only)	Belt relay
22	Self-levelling control (provisions)	
23	EDC (provisions)	
24	Tank reserve	Immersion tube sending unit with electronic damping in instrument cluster
25	Overtemperature (not included at present)	

Lamp Self-Test:

The lamps for **oil pressure (15)** and **battery charge indicator (14)** light when the ignition is switched on. They go out when the engine starts.

The lamps **brake pad wear (19), tanks reserve (24), handbrake (20)** and **brake fluid (18)** light for approx. 3 seconds and the lamps for **airbag (17)** and **DDE (11)** for approx. 6 seconds after the ignition has been switched on.

In diesel models, the **preheating lamp (12)** also lights when the ignition is switched on. After preheating, the **start lamp (13)** lights. If the vehicle is then not started, the start lamp also goes out after a short period of time. The **preheating lamp** lights up again when the ignition is switched on.

Depending on the ABS system installed in the vehicle, the indicator lamp for **ABS (15)** lights either continuously until the engine starts or for approx. 2 seconds after the ignition has been switched on.

Instrument cluster (Redesign Standard Version)

General Block Diagram

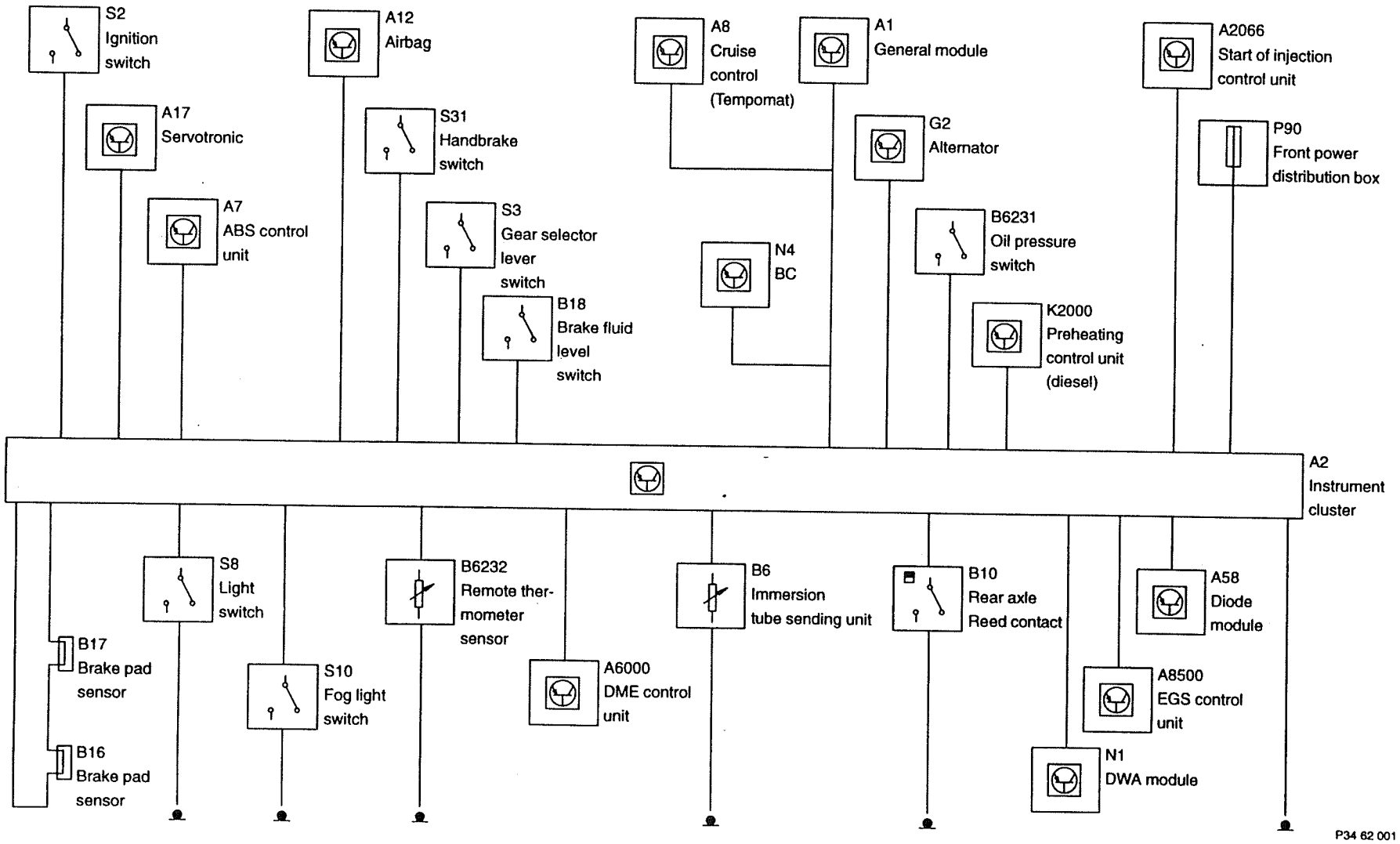

Notes on the BMW DIAGNOSTIC SYSTEM

♦D♦Component Activation

Acoustic Relay

The acoustic relay is activated with a fixed frequency.

Speed Signal Simulation

An arbitrary vehicle speed or frequency can be specified. The vehicle speed is indicated in the speedometer and transferred to other control units in the form of a speed-A signal.

Simulation is terminated automatically after 60 seconds.

Important!

Various control units store defect codes when the speed signal is simulated. Therefore, a ♦D♦ quick test must be performed after each simulation of the vehicle speed signal. If a defect code is stored in a defect code unit (e.g. DME), and this is caused by a faulty speed-A signal, then the defect code must be cleared.

♦D♦Test Procedure

Display of input statuses with notes on troubleshooting.

♦D♦Special Functions

– Output of important coding data.
– System test activation

Abbreviations

EGS	Electronic transmission control
KVA	Fuel consumption indicator
TD-Signal	Engine speed signal
ti-Signal	Injection signal
tQ-Signal	Injection quantity diesel
SIA	Service interval indicator

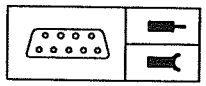

Pin Assignment

Connector Numbers

Number	Type	Description
X16	26-pin, yellow	Instrument cluster connector 1
X13060	26-pin, blue	Instrument cluster connector 2
X507	14-pin, black	Gear display

Pin Assignments at Instrument Cluster Connector 1, X16

Pin	Type	Description/function	Connection	Signal type	Tester display	Measurement notes
1		Diagnostic link TxD	Diagnostic socket Pin 20	Square-wave, 0 to 12 V		No diagnostic mode in the event of defect
2		ABS	ABS control unit	B–	None	
3		Brake fluid	Level switch	B–	None	
4		Coolant temperature	Remote thermometer sensor	0 to 12 V	Temperature ranges, defect code storage	
5		Oil pressure	Pressure switch	B–	None	
6		Start enable (diesel)	Preheating control unit	B–	None	
7		Preheating (diesel)	Preheating control unit	B–	None	
8		SIA reset	Diagnostic socket Pin 7	B–	None	Reset at B–

Pin	Type	Description/function	Connection	Signal type	Tester display	Measurement notes
9		Terminal 61, battery charge indicator	Alternator	B+	None	When engine running
10		DDE diagnosis	Start of injection control unit	B–	None	
11		Not used				
12		Diagnostic link RxD	Diagnostic socket Pin 15	Square-wave 0 to 12 V		No diagnostic mode in the event of defect
13		Not used				
14		Airbag	Airbag control unit	B–	None	
15		Terminal 15 (battery charge indicator)	Power distributor	B+	None	
16		Terminal 15 (indicator lamps)	Fuse	B+	None	
17		Terminal R, not fuse-protected (airbag)	Power distributor	B+	None	
18		Terminal 31 (lamps)	Ground	B–	None	
19		Terminal 50	Ignition switch	B+	None	When starting
20		ti-signal (DME), TQ-signal (DDE)	DME control unit or DDE quantity control unit	Square–wave	Measuring bar	
21		Terminal 30	Fuse	B+	None	
22		Terminal R	Fuse	B+	None	
23		Terminal 56 a (high beam)	Light switch	B+	None	
24		Turn signal indicator (trailer)	Relay	B+	None	
25		Terminal 15 (electronics)	Fuse	B+	ON	
26		TD-signal (engine speed)	DME control unit or DDE start of injection control unit	Square–wave	Engine speed values (rounded-off values)	

Pin Assignments at Instrument Cluster Connector 2, X13060

Pin	Type	Description/function	Connection	Signal type	Tester display	Measurement notes
1		Terminal 58g (instrument lights)	Light switch, dimmer	B+, pulse width-modulated	Measuring bar	
2		Terminal 31 for tachogenerator	Tachogenerator	B–	None	
3		Tank reserve lamp	Immersion tube sending unit	B–	ON/OFF, defect code storage	Display without electronic damping.
4		(Temperature warning lamp	Temperature switch	B–	None	Not used at present)
5		Position signal for DWA	DWA control unit	Square-wave 0V to 12 V	None	
6		Not used				
7		Rear fog light	Fog light switch	B+	None	
8		Fog light	Fog light switch	B+	None	
9		Brake pad sensor	Front left	B–	Defect code storage	
10		Brake pad sensor	Rear right	B–	Defect code storage	
11		Terminal 31 (electronics)	Ground	B–		No diagnostic mode in the event of defect
12		Speed output A	Various control units	Square–wave		Test by activation
13		Terminal 31 b (tachogenerator)	Tachogenerator	12 V	None	Plug connection at tacho-generator disconnected
14		Fuel gauge sensor	Immersion tube sending unit	0 to 12V	Measuring bar	
15		Output, brightness control		B+, pulse width-modulated	None	
16		Transmission oil temperature	EGS control unit	Square–wave	None	
17		Belt warning, KSA only	Seat belt relay	B–	None	KSA only

Pin	Type	Description/function	Connection	Signal type	Tester display	Measurement notes
18		Not used				
19		Right turn signal indicator	Relay	B+	None	
20		Left turn signal indicator	Relay	B+	None	
21		Not used				
22		Not used				
23		(Level control		B–	None	Not used at present)
24		Handbrake	Handbrake switch	B–	None	
25		Not used				
26		(Output for acoustic generator				Not used at present)

Pin Assignments at Instrument Cluster Connector Gear Indicator, X507

Pin	Type	Description/function	Connection	Signal type	Tester display	Measurement notes
1		L 7, transmission program	EGS control unit	B–	None	
2		L 6, transmission program	EGS control unit	B–	None	
3		L 1, gear	Selector lever	B+	None	
4		L 4, gear	Selector lever	B+	None	
5		L 3, gear	Selector lever	B+	None	
6		L 2, gear	Selector lever	B+	None	
7		Terminal 58g	Light switch	B+	None	
8		Terminal 15	Fuse	B+	None	
9		Terminal 58k	Dimmer	B+	None	

Pin	Type	Description/function	Connection	Signal type	Tester display	Measurement notes
10		Not used				
11		Not used				
12		Not used				
13		L5, transmission program	EGS control unit	B–	None	
14		Terminal 31, ground	Ground	B–	None	

Troubleshooting

Notes

- Troubleshooting takes place mainly in accordance with instructions in the BMW DIAGNOSTIC SYSTEM
- Battery charged, U-min = 12 V
- The plug connections can be very easily damaged when unsuitable measuring equipment is used. Therefore only carry out checks at the plug connections using the special adapter leads provided for this purpose.
- Take particular care when renewing indicator lamps to ensure that only replacement lamps with the specified ratings are used.

Defect Code Table

♦D♦ Defect code memory – stored defect codes:

01 Internal defect → Defect code 01

02 – 06 Coding plug defective → Defect codes 02 – 06

07 Overvoltage at Terminal R → Defect code 07

08 K-number faulty → Defect code 08

09 Tank sending unit failed → Defect code 09

10 Temperature gauge defective → Defect code 10

11 Brake pad sensor worn → Defect code 11

12 Tank reserve contact defective → Defect code 12

Malfunctions:

Acoustic relay failure → Defect code 13

LCD module failure → Defect code 14

Display instrument failure → Defect code 15

Simultaneous failure of several functions in the instrument cluster → Defect code 16

Diagnostic mode not possible with instrument cluster
→ Defect code 16

Defect Code 01

♦D♦Defect code memory: 01 Internal defect

Explanation: Defect in the vicinity of the electronic components

Troubleshooting:

- Clear defect code memory.
- Switch ignition off and on.
- If the defect code is stored once again, renew pc-board.

Defect Codes 02 – 06

♦D♦Defect code memory: 02 – 06 Coding plug defective

Explanation: Defect in the vicinity of the coding plug and coding data

Troubleshooting:

Initially, the coding plug should be recoded if coding is possible via the 48-position "central code". If the defect reoccurs after coding (after clearing defect code memory!), replace coding plug.

If coding is not possible:

- Clear defect code memory.
- Switch ignition off and on.
- If the defect is stored once again, replace coding plug.

Defect Code 07

♦D♦Defect code memory: 07 Overvoltage at Terminal R

Explanation: The instrument cluster detects a voltage value above 18 V at terminal R (connector 1, yellow, Pin 22).

Troubleshooting:

- Measure voltage at terminal R with engine running. Replace voltage regulator if defective.
- Check! Has vehicle battery been charged with defective charger?

Defect Code 08

♦D♦Defect code memory: 08 K-number faulty

Explanation: Faulty coding in coding plug

Troubleshooting:

Initially, the coding plug should be recoded if coding via the 48-position "central code" is possible. If the defect reoccurs after coding (after clearing defect code memory!), replace coding plug.

If coding is not possible, replace coding plug.

Defect Code 09

♦D♦Defect code memory: 09 Tank sending unit failed

Explanation: Wire to sending unit has a break or tank sending unit defective (break)

Troubleshooting:

- Check ground wire to tank sending unit.
- Check wire from connector 2 (blue) Pin 14 to tank sending unit.
- Check tank sending unit. For resistance values of sending unit refer to microfiche "Technical Data".

The tank sending unit can be additionally checked in ♦D♦Test procedure. The resistance value measured by the sensor is displayed, in this case, as a measuring bar. A corresponding text is displayed if a break or short occurs.

Defect Code 10

♦D♦Defect code memory: 10 Temperature gauge defective

Explanation: Wire to sender has a short to ground or temperature sensor overheated.

Troubleshooting:

- Check wire from connector 1 (yellow) Pin 4 to temperature sensor for a short to ground.
- Check temperature sensor. For resistance values of sensor, refer to microfiche "Technical Data".

The temperature sensor can also be checked in ♦**D**♦Test procedure. The resistance values measured by the sensor are displayed as temperature ranges. A corresponding text is displayed if a break or short occurs.

Defect Code 11

♦D♦Defect code memory: 11 Brake pad sensor worn

Explanation: Brake pads are or were worn, brake pad sensor worn, wire from instrument cluster to the sensors or wires between sensors worn through.

Troubleshooting:

Check brake pad sensors and wires.

Defect Code 12

♦D♦Defect code memory: 12 Tank reserve contact defective

Explanation: Tank reserve contact sticking or wire has short to ground.

Troubleshooting:

Check wire to instrument cluster and reserve contact in tank sensor.

Notes

The tank reserve lamp lights after closing the reserve contact with a delay of up to 25 seconds. The lamp switches on without a delay after switching on the ignition (up to 2 minutes after ignition ON).

The reserve contact can be checked by bypassing the time delay in ♦D♦Test procedure

Defect Code 13

Acoustic relay failure

Troubleshooting:

♦D♦Component activation. The acoustic relay can be activated (frequency not adjustable!). The relay is defective if no switching sounds can be heard during activation. Replace instrument cluster pc-board.

Defect Code 14

LCD module failure

Troubleshooting:

Perform system test for instrument cluster. All segments of the LCD module are activated.

If one or both fields (field for mileage (distance covered) and field for SIA) of the LCD module remain off during the system test, check lamps for LCD module and renew if necessary.

If all lamps are OK, replace instrument cluster pc-board with LCD module.

Defect Code 15

Display instrument failure

Perform system test for instrument cluster: The pointers of the speedometer, tachometer, fuel gauge, temperature gauge and KVA move within 5 seconds from the zero position to the end position and back. Check display instrument with system test.

Instrument defective during system test

If the pointer does not deflect during the system test, check coil resistance.

– Replace defective instrument.
– If coil resistance is OK, replace instrument cluster pc–board.

Check coil resistance

Measure resistance at the plug contacts of the display instrument. Instrument removed!

Nominal values: 280 Ω +/– 15 Ω per contact pair.

Instrument OK during system test

♦D♦Test procedure: Check sensor and wires via diagnostic system. Refer to screen display for information on defects and pin assignments.

The tachogenerator is not included in the test procedure. If the speedometer fails, check wires from instrument cluster to tachogenerator. If wires OK, replace tachogenerator.

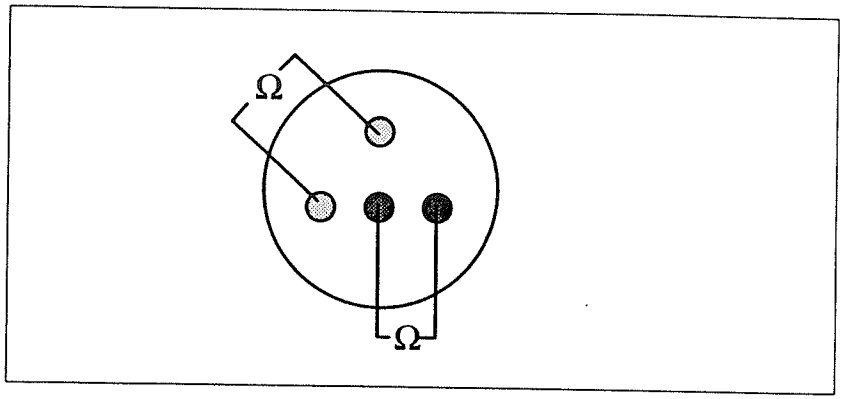

P34 62 006

Measuring the coil resistance of the speedometer, tachometer, coolant temperature gauge and fuel gauge. Rear view of display instruments (connector side).

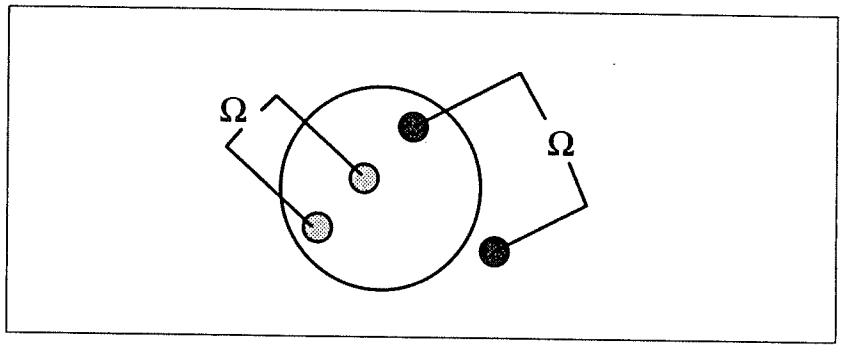

P34 62 007

Measuring the coil resistance of the fuel consumption indicator. Rear view of indicator instrument (connector side).

Defect Code 16

Simultaneous failure of several functions in the instrument cluster

Diagnostic mode not possible with instrument cluster

Possible cause: Fuses, wires, RxD or TxD link, electronic assembly, coding plug

Note: Refer to notes in the BMW DIAGNOSTIC SYSTEM (screen display).

Troubleshooting

Are all fuses OK?

— no → Replace defective fuse.

— * —

yes ↓

Switch on ignition. ♦D♦ Is diagnostic mode possible to instrument cluster?

— yes → ♦D♦ Test procedure. Switch on ignition! Is terminal 15 displayed as ON?

— no → Repair wire to connector 1 (yellow) Pin 25.

— * —

yes ↓

♦D♦ Defect code memory. Is a defect code between 01 and 06 stored?

— yes → Repair defect in accordance with instructions.

— * —

no ↓

Check individual defective functions (see Defect Code Table).

— * —

no ↓

no ↓

Instrument Cluster (Redesign Standard Version)

Remove instrument cluster. Is approx. battery voltage applied at connector 1 (yellow) Pin 21, Pin 16 and Pin 25?

— no → Repair wire.

—*—

yes ↓

Is ground to connector 1 Pin 18 and connector 2 (blue) Pin 11 OK?

— no → Repair wire.

—*—

yes ↓

Is RxD diagnostic link to connector 1 Pin 12 and TxD diagnostic link to connector 1 Pin 1 OK?

— no → Repair defective wire.

—*—

yes ↓

Is diagnosis with other control units possible?

— no → Continue troubleshooting as displayed on screen.

—*—

yes ↓

Replace instrument cluster pc-board.

—*—

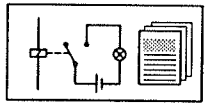

Functional Description

General

The lamp control module (LKM) contains the relays for:

- Low beam
- High beam
- Rear fog light
- Fog light

In addition, the lamp control module LKM monitors the light circuits for failure of bulbs and breaks in wire connections. If a defect occurs in a circuit, the lamp control module (LKM) signals this status via the data link to the check-control module (CCM). The check-control module (CCM) transfers the message also via data links to the instrument cluster. A text note in the instrument cluster display informs the driver that the corresponding light has failed.

Warm/Cold Monitoring

Light circuits are monitored by special electronic components, so-called **comparitors**. A differentiation is made between warm and cold monitoring.

Warm monitoring: The circuit is checked when the corresponding light is switched on.

Cold monitoring: The circuit is also checked when the corresponding light is switched off.

Scope of monitoring: A differentiation is made between the standard and luxury version. The luxury version is installed in the models 735i and 750i.

Light circuit	Standard	Luxury
Low beam	warm/cold	warm/cold
Front parking light	warm	warm/cold
Tail light	warm	warm/cold
Licence plate light	warm	warm
Fog light	None	warm/cold
Rear fog light	None	warm/cold

Rear fog lights are not installed in the country-specific version USA/Japan.

Brake Light

An additional brake light test switch is necessary in order to monitor the function of the brake light. Shortly after operating the brake light switch, the test switch is switched on by the brake pedal. It switches ground to the check-control module. The circuit of the brake light, including the brake light switch is monitored for defects for as long as the test switch is switched on. A defect is indicated in the instrument cluster display unit.

The country-specific version USA additionally features a third brake light which is also monitored.

Parking Light Cold Monitoring Relay

Cold monitoring of a light circuit is only possible when the light is switched via a relay. For this reason, the parking light and tail light are switched via the parking light cold monitoring relay (relay K7) in the models 735i and 750i. A jumper is installed in the 730i instead of the relay.

Lamp Control Module (LKM)

General Block Diagram

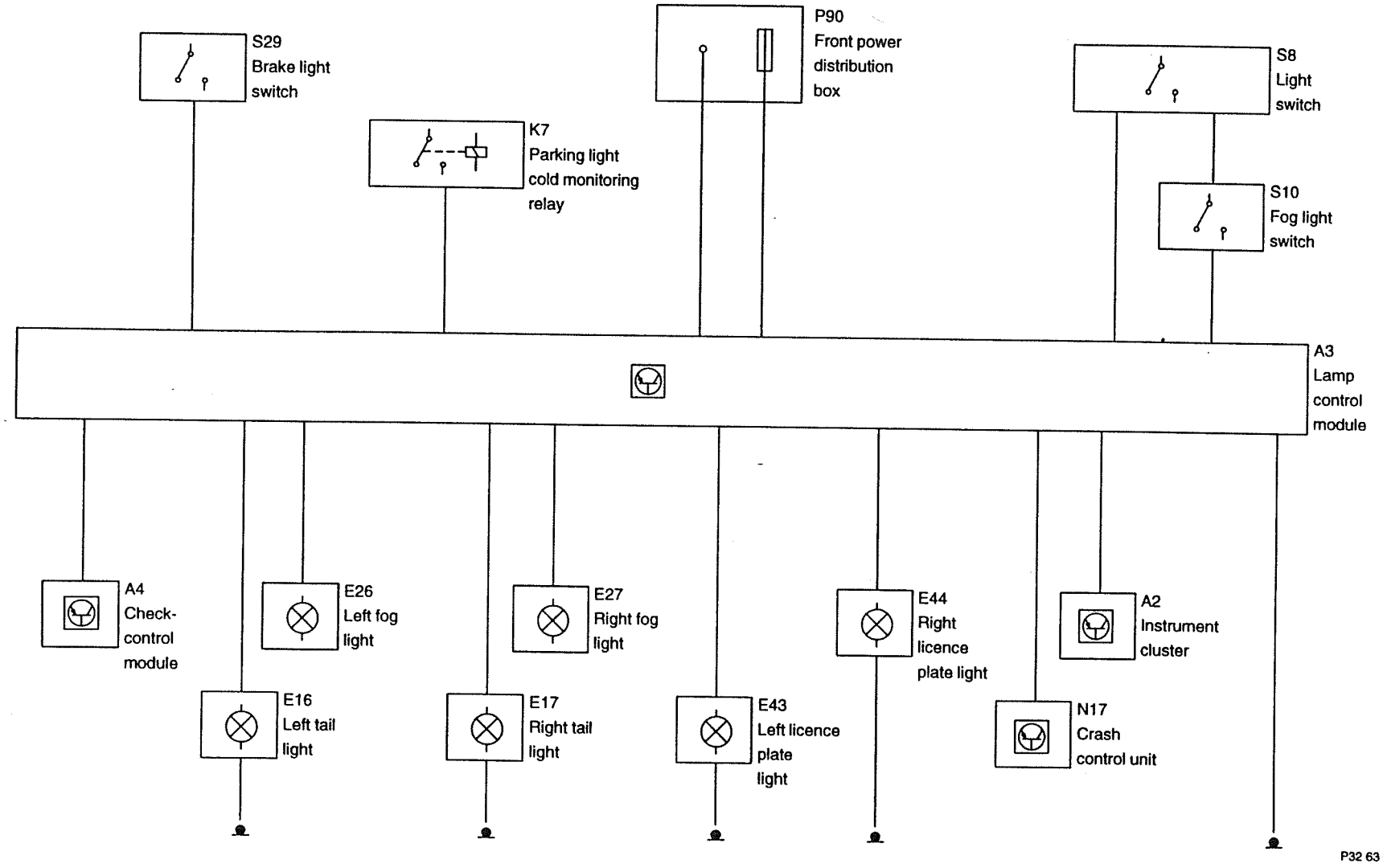

P32 63 005

Notes on the BMW DIAGNOSTIC SYSTEM

The lamp control module (LKM) is a component part of the instrument cluster/check-control system. The diagnostic program instrument cluster/check-control indicates the current LKM messages in the ♦**D**♦200 Check-control status lists. In the case of defect, information can be selected with ♦⇓♦ . Possible defects include:

– Light defective and ♦**D**♦display "not OK."
– Light defective and ♦**D**♦display "OK."
– Light not defective but♦**D**♦display "not OK."

A screen page for the brake light switches follows the light messages. The brake light switch and the brake light test switch can be checked with the aid of this display screen page.

Abbreviations

LKM	Lamp control module
CCM	Check-control module
K	Instrument cluster
CAG	Crash and alarm sensor
E	Input
A	Output

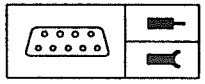

Pin Assignment

Pin Assignments Lamp Control Module, Connector X12

Pin	Type	Description/function	Connection	Signal type	Tester display	Measurement notes
1	E	High beam relay activation	High beam switch			
2	E	High beam/low beam supply	Connector terminal 30	approx. 12 V		
3	E	Low beam relay activation	Light switch / CAG	approx. 12 V		
4	A	Data link to CCM	CCM X18 Pin 10			
5	A	Data link to CCM	CCM X19 Pin 14			
6	E	Battery voltage terminal R	Fuse			
7	E	Left tail light activation	Light switch, via K7 where applicable	approx. 12 V		
8	A	Right tail light activation	Right tail light			
9	A	Left tail light activation	Left tail light			
10	A	Right parking light activation	Right parking light			
11	A	Left parking light activation	Left parking light			
12	E	Supply brake light	Brake light switch			
13	A	Left brake light	Left brake light			
14	E	Supply licence plate lights	Fuses	+		
15	A	Brake light activation	US brake light			
16	A	Left fog light	Left fog light	approx. 12 V		
17	E	Supply fog light	Fuse	approx. 12 V		

Lamp Control Module (LKM)

Pin Assignments

Pin	Type	Description/function	Connection	Signal type	Tester display	Measurement notes
18	E	Fog light relay activation	Fog light switch	approx. 12 V		
19	E	Fog light relay activation	Rear fog light relay			
20	A	High beam activation	Fuses	approx. 12 V		
21	A	Left low beam activation	Fuses	approx. 12 V		
22	A	Right low beam activation	Fuses	approx. 12 V		
23	E	Control line from instrument cluster	CCM, instrument cluster, on-board computer			
24	E	Ground	Ground connection	approx. 0 V		
25	E	Battery voltage terminal 15	CCM X18 Pin 11			
26	E	Left tail light activation	Light switch, via K7 where applicable	approx. 12 V		
27	E	Right parking light activation	Light switch, via K7 where applicable	approx. 12 V		
28	E	Left parking light activation	Light switch, via K7 where applicable	approx. 12 V		
29	A	Right brake light	Right brake light			
30	A	Right licence plate light activation	Right licence plate light			
31	A	Left licence plate light activation	Left licence plate light			
32	A	Right fog light	Right fog light	approx. 12 V		
33	A	Right rear fog light	Right rear fog light			
34	A	Left rear fog light	Left rear fog light			
35	E	Supply rear fog light	Fuse	approx. 12 V		

Pin Assignments ar Relay K7, Connector X60 (735i, 750i)

Pin	Type	Description/function	Connection	Signal type	Tester display	Measurement notes
2	A	Activation	LKM Pin 7			
4	E	Supply for left lights	Light switch			
5	A	Activation	LKM Pin 28			
6	A	Activation	LKM Pin 26			
7	E	Ground	Ground point			
8	E	Supply for right lights	Light switch			
9	A	Activation	LKM Pin 27			

Troubleshooting

Notes

- Battery charged, U-min = 12 V
- The LKM is a component part of the instrument cluster/check-control system. For a description of the interrelated functions, refer to Section 6200
- Observe special circuit for country-specific versions Norway and Sweden! (See schematics)
- If a crash and alarm sensor is installed, the following lines are connected via the crash and alarm sensor depending on the country-specific versions:
  ECE versions: Wire from light switch to LKM Pin 3 (low beam).
  US version: Wire from high beam switch to LKM Pin 1 (high beam).
- For functional description and troubleshooting of the crash and alarm sensor, refer to Section 6350.0A

Defect Code Table

Check-control text message in instrument cluster display → Continue with Section 6200 Instrument Cluster

Vehicle lighting OK despite defect message "light failure" in the instrument cluster display → Replace LKM

Front parking light or tail light defective → Defect code 01

High beam or low beam defective → Defect code 02

Brake light, licence plate light, fog light or rear fog light defective → Defect code 03

Defect Code 01

Front parking light or tail light defective

1. Are fuses and lamps OK? Are ground connections for lamps OK? Are wires from LKM to the lamps OK?
Replace defective part, repair faulty wire.

2. BMW 7 **Check parking light cold monitoring relay**

2.1 Remove relay K7 (parking light cold monitoring relay) or jumper (730i). Switch on light. Is battery voltage applied at Pin 4 and Pin 8? If defect found, check light switch and wires and repair if necessary. In country-specific versions Norway and Sweden, also check the relays K25 and K26 together with corresponding wires.

2.2 Install parking light cold monitoring relay (or jumper), remove LKM. Switch on light. Is battery voltage applied at following pins of the LKM: Pin 7, 26, 27, 28? If defect found, check ground for parking light cold monitoring relay and wires from relay to LKM and repair if necessary. If wires OK, replace parking light cold monitoring relay or jumper.

2. BMW 5

Check light switch and wires from light switch to LKM and repair if necessary.

3. If all fuses, wires, switch and the Parking light cold monitoring relay are OK, replace LKM.

Defect Code 02

High beam or low beam defective

1. Are fuses and lamps OK? Are ground connections for lamps OK? Are wires from LKM to the fuses and to the lamps OK?
Replace defective part, repair faulty wire.

2. Are fuse, wire and switch OK? Are wires from switch to LKM OK?
Replace defective part, repair faulty wire.

3. If a crash and alarm sensor (CAG) is installed!

ECE versions: CAG in low beam light circuit.
US versions: CAG in high beam light circuit.
Continue troubleshooting in accordance with diagnostic procedure 6350.0 for crash and alarm sensor.

4. If all fuses, wires, switches and the crash and alarm sensor are OK, replace LKM.

Defect Code 03

Brake light, licence plate light, fog light or rear fog light defective

1. Are fuses and lamps OK? Are ground connections for lamps OK? Are wires from LKM to the lamps OK? Are wires from the fuses to the LKM OK?
Replace defective part, repair faulty wire.

2. Are fuses for switches and switch OK? Are wires from switch to LKM OK?
Replace defective part, repair faulty wire.

3. If all fuses, wires and switches are OK, renew LKM.

Functional Description

not applicable

Abbreviations

CAG	Crash and alarm sensor
WBS	Hazard warning switch
WBG	Hazard warning flasher unit

Notes on the BMW DIAGNOSTIC SYSTEM

This system does not feature diagnostic capabilities.

BMW 5 BMW 7

Hazard Warning System

General Block Diagram

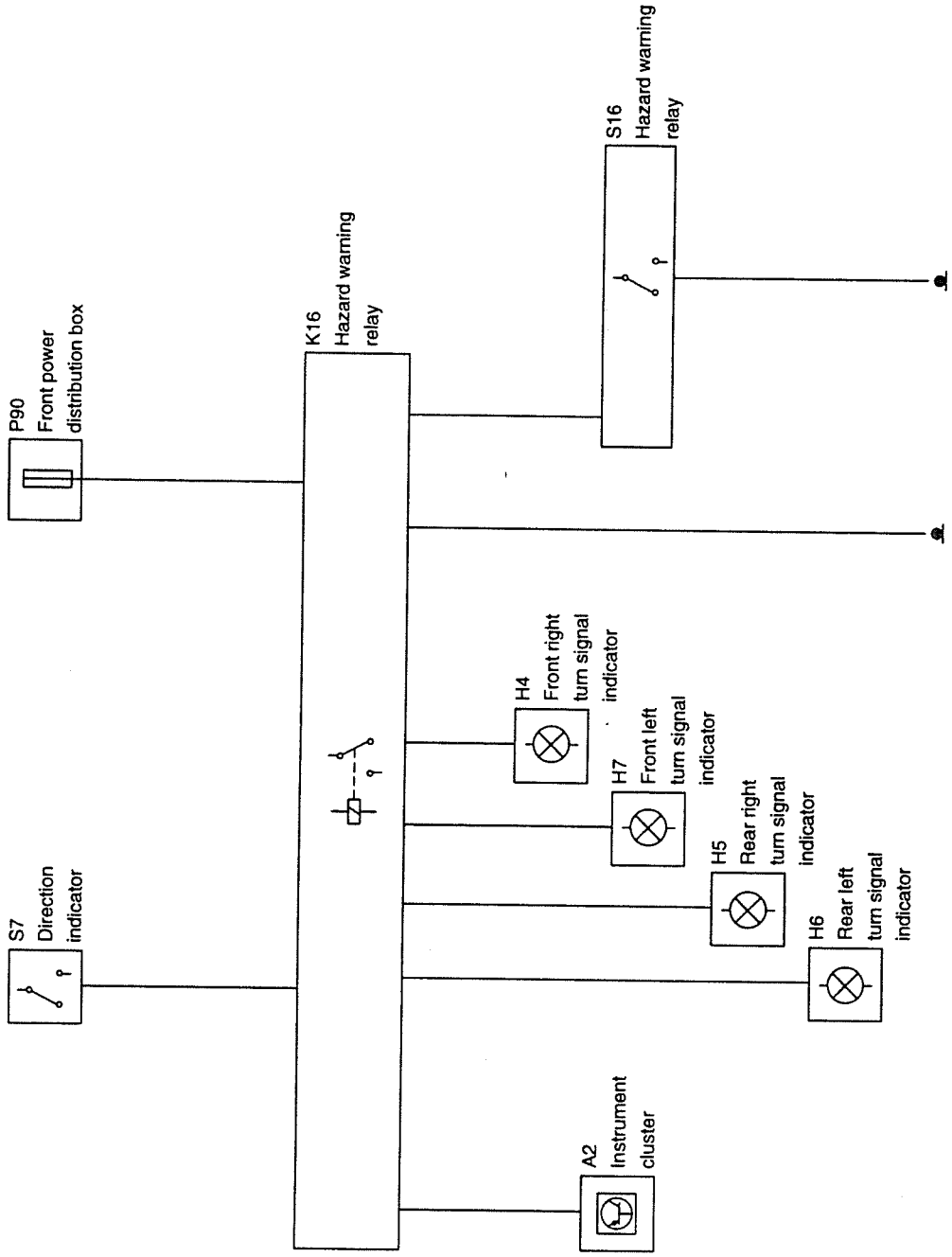

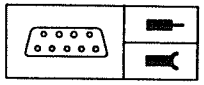

Pin Assignment

Pin Assignments at Hazard Warning Switch (WBS)

Pin	Type	Description/function	Connection	Signal type	Tester display	Measurement notes
1		Not used				
2	A	Supply line WBG/CAG	Supply line WBG/CAG			
3	E	Ground	Ground connection			
4	E	Lights	Light switch			
5	E	Flasher signal	Activation from WBG			

Pin Assignments at Hazard Warning Flasher Unit (WBG)

Pin	Type	Description/function	Connection	Signal type	Tester display	Measurement notes
1		Not used				
2	E	Left turn indicator signal	Left direction switch			
3		Not used				
4	A	Left turn signal indicator activation, CAG	Left turn signal indicator lights			
5	A	Right turn signal indicator activation, CAG	Right turn signal indicator lights			
6	E	Battery voltage terminal 3	Fuse	approx. 12 V		
7	E	Right turn indicator signal	Right direction switch			
8	E	Ground	Ground connection	approx. 0 V		
9	E	Activation from WBS/CAG	WBS/CAG	approx. 12 V		

Troubleshooting

Notes

Use relay adapter if necessary!

Defect Code Table

Hazard warning system defective → Defect code 01

Search light in hazard warning system defective → Defect code 02

Indicator lamp in hazard warning switch defective → Defect code 03

Indicator lamps in instrument cluster failed → Defect code 04

Defect Code 01

Hazard warning system defective

Troubleshooting

Has the entire system failed?

— no → Check lamp sockets as well as wires and repair or renew as required.

— * —

yes ↓

Is vehicle ground applied at WBS Pin 2 when the hazard warning system is switched on?

— no → Check ground wire and switch and repair or renew as required.

— * —

yes ↓

Is a crash and alarm sensor installed in the vehicle?

— no → Is vehicle ground applied at WBG Pin 9?

— no → Repair wire between WBS and WBG.

— * —

yes ↓

Is voltage supply (Pin 6, Pin 8) at WBG OK?

— yes → Check wires or fuse F6 and repair or renew as required.

yes ↓

Renew WBG.

— * —

yes ↓

Continue with diagnostic procedure 6350.0 for crash and alarm sensor.

— * —

Defect Code 02

Search light hazard warning light switch defective

Troubleshooting

Does hazard warning system operate? — no → Continue with defect code 01.

— * —

yes ↓

Switch on light. Is approx. battery voltage applied at the WBS Pin 4? — no → Check light switch and wire and repair or renew as required.

— * —

yes ↓

Renew WBS.

— * —

Defect Code 03

Indicator lamp in the hazard warning switch defective

Troubleshooting

Does the hazard warning system operate? — no → Continue with defect code 01.

—*—

yes ↓

Check wire between WBG Pin 4 and WBS Pin 5. Is wire OK? — no → Repair wire.

—*—

yes ↓

Renew WBS.

—*—

Defect Code 04

Failure of indicator lamps in instrument cluster

Troubleshooting

Does hazard warning system operate? — no → Continue with defect code 01.

— * —

yes ↓

Check wire from WBG Pin 4 or Pin 5 to the input of the instrument cluster. Is wire OK? — no → Repair wire.

— * —

yes ↓

Renew indicator lamp in instrument cluster.

— * —

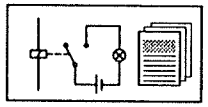

Functional Description

General

The task of the trailer module (AHM) is to monitor the light switching functions on the trailer without influencing the lamp monitoring function of the "lamp control module" (LKM) in the vehicle.

The AHM features the following functions:

– Switching on trailer lights
– Monitoring fuses, self-test of unit
– Output of any error messages to the check- control module (CCM)

The trailer module (AHM) receives the switch-on information via control lines which are connected to the rear vehicle lights.

Fuse Protection

The lamp power circuit of the trailer is fuse-protected in the trailer module. The fuses are monitored.

An error message is sent to the check-control module in the case of defect. The message is shown in the display of the instrument cluster.

Self-Test

The trailer module (AHM) features self-test properties, with which the operability of the module is checked (comparison of input and output information).

The defect output is set as soon as a defect occurs. The error message "trailer light" is indicated in the display of the instrument cluster.

Trailer Module (AHM)

General Block Diagram

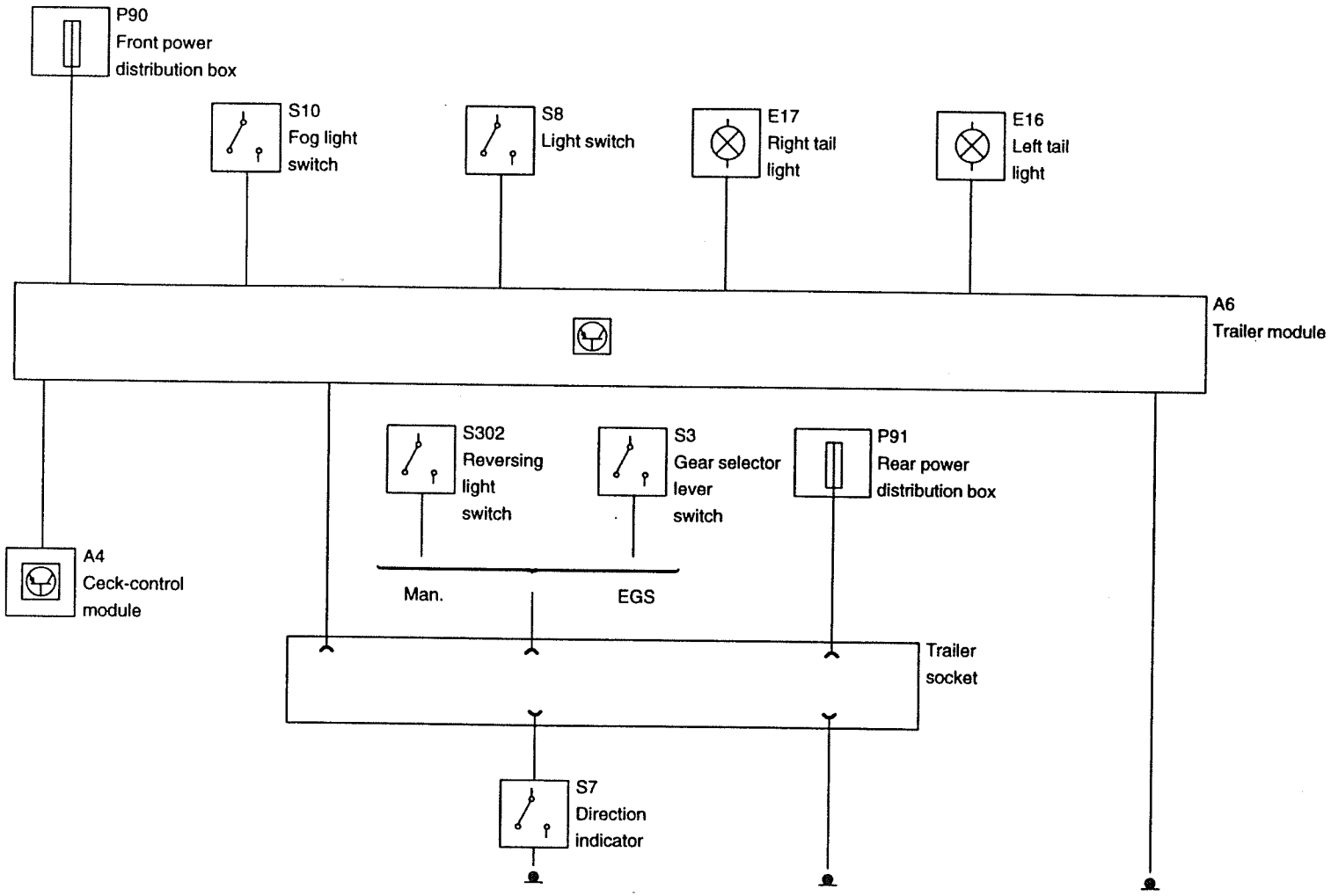

P32 63 004

Notes on the BMW DIAGNOSTIC SYSTEM

This system does not feature diagnostic capabilities.

Abbreviations

not applicable

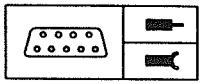

Pin Assignment

Pin Assignments at Trailer Module Connector

Pin	Type	Description/function	Connection	Signal type	Tester display	Measurement notes
1	A	Brake light	Trailer socket			
2	E	Brake light relay	Tail light			
3	A	Error output ERROR	CCM			
4		Not used				
5	E	Terminal 30	Fuse			
6		Not used				
7	E	Left parking light relay	Tail light			
8	A	Left parking light	Tail light			
9	A	Rear fog light	Tail light			
10	E	Rear fog light relay	Tail light			
11	E	Terminal R	Fuse			
12	E	Ground terminal 31	Ground			
13		Not used				
14	A	Right parking light	Tail light			
15	E	Right parking light relay	Tail light			

Troubleshooting

Notes

Is vehicle lighting system OK? Check and repair as required. Load must be applied to the trailer socket. Connect either test unit for trailer socket or trailer. Are fuses F22 and F18 in the fuse box OK? Renew if necessary.

Defect Code Table

Failure of entire system → Defect code 01

Brake light, tail light or fog light have failed → Defect code 02

Check-control displays "trailer light" (light OFF) → Defect code 03

Defect Code 01

Failure of entire system

Troubleshooting

Are fuses at AHM OK? Repair if necessary. Is battery voltage applied at AHM Pin 5? — no → Check wire, repair voltage supply if necessary.

—*—

yes ↓

Is battery voltage applied at AHM Pin 11? (Ignition key position 1) — no → Check wire, repair voltage supply if necessary.

—*—

yes ↓

Is ground applied at AHM Pin 12? — no → Check wire, repair ground supply if necessary.

—*—

yes ↓

Replace trailer module (AHM).

—*—

Defect Code 02

Failure of: A. Brake lights, B. Tail lights, C. Rear fog lights

Check fuses at the trailer module (AHM), repair if necessary.
Check brake lights, tail lights and rear fog lights on trailer and repair if necessary.

A. Brake lights have failed

Troubleshooting

With brake applied, measure voltage at Pin 6 of trailer socket, is battery voltage measured? — yes → Check trailer socket and wires on trailer, repair if necessary.

— * —

no ↓

Measure voltage at AHM Pin 1, is battery voltage measures? — yes → Check wire between trailer socket and AHM, repair if necessary.

— * —

no ↓

Measure voltage at AHM Pin 2, is battery voltage measured? — yes → Replace AHM if necessary.

— * —

no ↓

Check wire to tail light, repair if necessary.

— * —

B. Tail lights have failed

Troubleshooting

With lights switched on, measure voltage at Pin 5 or 7 (right or left) or trailer socket. Is battery voltage measured? — yes → Check trailer socket and wires on trailer, repair if necessary.

—*—

no ↓

Measure voltage at AHM Pin 8 or 14, is battery voltage measured? — yes → Check wire between trailer socket and AHM, repair if necessary.

—*—

no ↓

Measure voltage at Pin 15 and 7, is battery voltage measured? — yes → Replace AHM if necessary.

—*—

no ↓

Check wire to tail light and repair if necessary.

—*—

C. Rear fog lights have failed

Troubleshooting

With rear fog light switched on, measure voltage at Pin 2 of AH socket, is battery voltage measured? — yes → Check AH socket and wires on trailer and repair if necessary.

— * —

no ↓

Measure voltage at AHM Pin 9, is battery voltage measured? — yes → Check wire between AH socket and AHM, repair if necessary.

— * —

no ↓

Measure voltage at AHM Pin 10, is battery voltage measured? — yes → Replace AHM if necessary.

— * —

no ↓

Check wire to tail light and repair if necessary.

— * —

Defect Code 03

Check-control displays "trailer light" (light OFF)

Troubleshooting

Are fuses on AHM OK? — no → Repair fuses.

— * —

yes ↓

Is battery voltage applied at AHM Pin 3? — no → Check wire and repair if necessary.

— * —

yes ↓

Ignition switch in position I. Is battery voltage applied at AHM Pin 11? — no → Check wire and repair if necessary.

— * —

yes ↓

Is ground applied at AHM Pin 12? — no → Check wire and repair if necessary.

— * —

yes ↓

Replace AHM if necessary

— * —

Notes

These instructions apply only if a ZKE general module is installed.

Functional Description

Operating Principle

With the interior light switch, the interior lights (interior lighting - IB) can be switched to "constant light", OFF or "automatic mode" (controlled by general module). In automatic mode, the switch-on time is influenced by door contacts, ignition lock position, central locking system and door handle.

The general module of the central body electronics (ZKE) controls the interior lights via a relay in the relay module (RM). The relay switches ground to the interior light switch. Ground is switched through to the lights when the switch is in "automatic interior light" position. The relay itself is switched by the general module irrespective of the position of the interior light switch.

Switch-On Times

- 1. Door open: Interior light switched on for up to 16 minutes.
- 2. Opening and closing driver's door: After closing the door, the interior light continues to light for approx. 20 seconds but switches off as of ignition lock position 1 (terminal R).
- 3. Opening and closing driver's door, locking vehicle: The interior light switches off as the vehicle is locked.
- 4. Switching off the ignition when parking light was switched on: Interior light remains switched on for up to 20 seconds.

– only if door lock heating is installed –

- 5. lifting door handle: Interior light is switched on for approx. 10 seconds (maximum of three times within 10 minutes).

When the door is left open, the interior light is switched off after approx. 16 minutes in order to safe the battery. The light is switched on again after closing and opening the door.

Interior Lights (IB/ZKE)

General Block Diagram

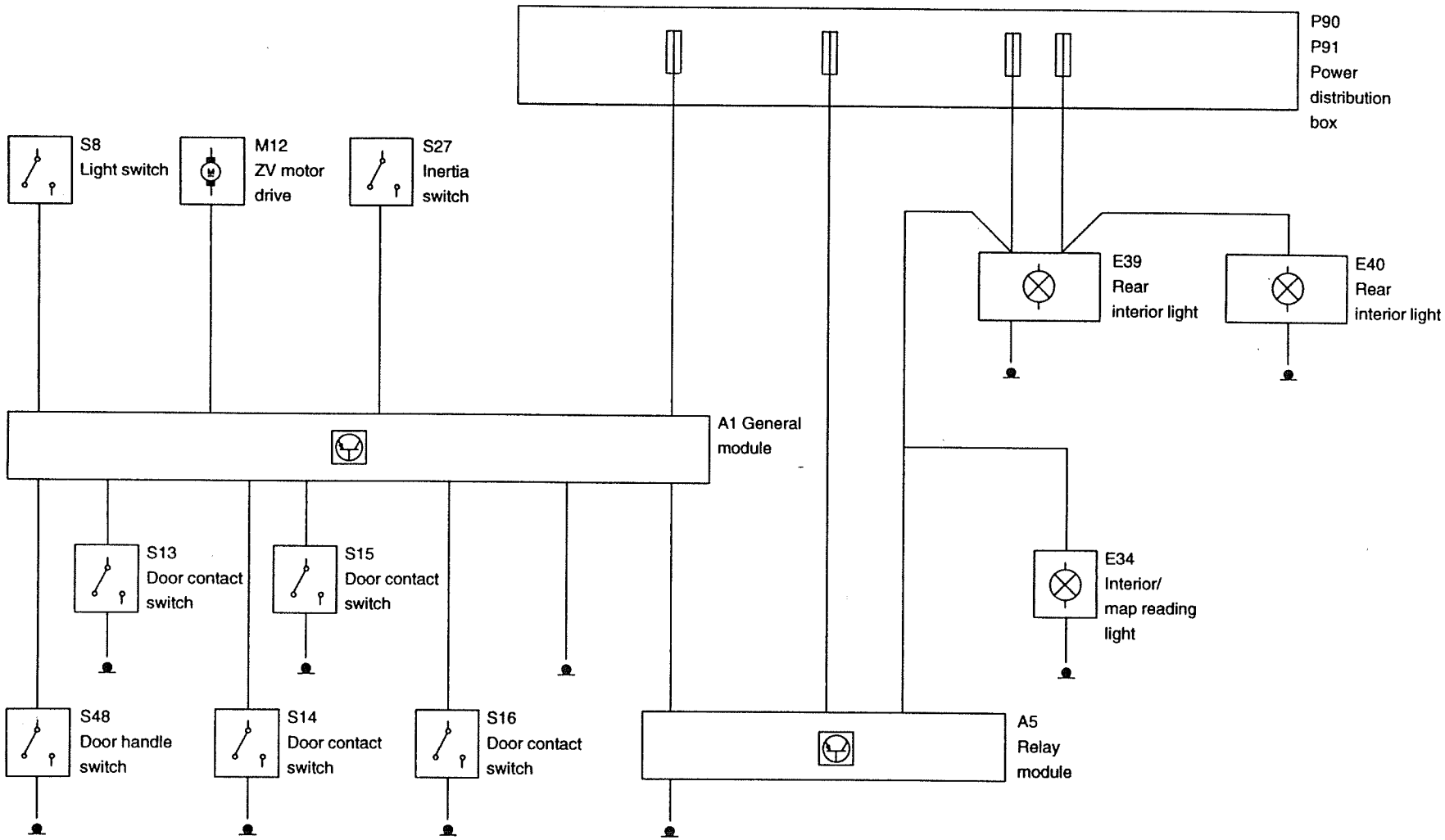

P32 63 002

Notes on the BMW DIAGNOSTIC SYSTEM

With ♦D♦MONITOR OUTPUTS, a check can be made as to whether the interior light relay in the relay module is switched on by the general module. The display does not depend on the position of the interior light switch.

The interior light control system is not included in the defect code memory of the central body electronics (ZKE). Troubleshooting is possible with the status lists only.

The interior light control is selected via the door lock heating system. If a door lock heating system is not installed, the "door lock heating" defect is of no significance.

A door lock contact can be installed only if the vehicle is equipped with a door lock heating system.

Abbreviations

ZKE	Central body electronics
IB	Interior light control
TGK	Door handle contact
TSH	Door lock heating
GM	General module
RM	Relay module
GM-A	General module connector A, 5-pin, colour white
GM-B	General module connector B, 26-pin, colour green
GM-C	General module connector C, 26-pin, colour white
GM-D	General module connector D, 26-pin, colour yellow
RM-A	Relay module connector A, 20-pin, colour black
RM-B	Relay module connector B, 20-pin, colour white
E	Input
A	Output

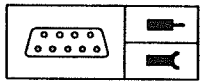

Pin Assignment

Connector Numbers

Number	Type	Description
X332	5-pin, white	GM-A
X253	26-pin, green	GM-B
X254	26-pin, white	GM-C installed only in conjunction with power windows
X255	26-pin, yellow	GM-D
X258	20-pin, black	RM-A up to model year '88 RM-B as of model year '89
X259	20-pin, white	RM-B up to model year '88 RM-A as of model year '89

Pin Assignments at the General Module

Pin	Type	Description/function	Connection	Signal type	Tester display	Measurement notes
D2	E	Driver's door handle contact	Driver's door handle	Ground	ON	
D15	E	Driver's door contact	Door contact	Ground	OPEN	
D1	E	Passenger's door contact	Door contact	Ground	OPEN	
D3	E	Door contacts of rear doors	Door contacts	Ground	OPEN	
B16	A	IB-relay activation in RM	Relay module Pin B7	B–	(activation)	

Pin Assignments at the Relay Module

Pin	Type	Description/function	Connection	Signal type	Tester display	Measurement notes
B7	E	IB relay activation	General module, Pin B16	B–	(activation)	
B6	A	Activation (ground) interior lights	Interior lights	B–		
B10	E	Ground connection for wiper and IB	Ground	B–		

Troubleshooting

Notes

- Troubleshooting with the BMW DIAGNOSTIC SYSTEM
- Battery charged, U-min = 12 V
- If all central body electronics functions ZKE have failed, carry out troubleshooting in accordance with Section 6100.0A Central Body Electronics (ZKE).

Important!

When the supply voltage is applied (terminal 30 at Pin A1), the ZKE general module detects which part systems are installed in the vehicle. Undefined contacting when plugging in the module can result in systems not being detected. Therefore:

Disconnect vehicle battery before installing a ZKE general module!

or

Disconnect the vehicle battery for at least 5 seconds after installing a ZKE general module.

Also refer to Section 6100.0A Central Body Electronics (ZKE), Functional Description and Troubleshooting.

Defect

Interior lights failed

Troubleshooting

Interior light switch in "permanent light" position! Does at least one lamp light?

— no → Is fuse for interior lights OK?

— no → Renew fuse.

— * —

yes ↓

Is fuse for interior lights OK?

yes ↓

Remove interior light switch, detach 4-pin white plug connection for interior light switch. Is ground connection to Pin 1 OK?

— no → Repair wire.

— * —

yes ↓

Remove interior light switch, detach 4-pin white plug connection for interior light switch. Is ground connection to Pin 1 OK?

yes ↓

Measure voltage between Pin 2 and ground. Is measured value approx. battery voltage?

— no → Repair wire from fuse to Pin 2.

— * —

yes ↓

Measure voltage between Pin 2 and ground. Is measured value approx. battery voltage?

yes ↓

Measure resistance at interior light switch (connector) between Pin 1 and Pin 4. Switch in permanent light position. Is the measured value < 1 Ω?

— no → Renew interior light switch.

— * —

yes ↓

Measure resistance at interior light switch (connector) between Pin 1 and Pin 4. Switch in permanent light position. Is the measured value < 1 Ω?

yes ↓

Check wires from the 4-pin plug connection to the interior light switch, repair if necessary. Check all bulbs, renew if necessary.

— * —

yes ↓

Do the rear lights operate? — no → Is bulb OK? — no → Renew bulb.

— * —

yes ↓

Is B+ supply for rear lights OK? — no → Repair wire.

yes ↓

Repair wire to front interior light switch.

— * —

yes ↓

Is a door lock heating system installed? — yes → ♦D♦MONITOR INPUTS. Lift door handle. Is the door handle contact displayed as ON? — no → Continue with Diagnostic Procedure 5120.0.

— * —

yes ↓

Continue with left column.

— * —

no ↓

no ↓

♦D♦MONITOR INPUTS. Open and close doors. Do the door contacts change between ON and OFF?

— no → Check door contact for mechanical defects (terminals, break etc.)! Is contact OK mechanically?

— no → Renew door contact.

—*—

yes ↓

Is ground connection to door contact OK?

— no → Repair wire.

—*—

yes ↓

Check door contact for continuity. Resistance is < 1 Ω, when contact is not depressed (door open). Is contact OK?

— no → Renew door contact.

—*—

yes ↓

Repair wire to general module. Driver's door: GM-D15, passenger's door: GM-D1, rear doors: GM-D3.

—*—

yes ↓

Interior light switch in "automatic" position. ♦D♦SIMULATE OUTPUTS. Does the interior light operate when actuated?

— yes → Automatic mode is OK electrically. If a defect is still suspected, read functional description.

—*—

no ↓

Remove interior light switch. Detach 4-pin white plug connection. Measure voltage between Pin 2 and Pin 3.
♦D♦SIMULATE OUTPUTS. Is approx. battery voltage measured?

— yes → Renew interior light switch.

—*—

no
↓

Is wire from Pin 3 to RM connector B (white) Pin 6 OK?

— no → Repair wire.

—*—

yes
↓

Is wire from GM-B13 to RM-B7 OK?

— no → Repair wire.

—*—

yes
↓

Renew relay module.

—*—

Notes

These instructions apply when a central locking module is installed in the 5 Series E32 up to and including model year 1991.

In this system, the ZV motor drives are blocked after setting the vehicle in arrest mode.

If the vehicle is equipped with a ZKE general module, carry out troubleshooting on the interior light control system in accordance with Section 6330.0A Interior Lights (ZKE).

Refer to Section 5126.1A Central Locking Module (ZVM) for description of operating principle of the central locking module

Functional Description

With the interior light switch, the interior lights (interior lighting - IB) can be switched to "continuous light", OFF or "automatic mode" (controlled by the central locking module). In automatic mode, the switch-on time is influenced by door contacts, ignition lock position, central locking system and door handle.

In automatic mode, the interior lighting is switched via the interior light relay (IB relay). Place of installation: Rear power distribution box. The relay switches ground to the IB switch. The IB relay itself is switched by the central locking module (ZVM) irrespective of the setting of the IB switch.

Switch-On Times

- 1. Door open: Interior light switched on for up to 16 minutes.
- 2. Opening and closing driver's door: After closing the door, the interior lights continue to light for approx. 20 seconds but switch off as of ignition lock position 1 (terminal R).
- 3. Opening and closing driver's door, locking door: The interior light switches off as the vehicle is locked.
- 4. Switching off the ignition when parking light was switched on: Interior light remains switched on for up to 20 seconds.

– only if door lock heating is installed –

- 5. Lifting door handle: Interior light is switched on for approx. 10 seconds (maximum of three times within 10 minutes).

When a door is left open, the interior lights are switched off after approx. 16 minutes in order to save the battery. The light is switched on again after closing and opening the door.

Important!

The interior light functions:

- Switching on via door handle contact,
- Automatic switch on after ignition off when parking light was switched on beforehand,

assume that a door lock heating system is installed.

Rear doors

The rear door contacts are not connected to the central locking module.

BMW 5

Interior Lights (IB/ZVM)

General Block Diagram

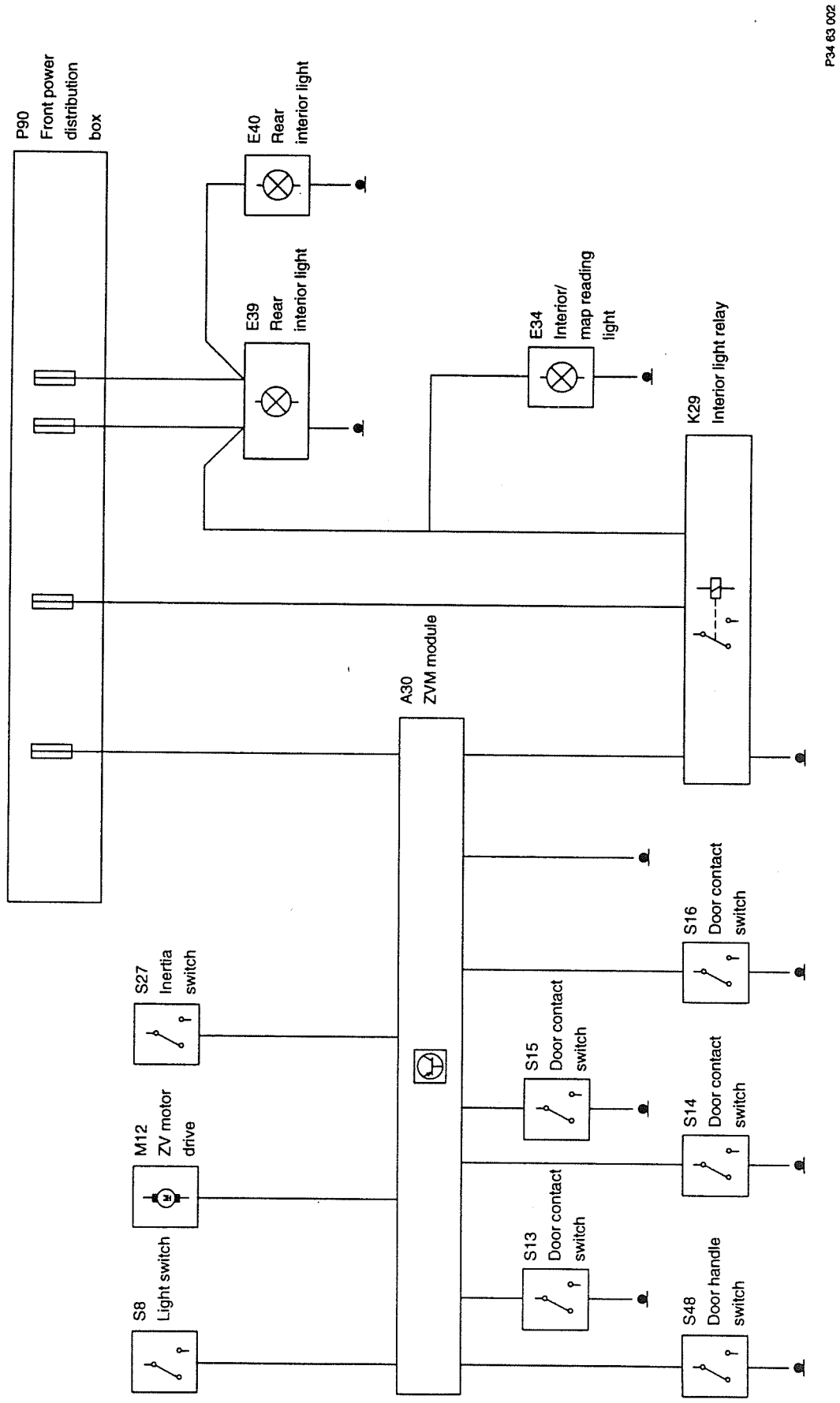

Notes on the BMW DIAGNOSTIC SYSTEM

General

Refer to notes on the BMW DIAGNOSTIC SYSTEM in Section 5126.1 Central Locking Module.

Without door lock heating:

- Door handle contact not installed, display in status list is always OFF.
- Wire to light switch (parking light) not installed, parking light always indicated in status display as OFF.

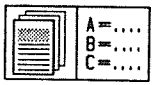

Abbreviations

IB	Interior lights, automatic interior light feature
IB-switch	Interior light switch
IB-relay	Interior light relay
ZVM	Central locking module
ZV	Central locking system
TSH	Door lock heating
E	Input
A	Output

Pin Assignment

Connector Numbers

Number	Type	Description
X1216	15-pin, black	ZVM connector A
X1217	26-pin, white	ZVM connector B
X286	Relay socket	IB-relay

Pin Assignments at ZVM

Pin	Type	Description/function	Connection	Signal type	Tester display	Measurement notes
A6	A	Interior light control	Relay for interior light	B–	(activation)	
B10	E	Driver's door contact	Door contact switch	Ground	OPEN	
B11	E	Passenger's door contact	Door contact switch	Ground	OPEN	
– only with optional extra door lock heating –						
B9	E	Door handle contact	Driver's door microswitch	Ground	ON	
B22	E	Parking light detection	Light switch terminal 58	B+	ON	

Pin Assignments at IB Relay, Connector X286

Pin	Type	Description/function	Connection	Signal type	Tester display	Measurement notes
2	A	Ground for IB switch	IB switch			
4	E	Activation	ZVM connector A, Pin 6			
6	E	Ground for working circuit	Ground			
8	E	B+ for control circuit	Fuse (terminal 30)			

Troubleshooting

Notes

- Troubleshooting with the BMW DIAGNOSTIC SYSTEM
- Battery charged, U-min = 12 V
- If all functions of the central locking system have failed, continue diagnostic procedure with Section 5126.1A Central Locking Module.

Defect Code Table

♦D♦900 Defect code memory – stored defect codes:

♦D♦Defect code 01 is stored → Defect code 01

Malfunctions:

Interior lights malfunctioning → Defect code 02

Defect Code 01

♦D♦900 Defect code memory: Defect code 01 is stored

Explanation: The central locking module (ZVM) detects a short to B+ at the connector A Pin 6.

Troubleshooting: As displayed on screen.

Defect Code 02

Interior lights malfunctioning → Defect code 02

Troubleshooting

1. Interior lights also faulty in "continuous light" setting → continue with troubleshooting in Section 6330.0A ZKE Interior Lights.
2. Rear lights malfunctioning → continue with troubleshooting in Section 6330.0A ZKE Interior Lights.
3. Interior light does not operate when rear doors are opened → Check rear door contacts (contact, ground wire) and wire to the IB relay Pin 4, repair if necessary.
4. Automatic interior light feature faulty, perform troubleshooting in accordance with instructions displayed on the screen in the BMW diagnostic system.

Notes

These instructions apply when a central locking module II (E36 system) is installed in the 5 Series, E34, as of model year 1992.

Refer to Section 5126.2A for description of Central Locking Module II (ZVM II).

In this system, the ZV motor drive is uncoupled internally from the locking linkage after setting the vehicle in arrest mode.

If a ZKE general module is installed, carry out troubleshooting on the interior lights in accordance with Section 6330.0 ZKE Interior Lights (IB).

Functional Description

General

The interior lights are controlled by the central locking module II (ZVM II). Refer to Section 5126.2A for description of the Central Locking Module II.

Operation

The interior lights can be switched by means of the interior light switch to "permanent light", "OFF" or "automatic" (controlled by the ZVM II).

Permanent light: Ground is applied directly to the IB lamps via the interior light switch

OFF: Interior light switch prevents the lamps being switched on by the module.

Automatic: The central locking module II switches ground to the lamps via a power transistor (in the module). The ON time is influenced by the door contacts, ignition switch position, central locking system, outer door handles and time sequences.

Automatic Mode

Switch–on conditions

- Doors open (door contact active)
- Turn ignition switch to position 0 (terminal R OFF) when terminal 58 (parking light) was switched on for at least 2 minutes beforehand.
- Raise outside door handle (terminal R OFF)
- Signal from crash sensor (see Section 5126.2A)

Switch–off conditions

Immediate switch–off:

- Doors closed and switch on ignition (terminal R or 15)
- Doors closed and lock vehicle

Delayed switch–off:

- Doors open longer than 16 minutes
- When IB switched on with outside door handle, deactivation after 8 seconds
- Close doors, switch–off after 20 seconds
- When interior lights activated by terminal R OFF and terminal 58 ON, switch-off after 16 seconds

Door handle contact

The door handle contact is only installed in conjunction with the optional extra door lock heating. In addition, the function "interior light via door handle contact" can be suppressed by coding (country-specific). ♦D♦ Test procedure indicates whether the door handle contact has an influence on the interior lights.

Repeat lockout

The interior lights can only be switched on three times within 16 minutes by way of the outer door handle. Further switch-on operations are ignored. The lockout is reset by opening and closing the driver's door.

Notes on the BMW DIAGNOSTIC SYSTEM

General

The terminal R (ignition switch in position 1 or 2) must be switched on to start the diagnostic procedure. The ignition can be switched off again and the ignition key removed from the ignition switch after output of the identification page.

Note

In a series of modules, the diagnostic procedures can only be started when the vehicle is unlocked and the terminal R is switched on. However, also in this case, the ignition can be switched off again and the vehicle locked after output of the identification page.

Test Procedure

The ♦**D**♦ Test procedure (BMW MoDiC ♦**D**♦ Status monitoring) makes it possible to check all components and contacts which have an influence on the control of the interior lights.

Activation of Interior Lights

It is possible to activate the interior lights as part of the guided test procedure. However, activation is only possible when:

– the vehicle is unlocked
– the ignition switch is in position 1 or 2.

The doors should also be closed otherwise the lights would be switched on without the activation function.

In the BMW MoDiC, the lights are activated by way of ♦**D**♦ Component activation.

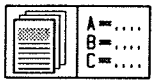

Abbreviations

FH	Power windows
IB	Interior lights
SG	Control unit
TSH	Door lock heating
ZVM	Central locking module
ZV	Central locking system

Pin Assignment

Connector Overview

Number	Type	Description
X13014	4-pin	ZVM connector A
X13013	5-pin	ZVM connector B
X13012	26-pin	ZVM connector C

Pin Assignments at Connector A, X13014

Pin	Type	Description/function	Connection	Signal type	Tester display	Measurement notes
1	A	Activation of interior lights	Interior light switch	B– (active status)	(activation)	Vehicle must be unlocked for activation
2	E	Rear door contacts	Rear door contacts	0 V 12 V	OPEN CLOSED	
3	E	Ground for interior lights	Ground connection	B–	(activation)	
4	E	Parking light detection	Light switch	Battery voltage	ON	

Pin Assignments at ZVM Connector C, X13012, in area of Interior Lights

Note: The complete pin assignments for the central locking module II can be found in Section 5126.2A.

Pin	Type	Description/function	Connection	Signal type	Tester display	Measurement notes
1	E	Ground for electronics	Ground connection	Battery voltage		
2	E	Passenger's door contact	Door contact	0 V 12 V	OPEN CLOSED	
3	E	B+ for electronic	Fuse, terminal 30	Battery voltage	Diagnostic procedure not possible in the case of fault	
4	E	Driver's door contact	Door contact	0 V 12 V	OPEN CLOSED	
5	E	Diagnostic link, RxD	Diagnostic socket, Pin 15	Square–wave		
6	A	Diagnostic link, TxD	Diagnostic socket, Pin 20	Square–wave		
7	E	Ignition switch, terminal R	Fuse	Battery voltage 0 V	ON OFF	
8	E	Door handle contact	Microswitch on door handle	0 V 12 V	ON OFF	
14	E	Crash signal	Crash sensor	B–	Defect code is stored	

Adapters

Component	Connector No.	Description	Adapter No.
ZV module	X13012	26-pin	Cartool 61 4 460 in conjunction with periphery box Cartool 61 1 459

Troubleshooting

Notes

Troubleshooting is mainly performed in accordance with instructions given by the BMW Diagnostic System. Note information provided on screen displays!

Defect Code Table

♦D♦ Defect code memory – stored defect codes:

Wire to interior light switch → Defect code 20

Malfunctions

General malfunction → Defect code 31

Defect Code 20

♦D♦ Defect code memory: Wire to interior light switch has short to positive

Explanation: Wire from ZV module 4-pin connector Pin 1 has short to positive.

Defect Code 31

General Malfunction

The BMW diagnostic system makes it possible to check the entire functional range of the interior lights by way of **♦D♦** test procedure in the diagnostic program for the central locking module II.

Functional Description

The crash and alarm sensor is installed as of 9/87 in E32 and as of 1/89 in E34 (only in conjunction with DWA). It is installed in the front power distribution box on the right-hand side next to the lamp control module. The CAG can be activated in two different ways:

Alarm

When the antitheft system is active (ground signal from DWA), the crash and alarm control unit triggers a visual signal for a period of approx. 5 minutes. The hazard warning system is switched on (not CH and Denmark version). It is not possible to switch the system off by way of the hazard warning switch during this period of time.

Additionally in ECE versions (not FRG, CH, Denmark versions) and USA versions, the lamp control module is activated in a push-pull cycle with respect to the flasher pulses. In the ECE versions, this results in the low beam lights flashing and in the USA versions the high beam lights flashing. The alarm is terminated by deactivation of the antitheft system.

Crash

The crash and alarm control unit switches on the hazard warning system in the event of a crash. It can be switched off by operating the hazard warning switch twice.

Notes on the BMW DIAGNOSTIC SYSTEM

This system does not feature diagnostic capabilities.

Abbreviations

CAG	Crash and alarm sensor (control unit)
DWA	Antitheft system
LKM	Lamp control module
CS	Crash sensor
WBS	Hazard warning switch
E	Input
A	Output

BMW 5 BMW 7

Crash and Alarm Sensor (CAG)

General Block Diagram

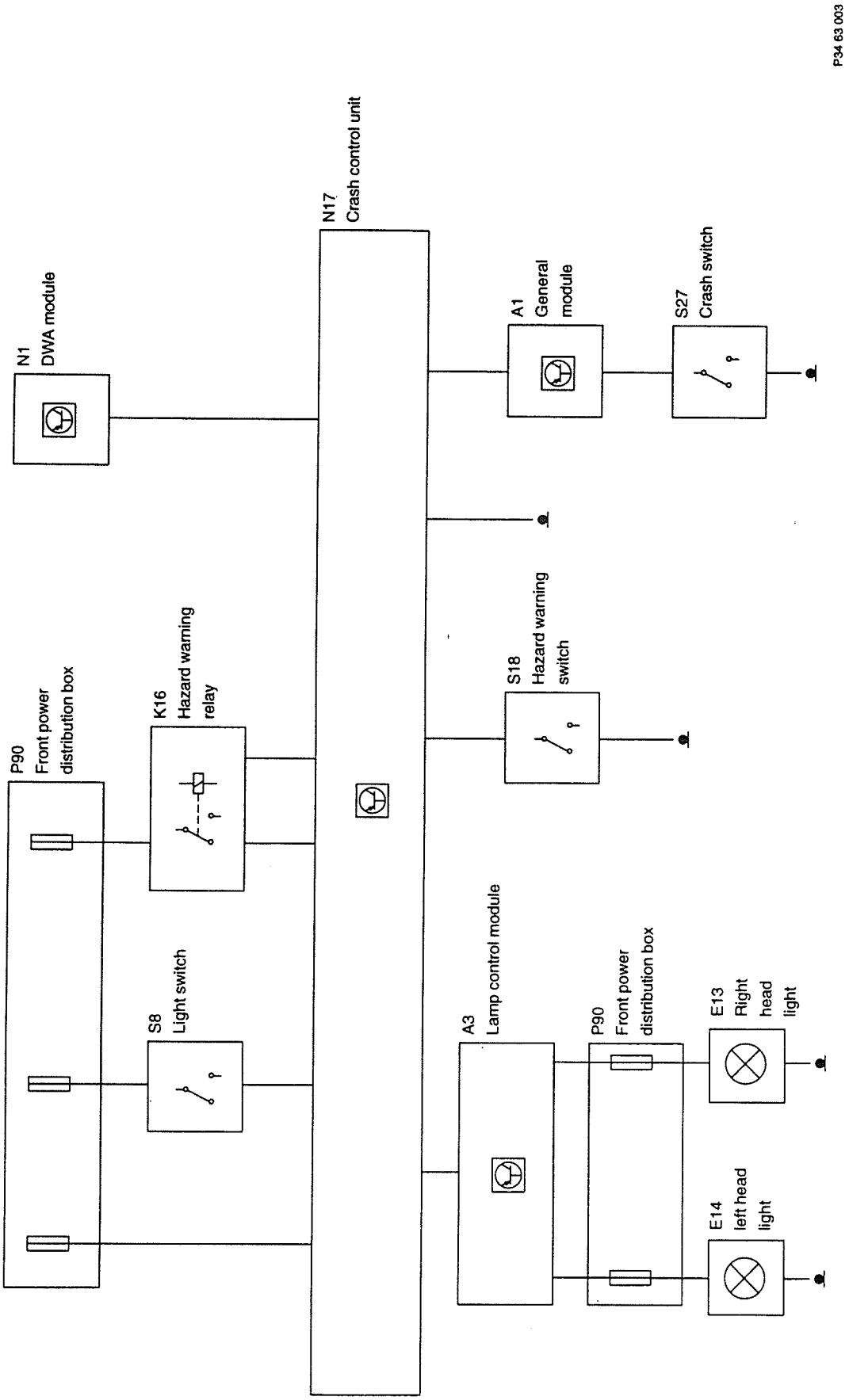

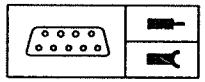

Pin Assignment

Pin	Type	Description/function	Connection	Signal type	Tester display	Measurement notes
1	E	Crash signal	General module, crash switch			
2	E	Alarm signal	DWA control unit			
3	E	Input, lights	Light switch			
4	E	Flash frequency signal	Hazard warning relay			
5	A	Hazard warning flasher unit signal	Hazard warning relay			
6	E	Battery voltage terminal 15	Fuse	approx. 12 V		
7	E	Hazard warning signal	Hazard warning switch			
8	E	Ground	Ground point	approx. 0 V		
9	A	LKM signal	Lamp control module			

Troubleshooting

Notes

Use relay adapter if necessary!

Defect Code Table

Failure of low beam light → Defect code 01

Failure of high beam light (USA)→ Defect code 01

Failure of hazard warning system → Defect code 02

Visual alarm is not triggered with DWA active (not CH, Denmark version) → Defect code 03

Low beam light or high beam light is not activated in push-pull system with respect to the flasher pulses in the event of alarm → Defect code 04

The hazard warning system is not switched on in the event of a crash → Defect code 05

Defect Code 01

Failure of low beam light (all with exception of USA)

Failure of high beam light (USA)

Troubleshooting

Error message "light failure" in instrument cluster display? — yes → Continue with diagnostic procedure 6301.0 for Lamp Control Module.

—*—

no ↓

Switch on low beam or high beam. Is approx. battery voltage applied at the CAG Pin 3? — no → Check fuses for the circuit, switch or wire and repair or renew as required.

—*—

yes ↓

Is vehicle ground applied at CAG Pin 8? — no → Check ground wire to CAG and repair if necessary.

—*—

yes ↓

Is approx. battery voltage applied at LKM input? — no → Check wire between CAG and LKM. Is wire OK? — no → Repair wire.

—*—

yes ↓

yes ↓

yes ↓

yes ↓

Continue with diagnostic procedure 63 01.

— * —

yes ↓

Check wire between CAG and LKM. Is wire OK? — no → Repair wire.

yes ↓

Renew CAG.

— * —

Defect Code 02

Failure of hazard warning system

Troubleshooting

Is approx. battery voltage applied at the switch input? — no → Check fuse and wire from hazard warning switch (WBS) to the CAG and repair if necessary.

— * —

yes ↓

Operate hazard warning switch. Is vehicle ground applied at CAG Pin 8? — no → Check hazard warning switch and wire from WBS to CAG and repair or renew if necessary.

— * —

yes ↓

Is vehicle ground applied at CAG Pin 8? — no → Check ground wire to CAG and repair if necessary.

— * —

yes ↓

Is vehicle ground applied at input of hazard warning flasher unit? — no → Check wire between input of hazard warning flasher unit and CAG Pin 5. Is wire OK? — no → Repair wire.

— * —

yes ↓

yes
↓
Check voltage supply at hazard warning flasher unit. If voltage supply is OK, renew hazard warning flasher unit.

— * —

yes
↓
Renew CAG.

— * —

Defect Code 03

No visual alarm is triggered with DWA active (not for CH, Denmark version)

Troubleshooting

Simulate alarm triggering. Is vehicle ground applied at CAG Pin 2?

— no → Is vehicle ground applied at DWA output?

— no → Renew DWA.

— * —

yes ↓

Check wire and DWA coding plug between DWA and CAG and repair if necessary.

— * —

yes ↓

Is approx. battery voltage applied at CAG Pin 5?

— no → Check voltage supply at CAG. Is voltage supply OK?

— no → Renew fuse or repair wire.

— * —

yes ↓

Renew CAG.

— * —

yes ↓

Check voltage supply at the hazard warning flasher unit. Is voltage supply OK?

— no → Repair wire or renew fuse.

|

yes

↓

Renew hazard warning flasher unit.

— * —

— * —

Defect Code 04

Low beam light or high beam light is not activated in push-pull system with respect to the flash pulses in the event of alarm.

Note: The low beam light is activated only in the case of ECE versions (not FRG, CH, Denmark).
The high beam light is activated only in USA versions.

Troubleshooting

Is the hazard warning system activated? — no → Continue with defect code 03

— * —

yes ↓

Check wire between hazard warning flasher unit Pin 4 and CAG Pin 4. Is wire OK? — no → Repair wire.

— * —

yes ↓

Renew CAG.

— * —

Defect Code 05

The hazard warning system is not switched on in the event of a crash.

Troubleshooting

Switch on ignition. Check driver's door. Lock vehicle with locking button at the driver's door. Detach 2-pin plug connection at the crash sensor (place of installation: Under the left rear seat). Simulate crash by briefly bridging Pin 1 and Pin 2 of the connector (wire to ZKE). Are doors unlocked?

— no → Check central locking system. Section 5126

—*—

yes ↓

Is vehicle ground applied at the input of the hazard warning flasher unit?

— no → Check wire between ZKE general module and CAG. Is wire OK?

— no → Repair wire.

—*—

yes ↓

Renew CAG.

—*—

yes ↓

Continue with defect code 02.

—*—

Overview of Climate Control Systems

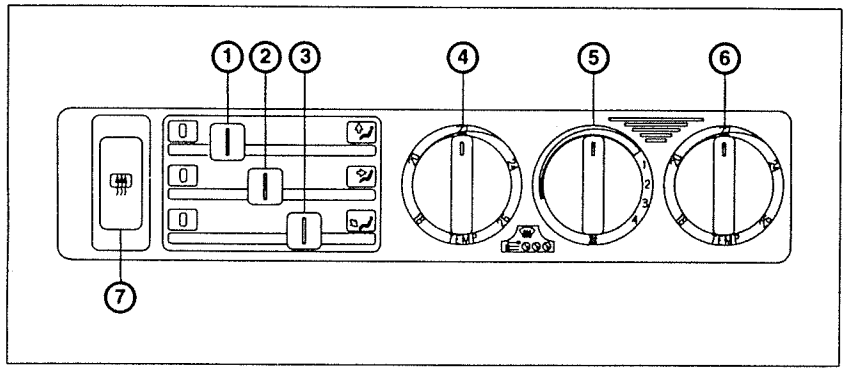

P 34 64 001

1 – Sliding lever for air distribution, up

2 – Sliding lever for air distribution, centre

3 – Sliding lever for air distribution, down

4 – Temperature selector, left side

5 – Rotary switch for air flow control

6 – Temperature selector, right side

7 – Push button for rear window defogger

HR34 analog and digital

Heating control system without self-diagnosis.

Installed only without filter.

Series: E34

Test procedure: 6410.0 A/B

Special features: HR34 analog and digital cannot be distinguished by way of the operator panel.

In the HR34 digital, the control unit for the rear window defogger is integrated in the control panel whereas the HR34 analog features a separate control unit for the rear window defogger.

HR34 analog was replaced by the HR34 digital.

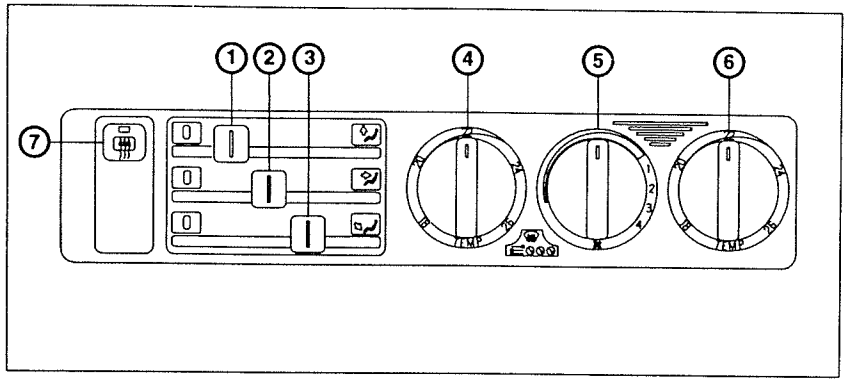

P 34 64 002

1 – Sliding lever for air distribution, up
2 – Sliding lever for air distribution, centre
3 – Sliding lever for air distribution, down
4 – Temperature selector, left side
5 – Rotary switch for air flow control
6 – Temperature selector, right side
7 – Push button for rear window defogger

IHR2

Automatic heating control with self-diagnosis.

Installed only in conjunction with filter.

Series: E34

Test procedure: Pin assignments as IHKR2. The components necessary for air conditioning, air mixing control, recirculation and mixing flap motor are not included.

Special features: Button for rear window defogger with LED function lights.

The rear window defogger is activated for 17 minutes by pressing the button and then switches off automatically.

In the current model year, the IHR2 is replaced by the IHR3 system.

Overview of Climate Control Systems

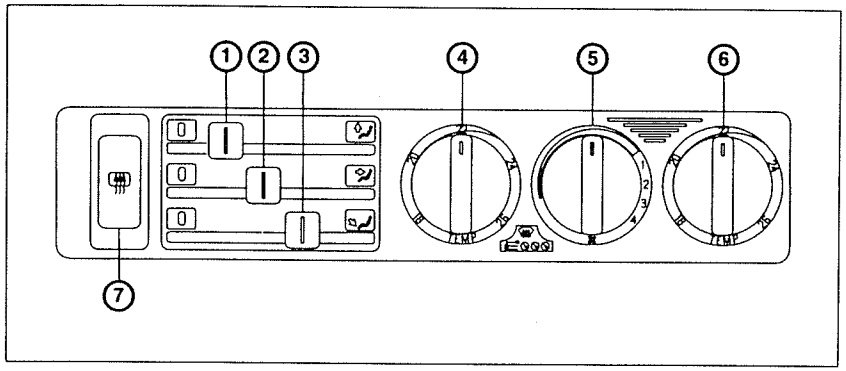

P 34 64 001

1 – Sliding lever for air distribution, up
2 – Sliding lever for air distribution, centre
3 – Sliding lever for air distribution, down
4 – Temperature selector, left side
5 – Rotary switch for air flow control
6 – Temperature selector, right side
7 – Push button for rear window defogger

IHR3

Automatic heating control without self-diagnosis.
Installed only in conjunction with filter.

Series: E34

Test procedure: see repair instructions

Special features: The control unit is integrated in the operating panel.
The IHR3 replaces the IHR2 in the current model year 1991.

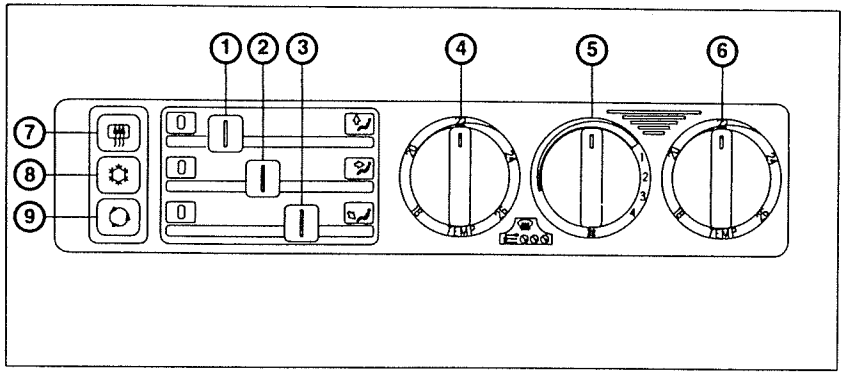

P 34 64 003

1 – Sliding lever for air distribution, up (cable assembly)
2 – Sliding lever for air distribution, centre (cable assembly)
3 – Sliding lever for air distribution, down (potentiometer)
4 – Temperature selector, left side
5 – Air flow control
6 – Temperature selector, right side
7 – Push button for rear window defogger
8 – Push button for air conditioning
9 – Push button for air recirculation

IHKR

Automatic climate control with self-diagnosis.

Installed optionally with or without filter.

Series: E34

Test procedure: 6450.1 A

Special features: Sliding lever for air distribution, sliding lever, down is a potentiometer.

The IHKR has been replaced by the IHKR2.

Overview of Climate Control Systems

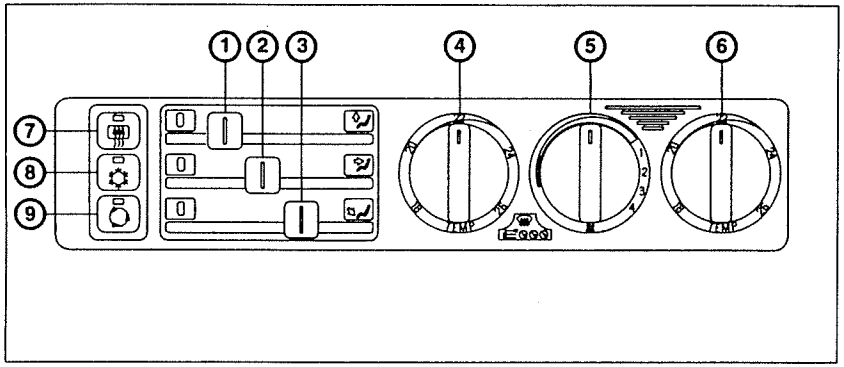

P 34 64 004

1 – Sliding lever for air distribution, up (cable assembly)

2 – Sliding lever for air distribution, centre (cable assembly)

3 – Sliding lever for air distribution, down (cable assembly)

4 – Temperature selector, left side

5 – Air flow control

6 – Temperature selector, right side

7 – Push button for rear window defogger

8 – Push button for air conditioning

9 – Push button for air recirculation

IHKR2 / IHKR3

Automatic climate control 2nd generation with self-diagnosis.

Installed optionally with or without filter.

Series: E34

Test procedure: 6450.3 A

Special features: Sliding lever for air distribution (all with cable assembly). Function lights of 3 keys with LEDs.

IHKR2 replaces the IHKR system.

The IHKR3 control unit differs from the IHKR2 control unit only by the smaller control unit housing (necessary space for filter). Function and pin assignments are identical.

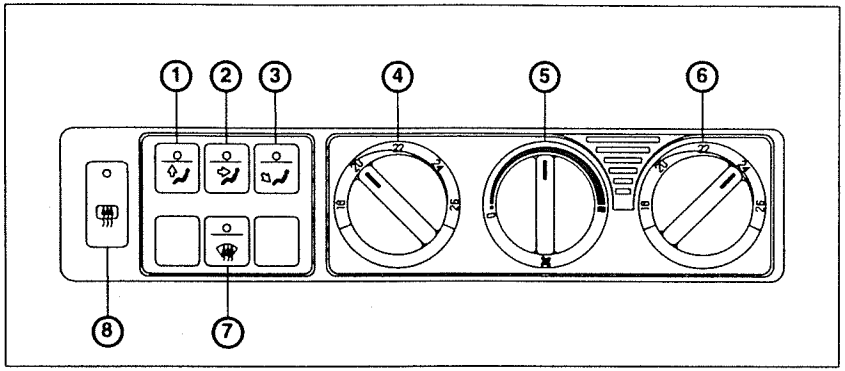

P 32 64 001

1 – Push button for air distribution, up
2 – Push button for air distribution, centre
3 – Push button for air distribution, down
4 – Temperature selector, left side
5 – Air flow control
6 – Temperature selector, right side
7 – Push button for maximum defrosting
8 – Push button for rear window defogger

IHR

Automatic heating control with or without filter. The control unit features self-diagnosis capabilities.

Series: E32

Test procedure: 6410.3 A

Special features: Ventilation grille for inside temperature between right temperature selector and air flow control. The IHR without filter has been replaced by the HR32 system.

Overview of Climate Control Systems

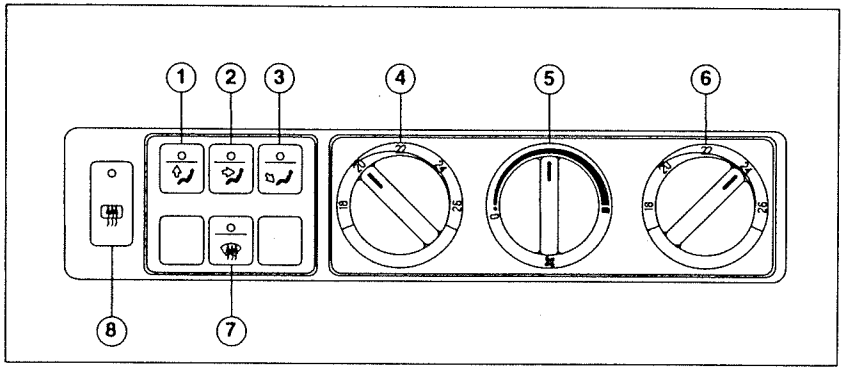

P 32 64 002

1 – Push button for air distribution, up
2 – Push button for air distribution, centre
3 – Push button for air distribution, down
4 – Temperature selector, left side
5 – Air flow control
6 – Temperature selector, right side
7 – Push button for maximum defrosting
8 – Push button for rear window defogger

HR32

Heating control system with self-diagnosis.

Installed only without filter.

Series: E32

Test procedure: 6410.2 A/B

Special features: Control unit integrated in control panel. No interior temperature sensor in control panel (2 footwell sensors). The HR32 replaces the IHR without filter.

Overview of Climate Control Systems

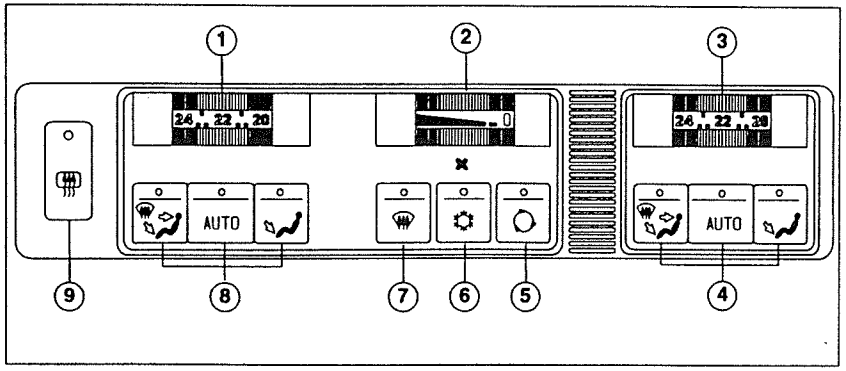

P 32 64 003

1 – Temperature selector, left side
2 – Air flow control
3 – Temperature selector, right side
4 – Program buttons, air distribution, right side
5 – Push button for air recirculation
6 – Push button for air conditioning
7 – Push button for maximum front and side window defrosting
8 – Program buttons, air distribution, left side
9 – Push button for rear window defogger

IHKA

Automatic climate control with self-diagnosis.
Installed optionally with or without filter.

Series: E34 and E32

Test procedure: 6450.0 A/B

Special features: Push buttons for air distribution.

Overview of Climate Control Systems

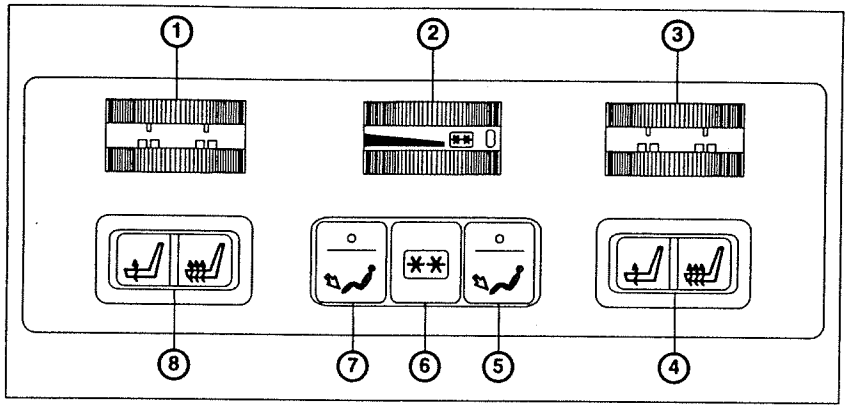

P 32 64 004

1 – Temperature selector, left side
2 – ON/OFF switch and selector for coolbox operation and air flow control
3 – Temperature selector, right side
4 – Rocker switch for seat heating, right side
5 – Push button for air distribution, down, right side
6 – Indicator lamp for coolbox operation
7 – Push button for air distribution, down, left side
8 – Rocker switch for seat heating, left side

FHK

Rear climate control with self-diagnosis

Series: E32

Model: 750iL

Test procedure: 6450.2 A/B

Special features: Installed only in conjunction with high-line rear area equipment.

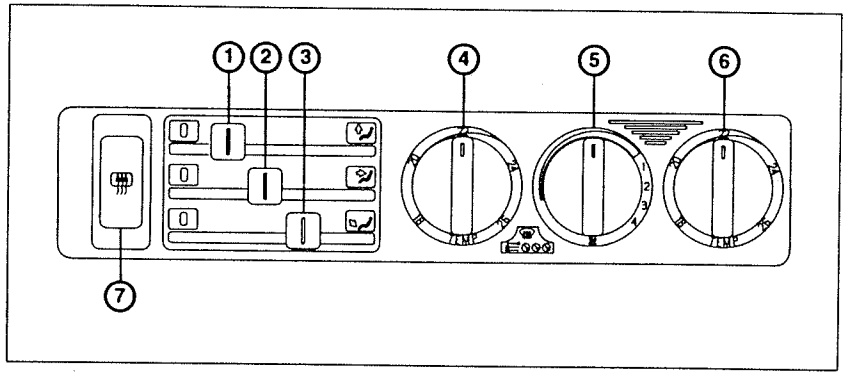

P34 64 001

1 – Sliding lever for air distribution, up
2 – Sliding lever for air distribution, centre
3 – Sliding lever for air distribution, down
4 – Temperature selector, left side
5 – Rotary switch for air flow control
6 – Temperature selector, right side
7 – Push button for rear window defogger

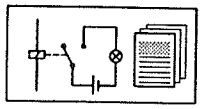

Functional Description

General

The heating system is controlled by two solenoid valves on the water side. The temperature can be set independently on the driver's and passenger's side. Two temperature selectors are provided for this purpose on the control panel. Two temperature sensors in the left and right footwell and two heater temperature sensors signal the relevant temperatures to the control unit.

Corresponding to the deviation from the set temperature, the water valves arranged in the inlet to the heating water circuit are closed to a greater or lesser extent, thus controlling the inside temperature. The water valves are operated electromagnetically and are open in their rest position. This ensures full heating capacity is available even in the event of failure of the electrical system (e.g. electronic control defective).

After a cold start, the temperature control system cuts in after the preset temperature has been reached. This ensures that the car interior can heat up at a fast rate without having to set the temperature selectors to maximum heating.

Air Distribution

Air distribution is controlled by sliding control levers which operate flaps via cable assemblies.

Heater Blower

The blower can be set in four stages with a blower switch. At the same time, the blower switch also operates the fresh air flaps in conjunction with a cable assembly. Flap control is continuously variable within the range of the switch settings 0 to 2. In this way, the supply of fresh air can be interrupted in the case of an unpleasant odour occurring suddenly without changing the air distribution setting.

Notes on the BMW DIAGNOSTIC SYSTEM

This system does not feature diagnostic capabilities.

Abbreviations

not applicable

Heating Control (HR 34) – Analog

General Block Diagram

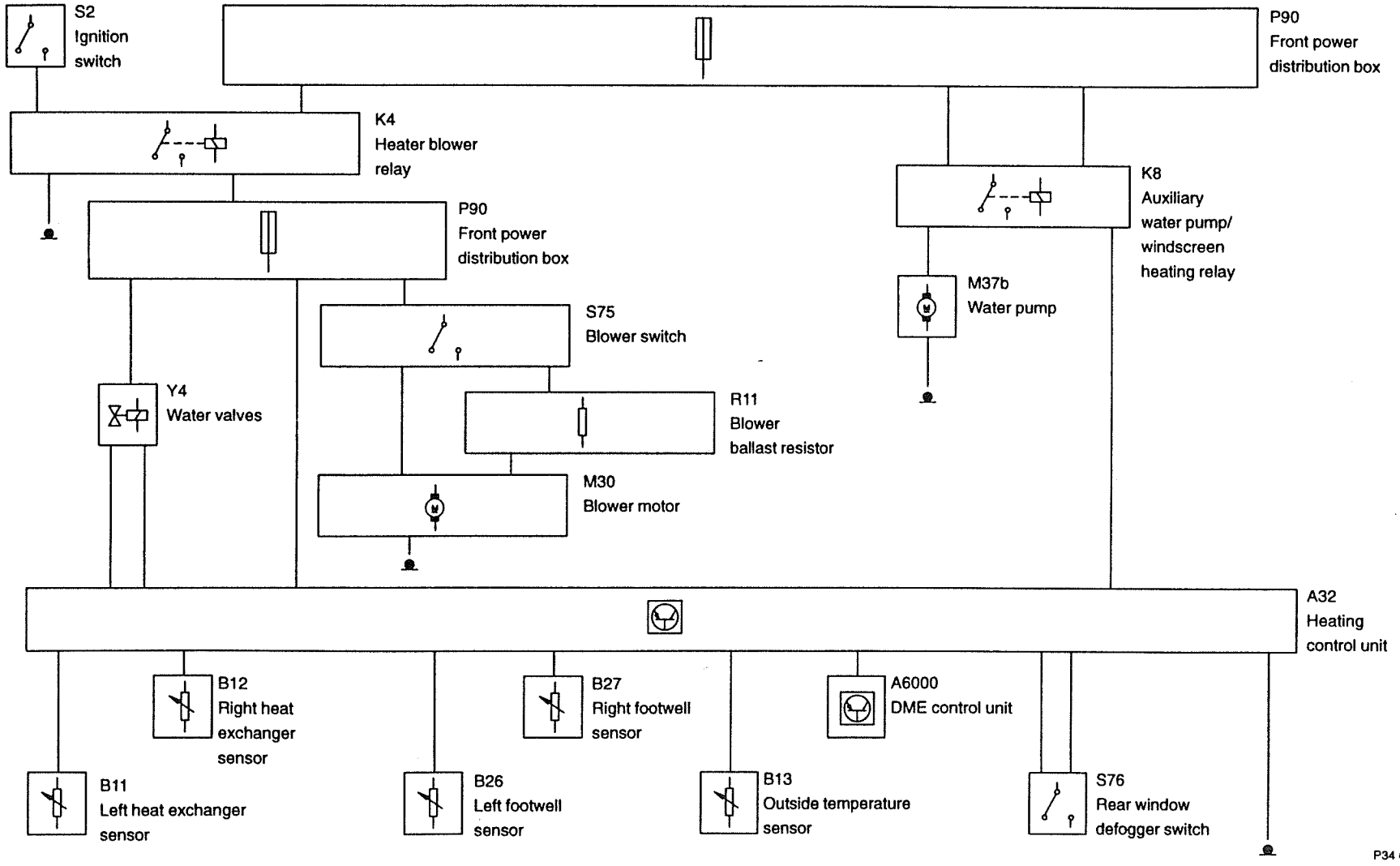

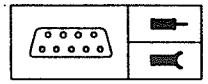

Pin Assignment

Connector, Heating Control Unit X899

Pin	Type	Description/function	Connection	Signal type	Tester display	Measurement notes
1	E	Left footwell sensor	Left footwell sensor			
2	E	Right footwell sensor	Right footwell sensor			
3	E	Right heater temperature sensor	Right heat exchanger sensor			
4	E	Outside temperature sensor	Outside temperature sensor			
5	E	Terminal 15	Fuse			
6	E	Ground	Ground			
7	E	Left heater temperature sensor	Left heat exchanger sensor			
8	A	Right water valve activation	Right water valve			
9		Not used				
10	E	Lights	Power circuit light switch			
11	E	Ground	Ground X938			
12	A	Left water valve activation	Left water valve			

Pin Assignments at Defogger Control Unit A91

Pin	Type	Description/function	Connection	Signal type	Tester display	Measurement notes
1		Not used				
2	E	Terminal 15	Fuse F29			
3	E	Lights (rear window defogger ON)	Power circuit light switch			
4	E	Rear window defogger switch ON	Rear window defogger switch			
5	A	Relay activation, rear window defogger	Rear window defogger relay			
6	E	Ground	Ground X497			
7		Not used				
8	A	Activation, indicator lamp in rear window defogger switch	Rear window defogger switch			

Pin Assignments at Blower Switch S75

Pin	Type	Description/function	Connection	Signal type	Tester display	Measurement notes
1	A	Stage 1	Blower resistors			
2	A	Stage 2	Blower resistors			
3	A	Stage 3	Blower resistors			
4	A	Stage 4	Blower motor			
5	E	Battery voltage with fan relay energized	Fuse F19			

Pin Assignments at Rear Window Defogger Switch S76

Pin	Type	Description/function	Connection	Signal type	Tester display	Measurement notes
1	E	Ground	Ground X497	0 V		
2		Not used				
3		Not used				
4	A	Rear window defogger switch ON	Rear window defogger control unit			
5	E	Lights	Power circuit light switch			
6		Not used				
7		Not used				
8	E	Activation, indicator lamp rear window defogger ON	Rear window defogger control unit			

Pin Assignments at Rear Window Defogger Relay K13

Pin	Type	Description/function	Connection	Signal type	Tester display	Measurement notes
1		Not used				
2	A	Rear window defogger signal ON	Rear window defogger			
3		Not used				
4	E	Terminal 15	Fuse F29			
5		Not used				
6	E	Battery voltage	Fuse F46/35			

Heating Control (HR 34) – Analog

Pin Assignments

Pin	Type	Description/function	Connection	Signal type	Tester display	Measurement notes
7		Not used				
8	E	Rear window defogger activation	Rear window defogger control unit			

Troubleshooting

Notes

- If heating and/or blower do not operate → K4 blower relay.
- Check contacts of the plug connections before replacing components.
- Check ground on the left side of the footwell next to the heater when the lighting of the heater control unit and the blower motor do not operate.

Defect Code Table

Heater control unit operates correctly on one side only → Check at corresponding water valve whether the outlet is warm. If water valve is OK → Check control circuit of the corresponding water valve and the temperature sensors for a short to B–.

Heater control unit lighting defective → Check wire to control unit for a break.

Blower operates in stage 4 only → Check wire between blower resistor and connector X941. If wire OK → Replace blower resistors.

Blower does not operate in a certain blower stage → Check the wire starting from the corresponding pin of the blower switch or ballast resistor (see Component testing).

Indicator lamp in rear defogger switch does not light but the rear window defogger operates correctly → Check bulb by switching on the parking light. Check wire and heater control unit by measuring the voltage with respect to ground from Pin 8 of the defogger switch when the ignition and rear window defogger are switched on.

The temperature must be reset manually in order to compensate for extreme outside temperature fluctuations → Check outside temperature sensor → See Component Testing.

Heating control unit and blower do not operate correctly **Defect code 01**

The heating control system reduces the temperature neither on one nor on both sides, but the blower and rear window defogger operate correctly → **Defect code 02**

Blower does not operate in any stage but the heater control unit is OK → **Defect code 03**

Rear window defogger and indicator lamp in the switch do not operate when the switch is pressed → **Defect code 04**

Indicator lamp in rear window defogger switch lights when switch is operated but the rear window defogger does not operate → **Defect code 05**

Defect Code 01

Heater control unit and blower do not operate correctly

Possible cause: Fuse, blower relay defective, switching circuit for blower relay defective

Troubleshooting

Disconnect blower relay. Switch on ignition. Measure voltage between Pin 5 and Pin 4. Is battery voltage applied?

— no → Measure voltage from Pin 5 with respect to ground. Is battery voltage applied?

— no → Repair GREEN wire.

— * —

yes ↓

Repair wire from Pin 4 to ground.

— * —

yes ↓

Measure voltage from Pin 6 with respect to ground. Is battery voltage applied?

— no → Repair RED wire from blower relay to ignition lock.

— * —

yes ↓

Reconnect relay. Check voltage at the fuse inputs. Is battery voltage applied ?

— no → Replace blower relay.

— * —

yes ↓

Continue with defect code 03.

Defect Code 02

Heater control system reduces the temperature neither on one nor on both sides but the blower and rear defogger operate correctly

Possible cause: Fuse tripped, interruption in voltage or ground supply to heater control unit, break in wires to water valves, heater control unit defective, temperature sensor defective

Troubleshooting

Switch on ignition and blower and set lowest possible temperature. Is battery voltage applied at the water valve connector pin 1?

— yes → Measure voltage between Pin 1 and Pin 3 as well as Pin 1 and Pin 2. Is battery voltage applied in both cases?

— yes → Replace solenoid valve(s).

— * —

no ↓

Repair wire between water valve and fuse.

— * —

no ↓

Disconnect heater control unit. Is battery voltage applied at control unit connector between Pin 5 and Pin 6?

— no → Repair wire to Pin 5 and/or Pin 6.

— * —

yes ↓

Is voltage applied at Pin 8 and Pin 12?

— no → Renew corresponding wire to the water valve or solenoid coil for water valve. See Repair Instructions HG 64.

— * —

yes ↓

Check resistance of the footwell sensors, heater sensors and of the outside sensors at the control unit connector (see Pin Assignments). Is resistance OK?

— no → Renew wire to defective sensor or the sensor itself.

— * —

yes

↓

Renew heater control unit.

— * —

Defect Code 03

Blower does not operate in any stage but the heater control unit is OK.

Possible cause: Fuse, power supply to blower switch interrupted, break in power circuit for blower motor, blower switch defective, blower motor defective.

Troubleshooting

Detach connector from blower switch. Switch on ignition. Measure voltage between Pin 5 and ground. Is voltage applied?

— no → Repair wire to fuse.

— * —

yes ↓

Connect jumper between Pin 5 and 4. Is the blower motor running?

— yes → Replace blower switch.

— * —

no ↓

Retain jumper in the connector. Detach connector from blower motor. Measure voltage between Pin 2 and 1. Is voltage applied?

— no → Measure voltage between Pin 2 and ground. Is voltage applied?

— yes → Repair ground wire.

— * —

yes ↓

Replace blower motor.

— * —

no ↓

Repair wire from blower connector to blower switch.

— * —

Defect Code 04

Rear window defogger and indicator lamp in rear window defogger switch do not operate when the switch is depressed

Possible cause: Voltage or ground supply to defogger control unit interrupted, rear window defogger switch interrupted, rear window defogger control unit defective, rear window defogger switch defective

Troubleshooting

Switch on parking light. Does the indicator lamp in the rear window defogger switch light dimly?

— no → Check wire from rear window defogger switch. If wire is OK → Replace rear window defogger switch.

— * —

yes ↓

Detach control unit from defogger connector. Switch on ignition. Measure voltage between Pin 2 and Pin 6. Is battery voltage applied?

— no → Measure voltage between Pin 2 and ground. Is voltage applied?

— no → Repair fuse or wires.

— * —

yes ↓

Repair wire between Pin 6 and ground.

— * —

yes ↓

Detach connector from defogger switch. With defogger switch depressed, measure continuity between Pin 4 and Pin 1 of the switch. Is continuity OK?

— no → Replace rear window defogger switch.

|

yes

↓

Is continuity between Pin 4 at the switch and Pin 4 at the control unit OK? — yes → Replace control unit.

|

no

↓

Repair wire.

— * —

— * —

Defect Code 05

Indicator lamp in the rear window defogger switch lights brightly when pressed but the rear window defogger does not operate

Possible cause: Break in wire to rear window, rear window relay defective, defogger control unit defective

Troubleshooting

Switch on ignition. Operate rear window defogger switch. Select a point in the centre of the rear window. Measure voltage between each individual heating wire element and ground. Is the voltage at several wire elements approx. half the battery voltage?

— yes → The wire heating elements, at which half battery voltage is not applied are defective. Move measuring probe of the voltmeter horizontally on the wire heating element. There is a break at the point where the voltage changes suddenly. Renew rear window.

— * —

no ↓

Is the voltage at all wire heating elements approx. 0 V?

— no → Disconnect the wires coming from the rear window at the connector (C-post right) and connect in turn to ground. Does a part of the wire heating element heat up in both cases?

— yes → Replace connector.

— * —

— * —

yes ↓

Is battery voltage applied at the connector outputs of the amplifier?

— no → Is battery voltage applied at the connector input of the amplifier?

— yes → Replace antenna amplifier.

— * —

yes ↓

no ↓

Repair wire to antenna amplifier.

— * —

|

yes

↓

Disconnect rear window defogger relay. Measure voltage between Pin 8 and Pin 4. Is voltage applied?

— no → Measure voltage between Pin 4 and ground. Is voltage applied?

— yes → Check wire to Pin 8 X292 for a break. If wire is OK → Replace defogger control unit.

— * —

|

yes

↓

|

no

↓

Repair wire from Pin 4 to fuse.

— * —

Is battery voltage applied between Pin 6 and ground?

— yes → Check wire from Pin 2 to the antenna amplifier. Is wire OK?

— yes → Renew relay.

— * —

|

no

↓

Repair wire to the fuse.

— * —

|

no

↓

Repair wire.

— * —

Component Testing

Blower Resistors

Test procedure: Resistance

Check:

Between Pin:	Resistance
1 and 4	0.7 Ω
1 and 2	1 Ω
2 and 3	2.2 Ω

If the measured value deviates from the specified value → Replace blower resistors.

Left or Right Footwell Temperature Sensor

Test procedure: Resistance

Check:

Temperature (degrees C)	Resistance
0	35.102 kΩ
25	10.00 kΩ
40	5.104 kΩ

If the measured value deviates by more than 5% from the specified value → Replace footwell temperature sensor.

Left or Right Heater Sensor

Test procedure: Resistance

Check:

Temperature (degrees C)	Resistance
0	32.650 kΩ
25	10.000 kΩ
40	5.327 kΩ

If the measured value deviates by more than 10% from the specified value → Replace heating sensor.

Outside Temperature Sensor

Test procedure: Resistance

Check:

Temperature (degrees C)	Resistance
0	3.075 kΩ
25	1.000 kΩ
40	0.547 kΩ

If the measured value deviates by more than 5% from the specified value → Replace outside temperature sensor.

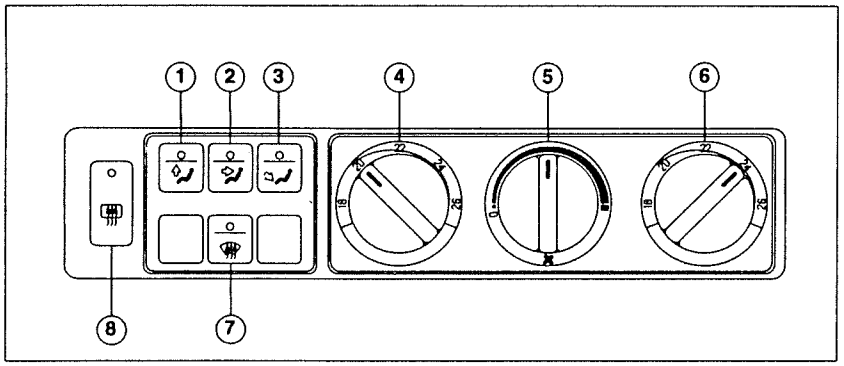

P 32 64 002

1 – Push button for air distribution, up

2 – Push button for air distribution, centre

3 – Push button for air distribution, down

4 – Temperature selector, left side

5 – Air flow control

6 – Temperature selector, right side

7 – Push button for maximum defrosting

8 – Push button for rear window defogger

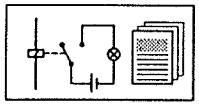

Functional Description

The HR32 is a water-based heating control system. The control system is regulated by two electrically operated water valves in separate heat exchangers on the left and right sides. The control unit performs open-loop and closed-loop control functions with the aid of a microprocessor.

All air distribution flaps are set corresponding to the flap programs by means of stepper motors. The Y-factor left/right is calculated from the input data (outside temperature, heater temperatures, selector positions, push button settings etc.) and a corresponding flap program is selected. After switching off the ignition, the flap program "defrost" is set for safety reasons.

In contrast to the IHR system (interior temperature sensor in operating panel), the inside temperature is evaluated by means of two separate footwell sensors.

Master Controller Y

The master controller is a value calculated by the control unit which separately activates the left and right outputs (water valves) dependent on the input values (nominal temperature value, interior temperature and outside temperature). The Y-value is also included in the calculation of the flap control.

The value of the master controller is between –25% (cooling) and 127% (high heat requirement).

Selector Switch Function

Air Flow Control:

The HR32 system is switched on with the air flow control and the value for the air flow rate is set. An increase in the set air flow rate as the result of increased wind pressure when driving is compensated by closing the fresh air flap dependent on the vehicle speed.

A switch is coupled to the air flow control to ensure the blower can still provide emergency operation in the case of a defect in the air flow control switch, failure of the control unit or a defect in the electronic circuitry of the output stage. This switch is set to the maximum position of the air flow control switch. The blower then runs at full power. The switch is not included in the control unit diagnosis.

Temperature selectors:

The nominal value for the inside temperature is set with the temperature selector switches. The temperature values indicated on the selector switch of the control panel do not correspond to those used by the control unit and the values which can be read out via the status lists, but rather to a comfort temperature.

When the temperature selector switch on the driver's side is set to maximum, the positive supply to the water valves is interrupted by way of a mechanically coupled switch.

Relay Outputs

All relays (also water valves) are switched by applying ground to the corresponding output of the control unit. The diagnostic procedure for the control unit only covers the control circuit of the relays.

Push Buttons

The air distribution setting can be freely selected with 3 push buttons.

The defrost program button has priority over the air distribution buttons. The defrost program is activated by pressing the defrost button. All current programs are interrupted and the function lights (apart from rear window defogger) of the previously selected program go out.

With the engine running, the rear window defogger button when pressed for the first time switches on the heated rear window (defogger stage). After this defogging time of 10 minutes has elapsed, the function LED goes out and the heated rear window is switched off for 80 seconds and switched on for 40 seconds. After a modulation time (clock cycle time) of 20 minutes, the rear window defogger switches off automatically and is reactivated when the rear window defogger button is depressed once again.

Independent Heating/Independent Ventilation

Flaps	Independent heating	Independent ventilation
Defrosting	100 %	0 %
Footwell	100 %	0 %
Ventilation	0 %	100 %
Fresh air	100 %	100 %
Blower	5 V	5 V
Water valves	open	open

100 % = open

0 % = closed

If an independent heating system is installed, the relay box, which switches the independent heating or independent ventilation program in the HR32 control unit, can be activated via the on-board or the multi-function clock. At the selected time, the on-board computer (or multi-function clock) switch on the independent heating at an outside temperature < 16° C and the independent ventilation at an outside temperature > 16° C.

Stepper Motors

Stepper motors are installed in order to move the various flaps. The control unit assumes that, on completion of calibration, the stepper motors are in a defined position since they cannot signal their position to the control unit. Calibration is necessary when the power supply (terminal 15 and terminal 30) of the control unit was interrupted and is started after ignition ON.

The defect detection function can differentiate between a short to positive and a break in the circuit. When the control unit detects a stepper motor defect, the corresponding motor is switched off.

Windscreen Heating

With the ignition switched on and the outside temperature 5° C, the HR32 control unit switches the windscreen heating relay to ground and the heating element is activated. The windscreen heating system remains switched on for as long as the value of the outside temperature sensor of the HR32 is less than 8° C. The heating system is switched off when the outside temperature increases to above 8° C.

Windscreen heating is no longer featured in model year 1990. Since there is no way of differentiating between installed and not installed windscreen heating system, the defect code memory of the windscreen heating relay is no longer evaluated.

Auxiliary Water Pump

The auxiliary water pump is switched on when the blow-off temperature on one side of the heat exchanger exceeds the value of 30° C after a new start or the setting variable Y_L OR Y_R is above 15%. The water pump is connected when the set value potentiometer on the driver's side is set to the end position.

The auxiliary water pump is switched off when the value drops below 10 % of the setting variable Y_L AND Y_R.

Heating Control (HR32)

General Block Diagram

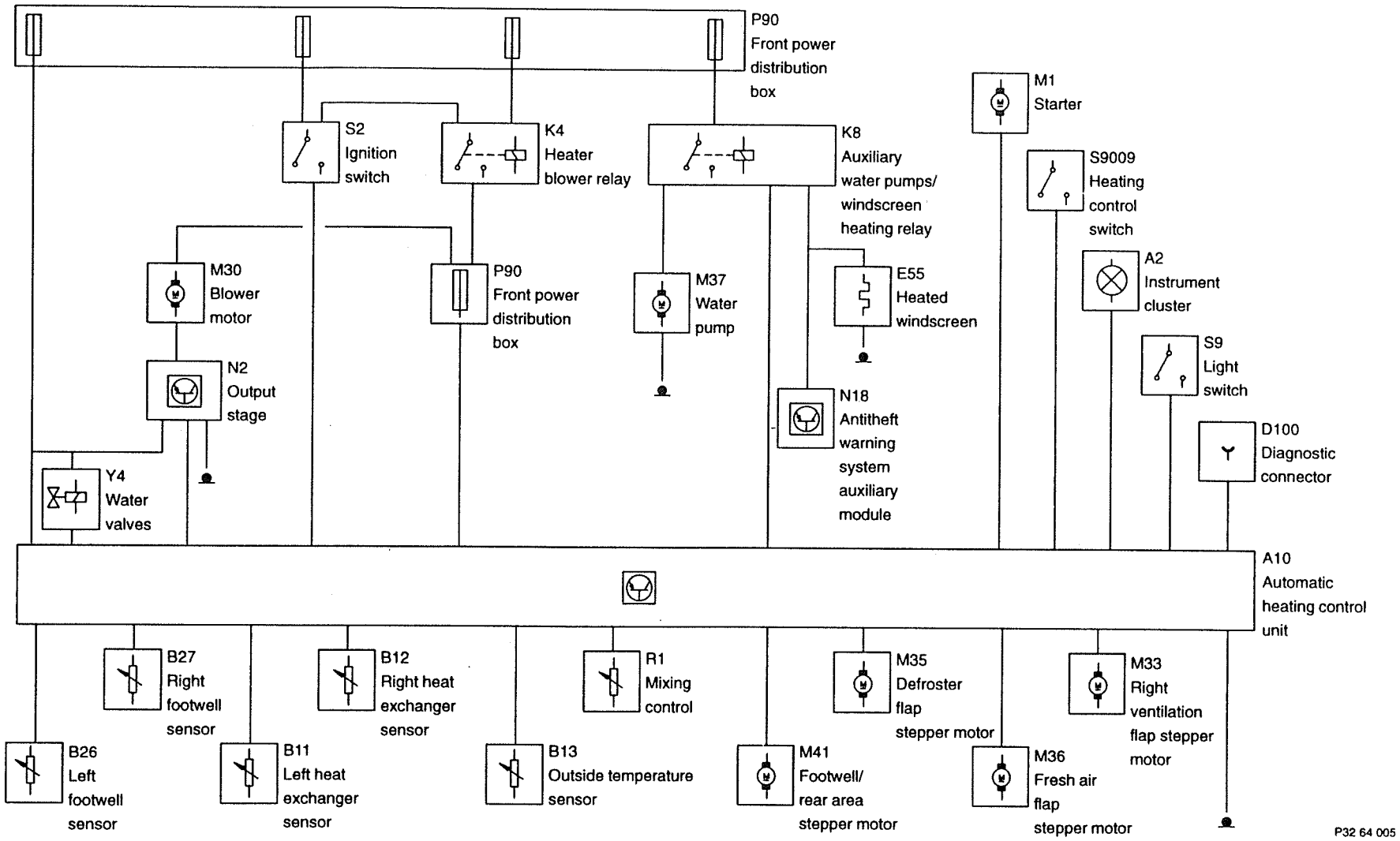

Notes on the BMW DIAGNOSTIC SYSTEM

The following component functions and signals are processed or controlled by the HR 32 control unit but not stored as a defect code in the case of a fault:

- * – All buttons in the operating unit, independent heating OR independent ventilation from the relay box
- Voltage supply of function LEDs
- Control of function lighting
- Voltage supply for search light
- * – Blower control voltage to blower motor output stage
- Diagnostic links RxD / TxD to BMW Service Tester

The component functions and signals marked with * can be read out in the status lists of the BMW Service Tester.

The HR32 control unit clears the defect code memory when the voltage supply (terminal 30) is interrupted. After repairing the defect, the defect code memory can be cleared with the BMW Service Tester.

The display "current defect" shows that there is currently a defect in the system. The component or the function is then not used by the control unit. For instance, a relay is then not driven by the control unit. If a current defect is indicated for the temperature sensors or selector switches, a substitute value made available by the control unit is used for these components.

As of software V01 the defect code is entered in the defect code memory only when terminal 61 is active (engine running).

Abbreviations

not applicable

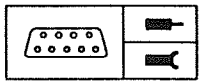

Pin Assignment

Connector Numbers

Connector at control unit

Number	Type	Description
X611	26-pin, green	
X610	26-pin, white	

Plug Connections

Number	Type	Description
X35/36		Plug connection to front section of wire harness up to break 88
X35		Plug connection to front section of wire harness LHD from break 88
X24		Plug connection to front section of wire harness RHD from break 88
X671	5-pin, green	Plug connection to output stage
X682	3-pin, white for independent heating/independent ventilation	Plug connection to relay box

Pin Assignments at Control Unit Connector X611

Pin	Type	Description/function	Connection	Signal type	Tester display	Measurement notes
1	A	Activation, right water valve	Right water valve			
2	A	Activation, defroster flap motor	Defroster flap motor			
3	A	Activation, defroster flap motor	Defroster flap motor			
4	A	Activation, defroster flap motor	Defroster flap motor			
5	A	Activation, defroster flap motor	Defroster flap motor			
6	E	Ground	Ground point		approx. 0 V	
7	E	Ground	Ground point		approx. 0 V	
8	E	Permanent positive supply terminal 30	Front power distribution box		approx. 12 V	
9	A	Activation, footwell/rear area flap motor	Footwell/rear area flap motor			
10	A	Activation, footwell/rear area flap motor	Footwell/rear area flap motor			
11	A	Activation, footwell/rear area flap motor	Footwell/rear area flap motor			
12	A	Activation, footwell/rear area flap motor	Footwell/rear area flap motor			
13	A	Permanent positive supply control unit	All flap motors			
14	A	Activation, left water valve	Left water valve			
15	A	Activation, fresh air flap motor	Fresh air flap motor			

Pin	Type	Description/function	Connection	Signal type	Tester display	Measurement notes
16	A	Activation, fresh air flap motor	Fresh air flap motor			
17	A	Activation, fresh air flap motor	Fresh air flap motor			
18	A	Activation, fresh air flap motor	Fresh air flap motor			
19	E	Ground	Ground point		approx. 0 V	
20	E	Permanent positive supply terminal 30	Front power distribution box		approx. 12 V	
21	E	Permanent positive supply terminal 30	Front power distribution box		approx. 12 V	
22	A	Activation, ventilation flap motor	Ventilation flap motor			
23	A	Activation, ventilation flap motor	Ventilation flap motor			
24	A	Activation, ventilation flap motor	Ventilation flap motor			
25	A	Activation, ventilation flap motor	Ventilation flap motor			
26	A	Permanent positive supply control unit	All flap motors			

Pin Assignments at Control Unit Connector X610

Pin	Type	Description/function	Connection	Signal type	Tester display	Measurement notes
1	E	Lighting of operating unit	Dimmer			
2	A	Activation, independent ventilation	Relay box independent ventilation/independent heating			
3	E	Ignition "ON" terminal 15	Heating blower relay K4			
4	E	Function lighting	Light switch			

Heating Control (HR32)

Pin Assignments

Pin	Type	Description/function	Connection	Signal type	Tester display	Measurement notes
5	E	Starter terminal 50 (30h)	Solenoid switch (30h)			
6	A	Activation, blower output stage	Blower output stage			
7	E	Speed signal	Instrument cluster A-signal			
8	E	Terminal 61	Unloader relay terminal 61			
9	E	Diagnosis RxD	Diagnostic connector RxD			
10	A	Activation, blower MAX	Blower output stage MAX			
11	A	Diagnosis TxD	Diagnostic connector TxD			
12	A	Activation, windscreen heating	Windscreen heating relay			
13	A	Activation, rear window defogger	Rear window defogger relay			
14	E	Independent heating/ventilation return line	Relay box independent heating/independent ventilation			
15	A	Activation, independent heating	Relay box independent heating/independent ventilation			
16	E/A	Outside temperature actual value	Outside temperature sensor			
17	E/A	Right heater temperature actual value	Right heater sensor			
18	E/A	Right interior temperature actual value	Right footwell sensor			
19	E/A	Left heater temperature sensor, actual value	Left heater sensor			
20	E/A	Left interior temperature actual value	Left footwell sensor			
21	A	Mixing control wheel positive	Mixing potentiometer			
22	E	Mixing control wheel nominal value	Mixing potentiometer			
23	E	Ignition "ON" terminal 15	Ignition switch		approx. 12 V	

Pin	Type	Description/function	Connection	Signal type	Tester display	Measurement notes
24	E	Ground	Ground point		approx. 0 V	
25	E	Permanent positive supply terminal 30	Power distribution box		approx. 12 V	
26	A	Activation, auxiliary water pump	Auxiliary water pump			

Troubleshooting

Notes

- Troubleshooting with BMW DIAGNOSTIC SYSTEM
- Battery charged, U-min = 12 V
- Fuses protecting the function of the HR 32 system must be in working order
- The suitable adapter must be used for testing and the HR 32 connected such that it is completely operable. Defect codes are stored by the control unit when connectors are disconnected and checked. The defect codes detected before the diagnostic procedure must therefore be printed out beforehand.

The inputs and outputs listed in the following are not registered by the defect code memory in the HR 32 control unit:

- Inputs (E): Buttons, terminal 15, terminal 30, diagnostic link RxD.
- Outputs (A): LEDs for function lighting, blower control voltage, diagnostic TxD .
- Defect code update only takes place with the engine running (monitoring of terminal 61 by the HR 32 system).

Table of Substitute values for temperature sensors

Defective component	Substitute value
Left heater sensor	55° C
Right heater sensor	55° C
Left inside temperature sensor	25° C
Right inside temperature sensor	25° C
Outside temperature sensor	0° C

Table of substitute values for selector switches

Defective components	Substitute value
Left temperature selector	30° C
Right temperature selector	30° C
Air flow control	50 %
Mixing air control	100 %

Defect Code Table

♦D♦ **Defect code memory – stored defect codes:**

Defect code No.	Defect location
01	Right temperature selector
10	Outside temperature sensor
14	Right inside temperature sensor
15	Left inside temperature sensor
19	Windscreen heating relay
25	Left temperature selector
28	Left heater sensor
31	Air flow control
34	Mixing air control
38	Auxiliary water pump relay
40	Left water valve
46	Right water valve
48	Rear window defogger relay
52	Fresh air flap motor
70	Flap motor, footwell/rear area
76	Defroster flap motor
79	Flap motor, ventilation/mixing
92	Terminal 50 > 5 minutes ON
94	Relay (box) independent ventilation/independent heating

Defect code No.	Defect location
98	Vehicle speed value not plausible
99	Control unit internal defect

Defect Code 01

♦D♦900 Defect code memory: 01 Right temperature selector

Explanation: This defect code is stored when a short to ground, a short to positive or a break is detected in the control unit at the wiper of the potentiometer for the right temperature selector.

Effect of defect: If defect is current, a substitute value of 30° C is used.

Possible cause: Control unit defective.

Defect Code 10

♦D♦900 Defect code memory: 10 Outside temperature sensor

Explanation: This defect code is stored when a short to ground, a short to positive or a break is detected at the white connector, Pin 16.

Effect of defect: If defect is current, a substitute value of 0° C is used.

Possible cause: Wire or outside temperature sensor defective.

Troubleshooting: Check wire and repair if necessary or renew component.

Defect Code 14

♦D♦900 Defect code memory: 14 Right inside temperature sensor

Explanation: This defect code is stored when a short to ground, a short to positive or a break is detected at the white connector Pin 18.

Effect of defect: If defect is current, a substitute value of 25° C is used.

Possible cause: Wire or right inside temperature sensor defective.

Troubleshooting: Check wire and repair if necessary or renew component.

Defect Code 15

♦D♦900 Defect code memory: 15 Left inside temperature sensor

Explanation: This defect code is stored when a short to ground, a short to positive or a break is detected at the white connector, Pin 20.

Effect of defect: If defect is current, a substitute value of 25° C is used.

Possible cause: Wire or left inside temperature sensor defective.

Troubleshooting: Check wire and repair if necessary or renew component.

Defect Code 19

♦D♦900 Defect code memory: 19 Windscreen heating relay

Explanation: This defect code is stored when a short to ground, a short to positive or a break is detected at the white connector, Pin 12.

Effect of defect: If defect is current, the component is no longer activated.

Possible cause: Wire or windscreen heating relay defective.

Troubleshooting: Check wire and repair if necessary or renew component.

Defect Code 25

♦D♦900 Defect code memory: 25 Left temperature selector

Explanation: This defect code is stored when a short to ground, a short to positive or a break is detected in the control unit at the wiper of the potentiometer for the left temperature selector.

Effect of defect: If defect is current, a substitute value of 30° C is used.

Possible cause: Control unit defective.

Defect Code 28

♦D♦900 Defect code memory: 28 Left heater sensor

Explanation: This defect code is stored when a short to ground, short to positive or a break is detected at the white connector, Pin 19.

Effect of defect: If defect is current, a substitute value of 55° C is used.

Possible cause: Wire or left heater sensor defective.

Troubleshooting: Check wire and repair if necessary or renew component.

Defect Code 31

♦D♦900 Defect code memory: 31 Air flow control

Explanation: This defect code is stored when a short to ground, a short to positive or a break is detected in the control unit at the wiper of the potentiometer for the air flow control.

Effect of defect: If defect is current, a substitute value of 50 % is used.

Possible cause: Control unit defective.

Defect Code 34

♦D♦900 Defect code memory: 34 Mixing control

Explanation: This defect code is stored when a short to ground, a short to positive or a break is detected at the white connector, Pin 22.

Effect of defect: If defect is current, a substitute value of 100 % is used.

Possible cause: Voltage supply (approx. 5 V) is not OK, wire or mixing control defective.

Troubleshooting: Check voltage supply (approx. 5 V) as well as wire and repair if necessary or renew component.

Defect Code 38

♦D♦900 Defect code memory: 38 Auxiliary water pump relay

Explanation: This defect code is stored when a short to ground, a short to positive or a break is detected at the white connector, Pin 26.

Effect of defect: If defect is current, the component is no longer activated.

Possible cause: Wire or auxiliary pump relay defective.

Troubleshooting: Check wire and repair if necessary or renew component.

Defect Code 40

♦D♦900 Defect code memory: 40 Left water valve

Explanation: This defect code is stored when a short to ground, short to positive or a break is detected at the green connector, Pin 14.

Effect of defect: If defect is current, the component is no longer actuated.

Possible cause: Wire or left water valve defective.

Troubleshooting: Check wire and repair if necessary or renew component.

Defect Code 46

♦D♦900 Defect code memory: 46 Right water valve

Explanation: This defect code is stored when a short to ground, short to positive or a break is detected at the green connector, Pin 1.

Effect of defect: If defect is current, the component is no longer actuated.

Possible cause: Wire or right water valve defective.

Troubleshooting: Check wire and repair if necessary or renew component.

Defect Code 48

♦D♦900 Defect code memory: 48 Rear window defogger relay

Explanation: This defect code is stored when a short to ground, short to positive or a break is detected at the white connector, Pin 13.

Effect of defect: If defect is current, the component is no longer actuated.

Possible cause: Wire or rear window defogger relay defective.

Troubleshooting: Check wire and repair if necessary or renew component.

Defect Code 52

♦D♦900 Defect code memory: 52 Fresh air flap motor

Explanation: This defect code is stored when a short to ground, short to positive or a break is detected at the green connector, Pin 15, 16, 17 or 18.

Effect of defect: If defect is current, the component is no longer actuated.

Possible cause: Voltage supply (approx. 12 V) not OK, wire or fresh air flap motor defective.

Troubleshooting: Check voltage supply (approx. 12 V) as well as wires and repair if necessary or renew component.

Defect Code 70

♦D♦900 Defect code memory: 70 Flap motor footwell/rear area

Explanation: This defect code is stored when a short to ground, short to positive or a break is detected at the green connector, Pin 9, 10, 11 or 12.

Effect of defect: If defect is current, the component is no longer actuated.

Possible cause: Check voltage supply (approx. 12 V) not OK, wire or footwell/rear area flap motor defective.

Troubleshooting: Check voltage supply (approx. 12 V) as well as wires and repair if necessary or renew component.

Defect Code 76

♦D♦900 Defect code memory: 76 Defroster flap motor

Explanation: This defect code is stored when a short to ground, short to positive or a break is detected at the green connector, Pin 2, 3, 4 or 5.

Effect of defect: If defect is current, the component is no longer actuated.

Possible cause: Check voltage supply (approx. 12 V) not OK, wire or defroster flap motor defective.

Troubleshooting: Check voltage supply (approx. 12 V) as well as wires and repair if necessary or renew component.

Defect Code 79

♦D♦900 Defect code memory: 79 Ventilation/mixing flap motor

Explanation: This defect code is stored when a short to ground, short to positive or a break is detected at the green connector, Pin 22, 23, 24 or 25.

Effect of defect: If defect is current, the component is no longer actuated.

Possible cause: Check voltage supply (approx. 12 V) not OK, wire or ventilation/mixing flap motor defective.

Troubleshooting: Check voltage supply (approx. 12 V) as well as wires and repair if necessary or renew component.

Defect Code 92

♦D♦900 Defect code memory: 92 Terminal 50 > 5 minutes ON

Explanation: This defect code is stored when positive from terminal 50 is applied at white connector Pin 5 for longer than 5 minutes.

Possible cause: Wire or solenoid switch defective.

Troubleshooting: Check wire and repair if necessary or renew solenoid switch.

Defect Code 94

♦D♦900 Defect code memory: 94 Relay (box) independent ventilation/independent heating

Explanation: This defect code is stored when the matrix circuit in the control unit detects the function independent ventilation and independent heating at the same time. The input signals for this evaluation are applied at white connector, Pin 2, 4 and 14.

Possible cause: Wire or relay box defective.

Troubleshooting: Check wire and repair if necessary or renew component.

Defect Code 98

♦D♦900 Defect code memory: 98 Vehicle speed value not plausible

Explanation: This defect code is stored when at white connector, Pin 7 the vehicle speed value of the speed signal exceeds 350 km/h.

Possible cause: Wire, rear axle sensor or instrument cluster defective.

Troubleshooting: Check wire and repair if necessary or renew defective component.

Defect Code 99

♦D♦900 Defect code memory: 99 Control unit internal defect

Explanation: This defect code is stored when the internal self-test detects a defect in the control unit.

Possible cause: Control unit defective.

Component Testing

Testing buttons and function LEDs in the button block for air distribution.

Test equipment: Adapter with correct connection lead (26-pin, blue), Service Tester ♦M♦09 Diode test and ♦M♦06 Resistance.

Test precondition: Connect periphery box and button block with adapter lead for push button testing.

ST♦M♦06 red clip at	**ST♦M♦06 black clip at**	**button to be tested**	**Nominal value**
PIN 8	PIN 1	Rear window button	< 1Ω
PIN 2	PIN 1	Top button	< 1Ω
PIN 3	PIN 1	Centre button	< 1Ω
PIN 4	PIN 1	Bottom button	< 1Ω
PIN 13	PIN 1	Defrost button	< 1Ω

ST♦M♦09 green clip at	**ST♦M♦09 black clip at**	**LED to be tested**	**Nominal value**
PIN 5	PIN 11	Rear window button	Negative polarity
PIN 6	PIN 11	Top button	Negative polarity
PIN 9	PIN 11	Centre button	Negative polarity
PIN 7	PIN 11	Bottom button	Negative polarity
PIN 12	PIN 11	Defrost button	Negative polarity

The nominal values of the buttons are measured with the button depressed. If the specified values are not achieved, then this indicates that the block of buttons is defective. If the correct values are indicated, check wires and renew control unit if necessary.

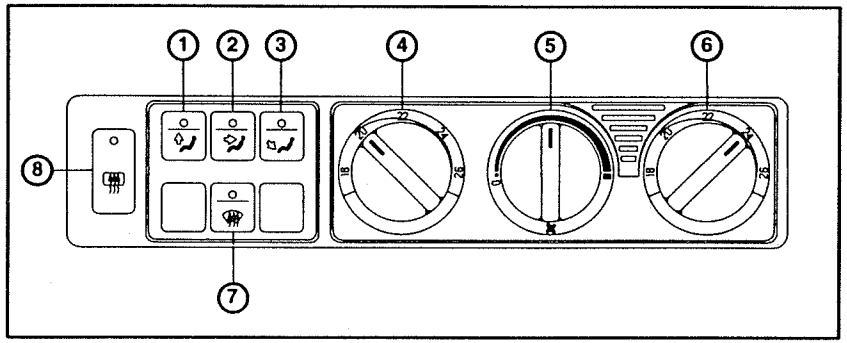

P32 64 001

1 – Push button air distribution, up

2 – Push button air distribution, centre

3 – Push button air distribution, down

4 – Temperature selector, left side

5 – Air flow control

6 – Temperature selector, right side

7 – Push button for windscreen and side window defrosting

8 – Push button for rear window defogger

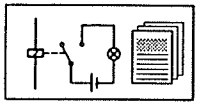

Functional Description

The automatic heating control (IHR) is a water-based heating control system. The control system on the water side is based on two electrically operated water valves in separate heat exchangers on the left and right sides. The required temperature in the vehicle is controlled by the mixing flap. The air is mixed ahead of the heat exchangers without being heated in the flow of ventilation air. Temperature control with the mixing flaps is therefore not possible when the ventilation outlet nozzles are closed manually.

The control unit performs open-loop and closed-loop control functions with the aid of a microcomputer:

- Control of air distribution flaps
- Air flow control
- Interior temperature control
- Rear window defogger control
- Auxiliary water pump control
- Defect detection and diagnosis in conjunction with making available a substitute value for the failed component

All air distribution flaps are set corresponding to the flap programs by means of the stepper motors. The left/right Y-value is calculated from the input data (outside temperature, heater temperatures, interior temperature, selector switch settings, push button settings etc.) and a corresponding flap program selected. For safety reasons, the "defrost" flap program is set before the IHR control unit switches off after approx. 3 minutes "ignition OFF" (clearing of the error memory) and its power consumption reduced.

Selector Switch Function

Air Flow Control

The IHR control unit takes up operation when the ignition is switched on. The IHR system is switched on and the nominal value for the air flow set with the air flow control switch. An increase in the set air flow rate caused by the wind during driving is largely compensated by the fresh air flap closing dependent on the vehicle speed. The blower is switched off via terminal 50 when starting the vehicle.

A switch is coupled with the air flow control switch to ensure that the blower can take up emergency operation in the case of a defect in the air flow control switch, failure of the control unit or a defect in the output stage electronics. In the maximum position of the air flow control switch, this switch switches positive to the relay integrated in the output stage, thus bypassing the output stage electronics. The switch is not included in the diagnostic procedure for the control unit.

Temperature Selectors

The nominal value for the inside temperature is set with the temperature selector switches. The temperature values printed on the selector switches of the operating unit do not correspond to the values which are used by the control unit and which can be read out via the status list, but rather to a comfort temperature. When setting the temperature, the control switch on the driver's side has priority near the end positions over the control switch on the passenger's side. When the temperature selector switch on the driver's side is set to maximum, the positive supply to the water valves is interrupted by way of a mechanically coupled switch. In this position, the control unit interrupts the diagnostic procedure for the water valves which are open when no power is applied.

Relay Outputs

All relays (also water valves) are switched by applying ground to the corresponding output of the control unit. The diagnostic procedure for the control unit only covers the control circuit of the relays.

Push Buttons

The air distribution setting can be freely selected by means of the 3 push buttons. The function LEDs belonging to the relevant push buttons are switched on when the IHR is switched on and the relevant button is depressed. The function LEDs have a common voltage supply from the control unit.

The defrost program button has priority over the air distribution push buttons. The defrost program is activated by pressing the defrost button. All current programs are interrupted and the function indicator lights (with the exception of the rear window defogger) of the previously selected program go out. With the exception of the fresh air and defroster flaps, all flaps are closed and the mixing air flap is set to "warm". The rear window defogger is additionally switched on automatically when the defrost function is activated for the first time. The defrost program is switched off again by pressing the defrost button a second time and the automatic heating control (IHR) continues to operate with the previously set program.

With the engine running, the rear window button switches on the rear window defogger when pressed for the first time (defrost stage). After the defrost time of 10 minutes has elapsed, the function LED goes out and the rear window defogger is switched off for 80 seconds and then switched on for 40 seconds. After a modulation time (cyclic mode) of 20 minutes, the rear window defogger switches off automatically. The system is switched to the defrost stage if the rear window button is depressed during modulation mode. The rear window defogger is switched off when the button is pressed once again. The rear window defogger is switched on when the defrost program button is depressed for the first time.

Auxiliary Water Pump

An electrical auxiliary water pump is installed in order to maintain the necessary heating water throughput at low engine speeds.

The auxiliary water pump is switched on when the outlet temperature on the heat exchanger side has exceeded the value of 30° C after a new start and the control variable Y_L OR Y_R is above 30%.

The auxiliary water pump is switched off when the control variable Y_L AND Y_R drops below the value of 25%.

Independent heating/ventilation

If an independent heating system is installed, the relay box, which switches the independent heating or independent ventilation program in the IHR control unit, can be activated via the on-board computer or the multi-function clock. At the selected time, the on-board computer (or multi-function clock) switches on the independent heating at an outside temperature < 16° C and the independent ventilation at an outside temperature > 16° C.

Flaps	Independent heating	Independent ventilation
Defrosting	100 %	0 %
Footwell	100 %	0 %
Mixing	100 %	0 %
Ventilation	0 %	100 %
Fresh air	100 %	100 %
All others	0 %	0 %
Blower	5 V	5 V
Water valves	open	open

100 % = open

0 % = closed

Windscreen Heating

If the ignition is switched on and the outside temperature is less than 5° C, the IHR control unit switches the windscreen heating relay to ground and the heating element at the wiper support bracket is activated. The windscreen heater remains switched on until the value of the outside temperature sensor of the IHR is less than 8° C. The windscreen heater is switched off when the outside temperature increases to above 8° C.

Stepper Motors

Stepper motors are installed in order to move the various flaps. The control unit assumes that, after completing the calibration phase, the stepper motors are in a defined position since the stepper motors cannot signal back their position to the control unit. The calibration phase is triggered when the power supply (terminal 15 and terminal 30) of the control unit was interrupted. The calibration phase is then started after ignition ON.

The corresponding motor is switched off if the control unit detects a stepper motor defect. It resumes operation when the ignition was switched off for > 3 minutes or a calibration run is triggered and the motor is found to be OK. The stepper motors have an adjustment time of approx. 12 – 16 seconds. An exception to this is the fresh air motor which has an opening time of approx. 12 seconds and a closing time of approx. 2 seconds.

Master Controller Y

The master controller is a value calculated by the control unit which separately activates the left and right outputs (water valves) dependent on the input values (nominal temperature value, interior temperature and outside temperature).

Interior Sensor Blower

The interior sensor blower ventilates the interior temperature sensor. This ventilation prevents overheating of the interior temperature sensor and the control unit operates with the current interior temperature value.

To ensure effective operation, unobstructed air flow through the ventilation grille in the operating unit must be ensured (no dirt build-up).

BMW 7

Automatic Heating Control (IHR)

General Block Diagram

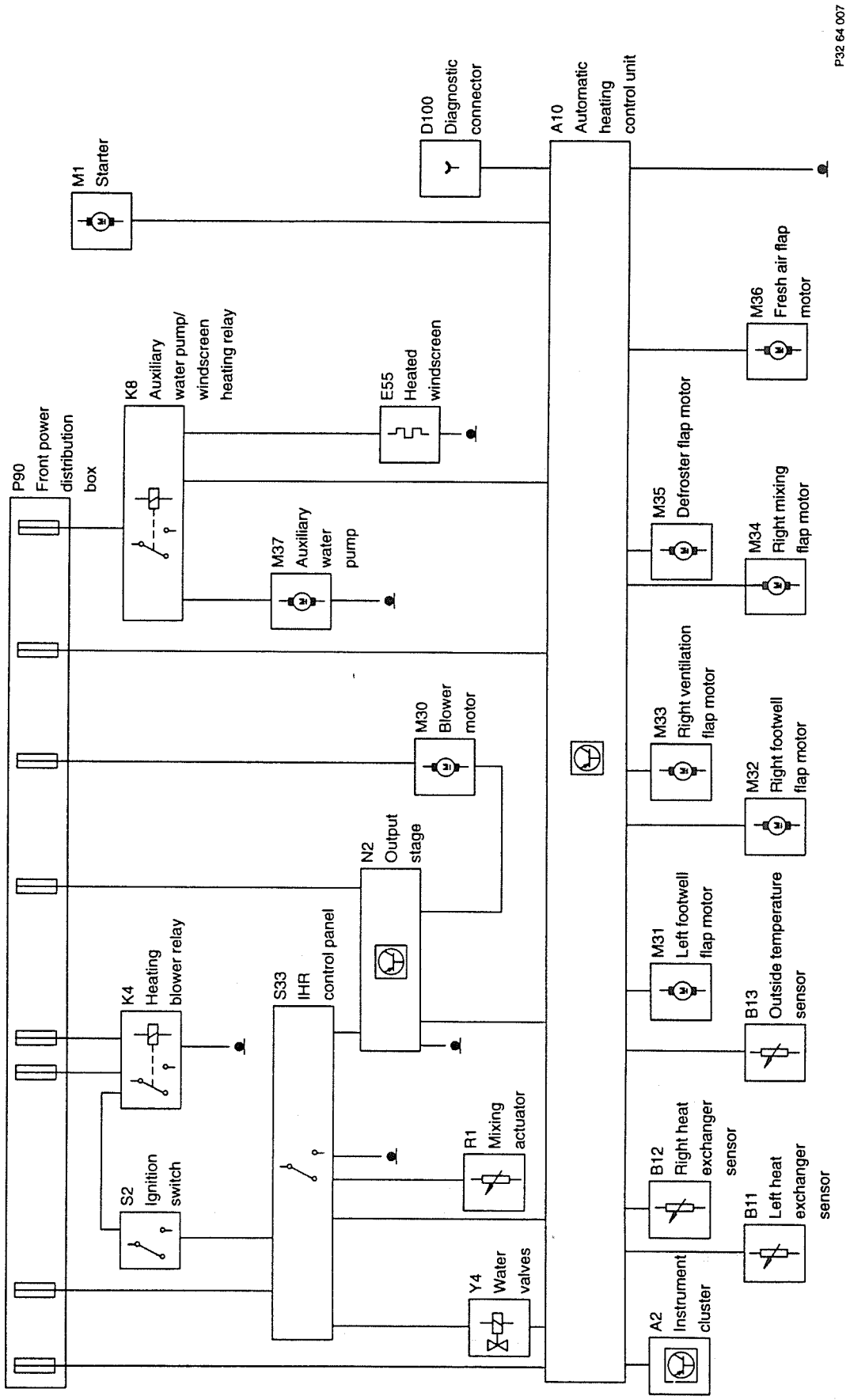

Notes on the BMW DIAGNOSTIC SYSTEM

The component functions and signals listed below are processed or controlled by the IHR control unit, however, they are not stored as a defect code in the event of a defect:

- Speed signal output from instrument cluster *
- All buttons in the operating panel, independent heating and independent ventilation of the relay box, diode for right-hand drive coding of the operating unit *
- Signal from terminal 30 h of the starter solenoid switch
- Voltage supply for function LEDs
- Control of function lights for the rear window defogger in the rear window defogger button.
- Blower control voltage to blower motor output stage
- Diagnostic links RxD/TxD to the BMW Service Tester

Component functions and signals marked with * can be read out in the status lists of the BMW Service Tester.

Defect Code Memory

The IHR control unit clears the defect code memory when the supply voltage (terminal 30, terminal 15) is interrupted or the ignition was switched on for longer than 3 minutes. The defective components or functions are stored as defect codes after the ignition is switched on.

The display "defect current" shows that the defect currently exists. The component or the function is then not used by the control unit. For instance, a relay is no longer activated by the control unit. If a "defect current" applies to the temperature sensors or selector switches, a substitute value provided by the control unit is used for these components. The substitute value is replaced by the current value when the defect no longer applies.

The control unit makes an exception as regards defect code detection and storage in the case of the stepper motors. Here, a defect is only detected after ignition "ON", under the condition that the ignition was switched off for longer than 3 minutes beforehand or the voltage supply was interrupted. If a stepper motor defect occurs when the IHR is in operation (ignition "ON") this defect is not stored in the form of a defect code.

Pin Assignment

Connectors at Control Unit

Number	Type	Description
X613	26-pin, blue	SRA, top right
X614	26-pin, yellow	SRB, bottom right
X610	26-pin, white	SLA, top left
X611	26-pin, green	SLB, bottom left

Plug Connections

Number	Type	Description
X612	26-pin, blue	BSA, operating unit
X671	5-pin, green	to output stage
X682	3-pin, white	from operating unit to relay box

Pin Assignments at IHR Control Unit Connector X610 (white)

Pin	Type	Description/function	Connection	Signal type	Tester display	Measurement notes
1		Not used				
2		Not used				
3		Not used				
4		Not used				
5	A	Blower output stage activation	Blower output stage	approx. 0 V – 4.3 V		
6		Not used				
7	A	Rear window defogger activation	Rear window defogger relay	approx. 0.4 V approx.12 V	ON OFF	Functions only when engine is running
8		Not used				
9		Not used				
10		Not used				
11		Not used				
12	E	Positive terminal 30	Front power distribution box	approx. 12 V		
13	E	Positive terminal 30	Front power distribution box	approx. 12 V		
14		Not used				
15		Not used				
16		Not used				
17		Not used				
18	A	Function light activation	Operating unit	approx. 12 V approx. 0.7 V		Air flow control OFF Air flow control ON

Pin	Type	Description/function	Connection	Signal type	Tester display	Measurement notes
19	A	Function lights, connection of rear window defogger	Operating unit	approx. 12 V approx. 2.7 V approx. 2.6 V		Rear window defogger OFF Light OFF Rear window defogger ON Light OFF Rear window defogger ON Light ON
20	A	Diagnosis	Diagnostic socket TxD	Frequency		
21	A	Left water valve activation	Left water valve	Frequency (square-wave voltage)	0% – 100%	at 0% approx. 0 V at 100% approx. 12 V
22	A	Auxiliary water pump relay activation	Auxiliary water pump relay	approx. 0.3 V approx.12 V	ON OFF	
23	A	Right water valve activation	Right water valve	Frequency (square-wave voltage)	0% – 100%	at 0% approx. 0 V at 100% approx. 12 V
24	A	Windscreen heating	Windscreen heating relay	approx. 0.3 V approx.12 V		
25	E	Positive terminal 30	Front power distribution box	approx. 12 V		
26	E	Positive terminal 30	Front power distribution box	approx. 12 V		

Pin Assignments at IHR Control Unit Connector X611 (green)

Pin	Type	Description/function	Connection	Signal type	Tester display	Measurement notes
1	A	Left footwell flap motor activation	Left footwell flap motor	Frequency (square-wave voltage)	0% – 100%	approx. 84Ω/Winding with flap motor disconnected
2		Not used				
3		Not used				
4		Not used				
5		Not used				
6	A	Fresh air flap motor activation	Fresh air flap motor	Frequency (square-wave voltage)	0% – 100%	approx. 24Ω/Winding with flap motor disconnected
7	A	Fresh air flap motor activation	Fresh air flap motor	Frequency (square-wave voltage)	0% – 100%	approx. 24Ω/Winding with flap motor disconnected
8	A	Fresh air flap motor activation	Fresh air flap motor	Frequency (square-wave voltage)	0% – 100%	approx. 24Ω/Winding with flap motor disconnected
9	A	Fresh air flap motor activation	Fresh air flap motor	Frequency (square-wave voltage)	0% – 100%	approx. 24Ω/Winding with flap motor disconnected
10		Not used				
11		Not used				
12		Not used				
13		Not used				

Pin	Type	Description/function	Connection	Signal type	Tester display	Measurement notes
14	A	Left footwell flap motor activation	Left footwell flap motor	Frequency (square-wave voltage)	0% – 100%	approx. 84Ω/Winding with flap motor disconnected
15	A	Left footwell flap motor activation	Left footwell flap motor	Frequency (square-wave voltage)	0% – 100%	approx. 84Ω/Winding with flap motor disconnected
16	A	Left footwell flap motor activation	Left footwell flap motor	Frequency (square-wave voltage)	0% – 100%	approx. 84Ω/Winding with flap motor disconnected
17	A	Defroster flap motor activation	Defroster flap motor	Frequency (square-wave voltage)	0% – 100%	approx. 84Ω/Winding with flap motor disconnected
18	A	Defroster flap motor activation	Defroster flap motor	Frequency (square-wave voltage)	0% – 100%	approx. 84Ω/Winding with flap motor disconnected
19	A	Defroster flap motor activation	Defroster flap motor	Frequency (square-wave voltage)	0% – 100%	approx. 84Ω/Winding with flap motor disconnected
20	A	Defroster flap motor activation	Defroster flap motor	Frequency (square-wave voltage)	0% – 100%	approx. 84Ω/Winding with flap motor disconnected
21		Not used				
22		Not used				
23		Not used				
24		Not used				
25		Not used				
26		Not used				

Pin Assignments at IHR Control Unit Connector X613 (blue)

Pin	Type	Description/function	Connection	Signal type	Tester display	Measurement notes
1	E	Ground	Ground point	0 V		
2	E	Ground	Ground point	0 V		
3		Not used				
4	E	Left nominal temperature value (potentiometer)	Operating unit	approx. 0.7 V – 4.4 V	approx. 16° C –32° C	
5	E	Nominal air flow value (potentiometer)	Operating unit	approx. 0.7 V – 4.4 V	OFF – 100%	
6	A	Interior sensor blower (ground)	Operating unit	approx. 0 V		
7	A/E	Outside temperature	Outside temperature sensor	approx. 0.5 V – 4.5 V	–50° C – +60° C	approx. 5 V with temperature sensor disconnected
8	E	Right nominal temperature value (potentiometer)	Operating unit	approx. 0.7 V – 4.4 V	approx. 16° C –32° C	
9		Not used				
10	A	Positive for stepper motors	Positive connector for stepper motors	approx. 12 V		
11	A	Positive for stepper motors	Positive connector for stepper motors	approx. 12 V		
12	E	Ignition terminal 15	Blower output stage	approx. 12 V		
13	E	Ignition terminal 15	Blower output stage	approx. 12 V		
14	E	Ground	Ground point	0 V		
15	E	Ground	Ground point	0 V		
16	A	Ground for sensors and selector switches	Sensor and selector switches	approx. 0 V		

Pin	Type	Description/function	Connection	Signal type	Tester display	Measurement notes
17	E	Nominal mixing value	Mixing control switch	approx. 0.7 V – 4.4 V	0% – 100%	
18	A/E	Left heater temperature	Left heater sensor	approx. 1.5 V – 3.5 V	–30° C – +110° C	approx. 5 V with temperature sensor disconnected
19	E	Starter terminal 50	Solenoid switch	approx. 12 V		
20	A	Positive for selector switches	Selector switches	approx. 5 V		
21	A/E	Interior temperature	Interior temperature sensor	approx. 0.5 V – 4.5 V	–25° C – +100° C	approx. 5 V with temperature sensor disconnected
22	A/E	Right heater temperature	Right heater sensor	approx. 1.5 V – 3.5 V	–30° C – +110° C	approx. 5 V with temperature sensor disconnected
23	A	Positive for stepper motors	Positive connector for stepper motors	approx. 12 V		
24	A	Positive for stepper motors	Positive connector for stepper motors	approx. 12 V		
25	E	Ignition terminal 15	Blower output stage	approx. 12 V		
26	E	Ignition terminal 15	Blower output stage	approx. 12 V		

Pin Assignments at IHR Control Unit Connector X614 (yellow)

Pin	Type	Description/function	Connection	Signal type	Tester display	Measurement notes
1	A	Right footwell flap motor activation	Right footwell flap motor	Frequency (square-wave voltage)	0% – 100%	approx. 84Ω/Winding with flap motor disconnected
2	A	Right footwell flap motor activation	Right footwell flap motor	Frequency (square-wave voltage)	0% – 100%	approx. 84Ω/Winding with flap motor disconnected
3	A	Right footwell flap motor activation	Right footwell flap motor	Frequency (square-wave voltage)	0% – 100%	approx. 84Ω/Winding with flap motor disconnected
4	A	Right footwell flap motor activation	Right footwell flap motor	Frequency (square-wave voltage)	0% – 100%	approx. 84Ω/Winding with flap motor disconnected
5	E	Switch for defrost, top air distribution	Operating unit	Frequency (square-wave voltage)	ON/OFF	
6	E	Switch for rear window, centre and bottom air distribution	Operating unit	Frequency (square-wave voltage)	ON/OFF	
7	E	Switch for independent heating/ independent ventilation	Operating unit	Frequency (square-wave voltage)	ON/OFF	
8		Not used				
9	E	Speed "A" signal	Instrument cluster	Frequency (square-wave voltage)	km/h	
10	E	Diagnosis	Diagnostic socket RxD	Frequency		

Pin	Type	Description/function	Connection	Signal type	Tester display	Measurement notes
11	A	Switch for rear window, independent heating, top air distribution	Operating unit	Frequency (square-wave voltage)	ON/OFF	
12	A	Switch for centre air distribution, defrost, independent ventilation	Operating unit	Frequency (square-wave voltage)	ON/OFF	
13	A	Switch for bottom air distribution	Operating unit	Frequency (square-wave voltage	ON/OFF	
14	A	Right ventilation flap motor activation	Right ventilation flap motor	Frequency (square-wave voltage)	0% – 100%	approx. 84Ω/Winding with flap motor disconnected
15	A	Right ventilation flap motor activation	Right ventilation flap motor	Frequency (square-wave voltage)	0% – 100%	approx. 84Ω/Winding with flap motor disconnected
16	A	Right ventilation flap motor activation	Right ventilation flap motor	Frequency (square-wave voltage)	0% – 100%	approx. 84Ω/Winding with flap motor disconnected
17	A	Right ventilation flap motor activation	Right ventilation flap motor	Frequency (square-wave voltage)	0% – 100%	approx. 84Ω/Winding with flap motor disconnected
18	A	Right mixing flap motor activation	Right mixing flap motor	Frequency (square-wave voltage)	0% – 100%	approx. 84Ω/Winding with flap motor disconnected
19	A	Right mixing flap motor activation	Right mixing flap motor	Frequency (square-wave voltage)	0% – 100%	approx. 84Ω/Winding with flap motor disconnected

Pin	Type	Description/function	Connection	Signal type	Tester display	Measurement notes
20	A	Right mixing flap motor activation	Right mixing flap motor	Frequency (square-wave voltage)	0% – 100%	approx. 84Ω/Winding with flap motor disconnected
21	A	Right mixing flap motor activation	Right mixing flap motor	Frequency (square-wave voltage)	0% – 100%	approx. 84Ω/Winding with flap motor disconnected
22		Not used				
23		Not used				
24		Not used				
25		Not used				
26		Not used				

Pin Assignments at IHR Operating Unit X612 (blue)

Pin	Type	Description/function	Connection	Signal type	Tester display	Measurement notes
1	E	Function lights, night-time circuit	Light switch	approx. 12 V		when light ON
2	A	Switch for rear window, bottom and centre air distribution	Control unit connector X614 Pin 6	Frequency (square-wave voltage)	ON/OFF	
3	E	Switch for independent heating, rear window, top air distribution	Control unit connector X614 Pin 11	Frequency (square-wave voltage)	ON/OFF RHD/LHD	
4	A	Switch for independent heating, independent ventilation	Control unit connector X614 Pin 7	Frequency (square-wave voltage)	ON/OFF	

Pin	Type	Description/function	Connection	Signal type	Tester display	Measurement notes
5	E	Switch for defrost, centre air distribution, independent ventilation	Control unit connector X614 Pin 12	Frequency (square-wave voltage)	ON/OFF	
6	A	Switch for defrost, top air distribution	Control unit connector X614 Pin 5	Frequency (square-wave voltage)	ON/OFF	
7	A	Function lights, night-time circuit rear window defogger	Control unit connector X610 Pin 19	approx. 12 V approx. 2.7 V approx. 2.6 V		Rear window defogger OFF Light OFF Rear window defogger ON Light OFF Rear window defogger ON Light ON
8		Not used				
9		Not used				
10		Not used				
11		Not used				
12		Not used				
13	A/E	Interior temperature sensor	Control unit connector X613 Pin 21	approx. 5 V	–25° C – +100° C	with sensor disconnected
14	E	Positive for selector switch	Control unit connector X613 Pin 20	approx. 5 V		
15	E	Ground for interior temperature sensor and selector switch	Control unit connector X613 Pin 16	approx. 0 V		
16	E	Function light activation	Control unit connector X610 Pin 18	approx. 12 V approx. 0.7 V		Air flow control OFF Air flow control ON
17	E	Air flow control switch max	Terminal 15	approx. 12 V		

Pin	Type	Description/function	Connection	Signal type	Tester display	Measurement notes
18		Not used				
19	E	Operating unit lighting	Dimmer for instrument lighting	approx. 2.5 – 12 V		when light ON
20	E	Ground for function and operating unit lighting	Ground point	0 V		
21	A	Right nominal temperature value	Control unit connector X613 Pin 8	approx. 0.7 V – 4.4 V	14° C – 34° C	
22	A	Left nominal temperature value	Control unit connector X613 Pin 4	approx. 0.7 V – 4.4 V	14° C – 34° C	
23	A	Nominal air flow value	Control unit connector X613 Pin 5	approx. 0.7 V – 4.4 V	OFF – 100%	
24	E	Switch for bottom air distribution	Control unit connector X614 Pin 13	Frequency (square-wave voltage)	ON/OFF	
25	A	Air flow control selector switch max	Blower output stage X671 Pin 3	approx. 12 V		
26	E	Interior sensor blower (ground)	Control unit connector X613 Pin 6	approx. 0 V		

Adapter

Component	Connector No.	Description	Adapter No.
Control unit	X610	26-pin, white, top left	Cartool 61 4 460 V-adapter 26-pin Cartool 61 1 459 Periphery box
	X611	26-pin, green, bottom left	Cartool 61 4 460 V-adapter 26-pin Cartool 61 1 459 Periphery box
	X613	26-pin, blue, top right	Cartool 61 4 460 V-adapter 26-pin Cartool 61 1 459 Periphery box
	X614	26-pin, yellow, bottom right	Cartool 61 4 460 V-adapter 26-pin Cartool 61 1 459 Periphery box
Operating unit	X612	26-pin, blue	Cartool 61 4 453 V-adapter 26-pin Cartool 61 1 459 Periphery box
Output stage	X671	5-pin, green	

Troubleshooting

Notes

- Troubleshooting with the BMW DIAGNOSTIC SYSTEM
- Battery charged, U-min = 12 V
- Fuses associated with the IHR are OK
- The suitable adapter must be used for testing and the IHR must be connected such that it is fully operable. The control unit stores defect codes when disconnecting components and during testing. The defect code stored prior to testing must therefore be printed out.

The inputs and outputs listed in the following are not stored in the defect code memory of the IHR control unit:

- Inputs (E): Buttons (matrix circuit), terminal 50 , terminal 15 , terminal 30, vehicle speed signal, diagnostic link RxD .
- Outputs (A): LEDs for function lights, blower control voltage, buttons (matrix circuit), diagnostic link TxD .

To ensure uniform initial conditions for defect monitoring and storage, the IHR must be switched on with the air flow control switch.

Table of substitute values for temperature sensors

Defective component	Substitute value
Left heater sensor	55° C
Right heater sensor	55° C
Outside temperature sensor	0° C
Interior temperature sensor	20° C

Table of substitute values for the selector switches

Defective component	Substitute value
Left temperature selector	24° C
Right temperature selector	24° C
Air flow control	50 %
Mixing air control	65 %

Defect Code Table

♦D♦ Defect code memory – possible stored defect codes:

Defect code No.	Defect location
01	Right temperature selector
04	Right heater sensor
10	Outside temperature sensor
13	Interior temperature sensor
16	Interior sensor blower
25	Left temperature selector
28	Left heater sensor
31	Air flow control
34	Mixing air control
38	Auxiliary water pump relay
40	Left water valve
46	Right water valve
48	Rear window defogger relay
52	Fresh air flap motor
61	Mixing air flap motor
70	Left footwell flap motor
73	Right footwell flap motor
76	Defrost flap motor
79	Ventilation flap motor

Defect Code 01

♦D♦ Defect code memory: 01 Right temperature selector

Explanation: This defect code is stored when there is a short to ground, to positive or a break at the connector blue Pin 8.

Effect of defect: If the defect is a current defect, a substitute value of 24° C is used.

Possible cause: Voltage supply (approx. 5 V) not OK, wire or control unit selector switches defective.

Troubleshooting: Check voltage supply (approx. 5 V) of selector switches as well as wires and repair or renew component as required.

Defect Code 04

♦D♦ Defect code memory: 04 Right heater sensor

Explanation: This defect code is stored when there is a short to ground, to positive or a break at connector blue Pin 22.

Effect of defect: If the defect is a current defect, a substitute value of 55° C is used.

Possible cause: Voltage supply (approx. 5 V) not OK, wire or right heater sensor defective.

Troubleshooting: Check voltage supply (approx. 5 V) as well as wires and repair or renew component as required.

Defect Code 10

♦D♦ Defect code memory: 10 Outside temperature sensor

Explanation: This defect code is stored when there is a short to ground, to positive or a break at connector blue, Pin 7.

Effect of defect: If the defect is a current defect, a substitute value of 0° C is used.

Possible cause: Voltage supply (approx. 5 V) not OK, wire or outside temperature sensor defective.

Troubleshooting: Check voltage supply (approx. 5 V) as well as wires and repair or renew component as required.

Defect Code 13

♦D♦ Defect code memory: 13 Interior temperature sensor

Explanation: This defect code is stored when there is a short to ground, to positive or a break at connector blue Pin 21.

Effect of defect: If the defect is a current defect, a substitute value of 20° C is used.

Possible cause: Voltage supply (approx. 5 V) not OK, wire or interior temperature sensor defective.

Troubleshooting: Check voltage supply (approx. 5 V) as well as wires and repair or renew component as required.

Defect Code 16

♦D♦ Defect code memory: 16 Interior sensor blower

Explanation: This defect code is stored when there is a short to ground, to positive or a break at connector blue Pin 6.

Effect of defect: If the defect is a current defect, the component is no longer activated.

Possible cause: Wire or interior temperature sensor blower defective.

Troubleshooting: Check wire and repair or renew component as required.

Defect Code 25

♦D♦ Defect code memory: 25 Left temperature selector

Explanation: This defect code is stored when there is a short to ground, to positive or a break at connector blue Pin 4.

Effect of defect: If the defect is a current defect, a substitute value of 24° C is used.

Possible cause: Voltage supply (approx. 5 V) not OK, wire or control unit selector switches defective.

Troubleshooting: Check voltage supply (approx. 5 V) of selector switches as well as wires and repair or renew component as required

Defect Code 28

♦D♦ Defect code memory: 28 Left heater sensor

Explanation: This defect code is stored when there is a short to ground, to positive or a break at connector blue Pin 18.

Effect of defect: If the defect is a current defect, a substitute value of 55° C is used.

Possible cause: Voltage supply (approx. 5 V) not OK, wire or left heater sensor defective.

Troubleshooting: Check voltage supply (approx. 5 V) as well as wires and repair or renew component as required.

Defect Code 31

♦D♦ Defect code memory: 31 Air flow control

Explanation: This defect code is stored when there is a short to ground, to positive or a break at connector blue Pin 5.

Effect of defect: If the defect is a current defect, a substitute value of 50% is used.

Possible cause: Voltage supply (approx. 5 V) not OK, wire or control unit selector switches defective.

Troubleshooting: Check voltage supply (approx. 5 V) of selector switches as well as wires and repair or renew component as required.

Defect Code 34

♦D♦ Defect code memory: 34 Mixing air control

Explanation: This defect code is stored when there is a short to ground, to positive or a break at connector blue Pin 17.

Effect of defect: If the defect is a current defect, a substitute value of 65% is used.

Possible cause: Voltage supply (approx. 5 V) not OK, wire or mixing air control defective.

Troubleshooting: Check voltage supply (approx. 5 V) of control switch as well as wires and repair or renew component as required.

Defect Code 38

♦D♦ Defect code memory: 38 Auxiliary water pump relay

Explanation: This defect code is stored when there is a short to ground, to positive or a break at connector white Pin 22.

Effect of defect: If the defect is a current defect, the component is no longer activated.

Possible cause: Wire or auxiliary water pump relay defective.

Troubleshooting: Check wire and repair or renew component as required.

Defect Code 40

♦D♦ Defect code memory: 40 Left water valve

Explanation: This defect code is stored when there is a short to ground, to positive or a break at connector white Pin 21.

Effect of defect: If the defect is a current defect, the component is no longer activated.

Possible cause: Wire or left water valve defective.

Troubleshooting: Check wire and repair or renew component as required.

Defect Code 46

♦D♦ Defect code memory: 46 Right water valve

Explanation: This defect code is stored when there is a short to ground, to positive or a break at connector white Pin 23.

Effect of defect: If the defect is a current defect, the component is no longer activated.

Possible cause: Wire or right water valve defective.

Troubleshooting: Check wire and repair or renew component as required.

Defect Code 48

♦D♦ Defect code memory: 48 Rear window defogger relay

Explanation: This defect code is stored when there is a short to positive at connector white Pin 7.

Effect of defect: If the defect is a current defect, the component is no longer activated.

Possible cause: Wire or rear window defogger relay defective.

Troubleshooting: Check wire and repair or renew component as required.

Defect Code 52

♦D♦ Defect code memory: 52 Fresh air flap motor

Explanation: This defect code is stored when there is a short to positive or a break at connector green Pin 6, 7, 8 or 9.

Effect of defect: If the defect is a current defect, the component is no longer activated.

Possible cause: Voltage supply (approx. 12 V) not OK, wire or fresh air flap motor defective.

Troubleshooting: Check voltage supply (approx. 12 V) as well as wires and repair or renew component as required.

Defect Code 61

♦D♦ Defect code memory: 61 Mixing air flap motor

Explanation: This defect code is stored when there is a short to positive or a break at connector yellow Pin 18, 19, 20 or 21.

Effect of defect: If the defect is a current defect, the component is no longer activated.

Possible cause: Voltage supply (approx. 12 V) not OK, wire or mixing air flap motor defective.

Troubleshooting: Check voltage supply (approx. 12 V) as well as wires and repair or renew component as required.

Defect Code 70

♦D♦ Defect code memory: 70 Left footwell flap motor

Explanation: This defect code is stored when there is a short to positive or a break at connector green Pin 1, 14, 15 or 16.

Effect of defect: If the defect is a current defect, the component is no longer activated.

Possible cause: Voltage supply (approx. 12 V) not OK, wire or left footwell flap motor defective.

Troubleshooting: Check voltage supply (approx. 12 V) as well as wires and repair or renew component as required.

Defect Code 73

♦D♦ Defect code memory: 73 Right footwell flap motor

Explanation: This defect code is stored when there is a short to positive or a break at connector yellow Pin 1, 2, 3 or 4.

Effect of defect: If the defect is a current defect, the component is no longer activated.

Possible cause: Voltage supply (approx. 12 V) not OK, wire or right footwell flap motor defective.

Troubleshooting: Check voltage supply (approx. 12 V) as well as wires and repair or renew component as required.

Defect Code 76

♦D♦ Defect code memory: 76 Defrost flap motor

Explanation: This defect code is stored when there is a short to positive or a break at connector green Pin 17, 18, 19 or 20.

Effect of defect: If the defect is a current defect, the component is no longer activated.

Possible cause: Voltage supply (approx. 12 V) not OK, wire or defrost flap motor defective.

Troubleshooting: Check voltage supply (approx. 12 V) as well as wires and repair or renew component as required.

Defect Code 79

♦D♦ Defect code memory: 79 Ventilation flap motor

Explanation: This defect code is stored when there is a short to positive or a break at connector yellow Pin 14, 15, 16 or 17.

Effect of defect: If the defect is a current defect, the component is no longer activated.

Possible cause: Voltage supply (approx. 12 V) not OK, wire or ventilation flap motor defective.

Troubleshooting: Check voltage supply (approx. 12 V) as well as wires and repair or renew component as required.

Notes

These instructions describe the independent heating/ventilation system regardless of which heating control or heating/climate control system is installed.

Functional Description

Function – Independent Heating

General

A warm water independent heating system is provided as an optional extra to heat the interior of the car and defrost the windscreen and side windows. The heater operates independent of the vehicle engine. The switch-on times can be preselected with the aid of the on-board computer or a timer (see Operating Instructions).

The cooling water flowing from the engine circulation system to the heat exchanger is heated. One or two solenoid valves ensure the cooling water remaining in the engine is excluded from this heating process.

When the independent heating system is switched on, an air flap program stored in the heating control unit runs, thus enabling specific air distribution control. When stationary, without the engine running, the interior of the vehicle is heated in air recirculation mode, during which the defrost, footwell and rear area flaps are 100% open.

The air flaps can be set individually once again as of ignition key position 1. As soon as the engine is started, air recirculation mode is switched off and the coolant circuit to the engine is released once again by the solenoid valve.

The interior temperature can be preselected with the temperature selectors. The operating time of the warm water independent heating system is maximum twice 30 minutes. For safety reasons, it must be restarted after this period. Operation is indicated by an LED.

The independent heating system can only be switched on at outside temperatures below 16° C. The temperature is measured by the outside temperature sensor of the on-board computer or timer.

The warm water heater is mounted on the right-hand side wall of the engine compartment. The preheating current as well as the fuel for operation are obtained from the vehicle systems.

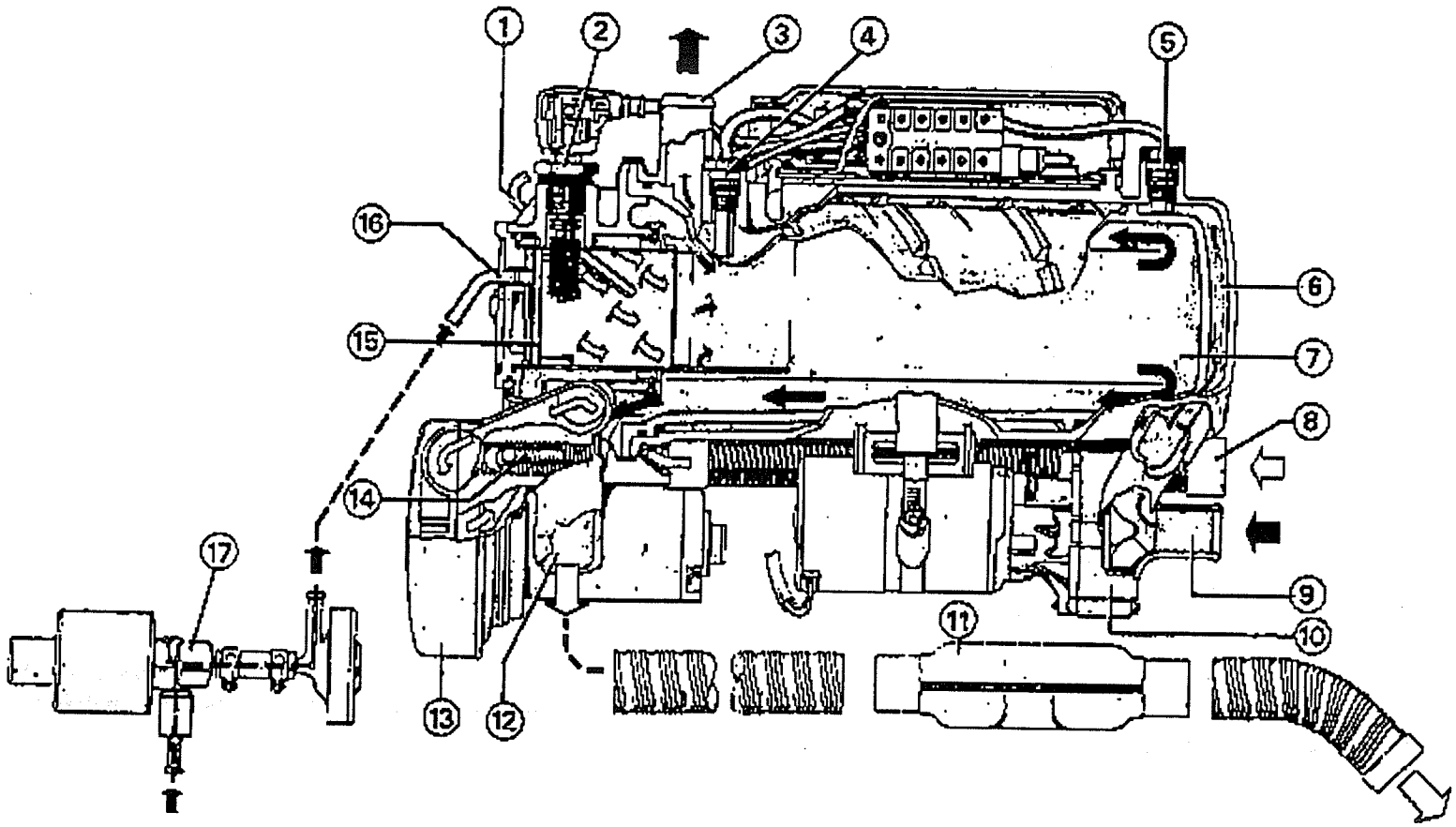

General layout – independent heating unit

P32 64 011

General layout – independent heating unit

1	Flame detector
2	Preheating plug
3	Water outlet
4	Temperature sensor
5	Thermal cut-out
6	Heat exchanger
7	Combustion tube
8	Intake silencer
9	Water inlet
10	Circulation pump
11	Exhaust gas silencer
12	Exhaust gas outlet
13	Combustion air blower
14	Adjusting screw for combustion air control
15	Evaporation burner with fleece
16	Fuel line connection
17	Metering pump

Operating Principle – Independent Heating

Assemblies of the independent heating system:

- Burner
- Heat exchanger
- Combustion air blower
- Warm water circulation pump
- Fuel metering pump

Operating Principle

The independent heating system operates in accordance with the evaporation principle, i.e. the fuel is fed to the hot evaporation burner.

When the system is activated, power is supplied to the preheating plug and the cooling water circulates through the water circulation pump. After a preheating time of approx. 30 sec, the fuel is injected into the evaporation burner in the combustion chamber and the combustion air is supplied after a further delay of 5 sec.

The gas which occurs at the burner as the result of evaporation is enriched with fresh air, it ignites at the heater plug and combusts. The combustion process initiated by external ignition then continues through self-ignition and the heater plug is switched off by flame detector.

If the flame detector does not register a flame during the safety period, a second start attempt is initiated automatically. After being switched on, the heater operates at full load. As the temperature increases individual switching thresholds are reached, via which the control unit initiates further operating statuses.

Partial load operation:

If the water exceeds a temperature of 78° C, the speed of the combustion air blower is reduced. At the same time, the frequency of the metering pump is reduced by approx. 50 %.

Full load operation:

If the temperature drops to 70° C during partial load operation, the system resumes full load operation once again.

Control pause:

If the temperature increases in excess of 86° C during partial load operation, the metering pump is switched off and afterrunning begins.

Afterrunning:

During the afterrunning phase, the combustion chamber is ventilated and the gas removed and the heat exchanger is cooled in order to avoid damage caused by overheating. The flame detector indicates when the flame goes out. During the afterrunning period (approx. 60 sec) the combustion air blower runs at full load and is then switched off. Only the circulation pump and vehicle blower then continue to run.

Start after control pause:

If the temperature drops below 70° C during the control pause, a new starting procedure is initiated automatically. Combustion is achieved once again as soon as the burn detector indicates ignition. The heater reverts to full load operation until the temperature increases above 78° C (followed by partial load operation).

Notes

The heater can dwell for long periods in the operating modes "partial load", "full load" and "control pause" when there is a state of equilibrium between the generated quantity of heat and the heat reduction rate. The operating statuses "full load", "partial load" and "control pause" can also be changed to suit requirements.

Switching off the heater:

The operation indicator goes out when the heater is switched off. The metering pump and the vehicle blower are switched off immediately. The combustion air blower switches to full load. Afterrunning begins after the flame detector signals "no flame". The combustion air blower and the circulation pump are also switched off on completion of the afterrunning phase (approx. 60 sec).

Shut-down circuits:

The heater, including the circulation pump, switches off automatically in the case of faults.

Shut-down when heater does not fire:

If the heater does not fire despite automatic start repeat cycles (approx. 4 minutes), the control unit switches off the heater.

Shut-down due to interruption in firing (e.g. lack of fuel):

If the flame goes out during operation and the flame detector indicates "no flame", the K1 relay (in the control unit) is connected to the heater plug for max. 90 sec (safety period). The heater reverts to full load operation. If combustion no longer takes place, the heater is shut down.

Shut-down by thermal cut-out:

If overheating occurs in the heating circuit, the thermal cut-out trips and interrupts the electrical drive of the metering pump. This stops the delivery of fuel and the flame goes out.

Shut-down after preheating when flame detector is defective:

If the flame detector signals "bright" at the end of the preheating time before the combustion air blower starts up, the heater is shut down.

Corrective measures:

- Rectify cause of fault.
- Shut-down is cancelled by switching the heater off and then on again (min. switch-off duration 1 sec.).

Important!

Even when the time is preselected, the heater must not be operated in closed rooms such as garages or workshops without exhaust gas extraction facilities.

Outside the heating period, the heater should be operated for at least 5 minutes when the engine is cold every 4 weeks in order to avoid difficulties in starting at the start of the heating period. The on-board computer must be switched over to inverse mode if the outside temperature is higher than 16° C.

Inverse Operation of Independent Heating

Explanation

The heating can still be switched on via the on-board computer at an outside temperature > 16° C (e.g. in the workshop).

Operation

1. Set temperature selector to MAXIMUM.
2. Set air flow control to mid-position.
3. Open all doors (prevents premature shut-down of the independent heating).
4. – for HR34 and IHKR (E34) – Open all ventilation flaps.
5. Switch ignition key to position 1 (position R).
6. Press on-board computer button "time"
7. Simultaneously depress on-board computer buttons "time" and "A-temp" for approx. 3 sec until "Inv.heat" appears in the display
8. Press S/R button (LEDs at the time button flash), independent heating operates
9. Press "S/R" button once again to terminate inverse mode

If a multifunction clock is installed

If a multifunction clock timer is installed, it can also be switched to inverse mode by pressing the outside temperature button (3 seconds).

Function – Independent Ventilation

General

Independent ventilation is only possible when independent heating is installed.

The independent ventilation system ventilates the interior at outside temperatures in excess of 16° C. The cut-in times are preselected with the aid of the on-board computer or a timer (see operating instructions).

During independent ventilation, the heating control operates in accordance with a prespecified ventilation program.

Inverse mode of independent ventilation

Analogously to the independent heating system, independent ventilation can also be switched on at temperatures below 16° C by inverse switching of the on-board computer or the multifunction clock timer.

Notes on the BMW DIAGNOSTIC SYSTEM

This system does not feature diagnostic capabilities.

Abbreviations

E	Input
A	Output
BC	On-board computer
HR	Heating control
IHKA	Automatic climate control

Pin Assignment

Connector Numbers

Number	Type	Description
X642		Connector A, independent heating control unit
X764		Connector B, independent heating control unit
X756		Connector C, independent heating control unit
X629		Connector D, independent heating control unit
X608	12-pin	Heater
X757	2-pin	Heater
Depending on type of heating or air conditioning control system:		
X607	12-pin	Relay box
or		
X607	20-pin	Relay box

Independent Heating Control Unit, Connector A, X642

Pin	Type	Description/function	Connection	Signal type	Tester display	Measurement notes
1	E	Terminal 30, control line				
2	E	Terminal 30, supply line				
3	E	Terminal 30, control line				
4	E	Switch-on independent heating from relay box				

Independent Heating Control Unit, Connector B, X764

Pin	Type	Description/function	Connection	Signal type	Tester display	Measurement notes
1		Overheating Protection, Metering Pump				
2	E	Terminal 31, ground	Ground	0 V		

Independent Heating Control Unit, Connector C, X765

Pin	Type	Description/function	Connection	Signal type	Tester display	Measurement notes
1		Not used				
2		Positive wire to thermal cut-out				

Independent Heating Control Unit, Connector D, X629

Pin	Type	Description/function	Connection	Signal type	Tester display	Measurement notes
1		Combustion air blower				
2		Heater plug				
3		Circulation pump				
4		Combustion air blower via partial load resistor				
5		Temperature sensor				
6		Not used				
7		Flame detector				
8		Ground for flame detector and temperature sensor		0 V		

Heater, X608

Pin	Type	Description/function	Connection	Signal type	Tester display	Measurement notes
1		Ground, circulation pump				
2		Circulation pump				
3		Ground, combustion air blower				
4	E	Combustion air blower				
5	A	Partial load resistor				
6	E	Partial load resistor				
7		Ground, flame detector				

Pin	Type	Description/function	Connection	Signal type	Tester display	Measurement notes
8	E	Flame detector				
9		Ground, temperature sensor				
10	E	Temperature sensor				
11	A	Thermal cut-out				
12	E	Thermal cut-out				

Relay box, 12-pin, X607

Pin	Type	Description/function	Connection	Signal type	Tester display	Measurement notes
1		Terminal 30				
2		Fan relay				
3		Ground via BC – heating				
4		Ground via BC – ventilation				
5		Activation, independent heating control unit				
6		Ventilation flap signal				
7		Independent ventilation signal, flap setting				
8		Independent heating signal, flap setting				
9		Terminal 61				
10		Terminal 31, ground				

Pin	Type	Description/function	Connection	Signal type	Tester display	Measurement notes
11		Terminal R				
12		Check valve				

Relay box, 20-pin, X607

Pin	Type	Description/function	Connection	Signal type	Tester display	Measurement notes
1		Terminal 61				
2		Ground via BC – ventilation				
3		Not used				
4		Heating regulator				
5		Step switch, blower motor				
6		Terminal 30				
7		Ground via BC – heating				
8		Not used				
9		Not used				
10		Terminal 31, ground				
11		Check valve				
12		Terminal 15 to unloader relay				
13		Not used				
14		Heating regulator				
15		Step switch, blower motor				
16		Activation, independent heating control unit				

Pin	Type	Description/function	Connection	Signal type	Tester display	Measurement notes
17		Ballast resistor, blower motor				
18		Not used				
19		Independent heating, 55° C switch				
20		Fan relay				

Troubleshooting

Notes

- If the heating control or automatic climate control system is not operating correctly → Continue with diagnostic procedure for heating control or automatic climate control system.
- If the on-board computer is not operating correctly → Continue with diagnostic procedure on-board computer 6581.0A
- Check fan operation by setting the air flow control to MAXIMUM. If fan does not operate → Continue with diagnostic procedure for heating control or automatic climate control system
- Depending on the type of heating control or automatic climate control system, either a 12-pin relay box (e.g. for IHR, IHKA) or a 20-pin relay box (e.g. for HR34) is installed.

Prerequisite for troubleshooting:

- Battery charged, U-min = 12 V
- All fuses for independent heating/ventilation OK

Defect Code Table

Independent ventilation system not operating → Defect code 01

Independent heating not operating → Defect code 02

Heater does not operate also after start repeat → Defect code 03

Despite operating correctly, the heater produces too little heat → Defect code 04

Heater switches to fault during heating operation → Defect code 05

Thermal cut-out is tripped → Defect code 06

Defect Code 01

Independent ventilation system does not operate

Possible cause: Power supply or connection to ground interrupted, on-board computer defective, independent heating/ventilation relay box defective, output stage defective

Troubleshooting

Is the heating control system or automatic climate control system operating?

— no → Continue with diagnostic procedure for heating control or automatic climate control system.

— * —

yes ↓

Switch off ignition and remove on-board computer. Connect adapter to on-board computer connector. Install a fused jumper between Pin 21 and ground. Does the blower motor operate?

— yes → Replace on-board computer.

— * —

no ↓

Do not remove fuse jumper at on-board computer! Remove fan relay. Is battery voltage applied at relay socket Pin 8?

— no → Is battery voltage applied at connector X607 of the independent heating/ventilation relay box at Pin 1 – 12-pin relay box or Pin 3 – 20-pin relay box?

— no → Repair wire to fuse.

— * —

yes ↓

Is wire from relay box connector X607 to fan relay Pin 8 OK?

— no → Repair wire.

yes ↓

yes
↓
Repair wire from the relay box connector X607 to the operating unit of the heating control or automatic climate control system.

— * —

yes
↓
Repair independent heating/ventilation relay box.

— * —

— * —

Defect Code 02

Independent heating does not operate

Possible cause: Power supply or connection to ground interrupted, on-board computer defective, independent heating/ventilation relay box defective, independent heating, ventilation control unit defective

Troubleshooting

Switch off ignition. Remove on-board computer. Connect adapter to the on-board computer connector. Install a fused jumper between Pin 20 and ground. Does the independent heating system operate? — yes → Replace on-board computer. — * —

↓ no

Is wire to on-board computer Pin 20 OK? — no → Repair wire. — * —

↓ yes

Is battery voltage applied at the connector X607 of the independent heating/ventilation relay box at Pin 1 – 12-pin relay box or Pin 3 – 20-pin relay box? — no → Repair wire to fuse. — * —

↓ yes

– **not for HR34** – Measure voltage between Pin 1 and 9 (12-pin relay box). Is voltage value within a tolerance of battery voltage ± 2 V? — no → Repair wire to the alternator.

| | yes ↓

— * —

Switch off ignition and detach connector X607 of the independent heating/ventilation relay box. Install fused jumper between Pin 1 and Pin 12 (12-pin relay box) or Pin 6 and Pin 11 (20-pin relay box). Listen to or feel whether solenoid valves are activated. Are solenoid valves activated?

— no → Is wire to solenoid valve OK?

— yes → Replace solenoid valve.

— * —

| yes ↓

| no ↓

Repair wire.

— * —

| yes ↓

Remove fused jumper. Install a fused jumper between Pin 1 and Pin 5 (12-pin relay box) or Pin 6 and Pin 16 (20-pin relay box). Does the independent heating system switch on?

— yes → Replace independent heating/ventilation relay box.

— * —

| no ↓

Is wire from relay box to independent heating control unit connector A – Pin 5 OK?

— no → Repair wire.

— * —

| yes ↓

Is battery voltage applied at the connector A – Pin 4 of the independent heating control unit? — no → Check fuse, renew if necessary. If OK, repair wire between Pin 4 and fuse.

— * —

yes ↓

Is battery voltage applied at connector A – Pin 3 of the independent heating control unit? — no → Check fuse, renew if necessary. If OK, repair wire between Pin 3 and fuse.

— * —

yes ↓

Is ground applied at connector B – Pin 2 of the independent heating control unit? — no → Repair wire.

— * —

yes ↓

Renew independent heating/ventilation control unit.

— * —

Defect Code 03

Heater does not fire even after start repeat

Possible cause: No ignition signal at Pin 5 X642, heater plug defective, metering pump defective, independent heating/ventilation control unit defective, combustion air blower defective

Troubleshooting

Switch on heater via on-board computer.
Outside temperature < 16° C or INV mode (see BC).
Water temperature < 78° C.

yes ↓

Is pilot indicator lamp of the on-board computer flashing? — no → Continue with defect code 02.

— * —

yes ↓

If the pilot indicator lamp is flashing on the on-board computer, measure voltage at independent heating control unit between connector A – Pin 5 and connector B – Pin 2. Is measured value battery voltage? — no → Charge battery. Check electrical wires, if necessary continue with defect code 02.

— * —

yes ↓

Is the fuse F51 OK (20 A)? — no → Has the wire a short to ground? — no → Renew heater plug.

— * —

yes ↓

Repair wire.

—*—

yes ↓

Is the fuse F52 OK (7.5 A)?

— no → Check circulation pump, combustion air blower, electrical wires for a short to ground. Replace fuse F52.

—*—

yes ↓

Is the heater plug OK?

— no → Check electrical wires. Is voltage between Pin 1 and 2 at the heater plug connector > 10.5 V and < 13.5 V?

— no → Check flame detector (see Component Testing), renew if necessary.

—*—

yes ↓

Check heater plug (see Component Testing). Renew if necessary.

—*—

yes ↓

Is the metering pump operating correctly (after 30 sec preheating)?

— no → Start interrupted by shut-down after 90 sec or after 270 sec.

— no → Check flame detector (see Component Testing) and electrical wires for ground or short-circuit.

—*—

yes ↓

Does the control pulse reach the metering pump?

— no → Check thermal cut-out for continuity and electrical wires. Are thermal cut-out and wires OK?

yes ↓

yes ↓

yes ↓

Renew metering pump.

— * —

Renew control unit.

— * —

|

yes

↓

Does the combustion air blower operate? — no → Are combustion air blower and electrical wires OK? — yes → Renew control unit.

— * —

|

no

↓

Repair wire.

— * —

|

yes

↓

Is the exhaust gas line hot (= combustion in heater)? — no → Metering pump operates but does not deliver fuel. — no → Is the tank empty?

|

no

↓

Check fuel line for kinks and leaks.

— * —

|

yes

↓

Metering pump operates but does not deliver fuel.

|

yes

↓

Check metering pump (see Component Testing).

— * —

|

yes

↓

Does the flame detector switch off the heater plug after combustion (slightly higher running noise of combustion air blower can be heard)? — no → Check flame detector and electrical supply wire.

— * —

|

yes

↓

Check delivery rate of metering pump. Check CO_2 value and adjust. Check fleece and replace if necessary.

— * —

Defect Code 04

Despite operating correctly, heater produces too little heat

Possible cause: Circulation pump defective, flame detector defective, independent heating/ventilation control unit defective

Troubleshooting

Heater switched on via on-board computer.

|
yes
↓

Does the circulation pump at the heater operate? — no → Check circulation pump (see Component Testing) and electrical wires to the independent heating control unit, repair if necessary.

— * —

|
yes
↓

Is the direction of rotation of the circulation pump OK? — no → Check polarity (see 12-pin connector on heater).

— * —

|
yes
↓

Is the vehicle blower operating? — no → Check wires to operating unit or control unit of the heating control or automatic climate control system.

— * —

|
yes
↓

Is free flow in water circuit ensured?

— no → Check solenoid valve ahead of the heat exchanger. Initially, solenoid valves are open and then close at intervals corresponding to the temperature. Check solenoid valves to cut out the vehicle engine (closed in independent heating mode). Renew defective solenoid valve.

— * —

|
yes
↓

Is combustion in heater OK?

— no → Check CO2 value (see Repair Instructions).

|
no
↓

Adjust CO2 value.

— * —

— yes → Check intake silencer.

|
no
↓

Repair exhaust gas silencer.

— * —

|
no
↓

Check metering pump.

— * —

Defect Code 05

Heater shuts down during heating operation

Troubleshooting

Does the heater operate properly during heating operation? — no → Check CO2 value, adjust if necessary.

— * —

yes ↓

Does the heater continue to operate correctly after changing over from full load to partial load? — no → Is the partial load resistor and the supply wire OK? — yes → Renew control unit.

— * —

yes ↓

End of troubleshooting.

— * —

no ↓

Renew wire or partial load resistor.

— * —

Defect Code 06

Thermal cut-out is tripped

Troubleshooting

Is air in the water circuit?

— no → Detach 12-pin connector X608 at the heater. Is battery voltage applied between Pin 1 and Pin 2?

— yes → Renew circulation pump.

— * —

yes ↓

Bleed water circuit (see Bleeding Instructions). When replacing **caution:** First reduce system pressure!

— * —

no ↓

Check temperature sensor (see Component Testing), renew if necessary. If OK, renew control unit.

— * —

Component Testing

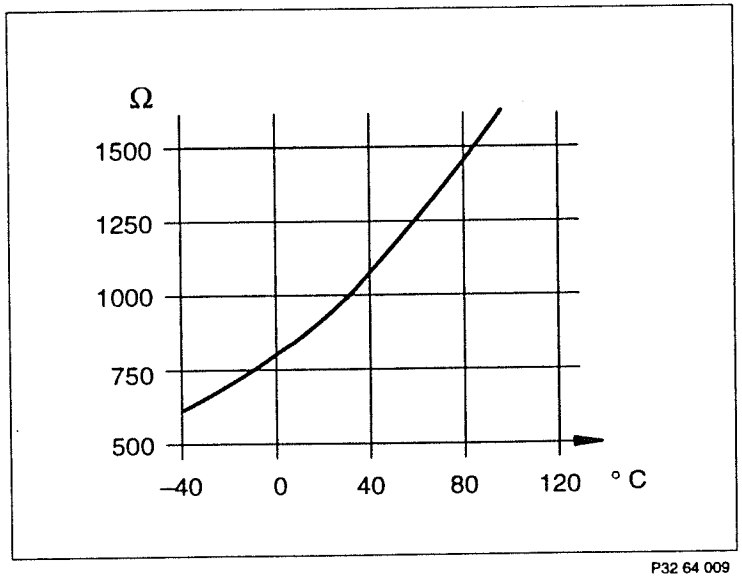

Resistance characteristic curve for temperature sensor

Check temperature sensor

Measure resistance in accordance with the above diagram, maximum permissible test current 1 mA.

Repair: The temperature sensor cannot be repaired and must be replaced complete.

Check heater plug

Test

At a test voltage of 12 V ± 5%, the heater plug should have a power consumption of 20 A ± 10%. If necessary, remove coke deposits on the heater plug by heating and careful cleaning, replace heater plug if necessary.

Note

Coke deposits on the heater plug can be an indication of irregularities in combustion. In this case, check the combustion values (CO2).

Check thermal cut-out

Test

Only the continuity can be checked.

Repair: It must be renewed.

Note

Bleed water circulation system after repair.

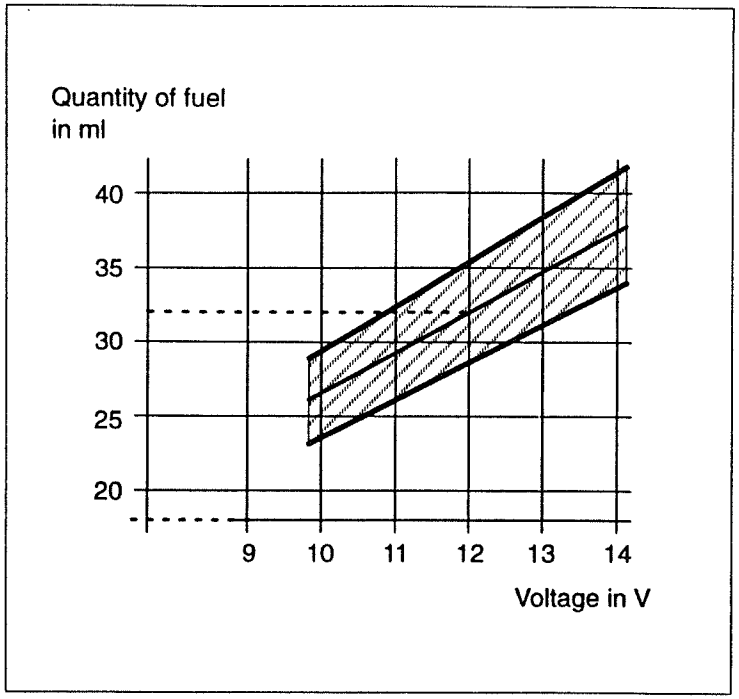

P32 64 010

Diagram for testing the metering pump

Check metering pump

Test

The delivery rate of the metering pump can be checked by measuring the fuel flow rate:

- 1) Detach two-pin connector of the heater plug under the cover.
- 2) Disconnect fuel line at the heater and hold in a measuring beaker (minimum measuring volume 100 ml).
- 3) Switch on heater. Automatic shut-down takes place after 90 sec followed by a start repeat. Repeat procedure until fuel emerges out of the line.
- 4) Switch on heater once again and measure increase in fuel over 2x90 sec. At the same time measure the voltage at the control unit input (plug connection A4 (+) and B2 (–)). Final shut-down takes place automatically.
- 5) To facilitate evaluation, enter the determined data in the corresponding diagram. The point of intersection must be within the hatched area.

Repair

A defective metering pump must be replaced.

Replace the diaphragm damper only in the case of excess delivery or pulsating firing noises.

Important!

The hose between the metering pump and diaphragm damper must not be extended.

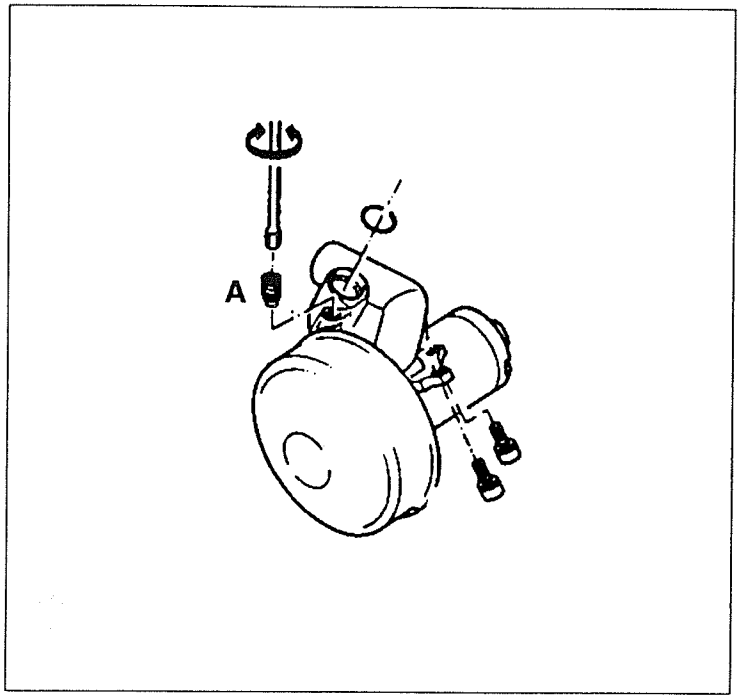

P32 64 012

Combustion air blower

Check combustion air blower

Function

The combustion air blower is mounted on the burner head and supplies the combustion air. An adjusting screw (A) is provided on the housing of the combustion air blower to control the combustion air.

Adjust CO2 value

The CO2 value must be measured and adjusted if necessary after replacing the combustion air blower, the metering pump or in the case of irregular operation of the heater.

CO2 setting value: 11 + 0.5–1.0% (at rated voltage)

Setting procedure

Turn to right: CO2 value is reduced (before measuring run heater for approx. 5 min)

Rough setting: Completely screw- in adjusting screw and turn back by one turn.

Check flame detector

Test

Switch on heater!

- If the heater shuts down after 30 sec (without afterrunning), this indicates a short in the supply line or in the flame detector.
- If the heater switches off after approx. 120 sec after start and reaching combustion and initiates start repeat, then shuts down after a total of 240 sec (without afterrunning), this indicates a break in the supply line or a defect in the flame detector.

Repair:

The flame detector cannot repaired and must be renewed.

Check circulation pump

Test

Check the pump housing for leaks. The circulation pump runs at increased speed if it is not completely filled with water. The seals can be destroyed if the pump runs dry for a longer period of time.

A defective circulation pump can also be the cause for insufficient heating capacity or overheating of the heater.

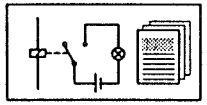

Functional Description

General

In order to avoid excessive accumulation of pollutants (e.g. in tunnels or at traffic lights), an automatic recirculated air control system is provided as an optional extra in models equipped with air conditioning.

Function

Pollutants which build up in road traffic reach the gas sensor as the result of the intake effect of the fan wheel. The sensor is mounted in a housing secured on the fan bracket. A change in the pollutant concentration causes a change in resistance at the gas sensor which is evaluated by the control unit and when a preset threshold value is exceeded, a signal is transferred to the heating control unit. Via the automatic climate control unit the system is switched over to recirculated air mode so that the air is only circulated in the interior of the car. After a certain period of time which depends upon the pollutant concentration, the climate control system automatically assumes its original status.

The aim of the switching characteristic is to ensure that the car occupants are effectively protected from the effects of **pollution peaks** (e.g. at traffic light stops, driving through tunnels). On the other hand, although a constantly high pollutant level is detected by the system, the car occupant cannot be permanently protected from its effects since constant recirculated air mode would lead to oxygen deficiency in the car.

Important!

The system always switches to recirculated air mode for the first 90 seconds after starting (i.e. after switching on the ignition).

This period serves the purpose of initialisation heating of the sensor which can only operate correctly when heated. Recirculated air mode at the beginning of each trip is intended to protect the car occupants from the effects of pollutants after starting the car, e.g. in multi-storey car parks or in town traffic.

Switching on

The AUC is switched on by the AUC/recirculation air push button in the climate control panel. This button is installed in place of the conventional recirculated air button. Three functions can be called in succession:

- 1. Recirculated air (right LED lights)
- 2. AUC (left LED lights)
- 3. OFF (both LED OFF)

Automatic climate control is connected automatically when AUC is switched on.

The AUC control unit also operates when the AUC function has not been selected, in this case, however, it does not intervene in the automatic climate control system, i.e. fresh air flaps are not automatically closed when pollutants filled up. This measure ensures the learn characteristic of the control program remains active so that the system adapts to current pollutant levels. For this reason, the system operates at an optimum when the AUC is switched on during a trip.

Notes on the BMW DIAGNOSTIC SYSTEM

Testing the Status "Recirculation Air Switch"

a) Select the automatic climate control system in the BMW DIAGNOSTIC SYSTEM and monitor the status "recirculation air switch" in the ♦D♦Status lists.

b) Calibration begins when the ignition is switched on. When AUC is switched on, the system switches over to "recirculated air mode" for 90 seconds. If the pollutant level does not increase after this period of time "recirculated air mode" is deactivated.

c) In order to test the AUC, after calibration, a test gas (tuner 600) is sprayed for approx. 1 sec through the kidney into the engine compartment. If the system is operating correctly, IHKA, IHKR will assume "recirculated air mode".

Abbreviations

AUC	Automatic recirculated air control
IHKA	Automatic climate control
IHKR	Automatic climate control

Pin Assignment

Connector Numbers

Number	Type	Description
X3210		Connector AUC Control Unit
X3211		Connector sensor housing
X3212		Plug connection climate control panel

X3210 Connector AUC Control Unit

Pin	Type	Description/function	Connection	Signal type	Tester display	Measurement notes
1	E	Test input (not used)				
2		Fault signal (not used)				
3		Monitor (for IHKR 2)				
4		Not used				
5	A	Relay output (not for IHKR 2)				
6	A	Relay output (not for IHKR 2)				
7		Not used				
8		Shield				
9		Sensor signal				

Pin	Type	Description/function	Connection	Signal type	Tester display	Measurement notes
10		Ground, sensor heating				
11		Sensor operating voltage				
12		Terminal 31, ground				
13		Terminal 15, + battery voltage				

X3211 Connector at Sensor Housing

Pin	Type	Description/function	Connection	Signal type	Tester display	Measurement notes
1	A	Sensor signal				
2	E	Sensor operating voltage		+5 V		
3	E	Ground for sensor heating		0 V		
4		Wire shield				

X3212 Plug Connection AUC-IHKA Operating Unit

Pin	Type	Description/function	Connection	Signal type	Tester display	Measurement notes
1		Relay working contact				
2		Relay working contact				
3	E	Terminal 15		approx. 12 V		
4	E	Ground		0 V		

X3212 Plug Connection AUC-IHKR 2/3-Operating Unit

Pin	Type	Description/function	Connection	Signal type	Tester display	Measurement notes
1	E	Terminal 15		approx. 12 V		
2	E	Ground		0 V		
3		AUC signal				

Troubleshooting

Notes

– The precondition for testing is a fully operable IHKA or IHKR system.

– Troubleshooting with the BMW DIAGNOSTIC SYSTEM. ♦ **D** ♦ Select automatic climate control.

– For wire testing, refer to schematics 6450.0 for 7 Series E32 and 5 Series E34 as of model year 1989. Section heating AUC!

– To check the AUC, after calibration, a test gas (tuner 600) is sprayed for approx. 1 sec through the BMW kidney into the engine compartment.

Defect Code Table

AUC does not switch to recirculated air mode during calibration → Defect code 01

After spraying the test gas, the AUC does not switch for approx. 10 ... 40 sec to "recirculated air mode" → Defect code 02.

AUC switches uncontrolled to "recirculated air mode" without an increase in the pollutant level of the ambient air or without spraying the test gas → Check shielding between sensor connector Pin 4 and AUC control unit connector Pin 8 and repair.

Defect Code 01

AUC does not switch to "recirculated air mode" during calibration

Possible cause: AUC control unit, wires, AUC/recirculation air button

Note: Observe notes in the BMW DIAGNOSTIC SYSTEM (screen display).

Troubleshooting

Connect 26-pin adapter between AUC control unit and connector. Switch on ignition, connect jumper between Pin 5 and 6. Does the system then switch over to "recirculated air mode"? (IHKR 2/3)

— yes → Is battery voltage applied at Pin 13?

— yes → Renew AUC control unit.

— * —

no ↓

Repair wire to fuse.

— * —

no ↓

Check wires Pin 5 and 6 at AUC control unit to operating panel for continuity. Are wires OK? (not for IHKR 2/3)

— yes → Renew operating unit.

— * —

no ↓

Repair wires.

— * —

Defect Code 02

After spraying the test gas, the AUC does not switch for approx. 10 – 40 sec to "recirculated air mode"

Possible cause: Sensor heating, sensor, wires

Troubleshooting

Detach connector at sensor housing. Measure voltage at connector between Pin 2 (approx. +5 V) and Pin 3 (ground via AUC control unit). Is voltage of approx. 5 V applied?

— yes → Connect jumper between Pin 2 and Pin 1. Does the system then switch to "recirculated air mode"?

— yes → Renew sensor.

— * —

no ↓

— yes → Check continuity from Pin 1 to Pin 9 at AUC control unit. Is wire OK?

— yes → Renew AUC control unit.

— * —

no ↓

Repair wire.

— * —

no ↓

Is voltage of approx. 5 V applied between Pin 2 (approx. +5 V) and vehicle ground?

— yes → Check for continuity between Pin 3 and vehicle ground. Is wire OK?

— yes → Renew sensor.

no ↓

|
no
↓

|
no
↓

|
no
↓

|
no
↓

Connect adapter between AUC control unit and connector. Measure voltage between Pin 11 (approx. 5 V) and 12 (ground). Is voltage of approx. 5 V applied?

— yes → Check wire between AUC control unit Pin 11, Pin 10 and sensor connector Pin 2. Check Pin 3 for continuity and repair if necessary.

—*—

|
no
↓

Renew AUC control unit.

—*—

|
no
↓

Connect adapter between AUC control unit and connector. Check for continuity between Pin 10 and vehicle ground. Is measurement OK?

— yes → Repair wire between AUC control unit connector, Pin 10 and sensor connector Pin 3.

—*—

|
no
↓

Check for continuity between Pin 12 and vehicle ground. Is measurement OK?

— yes → Renew AUC control unit.

—*—

|
no
↓

Repair ground wire to Pin 12.

—*—

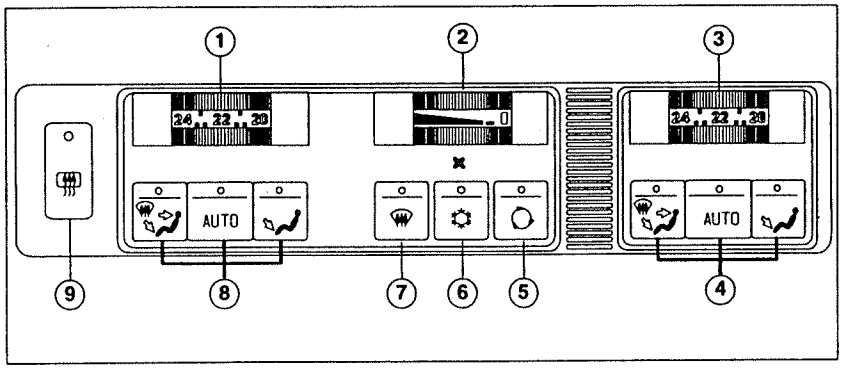

P32 64 003

1 – Temperature selector, left side

2 – Air flow control

3 – Temperature selector, right side

4 – Program button, air distribution, right side

5 – Push button for recirculated air mode

6 – Push button for air conditioning

7 – Push button for max. windscreen and side window de-icing

8 – Program button, air distribution, left side

9 – Push button for rear window defogger

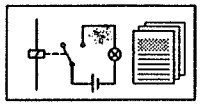

Functional Description

General

The climate control system (IHKA) is a water-based automatic heating and air conditioning system. The control system on the water side is based on two electrically operated water valves in separate heat exchangers on the left and right sides. The required temperature in the vehicle is controlled by the mixing flaps. The air is mixed ahead of the heat exchangers without being heated in the flow of ventilation air. Temperature control with the mixing flaps is therefore not possible when the ventilation outlet nozzles are closed manually.

The control unit performs open-loop and closed-loop control functions with the aid of a microcomputer:

- Control of air distribution flaps
- Air flow control
- Interior temperature control
- Cold start interlock
- Windscreen heating control (not installed in 5 Series)
- Rear window defogger control
- Evaporator temperature control
- Auxiliary water pump control
- Defect detection and diagnosis and making available a substitute value for the failed component

Air distribution flaps

All air distribution flaps are set corresponding to the flap programs by means of stepper motors. The left/right control value is calculated from the input data (outside temperature, heater temperatures, evaporator temperature, interior temperature, control wheel settings, push button settings etc.) and a corresponding flap program selected. For safety reasons, the defrost flap program is set before the IHKA control unit switches off after approx. 3 minutes "ignition OFF" (defect code memory is cleared) and its power consumption reduced.

Control Wheels

Air flow control wheel:

The IHKA control unit takes up operation when the ignition is switched on. The IHKA can be switched on and the nominal value for the air flow set with the air flow control wheel. An increase in the set air flow rate by the wind during driving is largely compensated by the fresh air flap closing dependent on the vehicle speed. The blower is switched off via terminal 50 when starting the vehicle.

A switch is coupled with the air flow control wheel to ensure the blower can take up emergency operation in the case of a defect in the air flow control wheel, failure of the control unit or a defect in the output stage electronics. In the maximum position of the air flow control wheel, this switch switches positive to a relay integrated in the output stage, thus bypassing the output stage electronics. The blower then runs at full power. This switch is not included in the diagnostic procedure for the control unit. It is protected in the case of a short-circuit by a resistor (PTC) connected in series to the switch.

Temperature control wheels:

The nominal value for the inside temperature is set with the temperature control wheels. The temperature values printed on the selector wheels of the operating unit do not correspond to the values which are used by the control unit and which can be read out via the status list, but rather to a comfort temperature. When setting the temperature, the control wheel on the driver's side has priority near the end positions over the control wheel on the passenger's side. In addition, a comfort allowance is implemented within the outside temperature range from – 40° C to 25° C. The comfort allowance ranges from 13° C at – 40° C to 0° C at 25° C.

When the temperature control wheel on the driver's side is set to maximum heating, the positive supply to the water valves is interrupted by way of a mechanically coupled switch. In this position, the control unit interrupts the diagnostic procedure for the water valves which are open when no power is applied.

Relay Outputs

All relays (also water valves) are switched by applying ground to the corresponding output of the control unit. Due to the design of the inner circuitry of the control unit, it is not possible to differentiate between a short to negative and a break. The diagnostic procedure for the control unit only covers the control circuit of the relays.

Cold Start Interlock

In order to avoid unpleasant draught during the warm-up phase (up to 30 °C left heater sensor temperature), the blower is switched to minimum, the air distribution flaps to defrost program and the compressor/auxiliary fan and auxiliary water pump switch to OFF. The cold start interlock is reset to ON after ignition OFF → ON and heater sensor temperature < 30° C.

Auxiliary Water Pump

An electrically operated auxiliary water pump is installed in order to maintain the necessary heating water throughput at low engine speeds.

The auxiliary water pump is switched on when the outlet temperature on one heat exchanger side has exceeded the value of 30 °C after a new start and the control variable Y_L OR Y_R is above 30%.

The auxiliary water pump is switched off when the control variables Y_L AND Y_R drop below the value of 25%.

Air Conditioning Control

The A/C compressor, evaporator control and the auxiliary fan stage 1 are switched on when the air conditioning or recirculated air button is pressed. As of version 002, the A/C compressor is no longer activated automatically when the defrost button is depressed.

Evaporator sensor:

The magnetic clutch of the A/C compressor is disengaged by the A/C relay when the evaporator sensor reaches a temperature of < 2° C. This prevents the evaporator from icing up. At an evaporator sensor temperature of > 3° C, the control unit switches on the A/C relay once again and the magnetic clutch engages.

Pressure switch:

In order to improve the cooling capacity, the medium pressure switch switches on the auxiliary fan stage 2 when the coolant pressure increases to above 18 bar. Auxiliary fan stage 2 is switched off again when the pressure drops below 15 bar. The activation circuit of the A/C compressor clutch leads from the output of the A/C relay (working circuit) to the coolant high pressure switch and via the low pressure switch to the A/C compressor clutch. When one of the pressure switches cuts out because there is too little or too much pressure in the coolant circuit (no or too little coolant or too much coolant), the A/C compressor clutch disengages to avoid damage to the compressor.

Push Buttons

The push buttons are arranged in 4 blocks:

- Air distribution buttons, driver's side
- Air distribution buttons, passenger's side
- Higher-ranking buttons: Defrost, recirculated air, air conditioning
- Rear window button

The air distribution buttons are mutually interlocked by mechanical means. The AUTO button is set by the control unit when no button is pressed. The defrost program button has priority over the other buttons.

The function LEDs belonging to the relevant buttons are switched on by switching on the IHKA and pressing the relevant button. The function LEDs have a common power supply from the control unit.

Rear window button

In vehicles as of **model year 1988**, the rear window defogger can only be activated with the engine running (terminal 61).

When the IHKA system is switched on, the rear window button switches on the rear window defogger for 10 minutes (defrost stage). The function LED lights up.

After the defrost time has elapsed, the function LED goes out and the rear window defogger is switched off for 80 seconds and switched on for 40 seconds.

The system is switched over to defrost if the rear window button is depressed during the modulation period. The rear window defogger is switched off by pressing the button once again.

As of **version 003** , the rear window defogger is switched off automatically after a modulation time of 20 minutes.

Independent Heating/Independent Ventilation

If an independent heating system is installed, the relay box, which switches the independent heating or independent ventilation program in the IHKA control unit, can be activated via the on-board computer. At the selected time, the on-board computer switches on the independent heating at an outside temperature < 16° C and the independent ventilation at an outside temperature > 16° C. For test purposes, by switching the on-board computer in inverse mode, the function at < 16° C outside temperature can be interchanged with the function at > 16° C outside temperature.

The flaps and the blower are set as follows:

Flaps	Independent heating	Independent ventilation
Defrosting	100 %	0 %
Footwell	100 %	0 %
Mixing	100 %	0 %
Ventilation	0 %	100 %
Fresh air	100 %	100 %
all others	0 %	0 %
Blower	5 V	5 V
Water valves	open	open

100 % = open

0 % = closed

Test Mode

Test mode for independent heating/ventilation with interchanged temperature threshold:

1. Switch ignition key to position "R".
2. Press BC button "Time".
3. Simultaneously depress BC buttons "Time" and "A-Temp." for approx. 3 seconds until "In heat" or "In vent" appear in the display.
4. Press BC button S/R (LEDs in Time button flash), independent heating/ independent ventilation operates (after starting, allow independent heating to run for at least 5 minutes).
5. Press the "S/R" button to terminate inverse mode.

Note: The relay box only switches the IHKA control unit to independent heating in ignition switch position "0". In this position, however, inverse mode is cancelled by the on-board computer. If only a multifunction clock is installed, it can also be switched to inverse mode by pressing the outside temperature button (3 seconds).

BMW 7 Windscreen Heating in 7 Series

If the ignition is switched on and the outside temperature is less than 5°C, the IHKA control unit switches the windscreen heating relay and the heating element heats up. The windscreen heater remains switched on for as long as the value of the outside temperature sensor of the IHKA is less than 8°C. The windscreen heater is switched off when the outside temperature increases to above 8°C.

Windscreen heating is no longer fitted during the course of **model year 1990.**

Stepper Motors

Stepper motors are installed to adjust the various flaps.

Calibration

The control unit assumes that, after completing the calibration phase, the stepper motors are in a defined position since the stepper motors cannot signal back their position to the control unit. The calibration phase is triggered when the power supply (terminal 15 and terminal 30) of the control unit was interrupted. The calibration phase is then started after ignition ON.

Defect detection

When a defect is detected, a differentiation is made between a short to positive and a break.

In the case of a short to positive, the cause may also be due to a inter-phase short-circuit, i.e. connection to another winding of the motor. The corresponding motor is switched off if the control unit detects a stepper motor defect. It resumes operation when the ignition was switched off for > 3 minutes or a calibration run is triggered and the motor is found to be OK.

The stepper motors have an adjustment time of approx. 12 – 16 seconds. An exception to this is the fresh air motor which has an opening time of approx. 12 seconds and a closing time of approx. 2 seconds.

If the system voltage drops below 10 V with the ignition switched on, the activation frequency is halved so that the adjustment time is doubled. If the system voltage drops below 9 V, the motor is no longer activated by the control unit. As of this voltage, reliable activation of the stepper motor is no longer possible.

Interior Sensor Blower

The interior sensor blower ventilates the interior sensor. This ventilation prevents overheating of the interior sensor and the control unit operates with the current interior temperature value. To ensure effective operation, unobstructed air flow through the ventilation grille in the component must be ensured (no dirt build-up).

BMW 5 BMW 7

Automatic Climate Control (IHKA)

General Block Diagram

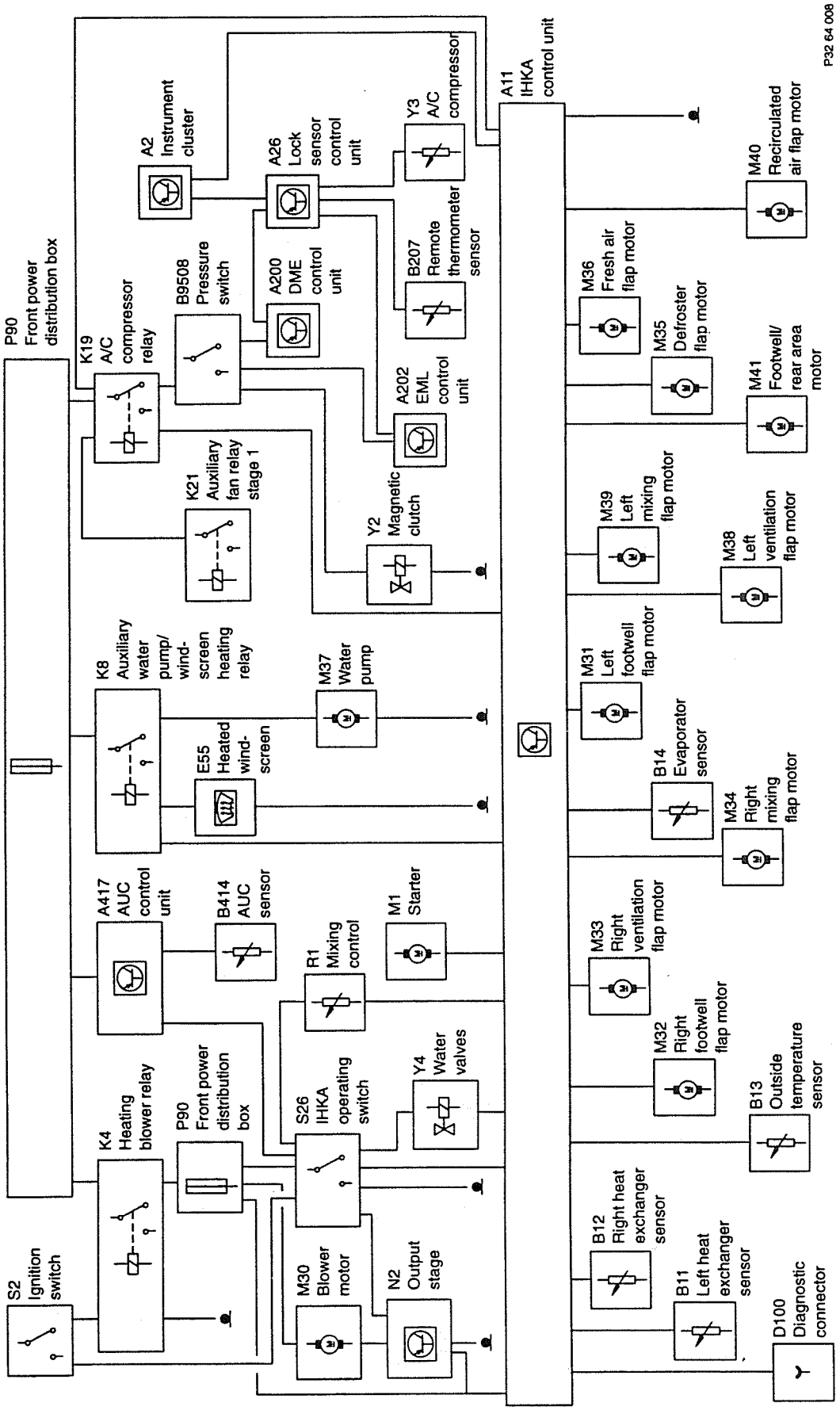

Notes on the BMW DIAGNOSTIC SYSTEM

The component functions and signals listed below are processed or controlled by the IHKA control unit, however, they are not stored as a defect code in the event of a defect:

- Speed signal output from the instrument cluster
- *All keys in the operating unit, switches for rear area flaps, independent heating and independent ventilation of the relay box, diode for right-hand drive coding in the operating unit
- Signal from terminal 30 h of the starter solenoid switch
- Voltage supply of function LEDs
- Control of function light for the rear window defogger in the rear window defogger button
- *Blower control voltage to blower motor output stage
- Diagnostic links RxD/TxD to BMW Service Tester

Component functions and signals marked with * can be read out in the status list of the BMW DIAGNOSTIC SYSTEM.

When the IHKA operating unit is coded with a diode as right-hand drive, the texts "driver's side"/"passenger's side" are used by the BMW diagnostic system corresponding to the function of the control unit.

The IHKA control unit clears the defect code memory when the voltage supply (terminal 30, terminal 15) is interrupted or the ignition was switched off for longer than 3 minutes. The defective components or functions are stored as defect codes after the ignition is switched on.

The current defect code memory indicates whether a defect currently exists. The display "current defect" shows that the defect currently exists. The component or the function is then not used by the control unit. For instance, a relay is no longer activated by the control unit. If a "defect current" applies to the temperature sensors or control wheels, a substitute value provided by the control unit is used for these components. The substitute value is replaced by the current value when the defect no longer applies. "No defect" is then indicated under "current memory" on the corresponding defect page. The control unit makes an exception as regards defect code detection and storage in the case of the stepper motors. Here, a defect is only detected after ignition "ON", under the condition that the ignition was switched off for longer than 3 minutes beforehand or the voltage supply was interrupted. If a stepper motor defect occurs when the IHKA is in operation (ignition "ON") this is not stored in the form of a defect code.

Notes

The windscreen heating relay status is derived from diagnosis of the outside temperature. A defect code is not detected.

Abbreviations

IHKA	Automatic climate control
A	Output
E	Input
Max	Maximum
AUTO	Automatic (control in accordance with the flap programs stored in the control unit)
Poti	Potentiometer

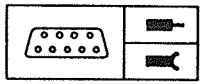

Pin Assignment

Pin Assignments at IHKA Control Unit Connector X613

Pin	Type	Description/function	Connection	Signal type	Tester display	Measurement notes
1	E	Ground	Ground point X818	0 V		
2	E	Ground	Ground point X818	0 V		
3		Not used				
4	E	Left nominal temperature value (potentiometer)	Left temperature control wheel			
5	E	Nominal air flow value (potentio-meter)	Air flow control wheel			
6	A	Interior sensor blower (ground)	Operating unit			
7	E/A	Actual outside temperature value	Outside temperature sensor			
8	E	Right nominal temperature value (potentiometer)	Right temperature control wheel			
9	E	Actual evaporator temperature	Evaporator sensor			
10	A	Positive for stepper motors	Positive from control unit for all stepper motors			
11	A	Positive for stepper motors	Positive from control unit for all stepper motors			
12	E	Ignition "ON" terminal 15	Blower relay K4			
13	E	Ignition "ON" terminal 15	Blower relay K4			
14	E	Ground	Ground point X818	0 V		

Pin	Type	Description/function	Connection	Signal type	Tester display	Measurement notes
15	E	Ground	Ground point X818	0 V		
16	A	Ground for sensors and control wheels	Ground from control wheel for all sensors and control wheels			
17	E	Nominal mixing air value (potentio-meter)	Mixing air control wheel			
18	A/E	Left actual heater value	Left heat exchanger sensor			
19	E	Start terminal 50 (30 h)	Solenoid switch			
20	A	+ 5 V supply from control unit	All control wheels (potentio-meter)			
21	A/E	Actual interior temperature value	Interior temperature sensor			
22	A/E	Right actual heater value	Right heat exchanger sensor			
23	A	Positive for stepper motors	Positive from control unit for all stepper motors			
24	A	Positive for stepper motors	Positive from control unit for all stepper motors			
25	E	Ignition "ON" terminal 15	Blower relay K4			
26	E	Ignition "ON" terminal 15	Blower relay K4			

Pin Assignments at IHKA Control Unit Connector X614

Pin	Type	Description/function	Connection	Signal type	Tester display	Measurement notes
1	A	Right footwell motor activation	Right footwell flap motor			
2	A	Right footwell motor activation	Right footwell flap motor			

Pin	Type	Description/function	Connection	Signal type	Tester display	Measurement notes
3	A	Right footwell motor activation	Right footwell flap motor			
4	A	Right footwell motor activation	Right footwell flap motor			
5	E	Switch for rear area, recirculated air, air conditioning	Operating unit (recirculated air, air conditioning), ventilation grille, rear area (matrix circuit)			
6	E	Switch for rear window, max. left, bottom left	Operating unit (matrix circuit)			
7	E	Switch for defrost, independent heating, independent ventilation	Operating unit defrost switch, relay box output			
8	E	Switch for max. right, bottom right, right-hand drive coding diode	Operating unit (matrix circuit)			
9	E	Speed-A signal	Instrument cluster			
10	E	Diagnosis	Diagnostic connector RxD			
11	A	Switch for rear area, rear window, independent heating, right-hand drive coding diode	Operating unit, relay box, ventilation grille			
12	A	Switch for recirculated air, max. right, independent ventilation	Operating unit, relay box			
13	A	Switch for air conditioning, bottom left, defrost, bottom right	Operating unit (matrix circuit)			
14	A	Right ventilation flap motor activation	Right ventilation flap motor			
15	A	Right ventilation flap motor activation	Right ventilation flap motor			
16	A	Right ventilation flap motor activation	Right ventilation flap motor			

Pin	Type	Description/function	Connection	Signal type	Tester display	Measurement notes
17	A	Right ventilation flap motor activation	Right ventilation flap motor			
18	A	Right mixing flap motor activation	Right mixing flap motor			
19	A	Right mixing flap motor activation	Right mixing flap motor			
20	A	Right mixing flap motor activation	Right mixing flap motor			
21	A	Right mixing flap motor activation	Right mixing flap motor			
22		Not used				
23		Not used				
24		Not used				
25		Not used				
26		Not used				

Pin Assignments at IHKA Control Unit Connector X610

Pin	Type	Description/function	Connection	Signal type	Tester display	Measurement notes
1	A	Rear area flap motor activation	Rear area flap motor			
2	A	Rear area flap motor activation	Rear area flap motor			
3	A	Rear area flap motor activation	Rear area flap motor			
4	A	Rear area flap motor activation	Rear area flap motor			
5	A	Blower output stage activation	Blower output stage			
6	A	Motronic relay activation	Motronic relay			
7	A	Rear window defogger relay activation	Rear window defogger relay			

Pin	Type	Description/function	Connection	Signal type	Tester display	Measurement notes
8	A	A/C relay activation	A/C relay			
9		Not used				
10		Not used				
11		Not used				
12	E	Permanent positive supply terminal 30	Front power distribution box			
13	E	Permanent positive supply terminal 30	Front power distribution box			
14	A	Recirculated air flap motor activation	Recirculated air flap motor			
15	A	Recirculated air flap motor activation	Recirculated air flap motor			
16	A	Recirculated air flap motor activation	Recirculated air flap motor			
17	A	Recirculated air flap motor activation	Recirculated air flap motor			
18	A	Function light activation	Operating unit			
19	A	Rear window function light activation	Operating unit			
20	A	Diagnosis	Diagnostic connector TxD			
21	A	Left water valve activation	Left water valve			
22	A	Auxiliary water pump relay activation	Auxiliary water pump relay K8			
23	A	Right water valve activation	Right water valve			

Pin	Type	Description/function	Connection	Signal type	Tester display	Measurement notes
24	A	Windscreen heating relay activation	not used at front part of wire harness			
25	E	Permanent positive supply terminal 30	Front power distribution box			
26	E	Permanent positive supply terminal 30	Front power distribution box			

Pin Assignments at IHKA Control Unit Connector X611

Pin	Type	Description/function	Connection	Signal type	Tester display	Measurement notes
1	A	Left footwell motor activation	Left footwell flap motor			
2	A	Mixing flap motor activation	Left mixing air flap motor			
3	A	Mixing flap motor activation	Left mixing air flap motor			
4	A	Mixing flap motor activation	Left mixing air flap motor			
5	A	Mixing flap motor activation	Left mixing air flap motor			
6	A	Fresh air flap motor activation	Fresh air flap motor			
7	A	Fresh air flap motor activation	Fresh air flap motor			
8	A	Fresh air flap motor activation	Fresh air flap motor			
9	A	Fresh air flap motor activation	Fresh air flap motor			
10		Not used				
11		Not used				
12		Not used				
13		Not used				

Pin	Type	Description/function	Connection	Signal type	Tester display	Measurement notes
14	A	Left footwell motor activation	Left footwell flap motor			
15	A	Left footwell motor activation	Left footwell flap motor			
16	A	Left footwell motor activation	Left footwell flap motor			
17	A	Defroster flap motor activation	Defroster flap motor			
18	A	Defroster flap motor activation	Defroster flap motor			
19	A	Defroster flap motor activation	Defroster flap motor			
20	A	Defroster flap motor activation	Defroster flap motor			
21	A	Left ventilation flap motor activation	Left ventilation flap motor			
22	A	Left ventilation flap motor activation	Left ventilation flap motor			
23	A	Left ventilation flap motor activation	Left ventilation flap motor			
24	A	Left ventilation flap motor activation	Left ventilation flap motor			
25		Not used				
26		Not used				

Pin Assignments at IHKA Operating Unit X612

Pin	Type	Description/function	Connection	Signal type	Tester display	Measurement notes
1	E	Function lights	Light switch			
2	A	Switch for rear window, max. left, bottom left	Control unit connector X614 Pin 6			
3	E	Switch for rear area, rear window, independent heating, right-hand drive coding plug	Control unit connector X614 Pin 11			

Pin	Type	Description/function	Connection	Signal type	Tester display	Measurement notes
4	A	Switch for defrost, independent heating, independent ventilation	Control unit connector X614 Pin 7			
5	E	Switch for recirculated air, max. left, max. right, independent ventilation	Control unit connector X614 Pin 12			
6	A	Switch for rear area, recirculated air, air conditioning	Control unit connector X614 Pin 5			
7	E	Rear window function light activation	Control unit connector X610 Pin 19			
8	A	Switch for max. right, bottom right, right-hand drive coding plug	Control unit connector X614 Pin 8			
9		Not used				
10		Not used				
11		Not used				
12		Not used				
13	A/E	Actual interior temperature value	Control unit connector X613 Pin 21			
14	E	+ 5 V supply from control unit	Control unit connector X613 Pin 20			
15	E	Ground for sensors and control wheels	Control unit connector X613 Pin 16			
16	E	Function light activation	Control unit connector X610 Pin 18			
17	E	Switch air flow control wheel max. position	Ignition switch terminal 15			
18		Not used				
19	E	Operating unit lights	Dimmer			

Pin	Type	Description/function	Connection	Signal type	Tester display	Measurement notes
20	E	Ground for function and operating unit lights	Ground point X818			
21	A	Right nominal temperature value (potentiometer)	Control unit connector X613 Pin 8			
22	A	Left nominal temperature value (potentiometer)	Control unit connector X613 Pin 4			
23	A	Nominal air flow value (potentiometer)	Control unit connector X613 Pin 5			
24	E	Switch for air conditioning, bottom left, defrost, bottom right	Control unit connector X614 Pin 13			
25	A	Switch air flow control wheel in max. position	Output stage connector X671 Pin 3			
26	E	Interior sensor blower (ground)	Control unit connector X613 Pin 6			

Adapter

Component	Connector No.	Description	Adapter No.
Control unit	X 610	26-pin white, top left	Cartool 61 4 460 V–adapter 26-pin Cartool 61 1 459 Periphery box
	X 611	26-pin green, bottom left	Cartool 61 4 460 V–adapter 26-pin Cartool 61 1 459 Periphery box
	X 613	26-pin blue, top right	Cartool 61 4 460 V–adapter 26-pin Cartool 61 1 459 Periphery box
	X 614	26-pin yellow, bottom right	Cartool 61 4 460 V–adapter 26-pin Cartool 61 1 459 Periphery box
Operating unit	X 612	26-pin blue	Cartool 61 4 453 V–adapter 26-pin Cartool 61 1 459 Periphery box
Output stage	X 671	5-pin green	

Troubleshooting

Notes

- Troubleshooting with BMW DIAGNOSTIC SYSTEM
- Battery charged, U-min = 12 V
- Fuses protecting the function of the IHKA must be in working order
- The suitable adapter must be used for testing and the IHKA must be connected such that
  it is fully operable. A connector which must be unplugged to facilitate testing must be specified as such in the test schedule. Defect codes are stored by the control unit when disconnecting components and during testing. The defect codes stored prior to testing must therefore be printed out.
- The inputs and outputs listed in the following are not stored in the defect code memory of the IHKA control unit:
- Inputs (E): Buttons (matrix circuit), terminal 50 , terminal 15 , terminal 30, vehicle speed signal, diagnostic link RxD .
- Outputs (A): LEDs for function lights, blower control voltage, buttons (matrix circuit), diagnostic link TxD .
- In order to achieve a uniform output status when monitoring and storing the defect codes, the IHKA must be switched on with the air flow control wheel. If, despite the IHKA being switched on, the air flow control wheel displays control wheels "OFF" in the ♦D♦ Status list (function lights of program buttons do not light), check the power supply from the control unit to the control wheel potentiometers in the operating unit.

Table of substitute values for temperature sensors

Defective component	Substitute value	Substitute value when outside temperature sensor defective
Left heater sensor	55° C	0° C
Right heater sensor	55° C	0° C
Outside temperature sensor	0° C	0° C
Evaporator sensor	– 5° C	– 5° C
Interior sensor	20° C	20° C

Table of substitute values for control wheels

Defective component	Substitute value
Left temperature control wheel	24° C
Right temperature control wheel	24° C
Air flow control	50%
Mixing air control	65%

Defect Code Table

♦D♦ Defect code memory – possible stored defect codes:

Defect code No.	Defect location
01	Right temperature control wheel
04	Right heater sensor
07	Evaporator sensor
10	Outside temperature sensor
13	Interior sensor
16	Interior sensor blower
25	Left temperature control wheel
28	Left heater sensor
31	Air flow control
34	Mixing air control
38	Auxiliary water pump relay
40	Left water valve
44	A/C relay/auxiliary fan stage 1
46	Right water valve
47	A/C system decoupling relay DME/EML
48	Rear window defogger relay
52	Fresh air flap motor
55	Recirculated air flap motor
58	Left ventilation flap motor

Defect code No.	Defect location
61	Right mixing air flap motor
64	Left mixing air flap motor
67	Rear area flap motor
70	Left footwell flap motor
73	Right footwell flap motor
76	Defroster flap motor
79	Right ventilation flap motor

Defect Code 01

♦D♦Defect code memory: 01 Right temperature control wheel

Explanation: This defect code is stored when there is a a short to ground, to positive or a break at connector blue Pin 8.

Effect of defect: If the defect is a current defect, a substitute value of 24° C is used.

Possible cause: Voltage supply (approx. 5 V) not OK., wire or pc-board of operating unit defective.

Troubleshooting: Check voltage supply (approx. 5 V) of control wheels as well as wires and repair or renew component as required.

Defect Code 04

♦D♦Defect code memory: 04 Right heater sensor

Explanation: This defect code is stored when there is a short to ground, to positive or a break at connector blue Pin 22.

Effect of defect: If the defect is a current defect, a substitute value of 55° C is used.

Possible cause: Voltage supply (approx. 5 V) not OK, wire or right heater sensor defective.

Troubleshooting: Check voltage supply (approx. 5 V with temperature sensor disconnected) as well as wires and repair or renew component as required.

Defect Code 07

♦D♦Defect code memory: 07 Evaporator sensor

Explanation: This defect code is stored when there is a short to ground, to positive or a break at connector blue Pin 9.

Effect of defect: If the defect is a current defect, a substitute value of – 5° C is used.

Possible cause: Voltage supply (approx. 5 V) not OK, wire or evaporator sensor defective.

Troubleshooting: Check voltage supply (approx. 5 V with temperature sensor disconnected) as well as wires and repair or renew component as required.

Defect Code 10

♦D♦Defect code memory: 10 Outside temperature sensor

Explanation: This defect code is stored when there is a short to ground, to positive or a break at connector blue Pin 7.

Effect of defect: If the defect is a current defect, a substitute value of 0° C is used.

Possible cause: Voltage supply (approx. 5 V) not OK, wire or outside temperature sensor defective.

Troubleshooting: Check voltage supply (approx. 5 V with temperature sensor disconnected) as well as wires and repair or renew component as required.

Defect Code 13

♦D♦ Defect code memory: 13 Interior temperature sensor

Explanation: This defect code is stored when there is a short to ground, to positive or a break at connector black Pin 3.

Effect of defect: If the defect is a current defect, a substitute value of 24° C is used.

Possible cause: Voltage supply not OK, wire or interior temperature defective.

Troubleshooting: Check voltage supply (approx. 5 V with temperature sensor disconnected) as well as wires and repair or renew component as required.

Defect Code 16

♦D♦Defect code memory: 16 Interior sensor blower

Explanation: This defect code is stored when there is a short to ground, to positive or a break at connector blue Pin 6.

Effect of defect: If the defect is a current defect, the component is no longer activated.

Possible cause: Wire or interior sensor blower defective.

Troubleshooting: Check wire and repair or renew component as required.

Defect Code 25

♦D♦ Defect code memory: 25 Left temperature control wheel

Explanation: This defect code is stored when there is a short to ground, to positive or a break at connector black Pin 5.

Effect of defect: If the defect is a current defect, a substitute value of 24° C is used.

Possible cause: Voltage supply not OK, wire or control unit selector wheels defective.

Troubleshooting: Check voltage supply (approx. 5 V) of control wheels as well as wires and repair or renew component as required.

Defect Code 28

♦D♦Defect code memory: 28 Left heater sensor

Explanation: This defect code is stored when there is a short to ground, to positive or a break at connector blue Pin 18.

Effect of defect: If the defect is a current defect, a substitute value of 55° C is used.

Possible cause: Voltage supply (approx. 5 V) not OK, wire or left heater sensor defective.

Troubleshooting: Check voltage supply (approx. 5 V with temperature sensor disconnected) as well as wires and repair or renew component as required.

Defect Code 31

♦D♦Defect code memory: 31 Air flow control

Explanation: This defect code is stored when there is a short to ground, to positive or a break at connector blue Pin 5.

Effect of defect: If the defect is a current defect, a substitute value of 50% is used.

Possible cause: Voltage supply (approx. 5 V) not OK, wire or control unit selector wheels defective.

Troubleshooting: Voltage supply (approx. 5 V) of control wheels as well as wires and repair or renew component as required.

Defect Code 34

♦D♦Defect code memory: 34 Mixing air control

Explanation: This defect code is stored when there is a short to ground, to positive or a break at connector blue Pin 17.

Effect of defect: If the defect is a current defect, a substitute value of 50% is used.

Possible cause: Voltage supply (approx. 5 V) not OK, wire or mixing air control defective.

Troubleshooting: Check voltage supply (approx. 5 V) of control wheel as well as wires and repair or renew component as required.

Defect Code 38

♦D♦Defect code memory: 38 Auxiliary water pump relay

Explanation: This defect code is stored when there is a short to ground, to positive or a break at connector white Pin 22.

Effect of defect: If the defect is a current defect, the component is no longer activated.

Possible cause: Wire or auxiliary water pump relay defective.

Troubleshooting: Check wire and repair or replace component as required.

Defect Code 40

♦D♦Defect code memory: 40 Left water valve

Explanation: This defect code is stored when there is a short to ground, to positive or a break at connector white Pin 21.

Effect of defect: If the defect is a current defect, the component is no longer activated.

Possible cause: Wire or left water valve defective.

Troubleshooting: Check wire and repair or renew component as required.

Defect Code 44

♦D♦Defect code memory: 44 A/C relay/auxiliary fan relay stage 1

Explanation: This defect code is stored when there is a short to ground, to positive or a break of both relays at the same time at connector white Pin 8.

Effect of defect: If the defect is a current defect, the component is no longer activated.

Possible cause: Wire or component defective.

Troubleshooting: Check wire and repair or renew component as required.

Defect Code 46

♦D♦Defect code memory: 46 Right water valve

Explanation: This defect code is stored when there is a short to ground, to positive or a break at connector white Pin 23.

Effect of defect: If the defect is a current defect, the component is no longer activated.

Possible cause: Wire or right water valve defective.

Troubleshooting: Check wire and repair or renew component as required.

Defect Code 47

♦D♦Defect code memory: 47 A/C decoupling relay – DME/EML

Explanation: This defect code is stored when there is a short to ground, to positive or a break at connector white Pin 6.

Effect of defect: If the defect is a current defect, the component is no longer activated.

Possible cause: Wire or auxiliary fan relay defective.

Troubleshooting: Check wire and repair or renew component as required.

Defect Code 48

♦D♦Defect code memory: 48 Rear window defogger relay

Explanation: This defect code is stored when there is a short to positive at connector white Pin 7.

Effect of defect: If the defect is a current defect, the component is no longer activated.

Possible cause: Wire or rear window defogger relay defective.

Troubleshooting: Check wire and repair or renew component as required.

Defect Code 52

♦D♦Defect code memory: 52 Fresh air flap motor

Explanation: This defect code is stored when there is a short to positive or a break at connector green Pin 6, 7, 8 or 9.

Effect of defect: If the defect is a current defect, the component is no longer activated.

Possible cause: Voltage supply (approx. 12 V) not OK, wire or fresh air flap motor defective.

Troubleshooting: Check voltage supply (approx. 12 V) as well as wires and repair or renew component as required.

Defect Code 55

♦D♦Defect code memory: 55 Recirculated air flap motor

Explanation: This defect code is stored when there is a short to positive or a break at connector white Pin 14, 15, 16 or 17.

Effect of defect: If the defect is a current defect, the component is no longer activated.

Possible cause: Voltage supply (approx. 12 V) not OK, wire or recirculated air flap motor defective.

Troubleshooting: Check voltage supply (approx. 12 V) as well as wires and repair or renew component as required.

Defect Code 58

♦D♦Defect code memory: 58 Left ventilation flap motor

Explanation: This defect code is stored when there is a short to positive or a break at connector green Pin 21, 22, 23 or 24.

Effect of defect: If the defect is a current defect, the component is no longer activated.

Possible cause: Voltage supply (approx. 12 V) not OK, wire or left ventilation flap motor defective.

Troubleshooting: Check voltage supply (approx. 12 V) as well as wires and repair or renew component as required.

Defect Code 61

♦D♦Defect code memory: 61 Right mixing air flap motor

Explanation: This defect code is stored when there is a short to positive or a break at connector yellow Pin 18, 19, 20 or 21.

Effect of defect: If the defect is a current defect, the component is no longer activated.

Possible cause: Voltage supply (approx. 12 V) not OK, wire or right mixing air flap motor defective.

Troubleshooting: Check voltage supply (approx. 12 V) as well as wires and repair or renew component as required.

Defect Code 64

♦D♦Defect code memory: 64 Left mixing air flap motor

Explanation: This defect code is stored when there is a short to positive or a break at connector green Pin 2, 3, 4 or 5.

Effect of defect: If the defect is a current defect, the component is no longer activated.

Possible cause: Voltage supply (approx. 12 V) not OK, wire or left mixing air flap motor defective.

Troubleshooting: Check voltage supply (approx. 12 V) as well as wires and repair or renew component as required.

Defect Code 67

♦D♦Defect code memory: Rear area flap motor

Explanation: This defect code is stored when there is a short to positive or a break at connector white Pin 1, 2, 3 or 4.

Effect of defect: If the defect is a current defect, the component is no longer activated.

Possible cause: Voltage supply (approx. 12 V) not OK, wire or rear area flap motor defective.

Troubleshooting: Check voltage supply (approx. 12 V) as well as wires and repair or renew component as required.

Defect Code 70

♦D♦Defect code memory: 70 Left footwell flap motor

Explanation: This defect code is stored when there is a short to positive or a break at connector green Pin 1, 14, 15 or 16.

Effect of defect: If the defect is a current defect, the component is no longer activated.

Possible cause: Voltage supply (approx. 12 V) not OK, wire or left footwell flap motor defective.

Troubleshooting: Check voltage supply (approx. 12 V) as well as wires and repair or renew component as required.

Defect Code 73

♦D♦Defect code memory: 73 Right footwell flap motor

Explanation: This defect code is stored when there is a short to positive or a break at connector yellow Pin 1, 2, 3 or 4.

Effect of defect: If the defect is a current defect, the component is no longer activated.

Possible cause: Voltage supply (approx. 12 V) not OK, wire or right footwell flap motor defective.

Troubleshooting: Check voltage supply (approx. 12 V) as well as wires and repair or renew component as required.

Defect Code 76

♦D♦Defect code memory: 76 Defroster flap motor

Explanation: This defect code is stored when there is a short to positive or a break at connector green Pin 17, 18, 19 or 20.

Effect of defect: If the defect is a current defect, the component is no longer activated.

Possible cause: Voltage supply (approx. 12 V) not OK, wire or defroster flap motor defective.

Troubleshooting: Check voltage supply (approx. 12 V) as well as wires and repair or renew component as required.

Defect Code 79

♦D♦Defect code memory: 79 Right ventilation flap motor

Explanation: This defect code is stored when there is a short to positive or a break at connector yellow Pin 14, 15, 16 or 17.

Effect of defect: If the defect is a current defect, the component is no longer activated.

Possible cause: Voltage supply (approx. 12 V) not OK, wire or right ventilation flap motor defective.

Troubleshooting: Check voltage supply (approx. 12 V) as well as wires and repair or renew component as required.

Component Testing

Operating unit – Control wheels ♦D♦201 Status list/31 air flow control OFF

Possible cause: Air flow control potentiometer in operating unit or connection to control unit defective

Note: When ♦D♦201 Status list/31 air flow control indicates OFF, the control unit does not switch on the function light. Only defrost and the rear window defogger can be activated. In the case of an interruption in the supply voltage of the control wheels in the operating unit, the temperature control wheel indicates ♦D♦201/01, 25 Temperature control wheels 15° C and 31 Air flow control OFF although they are in mid-position.

Troubleshooting

Set control wheels to mid-position. Check the two voltage supply lines from the control unit to the control wheel potentiometer at the operating unit (X612 Pin 14 positive and Pin 15 negative). Nominal value approx. 5 Volt. Is the nominal value obtained?

— no → Check wires to the control unit (X612 Pin 14 to X613 Pin 20 and X612 Pin 15 to X613 Pin 16). Is wire OK?

— no → Repair wires.

— * —

yes ↓

Renew pc-board of the operating unit.

— * —

yes ↓

Is the nominal value obtained when the operating unit is disconnected?

— no → Renew control unit.

— * —

yes ↓

Renew pc-board of the operating unit.

— * —

Output stage (blower "max" stage)♦D♦201 Status list/42 Blower control voltage and 31 Air flow control can be varied.

Possible cause: Blower does not operate in max setting: Blower, short-circuit protection, blower MAX switch, air flow control wheel on operating unit pc-board, ground connection for output stage X818 to X671 Pin 4 defective

Note: Activation of the blower output stage and activation of the blower motor are not part of the diagnostic procedure for the IHKA control unit.

Troubleshooting

Switch on ignition, set air flow control to "max" position. With a fused jumper, connect output stage connector X671 Pin 5 to Pin 4 (ground of X818). Does the blower operate at full capacity?

— no → Check blower motor. Is blower motor OK?

— yes → Check wire and fuse.

— * —

yes ↓

no ↓

Renew blower motor.

— * —

yes ↓

Check voltage at operating unit connector X612 (26-pin) Pin 17 with respect to vehicle ground. Is approx. battery voltage measured?

— no → Check wire to ignition lock connector X33 Pin 6 (terminal 15 i) and repair if necessary.

— * —

yes ↓

Detach connector from the output stage. Measure voltage at the operating unit connector X612 (26-pin) Pin 25 with respect to vehicle ground. Is approx. battery voltage measured?

— no → Check wire from connector X612 Pin 25 to the output stage connector X671 Pin 3. Is wire OK?

— yes → Renew pc-board of operating unit.

— * —

no ↓

Repair wire.

— * —

yes ↓

Check voltage at output stage connector X671 Pin 3 positive with respect to Pin 4 ground. Is approx. battery voltage measured?

— yes → Renew output stage.

— * —

no ↓

Repair wire (X612 Pin 25 (26-pin) to X671 Pin 3).

— * —

Output stage (blower motor control)♦D♦201 Status list/42 Blower control voltage and 31 Air flow control can be varied

Possible cause: Blower runs only in max setting: Blower and supply voltage to blower OK, connection or voltage supply to output stage defective

Note: Activation of the blower output stage and activation of the blower motor are not part of the diagnostic procedure of the IHKA control unit.

Troubleshooting

Switch on ignition, set air flow control wheel to mid-position. Detach connector X671 from the output stage. Measure voltage at connector X671 between Pin 2 positive and Pin 4 ground. Is approx. battery voltage applied?

— no → Check wire and fuse and repair if necessary.

yes ↓

—*—

Check voltage at connector X671 between Pin 1 positive and Pin 4 ground by turning the air flow control wheel from "min" to "max" ("max" not locked in position). Can the voltage be varied within a range from approx. 0 to approx. 4.5 Volt?

— no → Check voltage at the control unit connector X610 (SLA white) Pin 5 positive with respect to vehicle ground by turning the air flow control wheel from "min" to "max" ("max" not locked in position).Can the voltage be varied within the range from approx. 0 to approx. 4.5 Volt.?

— no → Check wire for short-circuit. If wire is OK, replace control unit.

yes ↓

—*—

yes ↓

Detach connector X671 at the output stage. Measure voltage at connector X671 between Pin 1 positive and Pin 4 ground by turning the air flow control wheel from "min" to "max" ("max" not locked in position). Can the voltage be varied within the range from approx. 0 to approx. 4.3 Volt?

— yes → Is the blower controlled when the connector X671 is connected?

— no → Replace output stage.

—*—

no
↓
Replace output stage.

—*—

yes
↓
Contact problems at output stage connector. Fault repaired.

—*—

Check buttons in operating unit and coding diode (matrix circuit).♦D♦205/207/208 Status lists

Possible cause: Pc-board of operating unit, connection to control unit, switch, button or corresponding diode defective

Note: The "auto" buttons switch on the function diode only internally. The control unit detects "auto" when no button is depressed. The buttons are detected by the control unit via a contact connected in series with a diode. When the control unit detects a button, this status can be read out in the status lists ♦D♦205/207/208.

Checking the buttons in the operating panel.

Test equipment: Adapter with correct connection lead (26-pin blue), Service Tester♦M♦09 Diode test.

Test prerequisite: Adapter connected to operating unit (blue connector), control unit side not connected, ignition switched off. The pin numbers without brackets ( ) apply when the adapter is connected at the control unit connector and the control unit side is not connected (yellow connector SRB X614).

ST♦M♦09 green clip at	ST♦M♦09 black clip at	Button to be tested		Displayed value	In case of fault
Pin (3) 11	Pin (2) 6	Rear window button	x	Positive polarity	see Notes on evaluation
Pin (3) 11	Pin (2) 6	Rear window button	o	Break	see Notes on evaluation
Pin (5) 12	Pin (2) 6	Program button max left	x	Positive polarity	see Notes on evaluation
Pin (5) 12	Pin (2) 6	Program button max left	o	Break	see Notes on evaluation
Pin (24) 13	Pin (2) 6	Program button bottom left	x	Positive polarity	see Notes on evaluation
Pin (24) 13	Pin (2) 6	Program button bottom left	o	Break	see Notes on evaluation
Pin (24) 13	Pin (4) 7	Defroster button	x	Positive polarity	see Notes on evaluation
Pin (24) 13	Pin (4) 7	Defroster button	o	Break	see Notes on evaluation
Pin (24) 13	Pin (6) 5	Program button A/C	x	Positive polarity	see Notes on evaluation
Pin (24) 13	Pin (6) 5	Program button A/C	o	Break	see Notes on evaluation
Pin (5) 12	Pin (6) 5	Program button recirculated air	x	Positive polarity	see Notes on evaluation
Pin (5) 12	Pin (6) 5	Program button recirculated air	o	Break	see Notes on evaluation
Pin (5) 12	Pin (8) 8	Program button max right	x	Positive polarity	see Notes on evaluation
Pin (5) 12	Pin (8) 8	Program button max right	o	Break	see Notes on evaluation
Pin (24) 13	Pin (8) 8	Program button bottom right	x	Positive polarity	see Notes on evaluation
Pin (24) 13	Pin (8) 8	Program button bottom right	o	Break	see Notes on evaluation
Pin (5) 12	Pin (4) 7	Program independent ventilation SL	x	Positive polarity	see Notes on evaluation
Pin (5) 12	Pin (4) 7	Program independent ventilation SL	o	Break	see Notes on evaluation
Pin (3) 11	Pin (4) 7	Program independent heating SH	x	Positive polarity	see Notes on evaluation
Pin (3) 11	Pin (4) 7	Program independent heating SH	o	Break	see Notes on evaluation
Pin (3) 11	Pin (6) 5	Rear area switch FR	x	Positive polarity	see Notes on evaluation
Pin (3) 11	Pin (6) 5	Rear area switch FR	o	Break	see Notes on evaluation
Pin (3) 11	Pin (8) 8	Right-hand drive coding diode RHD	x	Positive polarity	see Notes on evaluation
Pin (3) 11	Pin (8) 8	Right-hand drive coding diode RHD	o	Break	see Notes on evaluation

Notes on table

x = Button depressed / independent heating or independent ventilation ON / right-hand drive operating unit with coding diode
o = Button not depressed / independent heating or independent ventilation OFF / left-hand drive operating unit without coding diode

Notes on independent heating/ventilation

The switch and diode are integrated in the relay box. With the aid of their output temperature sensor, the on-board computer or the multifunction timer decide whether the independent heating or independent ventilation systems are to be activated. For test purposes, the on-board computer can switch on the independent heating or independent ventilation system in inverse mode.

Notes on evaluation

If the specified displays, referred to the pin numbers in brackets, are not obtained or if short-circuit is indicated, then the pc-board of the operating unit or the corresponding contacts are defective. If the displays are not obtained when checking at the connector X614 (pin numbers not in brackets) the corresponding wires must also be checked in accordance with the schematics.

Test Schematic for the IHKA Program Buttons
(Matrix Circuit)

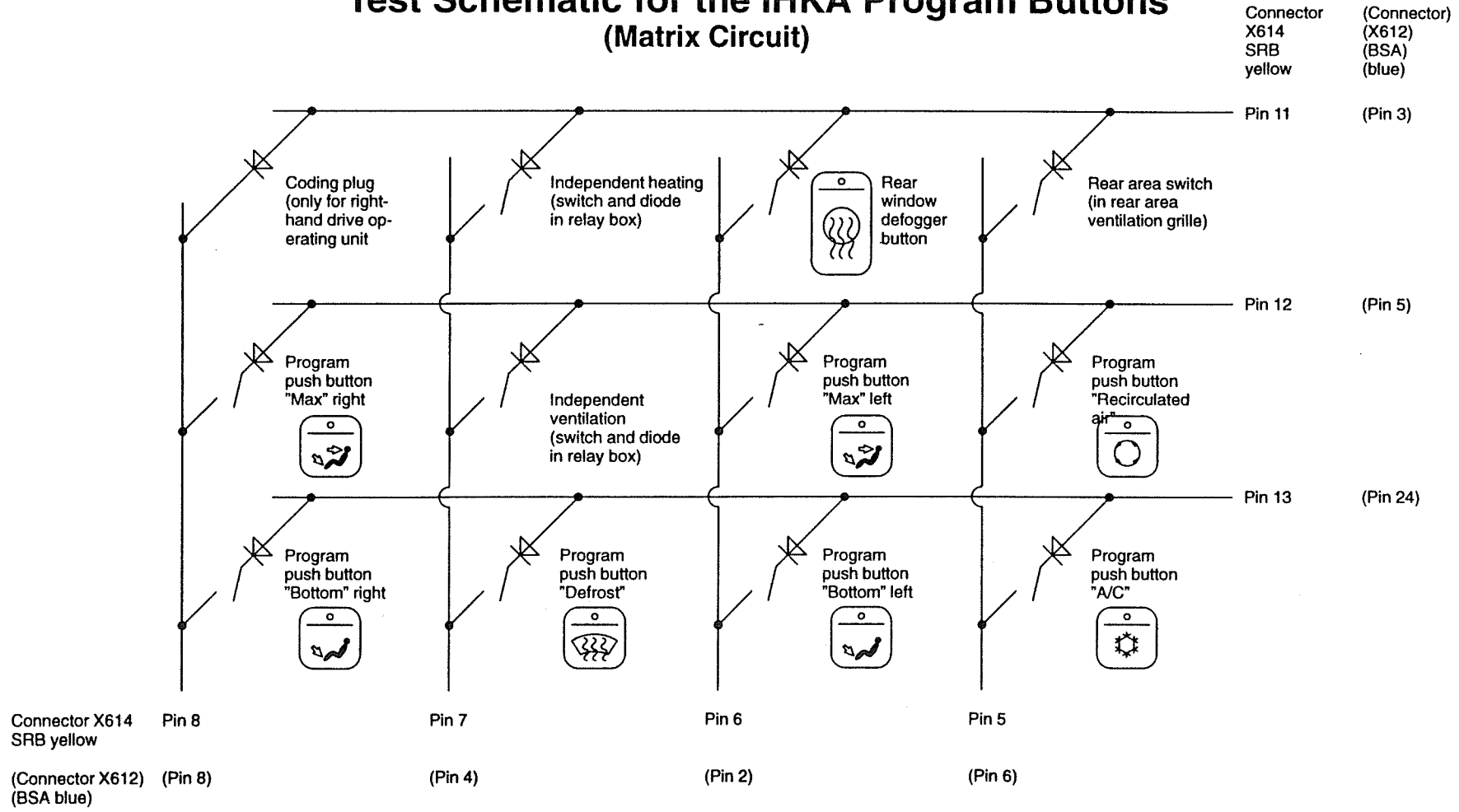

P34 64 003

A/C Compressor clutch does not engage "◆D◆206 Status list/44 A/C relay" indicates "ON" and ◆D◆900/04 IHKA defect code overview" indicates "No defect code stored"

Possible cause: Fuse F9, relay working circuit, refrigerant low pressure switch, refrigerant high pressure switch, incorrect refrigerant level, A/C compressor clutch with quenching diode or connections in working circuit defective

Note: The A/C relay is not driven by the IHKA control unit for as long as the A/C relay is stored as defective by the IHKA control unit.

Test prerequisite: Correct refrigerant level, fuse F9 and system voltage OK

Note: In the case of defect "A/C compressor clutch does not engage" in the Series 750i, the lock sensor additionally installed in these vehicles must be checked first.

Troubleshooting

Remove A/C relay. Switch on ignition. Connect relay connector X51 Pin 6 to Pin 2 with fused jumper. Does the A/C compressor clutch engage?

— yes → Renew A/C relay.

|
no
↓

— * —

Check voltage at relay connector X51 Pin 2 with respect to vehicle ground. Is approx. battery voltage measured?

— no → Check wire and fuse, repair if necessary.

|
yes
↓

— * —

Switch off ignition. Check at relay connector X51 Pin 6 to Pin 7 for continuity (< 1 Ω). Is the value obtained?

— no → Detach connector X127 from the refrigerant high pressure switch and with a fused jumper connect Pin 1 to Pin 2. Check at relay connector X51 Pin 6 to Pin 7 for continuity (< 1 Ω). Is the value obtained?

— no → Repair wires.

|
yes
↓

|
yes
↓

Detach connector X163 at the A/C compressor. Switch on ignition. With the aid of a fused jumper, connect Pin 6 to Pin 2 at relay connector X51. Measure voltage at A/C compressor connector X163 Pin 1 with respect to vehicle ground. Is approx. battery voltage applied?

— yes → Has the A/C compressor run hot (temperature protection switch cuts out)?

|
yes
↓

Renew refrigerant high pressure switch.

— * —

— no → Renew A/C compressor clutch.

— * —

|
no
↓

Allow A/C compressor to cool down and repeat test.

— * —

|
no
↓

Detach connector X125 from coolant low pressure switch and connect Pin 1 to Pin 2 with fused jumper. Measure voltage at A/C compressor connector X163 Pin 1 with respect to vehicle ground. Is approx. battery voltage applied?

— no → Repair wires.

— * —

|
yes
↓

Renew refrigerant low pressure switch.

— * —

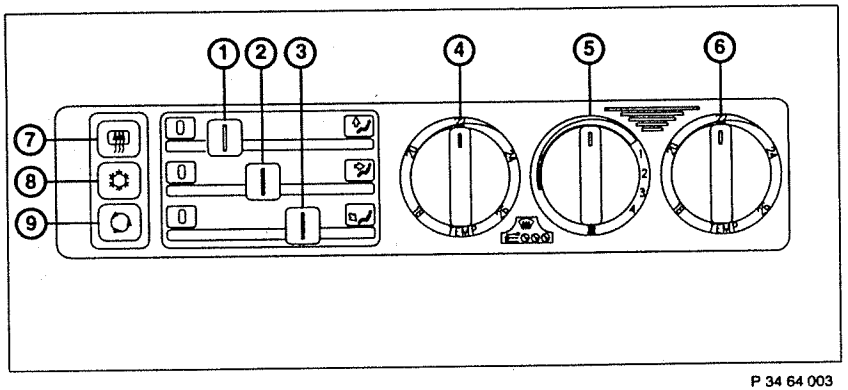

P 34 64 003

1 – Slide lever for top air distribution (operating cable)

2 – Slide lever for centre air distribution (operating cable)

3 – Slide lever for bottom air distribution (potentiometer)

4 – Temperature control left side

5 – Air flow control

6 – Temperature control right side

7 – Push button for rear window defogger

8 – Push button for air conditioning

9 – Push button for recirculated air mode

Notes

As of week 2/90 this system will be replaced by the IHKR 2 system! (refer to Section 6450.3A)

Functional Description

General

The automatic climate control system (IHKR) is a water-based automatic heating and air conditioning system. The control system on the water side is based on two electrically operated water valves in separate heat exchangers on the left and right sides.

The required temperature in the vehicle is controlled by a mixing flap. The air is mixed ahead of the heat exchangers without being heated in the flow of ventilation air. Temperature control with mixing flaps is therefore not possible when the ventilation outlet grilles are closed manually.

The control unit performs open-loop and closed-loop control functions with the aid of a microcomputer:

- Control of recirculated air and footwell flaps
- Temperature mixing control
- Air flow control
- Interior temperature control
- Rear window defogger control
- Evaporator temperature control
- Auxiliary water pump control
- Defect detection and diagnosis and making available a substitute value for failed components

Flap Control

The ventilation and defroster flaps are continuously variable by means of an operating cable assembly. The footwell flaps are adjusted by setting a sliding potentiometer. The fresh air flaps are controlled by way of a stepper motor depending upon the blower switch and the vehicle speed. By pressing the recirculated air button, the fresh air flaps are closed and the recirculated air flaps opened. The mixing flaps are adjusted by the mixing air control wheel and the control variable Y_L. When the ventilation flap is closed, the mixing air flap moves to the "warm" position (controlled by microswitch). After switching off the ignition, the flaps powered by stepper motors assume the following positions:

- Footwell : "CLOSED"
- Mixing : "WARM"
- Fresh air : "OPEN"
- Recirculated air : "CLOSED"

Control Wheels

Air flow control

The IHKR control unit takes up operation when the ignition is switched on. The IHKR can be switched on and the nominal value for the air flow set with the air flow control wheel (exception: rear window defogger).

An increase in the set air flow rate by the wind during driving is largely compensated by the fresh air flap closing dependent on the vehicle speed.

The blower is switched off via terminal 50 when starting the vehicle.

A switch is coupled with the air flow control wheel to ensure the blower can take up emergency operation in the case of a defect in the air flow control wheel, failure of the control unit or a defect in the output stage electronics. In the maximum position of the air flow control wheel, this switch switches positive to a relay integrated in the output stage, thus by-passing the output stage electronics.

The switch is not included in the diagnostic procedure of the control unit.

Temperature control wheels

The nominal value for the interior temperature is set with the temperature control wheels. The temperature values printed on the control wheels of the operating unit do not correspond to the values which are used by the control unit and which can be read out via the status list, but rather to a comfort temperature. When setting the temperature, the control wheel on the driver's side has priority near the end positions over the control wheel on the passenger's side. When the temperature control wheel on the driver's side is set to maximum heating, the positive supply to the water valves is interrupted by way of a mechanically coupled switch. In this position, the control unit interrupts the diagnostic procedure for the water valves which are open when no power is applied.

Relay Outputs

All relays (also water valves) are switched by applying ground to the corresponding output of the control unit. The diagnostic procedure for the control unit only covers the control circuit of the relays.

Climate Control

The A/C compressor, the evaporator control and the auxiliary fan stage 1 are switched on when the A/C or recirculated air button is pressed.

Evaporator sensor:

The magnetic clutch of the A/C compressor is switched off by the A/C relay and the auxiliary fan stage 1 is also switched off when the evaporator sensor reaches a temperature of < 2° C. This feature prevents the evaporator from icing up. At an evaporator sensor temperature of > 3° C, the control unit once again switches on the A/C relay and the auxiliary fan stage 1 and the magnetic clutch energizes.

Pressure switch:

In order to improve the cooling capacity, the auxiliary fan stage 2 is switched on by a medium pressure switch when the refrigerant pressure increases to above 18 bar. The auxiliary fan stage 2 is switched off once again when the pressure drops below 15 bar. The activation circuit for the A/C compressor clutch leads from the output of the A/C relay (working circuit) to the refrigerant high pressure switch and via the low pressure switch to the A/C compressor clutch. If one of the pressure switches has cut out due to too little or too much pressure in the refrigerant circuit (no or too little refrigerant or too much refrigerant) the A/C compressor clutch disengages in order to protect the A/C compressor from being damaged.

Push Buttons

3 push buttons are located in the IHKR operating unit.

- Rear window defogger button
- A/C button
- Recirculated air button

With the IHKR switched on and the engine running, the rear window defogger is switched on (defrost stage) by pressing the button once. The function lamp lights and the defrosting time runs down from 600 seconds to 0. After the defrosting time has elapsed, the function LED goes out and the rear window defogger is switched off for 80 seconds - and switched on for 40 seconds. This modulation is continued until this status is changed by pressing the rear window defogger button or after the ignition was switched off for longer than 3 minutes and the control unit switched off. If the defogger button is pressed during modulation mode, the system is switched over to defrosting. The rear window defogger is switched off by pressing the button once again.

Master Controller Y

The master controller is a value calculated by the control unit which separately activates the left and right outputs (water valves) dependent on the input values (nominal temperature value, interior temperature and outside temperature. The Y – value is also used in the calculation of the flap control.

The value of the master controller is between –25% (cooling) and 127% (high heat requirement).

Independent Heating/Ventilation

If an independent heating system is installed, the relay box which switches the independent heating or independent ventilation program in the IHKR control unit, can be activated via the on-board computer or multifunction clock. At a preselected time, the on-board computer (or multifunction clock) switches on the independent heating at an outside temperature < 16° C and the independent ventilation at an outside temperature > 16° C.

Stepper Motors

Stepper motors are installed in order to move the various flaps. The control unit assumes that, after completing the calibration phase, the stepper motors are in a defined position since the stepper motors cannot signal back their position to the control unit. The calibration phase is triggered when the power supply (terminal 30) of the control unit was interrupted or after the ignition was deactivated 10 times. The calibration phase is then started after ignition ON. Error detection differentiates between short to positive, short to negative and a break in the circuit. If the control unit detects a stepper motor defect, the defective motor is no longer activated. The stepper motors no longer move if the voltage of the vehicle electrical system drops below 9V or increases above 15V. The stepper motors operate with only half frequency when the voltage of the vehicle electrical system is between 9V and 11V.

Auxiliary Water Pump

An electrically operated, auxiliary water pump is installed to maintain the necessary heating water throughput at low engine speeds.

The auxiliary water pump is switched on when the outlet temperature on one heat exchanger side has exceeded the value of 30° C after a new start and the control variable Y_L OR Y_R is above 30 %. The water pump is connected when the nominal value potentiometer on the driver's side is set to the end position.

The auxiliary water pump is switched off when the control variables Y_L AND Y_R drop below the value of 25 %.

Interior Sensor Blower

The interior sensor blower ventilates the interior sensor. This ventilation prevents overheating of the interior sensor and the control unit operates with the current interior temperature value. To ensure effective operation, unobstructed air flow through the ventilation grille in the operating unit must be ensured (no dirt build-up).

Automatic Climate Control (IHKR)

General Block Diagram

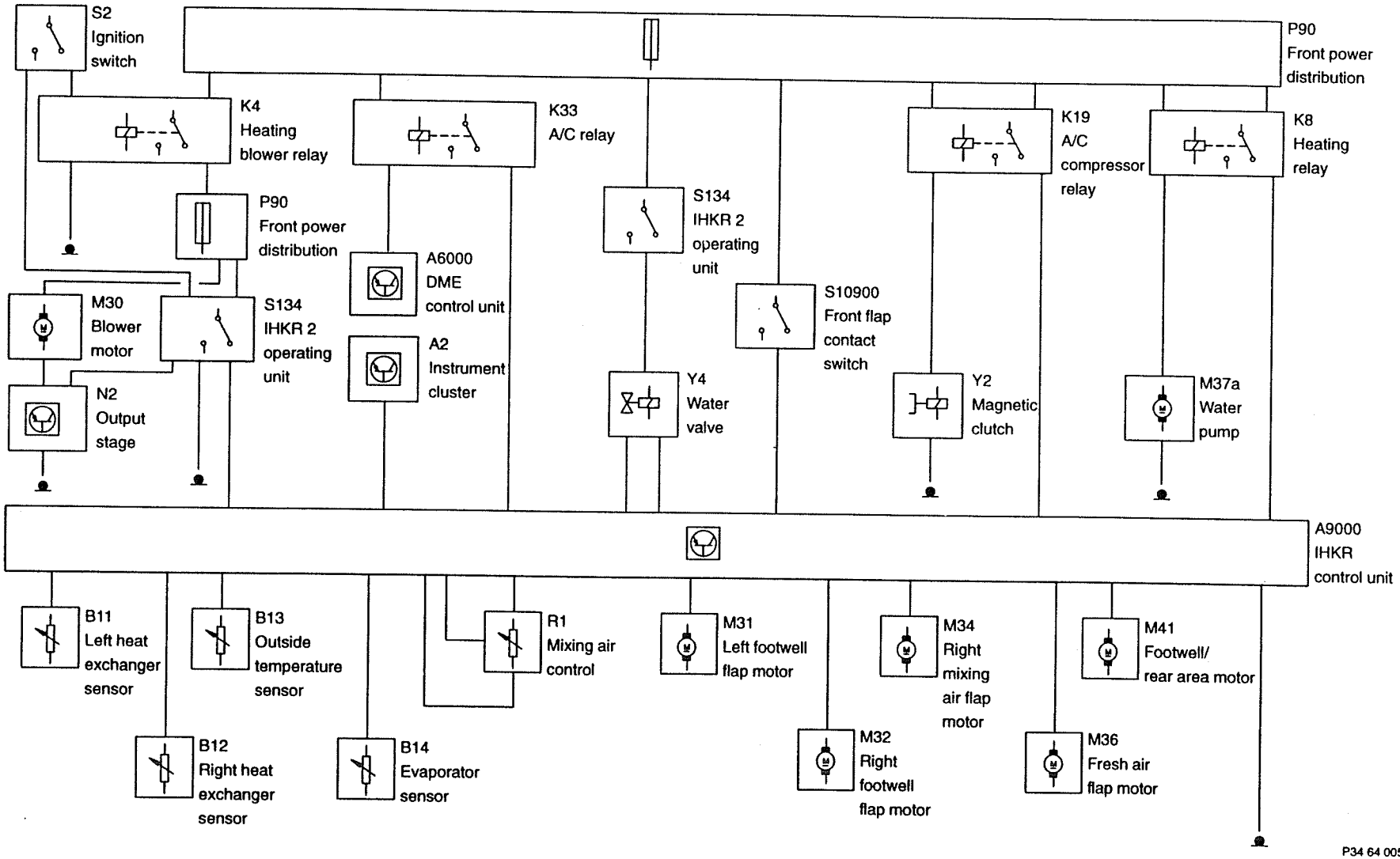

P34 64 005

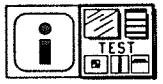

Notes on the BMW DIAGNOSTIC SYSTEM

The following component functions and signals are processed or controlled by the IHKR control unit but are not stored as a defect code in the case of a fault:

- * Speed signal output from instrument cluster
- * All buttons in the operating unit, switches for independent heating OR independent ventilation from the relay box
- Signal from terminal 30 h of the starter solenoid switch
- Voltage supply of function LEDs
- Control of function lighting for the rear defogger in the rear defogger button
- * – Blower control voltage to blower motor output stage
- Diagnostic links RxD/TxD to BMW Service Tester

The component functions and signals marked with * can be read out in the status lists of the BMW diagnostic system.

Defect Code Memory

The IHKR control unit clears the defect code memory when the voltage supply (terminal 30, terminal 15) is interrupted or the ignition was off for longer than 3 minutes. After switching on the ignition, all defective components or functions are stored as defect codes.

The defect code memory indicates whether a defect is currently present. The display "current defect" shows that the defect currently exists. The component or the function is then not used by the control unit. For instance, if a "current defect" is indicated for the temperature sensors or control wheels, a substitute value made available by the control unit is used for these components. When the defect has been rectified, the substitute value is replaced by the current value. "No defect" is then indicated in the corresponding defect code page. The control unit makes an exception for the stepper motors as regards defect detection and defect code storage. In this case, a defect is detected only after ignition "ON", whereby the ignition must have been switched off for longer than 3 minutes beforehand or the power supply was interrupted. When the automatic climate control (IHKR) is in operation (ignition "ON") and a stepper motor defect occurs, this defect is not stored in the form of a defect code.

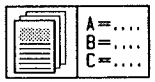

Abbreviations

not applicable

Pin Assignment

Connector at Control Unit

Number	Type	Description
X613	26-pin, blue	SRA, top right connector
X614	26-pin, yellow	SRB, bottom right connector
X610	26-pin, white	SLA, top left connector
X611	26-pin, green	SLB, bottom left connector

Plug Connections

Number	Type	Description
X35	21-pin, black	Front section of wire harness
X612	26-pin, blue	BSA, operating unit
X693		BSB, plug connection positive to the water valves
X682	3-pin, white	from operating unit to relay box
X671	5-pin, green	to output stage

Pin Assignments at IHKR Control Unit Connector X613

Pin	Type	Description/function	Connection	Signal type	Tester display	Measurement notes
1	E	Ground	Ground point X818	0 V		
2	E	Ground	Ground point X818	0 V		
3		Not used				
4	E	Left nominal temperature value (potentiometer)	Left temperature control wheel			
5	E	Nominal air flow value (potentio-meter)	Air flow control wheel			
6	A	Interior sensor blower (ground)	Operating unit			
7	A/E	Outside temperature	Outside temperature sensor			
8	E	Right nominal temperature value (potentiometer)	Right temperature control wheel			
9	A/E	Evaporator temperature	Evaporator sensor			
10	A	Positive for stepper motors	Positive from control unit for all stepper motors			
11	A	Positive for stepper motors	Positive from control unit for all stepper motors			
12	E	Ignition "ON" terminal 15	Terminal 15			
13	E	Ignition "ON" terminal 15	Terminal 15			
14	E	Ground	Ground point X818			
15	E	Ground	Ground point X818			
16	E	Ground for sensors and control wheels	Ground from control unit for all sensors and control wheels			

Pin	Type	Description/function	Connection	Signal type	Tester display	Measurement notes
17	E	Nominal mixing air value (potentio-meter)	Mixing air control wheel			
18	A/E	Left heater temperature	Left heat exchanger sensor			
19	E	Start terminal 50 (30 h)	Solenoid switch 30 h			
20	A	+ 5 V supply from control unit	All control wheels (potentio-meter)			
21	A/E	Interior temperature	Interior temperature sensor			
22	A/E	Right heater temperature	Right heat exchanger sensor			
23	A	Positive for stepper motors	Positive from control unit for all stepper motors			
24	A	Positive for stepper motors	Positive from control unit for all stepper motors			
25	E	Ignition "ON" terminal 15	Terminal 15			
26	E	Ignition "ON" terminal 15	Terminal 15			

Pin Assignments at IHKR Control Unit Connector X614

Pin	Type	Description/function	Connection	Signal type	Tester display	Measurement notes
1	A	Right footwell motor activation	Right footwell flap motor			
2	A	Right footwell motor activation	Right footwell flap motor			
3	A	Right footwell motor activation	Right footwell flap motor			
4	A	Right footwell motor activation	Right footwell flap motor			

Pin	Type	Description/function	Connection	Signal type	Tester display	Measurement notes
5	E	Switch for recirculated air, rear window, air conditioning	Operating unit recirculated air, air conditioning, rear window			
6		Not used				
7	E	Switch for independent heating, independent ventilation	Relay box independent heating, independent ventilation			
8	E	Ventilation flap switch	Switch on ventilation			
9	E	Speed-A signal	Instrument cluster			
10	E	Diagnosis	Diagnostic socket RxD			
11	E	Switch for rear window, independent heating	Operating unit rear window, relay box independent heating			
12	E	Switch for recirculated air, independent ventilation	Operating unit recirculated air, relay box independent ventilation			
13	E	Air conditioning switch	Air conditioning operating unit			
14		Not used				
15		Not used				
16		Not used				
17		Not used				
18	A	Mixing air flap motor activation	Mixing air flap motor			
19	A	Mixing air flap motor activation	Mixing air flap motor			
20	A	Mixing air flap motor activation	Mixing air flap motor			
21	A	Mixing air flap motor activation	Mixing air flap motor			

Pin	Type	Description/function	Connection	Signal type	Tester display	Measurement notes
22		Not used				
23		Not used				
24		Not used				
25		Not used				
26		Not used				

Pin Assignments at IHKR Control Unit Connector X610

Pin	Type	Description/function	Connection	Signal type	Tester display	Measurement notes
1		Not used				
2		Not used				
3		Not used				
4		Not used				
5	A	Blower output stage activation	Blower output stage			
6	A	Motronic relay activation	Air conditioning system motronic relay			
7	A	Rear window defogger relay activation	Rear window defogger relay			
8	A	Pressure switch for A/C compressor	Pressure switch for A/C compressor (M50)			
8	A	A/C relay activation	A/C relay K19 (for M50 + M5)			
9		Not used				
10		Not used				

Pin	Type	Description/function	Connection	Signal type	Tester display	Measurement notes
11		Not used				
12	E	Permanent positive supply terminal 30	Front power distribution box			
13	E	Permanent positive supply terminal 30	Front power distribution box			
14	A	Recirculated air flap motor activation	Recirculated air flap motor			
15	A	Recirculated air flap motor activation	Recirculated air flap motor			
16	A	Recirculated air flap motor activation	Recirculated air flap motor			
17	A	Recirculated air flap motor activation	Recirculated air flap motor			
18	A	Function lights air conditioning, recirculated air	Operating unit			
19	A	Rear window function light	Operating unit			
20	A	Diagnosis	Diagnostic socket TxD			
21	A	Left water valve activation	Left water valve			
22	A	Auxiliary water pump relay activation	Auxiliary water pump relay K8			
23	A	Right water valve activation	Right water valve			
24	E	Footwell slide control	Operating unit (potentiometer)			

Pin	Type	Description/function	Connection	Signal type	Tester display	Measurement notes
25	E	Permanent positive supply terminal 30	Front power distribution box			
26	E	Permanent positive supply terminal 30	Front power distribution box			

Pin Assignments at IHKR Control Unit Connector X611

Pin	Type	Description/function	Connection	Signal type	Tester display	Measurement notes
1	A	Left footwell motor activation	Left footwell flap motor			
2		Not used				
3		Not used				
4		Not used				
5		Not used				
6	A	Fresh air flap motor activation	Fresh air flap motor			
7	A	Fresh air flap motor activation	Fresh air flap motor			
8	A	Fresh air flap motor activation	Fresh air flap motor			
9	A	Fresh air flap motor activation	Fresh air flap motor			
10		Not used				
11		Not used				
12		Not used				
13		Not used				
14	A	Left footwell motor activation	Left footwell flap motor			
15	A	Left footwell motor activation	Left footwell flap motor			

Pin	Type	Description/function	Connection	Signal type	Tester display	Measurement notes
16	A	Left footwell motor activation	Left footwell flap motor			
17		Not used				
18		Not used				
19		Not used				
20		Not used				
21		Not used				
22		Not used				
23		Not used				
24		Not used				
25		Not used				
26		Not used				

Pin Assignments at IHKR Operating Unit X612

Pin	Type	Description/function	Connection	Signal type	Tester display	Measurement notes
1	E	Terminal 58k	Lights			
2		Not used				
3	A/E	Switch for rear window, independent heating	Control unit connector X614 Pin 11			
4	A	Switch for independent heating, independent ventilation	Control unit connector X614 Pin 7			
5	A/E	Switch for recirculated air, independent ventilation	Control unit connector X614 Pin 12			

Pin	Type	Description/function	Connection	Signal type	Tester display	Measurement notes
6	A	Switch for rear window, recirculated air, air conditioning	Control unit connector X614 Pin 5			
7	E	Rear window function lights	Control unit connector X610 Pin 19			
8		Not used				
9	E	AUC signal	AUC control unit			
10		Not used				
11	E	Permanent positive supply terminal 30	Front power distribution box			
12		Not used				
13	A/E	Actual interior temperature sensor	Control unit connector X613 Pin 21			
14	E	+ 5 V supply from control unit	Control unit connector X613 Pin 20			
15	E	Ground for sensors and control wheels	Control unit connector X613 Pin 16			
16	E	Function light activation	Control unit connector X610 Pin 18			
17	E	Switch air flow control, MAX position	Ignition switch terminal 15			
18	A	Footwell slide regulator	Control unit connector X610 Pin 24			
19	E	Operating unit lights	Dimmer for dashboard lights			
20	E	Ground for function and operating unit lights	Ground			

Pin	Type	Description/function	Connection	Signal type	Tester display	Measurement notes
21	A	Right nominal temperature value (potentiometer)	Control unit connector X613 Pin 8			
22	A	Left nominal temperature value (potentiometer)	Control unit connector X613 Pin 4			
23	A	Nominal air flow value (potentiometer)	Control unit connector X613 Pin 5			
24	A	Switch for heating, air conditioning, recirculated air	Control unit connector X614 Pin 13			
25	A	Switch air flow control in MAX position	Output stage connector X671 Pin 3			
26	E	Interior sensor blower (ground)	Control unit connector X613 Pin 6			

Troubleshooting

Notes

- Troubleshooting with BMW DIAGNOSTIC SYSTEM
- Battery charged, U-min = 12 V
- Fuses protecting the function of the IHKR must be in working order
- For testing, the suitable adapter must be used and the automatic climate control (IHKR) connected such that it is completely operable. Defect codes may be stored by the control unit when defects are disconnected and checked. The defect codes stored prior to testing must therefore be printed out.
- The inputs and outputs listed in the following are not stored in the defect code memory of the IHKR control unit:
- Inputs (E): Buttons (matrix circuit), terminal 50, terminal 15, terminal 30, vehicle speed signal, diagnostic link RxD .
- Outputs (A): Function lights, blower control voltage, buttons (matrix circuit), diagnostic link TxD.
- In order to achieve uniform initial conditions for defect monitoring and storage, the IHKR must be switched on with the air flow control wheel. If, despite the IHKR being switched on, the air flow control wheel shows "OFF" in the ♦D♦Status list control wheels (function lights for program buttons do not light), check the voltage supply from the control unit to the control wheel potentiometers in the operating unit.

Table of substitute values for temperature sensors

Defective component	Substitute value
Left heater sensor	55° C
Right heater sensor	55° C
Outside temperature sensor	0° C
Evaporator sensor	– 5° C
Interior temperature sensor	24° C

Table of substitute values for control wheels

Defective component	Substitute value
Left temperature control wheel	24° C
Right temperature control wheel	24° C
Air flow control wheel	50 %
Mixing air control wheel	50 %
Footwell slide regulator	50 %

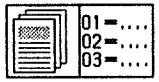

Defect Code Table

♦D♦900 Defect code memory – stored defect codes:

Defect code No.	Defect location
01	Right temperature control wheel
04	Right heater sensor
07	Evaporator sensor
10	Outside temperature sensor
13	Interior temperature sensor
16	Interior sensor blower
22	Auxiliary fan relay (= A/C decoupling relay – DME)
25	Left temperature control wheel
28	Left heater sensor
31	Air flow control wheel
32	Footwell selector lever
34	Mixing air control wheel
38	Auxiliary water pump relay
40	Left water valve
44	A/C relay
46	Right water valve
48	Rear window defogger relay
52	Fresh air flap motor

Defect code No.	Defect location
55	Recirculated air flap motor
61	Mixing air flap motor
70	Left footwell flap motor
73	Right footwell flap motor

Defect Code 01

♦D♦900 Defect code memory: 01 Right temperature control wheel

Explanation: This defect code is stored when a short to ground, a short to positive or a break is detected at blue connector Pin 8.

Effect of defect: If the defect is a current defect, a substitute value of 24° C is used.

Possible cause: Voltage supply (approx. 5 V) not OK, wire or control unit defective.

Troubleshooting: Check voltage supply (approx. 5 V) of control wheels as well as wires and repair if necessary or renew component.

Defect Code 04

♦D♦900 Defect code memory: 04 Right heater sensor

Explanation: This defect code is stored when a short to ground, a short to positive or a break is detected at the blue connector, Pin 22.

Effect of defect: If the defect is a current defect, a substitute value of 55° C is used.

Possible cause: Voltage supply (approx. 5 V) not OK, wire or right heater sensor defective.

Troubleshooting: Check voltage supply (approx. 5 V) as well as wires and repair if necessary or renew component.

Defect Code 07

♦D♦900 Defect code memory: 07 Evaporator sensor

Explanation: This defect code is stored when a short to ground, a short to positive or a break is detected at the blue connector, Pin 9.

Effect of defect: If the defect is a current defect, a substitute value of – 5° C is used.

Possible cause: Voltage supply (approx. 5 V) not OK, wire or evaporator sensor defective.

Troubleshooting: Check voltage supply (approx. 5 V) as well as wires and repair if necessary or renew component.

Defect Code 10

♦D♦900 Defect code memory: 10 Outside temperature sensor

Explanation: This defect code is stored when a short to ground, a short to positive or a break is detected at the blue connector, Pin 7.

Effect of defect: If the defect is a current defect, a substitute value of 0° C is used.

Possible cause: Voltage supply (approx. 5 V) not OK, wire or outside temperature sensor defective.

Troubleshooting: Check voltage supply (approx. 5 V) as well as wires and repair if necessary or renew component.

Defect Code 13

♦D♦900 Defect code memory: 13 Interior temperature sensor

Explanation: This defect code is stored when a short to ground, a short to positive or a break is detected at the blue connector, Pin 21 .

Effect of defect: If the defect is a current defect, a substitute value of 24° C is used.

Possible cause: Voltage supply (approx. 5 V) not OK, wire or interior temperature sensor defective.

Troubleshooting: Check voltage supply (approx. 5 V) as well as wires and repair if necessary or renew component.

Defect Code 16

♦D♦900 Defect code memory: 16 Interior sensor blower

Explanation: This defect code is stored when a short to ground, a short to positive or a break is detected at the blue connector, Pin 6 .

Effect of defect: If the defect is a current defect, the component is no longer activated.

Possible cause: Wire or interior sensor blower defective.

Troubleshooting: Check wire and repair if necessary or renew component.

Defect Code 22

♦D♦900 Defect code memory: 22 Auxiliary fan relay (A/C decoupling relay – DME)

Explanation: This defect code is stored when a short to ground, a short to positive or a break is detected at the white connector, Pin 6 .

Effect of defect: If the defect is a current defect, the component is no longer activated.

Possible cause: Wire or auxiliary fan relay defective.

Troubleshooting: Check wire and repair if necessary or renew component.

Defect Code 25

♦D♦900 Defect code memory: 25 Left temperature control wheel

Explanation: This defect code is stored when a short to ground, a short to positive or a break is detected at the blue connector, Pin 4 .

Effect of defect: If the defect is a current defect, a substitute value of 24° C is used.

Possible cause: Voltage supply (approx. 5 V) not OK, wire or control unit control wheels defective.

Troubleshooting: Check voltage supply (approx. 5 V) as well as wires and repair if necessary or renew component.

Defect Code 28

♦D♦900 Defect code memory: 28 Left heater sensor

Explanation: This defect code is stored when a short to ground, a short to positive or a break is detected at the blue connector, Pin 18 .

Effect of defect: If the defect is a current defect, a substitute value of 55° C is used.

Possible cause: Voltage supply (approx. 5 V) not OK, wire or left heater sensor defective.

Troubleshooting: Check voltage supply (approx. 5 V) as well as wires and repair if necessary or renew component.

Defect Code 31

♦D♦900 Defect code memory: 31 Air flow control wheel

Explanation: This defect code is stored when a short to ground, a short to positive or a break is detected at blue connector, Pin 5 .

Effect of defect: If the defect is a current defect, a substitute value of 50% is used.

Possible cause: Voltage supply (approx. 5 V) not OK, wire or control unit control wheels defective.

Troubleshooting: Check voltage supply (approx. 5 V) of the control wheels as well as wires and repair if necessary or renew component.

Defect Code 32

♦D♦900 Defect code memory: 32 Footwell selector lever

Explanation: This defect code is stored when a short to ground or short to positive is detected at white connector Pin 24.

Effect of defect: If the defect is a current defect, a substitute value of 50% is used.

Possible cause: Voltage supply (approx. 5 V) not OK, wires or control unit control wheels defective.

Troubleshooting: Check voltage supply (approx. 5 V) of the control wheels as well as wires and repair if necessary or renew component.

Defect Code 34

♦D♦900 Defect code memory: 34 Mixing air control wheel

Explanation: This defect code is stored when a short to ground, a short to positive or a break is detected at blue connector, Pin 17 .

Effect of defect: If the defect is a current defect, a substitute value of 50% is used.

Possible cause: Voltage supply (approx. 5 V) not OK, wire or mixing air control wheel defective.

Troubleshooting: Check voltage supply (approx. 5 V) of control wheels as well as wires and repair if necessary or renew component.

Defect Code 38

♦D♦900 Defect code memory: 38 Auxiliary water pump relay

Explanation: This defect code is stored when a short to ground, a short to positive or a break is detected at white connector, Pin 22.

Effect of defect: If the defect is a current defect, the component is no longer activated.

Possible cause: Wire or auxiliary water pump relay defective.

Troubleshooting: Check wire and repair if necessary or renew component.

Defect Code 40

♦D♦900 Defect code memory: 40 Left water valve

Explanation: This defect code is stored when a short to ground, a short to positive or a break is detected at the white connector, Pin 21 .

Effect of defect: If the defect is a current defect, the component is no longer activated.

Possible cause: Wire or left water valve defective.

Troubleshooting: Check wire and repair if necessary or renew component.

Defect Code 44

♦D♦900 Defect code memory: 44 A/C relay

Explanation: This defect code is stored when a short to ground, a short to positive or a break is detected at white connector, Pin 8 .

Effect of defect: If the defect is a current defect, the component is no longer activated.

Possible cause: Wire or A/C relay defective.

Troubleshooting: Check wire and repair if necessary or renew component.

Defect Code 46

♦D♦900 Defect code memory: 46 Right water valve

Explanation: This defect code is stored when a short to ground, a short to positive or a break is detected at white connector, Pin 23 .

Effect of defect: If the defect is a current defect, the component is no longer activated.

Possible cause: Wire or right water valve defective.

Troubleshooting: Check wire and repair if necessary or renew component.

Defect Code 48

♦D♦900 Defect code memory: 48 Rear window defogger relay

Explanation: This defect code is stored when a short to positive is detected at white connector, Pin 7.

Effect of defect: If the defect is a current defect, the component is no longer activated.

Possible cause: Wire or rear window defogger relay defective.

Troubleshooting: Check wire and repair if necessary or renew component.

Defect Code 52

♦D♦900 Defect code memory: 52 Fresh air flap motor

Explanation: This defect code is stored when a short to positive or a break is detected at green connector, Pin 6, 7, 8 or 9 .

Effect of defect: If the defect is a current defect, the component is no longer activated.

Possible cause: Voltage supply (approx. 12 V) not OK, wire or fresh air flap motor defective.

Troubleshooting: Check voltage supply (approx. 12 V) as well as wires and repair if necessary or renew component.

Defect Code 55

♦D♦900 Defect code memory: 55 Recirculated air flap motor

Explanation: This defect code is stored when a short to positive or a break is detected at white connector, Pin 14, 15, 16 or 17 .

Effect of defect: If the defect is a current defect, the component is no longer activated.

Possible cause: Voltage supply (approx. 12 V) not OK, wire or recirculated air flap motor defective.

Troubleshooting: Check voltage supply (approx. 12 V) as well as wires and repair if necessary or renew component.

Defect Code 61

♦D♦900 Defect code memory: 61 Mixing air flap motor

Explanation: This defect code is stored when a short to positive or a break is detected at yellow connector, Pin 18, 19, 20 or 21 .

Effect of defect: If the defect is a current defect, the component is no longer activated.

Possible cause: Voltage supply (approx. 12 V) not OK, wire or mixing air flap motor defective.

Troubleshooting: Check voltage supply (approx. 12 V) as well as wires and repair if necessary or renew component.

Defect Code 70

♦D♦900 Defect code memory: 70 Left footwell flap motor

Explanation: This defect code is stored when a short to positive or a break is detected at green connector, Pin 1, 14, 15 or 16 .

Effect of defect: If the defect is a current defect, the component is no longer activated.

Possible cause: Voltage supply (approx. 12 V) not OK, wire or left footwell flap motor defective.

Troubleshooting: Check voltage supply (approx. 12 V) as well as wires and repair if necessary or renew component.

Defect Code 73

♦D♦900 Defect code memory: 73 Right footwell flap motor

Explanation: This defect code is stored when a short to positive or a break is detected at yellow connector, Pin 1, 2, 3 or 4 .

Effect of defect: If the defect is a current defect, the component is no longer activated.

Possible cause: Voltage supply (approx. 12 V) not OK, wire or right footwell flap motor defective.

Troubleshooting: Check voltage supply (approx. 12 V) as well as wires and repair if necessary or renew component.

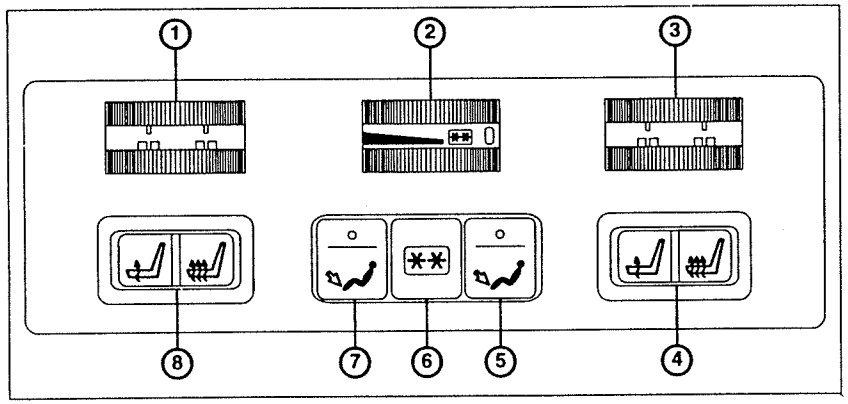

P 32 64 004

1 – Temperature control, left side

2 – ON/OFF switch and control wheel for coolbox operation and air flow

3 – Temperature control, right side

4 – Rocker switch for seat heating, right side

5 – Push button for bottom air distribution, right side

6 – Indicator lamp for coolbox operation

7 – Push button for bottom air distribution, left side

8 – Rocker switch for seat heating, left side

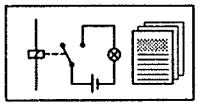

Functional Description

General

FHK is an automatic climate control system in the rear area of the car which can only be installed in conjunction with the IHKA system. The heater is supplied on the water side, separated by a water valve from the front coolant circuit. Climate control takes place in parallel with respect to the IHKA, and both control units are coupled with an FHK relay box. Temperature mixing takes place separately on the left and right sides, dependent on the position of the temperature control wheels and of the mixing control, through the mixing flaps for ventilation as well as through footwell flaps for the footwell. Before the FHK control unit switches off after approx. 3 minutes "ignition OFF" and its power consumption reduces, the ventilation mixing flaps are set to the setting 50% "WARM" and the footwell flaps to "CLOSED".

Temperature Sensors – Control Wheel Function

Air flow control wheel

With the air flow control wheel, the FHK system is switched on and set into operation. The coolbox function is activated by turning the air flow control wheel from the zero setting to the next notch setting (before the blower MIN setting). In this position, the air conditioning system is switched on, all flaps are moved to the "CLOSED" position and the blower runs at approx. 2 A. By turning the air flow control wheel out of this position, the air flow rate can then be set and the flaps are adjusted corresponding to the flap program.

Temperature control wheels

With the air flow control wheel switched on, the temperature control wheels influence the setting of the mixing flaps for ventilation as well as the footwell flaps when the footwell switch is switched on. In addition, the mixing control changes the flap program of the mixing flaps for ventilation.

Climate Control

By switching on the FHK system, the climate control is activated via the FHK relay box and the rear shut-off valve is switched on. The heating valve is switched on by turning one of the two temperature control wheels from the end position "COLD". By way of the flap program, the temperature is mixed between the heating element installed in the FHK and the evaporator.

Evaporator sensor

When the evaporator sensor exceeds 6° C, the solenoid clutch of the A/C compressor is switched on via the FHK relay box. When the temperature drops below 5° C, the solenoid clutch is disengaged once again. If a temperature >16° C is measured, the coolbox indicator below the air flow control wheel goes out. When the temperature drops below 15° C, the coolbox indicator switches on once again.

Stepper Motors

Stepper motors are installed to move the various flaps. The control unit assumes that, on completion of calibration, the stepper motors are in a defined position since they cannot signal back their position to the control unit. Calibration is triggered when the power supply (terminal 15 and terminal 30) of the control unit was interrupted.
The defect detection function can differentiate between a short to positive and a break in the circuit. When the control unit detects a stepper motor defect, the corresponding stepper motor is switched off.

Rear Climate Control System (FHK)

General Block Diagram

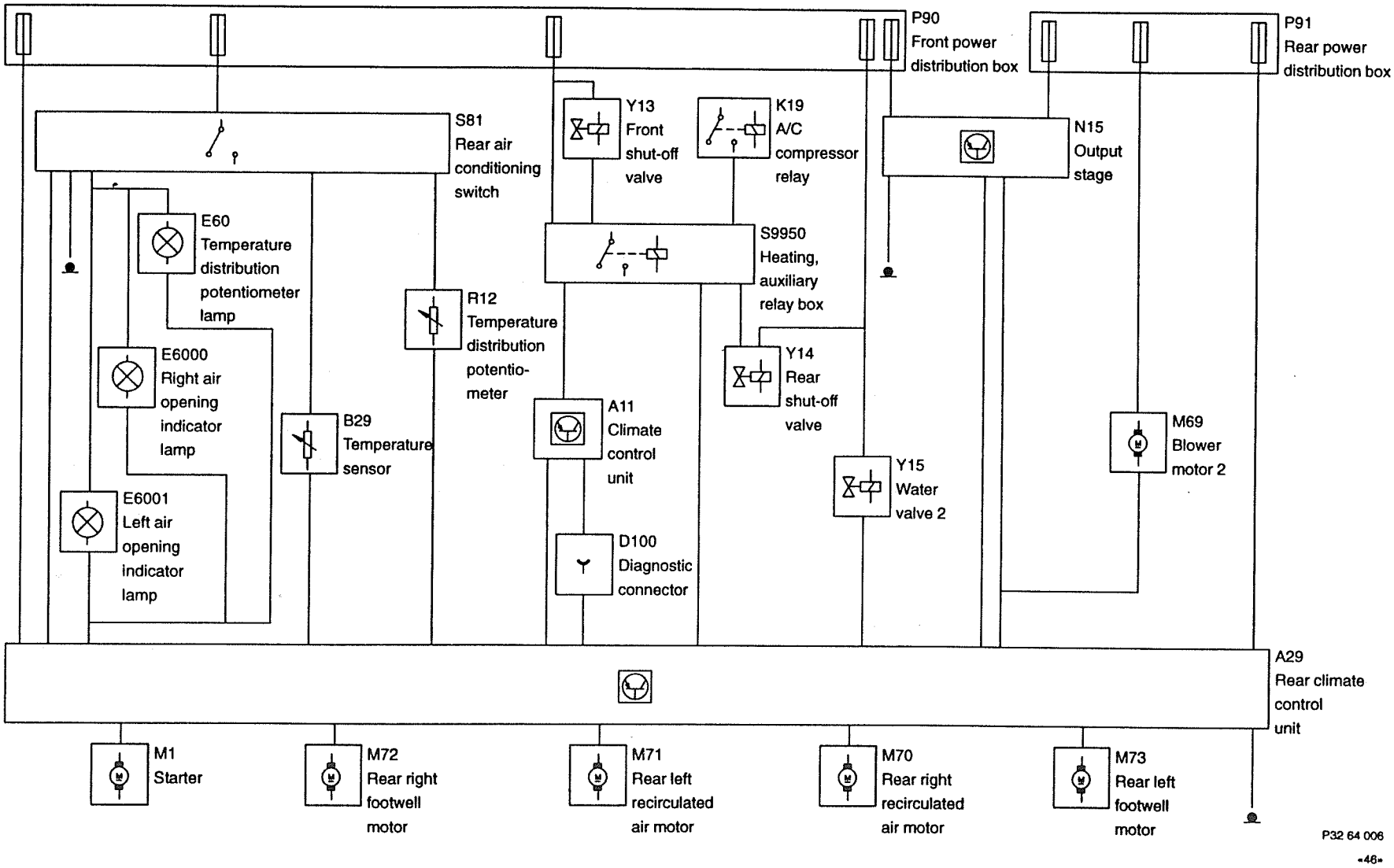

Notes on the BMW DIAGNOSTIC SYSTEM

The following component functions and signals are processed or controlled by the FHK control unit but not stored as a defect code in the case of a fault:

- * Buttons for footwell in the operating unit
- * Blower control voltage to blower motor output stage
- * Activation of A/C relay via FHK relay box
- Diagnostic links RxD/TxD to the BMW Service Tester

The component functions and signals marked with * can be read out in the status lists of the BMW DIAGNOSTIC SYSTEM.

Defect Code Memory

The FHK control unit clears the defect code memory when the voltage supply (terminal 30, terminal 15) is interrupted or the ignition was off for longer than 3 minutes. After switching on the ignition, all defective components or functions are stored as defect codes.

The display "current defect" shows that there is a defect. The component or function is then not used by the control unit. If a "current defect" is indicated for the temperature sensor or control wheels, a substitute value made available by the control unit is used for these components. The control unit makes an exception for the stepper motors as regards defect detection and defect code storage. In this case, a defect is detected only after ignition "ON", whereby the ignition must have been switched off for longer than 3 minutes beforehand or the power supply was interrupted. When the FHK system is in operation (ignition "ON") and a stepper motor defect occurs, this defect is not stored in the form of a defect code.

Abbreviations

not applicable

Pin Assignment

Connector Numbers

Connectors at Control Units

Number	Type	Description
X970	26-pin, blue	(S) Connector (R) right (A) top
X971	26-pin, yellow	(S) Connector (R) right (B) bottom
X968	26-pin, white	(S) Connector (L) left (A) top
X969	26-pin, green	(S) Connector (L) left (B) bottom

Plug Connection

Number	Type	Description
X951	12-pin	Plug connection to blower output stage, evaporator sensor, rear water and shut-off valves
X650	21-pin	Plug connection to the stepper motors
X979	26-pin, blue	Operating unit connector

Pin Assignments at FHK Control Unit Connector X970

Pin	Type	Description/function	Connection	Signal type	Tester display	Measurement notes
1	E	Ground terminal 31	Ground terminal 31			
2	E	Ground terminal 31	Ground terminal 31			
3		Not used				
4	E	Left nominal temperature value (potentiometer)	Operating unit left temperature control wheel			
5	E	Nominal air flow value (potentiometer)	Operating unit air flow control			
6	E	Blower motor feedback	Blower motor			
7		Not used				
8	E	Right nominal temperature value (potentiometer)	Operating unit right temperature control wheel			
9	A/E	Evaporator temperature	Evaporator sensor			
10	A	Positive for stepper motors	Positive from control unit for all stepper motors			
11	A	Positive for stepper motors	Positive from control unit for all stepper motors			
12	E	Ignition "ON" terminal 15	Terminal 15			
13	E	Ignition "ON" terminal 15	Terminal 15			
14	E	Ground terminal 31	Ground terminal 31			
15	E	Ground terminal 31	Ground terminal 31			
16	A	Ground for sensors and control wheels	Ground from control unit for sensors and control wheels			

Pin	Type	Description/function	Connection	Signal type	Tester display	Measurement notes
17	E	Nominal mixing air value (potentiometer)	Mixing air control wheel in ventilation grille			
18		Not used				
19	E	Starter terminal 50 (30 h)	Solenoid switch 30 h			
20	A	5 V supply from control unit	Control wheels and evaporator sensor			
21		Not used				
22		Not used				
23	A	Positive for stepper motors	Positive from control unit for all stepper motors			
24	A	Positive for stepper motors	Positive from control unit for all stepper motors			
25	E	Ignition "ON" terminal 15	Terminal 15			
26	E	Ignition "ON" terminal 15	Terminal 15			

Pin Assignments at FHK Control Unit Connector X971

Pin	Type	Description/function	Connection	Signal type	Tester display	Measurement notes
1	A	Right footwell flap motor activation	Right footwell flap motor			
2	A	Right footwell flap motor activation	Right footwell flap motor			
3	A	Right footwell flap motor activation	Right footwell flap motor			
4	A	Right footwell flap motor activation	Right footwell flap motor			

Rear Climate Control System (FHK)

Pin Assignments

Pin	Type	Description/function	Connection	Signal type	Tester display	Measurement notes
5		Not used				
6	E	Switch left footwell	Operating unit, left footwell switch			
7	E	Switch, right footwell	Operating unit, right footwell switch			
8		Not used				
9		Not used				
10	E	Diagnosis	Diagnostic socket RxD			
11		Not used				
12		Not used				
13	A	Footwell switch	Operating unit, footwell switch (matrix circuit)			
14	A	Right ventilation mixing air flap motor activation	Right ventilation mixing air flap motor			
15	A	Right ventilation mixing air flap motor activation	Right ventilation mixing air flap motor			
16	A	Right ventilation mixing air flap motor activation	Right ventilation mixing air flap motor			
17	A	Right ventilation mixing air flap motor activation	Right ventilation mixing air flap motor			
18		Not used				
19		Not used				
20		Not used				

Pin	Type	Description/function	Connection	Signal type	Tester display	Measurement notes
21		Not used				
22		Not used				
23		Not used				
24		Not used				
25		Not used				
26		Not used				

Pin Assignments at FHK Control Unit Connector X968

Pin	Type	Description/function	Connection	Signal type	Tester display	Measurement notes
1		Not used				
2		Not used				
3		Not used				
4		Not used				
5	A	Blower output stage activation	Blower output stage			
6		Not used				
7		Not used				
8		Not used				
9		Not used				
10		Not used				
11		Not used				

Pin	Type	Description/function	Connection	Signal type	Tester display	Measurement notes
12	E	Permanent positive supply terminal 30	Rear power distribution box			
13	E	Permanent positive supply terminal 30	Rear power distribution box			
14		Not used				
15		Not used				
16		Not used				
17		Not used				
18	A	Function LEDs activation	Operating unit			
19	A	Coolbox indicator activation	Operating unit			
20	A	Diagnosis	Diagnostic socket TxD			
21	A	Water valve activation	Water valve			
22	A	A/C relay and rear shut-off valve activation	FHK relay box			
23		Not used				
24	A	A/C system decoupling relay - DME activation	A/C decoupling relay – DME			
25	E	Permanent positive supply terminal 30	Rear power distribution box			
26	E	Permanent positive supply terminal 30	Rear power distribution box			

Pin Assignments at FHK Control Unit Connector X969

Pin	Type	Description/function	Connection	Signal type	Tester display	Measurement notes
1	A	Left footwell flap motor activation	Left footwell flap motor			
2		Not used				
3		Not used				
4		Not used				
5		Not used				
6		Not used				
7		Not used				
8		Not used				
9		Not used				
10		Not used				
11		Not used				
12		Not used				
13		Not used				
14	A	Left footwell flap motor activation	Left footwell flap motor			
15	A	Left footwell flap motor activation	Left footwell flap motor			
16	A	Left footwell flap motor activation	Left footwell flap motor			
17	A	Left ventilation mixing air flap motor activation	Left ventilation mixing air flap motor			
18	A	Left ventilation mixing air flap motor activation	Left ventilation mixing air flap motor			

Pin	Type	Description/function	Connection	Signal type	Tester display	Measurement notes
19	A	Left ventilation mixing air flap motor activation	Left ventilation mixing air flap motor			
20	A	Left ventilation mixing air flap motor activation	Left ventilation mixing air flap motor			
21		Not used				
22		Not used				
23		Not used				
24		Not used				
25		Not used				
26		Not used				

Pin Assignments at FHK Operating Unit X979

Pin	Type	Description/function	Connection	Signal type	Tester display	Measurement notes
1	E	Coolbox indicator activation	Control unit connector X968 Pin 19			
2	A	Left temperature control wheel	Control unit connector X970 Pin 4			
3		Not used				
4		Not used				
5	E	Ground for control wheels	Control unit connector X970 Pin 16			
6		Not used				

Pin	Type	Description/function	Connection	Signal type	Tester display	Measurement notes
7		Not used				
8		Not used				
9		Not used				
10	E	Ignition ON terminal 15	Terminal 15			
11		Not used				
12	E	Function LEDs activation	Control unit connector X968 Pin 18			
13	A	Right temperature control wheel	Control unit connector X970 Pin 8			
14		Not used				
15	E	Operating unit lights	Dimmer dashboard lighting terminal 58g			
16	A	Left footwell switch	Control unit connector X671 Pin 6			
17	E	Footwell switch (matrix circuit)	Control unit connector X671 Pin 13			
18		Not used				
19	A	Air flow control wheel	Control unit connector X970 Pin 5			
20	E	5 V supply for control wheels	Control unit connector X970 Pin 20			
21		Not used				
22		Not used				
23		Not used				

Pin	Type	Description/function	Connection	Signal type	Tester display	Measurement notes
24	A	Right footwell switch	Control unit connector X971 Pin 7			
25	E	Function LEDs	Light switch terminal 58K			
26	E	Ground terminal 31	Ground terminal 31			

Troubleshooting

Notes

The modified pin assignments in the test instructions must be used for troubleshooting at the operating unit. The modification of the pin assignments in the schematics will be introduced in the next edition.

- Troubleshooting with BMW DIAGNOSTIC SYSTEM.
- Battery charged, U-min = 12 V.
- Fuses belonging to the FHK system must be in working order.
- For testing, the suitable adapter must be used and the FHK connected such that it is completely operable. Defect codes are stored by the control unit when connectors are disconnected and checked. The defect codes detected before the diagnostic procedure must therefore be printed out beforehand.

The inputs and outputs listed in the following are not stored in the defect code memory in the FHK control unit:

- Inputs (E): Buttons (matrix circuit), terminal 50, terminal 15, terminal 30, A/C relay activation, diagnostic link RxD .
- Outputs (A): LEDs for function lights, blower control voltage, buttons (matrix circuit), diagnostic link TxD.

Table of substitute values for temperature sensors

Defective component	Substitute value
Evaporator sensor	25° C

Table of substitute values for control wheels

Defective component	Substitute value
Left temperature control wheel	50 %
Right temperature control wheel	50 %
Air flow control	50 %
Mixing air control	100 %

Defect Code Table

♦D♦900 Defect code memory – stored defect codes:

Defect code No.	Defect location
01	Right temperature control wheel
07	Evaporator sensor
22	Auxiliary fan relay
25	Left temperature control wheel
31	Air flow control wheel
34	Mixing air control wheel
41	Water valve
70	Left footwell flap motor
73	Right footwell flap motor
77	Left mixing flap motor
78	Right mixing flap motor

Defect Code 01

♦D♦900 Defect code memory: 01 Right temperature control wheel

Explanation: This defect code is stored when a short to ground, short to positive or a break is detected at blue connector Pin 8.

Effect of defect: If the defect is a current defect, a substitute value of 50% is used.

Possible cause: Voltage supply (approx. 5 V) not OK, wire or operating unit defective.

Troubleshooting: Check voltage supply (approx. 5 V) of the control wheels as well as wires and repair if necessary or renew component.

Defect Code 07

♦D♦900 Defect code memory: 07 Evaporator sensor

Explanation: This defect code is stored when a short to ground, short to positive or a break is detected at blue connector Pin 9.

Effect of defect: If the defect is a current defect, a substitute value of 25° C is used.

Possible cause: Wire or evaporator sensor defective.

Troubleshooting: Check wires and repair if necessary or renew component.

Defect Code 22

♦D♦900 Defect code memory: 22 Auxiliary fan relay (uncoupling relay A/C system - DME)

Explanation: This defect code is stored when a short to ground, short to positive or a break is detected at white connector Pin 24 .

Effect of defect: If the defect is a current defect, the component is no longer activated.

Possible cause: Wire, FHK relay box or auxiliary fan relay defective.

Troubleshooting: Check wires and repair if necessary or renew component.

Defect Code 25

♦D♦900 Defect code memory: 25 Left temperature control wheel

Explanation: This defect code is stored when a short to ground, short to positive or a break is detected at blue connector Pin 4.

Effect of defect: If the defect is a current defect, a substitute value of 50% is used.

Possible cause: Voltage supply (approx. 5 V) not OK, wire or operating unit defective.

Troubleshooting: Check voltage supply (approx. 5 V) of the control wheels as well as wires and repair if necessary or renew component.

Defect Code 31

♦D♦900 Defect code memory: 31 Air flow control wheel

Explanation: This defect code is stored when a short to ground, short to positive or a break is detected at blue connector Pin 5.

Effect of defect: If the defect is a current defect, a substitute value of 50% is used.

Possible cause: Voltage supply (approx. 5 V) not OK, wire or operating unit defective.

Troubleshooting: Check voltage supply (approx. 5 V) of the control wheels as well as wires and repair if necessary or renew component.

Defect Code 34

♦D♦900 Defect code memory: 34 Mixing air control wheel

Explanation: This defect code is stored when a short to ground, short to positive or a break is detected at blue connector Pin 17.

Effect of defect: If the defect is a current defect, a substitute value of 100% is used.

Possible cause: Voltage supply (approx. 5 V) not OK, wire or mixing air control wheel defective.

Troubleshooting: Check voltage supply (approx. 5 V) of control wheel as well as wires and repair if necessary or renew component.

Defect Code 41

♦D♦900 Defect code memory: 41 Water valve

Explanation: This defect code is stored when a short to ground, short to positive or a break is detected at white connector Pin 21.

Effect of defect: If the defect is a current defect, the component is no longer activated.

Possible cause: Wire or water valve defective.

Troubleshooting: Check wire and repair if necessary or renew component.

Defect Code 70

♦D♦900 Defect code memory: 70 Left footwell flap motor

Explanation: This defect code is stored when a short to positive or a break is detected at green connector Pin 1, 14, 15 or 16 .

Effect of defect: If the defect is a current defect, the component is no longer activated.

Possible cause: Voltage supply (approx. 12 V) not OK, wire or left footwell flap motor defective.

Troubleshooting: Check voltage supply (approx. 12 V) as well as wires and repair if necessary or renew component.

Defect Code 73

♦D♦900 Defect code memory: 73 Right footwell flap motor

Explanation: This defect code is stored when a short to positive or a break is detected at yellow connector Pin 1, 2, 3 or 4 .

Effect of defect: If the defect is a current defect, the component is no longer activated.

Possible cause: Voltage supply (approx. 12 V) not OK, wire or right footwell flap motor defective.

Troubleshooting: Check voltage supply (approx. 12 V) as well as wires and repair if necessary or renew component.

Defect Code 77

♦D♦900 Defect code memory: 77 Left mixing flap motor

Explanation: This defect code is stored when a short to positive or a break is detected at green connector Pin 17, 18, 19 or 20 .

Effect of defect: If the defect is a current defect, the component is no longer activated.

Possible cause: Voltage supply (approx. 12 V) not OK, wire or left mixing flap motor defective.

Troubleshooting: Check voltage supply (approx. 12 V) as well as wires and repair if necessary or renew component.

Defect Code 78

♦D♦900 Defect code memory: 78 Right mixing flap motor

Explanation: This defect code is stored when a short to positive or a break is detected at yellow connector Pin 14, 15, 16 or 17 .

Effect of defect: If the defect is a current defect, the component is no longer activated.

Possible cause: Voltage supply (approx. 12 V) not OK, wire or right mixing flap motor defective.

Troubleshooting: Check voltage supply (approx. 12 V) as well as wires and repair if necessary or renew component.

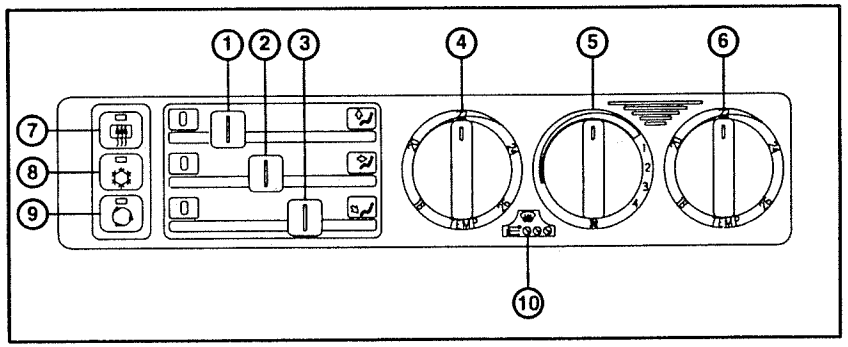

P34 64 001

1 – Slide lever for top air distribution (operating cable)
2 – Slide lever for centre air distribution (operating cable)
3 – Slide lever for bottom air distribution (operating cable)
4 – Temperature control, left side
5 – Air flow control
6 – Temperature control, right side
7 – Push button for rear window defogger
8 – Push button for air conditioning
9 – Push button for recirculated air
10 – Setting for maximum defrosting

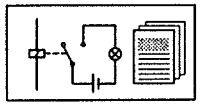

Functional Description

General

The automatic climate control system IHKR2/IHKR3 is a water-based automatic heating and air conditioning system. The control system on the water side is based on two electrically operated water valves in separate heat exchangers on the left and right sides. The required temperature in the vehicle is controlled by a mixing flap. The air is mixed ahead of the heat exchangers without being heated in the flow of ventilation air. Temperature control with mixing flaps is therefore not possible when the ventilation outlet nozzles are closed manually.

Important!

The IHKR3 control unit differs from the IHKR2 control unit only by the smaller control unit housing. Function and pin assignments are identical.

Control unit

The control unit performs open-loop and closed-loop control functions with the aid of a microcomputer:

- Control of fresh air, recirculated air and mixing air flaps
- Temperature mixing
- Interior temperature control
- Rear window defogger control
- Evaporator temperature control
- Auxiliary water pump control
- Defect detection and diagnosis and making available a substitute value for failed components

Flap Control

The ventilation, footwell and defroster flaps are continuously variable by means of an operating cable assembly. The fresh air, recirculated air and mixing flaps are set by means of stepper motors.

The fresh air flaps are controlled dependent on the air flow control wheel and the vehicle speed. By pressing the recirculated air push button the fresh air flaps are closed and the recirculation air flaps open. The mixing air flaps are adjusted by the mixing air control wheel and the control Y_{driver}. When the ignition is switched off, the flaps driven by stepper motors remain in the position last selected.

Push Buttons

A block of 3 push buttons is integrated in the operating unit.

- Rear window defogger button
- Air conditioning button
- Recirculated air or recirculated air/ AUC button

Rear window defogger

With the IHKR2/3 switched on and the engine running, when pressed for the first time, the rear window defogger button switches on the rear window defogger (defrost stage). The function indicator lamp lights and the defrost time counts down from 600 seconds to 0 seconds.

After the defrost time has elapsed, the function LED goes out and the rear window defogger is switched off for 80 seconds and switched on for 40 seconds.

After the modulation time of 20 minutes (cyclic mode) has elapsed, the rear window defogger switches off automatically. The system is switched to defrost stage if the rear window button is pressed during modulation mode. The rear window defogger is switched off when the button is pressed once again.

Control Wheel and Temperature Sensor Functions

Air flow control wheel

The IHKR2 control unit is ready for operation after switching on the ignition. The IHKR2 system is switched on by turning the air flow control wheel out of the zero position, the blower then runs in the first stage. The air flow control wheel (potentiometer) only influences the position of the fresh air flap until the first control stage is reached. The air flow is set by turning the air flow control wheel further to stage 4. The blower motor is activated by means of a rotary switch and a resistance circuit. The potentiometer and the rotary switch are coupled to the spindle of the air flow control wheel.

Temperature control wheels

The nominal value for the interior temperature is set with the temperature control wheels. The temperature values printed on the selector wheels of the operating unit do not correspond to the values which are used by the control unit and which can be read out via the status list. These values correspond to a comfort temperature. When setting the temperature, the control wheel on the driver's side has priority near the end positions over the control wheel on the passenger's side. When the temperature control wheel of the driver's side is set to maximum heating, the positive supply to the water valves is interrupted by way of a mechanically coupled switch. In this position, the control unit interrupts the diagnostic procedure for the water valves which are open when no power is applied.

Relay Outputs

All relays (also water valves) are switched by applying ground to the corresponding output of the control unit. Diagnosis of the control unit only covers the control circuit of the relay.

Air Conditioning Control

The A/C compressor, the evaporator control and the auxiliary fan stage 1 are switched on when the air conditioning or recirculated air button is pressed.

Evaporator sensor:

The magnetic clutch of the A/C compressor is disengaged and the auxiliary fan stage 1 switched off when the evaporator sensor reaches a temperature of < 2° C in order to prevent icing of the evaporator. At an evaporator sensor temperature of > 3° C, the control unit switches the auxiliary fan stage 1 on again and the magnetic clutch engages.

Pressure switch:

In order to improve the cooling capacity, the auxiliary fan stage 2 is switched on when the coolant pressure increases to above 18 bar. The auxiliary fan stage 2 is switched off again when the pressure drops below 15 bar. The activation circuit of the A/C compressor clutch leads from the

output of the A/C relay (working circuit) to the coolant high pressure switch (30/21 bar) and via the low pressure switch (1.5/2.6 bar) to the A/C compressor clutch. When one of the pressure switch is cut out because there is too little or too much pressure in the coolant circuit (no or too little coolant or too much coolant), the A/C compressor clutch disengages in order to prevent the compressor being damaged.

On the M50 engine, the low pressure and high pressure switch is connected between the IHKR2 and the DME control unit.

Independent Heating/Ventilation

If an independent heating system is installed, the relay box, which switches the independent heating or independent ventilation program in the IHKR2, can be activated via the on-board computer or multifunction clock. At a preselected time, the on-board computer (or multifunction clock) switches on the independent heating at an outside temperature < 16° C and the independent ventilation at an outside temperature > 16° C.

Flaps	Independent heating	Independent ventilation
Fresh air	100 %	100 %
Recirculated air	0 %	0 %
Mixing	warm	cold
Blower	Stage 2	Stage 2
Water valves	open	open

100% = open
0% = closed

Stepper Motors

Stepper motors are installed in order to move the various flaps. The control unit assumes that, after completing the calibration phase, the stepper motors are in a defined position since the stepper motors cannot signal back their position to the control unit. The calibration phase is triggered when the power supply (terminal 30) of the control unit was interrupted or after the ignition was deactivated 10 times. The calibration phase is then started after ignition ON. Error detection differentiates between short to positive, short to negative and a break in the circuit. If the control unit detects a stepper motor defect, the defective motor is no longer activated. The stepper motors no longer move if the voltage of the vehicle electrical system drops below 9V or increases above 15V. The stepper motors operate with only half frequency when the voltage of the vehicle electrical system is between 9V and 11V.

Auxiliary Water Pump

An electrical auxiliary water pump is installed in order to maintain the necessary heating water throughput at lower engine speeds.

The auxiliary water pump is switched on when the outlet temperature on one heat exchanger side has exceeded the value of 30° C after a new start and the control variable Y_L OR Y_R is above 30%.

The auxiliary water pump is switched off when the control variables Y_L AND Y_R drop below the value of 25%.

Interior Sensor Blower

The interior sensor blower ventilates the interior sensor. This ventilation prevents overheating of the interior sensor and the control unit operates with the current interior temperature value.

The interior sensor blower starts up when the ignition is switched on. When the ignition is switched off, the interior sensor blower remains in operation for a further 3 minutes to avoid heat building up in the intake duct of the temperature sensor when the vehicle is stopped for a short space of time.

To ensure effective operation, unobstructed air flow through the ventilation grille in the operating unit must be ensured (no dirt build-up).

Master Controller Y

The master controller is a value calculated by the control unit which separately activates the left and right outputs (water valves) dependent on the input values (nominal temperature value, interior temperature and outside temperature). The Y-value is also used in the calculation of the flap control.

The value of the master controller is between –25% (cooling) and 127% (high heat requirement).

Important!

-The decoupler relay for the A/C standby signal will no longer be installed as of model year 1991. The DME/EML control unit is then activated directly with positive by the IHKR2 control unit when the air conditioning system is ON.

The function as to whether the A/C signal to the DME/EML is switched actively to positive or negative is determined by the coded IHKR2 control unit.

Automatic Climate Control (IHKR2)/(IHKR3)

General Block Diagram

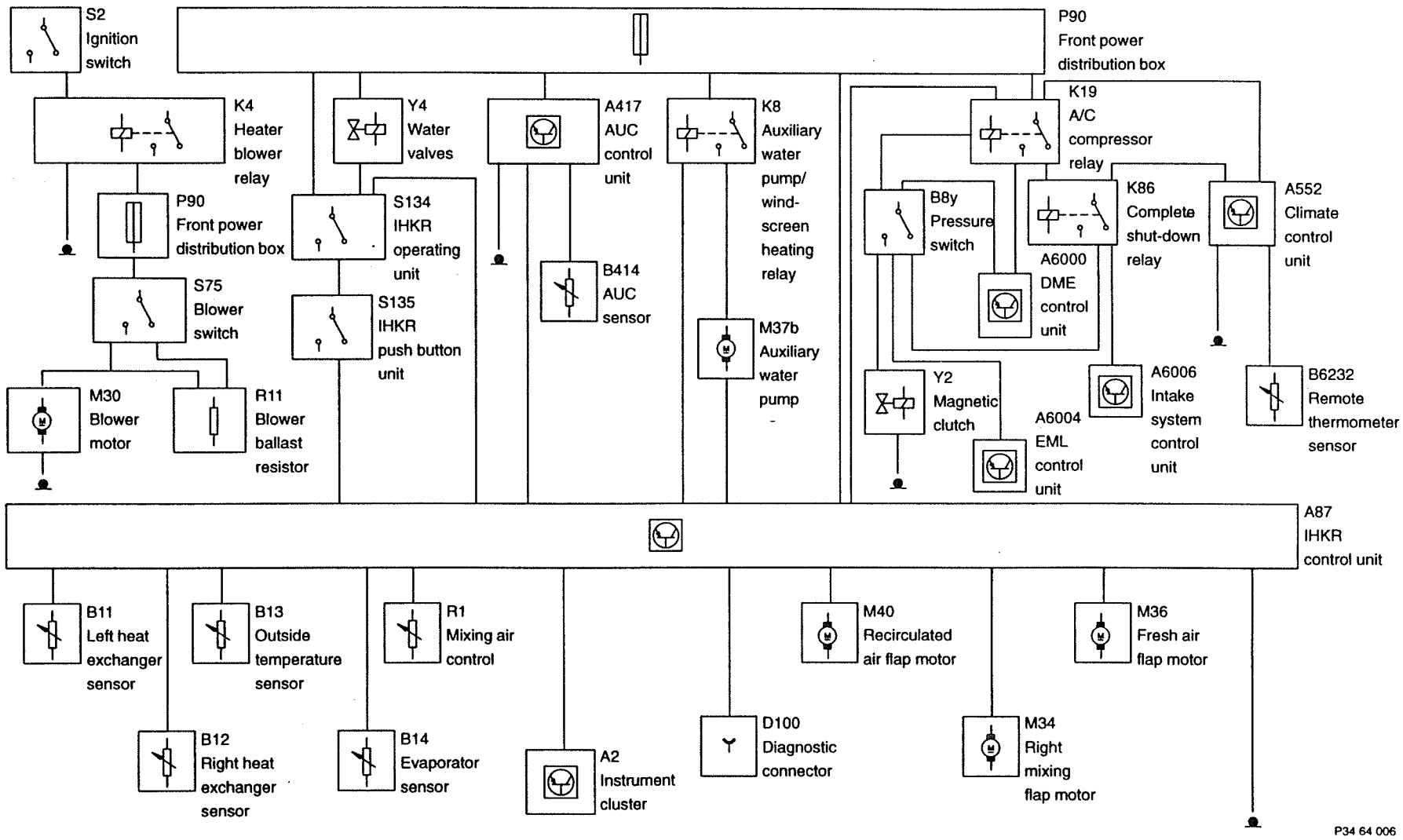

Notes on the BMW DIAGNOSTIC SYSTEM

The component functions and signals listed below are processed or controlled by the IHKR2 control unit but not stored as a defect code in the case of defect.

- Speed signal output from instrument cluster *
- All push buttons in the operating unit *
- Signal from terminal 61 *
- Voltage supply of function LEDs
- Control of function lighting for push buttons
- Diagnostic links RxD/TxD to BMW Service Tester

Component functions and signals marked with * can be read out in the status list of the BMW Service Tester.

Defect Code Memory

The defect code remains stored in the defect code memory of the IHKR2 control unit even after disconnecting the battery. Once the defect has been rectified, the defect code memory can be cleared with the BMW Service Tester or the MoDiC.

The display "current defect" indicates that the defect currently exists. The component or the function is then not used by the control unit. If a "defect current" applies to the temperature sensors or control wheels, a substitute value provided by the control unit is used for these components. The substitute value is replaced by the current value when the defect no longer applies. If the defect occurs several times "defect occurred several times" is displayed.

Abbreviations

not applicable

Pin Assignment

Connectors at Control Unit

Number	Type	Description
X18155	26-pin, white	
X18156	26-pin, black	
X18157	26-pin, blue	

Connector at Operating Unit

Number	Type	Description
X18154	18-pin	

Connector at Push Button Unit

Number	Type	Description
X18151	10-pin	

Pin Assignments at IHKR2 Control Unit Connector, white

Pin	Type	Description/function	Connection	Signal type	Tester display	Measurement notes
1		Not used				
2	A/E	Right heater temperature	Right heater sensor	approx. 0.7 V – 4.3 V	0° C – 90° C	approx. 5 V when temp. sensor disconnected
3	A/E	Left heater temperature	Left heater sensor	approx. 0.7 V – 4.3 V	0° C – 90° C	approx. 5 V when temp. sensor disconnected
4	A/E	Outside temperature	Outside temperature sensor	approx. 0.5 V – 4.5 V	–40° C – 40° C	approx. 5 V when temp. sensor disconnected
5	A/E	Evaporator temperature	Evaporator sensor	approx. 1.6 V – 3.4 V	–4.5° C – 25.5° C	approx. 5 V when temp. sensor disconnected
6	E	Nominal mixing value	Mixing air control	approx. 1.25 V – 3 V	approx. 6% – 120%	
7	E	Independent ventilation	Relay box	approx. 0 V/ approx. 11 V	ON/OFF	
8	E	Vehicle speed signal	Connector speed "A" signal	Frequency (square-wave voltage)	0 km/h – 250 km/h	
9		Not used				
10	E	Independent heating	Relay box	approx. 0 V approx. 11 V	ON OFF	
11		Not used				
12	E	Terminal 58k	Connector terminal 58k	approx. 12 V		Light ON
13	A	Voltage supply for function lights	Push button unit	approx. 10 V approx. 4 V approx. 7 V		Light OFF Light ON / Function light ON Light ON / Function light OFF

Pin	Type	Description/function	Connection	Signal type	Tester display	Measurement notes
14	A	Positive for mixing air control	Mixing air control	approx. 5 V		
15	A	Ground for control wheels	Operating unit	approx. 0 V		
16	A	Ground for temperature sensor		approx. 0 V		
17	A	Ground for mixing control		approx. 0 V		
18	A	Ground for push buttons	Push button unit	approx. 0 V		
19		Not used				
20	E	A/C push button	Push button unit	approx. 0 V approx. 5 V	ON OFF	
21	E	Push button for recirculated air/ AUC	Push button unit	approx. 0 V approx. 5 V	ON OFF	
22	E	Push button for rear window defogger	Push button unit	approx. 0 V approx. 5 V	ON OFF	
23	A	A/C function light	Push button unit	approx. 7.5 V approx. 8.5 V		LED ON LED OFF
24	A	Rear window defogger function light	Push button unit	approx. 7.5 V approx. 8.5 V		LED ON LED OFF
25	A	AUC function light	Push button unit	approx. 7.5 V approx. 8.5 V		LED ON LED OFF
26	A	Recirculated air function light	Push button unit	approx. 7.5 V approx. 8.5 V		LED ON LED OFF

Pin Assignments at IHKR2 Control Unit Connector, blue

Pin	Type	Description/function	Connection	Signal type	Tester display	Measurement notes
1	A	Positive for recirculated air flap motor	Recirculated air flap motor	approx. 11 V		
2	A	Positive for mixing flap motor	Mixing flap motor	approx. 11 V		
3	A	Positive for fresh air flap motor	Fresh air flap motor	approx. 11 V		
4 5		Not used				
6 7 8 9	A	Recirculated air flap motor activation	Recirculated air flap motor	Frequency (square-wave voltage) -	0% – 100%	approx. 11 V when motor off
10 11 12 13	A	Fresh air flap motor activation	Fresh air flap motor	Frequency (square-wave voltage)	0% – 100%	approx. 11 V when motor off
14	A	Positive for control wheels	Operating unit	approx. 5 V		
15	E	Diagnosis RxD	Diagnostic connector	Frequency		
16	A	Diagnosis TxD	Diagnostic connector	Frequency		
17		Not used				
18	A	Interior sensor blower activation	Operating unit	approx. 0 V approx. 11 V		at ignition ON after approx. 3 min. ignition OFF
19	A	Auxiliary water pump activation	Auxiliary water pump relay	approx. 0 V approx. 12 V	ON OFF	
20	A	Rear window defogger activation	Rear window defogger relay	approx. 0 V approx. 12 V	ON OFF	

Pin	Type	Description/function	Connection	Signal type	Tester display	Measurement notes
21		Not used				
22	A	Activation A/C compressor/ DME	A/C compressor relay up to model year 1991 with de-coupler relay DME/EML K33 as of model year 1991 direct activation of DME	approx. 0 V approx. 12 V	ON OFF	
23 24 25 26	A	Mixing flap motor activation	Mixing flap motor	Frequency (square-wave voltage)		approx. 11 V when motor off

Pin Assignments at IHKR2 Control Unit Connector, black

Pin	Type	Description/function	Connection	Signal type	Tester display	Measurement notes
1 2	E	Ground for electronics	Ground connector	0 V		
3	A/E	Interior temperature	Operating unit	approx. 1.7 V – 3.4 V	10° C – 40° C	approx. 5 V when temperature sensor disconnected
4	E	Nominal air flow value	Operating unit	approx. 0.7 V – 4 V	OFF – approx. 100%	
5	E	Left nominal temperature value	Operating unit	approx. 0.5 V – 4.4 V	16° C – 32° C	
6	E	Right nominal temperature value	Operating unit	approx. 0.5 V – 4.4 V	16° C – 32° C	
7		Not used				
8	E	AUC signal	AUC control unit	approx. 0 V approx. 5 V	ON OFF	

Pin	Type	Description/function	Connection	Signal type	Tester display	Measurement notes
9	A	Auxiliary fan stage 1 activation	Auxiliary fan relay stage 1	approx. 0 V approx. 12 V	ON OFF	
10 11	E	Ground for load circuit	Connector terminal 31L	0 V		
12 13	E	Positive voltage supply for the control unit	Connector terminal 30	approx. 12 V		
14		Not used				
15	A	Right water valve activation	Operating unit	Frequency (square-wave voltage)	0% – 100%	at 0% approx. 0 V at 100% approx. 12 V
16 17		Not used				
18	A	Terminal 15	Plug connection independent heating/independent ventilation	approx. 12 V		
19 20 21		Not used				
22	A	Left water valve activation	Operating unit	Frequency (square-wave voltage)	0% – 100%	at 0% approx. 0 V at 100% approx. 12 V
23	E	Positive voltage supply for the control unit	Connector terminal 15	approx. 12 V		
24		Not used				
25	E	Terminal 61	Unloader relay terminal 61	approx. 0 V approx. 12 V	OFF ON	when engine stationary when engine running
26	E	Terminal 50	Terminal 30h	approx. 12 V		when starting

Pin Assignments at Operating Unit

Pin	Type	Description/function	Connection	Signal type	Tester display	Measurement notes
1	A/E	Interior temperature sensor	IHKR2 control unit	approx. 1.7 V – 3.4 V	10° C – 40° C	
2	E	Ground for control wheels and interior temperature sensor	IHKR2 control unit	approx. 0 V		
3		Not used				
4	E	Positive voltage supply for control wheels	IHKR2 control unit	approx. 5 V		
5		Not used				
6	A	Air flow control wheel, nominal value	IHKR2 control unit	approx. 0.7 V – 4 V	OFF – approx. 100%	
7	E	Positive voltage supply for interior sensor blower	Connector terminal 30	approx. 12 V		
8	E	Interior sensor blower activation	IHKR2 control unit	approx. 0 V approx. 11 V		when ignition ON after approx. 3 min. ignition OFF
9		Not used				
10	A	Right nominal temperature value	IHKR2 control unit	approx. 0.5 V – 4.4 V	16° C – 32° C	
11	E	Lights for control wheels	Connector terminal 58g			
12	E	Ground for control wheel lights	Connector terminal 31			
13	E	Left water valve activation	IHKR2 control unit	Frequency (square-wave voltage)	0% – 100%	at 0% approx. 0 V at 100% approx. 12 V
14	A	Left water valve activation	Left water valve	Frequency (square-wave voltage)	0% – 100%	at 0% approx. 0 V at 100% approx. 12 V
15	E	Right water valve activation	IHKR2 control unit	Frequency (square-wave voltage)	0% – 100%	at 0% approx. 0 V at 100% approx. 12 V

Pin	Type	Description/function	Connection	Signal type	Tester display	Measurement notes
16	A	Right water valve activation	Right water valve	Frequency (square-wave voltage)	0% – 100%	at 0% approx. 0 V at 100% approx. 12 V
17	A	Left nominal temperature value	IHKR2 control unit	approx. 0.5 V – 4.4 V	16° C – 32° C	
18		Not used				

Pin Assignments at IHKR2 Push Button Unit

Pin	Type	Description/function	Connection	Signal type	Tester display	Measurement notes
1	E	A/C function lights	IHKR2 control unit	approx. 7.5 V approx. 8.5 V		LED ON LED OFF
2	E	Ground for push buttons	IHKR2 control unit	approx. 0 V		
3	E	AUC function light	IHKR2 control unit	approx. 7.5 V approx. 8.5 V		LED ON LED OFF
4	A	A/C push button	IHKR2 control unit	approx. 0 V approx. 5 V	ON OFF	
5	E	Recirculated air function light	IHKR2 control unit	approx. 7.5 V approx. 8.5 V		LED ON LED OFF
6	E	Voltage supply for function lights	IHKR2 control unit	approx. 10 V approx. 4 V approx. 7 V		Light OFF Light ON / Function light ON Light ON / Function light OFF
7	E	Rear window defogger function light	IHKR2 control unit	approx. 7.5 V approx. 8.5 V		LED ON LED OFF
8	E	Night-time light for push button	Connector terminal 58g			

Pin	Type	Description/function	Connection	Signal type	Tester display	Measurement notes
9	A	Rear window defogger push button	IHKR2 control unit	approx. 0 V approx. 5 V	ON OFF	
10	A	Recirculated air/AUC push button	IHKR2 control unit	approx. 0 V approx. 5 V	ON OFF	

Adapters

Component	Connector No.	Description	Adapter No.
Control unit	X18155	26-pin, white	Cartool 61 4 460 V-adapter 26-pin Cartool 61 1 459 Periphery box
Control unit	X18156	26-pin, black	Cartool 61 4 460 V-adapter 26-pin Cartool 61 1 459 Periphery box
Control unit	X18157	26-pin, blue	Cartool 61 4 460 V-adapter 26-pin Cartool 61 1 459 Periphery box

Troubleshooting

Notes

- Troubleshooting with the BMW DIAGNOSTIC SYSTEM
- Battery charged, U-min = 12 V
- Fuses associated with the IHKR2 are OK.
- The matching adapter must be used for testing and the IHKR2 must be connected such that it is fully operable. Defect codes may be stored by the control unit when it is disconnected and checked. The defect codes stored prior to testing must therefore be printed out.
- The inputs and outputs listed in the following are not stored in the defect code memory of the IHKR2 control unit:
- Inputs (E): Buttons , terminal 15, terminal 30, terminal 61, vehicle speed signal, diagnostic link RxD.
- Outputs (A): Function lights, diagnostic link TxD.
- To ensure uniform initial conditions for defect monitoring and storage, the IHKR2 must be switched on with the air flow control wheel. If, despite the IHKR2 being switched on, the air flow control wheels shows "OFF" in the ♦D♦ Status list control wheels (function lights of program buttons do not light), check the voltage supply from the control unit to the control wheel potentiometers in the operating unit.

Table of substitute values for the temperature sensors

Defective component	Substitute value
Left heater sensor	55° C
Right heater sensor	55° C
Outside temperature sensor	0° C
Evaporator sensor	–4° C
Interior temperature sensor	24° C

Table of substitute values for control wheels

Defective component	Substitute value
Left temperature control wheel	24° C
Right temperature control wheel	24° C
Air flow control	52 %
Mixing air control	47 %

Defect Code Table

♦D♦ Defect code memory – possible stored defect codes:

Defect code No.	Defect location
01	Right temperature control wheel
04	Right heater sensor
07	Evaporator sensor
10	Outside temperature sensor
13	Interior temperature sensor
16	Interior sensor blower
25	Left temperature control wheel
28	Left heater sensor
31	Air flow control wheel
34	Mixing air control wheel
38	Auxiliary water pump relay

Defect code No.	Defect location
40	Left water valve
44	A/C relay/auxiliary fan relay stage 1
46	Right water valve
47	A/C signal to DME/EML
48	Rear window defogger relay
52	Fresh air flap motor
55	Recirculated air flap motor
56	AUC signal > 14 min. ON
61	Mixing flap motor
92	Terminal 50 > 3 min. ON
94	Independent heating/independent ventilation

Defect Code 01

♦D♦ Defect code memory: 01 Right temperature control wheel

Explanation: This defect code is stored when there is a short to ground, to positive or a break at the connector, black Pin 6.

Effect of defect: If the defect is a current defect, a substitute value of 24° C is used.

Possible cause: Voltage supply not OK., wire or control unit selector wheels defective.

Troubleshooting: Check voltage supply (approx. 5 V) of control wheels as well as wires and repair if necessary or renew component.

Defect Code 04

♦D♦ Defect code memory: 04 Right heater sensor

Explanation: This defect code is stored when there is a short to ground, to positive or a break at the connector, white Pin 2.

Effect of defect: If the defect is a current defect, a substitute value of 55° C is used.

Possible cause: Voltage supply not OK., wire or right heater sensor defective.

Troubleshooting: Check voltage supply (approx. 5 V with sensor disconnected) as well as wires and repair if necessary or renew component.

Defect Code 07

♦D♦ Defect code memory: 07 Evaporator sensor

Explanation: This defect code is stored when there is a short to ground, to positive or a break at the connector, white Pin 5.

Effect of defect: If the defect is a current defect, a substitute value of – 4° C is used.

Possible cause: Voltage supply not OK., wire or evaporator sensor defective.

Troubleshooting: Check voltage supply (approx. 5 V with sensor disconnected) as well as wires and repair if necessary or renew component.

Defect Code 10

♦D♦ Defect code memory: 10 Outside temperature sensor

Explanation: This defect code is stored when there is a short to ground, to positive or a break at the connector, white Pin 4.

Effect of defect: If the defect is a current defect, a substitute value of 0° C is used.

Possible cause: Voltage supply not OK., wire or outside temperature sensor defective.

Troubleshooting: Check voltage supply (approx. 5 V with sensor disconnected) as well as wires and repair if necessary or renew component.

Defect Code 13

♦D♦ Defect code memory: 13 Interior temperature sensor

Explanation: This defect code is stored when there is a short to ground, to positive or a break at the connector, black Pin 3.

Effect of defect: If the defect is a current defect, a substitute value of 24° C is used.

Possible cause: Voltage supply not OK., wire or interior temperature sensor defective.

Troubleshooting: Check voltage supply (approx. 5 V with sensor disconnected) as well as wires and repair if necessary or renew component.

Defect Code 16

♦D♦ Defect code memory: 16 Interior sensor blower

Explanation: This defect code is stored when there is a short to positive at the connector, blue Pin 18.

Effect of defect: If the defect is a current defect, the component is no longer activated and the substitute value for the interior sensor temperature of 24° C is used.

Possible cause: Wire or interior sensor blower defective.

Troubleshooting: Check wire and repair if necessary or renew component.

Defect Code 25

♦D♦ Defect code memory: 25 Left temperature control wheel

Explanation: This defect code is stored when there is a short to ground, to positive or a break at the connector, black Pin 5.

Effect of defect: If the defect is a current defect, a substitute value of 24° C is used.

Possible cause: Voltage supply not OK., wire or control unit selector wheels defective.

Troubleshooting: Check voltage supply (approx. 5 V) of control wheels as well as wires and repair if necessary or renew component.

Defect Code 28

♦D♦ Defect code memory: 28 Left heater sensor

Explanation: This defect code is stored when there is a short to ground, to positive or a break at the connector, white Pin 3.

Effect of defect: If the defect is a current defect, a substitute value of 55° C is used.

Possible cause: Voltage supply not OK., wire or left heater sensor defective.

Troubleshooting: Check voltage supply (approx. 5 V with sensor disconnected) as well as wires and repair if necessary or renew component.

Defect Code 31

♦D♦ Defect code memory: 31 Air flow control wheel

Explanation: This defect code is stored when there is a short to ground, to positive or a break at the connector, black Pin 4.

Effect of defect: If the defect is a current defect, a substitute value of 52% is used.

Possible cause: Voltage supply not OK., wire or control unit selector wheels defective.

Troubleshooting: Check voltage supply (approx. 5 V) of control wheels as well as wires and repair if necessary or renew component.

Defect Code 34

♦D♦ Defect code memory: 34 Mixing air control wheel

Explanation: This defect code is stored when there is a short to ground, to positive or a break at the connector, white Pin 6.

Effect of defect: If the defect is a current defect, a substitute value of 47% is used.

Possible cause: Voltage supply not OK., wire or mixing air control wheel defective.

Troubleshooting: Check voltage supply (approx. 5 V) of control wheel as well as wires and repair if necessary or renew component.

Defect Code 38

♦D♦ Defect code memory: 38 Auxiliary water pump relay

Explanation: This defect code is stored when there is a short to ground, to positive or a break at the connector, blue Pin 19.

Effect of defect: If the defect is a current defect, the component is no longer activated.

Possible cause: Wire or auxiliary water pump relay defective.

Troubleshooting: Check wire and repair if necessary or renew component.

Defect Code 40

♦D♦ Defect code memory: 40 Left water valve

Explanation: This defect code is stored when there is a short to ground, to positive or a break at the connector, black Pin 22.

Effect of defect: If the defect is a current defect, the component is no longer activated.

Possible cause: Wire, operating unit or left water valve defective.

Troubleshooting: Check wire and repair if necessary or renew component.

Defect Code 44

♦D♦ Defect code memory: 44 A/C relay/auxiliary fan relay stage 1

Explanation: This defect code is stored when there is a short to ground, to positive or a break at the connector, blue Pin 22.

Effect of defect: If the defect is a current defect, the component is no longer activated.

Possible cause: Wire, A/C relay or auxiliary fan relaystage 1 defective.

Troubleshooting: Check wire and repair if necessary or renew component.

Note on troubleshooting: On the M50 engines, the DME control unit is activated directly by the IHKR2 control unit via the low pressure and high pressure switch. The defect break in circuit can also be stored when the low pressure or high pressure switch opens. When defect code stored, check wire and pressure switch as well as auxiliary fan relay stage 1.

Defect Code 46

♦D♦ Defect code memory: 46 Right water valve

Explanation: This defect code is stored when there is a short to ground, to positive or a break at the connector, black Pin 15.

Effect of defect: If the defect is a current defect, the component is no longer activated.

Possible cause: Wire, operating unit or right water valve defective.

Troubleshooting: Check wire and repair if necessary or renew component.

Defect Code 47

♦D♦ Defect code memory: 47 A/C signal to DME/EML

Explanation: This defect code is stored when there is a short to ground or to positive at the connector, black Pin 9.

Effect of defect: If the defect is a current defect, the component is no longer activated.

Possible cause: Wire or decoupling relay defective.

Troubleshooting: Check wire and repair if necessary or renew component.

Note: The decoupling relay is no longer installed as of model year 1991. The DME/EML control unit is activated directly with positive by the IHKR2 control unit when the air conditioning system is on.

The function whether the A/C signal to DME/EML is switched actively to positive or negative is defined by the coded IHKR2 control unit.

Defect Code 48

♦D♦ Defect code memory: 48 Rear window defogger relay

Explanation: This defect code is stored when there is a short to ground, to positive or a break at the connector, blue Pin 20. Defect codes are only updated when terminal 61 is active.

Effect of defect: If the defect is a current defect, the component is no longer activated.

Possible cause: Wire or rear window defogger relay defective.

Troubleshooting: Check wire and repair if necessary or renew component.

Defect Code 52

♦D♦ Defect code memory: 52 Fresh air flap motor

Explanation: This defect code is stored when there is a short to ground, to positive or a break at the connector, blue Pin 10, 11, 12, 13.

Effect of defect: If the defect is a current defect, the component is no longer activated.

Possible cause: Voltage supply not OK., wire or fresh air flap motor defective.

Troubleshooting: Check voltage supply (approx. 12 V) as well as wires and repair if necessary or renew component.

Defect Code 55

♦D♦ Defect code memory: 55 Recirculated air flap motor

Explanation: This defect code is stored when there is a short to ground, to positive or a break at the connector, blue Pin 6, 7, 8, 9.

Effect of defect: If the defect is a current defect, the component is no longer activated.

Possible cause: Voltage supply not OK., wire or recirculated air flap motor defective.

Troubleshooting: Check voltage supply (approx. 12 V) as well as wires and repair if necessary or renew component.

Defect Code 56

♦D♦ Defect code memory: 56 AUC signal >14 min. ON

Explanation: This defect code is stored when the AUC signal is detected as being active for longer than 14 minutes at the connector, black Pin 8.

Effect of defect: If the defect is a current defect, the AUC function is switched off and the function LED goes out.

Possible cause: Wire or AUC control unit defective.

Troubleshooting: Check wire and repair if necessary or renew component.

Defect Code 61

♦D♦ Defect code memory: 61 Mixing flap motor

Explanation: This defect code is stored when there is a short to ground, to positive or a break at the connector, blue Pin 23, 24, 25, 26.

Effect of defect: If the defect is a current defect, the component is no longer activated.

Possible cause: Voltage supply not OK., wire or mixing flap motor defective.

Troubleshooting: Check voltage supply (approx. 12 V) as well as wires and repair if necessary or renew component.

Defect Code 92

♦D♦ Defect code memory: 92 terminal 50 > 3 min. ON

Explanation: This defect code is stored when the signal terminal 50 is detected at connector, black Pin 26 for longer than 3 minutes ON.

Effect of defect: None

Possible cause: Wire defective.

Troubleshooting: Check wire and repair if necessary.

Defect Code 94

♦D♦ Defect code memory: 94 Independent heating/independent ventilation

Explanation: This defect code is stored when the function independent heating/independent ventilation "ON" occurs simultaneously at the connector, white Pin 7 and 10.

Effect of defect: When the defect is detected, the flap program independent heating/ventilation is no longer run.

Possible cause: Wire defective.

Troubleshooting: Check wire and repair if necessary.

User Mode Programming (Security Code)

Entry into this programming mode requires knowledge of the user defined security code and requires the correct key sequence. This mode allows the customer to program all basic parameters in the Number Assignment Module (NAM), which *must* be correct to make a cellular telephone call. There is no limit to the number of times security code programming may be performed, but there is a 3-time limit on the number of times the unit's telephone number can be changed. See pages 32, 33, and 34 for instructions on clearing the 3-time limit counter.

Data Required for Programming

Prior to programming the cellular phone, the following information must be acquired:

From the Cellular Carrier (System Operator) or Agent:

System ID	5 digits
Customer's Phone Number	10 digits (Area Code + 7 digit number)
Access Overload Class	2 digits
Group ID	2 digits
Initial Paging Channel	3 digits
MIN Mark	enable/disable
Local Use	enable/disable

From the Customer:

Security Code	6 digits
Unlock Code	3 digits

Upon entering the USER MODE programming configuration, the user will step through programming ENTRY NUMBERS and DATA FIELDS in sequence. This procedure will wrap around from the last DATA FIELD back to ENTRY # 1 and continue until the user exits the programming mode.

After programming the cellular telephone number by this method 3 times, the telephone will not allow the user back into this mode without resetting the "3-times counter" with a 32# test mode command. See the following page for the User Mode Programming Procedure.

User Mode Programming (Security Code)

User Mode Programming Procedure

Step 1. ***Reference the BMW Telephone User's Manual for additional programming information and a programming table.***

Step 2. Turn on the Cellular Telephone by pressing the **PWR** button.

Step 3. Enter the following keypad sequence:

Fcn 0, 6 digit security code twice, Rcl

Note: The 6 digit security code is set to **000000** at the factory on all new phones.

The entry number "01" will appear in the display if the attempt is successful. This brings up **ENTRY # 01** of the **user Mode NAM Programming table.**

If the attempt is unsuccessful (01 does not appear in the display), check the following:

- the wrong sequence was used
- the wrong security code was used
- the wrong handset was used (type mismatch)
- user mode programming has been disabled in test mode
- the telephone number has been changed three times and must be reset with the 32# command in test mode.

Step 4. Press ✻ to advance to the data field for **Entry # 01**, which is the SYSTEM ID. Enter new data from the keypad for this and each subsequent field throughout the programming sequence. Use the ✻ key to advance to the next field.

Step 5. The sequence will wrap around to Entry # 01 after all entries are complete.

Save the newly entered data by pressing the **"Snd"** key **while on any entry number.**

Exit the programming mode without saving changes by pressing #.

Step 6. Accessing the second telephone number data:

If the second telephone number bit is enabled in Entry #10, then the data entry for 2nd Telephone Number will begin after the SND key is pressed to save information for the first NAM, indicated by 01 2 in the display. Refer to the 2nd Telephone Number table for data field information.

User Mode (Security Code) Programming

Editing Commands for this programming method are:

*	Steps through the ENTRY #'s and DATA FIELDS in sequence.
CLR	Reverts the displayed data to the previously stored value when pressed while in any DATA field.
#	Exits the program without altering any of the information. This will not increment the "3-times counter."
SND	Stores all new data when entered during this programming sequence when pressed while in any ENTRY # field, and increments the "3-times counter" if the telephone number is changed.

Entry	Standard Default	Description
01	*00000*	**System ID Number.** Number assigned by system operator for system identification. Non-wireline is odd, wireline is even.
02	*111*	**Cellular Area Code.** Provided by the system operator.
03	*1110111*	**Cellular Telephone Number.** Provided by the system operator.
04	*XX*	**Station Class Mark: Set to 12 for BMW**
05	*00*	**Access Overload Class:** This 2 digit number specifies the level of priority assigned to the mobile for accessing the system. These numbers are assigned by the system operator.
06	*00*	**Group ID Mark:** This 2 digit number specifies how many bits of the 15-bit system ID are significant and compared during call processing. These numbers are assigned by the system operator for roaming purposes.
07	*000000*	**User Security Code:** This 6 digit number supplied by the user stores the code used by the user to check and change the 3 digit lock code and service levels.
08	*123*	**Unlock Code:** This 3 digit number supplied by the user for the purpose of allowing only user-approved individuals access.
09	*0334*	**Initial Paging Channel:** There are four significant digits for the initial paging channel. For Non-Wireline enter 0333, and for Wireline enter 0334. Provided by the System Operator.

(Continued)

User Mode (Security Code) Programming

Entry	Standard Default	Description
10	*111100*	**Option Programming:** Entries are 1's and 0's from left to right.
	1	**Internal Speaker Disable:** This bit is used to disable the handset call processing speaker (if present) when using an external (entertainment system) speaker. **Set to 1 for BMW.**
	1	**Local Use:** If set to a 1 telephone will respond to local control orders in the home area or when the group ID is matched. Assigned by the system operator.
	1	**MIN Mark:** Supplied by the system operator. When enabled the user's area code will be sent with each call initiated or answered. **1 = ENABLED, 0 = DISABLED.**
	1	**Auto Recall:** Allows the user to access repertory by a one-digit or two-digit send sequence. Also called **Super Speed Dialing. 1 = ENABLED, 0 = DISABLED.** Normally enabled.
	0	**Second Telephone Number Enable:** This bit allows entry of second telephone number data. If Dual NAM is required, set to a 1.
	0	**Not used on BMW Set to 0**
11	*100*	**Option Programming:** Entries are 1's and 0's from left to right.
	1	**Long Tone DTMF:** If enabled, this bit increases the time DTMF tones actually transmitted, enabling some low-tier telephone equipment, such as most answering machines, to be accessed via a cellular telephone. **1 = ENABLED, 0 = DISABLED.**
	0	**Not used on BMW Set to 0**
	0	**Eight hour timeout:** This feature ensures that if your telephone is inadvertantly left on, it will not completely drain your battery. **1 = DISABLED, 0 = ENABLED.**

Storing Programming:

Press SND on any entry number field.

Dual NAM Option:

If the Dual NAM bit is enabled, steps will continue with 01 2 on the following page.

User Mode (Security Code) Programming Second Telephone Number

Entry	Standard Default	Description
91 2	*00000*	**System ID Number:** Assigned by system operator.
92 2	*111*	**Cellular Area Code:** Provided by the system operator.
93 2	*1110111*	**Cellular Telephone Number:** Assigned by the system operator.
94 2	*XX*	**Station Class Mark: Set to 12 for BMW.**
95 2	*00*	**Access Overload Class:** Assigned by the system operator.
96 2	*00*	**Group ID Mark:** Assigned by the system operator.
99 2	*0334*	**Initial Paging Channel:** 0333 for Non-Wireline or 0334 for Wireline.
10 2	*011100*	**Option Programming:** Entries are 1's and 0's from left to right.
	0	**Internal Speaker Disable:** 1 = handset speaker disabled, 0 = handset speaker enabled. Set to 1 for BMW mobile cellular telephones.
	1	**Local Use: 1 = ENABLED, 0 = DISABLED.**
	1	**MIN Mark:** Supplied by the system operator. **1 = ENABLED, 0 = DISABLED.**
	1	**Auto Recall:** Super Speed Dialing. **1 = ENABLED, 0 = DISABLED.** Noramlly enabled.
	0	**Second Telephone Number Enable:** Set to 1 if programming a second telephone number.
	0	**Not used on BMW mobile telephones:** Set to 0.
11 2	*000*	**Option Programming:** Entries are 1's and 0's from left to right.
	0	**Long Tone DTMF: 1 = ENABLED, 0 = DISABLED.**
	0	**Not used on BMW Set to 0.**
	0	**Eight hour timeout: 1 = DISABLED, 0 = ENABLED.**

Note: Entries 07 and 08 are skipped during programming of the second telephone numbers.

Entering Test Mode 25 pin Transceivers

The test mode procedure is required to clear the 3-times User Mode Programming counter. It is also required to display the Electronic Serial Number (ESN). It may also be used to display the security and unlock codes in case the customer loses them. See the following page for procedures. Test Mode is also used for troubleshooting procedures used by technicians.

Insert the Identity Transfer Connector in line with the data cable and turn on the control unit. If the connector is not available, short pin 21 to ground on the 25 pin connector.

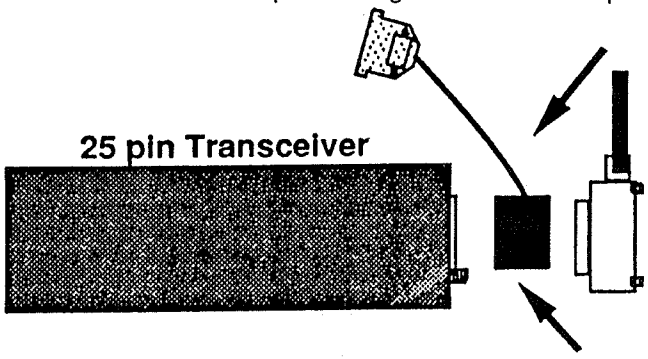

Identity Transfer Connector

This connector is part of the phone test and repair tool kit.

Test Mode consists of two separate levels. When the telephone is first placed in Test Mode it is in the STATUS DISPLAY LEVEL. The display will be scrolling (or flashing), or it will be locked. If locked, enter the unlock code and the display will begin scrolling. If the unlock code is not known, press #. By pushing the # key the technician causes the cellular telephone to change to its SERVICING LEVEL. the display will be [illegible].

Note: Use of a loaner handset is allowed in servicing level, but is not allowed in the status display level.

Test Mode Display

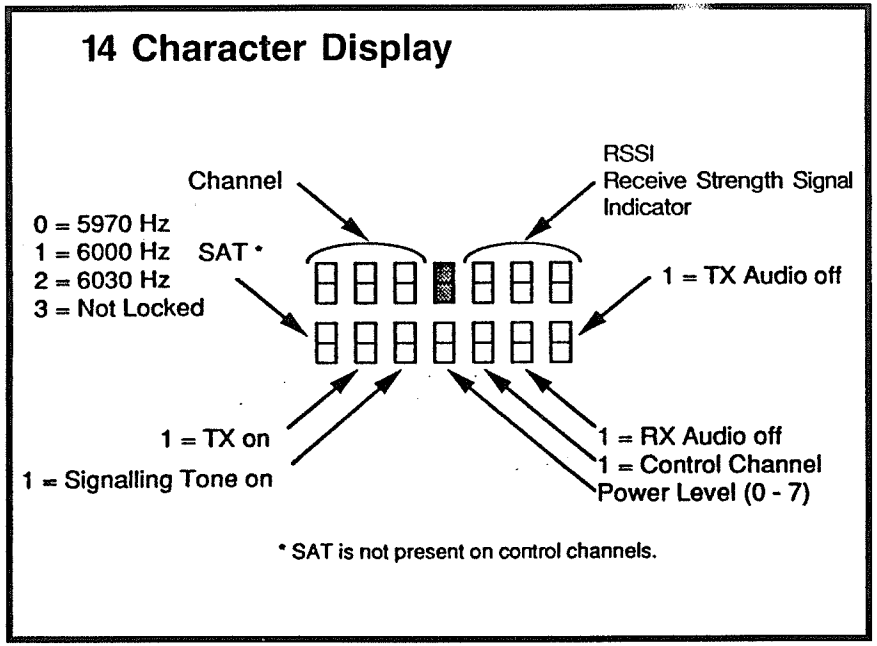

STATUS DISPLAY LEVEL—This level allows the telephone to operate normally while providing status indications in the display.

Note: Calls may be processed in the status display mode, but telephones may drop calls in this mode if data is received while the display is being updated.

SERVICING LEVEL—Pressing the # key takes the telephone out of normal operation and allows commands to be entered through the keypad to control the operation of the unit manually. The following list of test mode commands are accessed from the SERVICING LEVEL.

Test Mode Commands for Programming

The following Test Mode commands are significant for programming the telephone and registering it with the carrier:

IMPORTANT: Be very careful not to deviate from the following procedures. Any change in data fields may cause a loss of call processing.

32# Clears the telephone, including the THREE TIMES COUNTER and user repertory memory. This command may be necessary to allow entry into User Mode (Security Code) Programming. Phone will reset to factory defaults.

Step 1: Place the telephone in test mode using the appropriate procedure, and press the # key to suspend scrolling.

Step 2: Press 32#.

Step 3: This procedure could take as long as two minutes. **Wait until the display shows an apostrophe on the right side before proceeding.**

38# Displays the ESN in four windows, two hexadecimal numbers at a time. Each window has an address ranging from 00 to 03.

Step 1: Place the telephone in test mode using the appropriate procedure, and press the # key to suspend scrolling.

Step 2: Press 38#.

Step 3: The telephone will display 00 82. This is address 00 and the first two digits of the Electronic Serial Number in hexadecimal code. Write down "82" and depress the ✻ key to display the next window.

Step 4: The telephone will display 01 XX. This is address 01 and the second two digits of the Electronic Serial Number in hexadecimal code. Write down the value of "XX" and depress the ✻ key to display the next window.

Note: Continue to strike the ✻ key until all four windows have been displayed. Continuing to depress the ✻ key after that will cause the windows to "wrap around," once again displaying 00 82. Press the # key to exit this command.

55# Enables the technician to display the security and unlock codes of the cellular mobile. If the customer locks his phone and does not know either the unlock or the security codes, this procedure is necessary:

Step 1: Place the telephone in test mode using the appropriate procedure, and press the # key to suspend scrolling.

Step 2: Press 55#.

Step 3: Press the ✻ key (6) times. This will display the 6 digit security code.

Step 4: Press the ✻ key (1) more time. This will display the 3 digit unlock code. Press the # key to exit this command.

See the following pages for Test Mode Programming, using the 55# command.

Test Mode Programming (55#)

1. Programming Control Commands

a. Ground the test pin of the telephone using the appropriate procedure illustrated on the previous pages. Power up the telephone. The display will indicate Lo'd, 05, or a flashing display. Press the # key to continue.

b. To place the telephone in the PROGRAMMING MODE, press **55#**.

***** Advances to the next programming step.

Clr Clears the entered information and returns to previously stored information for the current programming step.

Exits the program without storing any new information. (Abort)

2. Programming Steps

The step number will be displayed on the top row, the data bits will be displayed in the bottom row.

Entry	Standard Default	Description
01	*00000*	**System ID.** The 5 digit number assigned by the system operator for system identification.
02	*10101101* (A7-A0)	**A Option Byte.** Read from left to right, bits A7 through A0.
	1	**A7 Local Use.** If set to 1 the telephone will respond to local control orders in the home area or when the group ID is matched. Assigned by the system operator. **1 = ENABLED, 0 = DISABLED.**
	0	**A6 Preferred System.** Applies to units capable of operating on two service systems (A or B). **1 = SYSTEM A, 0 = SYSTEM B.**
	1	**A5 End-to-End Signalling.** When enabled, this bit indicates the telephone is equipped for DTMF signalling via the keys after the landline connection is made. **1 = ENABLED, 0 = DISABLED.**
	0	**A4 Not used for BMW Set to a 0**
	1	**A3 Not used for BMW Set to a 1**
	1	**A2 Not used for BMW Set to a 1**
	0	**A1 Not used for BMW Set to a 0**
	1	**A0 Not used for BMW Set to a 1**

(Continued)

Entry	Standard Default	Description
03	*1111110111*	**User 10 Digit Telephone Number.** Assigned by Syst. Op.
04	*XX*	**Station Class Mark. Set to 12 for BMW**
05	*00*	**Access Overload Class.** Assigned by the system operator. This 2 digit number specifies the level of priority assigned to the mobile for accessing the system.
06	*00*	**Group ID Mark.** This 2 digit number specifies how many bits of the system ID are significant and compared during call processing for roaming purposes. **Assigned by the System Operator.**
07	*000000*	**User Security Code.** This 6 digit number supplied by the user stores the code used to enter USER MODE PROGRAMMING.
08	*123*	**Unlock Code.** This 3 digit number supplied by the user allows only user-approved individuals access to the telephone.
09	*004*	**Service Level.** This 3 digit number stipulates the call restrictions applied to the telephone. **004 = NORMAL SETTING.**
10	*00000100 (B7-B0)*	**B Option Byte.** Read from left to right, bits B7 through B0.
	0	**B7 Not used for BMW Set to a 0**
	0	**B6 Not used for BMW Set to a 0**
	0	**B5 Not used for BMW Set to a 0**
	0	**B4 Not used for BMW Set to a 0**
	0	**B3 Single System Scam.** Normally disabled. If enabled, the telephone will scan only one system based on the setting of the of the preferred system bit A6. **1 = ENABLED, 0 = DISABLED.**
	1	**B2 Auto Recall.** Normally enabled. This option allows the user to access repertory by a one or two digit send sequence. Also called **Super Speed Dialing. 1 = ENABLED, 0 = DISABLED.**
	0	**B1 Disabled Service Level.** Normally enabled. If disabled, service levels (call restrictions) may not be changed from the control unit. **1 = DISABLED, 0 = ENABLED.**
	0	**B0 Lock Code Disable.** Normally enabled. When enabled the user is allowed to lock and unlock the telephone through the 3 digit unlock code. **1 = DISABLED, 0 = ENABLED.**

(Continued)

Test Mode Programming (55#) (Continued)

Entry	Standard Default	Description
11	*00001000* (C7-C0)	**C Option Byte.** Read from left to right, bits C7 through C0.
	0	**C7 User NAM Programmability.** Normally enabled. When enabled the user is allowed to program the telephone in USER MODE PROGRAMMING. **0 = ENABLED, 1 = DISABLED.**
	0	**C6 2nd Number Registration (Dual NAM).** When enabled, allows access to the second telephone number for dual NAM option. **0 = DISABLED, 1 = ENABLED.**
	0	**C5 Call Timer Access.** Allows the user access to the call timer when that capability is available. **1 = DISABLED, 0 = ENABLED.**
	0	**C4 Auto Redial.** Normally enabled. This bit provides for automatic redialing of the last number entered for six minutes to access a busy cellular system. **1 = DISABLED, 0 = ENABLED.**
	1	**C3 Internal Speaker Disable.** This bit is used to disable the handset call processing speaker (if present) when using an external (entertainment system) speaker. **Set to 1 for BMW.**
	0	**C2 Not used by BMW Set to 0**
	0	**C1 Selectable System.** Allows user to select the primary system from the handset. **1 = DISABLED, 0 = ENABLED.**
	0	**C0 Not used by BMW Set to 0**
12	*0334*	**Initial Paging Channel.** 0333 for System A, 0334 for System B.
13	*0333*	**Initial Paging Channel for System A.**
14	*0334*	**Initial Paging Channel for System B.**
15	*021*	**Number of Dedicated Paging Channels.** Always **021** in North America.

(Continued)

Test Mode Programming (55#) (Continued)

Entry	Standard Default	Description
13	*00000001* (D7-D0)	**D Option Byte.** Read from left to right, bits D7 through D0.
	0	**D7 Not used on BMW Set to 0**
	0	**D6 Not used on BMW Set to 0**
	0	**D5 Long Tone DTMF.** Increases the time DTMF tones are transmitted for such purposes as remote answering machine activation. **1 = ENABLED, 0 = DISABLED.**
	0	**D4 Not used on BMW Set to 0**
	0	**D3 Eight Hour Timeout.** When enabled the telephone shuts itself off after eight hours to conserve the battery. **1 = DISABLED, 0 = ENABLED.**
	0	**D2 Not used on BMW Set to 0**
	0	**D1 Failed Page Indicator.** When enabled the telephone informs the user of any in-bound call attempt that failed. **1 = DISABLED, 0 = ENABLED.**
	1	**D0 Not used on BMW Set to 1**

Dual Nam Option:

If the second telephone number bit is enabled (Step 11, bit C6), steps 01 through 06 and step 12 will be repeated for the second telephone number.

Storing Programming:

Pressing * after step 16 (step 12 when the second telephone number is entered) will store all programming in the telephone.

Exiting Programming without Storing Changes:

Pressing # during the programming will abort the attempt, exiting 55# without storing any data.

Troubleshooting BMW CMT1000/CMT1000 VR Cellular Mobile Phone

Troubleshooting cellular telephones installed in BMW automobiles is extremely simple.

A. Always suspect programming first. Refer to the user's manual and the PROGRAMMING sections for guidance.

B. Next, **examine the installation.** The most frequently encountered problems here are with the antenna, its transmission line, and the crimp-on connector. Check all wiring connections for good mechanical contact.

C. Throubleshoot the cellular telephone.

1. Perform operations checks as described in the following pages of this manual and note any abnormalities.

2. Follow troubleshooting tables on the following pages.

Note: If all the preceding checks do not result in failures or error messages, the problem is not with the telephone, but with the cellular system. Inform the carrier of the situation.

D. If the problem is in the hardware, determine which module is faulty by swapping out these pieces with known good alternatives (e.g., handset, interface, wiring, or transceiver). The following pages covering troubleshooting may be of general help in solving problems with BMW transceivers.

1. If the problem is not in the transceiver, replace the faulty component.

2. If the problem is the transceiver, replace the unit and perform an identity transfer. See the proper procedure in this section.

Out of Box Check

The procedures outlined here are for initial or operations check-out only and are not intended to replace the other sections of this manual. BMW neither recommends nor supports alignment of modern subscriber products upon initial installation. If a new unit is out of adjustment, it should be returned for replacement.

See the PROGRAMMING section for guidance in initializing the customer's telephone. There is a separate INSTALLATION manual which discusses installation procedures in detail.

Mobile Operations Check

Step 1. Since the BMW cellular telephone interfaces with the automobile's AM-FM radio, these checks should be performed in the vehicle.

Step 2. Make certain the automobile is turned off. Turn the telephone on by pressing the **"PWR"** button.

Step 3. Observe wake-up (all 8's displayed, backlighting lit, and DTMF tones heard). Note that the display then changes to Loc'd.

Step 4. Enter **"456"**, then **"Clr"**. This is not the factory lock code and the display should not change from Loc'd.

Step 5. Enter the three digit unlock code (**"123"** as supplied from the factory) and observe that Loc'd is replaced by on or S (for signal meter) in the display.

Step 6. Lock the telephone by pressing **"FCN 5"** and observe that the unit displays Loc'd accompanied by an audible confirmation tone.

Step 7. Enter the three-digit unlock code (**"123"** as supplied from the factory). The unit should unlock and display on or S (for signal meter).

Step 8. Enter all 8's in the display and note that all segments are lit evenly. Press **"Clr"** to clear the display.

Step 9. Enter **"123456789*0#."** As each key is pressed, the appropriate number should scroll across the screen. The final display should read.

123456
789A0C.

Step 10. If the unit is a new telephone, enter **"STORE 01"** to store a number into user memory. The display should read 01 and "123456789A0C" should be stored in location 01. If the unit has already been in use, make certain there is no information already stored in location 01.

Operations Check (Continued)

Step 11. Press **"CLEAR,"** then **"RCL 01."** The display should now read 01 345and 6789ABC. The "123" digits are stored but not display at this time.

Step 12. Press **"RCL"**. The display should now display or scroll the digits previously entered.

Step 13. Adjust the speaker volume while on hook to verify that all levels work, both up and down. Also verify that the alert volume works properly by pressing **FCN** and then pressing the volume keys. Also verify handset earpiece by lifting the handset and pressing the volume keys.

Step 14. Press **"RCL#"** to display the unit's telephone number. Write this number down.

Step 15. Turn the automobile AM-FM radio on.

Step 16. From a landline telephone, place a call to the unit.

Step 17. Note that as the telephone rings the AM-FM radio is muted.

Step 18. Turn the automobile ignition switch to off.

Step 19. Note that the telephone continues to ring even though the automobile has been turned off.

Step 20. Terminate the landline call.

Testing the Antenna Installation with RSSI

Received Signal Strength Indicator (RSSI) is a feature of the telephone Used to check the entire antenna installation, including the crimp-on connectors, the transmission line (antenna cable), and the antenna itself. The procedure outlined here should be accomplished with the vehicle stationary, in a good cellular coverage area. It requires the use of a known good shop cellular antenna (preferrably a magnetic mount antenna).

Step 1. Place the unit in status display mode (See Page 6501.0A-06)

Step 2. Carefully watch the top row of the status display. (See Page 6501.0A-06). The numbers will continue to change for a short time. Wait until the (3) digit channel number (the upper left 3 characters) remains the same.

Step 3. Read the RSSI by locating the upper 3 characters in the status display. (See Page 6501.0A-07). Record this value.

Step 4. Disconnect the antenna transmission line from the RF port of the transceiver. Connect a known good shop (magnetic mount) antenna to the RF port of the transceiver. Postion the shop antenna at least 14 inches from the customer's antenna.

Step 5. Repeat step 2. Make sure that the channel number is the same channel used in step 2. If you are unable to get a reading using the same channel, this procedure is invalid.

Step 6. Repeat step 3 and record the new RSSI value. Compare the two RSSI readings. If they are not relatively close to each other, less than 15 numbers apart, the antenna installation may be faulty.

Note: A faulty antenna installation is most often the result of a faulty crimp-on connector. If the connectors are good, suspect that the transmission line has been damaged. Rarely is the problem with the antenna itself.

25 Pin D-Sub Transceiver Connector

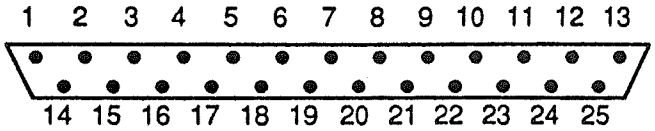

View into transceiver

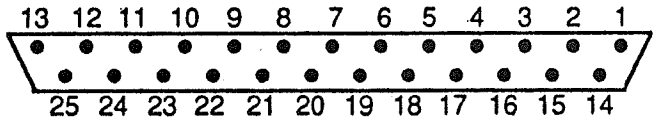

View into Cable

Pin Definitions

1 Handset Transmit Audio/On-Off
3 Ground, one of two required
4 Battery+, one of two required
5 Ignition Sense
6 Handset Receive Audio
8 Handset Switched +9.5V DC
10 Entertainment Mute output to AM/FM radio
11 Handset data line
12 Handset data line
4 Handsfree microphone ground
15 Handsfree microphone signal input
16 Battery+, one of two required
17 Ground, one of two required
18 Handset audio ground
19 Handsfree speaker signal output
20 Ground output
23 Handset logic ground
24 Handset data line
25 Handsfree speaker ground

A] TELEPHONE WILL NOT POWER UP

NOTE: MANY OF THE FOLLOWING TESTS ASSUME THAT THERE IS ADEQUATE CELLULAR COVERAGE IN THE AREA.

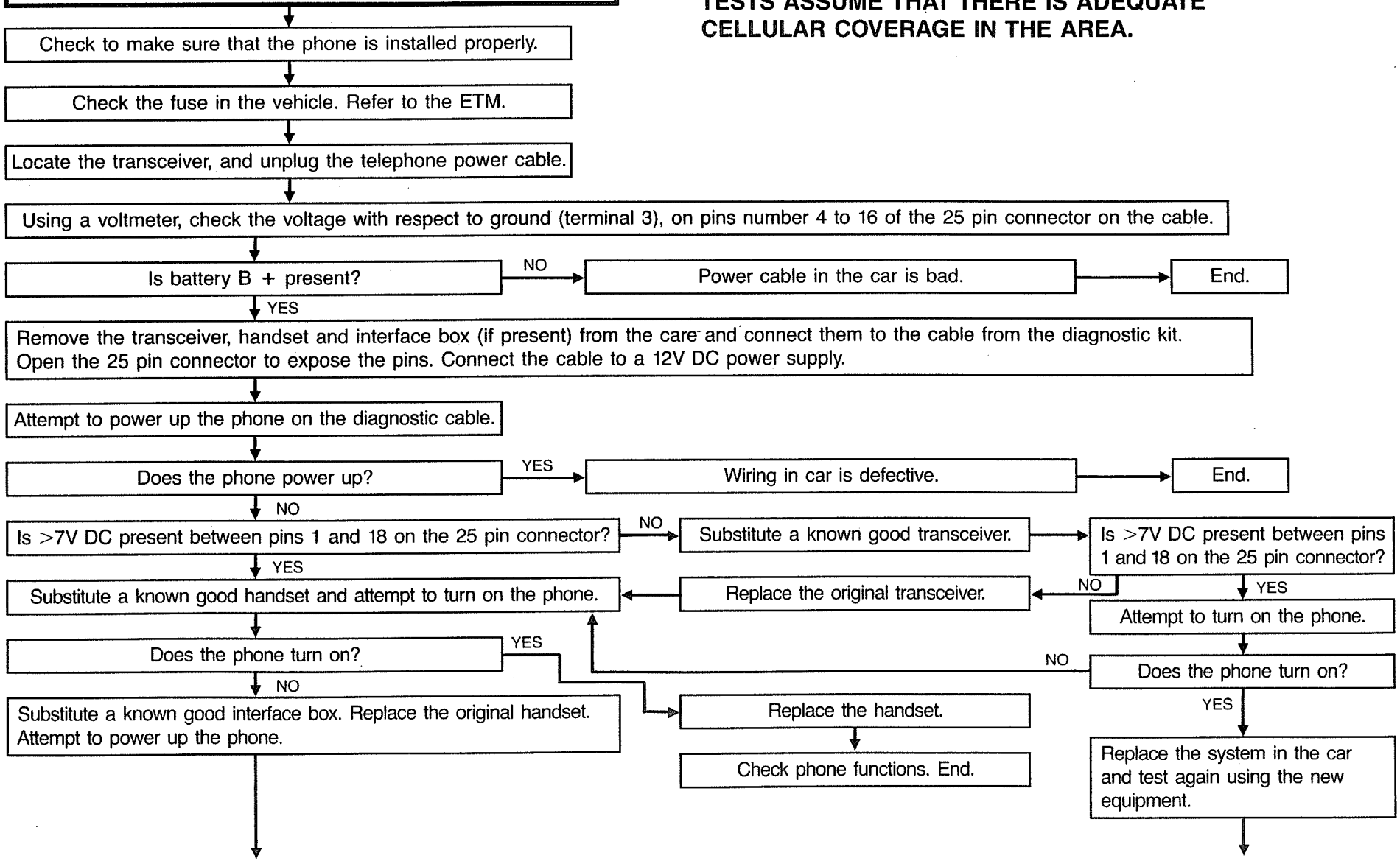

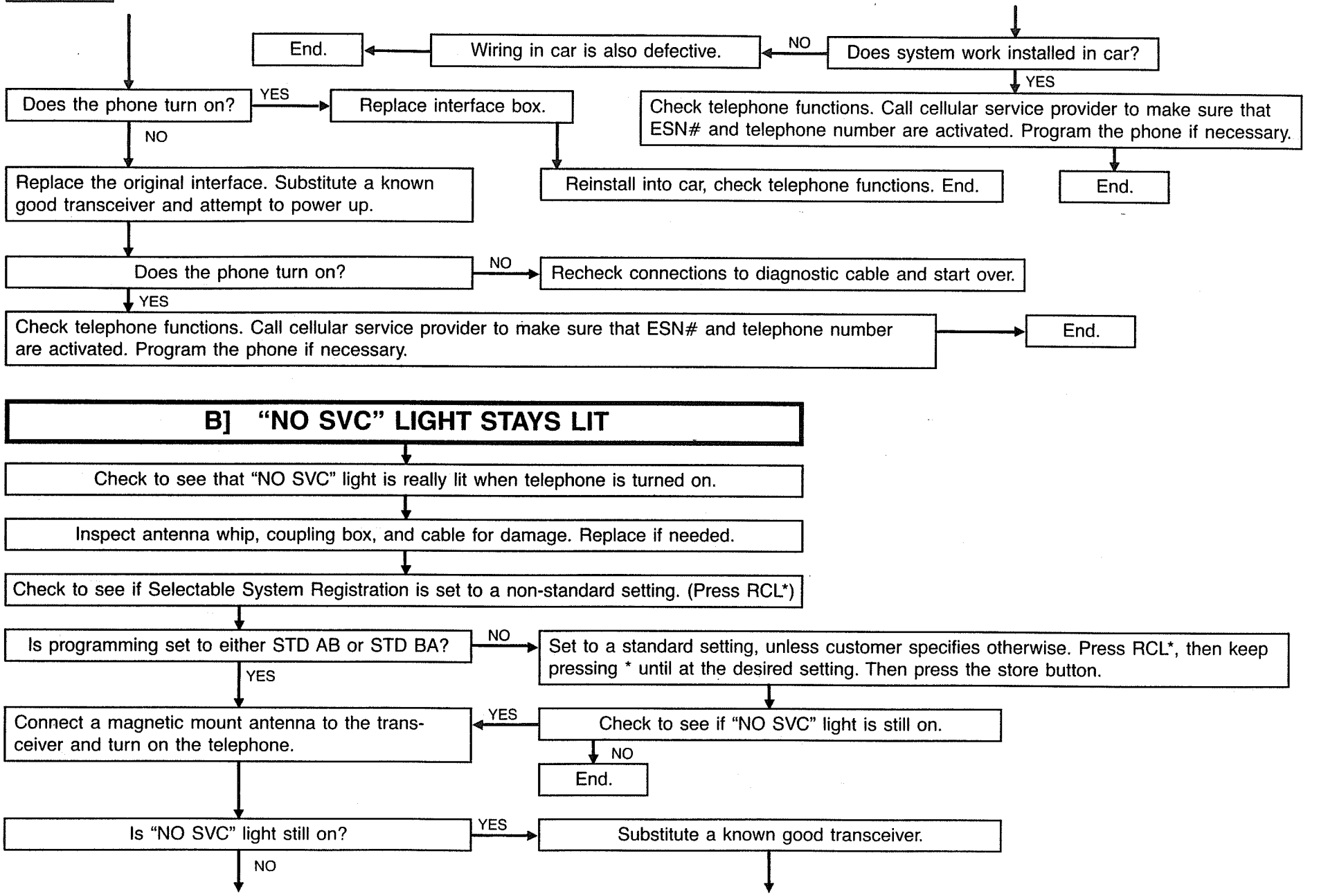
Does the phone turn on?
YES
Replace interface box.
NO
Replace the original interface. Substitute a known good transceiver and attempt to power up.
Reinstall into car, check telephone functions. End.
Does the phone turn on?
NO
Recheck connections to diagnostic cable and start over.
YES
Check telephone functions. Call cellular service provider to make sure that ESN# and telephone number are activated. Program the phone if necessary.
End.
Does system work installed in car?
NO
Wiring in car is also defective.
End.
YES
Check telephone functions. Call cellular service provider to make sure that ESN# and telephone number are activated. Program the phone if necessary.
End.
B] "NO SVC" LIGHT STAYS LIT
Check to see that "NO SVC" light is really lit when telephone is turned on.
Inspect antenna whip, coupling box, and cable for damage. Replace if needed.
Check to see if Selectable System Registration is set to a non-standard setting. (Press RCL*)
Is programming set to either STD AB or STD BA?
NO
Set to a standard setting, unless customer specifies otherwise. Press RCL*, then keep pressing * until at the desired setting. Then press the store button.
YES
Check to see if "NO SVC" light is still on.
YES
Connect a magnetic mount antenna to the transceiver and turn on the telephone.
NO
End.
Is "NO SVC" light still on?
YES
Substitute a known good transceiver.
NO

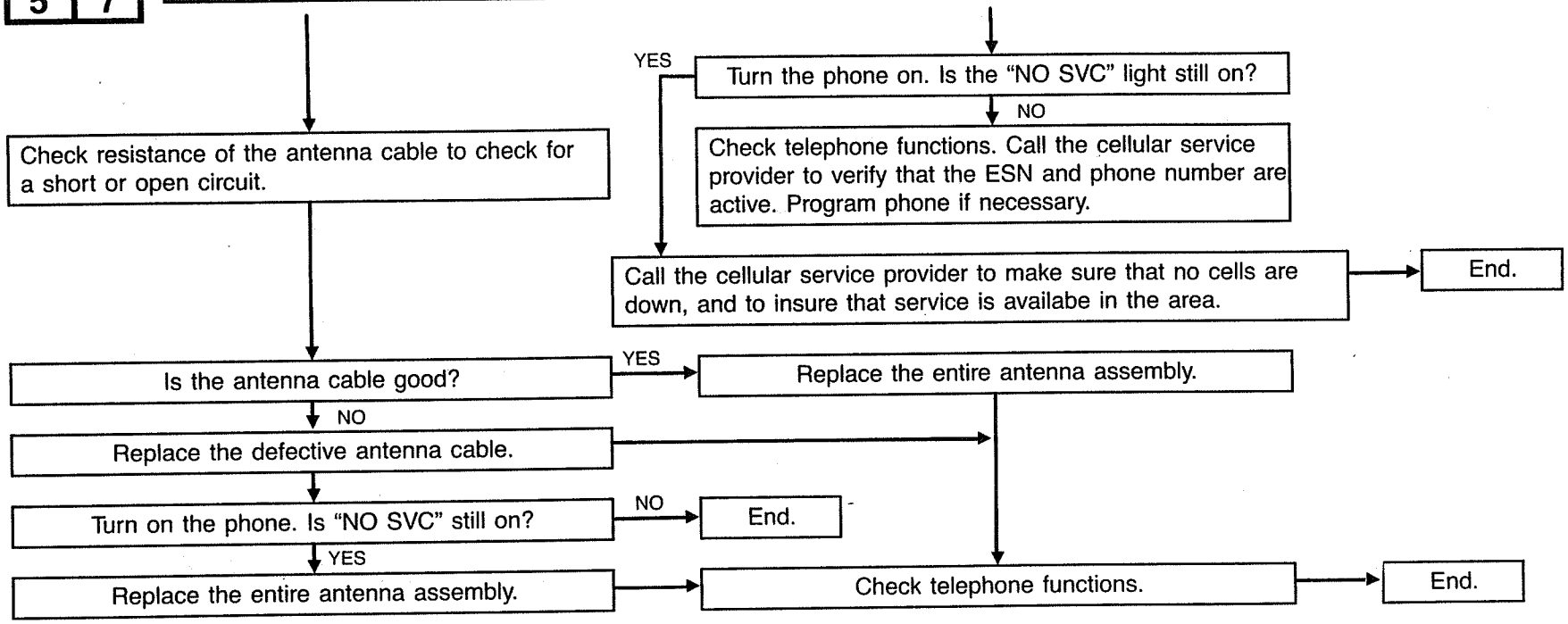

C] DROPPED CALLS OR STATIC IN A CALL

Problems of this nature may be due to system coverage problems. Check the following information with the customer:

1) Does the problem occur in specific geographic area, or near the edge of known service areas?
2) Does the problem occur at the same time each day?
3) Does the problem occur at the same place each day?
4) Does the problem occur in congested downtown areas, under freeways, etc.?

If the customer's phone exhibits some of the above mentioned symptoms, advise him that the problem is not hardware related. Check with the cellular service provider to see if they are having any temporary cell or equipment problems.

Cellular Mobile Telephone (CMT1000/CMT1000VR)

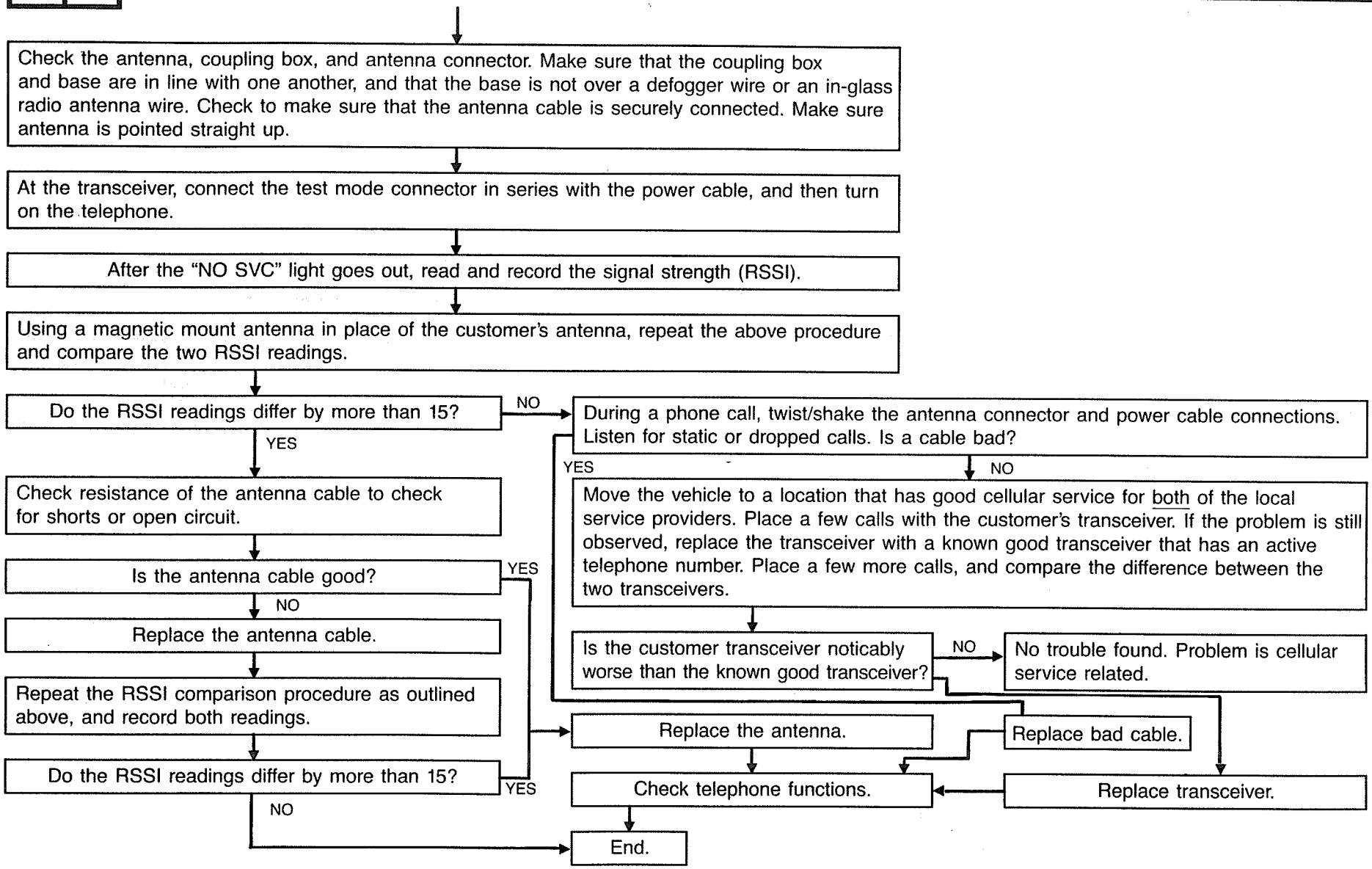

D] CUSTOMER GETS A FAST BUSY SIGNAL OR A RECORDING

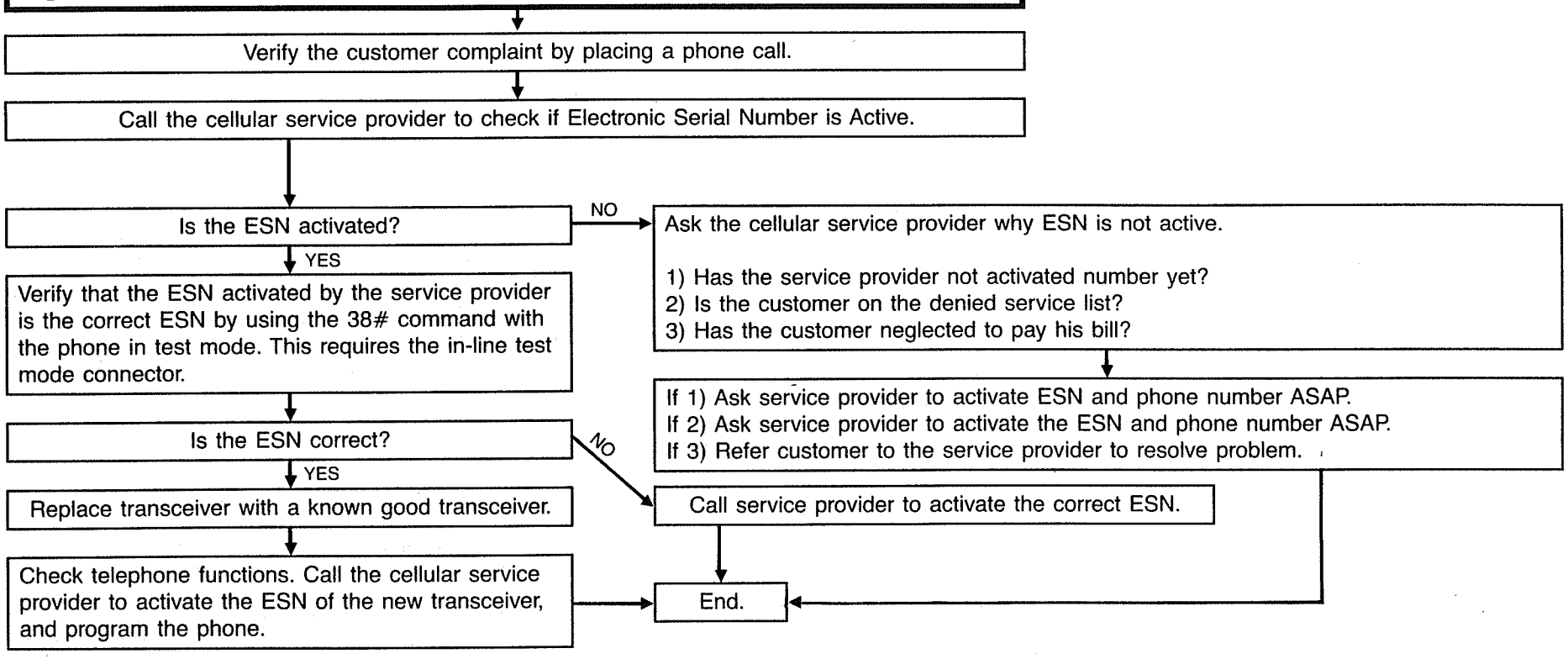

E] DIALING PROBLEMS WITH CONTROL STALKS OR DISPLAY

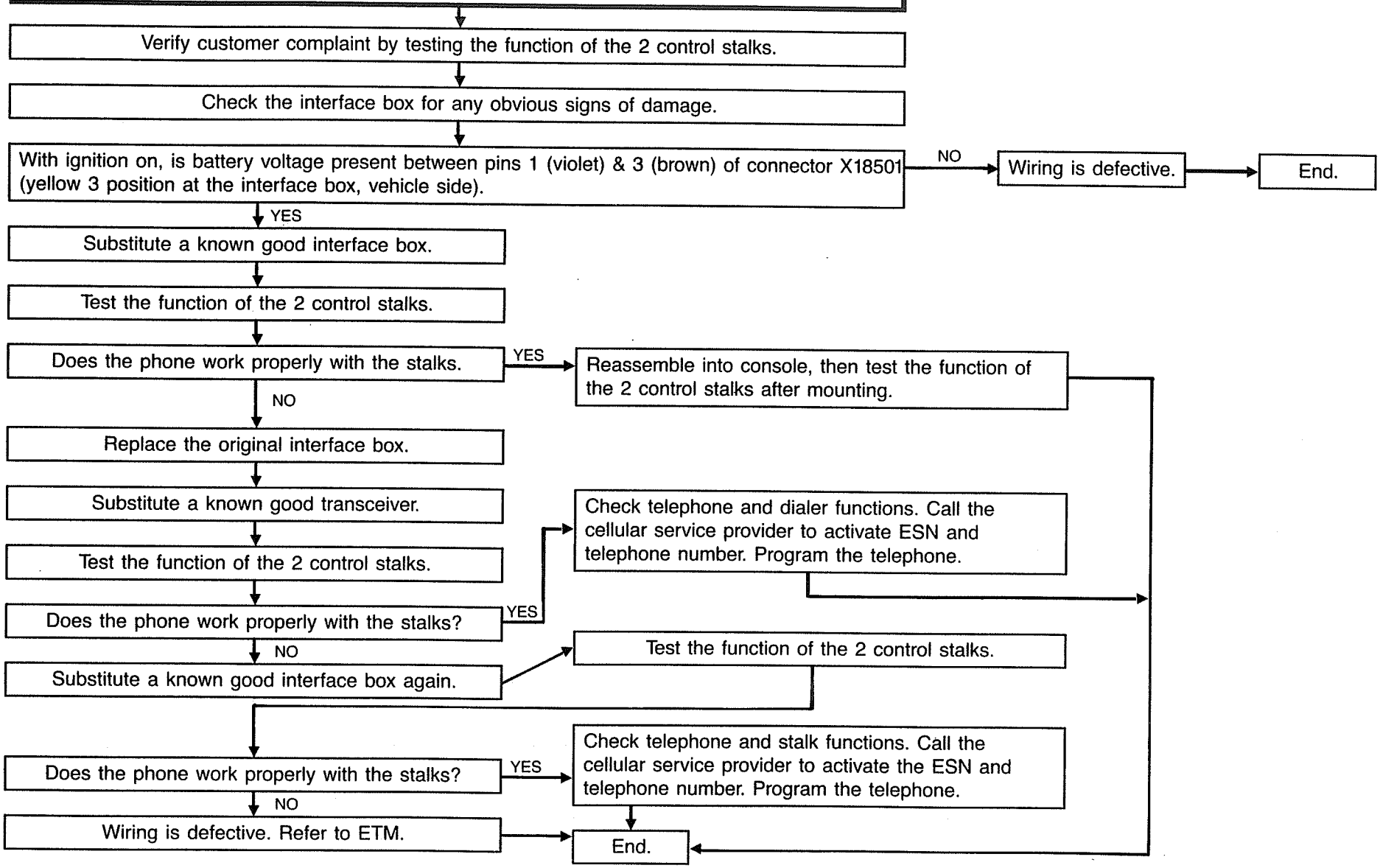

F] NO TRANSMIT AUDIO WHILE IN HANDS FREE

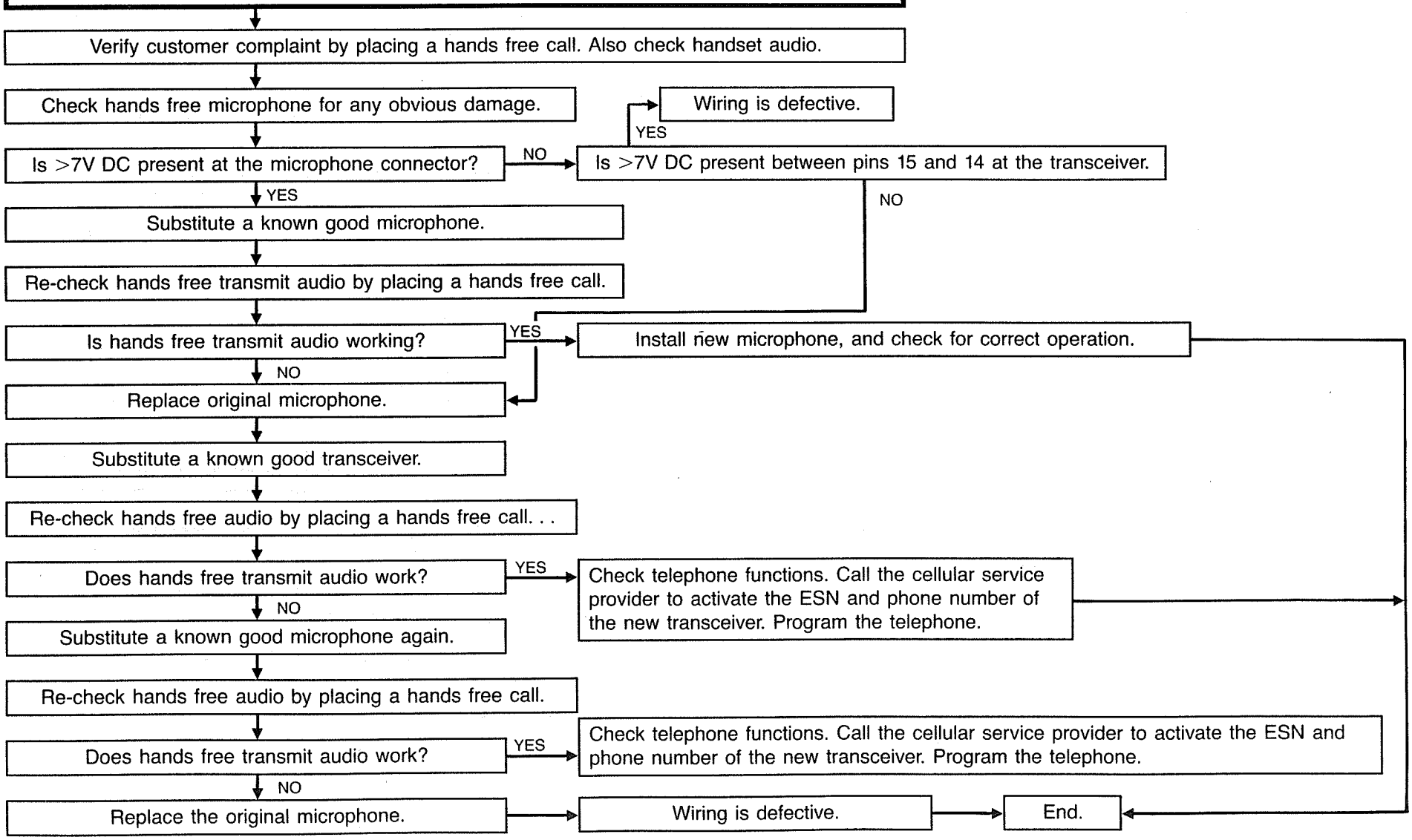

G] NO HANDS FREE AUDIO OR TONES FROM FRONT SPEAKERS

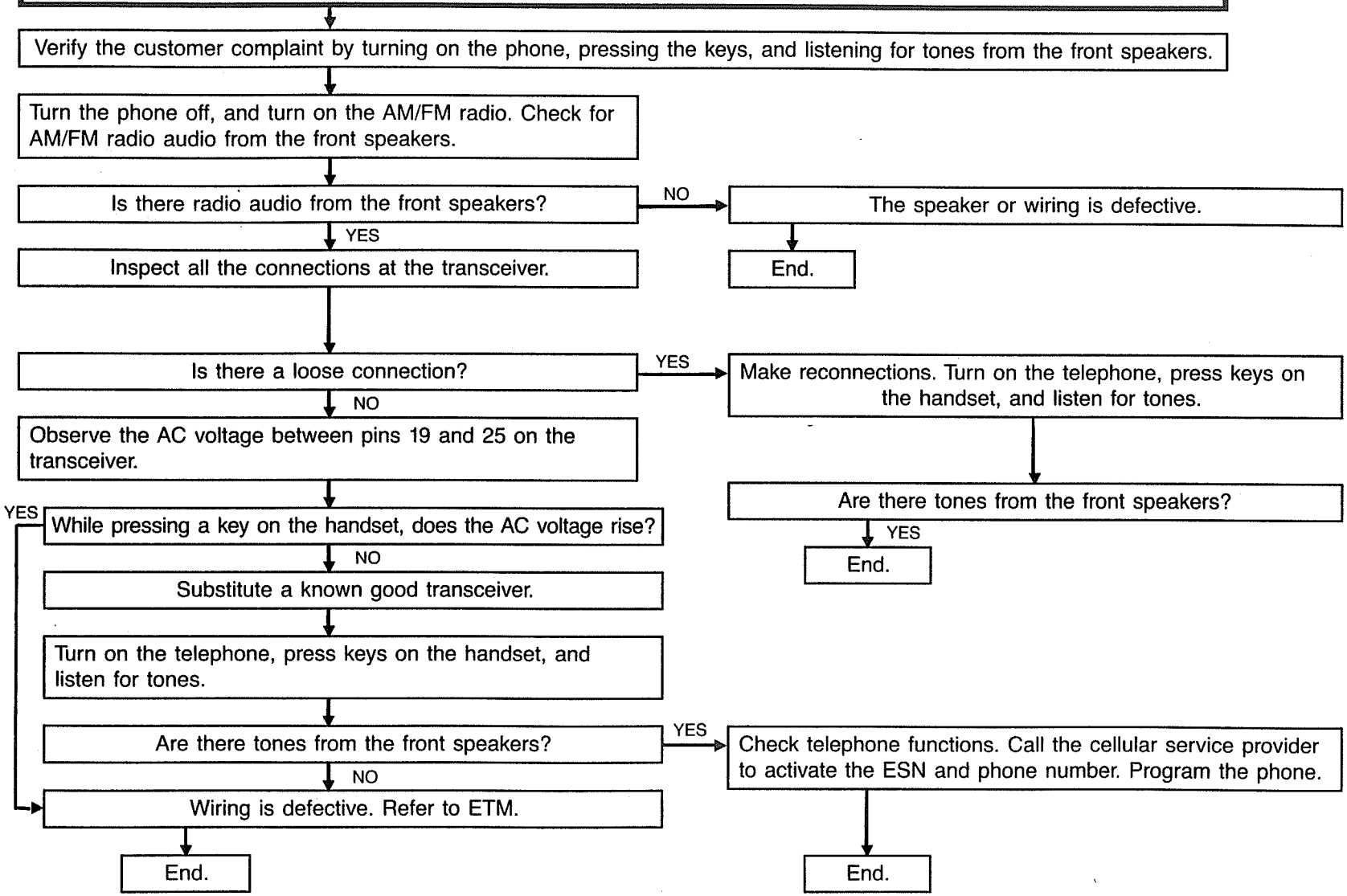

H] AM/FM RADIO DOES NOT MUTE DURING A PHONE CALL

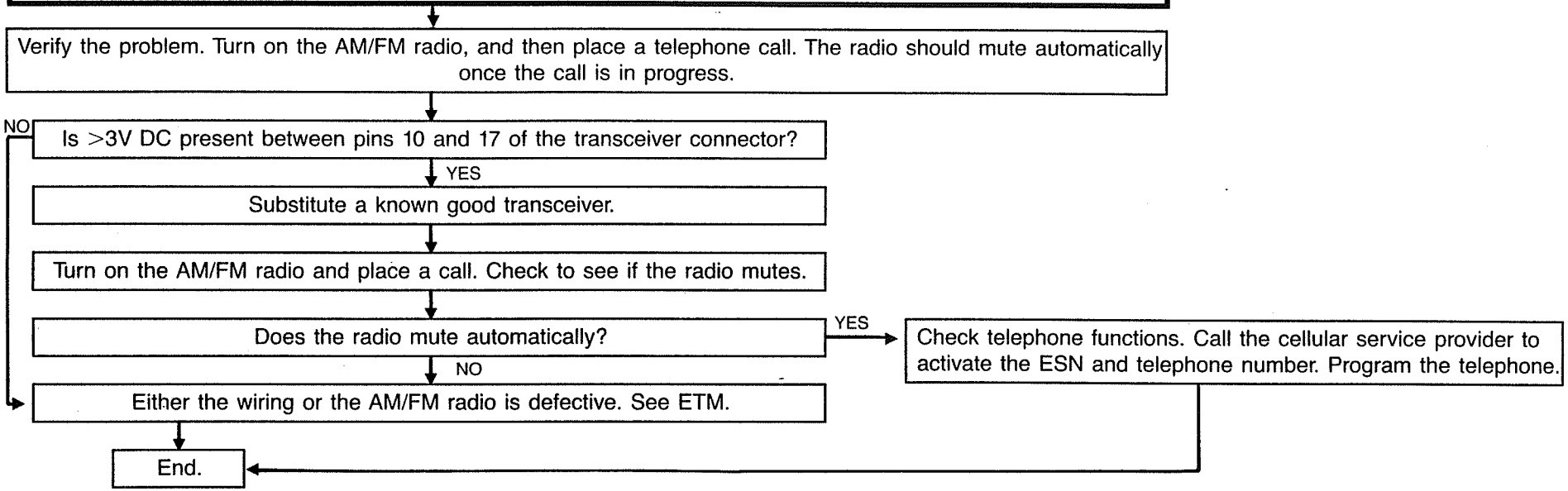

I] TELEPHONE WILL NOT GO INTO THE PROGRAMMING MODE

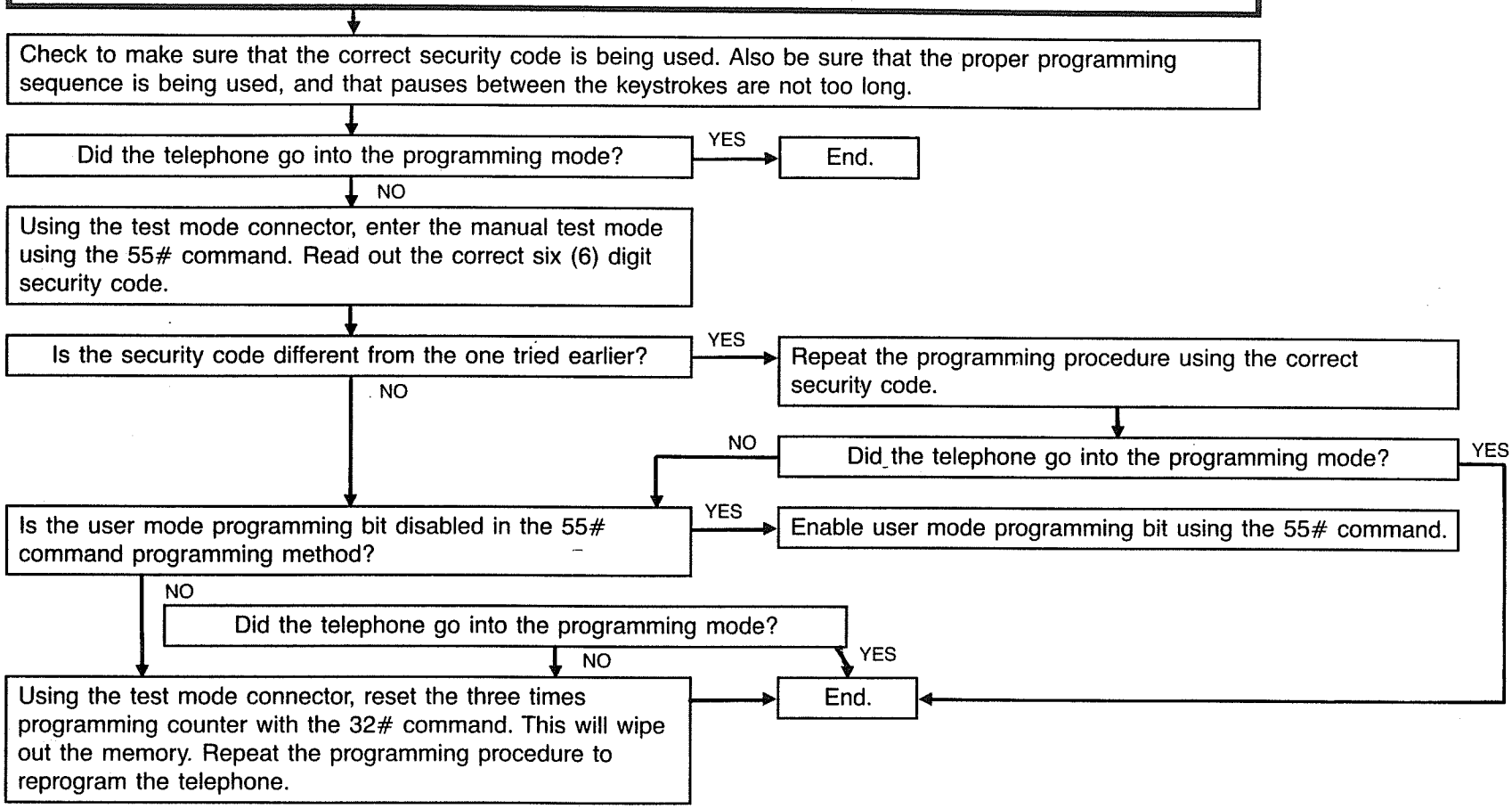

BMW Mobile Identity Transfer

The identity transfer procedure allows the cellular telephone number, electronic serial number, system parameters, and telephone numbers in memory to be transferred from a defective telephone to a replacement unit. It is now possible to perform an identity transfer on currently manufactured Motorola cellular telephones, including the models installed in BMW automobiles.

If a cellular telephone capable of accepting an identity transfer is found to be defective, it must be replaced. **A spare transceiver of the exact same model number as the defective unit is required.** If the wrong replacement telephone type is used, "FAIL 11" will appear in the display, indicating the error.

Identity Transfer Procedure

CAUTION

An anti-static wrist band, connected to an anti-static (conductive) work surface, must be worn during all phases of the Identity Transfer Procedure.

NOTE

The replacement transceiver and defective transceiver must be turned off during connection.

Step 1. Connect the spare transceiver to an identity transfer connector (SLN7012B) and cable kit with no power applied. Connect the handset either directly to the telephone or to the handset connector on the cable kit.

Step 2. With no power applied to the control/power cable, connect the female DB25 connector wired to the test mode connector as shown on the diagram on the next page. Apply power and ground to the control/power cable.

CAUTION

If units are reversed (not connected as shown on the diagram) the transfer will be reversed and the customer's information may be lost.

Step 3. Press the "PWR" key to turn on the units. press "#66#" to begin the transfer. The handset display will read "66" while the transfer is taking place, and the "66" will be replaced by "PASS" or "FAIL" when finished.

Step 4. If the Identity Transfer is successful, "PASS" appears in the handset display. Verify the ESN on the replacement unit using the 38# test command.

If the Identity Transfer is unsuccessful, "FAIL" appears in the handset display. Either try again or replace the defective unit.

Step 5. Next power down both units by pressing the PWR key on the handset.

Identity Transfer Procedure, cont.

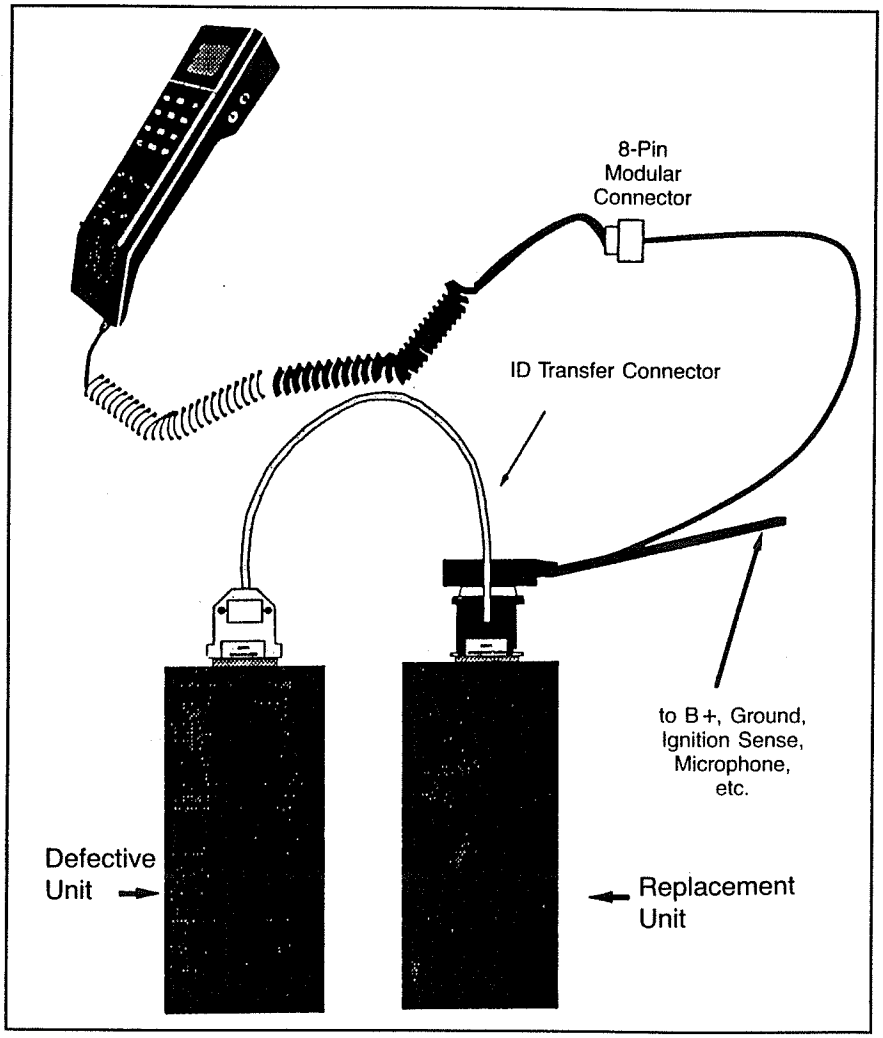

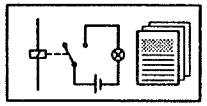

Functional Description

Application

The mobile telephone uses the telephone network C of the Federal German Post Office for the transfer of calls. In the C-network, incoming connections to the mobile telephone subscriber can also be set up automatically; the location of the mobile subscriber need not be known to the calling subscriber. In order to reach a telephone subscriber, the mobile telephone must be switched on, ready for operation and the caller must know the number of the service card. Outgoing call connections to subscribers of the public telephone network are, of course, also possible. Operation and the various user programs of the mobile telephone are not delt with in these test instructions so that reference is made to the relevant operating instructions.

Maintenance Work with the Service Card

- 1. Reset the inhibit number
- 2. Reset the entire customer-specific memory contents

Handling the Service Card

- 1. Switch on the mobile telephone. "CARD PLEASE" appears in the display.
- 2. Insert service card in the card reader. "SELECTION" appears in the display.
- 3. Enter the number 11 via the keypad in the receiver or separate operating panel. "CLEAR INHIBIT NUMBER" appears in the display. The display remains for approx. 2 seconds while the inhibit number is cleared.

Important!

"CLEAR ALL" appears in the display when the number 10 is entered. In this case, the inhibit number and the entire electronic telephone directory are cleared. Use this number combination only when the vehicle is sold with a telephone or when all stored telephone numbers are to be cleared.

- 4. Remove service card from the card reader. "CARD PLEASE" appears in the display. The telephone is now ready for operation once again and can be used by any authorization card.

Cellular Telephone

General Block Diagram

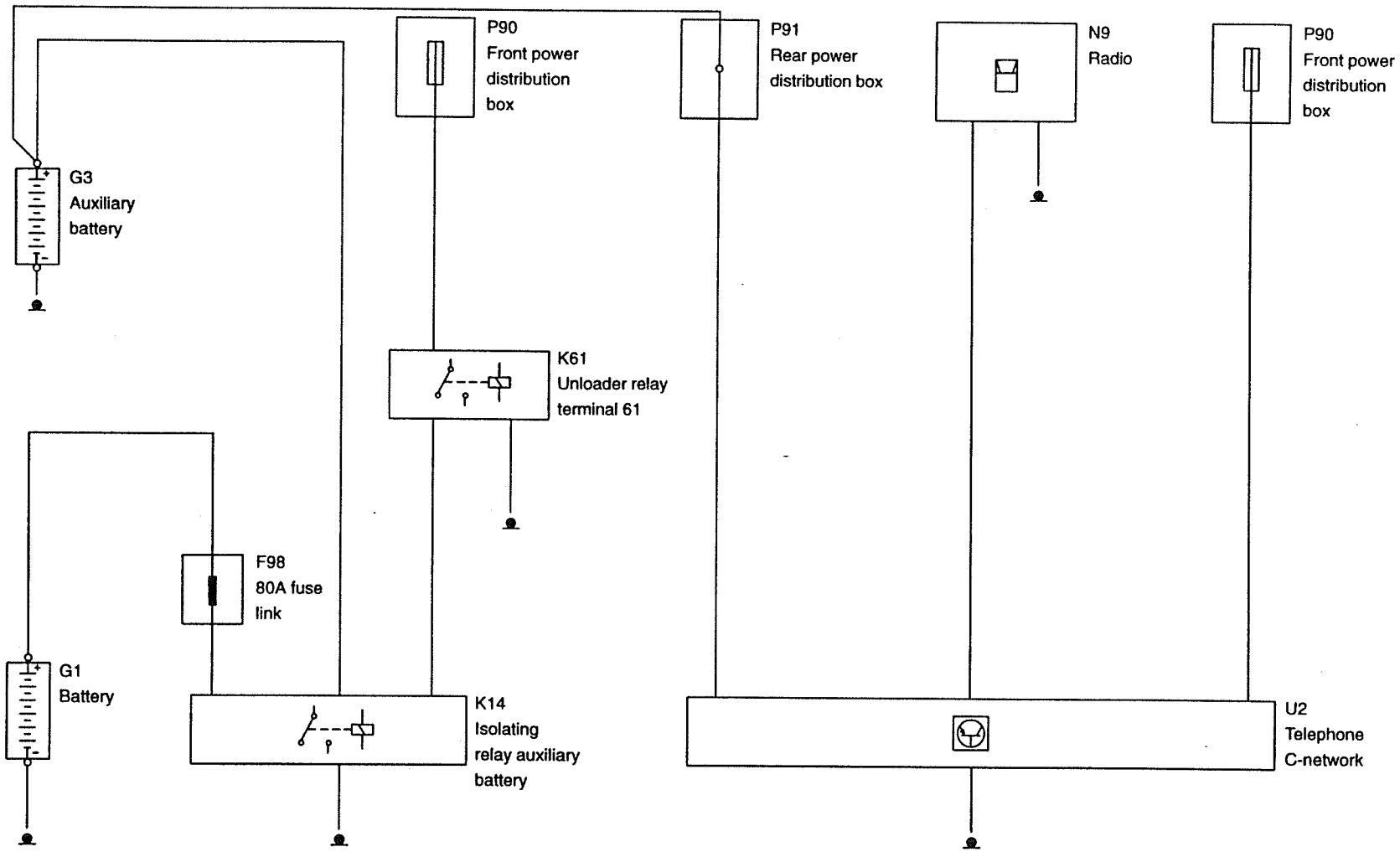

Notes on the BMW DIAGNOSTIC SYSTEM

This system does not feature diagnostic capabilities.

Abbreviations

DBP	Federal German Post Office (Deutsche Bundespost)
UB	Battery voltage

Pin Assignment

Connector Strip in Telephone Set Holder

Pin	Type	Description/function	Connection	Signal type	Tester display	Measurement notes
1		Ground				
2		Ground				
3	E	Terminal 30				
4	E	Terminal 30				
5		Terminal R				
6		Wire of ON/OFF switch				
7		Not used				
8		Not used				
9		UB stand-by				
10		Not used				
11		Start/stop button of post office tester				
12		Distributed signalling OFF for post office tester				
13		Ext. ring				
14		Not used				
15		Not used				
16		Not used				

Pin	Type	Description/function	Connection	Signal type	Tester display	Measurement notes
17		Not used				
18		Not used				
19		Not used				
20		Ground				
21		Ground				
22	E	Terminal 30				
23	E	Terminal 30				
24	A	Voltage supply for receiver				
25		Ground to AF OFF				
26		AF wire to receiver				
27		Ground to AF ON				
28	E	AF wire from microphone				
29		Position monitoring of card reader				
30	A	Clock line to RDP				
31		Data link of card reader				
32	A	Data link to receiver				
33	A	Data link to telephone set				
34	A	Data link to control additional equipment				
35		Clock line to I2C data				
36		Identifier for portable mode				
37		Not used				

Troubleshooting

Fault	Cause	Corrective measures
Left, yellow LED does not light after switching on at the receiver. **Note:** It may be possible that all 4 LEDs light briefly when switching on.	a) No voltage supply to terminal 30 (UB). b) No 9 V voltage from telephone set. c) Connection line defective. d) Operating unit defective.	a) Remove telephone set from holder and connect adapter between holder and telephone set. Measure battery voltage between Pin 1 (ground) and Pin 4 (UB). If no voltage can be measured, rectify battery output power or fuse, charge battery if necessary. b) Measure voltage supply of receiver between Pin 1 (ground) and Pin 24 (+9 V). If no voltage can be measured, check connection line from telephone set to the operating unit. Detach telephone set from adapter for this purpose. Detach connector at the operating unit and connect with 16-pin short-circuit jumper. Measure resistance between Pin 1 (ground) and Pin 24 (<3Ω), Pin 6 (<3Ω), Pin 32 (<3Ω). Remove short-circuit jumper and now measure resistance between Pin 1 (ground) and Pin 24 (∞), Pin 6 (∞), Pin 32 (∞). If both resistance measurements are OK, check operating unit. c) Reconnect operating unit to the connection line – telephone set remains disconnected – measure resistance between Pin 1 (ground) and Pin 6 (<7Ω at switch "ON" and >600kΩ at switch "OFF"), Pin 32 (>400kΩ), Pin 24 (>100kΩ). If the resistance measurements are OK, change telephone unit.

Fault	Cause	Corrective measures
		d) If the resistance measurement is not OK, change operating unit.
System cannot be switched on automatically with terminal R although the ON/OFF switch is in position "I".	No terminal R or incorrect evaluation by telephone unit.	Remove telephone from holder and connect adapter between holder and telephone unit. With terminal R switched off, measure voltage between Pin 1 (ground) and Pin 5 (UB). If no voltage can be measured, check wire, connectors and fuse terminal R to power distributor and repair if necessary. If measurement is OK, replace telephone unit.
The system switches off after the programmed cut-out time despite the vehicle still being in operation. **Note:** If no time has been programmed, the system switches off approx. 15 seconds after switching on.	Terminal R not detected or defective, or non-connected timer line not detected.	Measure voltage between Pin 1 (ground) and Pin 5 (terminal R UB). If measurement is OK, replace telephone unit. If measurement is not OK, check supply line, plug connection and fuse terminal R and repair if necessary.

Fault	Cause	Corrective measures
After reading the authorization card, no card number appears, or the card number is displayed and "card please" appears shortly afterwards.	a) Authorization card inhibited. b) Authorization card defective. c) Operating unit or magnetic card reader defective.	a) Insert authorization card twice in the card reader. If "number inhibited" appears in the display, then this indicates that the authorization card is inhibited by the DBP. b) If still no card number appears in the display, then repeat the read procedure with another authorization card. If the other card number is displayed or the service mode activated (see Functional Description) then the card is defective and must be replaced by the DBP. c) If a) and b) do not apply, check wire between operating unit and telephone set for continuity and short. Remove telephone set and connect adapter at holder. Detach connector at the operating unit and connect to 16-pin short-circuit jumper. Measure resistance between Pin 1 (ground) and Pin 29 (3Ω), Pin 30 (3Ω), Pin 31 (3Ω). Remove short-circuit jumper and measure resistance between Pin 1 (ground) and Pin 29 (∞), Pin 30 (∞), Pin 31 (∞). If both measurements are OK, renew operating unit or card reader.

Fault	Cause	Corrective measures
During the trip, the telephone, which is otherwise functioning correctly, requests "card please" in the display.	a) The card has been removed from the card reader or moved. b) Connection line defective. c) Low battery voltage. d) Telephone unit defective.	a) Reinsert card or remove and insert once again. b) Check connection line for short and continuity. **Attention!** Remove telephone unit from adapter, detach plug connection at the operating unit and connect to short-circuit jumper. Measure resistance between: Pin 1 (ground) and Pin 29 (3Ω). Remove short-circuit jumper. Measure resistance between: Pin 1 (ground) and Pin 29 (∞). c) If b) is OK, check vehicle battery voltage and load. For this purpose, reconnect telephone unit to the adapter and reconnect plug connection to the operating unit. Switch on telephone and set up connection (see Operating Instructions), start vehicle and switch on all major loads. Measure voltage: Between Pin 1 (ground) and Pin 4 (UB). At voltages below 8 V (possible during starting), the mobile telephone switches off and then requests "card please". d) If b) and c) are OK, replace telephone unit.

Fault	Cause	Corrective measures
It is possible to set up a connection with the telephone in outgoing and incoming direction but voice communication does not take place in one or both directions.	Telephone unit, connection line or operating unit defective.	a) Subscriber cannot hear the other call partner: Insert the service card in the card reader. If a distinct noise can be heard in the receiver then this indicates that the system is OK. Also shake the connectors when this noise is heard. If no noise can be heard, check the connection line, as described under b) for continuity and short. If this check is OK, reconnect the operating unit to the connection line. Telephone set disconnected. Measure resistance between Pin 25 (AF ground) and Pin 26 (200Ω to 3kΩ). If this check is OK, then either the telephone unit or operating unit is defective. b) Subscriber from the remote state not understood: Check the connection line for continuity and a short. For this purpose, remove the telephone set from the holder. Connect test adapter to holder. Detach plug connection at the operating unit and connect to short-circuit jumper. Measure resistance between: Pin 1 (ground) and Pin 25 (3Ω) Pin 1 and Pin 26 (3Ω) Pin 1 and Pin 27 (3Ω) Pin 1 and Pin 28 (3Ω) Remove short-circuit jumper.

Fault	Cause	Corrective measures
		Measure resistance between: Pin 1 (ground) and Pin 25 (50kΩ) Pin 1 and Pin 26 (50kΩ) Pin 1 and Pin 27 (50kΩ) Pin 1 and Pin 28 (50kΩ) If the measurement is not OK, the operating unit is defective. c) If both communication channels are disturbed, first perform the check as described in b). If this check is OK, then the telephone unit is defective.
The subscriber can set up no calls with the mobile telephone C2 or only calls with the telephone number of the electronic telephone directory. The subscriber can, however, be reached by other subscribers. A small key is indicated in the display.	The customer has inhibited the mobile telephone C2 and forgotten the 4-digit secret number or entered it incorrectly.	If the unit cannot be enabled, the telephone must be enabled with the service card (see Functional Description).

Fault	Cause	Corrective measures
The mobile telephone C2 is switched on and the authorization card is read in. There is no bar indicator in the reception quality indicator of the receiver and the red LED flashes constantly.	a) No supply by the Federal German Post Office (fault in C-network). b) Antenna or antenna cable defective. c) Telephone set defective.	a) Enquire at the Post Office, i.e. at the next fault test station (see telephone directory under "Post Office"). b) Check antenna cable and antenna for continuity and a short. For this purpose, remove the telephone unit from the holder. Connect additional adapter lead to the antenna socket of the holder. **Attention!** Do not measure with test probes directly in the antenna socket (contacts can bend). Measure resistance between: Pin 38 (centre contact) and Pin 39 (shield) = (∞) Pin 38 (centre contact) and antenna rod = (3Ω) Pin 38 (centre contact) and vehicle ground = (∞) Pin 39 (shield) and vehicle ground = (3Ω) If measurement is not OK, renew antenna or antenna cable. c) If a) and b) are OK, replace telephone unit.
The mobile telephone C2 is switched on and the card inserted. The antenna system is OK. The system does **not** count charges.	Defective telephone unit or power supply.	Replace telephone unit.

Fault	Cause	Corrective measures
The mobile telephone is ready for operation, i.e. the unit is charged. An outgoing connection (call from the vehicle) is always acknowledged with "no connection" in the display.	No free voice channels in the C-network or telephone unit defective.	If the fault occurs without interruption over several days, replace telephone unit.
During normal operation of the mobile telephone C2, the following error messages are indicated in the display of the receiver: "Error LOG.A 001", "Error LOG.A 002", "Error ENDST.010", "Error SYN.020", "RX-LOCK", "LUIJOSCHI DMA".	Telephone unit defective.	Replace telephone unit.

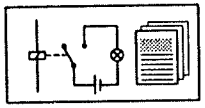

Functional Description

General

The automatic cruise control system (Tempomat) consists of the control unit, selector lever and servo motor.

- Control unit
- Selector lever
- Servo motor (actuator)

The control unit receives signals from the following components:

- Instrument cluster (speed-A signal)
- Gear selector lever switch (automatic transmission)
- Clutch switch (manual transmission)
- Brake light switch
- Cruise control switch
- Servo motor (actuator)

Operating Principle

The cruise control system (Tempomat) operates with the ignition on and at a vehicle speed of more than approx. 40 km/h and controls a stored speed with a tolerance of approx. ± 2 km/h.

Functions

ACCELERATE

Press forward cruise control switch and hold in position.

Vehicle accelerates without depressing the accelerator pedal. After releasing the selector lever, the speed reached is stored and maintained.

By briefly depressing the lever in the same direction, the stored speed can be increased (as often as necessary) by approx. 1 km/h at a time.

DECELERATE

Pull back cruise control switch and hold in position.

The vehicle decelerates as the result of automatic throttle reduction. After releasing the selector lever, the speed is stored and maintained.

By briefly depressing the lever in the same direction, the stored speed can be reduced (as often as necessary) by approx. 1 km/h at a time.

CALL

Briefly pull up cruise control switch.

The speed last stored is reached once again and maintained.

OFF

Briefly press down cruise control switch.

The cruise control system is switched off but the stored speed is not deleted.

Switch-Off Functions

The cruise control system is switched off automatically:

- At deceleration in excess of 1.5 m/s^2 (e.g. on gradients)
- When braking
- When operating the clutch or when moving the automatic transmission range switch from D to N
- With the automatic transmission range switch in setting P
- At a vehicle speed of less than approx. 40 km/h

Special Features

When the accelerator pedal is depressed with the cruise control system activated (e.g. in order to accelerate when overtaking), after the accelerator pedal has been released once again, the car resumes the stored speed.

A stored speed is cleared by switching off the ignition.

In order to avoid delays in time, an electromagnetic quick-release clutch is installed in the cruise control actuator between the drive and cable assembly.

Cruise Control (Tempomat)

General Block Diagram

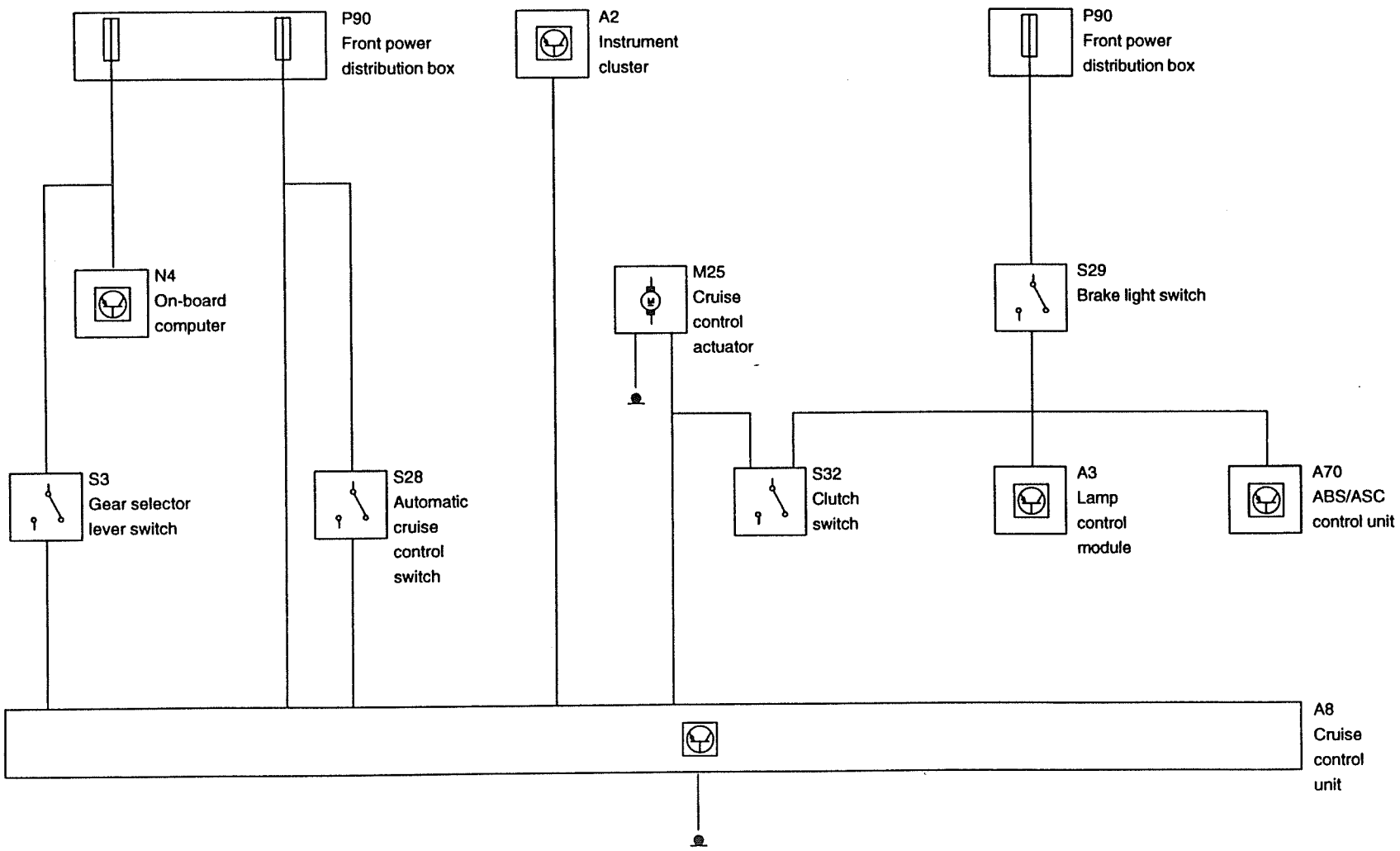

P32 65 005

Notes on the BMW DIAGNOSTIC SYSTEM

This system does not feature diagnostic capabilities.

Abbreviations

E	Input
A	Output

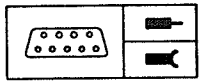

Pin Assignment

Control Unit Connector X22

Pin	Type	Description/function	Connection	Signal type	Tester display	Measurement notes
1	E	Battery voltage	Fuse F1			
2	E	NEUTRAL, CALL, ACCELERATE, DECELERATE	S28 cruise control switch			
3	E	PARK/NEUTRAL	S3 gear selector lever switch			
4	E	ACCELERATE	S28 cruise control switch			
5	E	CALL	S28 cruise control switch			
6	E	Speed signal	A2 instrument cluster			
7	E	DECELERATE	S28 cruise control switch			
8	A	Battery voltage for electromagnetic clutch	M25 servo motor (actuator)			
9	E	Clutch/brake	S29 Brake light switch/ S32 clutch switch			
10		Not used				
11		Not used				
12		Not used				
13	A	Drive motor	M25 servo motor (actuator)			
14		Not used				
15		Not used				

Pin	Type	Description/function	Connection	Signal type	Tester display	Measurement notes
16		Not used				
17		Not used				
18		Not used				
19		Not used				
20		Not used				
21		Not used				
22		Not used				
23	E	Ground	Terminal 31			
24	A	Battery voltage throttle potentiometer	M25 servo motor (actuator)			
25	A	Drive motor	M25 servo motor (actuator)			
26	E	Battery voltage throttle potentiometer	M25 servo motor (actuator)			

Connector Servo Motor (actuator) X70

Pin	Type	Description/function	Connection	Signal type	Tester display	Measurement notes
1	E	Drive motor control	Control unit			
2	E	Ground for clutch	Control unit			
3	E	Clutch operation	Control unit			
4	E	Drive motor control	Control unit			
5	E	Voltage for throttle potentiometer	Control unit			
6	A	Throttle potentiometer	Control unit			

Pin	Type	Description/function	Connection	Signal type	Tester display	Measurement notes
7		Not used				
8	E	Ground	Ground Terminal 31			

Connector Cruise Control Switch X72

Pin	Type	Description/function	Connection	Signal type	Tester display	Measurement notes
1	E	Battery voltage	Fuse F1			
2	A	CALL	Control unit			
3	A	ACCELERATE	Control unit			
4	A	NEUTRAL, CALL, ACCELERATE, DECELERATE	Control unit			
5		Not used				
6		Not used				
7	A	DECELERATE	Control unit			

Troubleshooting

Notes

Faults in the following systems which influence the cruise control (Tempomat) are not taken into account in this troubleshooting procedure.

- Speedometer does not operate → see Section 6200 Instrument Cluster
- One or several brake lights do not operate → Check brake light switch
- Selector lever position display does not operate → see 2460 Automatic Transmission/Electronic Transmission Control

Important!

Before performing troubleshooting, ensure that the fuses are OK and the battery is charged. The cable assembly to the throttle valve and the tie rod at the M25 cruise control actuator must show no signs of damage and must move smoothly. The cable assembly must be set correctly.

Defect Code Table

Failure of cruise control (Tempomat) → Defect code 01

Failure/malfunction during ACCELERATE → Defect code 02

Failure/malfunction during DECELERATE → Defect code 03

Failure/malfunction during CALL → Defect code 04

Failure/malfunction during OFF → Defect code 05

Defect Code 01

Failure of cruise control (Tempomat)

Troubleshooting

Detach control unit connector X22 from the A8 cruise control unit and connect adapter. Switch on ignition.
Is battery voltage applied between Pin 1 and 23 of control unit connector X22?

— no → Is battery voltage applied between Pin 1 of control unit connector X22 and vehicle ground?

— no → Repair or renew wire between Pin 1 of control unit connector and fuse F1.

— * —

yes ↓

Repair or renew wire between Pin 23 of control unit connector X22 and vehicle ground.

— * —

yes ↓

Is speed-A signal to Pin 6 OK (simulation of speed-A signal and frequency measurement)

— no → Repair or renew wire between Pin 6 of control unit connector X22 and speed signal output at the instrument cluster.

— * —

yes ↓

For manual transmission: Continue with next test step.
For automatic transmission: Set selector lever to a drive range.
Is battery voltage applied at Pin 3 of control unit connector X22?

— yes → Repair or renew wire between Pin 3 of control unit connector X22 and selector lever switch.

—*—

no ↓

Is battery voltage applied at Pin 2 of control unit connector X22?

— no → Is battery voltage applied at Pin 4 of cruise control switch connector X72?

— yes → Repair or renew wire between Pin 2 of control unit connector X22 and Pin 4 of cruise control switch connector X72.

—*—

no ↓

Is battery voltage applied at Pin 1 of cruise control switch connector X72?

— no → Repair or renew wire between Pin 1 of cruise control switch connector X72 and fuse.

—*—

yes ↓

Check S28 cruise control switch, see Component Testing.

—*—

yes ↓

Detach connector X70 from M25 cruise control actuator.
Is a voltage of approx. 5 V applied between Pin 5 and 8 of the cruise control actuator connector X70?

— no → Is a voltage of approx. 5 V applied between Pin 5 of actuator connector X70 and vehicle ground?

— yes → Repair or renew wire between Pin 8 of actuator connector X70 and ground.

—*—

yes ↓

no ↓

Check wire between Pin 5 of actuator connector X70 and Pin 24 of control unit connector X22.
Is wire OK?

— yes → Replace control unit.

— * —

no ↓

Repair or renew wire.

— * —

yes ↓

Is a voltage of approx. 5 V applied between Pin 5 and 6 of actuator connector X70?

— no → Is a voltage of approx. 5 V applied between Pin 24 and 26 of control unit connector X22?

— no → Renew control unit.

— * —

yes ↓

Repair or renew wire between Pin 6 of actuator connector X70 and Pin 26 of control unit connector X22.

— * —

yes ↓

Is battery voltage applied between Pin 1 of actuator connector X70 and vehicle ground?

— no → Is battery voltage applied between Pin 25 of control unit connector X22 and vehicle ground?

— no → Replace control unit.

— * —

yes ↓

Repair or renew wire between Pin 25 of control unit connector X22 and Pin 1 of actuator connector X70.

— * —

yes ↓

Is battery voltage applied between Pin 1 and 4 of the cruise control actuator connector X70?

— no → Is battery voltage applied between Pin 13 and Pin 25?

— no → Renew control unit.

— * —

yes ↓

Repair or renew wire between Pin 13 of control unit connector X22 and Pin 4 actuator connector X70.

— * —

yes ↓

Is voltage applied at Pin 2 of cruise control actuator connector X70?

— yes → Check wire between Pin 9 of control unit connector X22, Pin 2 of actuator connector X70 and Pin 2 of clutch switch connector X121, and wire between Pin 1 of clutch switch connector X121 and lamp control module as well as S32 clutch switch in accordance with schematics. Repair or renew wire and/or switch.

— * —

no ↓

Is voltage applied at Pin 2 of actuator connector X70 when the brake pedal is depressed?

— no → Check wire between Pin 1 of clutch switch connector X121 and brake light switch as well as I S29 brake light switch in accordance with schematics. Repair or replace wire and/or switch.

— * —

yes ↓

Manual transmission: Depress clutch pedal.
Automatic transmission: Detach clutch switch connector X121.
Is voltage applied at Pin 2 of actuator connector X70?

— no → Check wire between Pin 9 of control unit connector X22, Pin 2 of actuator connector X70 and Pin 2 of clutch switch connector X121, as well as S32 clutch switch in accordance with schematics.
Are switch and wire OK?

— no → Repair or replace switch and/or wire.

— * —

yes ↓

Check wire between Pin 8 of control unit connector X22 and Pin 3 of actuator connector X70.
Is wire OK?

— yes → Check M25 actuator (servo motor), see Component Testing.
Is M25 servo motor OK?

— yes → Renew control unit.

— * —

no ↓

Repair or renew wire.

— * —

no ↓

Replace M25 actuator (servo motor).

— * —

Defect Code 02

Failure/malfunction during ACCELERATE

Troubleshooting

Detach control unit connector X22 and connect adapter. Switch on ignition.
Is battery voltage applied at Pin 4 of control unit connector X22, when S28 cruise control switch is pressed to ACCELERATE?

— yes → Release S28 cruise control switch.
Does voltage drop to 0 V ?

— yes → Renew control unit.

— * —

no ↓

Check wire between Pin 4 of control unit connector X22 and Pin 3 of cruise control switch connector X72.
Is wire OK?

— yes → Check S28 cruise control switch, see Component Testing.

— * —

no ↓

Repair or renew wire.

— * —

no ↓

Is battery voltage applied at Pin 3 of cruise control switch connector X72, when cruise control switch S28 is pressed to ACCELERATE?

— yes → Repair or renew wire between Pin 4 of control unit connector X22 and Pin 3 of cruise control switch connector X72.

|

no

↓

Check S28 cruise control switch, see Component Testing.

— * —

— * —

Defect Code 03

Failure/malfunction during DECELERATE

Troubleshooting

Detach control unit connector X22 and connect adapter. Switch on ignition.
Is battery voltage applied at Pin 7 of control unit connector X22, when S28 cruise control switch is pressed DECELERATE?

— yes → Release S28 cruise control switch.
Does voltage drop to 0 V?

— yes → Renew control unit.

— * —

no ↓

Check wire between Pin 7 of control unit connector X22 and Pin 7 of cruise control switch connector X72.
Is wire OK?

— yes → Check S28 cruise control switch, see Component Testing.

— * —

no ↓

Repair or renew wire.

— * —

no ↓

Is battery voltage applied at Pin 7 of cruise control switch connector X72, when S28 cruise control switch is pressed to DECELERATE?

— yes → Repair or replace wire between Pin 7 of control unit connector X22 and Pin 7 of cruise control switch connector X72.

|
no
↓
Check S28 cruise control switch, see Component Testing.

—*—

—*—

Defect Code 04

Failure/malfunction during CALL

Troubleshooting

Detach control unit connector X22 and connect adapter. Switch on ignition.
Is battery voltage applied at Pin 5 of control unit connector X22, when S 28 cruise control switch is pressed to CALL?

— yes → Release S28 cruise control switch.
Does voltage drop to 0 V?

— yes → Renew control unit.

— * —

no ↓

Check wire between Pin 5 of control unit connector X22 and Pin 2 of cruise control switch connector X72.
Is wire OK?

— yes → Check S28 cruise control switch, see Component Testing.

— * —

no ↓

Repair or renew wire.

— * —

no ↓

Is battery voltage applied at Pin 2 of cruise control switch connector X72 when S 28 cruise control switch is pressed to CALL?

— yes → Repair or replace wire between Pin 5 of control unit connector X22 and Pin 2 of cruise control switch connector X72.

— * —

no ↓

Check S28 cruise control switch, see Component Testing.

— * —

Defect Code 05

Failure/malfunction during OFF

Troubleshooting

Check S28 cruise control switch, see Component Testing.
Is S28 cruise control switch OK?

— yes → Repair or replace wire between Pin 2 of control unit connector X22 and Pin 5 of cruise control switch connector X72.

— * —

no
↓
Replace S28 cruise control switch.

— * —

Component Testing

1. S28 Cruise Control Switch

Measure continuity (resistance) at cruise control switch connector X72 in accordance with the following table

Switch position	Measure between	Nominal value
NEUTRAL	Pin 1 and 4	< 5 Ω
NEUTRAL	Pin 1 and 3	∞ Ω
NEUTRAL	Pin 1 and 7	∞ Ω
NEUTRAL	Pin 1 and 2	∞ Ω
ACCELERATE	Pin 1 and 3	< 5 Ω
DECELERATE	Pin 1 and 7	< 5 Ω
CALL	Pin 1 and 2	< 5 Ω
OFF	Pin 1 and 4	∞ Ω

If one of the nominal values is not OK → S28 cruise control switch defective.

2. M25 Actuator (Servo Motor)

Detach connector X70 from servo motor.

Electromagnetic clutch: With the aid of a fused wire jumper, connect Pin 3 at the cruise control actuator to positive battery terminal and Pin 2 at the cruise control servo motor (actuator) to vehicle ground. The electromagnetic clutch must switch (heard to click).

Electric motor: With the aid of a fused wire jumper, connect Pin 4 at cruise control actuator to positive battery terminal and Pin 1 at servo motor (actuator) to vehicle ground, the electric motor must be heard to run.

If one of the functions is not OK → M25 servo motor (actuator) defective.

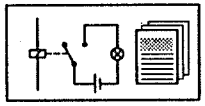

Functional Description

The task of the antitheft system is to detect attempts to break into the vehicle, give acoustic and visual warnings and to prevent the engine from being started by a start blocking facility. The antitheft system is armed (switched on) and disarmed (switched off) by means of the door locks and (if installed) the infrared locking system.

System Components

The antitheft system consists of:

- Control unit
- Status LED
- Antitheft horn
- External switches

Function

The operating elements of the system are the door locks and the infrared locking system. The command to arm/disarm is given at these operating elements. The system monitors the rear defogger (closed-circuit current loop), driver's/passenger's door, rear doors, front lid (engine hood), radio, rear lid, battery access, rear seat, vehicle towing, glove box, ignition lock.

Rest status after arming

If an element to be monitored is not in the rest position (e.g. door open), the status LED flashes until either the switch is in rest position (door closed) or the flashing time (= 10 seconds) has elapsed.

The trigger inhibit time (= 10 seconds) is started with the transition to the "armed" status. This means no switch is monitored during this period of time.

After the inhibit time has elapsed, all switches are included in the alarm monitoring system. During the trigger inhibit time, a signal change at a switch results in the inhibit time being restarted.

If, after the inhibit time has elapsed, a switch is moved into the rest position (e.g. opened door is closed), then the trigger inhibit time is started once again. In this case, however, the trigger inhibit applies only to this one particular switch. Unwanted alarms (e.g. doors not closed correctly) are prevented in this way.

After the system has been armed, the status LED lights for 36 hours.

If an alarm is triggered, an acoustic alarm (antitheft horn) is given for a duration of 30 seconds (ECE: intermittent tone, CH: continuous tone). A visual alarm is also given for approx. 5 minutes (ECE: hazard warning lights + low beam, FRG: hazard warning lights in compliance with revised StVZO [Federal Motor Vehicle Safety Standards]).

Expansion as of Model Year 1989

As of model year 89 an auxiliary module with inclination monitor is available as an optional extra.

Installation location: Left rear side of luggage compartment behind outside wall and trim panel.

Auxiliary module

The auxiliary module increases the number of inputs of the DWA control unit.

Inclination monitor

The inclination monitor detects changes in the angle of inclination of the parked vehicle by electrochemical means.

Interior protection

The large side windows and windscreen/rear window are monitored by the antitheft (DWA) version with the auxiliary module. Breaking of the windows is detected by Reed contacts which are mounted on the bottom end of the windows.

If the side windows are not closed and the antitheft system (DWA) is armed, the LED flashes. A maximum gap of 1 cm can remain open for passenger room ventilation.

Notes

The rear window is not monitored by the antitheft system (DWA) as of model year 89 without the auxiliary module.

Antitheft System (DWA)

General Block Diagram

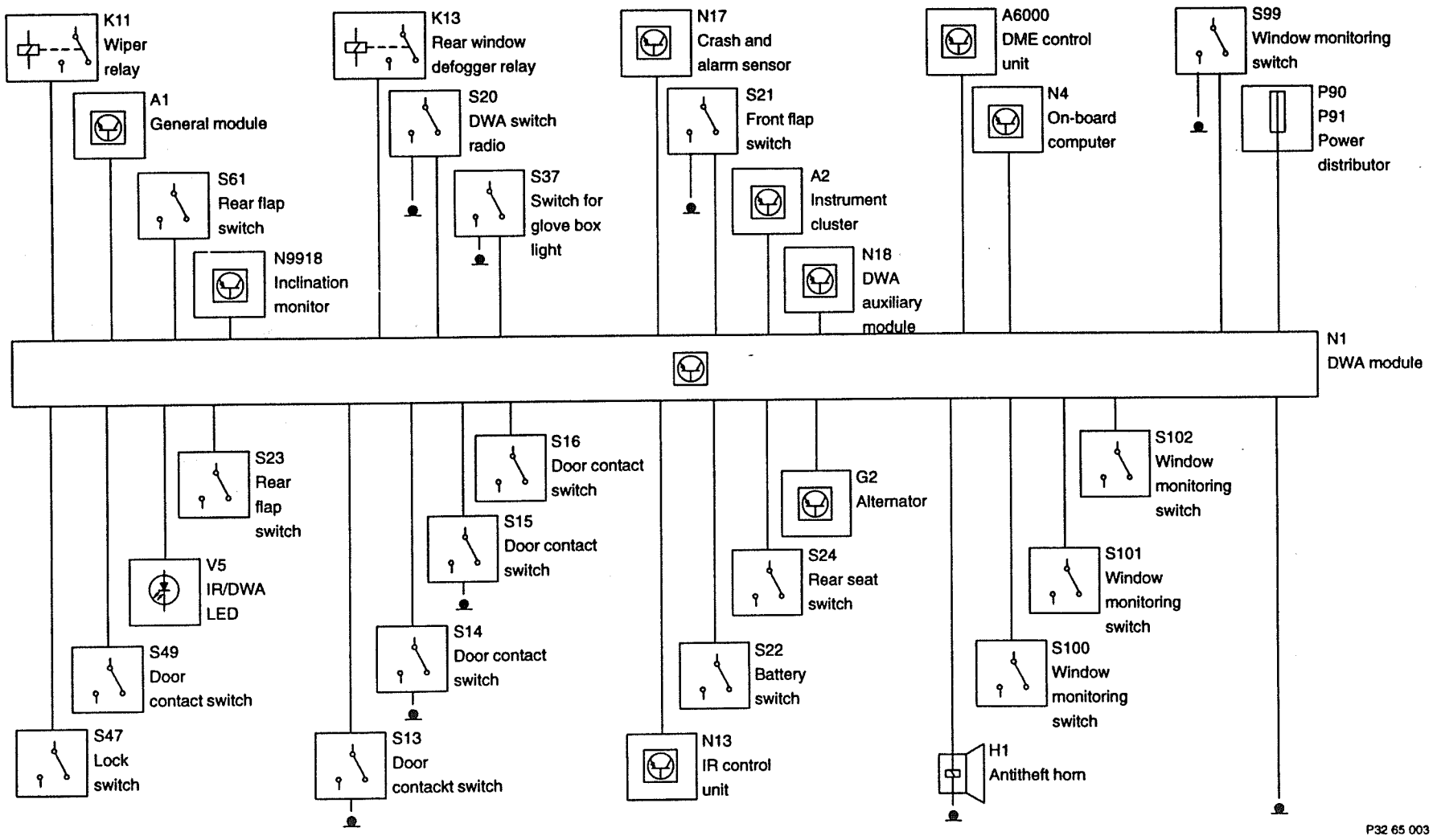

Notes on the BMW DIAGNOSTIC SYSTEM

Selection of the antitheft (DWA) program with number 8. On entry in the program the following overview page appears:

♦D♦200 Status lists

The status lists contain monitoring of the inputs and output statuses and the comparison with the actual vehicle status.

♦D♦900 Alarm counter

This part of the program contains the alarm counter, defect counter, system test and defect symptoms.

♦D♦999 Clear alarm counter

In addition to the alarm counter, the defect counters (when equipped with auxiliary module) can be set to zero.

♦D♦300 Lock signals/status DWA

The lock signals and arming with IR are checked and the number of arm/disarm procedures and the status of the antitheft system (DWA) are monitored in chapter 300.

Abbreviations

DWA	Antitheft system
IR	Infrared locking system
E	Input
A	Output
ZV	Central locking system
SG	Control unit
BC	On-board computer
QZV	Acknowledgement ZV
NG	Inclination monitor
ZM	Auxiliary module

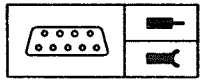

Pin Assignment

Pin Assignments at Connector X252

Pin	Type	Description/function	Connection	Signal type	Tester display	Measurement notes
1	E	Diagnostic link RxD				
2	A	Diagnostic link TxD				
3	E	Inclination monitor (as of model 89 with ZM)				
4	E	Auxiliary module (optional extra as of model 89)				
5	A	NG/ZM as of model year 89				
6	A	Visual alarm (as of model year 89)				
7	E	Acknowledgement signal ZV				
8	A	Indicator lamp LED				
9	E	Arm/disarm driver's door				
10	E	Arm/disarm driver's door				
11	E	Arm/disarm passenger's door				
12	E	Arm/disarm passenger's door + IR				
13	E	Arm/disarm IR				
14	E	Rear lid microswitch				
15	E	Rear lid microswitch				

Pin	Type	Description/function	Connection	Signal type	Tester display	Measurement notes
16	E	Passenger's door contact				
17	E	Terminal R				
18	E	Coding plug (alarm mode)				
19	E	Position pulse (instrument cluster)				
20	E	Radio/front lid contact				
21	E	Driver's door contact				
22	E	Glove box contact				
23	E	Contact battery/rear bench seat				
24	E	Rear door contacts				
25		Not used				
26	E	Luggage compartment contact				

Pin Assignments at Connector X331

Pin	Type	Description/function	Connection	Signal type	Tester display	Measurement notes
1	A		DME drive-away protection			
2	E		Battery			
3	E		Terminal 15			
4	E		Terminal 61			
5	E		BC drive-away protection			

Pin Assignments at Connector X335

Pin	Type	Description/function	Connection	Signal type	Tester display	Measurement notes
1	A		Antitheft horn			
2	A		30 s			
3	A		BC horn			
4	E		Terminal 30			

Troubleshooting

Notes

- Troubleshooting with the BMW DIAGNOSTIC SYSTEM
- Battery charged, U-min = 12 V
- When monitoring the status lists, a waiting time of approx. 1–2 seconds must be allowed for in order to transmit actions performed at the vehicle to the display screen.

Troubleshooting

Malfunctions

DWA cannot be armed from any lock → Defect code 01

DWA cannot be armed from driver's door (alarm may be triggered when disarming from the driver's door) → Defect code 02

DWA cannot be armed from the passenger's door and/or infrared system (IR) the alarm may be triggered when disarming the passenger's door and/or IR) → Defect code 03

DWA can be armed but does not trigger an alarm → Defect code 04

When armed, the DWA cannot be disarmed from the rear lid lock in order to open the rear lid → Defect code 05

Checking the individual components in the case of false alarm or alarm not triggered → Defect code 06

- Battery access
- Terminal "R"
- Terminal "15"
- Rear lid contact
- Front lid/radio contact
- Front door contact
- Rear door contact
- Rear window defogger
- Glove box contact
- Position pulse contact
- Central arrest
- Status LED
- Antitheft horn mode

Defect Code 01

The antitheft system (DWA) cannot be armed from any lock

Troubleshooting

Can system diagnosis be carried out? — no → Check fuse at antitheft control unit, is fuse OK? — no → Renew fuse.

— * —

yes ↓

yes ↓

Measure voltage at DWA control unit connector X335 (4-pin) Pin 4. Is voltage = 12 V? — no → Repair wire (terminal 30 not fuse-protected).

— * —

yes ↓

yes ↓

Is ground connection to DWA control unit connector X331 (5-pin) Pin 2 OK? — no → Repair wire.

— * —

yes ↓

yes ↓

Check diagnostic links. RxD: DWA control unit X252 Pin 1 to diagnostic connector Pin 16. TxD: DWA control unit X252 Pin 2 to diagnostic connector Pin 17. Are links OK? — no → Repair faulty wires.

— * —

yes ↓

yes ↓

Renew DWA control unit.

—*—

yes ↓

Select status list 202 (inputs), activate central arrest. Does the display for central arrest show "YES"?

— no → Is central locking system OK?

yes ↓

Renew antitheft control unit (DWA).

—*—

yes ↓

Check wire from: DWA control unit connector X252 Pin 7 to general module X253 Pin 8, and repair if necessary (acknowledgement line (QZV)).

—*—

— no → Continue troubleshooting with diagnostic procedure "5126".

—*—

Defect Code 02

Antitheft system (DWA) cannot be armed from the driver's door

Troubleshooting

♦D♦202 Status lists (inputs 2). Does "driver's door lock signal " show "DEFECTIVE"?

— no → Insert ignition key in driver's door lock and hold in "arm" position. Does the "driver's door lock signal" show" "DEFECTIVE"?

— no → Renew antitheft control unit (DWA).

— * —

yes ↓

Measure resistance: Between Pin 1 and 2 connector X747 of door lock contact (connector unplugged).
If R < 1 Ω, check wires to DWA control unit, if R > 1 Ω, renew microswitch.

— * —

yes ↓

Check fuse for central locking system; is fuse OK?

— no → Renew fuse.

— * —

yes ↓

Measure resistance between Pin 1 and 3 connector X685 of door lock contact (connector unplugged). If resistance is < 1 Ω, check wires to DWA control unit, if resistance is > 1 Ω, renew micro switch.

— * —

Defect Code 03

Antitheft system (DWA) cannot be armed from the passenger's door and/or IR

Troubleshooting

♦D♦202 Status lists (inputs 2). Does "passenger's door lock signals" show "DEFECTIVE"? — yes → Is battery voltage applied at the 3-pin connector of the lock contact at Pin 1? — no → Repair wire to fuse.

↓ no

↓ yes

Check passenger's door lock contact (measure resistance between Pin 1 and Pin 3 of connector. Operate door lock!); is R < 1 Ω? — no → Renew microswitch.

↓ no

↓ yes

Repair wire to DWA control unit Pin 11. — * —

— * —

Operate door lock, hold ignition key in "arm" position; does "passengers door lock signal" show "DEFECTIVE"? — yes → Check passenger's door lock contact (measure resistance between Pin 1 and Pin 2 of the 2-pin connector – hold door lock in "disarm" position during measurement!); is R < 1 Ω? — no → Renew microswitch.

↓ no

Renew DWA control unit.

↓ yes

Repair wire to DWA control unit Pin 12. — * —

— * —

Defect Code 04

Antitheft system (DWA) can be armed but does not trigger an alarm

Troubleshooting

Arm antitheft system (DWA), trigger alarm. Measure voltage during the alarm at the DWA control unit connector X335 Pin 1. Is voltage applied?

— no → Renew antitheft control unit (DWA).

— * —

yes ↓

Measure resistance: DWA control unit connector X335 Pin 1 to antitheft horn H1 X372 Pin 2. Is R < 1 Ω?

— no → Repair wire.

— * —

yes ↓

Measure resistance: Wire from antitheft horn H1 connector X372 Pin 1 to ground. Is R < 1 Ω?

— no → Repair wire.

— * —

yes ↓

Renew antitheft horn H1.

— * —

Defect Code 05

Antitheft system (DWA) cannot be disarmed from rear lid lock

Troubleshooting

♦D♦202 Status lists (inputs 2). Observe "rear lid lock signal" display. Does display show "DEFECTIVE"?

— no → Arm antitheft system (DWA) and observe display. Does display show "DEFECTIVE"?

— no → Rear lid lock switch and wires OK.

— * —

yes ↓

Measure voltage at rear lid microswitch connector X358 Pin 1 and Pin 2. If battery voltage is not applied, check the wires, repair if necessary: X358 Pin 1 to ZV fuse and X358 Pin 2 to DWA control unit connector X252 Pin 14. Check function and installed position of microswitch.

— * —

yes ↓

Measure voltage at rear lid microswitch connector X358 Pin 3. If battery voltage is not applied, check wires, repair if necessary: Connector X358 Pin 3 to DWA control unit connector X252 Pin 15. Check function of microswitch.

— * —

Defect Code 06

Checking the individual components in the case of false alarm or alarm not being triggered.

Note: ♦D♦Alarm counter. Determine which components triggered an alarm or which contacts are not in working order.

Battery access

♦D♦201 Status lists (inputs 1). Detach connector from battery (positive) microswitch and press rear seat microswitch. Does test display show "CLOSED"?

— no → Check function of rear seat microswitch with ohmmeter (with connector unplugged). If switch OK, check wires, repair if necessary: From DWA control unit connector X252 Pin 23 to rear seat microswitch X375 Pin 2 and further to X496 → ground.

— * —

yes ↓

Reconnect battery (positive) microswitch and detach connector from rear seat microswitch. Remove cover from battery ground point. Does the tester display change from "CLOSED" to "OPEN"?

— no → Check function of battery access microswitch with ohmmeter. If switch is OK, check wires, repair if necessary: From DWA control unit connector X252 Pin 23 to battery microswitch X374 Pin 2 and from X374 Pin 1 to X496 → ground.

— * —

yes ↓

Microswitch and wires OK. Other possible cause: Microswitch is installed in wrong position.

— * —

Terminal R

♦D♦201 Status lists (inputs 1). Turn ignition key to position "R" (= position 1) and observe tester display. Does status display show "ON"?

— no → Check fuse. Is fuse OK?

— no → Renew fuse.

yes ↓

Ignition lock and supply wires OK. Other possible cause: Intermittent defect due to plug-in contacts not being fitted correctly.

— * —

yes ↓

Check supply wires and ignition lock, repair if necessary.

— * —

Terminal 15

♦D♦201 Status lists (inputs 1). Switch on ignition (position 2) and observe tester display. Does status display show "ON"?

— no → Check fuse. Is fuse OK?

— no → Renew fuse.

— * —

yes ↓

Supply wires and ignition lock OK. Other possible cause: Intermittent defect due to plug-in contacts not being fitted correctly.

— * —

yes ↓

Check supply wires and ignition lock, repair if necessary.

— * —

Rear lid contact

♦D♦201 Status lists (inputs 1). Open rear lid and observe corresponding status display. Does status display change to "OPEN"? — no → Check rear lid contact (= switch for rear lid light). Is switch OK? — no → Renew switch.

—*—

yes ↓

Supply wires OK. Other possible cause: Intermittent defect caused by plug-in contacts not being fitted correctly. — no → Check supply wires, repair if necessary.

—*—

yes ↓

—*—

Front lid (engine hood)/radio contact

♦D♦201 Status lists (inputs 1). Remove radio and detach connector from radio contact, depress front lid contacts. Does status display show "CLOSED"? — no → Check function of front lid contact, renew if necessary. If switch is OK, check supply wires, renew if necessary.

yes ↓

Reconnect connector to radio contact, install radio, depress front lid contact; does status display show "CLOSED"? — no → Check function of radio contact, renew if necessary. If switch is OK, check supply wires, repair if necessary.

—*—

yes ↓

yes ↓

Electrical system OK. Other possible cause: Switches installed in wrong position. Intermittent defect caused by poor fit of plug-in contacts.

— * —

Front door contacts

♦D♦201 Status lists (inputs 1). When the corresponding front door is opened (the other door must be held closed) the status display must show "OPEN". Is display OK?

— no → Check door contact switch of corresponding door, is switch OK?

— no → Renew switch.

— * —

yes ↓

Switch and supply wires OK. Other possible cause: Intermittent defect caused by poor fit of plug-in contacts.

— * —

— no → Check supply wires, repair if necessary.

yes ↓

— * —

Rear door contacts

♦D♦201 Status lists (inputs 1). Proceed as described for "front door contacts".

— * —

Rear window

♦D♦201 Status lists (inputs 1). Observe tester display. Does status display show "REAR WINDOW OK"?

— no → Check heating element of rear defogger and wire.

— * —

yes ↓

Rear window defogger and supply wires OK.

— * —

Glove box contact

♦D♦201 Status lists (inputs 1). Open glove box. Does status display change from "CLOSED" to "OPEN"?

— no → Check function of switch. Is switch OK?

— no → Renew switch.

— * —

yes ↓

Check supply wires, repair if necessary.

— * —

yes ↓

Switch and supply wires OK. Other possible cause: Switch installed in wrong position. Intermittent defect caused by poor fit of plug-in contacts.

— * —

Position pulse contact

♦D♦201 Status lists (inputs 1). Raise vehicle at rear axle such that the rear wheels can be turned freely. Turn wheels by hand and observe tester display for position pulse. Does the display change between "OPEN" and "CLOSED"?

— no → Check function of position pulse switch. Is switch OK?

— no → Renew switch.

— * —

yes ↓

Position pulse switch and supply lines OK.

— * —

yes ↓

Check supply lines, repair if necessary.

— * —

Central arrest

♦D♦202 Status lists (inputs 2). If the tester display for "central arrest activated" when the vehicle is not arrested remains at "YES", then check the wire from the DWA control unit connector X252 Pin 7 to general module A1 X253 Pin 8.

— * —

Status LED

♦D♦203 Status lists (outputs). Arm antitheft system (DWA) and observe status LED (centre dashboard). Does the LED light?

— no → With the antitheft system (DWA) armed, does the status display (tester) change from "OFF" to "ON"?

— no → Renew antitheft control unit (DWA).

— * —

yes ↓

With the antitheft system (DWA) armed, does the status display (tester) change from "OFF" to "ON"?

yes ↓

Check status LED with diode test. Is LED OK?

— no → Renew status LED.

— * —

yes ↓

Check supply lines to LED, repair if necessary: DWA control unit connector X252 Pin 8 to LED X514 Pin 5 and from LED X514 Pin 2 to ZV fuse.

— * —

yes ↓

Status LED OK.

— * —

Antitheft horn mode

♦D♦202 Status lists (inputs 2). Does the tester display for "ANTITHEFT HORN MODE" agree with the mode on the vehicle? CH = continuous tone, ECE = intermittent tone. The mode can be changed with the coding plug (DWA control unit connector X252 Pin 18 to coding plug X373 Pin 2).

— * —

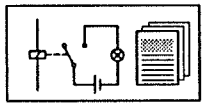

Functional Description

Notes

Depending on the model series, the systems (e.g. infrared locking system) which interact with the DWA and which are referred to in the following information are partly installed as standard and partly available as optional extras.

Brief Description

The task of the 3rd generation antitheft system (DWA III) is to detect attempts at breaking into and stealing the vehicle, to give audible and visual warning signals and to prevent the engine from being started by way of a starter blocking feature.

The DWA system additionally equipped with interior protection feature and inclination monitor protects the vehicle windows and prevents towing/wheel theft.

The DWA system is switched on and off (armed/disarmed) via the door locks or the infrared locking system.

System Components/Component Functions

The antitheft system contains the following components:

- Electronic control unit (DWA III control unit): Control of all functions in the DWA system
- Status LED: Indication of current status of DWA system
- Antitheft horn: Audible warning signals
- External switches/Reed contacts: Monitoring elements
- Inclination monitor (optional extra): Additional protection for vehicle against wheel theft/jacking up or towing off
- Conductor loops in windows (optional extra): Interior protection, i.e. window monitoring

Note: Two versions of the DWA system are available: A basic version and a version with inclination monitor and interior protection facility (inclination monitor and interior protection facility are interconnected).

The control units of both versions therefore differ. The version with inclination monitor/interior protection can be recognized from the outside by the additional plug contact for this additional equipment.

The DWA system communicates with other systems:

- Central locking system
- Infrared locking system
- On–board computer (BC)
- DME
- Crash and alarm sensor

Scope of Functions

The door locks and the infrared locking system serve as the operating elements for the DWA system (arm/disarm).

Monitored components are:

- Lock contacts driver's and passenger's door
- Rear lid
- Driver's door
- Passenger's door
- Rear doors
- Glove box
- Rear axle contact
- Radio
- Engine start
- Disconnection/connection of battery
- Front lid
- Vehicle tilt (only with inclination monitor)
- Driver's and passenger's window (only with interior protection)
- Rear window (rear screen) (only with interior protection)
- Left/right rear windows (only with interior protection)

Function

To arm (switch on) the DWA system, the ignition key is turned to the right in the door lock as far as it will go. The "arm" command is given to one of the operating elements (door lock or IRS system) by way of the transition to the "arm" position. Initially, this command is buffered by the DWA control unit. At this point in time, the DWA system is set to "arm" mode.

The acknowledgement signal QZV (from the central locking system) serves as a synchronisation signal for the lock contacts. The QZV signal ensures that all contacts perform the same command within a limited period of time (max. 50 ms). Lock signals triggered at different times represent a manipulation for the monitoring logic for the DWA unit.

The "ready to arm" status is achieved when the QZV signal is applied continuously for at least 3 seconds. If the time of at least 3 seconds is not achieved, the DWA system cannot be armed and the "arm" status is re-established. The signal is ignored if the QZV signal has been received for 3 seconds and the DWA has assumed the "ready to arm" status.

The system cannot be armed if one of the signals terminal "R", "15" or "61" (e.g. ignition switch "ON") is active. In this case, the "arm" command is not carried out by the system.

If, during the arming procedure, one of the elements to be monitored is not in the rest position (e.g. door open), the LED flashes until either all elements are in the rest position or the flashing time (approx. 10 seconds +/–1 second) has elapsed.

The trigger blocking time (trigger = monitoring element/switch) of 3 seconds +/–0.5 seconds is started with the transition to the "ready to arm" status. No trigger is monitored within this period of time so that no alarm can be triggered. Once the trigger blocking time has elapsed, all triggers at rest are included in the alarm evaluation.

If a trigger moves out of the active position to the rest position (i.e. closed) after the trigger blocking time has elapsed, the trigger blocking time is restarted. The trigger blocking time now only applies to the triggers still not included in the alarm evaluation. In this way, alarms are prevented when lids or doors are not immediately closed correctly.

The LED is switched to a steady light with the "alarm" status.

If programmed as being installed, the inclination monitor is switched on with the "ready to arm" status.

The inclination monitor can be switched off for special purposes such as tilt garages, ship transport, car trains etc. For this purpose, after arming the DWA, the system must be armed once again within the following 10 seconds. This "subsequent arming" switches off the inclination monitor but the DWA system remains armed. As an acknowledgement signal for the driver, the status LED goes out for 1 second after "subsequent arming".

The command "disarm" is triggered at one of the operating elements (locks) by unlocking the vehicle; the vehicle is unlocked, the DWA system disarmed (switched off), the status LED goes out.

Logic of Status LED

LED OFF: DWA disarmed or armed for longer than 36 h. LED is switched off to save power when the DWA is armed for longer than 36 h. When the DWA is disarmed, the LED lights as an acknowledgement for 1 second.

LED flashes: An element to be monitored is not in the rest position or alarm has been triggered. The DWA is still armed.

LED ON: DWA system is armed.

Inclination Monitor (Optional Extra)

The inclination monitor represents an extension to the existing antitheft system. Its task is to detect tyre/wheel theft or attempts at towing/jacking up the vehicle, to transfer this information to the DWA control unit and to trigger an alarm.

The inclination monitor can register all changes in vehicle position (all directions). The inclination monitor contains an electrolyte whose electrical resistance varies dependent on the vehicle inclination due to the changed liquid level.

The inclination monitor is switched on and off by the DWA control unit. After the switch-on command (arm command) is given, the inclination monitor performs a self-test. The result of the self-test is signalled back to the control unit as an acknowledgement. The inclination monitor is switched on when the signal is positive (inclination monitor OK.) and not switched on if the signal is negative. The current parked position of the vehicle is stored in the form of the component's longitudinal angle and transverse angle.

The inclination monitor compensates for drifting (soft base or change in temperature) and to a certain extent shaking of the vehicle. If the set values, including tolerance value, are exceeded in the transverse or longitudinal direction, the inclination monitor sends an alarm signal to the DWA control unit.

Note: The inclination monitor is active after a switch-on delay of approx. 10 sec.

Interior Protection (Optional Extra)

The interior protection facility provides glass breakage protection for the following windows: Rear window (rear screen), driver's and passenger's window, left and right rear windows, also the rear quarter light depending on the model.

The side windows which can be lowered are protected by means of Reed contacts: When the side window remains closed, the magnet mounted on the bottom edge of the window is positioned parallel with respect to the Reed contact so that the power circuit is closed. If the window is broken or opened by force, the magnet moves away from the Reed contact and an alarm is triggered.

The fixed side windows are protected by contact loops attached to the relevant window. If the window is broken, the alarm is triggered by the open current circuit.

The rear screen is protected by the heating conductor of the rear window defogger.

The front screen is not monitored!

Note: To ventilate the interior of the vehicle, the side windows can remain open by a maximum of 10 mm also when the DWA system is armed with the windows protected.

Installation locations: Control unit/inclination monitor

DWA control unit:	Under rear seat on left
Inclination monitor:	Rear left of luggage compartment

BMW 5 BMW 7

Antitheft System III (DWA III)

General Block Diagram

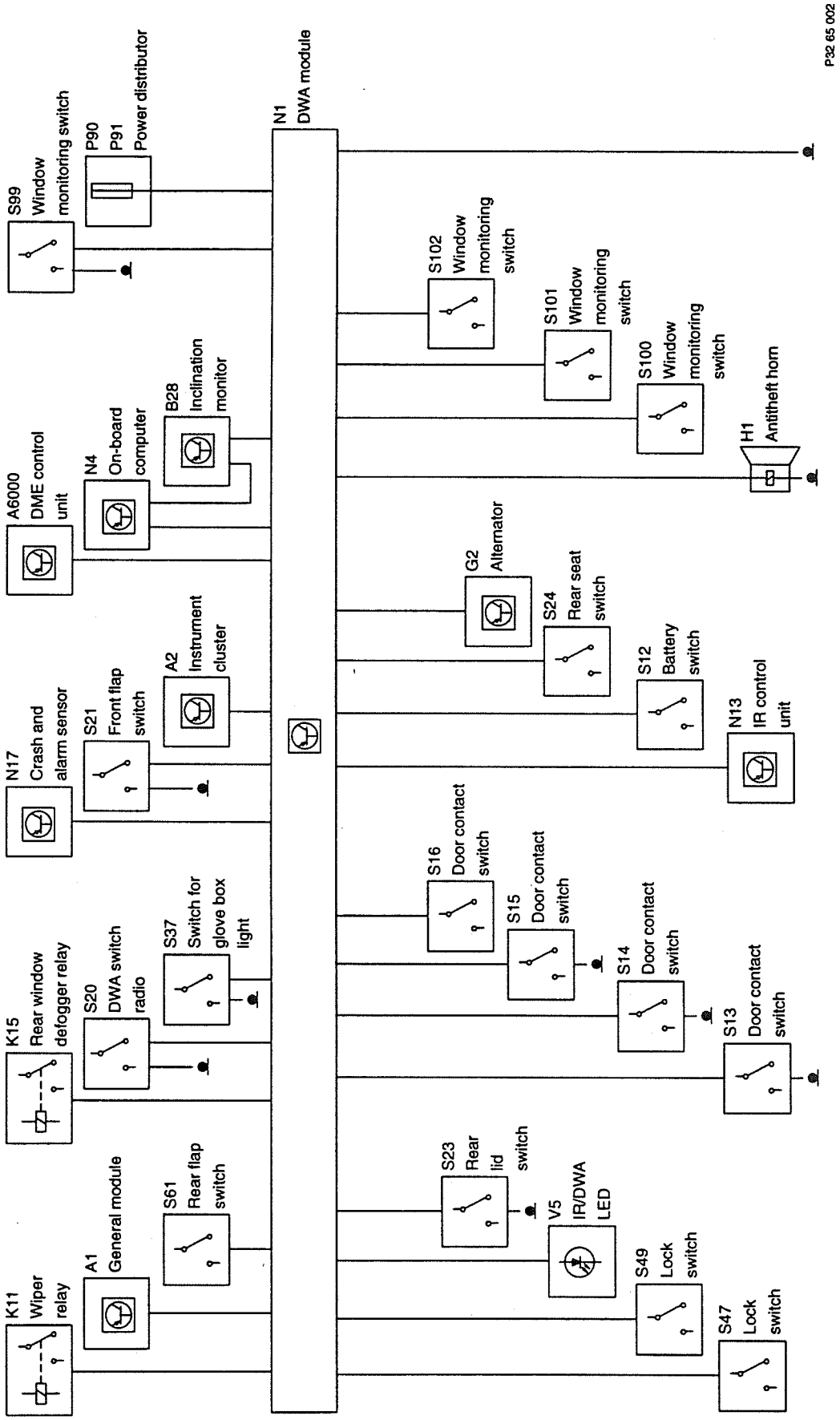

Notes on the BMW DIAGNOSTIC SYSTEM

In contrast to the previous DWA II system, the DWA III now features a defect code memory. As already familiar from other diagnostic systems, a stored defect code is followed by the troubleshooting procedure. The alarm timer is a further new feature. It can be used to determine the time of the last alarm. The time at which this alarm occurred can stretch back by a maximum of 135 days. If in the meantime, the battery was disconnected or the period of 135 days has elapsed, the timer begins to start counting anew from this point in time. The alarm cause counter also a feature of the DWA II system, is retained. If the defect code memory of the DWA III is cleared, the causes of the alarm and the alarm timer are also cleared. Therefore, if necessary, print out these lists before clearing the defect code memory.

In addition to the series designation of the diagnosed vehicle, an indication as to whether the vehicle is equipped with/without inclination monitor/ interior protection is also provided on the ID page.

Abbreviations

DWA	Antitheft system
EKM	Body electronics module
NG	Inclination monitor
SG	Control unit

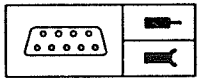

Pin Assignment

Pin Assignments at Connector X252 (DWA Control Unit Connector 26-pin, black)

Pin	Type	Description/function	Connection	Signal type	Tester display	Measurement notes
1	E	Diagnosis RxD	TxD diagnostic connector			
2	A	Diagnosis TxD	TxD diagnostic connector			
3		Not used				
4	E	Lock signal IRS	IR logic	12 V	♦D♦Status monitoring	
5	E	Not used				
6	A	"Visual alarm"	Crash-alarm sensor	Ground		
7	E	QZV	ZV module	12 V	♦D♦Status monitoring	
8	A	Status LED	LED	12 V	♦D♦Status monitoring	
9	E	Driver's door lock signal	ZV module	12 V	♦D♦Status monitoring	
10	E	Driver's door lock signal	ZV module	12 V	♦D♦Status monitoring	
11	E	Passenger's door lock signal	ZV module	12 V	♦D♦Status monitoring	
12	E	Passenger's door lock signal	ZV module	12 V	♦D♦Status monitoring	
13	E	Lock signal IRS	ZV module	12 V	♦D♦Status monitoring	
14	E	Rear lid lock signal	ZV module	12 V	♦D♦Status monitoring	
15	E	Rear lid lock signal	ZV module	12 V	♦D♦Status monitoring	
16	E	Passenger's door	Passengers's door contact	Ground	♦D♦Status monitoring	

Pin	Type	Description/function	Connection	Signal type	Tester display	Measurement notes
17	E	Connection terminal R	Terminal R	12 V	♦D♦Status monitoring	
18	E	Central arrest	ZV module	12 V	♦D♦Status monitoring	
19	E	Position pulse	Instrument cluster	Square–wave signal		
20	E	Front lid/radio	Front lid/radio contact	Ground	♦D♦Status monitoring	
21	E	Driver's door	Driver's door contact	Ground	♦D♦Status monitoring	
22	E	Glove box	Glove box contact	Ground	♦D♦Status monitoring	
23		Not used				
24	E	Rear door contacts	Door contacts	Ground	♦D♦Status monitoring	
25		Not used				
26	E	Rear lid	Rear lid contact	12 V	♦D♦Status monitoring	

Pin Assignments at Connector X331 (DWA Control Unit Connector 5-pin, black)

Pin	Type	Description/function	Connection	Signal type	Tester display	Measurement notes
1	A	Drive-away protection	DME/DDE control unit	12 V		
2	E	Ground	Chassis ground			
3	E	Ignition ON signal	Terminal 15	12 V	♦D♦Status monitoring	
4	E	Terminal 61	Battery charge indicator	12 V		
5		Not used				

Pin Assignments at Connector X301 (DWA Control Unit Connector 26-pin, white)

Pin	Type	Description/function	Connection	Signal type	Tester display	Measurement notes
1		Not used				
2		Not used				
3		Not used				
4		Not used				
5		Not used				
6		Not used				
7		Not used				
8	E	Inclination monitor	Inclination monitor	Ground		
9	A	Control line inclination monitor	Inclination monitor	12 V		
10		Not used				
11	E	Rear left windows	Rear left window contact	Ground	♦D♦Status monitoring	
12	E	Driver's door window	Driver's door window contact	Ground	♦D♦Status monitoring	
13		Not used				
14		Not used				
15		Not used				
16		Not used				
17		Not used				
18		Not used				
19		Not used				
20		Not used				
21		Not used				

Pin	Type	Description/function	Connection	Signal type	Tester display	Measurement notes
22		Not used				
23		Not used				
24	E	Rear right windows	Rear right window contact	Ground	♦D♦Status monitoring	
25	E	Passenger's door window	Passenger's door window contact	Ground	♦D♦Status monitoring	
26	E	Rear window (rear screen)	Conductor loop of rear window	Ground	♦D♦Status monitoring	

Pin Assignments at Connector X335 (DWA Control Unit Connector 4-pin, black)

Pin	Type	Description/function	Connection	Signal type	Tester display	Measurement notes
1	A	Antitheft horn connection	Antitheft horn	12 V		
2	A	Terminal 30S	Connector	12 V		
3	E	BC alarm	BC or relay	12 V		
4	E	Terminal 30U	Connector	12 V		

Adapter

Component	Connector No.	Description	Adapter No.
Control unit	X252	26-pin, black	Cartool 61 4 460 V-adapter 26-pin Cartool 61 1 459 periphery box
Control unit	X301	26-pin, white	Cartool 61 4 460 V-adapter 26-pin Cartool 61 1 459 periphery box

Troubleshooting

Notes

- Troubleshooting with BMW Diagnostic System
- Battery charged, U-min = 12 Volt
- Remove and install control unit only with ignition switched off

Important!

When the defect code memory is cleared, the alarm timer and the alarm cause counter are also cleared! If screen copies of these lists are required, they must be made before clearing the defect code memory.

Defect Code Table

♦D♦ Defect code memory – Defect codes which can be stored by the control unit:

Defect code 1 : Control unit malfunction

Defect code 2 : Control unit reset

Defect code 3 : Driver's door lock signals

Defect code 4 : Passenger's door lock signals

Defect code 5 : Lock signals infrared system

Defect code 6 : Rear lid lock signals

Defect code 7 : Inclination monitor

Defect code 8 : Inclination monitor

Defect code 9 : Antitheft horn

Defect code 10: Drive-away protection

Defect code 11: Control line inclination monitor

Defect code 12: Crash-alarm sensor

Defect code 13: Control unit malfunction

Defect code 14: Status LED

Defect code 15: Control unit reset

Defect code 16: Terminal "15"/"R"/"61"

Malfunctions – Defects which cannot be stored:

Defect code 20: DWA failure

Defect code 21: DWA triggers no alarm

Defect code 22: General malfunction of inputs at DWA control unit

Defect Code 1

♦D♦Defect code memory: 1 Control unit malfunction

Explanation: This defect code is stored when internal faults occur during control unit operation.

Possible cause: Hardware defect in control unit. Possible effects can be faults in operation or total failure of the DWA system. Coding of the control unit may be lost.

Troubleshooting: Renew control unit.

Defect Code 2

♦D♦Defect code memory: 2 Control unit reset

Explanation: The control unit has performed a reset.

Possible cause: Battery was disconnected (maintenance/laying up/emergency disarm); voltage or ground supply of control unit defective; control unit has internal fault.

Troubleshooting: Clear defect code memory and check the voltage and ground supply of the control unit, repair if necessary:

From control unit 5-pin connector, Pin 2 to ground. If wire OK, check voltage supply and repair if necessary. From control unit 4-pin connector Pin 4 to terminal 30 and from control unit 5-pin connector Pin 3 to terminal 15.

If all wires are OK and this defect is no longer stored on renewed monitoring of the defect code, further troubleshooting is not necessary since there is no defect in the system.

Defect Code 3

♦D♦Defect code memory: 3 Driver's door lock signals

Explanation: This defect code is stored when illogical lock signals are detected by the control unit at the driver's door lock during arming/disarming.

Possible cause: Driver's door microswitch defective; wire from microswitch to control unit defective.

Troubleshooting: Check driver's door microswitch and repair if necessary. If defect not rectified, check wires from microswitch to control unit and repair if necessary: From microswitch of driver's door to control unit 26-pin connector black Pin 9 and Pin 10.

Defect Code 4

♦D♦Defect code memory: 4 Passenger's door lock signal

Explanation: This defect code is stored when illogical lock signals are detected by the control unit at the passenger's door lock during arming/disarming.

Possible cause: Passenger's door microswitch defective; wire from microswitch to control unit defective.

Troubleshooting: Check passenger's door microswitch and repair if necessary. If defect not rectified, check wire from microswitch to control unit and repair if necessary: From microswitch of passenger's door to control unit 26-pin connector black Pin 12 and 13.

Defect Code 5

♦D♦Defect code memory: 5 Lock signals infrared system

Explanation: This defect code is stored when illogical lock signals are detected by the control unit while arming/disarming with the infrared system.

Possible cause: Microswitch defective; wires from the IR logic to control unit defective.

Troubleshooting: Check microswitches of driver's and passenger's door and repair if necessary. If defect is not rectified, check wires from IR logic to DWA control unit and repair if necessary: From the IR logic to the control unit 26-pin connector black Pin 12 and 13.

Defect Code 6

♦D♦Defect code memory: 6 Read lid lock signals

Explanation: This defect code is stored when illogical lock signals are detected by the control unit while arming/disarming via the rear lid lock.

Possible cause: Microswitch defective; wire from the microswitch to control unit defective.

Troubleshooting: Check rear lid microswitch and repair if necessary. If defect is not rectified, check wires from control unit and repair if necessary: From rear lid microswitch to control unit 26-pin connector black Pin 14 and Pin 15.

Defect Code 7

♦D♦Defect code memory: 7 Inclination monitor

Explanation: The inclination monitor sends a faulty or no acknowledgement signal to the DWA control unit when arming the DWA system.

Possible cause: Wire from inclination monitor to the DWA control unit defective; inclination monitor defective.

Troubleshooting: Check inclination monitor control line from white 26-pin DWA control unit connector Pin 9 to inclination monitor and repair if necessary. If defect is not rectified, check signal line from inclination monitor to white 26-pin DWA control unit connector Pin 8 and repair if necessary. If defect is not rectified renew inclination monitor.

Defect Code 8

♦D♦Defect code memory: 8 Inclination monitor

Explanation: The inclination monitor activates the wire to the DWA control unit although no inclination monitor is installed according to the control unit coding.

Possible cause: Coding of the DWA control unit incorrect.

Troubleshooting: Recode DWA control unit.

Defect Code 9

♦D♦Defect code memory: 9 Antitheft horn

Explanation: Wire from DWA control unit to antitheft horn defective.

Troubleshooting: Check wire from DWA control unit 4-Pin connector Pin 1 to antitheft horn and further to ground and repair if necessary. If wire OK, replace antitheft horn.

Defect Code 10

♦D♦Defect code memory: 10 Drive-away protection

Explanation: This defect code is stored when the wire "drive-away protection" from the DWA control unit to the DME/DDE control unit is defective.

Troubleshooting: Check wire from DWA control unit 5-pin connector Pin 1 to DME/DDE control unit and repair if necessary.

Defect Code 11

♦D♦Defect code memory: 11 Control line inclination monitor

Explanation: Control line from DWA control unit to inclination monitor defective.

Troubleshooting: Check control wire from white 26-pin DWA control unit connector Pin 9 to inclination monitor and repair if necessary.

Defect Code 12

♦D♦Defect code memory: 12 Crash-alarm sensor

Explanation: This defect code is stored when a fault occurs in the vicinity of the crash-alarm sensor.

Possible cause: Wire from DWA control unit to crash-alarm sensor defective; crash-alarm sensor defective.

Troubleshooting: Check wire from DWA control unit 26-pin connector black Pin 6 to crash-alarm sensor and repair if necessary. If wire OK, check crash-alarm sensor.

Defect Code 13

♦D♦Defect code memory: 13 Control unit malfunction

Explanation: Internal fault in control unit.

Possible cause: Defective components in control unit

Troubleshooting: Renew control unit.

Defect Code 14

♦D♦Defect code memory: 14 Status LED

Explanation: This defect code is stored when LED is faulty.

Possible cause: Wire from DWA control unit to status LED faulty; LED defective.

Troubleshooting: Check wire from DWA control unit 26-pin connector black, Pin 8 to status LED and repair if necessary. If wire OK, renew LED.

Defect Code 15

♦D♦Defect code memory: 15 Control unit reset

Explanation: Control unit has performed a reset.

Possible cause: Battery was disconnected; voltage supply of DWA control unit faulty; internal defect in control unit.

Troubleshooting: Clear defect code memory and read out defect code memory once again after approx. 30 seconds. If the defect code 15 is not stored further troubleshooting is not required since there is no defect. If the defect code is stored again and the voltage supply of the control unit is OK, defect code "15" indicates an internal defect in the control unit and the control unit must be replaced.

Defect Code 16

♦D♦Defect code memory: 16 Terminals "15"/"R"/"61"

Explanation: The DWA system should change over from "ready to arrest" status to the "arrest" status but one of the terminals "15", "R" or "61" (battery charge indicator) was active.

Possible cause: Terminal "15", "R" or "61" defective.

Troubleshooting: Change ignition switch and repair if necessary. If ignition switch OK, check following wires and repair if necessary:

- Terminal "R ": From DWA control unit 26-pin connector black Pin 17 to terminal "R"
- Terminal "15": From DWA control unit 5-pin connector Pin 3 to terminal "15"
- Terminal "61": From DWA control unit 5-pin connector Pin 4 to terminal "61"

Defect Code 20

Malfunction: DWA failure

Possible symptoms: Failure of DWA system; DWA system cannot be armed.

Possible cause: Voltage or ground supply of DWA control unit faulty; antitheft horn or wire to antitheft horn defective; lock microswitch defective.

Troubleshooting: Check lock signals with the aid of status monitoring and in the ZKE program. If lock signals are OK, check voltage supply of DWA control unit and repair if necessary:

From 4-pin control unit connector Pin 4 (check fuse on control unit housing) to terminal 30.

From 5-pin control unit connector Pin 4 to terminal 15.

If defect is not rectified check ground supply:

From 5-pin control unit connector Pin 2 to ground.

Defect Code 21

Malfunction: DWA triggers no alarm

Possible symptoms: System triggers no audible alarm;

Possible cause: Antitheft horn defective; wire from antitheft horn to DWA control unit defective.

Troubleshooting: Measure voltage at 4-pin control unit connector Pin 1 during alarm: A voltage of approx. 12 V should be measured. If voltage is considerably less than 12 V, check wire from 4-pin control unit connector Pin 1 to DWA horn and further to ground and repair if necessary. If all wires are OK, replace antitheft horn.

Defect Code 22

Malfunction: General malfunction of inputs on the DWA control unit

Symptoms: Inputs are not detected according to status monitoring in diagnostic program.

Possible cause: Relevant line from DWA control unit to corresponding input defective; switch/microswitch/contacts or conductor loops defective.

Troubleshooting: Proceed in accordance with schematic and pin assignments: Check wire from corresponding element to control unit and repair if necessary. If wire OK, check element and repair or renew as required.

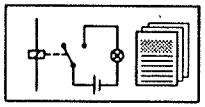

Functional Description

Depending upon the vehicle terminals, the on-board computer processes the signals from the vehicle systems, pickups, sensors and the keypad and it displays the resulting driver functions on the alphanumeric display.

System components: The on-board computer system basically consists of the on-board computer, signal generator/sensor systems, driven systems, vehicle terminals with serial interfaces (diagnosis, instrument cluster display).

On-board computer assemblies: Display, keypad, electronic circuitry

Signal generator/sensor systems: ti-signal (fuel consumption), v-signal, tank sending unit, outside temperature sensor.

Driven systems: Multiple gong, antitheft horn relay, start interlock, relay for independent ventilation/independent heating (SA).

Vehicle terminals and serial interfaces: Terminals:
31, 31g, 30, R, 15s, 50u, 58g; front lid contact, radio contact, check control button, steering column assembly switch, serial interfaces to instrument cluster for diagnosis.

Scope of Functions

HR/DATE	Time/date, hour gong on request
TIMER	Independent ventilation/independent heating (2 switching times)
SPEED	Average travelling speed
LIMIT	Individual limit speed (warning gong)
CONSUM	Two average consumption values
RANGE	Range with average consumption
TEMP	Outside temperature (frost warning gong)
CODE	Numerical code for vehicle safeguarding
DIST	Current distance to destination
ARR	Expected arrival at destination

On-Board Computer (BC IV)

General Block Diagram

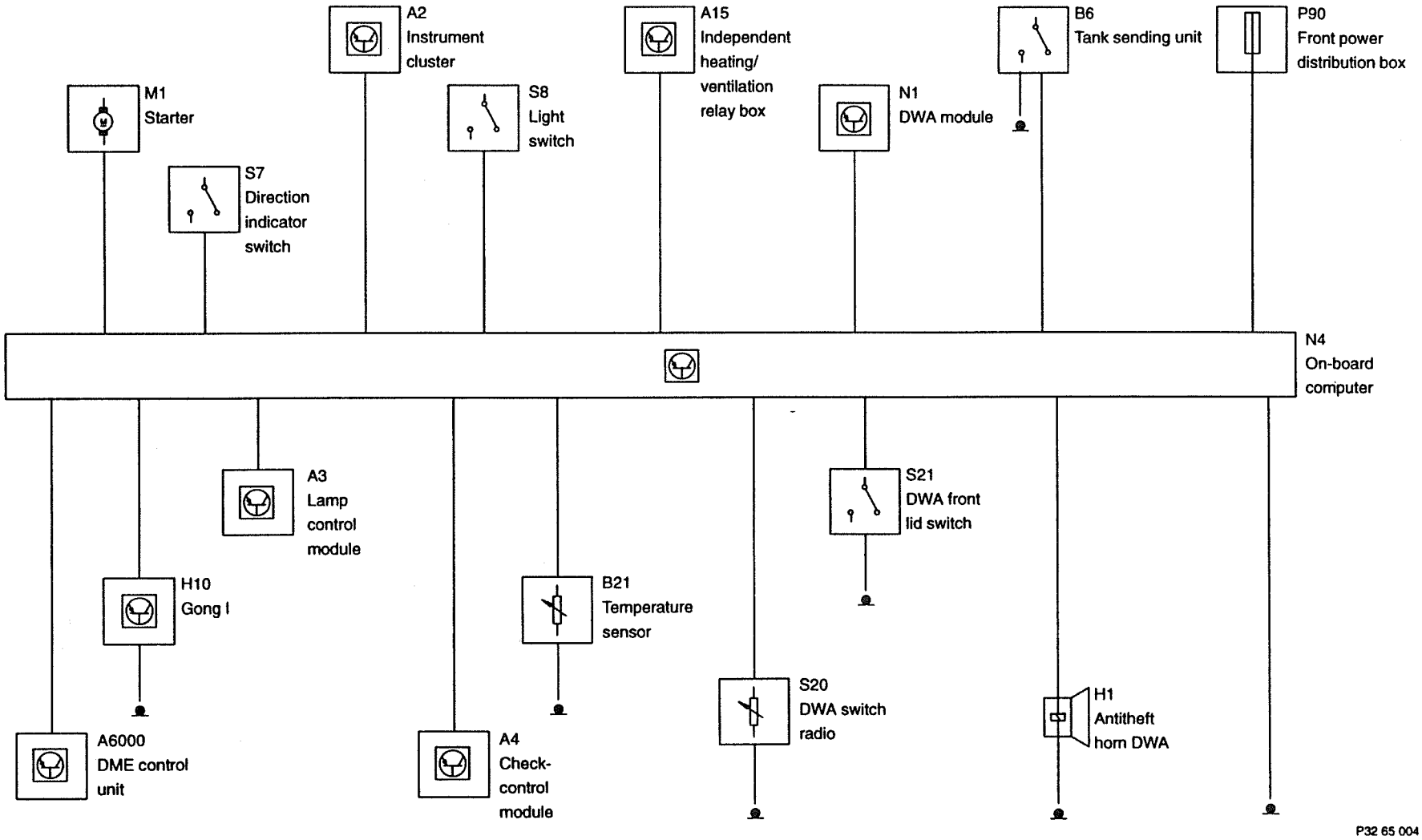

Notes on the BMW DIAGNOSTIC SYSTEM

Switch on ignition for diagnostic procedure. On entry in the program the following overview appears:

♦D♦Status lists

The contents of the status lists include input and output status monitoring and comparison with the actual vehicle status.

♦D♦Activate components

The task of this section of the program is to check the components of the on-board computer system (LEDs, gong, antitheft horn etc.)

♦D♦Defect code table

The message "no defect codes stored" or a list of the stored defect codes appears. After reconnecting the battery and switching on the ignition, the on-board computer requires approx. 1 minute to detect any defects.

♦D♦Clear defect code memory

The on-board computer program sequence includes automatic return to the general overview after the defect code memory has been cleared.

Abbreviations

BC	On-board computer
DWA	Antitheft system
IR	Infrared locking system
ZV	Central locking system
SG	Control unit
E	Input
A	Output

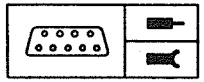

Pin Assignment

Pin Assignments at Connector X501 (26-pin)

Pin	Type	Description/function	Connection	Signal type	Tester display	Measurement notes
1	E	Front lid/radio contact	Front lid/radio contact			
2	A	DAC line	Instrument cluster			
3	E	Diagnostic link RxD	TxD diagnostic connector			
4	E	Connector terminal 31	Ground			
5	E	Temperature sensor				
6	E	Connector terminal 15	Fuse			
7	E	Position signal	Instrument cluster			
8	E	Connector terminal R	Fuse			
9	E	Connector terminal 30	Fuse			
10	E	Connector terminal 50	Starter			
11	E	Injection signal	DME			
12	E	Fuel gauge	Tank sending unit			
13		Not used				
14	E	Check-control button	CCM			
15	E	LAC line	Instrument cluster			
16	A	Diagnostic link TxD	Diagnostic socket			
17	E	Connector terminal 30	Fuse			

Pin	Type	Description/function	Connection	Signal type	Tester display	Measurement notes
18	A	Gong T2	Gong			
19	A	Gong T1	Gong			
20	A	Independent heating	Relay box			
21	A	Independent ventilation	Relay box			
22	E	Terminal 58 g	Light switch			
23	A	Alarm	Antitheft horn			
24	A	Drive-away protection	DME			
25	E	Remote control	Direction indicator switch			
26	E	Reserve contact	Tank sending unit			

Troubleshooting

Notes

- Troubleshooting with BMW DIAGNOSTIC SYSTEM
- Battery charged, U-min = 12 V
- When monitoring the status lists, a waiting time of 1–2 seconds must be taken into account for actions at the vehicle to be shown on the display screen.

Defect Code Table

Malfunctions:

Failure of on-board computer → Defect code 01

On-board computer is OK but the diagnostic procedure is not possible → Defect code 02

The current vehicle speed cannot be adopted in the LIMIT function → Defect code 03

When arming the CODE function, the CODE LED flashes for 10 s → Defect code 04

Position pulse not OK → Defect code 22

On-board computer does not display the correct average consumption → Defect code 25

No parallel display in the instrument cluster → Defect code 26

♦D♦900 Defect code memory – stored defect codes:

♦D♦Defect code 05 stored → Defect code 05

♦D♦Defect code 06 stored → Defect code 06

♦D♦Defect code 08 stored → Defect code 08

♦D♦Defect code 15 stored → Defect code 15

♦D♦Defect code 18 stored → Defect code 18

♦D♦Defect code 19 stored → Defect code 19

♦D♦Defect code 20 stored → Defect code 20

♦D♦Defect code 21 stored → Defect code 21

♦D♦Defect code 23 stored → Defect code 23

♦D♦Defect code 24 stored → Defect code 24

Defect Code 01

Failure of on-board computer

Troubleshooting

Check fuse at DWA control unit/relay box. Is fuse OK?

— no → Renew fuse. Does defect occur once again?

— yes → Detach connector X252 from DWA control unit. If defect code is no longer stored, continue with diagnostic procedure DWA 6575.1.

— * —

— * —

|
yes
↓

Measure voltage at BC connector between Pin 17 and Pin 4 (ground). Is battery voltage applied?

— no → Check wires, repair if necessary: From BC connector Pin 17 to DWA control unit or relay box X335 Pin 2 and BC X501 Pin 4 to ground.

— * —

|
yes
↓

Renew on-board computer (BC).

— * —

Defect Code 02

On-board computer is OK but diagnostic procedure not possible

Troubleshooting

Have all control units installed in the vehicle diagnostic capabilities? — no → Refer to notes in BMW DIAGNOSTIC SYSTEM

— * —

yes ↓

Check RxD and TxD links to on-board computer: Diagnostic socket Pin 15 to BC connector Pin 3 (RxD) and diagnostic socket Pin 20 to BC connector Pin 16 (TxD). Are links OK? — yes → Is plug connection X501 on BC OK? — yes → Renew on-board computer (BC).

— * —

no ↓ Repair faulty wire.

— * —

no ↓ Repair plug connection.

— * —

Defect Code 03

The current vehicle speed cannot be adopted in the LIMIT function

Troubleshooting

Remove on-board computer. Measure voltage between ground and BC connector X501 Pin 7. Is battery voltage applied?

— no → Is wire from BC connector Pin 7 to instrument cluster connector 3 (white) Pin 18 OK?

— no → Repair wire.

— * —

yes ↓

Renew on-board computer (BC).

— * —

yes ↓

Continue with diagnostic procedure instrument cluster 6200, speed-A signal.

— * —

Defect Code 04

When arming the CODE function, the CODE LED flashes for 10 s

Troubleshooting

Is front lid closed and radio switch installed? — yes → Is ground applied at BC connector Pin 1? — yes → Renew on-board computer (BC).

—*—

|
no
↓

Close front lid, install radio switch.

—*—

|
no
↓

Repair wire.

—*—

Defect Code 05

♦D♦900 Defect code memory: 05 Temperature sensor stored

Troubleshooting

Check contact of temperature sensor connector X770. Is connector OK?

— yes → Check connector X34, E32 X15, and supply lines to connector X770, repair if necessary. Measure resistance at temperature sensor B21 between Pin 1 and 2. Resistance at 20° C approx. 5 kΩ, is resistance OK?

— no → Temperature sensor B21 defective.

— * —

no ↓

Repair connector.

— * —

yes ↓

Is ground connection to connector X34, E32 X15, Pin 7 OK?

— yes → Check contact of connector X34 and repair if necessary. is connector OK?

yes ↓

Remove on-board computer. Measure resistance between BC connector Pin 5 and X34 Pin 2, E32 X15 Pin 11. If resistance > 1 Ω, repair wire. If resistance < 1 Ω and after installing the on-board computer, the defect code is stored once again after a waiting time of approx. 1 min, renew on-board computer.

— * —

no ↓

Repair ground connection.

— * —

Defect Code 06

♦D♦900 Defect code memory: 06 Terminal 15 is stored

Troubleshooting

Check fuse, is fuse OK? — no → Renew fuse.

—*—

yes ↓

Are tachometer, fuel gauge and temperature gauge in instrument cluster OK? — no → Check wire, repair if necessary: Connector X15 Pin 1 to fuse.

—*—

yes ↓

Is wire from BC connector Pin 6 to X15 Pin 1 OK? — no → Repair wire.

—*—

yes ↓

Renew on-board computer (BC).

—*—

Defect Code 08

♦D♦900 Defect code memory: 08 Terminal R is stored

Troubleshooting

Check fuse, is fuse OK? — no → Renew fuse.

— * —

yes ↓

Is wire from BC connector Pin 8 via X34, E32 X15, Pin 6 to fuse OK? — yes → Renew on-board computer (BC).

— * —

no ↓

Repair wire.

— * —

Defect Code 15

♦D♦900 Defect code memory: 15 Data link to instrument cluster stored

Troubleshooting

Does the message "check-control" appear in instrument cluster display? — yes → Continue with diagnostic procedure 6200 for instrument cluster/check-control.

|

no

↓

Check wire from BC connector Pin 15 to instrument cluster connector 2 (beige) Pin 3. Is wire OK? — no → Repair wire.

|

yes

↓

Clear defect code memory.

— * —

Defect codes 18, 19, 20, 21, 22

♦D♦900 Defect code memory: One or several of the defect codes 18, 19, 20, 21, 22, 26 stored

Defect code 18: Temperature warning gong

Check wire for the defect as displayed: BC connector Pin 18 to X518 Pin 3.

Defect code 19: Time warning gong

Check wire for the defect as displayed: BC connector Pin 19 to X518 Pin 2.

Defect code 20: Independent heating

No defect if independent heating system is not installed.

If an independent heating system is installed as an optional extra, check wire: BC Connector Pin 20 to X607 Pin 3. Press the keys A-TEMP and TIMER simultaneously in order to operate the independent heating/ventilation outside the 16 degree centigrade threshold for test purposes.

Defect code 21: Independent ventilation

There is no defect if no independent ventilation system is installed.

If the independent ventilation system is installed as an optional extra, check wire and repair if necessary: BC connector Pin 21 to X607 Pin 4.

Defect code 22: Position pulse not OK

If speedometer in instrument cluster not functioning, continue with Section 6200.

If speedometer OK, check wire and repair if necessary: BC connector Pin 7 to instrument cluster X502 Pin 18.

Defect Code 23

♦D♦900 Defect code memory: 23 Antitheft horn stored

Troubleshooting

With the on-board computer removed, measure voltage at BC connector Pin 23. Is battery voltage applied?

— no → With DWA control unit/relay box removed (connector X335 unplugged), measure resistance between BC X501 Pin 23 and DWA control unit/relay box X335 Pin 3. Is resistance < 1 Ω?

— yes → DWA module/relay box defective.

— * —

yes ↓

♦D♦999 Clear defect code memory and read out after approx. 1 minute. If "sporadic" defect is displayed, check wires and plug contacts for loose contact.

— * —

no ↓

Repair wire.

— * —

Defect Code 24

♦D♦900 Defect code memory: 24 Drive-away protection output stored

Note: In the case of defect "short to B–", diagnostic procedure is as described in the following. In the case of defect "short to B+", diagnostic procedure is as for "short to B–", but instead of measuring the resistance, measure the voltage and substitute R < 1 Ω by U > 5 V. If "sporadic" defect is displayed, carry out visual check of wires and connectors (contact).

Troubleshooting

Remove on-board computer. Detach connector X6000 from DME control unit and measure resistance between BC connector Pin 24 and vehicle ground. Is resistance < 1 Ω?

— no → Reconnect connector to DME control unit and repeat measurement. If resistance is < 1 Ω, DME control unit is defective. If resistance > 1 Ω and, after installing the on-board computer, a defect code is stored once again (wait 1 minute), renew on-board computer (BC).

— * —

yes ↓

Detach connector X20 and repeat measurement. Is resistance < 1 Ω?

— no → Wire from connector X20 to DME control unit has a short to ground.

— * —

yes ↓

Detach connector X15 and repeat measurement. Is resistance < 1 Ω?

— no → Reconnect connector X15 and disconnect plug connection to rear part (X13) and repeat measurement. Is resistance < 1 Ω?

— no → If DWA is installed: Detach DWA control unit connector X331 and reconnect connector X13 and repeat resistance measurement. If resistance < 1 Ω, then there is a short to ground in the rear part (connector X13 Pin 1 to X331 Pin 1). If resistance > 1 Ω, DWA control unit defective.

|
yes
↓
Wire from BC connector X501 Pin 24 to X15 Pin 25, in 5 Series Pin 6 has a short to ground.

—*—

|
yes
↓
Short to ground in front part of wire harness.

—*—

—*—

Defect Code 25

On-board computer does not display the correct average consumption

If differences occur between the consumption value displayed by the on-board computer and the actual consumption, the consumption must be calibrated. This procedure is described in the following, the sequence of operating steps must be followed.

E34 5 Series and E32 7 Series apart from E34 Standard version

1. Press the buttons 10 and 1000 simultaneously in order to access test mode. "TEST" appears in the BC display.

2. Enter number 20. This enables access to the consumption correction factor. "TE20" appears in the display.

3. Press S/R button. The previously stored correction factor appears in the display. Example: 1000CORR. The new value should be determined as follows.

(Correction value old) x (actual consumption/BC consumption) = = New correction value.

– The actual consumption should be determined as usual at the petrol pump. The consumption calculated by the on-board computer as well as the determined actual value must be determined on the same trip.

4. Press S/R. "CORR" no longer flashes. The new correction factor is now stored.

5. Press km/degrees centigrade or miles /degrees F button.

E34 5 Series, Standard version

In the E34 5 Series standard version, tank adjustment should be carried out within the test function 20.

1. Press the buttons 10 and 1000 simultaneously in order to enter test mode. "TEST" appears in the BC display.

2. Enter the number 20. This enables access to the consumption correction factor. "TE20" appears in the display.

3. Empty tank up to reserve level (reserve contact must be closed) and press S/R button; tank is adjusted.

4. Press km/degrees centigrade or miles/F button.

Defect Code 26

No parallel display in instrument cluster

Troubleshooting

Perform instrument cluster/check-control system test in diagnostic program and check instrument cluster display unit. Is display unit OK?

— no → Renew instrument cluster display unit (LCD module).

— * —

yes ↓

Check function of steering column lever (BC remote control) in "on-board computer" diagnostic program. Is steering column lever OK?

— no → Check continuity of steering column lever S7 and check ground line for steering column lever to ground. Is line OK?

— no → Renew steering column lever or repair faulty ground line to steering column lever.

— * —

yes ↓

Repair wire from steering column lever to BC connector.

— * —

yes ↓

Is data link from BC connector Pin 2 to instrument cluster connector 2 (beige) Pin 23 OK?

— no → Repair wire.

— * —

yes ↓

Is wire from BC connector Pin 15 to instrument cluster connector 2 (beige) Pin 3 OK? — no → Repair wire.

—*—

|
yes
↓

Renew on-board computer (BC).

—*—

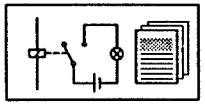

Functional Description

General

With the infrared locking system (IR), the vehicle can be locked, unlocked or arrested via the central locking system. The antitheft system (DWA) is armed when the vehicle is in arrest mode. The windows and sunroof are closed automatically (only power windows and sunroof) when the lock button is pressed for at least 2 seconds.

The infrared functions are performed only when the ignition is off.

The infrared functions are performed in conjunction with the ZKE control unit or the antitheft system (DWA).

The infrared transmitter also contains the conventional, mechanical key. The key folds out to the side when the BMW emblem is pressed. All central locking functions can still be operated with the key.

The infrared system operates at a distance of up to 5 to 6 metres. There must be no solid objects between the transmitter and the receiver in the vehicle.

The IR system is theft-proof. Manipulations are not possible.

Components

Transmitter (key): Battery operated (commercially available round cells) IR transmitter.

Receiver: Place of installation, front vehicle roof. Receives and amplifies the signals from the transmitter and transfers them to the logic module.

7 Series: One receiver is used.

5 Series: Two receivers (switched in parallel) are used.

Logic module: Place of installation, rear power distributor. Control unit of the infrared system. Processes the signals and gives the ZKE control unit or the ZV module or the antitheft system (DWA) the required command (lock, unlock, arrest etc.).

Indicator: Place of installation: Ventilation grille. The transmitter is initialised via the indicator. If an antitheft system (DWA) is installed, it also contains the LED indicator for the antitheft system (DWA).

Buttons on the IR Transmitter

Transmitter version up to model year 1988

Button 1 (front): Unlock vehicle, disarm antitheft system (DWA), switch on interior lights.

Button 2 (rear): Lock vehicle, close windows/sunroof.

Button 3 (side): Arrest vehicle, arm antitheft system (DWA), close windows/sunroof. All functions are performed only within 15 seconds after pressing the button 2.

Transmitter version as of model year 1989

A new IR transmitter has been introduced together with model year 1989. The new transmitter is more effective and the buttons 1 and 2 have been interchanged. The command unlock/disarm DWA is sent 5 times in succession when the unlock button is held pressed. In this case, the LED lights briefly 5 times.

Button 1 (front): Lock vehicle! Close windows/sunroof.

Button 2 (rear): Unlock vehicle, disarm antitheft system (DWA), switch on interior lights.

Button 3 (side): Arrest vehicle, arm antitheft system (DWA). The functions are performed within only 15 seconds after pressing button 2.

The function "close windows/sunroof" is now only triggered by the lock button, and no longer by the button 3 (side).

Note on Interior Light

The infrared system switches ground to the ZKE input door handle contact. All repeat lockouts and switch-on conditions are effective. Refer to Section ZKE Interior Lights 6330.0A).

Function Indication on the Transmitter

Lights briefly – after a button has been pressed: Transmitter is OK.

Quick flashing – when button 2 or 3 is held depressed: Command close window/sunroof is performed.

Slow flashing – during initialisation, indicates transmitter is initialised.

Lights continuously – after the transmitter self-test, transmitter is OK. See Transmitter Self-test.

Does not light – after pressing a button: Renew batteries

Transmitter Self-Test

Hold transmitter directly against a bright surface (e.g. white paper). Press unlock button and hold.

The self-test begins after the unlock code has been transmitted (LED lights briefly, in the case of transmitter as of model year 89, 5 times in succession). The transmitter is in perfect working order if the LED then lights for approx. 5 seconds (continuous light).

In the case of fault, renew battery. If batteries are OK., renew the transmitter.

Initialisation

It is necessary to initialise the transmitter:

- When the transmitter had no power supply for more than 1 minute
- When the transmitter is new

Initialisation is not necessary:

- When changing the batteries in the transmitter within one minute (capacitor buffer)
- Interruption in power circuit in the vehicle

Procedure:

- 1. Switch on ignition in vehicle with second key.
- 2. Place transmitter directly on display, hold straight (LED must face towards the operator).
- 3. Press unlock button until the LED on the transmitter begins to flash slowly. The transmitter is now initialised.

Notes

Re-initialisation of a transmitter cancels all transmitters already initialised in a system. Therefore, always re-initialise all transmitters for one system (manipulation protection).

All transmitters of one system (up to 4 units) must be initialised within 15 minutes. The ignition must not be switched off within this period.

Manipulation Lockout

Unauthorized manipulation can result in the IR system being inhibited. The inhibit is cancelled once again when the vehicle is opened with the conventional (mechanical) key.

Infrared Locking System (IR)

General Block Diagram

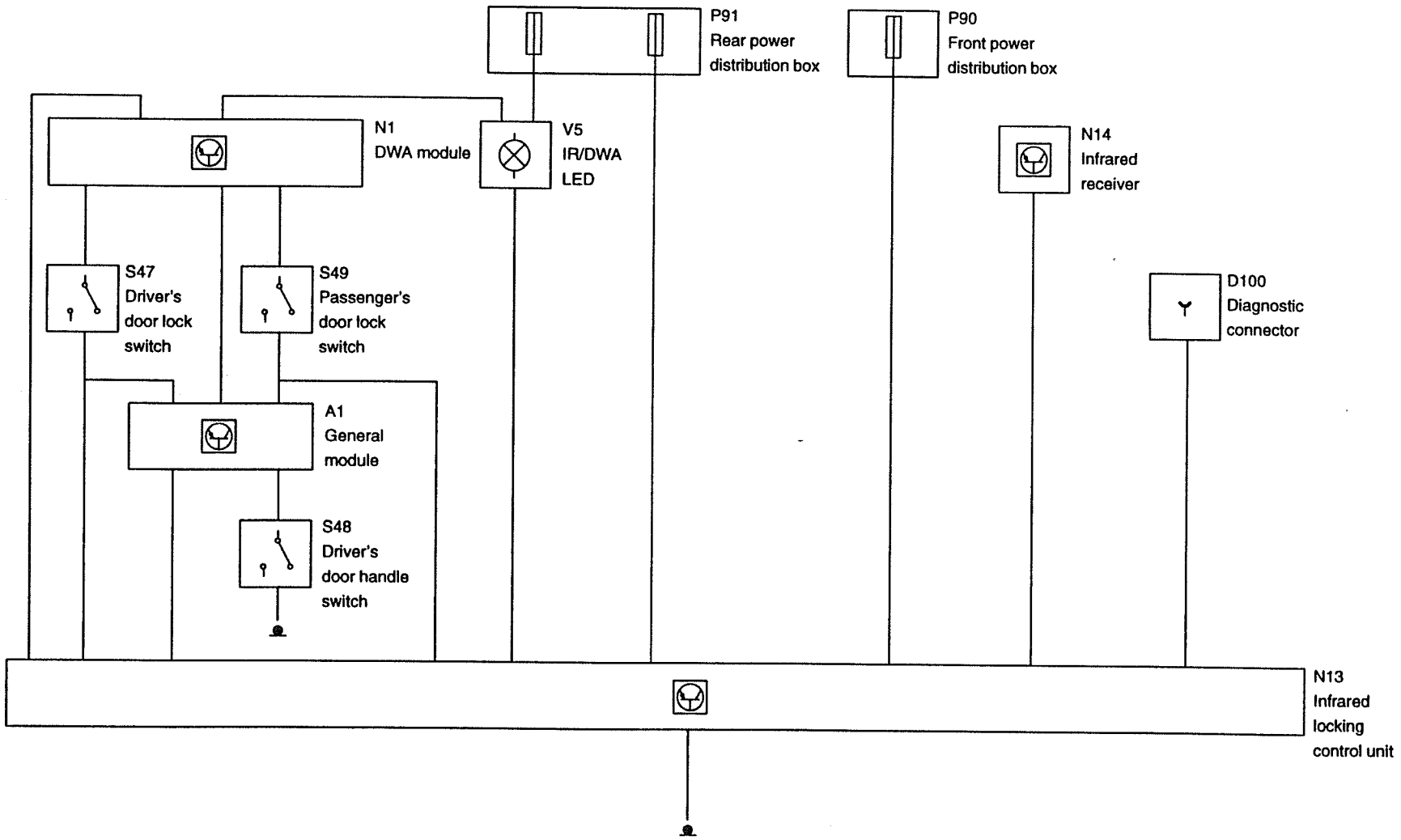

P32 66 001

Notes on the BMW DIAGNOSTIC SYSTEM

The infrared system has no defect code memory. The diagnostic procedure is performed by a test sequence incorporated in the program.

To perform diagnostics, terminal R must be switched on in the vehicle. Since the transmitter is necessary for checking receivers and the indicator, a second vehicle key or a second infrared transmitter should be kept at hand.

It is not necessary to use an infrared transmitter (intialised) belonging to the vehicle system for diagnostic procedures. Any infrared transmitter in working order can therefore be used to check the indicator and receivers. This infrared transmitter is not initialised during the checking procedure.

Abbreviations

IR	Infrared locking system
TGK	Door handle contact
DWA	Antitheft system
Init	Initialisation
ZKE	Central body electronics
ZV	Central locking system
E	Input
A	Output

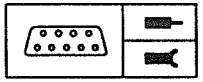

Pin Assignment

Connectors

Number	Type	Description
X262	26-pin	Connector, IR logic module
X323	6-pin, white	Connector, IR receiver
X514	6-pin, blue	Connector, indicator

Pin Assignments at IR Logic Module, Connector X262

Pin	Type	Description/function	Connection	Signal type	Tester display	Measurement notes
1		Not used				
2		Not used				
3	E	Terminal 30, B+ for IR	Fuse	B+		No diagnostic mode in the event of fault
4	E	Terminal 31, ground for IR	Ground	Ground		No diagnostic mode in the event of fault
5	E	Detection, terminal 15	Fuse	B+	ON, Test C	
6		Not used				
7		Not used				
8	E	Detection, terminal R	Fuse	B+	ON, Test C	No diagnostic mode in the event of fault

Pin	Type	Description/function	Connection	Signal type	Tester display	Measurement notes
9	A	Switched ground for receiver	Receiver Pin 3	Ground	Defect in test F	
10	A	Operating voltage 5 V for receiver	Receiver Pin 1	5V	Defect in test F	
11	A	Init-S, transmit line during initialisation	Indicator unit Pin 3	Square-wave pulses		Output is defective if the IR transmitters cannot be initialised but reception is OK in test E.
12	E	RxD diagnostic link	Diagnostic connector Pin 15	Square–wave signal		
13		Not used				
14		Not used				
15		Not used				
16		Not used				
17	A	ZV command lock	ZKE-D7	0V/12V	Defect in test G	12V for lock command
18	A	ZV command arrest/unlock	ZKE-D16	0V/12V	Defect in test G	12V for arrest or unlock command. Maximum duty cycle 700 ms
19	A	Arm DWA	DWA control unit, X252-Pin 13	0V/12	None	not in scope of diagnosis
20	A	TGK, door handle contact for interior light	ZKE-D2	B–	Defect in test H	
21		Not used				
22		Not used				
23	E	DE, data link from Receiver	Receiver Pin 2	Square-wave pulses	Defect in test F	
24	E	Init-E, receiver line during initialisation	Indicator unit Pin 4	Square-wave pulses	Defect in test E	

Pin	Type	Description/function	Connection	Signal type	Tester display	Measurement notes
25	A	TxD diagnostic link	Diagnostic connector Pin 20			
26		Not used				

Pin Assignments at IR-Receiver, Connector X323

Pin	Type	Description/function	Connection	Signal type	Tester display	Measurement notes
1	E	Operating voltage 5 V	IR logic module Pin 10	5V	Defect in test F	
2	A	Data link	IR logic module Pin 23	Square-wave pulses	Defect in test F	
3	E	Switched ground	IR logic module Pin 9	B–	Defect in test F	

Pin Assignments at IR-Display unit, Connector X514

Pin	Type	Description/function	Connection	Signal type	Tester display	Measurement notes
1		Not used				
2	E	Operating voltage 12 V	Fuse	B+	Defect in test E	
3	E	Init-S, transmit line during initialisation	IR logic module Pin 11	Square-wave pulses	None	
4	A	Init-E, receive line during initialisation	IR logic module Pin 24	Square-wave pulses	Defect in test E	
5	E	DWA LED	DWA control unit	B–	None	

Troubleshooting

Notes

- Troubleshooting with BMW DIAGNOSTIC SYSTEM
- Battery charged, U-min = 12 V
- Troubleshooting is essentially performed in accordance with the instructions in the BMW DIAGNOSTIC SYSTEM.
- Carry out checks at 26-pin connector of the logic module using the special adapter only. Only use suitable measuring equipment for checking other plug connections.

Defect Code Table

Malfunctions:

General malfunction → BMW DIAGNOSTIC SYSTEM

Diagnostic procedure not possible → Defect Code 01

Antitheft system (DWA) is not armed or disarmed → Defect code 02

Initialisation cannot be performed → Defect code 03

Defect Code 01

Diagnostic procedure not possible

Possible cause: Fuse, power supply, ground, RxD, TxD-links

Troubleshooting

Switch off ignition. Have all IR functions failed?

— yes → Is fuse OK?

— no → Renew fuse.

—*—

yes ↓

Remove IR logic module. Is ground connection to 26-pin connector Pin 4 OK?

— no → Repair wire.

—*—

yes ↓

Is approx. battery voltage applied at Pin 3?

— no → Repair wire to fuse.

—*—

yes ↓

Renew logic module.

—*—

no ↓

Is fuse OK?

— no → Renew fuse.

—*—

yes ↓

Remove IR logic module. Switch on ignition! Is approx. battery voltage applied at the 26-pin connector Pin 8?

— no → Repair wire to fuse.

—*—

yes ↓

Are RxD and TxD links to diagnostic socket OK?

— no → Repair faulty wire.

—*—

yes ↓

Continue troubleshooting as displayed on screen.

—*—

Defect Code 02

Antitheft system (DWA) cannot be armed or disarmed

Note: The signal line to the antitheft system (DWA) is not included in the diagnostic procedure.

Troubleshooting:

- All other functions of the IR system are in working order, otherwise carry out troubleshooting to instructions given in the BMW DIAGNOSTIC SYSTEM.
- Operation of antitheft system (DWA) (with key) functions normally, otherwise perform troubleshooting in accordance with Section 6575.0 or 6575.1 Antitheft System.
- **DWA cannot be armed:** Check wire from the IR–logic module Pin 19 to 26-pin connector of DWA control unit Pin 13 (input ZS 22) for a break and repair if necessary.
- **DWA is armed but cannot be disarmed:** Check wire from IR logic module Pin 19 to 26-pin connector of DWA control unit Pin 13 (input ZS 22) for a short to B+ and repair if necessary.

Defect Code 03

Initialisation cannot be performed

Note: The initialisation transmit line INIT-S from the IR logic module to the indicator unit is not included in the diagnostic procedure. The initialisation code is sent from the logic module to the indicator unit via this line. The IR transmitter receives the code from the indicator unit via infrared diodes.

Troubleshooting:

- To initialise the IR transmitter, ensure it is placed straight on the indicator unit. The LED of the IR transmitter must face towards the operator (or rear of vehicle).
- When the transmitter is correctly positioned: ♦ **D** ♦ Carry out all tests A to H. Rectify defect in accordance with instructions in the BMW DIAGNOSTIC SYSTEM.
- If no defect is found during diagnostic procedure: Repair INIT-S wire from the indicator unit Pin 3 to the 26-pin connector at the IR logic module Pin 11.

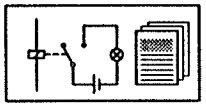

Functional Description

Operating Principle

The park distance control system serves as a collision prevention feature and assists the driver when parking and manoeuvering.

The system monitors the distance between the vehicle and an obstacle on the basis of the ultrasonic echo sound method.

The system essentially consists of the following components:

- PDC control unit
- 4 ultrasonic transducers in the front bumper
- 4 ultrasonic transducers in the rear bumper
- PDC switch (push button with indicator lamp)
- Rear tone generator
- Front tone generator (BC gong)

The front ultrasonic transducers have a measuring range from approx. 20 cm to approx. 60 cm, whereas the rear measuring range extends from approx. 20 cm to approx. 150 cm (inside) or 60 cm (outside).

If there is an obstacle within the measuring range in front of or behind the vehicle, this is signalled audibly to the driver by the relevant tone generator.

The signal comprises a sequence of identical tones.

The less the distance to the obstacle, the faster the tone sequence.

A distance of below 20 cm is indicated by a continuous tone.

To distinguish between them, the tone pitch at the front (1500 Hz = high tone) and at the rear (1000 Hz = low tone) differ.

Forward and reverse parking

The front tone generator is switched off when an obstacle is approached while driving forward such that a distance warning is triggered and reverse gear is then selected. However, the tone generator is reactivated if the vehicle continues to roll forward.

The same procedure takes place while reversing (rear tone generator) and a forward gear is selected.

Parking on incline or laterally

When parking on an incline or laterally with respect to an obstacle, only the transducers in the corners of the bumpers are used for measuring the distance. In the case of these transducers, the distance warning is interrupted after 3 seconds if an obstacle is no longer approached, e.g. driving along a wall. The distance warning is reactivated if the vehicle continues to approach the obstacle.

The distance warning is not switched off in the close range (approx. 20 cm) indicated by a continuous tone.

Activation and deactivation logic

The push button to switch the system on and off and an indicator lamp are integrated in the PDC switch.

The system is switched on when the indicator lamp lights.

There are two ways of activating the system:

- Depressing the push button
- Selecting reverse gear

There are three ways of deactivating the system:

- Pressing the push button
- Automatically after covering a distance of approx. 55 m at a speed below 35 km/h
- Automatically after exceeding a speed threshold (approx. 35 km/h)

The indicator lamp goes out when the system is deactivated

Defect Indication

The PDC control unit features a defect code memory.

The system provides an indication to the driver when it has stored a defect code.

When the system is switched on by means of the PDC switch, a short continuous tone is provided and the indicator lamp flashes.

If the system is activated by selecting reverse gear, a defect is indicated only by the indicator lamp flashing.

Park Distance Control (PDC)

General Block Diagram

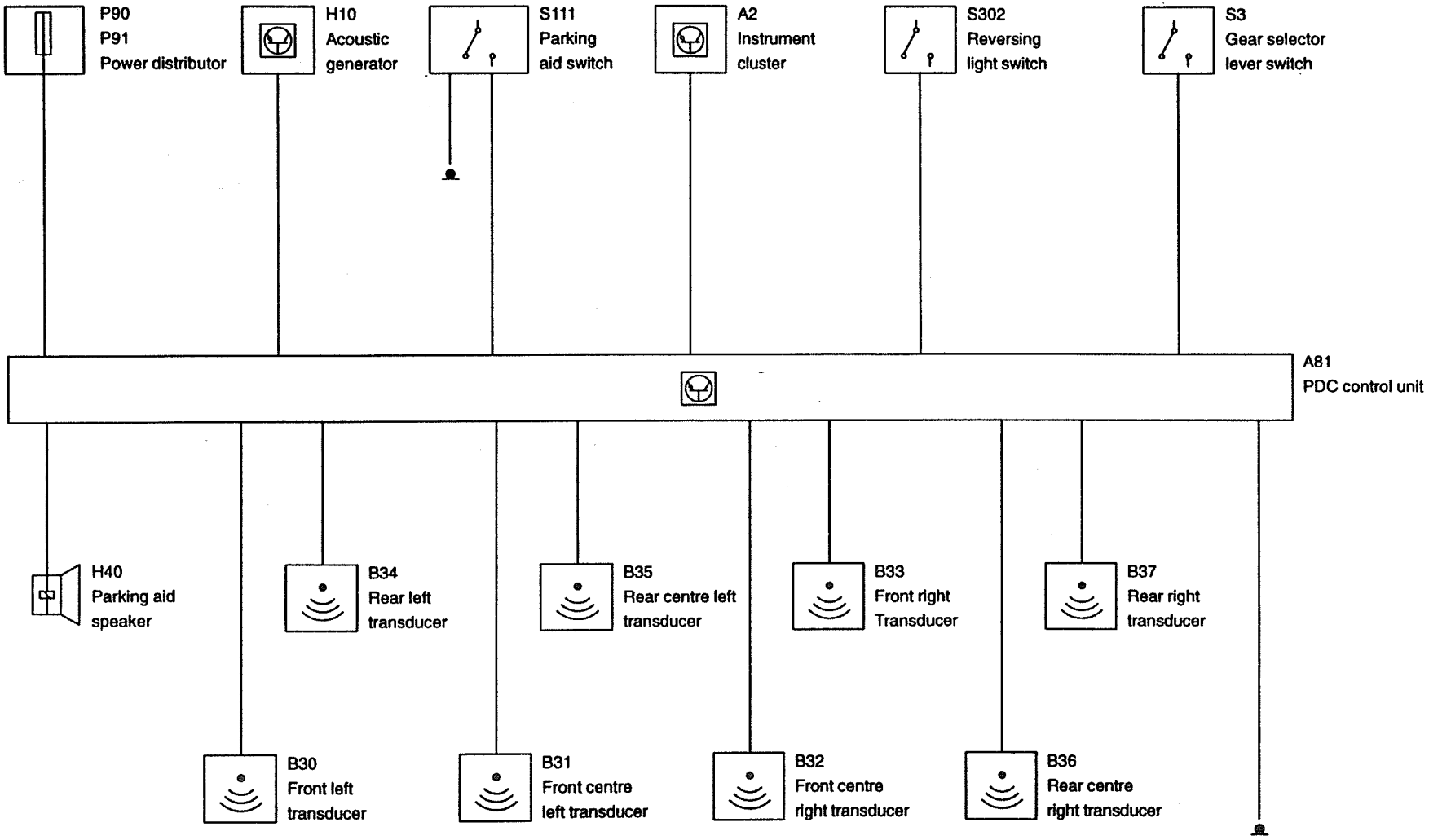

P32 66 002

Notes on the BMW DIAGNOSTIC SYSTEM

Diagnostic mode is only possible with the ignition switched on (terminal 15).

The PDC control unit does not feature a non-volatile memory.

Important!

The contents of the defect code memory are deleted when the battery is disconnected or terminal 30 or the ground connection are interrupted.

Always print out the screen page "PDC-IDENTIFICATION" before starting repair work on this system. The printout must accompany the control unit if it is to be sent in since it contains important information relating to the control unit.

In addition to activating certain components, distances can also be specified with ♦D♦3 COMPONENT ACTIVATION. If distances are specified within the measuring range of a transducer, an audible signal is provided as in actual operation.

Several distances can be specified at a time, however, only the shortest distance triggers the audible signal.

Defects in the PDC push button, position signal or reverse signal can be registered by the defect code memory only incompletely or not at all.

In this case, troubleshooting with the aid of ♦D♦2 Status monitoring is necessary.

Abbreviations

PDC	Park Distance Control
SG	Control unit
E	Input
A	Output
STVB	Plug connection
VL	Front left
VML	Front centre left
VMR	Front centre right
VR	Front right
HL	Rear left
HML	Rear centre left
HMR	Rear centre right
HR	Rear right

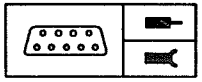

Pin Assignment

Connectors

Number	Type	Description
X300	26-pin, black	PDC connector
X361	6-pin, blue	STVB PDC switch
X362	2-pin	STVB rear tone generator
X363	1-pin	STVB front tone generator (BC gong)
X18013	26-pin, brown	Transducer connector
X18014	8-pin, black	STVB front transducer
X18015	8-pin, black	STVB rear transducer
X18016	2-pin, white	STVB front left transducer
X18017	2-pin, white	STVB front centre left transducer
X18018	2-pin, white	STVB front centre right transducer
X18019	2-pin, white	STVB front right transducer
X18020	2-pin, white	STVB rear left transducer
X18021	2-pin, white	STVB rear centre left transducer
X18022	2-pin, white	STVB rear centre right transducer
X18023	2-pin, white	STVB rear right transducer

Pin Assignments at Connector X300

Pin	Type	Description/function	Connection	Signal type	Tester display	Measurement notes
2	E	RxD link	Diagnostic bus			
5	A	TxD link	Diagnostic bus			
6	E	Speed-A signal	Instrument cluster	Square–wave signal	km/h	Simulate vehicle speed in accordance with Section 0130.0A–10/11
8	A	Rear tone generator activation	Rear one generator	Ground pulses	ON/OFF	Direct voltage during continuous tone approx. 5 V, increasing to approx. 12 V as distance increases
9	A	Indicator lamp activation	PDC switch		ON/OFF	
12	E	Control unit ground	Body ground	Ground		
13	E	Control unit continuous power supply	Terminal 30	approx. 12 V		
14	E	Reverse signal	Reversing lamps/selector lever switch	approx. 12 V	ON/OFF	
15	A	BC gong activation	BC gong	Ground pulses	ON/OFF	approx. 0 V for continuous tone increasing up to approx. 12 V as distance increases
16	E	System activation signal	PDC switch	Ground pulses	ON/OFF	
19	E	Ignition	Terminal 15	approx. 12 V	ON/OFF	
26	A	Positive supply, rear tone generator	Rear tone generator	approx. 12 V	ON/OFF	

Pin Assignments at Connector X361

Pin	Type	Description/function	Connection	Signal type	Tester display	Measurement notes
6		Switch-on ground pulse	PDC switch	Ground pulse		
5		Ground connection	Body ground	Ground		
4		Indicator lamp signal	PDC switch	approx. 12 V		
2		Search light	Terminal 58g	approx. 12 V		

Pin Assignments at Connector X18013

Pin	Type	Description/function	Connection	Signal type	Tester display	Measurement notes
1	E/A	Transducer transmit/receive signal, front right	STVB Transducer, front Pin 7	Damped oscillation	Distance in cm	Signal cannot be measured
2	E/A	Transducer transmit/receive signal, front centre right	STVB Transducer, front Pin 3	Damped oscillation	Distance in cm	Signal cannot be measured
4	E/A	Transducer transmit/receive signal, rear right	STVB Transducer, rear Pin 7	Damped oscillation	Distance in cm	Signal cannot be measured
6	E/A	Transducer transmit/receive signal, rear centre right	STVB Transducer, rear Pin 3	Damped oscillation	Distance in cm	Signal cannot be measured
8	E/A	Transducer transmit/receive signal, rear left	STVB Transducer, rear Pin 1	Damped oscillation	Distance in cm	Signal cannot be measured
10	E/A	Transducer transmit/receive signal, rear centre right	STVB Transducer, rear Pin 5	Damped oscillation	Distance in cm	Signal cannot be measured
12	E/A	Transducer transmit/receive signal, front left	STVB Transducer, front Pin 1	Damped oscillation	Distance in cm	Signal cannot be measured
13	E/A	Transducer transmit/receive signal, front centre right	STVB Transducer, front Pin 5	Damped oscillation	Distance in cm	Signal cannot be measured
14		Shield	Solder point in wire harness			
21		Shield	Solder point in wire harness			
26		Shield	Solder point in wire harness			

Troubleshooting

Notes

Use test adapters if necessary!

Defect Code Table

♦D♦1 Defect code memory – stored defect codes

Theoretically, all defect codes can be stored at the same time in the defect code memory.

♦D♦Transducer, front centre right → Defect code 01

♦D♦Transducer, front right → Defect code 02

♦D♦Transducer, front left → Defect code 03

♦D♦Transducer, front centre left → Defect code 04

♦D♦Transducer, rear centre right → Defect code 05

♦D♦Transducer, rear right → Defect code 06

♦D♦Transducer, rear left → Defect code 07

♦D♦Transducer, rear centre left → Defect code 08

♦D♦Rear tone generator → Defect code 09

♦D♦Front tone generator → Defect code 10

♦D♦Indicator lamp → Defect code 11

♦D♦PDC button → Defect code 12

♦D♦Position sensor → Defect code 13

Defects which cannot be stored

PDC button defective → Defect code 14

Position signal faulty → Defect code 15

Reverse signal faulty → Defect code 16

Search light not operating → Defect code 17

Diagnostic procedure not possible → Defect code 18

Defect Code 01 – 08

♦D♦1 Defect codes memory: One or several defect codes between 01 and 08 stored

Explanation: The transducers and their supply wires are checked for

- Shield short to ground
- Transducer wire short to ground
- Transducer wire short to shield
- Shield break
- Transducer wire break
- Transducer continuous signal (decay error)

Possible cause: Wire, plug connection or transducer damaged or defective.

If the defect code "transducer continuous signal" is stored for one of the rear centre transducers, check whether the vehicle has been driven with a trailer. In this case, there is no fault in the PDC system; simply clear the defect code memory.

Troubleshooting: As displayed on the screen.

Defect Codes 09, 10

♦D♦1: Defect code memory: One or both defect codes stored

Explanation: The relevant signal generator is checked for a short to positive and for a short to negative or break when switched off.

Possible cause: Supply wire, plug connection or signal generator damaged or defective.

Troubleshooting: As displayed on the screen.

Defect Code 11

♦D♦1 Defect code memory: Defect code 11 stored

Explanation: The indicator lamp is checked for a short to ground when switched on and for a short to positive or a break when switched off.

Possible cause: Supply wire, plug connection or indicator lamp damaged or defective.

Troubleshooting: As displayed on the screen.

Defect Code 12

♦D♦1 Defect code memory: Defect code 12 stored

Explanation: This defect code is stored when ground is applied at the input for longer than 3 seconds.

Possible cause: Supply wire, plug connection or indicator lamp damaged or defective.

Troubleshooting: As displayed on the screen.

Defect Code 13

♦D♦1 Defect code memory: Defect code 13 stored

Explanation: This defect code is stored, when ground is applied at the input for longer than 8 milliseconds.

Possible cause: Position signal line defective or damaged. Instrument cluster defective or other control unit which is supplied with the same signal defective.

Troubleshooting: As displayed on the screen.

Defect Code 14

PDC push button malfunction or defective (defect code not stored)

Possible cause: Switch, wires defective

Troubleshooting

Is ground applied at Pin 5 of the PDC switch connector? — no → Repair ground wire.

—*—

yes ↓

Check wire between connector PDC switch Pin 6 and device connector black, Pin 16. Is wire OK. — no → Repair wire.

—*—

yes ↓

Is approx. 12 V applied at connector PDC switch Pin 4? — no → Renew control unit.

—*—

yes ↓

Renew PDC switch.

—*—

Defect Code 15

Position signal faulty or not received (defect code not stored)

Possible cause: Wire, instrument cluster, control unit defective

Troubleshooting

Check wire from instrument cluster to control unit. Is wire OK?

— no → Repair wire.

—*—

yes ↓

Is approx. 12 V applied at Pin 6? (Vehicle speed = 0!)

— no → Check instrument cluster.

—*—

yes ↓

Simulate vehicle speed from 0 – 50 km/h (see Test Instructions E 34 Page 0130.0A – 08). Read out speed with BMW DIAGNOSTIC SYSTEM. (♦D♦2 Status monitoring). If display does not agree with speed display (note advance!), renew control unit.

—*—

Defect Code 16

Revers signal faulty or not received

Possible cause: Reversing lamp switch, selector lever switch (automatic), fuse, wire, control unit defective

Troubleshooting

Is approx. 12 V applied at control unit connector black Pin 14? — no → Renew control unit.

—*—

yes ↓

Check fuse F12. Is fuse OK? — no → Renew fuse.

—*—

yes ↓

Is approx. 12 V applied at reversing lamp switch Pin 1 or at selector lever switch Pin 6? — no → Check supply wire and repair if necessary.

—*—

yes ↓

Check wire between reversing lamp switch Pin 2 or selector lever switch (automatic) Pin 7 and PDC control unit Pin 14. Is wire OK? — no → Repair wire.

—*—

yes ↓

Renew reversing lamp switch or selector lever switch (automatic).

—*—

Defect Code 17

Search light defective

Possible cause: Ground connection, PDC switch (lamp), fuse, dimmer, wire defective

Troubleshooting

Is ground applied at PDC switch Pin 2? — no → Repair ground connection.

—*—

yes ↓

Is controlled voltage applied at PDC switch Pin 6? — yes → Renew PDC switch.

—*—

no ↓

Check fuse F31. Is fuse OK? — no → Renew fuse.

—*—

yes ↓

Is approx. 12 V applied at dimmer? — no → Check wire or light switch and repair if necessary.

—*—

yes ↓

Check dimmer. Is dimmer OK? — no → Renew dimmer.

—*—

yes ↓

Check wire between dimmer and PDC switch and repair if necessary.

—*—

Defect Code 18

Diagnostic mode not possible with control unit

Possible cause: Power supply, diagnostic links

Troubleshooting

Has entire system failed?

— no → Check diagnostic link as displayed on screen. Is link OK?

— no → Repair wires.

—*—

yes ↓

Renew control unit.

—*—

yes ↓

Check power supply (ground, terminal 30) at control unit. Is power supply OK?

— no → Repair power supply.

—*—

yes ↓

Is approx. 12 V applied at control unit connector black Pin 19?

— no → Check wire and fuse and repair or renew if necessary.

—*—

yes ↓

Renew control unit.

—*—