MICROFICHE INDEX

GROUPS 0.000 & 21.000

FICHE 1 OF 11

GROUP	DESCRIPTION	STARTING GRID LOCATION PARTS	ILLUSTRATIONS
–	GENERAL INFORMATION	1–A2	1–G2
–	ALPHABETICAL INDEX	1–B13	N.A.
0.000	8–CYLINDER ENGINE	1–E2	1–G5
21.000	ACCESSORY REFERENCE LIST	1–D2	N.A.
–	OUT OF FICHE CALLS	N.A.	1–L13

1–A1

LOGO-001
122192

CHEVROLET

1984 - 96 Y

PARTS AND ILLUSTRATION CATALOG

Exclusive Canadian and/or overseas export parts are published in this catalog in order to facilitate vehicles sold in Canada or overseas that may require service in the United States.

Your feedback and suggestions are requested to assist us in publishing the most complete and comprehensive catalogs possible. Please address any correspondence concerning this publication to the attention of the Engineering Department and include your address and dealer code to ensure a timely reply.

To ensure accurate and timely response to written correspondence involving catalog illustrations, please include the art number displayed in the upper right corner of each illustration. Unlike page numbers, this number remains constant from publication to publication and provides positive identification.

© 2000 GENERAL MOTORS SERVICE PARTS OPERATIONS–CHEVROLET–14Y

INTRODUCTION
CARLINE / LIGHT TRUCK CATALOG

Passenger Car/Light Truck Parts Catalogs have been compiled for the purpose of locating, identifying, and ordering replacement parts. All data and specifications contained in these publications are based on the latest product information available at the time of printing. General Motors Service Parts Operations reserves the right to make changes at any time without notice in data, price, specifications, materials and model. The "List Prices" shown are suggested prices only for sales to consumers.

Replacement parts are listed in Passenger Car/Light Truck catalogs under 17 major groups, as shown on the content page. Individual parts are assigned a Prime Group number, the first numeral of the group identifies the main unit it is affiliated with and following the decimal is the Minor Group number under which all parts of the same name and function are listed. For example, Group 0.519 Camshaft. The "0" denotes that it is an Engine Part, "519" the Minor group where all Engine Camshafts are listed. Related parts may also be found in the same group. Within each group, parts are listed by model year, vehicle series, part number, number used per vehicle or R.H.-L.H. designation, suggested list price, part name and description.

Parts may be used in different locations on the car requiring the listing of the part number in more than one group. When this "Cross Referencing" occurs, the prime group is shown in brackets, i.e.(1.850) in the description column.

To locate a listing for a part, determine the model vehicle and refer to the group number identifying it, which may be determined by using any of the following methods.

A. When the name of the part is known, consult the ALPHABETICAL INDEX in the regular Passenger Car/Light Truck Catalogs, which lists parts by noun name and Group Number where part is listed.

B. Reference may be made to the ILLUSTRATIONS, where Group Numbers, noun names or part numbers are shown.

C. When a part number is known and model application or a similar part is required, consult the DEALER PRICE SCHEDULE for the Group Number to locate the part in the Parts Catalog.

Parts having application or used with optional equipment are identified by Option Number or abbreviation of option. Familiarity with Option Numbers will assist in determining correct part required.

For complete identification of models refer to the specific carline/light truck catalog.

For complete option definition refer to the reference catalog.

Service part numbers are assigned to individual parts that make up an assembly used in the production of models. Certain items may not be listed, such as short tubing parts or fuel lines that can be made up by dealers from bulk material or attaching parts may be included in packages with the major assembly and not listed separately.

Passenger vehicles contain many parts dimensioned in the metric system. These parts are very close in dimension to familiar customary measurements in the inch system. It is important that during any vehicle maintenance procedure, replacement fasteners have the same measurements as those removed, whether metric or customary. Mismatched or incorrect fasteners can result in vehicle damage or malfunction, or possibly personal injury.

Fastener sizes denoted on illustrations may not reflect metric dimensions. However, since the same vehicle may be built with metric or customary fasteners, care should be exercised in selecting replacement part equivalent to the original fasteners in dimensions, strength and pitch of thread. Both metric and customary fasteners required for replacement are listed in the Service Parts Operations Standard Parts Catalog.

A special Service Parts Operations label, saying "Metric Fasteners Required" in red letters, will be used to identify service parts which require metric fasteners but replace parts which originally used inch fasteners. This label will enable dealers and over-the-counter customers to quickly recognize parts which have changed to metric fasteners.

Right Hand and Left Hand parts are so designated from the driver's position when seated in the vehicle.

CONTENTS

INTRODUCTION.....
GENERAL INFORMATION.....
ILLUSTRATED INDEX.....
ALPHABETICAL INDEX.....
ENGINE-CLUTCH.....0.000
COOLING-GRILLE-OIL SYSTEM.....1.000
CHASSIS WIRING-LAMPS.....2.000
FUEL-EXHAUST-CARBURETION.....3.000
TRANSMISSION-BRAKES.....4.000
BRAKES-REAR AXLE-PROPELLER SHAFT-WHEELS.....5.000
FRONT SUSPENSION-STEERING.....6.000
FRAME-SPRINGS-SHOCKS-BUMPERS.....7.000
FRONT END SHEET METAL-HEATER-LABELS.....8.000
BODY MOUNTING-AIR CONDITIONING-INSTRUMENT CLUSTER.....9.000
DOORS-REGULATORS-WINDSHIELD-WIPER-WASHER.....10.000
REAR GLASS-SEAT PARTS-ADJUSTER.....11.000
BODY MOLDINGS-SHEET METAL.. .....12.000
BODY WIRING-VINYL TOP TRIM.....13.000
INTERIOR TRIM-SEAT BELTS.....14.000
REAR SEAT TRIM-CARPETS-YARDAGE.....15.000

© 2000 GENERAL MOTORS SERVICE PARTS OPERATIONS-CHEVROLET-14Y

INDEX

The identification or usage charts are located in the catalog as listed below:

VIN.....
Model Designation.....
Paint Colors.....
Label Locations.....
Engine Service Policy.....(Group 0.000)
Engine Stamping Information.....(Group 0.000)
Engine Assembly Codes.....(Group 0.000)
Engine and Transmission Usage.....(Group 0.000)
V-Belt Chart.....(Group 1.066)
Radiator Chart.....(Group 1.219)
Starter Motor Chart.....(Group 2.041)
Spark Plug Wire Chart.....(Group 2.240)
Tune-Up Chart.....(Group 2.270)
Generator Chart.....(Group 2.275)
Distributor Chart.....(Group 2.361)
Lamp Socket Chart.....(Group 2.999)
Fuel Tank Meter Chart.....(Group 3.107)
Throttle Body Chart.....(Group 3.335)
Carburetor Chart.....(Group 3.725)
Transmission and Engine Usage.....(Group 4.000)
Transmission Identification Codes.....(Group 4.000)
Speedometer Gear Chart (A.T.).....(Group 4.337)
Master Cylinder Chart.....(Group 4.650)
Power Booster Chart.....(Group 4.901)
Trailing Axle I.D.....(Group 5.000)
Axle Information.....(Group 5.000)
Rear Axle.....(Group 5.000)
Steering Gear Chart.....(Group 6.508)
Steering Column Chart.....(Group 6.518)
Power Steering Pump Chart.....(Group 6.605)
Heater Module Chart.....(Group 8.845)
Air Conditioning Compressors.....(Group 9.170)
Air Conditioning Blowers.....(Group 9.215)
Electric Antenna Chart.....(Group 9.645)
Instrument Cluster Chart.....(Group 9.735)
Trim Combination Chart.....(Group 14.000)
Paint - Color By Family.....(Group 14.000)
Seat Belt Charts.....(Group 14.875)
Carpet Charts.....(Group 15.512)

FOLLOWING CHARTS ARE FOUND IN THE REFERENCE CATALOG.

Terminology-Parts Catalog
Abbreviations
Accessory Catalog Group and Alphabetical Index
Air Conditioning Connectors
Air Conditioning Retrofit Fittings
Blower Motor and Impeller(Passenger and Truck)
Body Number Plate
Carburetor Cross Reference Chart
Casting Cross Reference Chart
EGR Valve Chart
Electric Cooling Motor and Fan
Fabric Identification
Fluids and Capacities
Generator Cross Reference Chart
Locking Nuts & Wrenches For Aluminum Wheels & Wire Wheel Cover
Metrics
Option Label Explanation(Passenger and Truck)
Packard Electric Connectors
Packing Date Codes
Production Options By Family
Production Options
Seat Belt Codes
Seat Belt Cross Reference
Spark Plug Wire Chart(Passenger and Truck)
Starter Motor Cross Reference Chart
Transmission Reference Chart
V-Belt Chart
Wire Harness Tag Number Chart(Passenger and Truck)
NPN Work Sheet
R.F.I. Work Sheet

© 2000 GENERAL MOTORS SERVICE PARTS OPERATIONS–CHEVROLET–14Y

1984 GENERAL MOTORS PASSENGER CAR
VEHICLE IDENTIFICATION NUMBERING (VIN) SYSTEM

(1)(2)(3)	(4)	(5)	(6) (7)	(8)	(9)	(10)	(11)	(12) thru (17)
DIVISION/ MAKE	RESTRAINT SYS TYPE	CARLINE/ SERIES	BODY TYPE	ENGINE CODE	CHECK DIGIT	MODEL YEAR	PLANT CODE	PRODUCTION SEQUENCE NUMBER
1 G 1	A	Z	3 7	A	1	E	R	1 0 0 . 0 0 1

DIVISION CODE MAKE

1G1 Chevrolet Passenger
1G2 Pontiac Passenger
1G3 Oldsmobile Pass.
1G4 Buick Passenger
1G6 Cadillac Passenger
1G7 GM of Canada Pass.
1GC Chevrolet Truck
1GT GMC Truck
J8C*Chevrolet Truck
1G8 Chevrolet MPV
1G5 GMC Truck MPV
*
GM merchandised vehicle built by Isuzu Motors. Fujisawa Japan

RESTRAINT SYSTEM TYPE

CODE	RESTRAINT SYSTEM
A	Non Passive Restraint Manual Belts - A77

CAR LINE / SERIES

CHEVROLET (Code 1)

B-Chevette
C-Cavalier Cadet
D-Cavalier CS
E-Cavalier(Type 10)
H-Citation Coupe
J-Chevette Scooter
L-Impala
N-Caprice Classic
P-Camaro Sport Coupe
S-Camaro Berlinetta
W-Celebrity(19-27)
W-Malibu Classic (35-69)
X-Citation
Y-Corvette
Z-Monte Carlo

PONTIAC (Code 2)

B-J2000
C-J2000 LE
D-J2000 SE
E-Fiero Coupe
F-Fiero SE Coupe(37)
F-Pontiac 6000(19-27-35)
G-Pontiac 6000 LE
H-Pontiac 6000 STE
J-Grand Prix
K-Grand Prix LE
L-T1000(08-68)
L-Parisienne(35-69)
M-Fiero Sport Coupea
N-Bonneville
P-Grand Prix Brougham
R-Bonneville Brougham
S-Firebird(87)
S-Bonneville(69)
T-Phoenix SE
T-Parisienne Brougham (69)
W-Firebird Trans Am
X-Firebird Special Edition
Y-Phoenix
Z-Phoenix LE

OLDSMOBILE (Code 3)

B-Omega
C-Firenza
D-Firenza Brougham
E-Omega Brougham
G-98 Regency (RWD)
H-98 Regency Brougham (RWD)
J-Cutlass Ciera LS
K-Cutlass Calais

OLDSMOBILE (Code 3) (Cont'd)

M-Cutlass Supreme Brougham(47-69)
M-Cutlass Ciera Brougham(19-27)
N-Delta 88 Royals
P-Custom Cruiser
R-Cutlass Supreme
Y-Delta 88 Royale Brougham
Z-Toronado Brougham

BUICK (Code 4)

B-Skylark Custom
C-Skylark Limited
D-Skylark Sport(T Type)
E-Skyhawk(T Type)
F-Electra(T Type)(FWD)
G-Century Sport(T Type)
H-Century Custom
J-Regal
K-Regal Sport(T Type)
L-Century Limited
M-Regal Limited
N-LeSabre Custom
P-LeSabre Limited
R-Electra Limited(RWD)
S-Skyhawk Custom
T-Skyhawk Limited
U-Electra Park Avenue (RWD)
V-Electra Estate
Y-Riviera "T"
Z-Riviera Luxury

Y-Riviera "T"
Z-Riviera Luxury

CADILLAC

F-Fleetwood Limousine
G-Cimarron
L-Eldorado
M-DeVille(RWD)
S-Seville
W-Fleetwood Brougham (RWD)

GMC TRUCK & COACH

W-Caballero

ENGINE CODES

CODE	LITERS	CARB	DIV USAGE	PROD DIV
A	3.8L V6	2	1234	4
B	2.0 L4	2	1234	1
C	1.6 L4	2	12	1
D	1.8 L4	Dies	12	1
E	3.0 V6	2	34	4
F	2.5 L4	2	12	2
G	5.0 V8	4	12	1
H	5.0 V8	4	1234	1
L	2.8 V6	2	2	2
N	5.7 V8	Dies	12346	3
P	2.0 L4	TBI	12346	1
R	2.5 L4	TBI	1234	2
S	5.0 V8	TBI	12	1
T	4.3 V6	Dies	1234	3
V	4.3 V6	Dies	1234	3
X	2.8 V6	2	1234	1
Y	5.0 V8	4	34	3
Z	2.8 V6	2	1234	1
0	1.8 L4	TBI	234	2
1	2.8 V6	2	12	1
2	2.5 L4	TBI	12	2
4	4.1 V6	4	346	4
5	2.5 L4	2	1234	2
6	5.7 V8	4	1	1
8	5.7 V8	TBI	1	1
8	3.8 V6	4	4	4
8	4.1 V8	DFI	6	6
9	6.0 V8	DFI	6	6
9	3.8 V6	2	12	1
9	5.0 V8	4	3	3

NOTE: DIVISION / MAKE
1st Position = Country
1 = United States
2 = Canada
J = Japan

2nd Position = Manufacture
G = General Motors

3rd Position = Division
1 = Chevrolet
2 = Pontiac
3 = Oldsmobile
4 = Buick
6 = Cadillac
7 = Canada
Z = Isuzu (Luv)

* BODY TYPE - SEE MODEL CHART

© 2000 GENERAL MOTORS SERVICE PARTS OPERATIONS-CHEVROLET-14Y

1985 GENERAL MOTORS PASSENGER CAR
VEHICLE IDENTIFICATION NUMBERING (VIN) SYSTEM

(1)(2)(3)	(4)	(5)	(6)	(7)	(8)	(9)	(10)	(11)	(12) thru (17)
DIVISION/ MAKE	CAR LINE CODE	CARLINE/ SERIES	BODY TYPE		ENGINE CODE	CHECK DIGIT	MODEL YEAR	PLANT CODE	PRODUCTION SEQUENCE NUMBER
1 G 1	G	Z	3	7	H	X	F	R	1 0 0 . 0 0 1

DIVISION CODE MAKE

1G1 Chevrolet Passenger
1G2 Pontiac Passenger
1G3 Oldsmobile Pass.
1G4 Buick Passenger
1G6 Cadillac Passenger
1G7 GM of Canada Pass.
1GC Chevrolet Truck
1GT GMC Truck
J8C* Chevrolet Truck
1G8 Chevrolet MPV
1G5 GMC Truck MPV
*
GM merchandised vehicle built by Isuzu Motors. Fujisawa Japan

CARLINE CODE

CHEVROLET

A-Celebrity
B-Impala Caprice (RWD)
F-Camaro
G-El Camino/Monte Carlo
J-Cavalier
M-Sprint
R-Spectrum
S-Nova(Venture)
T-Chevette
X-Citation
Y-Corvette

PONTIAC

A-6000
B-Parisienne
F-Firebird
G-Grand Prix Brougham
J-Sunbird 2000
N-Grand Am
P-Fiero
T-T1000

OLDSMOBILE

A-Cutlass Ciera
B-Delta 88 Custom Cruiser (RWD)
C-98 Regency (FWD)
D-98 Regency (RWD)
E-Toronado
G-Cutlass
J-Firenza
N-Calais

BUICK

A-Century
B-LeSabre Electra Estate Wagon (RWD)
C-Electra (FWD)
E-Riviera
G-Regal
J-Skyhawk
N-Somerset Regal
X-Skylark

CADILLAC

C-Fleetwood/DeVille FWD
D-Fleetwood/DeVille RWD
E-Eldorado
J-Cimarron
K-Seville

CAR LINE / SERIES

CHEVROLET (Code 1)

B-Chevette
C-Cavalier
D-Cavalier CS
E-Cavalier(Hatchback) (Type 10 - Convert.)
F-Spectrum - Level I
G-Spectrum - Level II
H-Citation II Coup
J-Chevette Scooter
K-Nova
L-Impala
N-Caprice Classic
P-Camaro Sport Coupe
R-Sprint
S-Camaro Berlinetta
W-Celebrity (19-27)
X-Citation
Y-Corvette
Z- Monte Carlo

PONTIAC (Code 2)

B-Sunbird 2000
C-Sunbird 2000 LE
D-Sunbird 2000 SE
E-Fiero Coupe
F-Fiero (SE)(37)
G-Pontiac 6000 SE
H-Pontiac 6000 STE
J-Grand Prix
K-Grand Prix LE
L-T1000 (08-68)
L-Parisienne(35,69)
M-Fiero Sport Coupe
N-Bonneville
P-Grand Prix Brougham
R-Bonneville Brougham
S-Firebird (87)
S-Bonneville LE (69)
T-Parisienne Brougham (69)
W-Firebird Trans Am
X-Firebird Special Ed.

OLDSMOBILE (Code 3)

C-Firenza
D-Firenza Brougham
G-98 Regency (RWD)
H-98 Regency Brougham (RWD)
J-Cutlass Ciera LS
K-Cutlass Clais

OLDSMOBILE (Cont'd)

M-Cutlass Supreme Brought(47-69)
M-Cutlass Ciera Brougham(19-27)
N-Delta 88 Royale
P-Custom Cruiser
R-Cutlass Supreme
W-98 Regency Brougham (FWD)
X-98 Regency (FWD)
Y-Delta 88 Royale Brougham
Z-Toronado Brougham

BUICK (Code 4)

B-Skylark Custom
C-Skylark Limited
D-Skylark Sport-T Type
E-Skyhawk - T Type
F-Electra -T Type(FWD)
G-Century Sport-T Type
H-Century Costom
J-Regal
K-Regal Sport-T Type
L-Century Limited
M-Regal Limited
N-LeSabre Custom
P-LeSabre Limited
R-Electra Limited(RWD)
S-Skyhawk Custom
T-Skyhawk Limited(RWD)
U-Electra Park Avenue (RWD)
V-Electra Estate (RWD)
W-Electra Park Avenue (FWD)
X-Electra Limited(FWD)
Y-Riviera "T"
Z-Riviera Luxury

CADILLAC (Code 6)

B-Fleetwood (FWD)
D-DeVille (FWD)
F-Fleetwood Limousine
G-Cimarron
L-Eldorado
S-Seville
W-Fleetwood Brougham (RWD)

GMC TRUCK and COACH (Code 5)

W-Caballero

ENGINE CODES

CODE	LITERS	CARB	DIV USAGE
A	3.8L V6	2	1234
C	1.6 L4	2	12
D	1.8 L4	Dies	12
E	3.0 V6	2	34
F	5.0 V8	EFI	12
G	5.0 V8	4	12
H	5.0 V8	4	1234
J	1.0 L4	MFI	2 4
K	1.5 L4	2	1
L	3.0 V6	MFI	234
M	1.0 L3	2	1
N	5.7 V8	Dies	12346
P	2.0 L4	EFI	12346
R	2.5 L4	TBI	1234
S	2.8 V6	MFI	12
T	4.3 V6	Dies	1234
U	2.5 L4	TBI	234
V	4.3 V6	Dies	1234
W	2.8 V6	MFI	12346
X	2.8 V6	2	1234
Y	5.0 V8	4	34
Z	4.3 V6	TBI	12 4
0	1.8 L4	TBI	234
2	2.5 L4	TBI	12
3	3.8 V6	MFI	34
5	1.5 L4	Dies	1
6	5.7 V8	4	12
7	4.3 V6	Dies	3
8	5.7 V8	MFI	1
8	4.1 V8	DFI	6
9	2.8 V6	MFI	2
9	5.0 V8	4	3 6
9	3.8 V6	SFI	4

NOTE: DIVISION / MAKE
1st Position = Country
1 = United States
2 = Canada
J = Japan

2nd Position = Manufacture
G = General Motors

3rd Position = Division
1 = Chevrolet
2 = Pontiac
3 = Oldsmobile
4 = Buick
6 = Cadillac
7 = Canada
Z = Isuzu (Luv)

* BODY TYPE - SEE MODEL CHART

© 2000 GENERAL MOTORS SERVICE PARTS OPERATIONS–CHEVROLET–14Y

1986 GENERAL MOTORS PASSENGER CAR
VEHICLE IDENTIFICATION NUMBERING (VIN) SYSTEM

(1)(2)(3)	(4)	(5)	(6)	(7)	(8)	(9)	(10)	(11)	(12) thru (17)
DIVISION/ MAKE	CAR LINE CODE	CARLINE/ SERIES	BODY TYPE		ENGINE CODE	CHECK DIGIT	MODEL YEAR	PLANT CODE	PRODUCTION SEQUENCE NUMBER
1 G 1	G	Z	3	7	H	X	G	R	1 0 0 . 0 0 1

DIVISION CODE MAKE

1G1 Chevrolet Passenger
1G2 Pontiac Passenger
1G3 Oldsmobile Pass.
1G4 Buick Passenger
1G6 Cadillac Passenger
1G7 GM of Canada Pass.
1GC Chevrolet Truck
1GT GMC Truck
J8C*Chevrolet Truck
1GB Chevrolet MPV
1G5 GMC Truck MPV
*
GM merchandised vehicle built by Isuzu Motors. Fujisawa Japan

CARLINE CODE

CHEVROLET

A-Celebrity
B-Impala Caprice (RWD)
F-Camaro
G-El Camino/Monte Carlo
J-Cavalier
M-Sprint
R-Spectrum
S-TVX (Venture)
T-Chevette
Y-Corvette

PONTIAC

A-6000
B-Parisienne
F-Firebird
G-Grand Prix Brougham
J-Sunbird 2000
N-Grand Am
P-Fiero
T-T1000

OLDSMOBILE

A-Cutlass Ciera
B-Custom Cruiser (RWD)
C-98 Regency (FWD)
D-98 Regency (RWD)
E-Toronado
G-Cutlass
H-Delta 88
J-Firenza
N-Calais

BUICK

A-Century
B-LeSabre Electra Estate Wagon (RWD)
C-Electra (FWD)
E-Riviera

BUICK (Cont'd)

G-Regal
H-LeSabre
J-Skyhawk
N-Somerset Regal

CADILLAC

C-Fleetwood DeVille(FWD)
D-Fleetwood DeVille(RWD)
E-Eldorado
J-Cimarron
K-Seville

CAR LINE / SERIES

CHEVROLET (Code 1)

B-Chevette
C-Cavalier
D-Cavalier CS
E-Cavalier(Hatchback)
(Type 10 - Convert.)
F-Spectrum - Level I
G-Spectrum - Level II
J-Chevette Scooter
K-TVX
L-Impala
N-Caprice Classic
P-Camaro Sport Coupe
R-Sprint
S-Camaro Berlinetta
W-Celebrity (19-27)
Y-Corvette
Z-Monte Carlo

PONTIAC (Code 2)

B-Sunbird 2000
C-Sunbird 2000 LE
D-Sunbird 2000 SE
E-Fiero Coupe
E-Grand Am
F-Fiero(SE)(37)
F-Pontiac 6000
G-Fiero GT Sport Coupe
G-Pontiac 6000 LE
H-Pontiac 6000 STE
J-Grand Prix
K-Grand Prix LE
L-T1000(08-68)
L-Parisienne(35-69)
M-Fiero Sport Coupe
N-Bonneville
P-Grand Prix Brougham
R-Bonneville Brougham
S-Firebird(87)
S-Bonneville LE(69)
T-Parisienne Brougham (69)
V-Grand Am LE
W-Firebird Trans Am
X-Firebird Special Ed.

OLDSMOBILE (Code 3)

C-Firenza
D-Firenza Brougham
F-Calais
J-Cutlass Ciera LS
K-Cutlass Calais
M-Cutlass Supreme Brougham(47-69)

OLDSMOBILE (Code 3)

M-Cutlass Ciera Brougham(19-27)
N-Delta 88 Royale
P-Custom Cruiser
R-Cutlass Supreme
T-Calais Supreme
W-98 Regency Brougham (FWD)
X-98 Regency(FWD)
Y-Delta 88 Royale Brougham
Z-Toronado Brougham

BUICK (Code 4)

E-Skyhawk(T Type)
F-Electra(T Type)(FWD)
G-Century Sport(T Type)
H-Century Custom
J-Regal
J-Somerset
K-Somerset(T Type)
K-Regal Sport(T Type)
L-Century Limited
M-Somerset Limited
M-Regal Limited
P-LeSabre Custom
R-LeSabre Limited
R-LeSabre Estate Wagon
S-Skyhawk Custom
T-Skyhawk Limited
U-Electra Park Ave(RWD)
V-Electra Estate Wagon
V-Electra Estate(RWD)
W-Electra Park Avenue (FWD)
X-Electra Limited(FWD)
Y-Riviera "T"
Z-Riviera Luxury

CADILLAC (Code 6)

D-DeVille(FWD)
G-Cimarron
H-Fleetwood Limousine
L-Eldorado
S-Seville
W-Fleetwood Brougham (RWD)

GM TRUCK & COACH (Code 5)

W-Caballero

ENGINE CODES

CODE	LITERS		CARB	DIV USAGE
A	3.8L	V6	2	1234
B	3.8	V6	FI	34
C	1.6	L4	2	12
D	1.8	L4	Dies	12
E	3.0	V6	2	34
F	5.0	V8	EFI	12
G	5.0	V8	4	12
H	5.0	V8	4	1234
J	1.8	L4	MFI	2 4
K	1.5	L4	2	1
L	3.0	V6	MFI	234
M	1.0	L4	2	1
N	5.7	V8	Dies	12346
P	2.0	L4	FI	12346
R	2.5	L4	TBI	1234
S	2.8	V6	MFI	12
T	4.3	V6	Dies	1234
U	2.5	L4	TBI	234
V	4.3	V6	Dies	1234
W	2.8	V6	MFI	12346
X	2.8	V6	2	1234
Y	5.0	V8	4	12346
Z	4.3	V6	TBI	12 4
0	1.8	L4	TBI	234
2	2.5	L4	TBI	12
3	3.8	V6	MFI	34
5	1.5	L4	Dies	1
6	5.7	V8	4	12
7	3.8	V6	SFI	4
8	5.7	V8	MFI	1
8	4.1	V8	DFI	6
9	2.[illegible]	V6	MFI	2
9	5.0	V8	4	3 6
9	3.8	V6	SFI	4

NOTE: DIVISION / MAKE

1st Position = Country
- 1 = United States
- 2 = Canada
- J = Japan

2nd Position = Manufacture
- G = General Motors

3rd Position = Division
- 1 = Chevrolet
- 2 = Pontiac
- 3 = Oldsmobile
- 4 = Buick
- 6 = Cadillac
- 7 = Canada
- Z = Isuzu (Luv)

* BODY TYPE - SEE MODEL CHART

© 2000 GENERAL MOTORS SERVICE PARTS OPERATIONS-CHEVROLET-14Y

1987 GENERAL MOTORS PASSENGER CAR
VEHICLE IDENTIFICATION NUMBERING (VIN) SYSTEM

(1)(2)(3) DIVISION/ MAKE	(4) CAR LINE CODE	(5) CARLINE/ SERIES	(6) BODY TYPE	(7) REST-RAINT SYST.	(8) ENGINE CODE	(9) CHECK DIGIT	(10) MODEL YEAR	(11) PLANT CODE	(12) thru (17) PRODUCTION SEQUENCE NUMBER
1 G 1	G	Z	1*	1@	H	X	H	R	1 0 0 . 0 0 1

DIVISION CODE MAKE

1G1 Chevrolet Passenger
1G2 Pontiac Passenger
1G3 Oldsmobile Pass.
1G4 Buick Passenger
1G6 Cadillac Passenger
1G7 GM of Canada Pass.
1GC Chevrolet Truck
1GT GMC Truck
J8C*Chevrolet Truck
1G8 Chevrolet MPV
1G5 GMC Truck MPV
*
GM merchandised vehicle built by Isuzu Motors. Fujisawa Japan

CARLINE CODE

CHEVROLET

A-Celebrity
B-Impala Caprice (RWD)
F-Camaro
G-El Camino/Monte Carlo
J-Cavalier
L-Corsica/Beretta
M-Sprint
R-Spectrum
S-TVX (Venture)
T-Chevette
Y-Corvette

PONTIAC

A-6000
B-Safari
F-Firebird
G-Grand Prix Brougham
H-Bonneville
J-Sunbird 2000
N-Grand Am
P-Fiero
T-T1000

OLDSMOBILE

A-Cutlass Ciera
B-Custom Cruiser (RWD)
C-98 Regency (FWD)
E-Toronado
G-Cutlass
H-Delta 88
J-Firenza
N-Calais

BUICK

A-Century
B-LeSabre Electra Estate Wagon (RWD)
C-Electra (FWD)
E-Riviera
G-Regal
H-LeSabre
J-Skyhawk

BUICK (Cont'd)

N-Somerset Regal

CADILLAC

C-DeVille(FWD)

CADILLAC

D-Fleetwood DeVille(RWD)
E-Eldorado
J-Cimarron
K-Seville
V-Allante

CAR LINE / SERIES

CHEVROLET (Code 1)

B-Chevette CS
C-Cavalier
D-Cavalier CS
E-Cavalier(Hatchback) (Type 10 - Convert.)
F-Spectrum - Level I
F-Cavalier Z24
G-Spectrum - Level II
K-Nova
L-Caprice
N-Caprice Classic
P-Camaro Sport Coupe
R-Sprint
S-Sprint ER
T-Corsica
U-Caprice Brougham
V-Beretta
W-Celebrity (19-27)
Y-Corvette
Z-Monte Carlo

PONTIAC (Code 2)

B-Sunbird 2000
D-Sunbird 2000 SE
E-Pontiac 6000 SE
F-Fiero Coupe
E-Grand Am
F-Fiero(SE)(37)
F-Pontiac 6000
G-Fiero GT Sport Coupe
G-Pontaic 6000 LE
H-Pontiac 6000 STE
J-Grand Prix
K-Grand Prix LE
L-T1000(08-68)
L-Safari Wagon
M-Fiero Sport Coupe
P-Grand Prix Brougham
R-Firefly
S-Firebird(87)
U-Sunbird GT
V-Grand Am LE
W-Grand AM SE
W-Firebird Trans Am
X-Bonneville
Z-Bonneville LE

OLDSMOBILE (Code 3)

C-Firenza
D-Firenza Brougham
F-Calais
J-Cutlass Ciera LS
K-Cutlass Calais
M-Cutlass Supreme Brougham(47-69)

OLDSMOBILE (Code 3)

M-Cutless Ciera Brougham(19-27)
N-Delta 88 Royale
P-Custom Cruiser
R-Cutlass Supreme
T-Calais Supreme
W-98 Regency Brougham (FWD)
X-98 Regency(FWD)
Y-Delta 88 Royale Brougham
Z-Toronado Brougham

BUICK (Code 4)

C-Skylark
D-Skylark Limited
E-Skyhawk(T Type)
F-Electra(T Type)(FWD)
G-Century Sport(T Type)
H-Century Custom
H-LeSabre
J-Regal
J-Somerset Custom
K-Somerset(T Type)
L-Century Limited
M-Regal Limited
M-Somerset Limited
P-LeSabre Custom
R-LeSabre Limited
R-LeSabre Estate Wagon
S-Skyhawk Custom
T-Skyhawk Limited
V-Electra Estate(RWD)
W-Electra Park Ave(FWD)
X-Electra Limited(FWD)
Y-Riviera "T"
Z-Riviera Luxury

CADILLAC (Code 6)

B-Fleetwood(FWD)
D-DeVille(FWD)
G-Cimarron
H-Limousine
L-Eldorado
R-Allante
S-Seville
S-Fleetwood 60 Special
W-Fleetwood Brougham (RWD)

GM TRUCK & COACH (Code 5)

W-Caballero

ENGINE CODES

CODE	LITERS		CARB	DIV USAGE
A	3.8	V6	2	1234
C	1.6	L4	2	12
D	2.3	L4	FI	3
F	5.0	V8	TPI	12
G	5.0	V8	4	12
H	5.0	V8	4	1234
K	2.0	L4	EFI	1
L	3.0	V6	MFI	234
M	2.0	L4	MFI	1
R	2.5	L4	TBI	1234
S	2.8	V6	MFI	12
U	2.5	L4	TBI	234
W	2.8	V6	MFI	12346
Y	5.0	V8	4	12346
Z	4.3	V6	TBI	12 4
1	2.0	L4	EFI	1 34
2	1.0	L3	EFI	1
3	3.8	V6	MFI	34
4	1.6	L4	2	1
5	1.0	L3	2	1
6	5.7	V8	4	1
7	3.8	V6	SFI	4
7	1.5	L4	2	1
7	4.1	V8	DFI	6
8	5.7	V8	MFI	1
8	4.1	V8	DFI	6
9	2.8	V6	MFI	2
9	5.0	V8	4	3 6
9	3.8	V6	SFI	4

NOTE: DIVISION / MAKE
1st Position = Country
1 = United States
2 = Canada
J = Japan

2nd Position = Manufacture
G = General Motors

3rd Position = Division
1 = Chevrolet
2 = Pontiac
3 = Oldsmobile
4 = Buick
6 = Cadillac
7 = Canada
Z = Isuzu (Luv)

* BODY TYPE - SEE MODEL CHART

@ RESTRAINT SYSTEM TYPE
1 MANUAL BELTS
2 MANUAL BELTS(BUILT IN SFTY)
3 MANUAL BELTS(BUILT IN SFTY-DRIVER ONLY)
4 AUTOMATIC BELTS

© 2000 GENERAL MOTORS SERVICE PARTS OPERATIONS–CHEVROLET–14Y

1988 GENERAL MOTORS PASSENGER CAR
VEHICLE IDENTIFICATION NUMBERING (VIN) SYSTEM

(1)(2)(3)	(4)	(5)	(6)	(7)	(8)	(9)	(10)	(11)	(12) thru (17)
DIVISION/ MAKE	CAR LINE CODE	CARLINE/ SERIES	BODY TYPE	REST-RAINT SYST.	ENGINE CODE	CHECK DIGIT	MODEL YEAR	PLANT CODE	PRODUCTION SEQUENCE NUMBER
1 G 1	G	Z	1*	1@	H	X	J	R	1 0 0 . 0 0 1

DIVISION CODE MAKE

1G1 Chevrolet Passenger
1G2 Pontiac Passenger
1G3 Oldsmobile Pass.
1G4 Buick Passenger
1G6 Cadillac Passenger
1G7 GM of Canada Pass.
1GC Chevrolet Truck
1GT GMC Truck
J8C*Chevrolet Truck
1G8 Chevrolet MPV
1GF GMC Truck MPV
*
GM merchandised vehicle built by Isuzu Motors. Fujisawa Japan

CARLINE CODE

CHEVROLET

A-Celebrity
B-Impala Caprice (RWD)
F-Camaro
G-Monte Carlo
J-Cavalier
L-Corsica/Beretta
M-Sprint
R-Spectrum
S-Nova
Y-Corvette

PONTIAC

A-6000
B-Safari
F-Firebird
H-Bonneville
J-Sunbird 2000
M-Firefly
N-Grand Am
P-Fiero
T-Lemans
W-Grand Prix

OLDSMOBILE

A-Cutlass Ciera
B-Custom Cruiser (RWD)
C-98 Regency (FWD)
C-Touring Sedan
E-Toronado
G-Cutlass Supreme
H-Delta 88
J-Firenza
N-Calais
W-Cutlass

BUICK

A-Century
B-LeSabre Electra Estate Wagon (RWD)
C-Electra (FWD)
E-Riviera/Reatta
H-LeSabre
J-Skyhawk
N-Somerset/Skylark

BUICK (Cont'd)

W-Regal

CADILLAC

C-Fleetwood 60 Spl/D'Eleg
C-DeVille(FWD)

CADILLAC

D-Brougham
E-Eldorado
J-Cimarron
K-Seville
V-Allante

CAR LINE / SERIES

CHEVROLET (Code 1)

C-Cavalier
D-Cavalier CS
E-Cavalier RS
F-Cavalier Z24/Convr.
F-Spectrum Coupe(77)
G-Spectrum Sedan(69)
K-Nova
L-Caprice
L-Nova(Twin Cam 16val)
N-Caprice Classic
P-Camaro Sport Coupe & Convr.
R-Sprint
S-Sprint ER
T-Corsica
U-Caprice Brhm LS
V-Beretta
W-Celebrity
Y-Corvette
Z-Monte Carlo

PONTIAC (Code 2)

B-Sunbird 2000
D-Sunbird 2000 SE
E-Pontiac 6000 SE
E-Fiero Coupe
E-Grand Am
F-Fiero SE (Coupe)
F-Pontiac 6000
G-Fiero GT Coupe
G-Pontaic 6000 LE
H-Pontiac 6000 STE
J-Grand Prix
K-Grand Prix LE
L-Safari Wagon
M-Fiero Sport Coupe
N-Lemans
P-Grand Prix SE
R-Firefly
R-Lemans SE
S-Firebird
S-Lemans GSE
U-Sunbird GT
V-Grand Am LE
W-Grand AM SE
W-Firebird Trans Am
X-Bonneville LE
X-Lemans Aero Coupe
Y-Bonneville SSE
Z-Bonneville SE

OLDSMOBILE (Code 3)

C-Firenza
F-Calais
H-Cutlass Supreme
J-Cutlass Ciera/Wgn

OLDSMOBILE (Code 3)

K-Cutlass Calais
M-Cutlass Cruiser Broughan Wagon
M-Cutlass Ciera Brougham & SL
N-Delta 88 Royale
P-Custom Cruiser S/W
R-Cutlass Supreme
R-Sport Coupe/ES Sedan
S-Cutlass Ciera
S-Cutlass Supreme SL
T-Calais SL
V-98 Touring Sedan
V-Toronado Trofe'o
W-98 Regency Brougham
X-98 Regency(FWD)
Y-Delta 88 Royal Brhm
Z-Toronado

BUICK (Code 4)

B-Regal Custom
C-Reatta
C-Skylark
D-Regal Limited
D-Skylark Limited
F-Electra(T Type)(FWD)
H-Century Custom
J-Somerset Custom
L-Century Limited
L-Estate Wagon
M-Somerset Limited
P-LeSabre Custom
R-LeSabre Limited
R-LeSabre Estate Wagon
S-Skyhawk Custom
V-Electra Estate(RWD)
W-Electra Park Ave(FWD)
X-Electra Limited(FWD)
Z-Riviera Luxury

CADILLAC (Code 6)

B-Fleetwood(FWD)
D-DeVille(FWD)
G-Cimarron
L-Eldorado
R-Allante
S-Seville
S-Fleetwood Sixty Spec
W-Fleetwood Brougham (RWD)

ENGINE CODES

CODE	LITERS		CARB	DIV USAGE
C	3.8	V6	FI	234
D	2.3	L4	FI	234
E	5.0	V8	FI	12
F	5.0	V8	FI	12
G	5.0	V8	4	1
H	5.0	V8	4	1
K	2.0	L4	FI	234
L	3.0	V6	FI	34
M	2.0	L4	FI	2
R	2.5	L4	FI	1234
S	2.8	V6	FI	12
T	3.1	V6	FI	2
U	2.5	L4	FI	234
W	2.8	V6	FI	12346
Y	5.0	V8	4	12346
Z	4.3	V6	FI	1
1	2.0	L4	FI	1 34
2	1.0	L3	FI	1
3	3.8	V6	FI	234
4	1.6	L4	2	1
5	1.0	L3	2	1
5	1.6	L4	FI	1
5	4.5	V8	FI	6
6	5.7	V8	4	1
6	1.6	L4	FI	2
7	1.5	L4	2	1
7	4.1	V8	FI	6
8	5.7	V8	FI	12
9	2.8	V6	FI	2
9	5.0	V8	4	6
9	1.5	L4	FI	1

NOTE:DIVISION / MAKE
1st Position = Country
1 = United States
2 = Canada
J = Japan

2nd Position = Manufacture
G = General Motors

3rd Position = Division
1 = Chevrolet
2 = Pontiac
3 = Oldsmobile
4 = Buick
6 = Cadillac
7 = Canada
Z = Isuzu (Luv)

* BODY TYPE - SEE MODEL CHART

@ RESTRAINT SYSTEM TYPE
1 MANUAL BELTS
2 MANUAL BELTS(W/CERTIFIED BUILT IN SFTY)
3 MANUAL BELTS(DR INFLATABLE)
4 AUTOMATIC BELTS

© 2000 GENERAL MOTORS SERVICE PARTS OPERATIONS-CHEVROLET-14Y

1989 GENERAL MOTORS PASSENGER CAR
VEHICLE IDENTIFICATION NUMBERING (VIN) SYSTEM

(1)(2)(3)	(4)	(5)	(6)	(7)	(8)	(9)	(10)	(11)	(12) thru (17)
DIVISION/ MAKE	CAR LINE CODE	CARLINE/ SERIES	BODY TYPE	REST-RAINT SYST.	ENGINE CODE	CHECK DIGIT	MODEL YEAR	PLANT CODE	PRODUCTION SEQUENCE NUMBER
1 G 1	G	Z	1*	10	H	X	[illegible]	R	1 0 0 . 0 0 1

DIVISION CODE MAKE

1G1 Chevrolet Passenger
1G2 Pontiac Passenger
1G3 Oldsmobile Pass.
1G4 Buick Passenger
1G5 Pontiac-Incomplete
1G6 Cadillac Passenger
1G7 GM of Canada Pass.
1GC Chevrolet Truck
1GT GMC Truck
J8C*Chevrolet Truck
1G8 Chevrolet MPV
1G5 GMC Truck MPV
*
GM merchandised vehicle built by Isuzu Motors. Fujisawa Japan

CARLINE CODE

CHEVROLET

A-Celebrity
B-Caprice
F-Camaro
J-Cavalier
L-Corsica/Beretta
Y-Corvette

PONTIAC

A-6000
B-Safari
B-Parisienne(Exp.only)
F-Firebird
H-Bonneville
J-Sunbird
M-Firefly
N-Grand Am
T-Lemans
W-Grand Prix

OLDSMOBILE

A-Cutlass Ciera
B-Custom Cruiser (RWD)
C-98 Regency/Brougham
C-Touring Sedan
E-Toronado
E-Toronado Trofe'o
H-Delta 88
N-Calais
N-Cutlass International
W-Cutlass

BUICK

A-Century
B-LeSabre Elec.Est.Wgn.
B-Roadmaster(Exp.only)
B-Coachbuilder Wagon
C-Electra (FWD)
E-Riviera/Reatta
H-LeSabre
J-Skyhawk
N-Skylark
W-Regal

CADILLAC

C-Fleetwood 60 Spl/D'Eleg
K-Seville
C-DeVille(FWD)
C-Comer/Chassis
D-Brougham

CADILLAC

E-Eldorado
V-Allante

CAR LINE / SERIES

CHEVROLET (Code 1)

C-Cavalier
F-Cavalier Z24/Convr.
L-Caprice
N-Caprice Classic
P-Camaro Sport Coupe & Convr.
T-Corsica
U-Caprice Classic Brhm: & Brhm LS
V-Beretta
W-Celebrity
W-Beretta GT
Y-Corvette
Z-Corsica LTZ
Z-Corvette ZR1

PONTIAC (Code 2)

B-Sunbird 2000
D-Sunbird 2000 SE
D-Parisienne(Exp.only)
E-Pontiac 6000 SE
E-Fiero Coupe
E-Grand Am LE
F-Pontiac 6000 LE
G-Fiero GT Coupe
G-Pontiac 6000 LE
H-Pontaic 6000 STE
J-Pontiac 6000 SE
J-Grand Prix
K-Grand Prix LE
L-Safari Wgn(Exp.only)
N-Lemans
P-Grand Prix SE
R-Firefly
R-Lemans SE
S-Firebird
S-Lemans GSE
U-Sunbird GT
U-Parisienne(Exp.only)
W-Grand AM SE
W-Firebird Trans Am
X-Bonneville LE
X-Lemans Aero Coupe
Y-Bonneville SSE
Z-Bonneville SE

OLDSMOBILE (Code 3)

F-Calais
H-Cutlass Supreme
J-Cutlass Ciera/Wgn
K-Cutlass Internationl
L-Cutlass Calais
M-Cutlass Cruiser Broughan Wagon
M-Cutlass Ciera Brougham & SL
N-Delta 88 Royale
P-Custom Cruiser S/W
R-Cutlass Supreme International
S-Cutlass Ciera I/Natl
S-Cutlass Supreme SL
T-Calais SL
V-Toronado Trofe'o
V-Touring Sedan
W-98 Regency Brougham
X-98 Regency(FWD)
Y-Delta 88 Royal Brhm
Z-Toronado

BUICK (Code 4)

B-Regal Custom
C-Reatta
C-Skylark
D-Regal Limited
D-Skylark Limited
F-Electra(T Type)(FWD)
H-Century Custom
J-Skylark Custom
L-Century Limited
L-Estate Wagon
M-Skylark Limited
P-LeSabre Custom
R-LeSabre Limited
R-LeSabre Estate Wagon
S-Skyhawk Custom
U-Electra P/Ave(Ultra)
U-Roadmaster(Exp.only)
V-Electra Estate(RWD)
W-Electra Park Ave(FWD)
X-Electra Limited(FWD)
Z-Riviera Luxury

CADILLAC (Code 6)

B-Fleetwood
D-DeVille(FWD)
L-Eldorado
R-Allante
S-Seville
S-Fleetwood Sixty Spl.
W-Brougham
Z-Commercial Chassis

ENGINE CODES

CODE	LITERS		CARB	DIV USAGE
A	2.3	L4	FI	23
C	3.8	V6	FI	234
D	2.3	L4	FI	234
E	5.0	V8	FI	12
F	5.0	V8	FI	12
J	5.7	V8	FI	1
K	2.0	L4	FI	2
M	2.0	L4	FI	2
N	3.3	V6	FI	34
R	2.5	L4	FI	1234
S	2.8	V6	FI	12
T	3.1	V6	FI	234
U	2.5	L4	FI	234
V	3.1	V6	FI	2
W	2.8	V6	FI	1234
Y	5.0	V8	4	12346
Z	4.3	V6	FI	1
1	2.0	L4	FI	1 4
5	4.5	V8	FI	6
7	3.8	V6	FI	2
7	5.7	V8	FI	1
8	4.5	V8	FI	6
8	5.7	V8	FI	12
9	5.0	V8	4	6

NOTE:DIVISION / MAKE
1st Position = Country
1 = United States
2 = Canada
J = Japan

2nd Position = Manufacture
G = General Motors

3rd Position = Division
1 = Chevrolet
2 = Pontiac
3 = Oldsmobile
4 = Buick
6 = Cadillac
7 = Canada
Z = Isuzu (Luv)

* BODY TYPE - SEE MODEL CHART

@ RESTRAINT SYSTEM TYPE
1 MANUAL BELTS
2 MANUAL BELTS(W/CERTIFIED BUILT IN SFTY)
3 MANUAL BELTS(OR INFLATABLE)
4 AUTOMATIC BELTS

© 2000 GENERAL MOTORS SERVICE PARTS OPERATIONS–CHEVROLET–14Y

1990 GENERAL MOTORS PASSENGER CAR
VEHICLE IDENTIFICATION NUMBERING (VIN) SYSTEM

(1)(2)(3) DIVISION/ MAKE	(4) CAR LINE CODE	(5) CARLINE/ SERIES	(6) BODY TYPE	(7) REST-RAINT SYST.	(8) ENGINE CODE	(9) CHECK DIGIT	(10) MODEL YEAR	(11) PLANT CODE	(12) thru (17) PRODUCTION SEQUENCE NUMBER
1 G 1	G	Z	1*	1@	H	X	L	R	1 0 0 . 0 0 1

DIVISION CODE MAKE

1G1 Chevrolet Passenger
1G2 Pontiac Passenger
1G3 Oldsmobile Pass.
1G4 Buick Passenger
1G5 Pontiac-Incomplete
1G6 Cadillac Passenger
1G7 GM of Canads Pass.
1GC Chevrolet Truck
1GN Chevrolet MPV
1GM Pontiac MPV
1GH Oldsmobile MPV
1GT GMC Truck
J8C*Chevrolet Truck
* GM merchandised veh. built by Isuzu Motors. Fujisawa Japan

CARLINE CODE

CHEVROLET

A-Celebrity
B-Caprice
F-Camaro
J-Cavalier
L-Corsica/Beretta
W-Lumina
Y-Corvette

PONTIAC

A-6000
B-Safari
B-Parisienne(Exp.only)
F-Firebird
H-Bonneville
J-Sunbird
M-Firefly
N-Grand Am
T-Lemans
W-Grand Prix

OLDSMOBILE

A-Cutlass Ciera
B-Custom Cruiser (RWD)
C-98 Regency/Brougham
C-Touring Sedan
E-Toronado Trofe'o
E-Toronado
H-88 Royale
N-Calais
N-Cutlass Internationa
W-Cutlass

BUICK

A-Century
B-LeSabre Elec.Est.Wgn
B-Coachbuilder Wagon
C-Electra
E-Riviera/Reatta
H-LeSabre
J-Skyhawk
N-Skylark
W-Regal

CADILLAC

C-Fleetwood 60 Spl/D'Eleg
C-DeVille(FWD)
C-Comer/Chassis
D-Brougham

CADILLAC

E-Eldorado
K-Seville
K-Seville Tourg
V-Allante

CAR LINE / SERIES

CHEVROLET (Code 1)

C-Cavalier
F-Cavalier Z24
L-Caprice
L-Lumina
M-Caprice Classic
N-Lumina Eurosport
P-Camaro Sport Coupe & Convr.
T-Corsica
U-Caprice Classic Brhm & Brhm LS
V-Beretta
W-Celebrity
W-Beretta GT
Y-Corvette
Z-Beretta GTZ
Z-Corsica LTZ
Z-Corvette ZR1

PONTIAC (Code 2)

B-Sunbird LE
D-Sunbird SE
D-Parisienne(Exp.only)
E-Grand Am LE
F-6000 LE
J-6000 SE
J-Grand Prix LE
L-Safari Wgn(Exp.only)
L-Parisieen (Exp.only)
N-Lemans
P-Grand Prix SE
R-Firefly LE/Turbo
R-Lemans SE
S-Firebird
S-Lemans GSE
T-Grand Prix STE
T-Firefly
U-Sunbird GT
U-Parisienne(Exp.only)
W-Grand AM SE
W-Firebird Trans Am
X-Bonneville LE
X-Lemans Aero Coupe
Y-Bonneville SSE
Z-Bonneville SE

OLDSMOBILE (Code 3)

F-Calais S
H-Cutlass Supreme
J-Cutlass Ciera/Wgn
K-Cutlass Internationl
L-Cutlass Calais
M-Cutlass Ciera SL & Cruiser SL Wagon
N-88 Royale
P-Custom Cruiser S/W
R-Cutlass Supreme International
S-Cutlass Ciera I/natl
S-Cutlass Supreme SL
T-Calais SL
T-Cutlass Convertible
V-Trofe'o
V-Touring Sedan
W-98 Regency Brougham
X-98 Regency
Y-88 Royale Brhm
Z-Toronado

BUICK (Code 4)

B-Coachbuilder Wgn
B-Regal Custom
C-Reatta
C-Skylark Custom(4 dr)
D-Regal Limited
D-Skylark Limited(4 dr
F-Electra(T Type)
H-Century Custom
J-Skylark Custom(2 dr)
L-Century Limited
L-Estate Wagon
M-Skylark Grand Sport
P-LeSabre Custom
R-LeSabre Limited
R-LeSabre Estate Wagon
U-Electra P/Ave(Ultra)
U-Roadmaster(Exp.only)
V-Electra Estate Wgn
V-Skylark
W-Electra Park Ave
X-Electra Limited
Z-Riviera

CADILLAC (Code 6)

B-Fleetwood
D-DeVille(FWD)
L-Eldorado
R-Allante Convr.& Hard Top
S-Convertible
S-Seville
S-Fleetwood Sixty Spl.
W-Brougham
Y-Seville Touring Sed.
Z-Commercial Chassis

ENGINE CODES

CODE	LITERS		CARB	DIV USAGE
A	2.3	L4	MFI	123
C	3.8	V6	MFI	234
D	2.3	L4	MFI	234
E	5.0	V8	TBI	12
F	5.0	V8	MFI	12
G	2.2	L4	TBI	1
J	5.7	V8	MFI	1
K	2.0	L4	TBI	2
L	3.8	V6	MFI	4
M	2.0	L4	MFI	2
N	3.3	V6	MFI	34
R	2.5	L4	TBI	1234
T	3.1	V6	MFI	234
U	2.5	L4	TBI	234
V	3.1	V6	MFI	2
Y	5.0	V8	4BBL	12346
Z	4.3	V6	TBI	1
2	1.0	L3	MFI	1
3	4.5	V8	MFI	6
5	1.6	L4	MFI	1
6	1.0	L3	TBI	1
6	1.6	L4	MFI	1
6	1.6	L4	TBI	2
7	5.7	V8	TBI	1 6
8	4.5	V8	MFI	6
8	5.7	V8	MFI	12
9	5.0	V8	4BBL	6

NOTE:DIVISION / MAKE
1st Position = Country
1 = United States
2 = Canada
J = Japan

2nd Position = Manufacture
G = General Motors

3rd Position = Division
1 = Chevrolet
2 = Pontiac
3 = Oldsmobile
4 = Buick
6 = Cadillac
7 = Canada
Z = Isuzu (Luv)

* BODY TYPE - SEE MODEL CHART

@ RESTRAINT SYSTEM TYPE
1 MANUAL BELTS
2 MANUAL BELTS(W/CERTIFIED BUILT IN SFTY)
3 MANUAL BELTS(OR INFLATABLE)
4 AUTOMATIC BELTS

© 2000 GENERAL MOTORS SERVICE PARTS OPERATIONS-CHEVROLET-14Y

1991 GENERAL MOTORS PASSENGER CAR VEHICLE IDENTIFICATION NUMBERING (VIN) SYSTEM

(1)(2)(3) DIVISION/ MAKE	(4) CAR LINE CODE	(5) CARLINE/ SERIES	(6) BODY TYPE	(7) REST-RAINT SYST.	(8) ENGINE CODE	(9) CHECK DIGIT	(10) MODEL YEAR	(11) PLANT CODE	(12) thru (17) PRODUCTION SEQUENCE NUMBER
1 G 1	G	Z	1*	1@	H	X	M	R	1 0 0 . 0 0 1

DIVISION CODE MAKE

1G1 Chevrolet Passenger
1G2 Pontiac Passenger
1G3 Oldsmobile Pass.
1G4 Buick Passenger
1G6 Cadillac Passenger
1C7 GM of Canada Pass.
1GC Chevrolet Truck
1GN Chevrolet MPV
1GM Pontiac MPV
1GH Oldsmobile MPV
1GT GMC Truck
J8C*Chevrolet Truck

* GM merchandised veh. built by Isuzu Motors. Fujisawa Japan

CARLINE CODE

CHEVROLET

B-Caprice/Hearse/Limo
F-Camaro
J-Cavalier
L-Corsica/Beretta
W-Lumina
Y-Corvette

PONTIAC

A-6000
F-Firebird
H-Bonneville
J-Sunbird
M-Firefly
N-Grand Am
T-Lemans
W-Grand Prix

OLDSMOBILE

A-Cutlass Ciera
B-Custom Cruiser (RWD)
C-98 Regency Elite
C-Touring Sedan
E-Toronado Trofe'o
E-Toronado
H-88 Royale
N-Calais
N-Cutlass Internationa
W-Cutlass Supreme

BUICK

A-Century
B-Estate Wagon
B-Coachbuilder Wagon
C-Park Avenue
E-Riviera/Reatta
H-LeSabre
N-Skylark
W-Regal

CADILLAC

C-Fleetwood/60 Special
C-DeVille/DeVille Touring
C-Conv.r/Chassis
D-Brougham

CADILLAC

E-Eldorado
K-Seville
K-Seville Tourg
V-Allante

CAR LINE / SERIES

CHEVROLET (Code 1)

B-Hearse/Limo-Chassis
C-Cavalier&Contervible
F-Cavalier Z24
L-Caprice/Wagon
L-Lumina
N-Caprice Classic
N-Lumina Euro
P-Camaro Sport Coupe & Convr.
P-Lumina Z34
T-Corsica/Corsica LT
V-Beretta
W-Beretta GT
Y-Corvette/Convertible
Z-Beretta GTZ
Z-Corvette ZR1

PONTIAC (Code 2)

B-Sunbird LE
C-Sunbird
D-Sunbird SE
E-Grand Am LE
F-6000 LE
G-Grand AM
H-Grand Prix LE
J-6000 SE
J-Grand Prix SE
N-Lemans LE
P-Grand Prix GT
R-Firefly
S-Firebird
T-Grand Prix STE
U-Sunbird GT
W-Grand AM SE
W-Firebird Trans Am
X-Bonneville LE
X-Lemans Aero Coupe
Y-Bonneville SSE
Z-Bonneville SE

OLDSMOBILE (Code 3)

F-Calais S
H-Cutlass Supreme
J-Cutlass Ciera/Wgn
K-Cutlass Internationl
L-Cutlass Ciera
L-Cutlass Calais
M-Cutlass Ciera SL & Cruiser SL Wagon
N-88 Royale

OLDSMOBILE (Code 3)

P-Custom Cruiser S/W
R-Cutlass Supreme International
S-Cutlass Supreme SL
T-Calais SL
T-Cutlass Convertible
V-Trofe'o
V-Touring Sedan
W-98 Regency Elite
Y-88 Royale Brhm
Z-Toronado

BUICK (Code 4)

B-Coachbuilder Wgn
B-Regal Custom
C-Reatta
C-Skylark Custom(4 dr)
D-Regal Limited
D-Skylark Luxury(4 dr)
H-Century Custom
J-Skylark Custom(2 dr)
L-Century Limited
M-Skylark Grand Sport
P-LeSabre Custom
R-LeSabre Limited
R-Estate Wagon
U-Electra P/Ave(Ultra)
V-Skylark
W-Park Avenue
Z-Riviera

CADILLAC (Code 6)

B-Fleetwood
D-DeVille
G-Fleetwood 60 Spl.
L-Eldorado
R-Allante Convr.& Hard Top
S-Convertible
S-Seville
T-DeVille Touring
W-Brougham
Y-Seville Touring Sed.
Z-Commercial Chassis

ENGINE CODES

CODE	LITERS		CARB	DIV USAGE
A	2.3	L4	MFI	123
B	4.9	V8	MFI	6
C	3.8	V6	MFI	234
D	2.3	L4	MFI	234
E	5.0	V8	TBI	12346
F	5.0	V8	MFI	12
G	2.2	L4	TBI	1 4
J	5.7	V8	MFI	1
K	2.0	L4	TBI	2
L	3.8	V6	MFI	34
N	3.3	V6	MFI	34
R	2.5	L4	TBI	1234
T	3.1	V6	MFI	1234
U	2.5	L4	TBI	234
X	3.4	V6	MFI	123
1	3.8	V6	MFI	4
2	1.0	L3	MFI	1
5	1.6	L4	MFI	1
6	1.0	L3	TBI	1
6	1.6	L4	MFI	1
6	1.6	L4	TBI	2
7	5.7	V8	TBI	1 3 6
8	1.6	L4	MFI	1
8	4.5	V8	MFI	6
8	5.7	V8	MFI	12

NOTE:DIVISION / MAKE
1st Position = Country
1 = United States
2 = Canada
J = Japan

2nd Position = Manufacture
G = General Motors

3rd Position = Division
1 = Chevrolet
2 = Pontiac
3 = Oldsmobile
4 = Buick
6 = Cadillac
7 = Canada
Z = Isuzu (Luv)

* BODY TYPE - SEE MODEL CHART

@ RESTRAINT SYSTEM TYPE
1 MANUAL BELTS
2 MANUAL BELTS(W/CERTIFIED BUILT IN SFTY)
3 MANUAL BELTS(OR INFLATABLE)
4 AUTOMATIC BELTS

© 2000 GENERAL MOTORS SERVICE PARTS OPERATIONS-CHEVROLET-14Y

1992 GENERAL MOTORS PASSENGER CAR
VEHICLE IDENTIFICATION NUMBERING (VIN) SYSTEM

(1)(2)(3)	(4)	(5)	(6)	(7)	(8)	(9)	(10)	(11)	(12) thru (17)
DIVISION/ MAKE	CAR LINE CODE	CARLINE/ SERIES	BODY TYPE	REST-RAINT SYST.	ENGINE CODE	CHECK DIGIT	MODEL YEAR	PLANT CODE	PRODUCTION SEQUENCE NUMBER
1 G 1	G	Z	1*	1@	H	X	N	R	1 0 0 . 0 0 1

DIVISION CODE MAKE

1G1 Chevrolet Passenger
1G2 Pontiac Passenger
1G3 Oldsmobile Pass.
1G4 Buick Passenger
1G5 Pont.Incomplete
1G6 Cadillac Passenger
1G7 GM of Canads Pass.
1GC Chevrolet Truck
1GN Chevrolet MPV
1GM Pontiac MPV
1GH Oldsmobile MPV
1GT GMC Truck
4G1 Chev.Incomplete
J8C*Chevrolet Truck
* GM merchandised veh. built by Isuzu Motors. Fujisawa Japan

CARLINE CODE

CHEVROLET

B-Caprice/Hearse/Limo
F-Camaro
J-Cavalier/Conv./Wagon
L-Corsica/Beretta
W-Lumina
Y-Corvette

PONTIAC

F-Firebird
H-Bonneville
J-Sunbird & Convertible
L-Tempest
M-Firefly
N-Grand Am
T-Lemans
W-Grand Prix

OLDSMOBILE

A-Cutlass Ciera/Cruiser
B-Custom Cruiser
C-98 Regency/Elite
C-98 Touring Sedan
E-Toronado Trofe'o
E-Toronado
H-88 Royale/LS
N-Achieva
W-Cutlass Supreme S & Cutlass International &Cutlass Convertible

BUICK

A-Century
B-Estate Wagon
B-Coachbuilder Wagon
C-Park Avenue
E-Riviera
H-LeSabre
N-Skylark
W-Regal

CADILLAC

C-Fleetwood/60 Special
C-DeVille/DeVille Touring
C-Comer/Chassis
D-Brougham

CADILLAC

E-Eldorado
K-Seville
K-Seville Tourg
V-Allante

CAR LINE / SERIES

CHEVROLET (Code 1)

B-Hearse/Limo Chassis
C-Cavalier/Conv.&Wagon
F-Cavalier Z24
L-Caprice/Caprice Wgn.
L-Lumina
N-Caprice Classic
N-Lumina Eurosport
P-Camaro Sport Coupe & Convr.
P-Lumina Z34
T-Corsica LT
V-Beretta & Conver.
W-Beretta GT
Y-Corvette&Convertible
Z-Beretta GTZ
Z-Corvette ZR1

PONTIAC (Code 2)

B-Sunbird SE&Convertib
C-Sunbird LE
D-Sunbird GT
E-Grand Am LE
H-Grand Prix LE
J-Grand Prix SE
N-Lemans SE Aero Coupe & Sedan
P-Grand Prix GT/GTP
R-Firefly & Convertibl
S-Firebird & Convertib
T-Tempest(Export only)
T-Grand Prix STE
W-Grand AM GT
W-Firebird Trans Am & Convertible
X-Bonneville SE
X-Lemans Aero Coupe
Y-Bonneville SSEi
Z-Bonneville SSE

OLDSMOBILE (Code 3)

F-Achieva SL
H-Cutlass Supreme
J-Cutlass Ciera/Wgn
L-Cutlass Ciera
L-Achieva S
M-Cutlass Ciera SL & Cruiser SL Wagon
N-88 Royale
P-Custom Cruiser S/W
R-Cutlass Supreme International
T-Cutlass Convertible
V-Trofe'o
V-98 Touring Sedan
W-98 Regency Elite
Y-88 Royale LS
Z-Toronado

BUICK (Code 4)

B-Coachbuilder Wgn
B-Regal Custom
C-Reatta
D-Regal Limited
H-Century Custom/Wgn
J-Skylark Custom
L-Century Limited/Wgn
M-Skylark Gran Sport
N-Road Master
P-LeSabre Custom
R-LeSabre Limited
R-Road Master Est Wgn
T-Road Master Ill Ltd.
U-Park Avenue- Ultra
W-Park Avenue
Z-Riviera Luxury

CADILLAC (Code 6)

B-Fleetwood
D-DeVille
G-Fleetwood 60 Spl.
L-Eldorado
R-Allante Convertible & Hard Top
S-Allante Convertible
S-Seville
T-DeVille Touring
W-Brougham
Y-Seville Touring Sed.
Z-Commercial Chassis

ENGINE CODES

CODE	LITERS		CARB	DIV USAGE
A	2.3	L4	MFI	123
B	4.9	V8	MFI	6
D	2.3	L4	MFI	23
E	5.0	V8	TBI	12346
F	5.0	V8	MFI	12
H	2.0	L4	MFI	2
J	5.7	V8	MFI	1
L	3.8	V6	MFI	234
N	3.3	V6	MFI	234
P	5.7	V8	MFI	1
R	2.5	L4	TBI	1 34
T	3.1	V6	MFI	1234
X	3.4	V6	MFI	123
Z	4.3	V6	TBI	1
1	3.8	V6	MFI	234
3	2.3	L4	MFI	234
4	2.2	L4	MFI	1
5	1.6	L4	MFI	1
6	1.0	L3	TBI	1
6	1.6	L4	MFI	1
6	1.6	L4	TBI	2
7	5.7	V8	TBI	1 346
8	1.8	L4	MFI	1
8	4.5	V8	MFI	6
8	5.7	V8	MFI	12
9	1.3	L4	MFI	1

NOTE:DIVISION / MAKE
1st Position = Country
1 = United States
2 = Canada
J = Japan

2nd Position = Manufacture
G = General Motors

3rd Position = Division
1 = Chevrolet
2 = Pontiac
3 = Oldsmobile
4 = Buick
6 = Cadillac
7 = Canada
Z = Isuzu (Luv)

* BODY TYPE - SEE MODEL CHART

@ RESTRAINT SYSTEM TYPE
1 MANUAL BELTS
2 MANUAL BELTS(PASS & DR INFLATABLE RESTRAINT)
3 MANUAL BELTS(DR INFLATABLE
4 AUTOMATIC BELTS
5 AUTOMATIC BELTS(DRIVER INFLATABLE RESTRAINT)

© 2000 GENERAL MOTORS SERVICE PARTS OPERATIONS-CHEVROLET-14Y

1993 GENERAL MOTORS PASSENGER CAR
VEHICLE IDENTIFICATION NUMBERING (VIN) SYSTEM

(1)(2)(3) DIVISION/ MAKE	(4) CAR LINE CODE	(5) CARLINE/ SERIES	(6) BODY TYPE	(7) REST-RAINT SYST.	(8) ENGINE CODE	(9) CHECK DIGIT	(10) MODEL YEAR	(11) PLANT CODE	(12) thru (17) PRODUCTION SEQUENCE NUMBER
1 G 1	G	Z	1*	1@	H	X	P	R	1 0 0 . 0 0 1

DIVISION CODE MAKE

1G1 Chevrolet Passenger
1G2 Pontiac Passenger
1G3 Oldsmobile Pass.
1G4 Buick Passenger
1G5 Pont.Incomplete
1G6 Cadillac Passenger
1G7 GM of Canads Pass.
1GC Chevrolet Truck
1GN Chevrolet MPV
1GM Pontiac MPV
1GH Oldsmobile MPV
1GT GMC Truck
4G1 Chev.Incomplete
J8C*Chevrolet Truck
* GM merchandised veh. built by Isuzu Motors. Fujisawa Japan

CARLINE CODE

CHEVROLET

B-Caprice/Hearse/Limo
F-Camaro & Convertible
J-Cavalier/Conv./Wagon
L-Corsica/Beretta
W-Lumina
Y-Corvette & Convertibl

PONTIAC

F-Firebird
H-Bonneville
J-Sunbird & Convertible
L-Tempest
N-Grand Am
T-Lemans
W-Grand Prix

OLDSMOBILE

A-Cutlass Ciera/Cruiser
C-98 Regency/Elite
C-98 Touring Sedan
E-Toronado
H-88 Royale/LS
N-Achieva
W-Cutlass Supreme S & Cutlass International &Cutlass Convertible

BUICK

A-Century
B-Roadmaster
C-Park Avenue
E-Riviera
H-LeSabre
N-Skylark
W-Regal

CADILLAC

C-Sixty Special
C-DeVille/DeVille Touring
C-Comer/Chassis
D-Brougham

CADILLAC

E-Eldorado
K-Seville
V-Allante

CAR LINE / SERIES

CHEVROLET (Code 1)

B-Hearse/Limo Chassis
C-Cavalier/Conv.&Wagon
F-Cavalier Z24 & Conv.
L-Caprice/Caprice Wgn.
L-Lumina
N-Caprice Classic
N-Lumina Eurosport
P-Camaro Sport Coupe & Convr.
P-Lumina Z34
T-Corsica LT
V-Beretta
W-Beretta GT
Y-Corvette&Convertible
Z-Beretta GTZ
Z-Corvette ZR1

PONTIAC (Code 2)

B-Sunbird SE&Convertib
C-Sunbird
E-Grand Am SE
H-Grand Prix LE
J-Grand Prix SE
N-Lemans SE Aero Coupe & Sedan
P-Grand Prix GT/GTP
S-Firebird
T-Tempest(Export only)
T-Grand Prix STE
V-Formula
W-Grand AM GT
X-Bonneville SE
X-Lemans
Y-Bonneville SSEI
Z-Bonneville SSE

OLDSMOBILE (Code 3)

F-Achieva SL
H-Cutlass Supreme S
J-Cutlass S /Wgn
L-Cutlass Ciera S
L-Achieva S
M-Cutlass Ciera SL & Cruiser SL Wagon
N-88 Royale

OLDSMOBILE (Code 3)

R-Cutlass Supreme International
T-Cutlass Convertible
V-Trofe'o
V-98 Touring Sedan
W-98 Regency Elite
X-98 Regency
Y-88 Royale LS
Z-Toronado

BUICK (Code 4)

B-Coachbuilder Wgn
B-Regal Custom
C-Reatta
D-Regal Limited
F-Regal Gran Sport
G-Century/Spl Wgn
H-Century Custom/Wgn
J-Skylark
L-Century Limited
M-Skylark Gran Sport
N-Roadmaster
P-LeSabre Custom
R-LeSabre Limited
R-Roadmaster Est Wgn
T-Roadmaster Ltd.
U-Park Avenue- Ultra
V-Somerset
W-Park Avenue
Z-Riviera

CADILLAC (Code 6)

B-Sixty Special
D-DeVille
H-Commercial Chassis (RWD)
L-Eldorado
S-Allante Convertible
S-Seville
T-DeVille Touring
W-Brougham
Y-Seville Touring
Z-Commercial Chassis

ENGINE CODES

CODE	LITERS		CARB	DIV USAGE
A	2.3	L4	MFI	123
B	4.9	V8	MFI	6
D	2.3	L4	MFI	23
E	5.0	V8	TBI	1
H	2.0	L4	MFI	2
J	5.7	V8	MFI	1
L	3.8	V6	MFI	234
M	3.1	V6	MFI	3
N	3.3	V6	MFI	234
P	5.7	V8	MFI	12
S	3.4	V6	MFI	12
T	3.1	V6	MFI	1234
W	3.1	V6	MFI	1
X	3.4	V6	MFI	123
Y	4.6	V8	MFI	6
Z	4.3	V6	TBI	1
1	3.8	V6	MFI	234
3	2.3	L4	MFI	234
4	2.2	L4	MFI	1 34
7	5.7	V8	TBI	46
9	4.6	V8	MFI	6

NOTE: DIVISION / MAKE
1st Position = Country
1 = United States
2 = Canada
3 = Mexico
J = Japan

2nd Position = Manufacture
G = General Motors

3rd Position = Division
1 = Chevrolet
2 = Pontiac
3 = Oldsmobile
4 = Buick
6 = Cadillac
7 = Canada
Z = Isuzu (Luv)

* BODY TYPE - SEE MODEL CHART

@ RESTRAINT SYSTEM TYPE
1 MANUAL BELTS
2 MANUAL BELTS(PASS & DR INFLATABLE RESTRAINT)
3 MANUAL BELTS(DR INFLATABLE
4 AUTOMATIC BELTS
5 AUTOMATIC BELTS(DRIVER INFLATABLE RESTRAINT)

© 2000 GENERAL MOTORS SERVICE PARTS OPERATIONS-CHEVROLET-14Y

1994 GENERAL MOTORS PASSENGER CAR VEHICLE IDENTIFICATION NUMBERING (VIN) SYSTEM

(1)(2)(3)	(4)	(5)	(6)	(7)	(8)	(9)	(10)	(11)	(12) thru (17)
DIVISION/ MAKE	CAR LINE CODE	CARLINE/ SERIES	BODY TYPE	REST-RAINT SYST.	ENGINE CODE	CHECK DIGIT	MODEL YEAR	PLANT CODE	PRODUCTION SEQUENCE NUMBER
1 G 1	G	Z	1*	1@	H	X	R	R	1 0 0 . 0 0 1

DIVISION CODE MAKE

1G1 Chevrolet Passenger
1G2 Pontiac Passenger
1G3 Oldsmobile Pass.
1G4 Buick Passenger
1G6 Cadillac Passenger
1G7 GM of Canada Pass.
1GB Chev.Incomplete
1GC Chevrolet Truck
1GE Cad.Incomplete
1GN Chevrolet MPV
1GM Pontiac MPV
1GH Oldsmobile MPV
1GT GMC Truck
4GL Buick Incomplete
J8C* Chevrolet Truck

* GM merchandised veh. built by Isuzu Motors. Fujisawa Japan

CARLINE CODE

CHEVROLET

B-Caprice/Hearse/Limo
F-Camaro & Convertible
J-Cavalier/Conv./Wagon
L-Corsica/Beretta
W-Lumina
Y-Corvette & Convertibl

PONTIAC

F-Firebird/Formula
H-Bonneville
J-Sunbird & Convertible
N-Grand Am
T-Lemans
W-Grand Prix

OLDSMOBILE

A-Cutlass Ciera/Wagon
C-98 Regency/Elite
C-98 Regency
H-88 Royale/LS
N-Achieva
W-Cutlass Supreme S & Cutlass Convertible

BUICK

A-Century
B-Roadmaster
B-Coachbuilder Wagon
C-Park Avenue
H-LeSabre
N-Skylark
W-Regal

CADILLAC

D-Fleetwood
D-Commercial Chassis(RWD)
E-Eldorado

CADILLAC

K-Deville
K-Seville
K-Concours

CAR LINE / SERIES

CHEVROLET (Code 1)

C-Cavalier/Conv.&Wagon
D-Corsica
F-Cavalier Z24 & Conv.
L-Caprice/Caprice Wgn.
L-Lumina
M-Lumina(Coupe)
N-Caprice Classic LS
N-Lumina LS
P-Camaro Sport Coupe & Convr.
P-Lumina Z34
V-Beretta
W-Beretta Z26
Y-Corvette&Convertible
Z-Corvette ZR1

PONTIAC (Code 2)

B-Sunbird SE&Convertib
E-Grand Am SE
J-Grand Prix SE
L-Sunbird SE
M-Grand Prix
N-Lemans SE Aero Coupe & Sedan
S-Firebird
V-Formula&Convertible
W-Grand AM GT
X-Bonneville SE
X-Lemans
Z-SSE

OLDSMOBILE (Code 3)

F-Achieva SL/SC
G-Cutlass Ciera S
H-Cutlass Supreme S
J-Cutlass S /Wgn
L-Achieva S
N-88 Royale

OLDSMOBILE (Code 3)

T-Cutlass Convertible
W-98 Regency Elite
X-98 Regency
Y-88 Royale LS

BUICK (Code 4)

B-Coachbuilder Wgn
B-Regal Custom
D-Regal Limited
F-Regal Gran Sport
G-Century/Spl Wgn
H-Centruy Custom
J-Skylark Limited
M-Skylark Gran Sport
N-Roadmaster
P-LeSabre Custom
R-LeSabre Limited
R-Roadmaster Est/Wgn
T-Roadmaster Ltd.
U-Park Avenue- Ultra
V-Skylark Custom
W-Park Avenue

CADILLAC (Code 6)

D-DeVille
F-Concours
H-Commercial Chassis (RWD)
L-Eldorado
S-Seville
T-Eldorado Touring
W-Fleetwood
Y-Seville Touring

ENGINE CODES

CODE	LITERS		CARB	DIV USAGE
A	2.3	L4	MFI	123
B	4.9	V8	MFI	6
D	2.3	L4	MFI	23
H	2.0	L4	MFI	2
J	5.7	V8	MFI	1
L	3.8	V6	MFI	234
M	3.1	V6	MFI	3
P	5.7	V8	MFI	12
S	3.4	V6	MFI	12
T	3.1	V6	MFI	1234
W	4.3	V8	MFI	1
X	3.4	V6	MFI	123
Y	4.6	V8	MFI	6
1	3.8	V6	MFI	234
3	2.3	L4	MFI	234
4	2.2	L4	MFI	1 34
9	4.6	V8	MFI	6

NOTE:DIVISION / MAKE
1st Position = Country
1 = United States
2 = Canada
3 = Mexico
J = Japan

2nd Position = Manufacture
G = General Motors

3rd Position = Division
1 = Chevrolet
2 = Pontiac
3 = Oldsmobile
4 = Buick
6 = Cadillac
7 = Canada
Z = Isuzu (Luv)

* BODY TYPE - SEE MODEL CHART

@ RESTRAINT SYSTEM TYPE
1 MANUAL BELTS
2 MANUAL BELTS(PASS & DR INFLATABLE RESTRAINT)
3 MANUAL BELTS(DR INFLATABLE
4 AUTOMATIC BELTS
5 AUTOMATIC BELTS(DRIVER INFLATABLE RESTRAINT)
6 AUTOMATIC BELTS(DRIVER & PASSENGER INFLATABLE)

NOTE:FOR WMI 1Y1,THE FOLLOWING RESTRAINT CODE SYSTEM-FRT SEAT IS AS FOLLOWS: MANUSL BLTS W/DR & PASS INFLATABLE REATRAINTS.

© 2000 GENERAL MOTORS SERVICE PARTS OPERATIONS-CHEVROLET-14Y

1995 GENERAL MOTORS PASSENGER CAR VEHICLE IDENTIFICATION NUMBERING (VIN) SYSTEM

(1)(2)(3) DIVISION/ MAKE	(4) CAR LINE CODE	(5) CARLINE/ SERIES	(6) BODY TYPE	(7) REST-RAINT SYST.	(8) ENGINE CODE	(9) CHECK DIGIT	(10) MODEL YEAR	(11) PLANT CODE	(12) thru (17) PRODUCTION SEQUENCE NUMBER
1 G 1	G	Z	1*	1@	H	X	S	R	1 0 0 . 0 0 1

DIVISION CODE MAKE

1G1 Chevrolet Passenger
1G2 Pontiac Passenger
1G3 Oldsmobile Pass.
1G4 Buick Passenger
1G6 Cadillac Passenger
1G7 GM of Canads Pass.
1GB Chev.Incomplete
1GC Chevrolet Truck
1GE Cad.Incomplete
1GN Chevrolet MPV
1GM Pontiac MPV
1GH Oldsmobile MPV
1GT GMC Truck
4GL Buick Incomplete
J8C*Chevrolet Truck

* GM merchandised veh. built by Isuzu Motors. Fujisawa Japan

CARLINE CODE

CHEVROLET

B-Caprice/Wagon
F-Camaro & Convertible
J-Cavalier/Convertible
L-Corsica/Beretta
W-Lumina/Monte Carlo
Y-Corvette & Convertibl

PONTIAC

F-Firebird/Formula/Conv
H-Bonneville
J-Sunfire & Convertible
N-Grand Am
W-Grand Prix

OLDSMOBILE

A-Cutlass Ciera/Wagon
C-98 Regency/Elite
G-Aurora
H-88 Royale/LS
N-Achieva
W-Cutlass Supreme S & Cutlass Convertible

BUICK

A-Century
B-Roadmaster
B-Coachbuilder Wagon
C-Park Avenue
G-Rivera
H-LeSabre
N-Skylark
W-Regal

CADILLAC

D-Fleetwood
D-Commercial Chassis(RWD)
E-Eldorado
E-Eldorado Touring

CADILLAC

K-Deville
K-Seville
K-Concours
K-Seville Tour.

CAR LINE / SERIES

CHEVROLET (Code 1)

C-Cavalier
D-Corsica
F-Cavalier LS & Convertible
L-Caprice/Caprice Wgn.
L-Lumina Sedan
N-Lumina LS
P-Camaro Sport Coupe & Convr.
V-Beretta
W-Beretta Z26
W-Monte Carlo
X-Monte Carlo Z34
Y-Corvette&Convertible
Z-Corvette ZR1

PONTIAC (Code 2)

B-Sunfire SE&Convertib
D-Sunfire GT
E-Grand Am SE
J-Grand Prix SE
S-Firebird/Convertible
V-Formula &Convertible
W-Grand AM GT
X-Bonneville SE
Z-SSE

OLDSMOBILE (Code 3)

F-Achieva SL/SC
H-Cutlass Supreme S
J-Cutlass Ciera SL & Cruiser SL Wagon
L-Achieva S
N-88 Royale

OLDSMOBILE (Code 3)

R-Aurora
T-Cutlass Supreme Conv
X-98 Regency Elite
Y-88 Royale LS

BUICK (Code 4)

B-Coachbuilder Wgn
B-Regal Custom
D-Regal Limited
D-Riviera
F-Regal Gran Sport
G-Century/Spl Wgn
H-Century Custom
J-Skylark Limited
M-Skylark Gran Sport
N-Roadmaster
P-LeSabre Custom
R-LeSabre Limited
R-Roadmaster Est/Wgn
T-Roadmaster Ltd.
U-Park Avenue- Ultra
V-Skylark Custom
W-Park Avenue

CADILLAC (Code 6)

D-DeVille
F-Concours
H-Commercial Chassis (RWD)
L-Eldorado
S-Seville
T-Eldorado Touring
W-Fleetwood
Y-Seville Touring

ENGINE CODES

CODE	LITERS		CARB	DIV USAGE
B	4.9	V8	MFI	6
C	4.0	V8	mfi	3
D	2.3	L4	MFI	123
J	5.7	V8	MFI	1
K	3.8	V6	MFI	1234
L	3.8	V6	MFI	234
M	3.1	V6	MFI	1234
P	5.7	V8	MFI	12 46
S	3.4	V6	MFI	12
W	7.3	V8	MFI	1
X	3.4	V6	MFI	123
Y	4.6	V8	MFI	6
1	3.8	V6	MFI	234
4	2.2	L4	MFI	1234
9	4.6	V8	MFI	6

NOTE:DIVISION / MAKE
1st Position = Country
1 = United States
2 = Canada
3 = Mexico
J = Japan

2nd Position = Manufacture
G = General Motors

3rd Position = Division
1 = Chevrolet
2 = Pontiac
3 = Oldsmobile
4 = Buick
6 = Cadillac
7 = Canada
Z = Isuzu (Luv)

* BODY TYPE - SEE MODEL CHART

@ RESTRAINT SYSTEM TYPE
1 MANUAL BELTS
2 MANUAL BELTS(PASS & DR INFLATABLE RESTRAINT)
3 MANUAL BELTS(DR INFLATABLE
4 AUTOMATIC BELTS
5 AUTOMATIC BELTS(DRIVER INFLATABLE RESTRAINT)
6 AUTOMATIC BELTS(DRIVER & PASSENGER INFLATABLE)

© 2000 GENERAL MOTORS SERVICE PARTS OPERATIONS-CHEVROLET-14Y

1996 GENERAL MOTORS PASSENGER CAR VEHICLE IDENTIFICATION NUMBERING (VIN) SYSTEM

(1)(2)(3)	(4)	(5)	(6)	(7)	(8)	(9)	(10)	(11)	(12) thru (17)
DIVISION/ MAKE	CAR LINE CODE	CARLINE/ SERIES	BODY TYPE	REST-RAINT SYST.	ENGINE CODE	CHECK DIGIT	MODEL YEAR	PLANT CODE	PRODUCTION SEQUENCE NUMBER
1 G 1	G	Z	1*	1@	H	X	T	R	1 0 0 . 0 0 1

DIVISION CODE MAKE

1G1 Chevrolet Passenger
1G2 Pontiac Passenger
1G3 Oldsmobile Pass.
1G4 Buick Passenger
1G6 Cadillac Passenger
1G7 GM of Canads Pass.
1GB Chev.Incomplete
1GC Chevrolet Truck
1GE Cad.Incomplete
1GN Chevrolet MPV
1GM Pontiac MPV
1GH Oldsmobile MPV
1GT GMC Truck
4GL Buick Incomplete
JBC*Chevrolet Truck

* GM merchandised veh. built by Isuzu Motors. Fujisawa Japan

CARLINE CODE

CHEVROLET

B-Caprice/Wagon
F-Camaro & Convertible
J-Cavalier/Convertible
L-Corsica/Beretta
W-Lumina/Monte Carlo
Y-Corvette & Convertibl

PONTIAC

F-Firebird/Formula/Conv
H-Bonneville
J-Sunfire & Convertible
N-Grand Am
W-Grand Prix

OLDSMOBILE

A-Cutlass Ciera/Wagon
C-98 Regency/Elite
G-Aurora
H-88 Royale/LS
N-Achieva
W-Cutlass Supreme S & Cutlass Convertible

BUICK

A-Century
B-Roadmaster
B-Coachbuilder Wagon
C-Park Avenue
G-Riviera
H-LeSabre
N-Skylark
W-Regal

CADILLAC

D-Fleetwood
D-Commercial Chassis(RWD)
E-Eldorado
E-Eldorado Touring

CADILLAC

K-Deville
K-Seville
K-Concours
K-Seville Tour.

CAR LINE / SERIES

CHEVROLET (Code 1)

C-Cavalier
D-Corsica
F-Cavalier LS, Z24 & Convertible
. ·Caprice/Caprice Wgn.
L-Lumina Sedan
N-Lumina LS
P-Camaro Sport Coupe & Convr.
V-Beretta
W-Beretta Z26
W-Monte Carlo LS
X-Monte Carlo Z34
Y-Corvette&Convertible

PONTIAC (Code 2)

B-Sunfire SE & Convert
D-Sunfire GT
E-Grand Am SE
J-Grand Prix SE
M-Grand Prix
S-Firebird/Convertible
V-Formula &Convertible
W-Grand AM GT
X-Bonneville SE
Z-SSE

OLDSMOBILE (Code 3)

F-Achieva SL/SC
H-Cutlass Supreme S
J-Cutlass Ciera SL & Cruiser SL Wagon
L-Achieva S
N-88 Royale

OLDSMOBILE (Code 3)

R-Aurora
T-Cutlass Supreme Conv
X-98 Regency Elite
Y-88 Royale LSS

BUICK (Code 4)

B-Coachbuilder Wgn
B-Regal Custom
D-Regal Limited
D-Riviera
F-Regal Gran Sport
G-Century/Spl Wgn
H-Century Custom
J-Skylark Custom
M-Skylark Gran Sport
N-Roadmaster
P-LeSabre Custom
R-LeSabre Limited
R-Roadmaster Est/Wgn
T-Roadmaster Ltd.
U-Park Avenue- Ultra
W-Park Avenue

CADILLAC (Code 6)

D-DeVille
F-Concours
H-Commercial Chassis (RWD)
L-Eldorado
S-Seville
T-Eldorado Touring
W-Fleetwood
Y-Seville Touring

ENGINE CODES

CODE	LITERS		CARB	DIV USAGE
C	4.0	V8	MFI	3
K	3.8	V6	MFI	1234
M	3.1	V6	MFI	1234
P	5.7	V8	MFI	12 46
T	2.4	L4	MFI	1234
W	4.3	V8	MFI	1
X	3.4	V6	MFI	123
Y	4.6	V8	MFI	6
1	3.8	V6	MFI	234
4	2.2	L4	MFI	1234
5	5.7	V8	MFI	1 46
6	1.0	L3	TBI	1
6	1.6	L4	MFI	1
9	1.3	L4	MFI	1
9	4.6	V8	MFI	6

NOTE:DIVISION / MAKE
1st Position = Country
1 = United States
2 = Canada
3 = Mexico
J = Japan

2nd Position = Manufacture
G = General Motors

3rd Position = Division
1 = Chevrolet
2 = Pontiac
3 = Oldsmobile
4 = Buick
6 = Cadillac
7 = Canada
Z = Isuzu (Luv)

* BODY TYPE - SEE MODEL CHART

@ RESTRAINT SYSTEM TYPE
1 MANUAL BELTS
2 MANUAL BELTS(PASS & DR INFLATABLE RESTRAINT)
3 MANUAL BELTS(DR INFLATABLE
4 AUTOMATIC BELTS
5 AUTOMATIC BELTS(DRIVER INFLATABLE RESTRAINT)
6 AUTOMATIC BELTS(DRIVER & PASSENGER INFLATABLE)

© 2000 GENERAL MOTORS SERVICE PARTS OPERATIONS–CHEVROLET–14Y

MODEL SERIES IDENTIFICATION CHART

YEAR	SERIES	WHEELBASE	VEHICLE
1984	1YY07	96	CORVETTE(2 DR HATCHBACK)
1985	1YY07	96	CORVETTE(2 DR HATCHBACK)
1986	1YY07	96	CORVETTE(2 DR HATCHBACK)
1986	1YY67	96	CORVETTE(2 DR CONVERTIBLE)

YEAR	VIN CODE	SERIES	WHEEL BASE	VEHICLE
1987	2	1YY07	96	CORVETTE(2 DR HATCHBACK)
1987	3	1YY67	96	CORVETTE(2 DR CONVERTIBLE)
1988	2	1YY07	96	CORVETTE(2 DR HATCHBACK)
1988	3	1YY67	96	CORVETTE(2 DR CONVERTIBLE)
1989-96	2	1YY07	96	CORVETTE(2 DR PLAINBACK)
1990-95	2	1YY07 W/ZR1 = 1YZ07	95	CORVETTE(2 DR PLAINBACK)
1989-96	3	1YY67	96	CORVETTE(2 DR CONVERTIBLE)

© 2000 GENERAL MOTORS SERVICE PARTS OPERATIONS-CHEVROLET-14Y

1984 CORVETTE PAINT COLORS

COLOR NAME	CODE	DITZLER	DUPONT	RINSHED MASON
White	10	8631		1802
Black	19	9300		--
Med Gray Irid	18	3603		13104
Spectra Red	70	3512		12847V
Lt Blue Irid	20	3602		13105
Dk Blue Irid	29	--		13113
Gold Irid	53	3609		13117D
Lt Bronze Irid	63	3606		13124
Brt Red Irid	72	--		13130V
Brt Blue Irid	31	--		12660D
Dk Bronze Irid	66	3607		13126
Brt Slv Irid	16	3602		13103
Med Blue Irid	23	3605		13109

1985 CORVETTE PAINT COLORS

COLOR NAME	CODE	DITZLER	DUPONT	RINSHED MASON
Brt Slv Met	13	3661	B8402	14060
Med Gray Met	18	3603	B8321	13104
Lt Blue Met	20	3604	B8322	13105
Med Blue Met	23	3605	B8323	13109
White	40	3600	B8469	13570
Black	41	9300	99	13572
Gold Met	53	3609	B8327	13117
Lt Bronze Met	63	3606	B8324	13124
Dk Bronze Met	66	3607	B8325	13126
Brt Red	81	3794	C8508	15265

© 2000 GENERAL MOTORS SERVICE PARTS OPERATIONS–CHEVROLET–14Y

OPTION LABEL LOCATION

1985 - Y - ON LEFT SIDE REAR STORAGE COMPARTMENT

1986 - 96 - Y - ON INSIDE OF CENTER CONSOLE DOOR

© 2000 GENERAL MOTORS SERVICE PARTS OPERATIONS-CHEVROLET-14Y

ILLUSTRATED GROUP INDEX

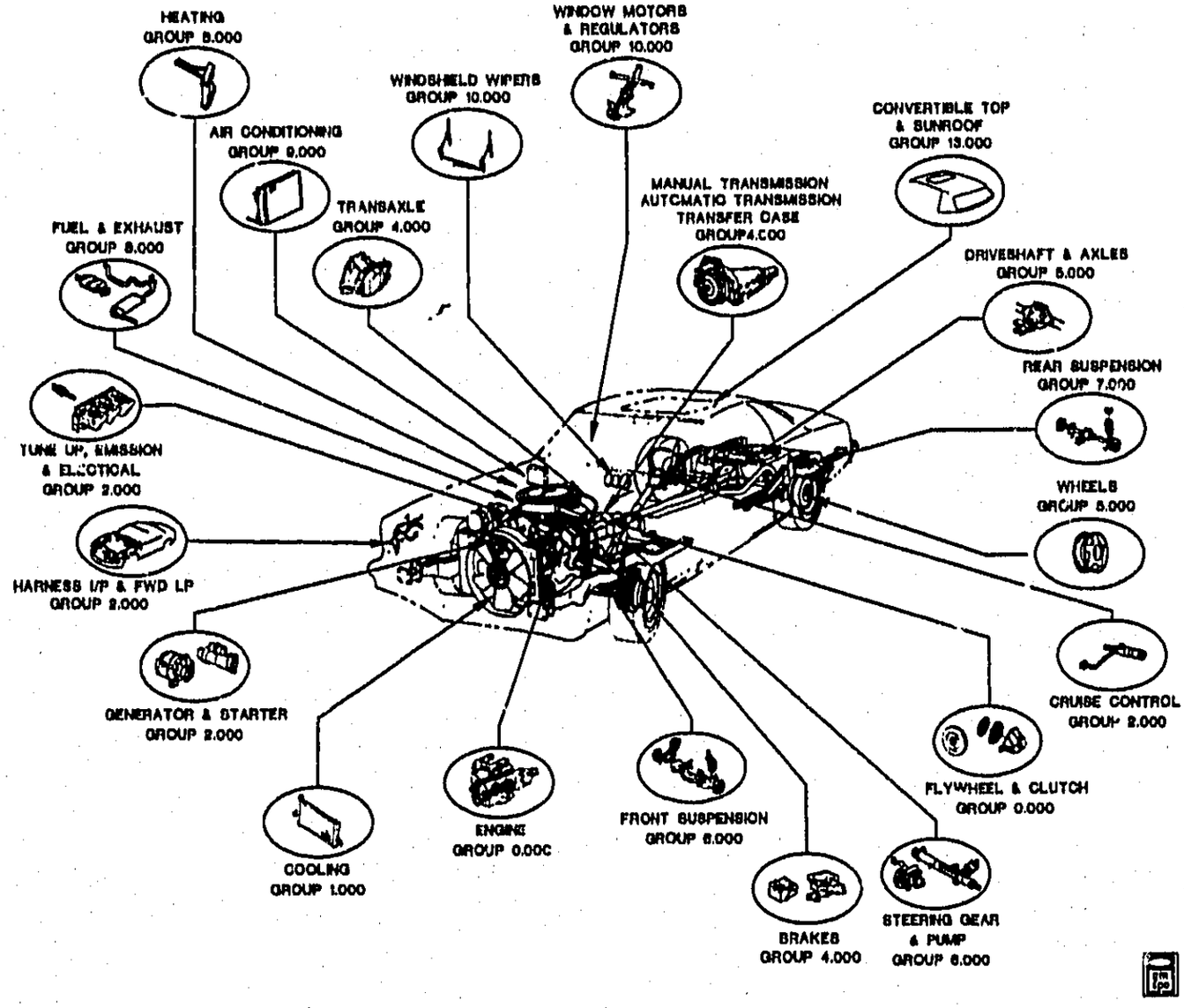

© 2000 GENERAL MOTORS SERVICE PARTS OPERATIONS-CHEVROLET-14Y

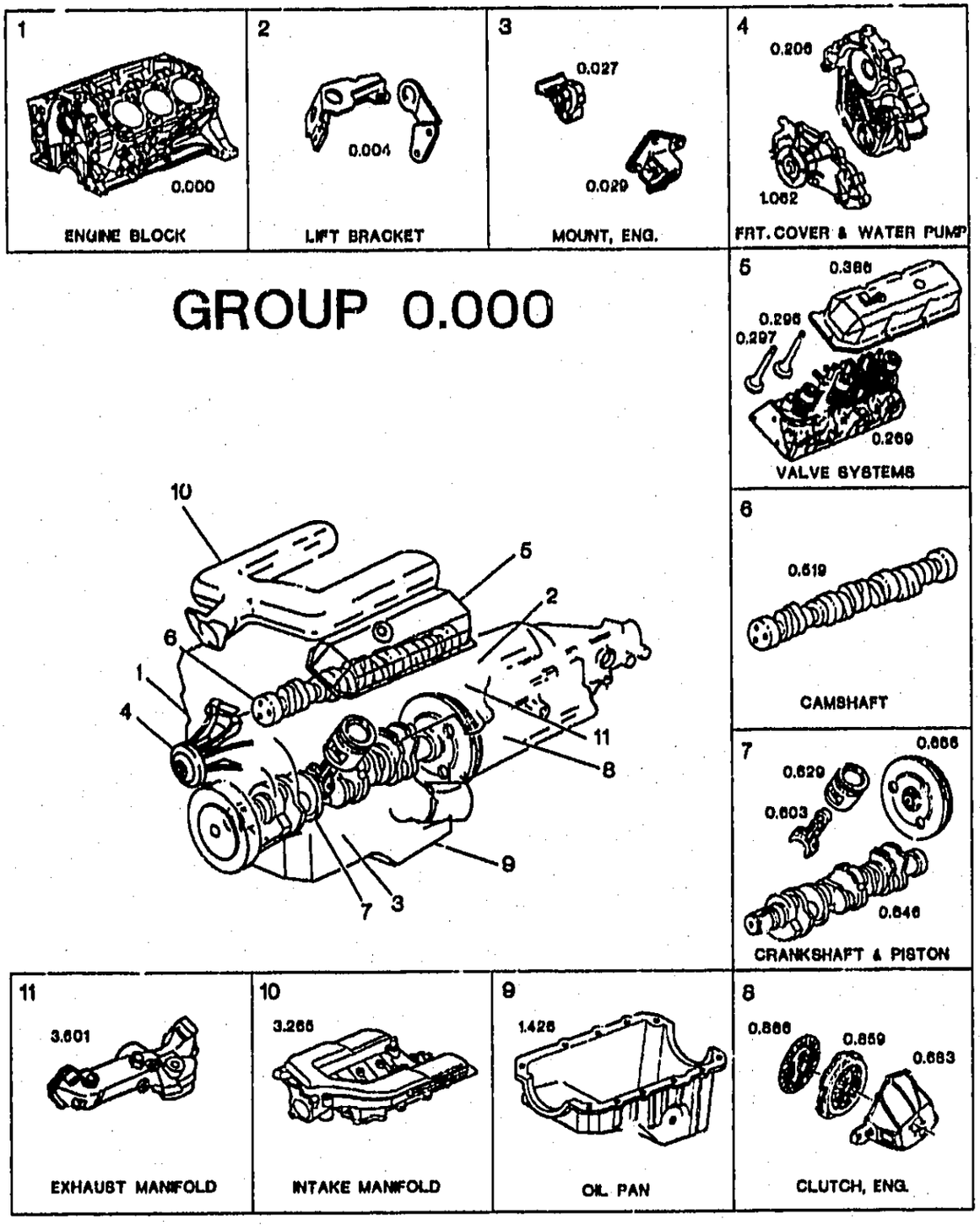

GROUP 0.000

© 2000 GENERAL MOTORS SERVICE PARTS OPERATIONS–CHEVROLET–14Y

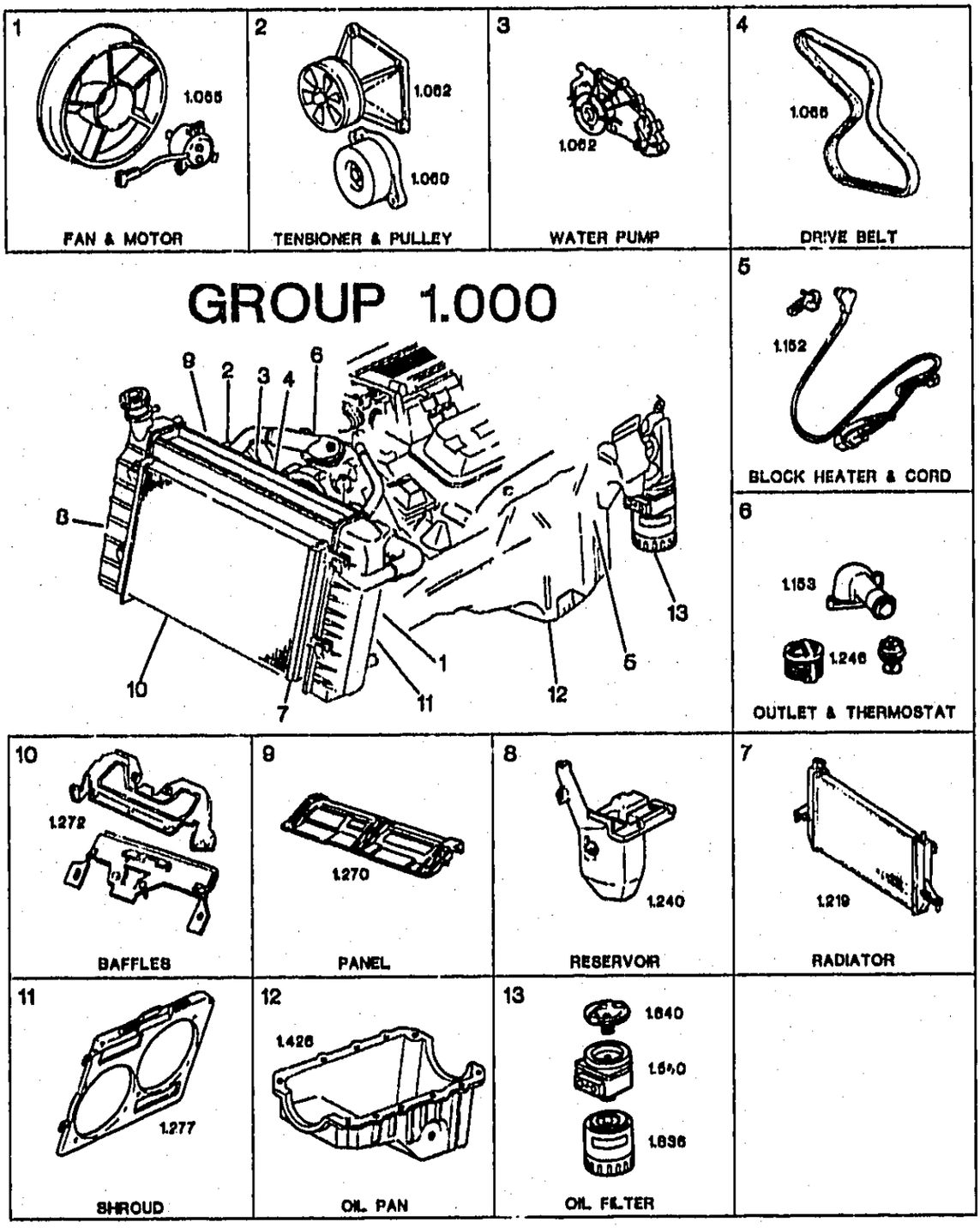

© 2000 GENERAL MOTORS SERVICE PARTS OPERATIONS–CHEVROLET–14Y

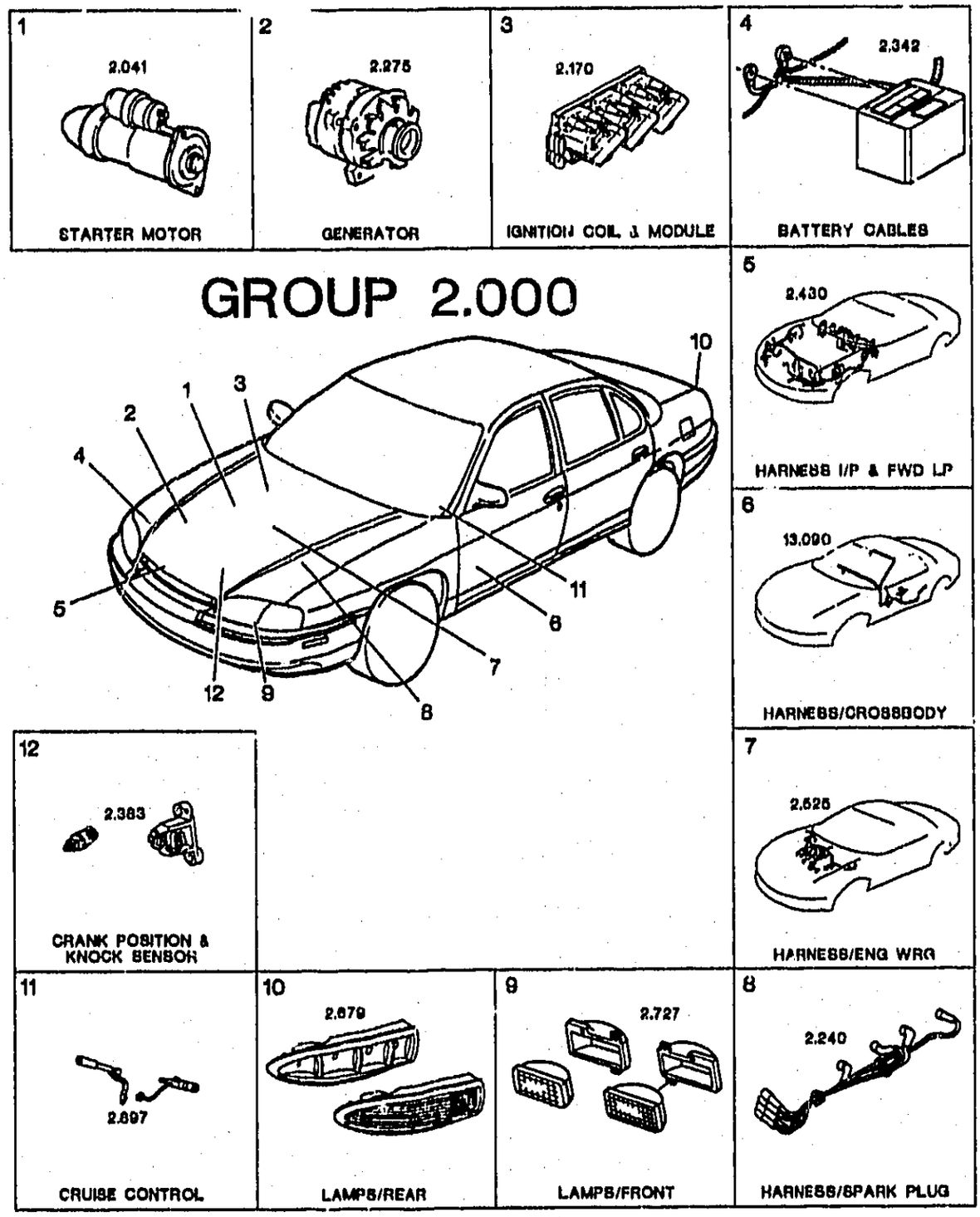

© 2000 GENERAL MOTORS SERVICE PARTS OPERATIONS-CHEVROLET-14Y

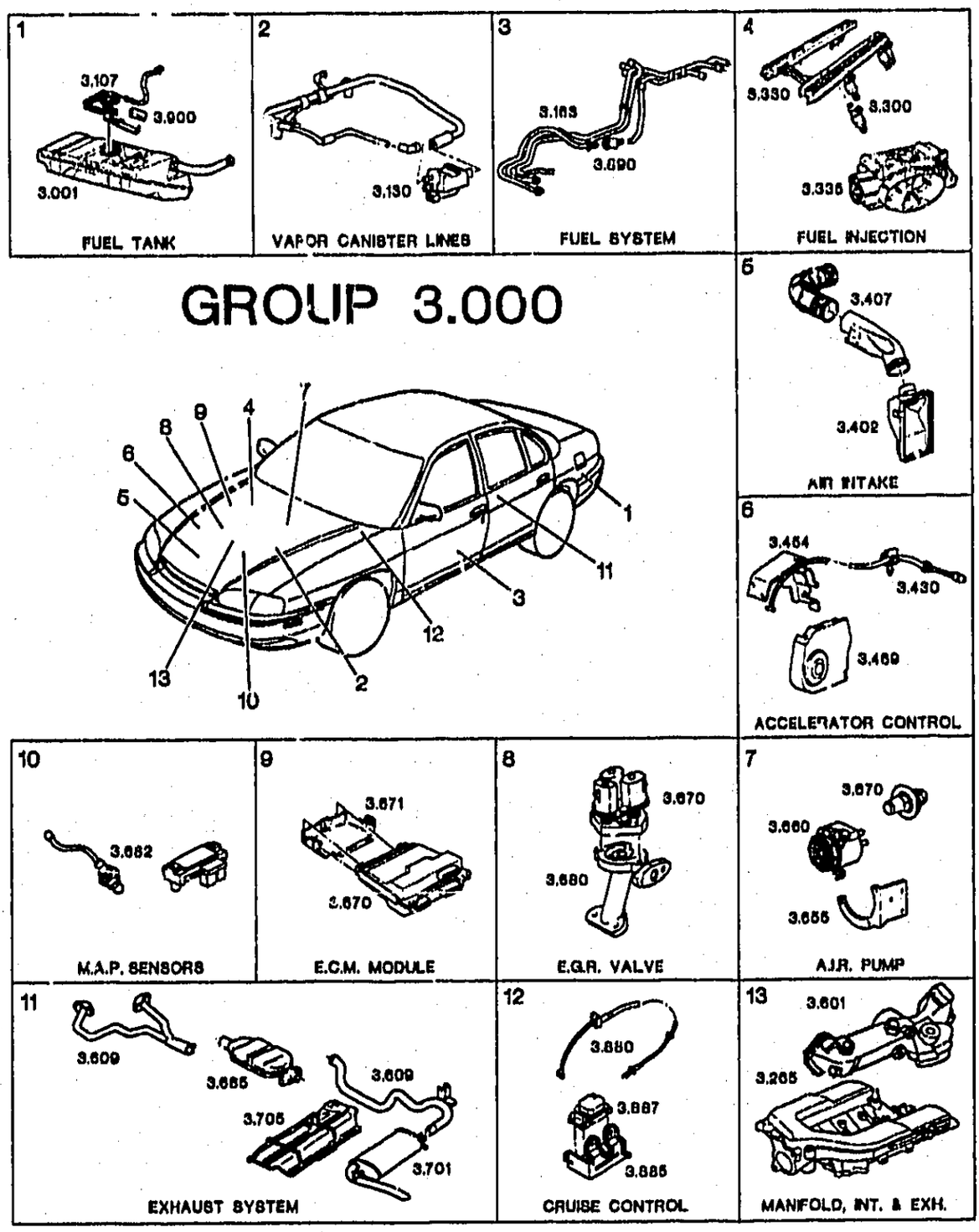

© 2000 GENERAL MOTORS SERVICE PARTS OPERATIONS–CHEVROLET–14Y

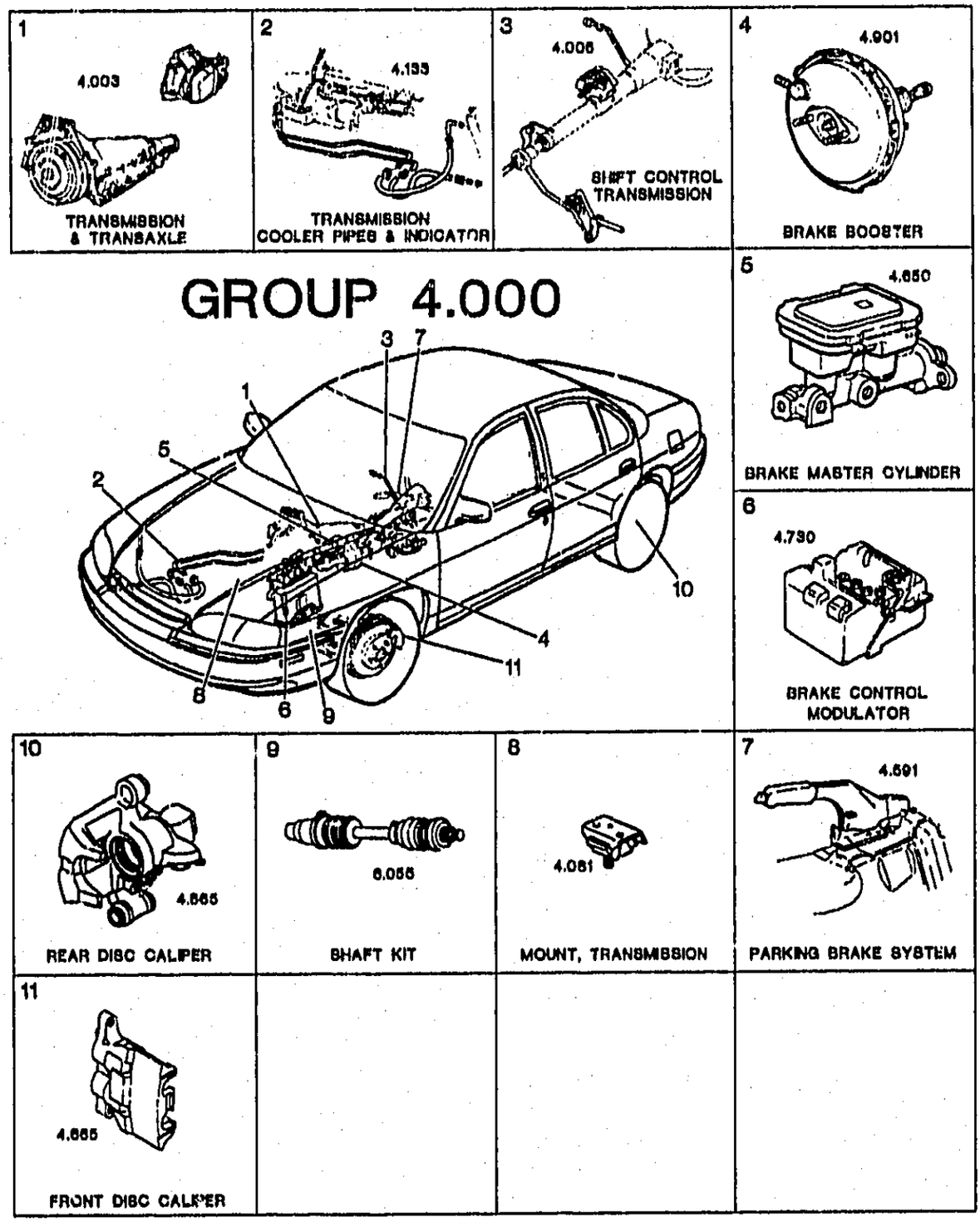

© 2000 GENERAL MOTORS SERVICE PARTS OPERATIONS-CHEVROLET-14Y

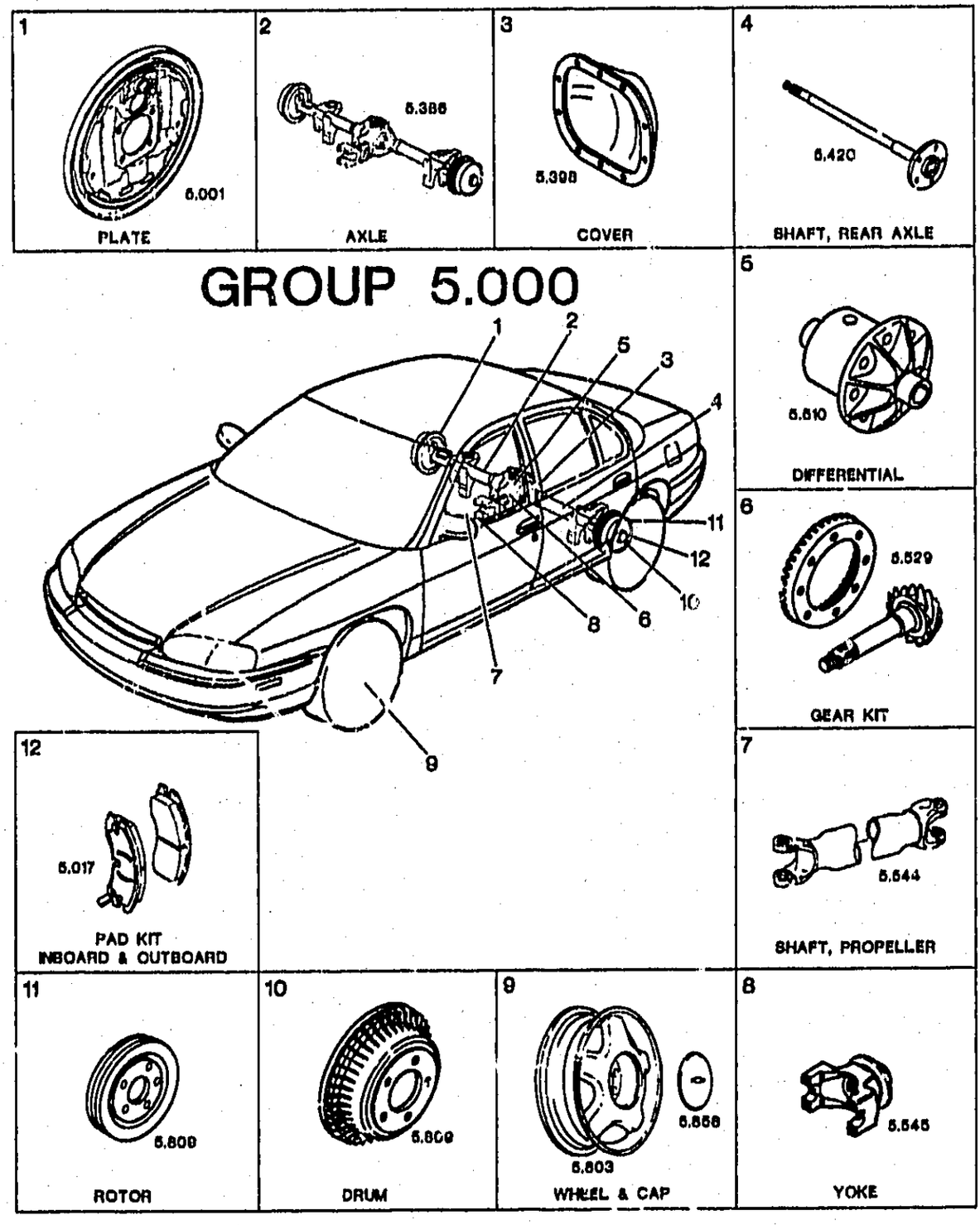

© 2000 GENERAL MOTORS SERVICE PARTS OPERATIONS-CHEVROLET-14Y

MICROFICHE INDEX

GROUPS 0.000 & 21.000

FICHE 1 OF 11

GROUP	DESCRIPTION	STARTING GRID LOCATION PARTS	ILLUSTRATIONS
–	GENERAL INFORMATION	1–A2	1–G2
–	ALPHABETICAL INDEX	1–B13	N.A.
0.000	8–CYLINDER ENGINE	1–E2	1–G5
21.000	ACCESSORY REFERENCE LIST	1–D2	N.A.
–	OUT OF FICHE CALLS	N.A.	1–L13

1–B1

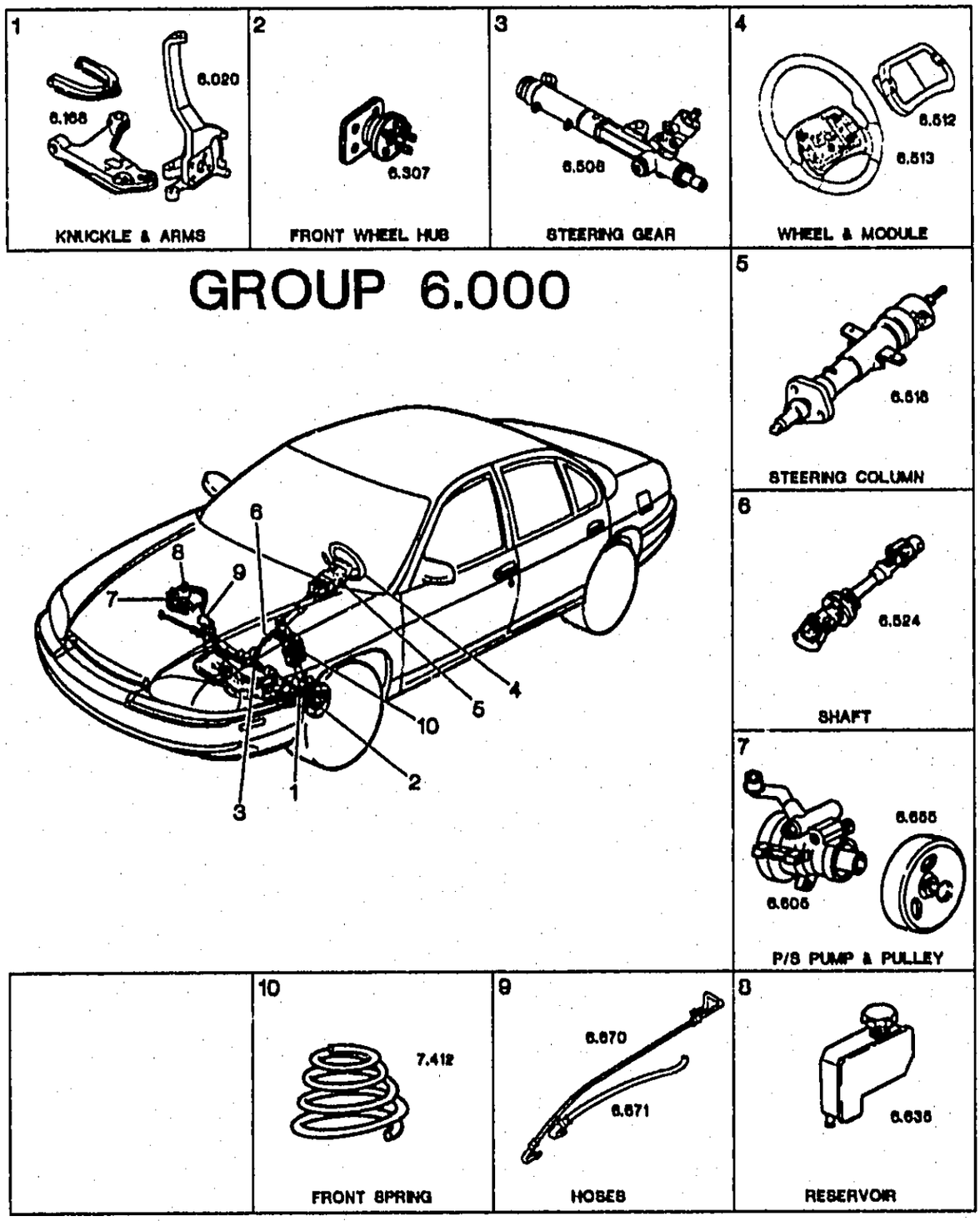

GROUP 6.000

© 2000 GENERAL MOTORS SERVICE PARTS OPERATIONS-CHEVROLET-14Y

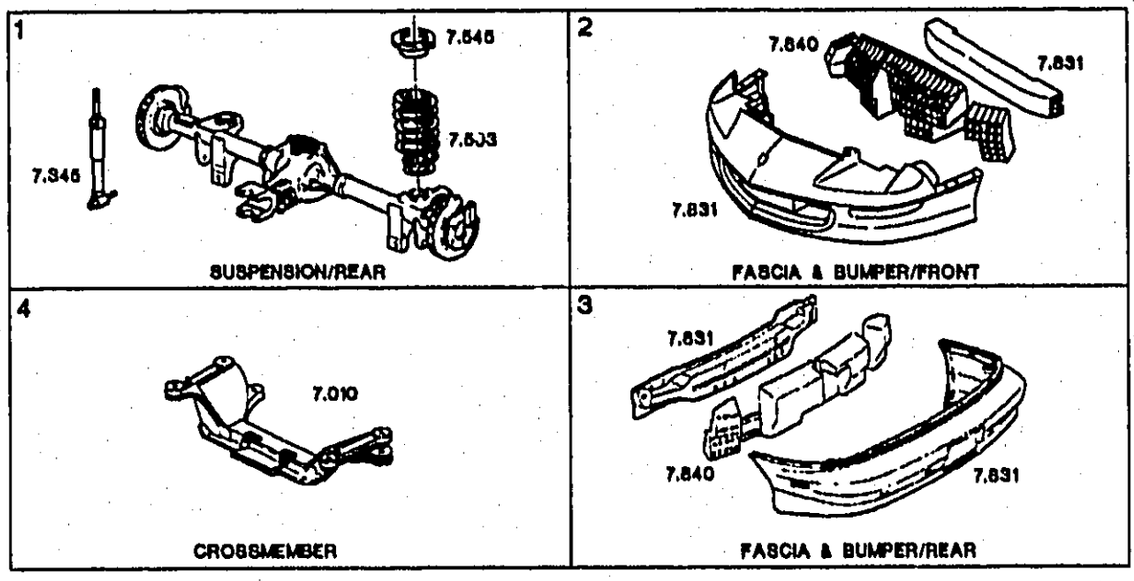

GROUP 7.000

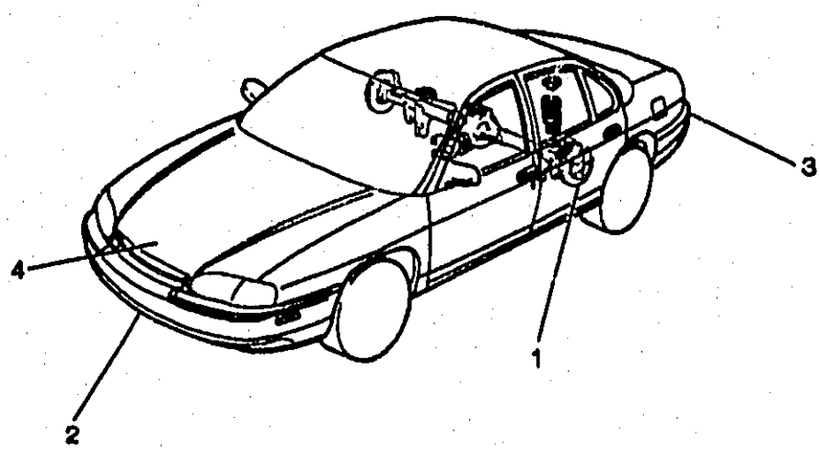

© 2000 GENERAL MOTORS SERVICE PARTS OPERATIONS–CHEVROLET–14Y

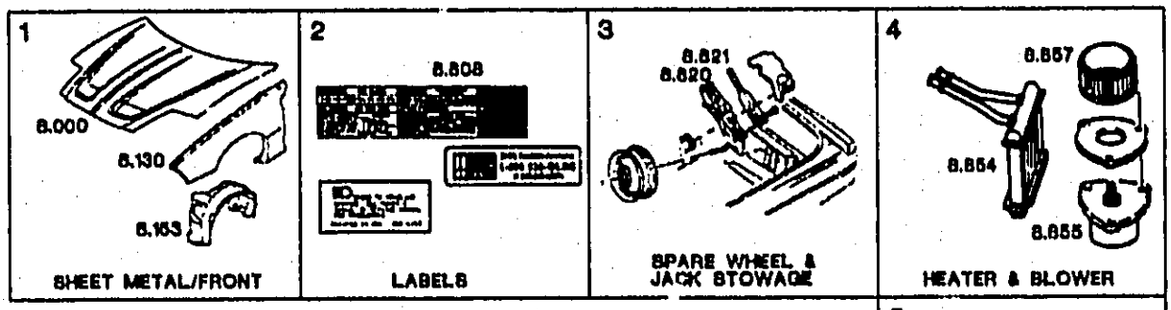

GROUP 8.000

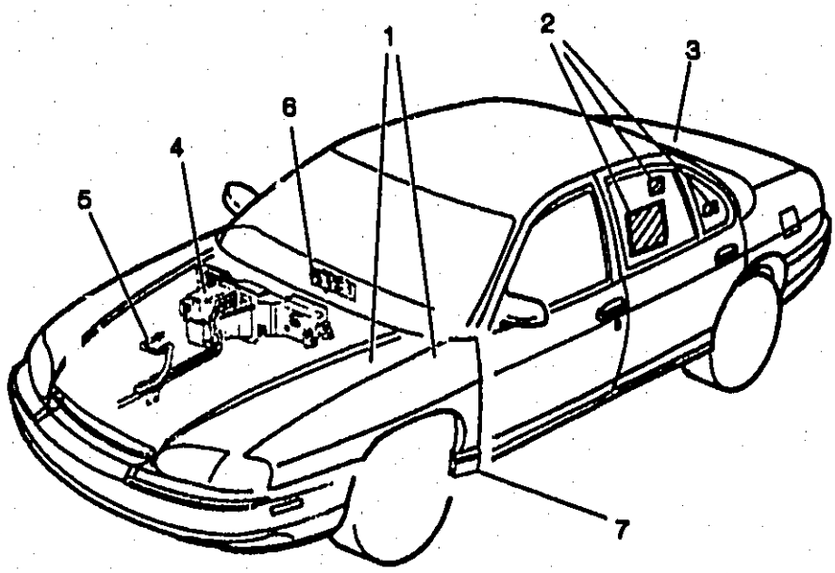

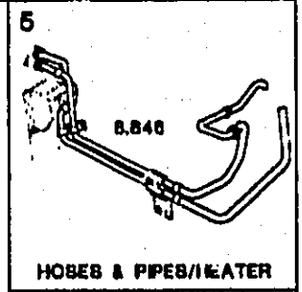

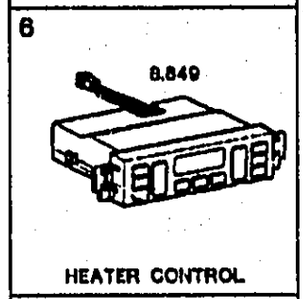

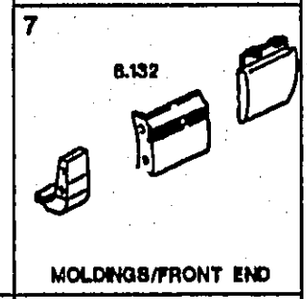

© 2000 GENERAL MOTORS SERVICE PARTS OPERATIONS–CHEVROLET–14Y

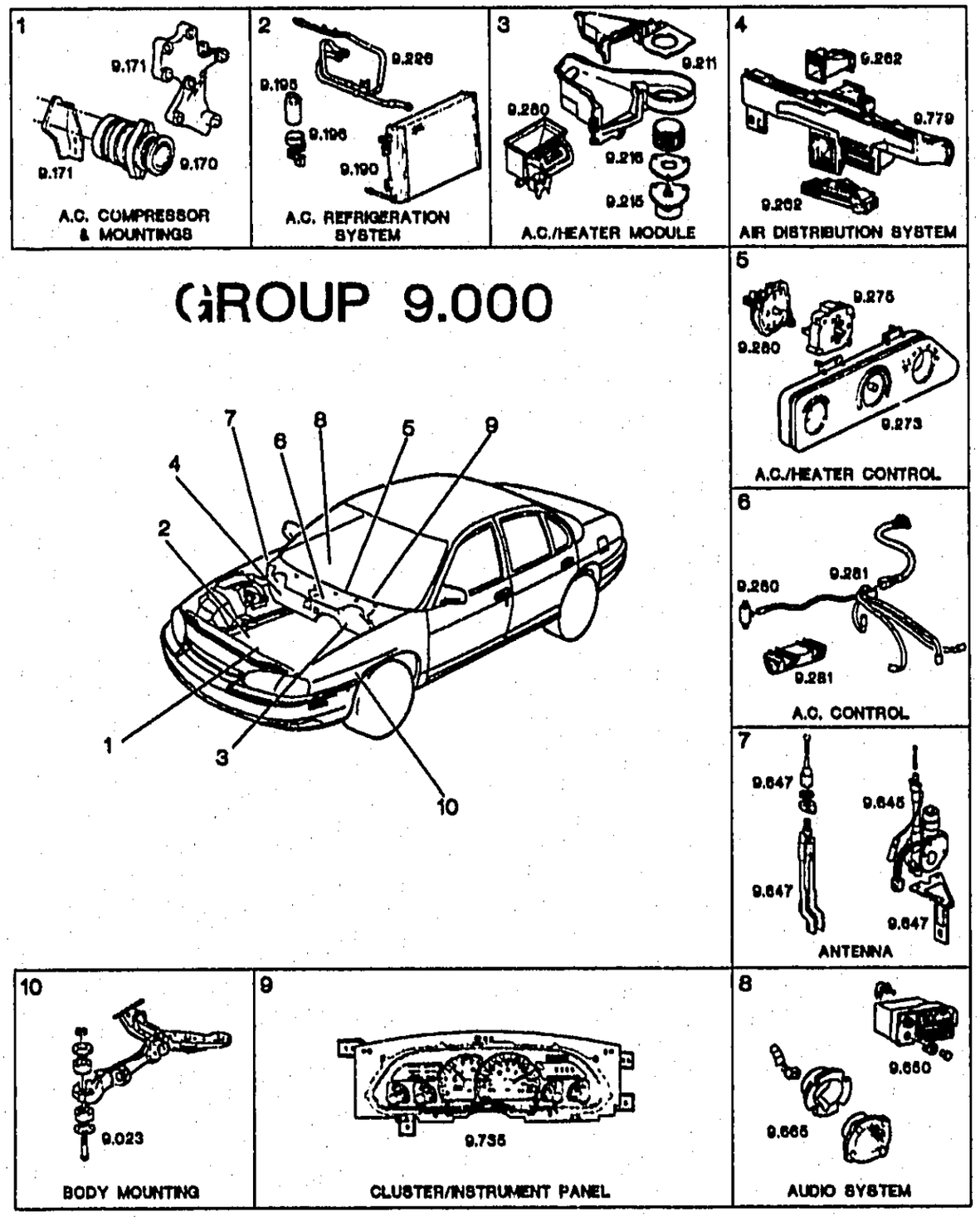

GROUP 9.000

© 2000 GENERAL MOTORS SERVICE PARTS OPERATIONS-CHEVROLET-14Y

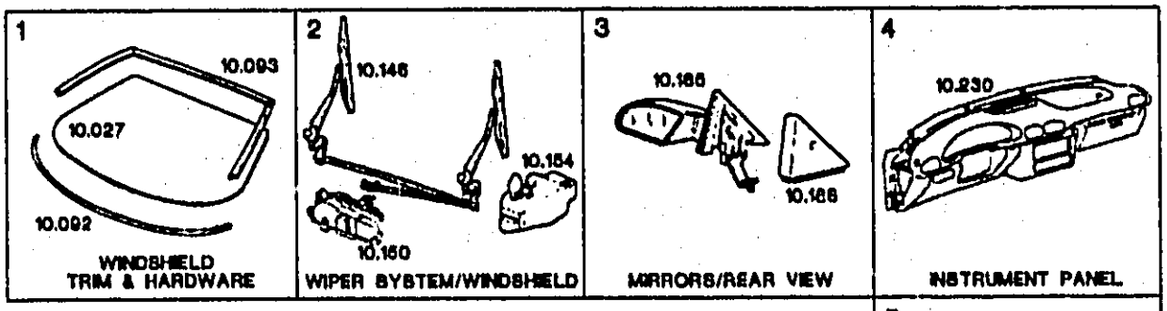

GROUP 10.000

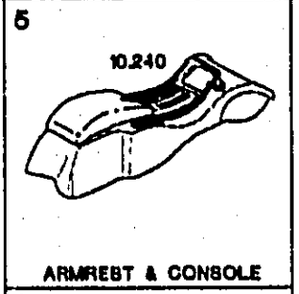

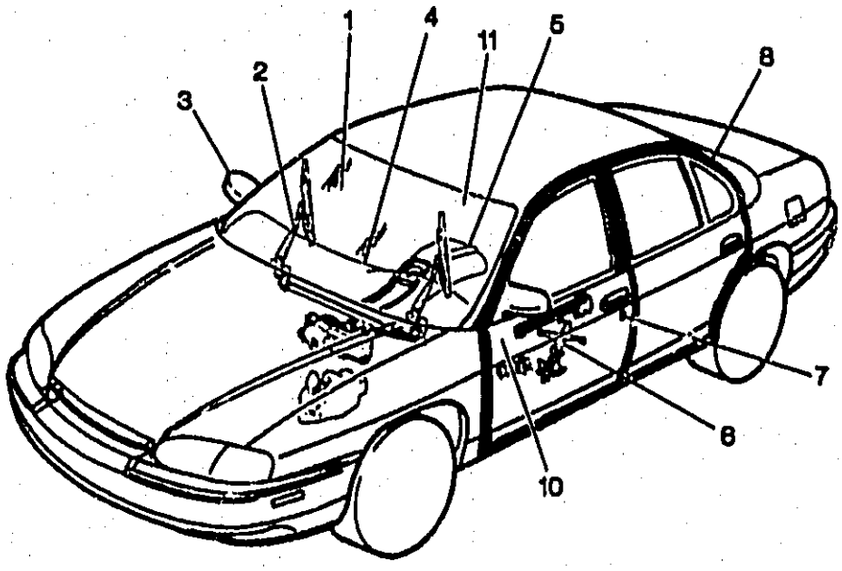

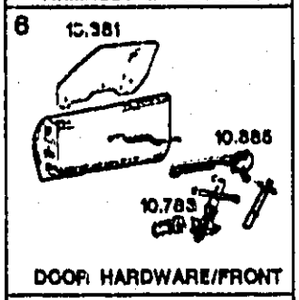

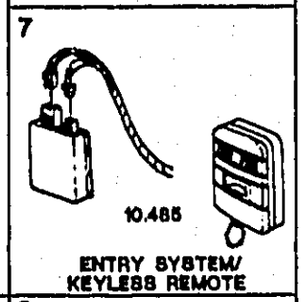

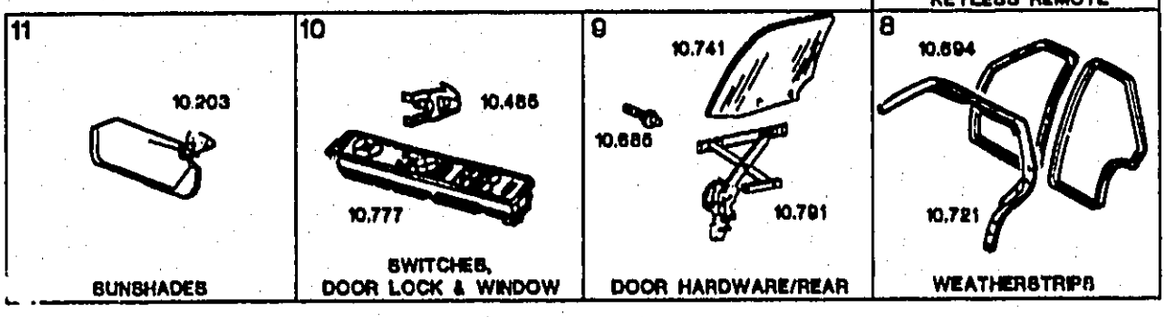

© 2000 GENERAL MOTORS SERVICE PARTS OPERATIONS-CHEVROLET-14Y

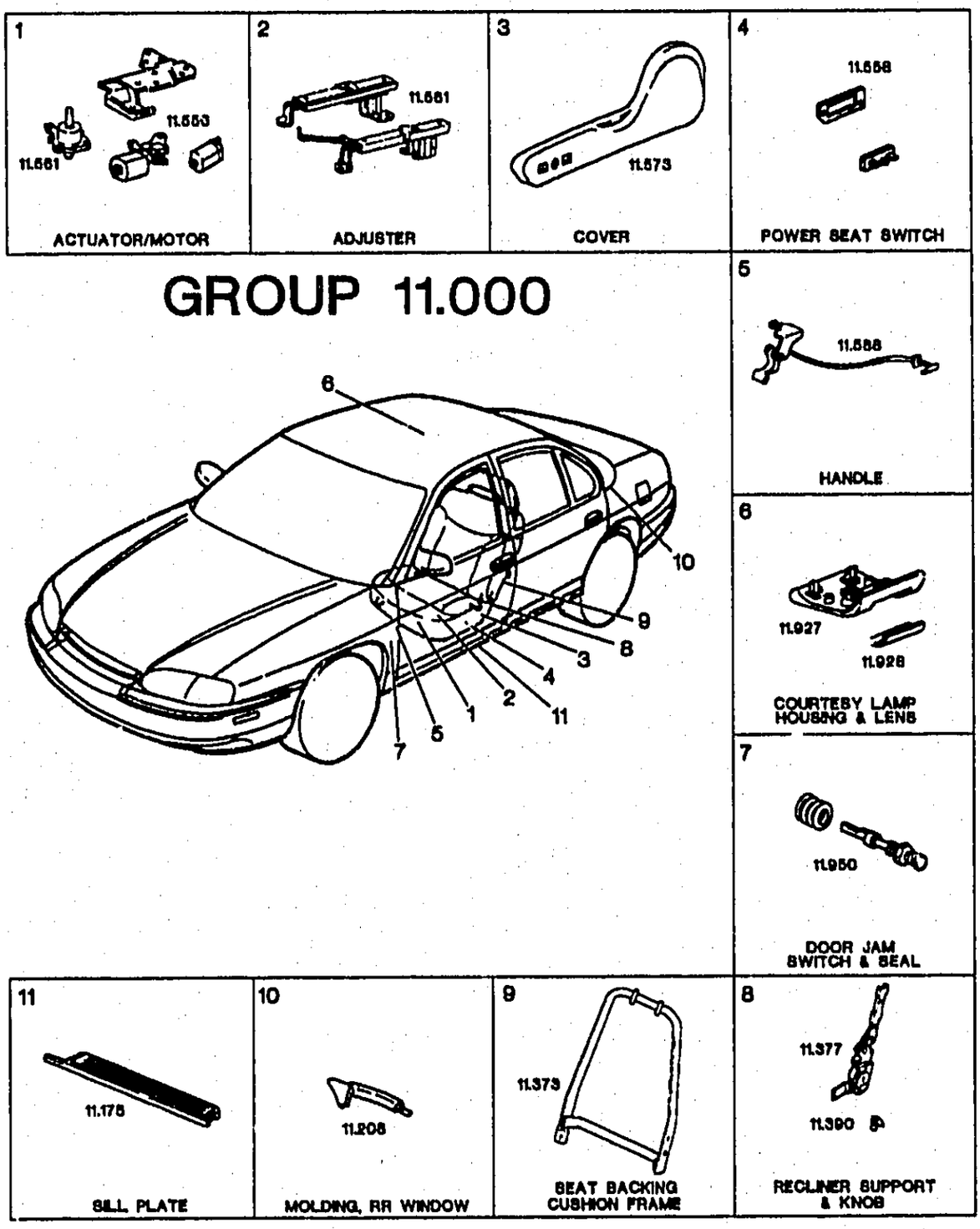

GROUP 11.000

© 2000 GENERAL MOTORS SERVICE PARTS OPERATIONS–CHEVROLET–14Y

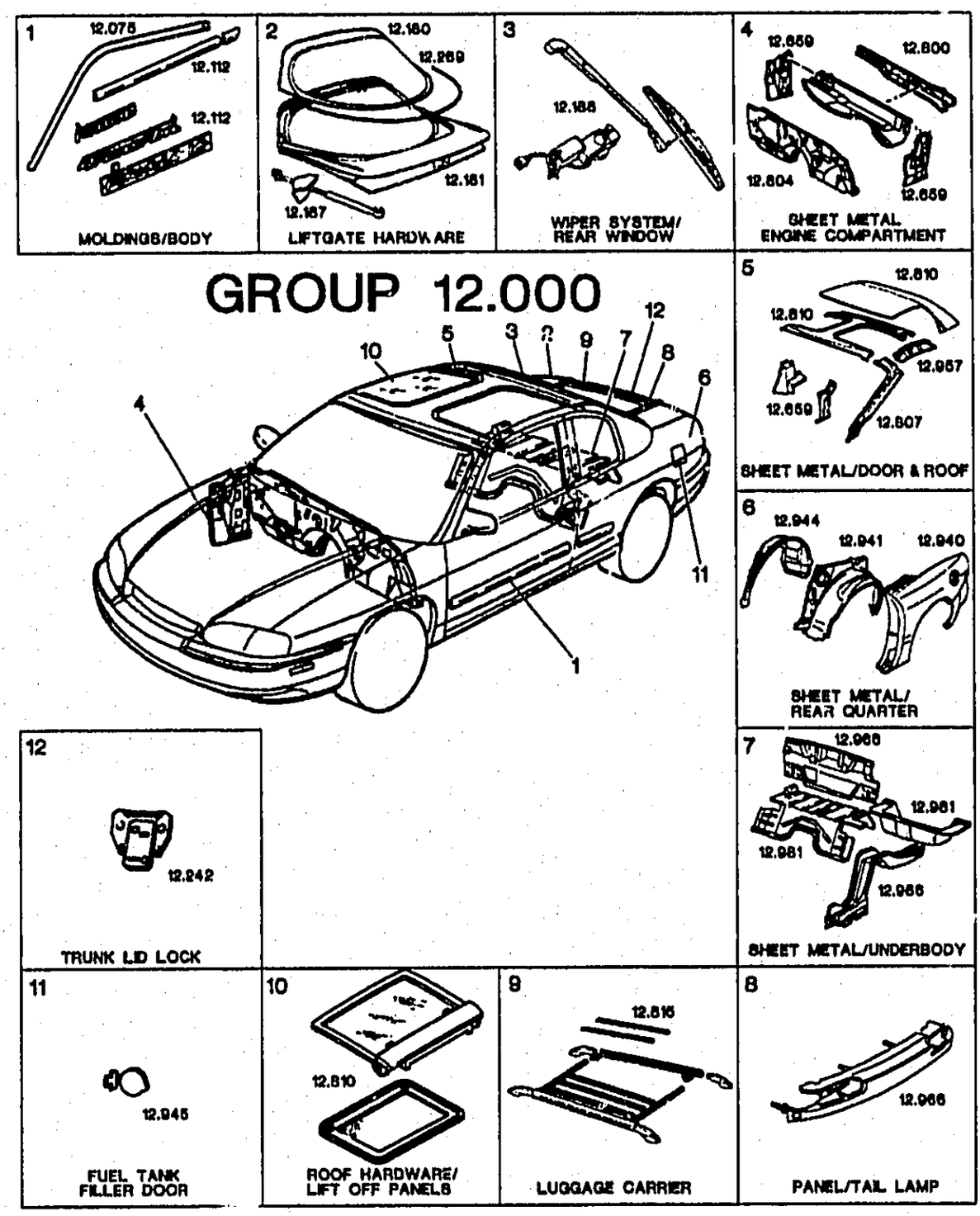

© 2000 GENERAL MOTORS SERVICE PARTS OPERATIONS-CHEVROLET-14Y

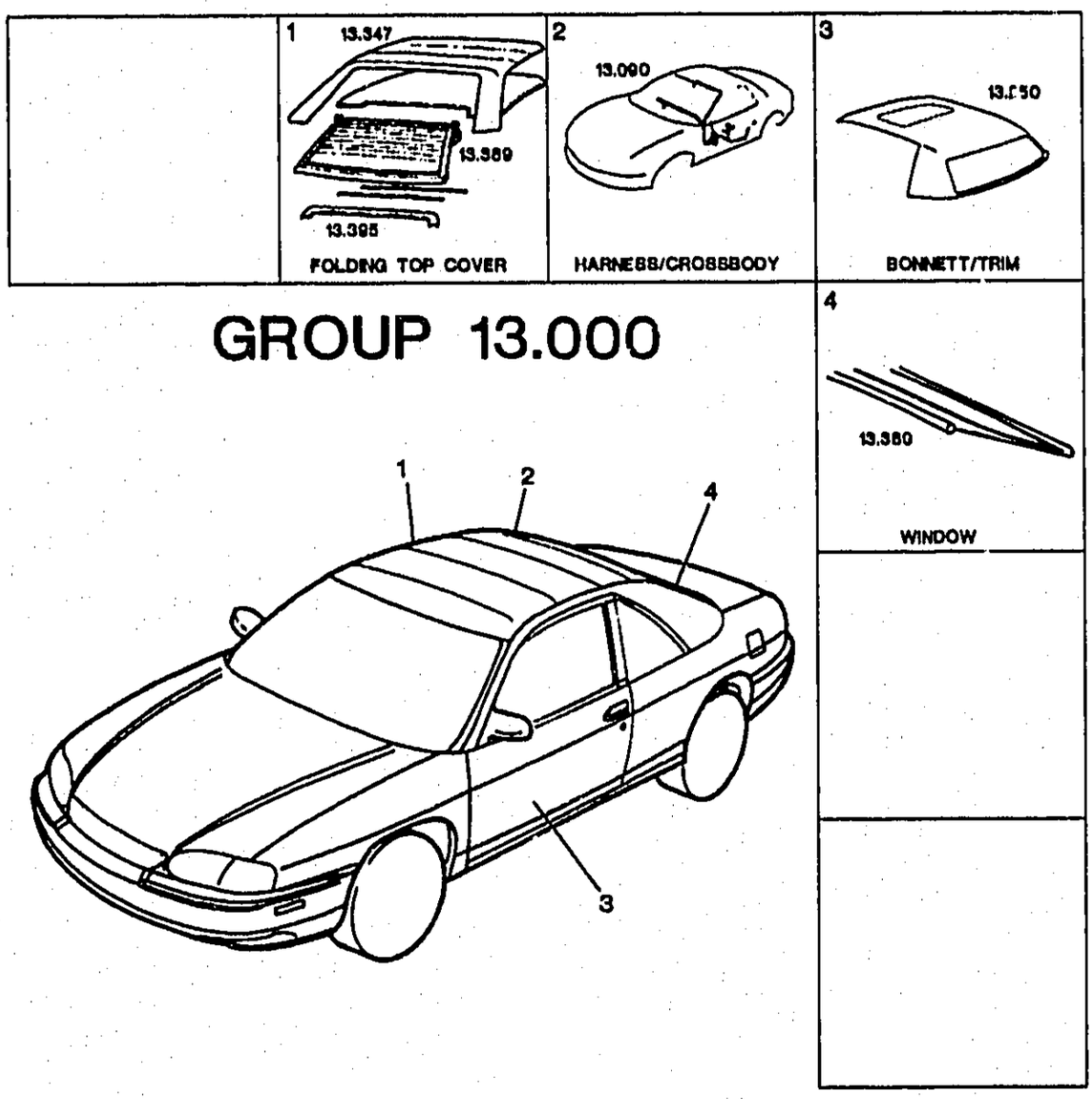

GROUP 13.000

© 2000 GENERAL MOTORS SERVICE PARTS OPERATIONS–CHEVROLET–14Y

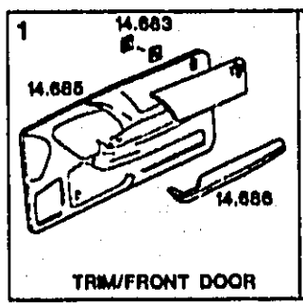

TRIM/FRONT DOOR

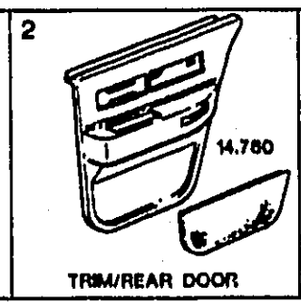

TRIM/REAR DOOR

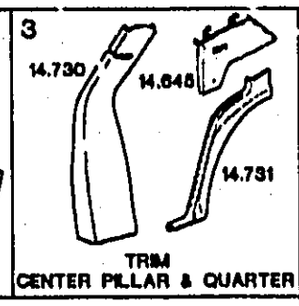

TRIM
CENTER PILLAR & QUARTER

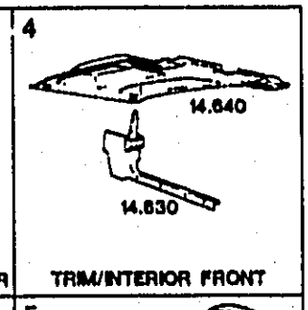

TRIM/INTERIOR FRONT

GROUP 14.000

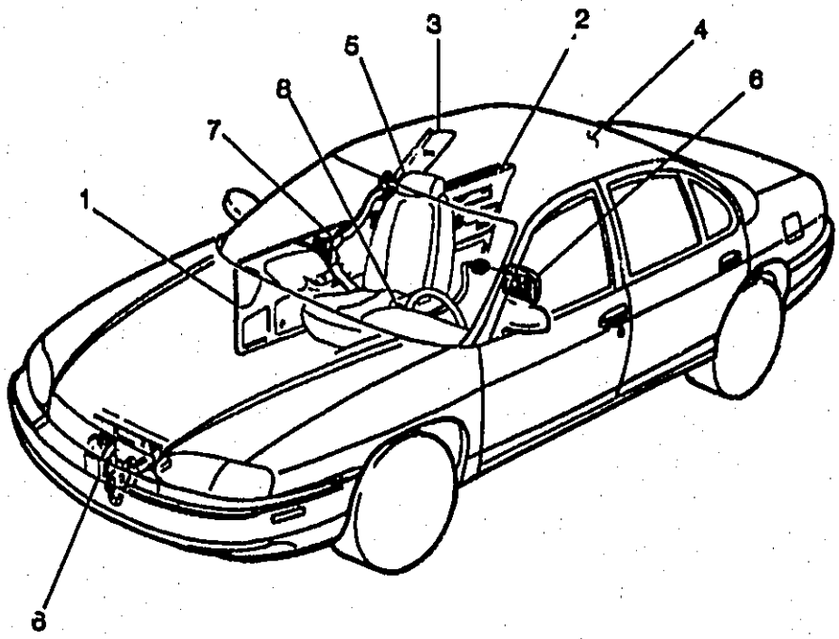

SEAT ASM/FRONT

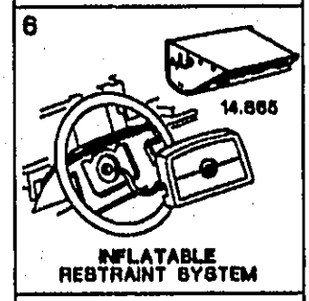

INFLATABLE
RESTRAINT SYSTEM

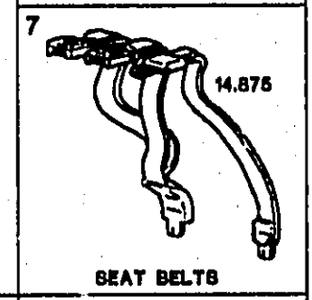

SEAT BELTS

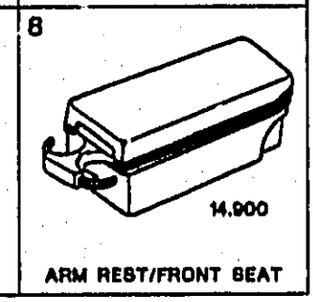

ARM REST/FRONT SEAT

© 2000 GENERAL MOTORS SERVICE PARTS OPERATIONS-CHEVROLET-14Y

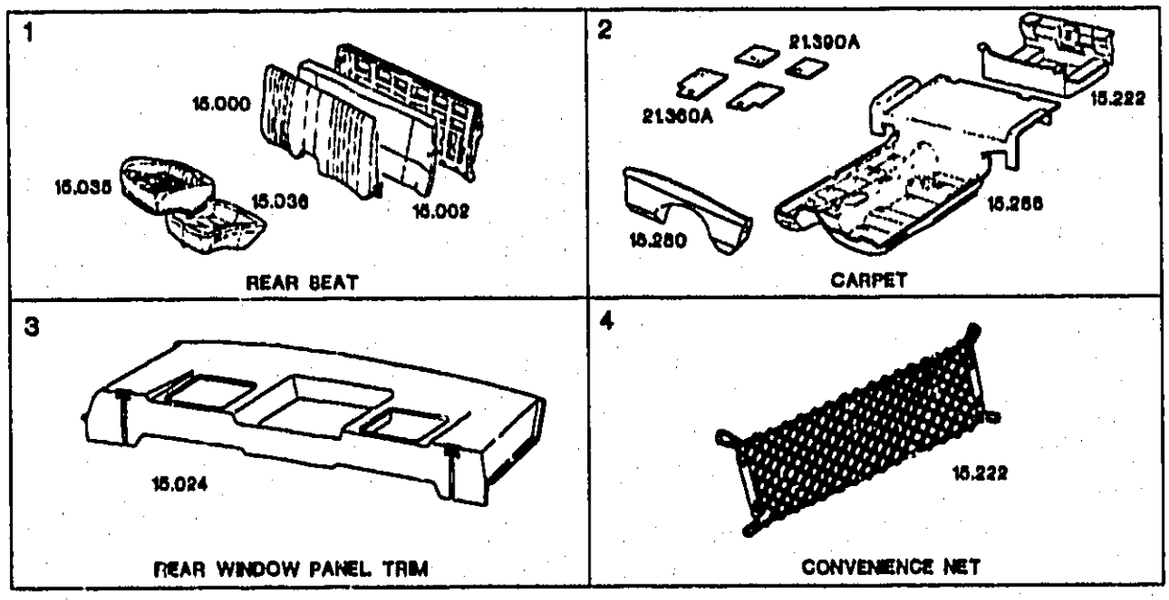

GROUP 15.000

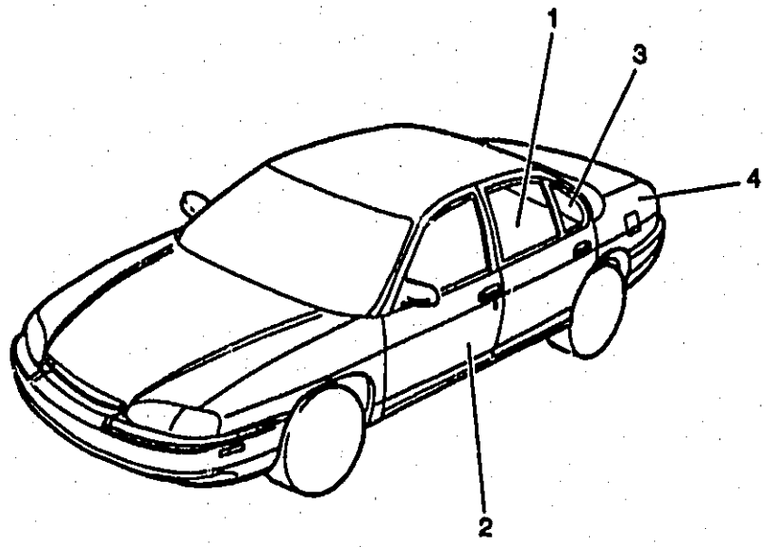

© 2000 GENERAL MOTORS SERVICE PARTS OPERATIONS-CHEVROLET-14Y

CHART INDEX

The identification or usage charts are located in this catalog as listed below.

CHART DESCRIPTION	GRID
ILLUS INDEX (GRP 0)	1–E8
ENGINE	1–E9
ILLUS INDEX (GRP 1)	2–A7
V–BELTS	2–A13
RADIATOR	2–A22
ILLUS INDEX (GRP 2)	3–A7
STARTER MOTOR	3–A11
SPARK PLUG WIRE	3–A25
TUNE–UP CHARTS	3–A28
GENERATOR	3–B8
DISTRIBUTOR	3–B22
LAMP SOCKETS	3–E8
ILLUS INDEX (GRP 3)	4–A7
FUEL TANK METER	4–A10
THROTTLE BODY	4–B2
CARB. EFI	4–D11
CARBURETIONCARB.EFI	4–D12
ILLUS INDEX (GRP 4)	5–A8
TRANS AND ENGINE	5–A9
SPEEDOMETER GEAR	5–D28
MASTER CYLINDER	6–A10
POWER BOOSTER	6–B9
ILLUS INDEX (GRP 5)	6–C7
REAR AXLE	6–C8
AXLE	6–C11
ILLUS INDEX (GRP 6)	7–A7
STEERING GEARS	7–A13
STEERING COLUMNS	7–A23
POWER STEERING PUMPS	7–B11
ILLUS INDEX (GRP 7)	7–C7
ILLUS INDEX (GRP 8)	8–A7
HEATER MODULE	8–A24
ILLUS INDEX (GRP 9)	8–C8
A.C. COMPRESSORS	8–C10
A.C. EVAP & BLOWER MODULE	8–C19
ELECTRIC ANTENNA	8–D8
INSTRUMENT CLUSTER	8–D27
ILLUS INDEX (GRP 10)	9–A8
ILLUS INDEX (GRP 11)	9–C6
ILLUS INDEX (GRP 12)	10–A7
ILLUS INDEX (GRP 13)	10–C6
ILLUS INDEX (GRP 14)	11–A6
TRIM COMB	11–A7
PAINT	11–A8
SEAT BELT	11–B24
ILLUS INDEX (GRP 15)	11–D5
CARPET I.D.	11–D15

CHEVROLET
ALL GROUPS

ALPHABETICAL INDEX

ALPHABETICAL INDEX

A

ABSORBER, Bumper/Fascia Energy Absorber 7.840 7–D9
ABSORBER, Instrument Panel Pad 10.235 9–A21
ABSORBER, Shock 7.345 7–C16
ACCELEROMETER KIT, Hydraulic Suspension 7.440 7–C20
ACCELEROMETER, Hydraulic Suspension 7.440 7–C20
ACCUMULATOR, A/C Refrigerant 9.195 8–C16
ACCUMULATOR, Transmission Servo & Accumulator (AUTOMATIC) 4.228 5–D12
ACTUATOR KIT, Concealed Capsule/Headlamp Control Drive ... 2.760 3–E2
ACTUATOR KIT, Parking Brake Apply .. 4.591 6–A7
ACTUATOR, A/C Control 9.280 8–D5
ACTUATOR, Air Cleaner Controls 3.415 4–B11
ACTUATOR, Air Suspension and Inflator Unit 7.460 7–C23
ACTUATOR, Capsule/Headlamp Dimmer 2.459 3–C9
ACTUATOR, Concealed Capsule/Headlamp Control Drive ... 2.760 3–E2
ACTUATOR, Door Electric and Vacuum Locks 10.485 9–B5
ACTUATOR, Folding Top Compartment 12.170 10–A10
ACTUATOR, Hydraulic Suspension 7.440 7–C20
ACTUATOR, Ignition Switch Warning, Lock, Headlamp, Theft Deterrent or Rear/Side Object 2.195 3–A21
ACTUATOR, Multi Port Fuel Injection Idle Air 3.336 4–B7
ACTUATOR, Stop Lamp Switch 2.447 3–C8
ACTUATOR, Transmission Park Lock (AUTOMATIC) 4.290 5–D25
ACTUATOR, Turn Signal Lamp 2.695 3–E6
ADAPTER KIT, Battery Cable 2.3 3 3–B21
ADAPTER PKG, Mobile (Non–Production) 21.444B 1–D8
ADAPTER PKG, Radio (Production) 21.480A 1–D9
ADAPTER, Brake Master Cylinder Reservoir 4.651 6–A14
ADAPTER, Emission Control System ... 3.671 4–C19
ADAPTER, Emission System 3.680 4–C24
ADAPTER, Engine Oil Drain (Non–Production) 21.241B 1–D5
ADAPTER, Engine Oil Filter 1.840 2–B15
ADAPTER, Exhaust Pipe 3.609 4–C7
ADJUSTER, Accelerator Pedal Lever ... 3.454 4–B13
ADJUSTER, Brake Shoe Adjusting 5.110 6–C13
ADJUSTER, Capsule/Headlamp Adjuster 2.737 3–D28
ADJUSTER, Cruise Control 3.880 4–D14
ADJUSTER, Front Seat Adjuster 11.561 9–C24
ALARM, Capsule/Headlamp Warning .. 2.461 3–C9
ALARM, Ignition Switch Warning, Lock, Headlamp, Theft Deterrent or Rear/Side Object 2.195 3–A21
ALARM, Instrument Cluster Warning ... 9.765 8–E9
ALARM, Speed Indicator 9.762 8–E8
AMPLIFIER, Radio Receiver 9.650 8–D14
AMPLIFIER, Speed Indicator 9.762 8–E8
ANTENNA PKG, Power Radio Antenna . 9.645 8–D7
ANTENNA, Door Electric and Vacuum Locks 10.485 9–B5
ANTENNA, Mobile (Non–Production) .. 21.444B 1–D8
ANTENNA, Power Radio Antenna 9.645 8–D7
APPLIQUE, A/C Control 9.279 8–D4
APPLIQUE, Driver Information Display . 9.768 8–E10
APPLIQUE, Floor Console 10.240 9–A23
ARM KIT, Engine Valve Rocker (8–CYLINDER) 0.333 1–E28
ARM, Engine Valve Rocker (6–CYLINDER) 0.333 1–E28
ARM, Folding Top Hinge 14.310 11–A21
ARM, Front Seat Bolster 11.379 9–C18
ARM, Steering Knuckle Upper & Lower Control 6.168 7–A8
ARM, Windshield Wiper Arm 10.147 9–A10
ARM, Windshield Wiper Motor Drive ... 10.151 9–A11
ARMATURE KIT, Radio Antenna 9.647 8–D11
ARMATURE, Starter Motor 2.043 3–A15
ARMREST, Front Door Armrest 14.686 11–A25
ASHTRAY, Instrument Panel Ashtray ... 12.009 10–A8
ASPIRATOR, A/C Electric Control 9.275 8–C27
ATTACHMENT KIT, Multi Port Fuel Injection Throttle Body 3.336 4–B6

B

BACKPLATE, Instrument Cluster 9.748 8–E7
BACKREST, Front Seat Back 14.602 11–B10
BAFFLE, Air Distributor 9.786 8–E12
BAFFLE, Engine Crankcase Ventilator .. 1.780 2–B12
BAFFLE, Engine Oil Pan 1.430 2–B3

© GENERAL MOTORS SERVICE PARTS OPERATIONS–CHEVROLET–14Y

BAFFLE, Engine Oil 1.426 2–A26
BAFFLE, Radiator Air 1.272 2–A26
BAG, Convertible and Hard Top 13.346 10–C15
BAG, Spare Wheel 7.629 7–C25
BAG, Wheel, Jack and Miscellaneous Wrench 8.621 8–A22
BALANCER, Engine Crankshaft And Camshaft Balancer [8–CYLINDER] . 0.659 1–F8
BALL, Generator Commutator End Frame 2.298 3–B16
BALL, Transmission Governor [AUTOMATIC] 4.256 5–D17
BALL, Transmission Main Control Valve Body [AUTOMATIC] 4.265 5–D18
BAND, Transmission Brake [AUTOMATIC] 4.251 5–D17
BAR, Bumper/Fascia Face 7.831 7–C28
BAR, Bumper/Fascia 7.836 7–D9
BARRIER, Door Inner Panel 10.355 9–B4
BARRIER, Rear Quarter Inner 12.941 10–A27
BARRIER, Windshield Frame 12.807 10–A17
BATTERY PKG, Food & Beverage (Non–Production) 21.265B 1–D6
BATTERY PKG, Mobile (Non–Production) 21.444B 1–D8
BATTERY PKG, Vehicle (Non–Production) 21.271B 1–D6
BATTERY PKG, Vehicle (Non–Production) 21.513B 1–D10
BATTERY, Mobile (Non–Production) ... 21.444B 1–D8
BATTERY, Vehicle (Non–Production) .. 21.513B 1–D10
BEARING KIT, Engine Connecting Rod [8–CYLINDER] 0.616 1–F6
BEARING KIT, Engine Crankshaft Main [8–CYLINDER] 0.096 1–E18
BEARING KIT, Front Seat Bolster 11.379 9–C18
BEARING KIT, Steering Column 6.521 7–B8
BEARING KIT, Steering Gear Shaft 6.525 7–B9
BEARING, A/C Compressor Pulley 9.181 8–C15
BEARING, Air Injection Reactor Pump and Multi–Function Air Compressor . 3.665 4–C11
BEARING, Concealed Capsule/Headlamp Opening Cover . 2.765 3–E3
BEARING, Differential Drive Pinion Front 5.447 6–C19
BEARING, Differential Drive Pinion 5.464 6–C22
BEARING, Differential Pinion 5.526 6–C27
BEARING, Differential Side Gear 5.536 6–C28
BEARING, Engine Camshaft & Balance Shaft Front [8–CYLINDER] 0.539 1–F5
BEARING, Engine Clutch Release Fork [8–CYLINDER] 0.799 1–F17
BEARING, Engine Crankshaft Clutch Pilot [8–CYLINDER] 0.649 1–F8
BEARING, Engine Crankshaft Main [8–CYLINDER] 0.096 1–E18
BEARING, Front Seat Bolster 11.379 9–C18
BEARING, Generator Commutator End Frame 2.298 3–B16
BEARING, Generator Drive End 2.306 3–B16
BEARING, Multi Port Fuel Injection Idle Air 3.338 4–B7
BEARING, Rear Axle Shaft 5.422 6–C18
BEARING, Steering Column 6.521 7–B8
BEARING, Steering Gear Shaft 6.525 7–B9
BEARING, Steering Pump Drive Shaft Outer Bearing Retainer 6.616 7–B15
BEARING, Transmission Countershaft Gear [4–SPEED MANUAL] 4.422 5–A17
BEARING, Transmission Housing [AUTOMATIC] 4.162 5–C19
BEARING, Transmission Main Drive Gear (Clutch) [4–SPEED MANUAL] 4.355 5–A15
BEARING, Transmission Mainshaft (Clutch) [4–SPEED MANUAL] 4.352 5–A15
BEARING, Transmission Mainshaft Center/Rear [4–SPEED MANUAL] .. 4.408 5–A16
BEARING, Transmission Output/Counter Shaft or Carrier [AUTOMATIC] 4.176 5–D3
BEARING, Transmission Overdrive Clutch [4–SPEED MANUAL] 4.468 5–A20
BEARING, Transmission Overdrive Out/Input [4–SPEED MANUAL] 4.465 5–A20
BEARING, Transmission Overdrive Sun Gear Cover [4–SPEED MANUAL] ... 4.472 5–A22
BEARING, Transmission Reverse Idler Gear [4–SPEED MANUAL] 4.437 5–A18
BEARING, Transmission Sun Gear [AUTOMATIC] 4.159 5–C19
BEARING, Vacuum Power Brake Booster Cylinder 4.924 6–B13
BELT KIT, Seat Belt 14.875 11–B14
BELT, Drive 1.066 2–A12
BELT, Seat Belt 14.875 11–B14
BEZEL, Capsule/Headlamp/Fog Lamp . 2.728 3–D28
BEZEL, Door Lock Inside Handle Escutcheon (Trim Protector) 10.515 9–B7
BEZEL, Door Window 10.777 9–B14
BEZEL, Folding Top 14.340 11–A22
BEZEL, Front Door Armrest 14.688 11–A27
BEZEL, Front Seat Back Lock 11.390 9–C19
BEZEL, Front Seat Lumbar 11.378 9–C17
BEZEL, Fuel Tank Filler Door 12.945 10–B3
BEZEL, Hood Latch 8.075 8–A12
BEZEL, Instrument Cluster 9.743 8–E6
BEZEL, Radio Antenna 9.647 8–D11
BEZEL, Rear Compartment Lamp 9.988 8–E13
BEZEL, Rear View Mirror 10.186 9–A15
BEZEL, Side Window Defroster 9.780 8–E11
BEZEL, Tail Lamp 2.681 3–D21
BEZEL, Turn Signal 2.680 3–E5
BLADDER, Front Seat Lumbar 11.378 9–C17
BLADE, Windshield Wiper Blade 10.146 9–A9
BLOCK, Engine Cylinder case [8–CYLINDER] 0.030 1–E17
BLOCK, Main Wiring Junction and Fuse Block 2.483 3–C20
BLOCK, Transmission Overdrive [4–SPEED MANUAL] 4.460 5–A22
BOARD, Instrument Cluster Warning ... 9.765 8–E9
BODY KIT, Fuel Injection Air Meter 3.335 4–A28
BODY KIT, Throttle Body/Carburetor ... 3.729 4–D13
BODY KIT, Transmission Oil Pump [AUTOMATIC] 4.224 5–D7
BODY, Fuel Injection Air Meter 3.335 4–A28
BODY, Transmission Main Control Valve Body [AUTOMATIC] 4.265 5–D18
BODY, Transmission Oil Pump [AUTOMATIC] 4.224 5–D7

BODY, Transmission Overdrive [4-SPEED MANUAL] 4.461 5-A19
BODY, Vacuum Power Brake Booster Valve Body 4.940 6-B14
BOLSTER, Instrument Panel Pad 10.235 9-A21
BOLT KIT, Differential, with Cap 5.505 6-C22
BOLT KIT, Emission Control System ... 3.671 4-C19
BOLT KIT, Engine Air Cooling (Electrical) 1.055 2-A8
BOLT KIT, Multi Port Fuel Injection Fuel Rail 3.331 4-A26
BOLT KIT, Radio Antenna 9.647 8-D11
BOLT, A/C Compressor Clutch 9.188 8-C16
BOLT, A/C Compressor Mounting 9.173 8-C14
BOLT, A/C Evaporator 9.211 8-C17
BOLT, A/C Refrigerant 9.196 8-C16
BOLT, A/C Vacuum and Temperature ... 9.281 8-D7
BOLT, Air Cleaner Controls 3.415 4-B11
BOLT, Air Cleaner Intake 3.410 4-B10
BOLT, Air Injection Reactor Pump and Multi-Function Air Compressor 3.655 4-C10
BOLT, Air Suspension Height Sensor ... 7.477 7-C23
BOLT, Battery Hold Down 2.334 3-B20
BOLT, Body Multifunction Electric Computer 2.560 3-D15
BOLT, Body Rear End (Plastic Laminated) 12.986 10-B10
BOLT, Brake Master Cylinder Reservoir . 4.651 6-A14
BOLT, Brake Master Cylinder Secondary 4.653 6-A15
BOLT, Brake Pedal 4.634 6-A8
BOLT, Bumper/Fascia Energy Absorber 7.840 7-D9
BOLT, Bumper/Fascia Mounting 7.874 7-D10
BOLT, Bumper/Fascia 7.836 7-D9
BOLT, Capsule/Headlamp Mounting ... 2.726 3-D26
BOLT, Capsule/Headlamp Retaining ... 2.731 3-D28
BOLT, Chassis/Engine Wiring Harness . 2.559 3-D11
BOLT, Computer Control Sensors 3.682 4-C26
BOLT, Concealed Capsule/Headlamp Control Drive 2.760 3-E2
BOLT, Concealed Capsule/Headlamp Opening Cover 2.765 3-E3
BOLT, Convertible and Hard Top 13.346 10-C15
BOLT, Coolant Pump, with Bearing 1.105 2-A15
BOLT, Differential Carrier 5.506 6-C24
BOLT, Distributor (also Knock Sensor) .. 2.363 3-C4
BOLT, Distributor Cap Retaining 2.368 3-C3
BOLT, Door Hinge 10.463 9-B5
BOLT, Door Opening 10.695 9-B11
BOLT, Driver Information Display 9.768 8-E10
BOLT, Electronic Brake Control 4.720 6-A25
BOLT, Electronic Brake Control 4.730 6-B4
BOLT, Emission Control System 3.671 4-C19
BOLT, Emission System 3.675 4-C21
BOLT, Emission System 3.680 4-C24
BOLT, Engine Air Cooling (Electrical) ... 1.055 2-A8
BOLT, Engine Camshaft [8-CYLINDER] 0.529 1-F4
BOLT, Engine Camshaft & Balance Shaft Hole [8-CYLINDER] 0.553 1-F5
BOLT, Engine Camshaft & Valve Rocker Cover [8-CYLINDER] 0.413 1-F2
BOLT, Engine Camshaft gear [8-CYLINDER] 0.738 1-F14
BOLT, Engine Clutch Cover to Flywheel [8-CYLINDER] 0.662 1-F19
BOLT, Engine Clutch Housing [8-CYLINDER] 0.683 1-F11
BOLT, Engine Clutch Pedal [8-CYLINDER] 0.829 1-F18
BOLT, Engine Clutch Release Fork [8-CYLINDER] 0.796 1-F17
BOLT, Engine Connecting Rod Cap [8-CYLINDER] 0.623 1-F6
BOLT, Engine Coolant By-Pass 1.097 2-A15
BOLT, Engine Coolant Pump 1.073 2-A14
BOLT, Engine Coolant Pump 1.079 2-A14
BOLT, Engine Coolant Recovery 1.240 2-A24
BOLT, Engine Coolant 1.153 2-A17
BOLT, Engine Crankcase Ventilation ... 1.762 2-B11
BOLT, Engine Crankcase 1.745 2-B9
BOLT, Engine Crankshaft And Camshaft Balancer [8-CYLINDER] 0.659 1-F8
BOLT, Engine Crankshaft Pulley and Balancer [8-CYLINDER] 0.662 1-F9
BOLT, Engine Crankshaft/Timing [8-CYLINDER] 0.728 1-F13
BOLT, Engine Cylinder Head [8-CYLINDER] 0.293 1-E24
BOLT, Engine Fan Coolant 1.060 2-A11
BOLT, Engine Flywheel [8-CYLINDER] 0.669 1-F10
BOLT, Engine Front Cover [8-CYLINDER] 0.208 1-E22
BOLT, Engine Fuel Filter 3.890 4-D17
BOLT, Engine Fuel Intake Manifold 3.265 4-A18
BOLT, Engine Lift [8-CYLINDER] 0.004 1-E16
BOLT, Engine Main Bearing Cap [8-CYLINDER] 0.056 1-E18
BOLT, Engine Mounting [8-CYLINDER] 0.002 1-E16
BOLT, Engine Mounting [8-CYLINDER] 0.029 1-E16
BOLT, Engine Oil Cooler 1.540 2-B5
BOLT, Engine Oil Filter 1.840 2-B15
BOLT, Engine Oil Pan 1.428 2-B2
BOLT, Engine Oil Pan 1.430 2-B3
BOLT, Engine Oil Pump 1.639 2-B7
BOLT, Engine Oil Pump 1.652 2-B7
BOLT, Engine Oil Pump 1.656 2-B8
BOLT, Engine Oil 1.426 2-A28
BOLT, Engine Rear Main Bearing [8-CYLINDER] 0.137 1-E20
BOLT, Engine Timing [8-CYLINDER] .. 0.724 1-F12
BOLT, Engine Vacuum Pump 3.280 4-A21
BOLT, Exhaust Manifold 3.602 4-C7
BOLT, Exhaust Pipe 3.613 4-C8
BOLT, Exhaust Pipe 3.616 4-C9
BOLT, Fan and Coolant Pump 1.062 2-A11
BOLT, Floor Console Compartment Door 10.242 9-A26
BOLT, Floor Pan 12.980 10-B5
BOLT, Flywheel & Clutch & Converter Housing [8-CYLINDER] 0.679 1-F11
BOLT, Folding and Hard Top Front Rail . 14.080 11-A18
BOLT, Folding Top Assist 14.475 11-A22
BOLT, Folding Top Center 14.215 11-A20
BOLT, Folding Top Compartment 12.170 10-A10
BOLT, Folding Top Front Bow 14.130 11-A19
BOLT, Folding Top Hinge 14.310 11-A21
BOLT, Folding Top Side Roof Rail Control Link 14.155 11-A19
BOLT, Folding Top Side Roof Rail Rear . 14.260 11-A21
BOLT, Folding Top 14.340 11-A22

© GENERAL MOTORS SERVICE PARTS OPERATIONS-CHEVROLET-14Y

BOLT, Frame Front Cross Member 7.039 7–C10
BOLT, Front Axle and Axle Center 6.008 7–A8
BOLT, Front Door Sill 11.175 9–C8
BOLT, Front Door Trim 14.683 11–A23
BOLT, Front Door Window Glass Channel (Outer & Inner) 10.710 9–B12
BOLT, Front Door Window 10.685 9–B11
BOLT, Front Door Window 10.728 9–B14
BOLT, Front Fender Inner Wheel House 8.153 8–A16
BOLT, Front Propeller Shaft 5.546 6–D4
BOLT, Front Seat Back Lock 11.390 9–C19
BOLT, Front Seat Back Reclining 11.377 9–C15
BOLT, Front Seat Back 11.373 9–C12
BOLT, Front Seat Bolster 11.378 9–C18
BOLT, Front Seat Cushion 11.419 9–C21
BOLT, Front Spring 7.425 7–C20
BOLT, Fuel Injection Air Meter 3.335 4–A28
BOLT, Fuel Injection 3.330 4–A24
BOLT, Fuel Injector 3.305 4–A23
BOLT, Fuel Line 3.162 4–A15
BOLT, Fuel or Air Meter 3.314 4–A24
BOLT, Fuel Pump 3.901 4–D18
BOLT, Fuel Tank Meter 3.107 4–A8
BOLT, Fuel Tank Mounting Strap 3.023 4–A8
BOLT, Generator Brush 2.291 3–B15
BOLT, Generator Mounting 2.277 3–B14
BOLT, Generator Output 2.319 3–B19
BOLT, Generator Thru 2.316 3–B18
BOLT, Heater 8.645 8–A23
BOLT, Hood Hinge 8.016 8–A9
BOLT, Hood Latch 8.075 8–A12
BOLT, Hood Latch 8.080 8–A13
BOLT, Hood Panel 8.015 8–A8
BOLT, Horn Button 2.819 3–E5
BOLT, Horn 2.812 3–E3
BOLT, Hub Front and Rear 5.813 6–D13
BOLT, Hub or Drum, Front and Rear Wheel 5.812 6–D13
BOLT, Hydraulic Brake Hose 4.681 6–A21
BOLT, Hydraulic Brake Pipe 4.686 6–A21
BOLT, Hydraulic Clutch Main Cylinder [6–CYLINDER] 0.777 1–F15
BOLT, Ignition Coil Mounting 2.183 3–A18
BOLT, Ignition Distributor Housing 2.363 3–C2
BOLT, Ignition Switch Warning, Lock, Headlamp, Theft Deterrent or Rear/Side Object 2.195 3–A21
BOLT, Ignition Switch 2.188 3–A20
BOLT, Inflatable Restraint System 14.665 11–B11
BOLT, Instrument Cluster Warning 9.765 8–E9
BOLT, Instrument Panel Pad 10.235 9–A21
BOLT, Intake & Exhaust Manifold 3.275 4–A20
BOLT, Lock Pillar Trim 14.731 11–A27
BOLT, Luggage Carrier 12.815 10–A25
BOLT, Multi Port Fuel Injection Idle Air .. 3.338 4–B7
BOLT, Multi Port Fuel Injection Throttle Body 3.336 4–B6
BOLT, Oil Pump 1.723 2–B9
BOLT, Parking Brake Apply 4.591 6–A7
BOLT, Pinion Shaft Lock 5.518 6–C26
BOLT, Propeller 5.544 6–D3
BOLT, Radiator Air 1.272 2–A26
BOLT, Radiator and Front End Tie 1.271 2–A26
BOLT, Radiator Fan Shroud 1.277 2–A28
BOLT, Radio Antenna 9.647 8–D11
BOLT, Radio Mounting 9.667 8–D24
BOLT, Rear Axle Control Arm 5.380 6–C14
BOLT, Rear Axle Housing 5.398 6–C15
BOLT, Rear Axle Shaft Bearing 5.816 6–D14
BOLT, Rear Axle Tie Rod 5.418 6–C17
BOLT, Rear Axle 5.416 6–C16
BOLT, Rear Axle 5.830 6–D14
BOLT, Rear Compartment Floor 12.981 10–B7
BOLT, Rear Hatch Window 12.180 10–A13
BOLT, Rear Hatch Window 12.184 10–A14
BOLT, Rear Hatch Window 12.237 10–A15
BOLT, Rear License Lamp 2.708 3–D25
BOLT, Rear Spring And Axle 7.529 7–C25
BOLT, Rear Spring And Shock Absorber Anchor 7.518 7–C24
BOLT, Rear View Mirror 10.186 9–A15
BOLT, Ring Gear 5.531 6–C28
BOLT, Roof Panel 12.810 10–A18
BOLT, Seat Belt 14.875 11–B14
BOLT, Shock Absorber/Strut 7.347 7–C18
BOLT, Side Door Lock 10.474 9–B5
BOLT, Side Window Defroster 9.780 8–E11
BOLT, Spare Wheel 7.629 7–C25
BOLT, Spark Plug Ignition Wire 2.251 3–A23
BOLT, Stabilizer Shaft 7.240 7–C12
BOLT, Stabilizer Shaft 7.242 7–C13
BOLT, Starter Motor 2.042 3–A15
BOLT, Starter Motor 2.077 3–A16
BOLT, Steering Column 6.514 7–A20
BOLT, Steering Column 6.758 7–B20
BOLT, Steering Gear Mounting 6.509 7–A19
BOLT, Steering Gear Shaft 6.525 7–B9
BOLT, Steering Knuckle Lower Control Arm 6.172 7–A9
BOLT, Steering Knuckle Upper Control Arm 6.178 7–A9
BOLT, Steering Pump Mounting 6.606 7–B14
BOLT, Steering 6.518 7–A21
BOLT, Tail Lamp Mounting 2.662 3–D20
BOLT, Throttle Body/Carburetor 3.726 4–D13
BOLT, Throttle Control Lever 3.463 4–B14
BOLT, Transmission Auxiliary Valve Body Cover [AUTOMATIC] 4.216 5–D7
BOLT, Transmission Case [4–SPEED MANUAL] 4.105 5–A14
BOLT, Transmission Case [6–SPEED MANUAL] 4.104 5–B7
BOLT, Transmission Case Extension [AUTOMATIC] 4.317 5–D26
BOLT, Transmission Control [6–SPEED MANUAL] 4.012 5–B6
BOLT, Transmission Control Lever [6–SPEED MANUAL] 4.010 5–B5
BOLT, Transmission Control Lever [6–SPEED MANUAL] 4.046 5–B6
BOLT, Transmission Converter [AUTOMATIC] 4.115 5–C14
BOLT, Transmission Countershaft Gear [6–SPEED MANUAL] 4.422 5–B10
BOLT, Transmission Extension [4–SPEED MANUAL] 4.319 5–A15

© GENERAL MOTORS SERVICE PARTS OPERATIONS–CHEVROLET–14Y

BOLT, Transmission Extension [6-SPEED MANUAL] 4.319 5-B8
BOLT, Transmission Main Control Valve Body [AUTOMATIC] 4.265 5-D18
BOLT, Transmission Mount and Support [4-SPEED MANUAL] 4.085 5-A13
BOLT, Transmission Mount and Support [6-SPEED MANUAL] 4.085 5-B7
BOLT, Transmission Oil Cooler [4-SPEED MANUAL] 4.128 5-A14
BOLT, Transmission Oil Pan [AUTOMATIC] 4.196 5-D6
BOLT, Transmission Oil Pump [AUTOMATIC] 4.226 5-D10
BOLT, Transmission Oil Suction Tube [AUTOMATIC] 4.197 5-D6
BOLT, Transmission Overdrive [4-SPEED MANUAL] 4.461 5-A19
BOLT, Transmission Overdrive Case [4-SPEED MANUAL] 4.455 5-A18
BOLT, Transmission Overdrive Clutch [4-SPEED MANUAL] 4.468 5-A20
BOLT, Transmission Overdrive Oil Pump [4-SPEED MANUAL] 4.466 5-A20
BOLT, Transmission Rear Servo Accumulator [AUTOMATIC] 4.241 5-D16
BOLT, Transmission Reverse Idler Shaft [6-SPEED MANUAL] 4.435 5-B10
BOLT, Transmission Servo & Accumulator [AUTOMATIC] 4.228 5-D12
BOLT, Turn Signal Lamp 2.895 3-E6
BOLT, Universal Joint Bearing and Flange 5.586 6-D5
BOLT, Wheel Brake Cylinder/Caliper ... 4.665 6-A16
BOLT, Windshield Sunshade 10.219 9-A18
BOLT, Windshield Washer 10.154 9-A11
BOLT, Windshield Wiper Motor 10.152 9-A11
BOLT, Windshield Wiper Transmission . 10.160 9-A12
BOLT/SCREW KIT, Spare Wheel Mounting 7.632 7-C27
BOOSTER KIT, Vacuum Power Brake Booster 4.898 6-B7
BOOSTER, Vacuum Power Brake 4.901 6-B8
BOOT KIT, Steering Tie Rod 6.242 7-A10
BOOT, Chassis Electrical 2.530 3-D2
BOOT, Cruise Control 3.885 4-D15
BOOT, Engine Clutch Release Fork [8-CYLINDER] 0.797 1-F17
BOOT, Hydraulic Power Brake Booster . 4.815 6-B6
BOOT, Parking Brake Shoe 5.149 6-C14
BOOT, Rear Axle 5.416 6-C16
BOOT, Transmission Control Lever [4-SPEED MANUAL] 4.015 5-A12
BOOT, Transmission Control Lever [6-SPEED MANUAL] 4.015 5-B6
BOOT, Transmission Control Lever [AUTOMATIC] 4.015 5-C11
BOOT, Vacuum Power Brake Booster Cylinder 4.906 6-B12
BOOT, Vacuum Power Brake Booster Valve Body 4.940 6-B14
BOOT, Wheel Brake Cylinder/Caliper ... 4.665 6-A16
BOW, Folding Top Center 14.215 11-A20
BOW, Folding Top Front Bow 14.130 11-A19
BOW, Folding Top 14.340 11-A22
BOW, Roof 12.952 10-B4
BRACE, A/C Compressor Mounting 9.171 8-C13
BRACE, Accelerator Pedal Lever 3.454 4-B13
BRACE, Air Injection Reactor Pump and Multi-Function Air Compressor 3.655 4-C10
BRACE, Body Lock Pillar 12.684 10-A16
BRACE, Body Rear End (Plastic Laminated) 12.986 10-B10
BRACE, Bumper/Fascia 7.833 7-D8
BRACE, Catalytic Converter 3.690 4-D4
BRACE, Engine Mounting [8-CYLINDER] 0.029 1-E16
BRACE, Frame Front Cross Member ... 7.039 7-C10
BRACE, Frame Side 7.006 7-C8
BRACE, Generator Mounting 2.277 3-B14
BRACE, Instrument Panel Pad 10.235 9-A21
BRACE, Instrument Panel 10.230 9-A18
BRACE, Radiator Air 1.272 2-A26
BRACE, Rear Wheelhouse 12.944 10-B2
BRACE, Starter Motor 2.042 3-A15
BRACE, Steering Pump Mounting 6.606 7-B14
BRACE, Transmission Detent Shift Control [AUTOMATIC] 4.050 5-C12
BRACKET KIT, Engine Air Cooling (Electrical) 1.055 2-A8
BRACKET KIT, Hood Panel 8.015 8-A8
BRACKET, A/C Compressor Mounting . 9.171 8-C13
BRACKET, A/C Control 9.280 8-D5
BRACKET, A/C Electric Control 9.275 8-C27
BRACKET, A/C Electrical 9.277 8-D3
BRACKET, A/C Evaporator 9.211 8-C17
BRACKET, A/C Refrigerant 9.196 8-C16
BRACKET, A/C Wiring 9.276 8-D2
BRACKET, Accelerator Pedal Lever 3.454 4-B13
BRACKET, Air Cleaner Controls 3.415 4-B11
BRACKET, Air Injection Reactor Pump and Multi-Function Air Compressor . 3.655 4-C10
BRACKET, Air Suspension Height Sensor 7.477 7-C23
BRACKET, Body Multifunction Electric Computer 2.560 3-D15
BRACKET, Body Wiring 13.090 10-C7
BRACKET, Brake Pedal 4.634 6-A8
BRACKET, Bumper Mounting 7.869 7-D10
BRACKET, Bumper/Fascia Face 7.831 7-C28
BRACKET, Bumper/Fascia 7.833 7-D8
BRACKET, Bumper/Fascia 7.836 7-D9
BRACKET, Capsule/Headlamp Mounting 2.726 3-D26
BRACKET, Capsule/Headlamp/Fog Lamp 2.485 3-C23
BRACKET, Catalytic Converter 3.686 4-D4
BRACKET, Catalytic Converter 3.690 4-D4
BRACKET, Chassis Electric Diagnostic . 2.440 3-C8
BRACKET, Chassis Wiring 2.460 3-C9
BRACKET, Chassis/Engine Wiring Harness 2.559 3-D11
BRACKET, Computer Control Sensors . 3.682 4-C26
BRACKET, Concealed Capsule/Headlamp Control 2.755 3-D28
BRACKET, Concealed Capsule/Headlamp Opening Cover . 2.765 3-E3
BRACKET, Convertible and Hard Top .. 13.346 10-C15
BRACKET, Cruise Control 3.880 4-D14
BRACKET, Cruise Control 3.885 4-D15
BRACKET, Distributor (also Knock Sensor) 2.383 3-C4

BRACKET, Door Arm Rest Mounting ... 14.690 11–A27
BRACKET, Door Electric and Vacuum Locks ... 10.465 9–B5
BRACKET, Early Fuel Evaporation Control ... 3.140 4–A13
BRACKET, Early Fuel Evaporation ... 3.145 4–A14
BRACKET, Electronic Brake Control ... 4.710 6–A23
BRACKET, Electronic Brake Control ... 4.720 6–A25
BRACKET, Electronic Brake Control ... 4.730 6–B4
BRACKET, Electronic Control Suspension ... 7.450 7–C21
BRACKET, Emission Control System ... 3.671 4–C19
BRACKET, Engine Air Cooling (Electrical) 1.055 2–A8
BRACKET, Engine Clutch Pedal [8–CYLINDER] ... 0.829 1–F18
BRACKET, Engine Coolant By–Pass ... 1.097 2–A15
BRACKET, Engine Coolant Recovery ... 1.240 2–A24
BRACKET, Engine Coolant Thermostat . 1.251 2–A25
BRACKET, Engine Fuel Filter ... 3.890 4–D17
BRACKET, Engine Mounting [8–CYLINDER] ... 0.029 1–E16
BRACKET, Engine Oil Cooler ... 1.540 2–B5
BRACKET, Engine Vacuum Pump ... 3.280 4–A21
BRACKET, Exhaust Muffler/Resonator .. 3.704 4–D9
BRACKET, Exhaust Pipe ... 3.616 4–C9
BRACKET, Floor Console ... 10.240 9–A23
BRACKET, Floor Pan ... 12.980 10–B5
BRACKET, Folding and Hard Top Front Rail ... 14.080 11–A18
BRACKET, Folding Top Center ... 14.215 11–A20
BRACKET, Folding Top Compartment .. 12.170 10–A10
BRACKET, Folding Top Hinge ... 14.310 11–A21
BRACKET, Folding Top Trim Hold Down 14.102 11–A18
BRACKET, Folding Top ... 14.340 11–A22
BRACKET, Frame Front Cross Member . 7.039 7–C10
BRACKET, Front Door Window ... 10.716 9–B14
BRACKET, Front Fender Inner Wheel House ... 8.153 8–A16
BRACKET, Front Floor Carpet ... 15.300 11–D10
BRACKET, Front Seat Adjuster ... 11.558 9–C23
BRACKET, Front Seat Back Reclining .. 11.377 9–C15
BRACKET, Front Seat Bolster ... 11.379 9–C16
BRACKET, Front Seat Lumbar ... 11.378 9–C17
BRACKET, Fuel Injection ... 3.300 4–A22
BRACKET, Fuel Pump ... 3.901 4–D18
BRACKET, Fuel Tank Evaporator Control (Engine End) ... 3.130 4–A12
BRACKET, Generator Mounting ... 2.277 3–B14
BRACKET, Heater ... 8.846 8–A27
BRACKET, Hood Latch ... 8.080 8–A13
BRACKET, Hood Latch ... 8.085 8–A14
BRACKET, Hood Panel ... 8.015 8–A8
BRACKET, Horn ... 2.812 3–E3
BRACKET, Hydraulic Brake Hose ... 4.681 6–A21
BRACKET, Hydraulic Brake Pipe ... 4.686 6–A21
BRACKET, Hydraulic Suspension ... 7.440 7–C20
BRACKET, Ignition Coil Mounting ... 2.183 3–A18
BRACKET, Ignition Switch Warning, Lock, Headlamp, Theft Deterrent or Rear/Side Object ... 2.195 3–A21
BRACKET, Inflatable Restraint System .. 14.865 11–B11
BRACKET, Inside Rear View Mirror ... 10.187 9–A17
BRACKET, Instrument Cluster Warning . 9.765 8–E9
BRACKET, Instrument Panel Pad ... 10.235 9–A21
BRACKET, Instrument Panel Trim ... 10.252 9–A28
BRACKET, Instrument Panel ... 10.230 9–A16
BRACKET, License Plate ... 7.800 7–C27
BRACKET, Luggage Carrier ... 12.815 10–A25
BRACKET, Luggage Compartment and Rear Seat to Window ... 12.971 10–B5
BRACKET, Main Wiring Junction and Fuse Block ... 2.483 3–C20
BRACKET, Multi Port Fuel Injection Idle Air ... 3.338 4–B7
BRACKET, Multi Port Fuel Injection Throttle Position ... 3.339 4–B8
BRACKET, Outside Air Control ... 9.787 8–E13
BRACKET, Parking Brake Cable ... 4.785 6–B5
BRACKET, Parking, Turn Signal & Cornering Lamp ... 2.587 3–D18
BRACKET, Radiator Air ... 1.272 2–A26
BRACKET, Radiator Grille and Front End Panel ... 1.267 2–A25
BRACKET, Radiator Support Mounting . 1.274 2–A28
BRACKET, Radio Antenna ... 9.647 8–D11
BRACKET, Radio Auxiliary Speakers ... 9.665 8–D22
BRACKET, Radio Mounting ... 9.667 8–D24
BRACKET, Radio Speaker ... 9.655 8–D17
BRACKET, Rear Axle Control Arm ... 5.380 6–C14
BRACKET, Rear Axle Tie Rod ... 5.418 6–C17
BRACKET, Rear Compartment Floor ... 12.981 10–B7
BRACKET, Rear Compartment Lamp ... 9.988 8–E13
BRACKET, Rear Hatch Window ... 12.187 10–A14
BRACKET, Rear Spring ... 7.535 7–C25
BRACKET, Roof Panel ... 12.810 10–A18
BRACKET, Seat Belt ... 14.875 11–B14
BRACKET, Shock Absorber/Strut ... 7.395 7–C19
BRACKET, Shock Absorber ... 7.380 7–C18
BRACKET, Shroud and Dash and Vent Duct Panel ... 12.804 10–A16
BRACKET, Side Marker and Hazard Flasher ... 2.575 3–D15
BRACKET, Spare Wheel ... 7.629 7–C25
BRACKET, Stabilizer Shaft ... 7.242 7–C13
BRACKET, Steering Column Attaching . 6.760 7–B20
BRACKET, Steering Fluid Cooler ... 6.602 7–B10
BRACKET, Steering Pump Mounting ... 6.606 7–B14
BRACKET, Steering Pump ... 6.635 7–B16
BRACKET, Steering ... 6.518 7–A21
BRACKET, Stop Lamp Switch ... 2.447 3–C8
BRACKET, Tail Lamp ... 2.694 3–D22
BRACKET, Towing ... 7.068 7–C11
BRACKET, Transmission Case [4–SPEED MANUAL] ... 4.104 5–A13
BRACKET, Transmission Control Cable [4–SPEED MANUAL] ... 4.047 5–A13
BRACKET, Transmission Control Lever [6–SPEED MANUAL] ... 4.010 5–B5
BRACKET, Transmission Oil Cooler [4–SPEED MANUAL] ... 4.128 5–A14
BRACKET, Transmission Overdrive [4–SPEED MANUAL] ... 4.060 5–A13
BRACKET, Transmission Overdrive Case [4–SPEED MANUAL] ... 4.455 5–A18
BRACKET, Transmission Park Lock [AUTOMATIC] ... 4.290 5–D25

BRACKET, Transmission Shift Control Cable [AUTOMATIC] 4.047 5–C11
BRACKET, Transmission Shift Lever [4–SPEED MANUAL] 4.046 5–A13
BRACKET, Wheel Brake Cylinder/Caliper 4.665 6–A16
BRACKET, Windshield Wiper Transmission 10.159 9–A12
BRAKE KIT, Wheel Brake Cylinder/Caliper 4.665 6–A16
BREAKER, Body Wiring 13.095 10–C10
BREAKER, Main Wiring Junction and Fuse Block 2.483 3–C20
BREATHER, Air Cleaner Intake 3.410 4–B10
BRIDGE, Generator Output 2.319 3–B19
BRUSH KIT, Generator Brush 2.291 3–B15
BRUSH, Distributor Cap Retaining 2.368 3–C3
BRUSH, Generator Brush 2.291 3–B15
BRUSH, Starter Motor 2.051 3–A15
BUFFER, Computer Control Sensors .. 3.682 4–C26
BULB, A/C Control 9.279 8–D4
BULB, Back Up Lamp 2.697 3–D23
BULB, Capsule/Headlamp/Fog Lamp .. 2.727 3–D27
BULB, Driver Information Display 9.768 8–E10
BULB, Radio Tuner 9.652 8–D17
BULB, Tail Lamp 2.679 3–D20
BULB, Vehicle Navigation 9.769 8–E10
BUMPER, Capsule/Headlamp Mounting 2.726 3–D26
BUMPER, Door 10.587 9–B10
BUMPER, Floor Console Compartment Door 10.242 9–A26
BUMPER, Folding Top Compartment .. 12.170 10–A10
BUMPER, Folding Top Front Bow 14.130 11–A19
BUMPER, Fuel Tank Filler Door 12.945 10–B3
BUMPER, Hood Latch 8.075 8–A12
BUMPER, Hood Panel Closing 8.024 8–A10
BUMPER, Instrument Panel Compartment Door Lock and Console Compartment Door Lock ... 10.268 9–B3
BUMPER, Instrument Panel Compartment Door 10.263 9–A26
BUMPER, Rear Axle 5.395 6–C15
BUMPER, Rear Compartment Lid or Tailgate 12.212 10–A15
BUMPER, Rear Quarter 15.100 11–D6
BUMPER, Rear Seat to Back Window Panel 15.024 11–D6
BUMPER, Rear Spring 7.535 7–C25
BUMPER, Roof Panel 12.810 10–A18
BUMPER, Steering Column 6.521 7–B8
BUSHING, Brake Pedal 4.626 6–A8
BUSHING, Door Hinge 10.464 9–B5
BUSHING, Engine Clutch Pedal [8–CYLINDER] 0.831 1–F18
BUSHING, Engine Timing [8–CYLINDER] 0.724 1–F12
BUSHING, Folding Top Center 14.215 11–A20
BUSHING, Folding Top Hinge 14.310 11–A21
BUSHING, Folding Top Side Roof Rail . 14.160 11–A19
BUSHING, Folding Top 14.340 11–A22
BUSHING, Front Door Window 10.685 9–B11
BUSHING, Front Door Window 10.716 9–B14
BUSHING, Front Seat Bolster 11.379 9–C18
BUSHING, Hood Latch 8.080 8–A13
BUSHING, Hydraulic Clutch Main Cylinder [8–CYLINDER] 0.775 1–F14
BUSHING, Multi Port Fuel Injection Idle Air 3.338 4–B7
BUSHING, Rear Axle Control Arm 5.381 6–C14
BUSHING, Rear Axle Tracking/Tracking 5.417 6–C17
BUSHING, Rear Hatch Window 12.186 10–A14
BUSHING, Roof Panel 12.810 10–A18
BUSHING, Safety Starting Switch Or Speed Sensing [6–SPEED MANUAL] 4.054 5–B6
BUSHING, Seat Belt 14.875 11–B14
BUSHING, Steering Gear Pitman Shaft . 7.[illegible] 7–B20
BUSHING, Steering Tie Rod 6.242 7–A10
BUSHING, Transmission Case Extension [AUTOMATIC] 4.319 5–D27
BUSHING, Transmission Clutch [AUTOMATIC] 4.169 5–C28
BUSHING, Transmission Clutch [AUTOMATIC] 4.180 5–D3
BUSHING, Transmission Converter [AUTOMATIC] 4.115 5–C14
BUSHING, Transmission Governor [AUTOMATIC] 4.256 5–D17
BUSHING, Transmission Input and Turbine Shaft [AUTOMATIC] 4.123 5–C16
BUSHING, Transmission Oil Pump [AUTOMATIC] 4.226 5–D10
BUSHING, Transmission Output/Counter Shaft or Carrier [AUTOMATIC] 4.176 5–D3
BUSHING, Transmission Safety Starting Switch Or Speed Sensing [4–SPEED MANUAL] 4.054 5–A13
BUSHING, Universal Joint Sleeve Yoke . 5.556 6–D5
BUTTON, Radio Tuner 9.652 8–D17
BUTTON, Side Marker and Hazard Flasher 2.575 3–D15
BUTTON, Transmission Control Lever [4–SPEED MANUAL] 4.006 5–A12

C

CABLE, Accelerator Control 3.430 4–B12
CABLE, Battery (Negative) 2.341 3–B20
CABLE, Battery (Positive) 2.342 3–B20
CABLE, Cruise Control 3.880 4–D14
CABLE, Folding Top Assist 14.475 11–A22
CABLE, Folding Top Trim Hold Down .. 14.102 11–A18
CABLE, Front Seat Adjuster 11.561 9–C24
CABLE, Front Seat Back Lock 11.390 9–C19
CABLE, Front Seat Back Reclining 11.377 9–C15
CABLE, Front Seat Bolster 11.379 9–C18
CABLE, Fuel Tank 3.022 4–A8
CABLE, Hood Latch 8.075 8–A12
CABLE, Outside Air Control 9.787 8–E13
CABLE, Parking Brake 4.779 6–B5
CABLE, Radio Antenna 9.647 8–D11
CABLE, Transmission Control Cable [4–SPEED MANUAL] 4.047 5–A13
CABLE, Transmission Detent Shift Control [AUTOMATIC] 4.050 5–C12
CABLE, Transmission Overdrive Control [4–SPEED MANUAL] 4.495 5–A23

© GENERAL MOTORS SERVICE PARTS OPERATIONS–CHEVROLET–14Y

CABLE, Transmission Shift Control Cable (AUTOMATIC) 4.047 5–C11
CALIPER KIT, Wheel Brake Cylinder/Caliper Piston 4.667 6–A20
CALIPER, Wheel Brake Cylinder/Caliper 4.665 6–A16
CAM, Rear Axle Tracking/Tracking 5.417 6–C17
CAM, Turn Signal Switch Cancelling ... 2.896 3–E6
CAMSHAFT, Engine [8–CYLINDER] ... 0.519 1–F4
CANISTER, Fuel Tank Evaporator Control (Engine End) 3.130 4–A12
CAP KIT, Distributor 2.367 3–C2
CAP KIT, Hydraulic Clutch Main Cylinder [8–CYLINDER] 0.775 1–F14
CAP, A/C Compressor 9.177 8–C14
CAP, A/C Compressor 9.226 8–C23
CAP, Brake Master Cylinder Reservoir .. 4.651 6–A14
CAP, Distributor 2.367 3–C2
CAP, Engine Coolant Recovery 1.240 2–A24
CAP, Engine Main Bearing [8–CYLINDER] 0.095 1–E18
CAP, Engine Oil Drain (Non–Production) 21.241B 1–D5
CAP, Engine Oil Filler 1.758 2–B10
CAP, Engine Valve Spring [8–CYLINDER] 0.309 1–E27
CAP, Fuel Tank Filler 3.028 4–A8
CAP, Heater Water Temperature Control 9.795 8–E13
CAP, Hood Latch 8.075 8–A12
CAP, Horn Button 2.820 3–E5
CAP, Hub Front and Rear 5.813 6–D13
CAP, Hydraulic Clutch Reservoir [8–CYLINDER] 0.785 1–F16
CAP, Intake Manifold Vacuum 3.278 4–A21
CAP, Parking Brake Shoe Lever 5.158 6–C14
CAP, Radiator Tank 1.203 2–A19
CAP, Rear Hatch Window 12.249 10–A16
CAP, Steering Pump 6.635 7–B16
CAP, Steering Pump 6.655 7–B17
CAP, Steering 6.518 7–A21
CAP, Tire Valve and Cover Lock 5.875 6–D15
CAP, Transmission Governor [AUTOMATIC] 4.256 5–D17
CAP, Wheel Brake Cylinder/Caliper Bleed 4.666 6–A20
CAP, Wheel Trim 5.658 6–D14
CAP, Windshield Washer 10.154 9–A11
CAPACITOR, Generator Output 2.319 3–B19
CAPACITOR, Radio Static Suppression 9.663 8–D22
CAPACITOR, Radio 9.654 8–D17
CAPSULE, Capsule/Headlamp/Foglamp 2.725 3–D25
CARPET, Front/Complete Floor 15.286 11–D6
CARPET, Instrument Panel Pad 10.235 9–A21
CARPET, Lock Pillar Trim 14.731 11–A27
CARPET, Rear Floor 15.306 11–D10
CARPET, Seat Belt 14.875 11–B14
CARRIER PKG, Roof & Deck Lid (Production) 21.060A 1–D3
CARRIER, Differential, with Cap 5.505 6–C22
CARRIER, Instrument Cluster 9.743 8–E6
CARRIER, Spare Wheel 7.629 7–C25
CARRIER, Transmission Output/Counter Shaft or Carrier [AUTOMATIC] 4.175 5–D2
CARRIER, Transmission Overdrive Sun Gear [4–SPEED MANUAL] 4.470 5–A21
CARTRIDGE, Radio (Non–Production) . 21.480B 1–D9
CASE KIT, Transmission Case [AUTOMATIC] 4.103 5–C14
CASE PKG, Garage Door Opener (Production) 21.500A 1–D10
CASE, A/C Evaporator 9.211 8–C17
CASE, Air Distributor 9.786 9–E12
CASE, Differential (Ring Gear and Pinion) 5.510 6–C25
CASE, Engine Oil Drain (Non–Production) 21.241B 1–D5
CASE, Heater Core 8.854 8–A28
CASE, Instrument Cluster 9.743 8–E6
CASE, Transmission Case [4–SPEED MANUAL] 4.103 5–A13
CASE, Transmission Case [AUTOMATIC] 4.103 5–C14
CASE, Transmission Overdrive Case [4–SPEED MANUAL] 4.455 5–A11
CASING, Front Seat Adjuster 11.561 9–C24
CHAIN, Cruise Control 3.885 4–D15
CHAIN, Engine Timing [8–CYLINDER] . 0.724 1–F12
CHANNEL, Front Door Window Glass .. 10.701 9–B12
CHARGER PKG, Mobile (Non–Production) 21.444B 1–D8
CIRCUIT, Instrument Cluster 9.744 8–E6
CLAMP, A/C Compressor 9.242 8–C24
CLAMP, A/C Vacuum and Temperature . 9.281 8–D7
CLAMP, Air Cleaner Air Intake 3.417 4–B11
CLAMP, Brake Master Cylinder Reservoir 4.651 6–A14
CLAMP, Catalytic Converter 3.690 4–D4
CLAMP, Computer Control Sensors 3.682 4–C26
CLAMP, Early Fuel Evaporation 3.145 4–A14
CLAMP, Emission Control System 3.671 4–C19
CLAMP, Emission System 3.675 4–C21
CLAMP, Emission System 3.680 4–C24
CLAMP, Engine Coolant Recovery 1.240 2–A24
CLAMP, Engine Crankcase Ventilation .. 1.762 2–B11
CLAMP, Engine Oil Cooler 1.540 2–B5
CLAMP, Engine Oil Filler Tube 1.750 2–B10
CLAMP, Engine Oil Filter 1.855 2–B16
CLAMP, Exhaust Pipe 3.616 4–C9
CLAMP, Exhaust System Attaching 3.708 4–D9
CLAMP, Fuel Line 3.162 4–A15
CLAMP, Heater Core 8.854 8–A28
CLAMP, Heater 8.848 8–A27
CLAMP, Hose (Radiator, Heater, A/C) ... 1.163 2–A18
CLAMP, Hydraulic Brake Hose 4.681 6–A21
CLAMP, Ignition Distributor Housing ... 2.363 3–C2
CLAMP, Rear Axle 5.416 6–C16
CLAMP, Stabilizer Shaft 7.242 7–C13
CLAMP, Steering Fluid Cooler 3.602 7–B10
CLAMP, Steering Gear Mounting 6.509 7–A19
CLAMP, Steering Gear/Pump Oil 6.672 7–B19
CLAMP, Steering Tie Rod 6.242 7–A10
CLAMP, Throttle Body Coolant Supply .. 3.337 4–B7
CLAMP, Transmission Main Control Valve Body [AUTOMATIC] 4.265 5–D18
CLEANER PKG, Stereo Tape/CD Disc (Production) 21.070A 1–D3
CLEANER, Air Intake 3.402 4–B10
CLIP, A/C Compressor 9.242 8–C24
CLIP, A/C Vacuum and Temperature ... 9.281 8–D7
CLIP, Accelerator Control 3.425 4–B12
CLIP, Back Up Lamp 2.698 3–D24

© GENERAL MOTORS SERVICE PARTS OPERATIONS–CHEVROLET–14Y

CLIP, Battery Cable 2.343 3–B21
CLIP, Body Moldings 12.118 10–A10
CLIP, Body Wiring 13.090 10–C7
CLIP, Brake Shoe Anchor Pin 5.056 6–C13
CLIP, Bumper/Fascia 7.832 7–D4
CLIP, Capsule/Headlamp Mounting 2.726 3–D26
CLIP, Capsule/Headlamp/Fog Lamp ... 2.727 3–D27
CLIP, Chassis/Engine Wiring Harness .. 2.559 3–D11
CLIP, Door Inside Locking Rod 10.565 9–B9
CLIP, Door Lock Inside Handle 10.512 9–B7
CLIP, Driver Information Display 9.768 8–E10
CLIP, Early Fuel Evaporation 3.145 4–A14
CLIP, Electronic Brake Control 4.720 6–A25
CLIP, Emission Control System 3.671 4–C19
CLIP, Engine Coolant Recovery 1.240 2–A24
CLIP, Engine Oil Cooler 1.540 2–B5
CLIP, Engine Vacuum Pump 3.280 4–A21
CLIP, Floor Console 10.240 9–A23
CLIP, Folding Top Assist 14.475 11–A22
CLIP, Front Door Armrest 14.686 11–A25
CLIP, Front Seat Back Lock 11.390 9–C19
CLIP, Fuel Line 3.162 4–A15
CLIP, Horn 2.815 3–E4
CLIP, Hydraulic Brake Pipe 4.686 6–A21
CLIP, Hydraulic Clutch Reservoir [8–CYLINDER] 0.785 1–F16
CLIP, Ignition Switch Warning, Lock, Headlamp, Theft Deterrent or Rear/Side Object 2.195 3–A21
CLIP, Inflatable Restraint System 14.865 11–B11
CLIP, Instrument Cluster 9.744 8–E0
CLIP, Instrument Panel Pad 10.235 9–A21
CLIP, Instrument Panel Trim 10.252 9–A28
CLIP, Main Wiring Junction and Fuse Block 2.483 3–C20
CLIP, Parking Brake Cable 4.785 6–B6
CLIP, Radiator Outlet (Lower) 1.173 2–A19
CLIP, Rear Window Defogger 9.778 8–E11
CLIP, Roof Panel 12.810 10–A18
CLIP, Side Marker and Hazard Flasher . 2.575 3–D15
CLIP, Spark Plug Ignition Wire 2.251 3–A26
CLIP, Speedometer Drive Gear [4–SPEED MANUAL] 4.345 5–A15
CLIP, Speedometer Drive Gear [6–SPEED MANUAL] 4.345 5–B8
CLIP, Speedometer Drive Gear [AUTOMATIC] 4.345 5–E13
CLIP, Steering Gear/Pump Oil 6.672 7–B19
CLIP, Transmission Control Cable [4–SPEED MANUAL] 4.047 5–A13
CLIP, Transmission Oil Cooler [AUTOMATIC] 4.128 5–C17
CLIP, Transmission Oil Suction Tube [AUTOMATIC] 4.197 5–D6
CLIP, Transmission Overdrive [4–SPEED MANUAL] 4.461 5–A19
CLIP, Transmission Overdrive Control [4–SPEED MANUAL] 4.495 5–A23
CLIP, Turn Signal Lamp 2.692 3–E5
CLIP, Underhood 8.890 8–B3
CLIP, Wheel Brake Cylinder/Caliper 4.665 6–A16
CLIP, Wheel, Jack and Miscellaneous Wrench 8.821 8–A22
CLIP, Windshield Sunshade 10.219 9–A16
CLUSTER, Instrument Panel Gage 9.735 8–D25
CLUTCH KIT, A/C Compressor Clutch .. 9.188 8–C16
CLUTCH PACK, Differential (Ring Gear and Pinion) 5.510 6–C25
CLUTCH, A/C Compressor Clutch 9.188 8–C16
CLUTCH, Transmission Clutch [AUTOMATIC] 4.164 5–C26
CLUTCH, Transmission Clutch [AUTOMATIC] 4.180 5–D3
COCK, Radiator Outlet (Lower) 1.173 2–A19
COIL KIT, Inflatable Restraint System ... 14.865 11–B11
COIL, A/C Compressor Clutch Actuating 9.186 8–C15
COIL, Ignition Coil 2.170 3–A18
COIL, Inflatable Restraint System 14.865 11–B11
COIL, Starter Motor 2.049 3–A15
COLLAR, Generator Drive End 2.307 3–B17
COLLAR, Starter Motor Thrust 2.063 3–A16
COLUMN, Steering 6.518 7–A21
COMPARTMENT, Instrument Panel 10.260 9–A28
COMPARTMENT, Rear Compartment Floor 12.981 10–B7
COMPASS PKG, Auto (Non–Production) 21.099B 1–D3
COMPRESSOR, A/C Compressor 9.170 8–C9
CONDENSER, A/C Condenser 9.190 8–C16
CONDUIT, Chassis Electrical 2.530 3–D2
CONDUIT, Transmission Solenoid [AUTOMATIC] 4.122 5–C15
CONN, Concealed Capsule/Headlamp Control 2.755 3–D28
CONNECTION KIT, Fuel Injection 3.330 4–A24
CONNECTOR KIT, Concealed Capsule/Headlamp Control 2.755 3–D28
CONNECTOR KIT, Electrical Wiring Repair Kit 2.535 3–D9
CONNECTOR, A/C Compressor (Internal Parts) 9.172 8–C13
CONNECTOR, A/C Compressor Clutch Actuating 9.186 8–C15
CONNECTOR, A/C Compressor 9.170 8–C9
CONNECTOR, A/C Control 9.280 8–D5
CONNECTOR, A/C Electric Control 9.275 8–C27
CONNECTOR, A/C Electrical 9.277 8–D3
CONNECTOR, A/C Evaporator Blower . 9.215 8–C18
CONNECTOR, A/C Evaporator 9.210 8–C17
CONNECTOR, A/C Wiring 9.276 8–D2
CONNECTOR, Accelerator Pedal Lever 3.454 4–B13
CONNECTOR, Accessory Switch (Multi–Function) 9.764 8–E9
CONNECTOR, Air Cleaner and Silencer 3.407 4–B10
CONNECTOR, Air Distributor 9.766 8–E12
CONNECTOR, Air Injection Reactor Pump and Multi–Function Air Compressor 3.660 4–C11
CONNECTOR, Air Suspension and Inflator Unit 7.460 7–C23
CONNECTOR, Ambient Outside Air Temperature 9.770 8–E10
CONNECTOR, Back Up Lamp 2.698 3–D24
CONNECTOR, Battery (Positive) 2.342 3–B20
CONNECTOR, Body Wiring 13.095 10–C10
CONNECTOR, Body Wiring 13.100 10–C11
CONNECTOR, Brake Press Indicator .. 4.874 6–B7
CONNECTOR, Brake Pressure Warning 4.663 6–A16

© GENERAL MOTORS SERVICE PARTS OPERATIONS–CHEVROLET 14Y

CONNECTOR, Capsule/Headlamp Dimmer 2.459 3–C9
CONNECTOR, Capsule/Headlamp/Fog Lamp 2.485 3–C23
CONNECTOR, Capsule/Headlamp/Fog Lamp 2.727 3–D27
CONNECTOR, Carburetor Accelerator Pump 3.838 4–D14
CONNECTOR, Catalytic Converter 3.686 4–D4
CONNECTOR, Chassis Electric Diagnostic 2.440 3–C8
CONNECTOR, Chassis Electrical 2.530 3–D2
CONNECTOR, Chassis Wiring 2.460 3–C9
CONNECTOR, Cigarette Lighter 9.709 8–D25
CONNECTOR, Computer Control Sensors 3.682 4–C26
CONNECTOR, Concealed Capsule/Headlamp Control Drive ... 2.760 3–E2
CONNECTOR, Concealed Capsule/Headlamp Control 2.755 3–D28
CONNECTOR, Control module [6–SPEED MANUAL] 4.056 5–B7
CONNECTOR, Coolant Temperature (Engine Unit) 1.150 2–A16
CONNECTOR, Courtesy Lamp and Door Ajar 11.950 9–C28
CONNECTOR, Courtesy/Dome/Reading Lamp 11.927 9–C27
CONNECTOR, Cruise Control Vacuum . 3.886 4–D16
CONNECTOR, Cruise Control 3.885 4–D15
CONNECTOR, Cruise Control 3.887 4–D17
CONNECTOR, Distributor (also Knock Sensor) 2.383 3–C4
CONNECTOR, Door Electric and Vacuum Locks 10.485 9–B5
CONNECTOR, Door Lock (Keyless Entry) 10.526 9–B8
CONNECTOR, Door Lock Bellcrank ... 10.508 9–B7
CONNECTOR, Door Lock Remote Control 10.500 9–B7
CONNECTOR, Door Window 10.777 9–B14
CONNECTOR, Driver Information Display 9.768 8–E10
CONNECTOR, Early Fuel Evaporation Control 3.140 4–A13
CONNECTOR, Early Fuel Evaporation . 3.145 4–A14
CONNECTOR, Electrical Wiring Repair Kit 2.535 3–D9
CONNECTOR, Electronic Brake Control 4.710 6–A23
CONNECTOR, Electronic Brake Control 4.720 6–A25
CONNECTOR, Electronic Brake Control 4.730 6–B4
CONNECTOR, Electronic Control Suspension 7.450 7–C21
CONNECTOR, Emission Control System 3.670 4–C11
CONNECTOR, Emission System 3.680 4–C24
CONNECTOR, Engine Air Cooling (Electrical) 1.055 2–A8
CONNECTOR, Engine Coolant Temperature (Dash Unit) 1.148 2–A16
CONNECTOR, Engine Crankcase Ventilation 1.762 2–B11
CONNECTOR, Engine Crankcase 1.745 2–B9
CONNECTOR, Engine Oil Filter 1.855 2–B16
CONNECTOR, Engine Oil Level 1.516 2–B4
CONNECTOR, Engine Oil Pressure/Temperature 1.600 2–B12
CONNECTOR, Engine Vacuum Pump .. 3.280 4–A21
CONNECTOR, Folding Top Compartment 12.170 10–A10
CONNECTOR, Front Door Trim 14.691 11–A27
CONNECTOR, Front Door Window Regulator 10.783 9–B15
CONNECTOR, Front Seat Adjuster 11.556 9–C23
CONNECTOR, Front Seat Back Reclining 11.377 9–C15
CONNECTOR, Front Seat Lumbar 11.378 9–C17
CONNECTOR, Fuel Injection 3.300 4–A22
CONNECTOR, Fuel Line 3.163 4–A15
CONNECTOR, Fuel Pump 3.900 4–D18
CONNECTOR, Fuel Tank Filler 3.003 4–A6
CONNECTOR, Fuel Tank Meter 3.107 4–A8
CONNECTOR, Generator 2.313 3–B18
CONNECTOR, Heater and A/C Control . 9.273 8–C25
CONNECTOR, Heater Blower Motor ... 8.855 8–B2
CONNECTOR, Heater Control 8.852 8–A26
CONNECTOR, Heater 8.845 8–A23
CONNECTOR, Hood Latch Release Cable 8.077 8–A12
CONNECTOR, Horn 2.815 3–E4
CONNECTOR, Ignition Coil 2.170 3–A18
CONNECTOR, Ignition Switch Warning, Lock, Headlamp, Theft Deterrent or Rear/Side Object 2.195 3–A21
CONNECTOR, Ignition Switch 2.188 3–A20
CONNECTOR, Inflatable Restraint System 14.865 11–B11
CONNECTOR, Inside Rear View 10.185 9–A12
CONNECTOR, Instrument Cluster Warning 9.765 8–E9
CONNECTOR, Instrument Panel Compartment Lamp 10.275 9–B3
CONNECTOR, Instrument Panel Gage . 9.735 8–D25
CONNECTOR, Instrument Panel/Interior Lamp Switch 2.490 3–C25
CONNECTOR, Main Wiring Junction and Fuse Block 2.483 3–C20
CONNECTOR, Multi Port Fuel Injection Idle Air 3.338 4–B7
CONNECTOR, Multi Port Fuel Injection Throttle Position 3.339 4–B8
CONNECTOR, Parking Brake Cable ... 4.765 6–B5
CONNECTOR, Parking Brake Indicator . 4.589 6–A7
CONNECTOR, Parking, Turn Signal & Cornering Lamp 2.596 3–D19
CONNECTOR, Radiator Tank 1.203 2–A19
CONNECTOR, Radio and Speaker 9.656 8–D20
CONNECTOR, Radio Antenna 9.647 8–D11
CONNECTOR, Radio Receiver 9.650 8–D14
CONNECTOR, Rear Hatch Window 12.243 10–A15
CONNECTOR, Rear View Mirror 10.186 9–A15
CONNECTOR, Rear Window Defogger . 9.778 8–E11
CONNECTOR, Safety Starting Switch Or Speed Sensing [6–SPEED MANUAL] 4.054 5–B6
CONNECTOR, Side Marker and Hazard Flasher 2.575 3–D15
CONNECTOR, Starter Motor 2.100 3–A17
CONNECTOR, Stop Lamp Switch 2.447 3–C8
CONNECTOR, Tachometer 9.750 8–E8
CONNECTOR, Tail Lamp 2.694 3–D22
CONNECTOR, Tire Pressure 5.890 6–D15

© GENERAL MOTORS SERVICE PARTS OPERATIONS–CHEVROLET–14Y

CONNECTOR, Transmission Case [4-SPEED MANUAL] 4.104 5-A13
CONNECTOR, Transmission Control [AUTOMATIC] 4.057 5-C13
CONNECTOR, Transmission Converter [AUTOMATIC] 4.115 5-C14
CONNECTOR, Transmission Interlock [AUTOMATIC] 4.307 5-D26
CONNECTOR, Transmission Internal Shift [6-SPEED MANUAL] 4.307 5-B8
CONNECTOR, Transmission Main Control Valve Body [AUTOMATIC] .. 4.265 5-D10
CONNECTOR, Transmission Overdrive [4-SPEED MANUAL] 4.461 5-A19
CONNECTOR, Transmission Overdrive Oil Cooler [4-SPEED MANUAL] 4.457 5-A18
CONNECTOR, Transmission Safety Start/Warning [AUTOMATIC] 4.054 5-C13
CONNECTOR, Transmission Shift Brake Interlock [AUTOMATIC] 4.053 5-C13
CONNECTOR, Turbocharger/Supercharger Coolant 3.373 4-B9
CONNECTOR, Turn Signal Lamp 2.892 3-E5
CONNECTOR, Underhood 8.890 8-B3
CONNECTOR, Voltage and Glow Plug . 2.510 3-C25
CONNECTOR, Windshield Washer Pump 10.153 9-A11
CONNECTOR, Windshield Washer 10.154 9-A11
CONNECTOR, Windshield Washer 10.155 9-A12
CONNECTOR, Windshield Wiper Control 10.163 9-A12
CONNECTOR, Windshield Wiper Motor 10.150 9-A10
CONSOLE, Floor Console 10.240 9-A23
CONTACT, Horn Button 2.819 3-E5
CONTACT, Starter Motor Switch 2.102 3-A17
CONTACT, Windshield Wiper Motor 10.150 9-A10
CONTAINER KIT, Windshield Washer .. 10.154 9-A11
CONTAINER, Auto 8.820 8-A22
CONTAINER, Windshield Washer 10.154 9-A11
CONTROL KIT, Throttle Body/Carburetor 3.820 4-D13
CONTROL PKG, Vehicle Security System (Non-Production) 21.517B 1-D12
CONTROL, Electronic Control Suspension 7.450 7-C21
CONTROL, Front Seat Adjuster 11.558 9-C23
CONTROL, Front Seat Lumbar 11.378 9-C17
CONTROL, Heater and A/C Control 9.273 8-C25
CONTROL, Inside Rear View 10.185 9-A12
CONTROL, Radio Receiver 9.650 8-D14
CONTROL, Transmission Shift [AUTOMATIC] 4.004 5-C10
CONTROL, Transmission Shift Control [4-SPEED MANUAL] 4.004 5-A12
CONTROLLER, Radio (Non-Production) 21.480B 1-D9
CONVERSION KIT, Transmission Control Module [AUTOMATIC] 4.056 5-C13
CONVERTER, Catalytic Converter 3.685 4-D3
CONVERTER, Exhaust Pipe 3.609 4-C7
CONVERTER, Transmission Converter [AUTOMATIC] 4.115 5-C14
COOLER, Engine Oil Cooler 1.540 2-B5
COOLER, Power Steering Fluid 6.600 7-B10
COOLER, Transmission Oil Cooler [AUTOMATIC] 4.128 5-C17
COOLER/WARMER PKG, Food & Beverage (Non-Production) 21.265B 1-D6
CORD, Engine Coolant Heater 1.152 2-A17
CORE, A/C Compressor 9.177 8-C14
CORE, Heater Core 8.854 8-A28
CORE, Radiator 1.219 2-A20
COUPLING, Air Distributor 9.786 8-E12
COUPLING, Coolant Pump, with Bearing 1.105 2-A15
COVER KIT, Convertible Top Cover 13.347 10-C16
COVER KIT, Throttle Body Coolant Supply 3.337 4-B7
COVER KIT, Throttle Body/Carburetor .. 3.726 4-D13
COVER PKG, Front End (Non-Production) 21.149B 1-D3
COVER PKG, Luggage Carrier (Non-Production) 21.061B 1-D3
COVER PKG, vehicle (Non-Production) 21.148B 1-D3
COVER, Accelerator Pedal Lever 3.454 4-B13
COVER, Air Cleaner Intake 3.410 4-B10
COVER, Air Distributor 9.786 8-E12
COVER, Battery Cable 2.343 3-B21
COVER, Brake/Clutch Pedal 4.630 6-A8
COVER, Bumper/Fascia Face 7.831 7-C28
COVER, Chassis Electric Diagnostic ... 2.440 3-C8
COVER, Chassis Electrical 2.530 3-D2
COVER, Chassis/Engine Wiring Harness 2.559 3-D11
COVER, Computer Control Sensors ... 3.682 4-C26
COVER, Concealed Capsule/Headlamp Control 2.755 3-D28
COVER, Convertible Top Cover 13.347 10-C16
COVER, Cowl Top Vent Louver 12.800 10-A16
COVER, Cruise Control 3.880 4-D14
COVER, Distributor Cap Retaining 2.368 3-C3
COVER, Door Lock Inside Handle Escutcheon (Trim Protector) 10.515 9-B7
COVER, Early Fuel Evaporation Control 3.140 4-A13
COVER, Electronic Brake Control 4.720 6-A25
COVER, Electronic Brake Control 4.730 6-B4
COVER, Emission Control System 3.670 4-C11
COVER, Emission Control System 3.671 4-C19
COVER, Engine Camshaft & Valve Rocker [8-CYLINDER] 0.386 1-E28
COVER, Engine Clutch [8-CYLINDER] 0.859 1-F18
COVER, Engine Crankcase 1.745 2-B9
COVER, Engine Front Cover [8-CYLINDER] 0.206 1-E22
COVER, Floor Console Compartment Door 10.242 9-A26
COVER, Floor Console 10.240 9-A23
COVER, Floor Pan 12.980 10-B5
COVER, Flywheel & Clutch & Converter Housing [8-CYLINDER] 0.679 1-F11
COVER, Folding Top Compartment 12.170 10-A10
COVER, Frame Front Cross Member ... 7.039 7-C10
COVER, Front Door Trim 14.685 11-A23
COVER, Front Door Trim 14.691 11-A27
COVER, Front Seat Adjuster Track 11.573 9-C25
COVER, Front Seat Back and Back of Back 14.800 11-B2
COVER, Front Seat Back Lock 11.390 9-C19
COVER, Front Seat Cushion 14.880 11-C3
COVER, Fuel Injection 3.330 4-A24
COVER, Fuel Pump 3.901 4-D18
COVER, Hood Latch 8.080 8-A13
COVER, Instrument Panel Ashtray 12.009 10-A8

© GENERAL MOTORS SERVICE PARTS OPERATIONS-CHEVROLET-14Y

COVER, Instrument Panel Opening 10.256 9–A28
COVER, License Plate 7.800 7–C27
COVER, Main Wiring Junction and Fuse Block 2.483 3–C20
COVER, Multi Port Fuel Injection Idle Air 3.338 4–B7
COVER, Oil Pump 1.723 2–B9
COVER, Parking Brake Apply Lever 4.612 6–A7
COVER, Parking, Turn Signal & Cornering Lamp 2.593 3–D18
COVER, Rear Axle Housing 5.398 6–C15
COVER, Roof Panel 12.810 10–A18
COVER, Seat Belt 14.875 11–B14
COVER, Steering Gear Housing Side .. 6.807 7–B20
COVER, Steering 6.518 7–A21
COVER, Trailer Platform (Non–Production) 21.260B 1–D6
COVER, Transmission Case [4–SPEED MANUAL] 4.105 5–A14
COVER, Transmission Governor [AUTOMATIC] 4.256 5–D17
COVER, Transmission Main Control Valve Body [AUTOMATIC] 4.265 5–D18
COVER, Transmission Oil Pump [AUTOMATIC] 4.224 5–D7
COVER, Transmission Oil Suction Tube [AUTOMATIC] 4.197 5–D6
COVER, Transmission Reverse Idler Shaft [6–SPEED MANUAL] 4.435 5–B10
COVER, Transmission Servo & Accumulator [AUTOMATIC] 4.228 5–D12
COVER, Windshield Frame 12.807 10–A17
COVER, Windshield Sunshade 10.219 9–A18
COVER, Windshield Wiper Motor 10.150 9–A10
CRADLE PKG, Mobile (Non–Production) 21.444B 1–D8
CRANKSHAFT, Engine [8–CYLINDER] . 0.646 1–F8
CROSSMEMBER, Front Frame Cross Member 7.010 7–C9
CROSSMEMBER, Rear Frame Cross .. 7.014 7–C9
CUP, Differential Drive Pinion Front 5.447 6–C19
CUSHION, Front/Rear 14.896 11–C10
CYLINDER KIT, Brake Master Cylinder . 4.649 6–A8
CYLINDER KIT, Door Outside Lock 10.550 9–B8
CYLINDER KIT, Instrument Panel Compartment Door Lock 10.266 9–B2
CYLINDER KIT, Rear Compartment Floor 12.981 10–B7
CYLINDER, A/C Compressor 9.170 8–C9
CYLINDER, Brake Master 4.650 6–A9
CYLINDER, Clutch Hydraulic Release Slave/Actuator [8–CYLINDER] 0.780 1–F15
CYLINDER, Engine Clutch [8–CYLINDER] 0.786 1–F16
CYLINDER, Hydraulic Clutch Main Cylinder [8–CYLINDER] 0.775 1–F14
CYLINDER, Ignition Switch 2.188 3–A20
CYLINDER, Instrument Panel Compartment Door Lock 10.266 9–B2
CYLINDER, Rear Compartment Floor .. 12.981 10–B7

D

DAMPENER, Engine Coolant 1.039 2–A14
DAMPENER, Engine Crankshaft And Camshaft Balancer [8–CYLINDER] . 0.659 1–F8
DAMPENER, Fuel Tank Meter 3.107 4–A8
DAMPENER, Propeller 5.544 6–D3
DECAL PKG, Body Side (Non–Production) 21.543B 1–D12
DECAL PKG, W/S Graphics (Non–Production) 21.157B 1–D3
DECAL, Front Fender and Body Ornamentation 8.132 8–A14
DECAL, Front Side Door 12.112 10–A8
DECAL, Rear Quarter Panel 12.116 10–A9
DECAL, Windshield Glass 10.027 9–A9
DEFLECTOR PKG, Radiator Air 1.272 2–A26
DEFLECTOR, Air Outlet 9.264 8–C25
DEFLECTOR, Engine Oil Pan 1.430 2–B3
DEFLECTOR, Inside Rear View 10.165 9–A12
DEFLECTOR, Radiator Air 1.272 2–A26
DEFLECTOR, Rear Body Lock Pillar ... 12.942 10–A28
DEFLECTOR, Transmission Oil Pan [AUTOMATIC] 4.195 5–D5
DETENT, Transmission Throttle Valve [AUTOMATIC] 4.275 5–D24
DIAL KIT, A/C Control 9.279 8–D4
DIAL PKG, A/C Control 9.279 8–D4
DIAL, A/C Control 9.279 8–D4
DIAL, Transmission Shift Control Selector [AUTOMATIC] 4.020 5–C11
DIAPHRAGM, Brake Master Cylinder Reservoir 4.651 6–A14
DIAPHRAGM, Cylinder Poppet 4.942 6–B15
DIAPHRAGM, Vacuum Power Brake Booster Cylinder 4.922 6–B12
DIMMER, Instrument Panel/Interior Lamp Switch 2.490 3–C25
DIODE, Electronic Brake Control 4.720 6–A25
DIODE, Generator Output 2.319 3–B19
DIODE, Voltage and Glow Plug 2.510 3–C25
DISC KIT, Differential Clutch 5.511 6–C26
DISC, Differential Clutch 5.511 6–C26
DISC, Vacuum Power Brake Booster Cylinder 4.924 6–B13
DISC, Vacuum Power Brake Booster Reaction 4.934 6–B14
DISPLAY, Driver Information Display ... 9.768 8–E10
DISTRIBUTOR, Ignition 2.361 3–B21
DOOR & FRAME, Rear Compartment Floor 12.981 10–B7
DOOR, Capsule/Headlamp/Fog Lamp . 2.728 3–D28
DOOR, Floor Console Compartment Door 10.242 9–A26
DOOR, Front Door 10.351 9–B3
DOOR, Fuel Tank Filler Door 12.945 10–B3
DOOR, Instrument Panel Compartment Door 10.261 9–A28
DOOR, Rear Compartment Floor 12.981 10–B7
DRIVE, Engine Oil Pump 1.639 2–B7
DRIVE, Starter Motor Drive 2.086 3–A17
DRUM, Transmission Overdrive Clutch [4–SPEED MANUAL] 4.468 5–A20
DUCT, A/C Electric Control 9.275 8–C27
DUCT, Air Cleaner Air Intake 3.417 4–B11
DUCT, Air Cleaner and Silencer 3.407 4–B10
DUCT, Air Distributor 9.262 8–C24

DUCT, Air Distributor 9.786 8–E12
DUCT, Emission System 3.675 4–C21
DUCT, Side Window Defroster 9.780 8–E11

E

ELBOW, Air Cleaner Air Intake 3.417 4–B11
ELBOW, Engine Air Cooling 1.020 2–A8
ELBOW, Engine Oil Pressure/Temperature 1.800 2–B12
ELBOW, Windshield Washer 10.155 9–A12
ELEMENT, Air Cleaner Intake 3.410 4–B10
EMBLEM, Bumper/Fascia 7.832 7–D4
EMBLEM, Engine Camshaft & Valve Rocker [8–CYLINDER] 0.306 1–E28
EMBLEM, Engine Fuel Intake Manifold . 3.265 4–A18
EMBLEM, Floor Console 10.240 9–A23
EMBLEM, Fuel Tank Filler Door 12.945 10–B3
EMBLEM, Hood Panel Ornamentation . 8.055 8–A10
EMBLEM, Horn Button 2.820 3–E5
EMBLEM, Wheel Cover Appearance ... 5.871 6–D15
EMERGENCY PKG, Highway (Non–Production) (2.575) 21.245B 1–D8
END KIT, Rear Axle 5.416 6–C16
ENGINE, Cylinder and Case [8–CYLINDER] 0.033 1–E17
ENGINE, New/Reman Goodwrench [8–CYLINDER] 0.000A 1–E15
ENGINE, Production/Service [8–CYLINDER] 0.000 1–E15
EPROM, Emission Control System 3.670 4–C11
EQUALIZER, Parking Brake Cable 4.785 6–B5
ESCUTCHEON, Convertible and Hard Top 13.346 10–C15
ESCUTCHEON, Door Electric and Vacuum Locks 10.485 9–B5
ESCUTCHEON, Front Seat Adjuster ... 11.558 9–C23
ESCUTCHEON, Radio Receiver 9.650 8–D14
ESCUTCHEON, Rear Window Reveal Molding 11.209 9–C12
EVAPORATOR, A/C Evaporator 9.210 8–C17
EXTENSION KIT, Seat Belt 14.875 11–B14
EXTENSION, Body Rear End (Plastic Laminated) 12.986 10–B10
EXTENSION, Bumper/Fascia Face 7.831 7–C28
EXTENSION, Door Opening 10.695 9–B11
EXTENSION, Engine Fuel Intake Manifold 3.265 4–A18
EXTENSION, Floor Pan 12.980 10–B5
EXTENSION, Folding Top Hinge 14.310 11–A21
EXTENSION, Tire Valve and Cover Lock 5.875 6–D15
EXTENSION, Transmission Case Extension [6–SPEED MANUAL] 4.317 5–B8
EXTENSION, Transmission Case Extension [AUTOMATIC] 4.317 5–D26

F

FACING, Engine Timing [8–CYLINDER] 0.724 1–F12
FAN KIT, Engine Air Cooling (Electrical) 1.055 2–A8
FAN, Engine Air Cooling (Electrical) 1.055 2–A8
FAN, Generator Drive 2.274 3–B6
FASCIA, Bumper/Fascia Face 7.831 7–C28
FASTENER KIT, Engine Camshaft & Valve Rocker Cover [8–CYLINDER] . 0.413 1–F2
FASTENER KIT, Fuel Injection 3.330 4–A24
FASTENER, Folding Top Side Roof Rail Rear 14.260 11–A21
FASTENER, Folding Top Side Roof Rail 14.120 11–A18
FASTENER, Instrument Panel Trim 10.252 9–A28
FASTENER, Multi Port Fuel Injection Throttle Body 3.336 4–B6
FASTENER, Roof Panel 12.810 10–A18
FENDER, Front Fender 8.130 8–A14
FILLER, Floor Console 10.240 9–A23
FILLER, Front Door Armrest 14.686 11–A25
FILLER, Rear Body Lock Pillar 12.942 10–A28
FILLER, Rear Compartment Floor .. . 12.981 10–B7
FILLER, Side Marker and Hazard Flasher 2.575 3–D15
FILTER KIT, Transmission Oil Suction Tube [AUTOMATIC] 4.197 5–D6
FILTER, A/C Control 9.279 8–D4
FILTER, A/C Evaporator 9.210 8–C17
FILTER, A/C Refrigerant 9.195 8–C16
FILTER, Door Lock (Keyless Entry) 10.526 9–B8
FILTER, Emission Control System 3.670 4–C11
FILTER, Emission Control System 3.671 4–C19
FILTER, Engine Crankcase 1.745 2–B9
FILTER, Engine Fuel Filter 3.890 4–D17
FILTER, Engine Oil Filter 1.836 2–B15
FILTER, Instrument Cluster 9.748 8–E7
FILTER, Power Brake Booster Air Cleaner 4.913 6–B12
FILTER, Speedometer 9.761 8–E8
FILTER, Tachometer 9.750 8–E8
FILTER, Transmission Main Control Valve Body [AUTOMATIC] 4.265 5–D18
FILTER, Windshield Washer 10.154 9–A11
FINIAL, Radio Antenna 9.647 8–D11
FITTING KIT, Fuel Injection 3.330 4–A24
FITTING, A/C Compressor 9.225 8–C23
FITTING, Brake Hose 4.671 6–A20
FITTING, Engine Crankcase Ventilation 1.702 2–B11
FITTING, Engine Oil Cooler 1.540 2–B5
FITTING, Engine Oil Filter 1.855 2–B16
FITTING, Engine Oil Pressure Gage ... 1.803 2–B14
FITTING, Engine Oil Pressure/Temperature 1.800 2–B12
FITTING, Fuel Line 3.163 4–A15
FITTING, Heater 8.846 8–A27
FITTING, Hydraulic Brake Pipe 4.686 6–A21
FITTING, Hydraulic Clutch Reservoir [8–CYLINDER] 0.785 1–F16
FITTING, Intake Manifold Vacuum 3.278 4–A21
FITTING, Steering Pump Control 6.624 7–B16
FITTING, Transmission Oil Cooler [AUTOMATIC] 4.128 5–C17
FITTING, Vacuum Power Brake 4.931 6–B14
FLARE PKG, Safety (Non–Production) . 21.207B 1–D4
FLASHER PKG, Vehicle Security (Non–Production) 21.515B 1–D11
FLASHER, Side Marker and Hazard Flasher 2.575 3–D15
FLASHER, Turn Signal Lamp 2.892 3–E5

© GENERAL MOTORS SERVICE PARTS OPERATIONS–CHEVROLET–1-Y

FLYWHEEL, Engine Crankshaft [8-CYLINDER] 0.666 1-F9
FORK, Engine Clutch Release [8-CYLINDER] 0.795 1-F16
FORK, Transmission Internal Shift [4-SPEED MANUAL] 4.303 5-A14
FRAME PKG, License Plate (Non-Production) 21.301B 1-D7
FRAME, Chassis 7.003 7-C8
FRAME, Folding Top 13.365 10-C17
FRAME, Front Seat Back 11.373 9-C12
FRAME, Front Seat Cushion 11.419 9-C21
FRAME, Generator Commutator 2.297 3-B16
FRAME, Generator Drive End 2.305 3-B16
FRAME, Starter Motor Commutator End 2.067 3-A16
FRAME, Windshield Frame 12.807 10-A17
FUEL INJECTOR KIT, Throttle Body/Carburetor 3.774 4-D13
FUEL, Throttle Body/Carburetor 3.734 4-D13

G

GAGE, Tire Pressure 5.890 6-D15
GASKET KIT, A/C Compressor Pressure Relief 9.178 8-C15
GASKET KIT, Engine Cylinder Head [8-CYLINDER] 0.289 1-E23
GASKET KIT, Engine Front Cover [8-CYLINDER] 0.207 1-E22
GASKET KIT, Engine Oil Pan 1.429 2-B3
GASKET KIT, Manifold to Cylinder Head 3.270 4-A19
GASKET KIT, Multi Port Fuel Injection Throttle Body 3.336 4-B6
GASKET KIT, Radiator 1.219 2-A20
GASKET KIT, TBI/Carburetor 3.724 4-D10
GASKET KIT, Transmission Main Control Valve Body [AUTOMATIC] 4.265 5-D18
GASKET KIT, Transmission Overhaul [AUTOMATIC] 4.005 5-C10
GASKET, A/C Evaporator Blower 9.216 8-C22
GASKET, A/C Evaporator 9.211 8-C17
GASKET, Air Duct 9.782 8-E12
GASKET, Air Injection Reactor Pump and Multi-Function Air Compressor 3.665 4-C11
GASKET, Brake Hose 4.671 6-A20
GASKET, Distributor (also Knock Sensor) 2.383 3-C4
GASKET, Door Outside Lock 10.550 9-B8
GASKET, Electronic Brake Control 4.720 6-A25
GASKET, Emission Control System 3.671 4-C19
GASKET, Emission System 3.675 4-C21
GASKET, Emission System 3.680 4-C24
GASKET, Engine Camshaft & Valve Rocker Cover [8-CYLINDER] 0.423 1-F2
GASKET, Engine Coolant Outlet 1.154 2-A18
GASKET, Engine Coolant Pump to Cover 1.114 2-A16
GASKET, Engine Coolant Pump 1.079 2-A14
GASKET, Engine Coolant Thermostat Housing 1.252 2-A25
GASKET, Engine Crankcase 1.745 2-B9
GASKET, Engine Cylinder Head [8-CYLINDER] 0.289 1-E23
GASKET, Engine Front Cover [8-CYLINDER] 0.207 1-E22
GASKET, Engine Oil Cooler 1.550 2-B6
GASKET, Engine Oil Filter 1.640 2-B15
GASKET, Engine Oil Pan Drain Plug ... 1.456 2-B4
GASKET, Engine Oil Pan 1.429 2-B3
GASKET, Engine Oil Pump Cover 1.724 2-B9
GASKET, Engine Rear Main Bearing [8-CYLINDER] 0.137 1-E20
GASKET, Engine Timing [8-CYLINDER] 0.724 1-F12
GASKET, Exhaust Pipe 3.611 4-C8
GASKET, Fuel Gage to Tank 3.112 4-A12
GASKET, Fuel Injector 3.305 4-A23
GASKET, Fuel Line 3.163 4-A15
GASKET, Fuel Pump Mounting 3.904 4-D19
GASKET, Fuel Tank Filler Neck 3.009 4-A8
GASKET, Heater 8.845 8-A23
GASKET, Hydraulic Brake Hose 4.681 6-A21
GASKET, Hydraulic Brake Pipe 4.686 6-A21
GASKET, Hydraulic Power Brake Booster 4.805 6-B6
GASKET, Ignition Distributor Housing .. 2.363 3-C2
GASKET, Instrument Cluster 9.744 8-E6
GASKET, Intake to Exhaust Manifold ... 3.272 4-A20
GASKET, Manifold to Cylinder Head ... 3.270 4-A19
GASKET, Multi Port Fuel Injection Throttle Body 3.336 4-B6
GASKET, Power Brake Booster 4.910 6-B12
GASKET, Radio Auxiliary Speakers 9.665 8-D22
GASKET, Rear Compartment Floor 12.981 10-B7
GASKET, TBI/Carburetor 3.724 4-D10
GASKET, Throttle Body/Carburetor 3.726 4-D13
GASKET, Transmission Case [4-SPEED MANUAL] 4.109 5-A14
GASKET, Transmission Case [6-SPEED MANUAL] 4.109 5-B7
GASKET, Transmission Extension [6-SPEED MANUAL] 4.318 5-B8
GASKET, Transmission Main Control Valve Body [AUTOMATIC] 4.265 5-D18
GASKET, Transmission Main Drive Gear Bearing Retainer [4-SPEED MANUAL] 4.358 5-A15
GASKET, Transmission Main Drive Gear Bearing Retainer [6-SPEED MANUAL] 4.358 5-B9
GASKET, Transmission Oil Pan [AUTOMATIC] 4.196 5-D6
GASKET, Transmission Oil Pump [AUTOMATIC] 4.226 5-D10
GASKET, Transmission Overdrive [4-SPEED MANUAL] 4.460 5-A19
GASKET, Transmission Overdrive [4-SPEED MANUAL] 4.461 5-A19
GASKET, Transmission Overdrive [4-SPEED MANUAL] 4.460 5-A22
GASKET, Transmission Overdrive Case [4-SPEED MANUAL] 4.455 5-A18
GASKET, Windshield Washer Pump 10.153 9-A11
GASKET, Windshield Wiper Motor 10.152 9-A11
GEAR KIT, Distributor Drive and Driven . 2.374 3-C3
GEAR KIT, Steering 6.508 7-A12
GEAR PKG, Transmission Overdrive Sun Gear [4-SPEED MANUAL] 4.470 5-A21
GEAR SET, Ring and Pinion 5.529 6-C27

© GENERAL MOTORS SERVICE PARTS OPERATIONS-CHEVROLET-14Y

GEAR SET, Transmission Overdrive Sun Gear [4-SPEED MANUAL] 4.470 5-A21
GEAR, Differential Pinion 5.526 6-C27
GEAR, Differential Side 5.528 6-C27
GEAR, Distributor Drive and Driven 2.374 3-C3
GEAR, Engine Flywheel [8-CYLINDER] 0.673 1-F10
GEAR, Front Seat Back Reclining 11.377 9-C15
GEAR, Speedometer Drive [6-SPEED MANUAL] 4.343 5-B8
GEAR, Speedometer Drive [AUTOMATIC] 4.337 5-D27
GEAR, Speedometer Drive [AUTOMATIC] 4.343 5-E13
GEAR, Speedometer Driven [6-SPEED MANUAL] 4.337 5-B8
GEAR, Transmission Countershaft [4-SPEED MANUAL] 4.421 5-A17
GEAR, Transmission First/Reverse Gear [4-SPEED MANUAL] 4.417 5-A17
GEAR, Transmission Governor [AUTOMATIC] 4.256 5-D17
GEAR, Transmission Input [AUTOMATIC] 4.150 5-C18
GEAR, Transmission Main Drive (Clutch) [4-SPEED MANUAL] 4.351 5-A15
GEAR, Transmission Overdrive Sun Gear [4-SPEED MANUAL] 4.470 5-A21
GEAR, Transmission Reverse Idler [4-SPEED MANUAL] 4.430 5-A17
GEAR, Transmission Second Speed [4-SPEED MANUAL] 4.395 5-A16
GEAR, Transmission Sun Gear [AUTOMATIC] 4.159 5-C19
GEAR, Transmission Third/Forth/Fifth Gear [4-SPEED MANUAL] 4.415 5-A17
GENERATOR, Engine Electrical 2.275 3-B6
GLASS, Rear Hatch Window 12.180 10-A13
GOVERNOR, Transmission Governor [AUTOMATIC] 4.256 5-D17
GRILLE, A/C Electric Control 9.275 8-C27
GRILLE, Air Outlet 9.264 8-C25
GRILLE, Capsule/Headlamp/Fog Lamp 2.485 3-C23
GRILLE, Radio Auxiliary Speakers 9.665 8-D22
GRILLE, Radio Receiver 9.650 8-D14
GRILLE, Radio Speaker 9.655 8-D17
GRILLE, Side Window Defroster 9.780 8-E11
GRILLE, Windshield Defroster 9.779 8-E11
GRIP, Transmission Control Lever [4-SPEED MANUAL] 4.006 5-A12
GROMMET KIT, Windshield Wiper Motor 10.152 9-A11
GROMMET, A/C Compressor 9.242 8-C24
GROMMET, Brake Master Cylinder Reservoir 4.651 6-A14
GROMMET, Emission Control System .. 3.671 4-C19
GROMMET, Engine Camshaft & Valve Rocker Cover [8-CYLINDER] 0.413 1-F2
GROMMET, Engine Crankcase Ventilation 1.762 2-B11
GROMMET, Engine Crankcase 1.745 2-B9
GROMMET, Starter Motor Switch 2.102 3-A17
GROMMET, Transmission Overdrive Oil Pan [4-SPEED MANUAL] 4.456 5-A18
GROMMET, Transmission Shift Control Cable [AUTOMATIC] 4.047 5-C11
GROMMET, Transmission Shift Shaft Lever Rod [4-SPEED MANUAL] 4.037 5-A13
GROMMET, Vacuum Power Brake Booster Check 4.955 6-B15
GUARD PKG, Fender Splash (Non-Production) 21.220B 1-D4
GUARD PKG, Lower Body Side (Non-Production) 21.225B 1-D5
GUARD, Door Opening 10.695 9-B11
GUARD, Engine Fuel Intake Manifold .. 3.265 4-A18
GUARD, Front Door Window Glass Channel (Outer & Inner) 10.710 9-B12
GUARD, Hose (Radiator, Heater, A/C) .. 1.166 2-A18
GUIDE, Convertible and Hard Top 13.346 10-C15
GUIDE, Convertible Top Cover 13.347 10-C16
GUIDE, Door Inside Locking Rod 10.565 9-B9
GUIDE, Engine Timing [8-CYLINDER] . 0.724 1-F12
GUIDE, Engine Valve Push Rod Cover [8-CYLINDER] 0.439 1-F3
GUIDE, Folding Top Back Window 13.395 10-C17
GUIDE, Folding Top Compartment 12.170 10-A10
GUIDE, Front Door Window 10.685 9-B11
GUIDE, Parking Brake Cable 4.785 6-B5
GUIDE, Transmission Oil Pump [AUTOMATIC] 4.220 5-D10
GUSSET, Frame Front Cross Member .. 7.039 7-C10
GUSSET, Front Body Hinge Pillar 12.659 10-A16
GUSSET, Windshield Frame 12.807 10-A17

H

HANDLE, Door Lock Inside Handle 10.512 9-B7
HANDLE, Door Outside Handle 10.527 9-B8
HANDLE, Folding and Hard Top Front Rail 14.080 11-A18
HANDLE, Front Seat Back Lock 11.390 9-C19
HANDLE, Front Seat Back Reclining ... 11.377 9-C15
HANDLE, Hood Latch 8.075 8-A12
HANDLE, Rear Compartment Floor 12.981 10-B7
HANDLE, Rear Seat to Back Window Panel 15.024 11-D6
HANDLE, Roof Panel 12.810 10-A18
HANDLE, Transmission Gearshift Control [6-SPEED MANUAL] 4.006 5-B5
HANDLE, Wheel, Jack and Miscellaneous Wrench 8.821 8-A22
HANDSET PKG, Mobile (Non-Production) 21.444B 1-D8
HANGER, Exhaust Muffler/Resonator .. 3.704 4-D9
HANGER, Exhaust Pipe 3.616 4-C9
HARDWARE KIT, Folding Top Back Window 13.395 10-C17
HARDWARE KIT, Roof Panel 12.810 10-A18
HARDWARE KIT, Wheel Brake Cylinder/Caliper 4.665 6-A16
HARDWARE PKG, Radio (Non-Production) 21.460B 1-D9
HARNESS PKG, Mobile (Non-Production) 21.444B 1-D8
HARNESS PKG, Mobile (Production) .. 21.444A 1-D8
HARNESS PKG, Radio (Non-Production) 21.460B 1-D9

HARNESS PKG, Trailer Wiring (Non-Production) 21.237B 1-D5
HARNESS, A/C Vacuum and Temperature 9.281 8-D7
HARNESS, A/C Wiring 9.276 8-D2
HARNESS, Body Wiring 13.090 10-C7
HARNESS, Capsule/Headlamp/Fog Lamp 2.727 3-D27
HARNESS, Catalytic Converter 3.686 4-D4
HARNESS, Chassis Wiring 2.460 3-C9
HARNESS, Distributor (also Knock Sensor) 2.383 3-C4
HARNESS, Distributor Vacuum Control . 2.420 3-C8
HARNESS, Early Fuel Evaporation 3.145 4-A14
HARNESS, Electronic Brake Control ... 4.720 6-A25
HARNESS, Electronic Control Suspension 7.450 7-C21
HARNESS, Emission System 3.675 4-C21
HARNESS, Engine Wiring 2.525 3-C26
HARNESS, Front Seat Lumbar 11.378 9-C17
HARNESS, GM Vehicle 21.513 1-D10
HARNESS, Heater Control 8.652 8-A28
HARNESS, Inflatable Restraint System . 14.865 11-B11
HARNESS, Mobile (Non-Production) .. 21.444B 1-D8
HARNESS, Parking, Turn Signal & Cornering Lamp 2.596 3-D19
HARNESS, Radio and Speaker 9.656 8-D20
HARNESS, Spark Plug or Coil 2.240 3-A22
HARNESS, Tachometer 9.750 8-E8
HARNESS, Tail Lamp 2.694 3-D22
HARNESS, Transmission Solenoid [AUTOMATIC] 4.122 5-C15
HARNESS, Vehicle (Non-Production) . 21.513B 1-D10
HEAD, Engine Cylinder [8-CYLINDER] 0.269 1-E23
HEADLINER, Convertible and Hard Top 13.346 10-C15
HEAT SINK, Distributor (also Knock Sensor) 2.383 3-C4
HEATER PKG, Battery (Non-Production) 21.553B 1-D14
HEATER PKG, Engine (Production) 21.240A 1-D5
HEATER, Cigarette Lighter 9.709 8-D25
HEATER, Engine Coolant Heater 1.152 2-A17
HINGE KIT, Fuel Tank Filler Door 12.945 10-B3
HINGE, Door Hinge 10.450 9-B5
HINGE, Floor Console Compartment Door 10.242 9-A26
HINGE, Folding Top Compartment 12.170 10-A10
HINGE, Folding Top Hinge 14.310 11-A21
HINGE, Front Door Armrest 14.686 11-A25
HINGE, Front Door Lower Hinge 10.454 9-B5
HINGE, Front Seat Bottom Hinge 11.375 9-C15
HINGE, Hood Panel 8.015 8-A8
HINGE, Instrument Panel Compartment Door 10.262 9-A28
HINGE, Parking, Turn Signal & Cornering Lamp 2.587 3-D18
HINGE, Rear Hatch Window 12.184 10-A14
HOLDER PKG, CD Stow (Non-Production) 21.121B 1-D3
HOLDER, Floor Console 10.240 9-A23
HOLDER, Front Door Window Regulator 10.783 9-B15
HOLDER, Hub Front and Rear 5.813 6-D13
HOLDER, Starter Motor Brush 2.052 3-A15
HOOD KIT, Panel 8.000 8-A8
HOOD, Panel 8.000 8-A8
HOOK, Coat 15.368 11-D13
HOOK, Front Floor Carpet 15.300 11-D10
HOOK, Rear Seat to Back Window Panel 15.024 11-D6
HOOK, Spare Wheel 7.629 7-C25
HOOK, Towing 7.068 7-C11
HORN KIT, Horn 2.810 3-E3
HORN, Fuel Injection Air Meter 3.335 4-A28
HORN, Horn 2.810 3-E3
HOSE ASM, A/C Compressor 9.226 8-C23
HOSE KIT, Engine Coolant Recovery ... 1.240 2-A24
HOSE KIT, Radiator Inlet (Upper) 1.159 2-A18
HOSE, A/C Electric Control 9.275 8-C27
HOSE, A/C Refrigerant (All Metal) 9.220 8-C22
HOSE, A/C Refrigerant (Metal and Rubber Sections) 9.225 8-C23
HOSE, A/C Vacuum and Temperature .. 9.281 8-D7
HOSE, Brake Master Cylinder Reservoir 4.651 6-A14
HOSE, Cruise Control Vacuum 3.686 4-D16
HOSE, Early Fuel Evaporation 3.145 4-A14
HOSE, Emission System 3.675 4-C21
HOSE, Engine Coolant By-Pass 1.097 2-A15
HOSE, Engine Coolant Recovery 1.240 2-A24
HOSE, Engine Crankcase Ventilation .. 1.762 2-B11
HOSE, Engine Oil Cooler 1.540 2-B5
HOSE, Engine Vacuum Pump 3.280 4-A21
HOSE, Front Seat Lumbar 11.378 9-C17
HOSE, Fuel Line 3.163 4-A15
HOSE, Fuel Tank Filler 3.003 4-A8
HOSE, Heater 8.846 8-A27
HOSE, Hydraulic Brake 4.680 6-A20
HOSE, Hydraulic Clutch Reservoir [8-CYLINDER] 0.785 1-F16
HOSE, Multi Port Fuel Injection Idle Air . 3.338 4-B7
HOSE, Radiator Inlet (Upper) 1.159 2-A18
HOSE, Radiator Outlet (Lower) 1.173 2-A19
HOSE, Steering Fluid Cooler 6.602 7-B10
HOSE, Steering Gear Oil Pressure 6.670 7-B18
HOSE, Steering Gear Oil Return 6.671 7-B18
HOSE, Steering Pump 6.635 7-B16
HOSE, Throttle Body Coolant Supply .. 3.337 4-B7
HOSE, Turbocharger/Supercharger Coolant 3.373 4-B9
HOSE, Vacuum Power Brake 4.931 6-B14
HOUSING KIT, Multi Port Fuel Injection Idle Air 3.338 4-B7
HOUSING KIT, Steering 6.518 7-A21
HOUSING, Capsule/Headlamp/Foglamp 2.725 3-D25
HOUSING, Cigarette Lighter 9.709 8-D25
HOUSING, Emission Control System .. 3.671 4-C19
HOUSING, Engine Clutch Housing [8-CYLINDER] 0.683 1-F11
HOUSING, Engine Coolant Thermostat 1.251 2-A25
HOUSING, Engine Rear Main Bearing [8-CYLINDER] 0.137 1-E20
HOUSING, Engine Timing [8-CYLINDER] 0.724 1-F12
HOUSING, Engine Vacuum (Fuel Economy) 9.755 8-E8
HOUSING, Floor Console Compartment Door 10.242 9-A26
HOUSING, Fuel Injector 3.305 4-A23
HOUSING, Fuel Tank Filler 3.003 4-A8

MICROFICHE INDEX

GROUPS 0.000 & 21.000

FICHE 1 OF 11

GROUP	DESCRIPTION	STARTING GRID LOCATION PARTS	ILLUSTRATIONS
–	GENERAL INFORMATION	1–A2	1–G2
–	ALPHABETICAL INDEX	1–B13	N.A.
0.000	8–CYLINDER ENGINE	1–E2	1–G5
21.000	ACCESSORY REFERENCE LIST	1–D2	N.A.
–	OUT OF FICHE CALLS	N.A.	1–L13

1–C1

HOUSING, Ignition Distributor 2.362 3–C2
HOUSING, Instrument Cluster Warning . 9.765 8–E9
HOUSING, Main Wiring Junction and Fuse Block 2.483 3–C20
HOUSING, Radio Auxiliary Speakers ... 9.665 8–D22
HOUSING, Rear Compartment Lamp .. 9.988 8–E13
HOUSING, Starter Motor Drive Housing 2.085 3–A17
HOUSING, Steering Pump 6.608 7–B14
HOUSING, Steering 6.518 7–A21
HOUSING, Tail Lamp 2.680 3–D21
HOUSING, Transmission Clutch [AUTOMATIC] 4.169 5–C28
HOUSING, Transmission Input [AUTOMATIC] 4.158 5–C18
HOUSING, Transmission Overdrive Oil Pump [4–SPEED MANUAL] 4.466 5–A20
HOUSING, Transmission Servo & Accumulator [AUTOMATIC] 4.228 5–D12
HOUSING, Transmission Shift Control Selector [AUTOMATIC] 4.020 5–C11
HOUSING, Vacuum Power Brake Booster Cylinder 4.906 6–B12
HUB, Engine Crankshaft And Camshaft Balancer [6–CYLINDER] 0.659 1–F8
HUB, Front Wheel 6.307 7–A10
HUB, Rear Wheel 5.806 6–D11
HUB, Transmission Overdrive Clutch [4–SPEED MANUAL] 4.468 5–A20

I

IMPELLER, A/C Evaporator Blower 9.216 8–C22
INDICATOR, Engine Front Cover Timing [6–CYLINDER] 0.219 1–E23
INDICATOR, Engine Oil Level 1.516 2–B4
INDICATOR, Transmission Oil Filler [AUTOMATIC] 4.133 5–C17
INDICATOR, Transmission Shift Control Selector [AUTOMATIC] 4.020 5–C11
INDICATOR, Vehicle (Non–Production) 21.513B 1–D10
INJECTOR KIT, Fuel Injection 3.300 4–A22
INJECTOR KIT, Throttle Body/Carburetor 3.774 4–D13
INJECTOR, Fuel Injection 3.300 4–A22
INLET, Air Duct 9.762 8–E12
INLET, Engine Coolant Pump 1.073 2–A14
INSERT, Engine Oil Pan Drain 1.453 2–B3
INSERT, Front Door Trim 14.685 11–A23
INSERT, Front Seat Adjuster 11.558 9–C23
INSERT, Transmission Gearshift Control [6–SPEED MANUAL] 4.006 5–B5
INSULATOR, Air Distributor 9.262 8–C24
INSULATOR, Air Distributor 9.760 8–E12
INSULATOR, Battery 2.333 3–B20
INSULATOR, Body Multifunction Electric Computer 2.560 3–D15
INSULATOR, Capsule/Headlamp Trim .. 2.729 3–D28
INSULATOR, Catalytic Converter 3.686 4–D4
INSULATOR, Catalytic Converter 3.690 4–D4
INSULATOR, Chassis Electrical 2.530 3–D2
INSULATOR, Chassis/Engine Wiring Harness 2.559 3–D11
INSULATOR, Cruise Control 3.880 4–D14
INSULATOR, Cruise Control 3.885 4–D15
INSULATOR, Door Inner Panel 10.355 9–B4
INSULATOR, Door Inside Locking Rod . 10.585 9–B9
INSULATOR, Door Opening 10.695 9–B11
INSULATOR, Electronic Brake Control . 4.730 6–B4
INSULATOR, Exhaust Muffler/Resonator 3.704 4–D9
INSULATOR, Floor Pan 12.980 10–B5
INSULATOR, Floor Pan 15.492 11–D14
INSULATOR, Flywheel & Clutch & Converter Housing [6–CYLINDER] .. 0.679 1–F11
INSULATOR, Folding Top Compartment 12.170 10–A10
INSULATOR, Folding Top Side Roof Rail 14.140 11–A19
INSULATOR, Front Door Trim 14.685 11–A23
INSULATOR, Front Door Window Regulator 10.783 9–B15
INSULATOR, Front Door Window 10.685 9–B11
INSULATOR, Front Propeller Shaft 5.546 6–D4
INSULATOR, Fuel Line 3.163 4–A15
INSULATOR, Fuel Pump Mounting 3.904 4–D19
INSULATOR, Fuel Tank 3.022 4–A8
INSULATOR, Generator 2.313 3–B16
INSULATOR, Heater and A/C Control .. 9.273 8–C25
INSULATOR, Hood Panel 8.021 8–A9
INSULATOR, Inflatable Restraint System 14.865 11–B11
INSULATOR, Inside Rear View 10.185 9–A12
INSULATOR, Instrument Panel Pad 10.235 9–A21
INSULATOR, Instrument Panel 10.230 9–A18
INSULATOR, Main Wiring Junction and Fuse Block 2.483 3–C20
INSULATOR, Parking Brake Cable 4.765 6–B5
INSULATOR, Radiator 1.270 2–A26
INSULATOR, Radio Antenna 9.647 8–D11
INSULATOR, Radio Auxiliary Speakers . 9.665 8–D22
INSULATOR, Radio Mounting 9.667 8–D24
INSULATOR, Rear Body Lock Pillar 12.942 10–A28
INSULATOR, Rear Compartment Floor . 12.981 10–B7
INSULATOR, Rear Floor 15.306 11–D10
INSULATOR, Rear Seat to Back Window Panel 15.024 11–D6
INSULATOR, Rear Spring 7.545 7–C25
INSULATOR, Rear View Mirror 10.186 9–A15
INSULATOR, Roof Panel 12.810 10–A18
INSULATOR, Shock Absorber/Strut 7.388 7–C18
INSULATOR, Shroud and Dash and Vent Duct Panel 12.804 10–A16
INSULATOR, Side Window Defroster ... 9.780 8–E11
INSULATOR, Stabilizer Shaft 7.243 7–C14
INSULATOR, Steering Column Housing 6.500 7–A11
INSULATOR, Steering Gear Mounting .. 6.509 7–A19
INSULATOR, Tire Pressure 5.690 6–D15
INSULATOR, Voltage & Current 2.515 3–C26
INSULATOR, Windshield Garnish Molding 10.056 9–A9

J

JACK, Auto 8.820 8–A22
JACKET, Steering 6.518 7–A21
JOINT KIT, Propeller Shaft Universal Joint 5.548 6–D4

K

KEY, A/C Compressor Clutch 9.188 8–C13
KEY, Engine Crankshaft Pulley and Balancer [8–CYLINDER] 0.662 1–F9
KEY, Engine Valve Spring Cap [8–CYLINDER] 0.310 1–E28
KEY, Ignition and Locks 2.107 3–A19
KEY, Transmission Synchronizer [4–SPEED MANUAL] 4.384 5–A16
KEYBOARD PKG, Vehicle Security (Non–Production) 21.515B 1–D11
KNOB KIT, Radio Control 9.649 8–D12
KNOB PKG, Transmission Control Lever [AUTOMATIC] 4.006 5–C10
KNOB, A/C Control 9.278 8–D4
KNOB, A/C Electric Control 9.275 8–C27
KNOB, Capsule/Headlamp/Fog Lamp Switch 2.486 3–C25
KNOB, Door Inside Locking Rod 10.559 9–B9
KNOB, Front Seat Adjuster Handle 11.588 9–C27
KNOB, Front Seat Adjuster 11.558 9–C23
KNOB, Heater Control 8.852 8–A28
KNOB, Radio Control 9.649 8–D12
KNOB, Rear View Mirror 10.186 9–A15
KNOB, Rear Window Defogger 9.778 8–E11
KNOB, Side Marker and Hazard Flasher 2.575 3–D15
KNOB, Transmission Control Lever [4–SPEED MANUAL] 4.006 5–A12
KNOB, Transmission Control Lever [AUTOMATIC] 4.006 5–C10
KNOB, Transmission Gearshift Control [6–SPEED MANUAL] 4.006 5–B5
KNUCKLE, Rear Axle Control Arm 5.380 6–C14
KNUCKLE, Rear Wheel 5.806 6–D11
KNUCKLE, Steering 6.020 7–A8

L

LABEL, Emission, Cautionary and Informative 8.808 8–A18
LABEL, Main Wiring Junction and Fuse Block 2.483 3–C20
LACE, Side Door Opening Trim 14.665 11–A23
LAMP PKG, Fog/Driving (Non–Production) 21.270B 1–D6
LAMP, A/C Control 9.279 8–D4
LAMP, A/C Wiring 9.276 8–D2
LAMP, Back Up Lamp 2.697 3–D23
LAMP, Capsule/Headlamp/Fog Lamp Switch 2.487 3–C25
LAMP, Capsule/Headlamp/Fog Lamp .. 2.485 3–C23
LAMP, Courtesy/Dome/Reading Lamp .. 11.927 9–C27
LAMP, Door Window 10.777 9–B14
LAMP, Electronic Control Suspension .. 7.450 7–C21
LAMP, Front Seat Adjuster 11.558 9–C23
LAMP, Instrument Cluster Warning 9.765 8–E9
LAMP, Instrument Panel Compartment Lamp 10.275 9–B3
LAMP, Parking, Turn Signal & Cornering & Daytime Running 2.585 3–D17
LAMP, Rear Compartment Lamp 9.988 8–E13
LAMP, Rear License Lamp 2.700 3–D24
LAMP, Rear View Mirror 10.186 9–A15
LAMP, Side Marker and Hazard Flasher 2.575 3–D15
LAMP, Tail Lamp 2.679 3–D20
LAMP, Tail Lamp 2.682 3–D21
LAMP, Underhood 8.890 8–B3
LATCH KIT, Hood Latch 8.080 8–A13
LATCH, Auto 8.820 8–A22
LATCH, Folding Top Compartment 12.170 10–A10
LATCH, Folding Top 14.340 11–A22
LATCH, Instrument Panel Compartment Door Lock and Console Compartment Door Lock 10.268 9–B3
LATCH, Rear Hatch Window 12.242 10–A15
LATCH, Roof Panel 12.810 10–A18
LEAD, Horn Lead 2.859 3–E5
LEAD, Starter Motor Brush 2.055 3–A16
LEADSCREW, Front Seat Adjuster 11.556 9–C23
LENS, Instrument Cluster 9.748 8–E7
LENS, Instrument Panel Compartment Lamp 10.275 9–B3
LENS, Parking, Turn Signal & Cornering Lamp 2.589 3–D18
LENS, Sunshade Vanity Mirror 10.195 9–A17
LENS, Tail Lamp 2.682 3–D21
LENS, Underhood 8.890 8–B3
LEVER, Air Distributor 9.786 8–E12
LEVER, Folding Top Compartment 12.170 10–A10
LEVER, Folding Top 14.340 11–A22
LEVER, Front Seat Back Reclining 11.377 9–C15
LEVER, Multi Port Fuel Injection Idle Air 3.338 4–B7
LEVER, Parking Brake Apply 4.591 6–A7
LEVER, Parking Brake Shoe 5.149 6–C14
LEVER, Starter Motor Drive Shift 2.108 3–A17
LEVER, Steering Column 6.514 7–A20
LEVER, Transmission Control [4–SPEED MANUAL] 4.045 5–A13
LEVER, Transmission Control [AUTOMATIC] 4.045 5–C11
LEVER, Transmission Detent [AUTOMATIC] 4.279 5–D25
LEVER, Transmission Overdrive [4–SPEED MANUAL] 4.461 5–A19
LEVER, Transmission Throttle Valve [AUTOMATIC] 4.275 5–D24
LEVER, Turn Signal Control 2.897 3–E7
LEVER, Wheel Brake Cylinder/Caliper .. 4.665 6–A16
LID, Folding Top Compartment 12.170 10–A10
LIFTER, Engine Valve Lifter [8–CYLINDER] 0.459 1–F3
LIGHT PKG, Highway (Non–Production) (2.575) 21.245B 1–D6
LIGHTER, Cigarette Lighter 9.709 8–D25
LIGHTPIPE, Radio Tuner 9.652 8–D17
LINE KIT, Steering Gear Oil Pressure ... 6.670 7–B18
LINER, Rear Wheelhouse 12.944 10–B2
LINK KIT, Rear Axle 5.416 6–C16
LINK, Air Distributor 9.786 8–E12
LINK, Air Suspension Height Sensor ... 7.477 7–C23
LINK, Folding Top Side Roof Rail 14.140 11–A19
LINK, Folding Top 14.340 11–A22

LINK, Multi Port Fuel Injection Idle Air .. 3.338 4–B7
LINK, Stabilizer Shaft 7.240 7–C12
LINK, Transmission Throttle Valve [AUTOMATIC] 4.275 5–D24
LOCATOR, Door Lock Striker 10.571 9–B10
LOCATOR, Roof Panel 12.810 10–A18
LOCK KIT, Instrument Panel Compartment Door Lock and Console Compartment Door Lock ... 10.268 9–B3
LOCK PKG, Instrument Panel Compartment Door Lock 10.266 9–B2
LOCK PKG, vehicle (Non–Production) . 21.148B 1–D3
LOCK PKG, Vehicle Security (Non–Production) 21.515B 1–D11
LOCK, Chassis Electrical 2.530 3–D2
LOCK, Front Side Door 10.470 9–B5
LOCK, Instrument Panel Compartment Door Lock 10.266 9–B2
LOCKING KIT, Tire Valve and Cover Lock 5.875 6–D15
LUBRICANT, Rear Axle Housing Oil 5.392 6–C15

M

MAGNET, Axle Housing to Differential Carrier 5.508 6–C25
MAGNET, Steering Pump 6.608 7–B14
MAGNET, Transmission Oil Pan [AUTOMATIC] 4.195 5–D5
MAGNET, Transmission Overdrive Oil Pan [4–SPEED MANUAL] 4.456 5–A18
MANIFOLD, Engine Exhaust Manifold .. 3.601 4–C7
MANIFOLD, Engine Fuel Intake Manifold 3.265 4–A18
MAST PKG, Mobile (Non–Production) . 21.444B 1–D8
MAT PKG, Front Floor (Carpet Insert) (Production) 21.360A 1–D7
MAT, Floor Console 10.240 9–A23
MAT, Front Door Sill 11.175 9–C8
MATERIAL, Bulk Material 15.500 11–D14
MEMBER, Frame Side 7.006 7–C8
MEMBER, Front Frame Cross Member . 7.010 7–C9
MEMBER, Rear Frame Cross 7.014 7–C9
MICROPHONE PKG, Mobile (Non–Production) 21.444B 1–D8
MICROPHONE, Radio Receiver 9.650 8–D14
MIRROR KIT, Inside Rear View 10.185 9–A12
MIRROR, Inside Rear View 10.185 9–A12
MIRROR, Sunshade Vanity Mirror 10.195 9–A17
MODULATOR, Radio (Non–Production) 21.460B 1–D9
MODULE PKG, Vehicle Security (Non–Production) 21.515B 1–D11
MODULE, A/C Electric Control 9.275 8–C27
MODULE, Air Conditioner, (Complete) . 9.169 8–C9
MODULE, Body Multifunction Electric Computer 2.560 3–D15
MODULE, Body Wiring 13.090 10–C7
MODULE, Capsule/Headlamp/Fog Lamp 2.485 3–C23
MODULE, Catalytic Converter 3.686 4–D4
MODULE, Computer Control Sensors .. 3.682 4–C26
MODULE, Concealed Capsule/Headlamp Control 2.755 3–D28
MODULE, Cruise Control 3.887 4–D17
MODULE, Distributor (also Knock Sensor) 2.383 3–C4
MODULE, Door Window 10.777 9–B14
MODULE, Electronic Brake Control 4.720 6–A25
MODULE, Electronic Control Suspension 7.450 7–C21
MODULE, Emission Control System ... 3.670 4–C11
MODULE, Fuel Injection 3.300 4–A22
MODULE, Fuel Pump 3.900 4–D18
MODULE, Fuel Tank Meter 3.107 4–A8
MODULE, Ignition Switch Warning, Lock, Headlamp, Theft Deterrent or Rear/Side Object 2.195 3–A21
MODULE, Inflatable Restraint System .. 14.865 11–B11
MODULE, Multi Port Fuel Injection Throttle Position 3.339 4–B8
MODULE, Radiator Tank 1.203 2–A19
MODULE, Steering Wheel 6.512 7–A19
MODULE, Tire Pressure 5.690 6–D15
MODULE, Vehicle (Non–Production) .. 21.513B 1–D10
MODULE, Voltage and Glow Plug 2.510 3–C25
MOLDING KIT, Bumper/Fascia 7.832 7–D4
MOLDING KIT, Front Fender and Body Ornamentation 8.132 8–A14
MOLDING KIT, Front Side Door 12.112 10–A8
MOLDING KIT, Rear Quarter Panel 12.116 10–A9
MOLDING, Bumper/Fascia 7.832 7–D4
MOLDING, Front Fender and Body Ornamentation 8.132 8–A14
MOLDING, Front Side Door 12.112 10–A8
MOLDING, Rear Quarter Panel 12.116 10–A9
MOLDING, Rear Window Reveal Molding 11.208 9–C12
MOLDING, Roof Drip 12.075 10–A8
MOLDING, Roof Panel 12.812 10–A24
MOLDING, Windshield Garnish Molding 10.051 9–A9
MOLDING, Windshield Reveal Molding . 10.093 9–A9
MOTOR KIT, Engine Air Cooling (Electrical) 1.055 2–A8
MOTOR KIT, Inside Rear View 10.185 9–A12
MOTOR, A/C Evaporator Blower 9.215 8–C18
MOTOR, Front Door Window Regulator 10.783 9–B15
MOTOR, Front Seat Adjuster 11.556 9–C23
MOTOR, Front Seat Bolster 11.379 9–C18
MOTOR, Heater Blower Motor 8.855 8–B2
MOTOR, Rear View Mirror 10.186 9–A15
MOTOR, Speedometer 9.761 8–E8
MOTOR, Windshield Wiper Motor 10.150 9–A10
MOUNT, Engine Mounting [8–CYLINDER] 0.027 1–E16
MUFFLER, A/C Electric Control 9.275 8–C27
MUFFLER, Engine Exhaust 3.701 4–D5

N

NIPPLE, Engine Crankcase 1.745 2–B9
NIPPLE, Heater Coolant Flow 8.866 8–B2
NUT KIT, Hub Front and Rear 5.813 6–D13
NUT PKG, Wheel (Production) 21.340A 1–D7
NUT, A/C Evaporator 9.211 8–C17
NUT, Accelerator Linkage 3.469 4–B14
NUT, Air Cleaner and Silencer 3.403 4–B10
NUT, Air Cleaner Controls 3.415 4–B11

NUT, Back Up Lamp 2.698 3–D24
NUT, Battery Cable 2.343 3–B21
NUT, Body Multifunction Electric Computer 2.560 3–D15
NUT, Brake Master Cylinder Adjusting .. 4.662 6–A15
NUT, Brake Pedal 4.634 6–A8
NUT, Bumper/Fascia Face 7.831 7–C28
NUT, Bumper/Fascia Mounting 7.874 7–D10
NUT, Capsule/Headlamp Mounting 2.726 3–D26
NUT, Capsule/Headlamp Trim 2.729 3–D26
NUT, Capsule/Headlamp/Fog Lamp Switch 2.487 3–C25
NUT, Catalytic Converter 3.686 4–D4
NUT, Convertible and Hard Top 13.346 10–C15
NUT, Cowl Top Vent Louver 12.800 10–A16
NUT, Differential Carrier 5.506 6–C24
NUT, Differential, with Cap 5.505 6–C22
NUT, Door Electric and Vacuum Locks . 10.485 9–B5
NUT, Electronic Control Suspension ... 7.450 7–C21
NUT, Emission Control System 3.671 4–C19
NUT, Engine Air Cooling (Electrical) 1.055 2–A8
NUT, Engine Connecting Rod Bolt [8–CYLINDER] 0.626 1–F6
NUT, Engine Coolant By–Pass 1.097 2–A15
NUT, Engine Crankshaft [8–CYLINDER] 0.648 1–F8
NUT, Engine Front Cover [8–CYLINDER] 0.206 1–E22
NUT, Engine Mounting [8–CYLINDER] . 0.002 1–E16
NUT, Engine Oil Level 1.516 2–B4
NUT, Engine Oil Pan Drain 1.453 2–B3
NUT, Engine Oil Pan 1.428 2–B2
NUT, Engine Rear Main Bearing [8–CYLINDER] 0.137 1–E20
NUT, Engine Vacuum Pump 3.280 4–A21
NUT, Engine Valve Adjusting [8–CYLINDER] 0.429 1–F3
NUT, Exhaust Pipe 3.613 4–C8
NUT, Floor Console 10.240 9–A23
NUT, Folding and Hard Top Front Rail .. 14.080 11–A18
NUT, Frame Front Cross Member 7.039 7–C10
NUT, Front Axle and Axle Center 6.008 7–A8
NUT, Front Door Window 10.716 9–B14
NUT, Front Door Window 10.728 9–B14
NUT, Front Propeller Shaft 5.546 6–D4
NUT, Front Seat Back Lock 11.390 9–C19
NUT, Front Seat Bolster 11.379 9–C18
NUT, Fuel Pump 3.901 4–D18
NUT, Fuel Tank Evaporator Control (Engine End) 3.130 4–A12
NUT, Generator Rotor Shaft 2.280 3–B15
NUT, Generator 2.313 3–B18
NUT, Hood Latch 8.080 8–A13
NUT, Hood Panel Closing 8.024 8–A10
NUT, Hub Front and Rear 5.813 6–D13
NUT, Hydraulic Brake Pipe 4.686 6–A21
NUT, Hydraulic Power Brake Booster .. 4.845 6–B6
NUT, Ignition Coil Mounting 2.183 3–A18
NUT, Inflatable Restraint System 14.865 11–B11
NUT, Instrument Panel Compartment Door Lock 10.266 9–B2
NUT, Instrument Panel/Interior Lamp Switch 2.490 3–C25
NUT, Instrument Panel 10.230 9–A18
NUT, License Plate 7.800 7–C27
NUT, Luggage Carrier 12.815 10–A25
NUT, Main Wiring Junction and Fuse Block 2.483 3–C20
NUT, Multi Port Fuel Injection Idle Air ... 3.338 4–B7
NUT, Parking Brake Shoe Lever 5.158 6–C14
NUT, Parking Brake Shoe 5.149 6–C14
NUT, Parking, Turn Signal & Cornering Lamp 2.586 3–D18
NUT, Parking, Turn Signal & Cornering Lamp 2.587 3–D18
NUT, Propeller Shaft Pinion Flange 5.595 6–D5
NUT, Radiator Support Mounting 1.274 2–A28
NUT, Radio Antenna 9.647 8–D11
NUT, Radio Auxiliary Speakers 9.665 8–D22
NUT, Radio Control 9.649 8–D12
NUT, Radio Mounting 9.667 8–D24
NUT, Rear Axle Control Arm 5.383 6–C14
NUT, Rear Axle Housing 5.396 6–C15
NUT, Rear Axle Tie Rod 5.418 6–C17
NUT, Rear Axle 5.416 6–C16
NUT, Rear Hatch Window 12.187 10–A14
NUT, Rear Hatch Window 12.237 10–A15
NUT, Rear Spring Eye 7.530 7–C25
NUT, Rear View Mirror 10.186 9–A15
NUT, Rear Wheel 5.506 6–D11
NUT, Roof Panel 12.810 10–A18
NUT, Seat Belt 14.875 11–B14
NUT, Shock Absorber/Strut 7.347 7–C18
NUT, Shock Absorber 7.380 7–C18
NUT, Shroud and Dash and Vent Duct Panel 12.804 10–A16
NUT, Spare Wheel Carrier 7.633 7–C27
NUT, Spare Wheel 7.629 7–C25
NUT, Spark Plug Ignition Wire 2.251 3–A26
NUT, Speed Indicator 9.762 8–E8
NUT, Stabilizer Shaft 7.243 7–C14
NUT, Stabilizer Shaft 7.244 7–C16
NUT, Steering Column Attaching 6.760 7–B20
NUT, Steering Gear Adjusting 6.832 7–B20
NUT, Steering Gear Lash Adjuster 6.822 7–B20
NUT, Steering Gear Mounting 6.509 7–A19
NUT, Steering Knuckle Lower Control Arm 6.172 7–A9
NUT, Steering Knuckle Upper Control Arm 6.178 7–A9
NUT, Steering Knuckle 6.009 7–A8
NUT, Steering Pump 6.635 7–B16
NUT, Steering Tie Rod 6.231 7–A10
NUT, Steering Wheel 6.516 7–A20
NUT, Stop Lamp Switch 2.447 3–C8
NUT, Tire Valve and Cover Lock 5.875 6–D15
NUT, Transmission Control Lever [6–SPEED MANUAL] 4.015 5–B6
NUT, Transmission Oil Cooler [4–SPEED MANUAL] 4.128 5–A14
NUT, Transmission Oil Cooler [AUTOMATIC] 4.128 5–C17
NUT, Transmission Overdrive Sun Gear Cover [4–SPEED MANUAL] 4.472 5–A22
NUT, Transmission Safety Start/Warning [AUTOMATIC] 4.054 5–C13
NUT, Transmission Shift Lever [4–SPEED MANUAL] 4.046 5–A13

NUT, Transmission Throttle Valve [AUTOMATIC] 4.275 5–D24
NUT, Underhood 8.890 8–B3
NUT, Upper Control Arm Shaft 6.164 7–A8
NUT, Vacuum Power Brake Booster 4.898 6–B7

O

ODOMETER, Speedometer 9.761 8–E8
OIL, Production/Service [8–CYLINDER] 0.000 1–E15
ORIFICE, A/C Expansion Refrigerant ... 9.213 8–C18
ORIFICE, Transmission Case [AUTOMATIC] 4.105 5–C14
ORIFICE, Transmission Oil Pump [AUTOMATIC] 4.224 5–D7
OUTLET, Air Distributor 9.262 8–C24
OUTLET, Air Distributor 9.786 8–E12
OUTLET, Air Outlet 9.264 8–C25
OUTLET, Engine Coolant 1.153 2–A17
OVERDRIVE, Transmission Overdrive Case [4–SPEED MANUAL] 4.455 5–A18

P

PAD KIT, Brake 5.017 6–C12
PAD, Convertible Top Cover 13.347 10–C16
PAD, Folding Top Back Window 13.395 10–C17
PAD, Front Seat Back 14.802 11–B10
PAD, Front Seat Cushion 14.690 11–C10
PAD, Fuel Tank Meter 3.107 4–A8
PAD, Instrument Panel Pad 10.235 9–A21
PAD, Luggage Carrier 12.815 10–A25
PAD, Rear Seat Back 15.002 11–D6
PAD, Roof Panel 12.810 10–A18
PAN KIT, Engine Oil 1.426 2–A28
PAN KIT, Transmission Oil Pan [AUTOMATIC] 4.195 5–D5
PAN, Engine Oil 1.426 2–A28
PAN, Transmission Overdrive Oil Pan [4–SPEED MANUAL] 4.456 5–A18
PANEL PKG, Roof (Production) 21.552A 1–D13
PANEL PKG, Roof Panel (AD3–Hinged Roof Window–Glass) 12.810A 10–A24
PANEL PKG, Roof Panel 12.810 10–A18
PANEL, Convertible Top Cover 13.347 10–C16
PANEL, Door Opening Rocker Panel ... 12.934 10–A27
PANEL, Door Opening 10.695 9–B11
PANEL, Floor Console 10.240 9–A23
PANEL, Floor Pan 12.980 10–B5
PANEL, Folding Top Compartment 12.170 10–A10
PANEL, Front Door Armrest 14.686 11–A25
PANEL, Front Door Inner/Outer Panel .. 12.895 10–A26
PANEL, Front Door Trim 14.685 11–A23
PANEL, Front Fender Inner Wheel House 8.153 8–A16
PANEL, Instrument Panel Compartment Door 10.261 9–A28
PANEL, Instrument Panel Trim 10.252 9–A28
PANEL, Instrument Panel 10.230 9–A18
PANEL, License Plate 7.800 7–C27
PANEL, Lock Pillar Trim 14.731 11–A27
PANEL, Radiator Grille and Front End Panel 1.267 2–A25
PANEL, Rear Body Lock Pillar 12.942 10–A28
PANEL, Rear Compartment Floor 12.981 10–B7
PANEL, Rear Compartment Trim 15.222 11–D6
PANEL, Rear Hatch Window 11.120 9–C7
PANEL, Rear Quarter Outer 12.940 10–A27
PANEL, Rear Wheelhouse 12.944 10–B2
PANEL, Roof Headlining 14.640 11–A22
PANEL, Roof Panel Top Covering 13.250 10–C14
PANEL, Seat Belt 14.875 11–B14
PANEL, Shroud and Dash and Vent Duct Panel 12.804 10–A16
PARTS PKG, Vehicle (Non–Production) 21.513B 1–D10
PAWL KIT, Transmission Park Lock [AUTOMATIC] 4.294 5–D26
PAWL, Door Outside Lock Cylinder 10.551 9–B8
PEDAL, Accelerator Pedal 3.451 4–B13
PEDAL, Brake 4.625 6–A7
PEDAL, Engine Clutch [8–CYLINDER] . 0.830 1–F18
PILLAR, Front Body Hinge Pillar 12.840 10–A26
PILLAR, Rear Body Lock Pillar 12.942 10–A28
PIN, A/C Compressor Mounting 9.171 8–C13
PIN, Air Cleaner Air Intake 3.417 4–B11
PIN, Brake Master Cylinder Adjusting .. 4.662 6–A15
PIN, Brake Master Cylinder Piston Return 4.655 6–A15
PIN, Brake Master Cylinder Secondary . 4.653 6–A15
PIN, Brake Shoe Hold Down 5.043 6–C13
PIN, Capsule/Headlamp Dimmer 2.459 3–C9
PIN, Distributor Shaft 2.372 3–C3
PIN, Door Hinge 10.466 9–B5
PIN, Door Lock Striker 10.570 9–B10
PIN, Electronic Brake Control 4.730 6–B4
PIN, Engine Camshaft & Valve Rocker Cover [8–CYLINDER] 0.413 1–F2
PIN, Engine Camshaft gear [8–CYLINDER] 0.738 1–F14
PIN, Engine Clutch Housing [8–CYLINDER] 0.683 1–F11
PIN, Engine Clutch Housing or Transmission [8–CYLINDER] 0.685 1–F12
PIN, Engine Coolant Pump 1.079 2–A14
PIN, Engine Cylinder Head [8–CYLINDER] 0.293 1–E24
PIN, Engine Flywheel [8–CYLINDER] .. 0.669 1–F10
PIN, Engine Front Cover [8–CYLINDER] 0.206 1–E22
PIN, Engine Oil Pan 1.428 2–B2
PIN, Engine Oil Pressure 1.609 2–B6
PIN, Engine Oil Pump 1.652 2–B7
PIN, Engine Rear Main Bearing [8–CYLINDER] 0.137 1–E20
PIN, Engine Timing [8–CYLINDER] 0.724 1–F12
PIN, Floor Console Compartment Door . 10.142 9–A26
PIN, Folding and Hard Top Front Rail .. 16.080 11–A18
PIN, Front Seat Back Reclining 11.377 9–C15
PIN, Front Seat Bolster 11.379 9–C18
PIN, Hood Panel Closing 8.024 8–A10
PIN, Parking Brake Shoe Lever 5.158 6–C14
PIN, Pinion Shaft Lock 5.518 6–C26
PIN, Rear Hatch Window 12.186 10–A14
PIN, Roof Panel 12.810 10–A18
PIN, Starter Motor Brush 2.052 3–A15

PIN, Starter Motor Drive Shift 2.108 3–A17
PIN, Steering Column Housing 6.500 7–A11
PIN, Steering Column 6.514 7–A20
PIN, Steering Pump 6.608 7–B14
PIN, Transmission Case Extension [6–SPEED MANUAL] 4.317 5–B8
PIN, Transmission Clutch [AUTOMATIC] 4.169 5–C28
PIN, Transmission Control Lever [4–SPEED MANUAL] 4.008 5–A12
PIN, Transmission Control Lever [AUTOMATIC] 4.008 5–C11
PIN, Transmission First/Reverse Gear [4–SPEED MANUAL] 4.419 5–A17
PIN, Transmission Governor [AUTOMATIC] 4.256 5–D17
PIN, Transmission Internal Shift [4–SPEED MANUAL] 4.307 5–A14
PIN, Transmission Main Control Valve Body [AUTOMATIC] 4.265 5–D18
PIN, Transmission Manual Detent [AUTOMATIC] 4.293 5–D25
PIN, Transmission Oil Pump [AUTOMATIC] 4.226 5–D10
PIN, Transmission Overdrive Oil Pump [4–SPEED MANUAL] 4.466 5–A20
PIN, Transmission Rear Servo Piston [AUTOMATIC] 4.246 5–D16
PIN, Transmission Servo & Accumulator [AUTOMATIC] 4.228 5–D12
PIN, Transmission Servo & Accumulator [AUTOMATIC] 4.229 5–D14
PIN, Transmission Servo & Accumulator [AUTOMATIC] 4.233 5–D15
PIN, Transmission Shift Control Cable [AUTOMATIC] 4.047 5–C11
PIN, Transmission Shift Shaft Detent [4–SPEED MANUAL] 4.311 5–A14
PIN, Wheel Brake Cylinder/Caliper 4.665 6–A16
PINION, Differential Pinion 5.526 6–C27
PIPE KIT, Fuel Injection 3.330 4–A24
PIPE KIT, Fuel Line 3.163 4–A15
PIPE KIT, Steering Fluid Cooler 6.602 7–B10
PIPE KIT, Steering Gear Oil Pressure ... 6.670 7–B18
PIPE, Early Fuel Evaporation 3.145 4–A14
PIPE, Emission System 3.675 4–C21
PIPE, Engine Block [8–CYLINDER] 0.034 1–E17
PIPE, Engine Coolant By–Pass 1.097 2–A15
PIPE, Engine Coolant 1.153 2–A17
PIPE, Engine Crankcase Ventilation 1.762 2–B11
PIPE, Engine Fuel Intake Manifold 3.265 4–A18
PIPE, Engine Oil Cooler 1.540 2–B5
PIPE, Engine Oil Pump 1.656 2–B8
PIPE, Exhaust Pipe 3.609 4–C7
PIPE, Fuel Line 3.163 4–A15
PIPE, Heater 8.846 5–A27
PIPE, Hydraulic Brake 4.685 6–A21
PIPE, Hydraulic Clutch Reservoir [8–CYLINDER] 0.785 1–F16
PIPE, Instrument Cluster 9.748 8–E7
PIPE, Radiator Inlet (Upper) 1.159 2–A18
PIPE, Steering Gear Oil Return 6.671 7–B18
PIPE, Transmission Case [4–SPEED MANUAL] 4.104 5–A13
PIPE, Transmission Case [AUTOMATIC] 4.104 5–C14
PIPE, Transmission Main Control Valve Body [AUTOMATIC] 4.265 5–D18
PIPE, Turbocharger/Supercharger Coolant 3.373 4–B9
PIPE, Vacuum Power Brake 4.930 6–B13
PISTON KIT, Brake Master Cylinder Secondary 4.653 6–A15
PISTON KIT, Engine Piston [8–CYLINDER] 0.629 1–F6
PISTON KIT, Transmission Servo & Accumulator [AUTOMATIC] 4.228 5–D12
PISTON, Brake Master Cylinder Secondary 4.653 6–A15
PISTON, Engine Piston [8–CYLINDER] 0.629 1–F6
PISTON, Transmission Clutch [AUTOMATIC] 4.166 5–C27
PISTON, Transmission Overdrive Accumulator [4–SPEED MANUAL] .. 4.462 5–A19
PISTON, Transmission Overdrive Clutch [4–SPEED MANUAL] 4.468 5–A20
PISTON, Transmission Servo & Accumulator [AUTOMATIC] 4.228 5–D12
PISTON, Wheel Brake Cylinder or Caliper 4.668 6–A20
PIVOT, Capsule/Headlamp Dimmer 2.459 3–C9
PLASTIGAGE, Engine Main Bearing Clearance [8–CYLINDER] 0.093 1–E18
PLATE KIT, Brake Flange/Backing 5.001 6–C12
PLATE KIT, Transmission Clutch [AUTOMATIC] 4.163 5–C20
PLATE, A/C Evaporator Blower 9.216 8–C22
PLATE, A/C Evaporator 9.211 8–C17
PLATE, A/C Wiring 9.276 8–D2
PLATE, Accelerator Pedal Lever 3.454 4–B13
PLATE, Accelerator Pedal Mounting ... 3.452 4–B13
PLATE, Air Distributor 9.786 8–E12
PLATE, Body Lock Pillar 12.684 10–A16
PLATE, Body Rear End (Plastic Laminated) 12.986 10–B10
PLATE, Brake Flange/Backing 5.001 6–C12
PLATE, Bumper/Fascia 7.832 7–D4
PLATE, Bumper/Fascia 7.836 7–D9
PLATE, Chassis/Engine Wiring Harness 2.559 3–D11
PLATE, Compass Mounting 8.873 8–B3
PLATE, Convertible and Hard Top 13.346 10–C15
PLATE, Dash Panel 15.280 11–D6
PLATE, Door Electric and Vacuum Locks 10.485 9–B5
PLATE, Door Lock Striker 10.571 9–B10
PLATE, Electronic Brake Control 4.720 6–A25
PLATE, Emission Control System 3.671 4–C19
PLATE, Engine Clutch [8–CYLINDER] . 0.859 1–F18
PLATE, Engine Clutch Driven [8–CYLINDER] 0.886 1–F19
PLATE, Exhaust Pipe 3.616 4–C9
PLATE, Floor Console 10.240 9–A23
PLATE, Floor Pan 12.980 10–B5
PLATE, Folding Top Compartment 12.170 10–A10
PLATE, Frame Front Cross Member ... 7.039 7–C10
PLATE, Front Door Sill 11.175 9–C8
PLATE, Front Door Trim 14.683 11–A23
PLATE, Front Door Trim 14.691 11–A27
PLATE, Front Seat Adjuster 11.561 9–C24
PLATE, Generator Drive End 2.307 3–B17
PLATE, Hood Latch 8.075 8–A12

PLATE, Hood Latch 8.080 8–A13
PLATE, Instrument Cluster 9.743 8–E6
PLATE, Instrument Panel Trim 10.252 9–A28
PLATE, Instrument Panel 10.230 9–A18
PLATE, Instrument Panel 10.254 9–A28
PLATE, License Plate 7.800 7–C27
PLATE, Radio Antenna 9.647 8–D11
PLATE, Radio Auxiliary Speakers 9.665 8–D22
PLATE, Radio Speaker 9.655 8–D17
PLATE, Rear Body Lock Pillar 12.942 10–A28
PLATE, Rear Compartment Floor 12.981 10–B7
PLATE, Rear Compartment Trim 15.222 11–D6
PLATE, Rear End 12.966 10–B4
PLATE, Rear Hatch Window 12.242 10–A15
PLATE, Rear Spring And Shock Absorber Anchor 7.518 7–C24
PLATE, Roof Panel 12.810 10–A18
PLATE, Seat Belt 14.875 11–B14
PLATE, Spare Wheel 7.629 7–C25
PLATE, Steering Column Housing 6.500 7–A11
PLATE, Steering Column 6.514 7–A20
PLATE, Steering Column 6.758 7–B20
PLATE, Steering Pump 6.612 7–B15
PLATE, Tail Lamp Mounting 2.662 3–D20
PLATE, Transmission Clutch [AUTOMATIC] 4.163 5–C20
PLATE, Transmission Main Control Valve Body [AUTOMATIC] ..... 4.265 5–[illegible]
PLATE, Transmission Overdrive [4–SPEED MANUAL] 4.461 5–A13
PLATE, Transmission Overdrive [4–SPEED MANUAL] 4.469 5–A21
PLATE, Transmission Overdrive Case [4–SPEED MANUAL] 4.455 5–A18
PLATE, Transmission Overdrive Clutch [4–SPEED MANUAL] 4.468 5–A20
PLATE, Transmission Overdrive Sun Gear Cover [4–SPEED MANUAL] ... 4.472 5–A22
PLATE, Transmission Shift Control [AUTOMATIC] 4.012 5–C11
PLATE, Vacuum Power Brake Booster Reaction 4.934 6–B14
PLATE, Wheel Brake Cylinder/Caliper .. 4.665 6–A16
PLATE, Wheel, Jack and Miscellaneous Wrench 8.821 8–A22
PLATE, Windshield Frame 12.807 10–A17
PLAYER PKG, Radio (Non–Production) 21.480B 1–D9
PLENUM, Engine Fuel Intake Manifold . 3.265 4–A18
PLUG KIT, Engine Oil Drain (Non–Production) 21.241B 1–D5
PLUG, Body Center Pillar 12.491 10–A16
PLUG, Brake Master Cylinder and Pedal Shaft 4.648 6–A8
PLUG, Brake Master Cylinder Proportioning 4.652 6–A14
PLUG, Chassis Electrical 2.530 3–D2
PLUG, Computer Control Sensors 3.682 4–C26
PLUG, Cylinder Head Valve Seat [8–CYLINDER] 0.253 1–E23
PLUG, Door 10.587 9–B10
PLUG, Engine Block [8–CYLINDER] ... 0.034 1–E17
PLUG, Engine Camshaft & Balance Shaft Hole [8–CYLINDER] 0.553 1–F5
PLUG, Engine Crankcase Ventilation ... 1.762 2–B11
PLUG, Engine Crankshaft [8–CYLINDER] 0.648 1–F8
PLUG, Engine Cylinder Head [8–CYLINDER] 0.293 1–E24
PLUG, Engine Front Cover [8–CYLINDER] 0.206 1–E22
PLUG, Engine Fuel Intake Manifold 3.265 4–A18
PLUG, Engine Oil Cooler 1.540 2–B5
PLUG, Engine Oil Distribution 1.531 2–B5
PLUG, Engine Oil Drain (Non–Production) 21.241B 1–D5
PLUG, Engine Oil Filter 1.837 2–B15
PLUG, Engine Oil Filter 1.840 2–B15
PLUG, Engine Oil Pan Drain 1.453 2–B3
PLUG, Engine Oil Pressure 1.609 2–B6
PLUG, Engine Timing [8–CYLINDER] .. 0.724 1–F12
PLUG, Exhaust Gas Recirculation Valve 3.672 4–C21
PLUG, Floor Pan 12.980 10–B5
PLUG, Frame Cross Member 7.009 7–C9
PLUG, Front Body Hinge Pillar 12.840 10–A26
PLUG, Fuel Injector 3.305 4–A23
PLUG, Hood Panel 8.010 8–A8
PLUG, Instrument Cluster Warning 9.765 8–E9
PLUG, Instrument Cluster 9.744 8–E6
PLUG, Rear Axle or Final Drive Filler and Drain 5.400 6–C16
PLUG, Rear Body Lock Pillar 12.942 10–A28
PLUG, Roof Panel 12.810 10–A18
PLUG, Roof 12.952 10–B4
PLUG, Steering 6.518 7–A21
PLUG, Transmission Case [4–SPEED MANUAL] 4.105 5–A14
PLUG, Transmission Case [6–SPEED MANUAL] 4.105 5–B7
PLUG, Transmission Case [AUTOMATIC] 4.104 5–C14
PLUG, Transmission Internal Shift [6–SPEED MANUAL] 4.307 5–B8
PLUG, Transmission Main Control Valve Body [AUTOMATIC] 4.265 5–D18
PLUG, Transmission Oil Cooler [AUTOMATIC] 4.128 5–C17
PLUG, Transmission Oil Pump [AUTOMATIC] 4.224 5–D7
PLUG, Transmission Overdrive Case [4–SPEED MANUAL] 4.455 5–A18
PLUG, Transmission Park Lock [AUTOMATIC] 4.294 5–D26
PLUG, Windshield Wiper Motor 10.150 9–A10
PLUNGER, Starter Motor Solenoid 2.113 3–A18
POD, Front Seat Lumbar 11.378 9–C17
POLE PIECE & PLATE, Distributor Shaft 2.372 3–C3
POLE, Distributor Shaft 2.372 3–C3
POLE, Starter Motor 2.077 3–A16
PROGRAMMER, A/C Electric Control .. 9.275 8–C27
PROTECTOR PKG, License Plate (Non–production) 21.483B 1–D10
PROTECTOR, Chassis Electrical 2.530 3–D2
PROTECTOR, Convertible and Hard Top 13.346 10–C15
PROTECTOR, Cruise Control 3.887 4–D17
PROTECTOR, Floor Console ..... 10.24[illegible] 9–A23
PROTECTOR, Folding Top Back Window 13.3[illegible]6 10–C17
PROTECTOR, Folding Top Compartment 12.170 10–A10
PROTECTOR, Front Spring 7.020 7–C20
PROTECTOR, Rear End 12.966 10–B4

© GENERAL MOTORS SERVICE PARTS OPERATIONS–CHEVROLET–14Y

PROTECTOR, Roof Panel 12.810 10–A18
PROTECTOR, Steering Column 6.522 7–B8
PROTECTOR, Steering Gear Oil Pressure 6.670 7–B18
PROTECTOR, Turn Signal Switch 2.906 3–E7
PULLER, Main Wiring Junction and Fuse Block 2.483 3–C20
PULLEY, A/C Compressor Drive/Idler ... 9.180 8–C15
PULLEY, Air Injection Reactor Pump and Multi–Function Air Compressor 3.650 4–C10
PULLEY, Engine Crankshaft And Camshaft Balancer [8–CYLINDER] . 0.659 1–F8
PULLEY, Fan and Coolant Pump 1.062 2–A11
PULLEY, Generator Drive 2.274 3–B6
PULLEY, Steering Pump 6.655 7–B17
PUMP KIT, Engine Coolant 1.069 2–A14
PUMP KIT, Power Steering 6.605 7–B10
PUMP, Air Injection Reactor Pump and Multi–Function Air Compressor 3.660 4–C11
PUMP, Engine Coolant 1.069 2–A14
PUMP, Engine Oil Pump 1.652 2–B7
PUMP, Engine Vacuum Pump 3.280 4–A21
PUMP, Front Seat Lumbar 11.378 9–C17
PUMP, Fuel Pump 3.900 4–D19
PUMP, Power Steering 6.605 7–B10
PUMP, Transmission Oil Pump [AUTOMATIC] 4.224 5–D7
PUMP, Transmission Overdrive Oil Pump [4–SPEED MANUAL] 4.466 5–A20
PUMP, Windshield Washer Pump 10.153 9–A11
PUSH ROD, Hydraulic Clutch Main Cylinder [8–CYLINDER] 0.775 1–F14
PUSHBUTTON, Radio Control 9.649 8–D12
PUSHBUTTON, Radio Tuner 9.652 8–D17
PUSHBUTTON, Side Marker and Hazard Flasher 2.575 3–D15
PUSHBUTTON, Transmission Control Lever [AUTOMATIC] 4.006 5–C10
PUSHBUTTON, Transmission Gearshift Control [6–SPEED MANUAL] 4.006 5–B5

R

RACE, Transmission Clutch [AUTOMATIC] 4.180 5–D3
RACK KIT, Ignition Switch Warning, Lock, Headlamp, Theft Deterrent or Rear/Side Object 2.195 3–A21
RACK, Front Door Window Regulator .. 10.783 9–B15
RACK, Ignition Switch Warning, Lock, Headlamp, Theft Deterrent or Rear/Side Object 2.195 3–A21
RADIATOR, Radiator 1.219 2–A20
RADIO, Radio Receiver 9.650 8–D14
RADIO/NAVIGATION PKG, Telepath 100 (Non–Production) 21.100B 1–D3
RAIL & TUBES KIT, Fuel Injection 3.330 4–A24
RAIL KIT, Fuel Injection 3.330 4–A24
RAIL, Folding Top Side Roof–Center .. 14.170 11–A20
RAIL, Frame Cross, Intermediate 7.012 7–C9
RAIL, Frame Side 7.006 7–C8
RAIL, Luggage Carrier 12.815 10–A25
RAMP, Windshield Wiper Arm 10.147 9–A10
RECEIVER PKG, Garage Door Opener (Production) 21.502A 1–D10
RECEIVER PKG, Vehicle Security (Non–Production) 21.515B 1–D11
RECEIVER, Door Electric and Vacuum Locks 10.485 9–B5
RECEIVER, Radio Receiver 9.650 8–D14
RECLINER, Front Seat Back Reclining . 11.377 9–C15
RECTIFIER, Generator Output 2.319 3–B19
REFLECTOR, Tail Lamp/Rear End Panel Reflector 2.689 3–D21
REGULATOR KIT, Fuel Injection 3.330 4–A24
REGULATOR, Front Door Window Regulator 10.783 9–B15
REGULATOR, Fuel Injection 3.330 4–A24
REGULATOR, Voltage Regulator 2.500 3–C25
REINFORCEMENT, Bumper/Fascia Face 7.831 7–C28
REINFORCEMENT, Door Lock Striker .. 10.571 9–B10
REINFORCEMENT, Door Opening Rocker Panel 12.934 10–A27
REINFORCEMENT, Engine Oil 1.426 2–A26
REINFORCEMENT, Exhaust Muffler/Resonator 3.704 4–D9
REINFORCEMENT, Floor Pan 12.980 10–B5
REINFORCEMENT, Frame Front Cross Member 7.039 7–C10
REINFORCEMENT, Front Fender 8.141 8–A15
REINFORCEMENT, Instrument Panel Pad 10.235 9–A21
REINFORCEMENT, Instrument Panel .. 10.230 9–A18
REINFORCEMENT, License Plate 7.800 7–C27
REINFORCEMENT, Radio Auxiliary Speakers 9.665 8–D22
REINFORCEMENT, Rear Body Lock Pillar 12.942 10–A28
REINFORCEMENT, Rear Compartment Floor 12.981 10–B7
REINFORCEMENT, Rocker Panel Molding 8.309 8–A18
REINFORCEMENT, Roof Panel 12.810 10–A18
REINFORCEMENT, Steering Column Attaching 6.760 7–B20
REINFORCEMENT, Transmission Control Lever [4–SPEED MANUAL] 4.010 5–A12
REINFORCEMENT, Windshield Frame . 12.807 10–A17
REINFORCEMENT, Windshield Wiper Transmission 10.159 9–A12
RELAY, A/C Electrical 9.277 8–D3
RELAY, Body Wiring 13.095 10–C10
RELAY, Capsule/Headlamp/Fog Lamp . 2.485 3–C23
RELAY, Computer Control Sensors 3.682 4–C26
RELAY, Concealed Capsule/Headlamp Control 2.755 3–D28
RELAY, Cruise Control 3.887 4–D17
RELAY, Electronic Brake Control 4.720 6–A25
RELAY, Electronic Brake Control 4.730 6–B4
RELAY, Emission Control System 3.670 4–C11
RELAY, Engine Air Cooling (Electrical) .. 1.055 2–A8
RELAY, Folding Top Compartment 12.170 10–A10
RELAY, Front Seat Adjuster 11.556 9–C23
RELAY, Fuel Pump 3.900 4–D18
RELAY, Horn 2.815 3–E4

RELAY, Ignition Switch Warning, Lock, Headlamp, Theft Deterrent or Rear/Side Object 2.195 3-A21
RELAY, Parking, Turn Signal & Cornering Lamp 2.596 3-D19
RELAY, Radio Antenna 9.647 8-D11
RELAY, Radio Receiver 9.650 8-D14
RELAY, Rear Hatch Window 12.243 10-A15
RELAY, Rear Window Defogger 9.778 8-E11
RELAY, Safety Starting Switch Or Speed Sensing [6-SPEED MANUAL] 4.054 5-B6
RELAY, Starter Motor 2.100 3-A17
RELAY, Transmission Overdrive [4-SPEED MANUAL] 4.480 5-A22
RELAY, Transmission Overdrive [6-SPEED MANUAL] 4.480 5-B11
RELAY, Voltage and Glow Plug 2.510 3-C25
REPAIR KIT, Brake Master Cylinder 4.649 6-A8
REPAIR KIT, Brake Shoe Hold Down ... 5.043 6-C13
REPAIR KIT, Clutch Hydraulic Release Slave/Actuator [8-CYLINDER] 0.780 1-F15
REPAIR KIT, Folding and Hard Top Front Rail 14.080 11-A18
REPAIR KIT, Hydraulic Clutch Main Cylinder [8-CYLINDER] 0.775 1-F14
REPAIR KIT, Roof Panel 12.810 10-A18
REPAIR KIT, Vacuum Power Brake Booster 4.898 6-B7
RESERVOIR, Brake Master Cylinder Reservoir 4.651 6-A14
RESERVOIR, Engine Coolant Recovery 1.240 2-A24
RESERVOIR, Engine Timing [8-CYLINDER] 0.724 1-F12
RESERVOIR, Steering Pump 6.635 7-B16
RESISTOR, A/C Evaporator Blower 9.215 8-C18
RESISTOR, Generator Output 2.319 3-B19
RESISTOR, Heater Blower Motor 8.855 8-B2
RESISTOR, Inflatable Restraint System . 14.865 11-B11
RESONATOR, Air Cleaner Air Intake ... 3.417 4-B11
RESONATOR, Exhaust 3.702 4-D8
RESTRICTOR, Engine Oil Distribution .. 1.531 2-B5
RETAINER KIT, Fuel Injector Metering .. 3.332 4-A27
RETAINER, A/C Compressor (Internal Parts) 9.172 8-C13
RETAINER, Accelerator Control 3.425 4-B12
RETAINER, Air Cleaner Air Intake 3.417 4-B11
RETAINER, Air Cleaner and Silencer ... 3.407 4-D10
RETAINER, Air Cleaner Controls 3.415 4-B11
RETAINER, Air Cleaner Intake 3.410 4-B10
RETAINER, Air Distributor 9.262 8-C24
RETAINER, Air Distributor 9.786 8-E12
RETAINER, Air Suspension Leveling Or Level Control 7.475 7-C23
RETAINER, Auto 8.820 8-A22
RETAINER, Battery Hold Down 2.335 3-B20
RETAINER, Body Wiring 13.090 10-C7
RETAINER, Brake Master Cylinder Adjusting 4.662 6-A15
RETAINER, Brake Master Cylinder Push Rod 4.658 6-A15
RETAINER, Bumper/Fascia Face 7.831 7-C28
RETAINER, Bumper/Fascia 7.833 7-D8
RETAINER, Chassis/Engine Wiring Harness 2.559 3-D11
RETAINER, Cigarette Lighter 9.709 8-D25
RETAINER, Computer Control Sensors . 3.682 4-C26
RETAINER, Convertible and Hard Top .. 13.346 10-C15
RETAINER, Convertible Top Cover 13.347 10-C16
RETAINER, Courtesy Lamp and Door Ajar 11.950 9-C26
RETAINER, Courtesy/Dome/Reading Lamp 11.927 9-C27
RETAINER, Cowl Ledge 12.801 10-A16
RETAINER, Cruise Control 3.880 4-D14
RETAINER, Cruise Control 3.885 4-D15
RETAINER, Distributor Shaft 2.372 3-C3
RETAINER, Door Electric and Vacuum Locks 10.485 9-B5
RETAINER, Door Inside Locking Rod .. 10.565 9-B9
RETAINER, Door Lock Cylinder 10.553 9-B9
RETAINER, Door Opening 10.695 9-B11
RETAINER, Door Weatherstrip 10.694 9-B11
RETAINER, Driver Information Display .. 9.768 8-E10
RETAINER, Electronic Brake Control ... 4.720 6-A25
RETAINER, Electronic Control Suspension 7.450 7-C21
RETAINER, Emission Control System .. 3.671 4-C19
RETAINER, Engine Air Cooling (Electrical) 1.055 2-A8
RETAINER, Engine Camshaft [8-CYLINDER] 0.529 1-F4
RETAINER, Engine Camshaft & Valve Rocker [8-CYLINDER] 0.386 1-E28
RETAINER, Engine Camshaft gear [8-CYLINDER] 0.738 1-F14
RETAINER, Engine Clutch Control [8-CYLINDER] 0.852 1-F18
RETAINER, Engine Clutch Pedal Shaft [8-CYLINDER] 0.837 1-F18
RETAINER, Engine Clutch Release Fork [8-CYLINDER] 0.799 1-F17
RETAINER, Engine Coolant Recovery .. 1.240 2-A24
RETAINER, Engine Crankshaft And Camshaft Balancer [8-CYLINDER] . 0.659 1-F8
RETAINER, Engine Fuel Intake Manifold 3.265 4-A18
RETAINER, Engine Oil Cooler 1.540 2-B5
RETAINER, Engine Oil Pressure 1.609 2-B6
RETAINER, Engine Oil Pump 1.639 2-B7
RETAINER, Engine Piston Pin [8-CYLINDER] 0.639 1-F7
RETAINER, Engine Valve Lifter [8-CYLINDER] 0.459 1-F3
RETAINER, Evaporation Emission System (Fuel Tank End) 3.120 4-A12
RETAINER, Floor Console 10.240 9-A23
RETAINER, Floor Pan 12.980 10-B5
RETAINER, Folding Top Compartment . 12.170 10-A10
RETAINER, Folding Top Side Pad 13.349 10-C17
RETAINER, Folding Top Side Roof Rail . 14.120 11-A18
RETAINER, Front Door Trim 14.683 11-A23
RETAINER, Front Door Window Glass Channel (Outer & Inner) 10.710 9-B12
RETAINER, Front Floor Carpet 15.300 11-D10
RETAINER, Front Seat Adjuster Track .. 11.573 9-C25
RETAINER, Front Seat Adjuster 11.558 9-C23
RETAINER, Front Seat Adjuster 11.561 9-C24
RETAINER, Front Seat Cushion 11.419 9-C21
RETAINER, Front Seat Lumbar 11.378 9-C17
RETAINER, Front Spring 7.425 7-C20
RETAINER, Fuel Injection 3.330 4-A24

© GENERAL MOTORS SERVICE PARTS OPERATIONS-CHEVROLET-14Y

RETAINER, Fuel Line 3.162 4–A15
RETAINER, Heater Coolant Flow 8.866 8–B2
RETAINER, Heater 8.846 8–A27
RETAINER, Hood Latch 8.075 8–A12
RETAINER, Hood Panel Closing 8.024 8–A10
RETAINER, Hood Panel 8.015 8–A8
RETAINER, Hood Upper Latch 8.083 8–A14
RETAINER, Hub Front and Rear 5.813 6–D13
RETAINER, Hydraulic Brake Hose 4.681 6–A21
RETAINER, Hydraulic Brake Pipe 4.686 6–A21
RETAINER, Ignition Switch 2.188 3–A20
RETAINER, Inflatable Restraint System . 14.865 11–B11
RETAINER, Instrument Cluster 9.744 8–E6
RETAINER, Instrument Cluster 9.748 8–E7
RETAINER, Instrument Panel Compartment Door Lock and Console Compartment Door Lock ... 10.268 9–B3
RETAINER, Instrument Panel 10.230 9–A18
RETAINER, License Plate 7.800 7–C27
RETAINER, Main Wiring Junction and Fuse Block 2.463 3–C20
RETAINER, Multi Port Fuel Injection Idle Air 3.338 4–B7
RETAINER, Parking Brake Cable 4.765 6–D5
RETAINER, Power Brake Booster (Vacuum) 4.918 6–B12
RETAINER, Radiator Air 1.272 2–A26
RETAINER, Radiator Baffle and Shroud 1.276 2–A28
RETAINER, Radio Mounting 9.667 8–D24
RETAINER, Rear Body Lock Pillar 12.942 10–A28
RETAINER, Rear Compartment Floor .. 12.981 10–B7
RETAINER, Rear Hatch Window 12.243 10–A15
RETAINER, Rear Quarter Outer 12.940 10–A27
RETAINER, Rear View Mirror 10.186 9–A15
RETAINER, Rear Wheel 5.306 6–D11
RETAINER, Roof Panel 12.810 10–A18
RETAINER, Safety Starting Switch Or Speed Sensing [6–SPEED MANUAL] 4.054 5–B6
RETAINER, Shock Absorber/Strut 7.389 7–C19
RETAINER, Shroud and Dash and Vent Duct Panel 12.804 10–A16
RETAINER, Side Window Defroster 9.780 8–E11
RETAINER, Spare Wheel 7.629 7–C25
RETAINER, Spark Plug Ignition Wire ... 2.251 3–A26
RETAINER, Steering Column 6.521 7–B8
RETAINER, Steering Wheel 6.515 7–A20
RETAINER, Stop Lamp Switch 2.447 3–C8
RETAINER, Tail Lamp Mounting 2.662 3–D20
RETAINER, Tail Lamp 2.660 3–D19
RETAINER, Transmission Auxiliary Valve Body Cover [AUTOMATIC] 4.216 5–D7
RETAINER, Transmission Case Extension [4–SPEED MANUAL] 4.317 5–A15
RETAINER, Transmission Clutch [AUTOMATIC] 4.166 5–C27
RETAINER, Transmission Clutch [AUTOMATIC] 4.169 5–C28
RETAINER, Transmission Clutch Gear [6–SPEED MANUAL] 4.352 5–B8
RETAINER, Transmission Clutch Gear [6–SPEED MANUAL] 4.353 5–B9
RETAINER, Transmission Control Lever [4–SPEED MANUAL] 4.015 5–A12
RETAINER, Transmission Control Lever [6–SPEED MANUAL] 4.015 5–B6
RETAINER, Transmission Control Lever [AUTOMATIC] 4.006 5–C10
RETAINER, Transmission Control Switch [AUTOMATIC] 4.060 5–C13
RETAINER, Transmission Main Control Valve Body [AUTOMATIC] 4.265 5–D18
RETAINER, Transmission Main Drive Gear Bearing (Clutch) [4–SPEED MANUAL] 4.376 5–A15
RETAINER, Transmission Oil [AUTOMATIC] 4.248 5–D17
RETAINER, Transmission Oil Pump [AUTOMATIC] 4.226 5–D10
RETAINER, Transmission Overdrive [4–SPEED MANUAL] 4.060 5–A13
RETAINER, Transmission Servo & Accumulator [AUTOMATIC] 4.233 5–D15
RETAINER, Transmission Shift Control Cable [AUTOMATIC] 4.047 5–C11
RETAINER, Transmission Shift Shaft Lever Rod [4–SPEED MANUAL] 4.037 5–A13
RETAINER, Transmission Throttle Valve [AUTOMATIC] 4.275 5–D24
RETAINER, Turn Signal Switch Cancelling 2.896 3–E6
RETAINER, Universal Joint Bearing and Flange 5.586 6–D6
RETAINER, Vacuum Power Brake Cylinder Relay Valve 4.935 6–B14
RETAINER, Windshield Sunshade 10.219 9–A18
RETAINER, Windshield Washer 10.156 9–A12
REWORK KIT, Front Seat Adjuster 11.561 9–C24
RING KIT, Engine Piston [8–CYLINDER] 0.643 1–F7
RING KIT, Pinion Shaft Lock 5.518 6–C26
RING KIT, Steering Pump 6.610 7–B15
RING KIT, Transmission Overhaul [AUTOMATIC] 4.005 5–C10
RING KIT, Transmission Servo & Accumulator [AUTOMATIC] 4.229 5–D14
RING, A/C Compressor Clutch 9.188 8–C16
RING, A/C Compressor Pulley 9.181 8–C15
RING, A/C Compressor 9.175 8–C14
RING, Brake Master Cylinder Piston ... 4.654 6–A15
RING, Capsule/Headlamp Mounting ... 2.726 3–D26
RING, Capsule/Headlamp Retaining ... 2.731 3–D28
RING, Distributor (also Knock Sensor) . 2.383 3–C4
RING, Door Outside Lock Cylinder 10.551 9–B8
RING, Engine Oil Cooler 1.540 2–B5
RING, Engine Oil Pressure/Temperature 1.800 2–B12
RING, Front Seat Back and Back of Back 14.300 11–B2
RING, Front Seat Bolster 11.379 9–C18
RING, Parking Brake Shoe Lever 5.158 6–C14
RING, Rear Axle U Joint 5.428 6–C19
RING, Starter Motor Thrust 2.063 3–A16
RING, Steering Column Housing 6.500 7–A11
RING, Steering Column 6.521 7–B8
RING, Steering Gear Hydraulic Valve ... 6.552 7–B9
RING, Steering Linkage 6.865 7–B20
RING, Steering Pump Drive Shaft Outer Bearing Retainer 6.616 7–B15
RING, Steering Pump 6.612 7–B15
RING, Transmission Case Extension [6–SPEED MANUAL] 4.317 5–B8

RING, Transmission Clutch [AUTOMATIC] 4.163 5–C20
RING, Transmission Clutch [AUTOMATIC] 4.164 5–C26
RING, Transmission Clutch [AUTOMATIC] 4.167 5–C28
RING, Transmission Clutch [AUTOMATIC] 4.180 5–D3
RING, Transmission Control Valve [AUTOMATIC] 4.262 5–D17
RING, Transmission Input and Turbine Shaft [AUTOMATIC] 4.123 5–C16
RING, Transmission Main Control Valve Body [AUTOMATIC] 4.265 5–D18
RING, Transmission Main Drive Gear Bearing (Clutch) [4–SPEED MANUAL] 4.376 5–A15
RING, Transmission Oil Pump [AUTOMATIC] 4.226 5–D10
RING, Transmission Output/Counter Shaft or Carrier [AUTOMATIC] 4.176 5–D3
RING, Transmission Overdrive Accumulator [4–SPEED MANUAL] .. 4.462 5–A19
RING, Transmission Rear Bearing and Mainshaft [4–SPEED MANUAL] 4.412 5–A16
RING, Transmission Reverse Idler Shaft [4–SPEED MANUAL] 4.435 5–A18
RING, Transmission Servo & Accumulator [AUTOMATIC] 4.228 5–D12
RING, Transmission Servo & Accumulator [AUTOMATIC] 4.229 5–D14
RING, Transmission Sun Gear [AUTOMATIC] 4.159 5–C19
RING, Transmission Synchronizer [4–SPEED MANUAL] 4.383 5–A16
RIVET, Accelerator Control 3.430 4–B12
RIVET, Bumper/Fascia Face 7.831 7–C28
RIVET, Convertible and Hard Top 13.346 10–C15
RIVET, Door Electric and Vacuum Locks 10.485 9–B5
RIVET, Door Opening 10.695 9–B11
RIVET, Folding Top Center 14.215 11–A20
RIVET, Front Fender 8.143 8–A16
RIVET, Front Seat Lumbar 11.378 9–C17
RIVET, License Plate 7.800 7–C27
RIVET, Main Wiring Junction and Fuse Block 2.483 3–C20
RIVET, Transmission Control Valve [AUTOMATIC] 4.262 5–D17
ROD KIT, Rear Axle Tie 5.415 6–C16
ROD KIT, Steering Tie Rod Inner 6.230 7–A9
ROD KIT, Tie Rod 6.233 7–A10
ROD UNIT, Vacuum Power Brake Booster Cylinder 4.906 6–B12
ROD, Brake Master Cylinder Push Rod . 4.658 6–A15
ROD, Capsule/Headlamp Dimmer 2.459 3–C8
ROD, Clutch Fork Release [8–CYLINDER] 0.787 1–F16
ROD, Door Inside Locking 10.563 9–B9
ROD, Engine Piston [8–CYLINDER] ... 0.603 1–F5
ROD, Engine Valve Push Rod [8–CYLINDER] 0.426 1–F3
ROD, Folding Top Compartment 12.170 10–A10
ROD, Hood Panel 8.015 8–A8
ROD, Hydraulic Clutch Main Cylinder [8–CYLINDER] 0.775 1–F14
ROD, Rear Axle Tie 5.415 6–C16
ROD, Rear Axle 5.416 6–C16
ROD, Safety Starting Switch Or Speed Sensing [6–SPEED MANUAL] 4.054 5–B6
ROD, Steering Column 6.521 7–B8
ROD, Transmission Overdrive Control [4–SPEED MANUAL] 4.495 5–A23
ROD, Transmission Safety Starting Switch Or Speed Sensing [4–SPEED MANUAL] 4.054 5–A13
ROD, Transmission Shift Shaft Lever [4–SPEED MANUAL] 4.035 5–A12
ROLLER, Transmission Clutch [AUTOMATIC] 4.180 5–D3
ROTATOR, Engine Valve Spring [8–CYLINDER] 0.309 1–E27
ROTOR KIT, Transmission Oil Pump [AUTOMATIC] 4.224 5–D7
ROTOR, Distributor 2.382 3–C4
ROTOR, Front and Rear Wheel Brake .. 5.809 6–D11
ROTOR, Generator 2.279 3–B15
ROTOR, Transmission Oil Pump [AUTOMATIC] 4.224 5–D7
ROTOR, Transmission Oil Pump & Governor [AUTOMATIC] 4.210 5–D5

S

SCREEN, Cowl Top Vent Louver 12.300 10–A16
SCREEN, Engine Oil Pump 1.656 2–B8
SCREEN, Ignition Distributor Housing .. 2.363 3–C2
SCREEN, Transmission Main Control Valve Body [AUTOMATIC] 4.265 5–D18
SCREEN, Transmission Oil [AUTOMATIC] 4.248 5–D17
SCREEN, Transmission Oil Pump [AUTOMATIC] 4.224 5–D7
SCREEN, Transmission Overdrive Oil Pan [4–SPEED MANUAL] 4.456 5–A18
SCREW & WASHER, Generator Output 2.319 3–B19
SCREW, Air Cleaner Air Intake 3.417 4–B11
SCREW, Air Cleaner and Silencer 3.403 4–B10
SCREW, Clutch Hydraulic Release Slave/Actuator [8–CYLINDER] 0.780 1–F15
SCREW, Cruise Control 3.885 4–D15
SCREW, Differential Carrier 5.506 6–C24
SCREW, Distributor (also Knock Sensor) 2.383 3–C4
SCREW, Distributor Cap Retaining 2.368 3–C3
SCREW, Emission Control System 3.670 4–C11
SCREW, Generator Brush 2.291 3–B15
SCREW, Generator Drive End 2.307 3–B17
SCREW, Generator Output 2.319 3–B19
SCREW, Ignition Coil Mounting 2.183 3–A16
SCREW, Ignition Switch Warning, Lock, Headlamp, Theft Deterrent or Rear/Side Object 2.195 3–A21
SCREW, Luggage Carrier 12.815 10–A25
SCREW, Parking Brake Shoe 5.149 6–C14
SCREW, Radiator Air 1.272 2–A26
SCREW, Roof Panel 12.810 10–A18
SCREW, Starter Motor 2.077 3–A16
SCREW, Steering Column 6.514 7–A20
SCREW, Tail Lamp 2.679 3–D20

© GENERAL MOTORS SERVICE PARTS OPERATIONS–CHEVROLET–14Y

SCREW, Transmission Extension [4-SPEED MANUAL] 4.319 5-A15
SCREW, Transmission Oil Pan [AUTOMATIC] 4.196 5-D6
SCREW, Transmission Overdrive Case [4-SPEED MANUAL] 4.455 5-A18
SCREW, Transmission Overdrive Oil Pump [4-SPEED MANUAL] 4.466 5-A20
SCREW, Transmission Overdrive Out/Input [4-SPEED MANUAL] 4.465 5-A20
SCREW, Voltage Regulator 2.500 3-C25
SEAL KIT, A/C Compressor 9.175 8-C14
SEAL KIT, A/C Refrigerant Lines 9.222 8-C22
SEAL KIT, Engine Rear Main Bearing [8-CYLINDER] 0.137 1-E20
SEAL KIT, Engine Valve [8-CYLINDER] 0.308 1-E27
SEAL KIT, Fuel Line 3.163 4-A15
SEAL KIT, Multi Port Fuel Injection Fuel Rail 3.331 4-A26
SEAL KIT, Steering Gear Hydraulic Valve 6.552 7-B9
SEAL KIT, Steering Pump 6.609 7-B14
SEAL KIT, Transmission Clutch (Low & Reverse) [AUTOMATIC] 4.169 5-D4
SEAL KIT, Transmission Clutch [AUTOMATIC] 4.166 5-C27
SEAL KIT, Transmission Oil Pump [AUTOMATIC] 4.226 5-D10
SEAL KIT, Wheel Brake Cylinder/Caliper Piston 4.667 6-A20
SEAL, A/C Evaporator 9.211 8-C17
SEAL, A/C Refrigerant Lines 9.222 8-C22
SEAL, Air Brake Compressor 4.854 6-B6
SEAL, Air Brake Compressor 4.868 6-B7
SEAL, Air Cleaner Air Intake 3.417 4-B11
SEAL, Air Cleaner and Silencer 3.403 4-B10
SEAL, Air Cleaner Controls 3.415 4-B11
SEAL, Air Cleaner Intake 3.410 4-B10
SEAL, Air Distributor 9.262 8-C24
SEAL, Air Distributor 9.786 8-E12
SEAL, Air Duct 9.782 8-E12
SEAL, Air Outlet 9.260 8-C24
SEAL, Bottom of Top Front Roof Rail to Windshield 14.060 11-A18
SEAL, Brake Master Cylinder Proportioning 4.652 6-A14
SEAL, Brake Master Cylinder Reservoir 4.651 6-A14
SEAL, Chassis Electrical 2.530 3-D2
SEAL, Computer Control Sensors 3.682 4-C26
SEAL, Coolant Pump, with Bearing 1.105 2-A15
SEAL, Courtesy Lamp and Door Ajar ... 11.950 9-C28
SEAL, Differential Drive Pinion Shaft Bearing 5.469 6-C21
SEAL, Distributor (also Knock Sensor) . 2.383 3-C4
SEAL, Distributor Shaft 2.372 3-C3
SEAL, Door Lock Striker 10.571 9-B10
SEAL, Engine Camshaft & Valve Rocker Cover [8-CYLINDER] 0.413 1-F2
SEAL, Engine Camshaft & Valve Rocker Cover [8-CYLINDER] 0.423 1-F2
SEAL, Engine Coolant By-Pass 1.097 2-A15
SEAL, Engine Coolant Pump 1.123 2-A16
SEAL, Engine Coolant Thermostat Housing 1.252 2-A25
SEAL, Engine Crankcase 1.745 2-B9
SEAL, Engine Front Cover & Crankshaft Seal [8-CYLINDER] 0.213 1-E23
SEAL, Engine Oil Cooler 1.540 2-B5
SEAL, Engine Oil Cooler 1.550 2-B6
SEAL, Engine Oil Filter 1.844 2-B16
SEAL, Engine Oil Level 1.516 2-B4
SEAL, Engine Oil Pan 1.429 2-B3
SEAL, Engine Oil Pump Cover 1.724 2-B9
SEAL, Engine Oil Pump 1.656 2-B8
SEAL, Engine Rear Main Bearing [8-CYLINDER] 0.137 1-E20
SEAL, Engine Timing [8-CYLINDER] .. 0.724 1-F12
SEAL, Engine Valve [8-CYLINDER] ... 0.308 1-E27
SEAL, Exhaust Pipe 3.611 4-C8
SEAL, Front Fender 8.154 8-A17
SEAL, Front Wheel Bearing 6.326 7-A10
SEAL, Fuel Injector 3.304 4-A23
SEAL, Fuel Line 3.163 4-A15
SEAL, Fuel Tank Filler Door 12.945 10-B3
SEAL, Heater Core 8.854 8-A28
SEAL, Hood Panel 8.010 8-A8
SEAL, Hydraulic Power Brake Booster . 4.805 6-B6
SEAL, Hydraulic Power Brake Booster . 4.845 6-B6
SEAL, Ignition Coil Mounting 2.183 3-A18
SEAL, Ignition Distributor Housing 2.363 3-C2
SEAL, Instrument Panel Pad 10.235 9-A21
SEAL, Multi Port Fuel Injection Fuel Rail 3.331 4-A26
SEAL, Multi Port Fuel Injection Idle Air .. 3.338 4-B7
SEAL, Power Brake Booster 4.910 6-B12
SEAL, Radio and Speaker 9.656 8-D20
SEAL, Radio Auxiliary Speakers 9.665 8-D22
SEAL, Rear Axle Shaft Bearing or Hub . 5.822 6-D14
SEAL, Rear Axle U Joint 5.430 6-C10
SEAL, Rear Body Lock Pillar 12.942 10-A26
SEAL, Rear Hatch Window 12.187 10-A14
SEAL, Rear Hatch Window 12.269 10-A13
SEAL, Roof Panel 12.810 10-A18
SEAL, Seat Belt 14.875 11-B14
SEAL, Shroud and Dash and Vent Duct Panel 12.804 10-A16
SEAL, Side Window Defroster 9.780 8-E11
SEAL, Speedometer Driven Gear [6-SPEED MANUAL] 4.338 5-B8
SEAL, Speedometer Driven Gear [AUTOMATIC] 4.338 5-E13
SEAL, Steering Column 6.758 7-B20
SEAL, Steering Fluid Cooler 6.602 7-B10
SEAL, Steering Gear 6.674 7-B19
SEAL, Steering Pump Drive Shaft 6.617 7-B16
SEAL, Steering Pump 6.635 7-B16
SEAL, Steering Tie Rod 6.242 7-A10
SEAL, Tail Lamp 2.660 3-D19
SEAL, Transmission Clutch [AUTOMATIC] 4.166 5-C27
SEAL, Transmission Clutch Gear Oil [6-SPEED MANUAL] 4.354 5-B9
SEAL, Transmission Converter [AUTOMATIC] 4.115 5-C14
SEAL, Transmission Countershaft Gear Bearing [6-SPEED MANUAL] 4.423 5-B10
SEAL, Transmission Cover To Gearshift Shaft [4-SPEED MANUAL] 4.107 5-A14

© GENERAL MOTORS SERVICE PARTS OPERATIONS-CHEVROLET-14Y

SEAL, Transmission Detent Shift Control [AUTOMATIC] 4.050 5–C12
SEAL, Transmission Extension [6–SPEED MANUAL] 4.318 5–B8
SEAL, Transmission Extension [AUTOMATIC] 4.318 5–D26
SEAL, Transmission Input and Turbine Shaft [AUTOMATIC] 4.123 5–C16
SEAL, Transmission Main Drive Gear Bearing (Clutch) [4–SPEED MANUAL] 4.354 5–A15
SEAL, Transmission Manual Shaft [AUTOMATIC] 4.282 5–D25
SEAL, Transmission Oil Filler [AUTOMATIC] 4.133 5–C17
SEAL, Transmission Oil Pump [AUTOMATIC] 4.224 5–D7
SEAL, Transmission Oil Pump [AUTOMATIC] 4.226 5–D10
SEAL, Transmission Output/Counter Shaft or Carrier [AUTOMATIC] 4.176 5–D3
SEAL, Transmission Overdrive [4–SPEED MANUAL] 4.480 5–A22
SEAL, Transmission Overdrive Accumulator [4–SPEED MANUAL] .. 4.462 5–A19
SEAL, Transmission Overdrive Case [4–SPEED MANUAL] 4.455 5–A18
SEAL, Transmission Overdrive Clutch [4–SPEED MANUAL] 4.468 5–A20
SEAL, Transmission Overdrive Control [4–SPEED MANUAL] 4.495 5–A23
SEAL, Transmission Overdrive Oil Cooler [4–SPEED MANUAL] 4.457 5–A18
SEAL, Transmission Overdrive Oil Pan [4–SPEED MANUAL] 4.456 5–A18
SEAL, Transmission Overdrive Oil Pump [4–SPEED MANUAL] 4.466 5–A20
SEAL, Transmission Overdrive Sun Gear Cover [4–SPEED MANUAL] 4.472 5–A22
SEAL, Transmission Rear Bearing and Mainshaft [4–SPEED MANUAL] 4.412 5–A16
SEAL, Transmission Reverse Idler Shaft [6–SPEED MANUAL] 4.435 5–B10
SEAL, Transmission Servo & Accumulator [AUTOMATIC] 4.228 5–D12
SEAL, Transmission Servo & Accumulator [AUTOMATIC] 4.229 5–D14
SEAL, Transmission Solenoid [AUTOMATIC] 4.122 5–C15
SEAL, Transmission Vacuum [AUTOMATIC] 4.205 5–D6
SEAL, Vacuum Power Brake Booster Cylinder 4.924 6–B13
SEAL, Wheel Cap or Cover 6.864 6–D15
SEAL, Windshield Frame 12.807 10–A17
SEAL, Windshield 10.092 9–A9
SEALBEAM, Capsule/Headlamp/Fog Lamp 2.727 3–D27
SEALER, Starter Motor 2.070 3–A16
SEALING STRIP, Door Opening 10.695 9–B11
SEALING STRIP, Front Door Window Glass Channel (Outer & Inner) 10.710 9–B12
SEALING STRIP, Seat Belt 14.875 11–B14
SEAT, Engine Oil Cooler 1.540 2–B5
SEAT, Engine Oil Pump 1.639 2–B7
SEAT, Engine Valve Spring [8–CYLINDER] 0.309 1–E27
SEAT, Fuel Tank 3.015 4–A8
SEAT, Steering Column 6.521 7–B8
SECURITY PKG, Vehicle (Non–Production) 21.513B 1–D10
SENDER, Fuel Tank Meter 3.107 4–A8
SENSOR KIT, Multi Port Fuel Injection Throttle Position 3.339 4–B8
SENSOR KIT, Throttle Body Throttle Position 3.704 4–D13
SENSOR PKG, Vehicle Security (Non–Production) 21.515B 1–D11
SENSOR, A/C Electric Control 9.275 8–C27
SENSOR, Air Suspension Leveling Or Level Control 7.475 7–C23
SENSOR, Ambient Outside Air Temperature 9.770 8–E10
SENSOR, Brake Master Cylinder Reservoir 4.661 6–A14
SENSOR, Capsule/Headlamp/Fog Lamp 2.465 3–C23
SENSOR, Catalytic Converter 3.686 4–D4
SENSOR, Computer Control Sensors .. 3.682 4–C26
SENSOR, Coolant Temperature (Engine Unit) 1.150 2–A16
SENSOR, Distributor (also Knock Sensor) 2.383 3–C4
SENSOR, Electronic Brake Control 4.710 6–A23
SENSOR, Engine Oil Level 1.516 2–B4
SENSOR, Engine Oil Pressure/Temperature 1.800 2–B12
SENSOR, Fuel Pump Pressure 3.910 4–D19
SENSOR, Inflatable Restraint System .. 14.865 11–B11
SENSOR, Multi Port Fuel Injection Throttle Position 3.339 4–B8
SENSOR, Radiator Tank 1.203 2–A19
SENSOR, Speedometer Drive [6–SPEED MANUAL] 4.329 5–B8
SENSOR, Speedometer Drive [AUTOMATIC] 4.329 5–D27
SENSOR, Tire Pressure 5.890 6–D15
SERVO, Cruise Control 3.885 4–D15
SHADE, Rear Seat to Back Window Panel 15.024 11–D6
SHAFT KIT, Steering Pump 6.614 7–B15
SHAFT KIT, Transmission Park Lock [AUTOMATIC] 4.294 5–D26
SHAFT, Air Distributor 9.786 8–E12
SHAFT, Coolant Pump, with Bearing ... 1.105 2–A15
SHAFT, Differential Planetary 5.515 6–C26
SHAFT, Differential Side Pinion 5.517 6–C26
SHAFT, Distributor Shaft 2.372 3–C3
SHAFT, Engine Oil Pump 1.639 2–B7
SHAFT, Ignition Switch Warning, Lock, Headlamp, Theft Deterrent or Rear/Side Object 2.195 3–A21
SHAFT, Multi Port Fuel Injection Idle Air 3.338 4–B7
SHAFT, Propeller 5.544 6–D3
SHAFT, Rear Axle Drive 5.420 6–C18
SHAFT, Stabilizer 7.241 7–C12
SHAFT, Starter Motor Drive Shift 2.108 3–A17
SHAFT, Steering Column Intermediate . 6.526 7–B9
SHAFT, Steering Column 6.524 7–B9
SHAFT, Steering Pump 6.614 7–B15
SHAFT, Transmission Countershaft [4–SPEED MANUAL] 4.428 5–A17

SHAFT, Transmission Internal Shift [4-SPEED MANUAL] 4.302 5-A14
SHAFT, Transmission Mainshaft [4-SPEED MANUAL] 4.403 5-A16
SHAFT, Transmission Output/Counter Shaft or Carrier [AUTOMATIC] 4.175 5-D2
SHAFT, Transmission Overdrive Out/Input [4-SPEED MANUAL] 4.465 5-A20
SHAFT, Transmission Reverse Idler [4-SPEED MANUAL] 4.433 5-A17
SHELL, Transmission Output/Counter Shaft or Carrier [AUTOMATIC] 4.175 5-D2
SHIELD, Accelerator Linkage 3.469 4-B14
SHIELD, Brake Flange Plate 5.002 6-C12
SHIELD, Catalytic Converter 3.690 4-D4
SHIELD, Chassis/Engine Wiring Harness 2.559 3-D11
SHIELD, Cruise Control 3.885 4-D15
SHIELD, Distributor (also Knock Sensor) 2.383 3-C4
SHIELD, Early Fuel Evaporation 3.145 4-A14
SHIELD, Emission System 3.675 4-C21
SHIELD, Engine Fan Coolant 1.060 2-A11
SHIELD, Engine Fuel Filter 3.890 4-D17
SHIELD, Engine Fuel Intake Manifold .. 3.265 4-A18
SHIELD, Engine Mounting [8-CYLINDER] 0.029 1-E16
SHIELD, Engine Valve [8-CYLINDER] . 0.308 1-E27
SHIELD, Evaporation Emission System (Fuel Tank End) 3.120 4-A12
SHIELD, Exhaust Manifold 3.602 4-C7
SHIELD, Exhaust Pipe 3.616 4-C9
SHIELD, Flywheel & Clutch & Converter Housing [8-CYLINDER] 0.679 1-F11
SHIELD, Fuel Line 3.163 4-A15
SHIELD, Fuel Tank Evaporator Control (Engine End) 3.130 4-A12
SHIELD, Generator Mounting 2.277 3-B14
SHIELD, Hydraulic Brake 4.685 6-A21
SHIELD, Hydraulic Clutch Main Cylinder [8-CYLINDER] 0.777 1-F15
SHIELD, Radio Static Suppression 9.663 8-D22
SHIELD, Rear Compartment Lamp 9.988 8-E13
SHIELD, Spark Plug Ignition Wire 2.251 3-A26
SHIELD, Steering Gear Shaft 6.525 7-B9
SHIELD, Transmission Control Indicator Lamp [AUTOMATIC] 4.022 5-C11
SHIFTER KIT, Transmission Shift Control [6-SPEED MANUAL] 4.004 5-B5
SHIFTER, Transmission Shift Control [6-SPEED MANUAL] 4.004 5-B5
SHIM KIT, A/C Compressor Clutch 9.188 8-C16
SHIM KIT, Differential Bearing Adjusting 5.537 6-D2
SHIM KIT, Differential Drive Pinion 5.484 6-C22
SHIM KIT, Differential Rear Pinion Bearing 5.460 6-C20
SHIM KIT, Engine Main Bearing Cap [8-CYLINDER] 0.153 1-E21
SHIM, Bumper/Fascia Mounting 7.865 7-D10
SHIM, Bumper/Fascia 7.833 7-D8
SHIM, Differential Bearing Adjusting ... 5.537 6-D2
SHIM, Distributor (also Knock Sensor) . 2.383 3-C4
SHIM, Engine Clutch Pedal [8-CYLINDER] 0.829 1-F18
SHIM, Engine Valve [8-CYLINDER] ... 0.303 1-E26
SHIM, Folding Top Compartment 12.170 10-A10
SHIM, Frame Front Cross Member 7.039 7-C10
SHIM, Front Fender Inner Wheel House 8.153 8-A16
SHIM, Front Fender 8.143 8-A16
SHIM, Front Seat Bolster 11.379 9-C18
SHIM, Front Spring 7.425 7-C20
SHIM, Hood Hinge 8.016 8-A9
SHIM, Instrument Panel 10.230 9-A18
SHIM, Roof Panel 12.810 10-A18
SHIM, Starter Motor 2.042 3-A15
SHIM, Steering Knuckle Upper Control Arm 6.178 7-A9
SHIM, Transmission Mainshaft [5-SPEED MANUAL] 4.412 5-B9
SHOE KIT, Brake 5.017 6-C12
SHOE, Steering Column 6.514 7-A20
SHROUD KIT, Radiator Fan Shroud 1.277 2-A26
SHROUD, Radiator Fan Shroud 1.277 2-A26
SHROUD, Steering 6.518 7-A21
SHUTTER, Door Outside Lock Cylinder 10.552 9-B8
SHUTTER, Fuel Tank Filler Door 12.945 10-B3
SHUTTER, Rear Hatch Window 12.240 10-A16
SHUTTER, Rear Quarter 15.100 11-D6
SILENCER, Exhaust Gas Recirculation Valve 3.672 4-C21
SILENCER, Folding Top 14.340 11-A22
SILENCER, Vacuum Power Brake Booster Cylinder 4.906 6-B12
SILL, Front Frame Cross Member 7.010 7-C9
SIREN PKG, Vehicle Security (Non-Production) 21.515B 1-D11
SLAT, Luggage Carrier 12.815 10-A25
SLEEVE, Cruise Control 3.885 4-D15
SLEEVE, Distributor (also Knock Sensor) 2.383 3-C4
SLEEVE, Emission System 3.675 4-C21
SLEEVE, Engine Timing [8-CYLINDER] 0.724 1-F12
SLEEVE, Heater 8.846 8-A27
SLEEVE, Steering Pump 6.612 7-B15
SLEEVE, Transmission First/Reverse Gear [4-SPEED MANUAL] 4.419 5-A17
SLEEVE, Transmission Internal Shift [4-SPEED MANUAL] 4.307 5-A14
SLIDE, Transmission Oil Pump [AUTOMATIC] 4.224 5-D7
SLINGER, Differential Drive Pinion 5.484 6-C22
SOCKET, A/C Control 9.279 8-D4
SOCKET, A/C Wiring 9.276 8-D2
SOCKET, Back Up Lamp 2.697 3-D23
SOCKET, Brake Shoe Adjusting Screw . 5.111 6-C13
SOCKET, Capsule/Headlamp/Fog Lamp 2.485 3-C23
SOCKET, Courtesy/Dome/Reading Lamp 11.927 9-C27
SOCKET, Instrument Cluster 9.744 8-E6
SOCKET, Parking, Turn Signal & Cornering & Daytime Running ... 2.585 3-D17
SOCKET, Parking, Turn Signal & Cornering Lamp 2.596 3-D19
SOCKET, Rear Axle Tie 5.415 6-C16
SOCKET, Rear Axle 5.416 6-C16
SOCKET, Rear Compartment Lamp 9.986 8-E13
SOCKET, Rear License Lamp 2.714 3-D25
SOCKET, Side Marker and Hazard Flasher 2.575 3-D15
SOCKET, Tail Lamp 2.694 3-D22
SOCKET, Transmission Control Indicator Lamp [4-SPEED MANUAL] 4.022 5-A12

SOCKET, Transmission Control Indicator Lamp [AUTOMATIC] 4.022 5-C11
SOCKET, Turn Signal Lamp 2.692 3-E5
SOLENOID, A/C Electric Control 9.275 8-C27
SOLENOID, Early Fuel Evaporation Control 3.140 4-A13
SOLENOID, Emission Control System .. 3.670 4-C11
SOLENOID, Rear Hatch Window 12.243 10-A15
SOLENOID, Safety Starting Switch Or Speed Sensing [6-SPEED MANUAL] 4.054 5-B6
SOLENOID, Transmission Overdrive [4-SPEED MANUAL] 4.461 5-A19
SOLENOID, Transmission Solenoid [AUTOMATIC] 4.122 5-C15
SPACER, Air Injection Reactor Pump and Multi-Function Air Compressor 3.650 4-C10
SPACER, Body Rear End (Plastic Laminated) 12.986 10-B10
SPACER, Brake Pedal 4.626 6-A8
SPACER, Brake Pedal 4.634 6-A8
SPACER, Bumper/Fascia Energy Absorber 7.840 7-D9
SPACER, Bumper/Fascia Face 7.831 7-C28
SPACER, Bumper/Fascia 7.832 7-D4
SPACER, Chassis/Engine Wiring Harness 2.559 3-D11
SPACER, Computer Control Sensors .. 3.682 4-C26
SPACER, Convertible and Hard Top 13.346 10-C15
SPACER, Differential Drive Pinion Front and Center Bearing 5.453 6-C20
SPACER, Emission Control System 3.671 4-C19
SPACER, Engine Clutch Pedal [8-CYLINDER] 0.029 1-F18
SPACER, Engine Clutch Pedal [8-CYLINDER] 0.831 1-F18
SPACER, Engine Mounting [8-CYLINDER] 0.002 1-E16
SPACER, Engine Oil Pump 1.656 2-B8
SPACER, Evaporation Emission System (Fuel Tank End) 3.120 4-A12
SPACER, Exhaust Manifold Bolt 3.604 4-C7
SPACER, Floor Console 10.240 9-A23
SPACER, Floor Pan 12.980 10-B5
SPACER, Folding Top Back Window ... 13.395 10-C17
SPACER, Folding Top Compartment ... 12.170 10-A10
SPACER, Frame Front Cross Member .. 7.039 7-C10
SPACER, Front Seat Adjuster 11.556 9-C23
SPACER, Front Seat Adjuster 11.561 9-C24
SPACER, Front Seat Bolster 11.379 9-C18
SPACER, Fuel Line 3.163 4-A15
SPACER, Generator Adjust 2.317 3-B16
SPACER, Generator Mounting 2.277 3-B14
SPACER, Hydraulic Brake Pipe 4.686 6-A21
SPACER, Hydraulic Clutch Main Cylinder [8-CYLINDER] 0.777 1-F15
SPACER, Luggage Carrier 12.815 10-A25
SPACER, Parking, Turn Signal & Cornering Lamp 2.587 3-D16
SPACER, Radio Control 9.649 8-D12
SPACER, Rear Hatch Window 12.184 10-A14
SPACER, Rear Hatch Window 12.187 10-A14
SPACER, Rear Spring And Shock Absorber Anchor 7.518 7-C24
SPACER, Rear Spring 7.535 7-C25
SPACER, Speedometer 9.761 8-E8
SPACER, Steering Column 6.514 7-A20
SPACER, Transmission Countershaft Gear Bearing [4-SPEED MANUAL] . 4.423 5-A17
SPACER, Transmission Main Drive Gear Bearing (Clutch) [4-SPEED MANUAL] 4.376 5-A15
SPACER, Transmission Mainshaft Bearing [4-SPEED MANUAL] 4.353 5-A15
SPARK PLUG, Engine Tune-up (Spark, Glow) 2.270 3-A27
SPEAKER PKG, Mobile (Non-Production) 21.444B 1-D8
SPEAKER PKG, Mobile (Production) ... 21.444A 1-D8
SPEAKER, Radio Auxiliary Speakers ... 9.665 8-D22
SPEAKER, Radio Receiver 9.650 8-D14
SPHERE KIT, Steering Column 6.514 7-A20
SPHERE KIT, Steering Gear Shaft 6.525 7-B9
SPINDLE, Rear Wheel 5.806 6-D11
SPLITTER, Radio Antenna 9.647 8-D11
SPOOL, Transmission Overdrive Oil Pump [4-SPEED MANUAL] 4.466 5-A20
SPOTLIGHT PKG, Portable Spot (Non-Production) 21.290B 1-D6
SPRAG, Transmission Overdrive Clutch [4-SPEED MANUAL] 4.468 5-A20
SPRING KIT, Brake Shoe Hold Down ... 5.043 6-C13
SPRING KIT, Brake Shoe Retractor 5.026 6-C13
SPRING KIT, Engine Valve [8-CYLINDER] 0.303 1-E26
SPRING KIT, Steering Column 6.514 7-A20
SPRING KIT, Steering Column 6.521 7-B8
SPRING, A/C Control 9.278 8-D4
SPRING, A/C Electric Control 9.275 8-C27
SPRING, Brake Master Cylinder Piston Return 4.655 6-A15
SPRING, Brake Pedal Pull Back 4.639 6-A8
SPRING, Brake Shoe Retractor 5.026 6-C13
SPRING, Capsule/Headlamp Adjuster .. 2.737 3-D28
SPRING, Capsule/Headlamp Dimmer .. 2.459 3-C9
SPRING, Capsule/Headlamp Mounting . 2.726 3-D26
SPRING, Cargo Compartment and Floor 12.977 10-B5
SPRING, Door Lock Cylinder 10.553 9-B9
SPRING, Door Outside Lock Cylinder .. 10.552 9-B8
SPRING, Engine Clutch Pedal Return [8-CYLINDER] 0.844 1-F18
SPRING, Engine Oil Filter 1.637 2-B15
SPRING, Engine Oil Pressure 1.609 2-B6
SPRING, Engine Valve [8-CYLINDER] . 0.303 1-E26
SPRING, Floor Console Compartment Door 10.242 9-A26
SPRING, Folding Top Center 14.215 11-A20
SPRING, Front Chassis 7.412 7-C19
SPRING, Front Seat Adjuster 11.561 9-C24
SPRING, Front Seat Bolster 11.379 9-C18
SPRING, Fuel Tank Filler Door 12.945 10-B3
SPRING, Generator Brush 2.286 3-B15
SPRING, Hood Upper Latch 8.083 8-A14
SPRING, Horn Button 2.819 3-E5
SPRING, Hydraulic Brake Combo/Monitering Valve 4.690 6-A23
SPRING, Ignition Switch Warning, Lock, Headlamp, Theft Deterrent or Rear/Side Object 2.195 3-A21

© GENERAL MOTORS SERVICE PARTS OPERATIONS-CHEVROLET-14Y

SPRING, Instrument Panel Compartment Door Lock 10.268 9–B2
SPRING, Parking Brake Apply Lever ... 4.606 6–A7
SPRING, Parking Brake Cable 4.784 6–B5
SPRING, Parking, Turn Signal & Cornering Lamp 2.587 3–D18
SPRING, Rear Compartment Floor 12.981 10–B7
SPRING, Rear Hatch Window 12.249 10–A16
SPRING, Rear Spring 7.503 7–C24
SPRING, Rear Window Defogger 9.776 8–E11
SPRING, Seat Adjuster 11.581 9–C27
SPRING, Side Door Lock 10.474 9–B5
SPRING, Side Marker and Hazard Flasher 2.575 3–D15
SPRING, Starter Motor Brush 2.053 3–A16
SPRING, Starter Motor Drive Shift 2.108 3–A17
SPRING, Steering Column Housing 6.500 7–A11
SPRING, Steering Column 6.514 7–A20
SPRING, Steering Column 6.521 7–B8
SPRING, Steering Pump Control 6.624 7–B16
SPRING, Steering Pump 6.612 7–B15
SPRING, Steering Wheel 6.512 7–A19
SPRING, Transmission Clutch [AUTOMATIC] 4.163 5–C20
SPRING, Transmission Clutch [AUTOMATIC] 4.164 5–C26
SPRING, Transmission Clutch [AUTOMATIC] 4.167 5–C28
SPRING, Transmission Clutch [AUTOMATIC] 4.180 5–D3
SPRING, Transmission Control Lever [4–SPEED MANUAL] 4.008 5–A12
SPRING, Transmission Control Valve [AUTOMATIC] 4.262 5–D17
SPRING, Transmission Main Control Valve Body [AUTOMATIC] 4.265 5–D18
SPRING, Transmission Oil Pump [AUTOMATIC] 4.226 5–D10
SPRING, Transmission Overdrive [4–SPEED MANUAL] 4.461 5–A19
SPRING, Transmission Overdrive Accumulator [4–SPEED MANUAL] .. 4.462 5–A19
SPRING, Transmission Overdrive Clutch [4–SPEED MANUAL] 4.468 5–A20
SPRING, Transmission Overdrive Control [4–SPEED MANUAL] 4.495 5–A23
SPRING, Transmission Overdrive Oil Cooler [4–SPEED MANUAL] 4.457 5–A18
SPRING, Transmission Park Lock [AUTOMATIC] 4.295 5–D26
SPRING, Transmission Rear Servo Piston [AUTOMATIC] 4.246 5–D16
SPRING, Transmission Servo & Accumulator [AUTOMATIC] 4.233 5–D15
SPRING, Transmission Shift Shaft Detent [4–SPEED MANUAL] 4.311 5–A14
SPRING, Transmission Synchronizer [4–SPEED MANUAL] 4.413 5–A17
SPRING, Turn Signal Switch Cancelling 2.696 3–E6
SPRING, Vacuum Power Brake Booster Cylinder 4.924 6–B13
SPRING, Wheel Brake Cylinder/Caliper 4.665 6–A16
SPRING, Windshield Sunshade 10.219 9–A18
SPROCKET, Engine Camshaft [8–CYLINDER] 0.736 1–F14
SPROCKET, Engine Crankshaft/Timing [8–CYLINDER] 0.728 1–F13
SPROCKET, Engine Timing [8–CYLINDER] 0.724 1–F12
STABILIZER, Front Door Window 10.685 9–B11
STARTER, Starter Motor 2.041 3–A10
STATOR, Generator Field 2.310 3–B17
STEM, Tire Valve and Cover Lock 5.675 6–D15
STIFFENER, Bumper/Fascia Face 7.631 7–C28
STOP, Air Brake Compressor 4.654 6–B6
STOP, Capsule/Headlamp Mounting ... 2.726 3–D26
STOP, Folding Top Compartment 12.170 10–A10
STOP, Folding Top Hinge 14.310 11–A21
STOP, Front Door Window 10.716 9–B14
STOP, Transmission Control Valve [AUTOMATIC] 4.262 5–D17
STOP, Transmission Oil Filler [AUTOMATIC] 4.133 5–C17
STOP, Transmission Overdrive [4–SPEED MANUAL] 4.461 5–A19
STOP, Windshield Wiper Arm 10.147 9–A10
STOP, Windshield Wiper Blade 10.146 9–A9
STOVE, Air Cleaner Air Intake 3.417 4–B11
STRAINER, Brake Master 4.650 6–A9
STRAINER, Fuel Tank Gage 3.110 4–A12
STRAP, A/C Compressor 9.242 8–C24
STRAP, Air Distributor 9.786 8–E12
STRAP, Battery (Negative) 2.341 3–B20
STRAP, Body Wiring 13.090 10–C7
STRAP, Chassis/Engine Wiring Harness 2.559 3–D11
STRAP, Distributor 2.400 3–C7
STRAP, Engine Crankcase 1.745 2–B9
STRAP, Folding Top Assist 14.475 11–A22
STRAP, Folding Top Compartment 12.170 10–A10
STRAP, Front Seat Cushion 11.419 9–C21
STRAP, Fuel Tank 3.022 4–A8
STRAP, Heater Core 8.854 8–A28
STRAP, Instrument Panel 10.260 9–A28
STRAP, Radio Antenna 9.647 8–D11
STRAP, Radio Static Suppression 9.663 8–D22
STRAP, Rear Compartment Trim 15.222 11–D6
STRAP, Spare Wheel 7.629 7–C25
STRAP, Steering Gear/Pump Oil 6.672 7–B19
STRAP, Steering Pump 6.635 7–B16
STRIKER, Door Lock Striker 10.569 9–B10
STRIKER, Folding Top Compartment ... 12.170 10–A10
STRIKER, Folding Top Hinge 14.310 11–A21
STRIKER, Instrument Panel Compartment Door Lock and Console Compartment Door Lock ... 10.268 9–B3
STRIKER, Rear Compartment Floor 12.981 10–B7
STRIKER, Rear Hatch Window 12.237 10–A15
STRIP, Convertible and Hard Top 13.346 10–C15
STRIP, Floor Pan 12.980 10–B5
STRIP, Rear Compartment Floor 12.981 10–B7
STRIPE PKG, Body Side (Non–Production) 21.543B 1–D12
STRIPE, Bumper/Fascia 7.832 7–D4
STRIPE, Folding Top Compartment 12.170 10–A10
STRIPE, Front Fender and Body Ornamentation 8.132 8–A14
STRIPE, Front Side Door 12.112 10–A8
STRIPE, Hood Panel Ornamentation ... 8.055 8–A10

© GENERAL MOTORS SERVICE PARTS OPERATIONS–CHEVROLET–14Y

STRIPE, Radiator 1.263 2–A25
STRIPE, Rear Compartment Lid, Rear End Panel and Tailgate 12.182 10–A14
STRIPE, Rear Quarter Panel 12.116 10–A9
STRIPE, Roof Panel 12.812 10–A24
STRUT, Hood Panel 8.015 8–A8
STRUT, Rear Hatch Window 12.187 10–A14
STUD KIT, Vacuum Power Brake Booster 4.898 6–B7
STUD, A/C Evaporator 9.211 8–C17
STUD, Air Injection Reactor Pump and Multi–Function Air Compressor 3.655 4–C10
STUD, Air Suspension Height Sensor .. 7.477 7–C23
STUD, Bumper/Fascia 7.833 7–D8
STUD, Catalytic Converter 3.690 4–D4
STUD, Chassis/Engine Wiring Harness . 2.559 3–D11
STUD, Clutch Hydraulic Release Slave/Actuator [8–CYLINDER] 0.780 1–F15
STUD, Emission Control System 3.671 4–C19
STUD, Emission System 3.675 4–C21
STUD, Engine Camshaft & Valve Rocker Cover [8–CYLINDER] 0.413 1–F2
STUD, Engine Clutch Housing [8–CYLINDER] 0.683 1–F11
STUD, Engine Clutch Release Fork [8–CYLINDER] 0.796 1–F17
STUD, Engine Coolant Pump 1.073 2–A14
STUD, Engine Coolant Pump 1.079 2–A14
STUD, Engine Coolant Pump 1.113 2–A16
STUD, Engine Coolant 1.153 2–A17
STUD, Engine Crankcase Ventilation ... 1.762 2–B11
STUD, Engine Crankcase Ventilator 1.780 2–B12
STUD, Engine Front Cover [8–CYLINDER] 0.206 1–E22
STUD, Engine Main Bearing Cap [8–CYLINDER] 0.056 1–E18
STUD, Engine Oil Cooler 1.540 2–B5
STUD, Engine Oil Filter 1.840 2–B15
STUD, Engine Oil Pan 1.428 2–B2
STUD, Engine Rear Main Bearing [8–CYLINDER] 0.137 1–E20
STUD, Engine Valve Adjusting [8–CYLINDER] 0.429 1–F3
STUD, Exhaust Pipe 3.613 4–C8
STUD, Front Door Window 10.685 9–B11
STUD, Front Wheel Lower Control Arm . 6.174 7–A9
STUD, Fuel Injection 3.300 4–A22
STUD, Fuel Injection 3.330 4–A24
STUD, Fuel Pump 3.901 4–D18
STUD, Heater Blower Motor 8.857 8–B2
STUD, Heater Core 8.854 8–A28
STUD, Hood Panel Closing 8.024 8–A10
STUD, Hood Panel 8.015 8–A8
STUD, Hydraulic Power Brake Booster . 4.845 6–B6
STUD, Ignition Coil Mounting 2.163 3–A18
STUD, Ignition Switch 2.188 3–A20
STUD, Inside Rear View 10.185 9–A12
STUD, Intake & Exhaust Manifold 3.275 4–A20
STUD, Rear Hatch Window 12.187 10–A14
STUD, Shock Absorber/Strut 7.347 7–C18
STUD, Spark Plug Ignition Wire 2.251 3–A26
STUD, TBI/Carburetor 3.724 4–D10
STUD, Transmission Case [6–SPEED MANUAL] 4.105 5–B7
STUD, Transmission Control Lever [AUTOMATIC] 4.006 5–C10
STUD, Transmission Mount and Support [6–SPEED MANUAL] 4.085 5–B7
STUD, Transmission Mount and Support [AUTOMATIC] 4.085 5–C13
STUD, Upper Control Arm Shaft 6.164 7–A8
SUNSHADE KIT, Windshield Sunshade . 10.203 9–A17
SUNSHADE, Windshield Sunshade 10.203 9–A17
SUPPORT KIT, Starter Motor Brush 2.052 3–A15
SUPPORT, Accelerator Pedal Lever 3.454 4–B13
SUPPORT, Body Rear End (Plastic Laminated) 12.986 10–B10
SUPPORT, Bumper/Fascia 7.833 7–D8
SUPPORT, Bumper/Fascia 7.836 7–D9
SUPPORT, Electronic Brake Control ... 4.720 6–A25
SUPPORT, Emission System 3.675 4–C21
SUPPORT, Fender Wheelhouse 8.155 8–A18
SUPPORT, Floor Pan 12.980 10–B5
SUPPORT, Folding Top Back Window .. 13.395 10–C17
SUPPORT, Front Body Hinge Pillar 12.040 10–A26
SUPPORT, Front Fender Inner Wheel House 8.153 8–A16
SUPPORT, Front Propeller Shaft 5.546 6–D4
SUPPORT, Front Seat Back Reclining .. 11.377 9–C15
SUPPORT, Front Seat Bolster 11.379 9–C18
SUPPORT, Hood Latch 8.080 8–A13
SUPPORT, Hose (Radiator, Heater, A/C) 1.166 2–A18
SUPPORT, Instrument Panel 10.230 9–A18
SUPPORT, License Plate 7.800 7–C27
SUPPORT, Radiator 1.219 2–A20
SUPPORT, Radiator 1.270 2–A26
SUPPORT, Rear Compartment Trim 15.222 11–D6
SUPPORT, Rear Floor 15.306 11–D10
SUPPORT, Rear Seat to Back Window Panel 15.024 11–D6
SUPPORT, Rear Wheelhouse 12.944 10–B2
SUPPORT, Spark Plug Ignition Wire 2.251 3–A26
SUPPORT, Stabilizer Shaft 7.242 7–C13
SUPPORT, Steering 6.518 7–A21
SUPPORT, Tail Lamp Mounting 2.662 3–D20
SUPPORT, Transmission Clutch [AUTOMATIC] 4.166 5–C27
SUPPORT, Transmission Output/Counter Shaft or Carrier [AUTOMATIC] 4.175 5–D2
SUPPORT, Windshield Sunshade 10.219 9–A18
SWITCH KIT, Inflatable Restraint System 14.865 11–B11
SWITCH PLATE, Instrument Cluster 9.744 8–E6
SWITCH, A/C Compressor (Internal Parts) 9.172 8–C13
SWITCH, A/C Electric Control 9.275 8–C27
SWITCH, Back Up Lamp 2.698 3–D24
SWITCH, Brake Pressure Warning 4.663 6–A16
SWITCH, Capsule/Headlamp Dimmer .. 2.459 3–C9
SWITCH, Capsule/Headlamp/Fog Lamp 2.465 3–C23
SWITCH, Courtesy Lamp and Door Ajar 11.950 9–C28
SWITCH, Cruise Control Selector 3.883 4–D15
SWITCH, Cruise Control 3.887 4–D17
SWITCH, Door Electric and Vacuum Locks 10.485 9–B5
SWITCH, Door Window 10.777 9–B14
SWITCH, Driver Information Display ... 9.768 8–E10
SWITCH, Early Fuel Evaporation Control 3.140 4–A13
SWITCH, Electronic Brake Control 4.710 6–A23

© GENERAL MOTORS SERVICE PARTS OPERATIONS–CHEVROLET–14Y

SWITCH, Electronic Control Suspension 7.450 7–C21
SWITCH, Emission Control System 3.670 4–C11
SWITCH, Engine Air Cooling (Electrical) 1.055 2–A8
SWITCH, Engine Oil Pressure/Temperature 1.800 2–B12
SWITCH, Folding Top 14.483 11–A22
SWITCH, Front Seat Adjuster 11.558 9–C23
SWITCH, Front Seat Bolster 11.379 9–C18
SWITCH, Front Seat Lumbar 11.378 9–C17
SWITCH, Fuel Injection 3.300 4–A22
SWITCH, Fuel Pump Pressure 3.910 4–D19
SWITCH, Heater Control 8.852 8–A28
SWITCH, Horn Button 2.819 3–E5
SWITCH, Ignition Switch Warning, Lock, Headlamp, Theft Deterrent or Rear/Side Object 2.195 3–A21
SWITCH, Ignition Switch 2.188 3–A20
SWITCH, Instrument Cluster 9.744 8–E6
SWITCH, Instrument Panel Compartment Lamp 10.275 9–B3
SWITCH, Parking Brake Indicator 4.589 6–A7
SWITCH, Radiator Tank 1.203 2–A19
SWITCH, Rear Hatch Window 12.243 10–A15
SWITCH, Rear View Mirror 10.166 9–A15
SWITCH, Rear Window Defoggar 9.778 8–E11
SWITCH, Safety Starting Switch Or Speed Sensing [6–SPEED MANUAL] 4.054 5–B6
SWITCH, Starter Motor 2.100 3–A17
SWITCH, Stop Lamp Switch 2.447 3–C8
SWITCH, Transmission Converter [AUTOMATIC] 4.115 5–C14
SWITCH, Transmission Main Control Valve Body [AUTOMATIC] 4.265 5–D18
SWITCH, Transmission Overdrive [4–SPEED MANUAL] 4.461 5–A19
SWITCH, Transmission Overdrive [4–SPEED MANUAL] 4.480 5–A22
SWITCH, Transmission Safety Start/Warning [AUTOMATIC] 4.054 5–C13
SWITCH, Transmission Safety Starting Switch Or Speed Sensing [4–SPEED MANUAL] 4.054 5–A13
SWITCH, Turn Signal Lamp 2.895 3–E6
SWITCH, Underhood 8.890 8–B3
SWITCH, Vehicle (Non–Production) ... 21.513B 1–D10
SWITCH, Windshield Wiper Control 10.163 9–A12
SWITCH, Windshield Wiper Motor 10.150 9–A10
SWIVEL, Transmission Shift Shaft Lever Rod [4–SPEED MANUAL] 4.037 5–A13
SYNCHRONIZER, Transmission Synchronizer [4–SPEED MANUAL] . 4.380 5–A16

T

TAG, Rear Axle or Final Drive Filler and Drain 5.400 6–C16
TANK, A/C Vacuum and Temperature .. 9.281 8–D7
TANK, Engine Coolant Recovery 1.240 2–A24
TANK, Fuel 3.001 4–A8
TANK, Multi Port Fuel Injection Idle Air . 3.338 4–B7
TANK, Radiator 1.219 2–A20
TAPE, Body Wiring 13.090 10–C7
TAPE, Bumper/Fascia 7.832 7–D4
TAPE, Convertible and Hard Top 13.346 10–C15
TAPE, Convertible Top Cover 13.347 10–C16
TAPE, Electronic Control Suspension .. 7.450 7–C21
TAPE, Radio and Speaker 9.656 8–D20
TAPE, Radio Mounting 9.667 8–D24
TAPE, Roof Drip 12.075 10–A8
TEE, Engine Crankcase 1.745 2–B9
TEE, Heater 8.846 8–A27
TELLTALE, Instrument Cluster Warning . 9.765 8–E9
TEMPLATE, Engine Oil Drain (Non–Production) 21.241B 1–D5
TENSIONER, Engine Fan Coolant 1.060 2–A11
TENSIONER, Engine Timing [8–CYLINDER] 0.724 1–F12
TERMINAL BLOCK, Distributor (also Knock Sensor) 2.383 3–C4
TERMINAL KIT, Generator 2.313 3–B18
TERMINAL, A/C Evaporator Blower 9.215 8–C18
TERMINAL, Chassis Electrical 2.530 3–D2
TERMINAL, Generator 2.313 3–B18
TERMINAL, Heater Blower Motor 8.855 8–B2
THERMOSTAT, Engine Coolant Temperature 1.246 2–A25
THROTTLE BODY, Throttle Body Injection 3.725 4–D10
THROTTLE, Fuel Injection Air Meter ... 3.335 4–A28
THROTTLE, Throttle Body Injection 3.725 4–D10
TOOL PKG, Portable (Non–Production) 21.551B 1–D13
TOOL, Engine Oil Drain (Non–Production) 21.241B 1–D5
TOP, Convertible and Hard Top 13.346 10–C15
TOWER, Horn Button 2.819 3–E5
TRANSMISSION, Automatic [AUTOMATIC] 4.003 5–C9
TRANSMISSION, Manual (4 Speed) [4–SPEED MANUAL] 4.003 5–A12
TRANSMISSION, Manual (6–Speed) [6–SPEED MANUAL] 4.003 5–B5
TRANSMISSION, Windshield Wiper Transmission 10.159 9–A12
TRANSMITTER PKG, Garage Door Opener (Production) 21.502A 1–D10
TRANSMITTER PKG, Vehicle (Non–Production) 21.513B 1–D10
TRANSMITTER, Door Electric and Vacuum Locks 10.485 9–B5
TRAY, Battery 2.333 3–B20
TRAY, Floor Console Compartment Door 10.242 9–A26
TRAY, Rear Compartment Floor 12.981 10–B7
TRIM, Front Door Trim 14.685 11–A23
TRIM, Front Seat Back and Back of Back 14.800 11–B2
TRIM, Front Seat Cushion 14.880 11–C3
TRUNNION, Inside Rear View 10.185 9–A12
TUBE KIT, Fuel Injection 3.330 4–A24
TUBE, A/C Blower Motor Cooling 9.218 8–C22
TUBE, A/C Refrigerant (All Metal) 9.220 8–C22
TUBE, Air Cleaner Air Intake 3.417 4–B11
TUBE, Early Fuel Evaporation 3.145 4–A14
TUBE, Engine Crankcase Ventilation ... 1.762 2–B11
TUBE, Engine Fuel Intake Manifold 3.265 4–A18
TUBE, Engine Oil Level 1.516 2–B4
TUBE, Fuel Injection 3.330 4–A24
TUBE, Heater Motor Cooling 8.659 8–B2

© GENERAL MOTORS SERVICE PARTS OPERATIONS–CHEVROLET–14Y

TUBE, Radiator Filler 1.210 2–A20
TUBE, Shroud and Dash and Vent Duct Panel 12.804 10–A16
TUBE, Steering Gear Oil Return 6.671 7–B18
TUBE, Transmission Front [6–SPEED MANUAL] 4.356 5–B9
TUBE, Transmission Oil Filler [AUTOMATIC] 4.133 5–C17
TUBE, Transmission Overdrive Oil Cooler [4–SPEED MANUAL] 4.457 5–A18
TUBE, Transmission Overdrive Oil Pan [4–SPEED MANUAL] 4.456 5–A18
TUBE, Vacuum Power Brake 4.930 6–B13
TUMBLER, Door Lock Cylinder 10.553 9–B9
TUMBLER, Instrument Panel Compartment Door Lock 10.266 9–B2
TUMBLER, Rear Compartment Floor ... 12.981 10–B7

U

UNION, Air Suspension Compressor Tank 7.465 7–C23

V

VALVE BODY, Vacuum Power Brake Booster 4.902 6–B12
VALVE KIT, Fuel Injection 3.330 4–A24
VALVE KIT, Multi Port Fuel Injection Idle Air 3.338 4–B7
VALVE KIT, Steering Gear Hydraulic 6.550 7–B9
VALVE KIT, Throttle Body/Carburetor ... 3.820 4–D13
VALVE KIT, Transmission Main Control Valve Body [AUTOMATIC] 4.265 5–D18
VALVE, A/C Compressor (Internal Parts) 9.172 8–C13
VALVE, A/C Compressor 9.177 8–C14
VALVE, A/C Control 9.280 8–D5
VALVE, Air Cleaner Controls 3.415 4–B11
VALVE, Air Distributor 9.786 8–E12
VALVE, Air Inlet 9.784 8–E12
VALVE, Brake Master Cylinder Proportioning 4.652 6–A14
VALVE, Brake Master 4.650 6–A9
VALVE, Clutch Hydraulic Release Slave/Actuator [8–CYLINDER] 0.780 1–F15
VALVE, Cruise Control Vacuum 3.886 4–D16
VALVE, Cruise Control 3.885 4–D15
VALVE, Electronic Brake Control 4.730 6–B4
VALVE, Emission Control System 3.670 4–C11
VALVE, Engine Air Cooling Control 1.035 2–A8
VALVE, Engine Crankcase 1.745 2–B9
VALVE, Engine Oil Cooler 1.540 2–B5
VALVE, Engine Oil Filter 1.837 2–B15
VALVE, Engine Oil Pressure 1.609 2–B6
VALVE, Exhaust [8–CYLINDER] 0.297 1–E26
VALVE, Front Seat Lumbar 11.378 9–C17
VALVE, Fuel Injection Air Meter 3.335 4–A28
VALVE, Fuel Tank Evaporator Control (Engine End) 3.130 4–A12
VALVE, Heater Coolant Flow 8.866 8–B2
VALVE, Heater Water Temperature Control 9.795 8–E13
VALVE, Hydraulic Brake Combo/Monitering Valve 4.690 6–A23
VALVE, Intake [8–CYLINDER] 0.296 1–E25
VALVE, Multi Port Fuel Injection Idle Air . 3.338 4–B7
VALVE, Rear Body Lock Pillar ..... 12.0[illegible] 10–A28
VALVE, Steering Pump Control 6.624 7–B16
VALVE, Temperature Control 8.858 8–B2
VALVE, Transmission Clutch [AUTOMATIC] 4.169 5–C28
VALVE, Transmission Clutch [AUTOMATIC] 4.180 5–D3
VALVE, Transmission Control Valve [AUTOMATIC] 4.262 5–D17
VALVE, Transmission Detent [AUTOMATIC] 4.279 5–D25
VALVE, Transmission Governor [AUTOMATIC] 4.256 5–D17
VALVE, Transmission Input and Turbine Shaft [AUTOMATIC] 4.123 5–C16
VALVE, Transmission Main Control Valve Body [AUTOMATIC] 4.265 5–D18
VALVE, Transmission Oil Pump [AUTOMATIC] 4.226 5–D10
VALVE, Transmission Overdrive Oil Cooler [4–SPEED MANUAL] 4.457 5–A18
VALVE, Transmission Servo & Accumulator [AUTOMATIC] 4.228 5–D12
VALVE, Transmission Solenoid [AUTOMATIC] 4.122 5–C15
VALVE, Transmission Throttle Valve [AUTOMATIC] 4.275 5–D24
VALVE, Vacuum Power Brake Booster Check 4.955 6–B15
VALVE, Vacuum Power Brake Booster Valve Body 4.940 6–B14
VALVE, Wheel Brake Cylinder/Caliper Bleed 4.666 6–A20
VALVE, Windshield Defroster 9.779 8–E11
VANE KIT, Steering Pump 6.610 7–B15
VANE, Transmission Oil Pump [AUTOMATIC] 4.226 5–D10
VENT, Rear Axle 5.387 6–C15
VENT, Transmission Case [6–SPEED MANUAL] 4.104 5–B7
VENTILATOR, Transmission Case [4–SPEED MANUAL] 4.104 5–A13

W

WARNING PKG, Buzzer (Non–Production) 21.239B 1–D5
WASHER KIT, A/C Compressor 9.170 8–C9
WASHER, A/C Condenser 9.190 8–C16
WASHER, Accelerator Pedal Lever 3.454 4–B13
WASHER, Accelerator Pedal Mounting . 3.452 4–B13
WASHER, Air Injection Reactor Pump and Multi–Function Air Compressor . 3.650 4–C10
WASHER, Battery Cable 2.343 3–B21
WASHER, Body Rear End (Plastic Laminated) 12.986 10–B10
WASHER, Brake Master Cylinder Adjusting 4.662 6–A15

© GENERAL MOTORS SERVICE PARTS OPERATIONS–CHEVROLET–14Y

WASHER, Brake Shoe Anchor 5.075 6–C13
WASHER, Bumper/Fascia 7.833 7–D8
WASHER, Chassis/Engine Wiring Harness 2.559 3–D11
WASHER, Convertible and Hard Top ... 13.346 10–C15
WASHER, Cruise Control 3.865 4–D15
WASHER, Differential Carrier 5.506 6–C24
WASHER, Differential Pinion Thrust 5.542 6–D3
WASHER, Distributor Drive Gear 2.379 3–C4
WASHER, Distributor Lubrication 2.364 3–C2
WASHER, Door Lock Striker 10.571 9–B10
WASHER, Door Outside Lock Cylinder . 10.551 9–B8
WASHER, Engine Camshaft & Valve Rocker Cover [8–CYLINDER] 0.413 1–F2
WASHER, Engine Camshaft gear [8–CYLINDER] 0.738 1–F14
WASHER, Engine Camshaft Thrust [8–CYLINDER] 0.533 1–F5
WASHER, Engine Clutch Housing [8–CYLINDER] 0.683 1–F11
WASHER, Engine Clutch Pedal Shaft [8–CYLINDER] 0.837 1–F18
WASHER, Engine Coolant Recovery ... 1.240 2–A24
WASHER, Engine Crankshaft And Camshaft Balancer [8–CYLINDER] . 0.659 1–F8
WASHER, Engine Crankshaft Pulley and Balancer [8–CYLINDER] 0.662 1–F9
WASHER, Engine Cylinder Head [8–CYLINDER] 0.263 1–E24
WASHER, Engine Fan Coolant 1.060 2–A11
WASHER, Engine Front Cover [8–CYLINDER] 0.206 1–E22
WASHER, Engine Main Bearing Cap [8–CYLINDER] 0.153 1–E21
WASHER, Engine Mounting [8–CYLINDER] 0.029 1–E16
WASHER, Engine Oil Filter 1.840 2–B15
WASHER, Engine Vacuum Pump 3.280 4–A21
WASHER, Folding and Hard Top Front Rail 14.080 11–A18
WASHER, Folding Top Compartment .. 12.170 10–A10
WASHER, Folding Top Hinge 14.310 11–A21
WASHER, Folding Top Side Roof Rail .. 14.162 11–A20
WASHER, Front Door Window 10.685 9–B11
WASHER, Front Fender Inner Wheel House 8.153 8–A16
WASHER, Front Fender 8.141 8–A15
WASHER, Front Propeller Shaft 5.546 6–D4
WASHER, Front Seat Adjuster 11.561 9–C24
WASHER, Front Seat Back Lock 11.390 9–C19
WASHER, Front Seat Bolster 11.379 9–C18
WASHER, Front Wheel Lower Control Arm 6.174 7–A9
WASHER, Fuel Tank Gage 3.110 4–A12
WASHER, Generator Rotor Shaft 2.280 3–B15
WASHER, Hood External Hold Down .. 8.036 8–A10
WASHER, Hood Hinge 8.016 8–A9
WASHER, Hood Panel Closing 8.024 8–A10
WASHER, Hub or Drum, Front and Rear Wheel 5.812 6–D13
WASHER, Inflatable Restraint System .. 14.865 11–B11
WASHER, Instrument Cluster Warning . 9.765 8–E9
WASHER, Instrument Panel Fuel Gage . 3.108 4–A12
WASHER, Multi Port Fuel Injection Idle Air 3.338 4–B7
WASHER, Parking Brake Cable 4.785 6–B5
WASHER, Pinion Shaft Lock 5.518 6–C26
WASHER, Propeller Shaft Pinion Flange 5.595 6–D5
WASHER, Propeller Shaft Pinion 5.545 6–D4
WASHER, Rear Axle Control Arm 5.383 6–C14
WASHER, Rear Axle Tie Rod 5.418 6–C17
WASHER, Rear Axle 5.416 6–C16
WASHER, Rear Hatch Window 12.184 10–A14
WASHER, Rear Wheel 5.806 6–D11
WASHER, Roof Panel 12.810 10–A18
WASHER, Seat Belt 14.875 11–B14
WASHER, Shock Absorber/Strut 7.347 7–C18
WASHER, Shock Absorber/Strut 7.389 7–C19
WASHER, Spark Plug Ignition Wire 2.251 3–A26
WASHER, Starter Motor Thrust 2.063 3–A16
WASHER, Steering Column Attaching .. 6.760 7–B20
WASHER, Steering Column 6.521 7–B8
WASHER, Steering Gear Mounting 6.509 7–A19
WASHER, Steering Knuckle Upper Control Arm 6.163 7–A8
WASHER, Steering Knuckle Upper Control Arm 6.178 7–A9
WASHER, Steering Knuckle 6.009 7–A6
WASHER, Sunroof Frame 12.809 10–A17
WASHER, Tire Valve and Cover Lock .. 5.875 6–D15
WASHER, Transmission Clutch (Low & Reverse) [AUTOMATIC] 4.189 5–D4
WASHER, Transmission Countershaft Gear Bearing [4–SPEED MANUAL] . 4.423 5–A17
WASHER, Transmission Extension [6–SPEED MANUAL] 4.319 5–B8
WASHER, Transmission First/Reverse Gear [4–SPEED MANUAL] 4.419 5–A17
WASHER, Transmission Mount and Support [4–SPEED MANUAL] 4.085 5–A13
WASHER, Transmission Oil Pump [AUTOMATIC] 4.226 5–D10
WASHER, Transmission Output/Counter Shaft or Carrier [AUTOMATIC] 4.176 5–D3
WASHER, Transmission Overdrive [4–SPEED MANUAL] 4.461 5–A19
WASHER, Transmission Overdrive Case [4–SPEED MANUAL] 4.455 5–A18
WASHER, Transmission Overdrive Clutch [4–SPEED MANUAL] 4.468 5–A20
WASHER, Transmission Overdrive Oil Cooler [4–SPEED MANUAL] 4.457 5–A18
WASHER, Transmission Overdrive Out/Input [4–SPEED MANUAL] 4.465 5–A20
WASHER, Transmission Overdrive Sun Gear Cover [4–SPEED MANUAL] ... 4.472 5–A22
WASHER, Transmission Park Lock [AUTOMATIC] 4.295 5–D26
WASHER, Transmission Parking Lock [4–SPEED MANUAL] 4.295 5–A14
WASHER, Transmission Reverse Idler [4–SPEED MANUAL] 4.430 5–A17
WASHER, Transmission Reverse Idler Gear [4–SPEED MANUAL] 4.437 5–A18
WASHER, Transmission Servo & Accumulator [AUTOMATIC] 4.233 5–D15
WASHER, Transmission Shift Control Cable [AUTOMATIC] 4.047 5–C11
WASHER, Transmission Sun Gear [AUTOMATIC] 4.159 5–C19
WASHER, Upper Control Arm Shaft 6.164 7–A8

© GENERAL MOTORS SERVICE PARTS OPERATIONS–CHEVROLET–14Y

WASHER, Vacuum Power Brake Booster Cylinder 4.906 6–B12
WASHER, Wheel Brake Cylinder/Caliper 4.665 6–A16
WASHER, Windshield Washer 10.154 9–A11
WEATHERSTRIP, Convertible and Hard Top 13.346 10–C15
WEATHERSTRIP, Door Weatherstrip ... 10.694 9–B11
WEATHERSTRIP, Folding Top Compartment 12.170 10–A10
WEATHERSTRIP, Folding Top Side Roof Rail Rear 14.260 11–A21
WEATHERSTRIP, Front Door Window Glass Channel (Outer & Inner) 10.710 9–B12
WEATHERSTRIP, Rear Hatch Window .. 12.269 10–A15
WEATHERSTRIP, Roof Panel 12.810 10–A18
WEATHERSTRIP, Windshield Frame ... 12.807 10–A17
WEDGE, Steering Column 6.514 7–A20
WEIGHT, Engine Flywheel [8–CYLINDER] 0.669 1–F10
WEIGHT, Wheel Balance 5.805 6–D8
WHEEL, Front or Rear 5.803 6–D6
WHEEL, Speedometer Drive [AUTOMATIC] 4.343 5–E13
WHEEL, Steering 6.513 7–A19
WINDLACE, Rear Door Belt Trim Finish & Window Garnish 11.089 9–C7
WINDLACE, Side Door Opening Trim .. 14.665 11–A23
WINDOW PKG, Roof (Production) 21.552A 1–D13
WINDOW PKG, Roof Panel 12.810 10–A18
WINDOW PKG, Roof 21.552 1–D13
WINDOW, Front Door Window 10.681 9–B10
WINDOW, Rear Hatch Window 12.180 10–A13
WINDOW, Rear Window 11.204 9–C12
WINDSHIELD, Windshield Glass 10.027 9–A9
WIPER, Windshield Wiper Blade 10.146 9–A9
WIRE KIT, Spark or Glow Plug Ignition . 2.239 3–A22
WIRE, Body Wiring 13.090 10–C7
WIRE, Capsule/Headlamp/Fog Lamp .. 2.727 3–D27
WIRE, Chassis Wiring 2.480 3–C9
WIRE, Electronic Brake Control 4.720 6–A25
WIRE, Front Seat Back Lock 11.390 9–C19
WIRE, Front Seat Back Reclining 11.377 9–C15
WIRE, Front Seat Back 11.373 9–C12
WIRE, Front Seat Cushion 11.419 9–C21
WIRE, Horn Lead 2.659 3–E5
WIRE, Horn 2.815 3–E4
WIRE, Radio and Speaker 9.656 8–D20
WIRE, Rear Window Defogger 9.778 8–E11
WIRE, Spark Plug or Coil 2.240 3–A22
WIRE, Tail Lamp 2.694 3–D22
WIRE, Transmission Overdrive [4–SPEED MANUAL] 4.461 5–A19
WRENCH, Convertible and Hard Top .. 13.346 10–C15
WRENCH, Roof Panel 12.810 10–A18
WRENCH, Wheel, Jack and Miscellaneous Wrench 8.821 8–A22

Y

YOKE, Propeller Shaft Pinion 5.545 6–D4
YOKE, Rear Axle Shaft 5.425 6–C19
YOKE, Steering Column 6.524 7–B9

© GENERAL MOTORS SERVICE PARTS OPERATIONS–CHEVROLET–14Y

MICROFICHE INDEX

GROUPS 0.000 & 21.000

FICHE 1 OF 11

GROUP	DESCRIPTION	STARTING GRID LOCATION PARTS	ILLUSTRATIONS
–	GENERAL INFORMATION	1–A2	1–G2
–	ALPHABETICAL INDEX	1–B13	N.A.
0.000	8–CYLINDER ENGINE	1–E2	1–G5
21.000	ACCESSORY REFERENCE LIST	1–D2	N.A.
–	OUT OF FICHE CALLS	N.A.	1–L13

1–D1

21.060A CARRIER PKG, Roof & Deck Lid (Production)

86-96	Y67	12341091	1	165.60	CARRIER PKG, R/CMPT LID LUGG (BLACK) (12.815)

21.061B COVER PKG, Luggage Carrier (Non-Production)

90-94	Y PAINTED R/CMPT LUGG CARR (V56)	12343189	1	161.90	COVER PKG, LUGG (GM TRAVELER) (CARRIER SLATS MUST BE AT LEAST 20" IN LENGTH) (12.815)

21.070A CLEANER PKG, Stereo Tape/CD Disc (Production)

84-96	Y	12344789	1	9.95	CLEANER PKG, TAPE (CASSETTE) (09.670)

21.099B COMPASS PKG, Auto (Non-Production)

84-96	Y	983335	1	10.33	COMPASS PKG, (08.873)

21.100B RADIO/NAVIGATION PKG, Telepath 100 (Non-Production)

90-96	Y	12344636	1	729.48	RADIO/NAVIGATION PKG, (TELEPATH 100) (INCOMPATIBLE WITH BOSE & ACTIVE AUDIO EQUIP SYS) (09.769) (AC-DELCO #12344636)

21.121B HOLDER PKG, CD Stow (Non-Production)

96	Y	12495014	1	*17.29	HOLDER PKG, S/S CD STOW (HOLDS 15 CD'S) (MOUNTED TO SUNVISOR) (10.203)

21.148B COVER PKG - LOCK PKG, vehicle (Non-Production)

84-96	Y	12344188	1	112.86	COVER PKG, VEH (WHITE) (CUSTOM FIT-TYVEK W/"GM" LOGO) (13.347)
84-96	Y	12370764	1	255.71	COVER PKG, VEH (GRAY) (CUSTOM FIT-STORMSHIELD DELUXE W/"CORVETTE" LOGO) (13.347)
84-96	Y	12344218	1	10.00	LOCK PKG, CAR CVR CBL (13.347)

21.149B COVER PKG, Front End (Non-Production)

84-90	Y	998994	1	87.14	COVER PKG, F/END (07.831)
91-96	Y	12343220	1	87.14	COVER PKG, F/END (07.831)

21.157B DECAL PKG, W/S Graphics (Non-Production)

85-96	Y	999280	1	34.29	DECAL PKG, W/S (SILVER) (CORVETTE) (BLOCK LETTERING) (08.132)
88-96	Y	12342741	1	34.29	DECAL PKG, W/S (RED) (CORVETTE) (SPLASH GRAPHICS) (10.027)
88-96	Y	12342742	1	34.29	DECAL PKG, W/S (GREEN) (CORVETTE) (SPLASH GRAPHICS) (10.027)
88-96	Y	12342743	1	34.29	DECAL PKG, W/S (SILVER) (CORVETTE) (SPLASH GRAPHICS) (10.027)

© 2000 GENERAL MOTORS SERVICE PARTS OPERATIONS-CHEVROLET-14Y

21.157B DECAL PKG, W/S Graphics (Non-Production) (Con't)

88-96	Y	12342866	1	34.29	DECAL PKG, W/S (GOLD) (CORVETTE) (SPLASH GRAPHICS) (10.027)
90-96	Y	12342735	1	34.29	DECAL PKG, W/S (RED) ("CHEVROLET" SPLASH GRAPHICS) (10.027)
90-96	Y	12342736	1	34.29	DECAL PKG, W/S (GREEN) ("CHEVROLET" SPLASH GRAPHICS) (10.027)
90-96	Y	12342737	1	34.29	DECAL PKG, W/S (SILVER) ("CHEVROLET" SPLASH GRAPHICS) (10.027)
90-96	Y	12342864	1	34.29	DECAL PKG, W/S (GOLD) ("CHEVROLET" SPLASH GRAPHICS) (10.027)

21.207B FLARE PKG, Safety (Non-Production)

84-96	Y	999328	1	12.79	FLARE PKG, SAF (02.575)

21.220B GUARD PKG, Fender Splash (Non-Production)

84-89	Y	994952	1	6.43	GUARD PKG, FDR SPH (GM LOGO) (BLACK) (08.214)
84-90	Y	996744	1	6.43	GUARD PKG, FDR SPH (WHITE) (08.214)
84-96	Y	12371078	1	6.43	GUARD PKG, FDR SPH (7.75" WIDE) (BLACK W/O LOGO) (08.214)
84-96	Y	12371079	1	8.57	GUARD PKG, FDR SPH (9" WIDE) (BLACK W/O LOGO) (08.214)
84-96	Y	12371082	1	6.43	GUARD PKG, FDR SPH (7.75" WIDE) (BLACK W/WHITE GM LOGO) (08.214)
84-96	Y	12371083	1	8.57	GUARD PKG, FDR SPH (9" WIDE) (BLACK W/WHITE GM LOGO) (08.214)
84-96	Y	12371087	1	6.43	GUARD PKG, FDR SPH (7.75" WIDE) (BLACK W/WHITE CHEVROLET LOGO) (08.214)
84-96	Y	12371088	1	8.57	GUARD PKG, FDR SPH (9" WIDE) (BLACK W/WHITE CHEVROLET LOGO) (08.214)
84-96	Y	12371091	1	6.43	GUARD PKG, FDR SPH (7.75" WIDE) (BLACK W/WHITE BOWTIE LOGO) (08.214)
84-96	Y	12371092	1	8.57	GUARD PKG, FDR SPH (9" WIDE) (BLACK W/WHITE BOWTIE LOGO) (08.214)
84-96	Y	12371370	1	6.43	GUARD PKG, FDR SPH (7.75" WIDE) (WHITE W/BLACK GM LOGO) (08.214)
84-96	Y	12371371	1	8.57	GUARD PKG, FDR SPH (8.90" WIDE) (WHITE W/BLACK GM LOGO) (08.214)
84-96	Y	12371372	1	6.43	GUARD PKG, FDR SPH (7.75" WIDE) (WHITE W/BLACK CHEVROLET LOGO) (08.214)
84-96	Y	12371373	1	8.57	GUARD PKG, FDR SPH (8.90" WIDE) (WHITE W/BLACK CHEVROLET LOGO) (08.214)

© 2000 GENERAL MOTORS SERVICE PARTS OPERATIONS-CHEVROLET-14Y

21.225B GUARD PKG, Lower Body Side (Non-Production)

84-96	Y	12340639	1	188.57	GUARD PKG, BODY SI PROTV FILM (BLACK) (12"X22') (08.304)
84-96	Y	12340640	1	240.00	GUARD PKG, BODY SI PROTV FILM (BLACK) (12"X28') (08.304)
84-96	Y	12340641	1	98.57	GUARD PKG, BODY SI PROTV FILM (CLEAR) (12"X22') (08.304)
84-96	Y	12340642	1	98.57	GUARD PKG, BODY SI PROTV FILM (CLEAR) (12"X28') (08.304)

21.237B HARNESS PKG, Trailer Wiring (Non-Production)

84-90	Y	999267	1	19.96	HARNESS PKG, TRLR WRG (W/RED RR T/SIG) (W/4-WAY CONN) (07.068)
84-90	Y	999268	1	19.96	HARNESS PKG, TRLR WRG (W/AMBER RR T/SIG) (W/4-WAY CONN) (07.068)

21.239B WARNING PKG, Buzzer (Non-Production)

84-90	Y (EXC HDLP WRNG (T63)	999373	1	13.60	WARNING PKG, HDLP (02.461) (AC-DELCO #999373)

21.240A HEATER PKG, Engine (Production)

85-92	Y 5.7-8 (L98)	996246	1	21.43	HEATER PKG, ENG BLK (01.152)
92-95	Y 5.7P (LT1)	996246	1	21.43	HEATER PKG, ENG BLK (01.152)
96	Y 5.7P (LT1), 5.7-5 (LT4)	996246	1	21.43	HEATER PKG, ENG BLK (01.152)

21.241B ADAPTER - CAP - CASE - PLUG - PLUG KIT - TEMPLATE - TOOL, Engine Oil Drain (Non-Production)

84-96	Y	10953166	1	121.64	ADAPTER, OIL DRN PLUG (90 DEG ANGLE) (GM POWER DRAIN) (PART OF 10953172) (01.453)
84-96	Y	10953167	1	121.64	ADAPTER, OIL DRN PLUG (STRAIGHT) (GM POWER DRAIN) (PART OF 10953172) (01.453)
84-96	Y	10953169	1	*.36	CAP, OIL DRN PLUG (RUBBER) (GM POWER DRAIN) (PART OF 10953172) (01.453)
84-96	Y	10953170	1	52.86	CASE, OIL DRN PLUG KIT (GM POWER DRAIN) (PART OF 10953172) (01.453)
84-96	Y	10953172	1	1354.29	PLUG KIT, OIL DRN (GM POWER DRAIN) (COMPLETE) (01.453)
84-96	Y	10953161	1	*11.41	PLUG, OIL DRN (1/2"X20) (GM POWER DRAIN) (PART OF 10953172) (01.453)
84-96	Y	10953162	1	*11.41	PLUG, OIL DRN (12MMX1.25) (GM POWER DRAIN) (PART OF 10953172) (01.453)
84-96	Y	10953163	1	*11.41	PLUG, OIL DRN (12MMX1.75) (GM POWER DRAIN) (PART OF 10953172) (01.453)
84-96	Y	10953164	1	*11.41	PLUG, OIL DRN (14MMX1.50) (GM POWER DRAIN) (PART OF 10953172) (01.453)

© 2000 GENERAL MOTORS SERVICE PARTS OPERATIONS-CHEVROLET-14Y

21.241B ADAPTER – CAP – CASE – PLUG – PLUG KIT – TEMPLATE – TOOL, Engine Oil Drain (Non–Production) (Con't)

84–96	Y	10953168	1	52.86	TEMPLATE, OIL DRN PLUG IDENT (GM POWER DRAIN) (PART OF 10953172) (01.453)
84–96	Y	10953165	1	28.93	TOOL, OIL DRN PLUG CAP REMOVAL (GM POWER DRAIN) (PART OF 10953172) (01.453)

21.245B EMERGENCY PKG – LIGHT PKG, Highway (Non–Production) (2.575)

84–96	Y	12495037	1	94.29	EMERGENCY PKG, HWY (INCLS LIGHT STICKS, FIRE EXT, ELEC TAPE, RAG, FUSE KIT, BUNGICORD, GLOVES, FLASHLIGHT, NEED HELP BANNER, RAIN PONCHO, SCREWDRIVER, EMERG KIT) (GM LOGO) (02.575)
88–96	Y	12370237	1	28.83	LIGHT PKG, DISTRESS (STROBE) (02.575)

21.260B COVER, Trailer Platform (Non–Production)

85–96	Y	12496972	1		COVER, TRLR HITCH RCVR (USED W/1 1/4" RCVR) (07.068)

21.265B BATTERY PKG – COOLER/WARMER PKG, Food & Beverage (Non–Production)

84–96	Y	999681	1	46.47	BATTERY PKG, COOLER/WARMER AUX PWR SCE (USE W/999679) (10.240)
84–96	Y C/LTR (U37)	999679	1	190.00	COOLER/WARMER PKG, FOOD & BEVERAGE (SCOTTY) (16"HX14"LX14"W) (10.240)

21.270B LAMP PKG, Fog/Driving (Non–Production)

84–89	Y	998528	1	110.01	LAMP PKG, FRT FOG (W/CVRS) (02.727)
84–89	Y	999451	1	72.16	LAMP PKG, FRT FOG (TOP FRT BPR MOUNT) (5.62"X3.56") (CLEAR) (W/O CVRS) (02.725)

21.271B BATTERY PKG, Vehicle (Non–Production)

89–91	Y	12340842	1	10.00	BATTERY PKG, KEYLESS XMTR (CONTAINS 6–12V ALKALINE BATTERIES) (USE W/GOODWRENCH KEYLESS ENTRY & VEH SEC SYS) (02.195)

21.290B SPOTLIGHT PKG, Portable Spot (Non–Production)

84–96	Y	998284	1	25.09	SPOTLIGHT PKG, PORTABLE (09.773)

© 2000 GENERAL MOTORS SERVICE PARTS OPERATIONS–CHEVROLET–14Y

21.301B FRAME PKG, License Plate (Non-Production)

NOTE: FRAMES NOT AVAILABLE FOR THE FOLLOWING STATES:AZ, CT, GA, IL, IA, KY, NV, NM, NC, OH, SD.
NOTE: #1 TO BE SOLD IN THE FOLLOWING STATES ONLY:AL, ID, IN, KS, LA, MI, MN, MT, NH, RI, SC, TN.
NOTE: #2 TO BE SOLD IN THE FOLLOWING STATES ONLY:AK, AR, CA, CO, DC, DE, MA, ME, MO, MS, ND, NE, NJ, NY, OK, OR, PA, TX, UT, VA, VT, WA, WI, WV, WY.
NOTE: #3 TO BE SOLD IN THE FOLLOWING STATES ONLY:FL, HI, MD.

84-90	Y	12343252	1	1.87	FRAME PKG, LIC PLT (REFLECTIVE) (NOTE 1) (07.800)
84-90	Y	12343253	1	1.40	FRAME PKG, LIC PLT (NON-REFLECTIVE) (NOTE 1) (07.800)
84-96	Y	12343254	1	1.87	FRAME PKG, LIC PLT (BLACK) (REFLECTIVE) (NOTE 2) (FRT/RR) (07.800)
84-90	Y	12343255	1	1.40	FRAME PKG, LIC PLT (NON-REFLECTIVE) (NOTE 2) (07.800)
84-89	Y	12343256	1	1.87	FRAME PKG, LIC PLT (REFLECTIVE) (NOTE 3) (07.800)
84-90	Y	12343257	1	1.40	FRAME PKG, LIC PLT (NON-REFLECTIVE) (NOTE 3) (07.800)

21.340A NUT PKG, Wheel (Production)

84-89	Y	12341387	1	15.71	NUT PKG, SPL SECURITY WHL LK (12MM LUG) (CHROME) (05.813)	
86-89	Y	999057	1	15.71	NUT PKG, SPL SECURITY WHL LK (ALUM WHL) (INCLS WRENCH) (12MM LUG) (BLACK) (05.813)	6-12,5
90	Y	999057	1	15.71	NUT PKG, SPL SECURITY WHL LK (ALUM WHL) (INCLS WRENCH) (12MM LUG) (BLACK) (CAP 12337914 MAY BE REQD) (05.813)	6-12,5
91-96	Y	999057	1	15.71	NUT PKG, SPL SECURITY WHL LK (M12X1.5 W/OTR TRD FOR DECOR CAP) (INCLS 4 NUTS, 1 KEY) (05.813)	6-12,5

21.360A MAT PKG, Front Floor (Carpet Insert) (Production)

88-89	Y (19I)	12362168	1	44.29	MAT PKG, F/FLR AUX (TWIN-CPT) (BLACK) (15.286) (FOR 88-93 APPLICATIONS, CARPET MATL AND BINDING HAVE BEEN REVISED TO 1994 OEM STANDARDS.)
88-92	Y (73I)	12362170	1	44.29	MAT PKG, F/FLR AUX (TWIN-CPT) (RED) (15.286)
90-93	Y (10I), (19I)	12362168	1	44.29	MAT PKG, F/FLR AUX (TWIN-CPT) (FOR 88-93 APPLICATIONS, CARPET MATL AND BINDING HAVE BEEN REVISED TO 1994 OEM STANDARDS.) (BLACK) (15.286)
92-93	Y (14I)	12362167	1	44.29	MAT PKG, F/FLR AUX (TWIN-CPT) (FOR 88-93 APPLICATIONS, CARPET MATL AND BINDING HAVE BEEN REVISED TO 1994 OEM SPECS.) (GRAY) (15.286)
92-96	Y (64I)	12362169	1	47.14	MAT PKG, F/FLR AUX (TWIN-CPT) (BEIGE) (15.286)

© 2000 GENERAL MOTORS SERVICE PARTS OPERATIONS-CHEVROLET-14Y

21.360A MAT PKG, Front Floor (Carpet Insert) (Production) (Con't)

93-96	Y (70I)	12362170	1	44.29	MAT PKG, F/FLR AUX (TWIN-CPT) (RED) (15.286)
94-96	Y (14I)	12362167	1	44.29	MAT PKG, F/FLR AUX (TWIN-CPT) (GRAY) (15.286)
94-96	Y (19I)	12362168	1	44.29	MAT PKG, F/FLR AUX (TWIN-CPT) (BLACK) (15.286)

21.444A HARNESS PKG - SPEAKER PKG, Mobile (Production)

91-92	Y	12341742	1	153.33	HARNESS PKG, CELLULAR TEL (5 METER) (09.675) (AC-DELCO #12341742)
91-92	Y	12341735	1	53.33	SPEAKER PKG, CELLULAR TEL (09.675) (AC-DELCO #12341735)

21.444B ADAPTER PKG - ANTENNA - BATTERY - BATTERY PKG - CHARGER PKG - CRADLE PKG - HANDSET PKG - HARNESS - HARNESS PKG - MAST PKG - MICROPHONE PKG - SPEAKER PKG, Mobile (Non-Production)

88-96	Y	12365601	1		ADAPTER PKG, C/LTR (FOR PORTABLE TEL) (USE W/12370674) (09.675) (AC-DELCO #12365601)
88-96	Y	12365600	1		ANTENNA, MOBILE TEL (USE W/12370674) (09.675) (AC-DELCO #12365600)
88-96	Y	12370684	1	83.88	BATTERY PKG, (ULTRA EXTENDED) (USE W/12370673 GM1100) (09.675) (AC-DELCO #12370684)
88-96	Y	12365585	1		BATTERY, CELLULAR TEL (USE W/12370671) (09.675) (AC-DELCO #12365585)
88-96	Y	12365596	1		BATTERY, CELLULAR TEL (USE W/12370673) (09.675) (AC-DELCO #12365596)
88-96	Y	12365586	1		CHARGER PKG, CELLULAR TEL (STANDARD) (USE W/12370671) (09.675) (AC-DELCO #12365586)
91	Y	16160460	1	31.00	CRADLE PKG, MOBILE TEL (BRACKET, HANG UP CUP) (USE W/6000) (09.675)
91	Y	16159668	1	362.33	HANDSET PKG, MOBILE (6000 SERIES) (09.675) (AC-DELCO #16159668)
91-92	Y	16161271	1	71.85	HARNESS PKG, MOBILE TEL WRG (COIL CORD) (09.675) (AC-DELCO #16161271)
91	Y	16172192	1	20.47	HARNESS, MOBILE TEL HANDSET (FOR 2600 & 6000 SERIES) (09.675) (AC-DELCO #16172192)
91	Y	16172193	1	40.18	HARNESS, MOBILE TEL XCVR (FOR 2600 & 6000 SERIES) (09.675) (AC-DELCO #16172193)
91-92	Y	16161527	1	58.75	MAST PKG, MOBILE TEL ANT (CHROME) (POWER) (09.675)

© 2000 GENERAL MOTORS SERVICE PARTS OPERATIONS-CHEVROLET-14Y

21.444B ADAPTER PKG – ANTENNA – BATTERY – BATTERY PKG – CHARGER PKG – CRADLE PKG – HANDSET PKG – HARNESS – HARNESS PKG – MAST PKG – MICROPHONE PKG – SPEAKER PKG, Mobile (Non–Production) (Con't)

91–92	Y	16157221	1	49.15	MICROPHONE PKG, MOBILE TEL (FOR 2600 & 6000 SERIES) (09.675) (AC–DELCO #16157221)
91–92	Y	16157996	1	54.07	SPEAKER PKG, CELLULAR TEL (6000 SERIES) (09.675) (AC–DELCO #16157996)

21.480A ADAPTER PKG, Radio (Production)

93–96	Y	16129041	1	18.50	ADAPTER PKG, RDO HARN & ANT CBL (12 PIN RDO, 21 PIN VEHICLE) (09.650) (AC–DELCO #16129041)
93–96	Y	16140051	1	18.25	ADAPTER PKG, RDO HARN & ANT CBL (21 PIN RDO, 12 PIN VEHICLE) (09.650) (AC–DELCO #16140051)

21.480B CARTRIDGE – CONTROLLER – HARDWARE PKG – HARNESS PKG – MODULATOR – PLAYER PKG, Radio (Non–Production)

94–96	Y	12344644	1	126.22	CARTRIDGE, REM CD PLYR (10 DISC) (SERVICE COMP OF 12370286) (CONTAINS 2PCS) (09.670) (AC–DELCO #12344644)
94–96	Y	16213705	1	124.98	CARTRIDGE, REM CD PLYR (10 DISC) (SERVICE COMPONENT OF 12370286 PLYR PKG) (09.670) (AC–DELCO #16213705)
88–96	Y	12370304	1	64.62	CONTROLLER, REM CD PLYR (HAND HELD) (SERVICE COMP OF 12370286) (09.670) (AC–DELCO #12370304)
94–96	Y	16213707	1	181.75	CONTROLLER, REM CD PLYR (HAND HELD) (SERVICE COMP FOR 12344632) (09.670) (AC–DELCO #16213707)
88–96	Y	16242987	1	124.38	CONTROLLER, REM CD PLYR WIRED (SERVICE COMP FOR 12370286) (09.670) (AC–DELCO #16242987)
88–96	Y	16242992	1	12.25	HARDWARE PKG, REM CD PLYR (10 DISC) (SERVICE COMP FOR 12370286) (09.670) (AC–DELCO #16242992)
94–96	Y	16213710	1	28.78	HARDWARE PKG, REM CD PLYR (10 DISC) (SERVICE COMP FOR 12344632) (09.670) (AC–DELCO #16213710)
88–96	Y	16242993	1	60.92	HARNESS PKG, REM CD PLYR (10 DISC) (SERVICE COMP FOR 12370286) (09.670) (AC–DELCO #16242993)
94–96	Y	16213712	1	98.58	HARNESS PKG, REM CD PLYR (10 DISC) (SERVICE COMP FOR 12344632) (09.670) (AC–DELCO #16213712)

© 2000 GENERAL MOTORS SERVICE PARTS OPERATIONS–CHEVROLET–14Y

21.480B CARTRIDGE – CONTROLLER – HARDWARE PKG – HARNESS PKG – MODULATOR – PLAYER PKG, Radio (Non–Production) (Con't)

88–96	Y	16242986	1	106.68	MODULATOR, REM CD PLYR (SERVICE COMPONENT OF 12370286 PLYR PKG) (09.670) (AC–DELCO #16242986)
88–96	Y	12370286	1	641.95	PLAYER PKG, REM CD (10 DISC) (MAY REQ ANT ADAPTER) (REFER DELCO ELEC SOUND FACTS FOR SAME) (09.670) (AC–DELCO #12370286)
88–96	Y	12489407	1	6691.13	PLAYER PKG, REM CD (16–PACK OF 12370286) (09.670) (AC–DELCO #12489407)

21.483B PROTECTOR PKG, License Plate (Non–production)

89–93	Y	999106	1	*6.19	PROTECTOR PKG, LIC PLT (07.800)

21.502A CASE PKG – RECEIVER PKG – TRANSMITTER PKG, Garage Door Opener (Production)

84–96	Y	12351967	1	17.40	CASE PKG, GARAGE DR OPENER XMTR (09.774)
84–96	Y	12351966	1	164.56	RECEIVER PKG, GARAGE DR OPENER (09.774)
84–96	Y	12351968	1	68.09	TRANSMITTER PKG, GARAGE DR OPENER (UNPROGRAMMABLE) (09.774)

21.513 HARNESS, GM Vehicle

94–96	Y	12463364	1	7.64	HARNESS, VEH SECURITY WRG (RPLMT HARN FOR VKE1000, VSS2000–2300, VSC3000–3300, VSL4000, 4100) (02.195)

21.513B BATTERY – BATTERY PKG – HARNESS – INDICATOR – MODULE – PARTS PKG – SECURITY PKG – SWITCH – TRANSMITTER PKG, Vehicle (Non–Production)

94–96	Y	12496766	1	65.00	BATTERY PKG, VEH SECURITY SYS B/U (02.194)
94–96	Y	12487101	1		BATTERY, VEH SECURITY SYS B/U (SERVICE PART OF BATTERY PKG 12496766) (02.194)
85–86	Y	12356880	1	37.50	HARNESS, VEH SECURITY WRG (USED TO SERVICE 12344678 & 12344679) (02.195)
94–96	Y	12463364	1	7.64	HARNESS, VEH SECURITY WRG (12 PIN MAIN) (RPLMT HARN FOR VKE1000, VSS2000–2300, VSC3000–3300, VSL4000, 4100) (02.195)
94–96	Y REMOTE ENTRY LK CONT (AU0), ELEC S/D LK (AU3)	12463365	1	5.17	HARNESS, VEH SECURITY WRG (8 PIN DR LK) (RPLMNT HARN FOR VKE1000, VSC3000, 3100, VSL4000, 4100) (02.195)
94–96	Y	12463368	1	3.53	HARNESS, VEH SECURITY WRG (2 PIN HORN AUX) (RPLMNT HARN FOR VSS2200, 2300, VSC3000, 3100, VSL4000, 4100) (02.195)

© 2000 GENERAL MOTORS SERVICE PARTS OPERATIONS–CHEVROLET–14Y

21.513B BATTERY – BATTERY PKG – HARNESS – INDICATOR – MODULE – PARTS PKG – SECURITY PKG – SWITCH – TRANSMITTER PKG, Vehicle (Non–Production) (Con't)

94–96	Y REMOTE ENTRY LK CONT (AU0)	12463369	1	3.93	**HARNESS**, VEH SECURITY WRG (5 PIN DR MONITORING) (RPLMNT HARN FOR VSC 3200, 3300) (02.195) .....
94–96	Y	12496349	1		**HARNESS**, VEH SECURITY WRG (SERVICE PART OF BATTERY PKG 12496766) (02.194) .....
94–96	Y	12463366	1	3.87	**INDICATOR**, LED VEH SECURITY SYS (STATUS) (RPLMNT FOR VSS2000–2300, VSC3000–3300, VSL4000, 4100) (02.195) .....
94–96	Y	12496348	1		**MODULE**, VEH SECURITY B/U B/T (SERVICE PART OF BATTERY PKG 12496766) (02.194) .....
85–86	Y	12360327	1	21.43	**PARTS PKG**, VEH REM SECURITY (USE W/12344678–9 REM SECURITY PKG) (02.195) .....
94–96	Y	12463503	1	5.27	**PARTS PKG**, VEH REM SECURITY (REPAIR) (INCLS SPLICE CONNS, RING TERMINALS, SCREWS & TIE STRAPS) (USE W/VKE1000, VSS2000–2300, VSC3000–3300, VSL4000, 4100) (02.195) .....
94–96	Y	12495657	1	5.27	**PARTS PKG**, VEH REM SECURITY (REPAIR) (INCLS SPLICE CONNS, RING TERMINALS, SCREWS & TIE STRAPS) (02.195) .....
84–86	Y	999400	1	73.57	**SECURITY PKG**, NON REM (VSS–100) (02.194) .....
94–96	Y	12495645	1	111.43	**SECURITY PKG**, NON REM (VSC3200 MID LEVEL W/O STARTER KILL) (02.194) .....
85–86	Y	12344679	1	270.00	**SECURITY PKG**, VEH REM (VSS–350) (2–TRANSMITTER) (02.194) .....
94–96	Y	12495647	1	232.86	**SECURITY PKG**, VEH REM (VSL4000 HIGH LEVEL W/O STARTER KILL) (02.194) .....
94–96	Y	12463367	1	4.29	**SWITCH**, OVERRIDE VEH SECURITY SYS (VALET OVERRIDE) (RPLMNT SW FOR VSS2000–2300, VSC3000–3300, VSL4000, 4100) (02.195) .....
94–96	Y	12495653	1	22.50	**TRANSMITTER PKG**, VEH SECURITY R/CON (XMTR ONLY) (RPLMNT TRANS FOR VKE1000, VCS3000, 3100, VSL4000, 4100, 4200) (02.195) .....

21.515B FLASHER PKG – KEYBOARD PKG – LOCK PKG – MODULE PKG – RECEIVER PKG – SENSOR PKG – SIREN PKG, Vehicle Security (Non–Production)

85–86	Y	12340318	1	31.43	**FLASHER PKG**, VEH SECURITY SYS LGT (EXT PARK LP) (USE W/999400) (02.195) .....
84–86	Y	999403	1	35.71	**KEYBOARD PKG**, VEH SECURITY (USE W/999400 ONLY) (02.195)

© 2000 GENERAL MOTORS SERVICE PARTS OPERATIONS–CHEVROLET–14Y

21.515B FLASHER PKG – KEYBOARD PKG – LOCK PKG – MODULE PKG – RECEIVER PKG – SENSOR PKG – SIREN PKG, Vehicle Security (Non–Production) (Con't)

84–86	Y	999404	1	51.43	LOCK PKG, VEH SECURITY HOOD (USE W/999400, 12344678, OR 12344679) (02.195) .....
94–96	Y REMOTE ENTRY LK CONT (AU0)	12463357	1	51.14	MODULE PKG, NON REM SECURITY SYS (RPLMNT MOD FOR VSC3200, VSC3300, VSC3400 PKGS) (02.195) .....
85–86	Y	12356879	1	50.00	RECEIVER PKG, VEH SECURITY (VSS–350) (MDL REPLACE FOR 12344679 INSTALLED AFTER 11/93) (02.195) .....
94–96	Y REMOTE ENTRY LK CONT (AU0), ELEC S/D LK (AU3) ..	12463358	1	67.71	RECEIVER PKG, VEH SECURITY (RPLMNT MOD FOR VSL4000, VSL4100, VSL4200 PKGS) (02.195) .....
84–86	Y	12342274	1	42.86	SENSOR PKG, VEH SECURITY SHK (USE W/999400) (PART OF12342272) (02.195) .....
84–86	Y	999401	1	42.86	SIREN PKG, VEH SECURITY (USE W/999400, 12344678) (PART OF 12344679) (02.195) .....
94–96	Y REMOTE ENTRY LK CONT (AU0), ELEC S/D LK (AU3) ..	12463371	1	18.14	SIREN PKG, VEH SECURITY (RPLMNT SIREN FOR VSC3000–3400, VSL4000–4200) (02.195) .....
94–96	Y	12495652	1	47.64	SIREN PKG, VEH SECURITY (W/BAT BACK–UP) (USE W/VSS2000–2300, VSC3000–3300, VS4000–4100) (02.195) .....

21.517B CONTROL PKG, Vehicle Security System (Non–Production)

84–92	Y	12343311	1	31.43	CONTROL PKG, VEH SECURITY SYS HDLP (MUST BE USED W/KEYLESS ENTRY 12342271, REM SEC 12342272, 12342273, 999880 OR 12340183) (02.195)

21.543B DECAL PKG – STRIPE PKG, Body Side (Non–Production)

85–96	Y	12343116	1	45.71	DECAL PKG, BODY SI (RED) ("CHEVROLET" SPLASH GRAPHICS) (08.132) .....
85–96	Y	12343117	1	45.71	DECAL PKG, BODY SI (GREEN) ("CHEVROLET" SPLASH GRAPHICS) (08.132) .....
85–96	Y	12343118	1	45.71	DECAL PKG, BODY SI (SILVER) ("CHEVROLET" SPLASH GRAPHICS) (08.132) .....
85–96	Y	12343122	1	45.71	DECAL PKG, BODY SI (RED) (CORVETTE) (SPLASH GRAPHICS) (08.132) .....
85–96	Y	12343123	1	45.71	DECAL PKG, BODY SI (GREEN) (CORVETTE) (SPLASH GRAPHICS) (08.132) .....

© 2000 GENERAL MOTORS SERVICE PARTS OPERATIONS–CHEVROLET–14Y

21.543B DECAL PKG – STRIPE PKG, Body Side (Non–Production) (Con't)

85–96	Y	12343124	1	45.71	DECAL PKG, BODY SI (SILVER) (CORVETTE) (SPLASH GRAPHICS) (08.132)	
84–96	Y	12340833	1	155.71	STRIPE PKG, BODY SI (SILVER) (AERO) (08.132)	

21.551B TOOL PKG, Portable (Non–Production)

84–96	Y	999141	1	25.00	TOOL PKG, (SCREWDRIVERS, PLIERS, WRENCH, TIRE GA, GLOVES, TIEDOWNS, WIRE, TAPE) (08.821)	

21.552 WINDOW PKG, Roof

84–85	Y (24S)	12370123	1	1191.66	WINDOW PKG, RF LIFT OFF (BLUE) (ALSO ORDER HARDWARE KIT 12523045 FOR 84–86 USAGES) (12.810)	10–F25,1
85	Y (64S)	12370124	1	1191.66	WINDOW PKG, RF LIFT OFF (MUST ALSO ORDER HARDWARE KIT 12523045) (12.810)	10–F25,1
86	Y (24S), (1ST DES)	12370123	1	1191.66	WINDOW PKG, RF LIFT OFF (BLUE) (2–3MM HOLES IN ROOF FRT LATCH CVRS, ALSO ORDER HARDWARE KIT 12523045 FOR 84–86 USAGES) (12.810)	10–F25,1

21.552A PANEL PKG – WINDOW PKG, Roof (Production)

84–86	Y07	12344791	1	1217.14	PANEL PKG, RF LIFT OFF (USE W/12523045) (12.810)	
89–90	Y07	12344791	1	1217.14	PANEL PKG, RF LIFT OFF (12.810)	
91–93	Y07 REMOVABLE SUNROOF (CF7), DUAL REM RF (C2L), (EXC CLEAR RF PNL (CC3)	12344791	1	1217.14	PANEL PKG, RF LIFT OFF (12.810)	
94–96	Y07 REMOVABLE SUNROOF (CF7), DUAL REM RF (C2L)	12344791	1	1217.14	PANEL PKG, RF LIFT OFF (12.810)	
84–85	Y (24S)	12370123	1	1191.66	WINDOW PKG, RF LIFT OFF (BLUE) (ALSO ORDER HARDWARE KIT 12523045 FOR 84–86 USAGES) (12.810)	10–G9,1
84–85	Y (64S)	12370124	1	1191.66	WINDOW PKG, RF LIFT OFF (BRONZE) (MUST ALSO ORDER HARDWARE KIT 12523045) (12.810)	10–G9,1
86	Y (2ND DES)	12344792	1	1191.66	WINDOW PKG, RF LIFT OFF (BLUE) (HAS ONE 245MM HOLE IN LATCH COVERS) (12.810)	
86	Y (2ND DES)	12344793	1	1191.66	WINDOW PKG, RF LIFT OFF (BRONZE) (HAS ONE 25MM HOLE IN LATCH COVERS) (12.810)	
86	Y (24S), (1ST DES)	12370123	1	1191.66	WINDOW PKG, RF LIFT OFF (BLUE) (2–30MM HOLES IN RF PNL FRT LATCH CVRS, ALSO ORDER HARDWARE KIT 12523045 FOR 84–86 USAGES) (12.810)	10–G9,1

© 2000 GENERAL MOTORS SERVICE PARTS OPERATIONS–CHEVROLET–14Y

21.552A PANEL PKG – WINDOW PKG, Roof (Production) (Con't)

86	Y (64S), (1ST DES)	12370124	1	1191.66	WINDOW PKG, RF LIFT OFF (BRONZE) (HAS 2 30MM HOLES IN RF PNL FRT LATCH CVRS. MUST ORDER HARDWARE KIT 12523045 FOR 84–86.) (12.810) .	10–G9,1
87–88	Y	12344792	1	1191.66	WINDOW PKG, RF LIFT OFF (BLUE) (12.810)	
87	Y	12344793	1	1191.66	WINDOW PKG, RF LIFT OFF (BRONZE) (12.810)	
89–96	Y07 CLEAR RF PNL (CC3), DUAL REM RF (C2L), (24S) .	12370123	1	1191.66	WINDOW PKG, RF LIFT OFF (BLUE) (12.810)	10–G9,1
89–96	Y07 CLEAR RF PNL (CC3), DUAL REM RF (C2L), (64S) .	12370124	1	1191.66	WINDOW PKG, RF LIFT OFF (BRONZE) (12.810)	10–G9,1

21.553B HEATER PKG, Battery (Non–Production)

84–96	Y	992419	1	21.43	HEATER PKG, BAT (02.343) ....

© 2000 GENERAL MOTORS SERVICE PARTS OPERATIONS–CHEVROLET–14Y

MICROFICHE INDEX

GROUPS 0.000 & 21.000

FICHE 1 OF 11

GROUP	DESCRIPTION	STARTING GRID LOCATION PARTS	ILLUSTRATIONS
–	GENERAL INFORMATION	1–A2	1–G2
–	ALPHABETICAL INDEX	1–B13	N.A.
0.000	8–CYLINDER ENGINE	1–E2	1–G5
21.000	ACCESSORY REFERENCE LIST	1–D2	N.A.
–	OUT OF FICHE CALLS	N.A.	1–L13

1–E1

CHEVROLET
CHASSIS GROUP 0.000

ENGINE – CLUTCH

ALPHABETICAL INDEX

A

ARM KIT, Engine Valve Rocker [8–CYLINDER] 0.333 1–E28
ARM, Engine Valve Rocker [8–CYLINDER] 0.333 1–E28

B

BALANCER, Engine Crankshaft And Camshaft Balancer [8–CYLINDER] . 0.659 1–F8
BEARING KIT, Engine Connecting Rod [8–CYLINDER] 0.616 1–F6
BEARING KIT, Engine Crankshaft Main [8–CYLINDER] 0.096 1–E18
BEARING, Engine Camshaft & Balance Shaft Front [8–CYLINDER] 0.539 1–F5
BEARING, Engine Clutch Release Fork [8–CYLINDER] 0.799 1–F17
BEARING, Engine Crankshaft Clutch Pilot [8–CYLINDER] 0.649 1–F8
BEARING, Engine Crankshaft Main [8–CYLINDER] 0.096 1–E18
BLOCK, Engine Cylinder case [8–CYLINDER] 0.030 1–E17
BOLT, Engine Camshaft [8–CYLINDER] 0.529 1–F4
BOLT, Engine Camshaft & Balance Shaft Hole [8–CYLINDER] 0.553 1–F5
BOLT, Engine Camshaft & Valve Rocker Cover [8–CYLINDER] 0.413 1–F2
BOLT, Engine Camshaft gear [8–CYLINDER] 0.738 1–F14
BOLT, Engine Clutch Cover to Flywheel [8–CYLINDER] 0.662 1–F19
BOLT, Engine Clutch Housing [8–CYLINDER] 0.683 1–F11
BOLT, Engine Clutch Pedal [8–CYLINDER] 0.829 1–F18
BOLT, Engine Clutch Release Fork [8–CYLINDER] 0.796 1–F17
BOLT, Engine Connecting Rod Cap [8–CYLINDER] 0.623 1–F6
BOLT, Engine Crankshaft And Camshaft Balancer [8–CYLINDER] 0.659 1–F8
BOLT, Engine Crankshaft Pulley and Balancer [8–CYLINDER] 0.662 1–F9
BOLT, Engine Crankshaft/Timing [8–CYLINDER] 0.728 1–F13
BOLT, Engine Cylinder Head [8–CYLINDER] 0.293 1–E24
BOLT, Engine Flywheel [8–CYLINDER] 0.669 1–F10
BOLT, Engine Front Cover [8–CYLINDER] 0.206 1–E22
BOLT, Engine Lift [8–CYLINDER] 0.004 1–E16
BOLT, Engine Main Bearing Cap [8–CYLINDER] 0.056 1–E18
BOLT, Engine Mounting [8–CYLINDER] 0.002 1–E16
BOLT, Engine Mounting [8–CYLINDER] 0.029 1–E16
BOLT, Engine Rear Main Bearing [8–CYLINDER] 0.137 1–E20
BOLT, Engine Timing [8–CYLINDER] .. 0.724 1–F12
BOLT, Flywheel & Clutch & Converter Housing [8–CYLINDER] 0.679 1–F11
BOLT, Hydraulic Clutch Main Cylinder [8–CYLINDER] 0.777 1–F15
BOOT, Engine Clutch Release Fork [8–CYLINDER] 0.797 1–F17
BRACE, Engine Mounting [8–CYLINDER] 0.029 1–E16
BRACKET, Engine Clutch Pedal [8–CYLINDER] 0.829 1–F18
BRACKET, Engine Mounting [8–CYLINDER] 0.029 1–E16
BUSHING, Engine Clutch Pedal [8–CYLINDER] 0.831 1–F10
BUSHING, Engine Timing [8–CYLINDER] 0.724 1–F12
BUSHING, Hydraulic Clutch Main Cylinder [8–CYLINDER] 0.775 1–F14

C

CAMSHAFT, Engine [8–CYLINDER] ... 0.519 1–F4
CAP KIT, Hydraulic Clutch Main Cylinder [8–CYLINDER] 0.775 1–F14
CAP, Engine Main Bearing [8–CYLINDER] 0.095 1–E18
CAP, Engine Valve Spring [8–CYLINDER] 0.309 1–E27
CAP, Hydraulic Clutch Reservoir [8–CYLINDER] 0.785 1–F16
CHAIN, Engine Timing [8–CYLINDER] . 0.724 1–F12
CLIP, Hydraulic Clutch Reservoir [8–CYLINDER] 0.785 1–F16

© GENERAL MOTORS SERVICE PARTS OPERATIONS–CHEVROLET–14Y

COVER, Engine Camshaft & Valve Rocker [8-CYLINDER] 0.386 1-E28
COVER, Engine Clutch [8-CYLINDER] 0.659 1-F16
COVER, Engine Front Cover [8-CYLINDER] 0.206 1-E22
COVER, Flywheel & Clutch & Converter Housing [8-CYLINDER] 0.679 1-F11
CRANKSHAFT, Engine [8-CYLINDER] . 0.646 1-F8
CYLINDER, Clutch Hydraulic Release Slave/Actuator [8-CYLINDER] 0.780 1-F15
CYLINDER, Engine Clutch [8-CYLINDER] 0.786 1-F16
CYLINDER, Hydraulic Clutch Main Cylinder [8-CYLINDER] 0.775 1-F14

D

DAMPENER, Engine Crankshaft And Camshaft Balancer [8-CYLINDER] 0.659 1-F8

E

EMBLEM, Engine Camshaft & Valve Rocker [8-CYLINDER] 0.386 1-E28
ENGINE, Cylinder and Case [8-CYLINDER] 0.033 1-E17
ENGINE, New/Reman Goodwrench [8-CYLINDER] 0.000A 1-E15
ENGINE, Production/Service [8-CYLINDER] 0.000 1-E15

F

FACING, Engine Timing [8-CYLINDER] 0.724 1-F12
FASTENER KIT, Engine Camshaft & Valve Rocker Cover [8-CYLINDER] . 0.413 1-F2
FITTING, Hydraulic Clutch Reservoir [8-CYLINDER] 0.785 1-F16
FLYWHEEL, Engine Crankshaft [8-CYLINDER] 0.666 1-F9
FORK, Engine Clutch Release [8-CYLINDER] 0.795 1-F15

G

GASKET KIT, Engine Cylinder Head [8-CYLINDER] 0.289 1-E23
GASKET KIT, Engine Front Cover [8-CYLINDER] 0.207 1-E22
GASKET, Engine Camshaft & Valve Rocker Cover [8-CYLINDER] 0.423 1-F2
GASKET, Engine Cylinder Head [8-CYLINDER] 0.289 1-E23
GASKET, Engine Front Cover [8-CYLINDER] 0.207 1-E22
GASKET, Engine Rear Main Bearing [8-CYLINDER] 0.137 1-E20
GASKET, Engine Timing [8-CYLINDER] 0.724 1-F12
GEAR, Engine Flywheel [8-CYLINDER] 0.673 1-F10
GROMMET, Engine Camshaft & Valve Rocker Cover [8-CYLINDER] 0.413 1-F2
GUIDE, Engine Timing [8-CYLINDER] . 0.724 1-F12
GUIDE, Engine Valve Push Rod Cover [8-CYLINDER] 0.439 1-F3

H

HEAD, Engine Cylinder [8-CYLINDER] 0.289 1-E23
HOSE, Hydraulic Clutch Reservoir [8-CYLINDER] 0.785 1-F16
HOUSING, Engine Clutch Housing [8-CYLINDER] 0.683 1-F11
HOUSING, Engine Rear Main Bearing [8-CYLINDER] 0.137 1-E20
HOUSING, Engine Timing [8-CYLINDER] 0.724 1-F12
HUB, Engine Crankshaft And Camshaft Balancer [8-CYLINDER] 0.659 1-F8

I

INDICATOR, Engine Front Cover Timing [8-CYLINDER] 0.219 1-E23
INSULATOR, Flywheel & Clutch & Converter Housing [8-CYLINDER] .. 0.679 1-F11

K

KEY, Engine Crankshaft Pulley and Balancer [8-CYLINDER] 0.662 1-F9
KEY, Engine Valve Spring Cap [8-CYLINDER] 0.310 1-E28

L

LIFTER, Engine Valve Lifter [8-CYLINDER] 0.459 1-F3

M

MOUNT, Engine Mounting [8-CYLINDER] 0.027 1-E16

N

NUT, Engine Connecting Rod Bolt [8-CYLINDER] 0.626 1-F6
NUT, Engine Crankshaft [8-CYLINDER] 0.648 1-F8
NUT, Engine Front Cover [8-CYLINDER] 0.206 1-E22
NUT, Engine Mounting [8-CYLINDER] . 0.002 1-E16

NUT, Engine Rear Main Bearing [8-CYLINDER] 0.137 1-E20
NUT, Engine Valve Adjusting [8-CYLINDER] 0.429 1-F3

O

OIL, Production/Service [8-CYLINDER] 0.000 1-E15

P

PEDAL, Engine Clutch [8-CYLINDER] . 0.830 1-F18
PIN, Engine Camshaft & Valve Rocker Cover [8-CYLINDER] 0.413 1-F2
PIN, Engine Camshaft gear [8-CYLINDER] 0.738 1-F14
PIN, Engine Clutch Housing [8-CYLINDER] 0.683 1-F11
PIN, Engine Clutch Housing or Transmission [8-CYLINDER] 0.685 1-F12
PIN, Engine Cylinder Head [8-CYLINDER] 0.293 1-E24
PIN, Engine Flywheel [8-CYLINDER] .. 0.669 1-F10
PIN, Engine Front Cover [8-CYLINDER] 0.206 1-E22
PIN, Engine Rear Main Bearing [8-CYLINDER] 0.137 1-E20
PIN, Engine Timing [8-CYLINDER] 0.724 1-F12
PIPE, Engine Block [8-CYLINDER] 0.034 1-E17
PIPE, Hydraulic Clutch Reservoir [8-CYLINDER] 0.785 1-F16
PISTON KIT, Engine Piston [8-CYLINDER] 0.629 1-F6
PISTON, Engine Piston [8-CYLINDER] 0.629 1-F6
PLASTIGAGE, Engine Main Bearing Clearance [8-CYLINDER] 0.093 1-E18
PLATE, Engine Clutch [8-CYLINDER] . 0.859 1-F18
PLATE, Engine Clutch Driven [8-CYLINDER] 0.886 1-F19
PLUG, Cylinder Head Valve Seat [8-CYLINDER] 0.253 1-E23
PLUG, Engine Block [8-CYLINDER] ... 0.034 1-E17
PLUG, Engine Camshaft & Balance Shaft Hole [8-CYLINDER] 0.553 1-F5
PLUG, Engine Crankshaft [8-CYLINDER] 0.648 1-F8
PLUG, Engine Cylinder Head [8-CYLINDER] 0.293 1-E24
PLUG, Engine Front Cover [8-CYLINDER] 0.206 1-E22
PLUG, Engine Timing [8-CYLINDER] .. 0.724 1-F12
PULLEY, Engine Crankshaft And Camshaft Balancer [8-CYLINDER] . 0.659 1-F8
PUSH ROD, Hydraulic Clutch Main Cylinder [8-CYLINDER] 0.775 1-F14

R

REPAIR KIT, Clutch Hydraulic Release Slave/Actuator [8-CYLINDER] 0.780 1-F15
REPAIR KIT, Hydraulic Clutch Main Cylinder [8-CYLINDER] 0.775 1-F14
RESERVOIR, Engine Timing [8-CYLINDER] 0.724 1-F12
RETAINER, Engine Camshaft [8-CYLINDER] 0.529 1-F4
RETAINER, Engine Camshaft & Valve Rocker [8-CYLINDER] 0.386 1-E26
RETAINER, Engine Camshaft gear [8-CYLINDER] 0.738 1-F14
RETAINER, Engine Clutch Control [8-CYLINDER] 0.852 1-F18
RETAINER, Engine Clutch Pedal Shaft [8-CYLINDER] 0.837 1-F18
RETAINER, Engine Clutch Release Fork [8-CYLINDER] 0.799 1-F17
RETAINER, Engine Crankshaft And Camshaft Balancer [8-CYLINDER] . 0.659 1-F8
RETAINER, Engine Piston Pin [8-CYLINDER] 0.639 1-F7
RETAINER, Engine Valve Lifter [8-CYLINDER] 0.459 1-F3
RING KIT, Engine Piston [8-CYLINDER] 0.643 1-F7
ROD, Clutch Fork Release [8-CYLINDER] 0.787 1-F16
ROD, Engine Piston [8-CYLINDER] ... 0.603 1-F5
ROD, Engine Valve Push Rod [8-CYLINDER] 0.426 1-F3
ROD, Hydraulic Clutch Main Cylinder [8-CYLINDER] 0.775 1-F14
ROTATOR, Engine Valve Spring [8-CYLINDER] 0.309 1-E27

S

SCREW, Clutch Hydraulic Release Slave/Actuator [8-CYLINDER] 0.780 1-F15
SEAL KIT, Engine Rear Main Bearing [8-CYLINDER] 0.137 1-E20
SEAL KIT, Engine Valve [8-CYLINDER] 0.308 1-E27
SEAL, Engine Camshaft & Valve Rocker Cover [8-CYLINDER] 0.413 1-F2
SEAL, Engine Camshaft & Valve Rocker Cover [8-CYLINDER] 0.423 1-F2
SEAL, Engine Front Cover & Crankshaft Seal [8-CYLINDER] 0.213 1-E23
SEAL, Engine Rear Main Bearing [8-CYLINDER] 0.137 1-E20
SEAL, Engine Timing [8-CYLINDER] .. 0.724 1-F12
SEAL, Engine Valve [8-CYLINDER] ... 0.308 1-E27
SEAT, Engine Valve Spring [8-CYLINDER] 0.309 1-E27
SHIELD, Engine Mounting [8-CYLINDER] 0.029 1-E16
SHIELD, Engine Valve [8-CYLINDER] . 0.308 1-E27
SHIELD, Flywheel & Clutch & Converter Housing [8-CYLINDER] 0.679 1-F11
SHIELD, Hydraulic Clutch Main Cylinder [8-CYLINDER] 0.777 1-F15
SHIM KIT, Engine Main Bearing Cap [8-CYLINDER] 0.153 1-E21
SHIM, Engine Clutch Pedal [8-CYLINDER] 0.829 1-F18
SHIM, Engine Valve [8-CYLINDER] ... 0.303 1-E26

© GENERAL MOTORS SERVICE PARTS OPERATIONS-CHEVROLET-14Y

SLEEVE, Engine Timing [8-CYLINDER] 0.724 1-F12
SPACER, Engine Clutch Pedal [8-CYLINDER] 0.829 1-F18
SPACER, Engine Clutch Pedal [8-CYLINDER] 0.831 1-F18
SPACER, Engine Mounting [8-CYLINDER] 0.002 1-E16
SPACER, Hydraulic Clutch Main Cylinder [8-CYLINDER] 0.777 1-F15
SPRING KIT, Engine Valve [8-CYLINDER] 0.303 1-E26
SPRING, Engine Clutch Pedal Return [8-CYLINDER] 0.844 1-F18
SPRING, Engine Valve [8-CYLINDER] . 0.303 1-E26
SPROCKET, Engine Camshaft [8-CYLINDER] 0.736 1-F14
SPROCKET, Engine Crankshaft/Timing [8-CYLINDER] 0.728 1-F13
SPROCKET, Engine Timing [8-CYLINDER] 0.724 1-F12
STUD, Clutch Hydraulic Release Slave/Actuator [8-CYLINDER] 0.780 1-F15
STUD, Engine Camshaft & Valve Rocker Cover [8-CYLINDER] 0.413 1-F2
STUD, Engine Clutch Housing [8-CYLINDER] 0.683 1-F11
STUD, Engine Clutch Release Fork [8-CYLINDER] 0.796 1-F17
STUD, Engine Front Cover [8-CYLINDER] 0.206 1-E22
STUD, Engine Main Bearing Cap [8-CYLINDER] 0.056 1-E18
STUD, Engine Rear Main Bearing [8-CYLINDER] 0.137 1-E20
STUD, Engine Valve Adjusting [8-CYLINDER] 0.429 1-F3

T

TENSIONER, Engine Timing [8-CYLINDER] 0.724 1-F12

V

VALVE, Clutch Hydraulic Release Slave/Actuator [8-CYLINDER] 0.780 1-F15
VALVE, Exhaust [8-CYLINDER] 0.297 1-E26
VALVE, Intake [8-CYLINDER] 0.296 1-E25

W

WASHER, Engine Camshaft & Valve Rocker Cover [8-CYLINDER] 0.413 1-F2
WASHER, Engine Camshaft gear [8-CYLINDER] 0.738 1-F14
WASHER, Engine Camshaft Thrust [8-CYLINDER] 0.533 1-F5
WASHER, Engine Clutch Housing [8-CYLINDER] 0.683 1-F11
WASHER, Engine Clutch Pedal Shaft [8-CYLINDER] 0.837 1-F18
WASHER, Engine Crankshaft And Camshaft Balancer [8-CYLINDER] . 0.659 1-F8
WASHER, Engine Crankshaft Pulley and Balancer [8-CYLINDER] 0.662 1-F9
WASHER, Engine Cylinder Head [8-CYLINDER] 0.293 1-E24
WASHER, Engine Front Cover [8-CYLINDER] 0.206 1-E22
WASHER, Engine Main Bearing Cap [8-CYLINDER] 0.153 1-E21
WASHER, Engine Mounting [8-CYLINDER] 0.029 1-E16
WEIGHT, Engine Flywheel [8-CYLINDER] 0.669 1-F10

© GENERAL MOTORS SERVICE PARTS OPERATIONS-CHEVROLET-14Y

CHART INDEX

GROUP 0 GRID

ILLUS INDEX (GRP 0) 1-E8
ENGINE 1-E9

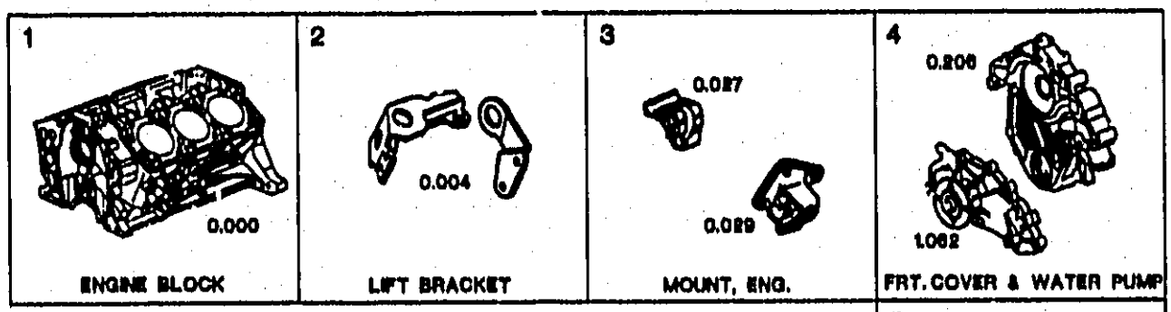

GROUP 0.000

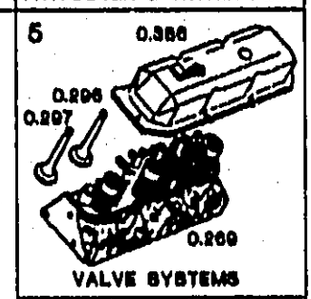

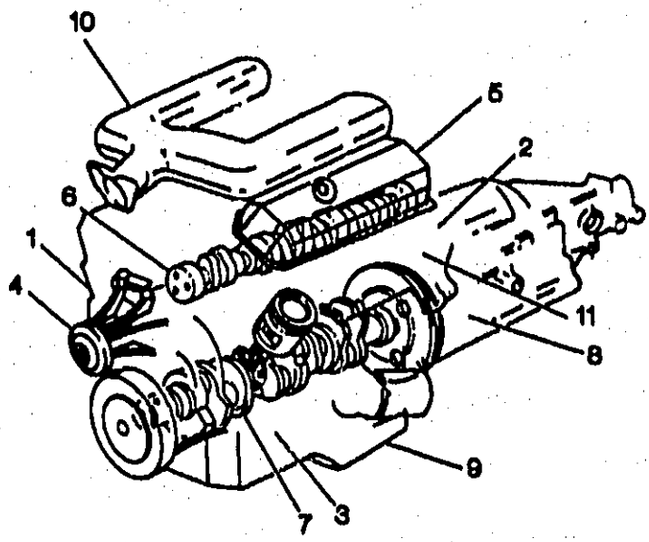

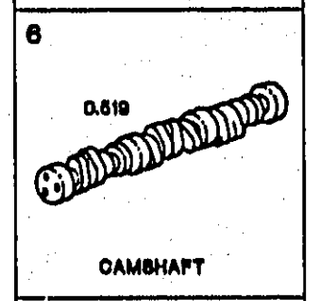

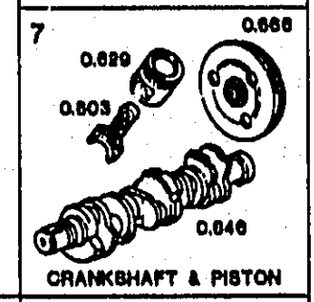

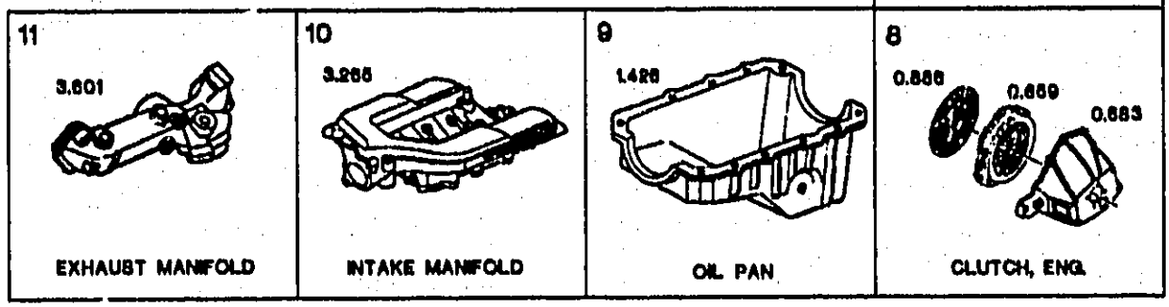

© 2000 GENERAL MOTORS SERVICE PARTS OPERATIONS–CHEVROLET–14Y

ENGINE SERVICE POLICY

COMPLETE PRODUCTION OEM ENGINE ASSEMBLIES IN GROUP 00.000 ARE OFFERED FOR SERVICE DURING THEIR PRODUCTION CYCLE ONLY. IN ADDITION, AT LEAST ONE OF THE FOLLOWING WILL BE OFFERED FOR EACH ENGINE SERVICE APPLICATION.

AS A PARTIAL ENGINE IN GROUP 00.033

AS A GOODWRENCH NEW, OR REMANUFACTURED ENGINE IN GROUP 00.000 SUB GROUP A (FOR PASSENGER CAR & LIGHT DUTY TRUCK), GROUP 00.000 SUB GROUP B (FOR MEDIUM DUTY TRUCK)

AS A COMPLETE ENGINE EXCHANGE THROUGH THE DIVISIONAL SERVICE GROUPS (PROCEDURE IS COVERED ON TECHNICAL SERVICE BULLETINS)

ENGINE STAMPING INFORMATION

The Engine Plants will stamp a source, production date, and type designation, on the engine, as shown below.

4-Cylinder 140 C.I.D. - stamped opposite the number three cylinder, on the right side of the case, on the left side of the pad, as close to the rear as possible.

All 6-Cylinder - stamped on crankcase, on right hand side of engine, to rear of distributor.

All 8-Cylinder except Mark IV - stamped on top front of right hand bank of cylinder and case, as close as possible to upper end of pad.

All Mark IV - stamped on top right hand bank of cylinder and case, as close as possible to lower end of pad.

"F" will designate Flint Motor, "V" - Flint Engine, "T" - Tonawanda, "S" -Saginaw Parts, "K" - GM of Canada LTD, "M" - GM of Mexico, and "H" - Hydramatic.

The four digit number following the source designation will indicate the calendar month and day produced. Of the four digits, the last two will always indicate the day, VIZ 01 for the first day of the month, 02 for the second day, etc. The two digits preceding the date produced will indicate the month VIZ, 01 for January, 02 for February, and 12 for December.

EXAMPLE: January 1st would read 0101.

A standard 1HA00 series type, if built in Tonawanda on January 1st would be stamped T0101CLW. The first character of the type designation will always be"C" or "Z", for Passenger and "T" or "A" for Truck.

Note: The engine plants are to stamp the serial pad of all current model service engines with the source, production date, and the same type designation as stamped on the comparable production engine.

On Irrigation engines a four digit sequential serial number beginning with 1001 for each engine, will be stamped adjacent to the engine date stamp and will identify each Irrigation engine built.

© 2000 GENERAL MOTORS SERVICE PARTS OPERATIONS-CHEVROLET-14Y

ENGINE ASSEMBLY CODES IDENTIFICATION

1984

5.7(350-8) - L83
VIN 8

ZFC	ZFD	ZFF	ZFN
ZFM	ZFL	ZFR	

1985

5.7(350) - L98
VIN 8

ZDF	ZJB	ZJJ
ZJK	ZJA	ZJD
ZJL	ZJM	

1986

5.7(350) - L98
VIN 8

ZJH	ZKA	ZKD	ZJS	ZJW
DKB	DKC	DKD	DKF	DKH
ZKB	ZKC	ZJT	ZJU	

1987

5.7(350) - L98
VIN 8

ZJN	ZJR	ZLA	ZLC
ZLB			

1988

5.7(350) - L98
VIN 8

ZMA	ZMC	ZMD

1989

5.7(350) - L98
VIN 8

CZA	ZRA	ZRB	ZRC

FONT A

1990

FONT O
5.7(350) - LT5
VIN J

ZRJ	ZSH	ZSD

5.7(350) - L98
VIN 8

ZSA	ZSB	ZSC

FONT A

1991

FONT O
5.7(350) - LT5
VIN J

ZTD	ZTJ	ZTK

5.7(350) - L98
VIN 8

ZTA	ZTB	ZTC

© 2000 GENERAL MOTORS SERVICE PARTS OPERATIONS-CHEVROLET-14Y

ENGINE ASSEMBLY CODES IDENTIFICATION

1992

FONT O 5.7(350) - LT5 VIN J	5.7(350) - LT1 VIN P			
ZAA	ZUA	ZUB	ZAC	ZAD

1993

FONT O 5.7(350) - LT5 VIN J	5.7(350) - LT1 VIN P	
ZVC	ZVB	ZVA

1994

FONT O 5.7(350) - LT5 VIN J	5.7(350) - LT1 VIN P			
ZWC	ZWH	ZWJ	ZWA	ZWB

1995

FONT O 5.7(350) - LT5 VIN J	5.7(350) - LT1 VIN P		
ZUD	ZUC	ZUF	XHT

1996

FONT O 5.7(350) - LT4 VIN 5	5.7(350) - LT1 VIN P
ZXD	ZXA

© 2000 GENERAL MOTORS SERVICE PARTS OPERATIONS-CHEVROLET-14Y

ENGINE AND TRANSMISSION USAGE

1984

VIN CODE	CUBIC DISP	LITER TYPE	ENGINE TYPE	FUEL TYPE	ENGINE OPT.	SERIES USAGE	TRANSMISSION USAGE
8	350	5.7	V8	TBI	L83	Y	MD8,MK2

AUTO TRANS.			MAN.TRANS.	
MD8	THM700R4	4 SPEED	MK2	4 SPEED

1985 - 86

VIN CODE	CUBIC DISP	LITER TYPE	ENGINE TYPE	FUEL TYPE	ENGINE OPT.	SERIES USAGE	TRANSMISSION USAGE
8	350	.	V8	TPI	L98	Y	MD8,MK2

AUTO TRANS.			MAN.TRANS.	
MD8	THM700R4	4 SPEED	MK2	4 SPEED

1987 - 88

VIN CODE	CUBIC DISP	LITER TYPE	ENGINE TYPE	FUEL TYPE	ENGINE OPT.	SERIES USAGE	TRANSMISSION USAGE
8	350	5.7	V8	TPI	L98	Y	MD8,MH5,MK2

AUTO TRANS.			MAN.TRANS.	
MD8	THM700R4	4 SPEED	MH5	4 SPEED
			MK2	4 SPEED

1989

VIN CODE	CUBIC DISP	LITER TYPE	ENGINE TYPE	FUEL TYPE	ENGINE OPT.	SERIES USAGE	TRANSMISSION USAGE
8	350	5.7	V8	TPI	L98	Y	MD8,ML9

AUTO TRANS.			MAN.TRANS.	
MD8	THM700R4	4 SPEED	ML9	6 SPEED

1990 - 91

VIN CODE	CUBIC DISP	LITER TYPE	ENGINE TYPE	FUEL TYPE	ENGINE OPT.	SERIES USAGE	TRANSMISSION USAGE
8	350	5.7	V8	TPI	L98	Y	MD8,ML9
J	350	5.7	V8	MFI	LT5	Y	ML9

AUTO TRANS.			MAN.TRANS.	
MD8	THM700R4/4L60	4 SPEED	ML9	6 SPEED

© 2000 GENERAL MOTORS SERVICE PARTS OPERATIONS–CHEVROLET–14Y

1992

VIN CODE	CUBIC DISP	LITER TYPE	ENGINE TYPE	FUEL TYPE	ENGINE OPT.	SERIES USAGE	TRANSMISSION USAGE
P	360	5.7	V8	MFI	LT1	Y	MD8,ML9
J	350	5.7	V8	MFI	LT5	Y	ML9

AUTO TRANS.			MAN.TRANS.		
MD8	THM700R4/4L60	4 SPEED	ML9	ZF	6 SPEED

© 2000 GENERAL MOTORS SERVICE PARTS OPERATIONS-CHEVROLET-14Y

ENGINE AND TRANSMISSION USAGE

1993

VIN CODE	CUBIC DISP	LITER TYPE	ENGINE TYPE	FUEL TYPE	ENGINE OPT.	SERIES USAGE	TRANSMISSION USAGE
P	350	5.7	V8	MFI	LT1	Y	MD8,ML9
J	350	5.7	V8	MFI	LT5	Y	ML9

AUTO TRANS.			MAN.TRANS.		
MD8	THM700R4/4L60	4 SPEED	ML9	ZF	6 SPEED

1994 - 1995

VIN CODE	CUBIC DISP	LITER TYPE	ENGINE TYPE	FUEL TYPE	ENGINE OPT.	SERIES USAGE	TRANSMISSION USAGE
P	350	5.7	V8	MFI	LT1	Y	M30,ML9
J	350	5.7	V8	MFI	LT5	Y	ML9

AUTO TRANS.			MAN.TRANS.		
M30	4L60E	4 SPEED	ML9	ZF	6 SPEED

1996

VIN CODE	CUBIC DISP	LITER TYPE	ENGINE TYPE	FUEL TYPE	ENGINE OPT.	SERIES USAGE	TRANSMISSION USAGE
P	350	5.7	V8	MFI	LT1	Y	M30
5	350	5.7	V8	MFI	LT4	Y	ML9

AUTO TRANS.			MAN.TRANS.		
M30	4L60E	4 SPEED	ML9	ZF	6 SPEED

© 2000 GENERAL MOTORS SERVICE PARTS OPERATIONS-CHEVROLET-14Y

0.000 ENGINE – OIL, Production/Service

91	Y 5.7–8 (L98), 4–SPD A/TRANS (MD8), FEDERAL EMIS (NA5), (EXC ENG OIL CLG (KC4)	10108422	1	DISCON	ENGINE, 5.7L (350 CID) (ZTA) ...	
91	Y 5.7–8 (L98), 6–SPD M/TRANS (ML9), FEDERAL EMIS (NA5)	10108423	1	DISCON	ENGINE, 5.7L (350 CID) (ZTB) ...	
91	Y 5.7–8 (L98), 4–SPD A/TRANS (MD8), ENG OIL CLG (KC4), FEDERAL EMIS (NA5)	10108424	1	DISCON	ENGINE, 5.7L (350 CID) (ZTC) ...	
92	Y 5.7P (LT1), 6–SPD M/TRANS (ML9)	10128439	1	DISCON	ENGINE, 5.7L (350 CID) (ZUB) ..	
92	Y 5.7P (LT1), 4–SPD A/TRANS (MD8)	10168518	1	DISCON	ENGINE, 5.7L (350 CID) (ZAC) ..	
93	Y 5.7P (LT1), 4–SPD A/TRANS (MD8)	10108612	1	DISCON	ENGINE, 5.7L (350 CID) (ZVA) ...	
93	Y 5.7J (LT5)	10168539	1		ENGINE, 5.7L (350 CID) (ZVC) ...	1–H6,101
94	Y 5.7P (LT1), 4–SPD A/TRANS (M30)	10168450	1	DISCON	ENGINE, 5.7L (350 CID) (ZWA, ZWJ)	
94	Y 5.7P (LT1), 6–SPD M/TRANS (ML9)	10215350	1	DISCON	ENGINE, 5.7L (350 CID) (ZWB, ZWH)	
94	Y 5.7J (LT5)	10219244	1		ENGINE, 5.7L (350 CID) (ZWC) ..	1–H6,101
95	Y 5.7P (LT1), 4–SPD A/TRANS (M30)	10230103	1	DISCON	ENGINE, 5.7L (350 CID) (ID: ZUC) .	
95	Y 5.7P (LT1), 6–SPD M/TRANS (ML9)	10230709	1	DISCON	ENGINE, 5.7L (350 CID) (XHT, ZUF)	
95	Y 5.7J (LT5)	10234780	1		ENGINE, 5.7L (350 CID) (ID: ZUD) .	1–H6,101
96	Y 5.7P (LT1), 4–SPD A/TRANS (M30)	10210312	1	DISCON	ENGINE, 5.7L (350 CID) (ID: ZXA)	
96	Y 5.7–5 (LT4), 6–SPD M/TRANS (ML9)	12551183	1	DISCON	ENGINE, 5.7L (350 CID) (ID: ZXD)	
84–96	Y	12345885	AR	*6.50	OIL, ENG (HIGH TEMP, SYNTHETIC, SAE 5W–30, SJ/CD (1 QT)) (08.800)	

0.000A ENGINE, New/Reman Goodwrench

NOTE 01: CONSISTS OF BLOCK, CRK & BRGS & SEALS, CAM & BRGS, O/PMP & CVR & SHF & SEALS, PIST & ROD ASMS, CYL HDS (W/VALVE TRAIN), WTR PMP SHF & CVR & SEALS, FRT CVR, TIM CH & GEARS, R/A CVRS, O/PAN, LIFT BKTS. DOES NOT INCLUDE INL/EXH MAN, FLYWHEEL, STARTER/IGNITION, WTR PMP, OR ATTACHING PARTS

NOTE 02: CONSISTS OF EVERYTHING IN NOTE 01 WITH ONE ADDITION; CRANKSHAFT BALANCER. DOES NOT INCLUDE INL/EXH MAN, FLYWHL, STARTER/IGN, WTR PMP OR ATTACHING PARTS

92–94	Y 5.7P (LT1)	12523000	1	N.L.	ENGINE, GASOLINE (GOODWRENCH) (NEW) (REFER TO NOTE #1 IN CATLG TEXT))	1–I8,101
95	Y 5.7P (LT1)	12524890	1	N.L.	ENGINE, GASOLINE (GOODWRENCH) (NEW, REF TO NOTE #2 IN CATLG TEXT;1995 VLV CVRS (12[illegible]21–22), VLV CVR BLTS (1[illegible]9674), O/PMP SCRN (0383[illegible]J), &O/PAN (12528503), PURCH OR REPL W/ORIG)	1–I8,101
96	Y 5.7P (LT1)	12533597	1	N.L.	ENGINE, GASOLINE (GOODWRENCH) (NEW) (REFER TO NOTE #1 IN CATLG TEXT))	1–I8,101
96	Y 5.7–5 (LT4)	12534776	1	N.L.	ENGINE, GASOLINE (GOODWRENCH) (NEW) (REFER TO NOTE #1 IN CATLG TEXT) ((5.7L, 350 CID))	1–J2,101

© 2000 GENERAL MOTORS SERVICE PARTS OPERATIONS–CHEVROLET–14Y

0.002 BOLT – NUT – SPACER, Engine Mounting

84	Y 5.7-8 (L83)	10200097	2	6.15	BOLT, ENG MT (HFH M12X1.75X80)	1-J21,4
85-92	Y 5.7-8 (L98)	10200097	2	6.15	BOLT, ENG MT	1-J21,4
90-95	Y 5.7J (LT5)	10200097	2	6.15	BOLT, ENG MT	1-J21,4
91-95	Y 5.7J (LT5)	11504596	8	*1.55	BOLT, ENG MT (M10X1.5X25, 10.9) (HEX) (08.900)	
92-95	Y 5.7P (LT1)	10200097	2	6.15	BOLT, ENG MT	1-J21,4
96	Y	10200097	2	6.15	BOLT, ENG MT	1-J21,4
90-96	Y	11502813	2	4.65	NUT, ENG MT (M12X1.75X13.4 25.6OD) (HEX FLGD PREV TORQ CAD) (08.917)	
90-94	Y	11516383	2	*1.20	NUT, ENG MT (16X2X18.9 34.2OD) (08.917)	
90-96	Y	10143502	AR	4.60	SPACER, ENG MT	1-J22,10

0.004 BOLT, Engine Lift

92-96	Y 5.7P (LT1)	9440071	2	*.26	BOLT, ENG LIFT FRT BRKT (HFH 3/8-16X1.00 280M PZOR) (08.900)	1-I18,502
96	Y 5.7-5 (LT4)	9440071	2	*.26	BOLT, ENG LIFT FRT BRKT (HFH 3/8-16X1.00 230M PZOR) (08.900)	1-I18,502
92-96	Y 5.7P (LT1)	9442052	3	*1.25	BOLT, ENG LIFT RR BRKT (3/8-16X3/4) (08.900)	1-I2,231
96	Y 5.7-5 (LT4)	9442052	3	*1.25	BOLT, ENG LIFT RR BRKT (3/8-16X3/4) (08.900)	1-I2,231
92-93	Y 5.7P (LT1)	9442339	2	.71	BOLT, ENG SHPG LAT (3/8-16 X 1-1/8) (280M) (02.042)	

0.027 MOUNT, Engine Mounting

84	Y 5.7-8 (L83)	17984499	2	48.50	MOUNT, ENG	1-J21,1
85	Y 5.7-8 (L98)	17984499	2	48.50	MOUNT, ENG	1-J21,1
86-91	Y 5.7-8 (L98)	17984499	2	48.50	MOUNT, ENG	1-J21,1
90-95	Y 5.7J (LT5)	14104622	2	64.20	MOUNT, ENG	1-J22,2
92-95	Y 5.7P (LT1)	10157980	2	79.30	MOUNT, ENG	1-J22,2
96	Y	10157980	2	79.30	MOUNT, ENG	1-J22,2

0.029 BOLT – BRACE – BRACKET – SHIELD – WASHER, Engine Mounting

93-94	Y 5.7J (LT5)	10187797	1	8.30	BOLT, CYL & C/CASE BR (M8X1.25X101.0, 6.12, SAE 4037 OR 1541, PC, MACH) (00.056)	
90-96	Y	9442963	6	.95	BOLT, ENG MT BRKT (08.900)	
90-91	Y 5.7J (LT5)	14069669	4	*1.10	BOLT, ENG MT BRKT BR (POSN #1) (M10X1.5X25 13HEX) (07.039)	1-J22,7
92-94	Y	11509591	4	2.00	BOLT, ENG MT BRKT BR (HFH, M12X1.75X40 10.9 PEOR 25.6-OD36-THD) (08.900)	7-H7,28
92-96	Y	14069669	4	*1.10	BOLT, ENG MT BRKT BR (POSN #1) (M10X1.5X25 13HEX) (07.039)	1-J22,7
92-96	Y	22651578	4	2.45	BOLT, ENG MT BRKT BR (HFH, M12X1.75X40) (08.900)	7-H7,28
90-91	Y 5.7J (LT5)	14104625	LH	37.90	BRACE, ENG MT BRKT	1-J22,9
90-91	Y 5.7J (LT5)	14104626	RH	37.90	BRACE, ENG MT BRKT	1-J22,4
92-96	Y	14104625	LH	37.90	BRACE, ENG MT BRKT	1-J22,9
92-96	Y	14104626	RH	37.90	BRACE, ENG MT BRKT	1-J22,4
90-91	Y 5.7J (LT5)	14104623	LH	23.10	BRACKET, ENG MT	1-J22,1
90-91	Y 5.7J (LT5)	14104624	RH	24.40	BRACKET, ENG MT	1-J22,1

© 2000 GENERAL MOTORS SERVICE PARTS OPERATIONS-CHEVROLET-14Y

0.029 BOLT – BRACE – BRACKET – SHIELD – WASHER, Engine Mounting (Con't)

92-96	Y	14104623	LH	23.10	BRACKET, ENG MT	1-J22,1
92-96	Y	14104624	RH	24.40	BRACKET, ENG MT	1-J22,1
90-91	Y 5.7J (LT5)	10098129	2	23.10	SHIELD, ENG MT (HEAT)	1-J22,11
92-96	Y	10098129	2	23.10	SHIELD, ENG MT (HEAT)	1-J22,11
95-96	Y	14046942	4	.73	WASHER, ENG MT BRKT BR (M13X24X2) (05.303)	1-J22,8
95-96	Y	14055822	6	.31	WASHER, ENG MT BRKT BR (24X22.50) (08.929)	1-J22,8

0.030 BLOCK, Engine Cylinder case

90-92	Y 5.7J (LT5)	10163555	1		BLOCK, ENG (TWO PART) (UPPER & LOWER)	1-H6,101

0.033 ENGINE, Cylinder and Case

NOTE 1: INCLUDES BLOCK, CR/SHF, CR/SHF BRGS, PISTON & ROD ASM, ROD BRGS, RR SEAL.

NOTE 2: INCLUDES BLOCK, PISTON & ROD ASM, CR/SHF, CR/SHF BRGS.

NOTE 3: WHEN USED IN PLC OF 1ST DES, IT WILL BE NEC TO PROCURE OIL PUMP MTG BOLT 10046007 (2.36" LONG) . SHORTED BOLT FROM REPLACED ENGINE SHOULD NOT BE USED.

*NOTE 4: 1ST DES ENGINE HAS OIL PUMP MTG SURFACE ON BEARING CAP W/POCKET DEPTH OF 0.30" OR LESS WHICH REQUIRES OIL PUMP MTG BOLT 3892678 (2.0" LONG) ****2ND DES ENGINE HAS OIL PUMP MTG SURFACE ON BEARING CAP W/POCKET DEPTH OF 0.32"– 0.42" WHICH REQUIRES OIL PUMP MTG BOLT 10046007 (2.36" LONG) .*

NOTE 5: WHEN USED FOR 1987 USAGE, IT WILL BE NECESSARY TO ALSO ORDER (16) RKR ARM & BALL UNITS P/N 10089648

NOTE 6: WHEN USED IN PLACE OF 14083505 PARTIAL ENGINE & (14083502 BLOCK) (85 & PRIOR USG) IT WILL BE NEC TO USE THESE ADDITIONAL PARTS: (1) FLYWHL 14088761 (1982 W/A.T.) OR 14088765 (1983-85 W/A.T.) OR 14088646 (W/M.T.) AND (6) FLYWHL BOLTS 14088764 (W/A.T.) OR 14088645 (W/M.T.) ----- (NOTE CONTINUE

NOTE 6A: (1) OIL PAN 14087077 (1) OIL PAN GASKET 14088505 (1) LH OIL PAN REINF 14088501 AND (1) RH OIL PAN REINF 14088502 & (1) TRANS CONV CVR 14106616 (W/A.T.) OR (1) CLU HSG CVR 14087248 (W/M.T.) .

NOTE 10:INCLUDES:BLOCK ASM, CR/SHF, CR/SHF BRGS, CM/SHF BRGS, PISTON & ROD ASM, ROD BRGS, CR/SHF RR SEAL

85	Y 5.7-8 (L98)	10077067	1	2665.00	ENGINE, (SERV PARTIAL) (REFER TO NOTES 1, 6 IN CATALOG TEXT)	1-G7,1
86	Y	12510737	1	1700.20	ENGINE, (SERV PARTIAL) (5.7-8) (ALUM HD) (REFER TO NOTE #1 IN CATLG TEXT))	1-G23,1
87-89	Y 5.7-8 (L98)	12510737	1	1700.20	ENGINE, (SERV PARTIAL) (NOTE 1, 5)	1-G23,1
90-91	Y 5.7-8 (L98)	12510735	1	1701.20	ENGINE, (SERV PARTIAL) (REFER TO NOTE 1 IN CATALOG TEXT)	1-G23,1

0.034 PIPE – PLUG, Engine Block

90-92	Y 5.7J (LT5)	10122192	1	10.70	PIPE, ENG BLK OIL GAL	1-H16,401
93-95	Y 5.7J (LT5)	10168695	1	32.40	PIPE, ENG BLK OIL GAL	1-H16,401
89-90	Y 5.7-8 (L98)	14084945	AR	.70	PLUG, ENG BLK COOL DRN HOLE (1/4-18X0.56 STL)	
90-95	Y 5.7J (LT5)	10067700	2	3.00	PLUG, ENG BLK COOL DRN HOLE (1/4-18 THD) (08.970)	1-H6,104
92-96	Y 5.7P (LT1)	838538	8	*.31	PLUG, ENG BLK CORE HOLE (41.5MM DIA) (STEEL)	1-I8,121
96	Y 5.7-5 (LT4), 6-SPD M/TRANS (ML9)	3826504	8	4.66	PLUG, ENG BLK CORE HOLE (41.5MM DIA) (BRASS)	1-J2,121
89	Y (5.7-8)	838538	AR	*.31	PLUG, WATER JACKET SIDE (DIA 41.5MM)	1-I8,121

© 2000 GENERAL MOTORS SERVICE PARTS OPERATIONS-CHEVROLET-14Y

0.056 BOLT – STUD, Engine Main Bearing Cap

84	Y 5.7-8 (L83)	3932480	7	*1.90	BOLT, CR/SHF BRG CAP	1-G7,51
85-91	Y 5.7-8 (L98)	3932480	7	*1.90	BOLT, CR/SHF BRG CAP (7/16-14 X 3 11/32)	1-G7,51
90-93	Y 5.7J (LT5)	10135847	6	19.50	BOLT, CR/SHF BRG CAP (M12 X 1.75 X 112.0 4H)	1-H6,152
90-92	Y 5.7J (LT5)	10135849	2	1.10	BOLT, CR/SHF BRG CAP (REAR MAIN OUTER) (M8 X 1.5 X 80.0 6G) (01.428)	1-H6,154
90-92	Y 5.7J (LT5)	10153559	4	5.00	BOLT, CR/SHF BRG CAP (M10 X 1.5 X 111.0 4H)	1-H6,148
92-95	Y 5.7P (LT1)	3877669	6	*3.10	BOLT, CR/SHF BRG CAP (7/16-14X2.06) (00.293)	1-I8,140
92-95	Y 5.7P (LT1)	3932480	10	*1.90	BOLT, CR/SHF BRG CAP (7/16-14 X 3 11/32)	1-G7,51
93-95	Y 5.7J (LT5)	10153559	10	5.00	BOLT, CR/SHF BRG CAP (M10 X 1.5 X 111.0 4H)	1-H6,148
93-95	Y 5.7J (LT5)	10187797	10	8.30	BOLT, CR/SHF BRG CAP (M8X1.25X101.0, 6.12, SAE 4037 OR 1541, PC, MACH)	
96	Y 5.7P (LT1), 4-SPD A/TRANS (M30)	3877669	6	*3.10	BOLT, CR/SHF BRG CAP (7/16-14X2.06) (00.293)	1-I8,140
96	Y 5.7-5 (LT4), 6-SPD M/TRANS (ML9)	3877669	6	*3.10	BOLT, CR/SHF BRG CAP (7/16-14X2.06) (00.293)	1-I8,140
96	Y 5.7P (LT1), 4-SPD A/TRANS (M30)	3932480	10	*1.90	BOLT, CR/SHF BRG CAP (7/16-14 X 3 11/32)	1-G7,51
96	Y 5.7-5 (LT4), 6-SPD M/TRANS (ML9)	3932480	10	*1.90	BOLT, CR/SHF BRG CAP (7/16-14 X 3 11/32)	1-G7,51
84	Y 5.7-8 (L83)	14087508	3	7.95	STUD, CR/SHF BRG CAP (3/8 -16 X 7/16-14 X 5 5/8)	1-G7,52
85	Y 5.7-8 (L98)	14087508	3	7.95	STUD, CR/SHF BRG CAP (3/8 -16 X 7/16-14 X 5 5/8)	1-G7,52
87-91	Y	12561389	3	6.65	STUD, CR/SHF BRG CAP (HFH SPL 7/16-14X3.36 THD 1.12, 3/8-16 FLG END, STL) (7/16-14 X 3.38 THD 1.12, 3/8-14 FLG END, STL)	1-G23,47
92-95	Y 5.7P (LT1)	12561389	3	6.65	STUD, CR/SHF BRG CAP (HFH SPL 7/16-14X3.36 THD 1.12, 3/8-16 FLG END, STL) (7/16-14 X 3.38 THD 1.12, 3/8-14 FLG END, STL)	1-G23,47
96	Y 5.7P (LT1), 4-SPD A/TRANS (M30)	12561389	3	6.65	STUD, CR/SHF BRG CAP (7/16-14 X 3.38 THD 1.12, 3/8-14 FLG END, STL)	1-G23,47
96	Y 5.7-5 (LT4), 6-SPD M/TRANS (ML9)	12561389	3	6.65	STUD, CR/SHF BRG CAP (7/16-14 X 3.38 THD 1.12, 3/8-14 FLG END, STL)	1-G23,47

0.093 PLASTIGAGE, Engine Main Bearing Clearance

84-86	Y	1390274	AR	19.50	PLASTIGAGE (TYPE PG-1)	

0.095 CAP, Engine Main Bearing

84-91	Y	3956688	4	DISCON	CAP, CR/SHF BRG (#1, 2, 3, 4) (2-BOLT CAP)	

0.096 BEARING – BEARING KIT, Engine Crankshaft Main

84	Y 5.7-8 (L83)	464047	1	DISCON	BEARING KIT (#1) (.010 U.S.)	
84	Y 5.7-8 (L83)	464048	1	DISCON	BEARING KIT (#1) (.020 U.S.)	
84	Y 5.7-8 (L83)	12329429	3	22.80	BEARING KIT (#2, 3, 4) (.020 U.S.)	1-I8,150
84	Y 5.7-8 (L83)	12329758	3	22.59	BEARING KIT (#2, 3, 4) (.002 U.S.)	1-I8,150
84	Y 5.7-8 (L83)	12329792	1	33.41	BEARING KIT (#5) (.002 U.S.)	

© 2000 GENERAL MOTORS SERVICE PARTS OPERATIONS-CHEVROLET-14Y

0.096 BEARING – BEARING KIT, Engine Crankshaft Main (Con't)

84	Y 5.7-8 (L83)	12329794	1	33.41	BEARING KIT (#5) (.020 U.S.)	
85-87	Y 5.7-8 (L98)	464047	1	DISCON	BEARING KIT (#1) (.010 U.S.)	
85-87	Y 5.7-8 (L98)	464048	1	DISCON	BEARING KIT (#1) (.020 U.S.)	
85-87	Y 5.7-8 (L98)	12329429	3	22.60	BEARING KIT (#2, 3, 4) (.020 U.S.)	1-I8,150
85-91	Y 5.7-8 (L98)	12329758	3	22.59	BEARING KIT (#2, 3, 4) (.002 U.S.)	1-I8,150
85-87	Y 5.7-8 (L98)	12329792	1	33.41	BEARING KIT (#5) (.002 U.S.)	
85-87	Y 5.7-8 (L98)	12329794	1	33.41	BEARING KIT (#5) (.020 U.S.)	
84	Y 5.7-8 (L83)	10120990	1	14.69	BEARING KIT, CR/SHF (#1, 2, 3, 4) (STD)	1-G7,31
84	Y 5.7-8 (L83)	10120993	1	30.09	BEARING KIT, CR/SHF (RR) (STD)	1-I8,150
84	Y 5.7-8 (L83)	12329428	3	23.51	BEARING KIT, CR/SHF (#2, 3, 4)	1-I8,150
84	Y 5.7-8 (L83)	12329793	1	29.33	BEARING KIT, CR/SHF (.010 U.S./STD FLG)	1-I8,150
84-91	Y 5.7-8	12528826	1	32.90	BEARING KIT, CR/SHF (.001 U.S./STD) (RR)	1-H6,127
85-91	Y 5.7-8 (L98)	10120990	4	14.69	BEARING KIT, CR/SHF (#1, 2, 3, 4) (STD)	1-G7,31
85-91	Y 5.7-8 (L98)	10120993	1	30.09	BEARING KIT, CR/SHF (STD) (RR)	1-I8,150
85-91	Y 5.7-8 (L98)	12329428	3	23.51	BEARING KIT, CR/SHF (#2, 3, 4) (.010 U.S.)	1-I8,150
85-91	Y 5.7-8 (L98)	12329793	1	29.33	BEARING KIT, CR/SHF (.010 U.S./STD FLG) (RR)	1-I8,150
87	Y 5.7-8 (L98)	10181325	1	30.35	BEARING KIT, CR/SHF (RR (STD, .008"O.S.FLG))	1-I8,150
87	Y 5.7-8 (L98)	10181326	1	33.41	BEARING KIT, CR/SHF (RR (.001"U.S., .008"O.S.FLG))	1-I8,150
88-91	Y 5.7-8 (L98)	10181325	1	30.35	BEARING KIT, CR/SHF (RR#5) (STD) (.008"O.S.FLG) (STD) (.008 O.S. FLG)	1-I8,150
88-91	Y 5.7-8 (L98)	10181326	1	33.41	BEARING KIT, CR/SHF (RR#5 (.001"U.S., .008"O.S.FLG) (#5) (.001 U.S., .008 O.S. FLG)	1-I8,150
90-95	Y 5.7J (LT5)	12508101	3	20.50	BEARING KIT, CR/SHF (#1, 2, 4)	1-H6,127
90-95	Y 5.7J (LT5)	12508102	1	63.75	BEARING KIT, CR/SHF (#3)	1-H6,127
90-95	Y 5.7J (LT5)	12508103	1	94.35	BEARING KIT, CR/SHF (#5)	1-H6,127
91	Y 5.7-8	12531215	4	26.52	BEARING KIT, CR/SHF (#1, 2, 3, 4)) (.001 U.S./STD) (REPL 0.0006" U.S. BRG KIT)	1-H6,127
92-94	Y 5.7P (LT1)	10120990	4	14.69	BEARING KIT, CR/SHF (#1, 2, 3, 4) (STD) (STD)	1-G7,31
92-95	Y 5.7P (LT1)	10120993	1	30.09	BEARING KIT, CR/SHF (RR#5) (STD) (RR)	1-I8,150
92-95	Y 5.7P (LT1)	10181325	1	30.35	BEARING KIT, CR/SHF (RR#5) (STD) (.008"O.S.FLG) (STD) (.008 O.S. FLG)	1-I8,150
92-95	Y 5.7P (LT1)	10181326	1	33.41	BEARING KIT, CR/SHF (RR#5 (.001"U.S., .008"O.S.FLG) (#5) (.001 U.S., .008 O.S. FLG)	1-I8,150
92-94	Y 5.7P (LT1)	12329428	4	23.51	BEARING KIT, CR/SHF (#1, 2, 3, 4) (.010 U.S.)	1-I8,150
92-93	Y 5.7P (LT1)	12329429	4	22.60	BEARING KIT, CR/SHF (#1, 2, 3, 4) (.020 U.S.)	1-I8,150
92-93	Y 5.7P (LT1)	12329758	4	22.59	BEARING KIT, CR/SHF (#1, 2, 3, 4) (.002 U.S.)	1-I8,150
92-95	Y 5.7P (LT1)	12329793	1	29.33	BEARING KIT, CR/SHF (.010 U.S./STD FLG) (RR)	1-I8,150
92-95	Y 5.7P (LT1)	12528826	1	32.90	BEARING KIT, CR/SHF (.001 U.S./STD) (RR)	1-H6,127

© 2000 GENERAL MOTORS SERVICE PARTS OPERATIONS-CHEVROLET-14Y

0.096 BEARING – BEARING KIT, Engine Crankshaft Main (Con't)

92-96	Y 5.7P (LT1)	12531215	4	26.52	BEARING KIT, CR/SHF (#1, 2, 3, 4)) (.001 U.S./STD) (REPL 0.0006" U.S. BRG KIT)	1-H6,127
95-96	Y 5.7P (LT1)	10120990	4	14.69	BEARING KIT, CR/SHF (#1, 2, 3, 4) (STD) (STD) (IF CRNK JOURNAL MEAS IS IN STD BRG RANGE, MAY USE THIS PART IN PLACE OF 12513950 (.0006 US), 10120992 (.001 US), OR 12531215 (.001 US) .)	1-G7,31
96	Y 5.7-5 (LT4)	10120990	4	14.69	BEARING KIT, CR/SHF (#1, 2, 3, 4)) (STD) (IF CRNK JOURNAL MEAS IS IN STD BRG RANGE, MAY USE THIS PART IN PLACE OF 12513950 (.0006 US), 10120992 (.001 US), OR 12531215 (.001 US) .)	1-G7,31
96	Y 5.7P (LT1), 4-SPD A/TRANS (M30)	10120993	1	30.09	BEARING KIT, CR/SHF (RR #5) (STD) (RR)	1-I8,150
96	Y 5.7-5 (LT4), 6-SPD M/TRANS (ML9)	10120993	1	30.09	BEARING KIT, CR/SHF (RR #5) (STD) (RR)	1-I8,150
96	Y 5.7P (LT1), 4-SPD A/TRANS (M30)	12528826	1	32.90	BEARING KIT, CR/SHF (.001 U.S./STD) (RR)	1-H6,127
96	Y 5.7-5 (LT4), 6-SPD M/TRANS (ML9)	12528826	1	32.90	BEARING KIT, CR/SHF (.001 U.S./STD) (RR)	1-H6,127
96	Y 5.7-5 (LT4)	12531215	4	26.52	BEARING KIT, CR/SHF (#1, 2, 3, 4)) (.001 U.S./STD) (REPL 0.0006" U.S. BRG KIT)	1-H6,127
84	Y 5.7-8 (L83)	12329792	1	33.41	BEARING, CR/SHF UPR (#5) (.010 U.S.)	
85-91	Y 5.7-8 (L98)	12329792	1	33.41	BEARING, CR/SHF UPR (#5) (.010 U.S.) (.002 U.S.)	
92-95	Y 5.7P (LT1)	12329792	1	33.41	BEARING, CR/SHF UPR (#5) (.010 U.S.) (.002 U.S.)	
96	Y 5.7P (LT1), 4-SPD A/TRANS (M30)	12329793	1	29.33	BEARING, CR/SHF UPR (.010 U.S./STD FLG) (RR)	1-I8,150
96	Y 5.7-5 (LT4), 6-SPD M/TRANS (ML9)	12329793	1	29.33	BEARING, CR/SHF UPR (.010 U.S./STD FLG) (RR)	1-I8,150

0.137 BOLT – GASKET – HOUSING – NUT – PIN – SEAL – SEAL KIT – STUD, Engine Rear Main Bearing

91-95	Y 5.7J (LT5)	11513897	AR	*.73	BOLT, CR/SHF RR OIL SEAL HSG (M6X1X20, 9.8, PEOR, TORQ, FULL THD, 12 OD) (08.913) ...	
92-95	Y 5.7P (LT1)	14088561	2	.97	BOLT, CR/SHF RR OIL SEAL HSG (1/4-20 X 7/8)	1-G7,42
92-95	Y 5.7P (LT1)	14088562	2	*1.00	BOLT, CR/SHF RR OIL SEAL HSG (1/4-20 X 1 3/4)	1-G7,63
86-91	Y 5.7-3 (L98)	14088561	2	.97	BOLT, CR/SHF RR OIL SEAL RET (1/4-20 X 7/8)	1-G7,42
86-91	Y 5.7-8 (L98)	14088562	2	*1.00	BOLT, CR/SHF RR OIL SEAL RET (1/4-20 X 1 3/4)	1-G7,63
86-91	Y 5.7-8 (L98)	12555714	1	1.43	GASKET, CR/SHF RR OIL SEAL HSG	1-G7,58
90-95	Y 5.7J (LT5)	10169681	1	20.86	GASKET, CR/SHF RR OIL SEAL HSG	1-H16,405
92-96	Y 5.7P (LT1)	12555714	1	1.43	GASKET, CR/SHF RR OIL SEAL HSG	1-G7,58
96	Y 5.7-5 (LT4)	12555714	1	1.43	GASKET, CR/SHF RR OIL SEAL HSG	1-G7,58

© 2000 GENERAL MOTORS SERVICE PARTS OPERATIONS-CHEVROLET-14Y

0.137 BOLT – GASKET – HOUSING – NUT – PIN – SEAL – SEAL KIT – STUD, Engine Rear Main Bearing (Con't)

86–91	Y 5.7–8 (L98)	14088556	1	40.40	HOUSING, CR/SHF RR OIL SEAL (00.659)	1–G7,60
90–92	Y 5.7J (LT5)	10168700	1	85.68	HOUSING, CR/SHF RR OIL SEAL	1–H16,403
92–96	Y 5.7P (LT1)	14088556	1	40.40	HOUSING, CR/SHF RR OIL SEAL (00.659)	1–G7,60
93–95	Y 5.7J (LT5)	10168700	1	85.68	HOUSING, CR/SHF RR OIL SEAL	1–H16,403
96	Y 5.7–5 (LT4)	14088556	1	40.40	HOUSING, CR/SHF RR OIL SEAL (00.659)	1–G7,60
92–96	Y 5.7P (LT1)	12337984	1	*.57	NUT, CR/SHF RR OIL SEAL RET (HFX, 1/4–20X.234, 284M, 69K, POR, 240) (HFH, 1/4–20X.234, 284M, 69K, POR, 240) (08.917)	1–I8,132
96	Y 5.7–5 (LT4)	12337984	1	*.57	NUT, CR/SHF RR OIL SEAL RET (HFX, 1/4–20X.234, 284M, 69K, POR, 240) (HFH, 1/4–20X.234, 284M, 69K, POR, 240) (08.917)	1–I8,132
92–96	Y 5.7P (LT1)	9441003	1	*.86	PIN, CR/SHF RR OIL SEAL HSG LOC (SPRING TYPE S 7/16X9/16 STL ZP) (08.940)	1–I8,151
96	Y 5.7–5 (LT4)	9441003	1	*.86	PIN, CR/SHF RR OIL SEAL HSG LOC (SPRING TYPE S 7/16X9/16 STL ZP) (08.940)	1–I8,151
84–85	Y (5.7–8)	10121044	1	24.30	SEAL KIT, CR/SHF RR OIL	1–G7,48
86–91	Y 5.7–8 (L98)	10088158	1	21.01	SEAL, CR/SHF RR OIL	1–G7,62
90–95	Y 5.7J (LT5)	10088158	1	21.01	SEAL, CR/SHF RR OIL	1–G7,62
92–96	Y 5.7P (LT1)	10088158	1	21.01	SEAL, CR/SHF RR OIL	1–G7,62
96	Y 5.7–5 (LT4)	10088158	1	21.01	SEAL, CR/SHF RR OIL	1–G7,62
86–91	Y 5.7–8 (L98)	14101058	1	2.25	STUD, CR/SHF RR OIL SEAL RET (1/4–20 X 2 3/16)	1–G7,59
89–91	Y 5.7–8 (L98)	14080362	2	*1.65	STUD, CR/SHF RR OIL SEAL RET (5/16 X 18 X 1 43/64) (01.428)	1–G7,45
92–96	Y 5.7P (LT1)	14080362	2	*1.65	STUD, CR/SHF RR OIL SEAL RET (5/16 X 18 X 1 43/64) (01.428)	1–G7,45
92–96	Y 5.7P (LT1)	14101058	1	2.25	STUD, CR/SHF RR OIL SEAL RET (1/4–20 X 2 3/16)	1–G7,59
96	Y 5.7–5 (LT4)	14080362	2	*1.65	STUD, CR/SHF RR OIL SEAL RET (5/16 X 18 X 1 43/64) (01.428)	1–G7,45
96	Y 5.7–5 (LT4)	14101058	1	2.25	STUD, CR/SHF RR OIL SEAL RET (1/4–20 X 2 3/16)	1–G7,59
87–88	Y	14080362	2	*1.65	STUD, CR/SHF RR SEAL RET (5/16X18X1.44) (01.428)	1–G7,45

0.153 SHIM KIT – WASHER, Engine Main Bearing Cap

84–86	Y (5.7–8)	3911010	4	DISCON	SHIM KIT (#1, 2, 3, 4)	
84–86	Y (5.7–8)	3911011	1	DISCON	SHIM KIT (#5)	
90–92	Y 5.7J (LT5)	10135846	6	1.90	WASHER, CR/SHF BRG CAP (13.0 ID 4.0 THK) (00.060)	1–H6,152
90–92	Y 5.7J (LT5)	10153561	4	2.10	WASHER, CR/SHF BRG CAP (19.0 OD X 11.0 ID X 4.0 THK) (00.060)	1–H6,148
93–95	Y 5.7J (LT5)	10153561	10	2.10	WASHER, CR/SHF BRG CAP (19.0 OD X 11.0 ID X 4.0 THK) (00.060)	1–H6,148
93–95	Y 5.7J (LT5)	10187796	10	3.95	WASHER, CR/SHF BRG CAP (16.0 OD X 9.0 ID X 4.0 THK) (00.060)	1–H6,146

© 2000 GENERAL MOTORS SERVICE PARTS OPERATIONS–CHEVROLET–14Y

0.206 BOLT – COVER – NUT – PIN – PLUG – STUD – WASHER, Engine Front Cover

90–96	Y 5.7J (LT5)	11515792	5	*.81	BOLT, ENG FRT CVR (08.900)	1–H13,316
91–96	Y 5.7J (LT5)	11508805	2	*.41	BOLT, ENG FRT CVR (HFH M6X1X16 9.8 POR 14 OD 14MM THD) (08.900)	1–H13,316
92–94	Y 5.7P (LT1)	14096659	8	.90	BOLT, ENG FRT CVR (HFH, 1/4–20X1.38, .52 OD, .75 THD, 280M, PO) (00.137)	1–I6,309
95–96	Y 5.7P (LT1)	9442397	1	.27	BOLT, ENG FRT CVR ((1/4–20X1 3/8 .52 OD, .75 THD, 280M, PO)) (08.900)	1–I6,309
96	Y 5.7–5 (LT4)	9442397	1	.27	BOLT, ENG FRT CVR ((1/4–20X1 3/8 .52 OD, .75 THD, 280M, PO)) (08.900)	1–I6,309
84–91	Y 5.7–8	10243967	1	30.60	COVER, ENG FRT (LESS POINTER)	1–G7,108
90–92	Y 5.7J (LT5)	10122126	1	103.10	COVER, ENG FRT	1–H13,313
92–94	Y 5.7P (LT1)	12551636	1	70.20	COVER, ENG FRT	1–I6,308
93–95	Y 5.7J (LT5)	10187756	1	140.40	COVER, ENG FRT	1–H13,313
95	Y 5.7P (LT1)	12552426	1	65.70	COVER, ENG FRT	1–I6,308
96	Y 5.7P (LT1)	12552427	1	39.70	COVER, ENG FRT	1–J6,276
96	Y 5.7–5 (LT4)	12552427	1	39.70	COVER, ENG FRT	1–J6,276
91–92	Y	11514596	2	1.82	NUT, ENG FRT CVR (M8X1.25) (08.915) (AC–DELCO #11514596)	
93–96	Y 5.7J (LT5)	11514596	2	1.82	NUT, ENG FRT CVR (M8X1.25) (08.915) (AC–DELCO #11514596)	
92–96	Y 5.7P (LT1)	12554553	2	.20	PIN, ENG FRT CVR LOC (1/4 X 5/8) (08.939)	1–I6,305
96	Y 5.7–5 (LT4)	12554553	2	.20	PIN, ENG FRT CVR LOC (1/4 X 5/8) (08.939)	1–I6,305
92–96	Y 5.7P (LT1)	12554553	2	.20	PIN, O/PMP LOC (1/4 X 5/8) (08.939)	1–I6,305
96	Y 5.7–5 (LT4)	12554553	2	.20	PIN, O/PMP LOC (1/4 X 5/8) (08.939)	1–I6,305
90–95	Y 5.7J (LT5)	10067630	2	5.00	PLUG, TMG CHAIN GDE ACC HOLE (00.724)	1–H10,224
90–95	Y 5.7J (LT5)	10067737	2	3.25	STUD, ENG FRT CVR (M8X1.25–6G THD) (PEOR)	
90–95	Y 5.7J (LT5)	10067631	2	6.40	WASHER, TMG CHAIN GDE ACC HOLE PLUG (00.724)	1–H10,225

0.207 GASKET – GASKET KIT, Engine Front Cover

84	Y 5.7–8 (L83)	10159418	1	14.38	GASKET KIT, ENG FRT CVR	
85–91	Y 5.7–8 (L98)	10159418	1	14.38	GASKET KIT, ENG FRT CVR (INCLS CR/SHFT SEAL, PAN SEAL, TIMING CVR & F/PMP & W/PMP GSKT)	
84–88	Y	10108435	1	*1.67	GASKET, ENG FRT CVR	1–G7,109
89–91	Y 5.7–8 (L98)	10108435	1	*1.67	GASKET, ENG FRT CVR	1–G7,109
90–92	Y 5.7J (LT5)	10135877	1	25.76	GASKET, ENG FRT CVR	1–H13,312
92–95	Y 5.7P (LT1)	10128293	1	1.68	GASKET, ENG FRT CVR	1–I6,306
93–95	Y 5.7J (LT5)	10187758	1	72.17	GASKET, ENG FRT CVR	1–H13,312
96	Y 5.7P (LT1), 4–SPD A/TRANS (M30)	10128293	1	1.68	GASKET, ENG FRT CVR	1–I6,306
96	Y 5.7–5 (LT4), 6–SPD M/TRANS (ML9)	10128293	1	1.68	GASKET, ENG FRT CVR	1–I6,306

© 2000 GENERAL MOTORS SERVICE PARTS OPERATIONS–CHEVROLET–14Y

0.213 SEAL, Engine Front Cover & Crankshaft Seal

84	Y 5.7-8 (L83)	10243247	1	10.91	SEAL, CR/SHF FRT OIL (TIMING GR CVR)	
85-91	Y 5.7-8 (L98)	10243247	1	10.91	SEAL, CR/SHF FRT OIL (TIMING GR CVR) (61.42/61.32 MM O.D.)	
90-95	Y 5.7J (LT5)	10067443	1	11.32	SEAL, CR/SHF FRT OIL	1-H13,314
92-95	Y 5.7P (LT1)	10128316	1	8.93	SEAL, CR/SHF FRT OIL (61.5MM O.D. W/PART NUMBER STAMPING)	1-I6,307
96	Y 5.7P (LT1), 4-SPD A/TRANS (M30)	10128316	1	8.93	SEAL, CR/SHF FRT OIL (61.5MM O.D. W/PART NUMBER STAMPING)	1-I6,307
96	Y 5.7-5 (LT4), 6-SPD M/TRANS (ML9)	10128316	1	8.93	SEAL, CR/SHF FRT OIL (61.5MM O.D. W/PART NUMBER STAMPING)	1-I6,307

0.219 INDICATOR, Engine Front Cover Timing

84-91	Y	3991435	1	*2.90	INDICATOR, TMG	1-H13,315
90-95	Y 5.7J (LT5)	10090539	1	12.00	INDICATOR, TMG	1-H13,315

0.253 PLUG, Cylinder Head Valve Seat

91	Y 5.7-8 (L98)	444654	AR	1.25	PLUG, CYL HD OIL GAL (SQ SOC PIPE) (1/4-18 NPTF) (08.971)	

0.269 HEAD, Engine Cylinder

84	Y 5.7-8 (L83)	14034808	2	493.90	HEAD	1-G11,65
85	Y 5.7-8 (L98)	14034808	2	493.90	HEAD, CYL	1-G11,65
85	Y ALUM HD	10125374	2	493.90	HEAD, CYL	1-G19,69
86	Y 5.7-8 (L98), (CAST IRON HD (KB2))	14034808	2	493.90	HEAD, CYL	1-G11,65
87-89	Y	10125374	2	493.90	HEAD, CYL	1-G19,69
90-91	Y 5.7-8 (L98)	10125374	2	493.90	HEAD, CYL	1-G19,69
90-92	Y 5.7J (LT5)	12516175	LH	5478.30	HEAD, CYL (W/VLV)	1-H10,214
90-92	Y 5.7J (LT5)	12516176	RH	5478.30	HEAD, CYL (W/VLV)	1-H10,214
92	Y 5.7P (LT1)	10205244	2	DISCON	HEAD, CYL	
93-95	Y 5.7J (LT5)	10168654	RH	5478.30	HEAD, CYL	1-H10,214
93-95	Y 5.7J (LT5)	10168655	LH	5478.30	HEAD, CYL	1-H10,214
93	Y 5.7P (LT1), 4-SPD A/TRANS (MD8), 6-SPD M/TRANS (ML9)	10205244	2	DISCON	HEAD, CYL	
94-95	Y 5.7P (LT1)	10168448	2	866.60	HEAD, CYL	1-I23,218
96	Y 5.7P (LT1), 4-SPD A/TRANS (M30)	10168448	1	866.60	HEAD, CYL	1-I23,218
96	Y 5.7-5 (LT4), 6-SPD M/TRANS (ML9)	12557773	2	757.50	HEAD, CYL	1-J6,218

0.289 GASKET - GASKET KIT, Engine Cylinder Head

84	Y (5.7-8)	10161303	1	DISCON	GASKET KIT	
86	Y 5.7-8 (L98), CAST IRON HD (KB2)	10161359	1	DISCON	GASKET KIT	
85	Y 5.7-8 (L98)	10159449	1	DISCON	GASKET KIT, CYL HD	
86	Y ALUM HD	10089675	1	194.82	GASKET KIT, CYL HD	1-G14,74
87-88	Y	10089675	1	194.82	GASKET KIT, CYL HD	1-G14,74
89-90	Y 5.7-8	12513774	1	195.84	GASKET KIT, CYL HD	
91	Y 5.7-8 (L98)	12506358	1	241.74	GASKET KIT, CYL HD (ASB)	
92-93	Y 5.7P (LT1)	12518047	1	271.32	GASKET KIT, CYL HD	1-I2,1
92	Y 5.7P (LT1)	12524675	1	243.78	GASKET KIT, CYL HD	1-I2,1
94-96	Y 5.7P (LT1)	12369146	1	85.68	GASKET KIT, CYL HD	1-I18,1

© 2000 GENERAL MOTORS SERVICE PARTS OPERATIONS-CHEVROLET-14Y

0.289 GASKET – GASKET KIT, Engine Cylinder Head (Con't)

96	Y 5.7-5 (LT4), 6-SPD M/TRANS (ML9)	12369147	1	243.78	GASKET KIT, CYL HD (INCLS (2) HD GSKTS, INT/EXH GSKTS, EGR & W/PMP GSKTS)	1-J6,1
84	Y 5.7-8 (L83)	10105117	2	17.20	GASKET, CYL HD	1-G11,59
85	Y 5.7-8 (L98)	10105117	2	17.20	GASKET, CYL HD	1-G11,59
86	Y 5.7-8 (L98), CAST IRON HD (KB2)	10105117	2	17.20	GASKET, CYL HD	1-G11,59
86	Y ALUM HD	12557236	2	16.02	GASKET, CYL HD	1-H2,54
87-88	Y	12557236	2	16.02	GASKET, CYL HD	1-H2,54
89-90	Y 5.7-8	12557236	2	16.02	GASKET, CYL HD	1-H2,54
89-91	Y 5.7-8 (L98)	12557236	2	16.02	GASKET, CYL HD	1-H2,54
90-95	Y 5.7J (LT5)	10106176	RH	23.36	GASKET, CYL HD	1-H10,223
90-95	Y 5.7J (LT5)	10106177	LH	23.36	GASKET, CYL HD	1-H10,223
92-95	Y 5.7P (LT1)	10168457	2	30.86	GASKET, CYL HD	1-I2,225
96	Y 5.7P (LT1), 4-SPD A/TRANS (M30)	10168457	2	30.86	GASKET, CYL HD	1-I2,225
96	Y 5.7-5 (LT4), 6-SPD M/TRANS (ML9)	12551488	2	30.86	GASKET, CYL HD	1-J6,225

0.293 BOLT – PIN – PLUG – WASHER, Engine Cylinder Head

NOTE: ALSO SEE STANDARD PARTS CATALOG

87-91	Y 5.7-8 (L98)	10168527	16	*1.62	BOLT, CYL HD (BOLT-HFH W/ SHOULDER, 7/16-14 UNC 3AX1.62, .94 THD, .790 OD, .4375 SD, GM300M, PZOR, MACH, SEALANT) (7/16-14 X 1.62) ...	1-G11,44
89-91	Y 5.7-8 (L98)	10168525	14	*1.43	BOLT, CYL HD (LONG 7/16-14 X 3 51/64, 300M)	1-G11,34
89-90	Y 5.7-8 (L98)	14088946	4	2.45	BOLT, CYL HD (MED (7/16-14 X 3 1/16, 300M)	1-G19,34
90-95	Y 5.7J (LT5)	10106175	20	13.40	BOLT, CYL HD (14X1.5X60)	1-H10,231
92-96	Y 5.7P (LT1)	10168525	14	*1.43	BOLT, CYL HD (LONG 7/16-14 X 3 51/64, 300M)	1-G11,34
92-96	Y 5.7P (LT1)	10168527	16	*1.62	BOLT, CYL HD (BOLT-HFH W/ SHOULDER, 7/16-14 UNC 3AX1.62, .94 THD, .790 OD, .4375 SD, GM300M, PZOR, MACH, SEALANT) (7/16-14 X 1.62) ...	1-G11,44
92-95	Y 5.7P (LT1)	14088946	4	2.45	BOLT, CYL HD ((7/16-14 X 3 1/16, 300M)	1-G19,34
96	Y 5.7-5 (LT4)	10168525	14	*1.43	BOLT, CYL HD (LONG 7/16-14 X 3 51/64, 300M)	1-G11,34
96	Y 5.7P (LT1)	10168526	4	*1.27	BOLT, CYL HD (MEDIUM 7/16-14 X 3 1/16, 300M)	1-G11,31
96	Y 5.7-5 (LT4)	10168526	4	*1.27	BOLT, CYL HD (MEDIUM 7/16-14 X 3 1/16, 300M)	1-G11,31
96	Y 5.7-5 (LT4)	10168527	14	*1.62	BOLT, CYL HD (BOLT-HFH W/ SHOULDER, 7/16-14 UNC 3AX1.62, .94 THD, .790 OD, .4375 SD, GM300M, PZOR, MACH, SEALANT) (7/16-14 X 1.62) ...	1-G11,44
86	Y ALUM HD	10168525	14	*1.43	BOLT, CYL HD LG (7/16-14X3 51/64, 300M)	1-G11,34
87-88	Y	10168525	14	*1.43	BOLT, CYL HD LG (7/16-14X3 51/64, 300M)	1-G11,34
84	Y 5.7-8 (L83)	10168526	4	*1.27	BOLT, CYL HD MED (7/16-14 X 3) .	1-G11,31
85	Y 5.7-8 (L98)	10168526	4	*1.27	BOLT, CYL HD MED (7/16-14 X 3) .	1-G11,31
86	Y 5.7-8 (L98), CAST IRON HD (KB2)	10168526	4	*1.27	BOLT, CYL HD MED (7/16-14 X 3) .	1-G11,31

© 2000 GENERAL MOTORS SERVICE PARTS OPERATIONS-CHEVROLET-14Y

0.293 BOLT – PIN – PLUG – WASHER, Engine Cylinder Head (Con't)

83	Y ALUM HD	14088946	4	2.45	BOLT, CYL HD MED (7/16-14 X 3 1/16, 300M)	1-G19,34
87-88	Y	14088946	4	2.45	BOLT, CYL HD MED (7/16-14 X 3 1/16, 300M)	1-G19,34
90-95	Y 5.7J (LT5)	10067633	1	39.90	PIN, CYL HD LOC	
92-94	Y 5.7P (LT1)	585927	4	*.31	PIN, CYL HD LOC (PIN (5/16 X 9/16) (5/16X9/16 STL) (08.939) (AC-DELCO #585927)	1-I2,232
89	Y 5.7-8 (L98)	12338136	1	*1.20	PLUG, CYL & CASE OIL GAL HOLE (RR) (08.971)	
89	Y 5.7-8 (L98)	444613	AR	*1.82	PLUG, CYL & CASE OIL GALLON (1/8 PL) (08.971) (AC-DELCO #444613)	
89-90	Y 5.7-8 (L98)	3701638	AR	*.97	PLUG, CYL & CASE OIL PRESS HOLE CVR (08.970)	
90-95	Y 5.7J (LT5)	10067515	2	1.30	PLUG, CYL HD (30.30 DIA CUP)	1-H10,212
92-96	Y 5.7P (LT1)	144011	AR	.41	PLUG, CYL HD CORE HOLE (1/4-18X.44 AM STD PIPE THD, STL, CZ) (1/4-18X.44 AM STD PIPE THD, STL, CZ (USED W/SEALER) (08.971)	1-I2,210
92-95	Y 5.7P (LT1)	14090911	LH	.66	PLUG, CYL HD CORE HOLE (FRT) (AUTO DRAIN, INT SQ, 3/8-18X.42 PEOR STL) (08.971)	1-I2,221
96	Y 5.7-5 (LT4)	14090911	LH	.66	PLUG, CYL HD CORE HOLE (FRT) (AUTO DRAIN, INT SQ, 3/8-18X.42 PEOR STL) (08.971)	1-I2,221
89-90	Y 5.7-8 (L98)	14090911	LH	.66	PLUG, CYL HD WAT JKT HOLE (FRT) (08.971)	1-I2,221
90-92	Y 5.7J (LT5)	10067515	2	1.30	PLUG, CYL HD WAT JKT HOLE (30.30 DIA CUP)	1-H10,212
90-95	Y 5.7J (LT5)	10067516	2	.40	PLUG, CYL HD WAT JKT HOLE (16.25 DIA CUP)	
90-92	Y 5.7J (LT5)	10067701	8	.70	PLUG, CYL HD WAT JKT HOLE (3/8 X 18 N.P.T.F.)	
90-95	Y 5.7J (LT5)	10153582	8	.70	PLUG, CYL HD WAT JKT HOLE (1/2-14 N.P.T.F.)	
90-95	Y 5.7J (LT5)	10067635	20	3.40	WASHER, CYL HD (28.3-DIAMETER)	

0.296 VALVE, Intake

84	Y 5.7-8 (L83)	14033148	8	DISCON	VALVE (.0305 O.S.)	
84	Y 5.7-8 (L83)	14075641	8	21.30	VALVE (STD)	1-G11,57
84	Y 5.7-8 (L83), CAST IRON HD (KB2)	14075642	8	24.10	VALVE (.0035 O.S.)	
84-85	Y (5.7-8)	14075643	8	24.10	VALVE (.0155 O.S.)	
85	Y 5.7-8 (L98)	14033148	8	DISCON	VALVE (.0305 O.S.)	
85	Y 5.7-8 (L98)	14075641	8	21.30	VALVE (STD)	1-G11,57
85-86	Y 5.7-8 (L98), CAST IRON HD (KB2)	14075642	8	24.10	VALVE (.0035 O.S.)	
86-87	Y (5.7-8)	10093027	8	18.70	VALVE (STD)	1-G19,56
86	Y	10166151	8	29.20	VALVE (.0035"O.S.)	
86	Y ALUM HD	10166152	8	28.80	VALVE (.0155"O.S.)	
86	Y 5.7-8 (L98), CAST IRON HD (KB2)	14033148	8	DISCON	VALVE (.0305 O.S.)	
86	Y ALUM HD	14034080	8	26.40	VALVE (.0305"O.S.)	
86	Y 5.7-8 (L98), CAST IRON HD (KB2)	14075641	8	21.30	VALVE (STD)	1-G11,57
86	Y 5.7-8 (L98), CAST IRON HD (KB2)	14075643	8	24.10	VALVE (.0155 O.S.)	

© 2000 GENERAL MOTORS SERVICE PARTS OPERATIONS-CHEVROLET-14Y

0.296 VALVE, Intake (Con't)

87	Y	10166151	8	29.20	VALVE (.0035"O.S.)	
87	Y	10166152	8	28.60	VALVE (.0155"O.S.)	
87	Y	14034080	8	26.40	VALVE (.0305"O.S.)	
86-87	Y (5.7-8)	10066027	8	18.70	VALVE, INT (STD)	1-G19,56
86	Y ALUM HD	10166152	8	28.60	VALVE, INT (.0155"O.S.)	
87	Y	10166152	8	28.60	VALVE, INT (.0155"O.S.)	
88-91	Y 5.7-8 (L98)	14075641	8	21.30	VALVE, INT (STD)	1-G11,57
88-90	Y 5.7-8 (L98)	14075642	8	24.10	VALVE, INT (.0035"O.S.)	
88-90	Y 5.7-8 (L98)	14075643	8	24.10	VALVE, INT (.0155"O.S.)	
88-90	Y 5.7-8 (L98)	14075644	8	24.10	VALVE, INT (.0305"O.S.)	
90-92	Y 5.7J (LT5)	10135861	16	39.50	VALVE, INT (STD)	1-H10,221
92	Y 5.7P (LT1)	10168465	8	28.60	VALVE, INT (STD)	1-I2,227
92-93	Y 5.7P (LT1)	10168466	8	24.60	VALVE, INT (.0035"O.S.)	1-I2,227
92-93	Y 5.7P (LT1)	10168468	8	24.60	VALVE, INT (.0305"O.S.)	1-I2,227
93	Y 5.7P (LT1)	10168465	8	28.60	VALVE, INT (STD)	1-I2,227
93	Y 5.7P (LT1)	10163467	8	24.60	VALVE, INT (.0155"O.S.)	1-I23,227
93-95	Y 5.7J (LT5)	10225130	16	39.90	VALVE, INT (STD)	1-H10,221
94-96	Y 5.7P (LT1)	10241743	8	20.90	VALVE, INT (STD)	1-I23,227
96	Y 5.7-5 (LT4)	12555331	8	38.40	VALVE, INT (STD)	1-J6,227

0.297 VALVE, Exhaust

84	Y 5.7-8 (L83)	14033160	8	26.40	VALVE, (.0305 O.S.)	
85-87	Y 5.7-8 (L98)	14033160	8	26.40	VALVE, (.0305 O.S.)	
84	Y 5.7-8 (L83)	14095451	8	18.40	VALVE, EXH (STD)	1-G11,56
84	Y 5.7-8 (L83)	14095459	8	26.30	VALVE, EXH (.0035 O.S.)	
84	Y 5.7-8 (L83)	14095460	8	24.10	VALVE, EXH (.0155 O.S.)	
85-86	Y 5.7-8 (L98)	14095451	8	18.40	VALVE, EXH (STD)	1-G11,56
85-90	Y 5.7-8 (L98)	14095459	8	26.30	VALVE, EXH (.0035 O.S.)	
85-90	Y 5.7-8 (L98)	14095460	8	24.10	VALVE, EXH (.0155 O.S.)	
87-91	Y 5.7-8 (L98)	10088106	8	23.40	VALVE, EXH (STD)	1-G19,55
90-91	Y 5.7J (LT5)	10135862	16	39.50	VALVE, EXH (STD)	1-H10,222
92-93	Y 5.7P (LT1)	10168514	8	30.60	VALVE, EXH (STD) (STD)	1-I2,226
92-93	Y 5.7P (LT1)	10168515	8	30.60	VALVE, EXH (.0035"O.S.)	1-I2,226
92-93	Y 5.7P (LT1)	10168516	8	30.60	VALVE, EXH (.0155 O.S.)	1-I2,226
92	Y 5.7J (LT5)	10199010	16	39.90	VALVE, EXH (STD)	1-H10,222
93-95	Y 5.7J (LT5)	10199033	16	39.90	VALVE, EXH (STD)	1-H10,222
94-96	Y 5.7P (LT1)	12550909	8	26.30	VALVE, EXH (STD)	1-I23,226
94-96	Y 5.7P (LT1)	12550913	8	26.30	VALVE, EXH (.0305 O.S.)	1-I23,226
96	Y 5.7-5 (LT4), 6-SPD M/TRANS (ML9)	12551313	8	44.20	VALVE, EXH (STD)	1-J6,226

0.303 SHIM - SPRING - SPRING KIT, Engine Valve

86-91	Y 5.7-8 (L98)	10185066	16	1.22	SHIM, VLV SPR	1-G14,130
92	Y 5.7P (LT1)	10168423	16	1.10	SHIM, VLV SPR (00.519)	1-I2,211
93	Y 5.7P (LT1)	10168423	16	1.10	SHIM, VLV SPR (00.519)	1-I2,211
94-95	Y 5.7P (LT1)	10212809	16	.80	SHIM, VLV SPR	1-I23,211
96	Y 5.7-5 (LT4), 6-SPD M/TRANS (ML9)	10212809	16	.80	SHIM, VLV SPR	1-I23,211
96	Y 5.7P (LT1), 4-SPD A/TRANS (M30)	10212809	16	.80	SHIM, VLV SPR	1-I23,211
90-95	Y 5.7J (LT5)	12508108	32	14.80	SPRING KIT, VLV	1-H10,1
84	Y 5.7-8 (L83)	3911068	16	*5.60	SPRING, VLV (W/DPNR)	1-G11,40
85-91	Y 5.7-8 (L98)	3911068	16	*5.60	SPRING, VLV (W/DPNR)	1-G11,40
92-95	Y 5.7P (LT1)	10206040	16	7.60	SPRING, VLV	1-I2,212

© 2000 GENERAL MOTORS SERVICE PARTS OPERATIONS-CHEVROLET-14Y

0.303 SHIM – SPRING – SPRING KIT, Engine Valve (Con't)

96	Y 5.7P (LT1), 4-SPD A/TRANS (M30)	10206040	16	7.60	SPRING, VLV	1-I2,212
96	Y 5.7-5 (LT4), 6-SPD M/TRANS (ML9)	12551483	16	6.70	SPRING, VLV	1-J6,212

0.308 SEAL – SEAL KIT – SHIELD, Engine Valve

84	Y 5.7-8 (L83)	12511890	1	39.78	SEAL KIT, VLV STEM	
85-86	Y 5.7-8 (L98)	12511890	1	39.78	SEAL KIT, VLV STEM	
84-85	Y (5.7-8)	10168534	8	2.91	SEAL, EXH VLV STEM OIL (.0305 O.S.)	
94-96	Y 5.7P (LT1)	12558674	8	*1.28	SEAL, EXH VLV STEM OIL	1-I23,213
96	Y 5.7-5 (LT4)	12558674	8	*1.28	SEAL, EXH VLV STEM OIL	1-I23,213
84	Y 5.7-8 (L83)	460483	8	*3.11	SEAL, INT VLV STEM OIL (W/RET) (STD, .003 O.S.)	1-G14,44
84	Y 5.7-8 (L83)	14037715	8	23.10	SEAL, INT VLV STEM OIL (W/RET) (.015 O.S.)	
84	Y 5.7-8 (L83)	14037716	8	23.10	SEAL, INT VLV STEM OIL (W/RET) (.030 O.S.)	
85-91	Y 5.7-8 (L98)	460483	8	*3.11	SEAL, INT VLV STEM OIL (W/RET) (STD, .003 O.S.) (STD AND .003 O.S.) (W/RET)	1-G14,44
85-90	Y 5.7-8 (L98)	14037715	8	23.10	SEAL, INT VLV STEM OIL (W/RET) (.015 O.S.)	
85-90	Y 5.7-8 (L98)	14037716	8	23.10	SEAL, INT VLV STEM OIL (W/RET) (.030 O.S.)	
94-96	Y 5.7P (LT1)	10212810	8	*1.28	SEAL, INT VLV STEM OIL	1-I23,213
96	Y 5.7-5 (LT4), 6-SPD M/TRANS (ML9)	10212810	8	*1.28	SEAL, INT VLV STEM OIL	1-I23,213
96	Y 5.7P (LT1), 4-SPD A/TRANS (M30)	10212810	8	*1.28	SEAL, INT VLV STEM OIL	1-I23,213
96	Y 5.7-5 (LT4)	10212810	8	*1.28	SEAL, INT VLV STEM OIL	1-I23,213
84-86	Y (5.7-8)	10147882	8	*1.28	SEAL, VLV STEM OIL (STD, .0035, .0155"O.S.)	1-G14,47
84-86	Y (5.7-8)	10147882	16	*1.28	SEAL, VLV STEM OIL (STD, .0035, .0155"O.S.)	1-G14,47
84	Y 5.7-8 (L83)	10214034	16	*.73	SEAL, VLV STEM OIL	1-G11,38
85-91	Y 5.7-8 (L98)	10214034	16	*.73	SEAL, VLV STEM OIL (O-RING TYPE)	1-G11,38
90-95	Y 5.7J (LT5)	10067412	32	1.94	SEAL, VLV STEM OIL	1-H10,220
90-91	Y 5.7-8 (L98)	10147882	8	*1.28	SEAL, VLV STEM OIL (STD, .0035, .0155"O.S.) (.0035 O.S.)	1-G14,47
92	Y 5.7P (LT1)	10128383	16	2.09	SEAL, VLV STEM OIL	1-I2,213
93	Y 5.7P (LT1), 4-SPD A/TRANS (MD8)	10128383	16	2.09	SEAL, VLV STEM OIL	1-I2,213
93	Y 5.7P (LT1), 6-SPD M/TRANS (ML9)	10128383	16	2.09	SEAL, VLV STEM OIL	1-I2,213
84	Y 5.7-8 (L83)	10007818	16	*.90	SHIELD, VLV STEM OIL	1-G11,39
85-91	Y 5.7-8 (L98)	10007818	16	*.90	SHIELD, VLV STEM OIL	1-G11,39

0.309 CAP – ROTATOR – SEAT, Engine Valve Spring

84	Y 5.7-8 (L83)	14003974	8	*2.00	CAP, INT VLV SPR	1-G14,42
85-91	Y 5.7-8 (L98)	14003974	8	*2.00	CAP, INT VLV SPR	1-G14,42
90-92	Y 5.7J (LT5)	10067403	32	3.50	CAP, VLV SPR	1-H10,216
92	Y 5.7P (LT1)	10168424	16	1.90	CAP, VLV SPR	1-I2,214
93	Y 5.7P (LT1), 4-SPD A/TRANS (MD8), 6-SPD M/TRANS (ML9)	10168424	16	1.90	CAP, VLV SPR	1-I2,214
93-95	Y 5.7J (LT5)	10168621	32	7.00	CAP, VLV SPR	1-H10,216
94-95	Y 5.7P (LT1)	10212808	16	*1.60	CAP, VLV SPR	1-I23,214

© 2000 GENERAL MOTORS SERVICE PARTS OPERATIONS-CHEVROLET-14Y

0.309 CAP – ROTATOR – SEAT, Engine Valve Spring (Con't)

96	Y 5.7-5 (LT4), 6-SPD M/TRANS (ML9)	10212808	16	*1.60	CAP, VLV SPR	1-I23,214
96	Y 5.7P (LT1), 4-SPD A/TRANS (M30)	10212808	16	*1.60	CAP, VLV SPR	1-I23,214
84	Y 5.7-8 (L83)	14042575	8	6.10	ROTATOR, EXH VLV	1-G11,37
85-87	Y 5.7-8 (L98)	14042575	8	6.10	ROTATOR, EXH VLV	1-G11,37
90-95	Y 5.7J (LT5)	10087421	32	2.40	SEAT, VLV SPR	1-H10,219

0.310 KEY, Engine Valve Spring Cap

84	Y 5.7-8 (L83)	24503856	32	*.90	KEY (PURPLE)	1-G11,36
85-91	Y 5.7-8 (L98)	24503856	32	*.90	KEY, VLV STEM (PURPLE)	1-G11,36
90-95	Y 5.7J (LT5)	10087420	64	.60	KEY, VLV STEM	1-H10,215
92-96	Y 5.7P (LT1)	24503856	32	*.90	KEY, VLV STEM	1-G11,36
96	Y 5.7-5 (LT4)	24503856	32	*.90	KEY, VLV STEM	1-G11,36

0.333 ARM – ARM KIT, Engine Valve Rocker

85-91	Y 5.7-8 (L98)	10089648	16	10.40	ARM KIT, VLV RKR (W/BALL KIT) (STD THREADS) (INCLS ARM, BALL & NUT)	1-G11,35
92-96	Y 5.7P (LT1)	10089648	16	10.40	ARM KIT, VLV RKR (W/BALL KIT) (STD THREADS) (INCLS ARM, BALL & NUT)	1-G11,35
96	Y 5.7-5 (LT4), 6-SPD M/TRANS (ML9)	12557779	16	43.70	ARM KIT, VLV RKR	1-J6,207
84	Y 5.7-8 (L83)	10089648	16	10.40	ARM, W/BALL	1-G11,35

0.386 COVER – EMBLEM – RETAINER, Engine Camshaft & Valve Rocker

84	Y 5.7-8 (L83)	14050240	RH	DISCON	COVER, (EMB IS PART OF LH CVR 14050239)	
86	Y 5.7-8 (L98), (ALUM HD)	10055782	RH	97.00	COVER, (ON 1986-87 VEH, WILL NEED TO USE OIL FILLER CAP #10066044)	1-H2,26
87	Y 5.7-8 (L98)	10055782	RH	97.00	COVER, (ON 1986-87 VEH, WILL NEED TO USE OIL FILLER CAP #10066044)	1-H2,26
85	Y 5.7-8 (L98)	14087461	LH	DISCON	COVER, VLV RKR	
85	Y 5.7-8 (L98)	14087462	RH	112.20	COVER, VLV RKR	1-G14,25
86	Y 5.7-8 (L98), (ALUM HD)	10055781	LH	106.10	COVER, VLV RKR	1-G19,26
86	Y 5.7-8 (L98), (W/CASE IRON HD)	14087461	LH	DISCON	COVER, VLV RKR	
86	Y 5.7-8 (L98), (W/CASE IRON HD)	14087462	RH	112.20	COVER, VLV RKR	1-G14,25
87-90	Y 5.7-8 (L98)	10055781	LH	106.10	COVER, VLV RKR ARM	1-G19,26
88-91	Y 5.7-8 (L98)	10055782	RH	97.00	COVER, VLV RKR ARM	1-H2,26
91	Y 5.7-8 (L98), FEDERAL EMIS (NA5)	10108588	LH	106.10	COVER, VLV RKR ARM	1-H2,26
92	Y 5.7P (LT1)	10055782	RH	97.00	COVER, VLV RKR ARM	1-H2,26
92	Y 5.7P (LT1)	10108590	LH	112.20	COVER, VLV RKR ARM	1-I2,203
93-95	Y 5.7P (LT1)	12552321	LH	104.10	COVER, VLV RKR ARM	1-I23,203
93-96	Y 5.7P (LT1)	12552322	RH	112.20	COVER, VLV RKR ARM	1-I23,203
96	Y 5.7-5 (LT4), 6-SPD M/TRANS (ML9)	12552321	LH	104.10	COVER, VLV RKR ARM	1-I23,203
96	Y 5.7P (LT1)	12552321	LH	104.10	COVER, VLV RKR ARM	1-I23,203
96	Y 5.7-5 (LT4), 6-SPD M/TRANS (ML9)	12552322	RH	112.20	COVER, VLV RKR ARM	1-I23,203
84	Y 5.7-8 (L83)	14050239	LH	DISCON	COVER, W/EMBLEM, VLV RKR	
86	Y	14087417	2	38.60	EMBLEM, VLV RKR CVR	
87-88	Y	14087417	2	38.60	EMBLEM, VLV RKR CVR	

© 2000 GENERAL MOTORS SERVICE PARTS OPERATIONS-CHEVROLET-14Y

MICROFICHE INDEX

GROUPS 0.000 & 21.000

FICHE 1 OF 11

GROUP	DESCRIPTION	STARTING GRID LOCATION PARTS	ILLUSTRATIONS
–	GENERAL INFORMATION	1–A2	1–G2
–	ALPHABETICAL INDEX	1–B13	N.A.
0.000	8–CYLINDER ENGINE	1–E2	1–G5
21.000	ACCESSORY REFERENCE LIST	1–D2	N.A.
–	OUT OF FICHE CALLS	N.A.	1–L13

1–F1

0.386 COVER – EMBLEM – RETAINER, Engine Camshaft & Valve Rocker(Con't)

89–90	Y 5.7–8 (L98)	14087417	2	38.60	EMBLEM, VLV RKR CVR	
91	Y 5.7–8 (L98), FEDERAL EMIS (NA5)	10108589	1	DISCON	EMBLEM, VLV RKR CVR	
90–95	Y 5.7J (LT5)	10146208	2	9.60	RETAINER, PCV FLTR	1–H10,206

0.413 BOLT – FASTENER KIT – GROMMET – PIN – SEAL – STUD – WASHER, Engine Camshaft & Valve Rocker Cover

NOTE #1: FASTENER KIT T/W GASKET USED IN PLC OF RTV SEALER, SCREWS & WASHERS ON SMALL BLK ENGS W/ALUM OR MAGNESIUM RKR CVRS ON 1957 TO 1984 AND 1985 1ST DES. FASTENER KIT NOT REQD FOR 2ND DES 1985.

88–91	Y 5.7–8 (L98)	10088165	8	*1.95	BOLT, VLV RKR ARM CVR (W/WASHER) (1/4X20X88)	1–I2,202
92	Y 5.7P (LT1)	10088165	8	*1.95	BOLT, VLV RKR ARM CVR (W/WASHER) (1/4X20X88)	1–I2,202
93–95	Y 5.7P (LT1)	10108675	8	*1.25	BOLT, VLV RKR ARM CVR	1–I23,202
96	Y 5.7P (LT1), 4–SPD A/TRANS (M30)	10108675	8	*1.25	BOLT, VLV RKR ARM CVR	1–I23,202
96	Y 5.7–5 (LT4), 6–SPD M/TRANS (ML9)	10108675	8	*1.25	BOLT, VLV RKR ARM CVR	1–I23,202
86–87	Y	12338092	8	*1.10	BOLT, VLV RKR CVR	1–G14,26
84	Y	14105964	1	5.30	FASTENER KIT, RKR CVR GASKET (REFER TO NOTE 1 IN CATALOG TEXT)	1–G14,129
85	Y (1ST DES)	14105964	1	5.30	FASTENER KIT, RKR CVR GASKET (REFER TO NOTE 1 IN CATALOG TEXT)	1–G14,129
93–95	Y 5.7P (LT1)	10108626	8	1.90	GROMMET, VLV RKR ARM CVR BOLT	1–J6,290
95	Y	10108626	8	1.90	GROMMET, VLV RKR ARM CVR BOLT (*15, 27, 33)	1–J6,290
96	Y 5.7P (LT1), 4–SPD A/TRANS (M30)	10108626	8	1.90	GROMMET, VLV RKR ARM CVR BOLT	1–J6,290
96	Y 5.7–5 (LT4), 6–SPD M/TRANS (ML9)	10108626	8	1.90	GROMMET, VLV RKR ARM CVR BOLT	1–J6,290
90–95	Y 5.7J (LT5)	10067634	1	5.40	PIN, CM/SHF HSG CVR LOC	
90–95	Y 5.7J (LT5)	10135851	48	3.50	SEAL, CM/SHF CVR BOLT (O RING) (WASHER) (00.529)	1–H10,247
93–95	Y 5.7P (LT1)	10108674	8	3.45	STUD, VLV RKR ARM CVR	1–I23,258
96	Y 5.7P (LT1), 4–SPD A/TRANS (M30)	10108674	8	3.45	STUD, VLV RKR ARM CVR	1–I23,258
96	Y 5.7–5 (LT4), 6–SPD M/TRANS (ML9)	10108674	8	3.45	STUD, VLV RKR ARM CVR	1–I23,258
86	Y 5.7–8 (L98), CAST IRON HD (K82)	14101002	8	1.65	STUD, VLV RKR CVR (M6X1)	
84	Y (5.7–8)	14060681	8	DISCON	WASHER, VLV RKR CVR (6.5 X 15.75 X 1.45)	
85–87	Y 5.7–8 (L98)	14094717	8	.46	WASHER, VLV RKR CVR (6.5 X 15.75 X 1.45)	1–G19,25

0.423 GASKET – SEAL, Engine Camshaft & Valve Rocker Cover

87–91	Y 5.7–8 (L98)	14088564	2	11.88	GASKET, VLV RKR ARM CVR	1–G19,27
92	Y 5.7P (LT1)	14088564	2	11.88	GASKET, VLV RKR ARM CVR	1–G19,27
93–95	Y 5.7P (LT1)	10108625	AR	11.73	GASKET, VLV RKR ARM CVR	1–I23,204
96	Y 5.7P (LT1), 4–SPD A/TRANS (M30)	10108625	1	11.73	GASKET, VLV RKR ARM CVR	1–I23,204
96	Y 5.7–5 (LT4), 6–SPD M/TRANS (ML9)	10108625	1	11.73	GASKET, VLV RKR ARM CVR	1–I23,204
84–85	Y	14101065	2	15.81	GASKET, VLV RKR CVR	
86	Y 5.7–8 (L98), (ALUM HD)	14088564	2	11.88	GASKET, VLV RKR CVR	1–G19,27

© 2000 GENERAL MOTORS SERVICE PARTS OPERATIONS–CHEVROLET–14Y

0.423 GASKET – SEAL, Engine Camshaft & Valve Rocker Cover (Con't)

86	Y 5.7-8 (L98), CAST IRON HD (KB2)	14101065	2	15.81	GASKET, VLV RKR CVR	
93	Y	14088793	8	*.37	GASKET, VLV RKR CVR BOLT	1-G14,27
90-95	Y 5.7J (LT5)	10067538	8	1.02	SEAL, CYL HD CAM CVR (O RING)	1-H10,242

0.426 ROD, Engine Valve Push Rod

84-86	Y (5.7-8)	14095256	16	10.00	ROD, PUSH (7 25/32 O.L.)	1-G11,32
87-88	Y	10046173	16	8.40	ROD, PUSH	1-H2,97
89-91	Y 5.7-8 (L98)	10046173	16	8.40	ROD, VLV PUSH (INCLS INSERTS)	1-H2,97
92-95	Y 5.7P (LT1)	10046173	16	8.40	ROD, VLV PUSH (INCLS INSERTS)	1-H2,97
96	Y 5.7P (LT1), 4-SPD A/TRANS (M30)	10241740	16	8.40	ROD, VLV PUSH (INCLS INSERT)	1-I23,255
96	Y 5.7-5 (LT4), 6-SPD M/TRANS (ML9)	10241740	16	8.40	ROD, VLV PUSH (INCLS INSERT)	1-I23,255

0.429 NUT – STUD, Engine Valve Adjusting

96	Y 5.7-5 (LT4), 6-SPD M/TRANS (ML9)	10215349	16	5.50	NUT, VLV RKR ARM	1-J6,205
86	Y 5.7-8 (L98), CAST IRON HD (KB2)	3814692	16	*4.20	STUD, VLV RKR ARM (.003 O.S.)	1-G11,30
86	Y 5.7-8 (L98), CAST IRON HD (KB2)	3815892	16	3.65	STUD, VLV RKR ARM (.013 O.S.)	
84	Y 5.7-8 (L83)	3814692	16	*4.20	STUD, VLV RKR ARM BALL (.003 O.S.-LT BLUE PAINT)	1-G11,30
84	Y 5.7-8 (L83)	3815892	16	3.65	STUD, VLV RKR ARM BALL (.013 O.S.-BLUE PAINT)	
85	Y 5.7-8 (L98)	3814692	16	*4.20	STUD, VLV RKR ARM BALL (.003 O.S.-LT BLUE PAINT)	1-G11,30
85	Y 5.7-8 (L98)	3815892	16	3.65	STUD, VLV RKR ARM BALL (.013 O.S.-BLUE PAINT)	
86	Y (5.7-8) ALUM HD	10168410	16	*2.46	STUD, VLV RKR ARM BALL	1-I2,208
87-91	Y 5.7-8 (L98)	10168410	16	*2.46	STUD, VLV RKR ARM BALL	1-I2,208
92	Y 5.7P (LT1)	10168410	16	*2.46	STUD, VLV RKR ARM BALL	1-I2,208
93-96	Y 5.7P (LT1)	12552126	16	3.95	STUD, VLV RKR ARM BALL	1-I23,208
96	Y 5.7-5 (LT4), 6-SPD M/TRANS (ML9)	12550011	16	3.20	STUD, VLV RKR ARM BALL	1-J6,208

0.439 GUIDE, Engine Valve Push Rod Cover

86-87	Y ALUM HD	10111771	8	7.70	GUIDE, PUSH ROD (W/ALUM HEADS ONLY)	1-I2,228
92-96	Y 5.7P (LT1)	12550002	8	2.60	GUIDE, VLV LFTR	1-G19,57
96	Y 5.7-5 (LT4)	12550002	8	2.60	GUIDE, VLV LFTR	1-G19,57
87-91	Y 5.7-8 (L98)	12550002	8	2.60	GUIDE, VLV LFTR PUSH ROD	1-G19,57
88-91	Y 5.7-8 (L98), FEDERAL EMIS (NA5)	10111771	8	7.70	GUIDE, VLV LFTR PUSH ROD (W/ALUM HEADS ONLY)	1-I2,228
92	Y 5.7P (LT1)	10111771	8	7.70	GUIDE, VLV LFTR PUSH ROD (W/ALUM HEADS ONLY)	1-I2,228

0.459 LIFTER – RETAINER, Engine Valve Lifter

87-88	Y	5234890	16	*39.55	LIFTER, HYD VLV RLR (AC-DELCO #HL112)	1-G19,58
84	Y 5.7-8 (L83), ((5.7-8))	5232720	16	*15.57	LIFTER, VLV (LIFTER, VLV) (AC-DELCO #HL66)	1-G11,58
85-86	Y 5.7-8 (L98), ((5.7-8))	5232720	16	*15.57	LIFTER, VLV (LIFTER, VLV) (AC-DELCO #HL66)	1-G11,58
89-91	Y 5.7-8 (L98)	5234890	16	*39.55	LIFTER, VLV (RLR) (AC-DELCO #HL112)	1-G19,58

© 2000 GENERAL MOTORS SERVICE PARTS OPERATIONS-CHEVROLET-14Y

0.459 LIFTER – RETAINER, Engine Valve Lifter (Con't)

90-95	Y 5.7J (LT5)	17120991	32	*30.18	LIFTER, VLV (AC-DELCO #HL110C)	1-H10,210
92-95	Y 5.7P (LT1)	5234890	16	*39.55	LIFTER, VLV (RLR) (AC-DELCO #HL112)	1-G19,58
96	Y 5.7-5 (LT4)	17120735	16	*39.54	LIFTER, VLV (ROLLER) (AC-DELCO #HL123)	1-I23,229
96	Y 5.7P (LT1)	17120735	16	*39.54	LIFTER, VLV (ROLLER) (AC-DELCO #HL123)	1-I23,229
89-91	Y 5.7-8 (L98)	14101116	1	10.80	RETAINER, VLV LFTR GDE (1 PC) (RESTRICTOR)	1-G19,121
92-95	Y 5.7P (LT1)	14101116	1	10.80	RETAINER, VLV LFTR GDE (1 PC) (RESTRICTOR)	1-G19,121
96	Y 5.7P (LT1), 4-SPD A/TRANS (M30)	14101116	1	10.80	RETAINER, VLV LFTR GDE (1 PC) (RESTRICTOR)	1-G19,121
96	Y 5.7-5 (LT4), 6-SPD M/TRANS (ML9)	14101116	1	10.80	RETAINER, VLV LFTR GDE (1 PC) (RESTRICTOR)	1-G19,121
87-88	Y	14101116	1	10.80	RETAINER, VLV LFTR RSTR	1-G19,121

0.519 CAMSHAFT, Engine

84	Y 5.7-8 (L83)	12523897	1	DISCON	CAMSHAFT, ENG	
85-86	Y 5.7-8 (L98)	14094728	1	235.40	CAMSHAFT, ENG	1-G7,99
87	Y	14093643	1	287.90	CAMSHAFT, ENG	1-G23,91
88-89	Y 5.7-8 (L98)	10066049	1	287.90	CAMSHAFT, ENG	1-G23,91
90-91	Y 5.7-8 (L98)	10111773	1	287.90	CAMSHAFT, ENG	1-G23,91
92-94	Y 5.7P (LT1)	10224241	1	299.00	CAMSHAFT, ENG	1-I8,163
95-96	Y 5.7P (LT1)	12551706	1	286.90	CAMSHAFT, ENG	1-I8,163
96	Y 5.7-5 (LT4), 6-SPD M/TRANS (ML9)	12551142	1	204.10	CAMSHAFT, ENG	1-J2,163
90-92	Y 5.7J (LT5)	10199084	RH	786.80	CAMSHAFT, EXH (MCHG)	1-H10,208
90-92	Y 5.7J (LT5)	10199085	LH	786.80	CAMSHAFT, EXH (MCHG)	1-H10,208
93-95	Y 5.7J (LT5)	10199077	LH	786.80	CAMSHAFT, EXH (MCHG)	1-H10,208
93-95	Y 5.7J (LT5)	10199078	RH	786.80	CAMSHAFT, EXH (MCHG)	1-H10,208
90-92	Y 5.7J (LT5)	10199082	RH	786.80	CAMSHAFT, INT (MCHG)	1-H10,209
90-92	Y 5.7J (LT5)	10199083	LH	786.80	CAMSHAFT, INT (MCHG)	1-H10,209
93-95	Y 5.7J (LT5)	10215908	RH	786.80	CAMSHAFT, INT (MCHG)	1-H10,209
93-95	Y 5.7J (LT5)	10215909	LH	786.80	CAMSHAFT, INT (MCHG)	1-H10,209

0.529 BOLT – RETAINER, Engine Camshaft

87-88	Y	14093637	2	*.78	BOLT, CM/SHF RET (1/4-20 X .5, .47 OD)	1-G23,101
89-91	Y 5.7-8 (L98)	14093637	2	*.78	BOLT, CM/SHF RET (HEX SOC TORQ DR 1/4-20 X 1/2, 15/32 OD)	1-G23,101
90-95	Y 5.7J (LT5)	11514259	16	.60	BOLT, CM/SHF RET (M6X1X35)	1-H10,241
92-96	Y 5.7P (LT1)	14093637	2	*.78	BOLT, CM/SHF RET (HEX SOC TORQ DR 1/4-20 X 1/2, 15/32 OD)	1-G23,101
96	Y 5.7-5 (LT4)	14093637	2	*.78	BOLT, CM/SHF RET (HEX SOC TORQ DR 1/4-20 X 1/2, 15/32 OD)	1-G23,101
87-88	Y	10088128	1	7.20	RETAINER, CM/SHF	1-G23,100
89-90	Y 5.7-8 (L98)	10088128	1	7.20	RETAINER, CM/SHF	1-G23,100
90-95	Y 5.7J (LT5)	10067713	4	18.20	RETAINER, CM/SHF	1-H10,207
91	Y 5.7-8 (L98), (1ST DES)	10088128	1	7.20	RETAINER, CM/SHF (W/ROLLER CAM, BOLT PATTERN 3.620")	1-G23,100
91	Y 5.7-8 (L98), (2ND DES)	10168501	1	7.20	RETAINER, CM/SHF (W/ROLLER CAM, BOLT PATTERN 3.294")	1-I8,157
92-95	Y 5.7P (LT1)	10168501	1	7.20	RETAINER, CM/SHF	1-I8,157

© 2000 GENERAL MOTORS SERVICE PARTS OPERATIONS-CHEVROLET-14Y

0.529 BOLT – RETAINER, Engine Camshaft (Con't)

96	Y 5.7P (LT1), 4-SPD A/TRANS (M30)	10168501	1	7.20	RETAINER, CM/SHF	1-I8,157
96	Y 5.7-5 (LT4), 6-SPD M/TRANS (ML9)	10168501	1	7.20	RETAINER, CM/SHF	1-I8,157

0.533 WASHER, Engine Camshaft Thrust

90-95	Y 5.7J (LT5)	10106163	4	13.30	WASHER, CM/SHF THR	1-H10,240

0.539 BEARING, Engine Camshaft & Balance Shaft Front

84	Y 5.7-8 (L83)	474006	2	25.35	BEARING, CM/SHF (#2-RR) ...	1-I8,156
84-90	Y	12453170	1	30.60	BEARING, CM/SHF (#1)	1-G7,97
84-91	Y	12453170	1	30.60	BEARING, CM/SHF (PRECISION TYPE) (STAMPED 1)	1-G7,97
84-90	Y	12453172	2	30.60	BEARING, CM/SHF (#3-4)	1-I8,156
84-91	Y	12453172	2	30.60	BEARING, CM/SHF (PRECISION TYPE) (STAMPED 3-4)	1-I8,156
85-91	Y 5.7-8 (L98)	474006	2	25.35	BEARING, CM/SHF (#2-RR) ...	1-I8,156
92-96	Y 5.7P (LT1)	474006	1	25.35	BEARING, CM/SHF (#2-RR) ...	1-I8,156
92-96	Y 5.7P (LT1)	12453170	1	30.60	BEARING, CM/SHF (PRECISION TYPE) (STAMPED 1)	1-G7,97
92-96	Y 5.7P (LT1)	12453172	2	30.60	BEARING, CM/SHF (PRECISION TYPE) (POS #3, 4)	1-I8,156
96	Y 5.7-5 (LT4), 6-SPD M/TRANS (ML9)	474006	2	25.35	BEARING, CM/SHF	1-I8,156
96	Y 5.7-5 (LT4), 6-SPD M/TRANS (ML9)	12453170	1	30.60	BEARING, CM/SHF	1-G7,97
96	Y 5.7-5 (LT4)	12453172	2	30.60	BEARING, CM/SHF (PRECISION TYPE) (POS #3, 4)	1-I8,156

0.553 BOLT – PLUG, Engine Camshaft & Balance Shaft Hole

90-95	Y 5.7J (LT5)	11514330	AR	2.15	BOLT, CM/SHF HSG CVR (TORX M8X1.25X55, 16 OD HD 9.8, PEOR) (08.913)	
90-95	Y 5.7J (LT5)	11514567	AR	1.80	BOLT, CM/SHF HSG CVR (M6X1X25, 12 OD, TORX, 9.8) (08.913)	
89-90	Y 5.7-8 (L98)	10241154	AR	*1.80	PLUG, CM/SH RR BRG (EXPANSION CUP 2.107 OD) (08.970)	1-I8,109
90-95	Y 5.7J (LT5)	10110931	8	10.25	PLUG, CM/SHF RR BRG HOLE (40MM) (08.970)	1-H10,213
92-96	Y 5.7P (LT1)	10241154	AR	*1.80	PLUG, CM/SHF RR BRG HOLE (08.970)	1-I8,109
96	Y 5.7-5 (LT4)	10241154	AR	*1.80	PLUG, CM/SHF RR BRG HOLE (08.970)	1-I8,109

0.603 ROD, Engine Piston

84-90	Y 5.7-8	10108688	8	54.54	ROD, CONN	1-G7,7
90-91	Y 5.7-8 (L98)	10108688	8	54.54	ROD, CONN	1-G7,7
90-92	Y 5.7J (LT5)	10146295	8	227.30	ROD, CONN	1-H6,136
92-96	Y 5.7P (LT1)	10108688	8	54.54	ROD, CONN	1-G7,7
93-95	Y 5.7J (LT5)	10225132	8	438.40	ROD, CONN	1-H6,136
96	Y 5.7-5 (LT4)	10108688	8	54.54	ROD, CONN	1-G7,7

© 2000 GENERAL MOTORS SERVICE PARTS OPERATIONS-CHEVROLET-14Y

0.616 BEARING KIT, Engine Connecting Rod

84-91	Y (5.7-8)	12523925	8	18.51	BEARING KIT (.001 U.S.) (.001 U.S.)	1-I8,111
84	Y 5.7-8 (L83)	12329426	8	16.35	BEARING KIT, CONN ROD (.002 U.S.)	1-I8,111
84	Y 5.7-8 (L83)	12329427	8	19.72	BEARING KIT, CONN ROD (.020 U.S.)	1-I8,111
84	Y 5.7-8 (L83)	12523924	8	22.63	BEARING KIT, CONN ROD (STD)	1-G7,8
84	Y 5.7-8 (L83)	12523926	8	20.33	BEARING KIT, CONN ROD (.010 U.S.)	1-I8,111
85-91	Y 5.7-8 (L98)	12329426	8	16.35	BEARING KIT, CONN ROD (.002 U.S.)	1-I8,111
85-91	Y 5.7-8 (L98)	12329427	8	19.72	BEARING KIT, CONN ROD (.020 U.S.)	1-I8,111
85-91	Y 5.7-8 (L98)	12523924	8	22.63	BEARING KIT, CONN ROD (STD) (STD)	1-G7,8
85-91	Y 5.7-8 (L98)	12523926	8	20.33	BEARING KIT, CONN ROD (.010 U.S.) (.010 U.S.)	1-I8,111
90-95	Y 5.7J (LT5)	12508107	8	13.57	BEARING KIT, CONN ROD	1-H6,141
92-96	Y 5.7P (LT1)	12329426	8	16.35	BEARING KIT, CONN ROD (.002 U.S.)	1-I8,111
92-96	Y 5.7P (LT1)	12329427	8	19.72	BEARING KIT, CONN ROD (.020 U.S.)	1-I8,111
92-96	Y 5.7P (LT1)	12523924	8	22.63	BEARING KIT, CONN ROD (STD)	1-G7,8
92-96	Y 5.7P (LT1)	12523926	8	20.33	BEARING KIT, CONN ROD (.010 U.S.) (.010 U.S.)	1-I8,111
93-96	Y 5.7P (LT1)	12523925	8	18.51	BEARING KIT, CONN ROD (.001 U.S.) (.001 U.S.)	1-I8,111
93-96	Y 5.7P (LT1)	12523928	8	14.23	BEARING KIT, CONN ROD (.001 U.S.) (.001 U.S.) (LANSING) (00.096)	1-I8,111
96	Y 5.7-5 (LT4)	12523924	8	22.63	BEARING KIT, CONN ROD (STD)	1-G7,8
96	Y 5.7-5 (LT4)	12523925	8	18.51	BEARING KIT, CONN ROD (.001 U.S.) (.001 U.S.)	1-I8,111
96	Y 5.7-5 (LT4)	12523926	8	20.33	BEARING KIT, CONN ROD (.010 U.S.) (.010 U.S.)	1-I8,111
96	Y 5.7-5 (LT4)	12523928	8	14.23	BEARING KIT, CONN ROD (.001 U.S.) (.001 U.S.) (LANSING) (00.096)	1-I8,111

0.623 BOLT, Engine Connecting Rod Cap

84	Y 5.7-8 (L83)	461372	16	*3.70	BOLT, CONN ROD	1-G7,16
85-91	Y 5.7-8 (L98)	461372	16	*3.70	BOLT, CONN ROD	1-G7,16
90-95	Y 5.7J (LT5)	10146241	16	8.20	BOLT, CONN ROD (M11X1.0X46)	1-H6,142
92-96	Y 5.7P (LT1)	461372	16	*3.70	BOLT, CONN ROD	1-G7,16
96	Y 5.7-5 (LT4)	461372	16	*3.70	BOLT, CONN ROD	1-G7,16

0.626 NUT, Engine Connecting Rod Bolt

84	Y 5.7-8 (L83)	3866766	16	*.69	NUT, CONN ROD (NUT, CONN ROD (HEX 3/8-24))	1-I8,117
85-90	Y 5.7-8 (L98)	3866766	16	*.69	NUT, CONN ROD (NUT, CONN ROD (HEX 3/8-24))	1-I8,117
92-96	Y 5.7P (LT1)	3866766	16	*.69	NUT, CONN ROD (3/8-24) (HEX)	1-I8,117
96	Y 5.7-5 (LT4)	3866766	16	*.69	NUT, CONN ROD (3/8-24) (HEX)	1-I8,117

0.629 PISTON - PISTON KIT, Engine Piston

84	Y 5.7-8 (L83)	474190	8	122.30	PISTON (STD) (3.9980-3.9990 DIA)	1-G7,10
84-P5	Y (5.7-8)	474191	8	DISCON	PISTON (STD HI LIMIT) (3.9990-4.0000 DIA)	

© 2000 GENERAL MOTORS SERVICE PARTS OPERATIONS-CHEVROLET-14Y

0.629 PISTON – PISTON KIT, Engine Piston (Con't)

85	Y 5.7-8 (L98)	474190	8	122.30	PISTON (STD) (3.9980-3.9990 DIA)	1-G7,10
89	Y 5.7-8	12514101	8	81.10	PISTON KIT, ENG (W/PIN & RINGS; STD)	
89	Y 5.7-8	12514103	8	81.10	PISTON KIT, ENG (W/PIN & RINGS; 0.030" OVSI)	
90-91	Y 5.7-8 (L98)	10159436	8	81.10	PISTON, (W/PIN) (STD) (S1=101.614-101.596)	1-G23,10
90-91	Y 5.7-8 (L98)	10159437	8	74.40	PISTON, (W/PIN) (HI-LIMIT) (S2=101.632-101.614)	1-I8,114
90-91	Y 5.7-8 (L98)	10159438	8	81.10	PISTON, (W/PIN) (.030" O.S.)	1-I8,114
92-96	Y 5.7P (LT1)	10159436	8	81.10	PISTON, (W/PIN) (STD) (S1=101.614-101.596)	1-G23,10
92-96	Y 5.7P (LT1)	10159437	8	74.40	PISTON, (W/PIN) (STD HI-LIMIT) (S2=101.632-101.614)	1-I8,114
92-96	Y 5.7P (LT1)	10159438	8	81.10	PISTON, (W/PIN) (.030 O.S.)	1-I8,114
96	Y 5.7-5 (LT4), 6-SPD M/TRANS (ML9)	12528828	8	99.00	PISTON, (W/PIN) (STD)	1-J2,114
96	Y 5.7-5 (LT4), 6-SPD M/TRANS (ML9)	12528829	8	99.00	PISTON, (W/PIN) (.005 O.S.)	1-J2,114
96	Y 5.7-5 (LT4), 6-SPD M/TRANS (ML9)	12528830	8	101.90	PISTON, (W/PIN) (.030 O.S.)	1-J2,114
90-92	Y 5.7J (LT5)	10146287	8	477.80	PISTON, ENG	1-H6,140
93-95	Y 5.7J (LT5)	10168607	8	587.90	PISTON, ENG	1-H6,140
84	Y 5.7-8 (L83)	474192	8	122.30	PISTON, W/PIN (.030"O.S.)	
85	Y 5.7-8 (L98)	474192	8	122.30	PISTON, W/PIN (.030"O.S.)	
86	Y 5.7-8 (L98), (ALUM HD)	10049079	8	101.90	PISTON, W/PIN (STD)	1-G23,10
86	Y 5.7-8 (L98), (ALUM HD)	10049080	8	97.30	PISTON, W/PIN (STD HI LIMIT)	
86	Y 5.7-8 (L98), (ALUM HD)	10049081	8	101.90	PISTON, W/PIN (.030"O.S.)	
86	Y (5.7-8) CAST IRON HD (KB2)	14101185	8	DISCON	PISTON, W/PIN (STD)	
86	Y (5.7-8) CAST IRON HD (KB2)	14101187	8	DISCON	PISTON, W/PIN (STD HI LIMIT)	
86	Y (5.7-8) CAST IRON HD (KB2)	14101189	8	DISCON	PISTON, W/PIN (.030 O.S.)	
87-88	Y 5.7-8 (L98)	10049079	8	101.90	PISTON, W/PIN (STD)	1-G23,10
87-88	Y 5.7-8 (L98)	10049080	8	97.30	PISTON, W/PIN (STD HI LIMIT)	
87-88	Y 5.7-8 (L98)	10049081	8	101.90	PISTON, W/PIN (.030 O.S.)	

0.639 RETAINER, Engine Piston Pin

90-92	Y 5.7J (LT5)	10146284	8	DISCON	RETAINER, PSTN PIN	
93-95	Y 5.7J (LT5)	10168632	8	10.30	RETAINER, PSTN PIN	

0.643 RING KIT, Engine Piston

84	Y 5.7-8 (L83)	14089025	8	27.60	RING KIT, PSTN (STD)	1-G7,11
84	Y 5.7-8 (L83)	14089026	8	30.30	RING KIT, PSTN (.030 O.S.) (INDIVIDUAL CYL REPLACEMENT UNIT ONLY)	
85	Y 5.7-8 (L98)	14089025	8	27.60	RING KIT, PSTN (STD)	1-G7,11
85	Y 5.7-8 (L98)	14089026	8	30.30	RING KIT, PSTN (.030 O.S.) (INDIVIDUAL CYL REPLACEMENT UNIT ONLY)	
86-89	Y 5.7-8 (L98)	12507985	8	10.00	RING KIT, PSTN (STD)	1-G23,11
86-89	Y 5.7-8	12507986	8	14.60	RING KIT, PSTN (.030 O.S.)	
90-95	Y 5.7J (LT5)	12513155	8	140.40	RING KIT, PSTN (STD)	1-H6,139
90-91	Y 5.7-8 (L98)	12528817	8	30.30	RING KIT, PSTN (STD) (STD)	1-G23,11
90-91	Y 5.7-8 (L98)	12528818	8	30.30	RING KIT, PSTN (.005" O.S.)	1-I8,115
90-91	Y 5.7-8 (L98)	12528819	8	30.30	RING KIT, PSTN (.030 O.S.)	1-I8,115

© 2000 GENERAL MOTORS SERVICE PARTS OPERATIONS-CHEVROLET-14Y

0.643 RING KIT, Engine Piston (Con't)

92-96	Y 5.7P (LT1)	12528817	8	30.30	RING KIT, PSTN (STD)	1-G23,11
92-96	Y 5.7P (LT1), 4-SPD A/TRANS (M30)	12528818	8	30.30	RING KIT, PSTN (.005" O.S.)	1-I8,115
92-96	Y 5.7P (LT1)	12528819	8	30.30	RING KIT, PSTN (.030 O.S.)	1-I8,115
96	Y 5.7-5 (LT4)	12528817	8	30.30	RING KIT, PSTN (STD)	1-G23,11
96	Y 5.7-5 (LT4)	12528818	8	30.30	RING KIT, PSTN (.005" O.S.)	1-I8,115
96	Y 5.7-5 (LT4)	12528819	8	30.30	RING KIT, PSTN (.030 O.S.)	1-I8,115

0.646 CRANKSHAFT, Engine

86-89	Y 5.7-8 (L98)	14088527	1	673.70	CRANKSHAFT	1-G7,94
90	Y 5.7J (LT5)	10153575	1		CRANKSHAFT	1-H6,121
90-91	Y 5.7-8 (L98), 4-SPD A/TRANS (MD8)	12551485	1	673.70	CRANKSHAFT	1-G23,86
91-92	Y 5.7J (LT5)	10174396	1		CRANKSHAFT	1-H6,121
93-95	Y 5.7J (LT5)	10168688	1		CRANKSHAFT	1-H6,121
95-96	Y	12551485	1	673.70	CRANKSHAFT	1-G23,86
90-91	Y 5.7-8 (L98), 6-SPD M/TRANS (ML9)	12551485	1	673.70	CRANKSHAFT, (USE T/W 3752487 PILOT BEARING)	1-G23,86
92-95	Y 5.7P (LT1)	12551485	1	673.70	CRANKSHAFT, (USE T/W 3752487 PILOT BEARING)	1-G23,86
84	Y 5.7-8 (L83)	3932444	1	693.90	CRANKSHAFT, ENG (WHEN USED ON A.T. IT WILL BE NECESSARY TO REMOVE THE PILOT BEARING.)	1-G7,94
85	Y 5.7-8 (L98)	3932444	1	693.90	CRANKSHAFT, ENG	1-G7,94

0.648 NUT -- PLUG, Engine Crankshaft

92-95	Y 5.7P (LT1)	9422297	3	*1.25	NUT, CR/SHF OIL DFL (3/8-16, 301M) (HEX LK/TORQ-TENS) (08.917)	1-I14,427
96	Y 5.7P (LT1)	9442946	3	*.32	NUT, CR/SHF OIL DFL (HEX 3/8-16) (08.917)	1-I14,427
96	Y 5.7-5 (LT4)	9442946	3	*.32	NUT, CR/SHF OIL DFL (HEX 3/8-16) (08.917)	1-I14,427
90-95	Y 5.7J (LT5)	10057639	1	2.90	PLUG, CR/SHF RR OIL	1-H6,119

0.649 BEARING, Engine Crankshaft Clutch Pilot

84-88	Y	14061685	1	11.41	BEARING, CLU PILOT	1-G7,37
89	Y	14061685	1	11.41	BEARING, CLU PILOT (BUSH TYPE 19/32 I.D. 1 3/32 O.D.X3/4)	1-G7,37
90-95	Y 5.7J (LT5)	10125896	1	5.92	BEARING, CLU PILOT (BUSHING TYPE 19/32 ID 1 3/32 O.D.X 3/4)	1-H6,118
90	Y 5.7-8 (L98)	14061685	1	11.41	BEARING, CLU PILOT	1-G7,37
91	Y 5.7-8 (L98), 6-SPD M/TRANS (ML9)	14061685	1	11.41	BEARING, CLU PILOT (BUSH TYPE 19/32 ID 1 3/32 O.D.X3/4)	1-G7,37
92-93	Y 5.7P (LT1)	14061685	1	11.41	BEARING, CLU PILOT (BUSH TYPE 19/32 ID 1 3/32 O.D.X3/4)	1-G7,37
94-95	Y 5.7P (LT1)	14061685	1	11.41	BEARING, CLU PILOT	1-G7,37
96	Y 5.7-5 (LT4), 6-SPD M/TRANS (ML9)	14061685	1	11.41	BEARING, CLU PILOT	1-G7,37

0.659 BALANCER -- BOLT -- DAMPENER -- HUB -- PULLEY -- RETAINER -- WASHER, Engine Crankshaft And Camshaft Balancer

92-95	Y 5.7P (LT1)	10128489	1	146.50	BALANCER, CR/SHF	1-I8,144
96	Y 5.7P (LT1), 4-SPD A/TRANS (M30)	10128489	1	146.50	BALANCER, CR/SHF	1-I8,144
96	Y 5.7-5 (LT4), 6-SPD M/TRANS (ML9)	12551486	1	295.50	BALANCER, CR/SHF	1-J2,144

© 2000 GENERAL MOTORS SERVICE PARTS OPERATIONS-CHEVROLET-14Y

0.659 BALANCER – BOLT – DAMPENER – HUB – PULLEY – RETAINER – WASHER, Engine Crankshaft And Camshaft Balancer (Con't)

90-95	Y 5.7J (LT5)	10067642	1	3.60	BOLT, TORSIONAL DPNR (M16X1.0-6G 45.00 G) (00.662)	1-H6,128
84	Y 5.7-8 (L83)	12551537	1	94.70	DAMPENER, CR/SHF TORSIONAL	1-G7,91
85-91	Y 5.7-8 (L98)	12551537	1	94.70	DAMPENER, CR/SHF TORSIONAL	1-G7,91
91-92	Y 5.7J (LT5)	10153517	1	227.30	DAMPENER, CR/SHF TORSIONAL	1-H6,131
93-95	Y 5.7J (LT5)	10225133	1	228.30	DAMPENER, CR/SHF TORSIONAL	1-H6,131
92-95	Y 5.7P (LT1)	12553250	1	34.60	HUB, CR/SHF BALR	1-I8,147
96	Y 5.7P (LT1)	12550097	1	37.20	HUB, CR/SHF BALR	1-I8,147
96	Y 5.7-5 (LT4)	12550097	1	37.20	HUB, CR/SHF BALR	1-I8,147
84	Y 5.7-8 (L83)	14055116	1	46.50	PULLEY, CR/SHF	1-G7,90
85-91	Y 5.7-8 (L98)	14055116	1	46.50	PULLEY, CR/SHF	1-G7,90
86-90	Y (5.7-8)	14088556	1	40.40	RETAINER, CR/SHF RR SEAL	
90-95	Y 5.7J (LT5)	10067597	1	3.60	WASHER, TORSIONAL DPNR (59.0 DIA) (00.662)	1-H6,129

0.662 BOLT – KEY – WASHER, Engine Crankshaft Pulley and Balancer

92-96	Y 5.7P (LT1)	9440024	1	*2.00	BOLT, CR/SHF BALR (7/16-20X2.25 300M POR) (7/16-20 X 2 1/4, 300M) (08.900)	1-I8,145
92-96	Y 5.7P (LT1)	9442448	3	6.15	BOLT, CR/SHF BALR (HFH, 7/16-14X.88, .70 THD, .86 OD, 300M, PC) (HFH, 7/16X.88, .70 THD, .86 OD, 300M, PC) (08.900)	1-I8,143
94-95	Y 5.7J (LT5)	10067642	1	3.60	BOLT, CR/SHF BALR (M16X1.0-6G 45.00 G)	
96	Y 5.7-5 (LT4)	9440024	1	*2.00	BOLT, CR/SHF BALR (7/16-20X2.25 300M POR) (7/16-20 X 2 1/4, 300M) (08.900)	1-I8,145
84	Y 5.7-8 (L83)	10179287	3	*1.85	BOLT, CR/SHF PUL (HFH 3/8-24X.75 280M)	1-G7,89
85-91	Y 5.7-8 (L98)	10179287	3	*1.85	BOLT, CR/SHF PUL (HFH 3/8-24X .75 280M) (3/8-24X1.0)	1-G7,89
90-95	Y 5.7J (LT5)	10067641	1	2.80	KEY, CR/SHF BALR	1-H6,132
92-95	Y 5.7P (LT1)	10128303	1	1.30	KEY, CR/SHF BALR	1-I8,148
96	Y 5.7P (LT1)	12550096	1	1.30	KEY, CR/SHF BALR	1-I8,148
96	Y 5.7-5 (LT4)	12550096	1	1.30	KEY, CR/SHF BALR	1-I8,148
90-95	Y 5.7J (LT5)	10067641	2	2.80	KEY, TORSIONAL DPNR	1-H6,132
84	Y 5.7-8 (L83)	14060682	1	3.70	WASHER, CR/SHF BALR	1-G7,88
85-91	Y 5.7-8 (L98)	14060682	1	3.70	WASHER, CR/SHF BALR	1-G7,88
92-95	Y 5.7P (LT1)	10128306	1	1.75	WASHER, CR/SHF BALR	1-I8,146
94-95	Y 5.7J (LT5)	10067597	1	3.60	WASHER, CR/SHF BALR (59.0 DIA)	
96	Y 5.7P (LT1), 4-SPD A/TRANS (M30)	10128306	1	1.75	WASHER, CR/SHF BALR	1-I8,146
96	Y 5.7-5 (LT4), 6-SPD M/TRANS (ML9)	10128306	1	1.75	WASHER, CR/SHF BALR	1-I8,146

0.666 FLYWHEEL, Engine Crankshaft

96	Y 5.7P (LT1), 4-SPD A/TRANS (M30)	14088765	1	94.00	FLYWHEEL	1-G23,33
84	Y 5.7-8 (L83), (A/TRNS)	471529	1	69.80	FLYWHEEL, ENG	
84	Y 5.7-8 (L83), (M/TRNS)	14085720	1	199.91	FLYWHEEL, ENG	1-G7,39
85	Y 5.7-8 (L98), (A/TRNS)	471529	1	69.80	FLYWHEEL, ENG	
85	Y 5.7-8 (L98), (M/TRNS)	14085720	1	199.91	FLYWHEEL, ENG	1-G7,39
86-88	Y 5.7-8 (L98), (M/TRNS)	14088646	1	285.90	FLYWHEEL, ENG	
86-88	Y A/TRNS	14088765	1	94.00	FLYWHEEL, ENG	1-G23,33
89-91	Y 5.7-8 (L98), 6-SPD M/TRANS (ML9)	10174482	1	873.70	FLYWHEEL, ENG	1-I8,129

© 2000 GENERAL MOTORS SERVICE PARTS OPERATIONS-CHEVROLET-14Y

0.666 FLYWHEEL, Engine Crankshaft (Con't)

89-91	Y 5.7-8 (L98), 4-SPD A/TRANS (MD8)	14088765	1	94.00	FLYWHEEL, ENG	1-G23,33
90-95	Y 5.7J (LT5)	10174481	1	1090.80	FLYWHEEL, ENG	1-H6,115
92-95	Y 5.7P (LT1), 6-SPD M/TRANS (ML9)	10174482	1	873.70	FLYWHEEL, ENG	1-I8,129
92-93	Y 5.7P (LT1), 4-SPD A/TRANS (MD8)	14088765	1	94.00	FLYWHEEL, ENG	1-G23,33
94-96	Y 5.7P (LT1), 4-SPD A/TRANS (M30)	14088765	1	94.00	FLYWHEEL, ENG	1-G23,33
96	Y 5.7-5 (LT4), 6-SPD M/TRANS (ML9)	10174482	1	873.70	FLYWHEEL, ENG	1-I8,129

0.669 BOLT - PIN - WEIGHT, Engine Flywheel

84-88	Y (5.7-8) M/TRNS	839756	6	*.78	BOLT, FLYWHL (7/16-20X1)	1-G7,41
86-88	Y 5.7-8 (L98), (M/TRNS)	12337973	6	*1.80	BOLT, FLYWHL	
86-91	Y 5.7-8 (L98), 4-SPD A/TRANS (MD8)	14088764	6	*2.00	BOLT, FLYWHL (7/16-20 X 45/64) (00.685)	1-G23,35
89-91	Y 5.7-8 (L98), 6-SPD M/TRANS (ML9), FEDERAL EMIS (NA5)	10085215	6	2.00	BOLT, FLYWHL (7/16-20X1 3/4) .	1-I8,124
90-95	Y 5.7J (LT5)	10085334	8	1.30	BOLT, FLYWHL (HEX HD. 7/16-20X2) (08.900)	1-H6,114
92-95	Y 5.7P (LT1), 6-SPD M/TRANS (ML9)	10085215	6	2.00	BOLT, FLYWHL (7/16-20X1 3/4) .	1-I8,124
92-93	Y 5.7P (LT1), 4-SPD A/TRANS (MD8)	14088764	6	*2.00	BOLT, FLYWHL (7/16-20 X 45/64) (00.685)	1-G23,35
94-96	Y 5.7P (LT1), 4-SPD A/TRANS (M30)	14088764	6	*2.00	BOLT, FLYWHL (7/16-20 X 45/64) (00.685)	1-G23,35
96	Y 5.7-5 (LT4), 6-SPD M/TRANS (ML9)	10085215	6	2.00	BOLT, FLYWHL (7/16-20X1 3/4) .	1-I8,124
86-91	Y 5.7-8 (L98)	3701679	1	*1.25	PIN, FLYWHL LOC (7/16 DIA. X 7/8)	1-I8,167
90-95	Y 5.7J (LT5)	10067640	1	1.10	PIN, FLYWHL LOC	1-H6,116
92-95	Y 5.7P (LT1)	3701679	1	*1.25	PIN, FLYWHL LOC (7/16 DIA. X 7/8)	1-I8,167
96	Y 5.7P (LT1), 4-SPD A/TRANS (M30)	3701679	1	*1.25	PIN, FLYWHL LOC (7/16 DIA. X 7/8)	1-I8,167
96	Y 5.7-5 (LT4), 6-SPD M/TRANS (ML9)	3701679	1	*1.25	PIN, FLYWHL LOC (7/16 DIA. X 7/8)	1-I8,167
90-95	Y 5.7J (LT5)	10174322	1	6.70	WEIGHT, CR/SHF BALR (00.659)	1-H6,130
89-91	Y 5.7-8 (L98), 6-SPD M/TRANS (ML9)	3890192	1	*.60	WEIGHT, FLYWHL (2380/.2500 X .50) (BARREL-SHAPED PIN) (GROOVE-F)	1-H6,117
90-95	Y 5.7J (LT5)	3890192	1	*.60	WEIGHT, FLYWHL (2380/.2500 X .50) (BARREL-SHAPED PIN) (GROOVE-F)	1-H6,117
92-94	Y 5.7P (LT1), 6-SPD M/TRANS (ML9)	3890192	1	*.60	WEIGHT, FLYWHL (2380/.2500 X .50) (BARREL-SHAPED PIN) (GROOVE-F)	1-H6,117
95	Y 5.7P (LT1), 6-SPD M/TRANS (ML9)	3890192	AR	*.60	WEIGHT, FLYWHL (2380/.2500 X .50) (BARREL-SHAPED PIN) (GROOVE-F)	1-H6,117
96	Y 5.7-5 (LT4), 6-SPD M/TRANS (ML9)	3890192	AR	*.60	WEIGHT, FLYWHL (2380/.2500 X .50) (BARREL-SHAPED PIN) (GROOVE-F)	1-H6,117

0.673 GEAR, Engine Flywheel

84	Y 5.7-8 (L83)	3991407	1	33.40	GEAR, FLYWHL RING	1-G7,44
85-89	Y 5.7-8 (L98)	3991407	1	33.40	GEAR, FLYWHL RING	1-G7,44
89-91	Y 5.7-8 (L98), 4-SPD A/TRANS (MD8)	3991407	1	33.40	GEAR, FLYWHL RING (153 TEETH)	1-G7,44

© 2000 GENERAL MOTORS SERVICE PARTS OPERATIONS-CHEVROLET-14Y

0.673 GEAR, Engine Flywheel (Con't)

92-94	Y 5.7P (LT1), 4-SPD A/TRANS (MD8)	3991407	1	33.40	GEAR, FLYWHL RING (153 TEETH)	1-G7,44
95-96	Y 5.7P (LT1), 4-SPD A/TRANS (M30)	3991407	1	33.40	GEAR, FLYWHL RING (153 TEETH)	1-G7,44

0.679 BOLT - COVER - INSULATOR - SHIELD, Flywheel & Clutch & Converter Housing

96	Y 5.7-5 (LT4)	11507087	3	1.82	BOLT, FLYWHL HSG CVR (HEX M6X1X20) (08.900) (AC-DELCO #11507087)	
84	Y 5.7-8 (L83)	14076110	1	4.07	BOLT, W/LK WA, CLU HSG CVR (1/4-20X.53) (04.128) (AC-DELCO #14076110)	1-K5,37
83-86	Y 5.7-8 (L98)	14076110	1	4.07	BOLT, W/LK WA, CLU HSG CVR (1/4-20X.53) (04.128) (AC-DELCO #14076110)	1-K5,37
88	Y 5.7-8 (L98)	14076110	4	4.07	BOLT, W/LK WA, CLU HSG CVR (1/4-20X.53) (04.128) (AC-DELCO #14076110)	1-K5,37
84	Y 5.7-8 (L83)	14055161	1	DISCON	COVER, CLU HSG	
85	Y 5.7-8 (L98)	14055161	1	DISCON	COVER, CLU HSG	
86-87	Y 5.7-8 (L98)	14087248	1	15.10	COVER, CLU HSG	1-K5,36
88	Y	10066405	1	DISCON	COVER, CLU HSG	
89-90	Y 5.7-8 (L98), 6-SPD M/TRANS (ML9), FEDERAL EMIS (NA5)	10085212	1	DISCON	COVER, FLYWHL HSG	
90-92	Y 5.7J (LT5)	10225112	1	10.10	COVER, FLYWHL HSG	1-H6,106
91	Y 5.7-8 (L98), 6-SPD M/TRANS (ML9)	10126500	1	4.60	COVER, FLYWHL HSG	1-J2,171
92-95	Y 5.7P (LT1), 6-SPD M/TRANS (ML9)	10126500	1	4.60	COVER, FLYWHL HSG	1-J2,171
93-95	Y 5.7J (LT5)	10225112	1	10.10	COVER, FLYWHL HSG	1-H6,106
96	Y 5.7-5 (LT4), 6-SPD M/TRANS (ML9)	10126500	1	4.60	COVER, FLYWHL HSG	1-J2,171
88-93	Y 4-SPD A/TRANS (MD8) ...	10126478	1	31.10	COVER, TRANS CONV	1-J24,1
94-96	Y 4-SPD A/TRANS (M30) ...	10126478	1	31.10	COVER, TRANS CONV	1-J24,1
84	Y 5.7-8 (L83), (A/TRNS)	14047627	1	31.90	COVER, TRANS CONVR	
85	Y 5.7-8 (L98), (A/TRNS)	14047627	1	31.90	COVER, TRANS CONVR	
86-87	Y 5.7-8 (L98), (A/TRNS)	14105616	1	31.10	COVER, TRANS CONVR	
91	Y 5.7-8 (L98), 6-SPD M/TRANS (ML9)	10174448	1	DISCON	INSULATOR, CLU HSG (ENG SI)	
91	Y 5.7-8 (L98), 6-SPD M/TRANS (ML9)	10174449	1	11.50	INSULATOR, CLU HSG (TRANS SI)	1-K2,21
92-96	Y 5.7P (LT1), 6-SPD M/TRANS (ML9)	10174449	1	11.50	INSULATOR, CLU HSG (TRANS SI)	1-K2,21
96	Y 5.7-5 (LT4), 6-SPD M/TRANS (ML9)	10174449	1	11.50	INSULATOR, CLU HSG (TRANS SI)	1-K2,21
91	Y 5.7-8 (L98), 6-SPD M/TRANS (ML9)	10163877	1	2.70	SHIELD, CLU HSG BOLT	
92	Y 5.7P (LT1), 6-SPD M/TRANS (ML9)	10163877	2	2.70	SHIELD, CLU HSG BOLT	

0.683 BOLT - HOUSING - PIN - STUD - WASHER, Engine Clutch Housing

84	Y 5.7-8 (L83)	10198997	AR	*.57	BOLT, CLU HSG (03.275)	1-K7,1
85-91	Y 5.7-8 (L98)	10198997	AR	*.57	BOLT, CLU HSG (3/8-16X1.25) (03.275)	1-K7,1
92-95	Y 5.7P (LT1), 6-SPD M/TRANS (ML9)	9440073	3	2.25	BOLT, CLU HSG (HFH 3/8-16X2.00 280M POR 6174M) (08.900) ...	

© 2000 GENERAL MOTORS SERVICE PARTS OPERATIONS-CHEVROLET-14Y

0.683 BOLT – HOUSING – PIN – STUD – WASHER, Engine Clutch Housing (Con't)

96	Y 5.7-5 (LT4), 6-SPD M/TRANS (ML9)	9440073	3	2.25	BOLT, CLU HSG (HFH 3/8-16X2.00 280M POR 6174M) (08.900) ...	
91	Y	10174450	8	DISCON	BOLT, CLU HSG INSL	
92-93	Y 5.7P (LT1)	9440073	1	2.25	BOLT, FLYWHL HSG (HFH 3/8-16X2.00 280M POR 6174M) (08.900)	
84	Y 5.7-8 (L83)	14048867	1	DISCON	HOUSING, CLU	
85-88	Y 5.7-8 (L98)	14048867	1	DISCON	HOUSING, CLU	
89-90	Y 5.7-8 (L98), 6-SPD M/TRANS (ML9), FEDERAL EMIS (NA5)	10085208	1	DISCON	HOUSING, CLU (ID BY 4 BOLT MTG & SLOTTED STRTR MTR OPG)	
91	Y 5.7-8 (L98), 3-SPD M/TRANS (ML9)	10126448	1	177.00	HOUSING, CLU	1-J2,172
90-95	Y 5.7J (LT5)	10085201	1	715.00	HOUSING, FLYWHL	1-H6,108
92-95	Y 5.7P (LT1), 6-SPD M/TRANS (ML9)	10126448	1	177.00	HOUSING, FLYWHL	1-J2,172
96	Y 5.7-5 (LT4), 6-SPD M/TRANS (ML9)	10126448	1	177.00	HOUSING, FLYWHL	1-J2,172
93-95	Y 5.7J (LT5)	10215917	4	1.45	PIN, F/INJN PUMP DRVN GR LOC (03.305)	
90	Y 5.7J (LT5), 6-SPD M/TRANS (ML9), FEDERAL EMIS (NA5)	10142011	1	14.35	STUD, CLU HSG (03.275)	
90-91	Y M/TRNS	10085606	1	1.65	STUD, FLYWHL HSG (T/W 1052080) (3/8-16X25/32 BOTH ENDS) (03.275)	1-K7,2
92-95	Y 5.7P (LT1), 6-SPD M/TRANS (ML9)	14085701	1	23.25	STUD, FLYWHL HSG (3/8-16X1.75/3/8-16X.88 300M) (03.655)	4-L2,26
96	Y 5.7-5 (LT4), 6-SPD M/TRANS (ML9)	14085701	1	23.25	STUD, FLYWHL HSG (03.655) ...	4-L2,26
92-94	Y 5.7P (LT1), 6-SPD M/TRANS (ML9)	10150037	1	1.00	WASHER, CLU HSG (00.685)	1-J2,173

0.685 PIN, Engine Clutch Housing or Transmission

91-95	Y 5.7J (LT5)	10067627	2	6.70	PIN, TRANS LOC (00.679)	
92-96	Y 5.7P (LT1)	12338119	2	*1.80	PIN, TRANS LOC (5/8 DIA, 1 3/16 LG) (08.939)	1-I8,118
96	Y 5.7-5 (LT4)	12338119	2	*1.80	PIN, TRANS LOC (5/8 DIA, 1 3/16 LG) (08.939)	1-I8,118

0.724 BOLT – BUSHING – CHAIN – FACING – GASKET – GUIDE – HOUSING – PIN – PLUG – RESERVOIR – SEAL – SLEEVE – SPROCKET – TENSIONER, Engine Timing

90-95	Y 5.7J (LT5)	11517518	4	1.85	BOLT, CM/SHF SEC TMG CHAIN TENSR CVR (HEAVY HEX FLANGE HD) (HFH, M6X1X20, 19 THD, 14.2 OD, 9.8, 6280M, MACH HD PT) (08.900) (AC-DELCO #11517518)	1-H10,230
90-95	Y 5.7J (LT5)	11509037	2	.48	BOLT, PRIM CHAIN GDE (M6X1X40, DIM A-25, 14.2-OD 9.8 PEOR) (06.900)	1-H13,331
90-95	Y 5.7J (LT5)	11514525	4	.61	BOLT, PRIM TMG CHAIN GDE FAC (M5X0.8X10)	1-H13,331
90-95	Y 5.7J (LT5)	11514888	2	1.30	BOLT, PRIM TMG CHAIN GDE FAC (4.2X1.4X13) (4.2X1.4X13)	1-H13,331
90-95	Y 5.7J (LT5)	24572579	4	.67	BOLT, TMG CHAIN GDE (HFH, M8X1.25X35) (00.206)	1-H13,342
90-95	Y 5.7J (LT5)	10122161	1	3.98	BUSHING, SECD TMG CHAIN GDE	1-H13,340

© 2000 GENERAL MOTORS SERVICE PARTS OPERATIONS-CHEVROLET-14Y

0.724 BOLT – BUSHING – CHAIN – FACING – GASKET – GUIDE – HOUSING – PIN – PLUG – RESERVOIR – SEAL – SLEEVE – SPROCKET – TENSIONER, Engine Timing (Con't)

85-91	Y 5.7-8 (L98)	14087014	1	39.20	CHAIN, CM/SHF TMG (9-LINKS) (DIM 5.737 36 TEETH, DIM 2.879 18 TEETH)	1-G7,110
92-95	Y 5.7P (LT1)	10128485	1	31.10	CHAIN, CM/SHF TMG (DIM 4.532 36 TEETH, DIM 4.522 18 TEETH)	1-I8,159
96	Y 5.7P (LT1), 4-SPD A/TRANS (M30)	10128485	1	31.10	CHAIN, CM/SHF TMG (DIM 4.532 36 TEETH, DIM 4.522 18 TEETH)	1-I8,159
96	Y 5.7-5 (LT4), 6-SPD M/TRANS (ML9)	12555887	1	59.40	CHAIN, CM/SHF TMG	1-J2,159
90-95	Y 5.7J (LT5)	10110983	1	27.60	CHAIN, PRIM TMG	1-H13,343
90-95	Y 5.7J (LT5)	10215911	LH	69.00	CHAIN, SECD TMG	1-H13,346
90-95	Y 5.7J (LT5)	10215912	RH	69.00	CHAIN, SECD TMG	1-H13,346
84	Y 5.7-8 (L83)	14087014	1	39.20	CHAIN, TIMING	1-G7,110
90-95	Y 5.7J (LT5)	10110982	1	2.40	FACING, PRIM TMG CHAIN GDE	1-H13,344
90-95	Y 5.7J (LT5)	10110917	LH	3.90	FACING, SECD TMG CHAIN GDE (FIXED)	1-H13,333
90-95	Y 5.7J (LT5)	10110918	RH	3.20	FACING, SECD TMG CHAIN GDE (FIXED)	1-H13,330
90-95	Y 5.7J (LT5)	10110919	LH	3.20	FACING, SECD TMG CHAIN GDE (PIV)	1-H13,333
90-95	Y 5.7J (LT5)	10110920	RH	3.20	FACING, SECD TMG CHAIN GDE (PIV)	1-H13,330
90-95	Y 5.7J (LT5)	10110933	2	1.80	FACING, SECD TMG CHAIN GDE (TOP)	1-H13,333
94	Y 5.7J (LT5), (2ND DES)	10199004	1	2.65	GASKET, CHAIN TENSR RSVR HSG (NO COMPARABLE 1ST DES)	
95	Y 5.7J (LT5)	10199004	1	2.65	GASKET, CHAIN TENSR RSVR HSG	
90-95	Y 5.7J (LT5)	10110999	1	32.90	GUIDE, PRIM TMG CHAIN	1-H13,327
90-95	Y 5.7J (LT5)	10110932	2	1.20	GUIDE, SECD TMG CHAIN	1-H13,332
90-95	Y 5.7J (LT5)	10122170	RH	115.20	GUIDE, TMG CHAIN (FIXED)	1-H13,329
90-95	Y 5.7J (LT5)	10122171	LH	64.40	GUIDE, TMG CHAIN (FIXED)	1-H13,336
90-95	Y 5.7J (LT5)	10122172	RH	141.40	GUIDE, TMG CHAIN (PIV)	1-H13,329
90-95	Y 5.7J (LT5)	10122173	LH	141.40	GUIDE, TMG CHAIN (PIV)	1-H13,336
90-95	Y 5.7J (LT5)	10110972	RH	131.20	HOUSING, TMG CHAIN TENSR	1-H10,228
90-95	Y 5.7J (LT5)	10153549	LH	131.30	HOUSING, TMG CHAIN TENSR	1-H10,228
90-95	Y 5.7J (LT5)	10106154	1	1.20	PIN, SECD TMG CHAIN GDE FAC RET	1-H13,328
90-95	Y 5.7J (LT5)	10067657	2	.70	PLUG, CM/SHF SEC TMG CHAIN TENSR CVR	1-H10,229
94	Y 5.7J (LT5), (2ND DES)	10215915	1	4.65	RESERVOIR, CHAIN TENSR (NO COMPARABLE 1ST DES)	
95	Y 5.7J (LT5)	10215915	1	4.65	RESERVOIR, CHAIN TENSR	
90-95	Y 5.7J (LT5)	10067520	2	7.91	SEAL, TMG CHAIN TENSR	1-H10,227
94	Y 5.7J (LT5), (2ND DES)	10215914	1	2.75	SLEEVE, CHAIN TENSR (NO COMPARABLE 1ST DES)	
95	Y 5.7J (LT5)	10215914	1	2.75	SLEEVE, CHAIN TENSR	
90-95	Y 5.7J (LT5)	10106173	1	228.30	SPROCKET, TMG CHAIN IDLER	1-H13,307
90-95	Y 5.7J (LT5)	10174324	RH	119.40	TENSIONER, TMG CHAIN	1-H10,226
90-95	Y 5.7J (LT5)	10174325	LH	193.80	TENSIONER, TMG CHAIN (02.559)	1-H10,226

0.728 BOLT – SPROCKET, Engine Crankshaft/Timing

90-92	Y 5.7J (LT5)	10122138	3	1.80	BOLT, CR/SHF SPKT (M8 X 1.5 X 100) (01.428)	1-H13,311
84	Y 5.7-8 (L83)	10128346	1	27.30	SPROCKET, CR/SHF (18 TEETH-2 7/8 O.D.)	1-G7,92

© 2000 GENERAL MOTORS SERVICE PARTS OPERATIONS-CHEVROLET-14Y

0.728 BOLT – SPROCKET, Engine Crankshaft/Timing (Con't)

85-91	Y 5.7-8 (L98)	10128346	1	27.30	SPROCKET, CR/SHF (18 TEETH-2 7/8 O.D.) (18 TEETH) (.40/.41" TOOTH WIDTH)	1-G7,92
90-95	Y 5.7J (LT5)	10106172	1	44.00	SPROCKET, CR/SHF	1-H6,155
92-95	Y 5.7P (LT1)	10128346	1	27.30	SPROCKET, CR/SHF (18 TEETH) (.40/.41" TOOTH WIDTH)	1-G7,92
96	Y 5.7P (LT1), 4-SPD A/TRANS (M30)	10128346	1	27.30	SPROCKET, CR/SHF (18 TEETH) (.40/.41" TOOTH WIDTH)	1-G7,92
96	Y 5.7-5 (LT4), 6-SPD M/TRANS (ML9)	12555886	1	47.00	SPROCKET, CR/SHF	1-J2,141

0.736 SPROCKET, Engine Camshaft

84	Y 5.7-8 (L83)	340235	1	40.70	SPROCKET (36 TEETH)	1-G7,111
85-86	Y 5.7-8 (L98)	340235	1	40.70	SPROCKET (36 TEETH)	1-G7,111
87-91	Y 5.7-8 (L98)	12552128	1	44.70	SPROCKET, CM/SHF (36 TEETH) (.395/.405" TOOTH WIDTH)	1-G23,105
90-95	Y 5.7J (LT5)	10106162	4	54.30	SPROCKET, CM/SHF	1-H10,239
92-94	Y 5.7P (LT1)	10128349	1	35.90	SPROCKET, CM/SHF (00.728)	1-I8,161
95	Y 5.7P (LT1)	10206039	1	35.90	SPROCKET, CM/SHF	1-I8,161
96	Y 5.7P (LT1), 4-SPD A/TRANS (M30)	10206039	1	35.90	SPROCKET, CM/SHF	1-I8,161
96	Y 5.7-5 (LT4), 6-SPD M/TRANS (ML9)	12555885	1	140.40	SPROCKET, CM/SHF	1-J2,161

0.738 BOLT – PIN – RETAINER – WASHER, Engine Camshaft gear

90-95	Y 5.7J (LT5)	10090566	4	2.90	BOLT, CM/SHF SPKT	1-H10,236
92-96	Y 5.7P (LT1)	9424877	3	*1.25	BOLT, CM/SHF SPKT (5/16-18 X 3/4, 300M) (HEX HD, STEEL) (08.900)	1-I8,160
96	Y 5.7-5 (LT4)	9424877	3	*1.25	BOLT, CM/SHF SPKT (5/16-18 X 3/4, 300M) (HEX HD, STEEL) (08.900)	1-I8,160
89-90	Y 5.7-8 (L98)	12554553	1	.20	PIN, CM/SHF SPKT (1/4X5/8) (08.939)	1-I8,162
90-95	Y 5.7J (LT5)	10106161	4	7.30	PIN, CM/SHF SPKT LOC	1-H10,235
92-96	Y 5.7P (LT1)	12554553	2	.20	PIN, CM/SHF SPKT LOC (1/4 X 5/8) (08.939)	1-I8,162
94-95	Y 5.7P (LT1)	10214485	1	1.20	PIN, CM/SHF SPKT LOC	1-I8,162
96	Y 5.7-5 (LT4), 6-SPD M/TRANS (ML9)	10214485	1	1.20	PIN, CM/SHF SPKT LOC	1-I8,162
96	Y 5.7P (LT1), 4-SPD A/TRANS (M30)	10214485	1	1.20	PIN, CM/SHF SPKT LOC	1-I8,162
90-92	Y 5.7J (LT5)	10106164	4	17.70	RETAINER, CM/SHF SPKT (00.736)	1-H10,238
93-95	Y 5.7J (LT5)	10199079	1	37.20	RETAINER, CM/SHF SPKT (00.736)	1-H10,238
90-95	Y 5.7J (LT5)	10090569	4	4.00	WASHER, CM/SHF SPKT	1-H10,237
92-96	Y 5.7P (LT1)	2436162	2	*.34	WASHER, OIL PAN (5/16X5/8X1/16, ZP) (HARDENED) (08.929)	1-I14,424

0.775 BUSHING – CAP KIT – CYLINDER – PUSH ROD – REPAIR KIT – ROD, Hydraulic Clutch Main Cylinder

86-87	Y	14094900	1	1.95	BUSHING, CLU M/CYL	1-K5,16
84	Y 5.7-8 (L83)	10028824	1	22.55	CAP KIT, CLU M/CYL	1-K16,10
85-88	Y 5.7-8 (L98)	10028824	1	22.55	CAP KIT, CLU M/CYL	1-K16,10
84	Y 5.7-8 (L83)	10079820	1	197.00	CYLINDER, CLU MAS (.38" DIA CLU PED BUSH)	1-K5,23

© 2000 GENERAL MOTORS SERVICE PARTS OPERATIONS-CHEVROLET-14Y

0.775 BUSHING – CAP KIT – CYLINDER – PUSH ROD – REPAIR KIT – ROD, Hydraulic Clutch Main Cylinder (Con't)

85-88	Y 5.7-8 (L98)	10079820	1	197.00	CYLINDER, CLU MAS (.38" DIA CLU PED BUSH) (ON EARLY 1987 & PRIOR VEHS W/NO PUSH ROD BUSH OR W/.43" DIA BUSH, ALSO ORDER NEW CLU PED 10079819 & RET 3817860)	1-K5,23
89-95	Y 6-SPD M/TRANS (ML9) ...	10147953	1	114.00	CYLINDER, CLU MAS (00.785) ..	1-K7,26
84-85	Y	14083523	1	DISCON	PUSH ROD, CLU M/CYL	
86	Y (1ST DES)	14083523	1	DISCON	PUSH ROD, CLU M/CYL (ID BY NO BUSH) ; 2ND DES ROD NOT SERV	
84	Y 5.7-8 (L83)	14079421	1	DISCON	REPAIR KIT, CLU M/CYL	
85-88	Y 5.7-8 (L98)	14079421	1	DISCON	REPAIR KIT, CLU M/CYL	
89-96	Y 6-SPD M/TRANS (ML9) ...	10147950	1	14.60	ROD, CLU M/CYL PUSH (00.785)	1-K7,27
87	Y M/TRNS	10140613	1	29.00	ROD, CLUTCH MASTER CYL PUSH (.38 DIA CLU PED BUSH)	
88	Y M/TRNS	10140613	1	29.00	ROD, CLUTCH MASTER CYL PUSH	

0.777 BOLT – SHIELD – SPACER, Hydraulic Clutch Main Cylinder

84	Y 5.7-8 (L83)	14066450	2	2.80	BOLT, CLU M/CYL (M8 X 1.25 X 55 10.9) (08.900)	1-K5,31
85-90	Y 5.7-8 (L98)	14066450	2	2.80	BOLT, CLU M/CYL (M8 X 1.25 X 55 10.9) (08.900)	1-K5,31
90-96	Y 6-SPD M/TRANS (ML9) ...	14066450	2	2.80	BOLT, CLU M/CYL (M8 X 1.25 X 55 10.9) (M8X1.25-8G, 10.9, PZO) (08.900)	1-K5,31
86-88	Y 5.7-8 (L98)	14087251	1	DISCON	SHIELD, CLU ACTR CYL HEAT ..	
84	Y 5.7-8 (L83)	14066452	1	13.25	SPACER, CLU M/CYL	1-K5,22
85-90	Y 5.7-8 (L98)	14066452	1	13.25	SPACER, CLU M/CYL	1-K5,22
90-96	Y 6-SPD M/TRANS (ML9) ...	14066452	1	13.25	SPACER, CLU M/CYL	1-K5,22

0.780 CYLINDER – REPAIR KIT – SCREW – STUD – VALVE, Clutch Hydraulic Release Slave/Actuator

89-90	Y 6-SPD M/TRANS (ML9) ...	10147948	1	187.00	CYLINDER, CLU ACTR (W/VLV & NO FTG) (00.775)	1-K7,31
91-95	Y 6-SPD M/TRANS (ML9) ...	12509313	1	120.00	CYLINDER, CLU ACTR (W/VLV & FTG)	1-K9,31
96	Y 6-SPD M/TRANS (ML9) ...	12509313	1	120.00	CYLINDER, CLU ACTR	1-K9,31
84	Y 5.7-8 (L83)	14079422	1	DISCON	REPAIR KIT, CLU SECD CYL	
85-88	Y 5.7-8 (L98)	14079422	1	DISCON	REPAIR KIT, CLU SECD CYL	
84	Y 5.7-8 (L83)	14079424	1	DISCON	SCREW, CLU SECD CYL BLEED .	
85-88	Y 5.7-8 (L98)	14079424	1	DISCON	SCREW, CLU SECD CYL BLEED .	
89-90	Y 6-SPD M/TRANS (ML9) ...	14062201	2	*.53	STUD, CLU ACTR CYL (M8X1.25X45) (9.8) (BOTH ENDS) (03.613)	1-K7,36
90-92	Y 5.7J (LT5), 6-SPD M/TRANS (ML9)	10186827	2	2.45	STUD, CLU ACTR CYL	1-K12,20
91	Y 5.7-8 (L98), 6-SPD M/TRANS (ML9)	10150004	2	*1.75	STUD, CLU ACTR CYL (00.777) ..	1-K9,36
92	Y 5.7P (LT1), 6-SPD M/TRANS (ML9)	10150004	2	*1.75	STUD, CLU ACTR CYL (00.777) ..	1-K9,36
93-94	Y 5.7P (LT1), 6-SPD M/TRANS (ML9)	10210489	2	3.00	STUD, CLU ACTR CYL	1-K14,24
93-95	Y 5.7J (LT5), 6-SPD M/TRANS (ML9)	14086087	2	1.25	STUD, CLU ACTR CYL (03.275) ..	1-K12,20
95	Y 5.7P (LT1), 6-SPD M/TRANS (ML9)	10150004	2	*1.75	STUD, CLU ACTR CYL (00.777) ..	1-K9,36

© 2000 GENERAL MOTORS SERVICE PARTS OPERATIONS-CHEVROLET-14Y

0.780 CYLINDER – REPAIR KIT – SCREW – STUD – VALVE, Clutch Hydraulic Release Slave/Actuator (Con't)

96	Y 5.7-5 (LT4), 6-SPD M/TRANS (ML9)	10150004	2	*1.75	STUD, CLU ACTR CYL (00.777) ..	1-K9,36
89-90	Y 6-SPD M/TRANS (ML9) ...	10181244	1	6.30	VALVE, CLU ACTR CYL BL (MAY HAVE TO DRILL OUT OLD SCREW) (00.775)	1-K7,30
91-96	Y 6-SPD M/TRANS (ML9) ...	10147951	1	9.45	VALVE, CLU ACTR CYL BL (W/CAP) (00.775)	1-K9,30

0.785 CAP – CLIP – FITTING – HOSE – PIPE, Hydraulic Clutch Reservoir

89-96	Y 6-SPD M/TRANS (ML9) ...	10147952	1	9.50	CAP, CLU M/CYL RSVR	1-K7,28
89-90	Y 5.7-8 (L98), 6-SPD M/TRANS (ML9)	10126475	1	DISCON	CLIP, CLU ACTR CYL HOSE	
91	Y 5.7-8 (L98), 6-SPD M/TRANS (ML9)	10174463	1	DISCON	CLIP, CLU ACTR CYL HOSE (POS #2)	
91-96	Y 6-SPD M/TRANS (ML9) ...	10174464	1	1.05	CLIP, CLU ACTR CYL HOSE (POS #1)	1-K9,34
91-95	Y 5.7J (LT5), 6-SPD M/TRANS (ML9)	10174465	1	5.80	CLIP, CLU ACTR CYL HOSE (POS #2)	
92-95	Y 5.7P (LT1), 6-SPD M/TRANS (ML9)	10186811	1	3.20	CLIP, CLU ACTR CYL HOSE (POS #2)	1-K14,22
96	Y 5.7-5 (LT4), 6-SPD M/TRANS (ML9)	10186811	1	3.20	CLIP, CLU ACTR CYL HOSE (POS #2)	1-K14,22
84-88	Y (5.7-8)	14068715	1	DISCON	FITTING, CLU ACTR CYL HOSE .	
86	Y67 5.7-8 (L98), 4-SPD M/TRANS (MK2)	10046506	1	60.00	HOSE, CLU ACTR CYL	1-K5,29
87-88	Y07 5.7-8 (L98), 4-SPD M/TRANS (MH5), (MK2)	10046506	1	60.00	HOSE, CLU ACTR CYL	1-K5,29
87-88	Y67 5.7-8 (L98), (MD0, MK2)	10046506	1	60.00	HOSE, CLU ACTR CYL	1-K5,29
89-90	Y 6-SPD M/TRANS (ML9) ...	10147949	1	60.00	HOSE, CLU ACTR CYL	1-K7,29
91-95	Y	12509314	1	73.75	HOSE, CLU MAIN CYL PIPE (M/CYL TO SEC CYL)	1-K9,29
96	Y 6-SPD M/TRANS (ML9) ...	12509314	1	73.75	HOSE, CLU MAIN CYL PIPE	1-K9,29
86	YY07	14087674	1	DISCON	HOSE, CLUTCH ACTR CYL	
84	Y 5.7-8 (L83)	14047673	1	DISCON	PIPE, CLU ACTR CYL	
85	Y 5.7-8 (L98)	14047673	1	DISCON	PIPE, CLU ACTR CYL	

0.786 CYLINDER, Engine Clutch

84	Y 5.7-8 (L83)	14087254	1	184.00	CYLINDER, CLU SECD (ON 1984-85 MODELS, HOSE 14087674 MUST ALSO BE PURCHASED) (00.775)	1-K5,30
85-88	Y 5.7-8 (L98)	14087254	1	184.00	CYLINDER, CLU SECD (ON 1984-85 MODELS, HOSE 14087674 MUST ALSO BE PURCHASED) (00.775)	1-K5,30

0.787 ROD, Clutch Fork Release

84-88	Y M/TRNS	14047672	1	8.90	ROD, CLU FORK PUSH/SECD CYL .	1-K5,25

0.795 FORK, Engine Clutch Release

84	Y 5.7-8 (L83)	14048868	1	32.50	FORK, CLU	1-K5,3
85-88	Y 5.7-8 (L98)	14048868	1	32.50	FORK, CLU	1-K5,3
89-91	Y 5.7-8 (L98), 6-SPD M/TRANS (ML9), FEDERAL EMIS (NA5)	10085210	1	98.50	FORK, CLU	1-H6,110
90-95	Y 5.7J (LT5)	10085210	1	98.50	FORK, CLU	1-H6,110

© 2000 GENERAL MOTORS SERVICE PARTS OPERATIONS-CHEVROLET-14Y

0.795 FORK, Engine Clutch Release (Con't)

92-95	Y 5.7P (LT1), 6-SPD M/TRANS (ML9)	10085210	1	98.50	FORK, CLU	1-H6,110
96	Y 5.7-5 (LT4), 6-SPD M/TRANS (ML9)	10085210	1	98.50	FORK, CLU	1-H6,110

0.796 BOLT - STUD, Engine Clutch Release Fork

90-91	5.7-8 (L98)	10150085	1	12.25	BOLT, CLU FORK BALL STUD (SPL, FLAT HD M8XA.25X15.5, 11X5 SHLDR, 27 OD, STL, CA, INT HEX DRV)	1-H6,109
90-95	Y 5.7J (LT5)	10150085	1	12.25	BOLT, CLU FORK BALL STUD (SPL, FLAT HD M8XA.25X15.5, 11X5 SHLDR, 27 OD, STL, CA, INT HEX DRV)	1-H6,109
92-94	Y 5.7P (LT1), 6-SPD M/TRANS (ML9)	10150085	1	12.25	BOLT, CLU FORK BALL STUD (SPL, FLAT HD M8XA.25X15.5, 11X5 SHLDR, 27 OD, STL, CA, INT HEX DRV)	1-H6,109
95	Y 5.7P (LT1), 6-SPD M/TRANS (ML9)	10227810	1	16.20	BOLT, CLU FORK BALL STUD ...	1-J2,175
96	Y 5.7-5 (LT4), 6-SPD M/TRANS (ML9)	10227810	1	16.20	BOLT, CLU FORK BALL STUD ...	1-J2,175
84-88	Y (5.7-8)	3790556	1	10.65	STUD, CLU FORK BALL	1-K5,34
89	Y 5.7-8 (L98), 6-SPD M/TRANS (ML9), FEDERAL EMIS (NA5)	10227809	1	14.60	STUD, CLU FORK BALL	1-J2,177
90-95	Y 5.7J (LT5)	10054279	1	11.65	STUD, CLU FORK BALL	1-J25,13
90-91	Y 5.7-8 (L98), 6-SPD M/TRANS (ML9), FEDERAL EMIS (NA5)	10227809	1	14.60	STUD, CLU FORK BALL	1-J2,177
92-94	Y 5.7P (LT1), 6-SPD M/TRANS (ML9)	10227809	1	14.60	STUD, CLU FORK BALL	1-J2,177
95	Y 5.7P (LT1), 6-SPD M/TRANS (ML9)	10227809	1	14.60	STUD, CLU FORK BALL	1-J2,177
96	Y 5.7-5 (LT4), 6-SPD M/TRANS (ML9)	10227809	1	14.60	STUD, CLU FORK BALL	1-J2,177

0.797 BOOT, Engine Clutch Release Fork

84-88	Y (5.7-8)	14053689	1	DISCON	BOOT	

0.799 BEARING - RETAINER, Engine Clutch Release Fork

84	Y 5.7-8 (L83)	15613306	1	54.00	BEARING, CLU REL ((BALL BRG TYPE) (1 1/4" LONG)) (AC-DELCO #CT24KVAL)	1-K5,35
85-88	Y 5.7-8 (L98)	15613306	1	54.00	BEARING, CLU REL ((BALL BHG TYPE) (1 1/4" LONG)) (AC-DELCO #CT24KVAL)	1-K5,35
89-91	Y 5.7-8 (L98), 6-SPD M/TRANS (ML9), FEDERAL EMIS (NA5)	10203567	1	131.68	BEARING, CLU REL (AC-DELCO #CT1073)	1-H6,111
90-93	Y 5.7J (LT5)	10203567	1	131.68	BEARING, CLU REL (AC-DELCO #CT1073)	1-H6,111
92-93	Y 5.7P (LT1), 6-SPD M/TRANS (ML9)	10203567	1	131.68	BEARING, CLU REL (AC-DELCO #CT1073)	1-H6,111
94-95	Y 5.7P (LT1), 6-SPD M/TRANS (ML9)	10222087	1	103.00	BEARING, CLU REL	1-H6,111
94-95	Y 5.7J (LT5)	10222087	1	103.00	BEARING, CLU REL	1-H6,111

© 2000 GENERAL MOTORS SERVICE PARTS OPERATIONS-CHEVROLET-14Y

	0.799 BEARING – RETAINER, Engine Clutch Release Fork (Con't)					
96	Y 5.7-5 (LT4), 6-SPD M/TRANS (ML9)	10222087	1	103.00	BEARING, CLU REL	1-H6,111
90-95	Y 5.7J (LT5)	10111569	1	3.50	RETAINER, CLU REL BRG COLR	1-J25,14
	0.829 BOLT – BRACKET – SHIM – SPACER, Engine Clutch Pedal					
90-94	Y 6-SPD M/TRANS (ML9) ...	14088310	2	*1.30	BOLT, CLU PED BRKT (M8X1.25X24) (03.671)	
84	Y 5.7-8 (L83)	14047676	1	DISCON	BRACKET, CLU PED	
85-89	Y 5.7-8 (L98)	14047676	1	DISCON	BRACKET, CLU PED	
90-96	Y 6-SPD M/TRANS (ML9) ...	10111642	1	40.25	BRACKET, CLU PED	1-K9,10
90-96	Y 6-SPD M/TRANS (ML9) ...	10126405	1	2.05	SHIM, CLU PED BRKT	1-K9,12
90-93	Y 4-SPD A/TRANS (MD8) ...	10126405	1	2.05	SPACER, HOOD PRIM LAT REL CBL BRKT	1-K9,12
94-96	Y 4-SPD A/TRANS (M30) ...	10126405	1	2.05	SPACER, HOOD PRIM LAT REL CBL BRKT	1-K9,12
	0.830 PEDAL, Engine Clutch					
84	Y 5.7-8 (L83)	14047677	1	DISCON	PEDAL, CLU	
85	Y 5.7-8 (L98)	14047677	1	DISCON	PEDAL, CLU	
86	Y (2ND DES HAS PLASTIC BUSHING IN PUSH ROD EYELET)	10079619	1	38.00	PEDAL, CLU	1-K5,19
86	Y 5.7-8 (L98)	14047677	1	DISCON	PEDAL, CLU (NO BUSH)	
87	Y 5.7-8 (L98)	10079619	1	38.00	PEDAL, CLU	1-K5,19
88-89	Y 5.7-8 (L98)	10079619	1	38.00	PEDAL, CLU	1-K5,19
90-96	Y 6-SPD M/TRANS (ML9) ...	10150006	1	34.75	PEDAL, CLU	1-K9,21
	0.831 BUSHING – SPACER, Engine Clutch Pedal					
84-96	Y	15594358	2	*.73	BUSHING, CLU PED PIV	1-K5,14
84	Y 5.7-8 (L83)	3908768	1	1.02	BUSHING, CLU PED RTN SPR (04.626)	1-K5,12
85-86	Y 5.7-8 (L98)	3908768	1	1.02	BUSHING, CLU PED RTN SPR (04.626)	1-K5,12
89-96	Y 6-SPD M/TRANS (ML9) ...	3908768	1	1.02	BUSHING, CLU PED RTN SPR (04.626)	1-K5,12
84-96	Y	25505362	1	1.50	SPACER, CLU PED PIV (04.604) .	1-K5,15
	0.837 RETAINER – WASHER, Engine Clutch Pedal Shaft					
87-88	Y M/TRNS (MH5, MK2)	3817880	1	*.41	RETAINER, CLU PED LVR PIN (04.662)	
84	Y 5.7-8 (L83), (M/TRNS)	1368917	1	.22	WASHER, CLU M/CYL PUSH ROD (04.662)	1-K5,17
85	Y 5.7-8 (L98), (M/TRNS)	1368917	1	.22	WASHER, CLU M/CYL PUSH ROD (04.662)	1-K5,17
	0.844 SPRING, Engine Clutch Pedal Return					
84-96	Y	14084055	1	4.15	SPRING, CLU PED RTN	1-K5,13
	0.852 RETAINER, Engine Clutch Control					
89-92	Y 6-SPD M/TRANS (ML9) ...	3817880	1	*.41	RETAINER, CLU PED LVR PIN (04.662)	1-K7,19
93-96	Y 6-SPD M/TRANS (ML9) ...	3817880	1	*.41	RETAINER, CLU PED LVR PIN (04.662)	1-K7,19
	0.859 COVER – PLATE, Engine Clutch					
90	Y 5.7J (LT5)	10054110	1	309.00	COVER, W/PLATE, CLU PRESS .	
84	Y 5.7-8 (L83)	14060624	1	DISCON	COVER, W/PLT, CLU PRESS	

© 2000 GENERAL MOTORS SERVICE PARTS OPERATIONS–CHEVROLET–14Y

0.859 COVER – PLATE, Engine Clutch (Con't)

85–88	Y 5.7–8 (L98)	14084176	1	257.00	COVER, W/PLT, CLU PRESS	1–K5,39
89–91	Y 5.7–8 (L98), 6–SPD M/TRANS (ML9)	10203570	1	309.00	PLATE, CLU PRESS (W/CVR & CLU REL BRG) (W/O CLU DISK)	1–J25,7
90–93	Y 5.7J (LT5)	10203573	1	309.00	PLATE, CLU PRESS (W/CVR & CLU REL BRG)	1–H6,112
92–93	Y 5.7P (LT1), 6–SPD M/TRANS (ML9)	10203570	1	309.00	PLATE, CLU PRESS (W/CVR & CLU REL BRG) (W/O CLU DISK)	1–J25,7
94–95	Y 5.7P (LT1), 6–SPD M/TRANS (ML9)	10222083	1	309.00	PLATE, CLU PRESS (W/CVR & CLU REL BRG)	1–K2,7
94–95	Y 5.7J (LT5)	10222084	1	288.00	PLATE, CLU PRESS (W/CVR & CLU REL BRG)	1–H6,112
96	Y 5.7–5 (LT4), 6–SPD M/TRANS (ML9)	10222083	1	309.00	PLATE, CLU PRESS (W/CVR & CLU REL BRG)	1–K2,7

0.862 BOLT, Engine Clutch Cover to Flywheel

84	Y 5.7–8 (L83)	838653	6	*.87	BOLT, CLU CVR & PRESS PLT (3/8–16X1)	
85–88	Y 5.7–8 (L98)	838653	6	*.87	BOLT, CLU CVR & PRESS PLT (3/8–16X1)	
89–91	Y 5.7–8 (L98), 6–SPD M/TRANS (ML9), FEDERAL EMIS (NA5)	10079698	6	*2.40	BOLT, CLU PRESS PLT (HFH, 3/8–16X1.62, .38 THD, .378 SHLD TAPERED TO .375, 280M)	1–H6,105
90	Y 5.7J (LT5)	10079698	6	*2.40	BOLT, CLU PRESS PLT	1–H6,105
90–95	Y 5.7J (LT5)	10111562	6	1.75	BOLT, CLU PRESS PLT	1–H6,105
92–95	Y 5.7P (LT1), 6–SPD M/TRANS (ML9)	10079698	6	*2.40	BOLT, CLU PRESS PLT (HFH, 3/8–16X1.62, .38 THD, .378 SHLD TAPERED TO .375, 280M)	1–H6,105
92–93	Y 5.7P (LT1), 6–SPD M/TRANS (ML9)	10150085	1	12.25	BOLT, CLU PRESS PLT (SPL, FLAT HD M8XA.25X15.5, 11X5 SHLDR, 27 OD, STL, CA, INT HEX DRV) (00.796)	1–K2,8
96	Y 5.7–5 (LT4), 6–SPD M/TRANS (ML9)	1[illegible]/698	6	*2.40	BOLT, CLU PRESS PLT (HFH, 3/8–16X1.62, .38 THD, .378 SHLD TAPERED TO .375, 280M)	1–H6,105

0.886 PLATE, Engine Clutch Driven

84	Y 5.7–8 (L83)	10120998	1	DISCON	PLATE, CLU DRIVEN (26 SPLINES)	
85–88	Y 5.7–8 (L98)	14084177	1	190.00	PLATE, CLU DRIVEN (26 SPLINES)	1–K5,38
89–91	Y 5.7–8 (L98), 6–SPD M/TRANS (ML9), FEDERAL EMIS (NA5)	10174491	1	204.00	PLATE, CLU DRVN	1–H6,113
90–95	Y 5.7J (LT5)	10174491	1	204.00	PLATE, CLU DRVN	1–H6,113
92–95	Y 5.7P (LT1), 6–SPD M/TRANS (ML9)	10174491	1	204.00	PLATE, CLU DRVN	1–H6,113
96	Y 5.7–5 (LT4), 6–SPD M/TRANS (ML9)	10174491	1	204.00	PLATE, CLU DRVN	1–H6,113

© 2000 GENERAL MOTORS SERVICE PARTS OPERATIONS–CHEVROLET–14Y

MICROFICHE INDEX

GROUPS 0.000 & 21.000

FICHE 1 OF 11

GROUP	DESCRIPTION	STARTING GRID LOCATION PARTS	ILLUSTRATIONS
–	GENERAL INFORMATION	1–A2	1–G2
–	ALPHABETICAL INDEX	1–B13	N A.
0.000	8–CYLINDER ENGINE	1–E2	1–G5
21.000	ACCESSORY REFERENCE LIST	1–D2	N.A.
–	OUT OF FICHE CALLS	N.A.	1–L13

1–G1

LOGO-001
122192

CHEVROLET

INTRODUCTION

THIS ILLUSTRATION CATALOG HAS BEEN COMPILED TO ASSIST IN THE LOCATION AND IDENTIFICATION OF SERVICE PARTS.

DURING EACH CALENDAR YEAR COMPLETE REPRINTS OF THE CATALOG ARE PUBLISHED AS PART OF THE CATALOG REVISION SERVICE. NEW OR REVISED ILLUSTRATIONS ARE MAILED TO DEALERS SUBSCRIBING TO THE REVISION SERVICE AS THEY ARE SCHEDULED.

EACH ILLUSTRATION IS IDENTIFIED BY AN ART NUMBER (REPRESENTING DIVISION, MODEL AND CATALOG GROUP) IN THE UPPER RIGHT HAND CORNER. PLEASE REFERENCE THIS NUMBER WHEN INQUIRING ON AN ILLUSTRATION.

ALL SPECIFICATIONS AND ILLUSTRATIONS CONTAINED IN THIS PUBLICATION ARE BASED ON THE LATEST PRODUCT INFORMATION AVAILABLE AT THE TIME OF PRINTING. SERVICE PARTS OPERATIONS RESERVES THE RIGHT TO MAKE CHANGES AT ANY TIME WITHOUT NOTICE IN DATA, SPECIFICATIONS, MATERIAL AND MODELS.

© 2000 GENERAL MOTORS SERVICE PARTS OPERATIONS-CHEVROLET-14Y

ILLUSTRATION CATALOG GROUP FORMAT

GENERAL ILLUSTRATION CONTENTS
REFER TO GROUP INDEXES FOR SPECIFIC LISTINGS

GROUP	
0.000	ENGINES - ENGINE/TRANSMISSION MOUNTING - CLUTCH
1.000	GRILLES - COOLING SYSTEMS - ENGINE OIL SYSTEMS
2.000	CHASSIS ELECTRICAL SYSTEMS - FRONT/REAR LAMPS
3.000	FUEL SYSTEMS - VACUUM PUMP - ACCELERATOR/ CRUISE - EMISSIONS - EXHAUST
4.000	TRANSMISSION & CONTROLS - BRAKE SYSTEMS
5.000	REAR DRUM BRAKES - REAR AXLE - WHEEL & TRIM
6.000	FRONT DRIVE AXLE - FRONT SUSPENSION - STEERING SYSTEMS & COMPONENTS
7.000	FRAME/COMPONENTS - REAR SUSPENSION - LEVEL CONTROL - BUMPERS
8.000	FRONT BODY PARTS - SPARE WHEEL & JACK - HEATER & COMPONENTS
9.000	BODY MOUNTING - AIR CONDITIONING - AUDIO PROVISIONS - INSTRUMENT CLUSTERS
10.000	WINDSHIELD WIPER/WASHER - MIRRORS - INSTRUMENT PANEL - CONSOLES - DOOR HARDWARE - WEATHERSTRIPS
11.000	QUARTER HARDWARE - SEAT HARDWARE - LOAD FLOORS - INTERIOR LAMPS
12.000	BODY ORNAMENTATION - TAILGATE/LIFTGATE HARDWARE - REAR WIPER/WASHER - BODY PANELS & COMPONENTS - ROOF/DECK LID OPTIONS
13.000	BODY ELECTRICAL SYSTEMS - CONVERTIBLE TRIM
14.000	CONVERTIBLE HARDWARE - INTERIOR TRIM - SEAT BELTS
15.000	REAR COMPARTMENT TRIM

© 2000 GENERAL MOTORS SERVICE PARTS OPERATIONS--CHEVROLET-14Y

CHEVROLET
CHASSIS GROUP 0.000

ILLUSTRATION INDEX

	TITLE	GRID
1984	Y ENGINE ASM–5.7L V8 PART 1 (L83/5.7–8)	1–G7
1985–1986	Y ENGINE ASM–5.7L V8 PART 1 (L98/5.7–8)	1–G7
1984	Y ENGINE ASM–5.7L V8 PART 2 (L83/5.7–8)	1–G11
1985–1986	Y ENGINE ASM–5.7L V8 PART 2 (L98/5.7–8)	1–G14
1987	Y ENGINE ASM–5.7L V8 PART 2 (L98/5.7–8)	1–G19
1987–1991	Y ENGINE ASM–5.7L V8 PART 1 (L98/5.7–8)	1–G23
1988–1991	Y ENGINE ASM–5.7L V8 PART 2 (L98/5.7–8)	1–H2
1990–1995	Y ENGINE ASM–5.7L V8 PART 1 CYLINDER BLOCK AND INTERNAL PARTS (LT5/5.7J)	1–H6
1990–1995	Y ENGINE ASM–5.7L V8 PART 2 CYLINDER HEAD AND RELATED PARTS (LT5/5.7J)	1–H10
1990–1995	Y ENGINE ASM–5.7L V8 PART 3 FRONT COVER & COOLING (LT5/5.7J)	1–H13
1990–1995	Y ENGINE ASM–5.7L V8 PART 4 OIL PUMP, PAN & RELATED PARTS (LT5/5.7J)	1–H16
1990–1995	Y ENGINE ASM–5.7L V8 PART 5 A MANIFOLDS AND FUEL RELATED PARTS (LT5/5.7J)	1–H20
1990–1995	Y ENGINE ASM–5.7L V8 PART 5 B MANIFOLDS AND FUEL RELATED PARTS (LT5/5.7J)	1–H25
1992	Y ENGINE ASM–5.7L V8 PART 2 CYLINDER HEAD AND RELATED PARTS (LT1/5.7P)	1–I2
1992–1995	Y ENGINE ASM–5.7L V8 PART 3 FRONT COVER & COOLING (LT1/5.7P)	1–I6
1992–1996	Y ENGINE ASM–5.7L V8 PART 1 CYLINDER BLOCK AND RELATED PARTS (LT1/5.7P)	1–I8
1992–1996	Y ENGINE ASM–5.7L V8 PART 4 OIL PUMP, PAN & RELATED PARTS (LT1/5.7P)	1–I14
1992–1996	Y ENGINE ASM–5.7L V8 PART 5 MANIFOLDS AND FUEL RELATED PARTS (LT1/5.7P)	1–I18
1993–1996	Y ENGINE ASM–5.7L V8 PART 2 CYLINDER HEAD AND RELATED PARTS (LT1/5.7P)	1–I23
1996	Y ENGINE ASM–5.7L V8 PART 1 CYLINDER BLOCK AND RELATED PARTS (LT4/5.7–5)	1–J2
1996	Y ENGINE ASM–5.7L V8 PART 2 CYLINDER HEAD AND RELATED PARTS (LT4/5.7–5)	1–J6
1996	Y ENGINE ASM–5.7L V8 PART 3 FRONT COVER & COOLING (LT1/5.7P)	J10
1996	Y ENGINE ASM–5.7L V8 PART 3 FRONT COVER & COOLING (LT4/5.7–5)	1–J12
1996	Y ENGINE ASM–5.7L V8 PART 4 OIL PUMP, PAN & RELATED PARTS (LT4/5.7–5)	1–J15
1996	Y ENGINE ASM–5.7L V8 PART 5 MANIFOLDS AND FUEL RELATED PARTS (LT4/5.7–5)	1–J17
1984	Y ENGINE MOUNTING–V8 (L83)	1–J21
1985–1991	Y ENGINE MOUNTING–V8 (L98)	1–J21
1990–1995	Y ENGINE MOUNTING–V8 (LT5)	1–J22
1992–1996	Y ENGINE MOUNTING–V8 (LT1)	1–J22
1996	Y ENGINE MOUNTING–V8 (LT4)	1–J22
1992–1996	Y COVER/TRANSMISSION CONVERTER	1–J24
1990	Y CLUTCH (LT5,L98)	1–J25
1991	Y CLUTCH (L98)	1–K2
1991–1995	Y CLUTCH (LT5)	1–K2
1992–1995	Y CLUTCH (LT1)	1–K2
1996	Y CLUTCH (LT4)	1–K2
1984–1988	Y CLUTCH LINKAGE	1–K5
1989	Y CLUTCH LINKAGE (L98)	1–K7
1990–1991	Y CLUTCH LINKAGE (L98,ML9)	1–K9
1990–1995	Y CLUTCH LINKAGE (LT5)	1–K12
1992–1995	Y CLUTCH LINKAGE (LT1)	1–K14
1996	Y CLUTCH LINKAGE (LT4)	1–K14
1984–1985	Y CLUTCH CYLINDERS/HYDRAULIC	1–K16
1986–1988	Y CLUTCH CYLINDERS/HYDRAULIC	1–K18

© GENERAL MOTORS SERVICE PARTS OPERATIONS–CHEVROLET–14Y

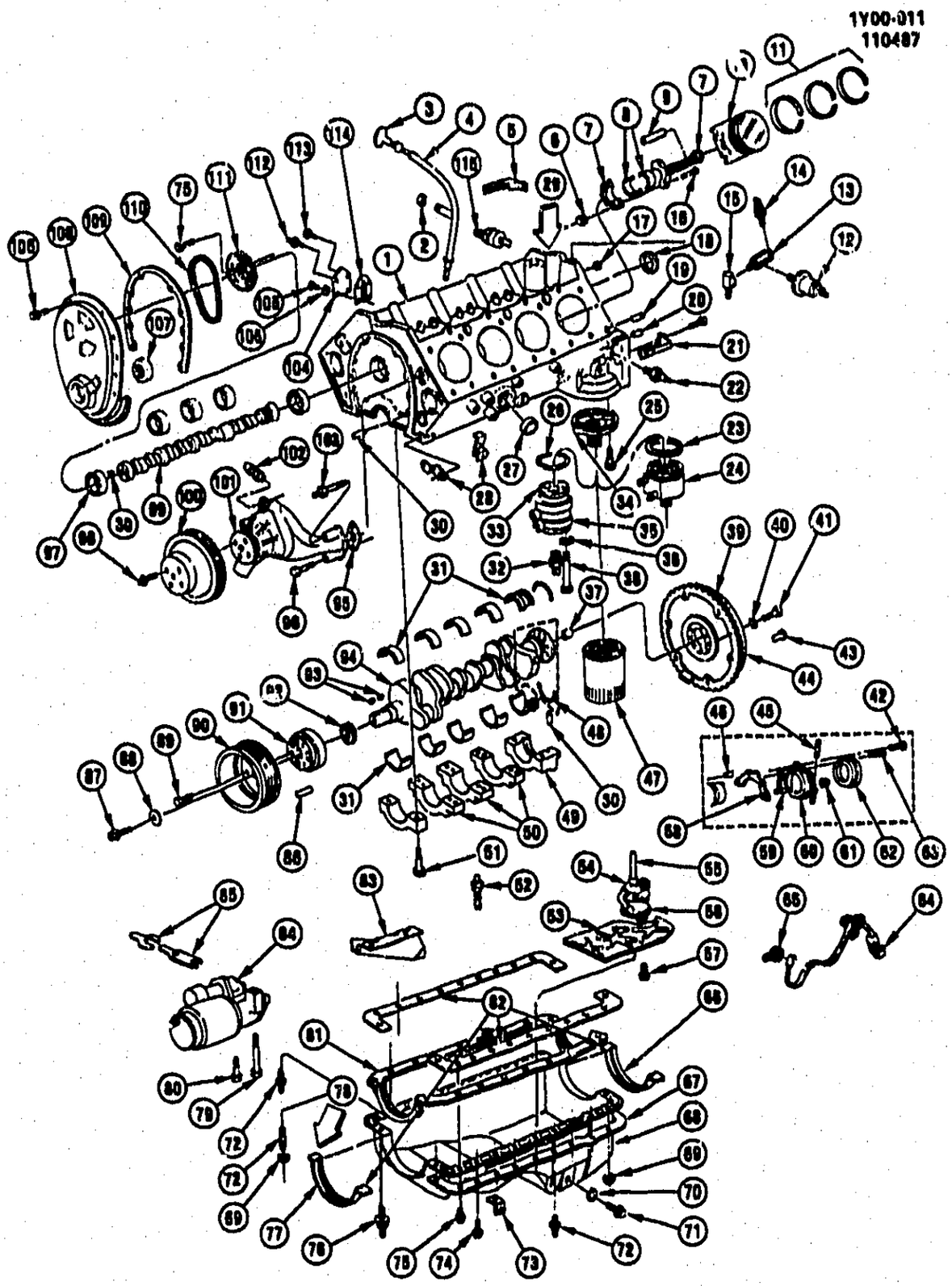

1Y00-011

1984 Y ENGINE ASM-5.7L V8 PART 1 (L83/5.7-8)
1985-1986 Y ENGINE ASM-5.7L V8 PART 1 (L98/5.7-8)

1.	1-E17	0.033	ENGINE, PARTIAL (*1)	10077067
		DISCON	ENGINE, PARTIAL (1984) (*1)	14083505
2.		8.917	NUT, HEX FLG (3/8-16) PHOS	14057004

© 2000 GENERAL MOTORS SERVICE PARTS OPERATIONS-CHEVROLET-14Y

				1Y00-011
3.		DISCON	INDICATOR (DIP STICK) (1984)	14060661
	1-L22	1.516	INDICATOR (DIP STICK) (1985-86)	14094758
4.	1-L22	1.516	TUBE, OIL LVL IND (1984)	14061026
	1-L22	1.516	TUBE, OIL LVL IND (1985-86)	14064336
5.	1-M22	2.559	BRACKET, ENG WRG HARN	14062511
6.		0.626	NUT, CONN ROD (HEX 3/8-24)	225854
7.	1-F5	0.603	ROD, CONN	10108683
8.	1-F6	0.616	BEARING KIT (STD) (*1)	12523924
9.		N.S.	PIN, PSTN (ALSO PART OF 10)	
10.	1-F6	0.629	PISTON (STD) (3.9980-3.9990 DIA) (INCL ITEM 9) (1984-85) (*1)	474193
11.	1-F7	0.643	RING KIT (STD) (1984-85) (*1)	14089025
12.	1-L27	1.800	SENDER, OIL PRESS (3 BLADE TERM, 1/8-27 THD) (1ST DES) (1984) (AC-DELCO #14073454)	14073454
	1-L27	1.800	SENSOR, PRESS GAGE (1 BLADE TERMINAL, 1/8-27 THD) (2ND DES 1984) (1985-86) (AC-DELCO #14078954)	14078954
13.		DISCON	FITTING, OIL PRESS GA SEN (1/8-27 1 INT 1 EXT AT 90 DE G M23 X 21) (90 DEGREE W/SQUARE BODY) (1ST DES) (1984)	14066511
	1-L27	1.800	ELBOW, OIL PRESS GA SEN TO BLK FTG (DOUBLE OUTLET W/HEX BODY) (2ND DES 1984)	14078988
	1-L27	1.800	FITTING, OIL PRESS GA SEN TO BLK FTG (1985-86)	14078988
14.	1-N24	3.910	SWITCH, F/PUMP (1.800) (1984) (AC-DELCO #D1818)	25036553
	1-L27	1.800	SWITCH, OIL PRESS (1985-86) (AC-DELCO #D1818)	25036553
15.		DISCON	FITTING, OIL PRESS GA SEN (1/8-27 NPT 1 EXT 1 INT AT 90 DEG M42 X 25) (SINGLE OUTLET W/SQUARE BODY) (1ST DES) (1984)	14066510
	1-M2	1.803	FITTING, OIL PRESS GA SEN TO BLK (105 DEG W/HEX BODY) (2ND DES 1984) (1985-86)	14078987
16.	1-F6	0.623	BOLT, CONN ROD (3/8-24X1 59/64)	461372
17.		8.971	PLUG, HEX (1/4-18X0.56) STL (3.660) (AC-DELCO #3889330)	3889330
18.		8.970	PLUG, EXP CUP (2 3/32) STL	10241154
19.		8.939	PIN, DOWEL (5/16X9/16) STL (AC-DELCO #585927)	585927
20.		8.939	PIN, DOWEL (5/8X1 3/16, PL)	12338119
21.	1-M22	2.559	BRACKET, ENG WRG HARN (TO LH RR FLYWHL HSG)	14073493
22.	1-L27	1.800	SENSOR, ENG OIL T/GA (OIL) (AC-DELCO #25036292)	25036292
23.	1-L23	1.550	GASKET, ENG OIL CLR ADAP (1985-86)	14087586
24.	1-L23	1.540	COOLER, ENG OIL (1985-86)	14084369
25.		8.900	BOLT, HFH (5/16-18X1.12) PHOS	3951644
	1-M3	1.840	STUD, OIL FLTR ADAP (5/16-18X1.88)	14101106
26.	1-M4	1.844	SEAL, OIL FLTR ADAP (1984)	10244495
27.		8.970	PLUG, WAT JKT (41.5MM)	838538
28.	1-M22	2.559	BRACKET, ENG WRG HARN (ABV LH ENG MT)	14062599
29.		8.800	SEALANT, SILICONE RTV RUBBER (AR)	1052366
30.		8.939	PIN, DWL (1/4X5/8) PL	12554553
31.	1-E18	0.096	BEARING KIT (#1, 2, 3, 4) (STD) (*2)	10120990
32.	1-M[illegible]	1.855	CONNECTOR, OIL FLTR (1984)	3853870
33.	1-M3	1.840	GASKET, OIL FLTR ADAP (1984)	14102025
34.	1-M3	1.840	ADAPTER, OIL FLTR BY PASS VLV	3952301
35.	1-M3	1.840	ADAPTER, OIL FLTR (CPS) (1984)	12558732
	1-M3	1.837	VALVE, OIL FLTR BY PASS (1984) (AC-DELCO #25013759)	25013759
		8.971	PLUG, AUTO DRN (3/8-18X.42) PEOR (1.073)	14090911
36.		8.929	WASHER, FL (.344X.688X.065) ZN	120393
37.	1-F8	0.649	BEARING, CLU PILOT	14061685
38.		8.900	SCREW, HEX SOC HD CAP (5/16-18X3.50) PL	9421634
39.	1-F9	0.666	FLYWHEEL, (M/TRNS) (*1)	14085720
40.		8.932	WASHER, SERRATED TOOTH LOCK .467/.452 DIA STEEL (AR)	1347774
41.	1-F10	0.669	BOLT (7/16-20X1) (M/TRNS) (*1)	839756
42.	1-E20	0.137	BOLT, CR/SHF RR SEAL RET (1/4-20X0.88) (1986)	14088561
43.		8.940	PIN, GROOVE (5/16X3/8) ZN	274584

© 2000 GENERAL MOTORS SERVICE PARTS OPERATIONS-CHEVROLET-14Y

44.	1-F10	0.673	GEAR, FLYWHL RING	3991407
45.	1-E20	0.137	STUD, RR SEAL RET (5/16X18X1.44)	14080362
46.		8.940	PIN, SPR TYPE S (7/16X9/16) STL ZP	9441003
47.	1-M2	1.036	FILTER, OIL (AC-DELCO #PF25)	6438261
48.	1-E20	0.137	SEAL KIT, CR/SHF RR OIL (1984-85)	10121044
49.		N.S.	CAP, CR/SHF RR BRG (PART OF 1)	
50.		DISCON	CAP, CR/SHF BRG (1, 2, 3, 4)	3956688
51.	1-E18	0.056	BOLT, CR/SHF BRG CAP (7/16X14X3.34)	3932480
52.	1-E18	0.056	STUD, CR/SHF BRG CAP (1984-85)	14087508
53.	1-L21	1.430	BAFFLE, OIL PAN HORIZ UPR	12554816
54.	1-L23	1.639	RETAINER, DISTR TO O/PUMP SHF	3764554
55.	1-L23	1.639	SHAFT, DISTR TO O/PUMP INTER	3998287
56.	1-L24	1.652	PUMP, OIL	12555284
57.	1-L24	1.652	BOLT (7/16-14 X 2) (1ST DES) (*2)	3892678
	1-L24	1.652	BOLT (7/16-14X2.36) (2ND. DES) (*3)	10046007
58.	1-E20	0.137	GASKET, CR/SHF RR SEAL RET (1986)	12555714
59.	1-E20	0.137	STUD, CR/SHF RR SEAL RET (1/4-20X2 3/16) (1986)	14101058
60.		N.S.	RETAINER, CR/SHF RR SEAL (1984-85)	14088556
	1-E20	0.137	HOUSING, CR/SHF RR OIL SEAL (1986) (L98)	14088556
61.		8.917	NUT, HEX W/TTH CON WA (1/4-20) PZOR	14051876
62.	1-E20	0.137	SEAL, CR/SHF RR (1986)	10088158
63.	1-E20	0.137	BOLT, CR/SHF RR SEAL RET (1/4-20X1 3/4) (1986)	14088562
64.	1-L18	1.152	CORD, ENG BLK HTR	52353021
65.	1-L18	1.152	HEATER, ENG BLK	996246
66.	1-L21	1.429	SEAL, OIL PAN RR (1984-85) (*4)	450625
67.	1-L20	1.426	REINFORCEMENT, OIL PAN-LH (1985) (*1)	14082341
68.		DISCON	PAN, OIL (1984-85) (*1)	14082350
69.		8.915	NUT, HEX (5/16-18X.25) POR	12338130
70.	1-L22	1.456	GASKET, OIL PAN DRN SCR (NYLON 1/2" I.D.X29/32" O.D.)	14090908
71.	1-L21	1.453	PLUG, OIL PAN DRAIN (8.971)	3921988
72.	1-L20	1.428	STUD, OIL PAN (1/4X20X.64/14X20X.50)	14101092
73.	1-M22	2.559	BRACKET, HARN TO OIL PAN	14062552
74.		8.900	BOLT, HFH (1/4-20X.62) POR	9440033
75.		8.900	BOLT, HEX (5/16-18X3/4) PHOS	9424877
76.	1-L20	1.428	STUD, OIL PAN (5/16X18X1.44) (*1)	14080362
77.	1-L21	1.429	SEAL, OIL PAN FRT (1984-85) (*4)	12337940
78.		8.800	SEALANT, PLASTIC VALVE COVER SEALANT (RTV) (3 OZ) (85 GRAMS) (AR)	1052751
79.	1-M4	2.042	BOLT, START MTR (3/8-16X4.65) PZOR	14097278
80.	1-M4	2.042	BOLT, START MTR (3/8-16X1.87) PZOR	14097279
81.	1-L21	1.429	GASKET, OIL PAN (1986)	14088505
82.	1-L21	1.429	GASKET KIT, OIL PAN (1984-85)	14079398
83.	1-M11	2.383	SHIELD, SPARK KNOCK SEN	10096158
84.	1-M4	2.041	MOTOR, START (CPS) (*5, 6) (AC-DELCO #323-365)	
85.	1-M4	2.042	SHIM, MTR (1X1 7/8X.015) STL	1246249
	1-M4	2.042	SHIM, MTR (24.4X106.7X0.38) STL	10008053
86.		8.940	PIN, GROOVE (5/16X3/8) ZN	274584
87.		8.900	BOLT (AR)	9440024
88.	1-F9	0.662	WASHER, CR/SHF BAL	14060682
89.	1-F9	0.662	BOLT, CR/SHF PUL (3/8-24X3/4) 280M	10170287
90.	1-F8	0.659	PULLEY, CR/SHF (AMC)	14055116
91.	1-F8	0.659	DAMPENER, CR/SHF TORSIONAL	12551537
92.	1-F13	0.728	SPROCKET, CR/SHF	10128346
93.		8.960	KEY, WOODRUFF #9 (3/16X3/4) PL	106751
94.	1-F8	0.646	CRANKSHAFT, (1984-85)	3932444
	1-F8	0.646	CRANKSHAFT, (1986)	14088527
95.	1-L16	1.079	GASKET, CLNT PUMP (LH & RH) (*4)	3754587

© 2000 GENERAL MOTORS SERVICE PARTS OPERATIONS-CHEVROLET-14Y

96.		8.900	BOLT, HFH (3/8-16X1 3/4) 280M PZOR	9441560
97.	1-F5	0.539	BEARING (PRECISION TYPE) (STAMPED 1)	12453170
98.		DISCON	BOLT, PUMP PUL	14067335
99.		DISCON	CAMSHAFT, (1984)	12523897
	1-F4	0.519	CAMSHAFT, (1985-86)	14094726
100.		DISCON	PULLEY, CLNT PUMP (AC) (1984)	14055117
	1-L15	1.062	PULLEY, CLNT PUMP (CAJ) (1985-86)	10105209
101.	1-L15	1.069	PUMP KIT, CLNT (AC-DELCO #251-500)	12522035
102.		N.S.	NIPPLE, HTR HOSE OTLT	14052405
103.	1-L16	1.073	STUD, PUMP (3/8-16X2 19, 3/8-16X1.85) 300M POR	10046099
104.	1-N24	3.901	COVER, F/PUMP OPG	14094069
105.		8.931	WASHER, SPR LK (17/64X31/64) ZOR (AC-DELCO #9439510)	9439510
106.		8.900	BOLT, HFH (1/4-20X.56) 280M PZOR	9439930
107.		0.213	SEAL, ENG FRT CVR (*4)	10111769
108.	1-E22	0.206	COVER, ENG FRT	10243967
109.	1-E22	0.207	GASKET, ENG FRT CVR (*4)	10108435
110.	1-F12	0.724	CHAIN, CM/SHF TIMING	14067014
111.	1-F14	0.736	SPROCKET (36 TEETH)	340235
112.		DISCON	STUD, PUMP OPG CVR (3/8-16X5/16-18)	10105227
113.		3.900	BOLT, HFH (3/8-16X3/4) 300M PZOR	9442963
114.	1-N24	3.904	GASKET, PUMP MTG PLT (*1)	12560223
115.	1-M11	2.383	SENSOR, ESC KNOCK (AC-DELCO #213-325)	10456287

NOTE 1: SEE CATALOG FOR ADDITIONAL USAGE.
NOTE 2: USE FOR ENG WHERE OIL PUMP MTG SURFACE ON BRG CAP HAS PKT DEPTH 0.30" OR LESS.
NOTE 3: USE FOR ENG WHERE OIL PUMP MTG SURFACE ON BRG CAP HAS PKT DEPTH 0.32"-0.42".
NOTE 4: ALSO PART OF ENG FRT GASKET KIT, GROUP 0.207.
NOTE 5: SEE CHART IN GROUP 2.000 FOR USAGE.
NOTE 6: SEE RESPECTIVE GROUP FOR DETAILED ILLUSTRATED VIEW.

RPO DEFINITIONS
L98 - ENGINE, 5.7L, (5.7-8) 350 CID, V8, TPI

© 2000 GENERAL MOTORS SERVICE PARTS OPERATIONS-CHEVROLET-14Y

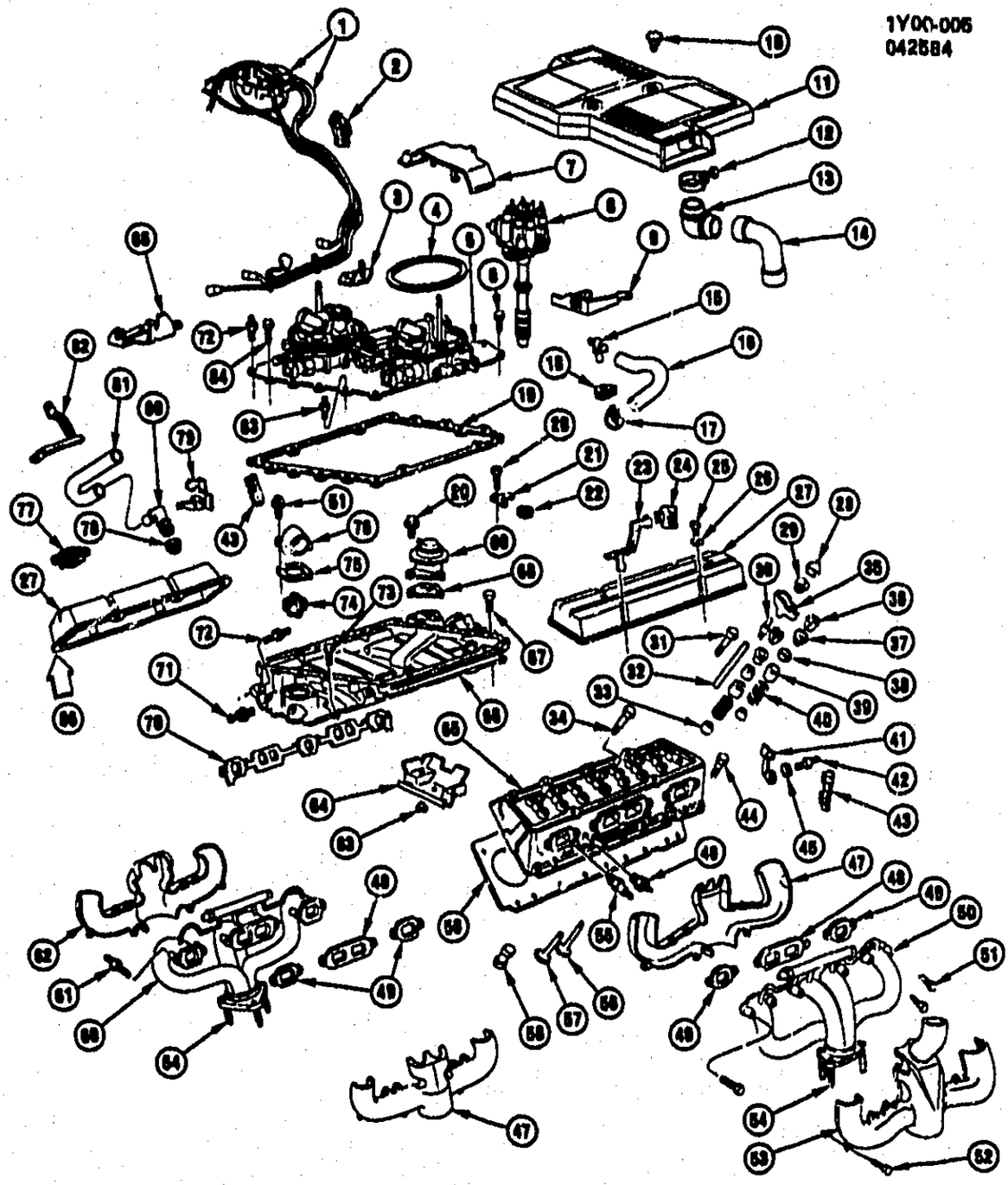

1Y00-005

1984 Y ENGINE ASM-5.7L V8 PART 2 (L83/5.7-8)

1.	1-M5	2.240	WIRE, SPLG (SEE CAT CHART) (AC-DELCO #312U)	
2.	1-M6	2.251	RETAINER, W/CVR SPLG WIRE	12043550
		N.S.	COVER, SPLG WIRE RET	
3.		DISCON	BRACKET, EGR SOL	14057006
4.	1-N7	3.403	SEAL, A/CLNR	10019632
5.	1-N23	3.725	THROTTLE BODY INJECTION (SEE CAT ILLUST)	
6.		8.900	BOLT, HEX (5/16-18X7/8)	
7.		DISCON	SHIELD, DISTR RFI	14067303
8.		N.S.	DISTRIBUTOR, IGN (CPS) (SEE CAT ILLUST)	
9.		DISCON	BRACKET, TRANS TV CONT CBL	14038660

© 2000 GENERAL MOTORS SERVICE PARTS OPERATIONS-CHEVROLET-14Y

				1Y00-005
10.		DISCON	NUT, W/INSERT, A/CLNR RET	14055160
11.	1-N7	3.402	CLEANER, AIR	25041409
12.		N.S.	CLAMP, ELBOW TO A/CLNR	
13.		DISCON	ELBOW, ENG AIR HT STOVE TUBE UPR	1249066
14.		DISCON	TUBE, ENG AIR HT STOVE	14057092
15.	1-L25	1.745	VALVE, CR/CASE VENT (CV-853C) (AC-DELCO #CV853C)	25040026
16.		DISCON	HOSE, CR/CASE VENT (W/A.T.)	14045839
17.	1-L18	1.166	CLAMP, WORM TYPE (.56 TO 1.06 DIA)	22518665
18.	1-L25	1.745	GROMMET, CR/CASE VENT-LH (3/4 I.D. X 1 1/8 SQ RAMPED)	3989349
19.	1-N23	3.726	GASKET, THROT BODY INJ	10140668
20.		8.900	BOLT, HEX (5/16"-18 X 1 1/4")	
21.	1-M10	2.363	CLAMP, DISTR	10096197
22.	1-M10	2.363	GASKET, IGN TIMER DISTR (AC-DELCO #10108445)	10108445
23.	1-M8	2.251	SUPPORT, SPLG WIRE-LH (TO VLV CVR)	14035123
24.	1-M8	2.251	RETAINER, W/CVR PLUG WIRE (2 WIRE)	12043158
25.		8.900	BOLT, HEX (1/4"-20 X 1")	
26.		DISCON	WASHER, VLV RKR CVR (M7X16X1.5)	14060681
27.		DISCON	COVER, VLV RKR-LH (W/EMBLEM)	14050239
		DISCON	COVER, VLV RKR-RH (EMBLEM IS PART OF LH COVER 14050239)	14050240
28.		0.429	NUT, VLV RKR ARM (3/8-24)	12555562
29.		N.S.	BALL, RKR ARM (PART OF 35)	
30.	1-F3	0.429	STUD, VLV RKR ARM BALL (.003 O. S.)	3814692
31.	1-E24	0.293	BOLT, CYL HD MED (7/16-14X3)	10168526
32.	1-F3	0.426	ROD, VLV PUSH (7 25/32 O. L.)	14095256
33.		0.308	SEAL, EXH VLV STEM OIL (.0305 O. S.)	10147883
34.	1-E24	0.293	BOLT, CYL HD LG (7/16-14X3 3/4 PL)	10168525
35.	1-E28	0.333	ARM, VLV RKR (W/BALL KIT)	10039648
36.	1-E28	0.310	KEY, VLV STEM	24503856
37.	1-E27	0.309	ROTATOR, EXH VLV	14042875
38.	1-E27	0.308	SEAL, VLV STEM OIL (O RING)	10214034
39.	1-E27	0.308	SHIELD, VLV STEM OIL	10007818
40.	1-E26	0.303	SPRING, W/DMP	3911068
41.		DISCON	SUPPORT, SPLG WIRE-LH (TO ENG LH OTR)	14055125
42.	1-M8	2.251	STUD, SPLG WIRE SUPT (3/8-16X.70/3/8-16X.70)	52350585
43.	1-M8	2.251	RETAINER, W/CVR PLUG WIRE (4-WIRE)	12043550
44.	1-E24	0.293	BOLT, CYL HD SHT (7/16-14X1 3/4)	10168527
45.		8.931	WASHER, LOCK (7/16)	
46.	1-L17	1.150	SENSOR, ENG CLNT TEMP GA (AC-DELCO #25036135)	25036135
47.	1-N7	3.417	STOVE, ENG AIR HT INR	14055131
48.	1-M28	3.270	GASKET, EXH MANIF CTR	10088112
49.	1-M28	3.270	GASKET, EXH MANIF FRT & RR	10088110
50.		DISCON	MANIFOLD, EXH-LH	10046139
51.		8.900	BOLT, HEX (3/8-16X1 1/4)	
52.		8.977	SCREW, HEX (10-16X3/8)	
53.		DISCON	STOVE, ENG AIR HT OTR-LH	14055129
54.	1-N10	3.613	STUD, EXH PIPE (M10X1.5X57)	14057005
55.	1-M9	2.270	SPARKPLUG (R45TS) (AC-DELCO #R45TS)	5613957
56.	1-E26	0.297	VALVE, EXH (STD)	14095451
57.	1-E25	0.296	VALVE, INT (STD)	14075641
58.	1-F3	0.459	LIFTER, VLV (AC-DELCO #HL66)	5232720
59.	1-E23	0.289	GASKET, CYL HD	10105117
60.		DISCON	MANIFOLD, EXH-RH	10046140
61.	1-M28	3.275	STUD, EXH MANIF (1, 4 RH) (2 LH) (3/8-16X2.06/3/8-16X3/4)	14057002
62.		DISCON	SHIELD, EXH MANIF HEAT OTR-RH	14055130
63.	1-N7	3.417	STUD, INT MANIF OIL SPH GUARD (8X3/8)	10092939
64.		DISCON	GUARD, INT MANIF OIL SPH	14037628
65.	1-E23	0.269	HEAD, CYL	14034308

© 2000 GENERAL MOTORS SERVICE PARTS OPERATIONS-CHEVROLET-14Y

				1Y00-005
66.		DISCON	MANIFOLD, INT (A.T.)	14057016
		DISCON	MANIFOLD, INT (M.T.)	14085703
67.		DISCON	BOLT, INL MANIF (3/8-16X1.00 280M)	14087336
68.	1-N19	3.680	GASKET, EGR VLV (AC-DELCO #219-20)	12554530
69.	1-N10	3.670	VALVE EGR (PROD 17083701) (A.T.) (AC-DELCO #214-5501)	17113422
	1-N10	3.670	VALVE EGR (PROD 17083847) (M.T.) (AC-DELCO #214-5501)	17113422
70.	1-M28	3.270	GASKET KIT, INT MANIF	10174977
		8.800	SEALANT, SILICONE RTV RUBBER (INT MANIF ENDS) (AR)	1052366
71.	1-N21	3.682	SENSOR, CLNT TEMP (AC-DELCO #213-52)	10045847
72.		N.S.	STUD, TBI (3/8-16X1.823) (2.277)	
73.	1-L18	1.153	BOLT, CLNT OTLT (3/8-16X1.25 280M PZOR) (0.683)	14091543
74.	1-L19	1.246	THERMOSTAT, CLNT (195 DEG) (AC-DELCO #131-87)	12514334
75.	1-L18	1.154	GASKET, CLNT OTLT (AC-DELCO #10105135)	10105135
76.		DISCON	OUTLET, CLNT	14047010
77.	1-L26	1.758	CAP, OIL FIL (AC-DELCO #14094763)	14094763
78.	1-L25	1.745	GROMMET, CR/CASE VENT-RH (3/4 I.D. X1 1/8 SQ-FLAT)	3989348
79.		DISCON	SUPPORT, SPLG WIRE-RH (TO ENG RH OTR)	14055126
80.	1-L26	1.762	CONNECTOR, VENT HOSE (A/CLNR TO CVR)	366846
81.	1-L26	1.762	HOSE, CR/CASE VENT TUBE	14057007
82.		DISCON	BRACKET, ELEC CONT MDL HARN	14066570
83.		N.S.	STUD, TBI (5/16-18 BOTH ENDS)	
84.		8.900	BOLT, HEX (3/8-16X1.00)	
85.		DISCON	SUPPORT, ACCEL CONT CBL-LH	14038659
86.		8.800	SEALANT, SILICONE RTV SILICONE 6W) (*5 (AR) (AC-DELCO #1052915)	1052915

© 2000 GENERAL MOTORS SERVICE PARTS OPERATIONS-CHEVROLET-14Y

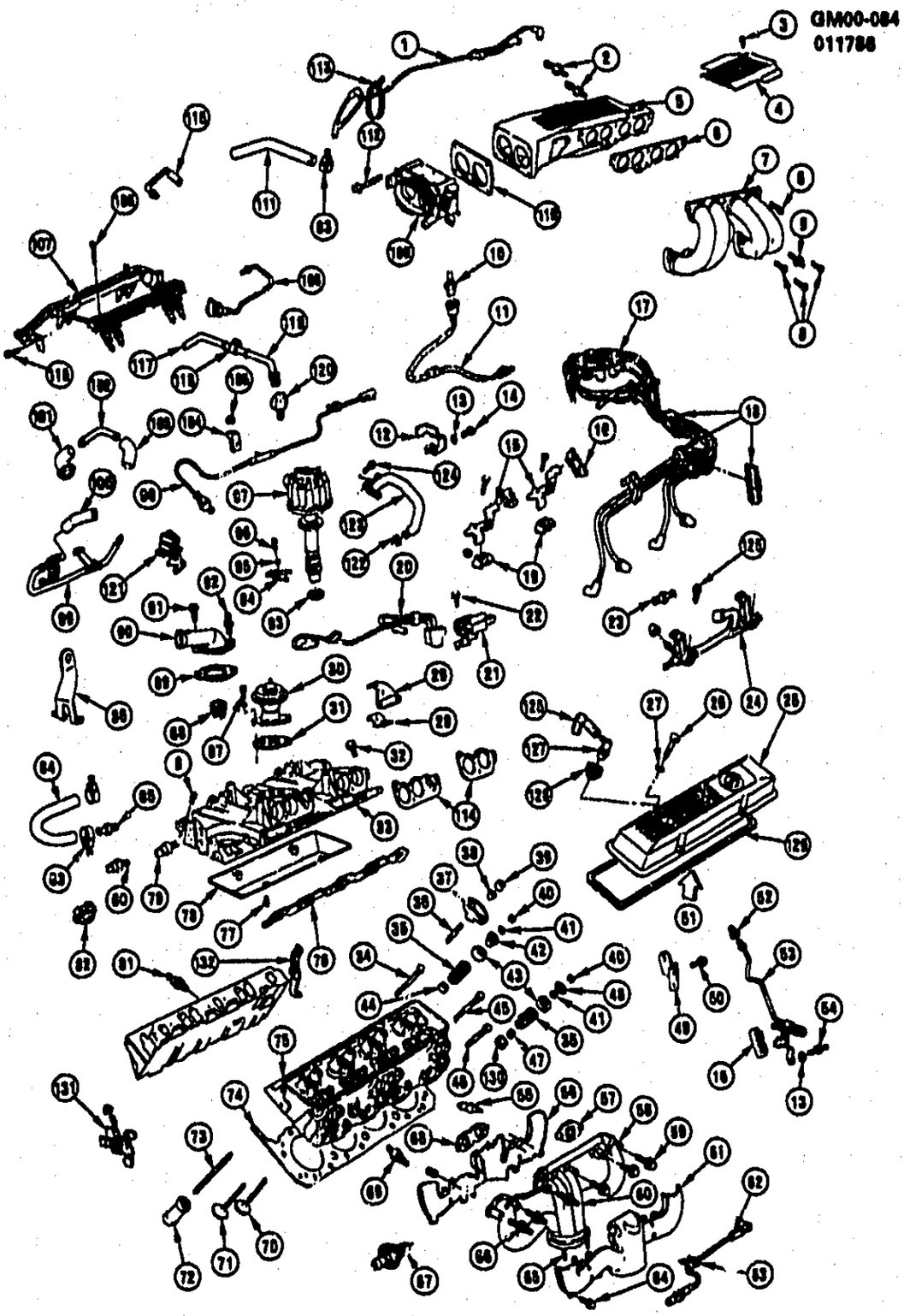

GM00-084

1985-1986 Y ENGINE ASM-5.7L V8 PART 2 (L98/5.7-8)

1.	1-N16	3.675	HARNESS, AIR INJ CONT VLV VAC	14082463
2.	1-N2	3.278	FITTING, INL MANIF VLV/IN PLNM	14082470
3.	1-M28	3.275	BOLT, INT MANIF PLNM (4X.7X13)	14082425

© 2000 GENERAL MOTORS SERVICE PARTS OPERATIONS-CHEVROLET-14Y

4.	1-M27	3.265	EXTENSION, INT MANIF PLNM	10108425
5.		DISCON	PLENUM, INT MANIF	10108443
6.	1-M28	3.270	GASKET KIT, INT MANIF PLNM	12508751
7.		DISCON	TUBE, INT MANIF-LH	14081007
		DISCON	TUBE, INT MANIF (TUBE) (RH)	14081008
8.	1-M28	3.275	BOLT, INT MANIF TUBE (M8X1.25X30) (19)	
	1-M28	3.275	BOLT, INT MANIF TUBE (M8X1.25X34.5) (3)	
	1-M28	3.275	BOLT, INT MANIF TUBE (M8X1.25X39.5) (2)	
	1-M28	3.275	BOLT, INT MANIF TUBE (M8X1.25X54.4) (4)	
9.		DISCON	STUD, INT MANIF PLNM-LH (NO. 2)	14084304
10.	1-N21	3.682	SENSOR, MANIF TEMP (1985) (AC-DELCO #213-190)	25036751
	1-N21	3.682	SENSOR, MANIF TEMP (USED FOR CLSTR W/OIL GAGE & LT COMB) (1986) (AC-DELCO #213-310)	12146312
11.	1-M14	2.480	HARNESS, INT AIR TEMP SEN WRG	12029463
12.		DISCON	SUPPORT, SPLG WIRE (TO ENG RH OTR)	14055126
13.		8.931	WASHER (AR)	
14.		N.S.	BOLT, ENG LIFT BRKT (3/8-16X.68)	
15.	1-M8	2.251	SUPPORT, SPLG WIRE-LH (TO VLV CVR)	14055123
16.	1-M8	2.251	CLIP, SPARK PLUG WIRE (4 LOOM)	8917256
17.		N.S.	HARNESS, SPLG WIRE (SEE CAT CHART-2.000 GRP)	
18.	1-M8	2.251	RETAINER, SPLG WIRE (6)	12043550
19.	1-M8	2.251	RETAINER, W/COVER, SPLG WIRE	12043158
20.	1-N16	3.675	HARNESS, EGR VLV VAC (1985)	14082441
		DISCON	HARNESS, EGR VLV VAC (1986)	14087573
21.	1-N10	3.670	SOLENOID, EGR CONT VLV RLY (1985 LOC) (AC-DELCO #214-331)	1997111
	1-N15	3.671	FILTER, EGR CONT VLV RLY SOL (3.140) (AC-DELCO #219-15)	1977880
	1-N15	3.671	CLIP, FLTR RET	1985870
	1-N10	3.670	SOLENOID, EGR VAC REG VLV ((1986)) (AC-DELCO #214-340)	1997195
22.		8.977	SCREW, HEX W/FLAT WA (AR)	
23.	1-L26	1.762	FITTING, CR/CASE VENT HOSE	14087402
24.		DISCON	PIPE, CR/CASE VENT VLV-LH	14080634
		DISCON	PIPE, CR/CASE VENT VLV (1986)	14087570
25.		DISCON	COVER, VLV RKR-LH	14087461
	1-E28	0.386	COVER, VLV RKR-RH	14087462
26.		8.900	BOLT, HEX 1/4-20X1.00 300M CAD ((1985)) (AR)	
	1-F2	0.413	BOLT, RKR CVR (1986)	12338092
27.		DISCON	WASHER, RKR CVR (M7X16X1X1.5 ALUM) (1985)	14060681
	1-F2	0.423	GASKET, RKR CVR BOLT (1986)	14088793
28.		DISCON	BRACKET, ENG WRG HARN (RR MANIF BY DISTR)	14062600
29.		DISCON	BRACKET, EGR SOL (1985)	14087565
30.	1-N10	3.670	VALVE, EGR (SEE CAT) (AC-DELCO #214-5591)	
31.	1-N19	3.680	GASKET, EGR VLV (AC-DELCO #14088262)	14088262
32.		8.913	BOLT, TORX, 3/8-16X1 1/8, W/SEALER, 280M, PEOR (AR)	14091547
33.		DISCON	MANIFOLD, INT (1985)	14081004
		DISCON	MANIFOLD, INT (1986)	14087098
34.	1-E24	0.293	BOLT, CYL HD LG (7/16-16X3 3/4 PL)	10168525
35.	1-E26	0.303	SPRING, W/DMP	3911068
36.	1-F3	0.429	STUD, VLV RKR ARM	3814632
37.	1-E28	0.333	ARM, VLV RKR (W/BALL KIT)	10089648
38.		N.S.	BALL, RKR ARM (PART OF 37)	
39.		0.429	NUT, VLV RKR ARM ADJ	12555562
40.	1-E28	0.310	KEY, VLV STEM (PURPLE)	24503856
41.	1-E27	0.308	SEAL, VLV STEM OIL	10214034
42.	1-E27	0.309	CAP, INT VLV SPR	14003974
43.	1-E27	0.308	SHIELD, VLV STEM OIL	10007818
44.	1-E27	0.308	SEAL, W/RET, INL VLV STEM (STD .003 O.S.)	460483

© 2000 GENERAL MOTORS SERVICE PARTS OPERATIONS-CHEVROLET-14Y

45.	1-E24	0.293	BOLT, CYL HD MED (7/16 -14X3)	10166526
46.	1-E24	0.293	BOLT, CYL HD SHT (7/16-14X1 3/4)	10166527
47.	1-E27	0.306	SEAL, EXH VLV STEM OIL	10147882
48.	1-E27	0.309	ROTATOR, EXH VLV	14042575
49.		N.S.	BRACKET, ENG LIFT RR	
50.		N.S.	BOLT, ENG LIFT BRKT (3/8-16X.68)	
51.		6.800	SEALANT, SILICONE (10.3 OZ) (SEE ALSO NO. 129)	
52.		N.S.	CONNECTOR, PWR BOOS VAC PIPE	
53.		DISCON	PIPE, P/B BOOS VAC	14087577
54.	1-N25	4.845	STUD, P/B BOOS VAC PIPE (2.277) (1985)	52350585
		N.S.	BOLT, P/B BOOS VAC PIPE (3/8-16X.68) (1986)	
55.	1-M9	2.270	SPARK PLUG, (R43TS) (1985) (AC-DELCO #R43TS)	5613325
	1-M9	2.270	SPARK PLUG, (FR3LS) (1986) (AC-DELCO #FR3LS)	5613796
56.	1-N7	3.417	STOVE, ENG AIR HT INR	14055131
57.	1-M28	3.270	GASKET, EXH MANIF (FRT & RR)	10088110
58.		DISCON	MANIFOLD, EXH-LH (1985)	10046139
		DISCON	MANIFOLD, EXH-RH (1985)	10046140
	1-N9	3.601	MANIFOLD, EXH-LH (1986)	14087511
	1-N9	3.601	MANIFOLD, EXH-RH (1986)	14087512
59.		8.900	BOLT (AR)	9440073
60.	1-M28	3.275	STUD, EXH MANIF (NO. 3 HOLE LH) (3/8-16X4.093) (1985)	3932448
		8.929	WASHER, FL, 10.8X18.54X1.95, 1050, PS ((1985)) (AR)	
61.		DISCON	SHIELD, EXH MANIF HT-OTR	14055130
62.	1-N21	3.682	SENSOR, EXH OXY (AC-DELCO #AFS20)	25162693
63.	1-M22	2.559	RETAINER, OXY SEN CONN (2.559)	8917236
64.		8.977	BOLT, HWH TAP 10-16X.50 PZOR (AR) (AC-DELCO #9440166)	9440166
65.	1-N10	3.613	STUD, EXH PIPE	14057005
66.	1-M28	3.275	STUD, EXH MANIF (NO. 1-4 RH & NO. 2 LH)	14057002
67.	1-N10	3.670	VALVE, AIR INJ CHK (AC-DELCO #214-422)	22050642
68.	1-M28	3.270	GASKET, EXH MANIF (CTR)	10088112
69.	1-L17	1.150	SENSOR, ENG COOL TEMP GA (1985 LOC) (AC-DELCO #25036135)	25036135
	1-L14	1.055	SWITCH, ENG COOL HIGH TEMP FAN CONT (1986 LOC) (AC-DELCO #D1852B)	14043276
70.	1-E26	0.297	VALVE, EXH (STD)	14095451
71.	1-E25	0.296	VALVE, INTAKE	14075641
72.	1-F3	0.459	LIFTER, VLV (AC-DELCO #HL66)	5232720
73.	1-F3	0.426	ROD, VLV PUSH	14095256
74.		DISCON	GASKET KIT, CYL HD	10159449
		DISCON	GASKET KIT, (KB2) (1986)	10181359
	1-E23	0.289	GASKET KIT, ALUM HD (1986)	10089675
75.	1-E23	0.269	HEAD, CYL	14034808
76.	1-M28	3.270	GASKET KIT, INT MANIF (INCL NO. 6, 93, 110)	10159564
77.		8.900	BOLT, M6X1X12, 10 THD, 11.6 OD, 9.8 GM500-M, POR, MACH (AR)	
78.	1-M27	3.265	SHIELD, INT MANIF OIL SPH	14087401
79.	1-N21	3.682	SENSOR, CLNT TEMP (1.150) (AC-DELCO #213-310)	12146312
80.		3.329	SWITCH, COLD START FUEL INJ (AC-DELCO #212-312)	14084318
81.	1-L14	1.055	SWITCH, ENG COOL HIGH TEMP FAN CONT (1985 LOC) (AC-DELCO #D1852B)	14043276
	1-L17	1.150	SENSOR, ENG COOL TEMP GA (1986 LOC) (AC-DELCO #25036135)	25036135
82.	1-L26	1.758	CAP, OIL FIL (AC-DELCO #14094763)	14094763
83.		N.S.	CLAMP, TB CLNT HOSE	
84.	1-N6	3.337	HOSE, THROT BODY HTR	10108509
85.	1-N6	3.337	CONTROL, T.B. CLNT HOSE (*1) (AC-DELCO #15-5372)	22532158
86.		N.S.	BRACKET, ENG FRT LIFT	
87.		N.S.	BOLT, HEX (5/16"-18 X 1.00)	

© 2000 GENERAL MOTORS SERVICE PARTS OPERATIONS-CHEVROLET-14Y

88.	1-L19	1.246	THERMOSTAT, CLNT (195 DEG) (AC-DELCO #131-87)	12514334
89.	1-L18	1.164	GASKET, CLNT OTLT (AC-DELCO #10105135)	10105135
90.	1-L18	1.153	OUTLET, CLNT (AC-DELCO #15-1443)	14084383
91.	1-L18	1.153	BOLT, CLNT OTLT (3/8-16X1.25 280M)	10198997
92.	1-L18	1.153	STUD, CLNT OTLT (3/8-16X0.78 BOTH ENDS)	14091545
93.	1-M10	2.363	GASKET, IGN TIMER DISTR (ALSO PART OF NO. 76) (AC-DELCO #10108445)	10108445
94.	1-M10	2.363	CLAMP, IGN TIMER DISTR	10096197
95.	1-M11	2.364	WASHER, IGN TIMER DIST CLA	3754153
96.	1-M11	2.364	BOLT, DISTR CLAMP (3/8"-16 X 1.25) (0.683)	14091543
97.		N.S.	DISTRIBUTOR, IGN (*1)	
98.	1-N10	3.670	SWITCH, EGR TEMP (1985) (AC-DELCO #212-337)	14087416
	1-N10	3.670	SWITCH, EGR VLV TEMP IND (1986) (AC-DELCO #212-336)	14087415
99.		DISCON	PIPE, CR/CASE VENT-RH (1985)	14082449
		DISCON	PIPE, CR/CASE VENT (1986)	14087569
100.		8.962	HOSE, CR/CASE VENT (1/2 IN.)	
101.	1-L25	1.745	GROMMET, CR/CASE VENT TUBE	14082445
102.	1-L26	1.762	TUBE, CR/CASE VENT	14087567
103.	1-L26	1.762	CONNECTOR, CR/CASE VENT TUBE	14082446
104.		DISCON	BRACKET, EGR TEMP SW WIRE (1985)	14087418
105.		N.S.	NUT, HEX (M5 X 0.8)	
106.		N.S.	VALVE ASM, COLD START FUEL (SERV BY)	
		DISCON	VALVE KIT, COLD START (1985)	17110858
		DISCON	VALVE KIT, COLD START (1986)	17110860
		3.329	TUBE KIT, COLD START (AC-DELCO #17112061)	17112061
107.		N.S.	RAIL ASM, FUEL INJ (SERV BY) (*2)	
108.	1-M28	3.275	BOLT, FUEL RAIL (HFH-M8X1.25X35)	
109.	1-N4	3.335	BODY, THROT (*1, 2)	
110.	1-N5	3.336	GASKET KIT (*1)	
111.	1-N27	8.846	HOSE, HTR INL	14081346
112.		8.900	BOLT, HEX FLG HD (M8X1.25X70 10.9 17.6 OD 6174M (AR)	
113.		8.965	RETAINER, PLSTC 7 IN. ADJ STRAP	
114.	1-M28	3.270	GASKET KIT, INT MANIF TUBE	10174951
115.	1-N16	3.675	HARNESS, EMIS CONT VAC RR (1986) (*1)	14082433
116.	1-N3	3.330	BOLT, F/INJ RAIL FRT (3.680)	14081021
117.		8.962	HOSE, MANIF VPR (8.0MM) (1986)	
118.		8.946	CLAMP, WORM (1/2 -13/16) (1986)	
119.		8.964	TUBE, MANIF VPR (5/16) (1986)	
		8.963	NUT, INV FL TUBE (5/16 TUBE 1/2-20) (1986)	
120.		N.S.	(1986) (AR)	
121.	1-N10	3.670	SOLENOID, EGR CONT VLV RLY (1986 LOC) (AC-DELCO #214-340)	1997195
	1-N15	3.671	FILTER, EGR CONT VLV RLY SOL (3.140) (AC-DELCO #219-15)	1977880
	1-N15	3.671	CLIP, FLTR RET	1985870
122.	1-N19	3.680	CLAMP, EGR PIPE (1986)	
123.	1-N16	3.675	PIPE, EGR (1986)	14092329
	1-N16	3.675	SHIELD, EGR PIPE (1986)	14087579
124.	1-N19	3.680	BOLT, EGR TUBE (1986)	14081021
125.		N.S.	STUD, CR/CASE TUBE (M6X1X25X12) (2) (1986)	
		N.S.	STUD, CR/CASE TUBE (M6X1X12X12) (1 RH) (1986)	
126.	1-L26	1.762	HOSE, CR/CASE VENT VLV	14082442
127.	1-L25	1.745	VALVE, CR/CASE VENT (CV-774C) (AC-DELCO #CV774C)	6487779
128.	1-L25	1.745	GROMMET, CR/CASE VENT (3/4 ID X 1 1/8 OD)	3989349
129.	1-F2	0.413	FASTENER KIT, RKR CVR GASKET (REFER TO NOTE 1 IN CATALOG TEXT) (1ST DES)	14105964
130.	1-F26	0.303	SHIM, VLV SPR (1986)	10185066

© 2000 GENERAL MOTORS SERVICE PARTS OPERATIONS-CHEVROLET-14Y

131.	1-M6	2.251	SUPPORT, SPLG WIRE CYL HD SI RR-RH (1986)	14087574
132.	1-M6	2.251	SUPPORT, SPLG WIRE CYL HD R/END-STRGT-RH (1986)	14087578

NOTE 1: SEE PARTS CATALOG FOR ADDITIONAL USAGE.
NOTE 2: SEE RESPECTIVE GROUP FOR DETAILED ILLUSTRATED VIEW.

© 2000 GENERAL MOTORS SERVICE PARTS OPERATIONS-CHEVROLET-14Y

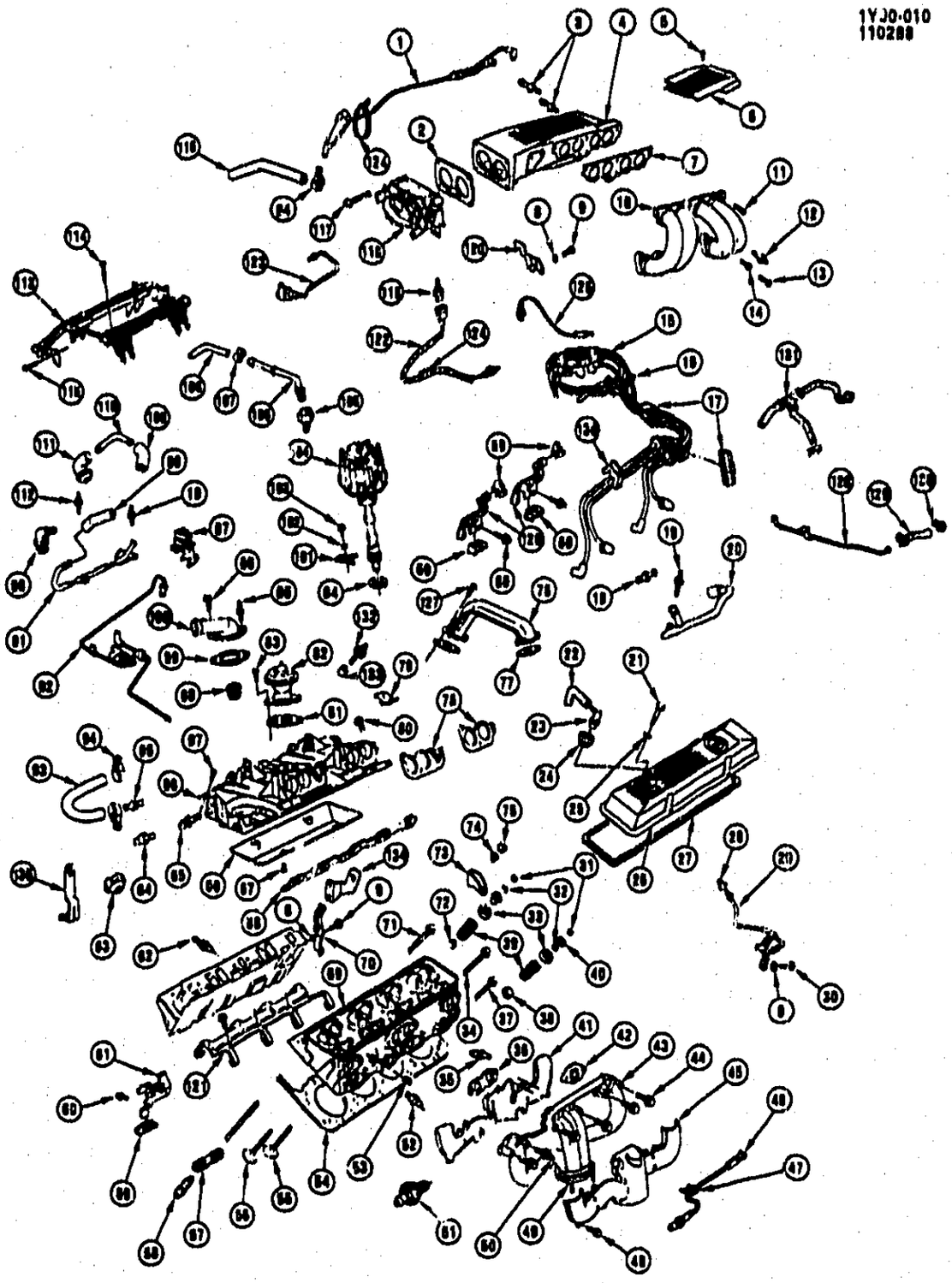

1Y00-010

1987 Y ENGINE ASM-5.7L V8 PART 2 (L98/5.7-8)

1.		DISCON	HARNESS, AIR INJ CONT VLV VAC	14065722
2.	1-N5	3.336	GASKET KIT (*1, 4) (AC-DELCO #40-709)	17113115
3.	1-N2	3.278	FITTING, INT MANIF VAC IN PLNM	1408[illegible].470
4.		DISCON	PLENUM, INT MANIF	10108443
5.	1-M28	3.275	BOLT, INT MANIF PLNM (M4X.7X13)	14082425

© 2000 GENERAL MOTORS SERVICE PARTS OPERATIONS-CHEVROLET-14Y

				1Y00-010
6.	1-M27	3.265	EXTENSION, INT MANIF PLNM	10108425
7.	1-M28	3.270	GASKET KIT, INT MANIF PLNM (*1)	12508751
8.		8.931	WASHER (AR)	9439513
9.		8.900	BOLT, HFH (1/4-20X.56 280M PZOR) (AR)	9439930
10.		DISCON	TUBE, INT MANIF	14081007
11.	1-M28	3.275	BOLT, INT MANIF PLNM (M8X1.25X30)	14081014
12.	1-M28	3.275	STUD, INT MANIF PLNM (M8X1.25X30)	14091678
13.	1-M28	3.275	BOLT, INT MANIF TUBE (M8X1.25X54.4)	14081017
14.	1-M28	3.275	BOLT, INT MANIF TUBE (M8X1.25X34.5)	14081015
15.	1-M5	2.239	HARNESS, SPLG WIRE (*3)	
16.	1-M8	2.251	CLIP, SPLG WIRE (4 LOOM)	8917256
17.	1-M8	2.251	RETAINER, SPLG WIRE (5 WIRE 8MM CBL)	12041472
18.	1-L26	1.762	FITTING, CR/CASE VENT HOSE	14087402
19.		DISCON	STUD, CR/CASE VENT TUBE (M6X1X12) PZOR	14087572
20.		DISCON	PIPE, CR/CASE VENT	10046142
21.	1-F2	0.413	BOLT, VLV RKR CVR	12338092
22.	1-L26	1.762	HOSE, CR/CASE VENT VLV	14082442
23.	1-L25	1.745	VALVE, CR/CASE VENT (CV-774C) (AC-DELCO #CV774C)	6487779
24.	1-L25	1.745	GROMMET, CR/CASE VENT (3/4X1 1/8)	3989349
25.	1-F2	0.413	WASHER, VLV RKR CVR (M6.5X15.75X1.45)	14094717
26.	1-E28	0.386	COVER, VLV RKR-LH	10055781
27.	1-F2	0.123	GASKET, VLV RKR CVR (*1)	14088564
28.		N.S.	CONNECTOR, PWR BOOS PIPE	
29.		DISCON	PIPE, P/B BOOS VAC	14087577
30.		4.815	CLAMP, P/B BOOS VAC TUBE (3/8-16X.38 280M) (L98)	9439928
31.	1-E28	0.310	KEY, VLV STEM	24503856
32.	1-E27	0.308	SEAL, VLV STEM OIL (O RING) (*1)	1021[illegible]034
33.	1-E27	0.308	SHIELD, VLV STEM OIL	1006[illegible]18
34.	1-E24	0.293	BOLT, CYL HD MED (7/16-14X3 1/16 300M)	14088946
35.	1-M9	2.270	SPARKPLUG (FR5LS) (AC-DELCO #FR5LS)	5614106
36.	1-M28	3.270	GASKET, EXH MANIF CTR (*1)	10088112
37.	1-E24	0.293	BOLT, CYL HD SHORT (7/16X1 3/4) PZOR	10168527
38.	1-E26	0.303	SHIM, VLV SPR	[illegible]0185066
39.	1-E26	0.303	SPRING, W/DMP VLV	3911033
40.	1-E27	0.309	ROTATOR, EXH VLV	14042575
41.	1-N7	3.417	STOVE, ENG AIR HT INR	14055131
42.	1-M25	3.270	GASKET, EXH MANIF (FRT & RR) (*1)	10088110
43.	1-N9	3.601	MANIFOLD, EXH-LH	14087511
	1-N9	3.601	MANIFOLD, EXH-RH	10055734
44.		8.900	BOLT (AR)	9440073
45.		DISCON	SHIELD, EXH MANIF HT OTR	14055130
46.	1-N21	3.682	SENSOR, EXH OXYGEN (AC-DELCO #AFS20)	25162693
47.	1-M22	2.539	RETAINER, OXY SEN CONN	8917236
48.		8.977	BOLT, HWH TAP 10-16X.50 PZOR (AR) (AC-DELCO #9440166)	9440166
49.	1-N10	3.613	STUD, EXH PIPE (M10X1.5X57)	14057005
50.	1-M28	3.275	STUD, EXH MANIF (1, 4 RH) (2 LH)	14007002
51.	1-N10	3.670	VALVE, AIR INJ CONT (AC-DELCO #214-107)	17087221
52.	1-L14	1.015	SWITCH, ENG COOL HIGH TEMP FAN CONT (AC-DELCO #D1852B)	14043276
53.		8.971	PLUG (AR)	14090911
54.	1-E23	0.289	GASKET KIT, CYL HD	10089675
55.	1-E26	0.297	VALVE, EXH (STD)	10088106
56.	1-E25	0.296	VALVE, INT (STD)	10093027
57.	1-F3	0.439	GUIDE, VLV LFTR PUSH ROD	12550002
58.	1-F3	0.459	LIFTER, HYD VLV (AC-DELCO #HL112)	5234890
59.	1-M8	2.251	RETAINER, W/COVER, SPLG WIRE (2-WIRE)	12043158
60.		8.900	BOLT, HFH (1/4-20X.56 280M PZOR) (AR)	9439930

© 2000 GENERAL MOTORS SERVICE PARTS OPERATIONS-CHEVROLET-14Y

				1Y00-010
61.	1-M8	2.251	SUPPORT, SPLG WIRE CYL HD SI RR-RH	14087574
62.	1-L17	1.1[illegible]0	SENSOR, ENG COOL TEMP GA (AC-DELCO #25036135)	25036135
63.	1-L26	1.758	CAR OIL FIL (AC-DELCO #14094763)	14094763
64.		3.329	SWITCH, COLD START F/INJ (AC-DELCO #212-312)	14084318
65.	1-N21	3.682	SENSOR, CLNT TEMP (1.150) (AC-DELCO #213-310)	12146312
66.	1-M27	3.265	SHIELD, INT MANIF OIL SPH	14087401
67.		8.900	BOLT, M6X1X12, 10 THD, 11.6 OD, 9.8 GM500-M, POR, MACH (AR) (AC-DELCO #11514149)	11514149
68.	1-M28	3.270	GASKET, INL MANIF SI (*1)	
69.	1-E23	0.269	HEAD, CYL	10125374
70.	1-M8	2.251	SUPPORT, SPLG WIRE CYL HD RR END-RH	14087576
71.	1-E24	0.293	BOLT, CYL HD LG (7/16-14X3 51/64 300M)	10168525
72.	1-E27	0.308	SEAL, INL VLV STEM W/RET (STD., .003 O.S.) (*1)	460483
73.	1-E26	0.333	ARM, VLV RKR (W/BALL KIT)	10089648
74.		N.S.	BALL, RKR ARM (PART OF 73)	
75.		0.429	NUT, VLV RKR ARM ADJ (3/8-24)	12555562
76.	1-N16	3.675	PIPE, EGR VLV	10055728
77.	1-N16	3.675	GASKET, EGR VLV PIPE	10055726
78.	1-M28	3.270	GASKET KIT, INT MANIF TUBE (*1)	10174951
79.		DISCON	BRACKET, ENG WRG HARN-RH (INT MANIF)	14100610
80.		8.913	BOLT, TORX, 3/8-16X1 1/8, W/SEALER, 280M, PEOR (AR)	14091547
81.	1-N19	3.680	GASKET, EGR VLV (AC-DELCO #14088262)	14088262
82.	1-N10	3.670	VALVE, EGR (AC-DELCO #214-5535)	17113456
83.		8.900	BOLT, HFH, 5/16-18X1.00, 280M, PC, .65-OD (AR)	9441894
84.	1-M10	2.363	GASKET, IGN TIMER DISTR (*1) (AC-DELCO #10108445)	10108445
85.	1-L18	1.153	STUD, CLNT OTLT (3/8-16X0.78 BOTH ENDS)	14091545
86.	1-L18	1.153	BOLT, CLNT OTLT (3/8-16X1.25 280M)	10198997
87.	1-N10	3.670	SOLENOID, EGR CONT VLV RLY (SERV BY) (AC-DELCO #214-340)	1997195
89.		8.962	HOSE, 1/2 ID X 15/16 OD 25' ROLL CTL (CR/CASE VENT (1/2)) (AR)	9438362
90.	1-L26	1.762	CONNECTOR, CR/CASE VENT TUBE	14082446
91.		DISCON	PIPE, CR/CASE VENT	14087569
92.	1-N16	3.675	HARNESS, EGR VLV VAC	10046113
93.	1-N6	3.337	HOSE, TBI HTR	10108509
94.		8.948	CLAMP, WORM GEAR (AR) (AC-DELCO #12337891)	12337891
95.	1-N28	8.866	VALVE, HTR WAT FLOW CONT (L98) (AC-DELCO #15-5372)	22532158
96.	1-M27	3.265	MANIFOLD, INT	10108517
97.		8.913	BOLT, TORX, 3/8-16X1 1/8, W/SEALER, 280M, PEOR (INL MANIF) (AR)	14091547
98.	1-L19	1.246	THERMOSTAT (195 DEG) (AC-DELCO #131-87)	12514334
99.	1-L18	1.154	GASKET, CLNT OTLT (*1) (AC-DELCO #10105135)	10105135
100.	1-L18	1.153	OUTLET, CLNT (AC-DELCO #15-1443)	14084383
101.	1-M10	2.363	CLAMP, IGN TIMER DISTR	10096197
102.	1-M11	2.364	WASHER, IGN TIMER DIST CLA	3754153
103.	-M10	2.363	BOLT, IGN TIMER DIST CLA (3/8-16X1.25 280M) PZOR	10198997
104.		N.S.	DISTRIBUTOR, IGN (*2)	
105.		DISCON	(AR)	116341
106.		8.964	TUBING (MANIF VPR) (AR)	12541500
107.		8.948	CLAMP, WORM GEAR, 1/2-13/16 (MANIF VPR HOSE) (AR)	22527587
108.		8.962	HOSE, 7.9 MM X 3050 MM LGTH +/- 30.48 MM, BULK, GM6260-M (MANIF VPR) (AR) (AC-DELCO #12339996)	12339996
109.	1-L26	1.762	CONNECTOR, CR/CASE VENT TUBE	14082446
110.	1-L26	1.762	TUBE, CR/CASE VENT	14087567
111.	1-L25	1.745	GROMMET, CR/CASE VENT TUBE	14082445
112.		DISCON	STUD, CR/CASE VENT TUBE (M6X1X25, M6X1X12)	14087571
113.	1-N3	3.330	RAIL ASM, F/INJ (CMPTS SERV) (*2)	
114.		8.900	BOLT, HFH M[illegible]25X35 10.9 PZOR (AR)	24572579

© 2000 GENERAL MOTORS SERVICE PARTS OPERATIONS-CHEVROLET-14Y

				1Y00-010
115.	1-N3	3.330	BOLT, F/INJ RAIL FRT (3.660)	14081021
116.	1-N27	8.846	HOSE, HTR INL	14081348
117.		8.900	BOLT, HEX FLG HD (M8X1.25X70 10.9 17.6 OD 0174M (AR)	11509516
118.	1-N4	3.335	BODY, THROT (*2)	17086051
119.	1-N21	3.662	SENSOR, MANIF TEMP UNDER PLENUM (1.150) (AC-DELCO #213-310)	12146312
120.	1-M8	2.251	SUPPORT, SPLG WIRE CYL HD SI FRT-RH	14087575
121.	1-F3	0.459	RETAINER, VLV LFTR RSTR	14101116
122.	1-M14	2.460	HARNESS, INT AIR TEMP SEN WRG	12029463
123.		DISCON	VALVE KIT, COLD START	17110860
124.		8.965	STRAP-TIE-7"ADJ (W/ROSEBUD FOR .25 DIA HOLE .031-.14 TH) (AR)	3816659
125.	1-N10	3.670	SWITCH, EGR VLV TEMP IN'] (AC-DELCO #212-336)	14087415
126.	1-M8	2.251	SUPPORT, SPLG WIRE (LH CYL HD)	14087576
127.	1-N19	3.660	BOLT, EGR TUBE	14081021
128.		DISCON	PIPE, AIR INJ ENG CHK VLV	14100852
129.		8.962	HOSE (ENG CHK VLV) (AR)	12322342
130.		8.948	CLAMP, WORM TYPE (11/16"TO 1 5/16") (AR)	1470030
131.		DISCON	HOSE, AIR INJ PUMP (5/8)	14092379
	1-N19	3.660	CONNECTOR, AIR INJ ENG CHK VLV	10046154
132.		DISCON	STUD, CR/CASE VENT TUBE (M6X11X25, M6X1X12)	14087571
133.		N.S.	SPACER, ENG WRG HARN BRKT	
134.		N.S.	BRACKET, ENG LFTR RR	
135.		N.S.	BRACKET, ENG LFTR FRT	
136.	1-M8	2.251	RETAINER, W/COVER, SPLG WIRE (2-WIRE)	12043158

NOTE 1: ALSO PART OF GASKET KIT, GROUP: 0.289.
NOTE 2: SEE RESPECTIVE GROUP FOR DETAILED ILLUSTRATED VIEW.
NOTE 3: SEE CHART IN GROUP 2 FOR USAGE.
NOTE 4: SEE CHART IN GROUP 3 FOR USAGE.

RPO DEFINITIONS
L98 – ENGINE, 5.7L, (5.7-8) 350 CID, V8, TPI

© 2000 GENERAL MOTORS SERVICE PARTS OPERATIONS-CHEVROLET-14Y

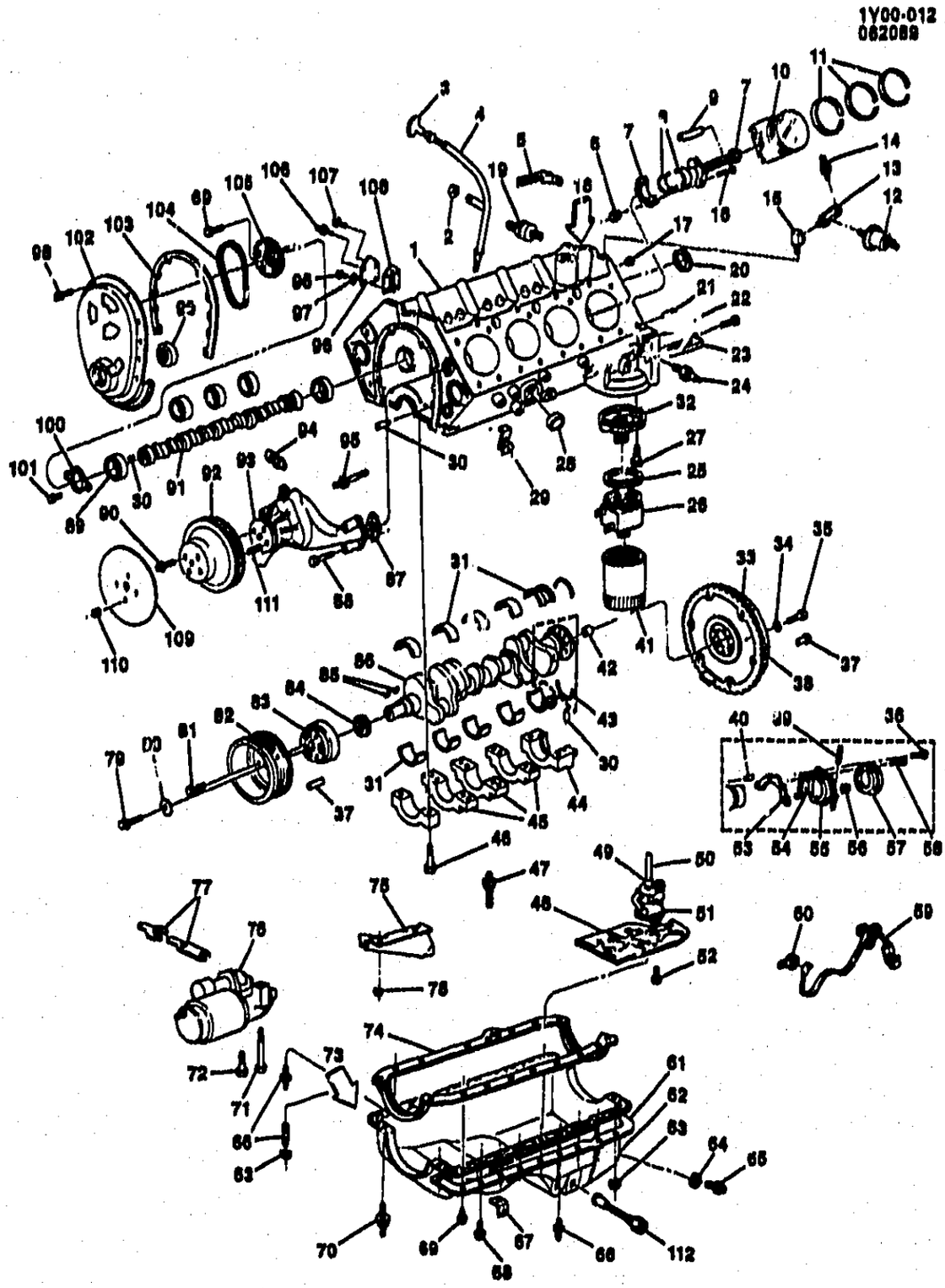

1Y00-012

1987-1991 Y ENGINE ASM-5.7L V8 PART 1 (L98/5.7-8)

1.	1-E17	0.033	ENGINE, PARTIAL (INCL 44) (1987-89)	12510737
	1-E17	0.033	ENGINE, PARTIAL (INCL 44) (1990-91)	12510735
2.		8.917	NUT, HEX FLG (3/8-16) PHOS	14057004

© 2000 GENERAL MOTORS SERVICE PARTS OPERATIONS-CHEVROLET-14Y

3.	1-L22	1.516	INDICATOR, OIL LVL (1987-88)	14094758
	1-L22	1.516	INDICATOR, OIL LVL (1989-91)	10108430
4.	1-L22	1.516	TUBE, OIL LVL IND	14084338
5.	1-M22	2.559	BRACKET, ENG WRG HARN RR	14062511
6.		8.915	NUT, HEX (3/8) ZN	225854
7.	1-F5	0.603	ROD, CONN	10108688
8.	1-F6	0.616	BEARING KIT, CONN ROD (STD)	12523924
9.		N.S.	PIN, PSTN (PART OF 10)	
10.	1-F6	0.629	PISTON, W/PIN (STD) (INCL 9) (1987-88)	10049079
	1-F6	0.629	PISTON, W/PIN (STD) (INCL 9) (1990-91)	10159436
11.	1-F7	0.643	RING KIT, PSTN (1987-89)	12507985
	1-F7	0.643	RING KIT, PSTN (1990-91)	12528817
12.	1-L27	1.800	SENSOR, OIL PRESS GA (1987-88) (AC-DELCO #14078954)	14078954
	1-L27	1.800	SENSOR, F/PUMP & ENG OIL PRESS GA (AC-DELCO #10201491)	10201491
13.	1-L27	1.800	FITTING, OIL PRESS GA SEN TO BLK FTG (1987-88)	14078958
		DISCON	FITTING, F/PMP & ENG OIL PRESS IND SW (1989)	10096122
	1-L27	1.800	ELBOW, ENG OIL PRESS GA SEN (1990-91)	14078988
14.	1-L27	1.800	SWITCH, OIL PRESS (1987) (AC-DELCO #D1818)	25036553
	1-L27	1.800	SWITCH, OIL PRESS IND (1988) (AC-DELCO #D1835)	25036936
	1-L27	1.800	SENSOR, F/PUMP & ENG OIL PRESS GA (1989) (AC-DELCO #10201491)	10201491
	1-L27	1.800	SENSOR, F/PUMP&ENG OIL PRESS GA (1990-91) (L98) (AC-DELCO #10201491)	10201491
15.	1-M2	1.803	FITTING, OIL PRESS GA SEN TO BLK (1987-88) (1990-91)	14078987
16.	1-F6	0.623	BOLT, CONN ROD	461372
17.		0.034	PLUG, ENG BLK COOL DRN HOLE (HEX (1/4-18X0.56) PHOS (1989-90)) (AC-DELCO #3889330)	3889330
18.		8.800	SEALANT, SILICONE RTV RUBBER (AR)	1052366
19.	1-M11	2.383	SENSOR, ESC KNOCK (1987-89) (AC-DELCO #213-324)	10456288
	1-M11	2.383	SENSOR, ESC KNOCK (1990-91) (AC-DELCO #213-92)	10456549
20.		8.970	PLUG, EXP CUP (2 3/32) STL	10241154
21.		8.939	PIN, DWL (5/16X9/16) STL (AC-DELCO #585927)	585927
22.		8.939	PIN, DWL (5/8X1 3/16) PL	12338119
23.	1-M22	2.559	BRACKET, ENG WRG HARN-LH RR	14073493
24.	1-L27	1.800	SENSOR, ENG OIL T/GA (1987-89) (AC-DELCO #25036292)	25036292
	1-L27	1.800	SENSOR, OIL CHG MON & TEMP GA (1990-91) (AC-DELCO #10096136)	10096136
25.	1-L23	1.550	GASKET, OIL CLR ADAP (PART OF 26)	14087586
26.	1-L23	1.540	COOLER, ENG OIL (INCL 25)	14084369
27.		8.900	BOLT, HFH (5/16-18X1.12) PHOS	3951644
	1-M3	1.840	STUD, OIL FLTR ADAP (5/16-18X1.88)	14101106
28.		8.970	PLUG, WAT JKT (41.5MM)	838538
29.	1-M22	2.559	BRACKET, ENG WRG HARN (ABV LH ENG MT)	14062599
30.		8.939	PIN, SPL DWL (1/4X5/8) PL	12554553
31.	1-E18	0.096	BEARING KIT, CR/SHF (#1 UPR) (STD (SEE PARTS SECTION FOR ADDITIONAL USAGE.))	10120990
32.	1-M3	1.840	ADAPTER, OIL FLTR (KC4)	10055722
33.	1-F9	0.666	FLYWHEEL, CR/SHF (A.T.)	14088765
34.		8.932	WASHER, SER TTH LK (.467/.452)	1347774
35.	1-F10	0.669	BOLT, FLYWHL (A.T.) (7/16-20X.7) (0.685)	14088764
36.	1-E20	0.137	BOLT, CR/SHF RR SEAL RET (1/4-20X0.88)	14088561
37.		8.940	PIN, GROOVE (5/16X3/8) ZN	274564
38.	1-F10	0.673	GEAR, FLYWHL RING	3991407
39.	1-E20	0.137	STUD, CR/SHF RR SEAL RET (5/16X18X1.44) (1.426)	14080362
40.		8.940	PIN, SPR TYPE S (7/16X9/16) STL ZP	9441003
41.	1-M2	1.836	FILTER, OIL (PF25) (AC-DELCO #PF25)	6438261
42.	1-F8	0.649	BEARING, CLU PILOT	14061685

© 2000 GENERAL MOTORS SERVICE PARTS OPERATIONS-CHEVROLET-14Y

43.	1-E20	0.137	SEAL, CR/SHF RR	10088158
44.		N.S.	CAP, CR/SHF RR BRG (PART OF 1)	
45.		DISCON	CAP, CR/SHF BRG (1, 2, 3, 4)	3956688
46.	1-E18	0.056	BOLT, CR/SHF BRG CAP (7/16X14X3.34)	3932480
47.	1-E18	0.056	STUD, CR/SHF BRG CAP	12561389
48.	1-L21	1.430	BAFFLE, OIL PAN HORIZ UPR	12554816
49.	1-L23	1.639	RETAINER, DISTR TO O/PUMP SHF	3764554
50.	1-L23	1.639	SHAFT, DISTR TO O/PUMP INTER	3998287
51.	1-L24	1.652	PUMP, OIL	12555284
52.	1-L24	1.652	BOLT, O/PUMP (7/16-14X2.36)	10046007
53.	1-E20	0.137	GASKET, CR/SHF RR SEAL RET	12555714
54.	1-E20	0.137	STUD, CR/SHF RR SEAL RET (1/4-20X2 3/16)	14101058
55.	1-E20	0.137	HOUSING, CR/SHF RR OIL SEAL	14088556
56.		8.917	NUT, HEX W/TTH CON WA (1/4-20) PZOR	14051876
57.	1-E20	0.137	SEAL, CR/SHF RR	10088158
58.	1-E20	0.137	BOLT, CR/SHF RR SEAL RET (1/4-20X1 3/4)	14088562
59.	1-L18	1.152	CORD, BLK HTR	52353021
60.	1-L18	1.152	HEATER, ENG BLK	996246
61.	1-L20	1.426	REINFORCEMENT, OIL PAN-LH	12553058
62.	1-L20	1.426	PAN, OIL (1987-90)	10056765
	1-L20	1.426	PAN, OIL (1991)	10108584
63.		8.915	NUT, HEX (5/16-18) POR	12338130
64.	1-L22	1.456	GASKET, DRN SCR (NY)	14090908
65.	1-L21	1.453	PLUG, OIL PAN DRAIN (8.971)	3921988
66.	1-L20	1.428	STUD, OIL PAN (1/4X20X.64/14X20X.50)	14101092
67.	1-M22	2.559	BRACKET, ECM WRG HARN	14062552
68.		8.900	BOLT, HFH (1/4-20X.62) POR	9440033
69.		8.900	BOLT, HEX (5/16-18X3/4) PHOS	9424877
70.	1-L20	1.428	STUD, OIL PAN (W/A.T.) (5/16-18X.66, 5/16-18X.49) PL	14084059
71.	1-M4	2.042	BOLT, START MTR (3/8-16X4.65) PZOR	14097278
72.	1-M4	2.042	BOLT, START MTR (3/8-16X1.87) PZOR	14097279
73.		8.800	SEALANT, PLASTIC VALVE COVER SEALANT (RTV) (3 OZ) (85 GRAMS) (AR)	1052751
74.	1-L21	1.429	GASKET, OIL PAN	14088505
75.	1-M11	2.383	SHIELD, ESC KNOCK SEN	10096158
76.	1-M4	2.041	MOTOR, START (CPS) (*1) (AC-DELCO #10455702)	10455702
	1-M5	2.070	SEALER, STRTR (NOT SHOWN)	10096162
77.	1-M4	2.042	SHIM, START MTR (1X1 7/8X.015) STL	1246249
78.		8.917	NUT, HFH (1/4-20) POR	12337984
79.		8.900	BOLT, HEX (7/16-20X2.25) POR	9440024
80.	1-F9	0.662	WASHER, CR/SHF BAL	14060682
81.	1-F9	0.662	BOLT, CR/SHF PUL (3/8-24X3/4) 280M	10179287
82.	1-F8	0.659	PULLEY, CR/SHF	14055116
83.	1-F8	0.659	DAMPENER, CR/SHF TORSIONAL	12551537
84.	1-F13	0.723	SPROCKET, CR/SHF	10128346
85.		8.960	KEY, WOODRUFF (3/16X3/4) PL	106751
86.	1-F8	0.646	CRANKSHAFT, ENG (1987-89)	14088527
	1-F8	0.646	CRANKSHAFT, ENG (1990-91)	12551485
87.	1-L16	1.079	GASKET, CLNT PUMP-LH & RH (*2)	3754587
88.		8.900	BOLT, HFH (3/8-16X1 3/4) PZOR	9441560
89.	1-F5	0.539	BEARING, CM/SHF	12453170
90.		DISCON	BOLT, CLNT PUMP PUL (M.T.) (1987-88)	14067335
	1-L15	1.062	BOLT, FAN & W/PMP PUL (1989-91) (L98)	15517450
91.	1-F4	0.519	CAMSHAFT, ENG (1987)	14093643
	1-F4	0.519	CAMSHAFT, ENG (1988-89)	10066049
	1-F4	0.519	CAMSHAFT, ENG (1990-91)	10111773
92.	1-L15	1.062	PULLEY, CLNT PUMP (1987)	10105209

© 2000 GENERAL MOTORS SERVICE PARTS OPERATIONS-CHEVROLET-14Y

	1-L15	1.062	PULLEY, CLNT PUMP (1988-91)	10105209
93.	1-L15	1.069	PUMP KIT, CLNT (AC-DELCO #251-500)	12522035
94.	1-N27	8.846	FITTING, HTR HOSE (NA5) (1988-91)	10088196
95.	1-L16	1.073	STUD, CLNT PUMP (3/8-16X2.73/3/8-16X1.32)	14055139
96.	1-N24	3.901	COVER, F/PUMP OPG	14094069
97.		8.931	WASHER, SPR LK (17/64X31/64) ZOR (AC-DELCO #9439510)	9439510
98.		8.900	BOLT, HFH (1/4-20X.62) POR	9440033
99.		0.213	SEAL, CR/SHF FRT OIL (*2)	10111769
100.	1-F4	0.529	RETAINER, CM/SHF	10088128
101.	1-F4	0.529	BOLT, CM/SHF RET	14093637
102.	1-E22	0.206	COVER, ENG FRT	10243967
103.	1-E22	0.207	GASKET, ENG FRT CVR (*2)	10108435
104.	1-F12	0.724	CHAIN, CM/SHF TIMING	14087014
105.	1-F14	0.736	SPROCKET, CM/SHF	12552128
106.		DISCON	STUD, F/PMP OPG CVR (3/8-16/5/16-18)	10105227
107.		8.900	BOLT, HFH (3/8-16X3/4) PZOR	9442063
108.	1-N24	3.904	GASKET, PUMP OPG CVR (W/NA5) (*2)	12560223
109.	1-L15	1.069	DAMPENER, CLNT PUMP PUL VIB (1988-91)	10105252
110.		8.917	NUT, HFH (5/16-18) PHOS	1359887
111.		8.981	STUD, PL (5/16-18X5/16-24X1 1/4)	382919
112.	1-L22	1.516	SENSOR, ENG OIL LVL (2 TERM, M20X1.5-6G) (1991)	10137676
	1-L22	1.516	SEAL, ENG OIL LVL SEN ((PART OF SENSOR))	10151633

NOTE 1: SEE RESPECTIVE GROUP FOR DETAILED ILLUSTRATED VIEW.
NOTE 2: PART OF ENG FRT GASKET KIT GROUP 0.207.

RPO DEFINITIONS
L98 · ENGINE, 5.7L, (5.7-8) 350 CID, V8, TPI

© 2000 GENERAL MOTORS SERVICE PARTS OPERATIONS-CHEVROLET-14Y

MICROFICHE INDEX

GROUPS 0.000 & 21.000

FICHE 1 OF 11

GROUP	DESCRIPTION	STARTING GRID LOCATION PARTS	ILLUSTRATIONS
–	GENERAL INFORMATION	1–A2	1–G2
–	ALPHABETICAL INDEX	1–B13	N.A.
0.000	8–CYLINDER ENGINE	1–E2	1–G5
21.000	ACCESSORY REFERENCE LIST	1–D2	N.A.
–	OUT OF FICHE CALLS	N.A.	1–L13

1–H1

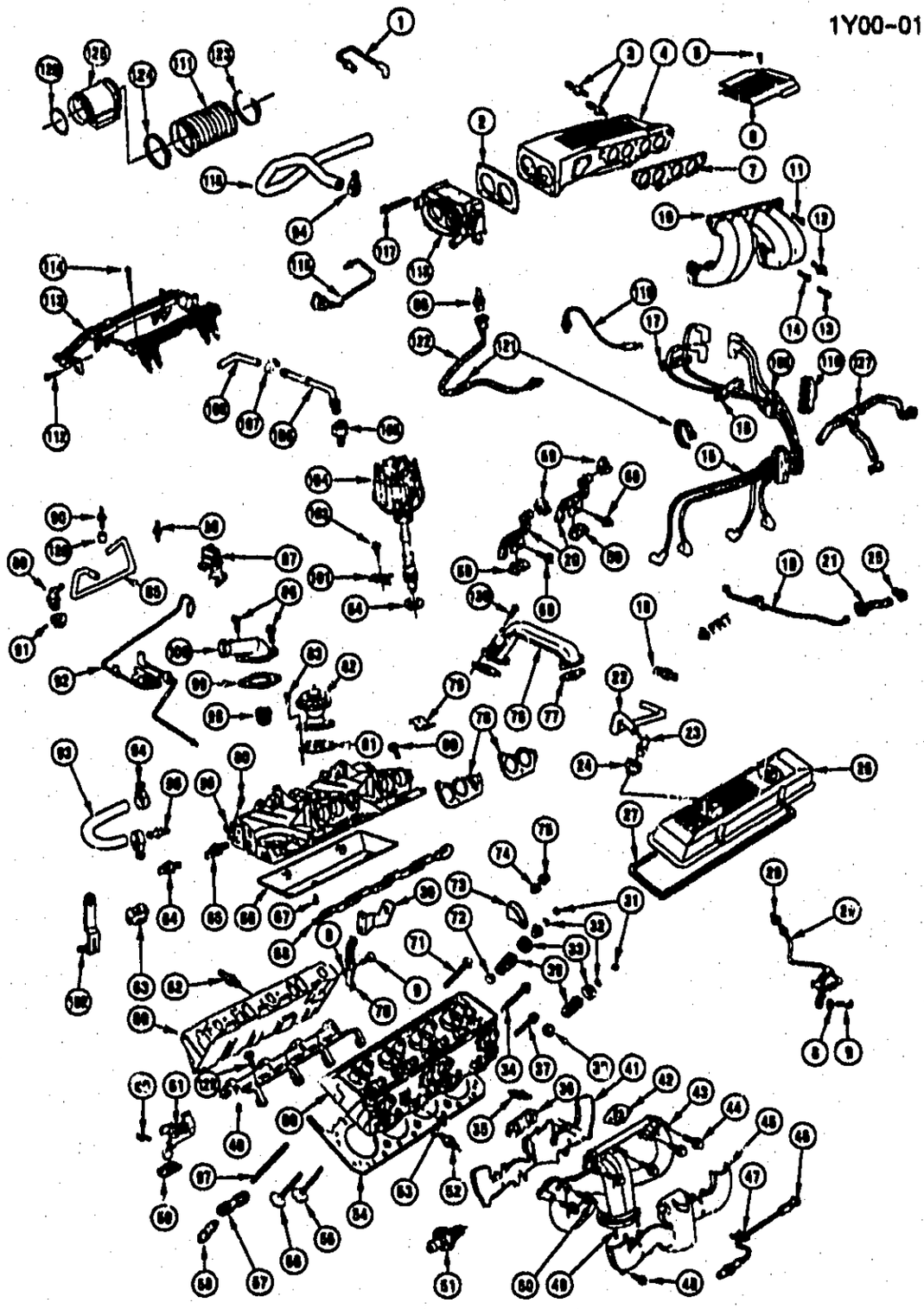

1Y00-017

1988-1991 Y ENGINE ASM-5.7L V8 PART 2 (L98/5.7-8)

1.	1-N16	3.675	HARNESS, EXH EMIS CONT VAC RR	14082433
2.	1-N5	3.336	GASKET, TBI (1988) (FOR MOD APPL & POA SEE THROT BODY CHT) (1) (1988) (Y) (L98) (*1) (AC-DELCO #40-718)	10105379
	1-N5	3.336	GASKET, TBI (1989-91) (*KIT1) (AC-DELCO #40-717)	10105351
3.	1-N2	3.278	FITTING, INT MANIF VAC IN PLNM	14082470
4.		DISCON	PLENUM, INT MANIF (1988)	10108443
	1-M27	3.265	PLENUM, INL MANIF (1989)	10108468

© 2000 GENERAL MOTORS SERVICE PARTS OPERATIONS-CHEVROLET-14Y

	1-M27	3.265	PLENUM, INT MANIF (1990-91)	10077151
5.	1-M28	3.275	BOLT, INT MANIF PLNM (M4X.7X13)	14082425
6.	1-M27	3.265	EXTENSION, INT MANIF PLNM	10108425
7.	1-M28	3.270	GASKET KIT, INT MANIF PLNM (*1)	12508751
8.		8.931	WASHER, SPR LK (7/16X25/32) ZOR	9439613
9.		N.S.	BOLT, SPLG WIRE SUPT (3/8-16X11/16)	
10.		DISCON	TUBE, INT MANIF-LH (1988)	14081007
		DISCON	TUBE, INT MANIF (TUBE) (RH)	14081008
	1-M27	3.265	TUBE, INT MANIF (TUBE) (LH) (1989-91)	10108469
11.	1-M28	3.275	BOLT, INT MANIF PLNM (M8X1.25X30)	14081014
12.	1-M28	3.275	STUD, INT MANIF PLNM (M8X1.25X30)	14091678
13.	1-M28	3.275	BOLT, INT MANIF TUBE (M8X1.25X54.4)	14081017
14.	1-M28	3.275	BOLT, INT MANIF TUBE (M8X1.25X34.5)	14081015
15.	1-M5	2.239	WIRE KIT, SPLG (*3) (AC-DELCO #618W)	12073939
16.	1-M8	2.251	CLIP SPLG WIRE (4)	8917256
17.	1-M8	2.251	RETAINER, SPLG WIRE	12041472
18.	1-L26	1.762	FITTING, CR/CASE VENT HOSE	14087402
19.	1-N16	3.675	PIPE, AIR INJ ENG CHK VLV (AC-DELCO #219-70)	10055834
20.	1-M8	2.251	SUPPORT, SPLG WIRE (LH CYL HD)	14087576
	1-M8	2.251	SUPPORT, SPLG WIRE (RH CYL HD)	14087575
21.		8.962	HOSE, AIR PUMP (5/8)	12322342
22.	1-L26	1.762	HOSE, CR/CASE VENT VLV TO PCV VLV	14088538
23.	1-L25	1.745	VALVE, CR/CASE VENT (CV-774C) (1988) (AC-DELCO #CV774C)	6487779
	1-L25	1.745	VALVE, CR/CASE VENT (CV-789C) (1989-91) (AC-DELCO #CV789C)	8995284
24.	1-L25	1.745	GROMMET, CR/CASE VENT VLV-LH (3/4X1 1/8) (1988)	3989349
	1-L25	1.745	GROMMET, C/CASE VENT VLV (1989-91)	10088198
25.		8.948	CLAMP, WORM GR (11/16 TO 1 5/16)	1470030
26.	1-E28	0.386	COVER, VLV RKR-LH (1990)	10055781
	1-E28	0.386	COVER, VLV RKR-LH (1991)	10108588
	1-E28	0.386	COVER, VLV RKR-RH	10055782
27.	1-F2	0.423	GASKET, VLV RKR CVR (*1)	14088564
28.		N.S.	FITTING, PWR BOOS PIPE	
29.		DISCON	PIPE, P/B BOOS VAC	14087577
30.		N.S.	BRACKET, ENG LIF RR	
31.	1-E28	0.310	KEY, VLV STEM	24503856
32.	1-E27	0.308	SEAL, VLV STEM OIL (*1)	10214034
33.	1-E27	0.308	SHIELD, VLV STEM OIL	10007818
34.	1-E24	0.293	BOLT, CYL HD MED (7/16-14X3 1/16)	14088946
35.	1-M9	2.270	SPARK PLUG, ((FR5LS)) (AC-DELCO #FR5LS)	5614106
36.	1-M28	3.270	GASKET, EXH MANIF CTR (*1)	10088112
37.	1-E24	0.293	BOLT, CYL HD HEX W/FL WA (7/16-14X1 3/4) 300M PZOR	10168527
38.	1-E26	0.303	SHIM, VLV SPR	10185066
39.	1-E26	0.303	SPRING, W/DMP VLV	3911068
40.	1-F3	0.459	RETAINER, VLV LFTR RSTR	14101116
41.	1-N7	3.417	STOVE, ENG AIR HT INR	14055131
42.	1-M28	3.270	GASKET, EXH MANIF (*1)	10088110
43.	1-N9	3.601	MANIFOLD, EXH-LH	14087511
	1-N9	3.601	MANIFOLD, EXH-LH	10055734
44.		8.90	BOLT, HFH (3/8-16X2) 280M POR	9440073
45.		DISCON	SHIELD, EXH MANIF HT OTR	14055130
46.	1-N21	3.682	SENSOR, EXH OXYGEN (AC-DELCO #AFS21)	25166816
47.	1-M22	2.559	RETAINER, OXY SEN CONN	8917236
48.		8.977	BOLT, HWH TAP (10-16X.50) PZOR (AC-DELCO #9440166)	9440166
49.	1-N10	3.613	STUD, EXH PIPE (M10X1.5X57)	14057005
50.	1-M28	3.275	STUD, EXH MANIF (3, 4) -RH (2) -LH	14057002
51.	1-N10	3.670	VALVE, AIR INJ ENG CHK (AC-DELCO #214-998)	12562568

© 2000 GENERAL MOTORS SERVICE PARTS OPERATIONS-CHEVROLET-14Y

52.	1-L14	1.055	SWITCH, ENG COOL HIGH TEMP FAN CONT (1988-89) (AC-DELCO #D1852B)	14043276
53.		6.971	PLUG, DRN INT (3/8-18X27/64) PEOR (1.073)	14090911
54.	1-E23	0.289	GASKET KIT, CYL HD (1988)	10089675
	1-E23	0.289	GASKET, CYL HD	12557236
55.	1-E26	0.297	VALVE, EXH (STD)	10088106
56.	1-E25	0.296	VALVE, INT (STD)	14075641
57.	1-F3	0.439	GUIDE, VLV LFTR PUSH ROD	12550002
58.	1-F3	0.459	LIFTER, HYD VLV (AC-DELCO #HL112)	5234890
59.	1-M8	2.251	RETAINER, SPLG WIRE	12043158
60.		8.900	BOLT, HFH (1/4-20X9/16) 280M PZOR	9439930
61.	1-M8	2.251	SUPPORT, SPLG WIRE CYL HD SI RR-RH	14087574
62.	1-L17	1.150	SENSOR, ENG COOL TEMP GA (1988-89) (AC-DELCO #25036135)	25036135
	1-L17	1.150	SENSOR, CLNT TEMP (1990) (AC-DELCO #D1885)	8993146
	1-L17	1.150	SENSOR, COOLANT TEMP (1991) (AC-DELCO #213-80)	25037346
63.	1-L26	1.758	CAP, OIL FIL (AC-DELCO #PC180)	12555300
64.		3.329	SWITCH, COLD START F/INJ (1988) (AC-DELCO #212-312)	14084318
65.	1-N21	3.682	SENSOR, CLNT TEMP (AC-DELCO #213-310)	12146312
66.	1-M27	3.265	SHIELD, INT MANIF OIL SPH	14087401
67.		8.900	BOLT, HEX FLG HD (M6X1X13) 9.8 POR (AC-DELCO #11514149)	11514149
68.		N.S.	GASKET, INL MANIF SI (*1, KIT1)	
69.	1-E23	0.269	HEAD, CYL	10125374
70.	1-M8	2.251	SUPPORT, SPLG WIRE CYL HD RR END-RH	14087578
71.	1-E24	0.293	BOLT, CYL HD LG (7/16-14X3 51/64) 300M	10108525
72.	1-E27	0.308	SEAL, W/RET INL VLV STEM (STD., .003 O.S.) (*1)	460483
73.	1-E28	0.333	ARM KIT, VLV RKR (ARM & BALL KIT, VLV RKR)	10069648
74.		N.S.	BALL, RKR ARM (PART OF 73)	
75.		0.429	NUT, VLV RKR ARM ADJ	12555562
76.	1-N16	3.675	PIPE, EGR VLV (1988-89)	10055728
	1-N16	3.675	PIPE, EGR (1990-91)	10108433
77.	1-N16	3.675	GASKET, EGR VLV PIPE	10055726
78.	1-M28	3.270	GASKET KIT, INT MANIF TUBE (*1)	10174951
79.	1-M22	2.559	BRACKET, ENG WRG HARN-RH RR	14062511
80.		8.913	BOLT, INL MANIF TORX (3/8-16X1 1/8) 280M	14091547
81.	1-N19	3.680	GASKET, EGR VLV (AC-DELCO #10077547)	10077547
82.	1-N10	3.670	VALVE, EGR (AC-DELCO #214-5535)	17113456
83.		8.900	BOLT, HFH (5/16-18X1) 280M POR	9441894
		8.932	WASHER, EXT LK (M8X15X1.52) ZN (AC-DELCO #11501869)	11501869
84.	1-M10	2.363	GASKET, IGN TIMER DISTR (1989) (*1, KIT1) (AC-DELCO #10108445)	10108445
85.	1-L26	1.762	HOSE, PCV VLV	10055872
86.	1-L18	1.153	BOLT, CLNT OTLT (3/8-16X1.25) 280M PZOR	10198997
87.	1-N10	3.670	SOLENOID, EGR CONT VLV RLY (AC-DELCO #214-340)	1997195
88.		DISCON	STUD, CR/CASE VENT TUBE (M6X1X12/M6X1X12) 9.8 PZOR (1762)	14087572
89.	1-L26	1.762	CONNECTOR, PCV HOSE (C/CASE VENT HOSE) (1) (1988-91) (Y) (L98)	10055873
90.		DISCON	STUD, CR/CASE VENT TUBE (M6X1X25, M6X1X12) STL	14087571
91.	1-L25	1.745	GROMMET, CR/CASE VENT VLV	10088198
92.	1-N16	3.675	HARNESS, EGR VLV VAC (1990)	10055893
	1-N16	3.675	HARNESS, EGR VLV VAC (1991)	10105375
93.	1-N6	3.337	HOSE, TBI HTR	10108509
94.		8.948	CLAMP, WORM GR (15.7 TO 31.8) SST (AC-DELCO #12337891)	12337891
95.	1-N28	8.666	VALVE, HTR WAT FLOW CONT (L98) (AC-DELCO #15-5372)	22532158
96.	1-M27	3.265	MANIFOLD, INT (1988)	10108517
	1-M27	3.265	MANIFOLD, INT (1989-91)	10066012
97.	1-F3	0.426	ROD, PUSH	10046173

© 2000 GENERAL MOTORS SERVICE PARTS OPERATIONS-CHEVROLET-14Y

98.	1-L19	1.246	THERMOSTAT (195 DEG) (AC-DELCO #131-87)	12514334
99.	1-L18	1.154	GASKET, CLNT OTLT (*1) (AC-DELCO #10105135)	10105135
100.	1-L18	1.153	OUTLET, CLNT (AC-DELCO #15-1443)	14084383
101.	1-M10	2.363	CLAMP, IGN TIMER DISTR (1988-90)	10096197
	1-M10	2.363	CLAMP, IGN TIMER DISTR (1991)	10096197
102.		N.S.	BRACKET, ENG LFTR FRT	
103.	1-M10	2.363	BOLT, DISTR CLA (IGN TIMER (3/8-16X1 1/8)) (1988-90)	14091544
		8.900	BOLT, HFH 3/8-16X1.12 280M ZP FULL THD .75-OD (DISTR CLA IGN TIMER) (AR) (1991)	14091544
104.		N.S.	DISTRIBUTOR, IGN (*2)	
105.		DISCON	ELBOW, 45 DEG (5/16 INV FL TUBE)	116341
		8.800	SEALANT-LOCTITE PIPE-W/TEFLON 50CC TUBE (AR)	12346004
106.		8.964	TUBING, MANIF VPR (5/16)	12541500
107.		8.948	CLAMP, MANIF VPR HOSE (1/2-13/16) SST/BLK	22527587
108.		8.962	HOSE, MANIF VPR (7.9MM) (AC-DELCO #12339996)	12339996
109.	1-M8	2.251	RETAINER, SPLG WIRE (INCL 110)	12043550
110.		N.S.	COVER, SPLG WIRE RET (PART OF 109)	
111.	1-N7	3.417	DUCT, AIR INT RR (1988-89)	14081891
	1-N7	3.417	DUCT, AIR INT INTER (1990-91)	10106444
112.	1-N3	3.330	BOLT, PAN HD TORX (M8X1.25X20) 10.9 PEOR (3.680)	14081021
113.		N.S.	RAIL ASM, F/INJ (CPS) (*2)	
114.		8.900	BOLT, FUEL RAIL HFH (M8X1.25X35) 10.9 PZOR	24572579
115.		DISCON	VALVE KIT, COLD START (1988)	17110860
116.	1-N27	8.846	HOSE, HTR INL	10108510
117.		8.900	BOLT, HFH (M8X1.25X70) 9.8 PZOR	11509516
118.	1-N4	3.335	BODY KIT, THROT (1988) (FOR MOD APPL & POA SEE THROT BODY CHT) (*2)	
	1-N4	3.335	BODY KIT, THROT (1989) (FOR MOD APPL & POA SEE THROT BODY CHT) (*2)	
119.	1-N10	3.670	SWITCH, EGR VLV TEMP IND (1988-89) (AC-DELCO #212-336)	14087415
120.		N.S.	SPACER, ENG WRG HARN BRKT	
121.		8.965	RETAINER, PLSTC 7IN ADJ STRAP	3816659
122.	1-M14	2.480	HARNESS, INT AIR TEMP SEN WRG	12029463
123.		8.948	CLAMP, WORM GR	14081883
124.	1-N7	3.417	CLAMP, RR INT AIR DUCT (UPC/FNA: CLAMP, RR AIR INT DUCT)	10146826
	1-N7	3.417	CLAMP, RR INT AIR DUCT (UPC/FNA: CLAMP, RR AIR INT DUCT)	10146826
125.	1-N21	3.682	SENSOR, MASS AIR FLOW (1988-89) (AC-DELCO #213-161)	10055877
	1-N21	3.682	SENSOR, MAP (1990-91) (AC-DELCO #213-185)	16137039
126.	1-N7	3.415	SEAL, MASS AIR FLOW SEN (1988-89)	14081880
127.	1-N16	3.675	HOSE, AIR INJ CHK VLV TEE TO AIR CLNT VLV	10105316
	1-N19	3.680	CONNECTOR, AIR INJ CHK VLV	10046154
128.		8.900	BOLT, HEX 5/16-18X[illegible]2 280M (AR)	180075
		8.929	WASHER (AR)	120386
130.	1-N3	3.330	BOLT, EGR TUBE (AR)	14081021

SERVICE KITS

1.	1-M28	3.270	GASKET KIT, INT MANIF	

NOTE 1: ALSO PART OF GASKET KIT, GROUP: 0.289.
NOTE 2: SEE RESPECTIVE GROUP FOR DETAILED ILLUSTRATED VIEW.
NOTE 3: SEE CHART IN GROUP FOR USAGE.

RPO DEFINITIONS
L98 - ENGINE, 5.7L, (5.7-8) 350 CID, V8, TPI

© 2000 GENERAL MOTORS SERVICE PARTS OPERATIONS-CHEVROLET-14Y

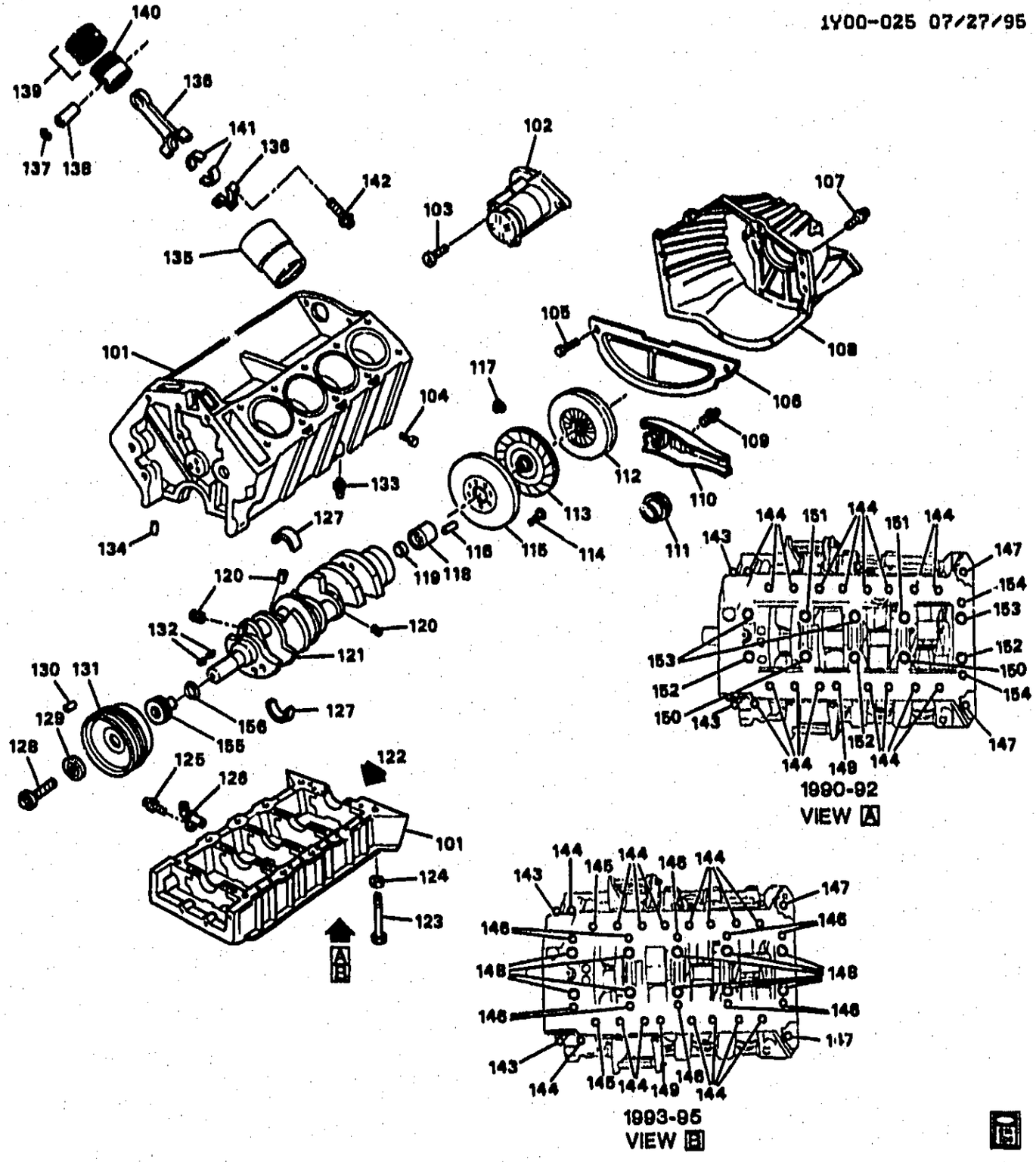

1Y00-025

1990-1995 Y ENGINE ASM-5.7L V8 PART 1 CYLINDER BLOCK AND INTERNAL PARTS (LT5/5.7J)

101.	1-E17	0.030	BLOCK, ENG (TWO PART) (UPPER & LOWER)	90-92	Y (LT5)	1	10153555
		N.S.	BLOCK, ENG	93-95	.....		
	1-E15	0.000	ENGINE, 5.7L (350 CID) (ID: ZUD)	95	Y (LT5)	1	10234780
	1-E15	0.000	ENGINE, 5.7L (350 CID) (ZVC) ...	93	Y (LT5)	1	10168539

© 2000 GENERAL MOTORS SERVICE PARTS OPERATIONS-CHEVROLET-14Y

							1Y00-025
	1-E15	0.000	ENGINE, 5.7L (350 CID) (ZWC) ..	94	Y (LT5)	1	10219244
102.	1-M4	2.041	STARTER, (SERVICED BY COMPL ASM ONLY) (AC-DELCO #10455704)	90-95	Y (LT5)	1	10455704
103.		8.900	BOLT, HFH M10X1.5X30 10.9 FL BLK 21.5 OD 26MM THD POINTED (STRTR)	90-95	.....	AR	12337993
104.	1-E17	0.034	PLUG, ENG BLK COOL DRN HOLE (1/4-18 THD) (8.970)	90-95	Y (LT5)	2	10067700
105.	1-F19	0.862	BOLT, CLU PRESS PLT	90	Y (LT5)	6	10079698
	1-F19	0.862	BOLT, CLU PRESS PLT	90-95	Y (LT5)	6	10111562
106.	1-F11	0.679	COVER, FLYWHL HSG	90-95	Y (LT5)	1	10225112
107.		8.900	BOLT, M10X1.5X32, 28.10 THD, 20.28 OD, 10.9, GM 7114M (TRANS CASE)	90-95	.....	AR	14056165
		8.900	BOLT, HFH, M10X1.5X135, 39 THD, 9.8, PE (TRANS CASE)	90-95	.....	AR	11514569
108.	1-F11	0.683	HOUSING, FLYWHL	90-95	Y (LT5)	1	10065201
109.	1-F17	0.796	BOLT, CLU FORK BALL STUD (SPL, FLAT HD M8XA.25X15.5, 11X5 SHLDR, 27 OD, STL, CA, INT HEX DRV)	90-95	Y (LT5)	1	10150085
110.	1-F16	0.795	FORK, CLU	90-95	Y (LT5)	1	10065210
111.	1-F17	0.799	BEARING, CLU REL (AC-DELCO #CT1073)	90-93	Y (LT5)	1	10203567
	1-F17	0.799	BEARING, CLU REL	94-95	Y (LT5)	1	10222087
112.	1-F18	0.859	PLATE, CLU PRESS (W/CVR & CLU REL BRG)	90-93	Y (LT5)	1	10203573
	1-F18	0.859	PLATE, CLU PRESS (W/CVR & CLU REL BRG)	94-95	Y (LT5)	1	10222084
113.	1-F19	0.886	PLATE, CLU DRVN	90-95	Y (LT5)	1	10174491
114.	1-F10	0.669	BOLT, FLYWHL (ALSO PART OF 121) (HEX HD. 7/16-20X2) (8.900)	90-95	Y (LT5)	8	10065334
115.	1-F9	0.666	FLYWHEEL, ENG (ALSO PART OF 121)	90-95	Y (LT5)	1	10174481
116.	1-F10	0.669	PIN, FLYWHL LOC (ALSO PART OF 121)	90-95	Y (LT5)	1	10067640
117.	1-F10	0.669	WEIGHT, FLYWHL (2380/.2500 X .50) (BARREL-SHAPED PIN) (GROOVE-F)	90-95	Y (LT5)	1	[illegible]90192
118.	1-F8	0.649	BEARING, CLU PILOT (BUSHING TYPE 19/32 ID 1 3/32 O.D.X 3/4) .	90-95	Y (LT5)	1	10125896
119.	1-F8	0.648	PLUG, CR/SHF RR OIL (ALSO PART OF 121)	90-95	Y (LT5)	8	10067639
120.		8.971	PLUG (ALSO PART OF 121)	90-95	Y (LT5)	AR	14090911
		8.971	PLUG, AUTO HEX SOC DRN (ALSO PART OF 121) (8.921)	90-95	Y (LT5)	7	444777
121.	1-F8	0.646	CRANKSHAFT, (INCL 114, 115, 116, 119, 120, 128, 129, 131, 132, 155, 156)	90	Y (LT5)	1	10153575
	1-F8	0.646	CRANKSHAFT, (INCL 114, 115, 116, 119, 120, 128, 129, 131, 132, 155, 156)	91-92	Y (LT5)	1	10174396
	1-F8	0.646	CRANKSHAFT, (INCL 114, 115, 116, 119, 120, 128, 129, 131, 132, 155, 156)	93-95	Y (LT5)	1	10168688

© 2000 GENERAL MOTORS SERVICE PARTS OPERATIONS-CHEVROLET-14Y

							1Y00-025
122.		8.800	SEALANT-LOCTITE PIPE-W/TEFLON 50CC TUBE ...	90-95	.....	AR	12346004
123.		N.S.	BOLT, LWR C/CASE (SEE VIEW A & B FOR PROPER IDENTIFICATION)		.....		
124.		N.S.	WASHER, CR/SHF BRG CAP (SEE VIEW A & B FOR PROPER IDENTIFICATION)		.....		
125.		6.900	BOLT, HFH M6X1X16 9.8 POR (CR/SHF POSN SEN)	90-95	.....	AR	11508805
126.	1-M11	2.383	SENSOR, CR/SHF POSN (AC-DELCO #213-153)	90-95	Y (LT5)	1	10457661
127.	1-E18	0.096	BEARING KIT, CR/SHF (.001 U.S./STD) (RR)	90-91	Y (5.7-8)	1	12528826
	1-E18	0.096	BEARING KIT, CR/SHF (#1, 2, 3, 4)) (.001 U.S./STD) (REPL 0.0006" U.S. BRG KIT)	91	Y (5.7-8)	4	12531215
	1-E18	0.096	BEARING KIT, CR/SHF (#1, 2, 4)	90-95	Y (LT5)	3	12508101
	1-E18	0.096	BEARING KIT, CR/SHF (#3)	90-95	Y (LT5)	1	12508102
	1-E18	0.096	BEARING KIT, CR/SHF (#5)	90-95	Y (LT5)	1	12508103
128.	1-F8	0.659	BOLT, TORSIONAL DPNR (ALSO PART OF 121) (M16X1.0-6G 45.00 G) (0.662)	90-95	Y (LT5)	1	10067642
129.	1-F8	0.659	WASHER, TORSIONAL DPNR (ALSO PART OF 121) (59.0 DIA) (0.662)	90-95	Y (LT5)	1	10067597
130.	1-F10	0.669	WEIGHT, CR/SHF BALR (0.659) ..	90-95	Y (LT5)	1	10174322
131.	1-F8	0.659	DAMPENER, CR/SHF TORSIONAL (ALSO PART OF 121)	90-92	Y (LT5)	1	10153517
	1-F8	0.659	DAMPENER, CR/SHF TORSIONAL (ALSO PART OF 121)	93-95	Y (LT5)	1	10225133
132.	1-F9	0.662	KEY, TORSIONAL DPNR (ALSO PART OF 121)	90-95	Y (LT5)	2	10067641
133.	1-M11	2.383	SENSOR, KNOCK (AC-DELCO #213-94)	90	Y (LT5)	1	10456075
	1-M11	2.383	SENSOR, KNOCK (AC-DELCO #213-266)	91-95	Y (LT5)	1	10456207
	1-M11	2.383	SENSOR, KNOCK (AC-DELCO #213-325)	93-95	Y	1	10456287
134.	1-L20	1.428	PIN, LWR C/CASE LOC	90-92	Y (LT5)	2	10153560
	1-L20	1.428	PIN, LWR C/CASE LOC (OUTBOARD MAIN BRG BOLT LOCATIONS)	93-95	Y (LT5)	10	10153560
135.		N.S.	SLEEVE, CYL (P.. OF 140)		.....		
136.	1-F5	0.603	ROD, CONN	90	Y (5.7-8)	8	10108688
	1-F5	0.603	ROD, CONN	90-92	Y (LT5)	8	10146295
	1-F5	0.603	ROD, CONN	93-95	Y (LT5)	8	10225132
137.		N.S.	RETAINER, PSTN PIN (PART OF 140)		.....		
138.		N.S.	PIN, PSTN (P..T OF 140)		.....		
139.	1-F7	0.643	RING KIT, PSTN (STD)	90-95	Y (LT5)	8	12513155
140.	1-F6	0.629	PISTON, ENG (INCL 135, 137, 138)	90-92	Y (LT5)	8	10146287
	1-F6	0.629	PISTON, ENG (INCL 135, 137, 138)	93-95	Y (LT5)	8	10168607
141.	1-F6	0.616	BEARING KIT, CONN ROD	90-95	Y (LT5)	8	12508107

© 2000 GENERAL MOTORS SERVICE PARTU OPERATIONS-CHEVROLET-14Y

142.	1-F6	0.623	BOLT, CONN ROD (M11X1.0X46)	90-95	Y (LT5)	16	10146241
143.		8.900	BOLT, HFH M8X1.25X35 10.9 PZOR (LWR C/CASE) (0.206)	90-95		2	24572579
144.	1-L20	1.426	BOLT, LWR C/CASE (M8 X 1.5 X 65.0 6G) (1.428)	90-92	Y (LT5)	17	10135848
	1-L20	1.426	BOLT, LWR C/CASE (M8 X 1.5 X 65.0 6G) (1.428)	93-95	Y (LT5)	15	10135848
145.		8.900	BOLT, HFH, 8X1.25X30, 27THD, 17.6OD, 9.8PEOR (LWR C/CASE)	93-95		2	11509666
146.	1-L20	1.426	BOLT, LWR C/CASE (M8X1.25X101.0, 6.12, SAE 4037 OR 1541, PC, MACH) (0.056)	93-95	Y (LT5)	10	10187797
	1-E21	0.153	WASHER, CR/SHF BRG CAP (16.0 OD X 9.0 ID X 4.0 THK) (0.060)	93-95	Y (LT5)	10	10187798
	1-L20	1.420	PIN, LWR C/CASE LOC (OUTBOARD MAIN BRG BOLT LOCATIONS) (OUTBOARD MAIN BRG BOLT LOCATIONS)	93-95	Y (LT5)	10	10153560
147.	1-L20	1.426	BOLT, LWR C/CASE (M8 X 1.5 X 100) (1.428)	90-95	Y (LT5)	2	10122138
148.	1-E18	0.056	BOLT, CR/SHF BRG CAP (M10 X 1.5 X 111.0 4H)	93-95	Y (LT5)	10	10153559
	1-E21	0.153	WASHER, CR/SHF BRG CAP (19.0 OD X 11.0 ID X 4.0 THK) (0.060)	93-95	Y (LT5)	10	10153561
149.	1-L20	1.426	BOLT, LWR C/CASE (M8 X 1.5 X 80.0 6G) (1.428)	90-95	Y (LT5)	1	10135849
150.	1-E18	0.056	BOLT, CR/SHF BRG CAP (M10 X 1.5 X 111.0 4H)	90-92	Y (LT5)	2	10153559
	1-E21	0.153	WASHER, CR/SHF BRG CAP (19.0 OD X 11.0 ID X 4.0 THK) (0.060)	90-92	Y (LT5)	2	10153561
	1-L20	1.428	PIN, LWR C/CASE LOC	90-92	Y (LT5)	2	10153560
151.	1-E18	0.056	BOLT, CR/SHF BRG CAP (M10 X 1.5 X 111.0 4H)	90-92	Y (LT5)	4	10153559
	1-E21	0.153	WASHER, CR/SHF BRG CAP (19.0 OD X 11.0 ID X 4.0 THK) (0.060)	90-92	Y (LT5)	4	10153561
152.	1-E18	0.056	BOLT, CR/SHF BRG CAP (M12 X 1.75 X 112.0 4H)	90-92	Y (LT5)	6	10135847
	1-E21	0.153	WASHER, CR/SHF BRG CAP (13.0 ID 4.0 THK) (0.060)	90-92	Y (LT5)	6	10135846
153.	1-E18	0.056	BOLT, CR/SHF BRG CAP (M12 X 1.75 X 112.0 4H)	90-92	Y (LT5)	3	10135847
	1-E21	0.153	WASHER, CR/SHF BRG CAP (13.0 ID 4.0 THK) (0.060)	90-92	Y (LT5)	3	10135846
		N.S.	PIN, LWR C/CASE LOC (PART OF ITEM 101)	90-92	Y (LT5)	3	
154.	1-E18	0.056	BOLT, CR/SHF BRG CAP (M8 X 1.5 X 80.0 6G) (1.428)	90-92	Y (LT5)	2	10135849
155.	1-F13	0.728	SPROCKET, CR/SHF (ALSO PART OF 121)	90-95	Y (LT5)	1	10106172
156.	1-L23	1.639	SEAT, O/PMP SEAL (ALSO PART OF 121)	90-95	Y (LT5)	1	10067685

RPO DEFINITIONS
LT5 – ENGINE,5.7L(5.7J),TPI

© 2000 GENERAL MOTORS SERVICE PARTS OPERATIONS-CHEVROLET-14Y

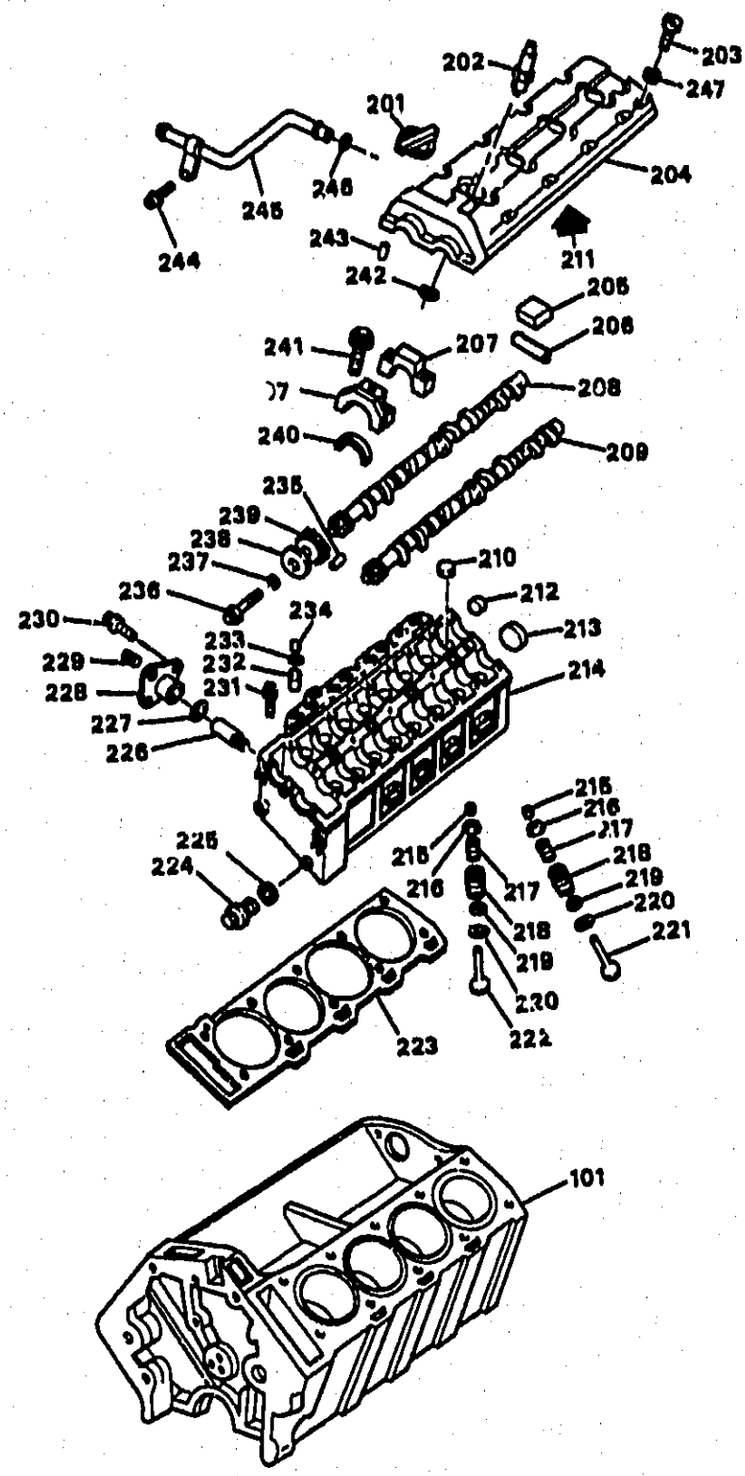

1Y00-026

1990-1995 Y ENGINE ASM-5.7L V8 PART 2 CYLINDER HEAD AND RELATED PARTS (LT5/5.7J)

101.		N.S.	BLOCK, ENG (REFER TO PART 1)				
201.	1-M27	3.265	EMBLEM, ENG	90-95	Y (LT5)	1	10174309
202.	1-M9	2.270	SPARK PLUG, (AC-DELCO #FR2LS)	90-92	Y (LT5)	8	5614167
	1-M9	2.270	SPARK PLUG, (AC-DELCO #41-913)	92-95	Y (LT5)	8	5614355

© 2000 GENERAL MOTORS SERVICE PARTS OPERATIONS-CHEVROLET-14Y

							1Y00-026
203.		8.913	SCREW, PAN HD, M8X1.25X55, 9.8, PEOR, 38 THD (CM/SHF HSG CVR)	90-95		48	11514330
		8.913	SCREW, PAN HD TORX, M6X1X25, 9.8 (CM/SHF HSG CVR)	90-95		6	11514567
204.		N.S.	COVER, CM/SHF HSG (PART OF 214)				
205.	1-L25	1.745	FILTER, PCV (0.386)	90-95	Y (LT5)	2	10135879
206.	1-E28	0.386	RETAINER, PCV FLTR	90-95	Y (LT5)	2	10146208
207.	1-F4	0.529	RETAINER, CM/SHF	90-95	Y (LT5)	4	10067713
208.	1-F4	0.519	CAMSHAFT, EXH (MCHG)	90-92	Y (LT5)	RH	10199084
	1-F4	0.519	CAMSHAFT, EXH (MCHG)	90-92	Y (LT5)	LH	10199085
	1-F4	0.519	CAMSHAFT, EXH (MCHG)	93-95	Y (LT5)	LH	10199077
	1-F4	0.519	CAMSHAFT, EXH (MCHG)	93-95	Y (LT5)	RH	10199078
209.	1-F4	0.519	CAMSHAFT, INT (MCHG)	90-92	Y (LT5)	RH	10199082
	1-F4	0.519	CAMSHAFT, INT (MCHG)	90-92	Y (LT5)	LH	10199083
	1-F4	0.519	CAMSHAFT, INT (MCHG)	93-95	Y (LT5)	RH	10215908
	1-F4	0.519	CAMSHAFT, INT (MCHG)	93-95	Y (LT5)	LH	10215909
210.	1-F3	0.459	LIFTER, VLV (AC-DELCO #HL110C)	90-95	Y (LT5)	32	17120991
211.		8.800	SEALANT, PERMABOND A136	93-95	Y (LT5)	AR	12345980
212.	1-E24	0.293	PLUG, CYL HD (30.30 DIA CUP)	90-95	Y (LT5)	2	10067515
213.	1-F5	0.553	PLUG, CM/SHF RR BRG HOLE (40MM) (8.970)	90-95	Y (LT5)	8	10110931
214.	1-E23	0.269	HEAD, CYL (INCL 204, 243)	93-95	Y (LT5)	RH	10168654
	1-E23	0.269	HEAD, CYL (INCL 204, 243)	93-95	Y (LT5)	LH	10168655
	1-E23	0.269	HEAD, CYL (W/VLV) (INCL 204, 243)	90-92	Y (LT5)	LH	12516175
	1-E23	0.269	HEAD, CYL (W/VLV) (INCL 204, 243)	90-92	Y (LT5)	RH	12516176
215.	1-E28	0.310	KEY, VLV STEM	90-95	Y (LT5)	64	10067420
216.	1-E27	0.309	CAP, VLV SPR	90-92	Y (LT5)	32	10067403
	1-E27	0.309	CAP, VLV SPR	93-95	Y (LT5)	32	10168621
217.		N.S.	SPRING, VLV INR (*KIT1)				
218.		N.S.	SPRING, VLV OTR (*KIT1)				
219.	1-E27	0.309	SEAT, VLV SPR	90-95	Y (LT5)	32	10067421
220.	1-E27	0.308	SEAL, VLV STEM OIL	90-95	Y (LT5)	32	10067412
221.	1-E25	0.296	VALVE, INT (STD)	90-92	Y (LT5)	16	10135861
	1-E25	0.296	VALVE, INT (STD)	93-95	Y (LT5)	16	10225130
222.	1-E26	0.297	VALVE, EXH (STD)	90-91	Y (LT5)	16	10135862
	1-E26	0.297	VALVE, EXH (STD)	92	Y (LT5)	16	10199010
	1-E26	0.297	VALVE, EXH (STD)	93-95	Y (LT5)	16	10199033
223.	1-E23	0.289	GASKET, CYL HD	90	Y (5.7-8)	2	12557236
	1-E23	0.289	GASKET, CYL HD	90-95	Y (LT5)	RH	10106176
	1-E23	0.289	GASKET, CYL HD	90-95	Y (LT5)	LH	10106177
224.	1-E22	0.206	PLUG, TMG CHAIN GDE ACC HOLE (0.724)	90-95	Y (LT5)	2	10067630
225.	1-E22	0.206	WASHER, TMG CHAIN GDE ACC HOLE PLUG (0.724)	90-95	Y (LT5)	2	10067631
226.	1-F12	0.724	TENSIONER, TMG CHAIN	90-95	Y (LT5)	RH	10174324
	1-F12	0.724	TENSIONER, TMG CHAIN (2.559)	90-95	Y (LT5)	LH	10174325
227.	1-F12	0.724	SEAL, TMG CHAIN TENSR	90-95	Y (LT5)	2	10067520
228.	1-F12	0.724	HOUSING, TMG CHAIN TENSR	90-95	Y (LT5)	RH	10110972
	1-F12	0.724	HOUSING, TMG CHAIN TENSR	90-95	Y (LT5)	LH	10153549
229.	1-F12	0.724	PLUG, CM/SHF SEC TMG CHAIN TENSR CVR	90-95	Y (LT5)	2	10067657

© 2000 GENERAL MOTORS SERVICE PARTS OPERATIONS-CHEVROLET-14Y

							1Y00-026
230.	1-F12	0.724	BOLT, CM/SHF SEC TMG CHAIN TENSR CVR (HEAVY HEX FLANGE HD) (HFH, M6X1X20, 19 THD, 14.2 OD, 9.8, 6260M, MACH HD PT) (8.900) (AC-DELCO #11517518)	90-95	Y (LT5)	4	11517518
231.	1-E24	0.293	BOLT, CYL HD (14X1.5X60)	90-95	Y (LT5)	20	10106175
232.		N.S.	GUIDE, VLV		.....		
233.		N.S.	RETAINER, VLV GUIDE		.....		
234.		N.S.	SEAL, VLV GUIDE		.....		
235.	1-F14	0.736	PIN, CM/SHF SPKT LOC	90-95	Y (LT5)	4	10106161
236.	1-F14	0.736	BOLT, CM/SHF SPKT	90-95	Y (LT5)	4	10090566
237.	1-F14	0.736	WASHER, CM/SHF SPKT	90-95	Y (LT5)	4	10090569
238.	1-F14	0.736	RETAINER, CM/SHF SPKT (0.736)	90-92	Y (LT5)	4	10106164
	1-F14	0.736	RETAINER, CM/SHF SPKT (0.736)	93-95	Y (LT5)	1	10199079
239.	1-F14	0.736	SPROCKET, CM/SHF	90-95	Y (LT5)	4	10106162
240.	1-F5	0.533	WASHER, CM/SHF THR	90-95	Y (LT5)	4	10106163
241.	1-F4	0.529	BOLT, CM/SHF RET (M6X1X35) ..	90-95	Y (LT5)	16	11514259
242.	1-F2	0.423	SEAL, CYL HD CAM CVR (O RING)	90-95	Y (LT5)	8	10067538
243.		N.S.	PIN, CM/SHF HSG CVR LOC (PART OF 214)		.....		
244.	1-L26	1.762	BOLT, PCV TUBE (M12X1.75X110)	90-95	Y (LT5)	1	11514119
245.	1-L26	1.762	TUBE, PCV	90-95	Y (LT5)	LH	10135804
	1-L26	1.762	TUBE, PCV	90-95	Y (LT5)	RH	10135857
246.	1-L25	1.745	SEAL, PCV TUBE	90-95	Y (LT5)	RH	10110955
247.	1-F2	0.413	SEAL, CM/SHF CVR BOLT (O RING) (WASHER) (0.529)	90-95	Y (LT5)	48	10135851

SERVICE KITS

1.	1-E26	0.303	SPRING KIT, VLV (INCL 217, 218)	90-95	Y (LT5)	32	12508108

RPO DEFINITIONS
LT5 – ENGINE,5.7L(5.7J),TPI

© 2000 GENERAL MOTORS SERVICE PARTS OPERATIONS-CHEVROLET-14Y

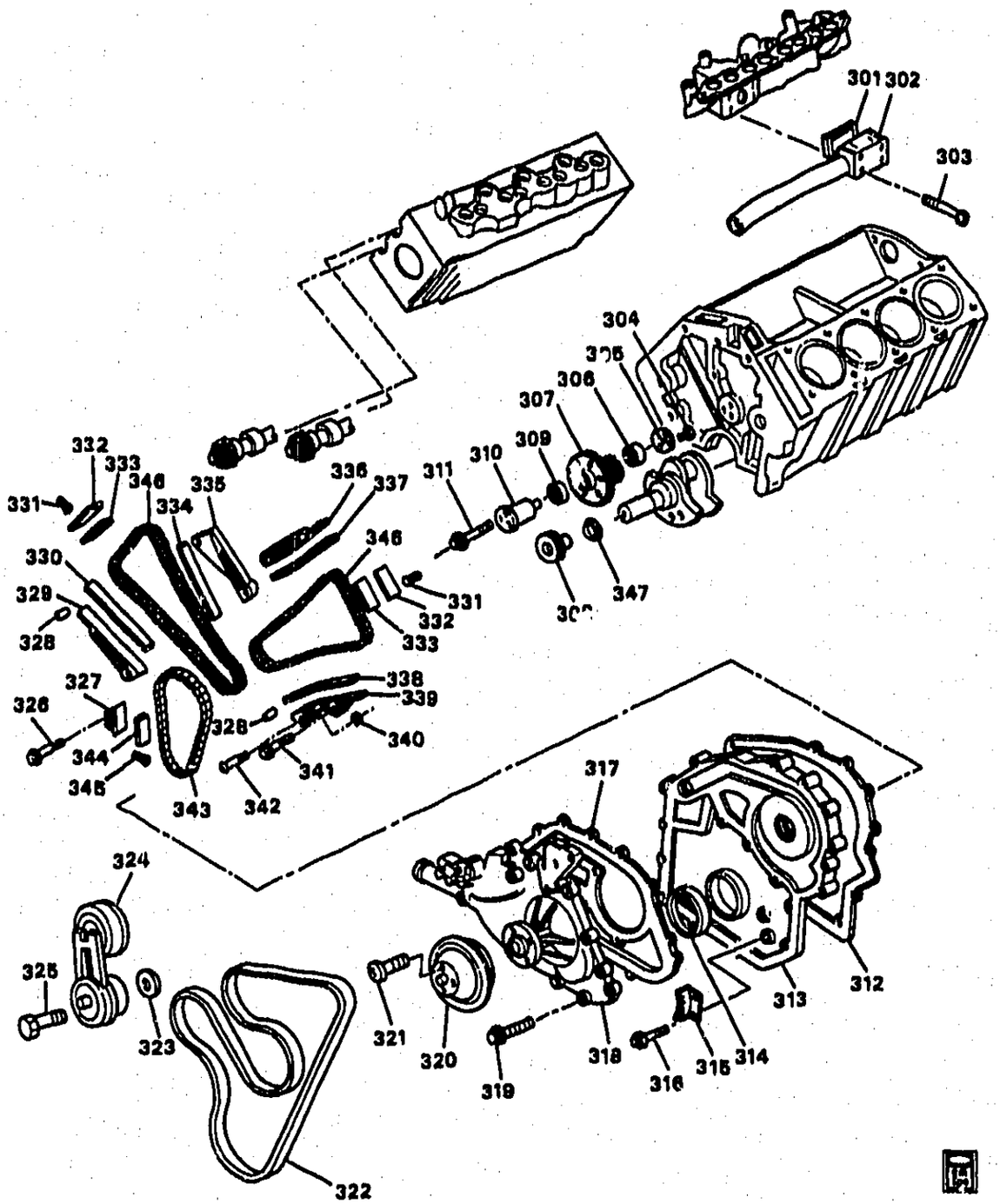

1Y00-027

1990-1995 Y ENGINE ASM-5.7L V8 PART 3 FRONT COVER & COOLING (LT5/5.7J)

301.	1-L18	1.154	GASKET, WAT OTLT (PIPE)	90-95	Y (LT5)	2	10168677
302.	1-L18	1.153	OUTLET, WAT	90-95	Y (LT5)	LH	10146270
	1-L18	1.153	OUTLET, WAT	90-95	Y (LT5)	RH	10146271
303.	1-L18	1.153	BOLT, WAT OTLT (PIPE) (6X1X50, 10.5 OD, T30 TORX DR)	90-95	Y (LT5)	8	11514494
304.		N.S.	BOLT, TMG CHAIN IDLER SPKT (PART OF 307)		.....		
305.		N.S.	WASHER, TMG CHAIN IDLER SPKT (PART OF 307)		.....		

© 2000 GENERAL MOTORS SERVICE PARTS OPERATIONS-CHEVROLET-14Y

306.		N.S.	BEARING, TMG CHAIN IDLER SPKT (PART OF 307)				
307.	1-F12	0.724	SPROCKET, TMG CHAIN IDLER (INCL 304, 305, 306, 309, 310)	90-95	Y (LT5)	1	10106173
308.	1-F13	0.728	SPROCKET, CR/SHF	90-95	Y (LT5)	1	10106172
309.		N.S.	BEARING, TMG CHAIN IDLER SPKT (PART OF 307)				
310.		N.S.	SHAFT, TMG CHAIN IDLER SPKT (PART OF 307)				
311.	1-F13	0.728	BOLT, CR/SHF SPKT (M8 X 1.5 X 100) (1.428)	93-95	Y (LT5)	3	10122138
312.	1-E22	0.207	GASKET, ENG FRT CVR	90-92	Y (LT5)	1	10135877
	1-E22	0.207	GASKET, ENG FRT CVR	93-95	Y (LT5)	1	10187758
313.	1-E22	0.206	COVER, ENG FRT (LESS POINTER)	90-91	Y (5.7-8)	1	10243967
	1-E22	0.206	COVER, ENG FRT	90-92	Y (LT5)	1	10122126
	1-E22	0.206	COVER, ENG FRT	93-95	Y (LT5)	1	10187756
314.	1-E23	0.213	SEAL, CR/SHF FRT OIL	90-95	Y (LT5)	1	10067443
315.	1-E23	0.219	INDICATOR, TMG	90-91	Y	1	3991435
	1-E23	0.219	INDICATOR, TMG	90-95	Y (LT5)	1	10090539
316.	1-E22	0.206	BOLT, ENG FRT CVR (8.900)	90-95	Y (LT5)	5	11515792
	1-E22	0.206	BOLT, ENG FRT CVR (HFH M6X1X16 9.8 POR 14 OD 14MM THD) (8.900)	91-95	Y (LT5)	2	11508805
317.	1-L16	1.079	GASKET, W/PMP (PART OF 318)	90-95	Y (LT5)	1	10168678
	1-L16	1.079	GASKET, W/PMP (LEFT OR RIGHT, 13/32 LARGE ID, CORK) (PART OF 318)	90-91	Y	2	3754587
318.	1-L15	1.069	PUMP, WAT (CONTAINS PUMP & GASKET) (INCL 317) (AC-DELCO #251-561)	90-95	Y (LT5)	1	10159599
319.	1-L16	1.079	BOLT, W/PMP (8X1.25X40, 37.5 THD, 14 OD, TORX T40 DR, 9.8, PE 4067M)	90-95	Y (LT5)	2	11514566
	1-L16	1.079	BOLT, W/PMP (HFH, M8X1.25X35) (0.206)	90-95	Y (LT5)	2	24572579
	1-L16	1.079	BOLT, W/PMP (8X1.25X55, 22 THD, 18 OD, 9.8, PZOR, MACH) (1.840)	92-95	Y (LT5)	3	3522444
320.	1-L15	1.062	PULLEY, W/PMP	90-95	Y (LT5)	1	10067478
321.	1-L15	1.062	BOLT, W/PMP PUL (M6X1X12, FL HD) (8.900)	90-95	Y (LT5)	4	11516061
322.	1-L15	1.066	BELT, W/PMP & A/C CMPR & GEN & P/S PUMP	90-95	Y (LT5)	1	10067477
323.	1-L14	1.060	WASHER, DRV BELT TENSR (FLAT)	90-95	Y (LT5)	1	10067747
324.	1-L14	1.060	TENSIONER, DRV BELT	90-95	Y (LT5)	1	10067479
325.		8.900	BOLT, HEX, M12X1.75X75, 38.8 THD, 9.8, PE (DRV BELT TENSR)	90-95		1	11514794
326.	1-F12	0.724	BOLT, PRIM CHAIN GDE (M6X1X40, DIM A-25, 14.2-OD 9.8 PEOR) (8.900)	90-95	Y (LT5)	2	11509037
327.	1-F12	0.724	GUIDE, PRIM TMG CHAIN	90-95	Y (LT5)	1	10110999
328.	1-F12	0.724	PIN, SECD TMG CHAIN GDE FAC RET	90-95	Y (LT5)	1	10106154
329.	1-F12	0.724	GUIDE, TMG CHAIN (FIXED)	90-95	Y (LT5)	RH	10122170
	1-F12	0.724	GUIDE, TMG CHAIN (PIV)	90-95	Y (LT5)	RH	10122172

© 2000 GENERAL MOTORS SERVICE PARTS OPERATIONS-CHEVROLET-14Y

							1Y00-027
330.	1-F12	0.724	FACING SECD TMG CHAIN GDE (FIXED)	90-95	Y (LT5)	RH	10110918
	1-F12	0.724	FACING, SECD TMG CHAIN GDE (PIV)	90-95	Y (LT5)	RH	10110920
331.	1-F12	0.724	BOLT, PRIM TMG CHAIN GDE FAC (M5X0.8X10)	90-95	Y (LT5)	4	11514525
	1-F12	0.724	BOLT, PRIM TMG CHAIN GDE FAC (4.2X1.4X13) (4.2X1.4X13)	90-95	Y (LT5)	2	11514888
332.	1-F12	0.724	GUIDE, SECD TMG CHAIN	90-95	Y (LT5)	2	10110932
333.	1-F12	0.724	FACING, SECD TMG CHAIN GDE (FIXED)	90-95	Y (LT5)	LH	10110917
	1-F12	0.724	FACING, SECD TMG CHAIN GDE (FIXED)	90-95	Y (LT5)	RH	10110918
	1-F12	0.724	FACING, SECD TMG CHAIN GDE (PIV)	90-95	Y (LT5)	LH	10110919
	1-F12	0.724	FACING, SECD TMG CHAIN GDE (PIV)	90-95	Y (LT5)	RH	10110920
	1-F12	0.724	FACING, SECD TMG CHAIN GDE (TOP)	90-95	Y (LT5)	2	10110933
334.	1-F12	0.724	FACING, SECD TMG CHAIN GDE (FIXED)	90-95	Y (LT5)	RH	10110918
	1-F12	0.724	FACING, SECD TMG CHAIN GDE (PIV)	90-95	Y (LT5)	RH	10110920
335.	1-F12	0.724	GUIDE, TMG CHAIN (FIXED)	90-95	Y (LT5)	RH	10122170
	1-F12	0.724	GUIDE, TMG CHAIN (PIV)	90-95	Y (LT5)	RH	10122172
336.	1-F12	0.724	GUIDE, TMG CHAIN (FIXED)	90-95	Y (LT5)	LH	10122171
	1-F12	0.724	GUIDE, TMG CHAIN (PIV)	90-95	Y (LT5)	LH	10122173
337.	1-F12	0.724	FACING, SECD TMG CHAIN GDE (FIXED)	90-95	Y (LT5)	LH	10110917
	1-F12	0.724	FACING, SECD TMG CHAIN GDE (PIV)	90-95	Y (LT5)	LH	10110919
338.	1-F12	0.724	FACING, SECD TMG CHAIN GDE (FIXED)	90-95	Y (LT5)	LH	10110917
	1-F12	0.724	FACING, SECD TMG CHAIN GDE (PIV)	90-95	Y (LT5)	LH	10110919
339.	1-F12	0.724	GUIDE, TMG CHAIN (FIXED)	90-95	Y (LT5)	LH	10122171
	1-F12	0.724	GUIDE, TMG CHAIN (PIV)	90-95	Y (LT5)	LH	10122173
340.	1-F12	0.724	BUSHING, SECD TMG CHAIN GDE	90-95	Y (LT5)	1	10122161
341.		0.724	BOLT, TMG CHAIN GDE (M8X1.25X20) (8.900)	93-95	Y (LT5)	1	12551177
342.	1-F12	0.724	BOLT, TMG CHAIN GDE (HFH, M8X1.25X35) (0.206)	93-95	Y (LT5)	4	24572579
343.	1-F12	0.724	CHAIN, PRIM TMG	90-95	Y (LT5)	1	10110983
344.	1-F12	0.724	FACING, PRIM TMG CHAIN GDE	90-95	Y (LT5)	1	10110982
345.	1-F12	0.724	BOLT, PRIM TMG CHAIN GDE FAC (M5X0.8X10)	90-95	Y (LT5)	4	11514525
	1-F12	0.724	BOLT, PRIM TMG CHAIN GDE FAC (4.2X1.4X13) (4.2X1.4X13)	90-95	Y (LT5)	2	11514888
346.	1-F12	0.724	CHAIN, SECD TMG	90-95	Y (LT5)	LH	10215911
	1-F12	0.724	CHAIN, SECD TMG	90-95	Y (LT5)	RH	10215912
347.	1-L23	1.639	SEAT, O/PMP SEAL	90-95	Y (LT5)	1	10037685

RPO DEFINITIONS
LT5 – ENGINE,5.7L(5.7J),TPI

© 2000 GENERAL MOTORS SERVICE PARTS OPERATIONS–CHEVROLET–14Y

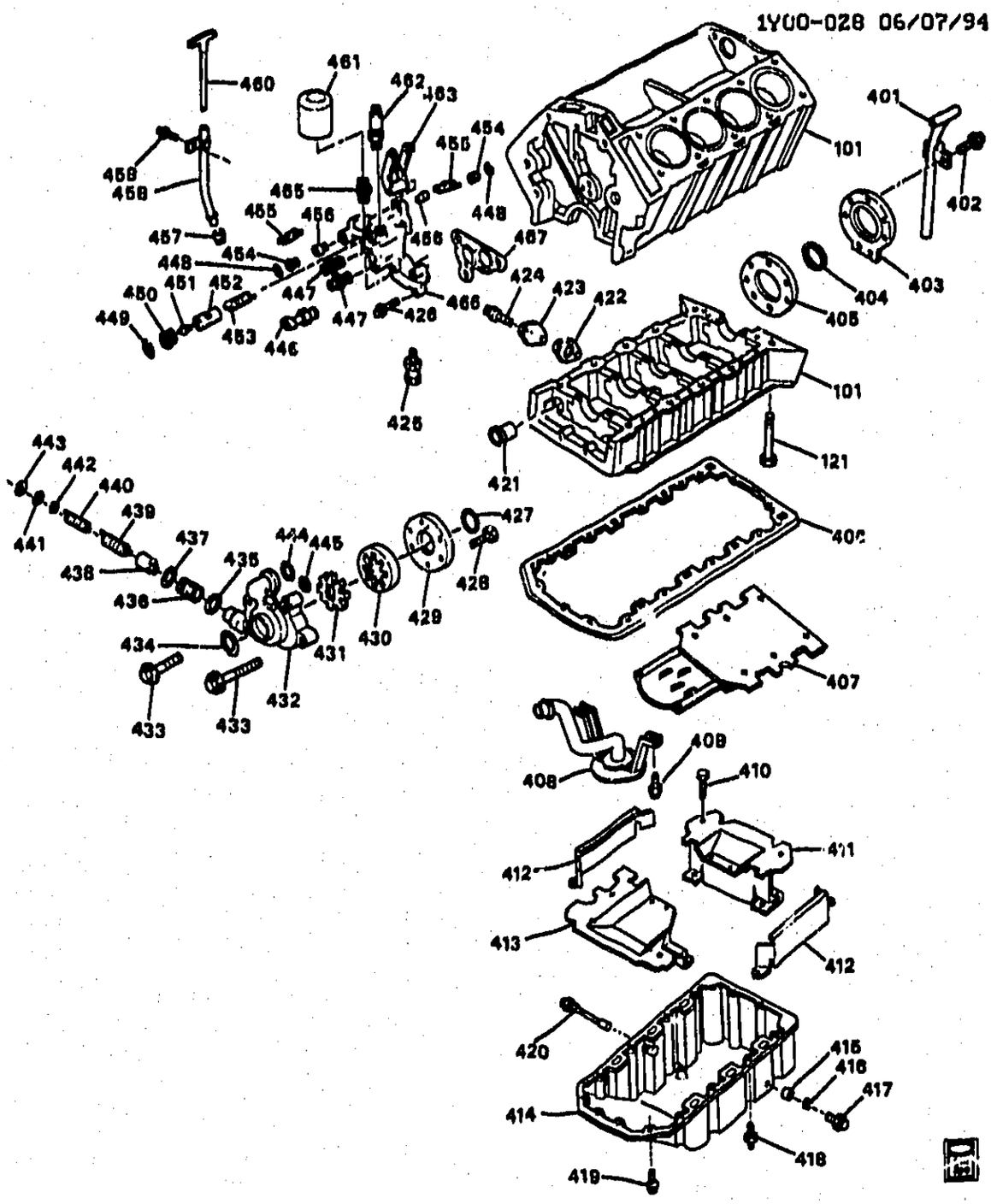

1990-1995 Y ENGINE ASM-5.7L V8 PART 4 OIL PUMP, PAN & RELATED PARTS (LT5/5.7J)

101.		N.S.	BLOCK, ENG (REFER TO PART 1)		.....		
121.	1-L20	1.426	BOLT, LWR C/CASE (M8 X 1.5 X 100) (1.428)	90-95	Y (LT5)	2	10122138
	1-L20	1.426	BOLT, LWR C/CASE (M8 X 1.5 X 80.0 6G) (1.428)	90-95	Y (LT5)	1	10135849
	1-L20	1.426	BOLT, LWR C/CASE (HFH, M8X1.25X35) (0.206)	90-95	Y (LT5)	2	24572579
	1-L20	1.426	BOLT, LWR C/CASE (M8 X 1.5 X 65.0 6G) (1.428)	90-95	Y (LT5)	15	10135848

© 2000 GENERAL MOTORS SERVICE PARTS OPERATIONS-CHEVROLET-14Y

							1Y00-028
	1-L20	1.426	BOLT, LWR C/CASE (8X1.25X50, 27 THD) (8.900)	93-95	Y (LT5)	2	11509666
401.	1-E17	0.034	PIPE, ENG BLK OIL GAL	90-92	Y (LT5)	1	10122192
	1-E17	0.034	PIPE, ENG BLK OIL GAL	93-95	Y (LT5)	1	10168695
402.		8.913	SCREW, PAN HD C/R MA, 6X1X20, 9.8PS, 12-ODHDR POINT, FULL THD (CR/SHF RR OIL SEAL HSG)	90-95		AR	11513897
403.	1-E20	0.137	HOUSING, CR/SHF RR OIL SEAL	90-95	Y (LT5)	1	10168700
404.	1-E20	0.137	SEAL, CR/SHF RR OIL	90-95	Y (LT5)	1	10088158
405.	1-E20	0.137	GASKET, CR/SHF RR OIL SEAL HSG	90-95	Y (LT5)	1	10168681
406.	1-L21	1.429	GASKET, OIL PAN	90-92	Y (LT5)	1	10108193
	1-L21	1.429	GASKET, OIL PAN	93-95	Y (LT5)	1	10187750
407.	1-L21	1.430	BAFFLE, OIL PAN	93-95	Y	1	10199037
408.	1-L24	1.656	PIPE, O/PMP SUC	90-92	Y (LT5)	1	10135840
	1-L24	1.656	PIPE, O/PMP SUC	93-95	Y (LT5)	1	10187741
409.	1-L24	1.656	BOLT, O/PMP SUC PIPE BRKT (M6X1X25) (8.900)	93-95	Y	2	11514151
410.		8.900	BOLT, M6X1X12, 10 THD, 11.6 OD, 9.8 GM500-M, POR, MACH (OIL PAN BFL) (AC-DELCO #11514149)	90-95		AR	11514149
411.	1-L20	1.426	BAFFLE, OIL PAN RR (1.430)	93-95	Y	1	10187737
412.	1-L21	1.430	BAFFLE, OIL PAN SI	93-95	Y	1	10225115
413.	1-L20	1.426	BAFFLE, OIL PAN FRT (1.430)	93-95	Y		10187733
	1-L21	1.430	BAFFLE, OIL PAN	90	Y	1	10146222
	1-L21	1.430	BAFFLE, OIL PAN	91-92	Y	1	10153532
414.	1-L20	1.426	PAN, OIL (INCL 411-413, 416, 417)	93-95	Y	1	10225138
	1-L20	1.426	PAN, OIL	90	Y	1	10122165
		DISCON	PAN, OIL	91-92	Y	1	10153593
415.	1-L21	1.453	INSERT, OIL PAN DRN PLUG THD	93-95	Y	1	452796
416.	1-L22	1.456	GASKET, OIL PAN DRN PLUG (ALUMINUM PLUG) (0.413)	90-93	Y (LT5)	1	10135843
	1-L22	1.456	GASKET, OIL PAN DRN PLUG (STEEL PLUG)	90-95	Y (LT5)	1	10174313
417.	1-L21	1.453	PLUG, OIL PAN DRN	90-95	Y (LT5)	1	10110927
418.	1-L20	1.428	STUD, OIL PAN (1.153)	90-95	Y (LT5)	4	10044165
419.		8.900	BOLT, HEX FLNG HD (6X1X20) (PE 9.8) (OIL PAN)	90-95		AR	11514150
		8.900	BOLT, M8X1.25X25 9.8 (OIL PAN)	90-95		AR	11508476
420.	1-L22	1.516	SENSOR, ENG OIL LVL	93-95	Y (LT1, LT5)	1	24507190
	1-L22	1.516	SENSOR, ENG OIL LVL	94-95	Y (LT5)	1	10137676
	1-L22	1.516	SENSOR, ENG OIL LVL (2 TERM, M20X1.5-6G)	90-92	Y	1	10137676
421.	1-L24	1.656	SEAL, O/PMP SUC PIPE (O RING)	90-92	Y (LT5)	1	10106189
	1-L24	1.656	SEAL, O/PMP SUC PIPE (O RING)	93-95	Y (LT5)	1	10187747
422.	1-L25	1.724	GASKET, O/PMP ACC CVR (TO C/CASE) (1.609)	90-95	Y (LT5)	1	10168683
423.	1-L25	1.723	COVER, O/PMP (ACCESS TO C/CASE) (1.609)	90-95	Y (LT5)	1	10110922
424.		8.900	BOLT, HFH M6X1X16 9.8 POR (O/PMP ACC CVR (TO C/CASE))	90-95		2	11508805

© 2000 GENERAL MOTORS SERVICE PARTS OPERATIONS-CHEVROLET-14Y

						1Y00-028
425.	1-L27	1.800	SWITCH, ENG OIL PRESS IND (AC-DELCO #D1846)	93-95	Y (LT5)	1 25036935
	1-L27	1.800	SWITCH, ENG OIL PRESS IND (OIL FLTR HSG (1 BLADE TERM, 1/8-27 THD)) (AC-DELCO #D1846)	90-92	Y (LT5)	1 25036935
426.		8.900	BOLT, HFH, M8X1.25X45, 22 THD, PE, 9.8 (OIL FLTR)	90-95		AR 11514158
		8.900	BOLT, HFH M8X1.25X35 10.9 P2OR (OIL FLTR HSG & W/PMP) (0.206)	90-95		AR 24572579
427.	1-L25	1.724	SEAL, O/PMP (O RING) (1.73 I.D. O RING)	93-95	Y (LT5)	1 10135870
428.		N.S.	BOLT, OIL PMP PLATE (PART OF ITEM 432)			
429.		N.S.	PLATE, OIL PMP (PART OF ITEM 432)			
430.		N.S.	GEAR, OIL PMP OUTER (PART OF ITEM 432)			
431.		N.S.	GEAR, OIL PMP INNER (PART OF ITEM 432)			
432.	1-L24	1.652	PUMP, OIL (INCLS ITEM 428-431, 435-443)	90-92	Y (LT5)	1 10135871
	1-L24	1.652	PUMP, OIL (INCLS ITEM 428-431, 435-443)	93-95	Y (LT5)	1 10187763
	1-L24	1.652	PUMP, OIL (INCLS ITEM 428-431, 435-443) (INCLS BOLTS, COVERS, GEARS, HSGS, PIN, PLUG, SHFS, SPR & VLV)	95	Y	1 12555283
433.		8.900	BOLT, HFH, 8X1.25X50, 27THD, 17.6OD, 9.8PEOR (O/PMP)	90-95		AR 11509666
		8.900	BOLT, HFH, M8X1.25X45, 22 THD, PE, 9.8 (O/PMP)	90-95		AR 11514158
434.	1-L25	1.724	SEAL, O/PMP (O RING) (1.639)	90-95	Y (LT5)	1 10067512
	1-L25	1.724	SEAL, O/PMP (O RING) (0.423)	90-95	Y (LT5)	1 10067538
	1-L25	1.724	SEAL, O/PMP (O RING) (.931 ID O-RING)	90-95	Y (LT5)	2 10106142
	1-L25	1.724	SEAL, O/PMP (O RING) (1.73 I.D. O RING)	90-95	Y (LT5)	1 10135870
435.		N.S.	SEAL, OIL PRESS REG VLV (O RING) (INR) (PART OF ITEM 432)			
436.		N.S.	VALVE, OIL PRESS RLF (PART OF ITEM 432)			
437.		N.S.	SEAL, OIL PRESS REG VLV (O RING) (OTR) (PART OF ITEM 432)			
438.		N.S.	HOUSING, OIL PRESS RLF VLV (PART OF ITEM 432)			
439.		N.S.	SPRING, OIL PRESS RLF VLV (OTR) (PART OF ITEM 432)			
440.		N.S.	SPRING, OIL PRESS RLF VLV (INR) (PART OF ITEM 432)			
441.		N.S.	RETAINER, OIL PRESS REG VLV (INR) (PART OF ITEM 432)			
442		N.S.	PLUG, OIL PRESS RLF VLV BORE (PART OF ITEM 432)			
443.	1-L23	1.609	RETAINER, OIL PRESS REG VLV (OTR) (ALSO PART OF ITEM 432)	90-95	Y (LT5)	1 10110941

© 2000 GENERAL MOTORS SERVICE PARTS OPERATIONS-CHEVROLET-14Y

							1Y00-028
444.	1-L25	1.724	SEAL, O/PMP (O RING) (.931 ID O-RING)	93-95	Y (LT5)	2	10106142
445.	1-L25	1.724	SEAL, O/PMP (O RING) (O-RING) (0.423)	93-95	Y (LT5)	1	10067538
446.	1-L27	1.800	SENSOR, ENG OIL T/GA (3 BLADE TERM) (W/IND SW) (3.662) (AC-DELCO #213-815)	92-95	Y (LT5)	1	10096161
	1-L27	1.800	SENSOR, ENG OIL T/GA (3 BLADE TERM, 1/4-18 THD) (AC-DELCO #10096136)	90-91	Y (LT5)	1	10096136
447.	1-L23	1.540	FITTING, ENG OIL CLR PIPE (HEX NUT)	90-95	Y (LT5)	2	14104403
448.		8.934	RETAINING RING, M22 BORE DIA, 1.0 THK	90-95		AR	9411714
449.	1-L27	1.800	RING, ENG OIL TEMP CONT VLV RET (8.934)	90-95	Y (LT5)	1	274843
450.	1-L23	1.540	PLUG, ENG OIL CLR BYPASS VLV (1.800)	90-95	Y (LT5)	1	10067688
451.	1-L23	1.540	VALVE, ENG OIL CLR BYPASS (1.800)	90-95	Y (LT5)	1	10067599
452.	1-L23	1.540	SEAT, ENG OIL CLR BYPASS VLV (1.800)	90-95	Y (LT5)	1	10067687
453.	1-L23	1.540	RING, ENG OIL CLR BYPASS VLV PLUG RET (1.800)	90-95	Y (LT5)	1	10067722
454.	1-M3	1.837	PLUG, OIL FLTR BYPASS HOLE (1.844)	90-95	Y (LT5)	2	10067690
455.	1-M3	1.837	SPRING, OIL FLTR BYPASS VLV (1.540)	90-95	Y (LT5)	2	10135808
456.	1-M3	1.837	VALVE, OIL FLTR BYPASS (1.540)	90-95	Y (LT5)	2	10067689
457.	1-L22	1.516	SEAL, OIL LVL IND TUBE	90-95	Y (LT5)	1	10106190
458.	1-L22	1.516	TUBE, OIL LVL IND	90-95	Y (LT5)	1	10135367
459.		8.900	BOLT, HFH, M8X1.25X45, 22 THD, 9.8, SF / (OIL LVL INDC TUB)	90-95		1	10067660
460.	1-L22	1.516	INDIC/ /OR, OIL LVL	90-95	Y (LT5)	1	10067418
461.	1-M2	1.836	FILTF H, OIL (FILTER, ENG OIL (BL/ CK)) (PF970C) (AC-DELCO #PF970C)	90-95	Y (LT5)	1	25014155
462.	1-L27	1.800	SENSOR, ENG OIL PRESS GA (3 TERMINALS:A, C, D) (AC-DELCO #D1808A)	90-95	Y (LT5)	1	12555492
463.	1-M9	2.277	BRACKET, GEN (BOTTOM)	93-95	Y (LT5)	1	10067686
465.	1-M3	1.840	ADAPTER, OIL FLTR (M20X1.5X24)	90-95	Y (LT5)	1	10067656
466.	1-M3	1.840	ADAPTER, OIL FLTR (1.837)	90-95	Y (LT5)	1	10146218
467.	1-M3	1.840	GASKET, OIL FLTR ADAP	90-95	Y (LT5)	1	10168686

RPO DEFINITIONS
LT1 – ENGINE-GAS, 8 CYL, 5.7L(5.7P),MFI,HO
LT5 – ENGINE,5.7L(5.7J),TPI

© 2000 GENERAL MOTORS SERVICE PARTS OPERATIONS-CHEVROLET-14Y

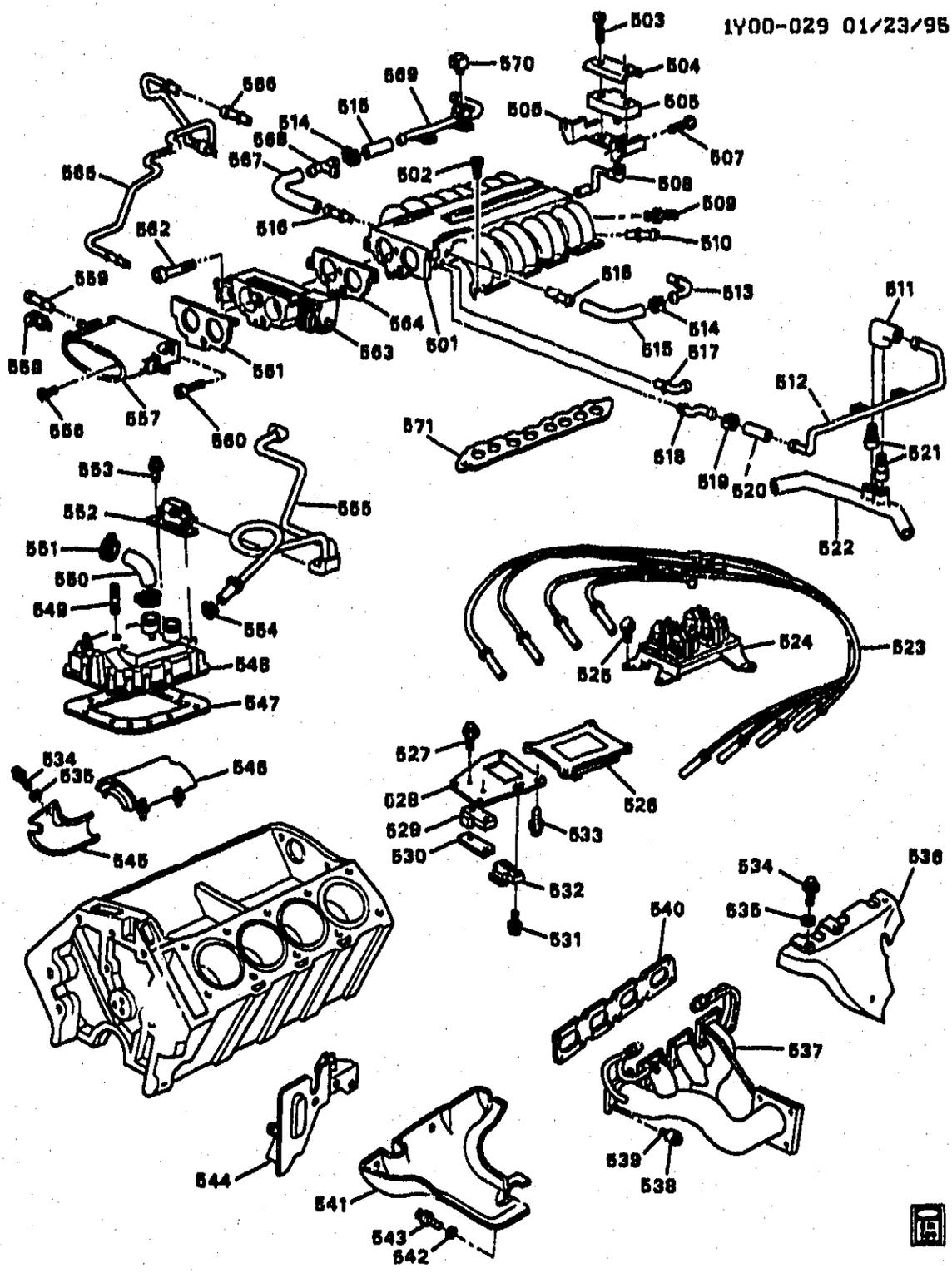

1Y00-029

1990-1995 Y ENGINE ASM-5.7L V8 PART 5 A MANIFOLDS AND FUEL RELATED PARTS (LT5/5.7J)

501.	1-M27	3.265	PLENUM, INT MANIF (W/O FITTINGS, HOSES, ETC.)	90-92	Y (LT5)	1	10090512
	1-M27	3.265	PLENUM, INT MANIF	93-95	Y (LT5)	1	12522045
502.	1-M27	3.265	BOLT, INT MANIF PLNM (M8X1.25X25) (8.913) (AC-DELCO #11514168)	90-95	Y (LT5)	12	11514168

© 2000 GENERAL MOTORS SERVICE PARTS OPERATIONS-CHEVROLET-14Y

							1Y00-029
503.	1-N21	3.682	BOLT, MAP SEN (TO BRKT) (5X.8X30, 28.4 THD, 5.9 OD, T25 TORX DR. 9.8 STL) (8.907)	90-95	Y (LT5)	2	11514491
504.	1-N21	3.682	COVER, MAP SEN (AC-DELCO #10090513)	90-95	Y (LT5)	1	10090513
505.	1-N21	3.682	SENSOR, MAP (1 PORT, 3 TERM, 2 BOLT HOLES) (AC-DELCO #213-185)	90	Y	1	16137039
	1-N21	3.682	SENSOR, MAP (1 PORT, 3 TERM, 2 BOLT HOLES) (AC-DELCO #213-185)	91-95	Y (LT5)	1	16137039
506.	1-N21	3.682	BRACKET, MAP SEN	90-95	Y (LT5)	1	10067781
507.	1-N21	3.682	BOLT, MAP SEN BRKT (TO PLENUM) (M6X1.0X13.0) (METRIC TORX HD) (8.913)	90-95	Y (LT5)	2	10192577
508.	1-N16	3.675	HOSE, MAP SEN VAC	90-95	Y (LT5)	1	10106118
509.	1-N26	4.931	FITTING, P/B BOOS VAC TUBE (1/4-18 NPTF W/3/8 NIPPLE) (1.745)	90-95	Y (LT5)	1	336018
510.	1-N24	3.886	CONNECTOR, CRCONT VAC HOSE (1/4" DIA) (1.020)	90-95	Y (LT5)	1	10067705
511.	1-L25	1.745	CONNECTOR, PCV VLV (1.762) .	90-95	Y (LT5)	1	10153503
512.	1-L26	1.762	PIPE, PCV VLV (PCV VALVE PLENUM)	93-95	Y (LT5)	1	10153501
513.	1-L14	1.020	ELBOW, PLNM COOL AIR BL (.0X19)	90-95	Y (LT5)	LH	10153519
514.		8.948	CLAMP 1/4X5/8, .320 WIDE BAND, WORM GEAR HEX (AC-DELCO #1648216)	90-95	.....	6	1648216
515.	1-N7	3.373	HOSE, PLNM COOL AIR BL	93-95	Y (LT5)	1	10153524
516.	1-N7	3.373	CONNECTOR, PLNM COOL AIR BL (LH/RH) (.43X1.7 LG)	93-95	Y (LT5)	2	10153518
517.	1-N7	3.373	CONNECTOR, PURGE RTN (TO PLNM)	90-95	Y (LT5)	1	10174347
518.	1-L26	1.762	CONNECTOR, PCV HOSE (TO PLNM) (1.750)	90-95	Y (LT5)	2	10110946
519.		8.948	CLAMP SPRG BAND, 14.2MM, 9/16 OD HOSE, POR	90-95	.....	2	25526358
520.		N.S.	HOSE, C/CASE VENT VLV PIPE .		.....		
521.	1-L25	1.745	VALVE, PCV (AC-DELCO #CV769C)	90-95	Y (LT5)	LH	6487532
	1-L25	1.745	VALVE, PCV (AC-DELCO #CV913C)	90-95	Y (LT5)	RH	25098197
522.	1-L26	1.762	HOSE, PCV (1.745)	90-95	Y (LT5)	1	10122196
523.	1-M5	2.239	WIRE KIT, SPLG (AC-DELCO #628D)	90-95	Y (LT5)	1	12073977
524.		N.S.	COIL, IGN (*1)		.....		
525.	1-M5	2.183	BOLT, IGN COIL (M8X1.25X20) (8.900)	93-95	Y (LT5)	2	12551177
	1-M5	2.183	BOLT, IGN COIL (HFH M6X1X16 9.8 POR 14 OD 14MM THD) (8.900)	93-95	Y (LT5)	2	11508805
526.	1-M11	2.383	MODULE, DISTR IGN CONT	90-95	Y (LT5)	1	1103841
527.	1-N21	3.682	BOLT, MAP SEN (DIFF PRESS SW MTG) (5X.8X30, 28.4 THD, 5.9 OD, T25 TORX DR. 9.8 STL) (8.907)	93-95	Y (LT5)	2	11514491
528.	1-N21	3.682	BRACKET, MDP SEN (3.671)	93-95	Y		10168022

© 2000 GENERAL MOTORS SERVICE PARTS OPERATIONS-CHEVROLET-14Y

							1Y00-029
529.	1-N21	3.682	SENSOR, MDP (AC-DELCO #16006834)	90-95	Y (LT5)	1	16006834
530.	1-N21	3.682	CLAMP, MDP SEN (1.750)	93-95	Y	1	10168670
531.		N.S.	BOLT, EGR VLV SIG MOD				
532.	1-N10	3.670	MODULE, EGR VLV REG SOL VLV SIG MODIFIER (AC-DELCO #216-31)	93-95	Y	1	16160359
533.	1-M11	2.383	BOLT, ELEK ICM (HEAVY HEX FLANGE HD) (HFH, M6X1X20, 19 THD, 14.2 OD, 9.8, 6280M, MACH HD PT) (8.900) (AC-DELCO #11517518)	90-92	Y (LT5)	4	11517518
	1-M11	2.383	BOLT, ELEK ICM ((6X1X20) (PE 9.8)) (8.900)	93-95	Y (LT5)	4	11514150
534.		8.977	SCREW, HWH TAP M6.3X1.81X13 13 OD PZOR (EXH MANIF HT OTR SHLD)	90-95		9	12336139
535.		8.929	WASHER, M6.3X16.75X1.5 PH (EXH MANIF HT OTR SHLD)	90-95		9	11500322
536.	1-N9	3.602	SHIELD, EXH MANIF OTR HT	90-91	Y (LT5)	LH	10128253
	1-N9	3.602	SHIELD, EXH MANIF OTR HT	92-95	Y (LT5)	LH	25129500
	1-N9	3.602	SHIELD, EXH MANIF OTR HT (RR)	93-95	Y (LT5)	RH	25034993
537.	1-N9	3.601	MANIFOLD, EXH	93-95	Y (LT5)	LH	25129492
	1-N9	3.601	MANIFOLD, EXH	93-95	Y (LT5)	RH	25143612
		DISCON	MANIFOLD, EXH (W/CTLTC CONV)	90-92	Y (LT5)	LH	25127591
	1-N9	3.601	MANIFOLD, EXH (WHEN USING ON 1990-1992 MDLS REFER TO CHEV SERV BULLETIN 776106 DTD 2-97 FOR ADDITIONAL INFORMATION.USE T/W 25129503 CTLC CONV)	90-92	Y (LT5)	RH	25143612
538.	1-N10	3.604	SPACER, EXH MANIF BOLT (.42X.68" STL) (6.606)	92-95	Y (LT5)	2	3983422
	1-N10	3.604	SPACER, EXH MANIF BOLT (9.8ID, 15.6 OD, 19THK, 6047M, 1035STL)	90-95	Y (LT5)	14	10110994
539.		8.900	BOLT, HFH, M8X1.25X45, 22 THD, 9.8, SST (EXH MANIF)	90-95		16	10067660
540.	1-M28	3.272	GASKET, EXH MANIF (3.270)	90-95	Y (LT5)	2	10187776
541.	1-N9	3.602	SHIELD, EXH MANIF INR HT	90-91	Y (LT5)	LH	10128251
	1-N9	3.602	SHIELD, EXH MANIF INR HT	90-92	Y (LT5)	RH	10128252
	1-N9	3.602	SHIELD, EXH MANIF INR HT	93-95	Y (LT5)	RH	25035039
	1-N9	3.602	SHIELD, EXH MANIF INR HT	93-95	Y (LT5)	LH	25129498
542.		8.929	WASHER, M6.3X16.75X1.5 PH (EXH MANIF HT INR SHLD)	90-95		6	11500322
543.		8.977	SCREW, HWH TAP M6.3X1.81X13 13 OD PZOR (EXH MANIF HT INR SHLD)	90-95		6	12336139
544.	1-M11	2.383	SHIELD, KNOCK SEN (LH)	90-95	Y (LT5)	1	10199007
	1-M11	2.383	SHIELD, CR/SHF POSN SEN (RH)	93-95	Y	RH	10168649
545.	1-N9	3.602	SHIELD, EXH MANIF OTR HT (FRT)	92-95	Y (LT5)	RH	25034884
546.	1-L27	1.780	BAFFLE, PCV (PART OF 548)	90-95	Y (LT5)	1	10199011
547.	1-L25	1.745	GASKET, CYL CASE VENT CVR	90-95	Y	1	10168682

© 2000 GENERAL MOTORS SERVICE PARTS OPERATIONS-CHEVROLET-14Y

						1Y00-029
548.	1-L26	1.745	COVER, PCV VLV (INCL 546, 549) (1.762)	90-95	Y (LT5)	1 10168603
549.	1-L26	1.762	STUD, C/BLK VENT VAC RSVR (PART OF 548) (M6X1.0-THD)	90-95	Y (LT5)	2 10110936
550.	1-L26	1.762	HOSE, PCV VLV	90-95	Y (LT5)	LH 10110907
	1-L26	1.762	HOSE, PCV VLV	90-95	Y (LT5)	RH 10110908
551.	1-L26	1.750	CLAMP PCV TUBE (26.6-66.2 DIA WORM GEAR) (6.948) (AC-DELCO #12338017)	90-95	Y (LT5)	1 12338017
552.	1-M25	3.130	VALVE, EVAP EMIS CNSTR PURGE SOL (3.140) (AC-DELCO #214-375)	90	Y	1 1997161
	1-M25	3.130	VALVE, EVAP EMIS CNSTR PURGE SOL (AC-DELCO #214-565)	90	Y (LT5)	1 1997201
	1-M25	3.130	VALVE, EVAP EMIS CNSTR PURGE SOL (2 PORT VAC, 2 BLADE TERM) (AC-DELCO #214-565)	91-95	Y	1 1997201
	1-M25	3.130	BRACKET, EVAP EMIS CNSTR PURGE SOL VLV	90-95	Y (LT5)	1 10174301
	1-M25	3.130	BRACKET, EVAP EMIS CNSTR PURGE SOL VLV (3.145)	91	Y	1 10137634
553.		8.913	SCREW, PAN HD TORX, M4X.7X3, 7.3 TD, 9.8, PE (PURGE SOL VLV)	90-95		2 11514253
554.		6.948	CLAMP SPRG BAND, 14.2MM, 9/16 OD HOSE, POR (VENT VLV HOSE)	90-95		1 25526358
555.	1-L26	1.762	HOSE, PCV VLV (W/CONNECTOR)	93-95	Y (LT5)	1 10174350
556.	1-N3	3.314	BOLT, THROT BODY ACTR (BUTN HD 6 LOBED SOC) (PART OF 557) (M5X0.8X22) (3.407)	90-95	Y (LT5)	4 10110934
	1-N7	3.407	RETAINER, A/CL OTLT DUCT ADAP BOLT (PART OF 557)	90-95	Y (LT5)	4 10110935
557.	1-N4	3.335	HORN, THROT BODY AIR (INCL 556, 559) (3.407)	90	Y (LT5)	1 10140623
	1-N4	3.335	HORN, THROT BODY AIR (INCL 556, 559)	91-95	Y (LT5)	1 12509722
558.	1-N21	3.682	SENSOR, INT AIR TEMP (2 BLADE TERM, 3/8-18 THD) (STAMPED AC12V) (AC-DELCO #213-190)	90-95	Y (LT5)	1 25036751
559.	1-N7	3.407	CONNECTOR, THROT BODY (TO CAM CVR) (1/2" DIA) (PART OF 557)	90-95	Y (LT5)	2 10067708
560.	1-N23	3.726	BOLT, TBI ADAP (M5X.8X16 THD PT 4.8 T25) (8.913)	93-95	Y	2 11514492
561.	1-N5	3.336	GASKET, THROT BODY (INTAKE) (3.335)	93-95	Y (LT5)	1 10067759
562.	1-N5	3.336	BOLT, THROT BODY (TO PLENUM) (M8X1.25X35)	90-95	Y (LT5)	2 11514493
	1-N5	3.336	BOLT, THROT BODY (TO PLENUM) (M8X1.25X70, 38 THD, 9.8, PE) (8.913)	91-95	Y (LT5)	3 11514556
563.	1-N24	3.729	BODY KIT, THROT (*2) (3.335) (AC-DELCO #17112264)	90-95	Y (LT5) (FOR MDL APPL AND POA SEE THROT BODY CHT)	1 17112264

© 2000 GENERAL MOTORS SERVICE PARTS OPERATIONS-CHEVROLET-14Y

							1Y00-029	
564.	1-N5	3.336	GASKET, THROT L CY (PLENUM)	93-95	Y (LT5)		1	10168660
565.	1-N24	3.886	HOSE, CRCONT VAC (1.0 PLENUM)	90-95	Y (LT5)		1	10110989
566.	1-N24	3.886	CONNECTOR, CRCONT VAC HOSE (1/4" DIA) (1.020)	90-95	Y (LT5)		1	10067705
567.	1-N7	3.373	HOSE, PLNM COOL AIR BL	93	Y (LT5)		1	10153524
	1-N7	3.373	HOSE, PLNM COOL AIR BL (FRT)	94-95	Y (LT5)		RH	10225109
568.	1-N7	3.373	CONNECTOR, PLNM COOL AIR BL (TEE)	93-95	Y (LT5)		1	10153526
569.	1-N7	3.373	PIPE, COOL AIR BL	90-95	Y (LT5)		RH	10187790
570.	1-L19	1.173	CLIP, COOL AIR PURGE PIPE	90-95	Y (LT5)		1	10187787
571.	1-N3	3.305	GASKET, F/INJR HSG	93-95	Y			10168684

NOTE 1: SEE DISTRIBUTOR/IGNITION ILLUSTRATION IN GROUP 2.000 FOR DETAILS.
NOTE 2: SEE THROTTLE BODY/MPFI ILLUSTRATION IN GROUP 3.000 FOR DETAILS.

RPO DEFINITIONS
LT5 – ENGINE,5.7L(5.7J),TPI

© 2000 GENERAL MOTORS SERVICE PARTS OPERATIONS-CHEVROLET-14Y

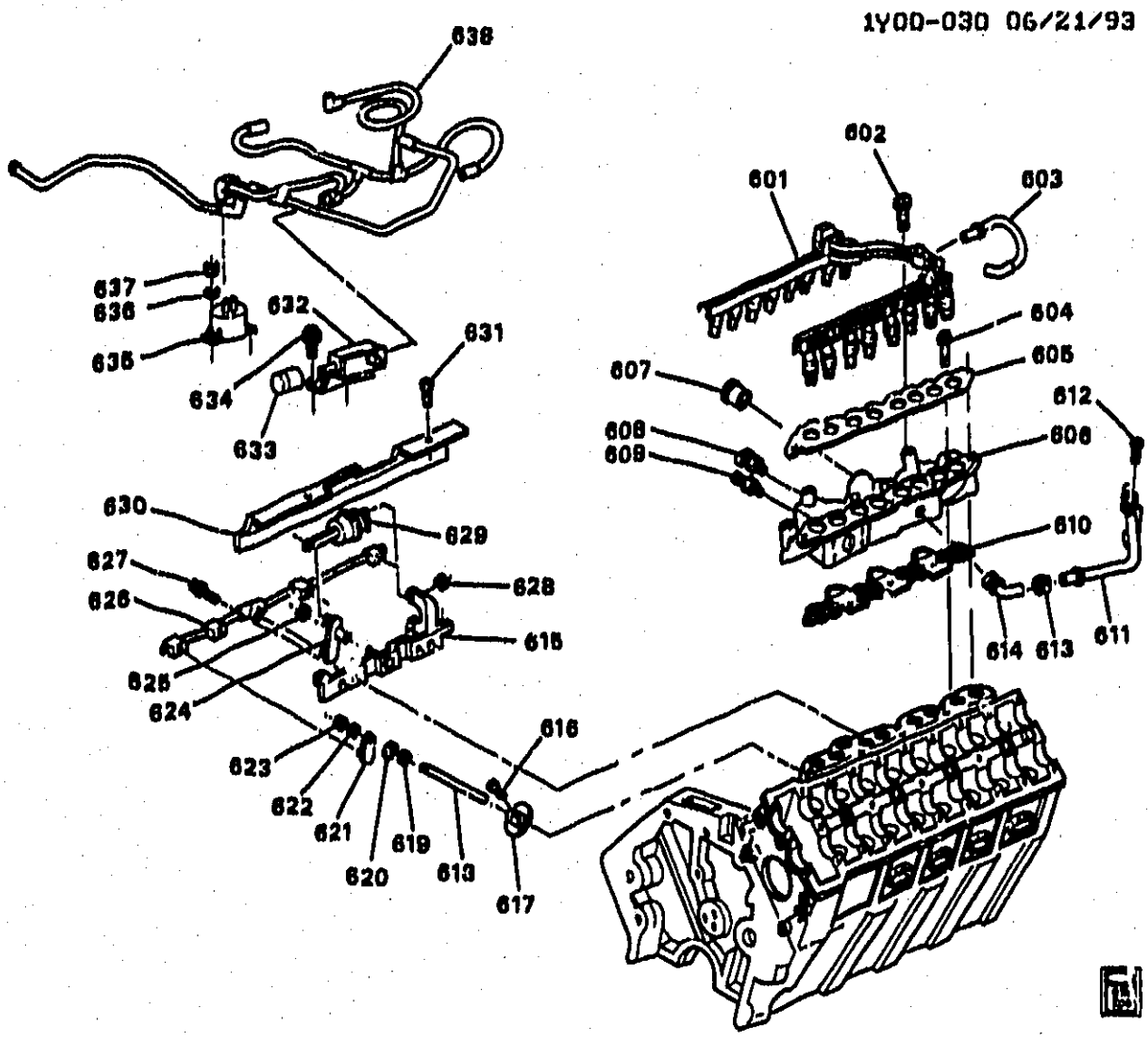

1Y00-030

1990-1995 Y ENGINE ASM-5.7L V8 PART 5 B MANIFOLDS AND FUEL RELATED PARTS (LT5/5.7J)

601.		N.S.	RAIL, M/PORT F/INJN FUEL (*1)				
602.	1-N3	3.330	BOLT, F/INJN FUEL RL (M8X1.25X16 17.6.9.8PZOR) (8.900)	90-95	Y (LT5)	4	11516166
603.	1-M27	3.163	HOSE, CARB FUEL FEED	90-95	Y (LT5)	1	10110987
604.	1-N3	3.305	BOLT, F/INJR HSG (8X1.25X55, 22 THD, 18 OD, 9.8, PZOR, MACH) (1.840)	90-95	Y (LT5)	2	3522444
	1-N3	3.305	BOLT, F/INJR HSG (8X1.25X70) (8.900)	90-95	Y (LT5)	16	11509516
605.	1-N3	3.305	GASKET, F/INJR HSG (TO PLENUM)	93-95	Y (LT5)	2	10168684
606.	1-N3	3.305	HOUSING, F/INJR (INCL 607) . . .	90	Y (LT5)	LH	10159505
	1-N3	3.305	HOUSING, F/INJR (INCL 607) . . .	90	Y (LT5)	RH	10159506
	1-N3	3.305	HOUSING, F/INJR (INCL 607) (1ST DES FOR 91, FOR 2ND DES SEE 12507649, 1ST DES ID BY INJR HOLE PLUGS, 2ND DES W/O INJR HOLE PLUGS)	91-92	Y (LT5) (1ST DES)	LH	10159505

© 2000 GENERAL MOTORS SERVICE PARTS OPERATIONS-CHEVROLET-14Y

							1Y00-030
	1-N3	3.305	HOUSING, F/INJR (INCL 607) (1ST DES FOR 91, FOR 2ND DES SEE 12507650, 1ST DES ID BY INJR HOLE PLUGS, 2ND DES W/O INJR HOLE PLUGS)	91-92	Y (LT5) (1ST DES)	RH	10159506
	1-N3	3.305	HOUSING, F/INJR (INCL 607) (2ND DES FOR 91, FOR 1ST DES SEE 10159505, 1ST DES ID BY INJR HOLE PLUGS, 2ND DES W/O INJR HOLE PLUGS)	91-92	Y (LT5) (2ND DES)	LH	12507649
	1-N3	3.305	HOUSING, F/INJR (INCL 607) (2ND DES FOR 91, FOR 1ST DES SEE 10159506, 1ST DES ID BY INJR HOLE PLUGS, 2ND DES W/O INJR HOLE PLUGS)	91-92	Y (LT5) (2ND DES)	RH	12507650
	1-N3	3.305	HOUSING, F/INJR (INCL 607) ...	92	Y (LT5)	LH	10153541
	1-N3	3.305	HOUSING, F/INJR (INCL 607) ...	92	Y (LT5)	RH	10153542
	1-N3	3.305	HOUSING, F/INJR (INCL 607) ...	93-95	Y (LT5)	LH	12522327
	1-N3	3.305	HOUSING, F/INJR (INCL 607) ...	93-95	Y (LT5)	RH	12522328
607.	1-L26	1.762	CONNECTOR, PCV TUBE (PART OF 606) (3.305)	90-95	Y (LT5)	1	10110911
608.	1-L17	1.150	SENSOR, ENG COOL TEMP (UND PLENUM) (USED FOR CLUSTERS W/OIL GAGE & LGT COMB) (2-WAY M) (3.682) (AC-DELCO #213-310)	90-95	Y	1	12146312
609.	1-L17	1.150	SENSOR, ENG COOL T/GA (3/8-18 THD, COLLAR BUTTON) (AC-DELCO #213-80)	90-95	Y (LT5)	1	25037346
	1-L17	1.150	SENSOR, ENG COOL T/GA (LOCK BLADE, 3/8-18 THD (MAY ALSO REQ TERM #6288704 TO ENABLE CHANGE FROM BUTTON TO BLADE TERM) (AC-DELCO #D1885) ...	90	Y	1	8993146
	1-L17	1.150	SENSOR, ENG COOL T/GA (LOCK BLADE, 3/8-18 THD) (MAY ALSO REQ TERM #6288704 TO ENABLE CHANGE FROM BUTTON TO BLADE TERM) (AC-DELCO #D1885) ...	91	Y (LT5)	1	8993146
610.	1-N3	3.305	GASKET, F/INJR HSG (TO CYL HD)	93-94	Y (LT5)	2	10225120
611.	1-L26	1.762	PIPE, PCV VLV (INJ HSG TO PCV VLV) (1.745)	93-94	Y (LT5)	RH	10146296
	1-L26	1.762	PIPE, PCV VLV (INJ HSG TO PCV VLV) (1.745)	93-94	Y (LT5)	LH	10146295
612.		8.900	BOLT-METRIC HEAVY HEX FLANGE HEAD	90-95	.....	1	11516061
613.		8.948	CLAMP, WORM GEAR, 1/2-13/16 (PCV TUBE HOSE) ...	90-95	.....	5	22527587
614.	1-L25	1.745	GROMMET, PCV VLV (15/32I.D. X 25/32O.D)	90-95	Y (LT5)	2	14078872
615.	1-N6	3.338	BRACKET, INT MANIF RUNNER C/VLV ACTR (3.415)	90-95	Y (LT5)	1	10146242
616.	1-N6	3.338	BOLT, INT MANIF RUNNER C/VLV (M3X0.5X5) (3.302)	90-95	Y (LT5)	16	11514887
617.	1-N6	3.338	VALVE, INT MANIF RUNNER CONT (3.302)	90-95	Y (LT5)	8	10135872

© 2000 GENERAL MOTORS SERVICE PARTS OPERATIONS-CHEVROLET-14Y

							1Y00-030
618.	1-N6	3.338	SHAFT, INT MANIF RUNNER C/VLV (3.302)	90-95	Y (LT5)	8	10122112
619.	1-N6	3.338	SEAL, INT MANIF RUNNER C/VLV SHF (3.335)	90-95	Y (LT5)	8	10135892
620.	1-N6	3.338	BEARING, INT MANIF RUNNER C/VLV SHF (3.302)	90-95	Y (LT5)	8	10122114
621.	1-N6	3.338	LEVER, INT MANIF RUNNER C/VLV (3.415)	90-95	Y (LT5)	8	10122108
622.	1-N6	3.338	WASHER, INT MANIF RUNNER C/VLV LVR (3.314)	90-95	Y (LT5)	8	10135893
623.	1-N6	3.338	NUT, INT MANIF RUNNER C/VLV LVR (M4X0.7-6H) (3.415)	90-95	Y (LT5)	8	10122113
624.	1-N6	3.338	LEVER, INT MANIF RUNNER C/VLV ACTR (3.415)	90-95	Y (LT5)	2	10122102
625.	1-N6	3.338	RETAINER, INT MANIF RUNNER C/VLV ACTR LVR (PUSH ON) (3.415)	90-95	Y (LT5)	2	10228856
626.	1-N6	3.338	LINK, INT MANIF RUNNER C/VLV (3.415)	90-95	Y (LT5)	2	10122105
627.	1-N21	3.682	BOLT, SECD PORT THROT VLV BRKT (M6X1.0X13.0) (METRIC TORX HD) (8.913)	90-95	Y (LT5)	4	10192577
628.		8.917	NUT, HEX FLG M5X0.8 GRD 9 ZP (VAC ACTR (TO INLT CONT BRKT))	90-95		4	11514252
629.	1-N6	3.338	ACTUATOR, INT MANIF RUNNER C/VLV (3.314)	90-95	Y (LT5)	2	1996743
630.	1-N6	3.338	COVER, INT MANIF RUNNER C/VLV LNKG (3.415)	90-95	Y (LT5)	2	10110525
631.	1-N7	3.415	BOLT, SECD FUEL INJN AIR CONT VLV LNKG CVR (M4.7X8-7.3 THD 9.8 PE) (8.913)	90-95	Y (LT5)	4	11514253
632.	1-N4	3.335	VALVE, INT MANIF RUNNER C/VLV ACTR SOL (AC-DELCO #1997222)	90-95	Y (LT5)	1	1997222
633.	1-N15	3.671	FILTER, EGR VAC REG SOL VLV (AC-DELCO #219-14)	90-92	Y (LT5)	1	1977796
	1-N15	3.671	FILTER, EGR VAC REG SOL VLV (3.670) (AC-DELCO #219-16)	93-95	Y (LT5)	1	10159525
634.	1-N4	3.335	BOLT, SOL (TO CYL CASE) (HFH M6X1X16 9.8 POR 14 OD 14MM THD) (8.900)	90-95	Y (LT5)	1	11508805
635.	1-N6	3.338	TANK, INT MANIF RUNNER C/VLV ACTR VAC (3.682)	90-95	Y (LT5)	1	10067563
636.	1-N2	3.280	WASHER, SECD PORT THROT VAC ACTR RSVR (M6.3X16.75X1.5 PH) (8.929)	90-95	Y (LT5)	2	11500322
637.	1-N2	3.280	NUT, SECD PORT THROT VAC ACTR RSVR (PREV TORQ (STYLE-1) (M6X1, 5.9, 510M (10), CA) (NUT-HEX LOCK, PREV TORQ) (8.917) (AC-DELCO #11503749)	90-95	Y (LT5)	2	11503749
638.	1-N6	3.338	HOSE, INT MANIF RUNNER C/VLV ACTR VAC (3.415)	90-92	Y (LT5)	1	10146221
	1-N6	3.338	HOSE, INT MANIF RUNNER C/VLV ACTR VAC (3.415)	93-95	Y (LT5)	1	10168624

NOTE 1: SEE FUEL INJECTOR RAIL ILLUSTRATION IN GROUP 3.000 FOR DETAILS.

© 2000 GENERAL MOTORS SERVICE PARTS OPERATIONS-CHEVROLET-14Y

© 2000 GENERAL MOTORS SERVICE PARTS OPERATIONS–CHEVROLET–14Y

MICROFICHE INDEX

GROUPS 0.000 & 21.000

FICHE 1 OF 11

GROUP	DESCRIPTION	STARTING GRID LOCATION PARTS	ILLUSTRATIONS
–	GENERAL INFORMATION	1–A2	1–G2
–	ALPHABETICAL INDEX	1–B13	N.A.
0.000	8–CYLINDER ENGINE	1–E2	1–G5
21.000	ACCESSORY REFERENCE LIST	1–D2	N.A.
–	OUT OF FICHE CALLS	N.A.	1–L13

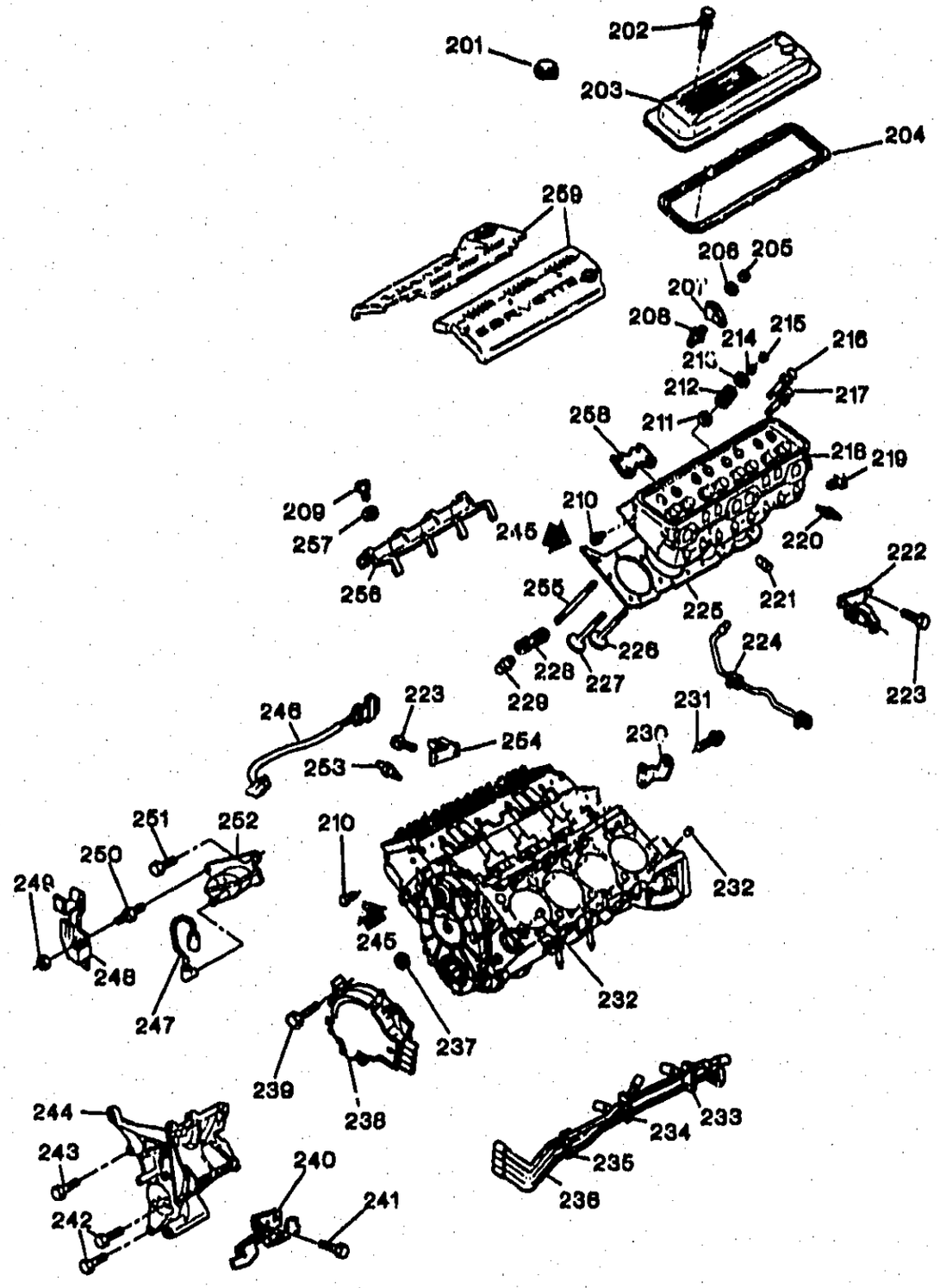

1Y00-024

1992 Y ENGINE ASM-5.7L V8 PART 2 CYLINDER HEAD AND RELATED PARTS (LT1/5.7P)

201.	1-L26	1.758	CAP, OIL FIL (AC-DELCO #FC158)	92 Y (LT1)	1	10108650
202.	1-F2	0.413	BOLT, VLV RKR ARM CVR (W/WASHER) (1/4X20X88)	92 Y (LT1)	8	10088165
203.	1-E28	0.386	COVER, VLV RKR ARM	92 Y (LT1)	RH	10055782
	1-E28	0.386	COVER, VLV RKR ARM	92 Y (LT1)	LH	10108590

© 2000 GENERAL MOTORS SERVICE PARTS OPERATIONS-CHEVROLET-14Y

							1Y00-024
204.	1-F2	0.420	GASKET, VLV RKR ARM CVR (*KIT1)	92	Y (LT1)	2	14088564
205.		0.429	NUT, VLV RKR ARM (ALSO PART OF 207)	92			
206.		N.S.	BALL, VLV RKR ARM (PART OF 207)				
207.	1-E28	0.333	ARM KIT, VLV RKR (W/BALL KIT) (INCL 205, 206) (STD THREADS) (INCLS ARM, BALL & NUT)	92	Y (LT1)	16	10069648
208.	1-F3	0.429	STUD, VLV RKR ARM BALL	92	Y (LT1)	16	10168410
209.		8.900	BOLT, HEX 5/16-18X5/8 Z 280M (VLV LFTR GDE RET)	92		AR	
210.	1-E24	0.293	PLUG, CYL HD CORE HOLE (1/4-18X.44 AM STD PIPE THD, STL, CZ) (1/4-18X.44 AM STD PIPE THD, STL, CZ (USED W/SEALER) (8.971)	92	Y (LT1)	AR	144011
211.	1-E26	0.303	SHIM, VLV SPR (0.519)	92	Y (LT1)	16	10168423
212.	1-E26	0.303	SPRING, VLV	92	Y (LT1)	16	10206040
213.	1-E27	0.308	SEAL, VLV STEM OIL (*KIT1)	92	Y (LT1)	16	10128383
214.	1-E27	0.309	CAP, VLV SPR	92	Y (LT1)	16	10168424
215.	1-E28	0.310	KEY, VLV STEM	92	Y (LT1)	32	24503856
216.	1-E24	0.293	BOLT, CYL HD (MED (7/16-14 X 3 1/16, 300M)	92	Y (LT1)	4	14088946
217.	1-E24	0.293	BOLT, CYL HD (7/16-14 X 3 51/64) (LONG 7/16-14 X 3 51/64, 300M)	92	Y (LT1)	14	10168525
218.		DISCON	HEAD, CYL	92	Y (LT1)	2	10205244
219.	1-E24	0.293	BOLT, CYL HD (SHORT (7/16 X 1 3/4, PZOR, .78 O.D.) (7/16-14 X 1.62)	92	Y (LT1)	16	10168527
220.	1-M9	2.270	SPARK PLUG, (41-904) (AC-DELCO #41-904)	92	Y (LT1)	8	5614238
221.	1-E24	0.293	PLUG, CYL HD CORE HOLE (FRT) (AUTO DRAIN, INT SQ, 3/8-18X.42 PEOR STL) (8.971)	92	Y (LT1)	LH	14090911
222.	1-M8	2.251	SUPPORT, SPLG WIRE	92	Y (LT1)	LH	10096186
223.	1-M8	2.251	BOLT, SPLG WIRE SUPT (8.900)	92	Y (LT1)	8	9439930
224.	1-L16	1.097	PIPE, ENG COOL AIR BL	92	Y (LT1)	1	10108636
225.	1-E23	0.289	GASKET, CYL HD (*KIT1)	92	Y (LT1)	2	10168457
226.	1-E26	0.297	VALVE, EXH (.0155 O.S.)	92	Y (LT1)	8	10168516
	1-E26	0.297	VALVE, EXH (.0035"O.S.)	92	Y (LT1)	8	10168515
	1-E26	0.297	VALVE, EXH (STD) (STD)	92	Y (LT1)	8	10168514
227.	1-E25	0.296	VALVE, INT (.0035"O.S.)	92	Y (LT1)	8	10168466
	1-E25	0.296	VALVE, INT (.0305"O.S.)	92	Y (LT1)	8	10168468
	1-E25	0.296	VALVE, INT (STD)	92	Y (LT1)	8	10168465
228.	1-F3	0.439	GUIDE, VLV LFTR	92	Y (LT1)	8	12550002
	1-F3	0.439	GUIDE, VLV LFTR PUSH ROD (W/ALUM HEADS ONLY)	92	Y (LT1)	8	10111771
229.	1-F3	0.459	LIFTER, VLV (RLR) (AC-DELCO #HL112)	92	Y (LT1)	16	5234890
230.		N.S.	BRACKET, ENG LIFT RR				
231.	1-E16	0.004	BOLT, ENG LIFT RR BRKT (3/8-16X3/4) (8.900)	92	Y (LT1)	3	9442052
232.	1-E24	0.293	PIN, CYL HD LOC (PIN (5/16 X 9/16) (5/16X9/16 STL) (*2) (8.939) (AC-DELCO #585927)	92	Y (LT1)	4	585927

© 2000 GENERAL MOTORS SERVICE PARTS OPERATIONS-CHEVROLET-14Y

233.	1-M8	2.251	RETAINER, SPLG WIRE (W/COVER, (2-WIRE)	92	Y (LT1)	AR	12043158
234.	1-M8	2.251	RETAINER, SPLG WIRE (4/WIRE) (AC-DELCO #8073)	92	Y (LT1)	AR	12073948
235.	1-M8	2.251	RETAINER, SPLG WIRE (4-WIRE) (CLIP, LWR)	92	Y (LT1)	AR	12059510
	1-M8	2.251	RETAINER, SPLG WIRE (4-WIRE, BRKT MT, TWO LK PIN TOP)	92	Y (LT1)	AR	12059514
236.	1-M5	2.239	WIRE KIT, SPLG (INCL 250) (AC-DELCO #708W)	92	Y (LT1)	1	12074093
237.	1-M11	2.372	SEAL, DISTR DRV SHF (IN ENG FRT CVR)	92	Y (LT1)	1	10128317
238.	1-M10	2.361	DISTRIBUTOR, (CONTAINS 2 WATER PUMP GASKETS (SEE PART 3) .) (*1) (AC-DELCO #10457702)	92	Y (LT1)	1	10457702
239.	1-M10	2.363	BOLT, DISTR (HFH, 1/4-20X2, .75 THD, .52 OD, 280M, PO) (8.900)	92	Y (LT1)	3	9442398
240.	1-M8	2.251	SUPPORT, SPLG WIRE	92	Y (LT1)	1	10137631
241.	1-M8	2.251	BOLT, SPLG WIRE SUPT (M8X1.25X16 17,6.9.8PZOR) (8.900)	92	Y (LT1)	2	11516186
242.	1-M9	2.277	BOLT, GEN BRKT (HFH, 3/8-16X1.75, 1.12-THD LEN 0.75-OD, 300M, POR) (3/8-16X1.75, 1.12-THD) (8.900)	92	Y (LT1)	2	9441560
243.	1-M9	2.277	BOLT, GEN BRKT (HFH 3/8-16X2.00 280M POR 6174M) (8.900)	92	Y (LT1)	1	9440073
244.	1-M9	2.277	BRACKET, GEN & A/C CMPR & P/S PUMP	92	Y (LT1)	1	12550052
245.		8.800	SEALANT-LOCTITE PIPE-W/TEFLON 50CC TUBE ...	92	.....	AR	1052080
246.		DISCON	HARNESS, DISTR WRG (2.240) .	92	Y (LT1)	1	12106522
247.		N.S.	HARNESS, IGN COIL WRG (PART OF 236)		.....		
248.	1-N26	6.635	BRACKET, P/S FLUID RSVR	92	Y (LT1)	1	10157972
249.	1-N26	6.635	NUT, P/S FLUID RSVR BRKT (3/8-16 PC, 286M) (HEX, FLANGE) (3.917)	92	Y (LT1)	1	9442958
250.	1-M5	2.183	STUD, IGN COIL (STUD, HEX 3/8-16X.80-3/8-16X.80 300M POR) (8.981)	92	Y (LT1)	1	14057279
251.	1-M5	2.183	BOLT, IGN COIL (3/8-16X3/4) (8.900)	92	Y (LT1)	3	9442052
252.	1-M5	2.170	COIL, IGN (*1) (AC-DELCO #D535)	92	Y (LT1)	1	1115315
253.	1-L17	1.150	SENSOR, ENG COOL T/GA (2 BLADE TERM) (3/8-18 THD) (2 TERM, CAN BE USED AS 1 TERM CONN) (AC-DELCO #213-77)	92	Y (LT1)	1	25037332
254.	1-M8	2.251	SUPPORT, SPLG WIRE	92	Y (LT1)	RH	10096185
255.	1-F3	0.426	ROD, VLV PUSH (INCLS INSERTS)	92	Y (LT1)	16	10046173

© 2000 GENERAL MOTORS SERVICE PARTS OPERATIONS-CHEVROLET-14Y

							1Y00-024
256.	1-F3	0.459	RETAINER, VLV LFTR GDE (1 PC) (RESTRICTOR)	92	Y (LT1)	1	14101116
257.		8.929	WASHER (VLV LFTR GDE RET) ..	92	.....	3	120386
258.	1-F3	0.439	GUIDE, VLV LFTR PUSH ROD ...		W/ALUM HEADS ONLY	1	10111771
259.	1-N3	3.330	COVER, F/INJN FUEL RL	92	Y (LT1)	LH	10224935
	1-N3	3.330	COVER, F/INJN FUEL RL	92	Y (LT1)	RH	10224936

SERVICE KITS

1.	1-E23	0.269	GASKET KIT, CYL HD (INCL 204, 213, 225) (KIT INCLUDES: GASKETS FOR CYLINDER HEAD, INTAKE AND EXHAUST MANIFOLD, EGR VALVE, THROTTLE BODY, VALVE COVERS AND VALVE STEM SEALS.)	92	Y (LT1)	1	12518047
	1-E23	0.269	GASKET KIT, CYL HD (INCL 204, 213, 225) (KIT INCLUDES: GASKETS FOR CYLINDER HEAD, INTAKE AND EXHAUST MANIFOLD, EGR VALVE, THROTTLE BODY, VALVE COVERS AND VALVE STEM SEALS.)	92	Y (LT1)	1	12524675

NOTE 1: SEE 2.000 GROUP FOR DETAILED ILLUSTRATED VIEW.
NOTE 2: ALSO PART OF PARTIAL ENGINE ASSEMBLY (SEE PART 1).

RPO DEFINITIONS
LT1 – ENGINE–GAS, 8 CYL, 5.7L(5.7P),MFI,HO

© 2000 GENERAL MOTORS SERVICE PARTS OPERATIONS–CHEVROLET–14Y

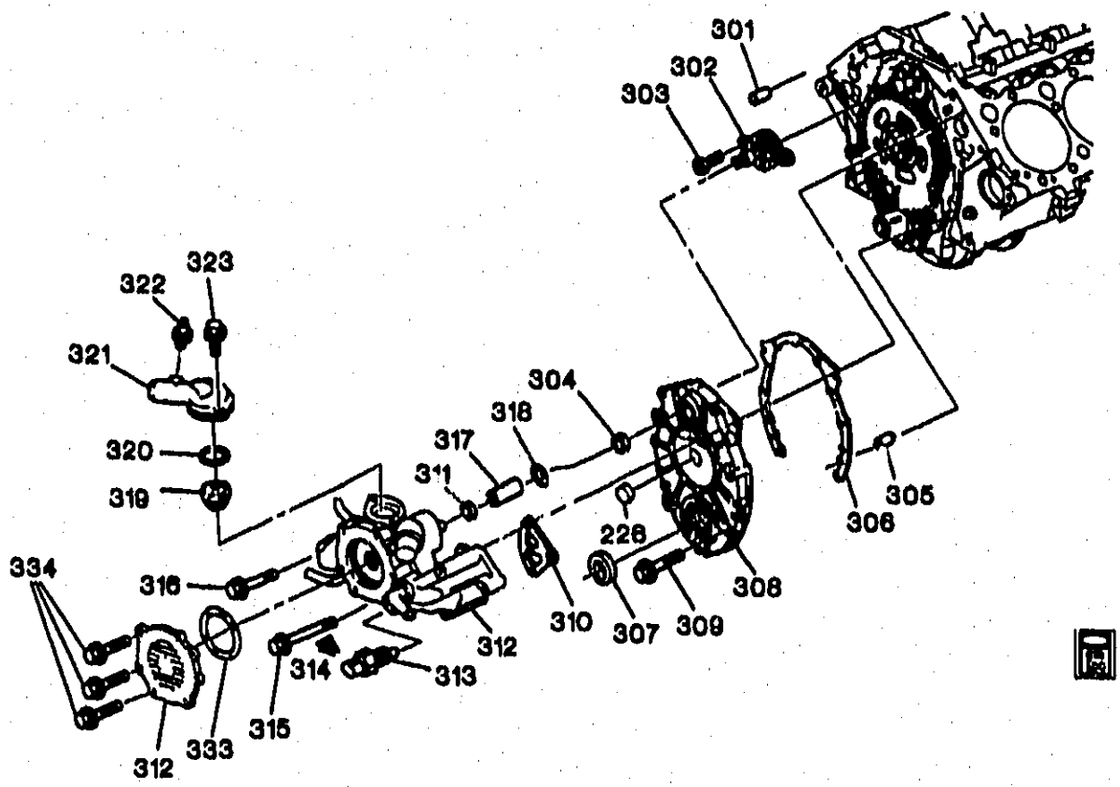

GM00-193

1992-1995 Y ENGINE ASM-5.7L V8 PART 3 FRONT COVER & COOLING (LT1/5.7P)

226.	1-M11	2.372	SEAL, DISTR DRV SHF (PART OF 308) (2.363)	95	Y (LT1)	1	12552428
	1-M11	2.372	SEAL, DISTR DRV SHF (IN ENG FRT CVR) (PART OF 308)	92-94	Y (LT1)	1	10128317
301.	1-L16	1.079	PIN, W/PMP LOC (DOWELL, 0.31X1.25, STL-HRD, PL, CHAM ENDS)	92-95	Y (LT1)	1	10128487
302.	1-L17	1.105	SHAFT, W/PMP DRV	92-95	Y (LT1)	1	10219554
303.	1-L17	1.105	BOLT, W/PMP DRV SHF BRG RET (HEX SOC TORQ DR 1/4-20 X 1/2, 15/32 OD) (0.529)	92-95	Y (LT1)	2	14093637
304.	1-L17	1.123	SEAL, W/PMP BRG (ALSO PART OF 308)	92-95	Y (LT1)	1	10217886
305.	1-E22	0.206	PIN, ENG FRT CVR LOC (1/4 X 5/8) (*1) (8.939)	92-95	Y (LT1)	2	12554553
306.	1-E22	0.207	GASKET, ENG FRT CVR	92-95	Y (LT1)	1	10128293
307.	1-E23	0.213	SEAL, CR/SHF FRT OIL (ALSO PART OF 308) (61.5MM O.D. W/PART NUMBER STAMPING) ..	92-95	Y (LT1)	1	10128316
308.	1-E22	0.206	COVER, ENG FRT (INCL 304, 307)	92-94	Y (LT1)	1	12551636
	1-E22	0.206	COVER, ENG FRT (INCL 304, 307)	95	Y (LT1)	1	12552426
309.	1-E22	0.206	BOLT, ENG FRT CVR (HFH, 1/4-20X1.33, .52 OD, .75 THD, 280M, PO) (0.137)	92-94	Y (LT1)	8	14096659

© 2000 GENERAL MOTORS SERVICE PARTS OPERATIONS-CHEVROLET-14Y

	1-E22	0.206	BOLT, ENG FRT CVR ((1/4-20X1 3/8 .52 OD, .75 THD, 280M, PO)) (8.900)	95	Y (LT1)	1	9442397
310.	1-L16	1.079	GASKET, W/PMP (ALSO PART OF 312) (ALSO PART OF DISTRIBUTOR ASSEMBLY (SEE PART 2) .)	92-95	Y (LT1)	2	10128343
311.	1-L17	1.105	SEAL, W/PMP DRV SHF	92-95	Y (LT1)	1	12553792
312.	1-L15	1.069	PUMP KIT, WAT (INCL 310) (AC-DELCO #251-537)	92	Y (LT1)	1	12529560
	1-L15	1.069	PUMP WAT (W/GASKET) (INCL 310) (AC-DELCO #251-554)	93-95	Y (LT1)	1	12527739
313.	1-N21	3.682	SENSOR, ENG COOL TEMP (UND PLENUM) (USED FOR CLUSTERS W/OIL GAGE & LGT COMB) (2-WAY M) (AC-DELCO #213-310)	92-95	Y	1	12146312
	1-L17	1.150	SENSOR, ENG COOL TEMP (UND PLENUM) (USED FOR CLUSTERS W/OIL GAGE & LGT COMB) (2-WAY M) (3.682) (AC-DELCO #213-310)	92-95	Y	1	12146312
314.		8.800	SEALANT-LOCTITE PIPE-W/TEFLON 50CC TUBE	92-95		AR	12346004
315.	1-L16	1.079	BOLT, W/PMP (USED W/SEALANT) (8.900)	92-95	Y (LT1)	4	9423592
316.	1-L16	1.079	BOLT, W/PMP (HFH 3/8-16X2.00 280M POR 6174M) (8.900)	92-95	Y (LT1)	2	9440073
317.	1-L17	1.105	COUPLING, W/PMP DRV SHF	92-95	Y (LT1)	1	10128334
318.	1-L17	1.105	SEAL, W/PMP DRV SHF	92-95	Y (LT1)	1	12553792
319.	1-L19	1.246	THERMOSTAT, ENG COOL (180 DEG) (INCL 320) (AC-DELCO #131-100)	92-95	Y (LT1)	1	12555290
320.	1-L19	1.252	SEAL, ENG COOL THERM (O RING) (ALSO PART OF 319) (AC-DELCO #12553106)	92-95	Y (LT1)	1	12553106
321.	1-L16	1.073	INLET, W/PMP (W/THERM HSG & BLEDR SCREW) (INCL 322)	92-95	Y (LT1)	1	10108667
322.	1-L14	1.035	VALVE, ENG COOL AIR BL (ALSO PART OF 321)	92-95	Y (LT1)	1	10070107
323.	1-L16	1.079	BOLT, W/PMP INL (M6 X 1.0 X 25.0 FLG HD) (8.900)	94-95	Y (LT1)	2	22539278
333.	1-L17	1.123	SEAL, W/PMP CVR (O RING) (ALSO PART OF 312) (1.114)	92-95	Y (LT1)	1	10128329
334.		8.900	BOLT, HFH M6X1X16 9.8 POR (W/PMP CVR)	92-95		AR	11508805

NOTE 1: ALSO PART OF PARTIAL ENGINE ASSEMBLY (SEE PART 1).

RPO DEFINITIONS
LT1 -- ENGINE-GAS, 8 CYL, 5.7L(5.7P),MFI,HO

© 2000 GENERAL MOTORS SERVICE PARTS OPERATIONS-CHEVROLET-14Y

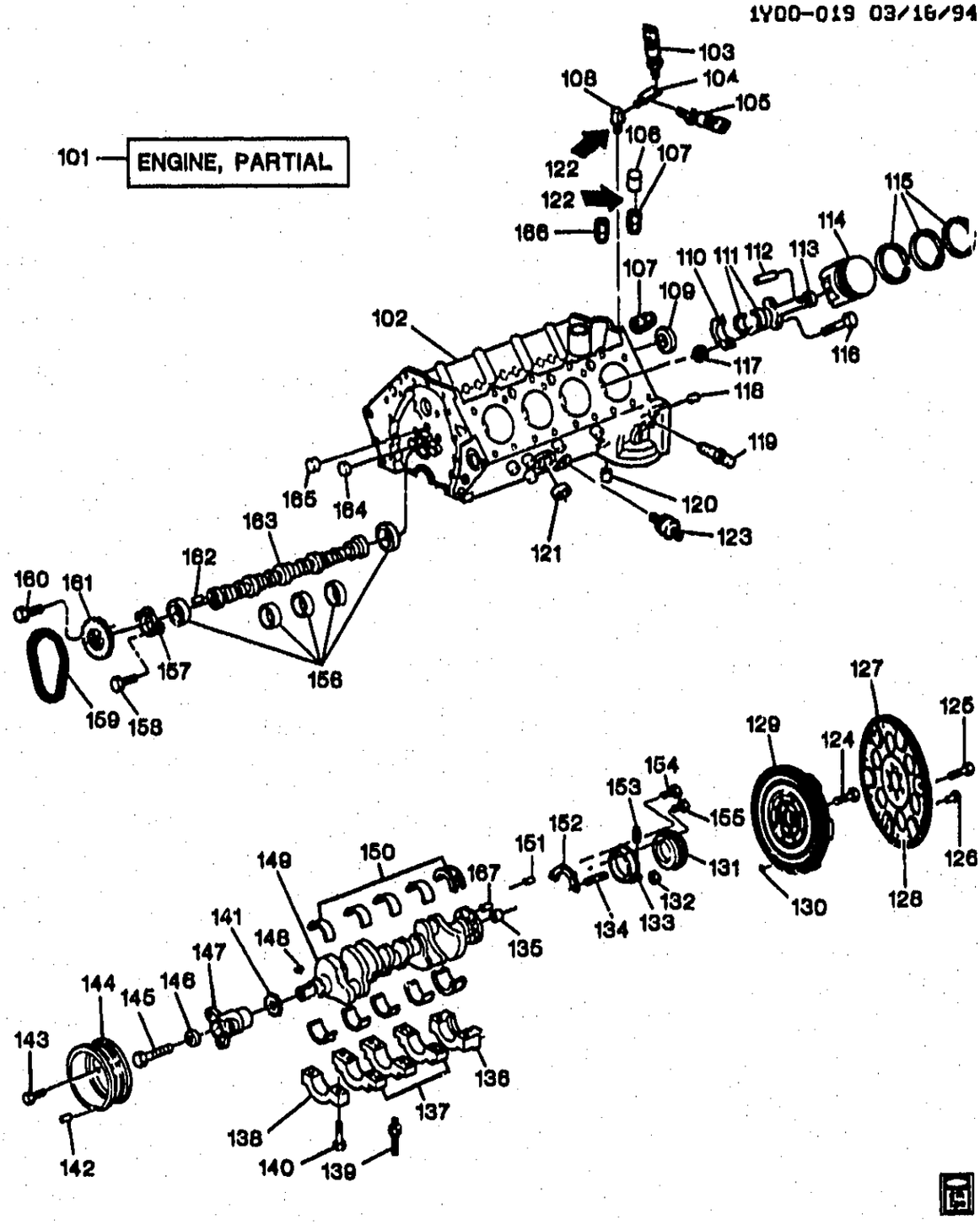

1Y00-019

1992-1996 Y ENGINE ASM-5.7L V8 PART 1 CYLINDER BLOCK AND RELATED PARTS (LT1/5.7P)

101.	1-E15	0.000 A	ENGINE, GASOLINE (GOODWRENCH) (NEW) (REFER TO NOTE #1 IN CATLG TEXT)) ..	92-94	Y (LT1)	1	12523000
	1-E15	0.000 A	ENGINE, GASOLINE (GOODWRENCH) (NEW) (REFER TO NOTE #1 IN CATLG TEXT)) ..	96	Y (LT1)	1	12533597

© 2000 GENERAL MOTORS SERVICE PARTS OPERATIONS-CHEVROLET-14Y

							1Y00-019
	1-E15	0.000 A	ENGINE, GASOLINE (GOODWRENCH) (NEW, REF TO NOTE #2 IN CATLG TEXT;1995 VLV CVRS (12552021-22), VLV CVR BLTS (10108674), O/PMP SCRN (03830080), &O/PAN (12528503), PURCH OR REPL W/ORIG)	95	Y (LT1)	1	12524896
102.		N.S.	BLOCK, ENG				
103.	1-L27	1.800	SENSOR, F/PMP SW & ENG OIL PRESS GA (1/8-27 THD SIZE) (3 BLADE TERM) (AC-DELCO #10201491)	92-96	Y (LT1)	1	10201491
104.	1-L27	1.000	ELBOW, ENG OIL PRESS GA SEN (TO BLK) (1.803) (USED W/1052080, SEALER)	92-96	Y (LT1)	1	14078988
105.	1-L27	1.000	SWITCH, ENG OIL PRESS IND (OIL FLTR HSG (1 BLADE TERM, 1/8-27 THD)) (AC-DELCO #D1846)	92-96	Y (LT1)	1	25036935
106.		8.970	PLUG EXPANSION (1/2" STL) (ENG BLK OIL GAL)	92-96	Y (LT1)	1	3701638
107.	1-L22	1.531	PLUG, ENG BLK OIL GAL (8.971)	92-96	Y (LT1)	1	14081701
108.	1-L27	1.800	FITTING, ENG OIL PRESS GA SEN	92-96	Y (LT1)	1	10137636
109.	1-F5	0.553	PLUG, CM/SHF RR BRG HOLE (8.970)	92-96	Y (LT1)	AR	10241154
110.		N.S.	CAP, CONN ROD (PART OF 113)				
111.	1-F6	0.616	BEARING KIT, CONN ROD (.002 U.S.)	92-95	Y (LT1)	8	12329426
	1-F6	0.616	BEARING KIT, CONN ROD (.020 U.S.)	92-95	Y (LT1)	8	12329427
	1-F6	0.616	BEARING KIT, CONN ROD (STD)	92-96	Y (LT1)	8	12523924
	1-F6	0.616	BEARING KIT, CONN ROD (.001 U.S.) (.001 U.S.)	93-96	Y (LT1)	8	12523925
	1-F6	0.616	BEARING KIT, CONN ROD (.001 U.S.) (.001 U.S.) (LANSING) (0.096)	93-96	Y (LT1)	8	12523928
	1-F6	0.616	BEARING KIT, CONN ROD (.010 U.S.) (.010 U.S.)	92-96	Y (LT1)	8	12523926
112.		N.S.	PIN, PSTN (PART OF 114)				
113.	1-F5	0.603	ROD, CONN (INCL 110, 116, 117)	92-96	Y (LT1)	8	10108688
114.	1-F6	0.629	PISTON, (W/PIN) (.030 O.S.) (INCL 112)	92-96	Y (LT1)	8	10159438
	1-F6	0.629	PISTON, (W/PIN) (STD) (INCL 112) (S1=101.614-101.596)	92-96	Y (LT1)	8	10159436
	1-F6	0.629	PISTON, (W/PIN) (STD HI-LIMIT) (INCL 112) (S2=101.632-101.614)	92-96	Y (LT1)	8	10159437
115.	1-F7	0.643	RING KIT, PSTN (STD)	92-96	Y (LT1)	8	12528817
	1-F7	0.643	RING KIT, PSTN (.005" O.S.)	92-96	Y (LT1, M30)	8	12528818
	1-F7	0.643	RING KIT, PSTN (.030 O.S.)	92-96	Y (LT1)	8	12528819
116.	1-F6	0.623	BOLT, CONN ROD (ALSO PART OF 113)	92-96	Y (LT1)	16	461372
117.	1-F6	0.626	NUT, CONN ROD (ALSO PART OF 113) (3/8-24) (HEX)	92-96	Y (LT1)	16	3866766
118.	1-F12	0.685	PIN, TRANS LOC (5/8 DIA, 1 3/16 LG) (8.939)	92-96	Y (LT1)	2	12338119

© 2000 GENERAL MOTORS SERVICE PARTS OPERATIONS-CHEVROLET-14Y

							1Y00-019
119.	1-L27	1.800	SENSOR, ENG OIL T/GA & OIL CHANGE IND (AC-DELCO #10096136)	92-96	Y (LT1)	1	10096136
120.	1-L22	1.531	PLUG, ENG BLK OIL GAL (CUP 15/32 X 5/16)	92-96	Y (LT1)	1	14091563
121.	1-E17	0.034	PLUG, ENG BLK CORE HOLE (41.5MM DIA) (STEEL)	92-96	Y (LT1)	8	838538
122.		8.800	SEALANT-LOCTITE PIPE-W/TEFLON 50CC TUBE ...	92-96	.....	AR	12346004
123.	1-M11	2.383	SENSOR, KNOCK (AC-DELCO #213-96)	92-95	Y (LT1)	2	10456126
	1-M11	2.383	SENSOR, KNOCK (AC-DELCO #213-325)	93-96	Y	1	10456287
124.	1-F10	0.669	BOLT, FLYWHL (MANUAL TRANS) (7/16-20X1 3/4)	92-95	Y (LT1, ML9)	6	10085215
125.	1-F10	0.669	BOLT, FLYWHL (AUTO TRANS) (7/16-20 X 45/64) (0.685)	92-96	Y (LT1, MD8)	6	14088764
126.		N.S.	WEIGHT, FLYWHL (AUTO TRANS)		.....		
127.	1-F10	0.673	GEAR, FLYWHL RING (AUTO TRANS) (153 TEETH)	92-94	Y (LT1, MD8)	1	3991407
	1-F10	0.673	GEAR, FLYWHL RING (AUTO TRANS) (153 TEETH)	95-96	Y (LT1, M30)	1	3991407
128.	1-F9	0.666	FLYWHEEL, ENG (AUTO TRANS)	92-95	Y (LT1, MD8)	1	14088765
	1-F9	0.666	FLYWHEEL, ENG (AUTO TRANS)	95-96	Y (LT1, M30)	1	14088765
129.	1-F9	0.666	FLYWHEEL, ENG (MANUAL TRANS)	92-95	Y (LT1, ML9)	1	10174462
130.	1-F10	0.669	WEIGHT, FLYWHL (MANUAL TRANS) (.2380/.2500 X .50) (BARREL-SHAPED PIN) (GROOVE-F)	92-95	Y (LT1, ML9)	1	3890192
131.	1-E20	0.137	SEAL, CR/SHF RR OIL (ALSO PART OF 137)	92-96	Y (LT1)	1	10088158
132.	1-E20	0.137	NUT, CR/SHF RR OIL SEAL RET (HFX, 1/4-20X.234, 284M, 69K, POR, 240) (PART OF 101) (HFH, 1/4-20X.234, 284M, 69K, POR, 240) (8.917)	92-96	Y (LT1)	1	12337984
		8.917	NUT, HFX, 1/4-20X.234, 284M, 69K, POR, 240 (CR/SHF RR OIL SEAL RET) (PART OF 101)	93-96	.....	1	12337984
133.	1-E20	0.137	HOUSING, CR/SHF RR OIL SEAL (INCL 135, 157)) (0.659)	92-96	Y (LT1)	1	14088556
134.	1-E20	0.137	STUD, CR/SHF RR OIL SEAL RET (1/4-20 X 2 3/16)	92-96	Y (LT1)	1	14101058
135.	1-F8	0.649	BEARING, CLU PILOT (MANUAL TRANS) (PART OF 101)	92-95	Y (LT1)	1	14061685
136.		N.S.	CAP, CR/SHF #5 BRG		.....		
137.		N.S.	CAP, CR/SHF BRG		.....		
138.		N.S.	CAP, CR/SHF #1 BRG		.....		
139.	1-E18	0.056	STUD, CR/SHF BRG CAP (7/16-14 X 3.38 THD 1.12, 3/8-14 FLG END, STL)	96	Y (LT1, M30)	3	12561389
	1-E18	0.056	STUD, CR/SHF BRG CAP (HFH SPL 7/16-14X3.36 THD 1.12, 3/8-16 FLG END, STL) (7/16-14 X 3.38 THD 1.12, 3/8-14 FLG END, STL)	92-95	Y (LT1)	3	12561389

© 2000 GENERAL MOTORS SERVICE PARTS OPERATIONS-CHEVROLET-14Y

							1Y00-019
140.	1-E18	0.056	BOLT, CR/SHF BRG CAP (7/16-14X2.06) (0.293)	92-95	Y (LT1)	6	3877669
	1-E18	0.056	BOLT, CR/SHF BRG CAP (7/16-14 X 3 11/32)	92-95	Y (LT1)	10	3932480
	1-E18	0.056	BOLT, CR/SHF BRG CAP (7/16-14X2.06) (0.293)	96	Y (LT1, M30)	6	3877669
	1-E18	0.056	BOLT, CR/SHF BRG CAP (7/16-14 X 3 11/32)	96	Y (LT1, M30)	10	3932480
141.	1-F13	0.728	SPROCKET, CR/SHF (18 TEETH) (.40/.41" TOOTH WIDTH)	92-95	Y (LT1)	1	10128346
	1-F13	0.728	SPROCKET, CR/SHF (18 TEETH) (.40/.41" TOOTH WIDTH)	96	Y (LT1, M30)	1	10128346
142.		8.940	PIN, GROOVE/F/.312X.375 CZ; 0.375" LENGTH (CR/SHF BAL) (WEIGHT)	92-96	.....	AR	274584
143.	1-F9	0.662	BOLT, CR/SHF BALR (HFH, 7/16-14X.88, .70 THD, .86 OD, 300M, PC) (HFH, 7/16X.88, .70 THD, .86 OD, 300M, PC) (8.900) .	92-96	Y (LT1)	3	9442448
144.	1-F8	0.659	BALANCER, CR/SHF	92-95	Y (LT1)	1	10128489
	1-F8	0.659	BALANCER, CR/SHF	96	Y (LT1, M30)	1	10128489
145.	1-F9	0.662	BOLT, CR/SHF BALR (7/16-20X2.25 300M POR) (7/16-20 X 2 1/4, 300M) (8.900) .	92-96	Y (LT1)	1	9440024
146.	1-F9	0.662	WASHER, CR/SHF BALR	92-95	Y (LT1)	1	10128306
	1-F9	0.662	WASHER, CR/SHF BALR	96	Y (LT1, M30)	1	10128306
147.	1-F8	0.659	HUB, CR/SHF BALR	92-95	Y (LT1)	1	12553250
	1-F8	0.659	HUB, CR/SHF BALR	96	Y (LT1)	1	12550097
148.	1-F9	0.662	KEY, CR/SHF BALR	92-95	Y (LT1)	1	10128303
	1-F9	0.662	KEY, CR/SHF BALR	96	Y (LT1)	1	12550096
149.	1-F8	0.646	CRANKSHAFT, (USE T/W 3752487 PILOT BEARING)	92-95	Y (LT1)	1	12551485
	1-F8	0.646	CRANKSHAFT, ...	95-96	Y	1	12551485
150.	1-E18	0.096	BEARING KIT, CR/SHF (.010 U.S./STD FLG) (RR)	92-95	Y (LT1)	1	12329793
	1-E18	0.096	BEARING KIT, CR/SHF (.001 U.S./STD) (RR)	92-95	Y (LT1)	1	12528826
	1-E18	0.096	BEARING KIT, CR/SHF (.001 U.S./STD) (RR)	96	Y (LT1, M30)	1	12528826
	1-E18	0.096	BEARING KIT, CR/SHF (#1, 2, 3, 4) (.010 U.S.)	92-94	Y (LT1)	4	12329428
	1-E18	0.096	BEARING KIT, CR/SHF (#1, 2, 3, 4) (.020 U.S.)	92-93	Y (LT1)	4	12329429
	1-E18	0.096	BEARING KIT, CR/SHF (#1, 2, 3, 4) (.002 U.S.)	92-93	Y (LT1)	4	12329758
	1-E18	0.096	BEARING KIT, CR/SHF (#1, 2, 3, 4)) (.001 U.S./STD) (REPL 0.0006" U.S. BRG KIT)	92-96	Y (LT1)	4	12531215
	1-E18	0.096	BEARING KIT, CR/SHF (#1, 2, 3, 4) (STD) (STD) (IF CRNK JOURNAL MEAS IS IN STD BRG RANGE, MAY USE THIS PART IN PLACE OF 12513950 (.0006 US), 10120992 (.001 US), OR 12531215 (.001 US) .)	92-96	Y (LT1)	4	10120090
	1-E18	0.096	BEARING KIT, CR/SHF (RR #5) (STD) (RR)	96	Y (LT1, M30)	1	10120993
	1-E18	0.096	BEARING KIT, CR/SHF (RR#5) (STD) (RR)	92-95	Y (LT1)	1	10120993

© 2000 GENERAL MOTORS SERVICE PARTS OPERATIONS-CHEVROLET-14Y

							1Y00-019
	1-E18	0.096	BEARING KIT, CR/SHF (RR#5 (.001"U.S., .008"O.S.FLG) (#5) (.001 U.S., .008 O.S. FLG)	92-95	Y (LT1)	1	10181326
	1-E18	0.096	BEARING KIT, CR/SHF (RR#5) (STD) (.008"O.S.FLG) (STD) (.008 O.S. FLG)	92-95	Y (LT1)	1	10181325
151.	1-E20	0.137	PIN, CR/SHF RR OIL SEAL HSG LOC (SPRING TYPE S 7/16X9/16 STL ZP) (8.940)	92-96	Y (LT1)	1	9441003
152.	1-E20	0.137	GASKET, CR/SHF RR OIL SEAL HSG	92-96	Y (LT1)	1	12555714
153.	1-E20	0.137	STUD, CR/SHF RR OIL SEAL RET (ALSO PART OF 137) (5/16 X 18 X 1 43/64) (1.428)	92-96	Y (LT1)	2	14080362
154.	1-E20	0.137	BOLT, CR/SHF RR OIL SEAL HSG (1/4-20 X 1 3/4)	92-96	Y (LT1)	2	14088562
155.	1-E20	0.137	BOLT, CR/SHF RR OIL SEAL HSG (1/4-20 X 7/8)	92-96	Y (LT1)	2	14088561
156.	1-F5	0.539	BEARING, CM/SHF (#2-RR) ...	92-96	Y (LT1)	1	474006
	1-F5	0.539	BEARING, CM/SHF (PRECISION TYPE) (POS #3, 4)	92-96	Y (LT1)	2	12453172
	1-F5	0.539	BEARING, CM/SHF (PRECISION TYPE) (STAMPED 1)	92-96	Y (LT1)	1	12453170
157.	1-F4	0.529	RETAINER, CM/SHF	92-95	Y (LT1)	1	10168501
	1-F4	0.529	RETAINER, CM/SHF	96	Y (LT1, M30)	1	10168501
158.	1-F4	0.529	BOLT, CM/SHF RET (HEX SOC TORQ DR 1/4-20 X 1/2, 15/32 OD)	92-96	Y (LT1)	2	14093637
159.	1-F12	0.724	CHAIN, CM/SHF TMG (DIM 4.532 36 TEETH, DIM 4.522 18 TEETH) .	92-95	Y (LT1)	1	10128485
	1-F12	0.724	CHAIN, CM/SHF TMG (DIM 4.532 36 TEETH, DIM 4.522 18 TEETH) .	96	Y (LT1, M30)	1	10128485
160.	1-F14	0.738	BOLT, CM/SHF SPKT (5/16-18 X 3/4, 300M) (HEX HD, STEEL) (8.900)	92-96	Y (LT1)	3	9424877
161.	1-F14	0.736	SPROCKET, CM/SHF (0.728)	92-94	Y (LT1)	1	10128349
	1-F14	0.736	SPROCKET, CM/SHF	95	Y (LT1)	1	10206039
	1-F14	0.736	SPROCKET, CM/SHF	96	Y (LT1, M30)	1	10206039
162.	1-F14	0.738	PIN, CM/SHF SPKT LOC (1/4 X 5/8) (8.939)	92-96	Y (LT1)	2	12554553
	1-F14	0.738	PIN, CM/SHF SPKT LOC	94-95	Y (LT1)	1	10214485
	1-F14	0.738	PIN, CM/SHF SPKT LOC	96	Y (LT1, M30)	1	10214485
163.	1-F4	0.519	CAMSHAFT, ENG	92-94	Y (LT1)	1	10224241
	1-F4	0.519	CAMSHAFT, ENG	95-96	Y (LT1)	1	12551705
164.	1-L22	1.531	PLUG, ENG BLK OIL GAL (37/64X1/4, 1/4 MM HOLE IN CTR, 1008, PL)	92-96	Y (LT1)	2	10110897
165.	1-L22	1.531	PLUG, ENG BLK OIL GAL (CUP 15/32 X 5/16)	92-96	Y (LT1)	1	14091583
166.		8.971	PLUG, 1/4-18 NPTF, SQ SOCKET PIPE (ENG OIL PRESS GA SEN ORIND SW HOLE)	92-96	.....	AR	444654
167.	1-F10	0.669	PIN, FLYWHL LOC (7/16 DIA. X 7/8)	92-95	Y (LT1)	1	3701679
	1-F10	0.669	PIN, FLYWHL LOC (7/16 DIA. X 7/8)	96	Y (LT1, M30)	1	3701679

RPO DEFINITIONS

LT1 - ENGINE-GAS, 8 CYL, 5.7L(5.7P),MFI,HO

© 2000 GENERAL MOTORS SERVICE PARTS OPERATIONS-CHEVROLET-14Y

© 2000 GENERAL MOTORS SERVICE PARTS OPERATIONS–CHEVROLET–14Y

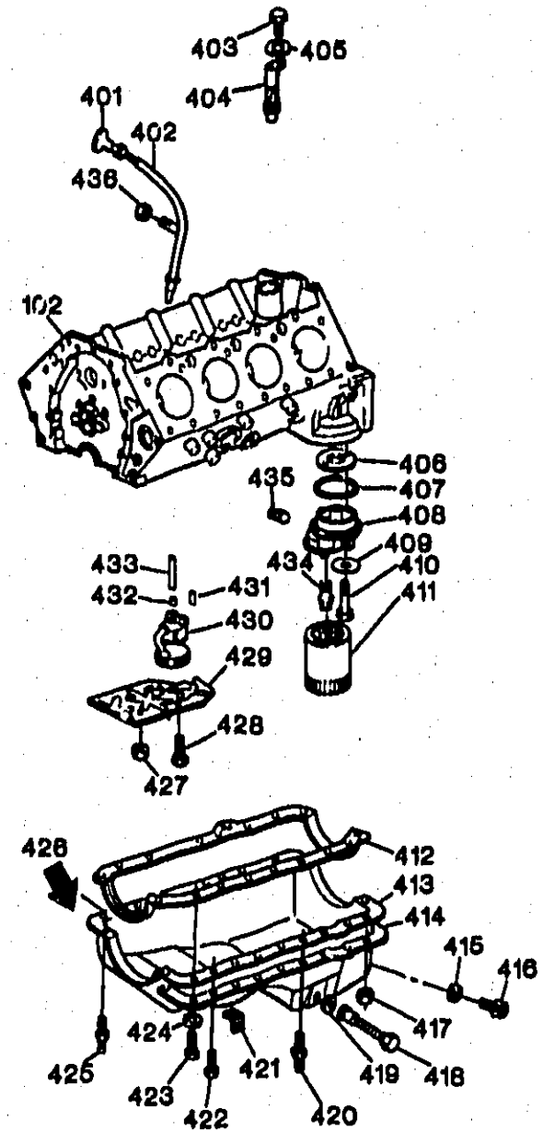

1Y00-023

1992-1996 Y ENGINE ASM-5.7L V8 PART 4 OIL PUMP, PAN & RELATED PARTS (LT1/5.7P)

102.		N.S.	BLOCK, ENG		.....		
401.	1-L22	1.516	INDICATOR, OIL LVL	92-94	Y (LT1)	1	10108430
	1-L22	1.516	INDICATOR, OIL LVL	95-96	Y (LT1)	1	12553510
402.	1-L22	1.516	TUBE, OIL LVL IND	92-94	Y (LT1)	1	10108520
	1-L22	1.516	TUBE, OIL LVL IND	95-96	Y (LT1)	1	12551155
403.	1-L23	1.639	BOLT, O/PMP DRV SHF (5/16-18 X 3/4, 300M) (HEX HD, STEEL) (8.900)	92-96	Y (LT1)	1	9424877

© 2000 GENERAL MOTORS SERVICE PARTS OPERATIONS-CHEVROLET-14Y

							1Y00-023
404.	1-L23	1.639	DRIVE, O/PMP (AC-DELCO #1103868)	92-96	Y (LT1)	1	1103868
405.		8.929	WASHER, FLAT 5/16X5/8X1/16 ZP HARD (O/PMP DRV SHF)	92-96		1	2436162
406.	1-M3	1.840	GASKET, OIL FLTR ADAP	92-96	Y (LT1)	1	12551589
407.	1-M4	1.844	SEAL, OIL FLTR ADAP (3.359")	92-96	Y (LT1)	1	10244495
408.	1-M3	1.840	ADAPTER, OIL FLTR	92-93	Y (LT1)	1	10168497
	1-M3	1.840	ADAPTER, OIL FLTR	94-96	Y (LT1)	1	12556204
409.	1-M3	1.840	WASHER, OIL FLTR ADAP (8.929)	92-95	Y (LT1)	1	120393
	1-M3	1.840	WASHER, OIL FLTR ADAP (.276X.64X.080 ZP) (8.929)	95-96	Y (LT1)	1	120392
410.	1-M3	1.840	BOLT, OIL FLTR ADAP (5/16-18X3,)	92-93	Y (LT1)	2	10168445
	1-M3	1.840	BOLT, OIL FLTR ADAP (5/16-18X1.875)	94-96	Y (LT1)	2	14092398
411.	1-M2	1.836	FILTER, OIL (AC-DELCO #PF52)	92-96	Y (LT1)	1	25171377
	1-M2	1.836	FILTER, OIL (AC-DELCO #UPF52)	92-96	Y (LT1)	1	25322836
	1-M2	1.836	FILTER, OIL (AC-DELCO #SPF52)	92-96	Y (LT1)	1	25325403
412.	1-L21	1.429	GASKET, OIL PAN	92	Y (LT1)	1	14088505
	1-L21	1.429	GASKET, OIL PAN	93-96	Y (LT1)	1	10108676
413.	1-L20	1.426	PAN KIT, OIL (W/GSKT) (INCL 415, 416)	92-96	Y (LT1)	1	12528503
414.	1-L20	1.426	REINFORCEMENT, OIL PAN	92-96	Y (LT1)	LH	12553058
	1-L20	1.426	REINFORCEMENT, OIL PAN	92-96	Y (LT1)	RH	12553059
415.	1-L22	1.456	GASKET, OIL PAN DRN PLUG (ALSO PART OF 413)	92-96	Y (LT1)	1	14090908
416.	1-L21	1.453	PLUG, OIL PAN DRN (ALSO PART OF 413) (1/2-20, 81LG)	92-95	Y (LT1)	1	3921988
	1-L21	1.453	PLUG, OIL PAN DRN (ALSO PART OF 413) (1/2-20, 81LG) (HAS ENGLISH THDS, FOR 2ND DES SEE 24100042 METRIC THDS)	96	Y (LT1) (1ST DES)	1	3921988
	1-L21	1.453	PLUG, OIL PAN DRN (ALSO PART OF 413) (M12X1.75-6G THD, 44.45MM LNG, 15MM FLG HEX HD) (W/MAGNET & SEAL)	92-95	Y (LT1)	1	24100042
	1-L21	1.453	PLUG, OIL PAN DRN (ALSO PART OF 413) (M12X1.75-6G THD, 44.45MM LNG, 15MM FLG HEX HD) (W/MAGNET & SEAL) (HAS METRIC THDS) (FOR 1ST DES SEE 39219988 ENGLISH THDS)	96	Y (LT1) (2ND DES)	1	24100042
417.	1-L20	1.428	NUT, OIL PAN (5/16-18 X 1/4, 286M) (POR) (8.915)	92-95	Y (LT1)	2	12338130
	1-L20	1.428	NUT, OIL PAN (5/16-18X20, 286M) (PC) (8.917)	92-96	Y (LT1)	2	1359887
418.	1-L22	1.516	SENSOR, ENG OIL LVL (INCL 419)	93-95	Y (LT1, LT5)	1	24507190
	1-L22	1.516	SENSOR, ENG OIL LVL (INCL 419)	96	Y (LT1, LT4)	1	24507190
	1-L22	1.516	SENSOR, ENG OIL LVL (2 TERM, M20X1.5-6G) (INCL 419)	92	Y	1	10137676

© 2000 GENERAL MOTORS SERVICE PARTS OPERATIONS-CHEVROLET-14Y

							1Y00-023
419.	1-L22	1.516	SEAL, ENG OIL LVL SEN (ALSO PART OF 418)	92-96	Y	1	10151633
420.	1-L20	1.428	STUD, OIL PAN (14X20X.56-1/4X20X.50)	92-96	Y (LT1)	4	14101092
421.	1-M22	2.559	BRACKET, ENG WRG HARN	92-95	Y (LT1)	4	12553341
	1-M22	2.559	BRACKET, ENG WRG HARN (POS#RH-3, 6, 8, LH-6, 7)	96	Y	5	12553341
422.	1-L20	1.428	BOLT, OIL PAN (HFH 1/4-20 X 5/8 280M POR) (8.900)	92-96	Y (LT1)	10	9440033
423.	1-L20	1.428	BOLT, OIL PAN (5/16-18 X 3/4, 300M) (HEX HD, STEEL) (8.900) .	92-96	Y (LT1)	1	9424877
424.	1-F14	0.738	WASHER, OIL PAN (5/16X5/8X1/16, ZP) (HARDENED) (8.929)	92-96	Y (LT1)	2	2436162
425.	1-L20	1.428	STUD, OIL PAN (5/16-18X.66, 5/16-18X.49)	92-96	Y (LT1)	1	14084059
426.		8.800	SEALANT-LOCTITE PIPE-W/TEFLON 50CC TUBE ...	92-96	.....	AR	12346004
427.	1-F8	0.648	NUT, CR/SHF OIL DFL (3/8-16, 301M) (HEX LK/TORQ-TENS) (8.917)	92-95	Y (LT1)	3	9422297
	1-F8	0.648	NUT, CR/SHF OIL DFL (HEX 3/8-16) (8.917)	96	Y (LT1)	3	9442946
428.	1-L24	1.652	ROLL, O/PMP (7/16-14X2 3/8) ..	92-96	Y (LT1)	1	10046007
429.	1-L21	1.430	DEFLECTOR, CR/SHF OIL	92-96	Y (LT1)	1	12554816
430.	1-L24	1.652	PUMP, OIL (SEE GROUP 1.000 "PUMP, OIL" FOR DETAIL ILLUSTRATED VIEW.)	92	Y (LT1)	1	12555284
	1-L24	1.652	PUMP, OIL (SEE GROUP 1.000 "PUMP, OIL" FOR DETAIL ILLUSTRATED VIEW.) (INCLS BOLTS, COVERS, GEARS, HSGS, PIN, PLUG, SHFS, SPR & VLV) (.742 DIA TUBE, FOR 1ST DES SEE 12555284)	94	Y (LT1) (2ND DES)	1	12555283
	1-L24	1.652	PUMP, OIL (SEE GROUP 1.000 "PUMP, OIL" FOR DETAIL ILLUSTRATED VIEW.) (INCLS BOLTS, COVERS, GEARS, HSGS, PIN, PLUG, SHFS, SPR & VLV)	95	Y	1	12555283
	1-L24	1.652	PUMP, OIL (SEE GROUP 1.000 "PUMP, OIL" FOR DETAIL ILLUSTRATED VIEW.) (INCLS BOLTS, COVERS, GEARS, HSGS, PIN, PLUG, SHFS, SPR & VLV)	96	Y (LT1)	1	12555283
	1-L24	1.652	PUMP, OIL (.620 TUBE DIA, 1ST DES SEE 12555283) (SEE GROUP 1.000 "PUMP, OIL" FOR DETAIL ILLUSTRATED VIEW.)	93	Y (LT1) (2ND DES)	1	12555284
	1-L24	1.652	PUMP, OIL (.620 TUBE DIA, 2ND DES SEE 12555283) (SEE GROUP 1.000 "PUMP, OIL" FOR DETAIL ILLUSTRATED VIEW.)	94	Y (LT1) (1ST DES)	1	12555284

© 2000 GENERAL MOTORS SERVICE PARTS OPERATIONS-CHEVROLET-14Y

	1-L24	1.652	PUMP, OIL (.742 TUBE DIA, 2ND DES SEE 12555284) (SEE GROUP 1.000 "PUMP, OIL" FOR DETAIL ILLUSTRATED VIEW.) (INCLS BOLTS, COVERS, GEARS, HSGS, PIN, PLUG, SHFS, SPR & VLV)	93	Y (LT1) (1ST DES)	1	12555283
	1-L24	1.656	SCREEN, O/PMP (TUBE DIA 0.62)	92	Y (LT1)	1	3830080
	1-L24	1.656	SCREEN, O/PMP (TUBE DIA 0.62) (1ST DES SEE 10168453) ..	93	Y (LT1) (2ND DES)	1	3830080
	1-L24	1.656	SCREEN, O/PMP (2ND DES SEE 03830080/.742 USED UNTIL MID NOV)	93	Y (LT1) (1ST DES)	1	10168453
	1-L24	1.656	SCREEN, O/PMP (TUBE DIA 0.62) (2ND DES SEE 12550106) .	94	Y (LT1) (1ST DES)	1	3830080
	1-L24	1.656	SCREEN, O/PMP (1ST DES SEE 03830080/.742 USED UNTIL MID NOV)	94	Y (LT1) (2ND DES)	1	12550106
	1-L24	1.656	SCREEN, O/PMP (1ST DES SEE 03830080)	95-96	Y (LT1)	1	12550106
431.	1-E22	0.206	PIN, O/PMP LOC (1/4 X 5/8) (8.939)	92-96	Y (LT1)	2	12554553
432.	1-L23	1.639	RETAINER, O/PMP DRV SHF	92-96	Y (LT1)	1	3764554
433.	1-L23	1.639	SHAFT, O/PMP DRV	92-96	Y (LT1)	1	3998287
434.	1-M4	1.855	FITTING, OIL FLTR (1.840)	92-96	Y (LT1)	1	462659
435.	1-M3	1.840	PLUG, OIL FLTR ADAP HOLE (AUTO DRAIN, INT SQ, 3/8-18X.42 PEOR STL) (8.971) ..	92-96	Y (LT1)	1	14090911
436.	1-L22	1.516	NUT, OIL LVL IND TUBE (3/8-16 PC, 286M) (HEX, FLANGE) (8.917)	92-96	Y (LT1)	1	9442958

RPO DEFINITIONS

LT1 - ENGINE-GAS, 8 CYL, 5.7L(5.7P),MFI,HO
LT4 - ENGINE GAS, 8 CYL, 5.7L, MFI, HIGH OUTPUT
LT5 - ENGINE,5.7L(5.7J),TPI

© 2000 GENERAL MOTORS SERVICE PARTS OPERATIONS-CHEVROLET-14Y

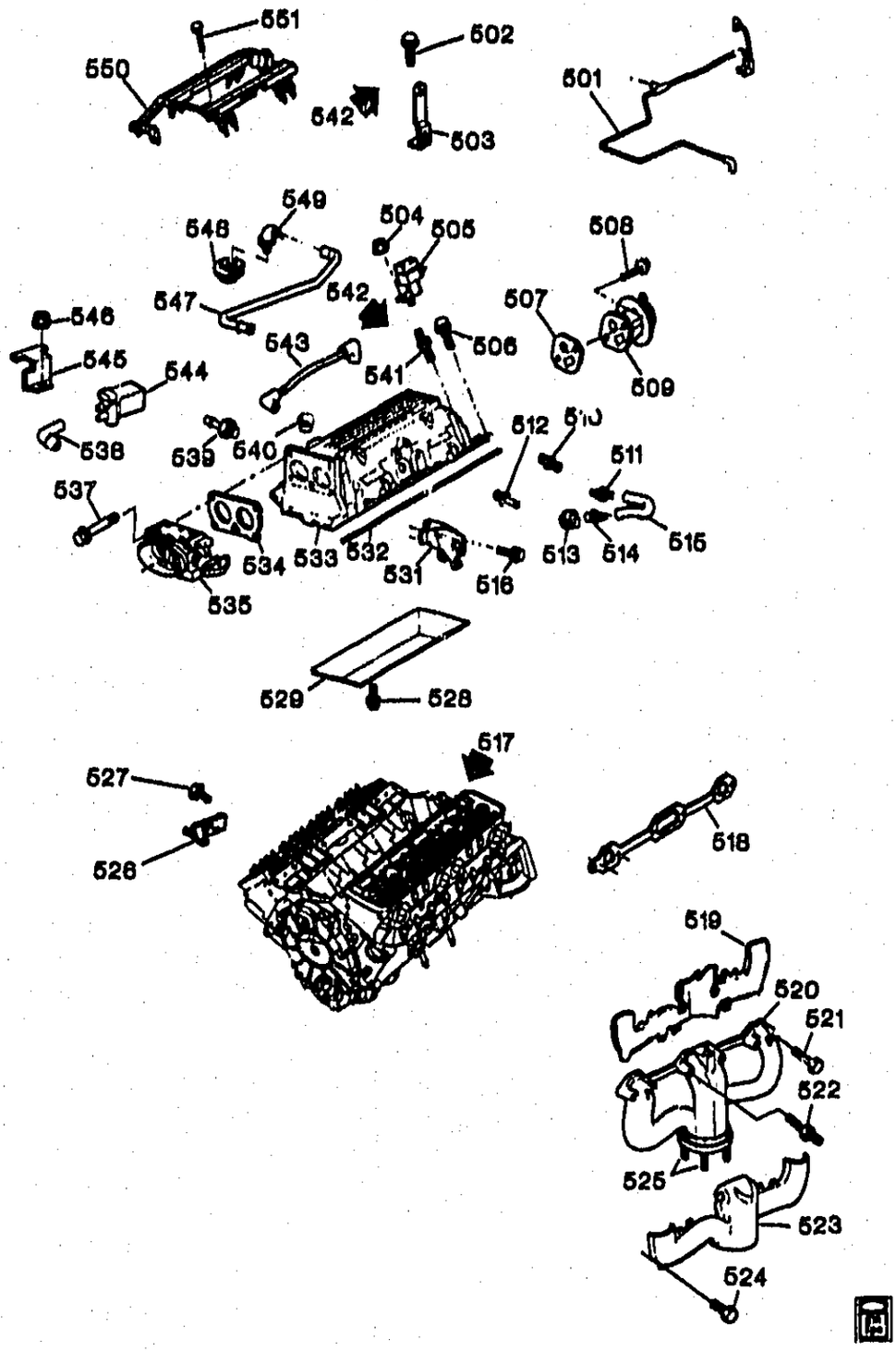

1Y00-020

1992-1996 Y ENGINE ASM-5.7L V8 PART 5 MANIFOLDS AND FUEL RELATED PARTS (LT1/5.7P)

501.	1-N16	3.675	HARNESS, EGR VLV VAC	92-93	Y (LT1)	1	10105325
	1-N16	3.675	HARNESS, EGR VLV VAC	94-96	Y (LT1)	1	10105323
502.	1-E16	0.004	BOLT, ENG LIFT FRT BRKT (HFH 3/8-16X1.00 280M PZOR) (8.900)	92-96	Y (LT1)	2	9440071
503.		N.S.	BRACKET ENG LIFT FRT		.....		

© 2000 GENERAL MOTORS SERVICE PARTS OPERATIONS-CHEVROLET-14Y

504.	1-N15	3.671	NUT, EGR VAC REG VLV SOL (3/8-16 PC, 286M) (HEX, FLANGE) (8.917)	92-96	Y (LT1)	1	9442958
505.	1-N10	3.670	SOLENOID, EGR VAC REG VLV (AC-DELCO #214-396)	92-96	Y (LT1)	1	1997223
506.	1-M28	3.275	BOLT, INT MANIF (HFH 3/8-16X1.38 280M PZOR) (8.900)	92-96	Y (LT1)	1	9439918
507.	1-N19	3.680	GASKET, EGR VLV (*KIT1) (AC-DELCO #219-21)	92-96	Y (LT1)	1	12337972
508.	1-N15	3.671	BOLT, EGR VLV (HFH, 5/16-18X1.00, 280M, PC, .65 OD) (8.900)	92-94	Y (LT1)	2	9441894
	1-N15	3.671	STUD, EGR VLV (5/16 X 18 X 1 43/64) (1.428)	95-96	Y (LT1)	2	14080362
509.	1-N10	3.670	VALVE, EGR (PROD 17092160) (FOR EXPORT REPL EGR VLV W/ EGR VLV CVR & VAC CAP) (AC-DELCO #214-5083)	92-95	Y (LT1, ML9) (EXC NM8)	1	17113381
	1-N10	3.670	VALVE, EGR (PROD 17092172) (FOR EXPORT REPL EGR W/ EGR CVR & VAC CAP) (AC-DELCO #214-5084)	92-93	Y (LT1, MD8)	1	17113382
	1-N10	3.670	VALVE, EGR (PROD 17092172) (FOR EXPORT REPL EGR W/ EGR CVR & VAC CAP) (AC-DELCO #214-5084)	94-96	Y (LT1, M30) (EXC NM8)	1	17113382
510.	1-N26	4.931	FITTING, P/B BOOS VAC TUBE (1/4-18 NPTF W/3/8 NIPPLE) (1.745)	92-96	Y (LT1)	1	336018
511.	1-L25	1.745	CONNECTOR, PCV VLV HOSE (1/4-18 NPTF W/3/8 NIPPLE)	92-96	Y (LT1)	1	336018
512.	1-N19	3.680	CONNECTOR, EMIS CONT VAC HARN	92-93	Y (LT1)	1	12550629
	1-N19	3.680	CONNECTOR, EMIS CONT VAC HARN (3.278) (1 PORT HOSE CONN 4.5 OD, SAE 1113, PZOR)	92-96	Y (LT1)	1	14082470
513.	1-L25	1.745	GROMMET, PCV VLV (1.762)	92-93	Y (LT1)	1	10207699
	1-L25	1.745	GROMMET, PCV VLV (1.762)	94-96	Y (LT1)	1	10240678
514.	1-L25	1.745	VALVE, PCV (CV895C, 1 VACUUM PORT) (AC-DELCO #CV895C)	92-96	Y (LT1)	1	25095452
515.	1-L26	1.762	HOSE, PCV VLV	92-95	Y (LT1)	1	10128361
	1-L26	1.762	HOSE, PCV VLV	96	Y (LT1)	1	12551389
516.	1-N9	3.463	BOLT, ACCEL CONT CBL BRKT (M6 X 1 X 12) (HFH, 9.8 PE, 12.8 OD DR) (8.900) (AC-DELCO #11514149)	92-96	Y (LT1)	3	11514149
517.		8.800	SEALANT, SILICONE RTV SILICONE 6W) (*5 (AC-DELCO #1052915)	92-96		AR	1052915
518.	1-M28	3.272	GASKET, EXH MANIF (*KIT1) (3.270)	92-95	Y (LT1)	2	12552470
	1-M28	3.272	GASKET, EXH MANIF (*KIT1) (3.270)	96	Y	2	12552470
519.	1-N9	3.602	SHIELD, EXH MANIF INR HT (ALSO PART OF 520)	92-96	Y (LT1)	2	10128311
520.	1-N9	3.601	MANIFOLD, EXH (W/H/SHLD) (INCL 519, 523)	96	Y (LT1)	2	12554232

© 2000 GENERAL MOTORS SERVICE PARTS OPERATIONS-CHEVROLET-14Y

	1-N9	3.601	MANIFOLD, EXH (W/H/SHLD) (WHEN USED IN PLC OF 12554231 (1992-95), MUST USE GSKT 15713154) (INCL 519, 523)	92-95	Y (LT1)	2	12554232
521.	1-M28	3.275	BOLT, EXH MANIF (HFH 3/8-16X2.00 280M POR 6174M) (8.900)	92-93	Y (LT1)	2	9440073
	1-M28	3.275	BOLT, EXH MANIF (3/8-16 X 2 1/8) (1.079)	94-96	Y (LT1)	1	12552096
	1-M28	3.275	BOLT, EXH MANIF (HFH 3/8-16X2.00 280M POR 6174M) (8.900)	95	Y (LT1)	2	9440073
522.	1-M28	3.275	STUD, EXH MANIF	92-96	Y (LT1)	3	12550726
	1-M28	3.275	STUD, EXH MANIF (#1-4 RH, #2 LH) (3/8 X 16 X 2.08)	92-93	Y (LT1)	3	14057002
523.	1-N9	3.602	SHIELD, EXH MANIF OTR HT (ALSO PART OF 520)	92-96	Y (LT1)	2	10128312
524.	1-N9	3.602	BOLT, EXH MANIF H/SHLD (M6X12)	92-96	Y (LT1)	3	10226350
525.	1-N10	3.613	STUD, EXH PIPE	94-96	Y (LT1)	6	10220453
	1-N10	3.613	STUD, EXH PIPE (M10X1.5X57)	92-93	Y (LT1)	6	14057005
526.	1-N21	3.682	BRACKET, OXY SEN CONN RET (2.559)	92-96	Y (LT1)	1	10165388
527.		N.S.	BOLT, OXY SEN CONN RET BRKT				
528.	1-M27	3.265	BOLT, INT MANIF OIL SPH SHLD (M6 X 1 X 12) (HFH, 9.8 PE, 12.8 OD DR) (8.900) (AC-DELCO #11514149)	92-96	Y (LT1)	4	11514149
529.	1-M27	3.265	SHIELD, INT MANIF OIL SPH	92-96	Y (LT1)	1	10128305
531.	1-N8	3.454	BRACKET, ACCEL CONT CBL	92	Y (LT1)	1	10226089
	1-N8	3.454	BRACKET, ACCEL CONT CBL	93	Y (LT1, MD8)	1	10226089
	1-N8	3.454	BRACKET, ACCEL CONT CBL	94-96	Y (LT1, M30)	1	10192221
532.		N.S.	GASKET, INT MANIF (*KIT1, KIT2)				
533.	1-M27	3.265	MANIFOLD, INT	92	Y (LT1)	1	12518284
	1-M27	3.265	MANIFOLD, INT	93	Y (LT1, MD8)	1	12518284
	1-M27	3.265	MANIFOLD, INT	93	Y (LT1, ML9)	1	12518284
	1-M27	3.265	MANIFOLD, INT	94-96	Y (LT1)	1	12552137
534.	1-N5	3.336	GASKET, THROT BODY (*KIT1) (AC-DELCO #40-716)	92-96	Y (LT1)	1	10105379
535.	1-N4	3.335	BODY, THROT (*1)				
537.	1-N5	3.336	BOLT, THROT BODY (HFH M8X1.25X65 9.8 POR 17.6 OD) (8.900)	92-96	Y (LT1)	4	11508083
538.	1-M26	3.145	HOSE, EVAP EMIS CNSTR PURGE	92-95	Y	1	10105300
	1-M26	3.145	HOSE, EVAP EMIS CNSTR PURGE	96	Y (LT1, LT4)	1	12552593
539.	1-N2	3.278	FITTING, INT MANIF VAC (IN PLENUM)	92-96	Y (LT1)	3	14082470
540.	1-N21	3.682	PLUG, MAP SEN HOLE (8.153)	92-96	Y (LT1)	1	3738198
541.	1-M28	3.275	STUD, INT MANIF (3/8X16X1 3/8)	92-96	Y (LT1)	3	10106420
542.		8.800	SEALANT-LOCTITE PIPE-W/TEFLON 50CC TUBE	92-96		AR	1052080
543.	1-N3	3.330	TUBE, FUEL PRESS REG VAC	92	Y (LT1)	1	10105322
	1-N3	3.330	TUBE, FUEL PRESS REG VAC	93	Y (LT1, MD8)	1	10105322
	1-N3	3.330	TUBE, FUEL PRESS REG VAC	93	Y (LT1, ML9)	1	10105322

© 2000 GENERAL MOTORS SERVICE PARTS OPERATIONS- CHEVROLET- 4Y

							1Y00-020
	1-N3	3.330	TUBE, FUEL PRESS REG VAC ..	94-96	Y (LT1)	1	10216953
544.	1-M25	3.130	VALVE, EVAP EMIS CNSTR PURGE SOL (2 PORT VAC, 2 BLADE TERM) (AC-DELCO #214-565)	92-96	Y	1	1997201
545.	1-M25	3.130	BRACKET, EVAP EMIS CNSTR PURGE SOL VLV	92-95	Y (LT1)	1	10137656
	1-M25	3.130	BRACKET, EVAP EMIS CNSTR PURGE SOL VLV	96	Y (LT1, M30)	1	12551612
546.	1-M25	3.130	NUT, EVAP EMIS CNSTR PURGE SOL VLV (3/8-16 PC, 286M) (HEX, FLANGE) (8.917)	92-96	Y (LT1)	1	9442958
547.	1-L26	1.762	HOSE, PCV	92	Y (LT1)	1	10128365
	1-L26	1.762	TUBE, PCV (INCL ITEM #549) ...	93-96	Y (LT1)	1	12550624
548.	1-L26	1.762	GROMMET, PCV HOSE CONN (1.745)	92	Y (LT1)	1	10088198
	1-L26	1.762	GROMMET, PCV HOSE CONN ..	93	Y (LT1)	1	10207699
	1-L26	1.762	GROMMET, PCV HOSE CONN ..	94-96	Y (LT1)	1	10240678
549.	1-L26	1.762	CONNECTOR, PCV HOSE	92-96	Y (LT1)	1	12550625
550.	1-N3	3.330	RAIL, M/PORT F/INJN FUEL (*KIT3)) (*1)		.....		
551.	1-N3	3.330	BOLT, F/INJN FUEL RL (HFH, M8X1.25X35, 28 THD, 14 OD, 9.8;USE T/W 12 [illegible]5382 ADHES) .	92-94	Y (LT1)	4	10108668
	1-N3	3.330	BOLT, F/INJN FUEL RL (6X1X35) (9.8 PEOR) (8.900)	93-96	Y (LT1)	4	11514667

SERVICE KITS

1.	1-E23	0.289	GASKET KIT, CYL HD (INCL 507, 518, 532, 534) (KIT CONTAINS: GASKETS FOR CYLINDER HEAD, INTAKE AND EXHAUST MANIFOLDS, EGR VALVE, THROTTLE BODY, VALVE COVERS, AND VALVE STEM SEALS.)	92-93	Y (LT1)	1	12518047
	1-E23	0.289	GASKET KIT, CYL HD (INCL 507, 518, 532, 534) (KIT CONTAINS: GASKETS FOR CYLINDER HEAD, INTAKE AND EXHAUST MANIFOLDS, EGR VALVE, THROTTLE BODY, VALVE COVERS, AND VALVE STEM SEALS.)	92	Y (LT1)	1	12524675
	1-E23	0.289	GASKET KIT, CYL HD (INCL 507, 518, 532, 534) (KIT CONTAINS: GASKETS FOR CYLINDER HEAD, INTAKE AND EXHAUST MANIFOLDS, EGR VALVE, THROTTLE BODY, VALVE COVERS, AND VALVE STEM SEALS.)	94-96	Y (LT1)	1	12569146
2.	[illegible]-M28	3.270	GASKET KIT, INT MANIF (INCL 571) (KIT CONTAINS: GASKETS FOR INTAKE MANIFOLD.)	92-96	Y (LT1)	1	12524653
3.	1-N3	3.330	RAIL KIT, M/PORT F/INJN FUEL (INCL 550) (AC-DELCO #17112335)	92-93	Y (LT1)	LH	17112635

© 2000 GENERAL MOTORS SERVICE PARTS OPERATIONS-CHEVROLET-14Y

1–N3	3.330	RAIL KIT, M/PORT F/INJN FUEL (INCL 550) (AC–DELCO #17113241)	92–93	Y (LT1)	RH	17113241
1–N3	3.330	RAIL KIT, M/PORT F/INJN FUEL (INCL 550)	94–96	Y (LT1)	LH	17113249
1–N3	3.330	RAIL KIT, M/PORT F/INJN FUEL (INCL 550)	94–96	Y (LT1)	RH	17113250

NOTE 1: SEE 3.000 GROUP FOR DETAILED ILLUSTRATED VIEW.

RPO DEFINITIONS
LT1 – ENGINE–GAS, 8 CYL, 5.7L(5.7P),MFI,HO
LT4 – ENGINE GAS, 8 CYL, 5.7L, MFI, HIGH OUTPUT
MD8 – TRANSMISSION,AUTOMATIC 4–SPEED(THM700R4/4L60)
ML9 – TRANSMISSION,MANUAL 6–SPEED
M30 – TRANSMISSION,AUTOMATIC 4 SPEED,4L60E,ELECTRONIC
NM6 – EMISSION SYSTEM,LEADED FUEL(EXPORT)

© 2000 GENERAL MOTORS SERVICE PARTS OPERATIONS–CHEVROLET–14Y

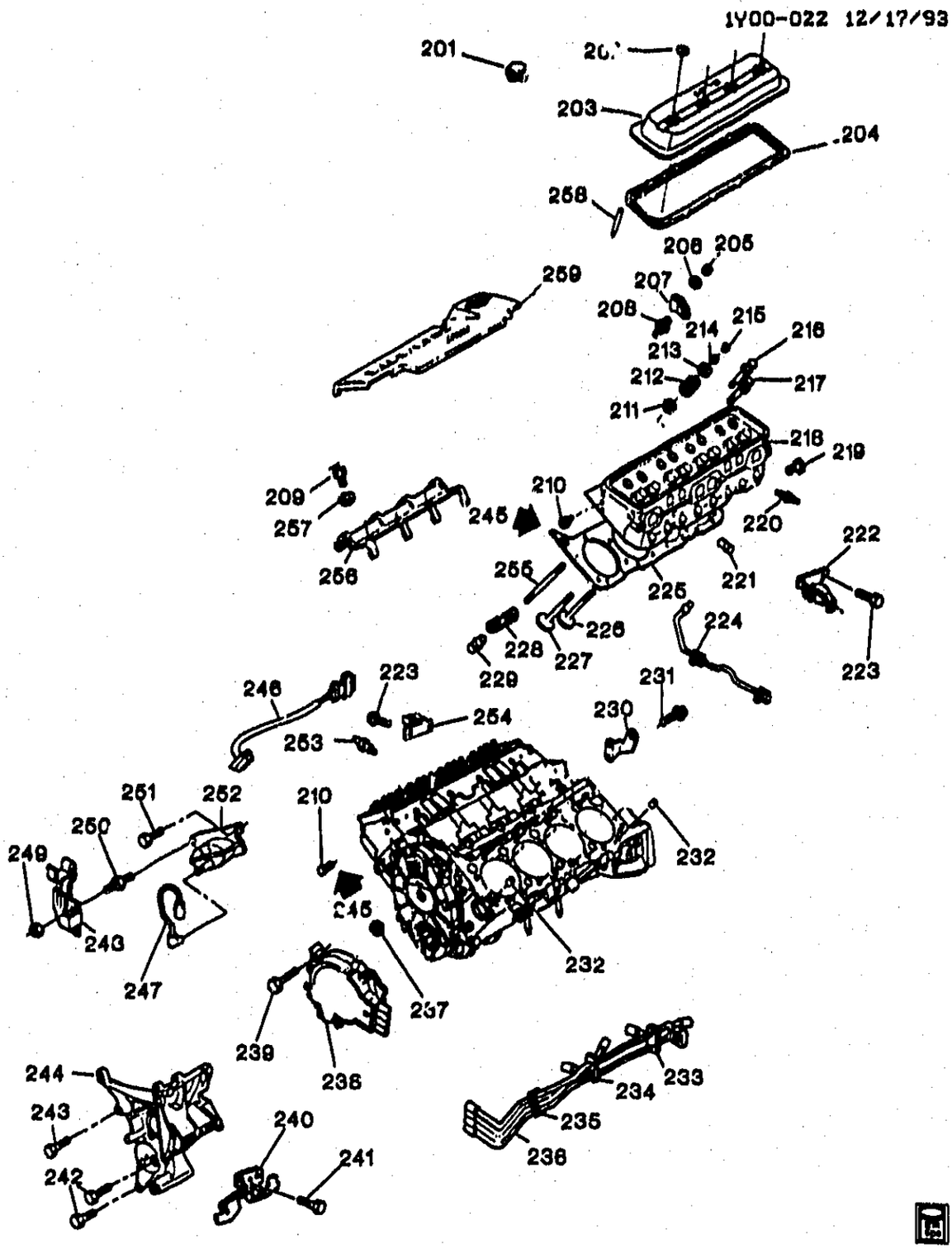

1Y00-022

1993-1996 Y ENGINE ASM-5.7L V8 PART 2 CYLINDER HEAD AND RELATED PARTS (LT1/5.7P)

201.	1-L26	1.758	CAP, OIL FIL ("MOBIL 1") (AC-DELCO #FC183)	93	Y	1	12554955
	1-L26	1.758	CAP, OIL FIL ("MOBIL 1") (AC-DELCO #FC183)	94-95	Y (LT1)	1	12554955
	1-L26	1.758	CAP, OIL FIL ("MOBIL 1") (AC-DELCO #FC183)	96	Y	1	12554955

© 2000 GENERAL MOTORS SERVICE PARTS OPERATIONS-CHEVROLET-14Y

							1Y00-022
202.	1-F2	0.413	BOLT, VLV RKR ARM CVR	93-95	Y (LT1)	8	10108675
	1-F2	0.413	BOLT, VLV RKR ARM CVR	96	Y (LT1, M30)	8	10108675
203.	1-E28	0.386	COVER, VLV RKR ARM	93-96	Y (LT1)	RH	12552322
	1-E28	0.386	COVER, VLV RKR ARM	93-96	Y (LT1)	LH	12552321
204.	1-F2	0.423	GASKET, VLV RKR ARM CVR (*KIT1)	93-95	Y (LT1)	AR	10108625
	1-F2	0.423	GASKET, VLV RKR ARM CVR (*KIT1)	96	Y (LT1, M30)	1	10108625
205.		0.429	NUT, VLV RKR ARM (ALSO PART OF 207)	93-96	.....		
206.		N.S.	BALL, VLV RKR ARM (PART OF 207)		.....		
207.	1-E28	0.333	ARM KIT, VLV RKR (W/BALL KIT) (INCL 205, 206) (STD THREADS) (INCLS ARM, BALL & NUT)	93-96	Y (LT1)	16	10089648
208.	1-F3	0.429	STUD, VLV RKR ARM BALL	93-96	Y (LT1)	16	12552126
209.		8.900	BOLT, HEX 5/16-18X5/8 Z 280M (VLV LFTR GDE RET)	93-96	.....	AR	
210.		8.971	PLUG-SQ SOC, 1/4-18X.44 AM STD PIPE THD, STL, CZ (CYL HD CORE HOLE)	93-96	.....	AR	144011
211.	1-E26	0.303	SHIM, VLV SPR (0.519)	93	Y (LT1)	16	10168423
	1-E26	0.303	SHIM, VLV SPR	94-95	Y (LT1)	16	10212809
	1-E26	0.303	SHIM, VLV SPR	96	Y (LT1, M30)	16	10212809
212.	1-E26	0.303	SPRING, VLV	93-95	Y (LT1)	16	10206040
	1-E26	0.303	SPRING, VLV	96	Y (LT1, M30)	16	10206040
213.	1-E27	0.308	SEAL, VLV STEM OIL (*KIT1)	93	Y (LT1, MD8)	16	10128383
	1-E27	0.308	SEAL, VLV STEM OIL (*KIT1)	93	Y (LT1, ML9)	16	10128383
	1-E27	0.308	SEAL, INT VLV STEM OIL (*KIT1)	94-96	Y (LT1)	8	10212810
	1-E27	0.308	SEAL, INT VLV STEM OIL (*KIT1)	96	Y (LT1, M30)	8	10212810
	1-E27	0.308	SEAL, EXH VLV STEM OIL (*KIT1)	94-96	Y (LT1)	8	12558674
214.	1-E27	0.309	CAP, VLV SPR	93	Y (LT1, MD8, ML9)	16	10168424
	1-E27	0.309	CAP, VLV SPR	94-95	Y (LT1)	16	10212808
	1-E27	0.309	CAP, VLV SPR	96	Y (LT1, M30)	16	10212808
215.	1-E28	0.310	KEY, VLV STEM	93-96	Y (LT1)	32	24503856
216.	1-E24	0.293	BOLT, CYL HD (MED (7/16-14 X 3 1/16, 300M)	93-94	Y (LT1)	4	14088946
	1-E24	0.293	BOLT, CYL HD (MED (7/16-14 X 3 1/16, 300M)	95-96	Y (LT1)	4	14088946
217.	1-E24	0.293	BOLT, CYL HD (LONG 7/16-14 X 3 51/64, 300M)	93-96	Y (LT1)	14	10168525
218.		DISCON	HEAD, CYL	93	Y (LT1, MD8, ML9)	2	10205244
	1-E23	0.269	HEAD, CYL	94-95	Y (LT1)	2	10168448
	1-E23	0.269	HEAD, CYL	96	Y (LT1, M30)	1	10168448
219.	1-E24	0.293	BOLT, CYL HD (SHORT (7/16 X 1 3/4, PZOR, .78 O.D.) (7/16-14 X 1.62)	93-96	Y (LT1)	16	10168527
220.	1-M9	2.270	SPARK PLUG, (41-906) (AC-DELCO #41-906)	93-95	Y (LT1)	8	5614244
	1-M9	2.270	SPARK PLUG, (41-943) (AC-DELCO #41-943)	96	Y (LT1, M30)	8	25166821
221.		8.971	PLUG (CYL HD CORE HOLE)	93-96	.....	AR	14090911
222.	1-M8	2.251	SUPPORT, SPLG WIRE	93-96	Y (LT1)	LH	10096186
223.	1-M8	2.251	BOLT, SPLG WIRE SUPT (8.900) .	93-96	Y (LT1)	8	9439930
224.	1-L16	1.097	PIPE, ENG COOL AIR BL	93-94	Y (LT1)	1	10108636
	1-L16	1.097	PIPE, ENG COOL AIR BL (INCLUDES BOLTS & SEALS) ...	95-96	Y (LT1)	1	12556260

© 2000 GENERAL MOTORS SERVICE PARTS OPERATIONS-CHEVROLET-14Y

							1Y00-022
225.	1-E23	0.289	GASKET, CYL HD (*KIT1)	93-95	Y (LT1)	2	10168457
	1-E23	0.289	GASKET, CYL HD (*KIT1)	96	Y (LT1, M30)	2	10168457
226.	1-E26	0.297	VALVE, EXH (.0035"O.S.)	93	Y (LT1)	8	10168515
	1-E26	0.297	VALVE, EXH (STD)	94-96	Y (LT1)	8	12550909
	1-E26	0.297	VALVE, EXH (.0305 O.S.)	94-96	Y (LT1)	8	12550913
	1-E26	0.297	VALVE, EXH (STD) (STD)	93	Y (LT1)	8	10168514
227.	1-E25	0.296	VALVE, INT (STD)	94-96	Y (LT1)	8	10241743
	1-E25	0.296	VALVE, INT (.0035"O.S.)	93	Y (LT1)	8	10168466
	1-E25	0.296	VALVE, INT (.0155"O.S.)	93	Y (LT1)	8	10168467
	1-E25	0.296	VALVE, INT (.0305"O.S.)	93	Y (LT1)	8	10168468
	1-E25	0.296	VALVE, INT (STD)	93	Y (LT1)	8	10168465
228.	1-F3	0.439	GUIDE, VLV LFTR	93-96	Y (LT1)	8	12550002
229.	1-F3	0.459	LIFTER, VLV (RLR) (AC-DELCO #HL112)	93-95	Y (LT1)	16	5234690
	1-F3	0.459	LIFTER, VLV (ROLLER) (AC-DELCO #HL123)	96	Y (LT1)	16	17120735
230.		N.S.	BRACKET, ENG LIFT RR		.....		
231.	1-E16	0.004	BOLT, ENG LIFT RR BRKT (3/8-16X3/4) (8.900)	96	Y (LD9)	2	9442052
232.		8.939	PIN, DOWEL 5/16 X 9/16 STEEL (CYL HD LOC) (*2) (AC-DELCO #585927)	93-96	.....	AR	585927
233.	1-M8	2.251	RETAINER, SPLG WIRE (W/COVER, (2-WIRE)	93-95	Y (LT1)	AR	12043158
234.	1-M8	2.251	RETAINER, SPLG WIRE (4/WIRE) (AC-DELCO #8073)	93-95	Y (LT1)	AR	12073940
235.	1-M8	2.251	RETAINER, SPLG WIRE (4-WIRE) (CLIP, LWR)	93-95	Y (LT1)	AR	12059510
	1-M8	2.251	RETAINER, SPLG WIRE (4-WIRE, BRKT MT, TWO LK PIN TOP)	93-95	Y (LT1)	AR	12059514
236.	1-M5	2.239	WIRE KIT, SPLG (INCL 247) (AC-DELCO #708W)	93-95	Y (LT1)	1	12074093
	1-M5	2.239	WIRE KIT, SPLG (INCL 247) (AC-DELCO #748C)	96	Y (LT1, M30)	1	12173585
237.	1-M11	2.372	SEAL, DISTR DRV SHF (2.363) ..	95-96	Y (LT1)	1	12552428
	1-M11	2.372	SEAL, DISTR DRV SHF (IN ENG FRT CVR)	93-94	Y (LT1)	1	10128317
238.	1-M10	2.361	DISTRIBUTOR, (CONTAINS 2 WATER PUMP GASKETS) (SEE GROUP 2.000 "DISTRIBUTOR" FOR DETAIL ILLUSTRATED VIEW.) (AC-DELCO #10457702)	93-94	Y (LT1)	1	10457702
	1-M10	2.361	DISTRIBUTOR, (CONTAINS 2 WATER PUMP GASKETS) (SEE GROUP 2.000 "DISTRIBUTOR" FOR DETAIL ILLUSTRATED VIEW.) (W/PUMP GSKT SHOULD BE ORDERED ALSO) (AC-DELCO #1104032)	95-96	Y (LT1)	1	1104032
239.	1-M10	2.363	BOLT, DISTR (HFH, 1/4-20X2, .75 THD, .52 OD, 280M, PO) (8.900)	93-96	Y (LT1)	3	9442308
240.	1-M8	2.251	SUPPORT, SPLG WIRE	93-96	Y (LT1)	1	10137631
241.	1-M8	2.251	BOLT, SPLG WIRE SUPT (M8X1.25X16 17.6.9.8PZOR) (8.900)	93-96	Y (LT1)	2	11516186

© 2000 GENERAL MOTORS SERVICE PARTS OPERATIONS-CHEVROLET-14Y

							1Y00-022
242.	1-M9	2.277	BOLT, GEN BRKT (HFH, 3/8-16X1.75, 1.12-THD LEN 0.75-OD, 300M, POR) (3/8-16X1.75, 1.12-THD) (8.900)	93-96	Y (LT1)	2	9441560
243.	1-M9	2.277	BOLT, GEN BRKT (HFH 3/8-16X2.00 280M POR 8174M) (8.900)	93-95	Y (LT1)	1	9440073
244.	1-M9	2.277	BRACKET, GEN & A/C CMPR & P/S PUMP	93-95	Y (LT1)	1	12550052
	1-M9	2.277	BRACKET, GEN & A/C CMPR & P/S PUMP	96	Y	1	12550052
245.		8.800	SEALANT-LOCTITE PIPE-W/TEFLON 50CC TUBE	93-96		AR	1052080
246.	1-M11	2.383	HARNESS, DISTR WRG	93	Y (LT1)	1	12106559
	1-M11	2.383	HARNESS, DISTR WRG (DISTR CONN IS APPX 1" LG)	94	Y (LT1) (1ST DES)	1	12106559
	1-M11	2.383	HARNESS, DISTR WRG	95-96	Y (LT1)	1	12130319
	1-M11	2.383	HARNESS, DISTR WRG (DISTR CONN IS APPX 2" LG)	94	Y (LT1) (2ND DES)	1	12130319
247.	1-M5	2.240	WIRE, IGN COIL (FROM DIST TO COIL) (PART OF 236) (AC-DELCO #344S)	93-95	Y (LT1)	1	12173444
		N.S.	WIRE, IGN COIL (PART OF 236)	96	(LT1)		
248.	1-N26	6.635	BRACKET, P/S FLUID RSVR	93-96	Y (LT1)	1	10157972
249.	1-N26	6.635	NUT, P/S FLUID RSVR BRKT (3/8-16 PC, 286M) (HEX, FLANGE) (8.917)	93-96	Y (LT1)	1	9442958
250.	1-M5	2.163	STUD, IGN COIL (INBOARD & OUTBOARD)	95-96	Y (LT1)	1	12555065
	1-M5	2.163	STUD, IGN COIL (STUD, HEX 3/8-16X.80-3/8-16X.80 300M POR) (8.981)	93-95	Y (LT1)	1	14057279
251.	1-M5	2.163	BOLT, IGN COIL (3/8-16X3/4) (8.900)	93-95	Y (LT1)	3	9442052
252.	1-M5	2.170	COIL, IGN (SEE GROUP 2.000 "COIL" FOR DETAIL ILLUSTRATED VIEW.) (AC-DELCO #D535)	93	Y (LT1)	1	1115315
	1-M5	2.170	COIL, IGN (SEE GROUP 2.000 "COIL" FOR DETAIL ILLUSTRATED VIEW.) (AC-DELCO #D573)	94-95	Y (LT1)	1	10477208
	1-M5	2.170	COIL, IGN (SEE GROUP 2.000 "COIL" FOR DETAIL ILLUSTRATED VIEW.) (AC-DELCO #D577)	96	Y (LT1, LT4)	1	10489421
253.	1-L17	1.150	SENSOR, ENG COOL T/GA (2 BLADE TERM) (3/8-18 THD) (2 TERM, CAN BE USED AS 1 TERM CONN) (AC-DELCO #213-77)	93-96	Y (LT1)	1	25037332
254.	1-M8	2.251	SUPPORT, SPLG WIRE	93-96	Y (LT1)	RH	10096185
255.	1-F3	0.426	ROD, VLV PUSH (INCLS INSERTS)	93-95	Y (LT1)	16	10046173
	1-F3	0.426	ROD, VLV PUSH (INCLS INSERT)	96	Y (LT1, M30)	16	10241740
256.	1-F3	0.459	RETAINER, VLV LFTR GDE (1 PC) (RESTRICTOR)	93-95	Y (LT1)	1	14101116

© 2000 GENERAL MOTORS SERVICE PARTS OPERATIONS-CHEVROLET-14Y

							1Y00-022
	1-F3	0.459	RETAINER, VLV LFTR GDE (1 PC) (RESTRICTOR)	96	Y (LT1, M30)	1	14101116
257.		6.929	WASHER (VLV LFTR GDE RET) ..	93-96	.....	3	120386
258.	1-F2	0.413	STUD, VLV RKR ARM CVR	93-95	Y (LT1)	8	10108674
	1-F2	0.413	STUD, VLV RKR ARM CVR	96	Y (LT1, M30)	8	10108674
259.	1-N3	3.330	COVER, F/INJN FUEL RL	93	Y (LT1)	LH	10224935
	1-N3	3.330	COVER, F/INJN FUEL RL	93	Y (LT1)	RH	10224936
	1-N3	3.330	COVER, F/INJN FUEL RL	94-96	Y (LT1)	LH	10208794
	1-N3	3.330	COVER, F/INJN FUEL RL	94-96	Y (LT1)	RH	10208795

SERVICE KITS

1.	1-E23	0.289	GASKET KIT, CYL HD (INCL 204, 213, 225) (KIT INCLUDES: GASKETS FOR CYLINDER HEAD, INTAKE AND EXHAUST MANIFOLD, EGR VALVE, THROTTLE BODY, VALVE COVERS AND VALVE STEM SEALS.)	93	Y (LT1)	1	12518047
	1-E23	0.289	GASKET KIT, CYL HD (INCL 204, 213, 225) (KIT INCLUDES: GASKETS FOR CYLINDER HEAD, INTAKE AND EXHAUST MANIFOLD, EGR VALVE, THROTTLE BODY, VALVE COVERS AND VALVE STEM SEALS.)	94-96	Y (LT1)	1	12369146

NOTE 2: ALSO PART OF PARTIAL ENGINE (SEE PART 1).

RPO DEFINITIONS

LD9 – ENGINE GAS, 4 CYL, 2.4L, SFI, DOHC
LT1 – ENGINE–GAS, 8 CYL, 5.7L(5.7P),MFI,HO
LT4 – ENGINE GAS, 8 CYL, 5.7L, MFI, HIGH OUTPUT
MD8 – TRANSMISSION,AUTOMATIC 4–SPEED(THM700R4/4L60)
ML9 – TRANSMISSION,MANUAL 6–SPEED
M30 – TRANSMISSION,AUTOMATIC 4 SPEED,4L60E,ELECTRONIC

© 2000 GENERAL MOTORS SERVICE PARTS OPERATIONS–CHEVROLET–14Y

MICROFICHE INDEX

GROUPS 0.000 & 21.000

FICHE 1 OF 11

GROUP	DESCRIPTION	STARTING GRID LOCATION PARTS	ILLUSTRATIONS
–	GENERAL INFORMATION	1–A2	1–G2
–	ALPHABETICAL INDEX	1–B13	N.A.
0.000	8–CYLINDER ENGINE	1–E2	1–G5
21.000	ACCESSORY REFERENCE LIST	1–D2	N.A.
–	OUT OF FICHE CALLS	N.A.	1–L13

1–J1

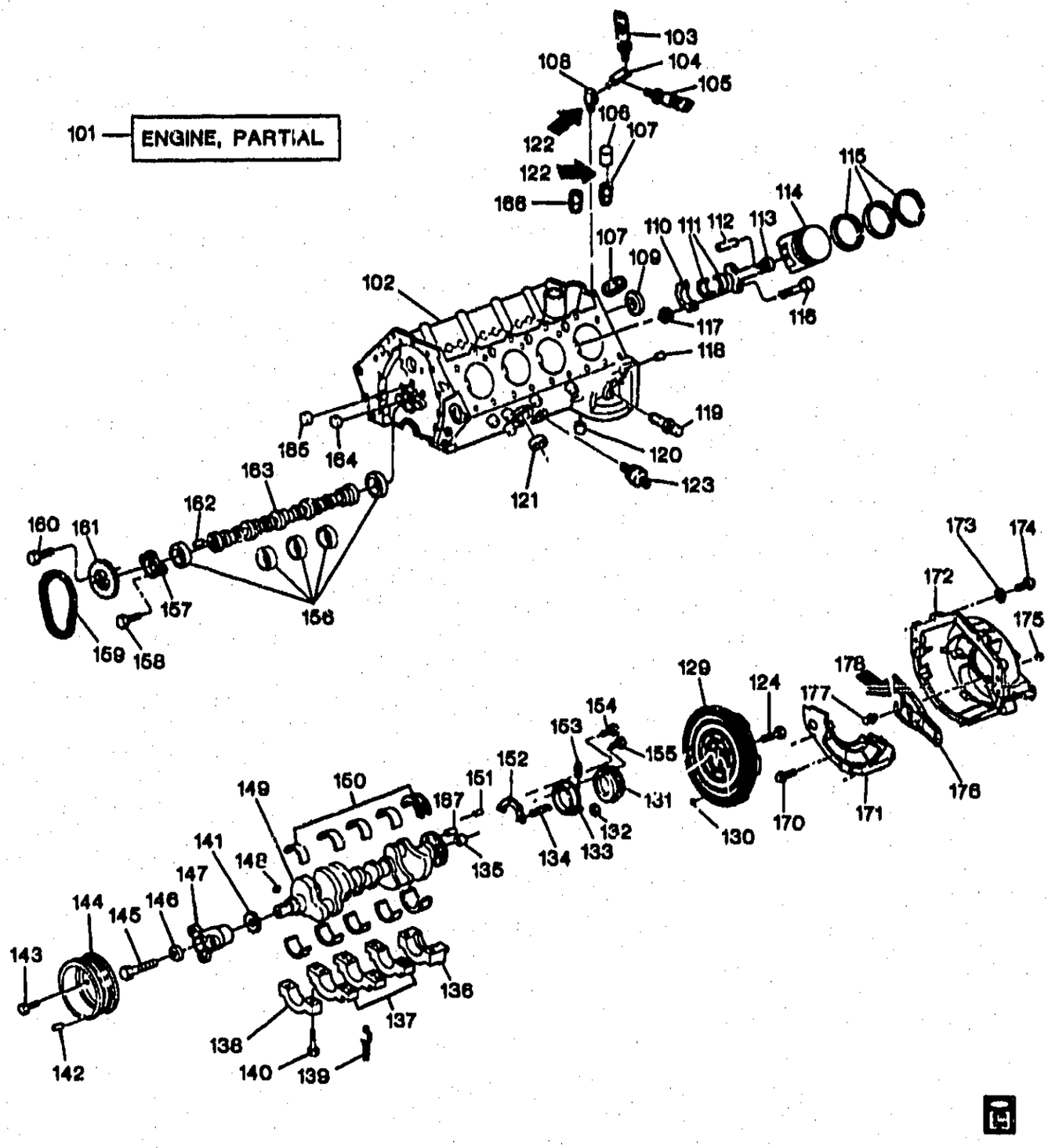

1Y00-040

1996 Y ENGINE ASM-5.7L V8 PART 1 CYLINDER BLOCK AND RELATED PARTS (LT4/5.7-5)

101.	1--E15	0.000 A	ENGINE, GASOLINE (GOODWRENCH) (NEW) (REFER TO NOTE #1 IN CATLG TEXT) ((5.7L, 350 CID))	96 Y (LT4)	1 12534776
102.		N.S.	BLOCK, ENG	.....	

© 2000 GENERAL MOTORS SERVICE PARTS OPERATIONS-CHEVROLET-14Y

							1Y00-040
103.	1-L27	1.800	SENSOR, F/PMP SW & ENG OIL PRESS GA (1/8-27 THD SIZE) (3 BLADE TERM) (AC-DELCO #10201491)	96	Y (LT4)	1	10201491
104.	1-L27	1.800	ELBOW, ENG OIL PRESS GA SEN (TO BLK) (1.803) (USED W/1052080, SEALER)	96	Y (LT4)	1	14078988
105.	1-L27	1.800	SWITCH, ENG OIL PRESS IND (OIL FLTR HSG (1 BLADE TERM, 1/8-27 THD)) (AC-DELCO #D1846)	96	Y (LT4)	1	25036935
106.		8.970	PLUG EXPANSION (1/2" STL) (ENG BLK OIL GAL)	96	Y (LT4)	1	3701638
107.	1-L22	1.531	PLUG, ENG BLK OIL GAL (8.971)	96	Y (LT4)	1	14081701
108.	1-L27	1.800	FITTING, ENG OIL PRESS GA SEN	96	Y (LT4)	1	1013,636
109.	1-F5	0.553	PLUG. CM/SHF RR BRG HOLE (8.970)	96	Y (LT4)	AR	10241154
110.		N.S.	CAR CONN ROD (PART OF 113) .		.....		
111.	1-F6	0.616	BEARING KIT, CONN ROD (STD)	96	Y (LT4)	8	12523924
	1-F6	0.616	BEARING KIT, CONN ROD (.001 U.S.) (.001 U.S.)	96	Y (LT4)	8	12523925
	1-F6	0.616	BEARING KIT, CONN ROD (.001 U.S.) (.001 U.S.) (LANSING) (0.096)	96	Y (LT4)	8	12523928
	1-F6	0.616	BEARING KIT, CONN ROD (.010 U.S.) (.010 U.S.)	96	Y (LT4)	8	12523926
112.		N.S.	PIN, PSTN (PART OF 114)		.....		
113.	1-F5	0.603	ROD, CONN (INCL 110, 116, 117)	96	Y (LT4)	8	10108688
114.	1-F6	0.629	PISTON, (W/PIN) (.005 O.S.) (INCL 112)	96	Y (LT4, ML9)	8	12528829
	1-F6	0.629	PISTON, (W/PIN) (.030 O.S.) (INCL 112)	96	Y (LT4, ML9)	8	12528830
	1-F6	0.629	PISTON, (W/PIN) (STD) (INCL 112)	96	Y (LT4, ML9)	8	12528828
115.	1-F7	0.643	RING KIT, PSTN (STD)	96	Y (LT4)	8	12528817
	1-F7	0.643	RING KIT, PSTN (.005" O.S.)	96	Y (LT4)	8	12528818
	1-F7	0.643	RING KIT, PSTN (.030 O.S.)	96	Y (LT4)	8	12528819
116.	1-F6	0.623	BOLT, CONN ROD (ALSO PART OF 113)	96	Y (LT4)	16	461372
117.	1-F6	0.626	NUT, CONN ROD (ALSO PART OF 113) (3/8-24) (HEX)	96	Y (LT4)	16	3066766
118.	1-F12	0.685	PIN, FLYWHL HSG LOC (5/8 DIA, 1 3/16 LG) (8.939)	96	Y (LT4)	2	12338119
119.	1-L27	1.800	SENSOR, ENG OIL T/GA & OIL CHANGE IND (AC-DELCO #10096136)	96	Y (LT4)	1	10096136
120.	1-L22	1.531	PLUG, ENG BLK OIL GAL (CUP 15/32 X 5/16)	96	Y (LT4)	1	14091563
121.	1-E17	0.034	PLUG, ENG BLK CORE HOLE (41.5MM DIA) (BRASS)	96	Y (LT4, ML9)	8	3826504
122.		8.800	SEALANT-LOCTITE PIPE-W/TEFLON 50CC TUBE ...	96	.....	AR	12346004
123.	1-M11	2.383	SENSOR, KNOCK (AC-DELCO #213-325)	96	Y	1	10456287
124.	1-F10	0.669	BOLT, FLYWHL (MANUAL TRANS) (7/16-20X1 3/4)	96	Y (LT4)	6	10085215
129.	1-F9	0.666	FLYWHEEL, ENG (MANUAL TRANS)	96	Y (LT4)	1	10174482

© 2000 GENERAL MOTORS SERVICE PARTS OPERATIONS-CHEVROLET-14Y

						1Y00-J40	
130.	1-F10	0.669	WEIGHT FLYWHL (MANUAL TRANS) (2360/.2500 X .50) (BARREL-SHAPED PIN) (GROOVE-F)	96	Y (LT4, ML9)	AR	3890102
131.	1-E20	0.137	SEAL, CR/SHF RR OIL (ALSO PART OF 137)	96	Y (LT4)	1	10038158
132.	1-E20	0.137	NUT, CR/SHF RR OIL SEAL RET (HFX, 1/4-20X.234, 284M, 69K, POR, 240) (HFH, 1/4-20X.234, 284M, 69K, POR, 240) (8.917) ...	96	Y (LT4)	1	12337984
133.	1-E20	0.137	HOUSING, CR/SHF RR OIL SEAL (INCL 135, 157) (0.659)	96	Y (LT4)	1	14088556
134.	1-E20	0.137	STUD, CR/SHF RR OIL SEAL RET (1/4-20 X 2 3/16)	96	Y (LT4)	1	14101058
135.	1-F8	0.649	BEARING, CLU PILOT	96	Y (LT4, ML9)	1	14061685
136.		N.S.	CAP, CR/SHF #5 BRG		.....		
137.		N.S.	CAP, CR/SHF BRG		.....		
138.		N.S.	CAP, CR/SHF #1 BRG		.....		
139.	1-E18	0.056	STUD, CR/SHF BRG CAP (7/16-14 X 3.38 THD 1.12, 3/8-14 FLG END, STL)	96	Y (LT4, ML9)	3	12561389
140.	1-E18	0.056	BOLT, CR/SHF BRG CAP (7/16-14X2.06) (0.293)	96	Y (LT4, ML9)	6	3977669
	1-E18	0.056	BOLT, CR/SHF BRG CAP (7/16-14 X 3 11/32)	96	Y (LT4, ML9)	10	3932480
141.	1-F13	0.728	SPROCKET, CR/SHF	96	Y (LT4, ML9)	1	12555886
142.		8.940	PIN, GROOVE/F/.312X.375 CZ; 0.375" LENGTH (CR/SHF BAL) (WEIGHT)	96	.....	AR	274584
143.	1-F9	0.662	BOLT, CR/SHF BALR (HFH, 7/16-14X.88, .70 THD, .86 OD, 300M, PC) (HFH, 7/16X.88, .70 THD, .86 OD, 300M, PC) (8.900) .	96	Y (LT4)	3	9442448
144.	1-F8	0.659	BALANCER, CR/SHF	96	Y (LT4, ML9)	1	12551486
145.	1-F9	0.662	BOLT, CR/SHF BALR (7/16-20X2.25 300M POR) (7/16-20 X 2 1/4, 300M) (8.900) .	96	Y (LT4)	1	9440024
146.	1-F9	0.662	WASHER, CR/SHF BALR	96	Y (LT4, ML9)	1	10128306
147.	1-F8	0.659	HUB, CR/SHF BALR	96	Y (LT4)	1	12550097
148.	1-F9	0.662	KEY, CR/SHF BALR	96	Y (LT4)	1	12550096
149.	1-F8	0.646	CRANKSHAFT, ...	96	Y	1	12551485
150.	1-E18	0.096	BEARING KIT, CR/SHF (.001 U.S./STD) (RR)	96	Y (LT4, ML9)	1	12528826
	1-E18	0.096	BEARING KIT, CR/SHF (#1, 2, 3, 4)) (STD) (IF CRNK JOURNAL MEAS IS IN STD BRG RANGE, MAY USE THIS PART IN PLACE OF 12513950 (.0006 US), 10120992 (.001 US), OR 12531215 (.001 US) .)	96	Y (LT4)	4	10120990
	1-E18	0.096	BEARING KIT, CR/SHF (#1, 2, 3, 4)) (.001 U.S./STD) (REPL 0.0006" U.S. BRG KIT)	96	Y (LT4)	4	12531215
	1-E18	0.096	BEARING KIT, CR/SHF (RR #5) (STD) (RR)	96	Y (LT4, ML9)	1	10120993
151.	1-E20	0.137	PIN, CR/SHF RR OIL SEAL HSG LOC (SPRING TYPE S 7/16X9/16 STL ZP) (8.940)	96	Y (LT4)	1	9441003

© 2000 GENERAL MOTORS SERVICE PARTS OPERATIONS-CHEVROLET-14Y

							1Y00-040
152.	1-E20	0.137	GASKET, CR/SHF RR OIL SEAL HSG	96	Y (LT4)	1	12555714
153.	1-E20	0.137	STUD, CR/SHF RR OIL SEAL RET (ALSO PART OF 137) (5/16 X 18 X 1 43/64) (1.428)	96	Y (LT4)	2	14060362
154.	1-E20	0.137	BOLT, CR/SHF RR OIL SEAL HSG (1/4-20 X 1 3/4)	96	Y (LT4)	2	14088562
155.	1-E20	0.137	BOLT, CR/SHF RR OIL SEAL HSG (1/4-20 X 7/8)	96	Y (LT4)	2	14088561
156.	1-F5	0.539	BEARING, CM/SHF	96	Y (LT4, ML9)	2	474006
	1-F5	0.539	BEARING, CM/SHF	96	Y (LT4, ML9)	1	12453170
	1-F5	0.539	BEARING, CM/SHF (PRECISION TYPE) (POS #3, 4)	96	Y (LT4)	2	12453172
157.	1-F4	0.529	RETAINER, CM/SHF	96	Y (LT4, ML9)	1	10168501
158.	1-F4	0.529	BOLT, CM/SHF RET (HEX SOC TORQ DR 1/4-20 X 1/2, 15/32 OD)	96	Y (LT4)	2	14093637
159.	1-F12	0.724	CHAIN, CM/SHF TMG	96	Y (LT4, ML9)	1	12555887
160.	1-F14	0.738	BOLT, CM/SHF SPKT (5/16-18 X 3/4, 300M) (HEX HD, STEEL) (8.900)	96	Y (LT4)	3	9424877
161.	1-F14	0.738	SPROCKET, CM/SHF	96	Y (LT4, ML9)	1	12555885
162.	1-F14	0.738	PIN, CM/SHF SPKT LOC	96	Y (LT4, ML9)	1	10214485
163.	1-F4	0.519	CAMSHAFT, ENG	96	Y (LT4, ML9)	1	12551142
164.	1-L22	1.531	PLUG, ENG BLK OIL GAL (37/64X1/4, 1/4 MM HOLE IN CTR, 1008, PL)	96	Y (LT4)	2	10110697
165.	1-L22	1.531	PLUG, ENG BLK OIL GAL (CUP 15/32 X 5/16)	96	Y (LT4)	1	14091563
166.		8.971	PLUG, 1/4-18 NPTF, SQ SOCKET PIPE (ENG OIL PRESS GA SEN ORIND SW HOLE)	96		AR	444654
167.	1-F10	0.669	PIN, FLYWHL LOC (7/16 DIA. X 7/8)	96	Y (LT4, ML9)	1	3701679
170.		8.900	BOLT, PZCR 0.8 (FLYWHL HSG CVR) (AC-DELCO #11507087)	96		AR	11507087
171.	1-F11	0.679	COVER, FLYWHL HSG	96	Y (LT4, ML9)	1	10126500
172.	1-F11	0.683	HOUSING, FLYWHL	96	Y (LT4, ML9)	1	10126440
173.	1-F11	0.683	WASHER, CLU HSG (0.685)	96	Y (LT4)	AR	10150037
174.	1-F11	0.683	BOLT, FLYWHL HSG (0.685)	96	Y (LT4)	AR	10150037
175.	1-F17	0.796	BOLT, CLU FORK BALL STUD	96	Y (LT4, ML9)	1	10227810
176.	1-F16	0.795	FORK, CLU	96	Y (LT4, ML9)	1	10065210
177.	1-F17	0.796	STUD, CLU FORK BALL	96	Y (LT4, ML9)	1	10227809
178.			LUBRICANT, CLU FORK BALL STUD (1 LB CAN) (8.800)				1051344

RPO DEFINITIONS
LT4 -- ENGINE GAS, 8 CYL, 5.7L, MFI, HIGH OUTPUT
ML9 -- TRANSMISSION,MANUAL 6-SPEED

© 2000 GENERAL MOTORS SERVICE PARTS OPERATIONS-CHEVROLET-14Y

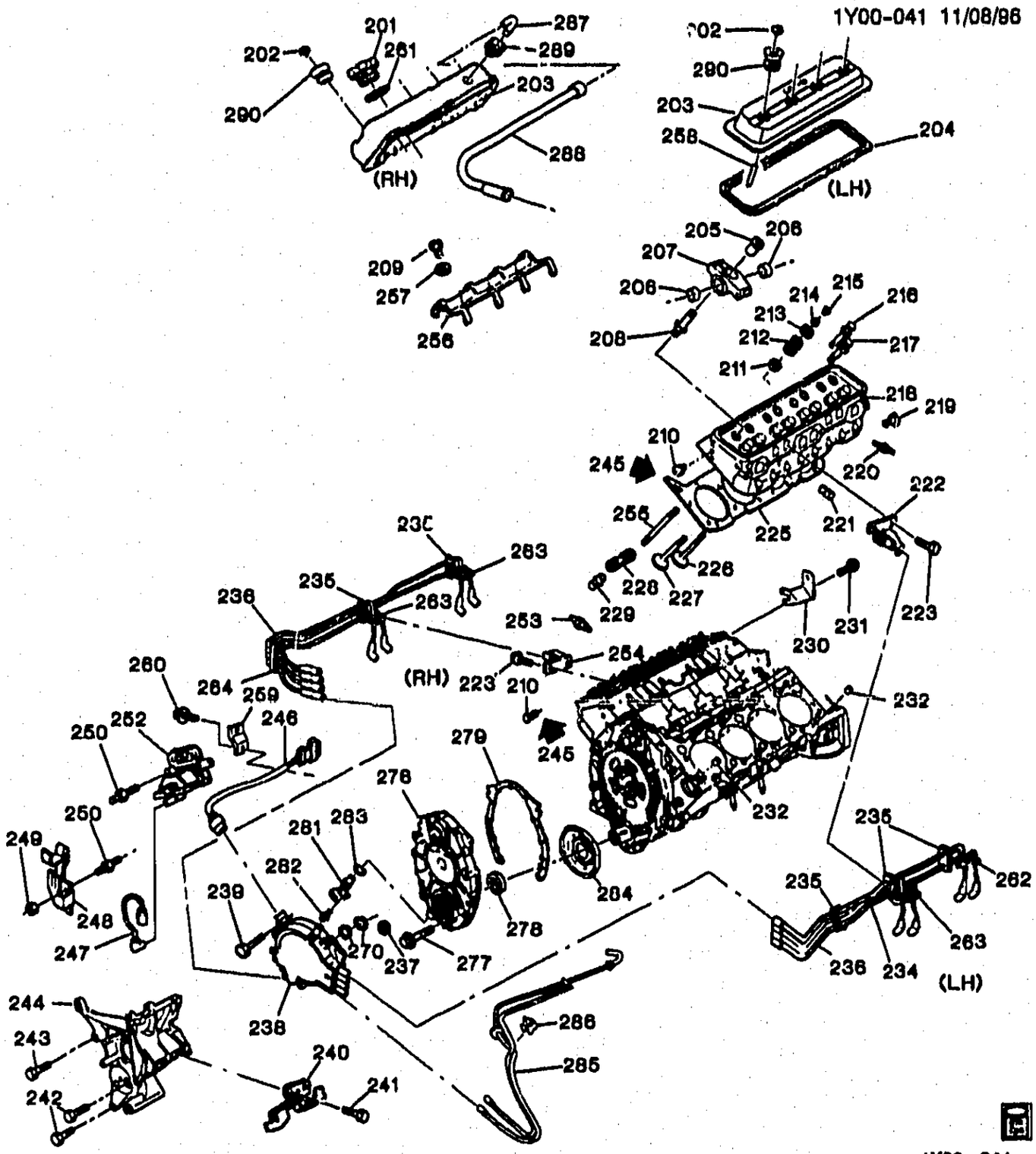

1Y00-041

1996 Y ENGINE ASM-5.7L V8 PART 2 CYLINDER HEAD AND RELATED PARTS (LT4/5.7-5)

201.	1-L26	1.758	CAP, OIL FIL ("MOBIL 1") (AC-DELCO #PC183)	96	Y	1	12554955
202.	1-F2	0.413	BOLT, VLV RKR ARM CVR	96	Y (LT4, ML9)	8	10108675
203.	1-E28	0.386	COVER, VLV RKR ARM	96	Y (LT4, ML9)	LH	12552321
	1-E28	0.386	COVER, VLV RKR ARM	96	Y (LT4, ML9)	RH	12552322
204.	1-F2	0.423	GASKET, VLV RKR ARM CVR (*KIT1)	96	Y (LT4, ML9)	1	10108625

© 2000 GENERAL MOTORS SERVICE PARTS OPERATIONS-CHEVROLET-14Y

								1Y00-041
205.	1-F3	0.429	NUT, VLV RKR ARM (ALSO PART OF 207)	96	Y (LT4, ML9)		16	10215349
206.		N.S.	BALL, VLV RKR ARM (PART OF 207)					
207.	1-E28	0.333	ARM KIT, VLV RKR (INCL 205, 206)	96	Y (LT4, ML9)		16	12557779
208.	1-F3	0.429	STUD, VLV RKR ARM BALL	96	Y (LT4, ML9)		16	12550011
209.		8.900	BOLT, HEX 5/16-18X5/8 Z 280M (VLV LFTR GDE RET)	96			AR	
210.		8.971	PLUG-SQ SOC, 1/4-18X.44 AM STD PIPE THD, STL, CZ (CYL HD CORE HOLE)	96			AR	144011
211.	1-E26	0.303	SHIM, VLV SPR	96	Y (LT4, ML9)		16	10212809
212.	1-E26	0.303	SPRING, VLV	96	Y (LT4, ML9)		16	12551483
213.	1-E27	0.308	SEAL, INT VLV STEM OIL (*KIT1)	96	Y (LT4)		8	10212810
	1-E27	0.308	SEAL, EXH VLV STEM OIL (*KIT1)	96	Y (LT4)		8	12558674
214.	1-E27	0.309	CAP, VLV SPR	96	Y (LT4, ML9)		16	10212808
215.	1-E28	0.310	KEY, VLV STEM	96	Y (LT4)		32	24503856
216.	1-E24	0.293	BOLT, CYL HD (MED (7/16-14 X 3 1/16, 300M) (MEDIUM 7/16-14 X 3 1/16, 300M)	96	Y (LT4)		14	10168526
217.	1-E24	0.293	BOLT, CYL HD (MEDIUM 7/16-14 X 3 1/16, 300M)	96	Y (LT4)		4	10168526
218.	1-E23	0.269	HEAD, CYL	96	Y (LT4, ML9)		?	12557773
219.	1-E24	0.293	BOLT, CYL HD (SHORT) (7/16-14 X 1.62)	96	Y (LT4)		16	10168527
220.	1-M9	2.270	SPARK PLUG, (41-943) (AC-DELCO #41-943)	96	Y (LT4, ML9)		8	25166821
221.		8.971	PLUG (CYL HD CORE HOLE)	96			AR	14090911
222.	1-M8	2.251	SUPPORT, SPLG WIRE	96	Y (LT4)		LH	10096186
223.	1-M8	2.251	BOLT, SPLG WIRE SUPT (8.900)	96	Y (LT4)		8	9439930
225.	1-E23	0.289	GASKET, CYL HD (*KIT1)	96	Y (LT4, ML9)		2	12551488
226.	1-E26	0.297	VALVE, EXH (STD)	96	Y (LT4, ML9)		8	12551313
227.	1-E25	0.296	VALVE, INT (STD)	96	Y (LT4)		8	12555331
228.	1-F3	0.439	GUIDE, VLV LFTR	96	Y (LT4)		8	12550002
229.	1-F3	0.459	LIFTER, VLV (ROLLER) (AC-DELCO #HL123)	96	Y (LT4)		16	17120735
230.		N.S.	BRACKET, ENG LIFT RR					
231.	1-E16	0.004	BOLT, ENG LIFT RR BRKT (3/8-16X3/4) (8.900)	96	Y (LT4)		3	9422052
232.		8.939	PIN, DOWEL 5/16 X 9/16 STEEL (CYL HD LOC) (AC-DELCO #585927)	96			AR	585927
234.	1-M8	2.251	RETAINER, SPLG WIRE (4/WIRE, CROSS SHAPED) (AC-DELCO #8073)	96	Y (LT4)		AR	12073948
235.	1-M8	2.251	RETAINER, SPLG WIRE (4-WIRE) (CLIP, LWR)	96	Y (LT4)		AR	12059510
236.	1-M5	2.239	WIRE KIT, SPLG (W/COIL WIRE) (AC-DELCO #748D)	96	Y (LT4, ML9)		1	12173591
	1-M5	2.240	WIRE, SPLG #1 CYL (AC-DELCO #347G)	96	Y (LT4, ML9)		1	12173594
	1-M5	2.240	WIRE, SPLG #2 CYL (AC-DELCO #347H)	96	Y (LT4)		1	12173595
	1-M5	2.240	WIRE, SPLG #3 CYL (AC-DELCO #347H)	96	Y (LT4, ML9)		1	12173595

© 2000 GENERAL MOTORS SERVICE PARTS OPERATIONS-CHEVROLET-14Y

							1Y00-041
	1-M5	2.240	WIRE, SPLG #4 CYL (AC-DELCO #347J)	96	Y (LT4, ML9)	1	12173596
	1-M5	2.240	WIRE, SPLG #5 CYL (AC-DELCO #347K)	96	Y (LT4, ML9)	1	12173597
	1-M5	2.240	WIRE, SPLG #6 CYL (AC-DELCO #347N)	96	Y (LT4, ML9)	1	12173599
	1-M5	2.240	WIRE, SPLG #7 CYL (AC-DELCO #347M)	96	Y (LT4, ML9)	1	12173598
	1-M5	2.240	WIRE, SPLG #8 CYL (AC-DELCO #347N)	96	Y (LT4, ML9)	1	12173599
237.	1-M11	2.372	SEAL, DISTR DRV SHF (2.363) ..	96	Y (LT4)	1	12552428
238.	1-M10	2.341	DISTRIBUTOR, (SEE GROUP 2.000 "DISTRIBUTOR" FOR DETAIL ILLUSTRATED VIEW.) (W/PUMP GSKT SHOULD BE ORDERED ALSO) (AC-DELCO #1104032)	96	Y (LT4)	1	1104032
239.	1-M10	2.363	BOLT, DISTR (HFH, 1/4-20X2, .75 THD, .52 OD, 280M, PO) (8.900)	96	Y (LT4)	3	9442398
240.	1-M8	2.251	SUPPORT, SPLG WIRE	96	Y (LT4)	1	10137631
241.	1-M8	2.251	BOLT, SPLG WIRE SUPT (M8X1.25X1 18 OD, 10.9, PS W/SEALANT) (8.900)	96	Y (LT4)	2	25534835
242.	1-M9	2.277	BOLT, GEN BRKT (HFH, 3/8-16X1.75, 1.12-THD LEN 0.75-OD, 300M, POR) (3/8-16X1.75, 1.12-THD) (8.900)	96	Y (LT4)	2	9441560
243.	1-M9	2.277	BOLT, GEN BRKT (HFH 3/8-16X2.00 280M POR 6174M) (8.900)	96	Y (LT4)	1	9440073
244.	1-M9	2.277	BRACKET, GEN & A/C CMPR & P/S PUMP	96	Y	1	12550052
245.		8.800	SEALANT-LOCTITE PIPE-W/TEFLON 50CC TUBE ...	96	.....	AR	1052080
246.	1-M11	2.383	HARNESS, DISTR WRG	96	Y (LT4)	1	12130319
247.	1-M5	2.240	HARNESS, IGN COIL WRG (AC-DELCO #347R)	96	Y (LT4, ML9)	1	12192000
248.	1-N26	6.635	BRACKET, P/S FLUID RSVR	96	Y (LT4)	1	10157972
249.		8.917	NUT (P/S FLUID RSVR BRKT) ...	96	Y (LT4)	1	9442958
250.	1-M5	2.183	STUD, IGN COIL (INBOARD & OUTBOARD)	96	Y (LT4)	1	12555065
252.	1-M5	2.170	COIL, IGN (SEE GROUP 2.000 "COIL, IGN" FOR DETAIL ILLUSTRATED VIEW.) (AC-DELCO #D577)	96	Y (LT1, LT4)	1	10489421
253.	1-L17	1.150	SENSOR, ENG COOL T/GA (2 BLADE TERM) (3/8-18 THD) (2 TERM, CAN BE USED AS 1 TERM CONN) (AC-DELCO #213-77)	96	Y (LT4)	1	25037332
254.	1-M8	2.251	SUPPORT, SPLG WIRE	96	Y (LT4)	RH	10096185
255.	1-F3	0.426	ROD, VLV PUSH (INCLS INSERT)	96	Y (LT4, ML9)	16	10241740
256.	1-F3	0.459	RETAINER, VLV LFTR GDE (1 PC) (RESTRICTOR)	96	Y (LT4, ML9)	1	14101116
257.		8.929	WASHER (VLV LFTR GDE RET) ..	96	.....	3	120386
258.	1-F2	0.413	STUD, VLV RKR ARM CVR	96	Y (LT4, ML9)	8	10108674
259.		N.S.	BRACKET, DISTR WRG HARN ...		.....		

© 2000 GENERAL MOTORS SERVICE PARTS OPERATIONS-CHEVROLET-14Y

							1Y00-041
260.		8.900	BOLT, HFH, M5X.8X10, 8.8 THD, 11.4 OD, 9.8, PO (DISTR WRG HARN BRKT)	96		1	11514607
261.		N.S.	SEAL, O-RING FIL (PART OF ITEM #201				
262.	1-M8	2.251	RETAINER, SPLG WIRE (RETAINS 3-7MM LEADS, BRKT MT, HINGE STYLE)	96	Y (LT4)	AR	12047523
263.	1-M8	2.251	RETAINER, SPLG WIRE (RETAINS 2-7MM LEADS, HINGE LOCKING CVR, NARROW BLADE MT)	96	Y (LT4)	AR	12132229
264.	1-M8	2.251	RETAINER, SPLG WIRE (4 LEADS)	96	Y (LT4)	AR	12034561
270.	1-M10	2.363	SEAL, DISTR HSG OIL (O RING) (2.372) (AC-DELCO #10474278)	96	Y (LT4)	2	10474278
276.	1-E22	0.206	COVER, ENG FRT	96	Y (LT4)	1	12552427
277.	1-E22	0.206	BOLT, ENG FRT CVR ((1/4-20X1 3/8 .52 OD, .75 THD, 280M, PO)) (8.900)	96	Y (LT4)	1	9442397
278.	1-E23	0.213	SEAL, CR/SHF FRT OIL (61.5MM O.D. W/PART NUMBER STAMPING)	96	Y (LT4, ML9)	1	10128316
279.	1-E22	0.207	GASKET, ENG FRT CVR	96	Y (LT4, ML9)	1	10128293
281.	1-M11	2.383	SENSOR, CR/SHF POSN (AC-DELCO #213-314)	96	Y (LT4, ML9)	1	10456534
282.	1-M11	2.383	BOLT, CR/SHF POSN SEN (HFH M6X1X16 9.8 POR 14 OD 14MM THD) (8.900)	96	Y (LT4)	1	11508805
283.	1-M11	2.383	SEAL, CR/SHF POSN SEN (O RING) (AC-DELCO #219-194)	96	Y (LT4)	1	10476885
284.	1-M11	2.383	RING, CR/SHF POSN SEN RELUCTOR	96	Y (LT4, ML9)	1	10190917
285.	1-M13	2.420	HARNESS, DISTR VAC	96	Y (LT1, LT4)	1	12556174
286.	1-M13	2.420	CLIP, DISTR VAC HARNESS (10.186)	96	Y (LT4)	1	4614452
287.	1-L26	1.762	CONNECTOR, PCV HOSE	96	Y (LT4)	1	12550625
288.	1-L26	1.762	TUBE, PCV	96	Y (LT4)	1	12550624
289.	1-L25	1.745	GROMMET, PCV VLV (1.762)	96	Y (LT4)	1	10240678
290.	1-F2	0.413	GROMMET, VLV RKR ARM CVR BOLT	96	Y (LT4, ML9)	8	10108626

SERVICE KITS

1.	1-E23	0.289	GASKET KIT, CYL HD (INCL 204, 213, 225) (KIT INCLUDES: GASKETS FOR CYLINDER HEAD, INTAKE AND EXHAUST MANIFOLD, EGR VALVE, THROTTLE BODY, VALVE COVERS AND VALVE STEM SEALS.) (INCLS (2) HD GSKTS, INT/EXH GSKTS, EGR & W/PMP GSKTS)	96	Y (LT4, ML9)	1	12369147

RPO DEFINITIONS
LT1 – ENGINE-GAS, 8 CYL, 5.7L(5.7P),MFI,HO
LT4 – ENGINE GAS, 8 CYL, 5.7L, MFI, HIGH OUTPUT
ML9 – TRANSMISSION,MANUAL 6-SPEED

© 2000 GENERAL MOTORS SERVICE PARTS OPERATIONS-CHEVROLET-14Y

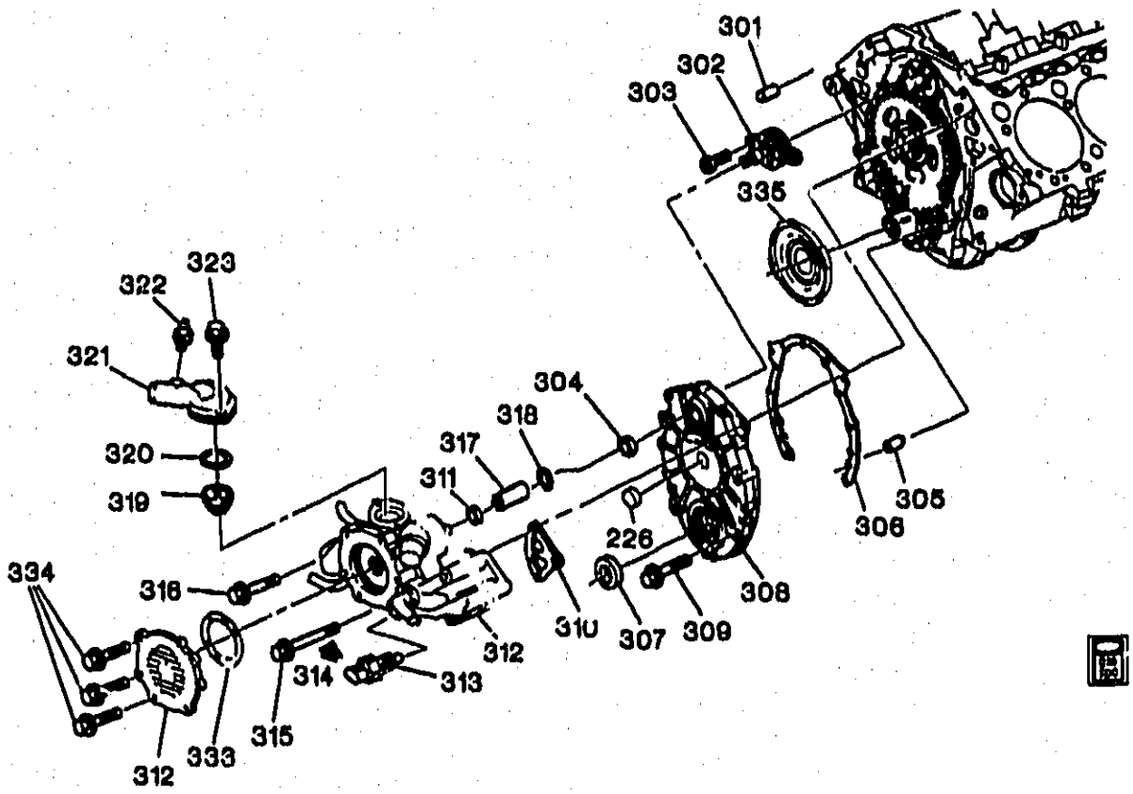

GM00-307Y

1996 Y ENGINE ASM-5.7L V8 PART 3 FRONT COVER & COOLING (LT1/5.7P)

226.	1-M11	2.372	SEAL, DISTR DRV SHF (PART OF 308) (2.363)	96	Y (LT1)	1	12552428
301.	1-L16	1.079	PIN, W/PMP LOC (DOWELL, 0.31X1.25, STL-HRD, PL, CHAM ENDS)	96	Y (LT1)	1	10128487
302.	1-L17	1.105	SHAFT, W/PMP DRV	96	Y (LT1)	1	10219554
303.	1-L17	1.105	BOLT, W/PMP DRV SHF BRG RET (HEX SOC TORQ DP 1/4-20 X 1/2, 15/32 OD) (0.529)	96	Y (LT1)	2	14093637
304.	1-L17	1.123	SEAL, W/PMP BRG (ALSO PART OF 308)	96	Y (LT1)	1	10217886
305.	1-E22	0.206	PIN, ENG FRT CVR LOC (1/4 X 5/8) (*1) (8.939)	96	Y (LT1)	2	12554553
306.	1-E22	0.207	GASKET, ENG FRT CVR	96	Y (LT1, M30)	1	10128293
307.	1-E23	0.213	SEAL, CR/SHF FRT OIL (ALSO PART OF 308) (61.5MM O.D. W/PART NUMBER STAMPING) ..	96	Y (LT1, M30)	1	10128316
308.	1-E22	0.206	COVER, ENG FRT (INCL 304, 307)	96	Y (LT1)	1	12552427
309.	1-E22	0.206	BOLT, ENG FRT CVR ((1/4-20X1 3/8 .52 OD, .75 THD, 280M, PO)) (8.900)	96	Y (LT1)	1	9442397
310.	1-L16	1.079	GASKET, W/PMP (ALSO PART OF 312) (ALSO PART OF DISTRIBUTOR ASSEMBLY (SEE PART 2) .)	96	Y (LT1)	2	10128343

© 2000 GENERAL MOTORS SERVICE PARTS OPERATIONS-CHEVROLET-14Y

311.	1-L17	1.123	SEAL, W/PMP CVR (O RING) (1.114)	96	Y (LT1)	1	10128329
312.	1-L15	1.069	PUMP, WAT (W/GASKET) (INCL 310) (AC-DELCO #251-554)	96	Y (LT1)	1	12527739
313.	1-N21	3.682	SENSOR, ENG COOL TEMP (UND PLENUM) (USED FOR CLUSTERS W/OIL GAGE & LGT COMB) (2-WAY M) (AC-DELCO #213-310)	96	Y	1	12146312
	1-L17	1.150	SENSOR, ENG COOL TEMP (UND PLENUM) (USED FOR CLUSTERS W/OIL GAGE & LGT COMB) (2-WAY M) (3.682) (AC-DELCO #213-310)	96	Y	1	12146312
314.		8.800	SEALANT-LOCTITE PIPE-W/TEFLON 50CC TUBE	96		AR	12346004
315.	1-L16	1.079	BOLT, W/PMP (USED W/SEALANT) (8.900)	96	Y (LT1)	4	9423592
316.	1-L16	1.079	BOLT, W/PMP (HFH 3/8-16X2.00 280M POR 6174M) (8.900)	96	Y (LT1)	2	9440073
317.	1-L17	1.105	COUPLING, W/PMP DRV SHF	96	Y (LT1)	1	10128334
318.	1-L17	1.105	SEAL, W/PMP DRV SHF	96	Y (LT1)	1	12553792
319.	1-L19	1.246	THERMOSTAT, ENG COOL (180 DEG) (INCL 320) (AC-DELCO #131-100)	96	Y (LT1)	1	12555290
320.	1-L19	1.252	SEAL, ENG COOL THERM (O RING) (ALSO PART OF 319) (AC-DELCO #12553106)	96	Y (LT1)	1	12553106
321.	1-L16	1.073	INLET, W/PMP (W/THERM HSG & BLEDR SCREW) (INCL 322)	96	Y (LT1)	1	10108667
322.	1-L14	1.035	VALVE, ENG COOL AIR BL (ALSO PART OF 321)	96	Y (LT1)	1	10070107
323.	1-L16	1.079	BOLT, W/PMP INL (M6 X 1.0 X 25.0 FLG HD) (8.900)	96	Y (LT1)	2	22539278
333.	1-L17	1.123	SEAL, W/PMP CVR (O RING) (ALSO PART OF 312) (1.114)	96	Y (LT1)	1	10128329
334.		8.900	BOLT, HFH M6X1X16 9.8 POR (W/PMP CVR)	96		AR	11508805
335.	1-M11	2.383	RING, CR/SHF POSN SEN RELUCTOR	96	Y (LT1, M30)	1	10190917

NOTE 1: ALSO PART OF PARTIAL ENGINE ASSEMBLY (SEE PART 1).

RPO DEFINITIONS
LT1 – ENGINE-GAS, 8 CYL, 5.7L(5.7P),MFI,HO
M30 – TRANSMISSION,AUTOMATIC 4 SPEED,4L60E,ELECTRONIC

© 2000 GENERAL MOTORS SERVICE PARTS OPERATIONS-CHEVROLET-14Y

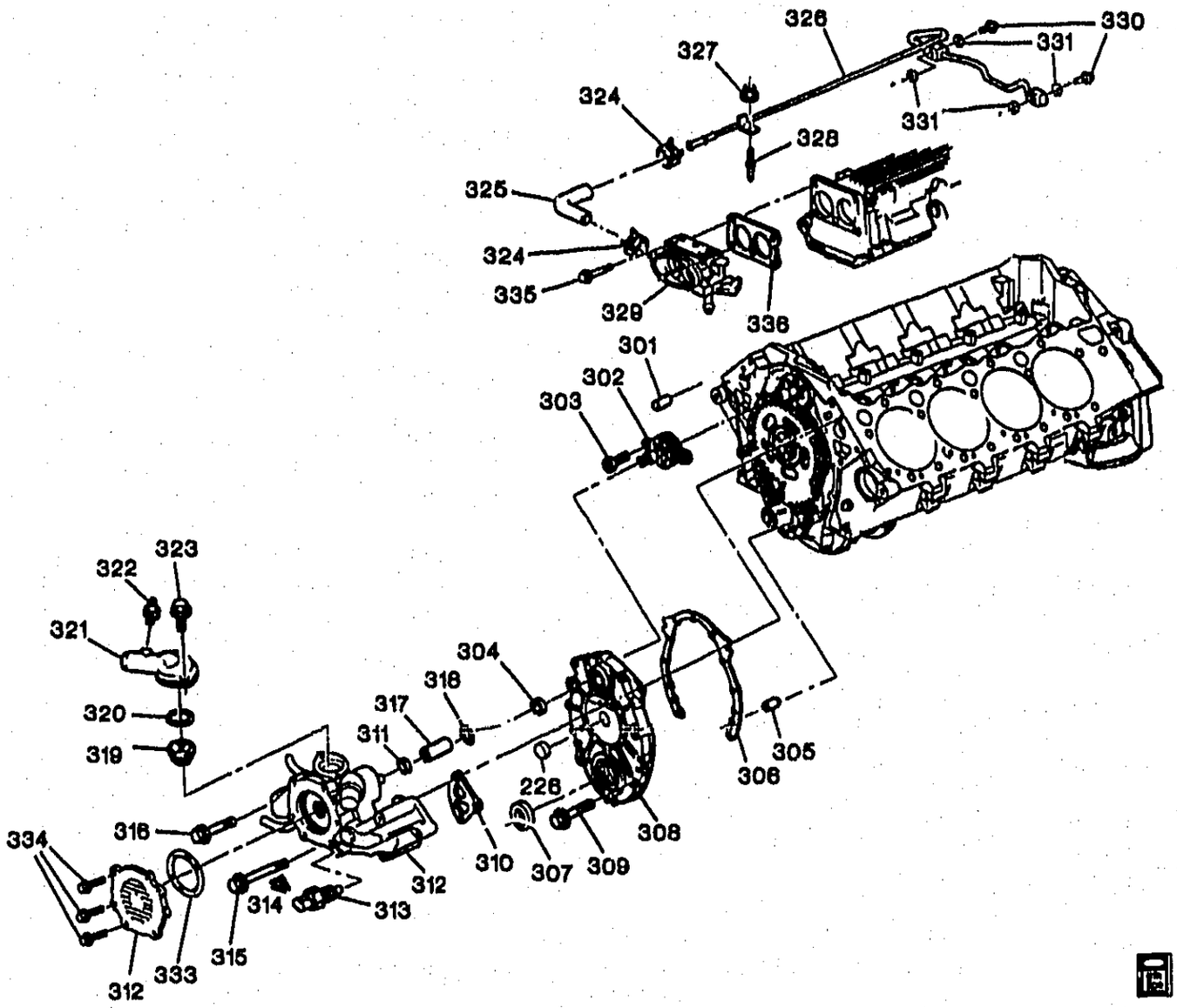

1Y00-042

1996 Y ENGINE ASM-5.7L V8 PART 3 FRONT COVER & COOLING (LT4/5.7-5)

226.	1-M11	2.372	SEAL, DISTR DRV SHF (PART OF 308) (2.363)	96	Y (LT4)	1	12552428
301.	1-L16	1.079	PIN, W/PMP LOC (DOWELL, 0.31X1.25, STL-HRD, PL, CHAM ENDS)	96	Y (LT4)	1	10128487
302.	1-L17	1.105	SHAFT, W/PMP DRV	96	Y (LT4, ML9)	1	12551727
303.	1-L17	1.105	BOLT, W/PMP DRV SHF BRG RET (HEX SOC TORQ DR 1/4-20 X 1/2, 15/32 OD) (0.529)	96	Y (LT4)	2	14093637
304.	1-L17	1.123	SEAL, W/PMP BRG (ALSO PART OF 308)	96	Y (LT4)	1	10217886
305.	1-E22	0.206	PIN, ENG FRT CVR LOC (1/4 X 5/8) (*1) (6.939)	96	Y (LT4)	2	12554553
306.	1-E22	0.207	GASKET, ENG FRT CVR	96	Y (LT4, ML9)	1	10128293
307.	1-E23	0.213	SEAL, CR/SHF FRT OIL (ALSO PART OF 308) (61.5MM O.D. W/PART NUMBER STAMPING) ..	96	Y (LT4, ML9)	1	10128316

© 2000 GENERAL MOTORS SERVICE PARTS OPERATIONS-CHEVROLET-14Y

						1Y00-042
308.	1-E22	0.206	COVER, ENG FRT (INCL 304, 307)	96 Y (LT4)	1	12552427
309.	1-E22	0.206	BOLT, ENG FRT CVR ((1/4-20X1 3/8 .52 OD, .75 THD, 280M, PO)) (8.900)	96 Y (LT4)	1	9442397
310.	1-L16	1.079	GASKET, W/PMP (ALSO PART OF 312) (ALSO PART OF DISTRIBUTOR ASSEMBLY (SEE PART 2).)	96 Y (LT4)	2	10128343
311.	1-L17	1.123	SEAL, W/PMP CVR (O RING) (1.114)	96 Y (LT4)	1	10128329
312.	1-L15	1.069	PUMP, WAT (W/GASKET) (INCL 310) (AC-DELCO #251-554)	96 Y (LT4)	1	12527739
313.	1-N21	3.682	SENSOR, ENG COOL TEMP (UND PLENUM) (USED FOR CLUSTERS W/OIL GAGE & LGT COMB) (2-WAY M) (AC-DELCO #213-310)	96 Y	1	12146312
	1-L17	1.150	SENSOR, ENG COOL TEMP (UND PLENUM) (USED FOR CLUSTERS W/OIL GAGE & LGT COMB) (2-WAY M) (3.682) (AC-DELCO #213-310)	96 Y	1	12146312
314.		8.800	SEALANT-LOCTITE PIPE-W/TEFLON 50CC TUBE	96	AR	12346004
315.	1-L16	1.079	BOLT, W/PMP (USED W/SEALANT) (8.900)	96 Y (LT4)	4	9423592
316.	1-L16	1.079	BOLT, W/PMP (HFH 3/8-16X2.00 280M POR 6174M) (8.900)	96 Y (LT4)	2	9440073
317.	1-L17	1.105	COUPLING, W/PMP DRV SHF	96 Y (LT4)	1	10128334
318.	1-L17	1.105	SEAL, W/PMP DRV SHF	96 Y (LT4)	1	12553792
319.	1-L19	1.246	THERMOSTAT, ENG COOL (180 DEG) (INCL 320) (AC-DELCO #131-100)	96 Y (LT4)	1	12555290
320.	1-L19	1.252	SEAL, ENG COOL THERM (O RING) (ALSO PART OF 319) (AC-DELCO #12553106)	96 Y (LT4)	1	12553106
321.	1-L16	1.073	INLET, W/PMP (W/THERM HSG & BLEDR SCREW) (INCL 322)	96 Y (LT4)	1	10108667
322.	1-L14	1.035	VALVE, ENG COOL AIR BL (ALSO PART OF 321)	96 Y (LT4)	1	10070107
323.	1-L16	1.079	BOLT, W/PMP INL (M6 X 1.0 X 25.0 FLG HD) (8.900)	96 Y (LT4)	2	22539278
324.	1-N6	3.337	CLAMP, THROT BODY HT INL HOSE (20.0 X 12.4) (WORM GEAR, 1/2-13/16) (8.948)	96 Y (LT4)	AR	22527587
325.	1-N6	3.337	HOSE, THROT BODY HTR INL	96 Y (LT4)	1	12553625
326.	1-L16	1.097	PIPE, ENG COOL AIR BL (INCLUDES BOLTS & SEALS)	96 Y (LT4, ML9)	1	12556260
327.	1-L16	1.097	NUT, ENG COOL AIR BL PIPE (3/8-16 PC, 286M) (HEX, FLANGE) (8.917)	96 Y (LT4)	3	9442958
328.	1-M28	3.275	STUD, INT MANIF (3/8X16X1 3/8)	96 Y (LT4)	3	10106420
329.	1-N4	3.335	BODY, THROT (*2) (3.725) (AC-DELCO #17096246)	96 Y (LT4, ML9)	1	17096246
330.	1-L16	1.097	BOLT, ENG COOL AIR BL PIPE	96 Y (LT4)	2	12552974
331.	1-L16	1.097	SEAL, ENG COOL AIR BL PIPE (O RING)	96 Y (LT4)	4	10108689

© 2000 GENERAL MOTORS SERVICE PARTS OPERATIONS-CHEVROLET-14Y

							1Y00-042
333.	1-L17	1.123	SEAL, W/PMP CVR (O RING) (ALSO PART OF 312) (1.114)	96	Y (LT4)	1	10128329
334.		8.900	BOLT, HFH M6X1X16 9.8 POR (W/PMP CVR)	96	.....	AR	11508805
335.	1-N5	3.336	BOLT, THROT BODY (HFH M8X1.25X65 9.8 POH 17.6 OD) (8.900)	96	Y (LT4)	4	11508083
336.	1-N5	3.336	GASKET, THROT BODY (AC-DELCO #40-[illegible]18)	96	Y (LT4)	1	10105379

NOTE 1: ALSO PART OF PARTIAL ENGINE ASSEMBLY (SEE PART 1).
NOTE 2: SEE GROUP 3.000"THROTTLE BODY"FOR DETAIL ILLUSTRATED VIEW.

RPO DEFINITIONS
LT4 – ENGINE GAS, 8 CYL, 5.7L, MFI, HIGH OUTPUT
ML9 – TRANSMISSION, MANUAL 6-SPEED

© 2000 GENERAL MOTORS SERVICE PARTS OPERATIONS-CHEVROLET-14Y

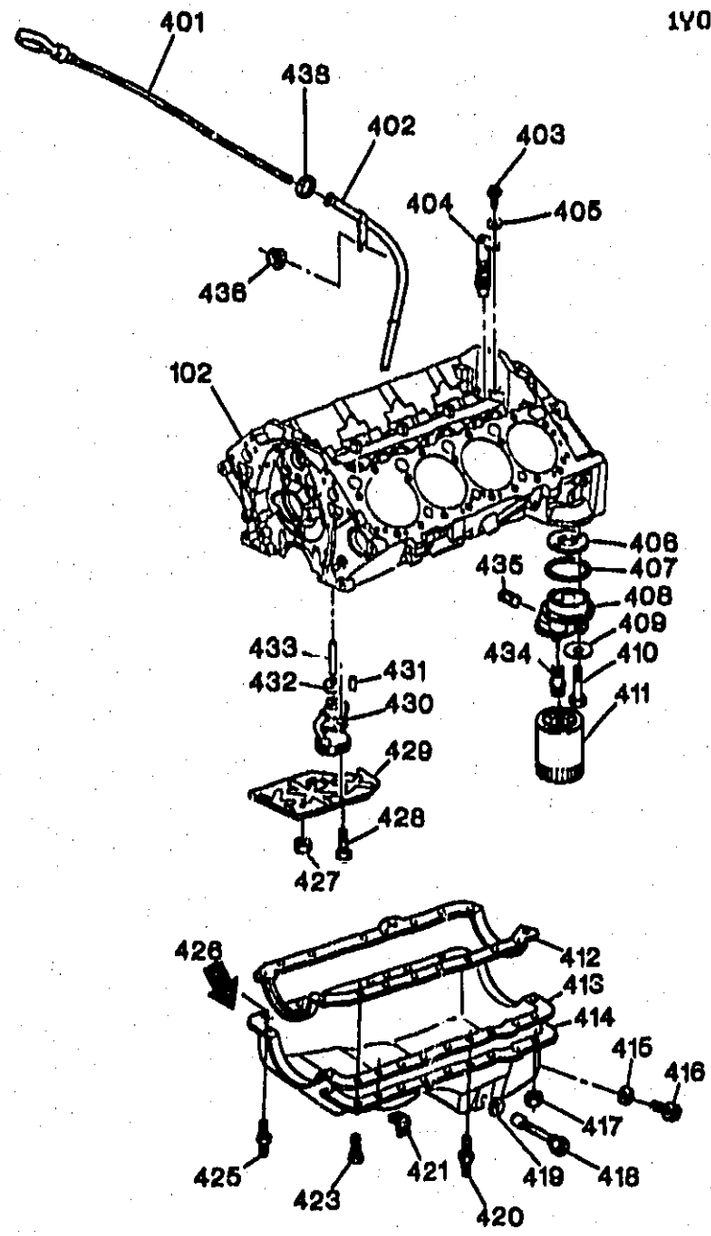

1Y00-043

1996 Y ENGINE ASM-5.7L V8 PART 4 OIL PUMP, PAN & RELATED PARTS (LT4/5.7-5)

102.		N.S.	BLOCK, ENG		.....		
401.	1-L22	1.516	INDICATOR, OIL LVL	96	Y (LT4)	1	12553510
402.	1-L22	1.516	TUBE, OIL LVL IND	96	Y (LT4)	1	12551155
403.	1-L23	1.639	BOLT, O/PMP DRV SHF (5/16-18 X 3/4, 300M) (HEX HD, STEEL) (8.900)	96	Y (LT4)	1	9424877
404.	1-L23	1.639	DRIVE, O/PMP (AC-DELCO #1103868)	96	Y (LT4)	1	1103868
405.		8.929	WASHER, FLAT 5/16X5/8X1/16 ZP HARD (O/PMP DRV SHF)	96	.....	1	2436162
406.	1-M3	1.840	GASKET, OIL FLTR ADAP	96	Y (LT4)	1	12551589
407.	1-M4	1.844	SEAL, OIL FLTR ADAP (3.359") ..	96	Y (LT4)	1	10244495
408.	1-M3	1.840	ADAPTER, OIL FLTR	96	Y (LT4)	1	12556204
409.	1-M3	1.840	WASHER, OIL FLTR ADAP (8.929)	96	Y (LT4)	1	120393

© 2000 GENERAL MOTORS SERVICE PARTS OPERATIONS-CHEVROLET-14Y

							1Y00-043
410.	1-M3	1.840	BOLT, OIL FLTR ADAP (5/16-18X1.875)	96	Y (LT4)	2	14092398
411.	1-M2	1.836	FILTER, OIL (AC-DELCO #PF52)	96	Y (LT4)	1	25171377
	1-M2	1.836	FILTER, OIL (AC-DELCO #UPF52)	96	Y (LT4)	1	25322836
	1-M2	1.836	FILTER, OIL (AC-DELCO #SPF52)	96	Y (LT4)	1	25325403
412.	1-L21	1.429	GASKET, OIL PAN	96	Y (LT4)	1	10108676
413.	1-L20	1.426	PAN KIT, OIL (W/GSKT) (INCL 415, 416)	96	Y (LT4)	1	12528503
414.	1-L20	1.426	REINFORCEMENT, OIL PAN	96	Y (LT4)	LH	12553058
	1-L20	1.426	REINFORCEMENT, OIL PAN	96	Y (LT4)	RH	12553059
415.	1-L22	1.456	GASKET, OIL PAN DRN PLUG (ALSO PART OF 413)	96	Y (LT4)	1	14090908
416.	1-L21	1.453	PLUG, OIL PAN DRN (ALSO PART OF 413) (M12X1.75X26.5)	96	Y (LT4)	1	10017615
417.	1-L20	1.428	NUT, OIL PAN (5/16-18X20, 286M) (PC) (8.917)	96	Y (LT4)	2	1359887
418.	1-L22	1.516	SENSOR, ENG OIL LVL (INCL 419)	96	Y (LT1, LT4)	1	24507190
419.	1-L22	1.516	SEAL, ENG OIL LVL SEN (ALSO PART OF 418)	96	Y	1	10151633
420.	1-L20	1.428	STUD, OIL PAN (14X20X.56-1/4X20X.50)	96	Y (LT4)	4	14101092
421.	1-M22	2.559	BRACKET, ENG WRG HARN (POS#RH-3, 6, 8, LH-6, 7)	96	Y	5	12553341
423.	1-L20	1.428	BOLT, OIL PAN (HFH 1/4-20 X 5/8 280M POR) (8.900)	96	Y (LT4)	1	9440033
425.	1-L20	1.428	STUD, OIL PAN (5/16-18X.66, 5/16-18X.49)	96	Y (LT4)	1	14084059
426.		8.800	SEALANT-LOCTITE PIPE-W/TEFLON 50CC TUBE	96		AR	12346004
427.	1-F8	0.648	NUT, CR/SHF OIL DFL (HEX 3/8-16) (8.917)	63	Y (LT4)	3	9442946
428.	1-L24	1.652	BOLT, O/PMP (7/16-14X2 3/8)	96	Y (LT4)	1	10046007
429.	1-L21	1.430	DEFLECTOR, CR/SHF OIL	96	Y (LT4)	1	12554816
430.	1-L24	1.652	PUMP, OIL (INCLS BOLTS, COVERS, GEARS, HSGS, PIN, PLUG, SHFS, SPR & VLV) (*1)	96	Y (LT4)	1	12555283
431.	1-E22	0.206	PIN, O/PMP LOC (1/4 X 5/8) (*2) (8.939)	96	Y (LT4)	2	12554553
432.	1-L23	1.639	RETAINER, O/PMP DRV SHF	96	Y (LT4)	1	3764554
433.	1-L23	1.639	SHAFT, O/PMP DRV	96	Y (LT4)	1	3998287
434.	1-M4	1.855	FITTING, OIL FLTR (1.840)	96	Y (LT4)	1	462659
435.	1-M3	1.840	PLUG, OIL FLTR ADAP HOLE (AUTO DRAIN, INT SQ, 3/8-18X.42 PEOR STL) (8.971)	96	Y (LT4)	1	14090911
436.	1-L22	1.516	NUT, OIL LVL IND TUBE (3/8-16 PC, 286M) (HEX, FLANGE) (8.917)	96	Y (LT4)	1	9442958
438.		N.S.	SEAL, OIL LVL IND (O RING) (PART OF #401)				

NOTE 1: SEE 1.000 GROUP FOR DETAILED ILLUSTRATED VIEW.
NOTE 2: ALSO PART OF PARTIAL ENGINE ASSEMBLY (SEE PART 1).

RPO DEFINITIONS
LT1 – ENGINE-GAS, 8 CYL, 5.7L(5.7P),MFI,HO
LT4 – ENGINE GAS, 8 CYL, 5.7L, MFI, HIGH OUTPUT

© 2000 GENERAL MOTORS SERVICE PARTS OPERATIONS-CHEVROLET-14Y

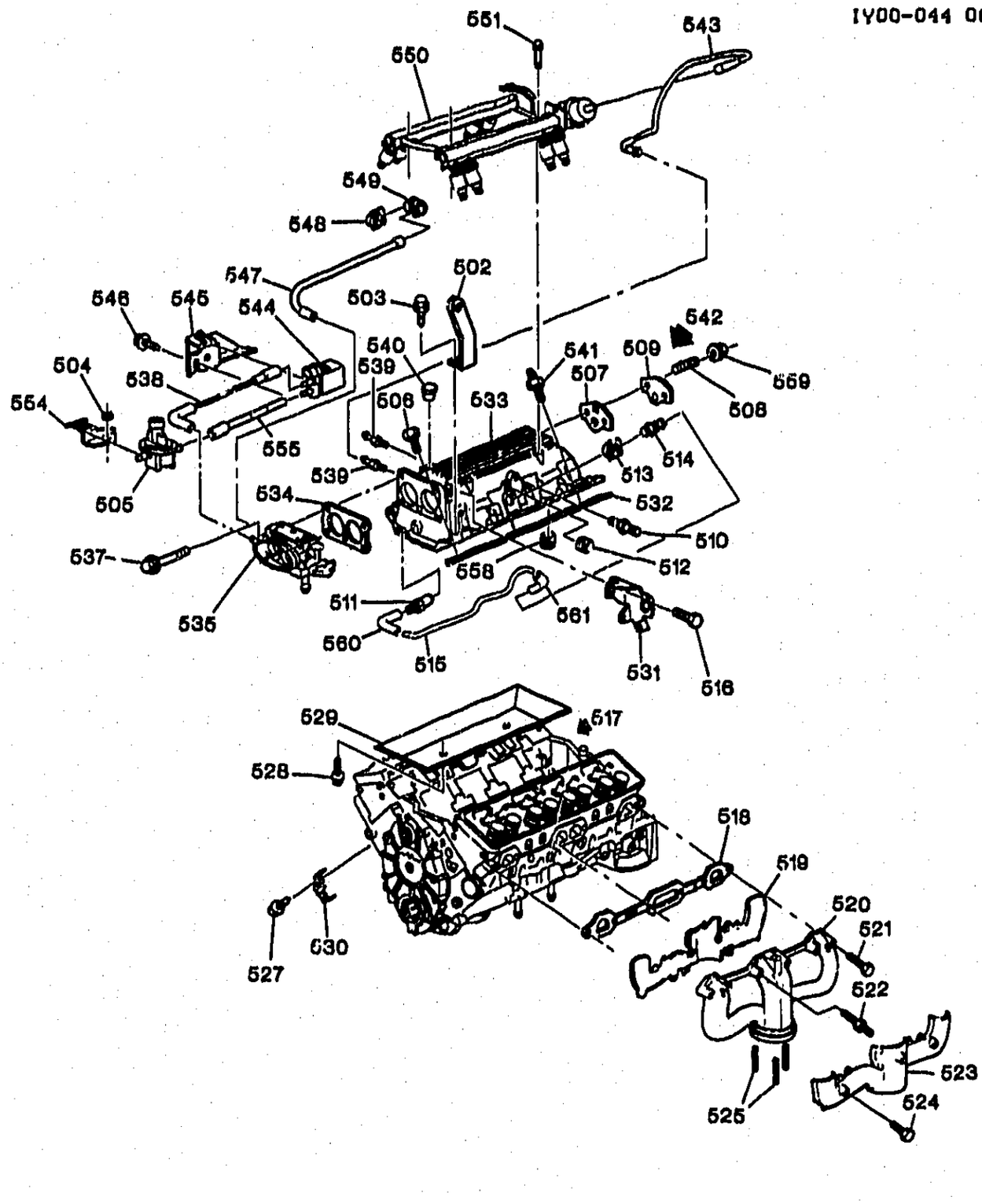

1Y00-044

1996 Y ENGINE ASM-5.7L V8 PART 5 MANIFOLDS AND FUEL RELATED PARTS (LT4/5.7-5)

502.	1-E16	0.004	BOLT, ENG LIFT FRT BRKT (HFH 3/8-16X1.00 280M PZOR) (8.900)	96 Y (LT4)	2	9440071
503.		N.S.	BRACKET ENG LIFT FRT	.....		

© 2000 GENERAL MOTORS SERVICE PARTS OPERATIONS-CHEVROLET-14Y

							1Y00-044
504.	1-M25	3.130	NUT, EVAP EMIS CNSTR PURGE SOL VLV (3/8-16 PC, 286M) (HEX, FLANGE) (8.917)	96	Y (LT4)	1	9442958
505.	1-M26	3.140	SWITCH, EVAP EMIS CNSTR PURGE VAC (SWITCH W/2 CONNECTIONS W/VENT HOLE) .	96	Y (LT4)	1	12555984
506.	1-M28	3.275	BOLT, INT MANIF (HFH 3/8-16X1.38 280M PZOR) (8.900)	96	Y (LT4)	1	9439918
507.	1-N19	3.680	GASKET, EGR VLV (*KIT1) (AC-DELCO #219-21)	96	Y (LT4)	1	12337972
508.	1-N15	3.671	STUD, EGR VLV (5/16 X 18 X 1 43/64) (1.428)	96	Y (LT4)	2	14080362
509.	1-N15	3.671	COVER, EGR VLV OPG	96	Y (LT4, NM8)	1	10054880
510.	1-N26	4.931	FITTING, P/B BOOS VAC TUBE (1/4-18 NPTF W/3/8 NIPPLE) (1.745)	96	Y (LT4)	1	336018
511.	1-L25	1.745	CONNECTOR, PCV VLV HOSE (1/4-18 NPTF W/3/8 NIPPLE) ...	96	Y (LT4)	1	336018
512.	1-M27	3.265	PLUG, EGR VLV INT MANIF HOLE (1/4-18X.44 AM STD PIPE THD, STL, CZ (USED W/SEALER) (8.971)	96	Y (LT4)	1	144011
513.	1-L25	1.745	GROMMET, PCV VLV (1.762)	96	Y (LT4)	1	10240678
514.	1-L25	1.745	VALVE, PCV (CV895C, 1 VACUUM PORT) (AC-DELCO #CV895C)	96	Y (LT4)	1	25095452
515.	1-L26	1.762	PIPE, PCV VLV	96	Y (LT4, ML9)	1	12556257
516.	1-N9	3.463	BOLT, ACCEL CONT CBL BRKT (M6 X 1 X 12) (HFH, 9.8 PE, 12.8 OD DR) (8.900) (AC-DELCO #11514149)	96	Y (LT4)	3	11514149
517.		8.800	SEALANT, SILICONE RTV SILICONE 6W) (*5 (AC-DELCO #1052915)	96	.....	AR	1052915
518.	1-M28	3.272	GASKET, EXH MANIF (*KIT1) (3.270)	96	Y	2	12552470
519.	1-N9	3.602	SHIELD, EXH MANIF INR HT (ALSO PART OF 520)	96	Y (LT4)	2	10128311
520.	1-N9	3.601	MANIFOLD, EXH (W/H/SHLD) (INCL 519, 523)	96	Y (LT4)	2	12554232
521.	1-M28	3.275	BOLT, EXH MANIF (3/8-16 X 2 1/8) (1.079)	96	Y (LT4)	1	12552096
522.	1-M28	3.275	STUD, EXH MANIF	96	Y (LT4)	3	12530726
523.	1-N9	3.602	SHIELD, EXH MANIF OTR HT (ALSO PART OF 520)	96	Y (LT4)	2	10128312
524.	1-N9	3.602	BOLT, EXH MANIF H/SHLD (M6X12)	96	Y (LT4)	3	10228350
525.	1-N10	3.613	STUD, EXH PIPE	96	Y (LT4)	6	10220453
527.		N.S.	BOLT, OXY SEN CONN RET BRKT		.....		
528.	1-M27	3.265	BOLT, INT MANIF OIL SPH SHLD (M6 X 1 X 12) (HFH, 9.8 PE, 12.8 OD DR) (8.900) (AC-DELCO #11514149)	96	Y (LT4)	4	11514149
529.	1-M27	3.265	SHIELD, INT MANIF OIL SPH	96	Y (LT4)	1	10128305
530.	1-N21	3.682	BRACKET, OXY SEN CONN RET (2.559)	96	Y (LT4)	1	10165388
531.	1-N8	3.454	BRACKET, ACCEL CONT CBL ...	96	Y (LT4, ML9)	1	10192221

© 2000 GENERAL MOTORS SERVICE PARTS OPERATIONS-CHEVROLET-14Y

532.		N.S.	GASKET, INT MANIF (*KIT1, KIT2)				
533.	1-M27	3.265	MANIFOLD, INT	96	Y (LT4, ML9)	1	12550630
534.	1-N5	3.336	GASKET, THROT BODY (*KIT1) (AC-DELCO #40-718)	96	Y (LT4)	1	10105379
535.	1-N4	3.335	BODY, THROT (*2) (3.725) (AC-DELCO #17096246)	96	Y (LT4, ML9)	1	17096246
537.	1-N5	3.336	BOLT, THROT BODY (HFH M8X1.25X65 9.8 POR 17.6 OD) (8.900)	96	Y (LT4)	4	11508083
538.	1-M26	3.145	PIPE, EVAP EMIS CNSTR PURGE SOL VLV	96	Y (LT4, ML9)	1	12551611
539.	1-N2	3.276	FITTING, INT MANIF VAC (IN PLENUM)	96	Y (LT4)	3	14082470
540.	1-N21	3.682	PLUG, MAP SEN HOLE (8.153)	96	Y (LT4)	1	3738198
541.	1-M28	3.275	STUD, INT MANIF (3/8X16X1 3/8)	96	Y (LT4)	3	10106420
542.		8.800	SEALANT-LOCTITE PIPE-W/TEFLON 50CC TUBE	96		AR	1052080
543.	1-N3	3.330	TUBE, FUEL PRESS REG VAC	96	Y (LT4)	1	10216953
544.	1-M25	3.130	VALVE, EVAP EMIS CNSTR PURGE SOL (2 PORT VAC, 2 BLADE TERM) (AC-DELCO #214-565)	96	Y	1	1997201
545.	1-M25	3.130	BRACKET, EVAP EMIS CNSTR PURGE SOL VLV	96	Y (LT4, ML9)	1	12551612
546.	1-M25	3.130	BOLT, EVAP EMIS CNSTR PURGE SOL VLV BRKT (8.900)	96	Y (LT4)	1	11514607
547.	1-L26	1.762	TUBE, PCV	96	Y (LT4)	1	12550624
548.	1-L25	1.745	GROMMET, PCV VLV (1.762)	96	Y (LT4)	1	10240678
549.	1-L26	1.762	CONNECTOR, PCV HOSE	96	Y (LT4)	1	12550625
550.	1-N3	3.330	RAIL, M/PORT F/INJN FUEL (*KIT3) (*1)				
551.	1-N3	3.330	BOLT, F/INJN FUEL RL (6X1X35) (9.8 PEOR) (8.900)	96	Y (LT4)	4	11514667
554.	1-M26	3.140	BRACKET, EVAP EMIS CNSTR PURGE VAC DIAGN SW	96	Y (LT4, ML9)	1	12551614
555.	1-M26	3.145	PIPE, EVAP EMIS CNSTR PURGE SOL VLV	96	Y (LT4, ML9)	1	12551611
558.	1-M27	3.265	PLUG, INT MANIF CORE HOLE (4.510)	96	Y (LT4)	1	444595
559.	1-N15	3.671	NUT, EGR VLV (5/16-18) (HEX FLG) (8.917)	96	Y (LT4)	2	9440046
560.	1-L26	1.762	HOSE, PCV VLV	96	Y (LT4)	1	12551389
561.		N.S.	HOSE, PCV VLV (PART OF #515)				

SERVICE KITS

1.	1-E23	0.289	GASKET KIT, CYL HD (INCL 507, 518, 532, 534) (KIT CONTAINS: GASKETS FOR CYLINDER HEAD, INTAKE AND EXHAUST MANIFOLDS, EGR VALVE, THROTTLE BODY, VALVE COVERS, AND VALVE STEM SEALS.) (INCLS (2) HD GSKTS, INT/EXH GSKTS, EGR & W/PMP GSKTS)	96	Y (LT4, ML9)	1	12369147
2.	1-M28	3.270	GASKET KIT, INT MANIF (INCL 571) (KIT CONTAINS: GASKETS FOR INTAKE MANIFOLD.)	96	Y (LT4)	2	12528884

© 2000 GENERAL MOTORS SERVICE PARTS OPERATIONS-CHEVROLET-14Y

9.	1–N3	3.330	RAIL KIT, M/PORT F/INJN FUEL (INCL 550)	96	Y (LT4)	LH	17113249
	1–N3	3.330	RAIL KIT, M/PORT F/INJN FUEL (INCL 550)	96	Y (LT4)	RH	17113250

NOTE 1: SEE GROUP 3.000 "FUEL RAIL" FOR DETAILED ILLUSTRATED VIEW.
NOTE 2: SEE GROUP 3.000 "THROTTLE BODY " FOR DETAILED ILLUSTRATED VIEW.

RPO DEFINITIONS
LT4 – ENGINE GAS, 8 CYL, 5.7L, MFI, HIGH OUTPUT
ML9 – TRANSMISSION,MANUAL 6–SPEED
NM6 – EMISSION SYSTEM,LEADED FUEL(EXPORT)

© 2000 GENERAL MOTORS SERVICE PARTS OPERATIONS–CHEVROLET–14Y

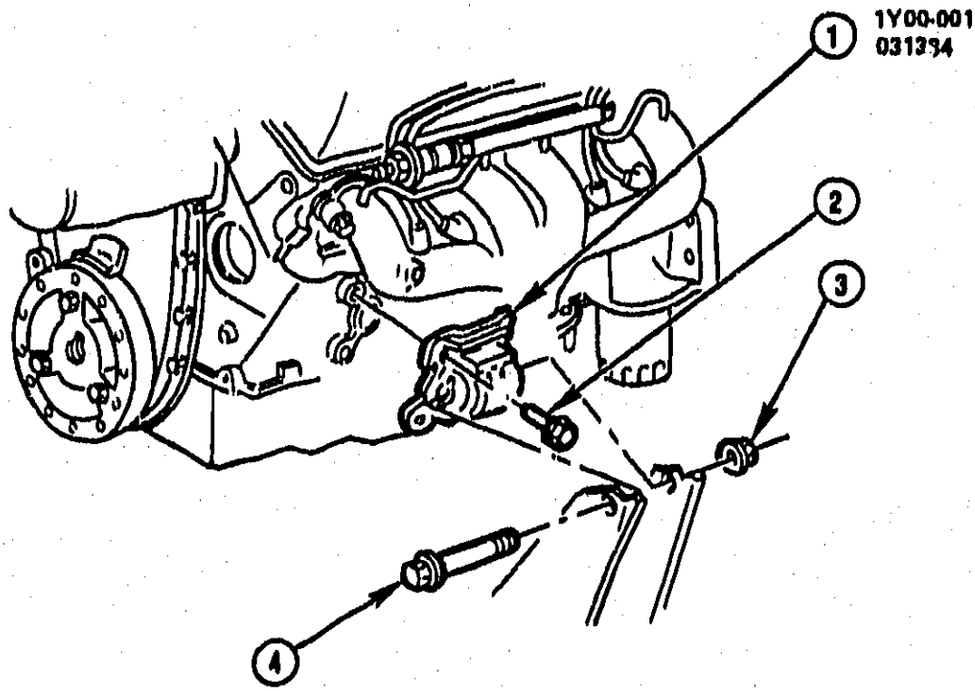

1Y00-001

1984 Y ENGINE MOUNTING-V8 (L83)
1985-1991 Y ENGINE MOUNTING-V8 (L98)

1.	1-E16	0.027	MOUNT, ENG	17984499
2.		8.900	BOLT, HEX (3/8-16X3/4) 300M PZOR	9442963
3.		8.917	NUT, HEX FLG PREV TORQ (M12X1.75) 10 CAD	11502813
4.	1-E16	0.002	BOLT, HFH (M12X1.75X80)	10200097

RPO DEFINITIONS
L83 - ENGINE, 5.7L (5.7-8), V8,(CFI-CROSSFIRE)(TBI)
L98 - ENGINE, 5.7L, (5.7-8) 350 CID, V8, TPI

© 2000 GENERAL MOTORS SERVICE PARTS OPERATIONS-CHEVROLET-14Y

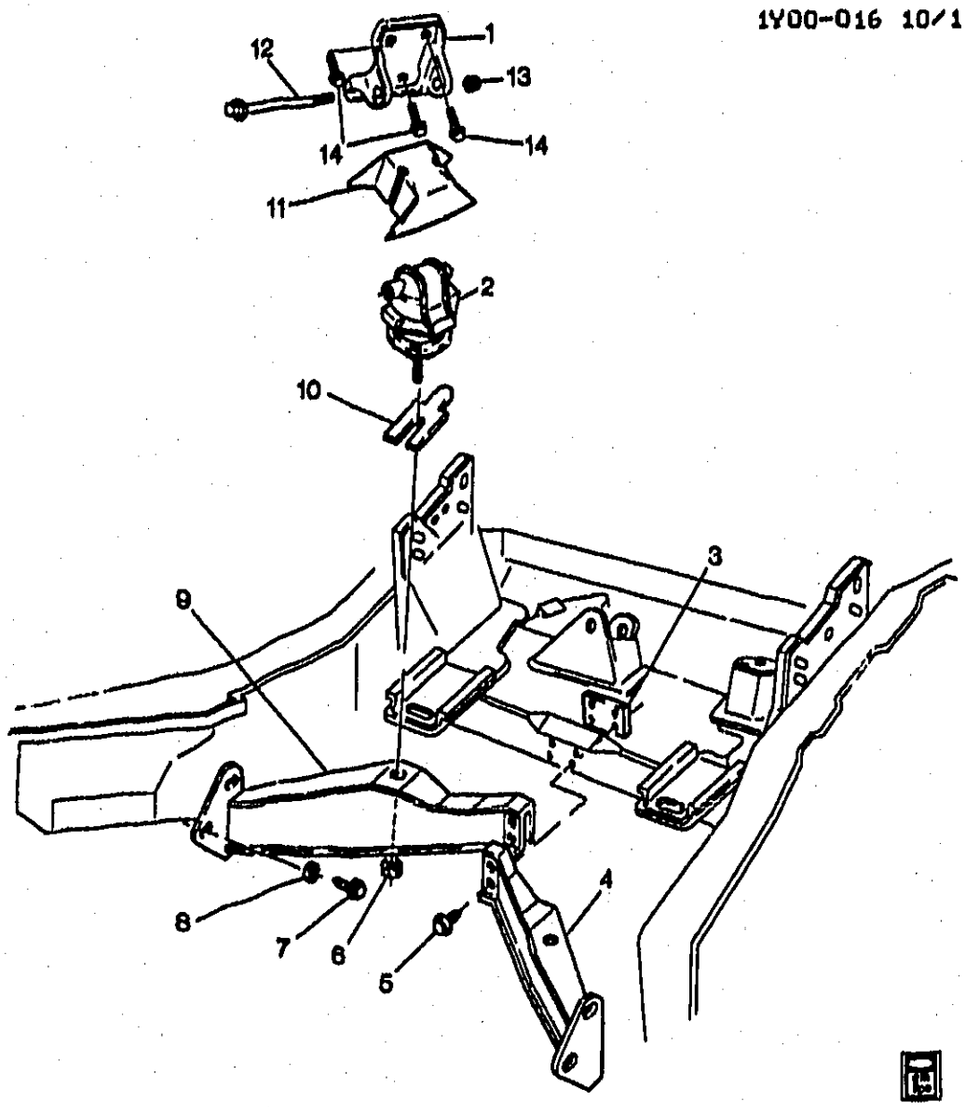

1Y00-016

1990-1995 Y ENGINE MOUNTING-V8 (LT5)
1992-1996 Y ENGINE MOUNTING-V8 (LT1)
1996 Y ENGINE MOUNTING-V8 (LT4)

1.	1-E16	0.029	BRACKET, ENG MT	90-91	Y (LT5)	LH	14104623
	1-E16	0.029	BRACKET, ENG MT	90-91	Y (LT5)	RH	14104624
	1-E16	0.029	BRACKET, ENG MT	92-96	Y	LH	14104623
	1-E16	0.029	BRACKET, ENG MT	92-96	Y	RH	14104624
2.	1-E16	0.027	MOUNT, ENG	90-95	Y (LT5)	2	14104622
	1-E16	0.027	MOUNT, ENG	92-95	Y (LT1)	2	10157980
	1-E16	0.027	MOUNT, ENG	96	Y	2	10157980
3.	1-N26	7.039	REINFORCEMENT, FRT C/MBR	90-91	Y (LT5)	1	10098136
	1-N26	7.039	REINFORCEMENT, FRT C/MBR	92-96	Y	1	10098136
4.	1-E16	0.029	BRACE, ENG MT BRKT	90-91	Y (LT5)	RH	14104626
	1-E16	0.029	BRACE, ENG MT BRKT	92-96	Y	RH	14104626
5.		8.800	BOLT, HFH, M12X1.75X40 10.9 PEOR 25.6-OD36-THD (ENG MT BRKT BR) (POSN #2)	90-96		4	11509591

© 2000 GENERAL MOTORS SERVICE PARTS OPERATIONS-CHEVROLET-14Y

								1Y00-016
6.		8.917	NUT, HEX FLG PREVAILING TORQ (M12X1.75X14) (ZO 10) (ENG MT)	90-96	.....	2	11515744
7.	1-E16	0.029	BOLT, ENG MT BRKT BR (POSN #1) (M10X1.5X25 13HEX) (7.039)	90-91	Y (LT5)	4	14069669
	1-E16	0.029	BOLT, ENG MT BRKT BR (POSN #1) (M10X1.5X25 13HEX) (7.039)	92-96	Y	4	14069669
8.		8.920	WASHER, M10X 2.5 THK PHOS (ENG MT BRKT BR) (AC-DELCO #11500324)	90-94	.....	4	11500324
	1-E16	0.029	WASHER, ENG MT BRKT BR (M13X24X2) (5.383)	95-96	Y	4	14046942
	1-E16	0.029	WASHER, ENG MT BRKT BR (24X22.50) (8.929)	95-96	Y	6	14055822
9.	1-E16	0.029	BRACE, ENG MT BRKT	90-91	Y (LT5)	LH	14104625
	1-E16	0.029	BRACE, ENG MT BRKT	92-96	Y	LH	14104625
10.	1-E16	0.002	SPACER, ENG MT	90-96	Y	AR	10143502
11.	1-E16	0.029	SHIELD, ENG MT (HEAT)	90-91	Y (LT5)	2	10098129
	1-E16	0.029	SHIELD, ENG MT (HEAT)	92-96	Y	2	10098129
12.	1-E16	0.002	BOLT, ENG MT	90-96	Y	2	10200097
13.		8.017	NUT, HEX FLG PREVAILING TORQ (M12X1.75X14) (ZO 10) (ENG MT)	90-96	.....	2	11515744
14.		8.900	BOLT, HFH 3/8-16X3/4 PZOR 71'4N' (ENG MT BRKT)	90-96	.....	6	9442963

RPO DEFINITIONS
LT1 – ENGINE-GAS, 8 CYL, 5.7L(5.7P),MFI,HO
LT4 – ENGINE GAS, 8 CYL, 5.7L, MFI, HIGH OUTPUT
LT5 – ENGINE,5.7L(5.7J),TPI

© 2000 GENERAL MOTORS SERVICE PARTS OPERATIONS-CHEVROLET-14Y

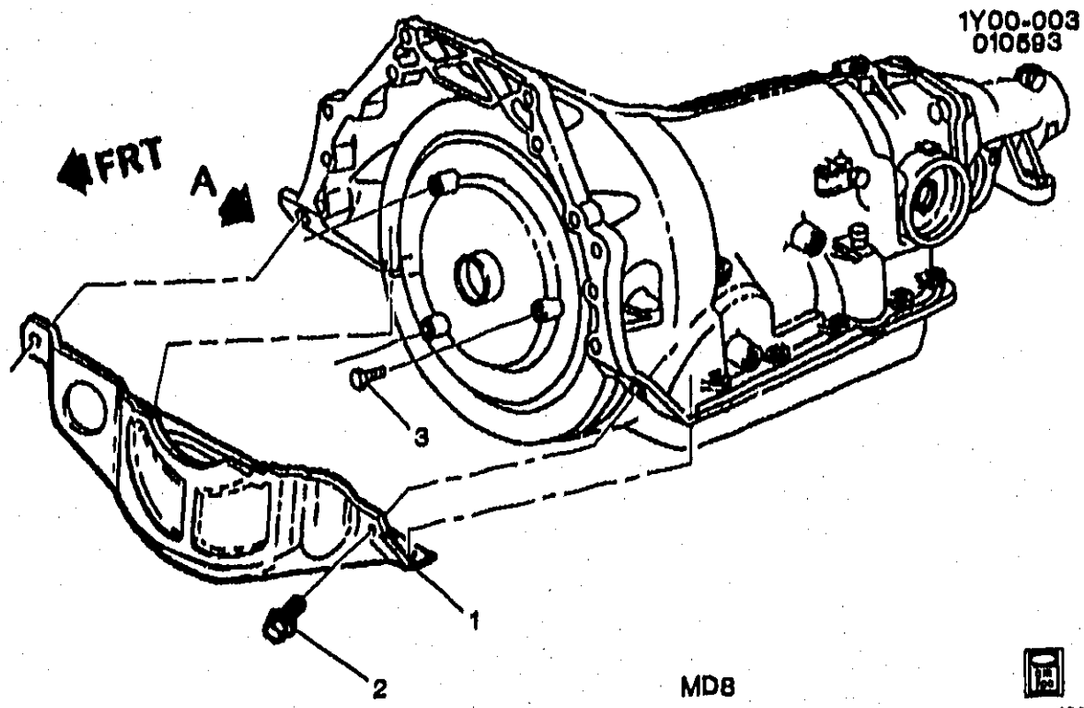

1Y00-003

1992-1996 Y COVER/TRANSMISSION CONVERTER

1.	1-F11	0.679	COVER, TRANS CONV	92-93	Y (MD8)	1	10126478
	1-F11	0.679	COVER, TRANS CONV	94-96	Y (M30)	1	10126478
2.		6.977	SCREW, HWH TAP M6.3X1.81X13 13 OD PZOR (TRANS CONV)	92-96	.....	4	12338139
3.	1-N25	4.115	BOLT, TRANS T/CV (M10X1.5X15 12.5 THD) (AC-DELCO #1261968)	92-93	Y (MD8)	3	1261968
	1-N25	4.115	BOLT, TRANS T/CV (M10X1.5X15 12.5 THD) (AC-DELCO #1261968)	94-96	Y (M30)	3	1261968

RPO DEFINITIONS
MD8 – TRANSMISSION,AUTOMATIC 4-SPEED(THM700R4/4L60)
M30 – TRANSMISSION,AUTOMATIC 4 SPEED,4L60E,ELECTRONIC

© 2000 GENERAL MOTORS SERVICE PARTS OPERATIONS-CHEVROLET-14Y

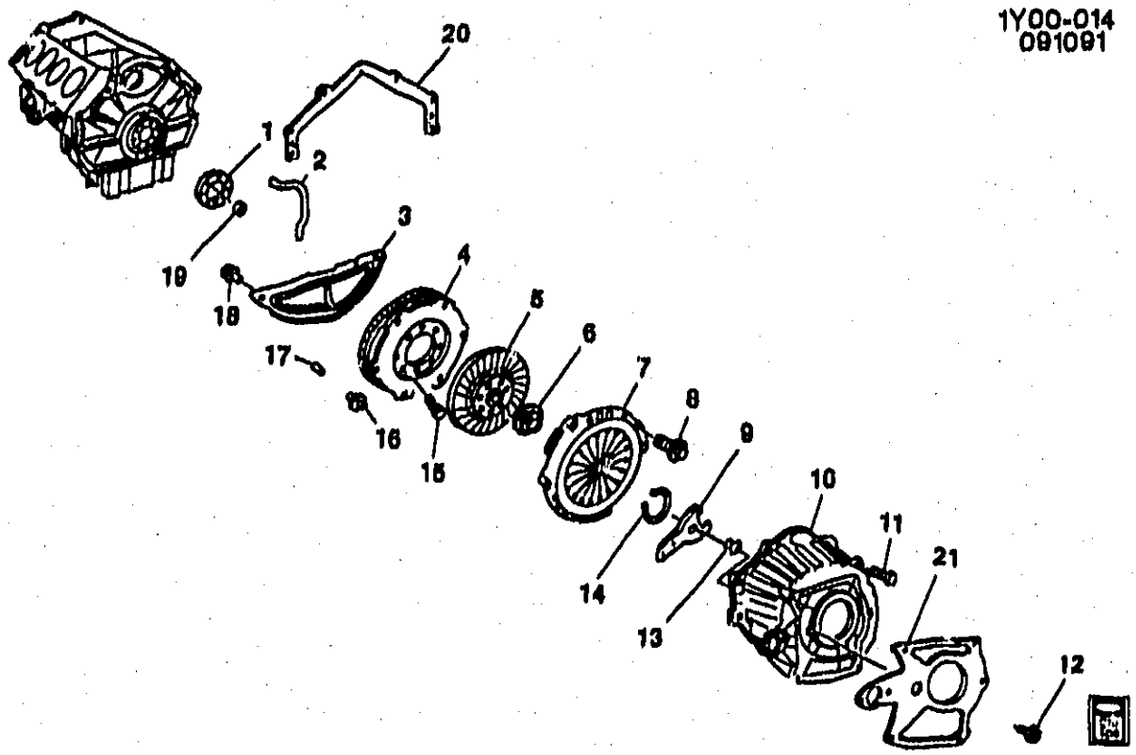

1Y00-014

1990 Y CLUTCH (LT5,L98)

1.	1-E20	0.137	SEAL, CR/SHF RR	10088158
2.	1-E17	0.034	PIPE, CYL CASE VEE DRN (LT5)	10122192
3.	1-F11	0.679	COVER, FLYWHL HSG (LT5)	10225112
		DISCON	COVER, FLYWHL HSG (L98)	10085212
4.	1-F9	0.666	FLYWHEEL, ENG (DUAL MASS) (LT5)	10174481
	1-F9	0.666	FLYWHEEL (DUAL MASS) (L98)	10174482
5.	1-F19	0.886	PLATE, CLU DRVN	10174491
6.	1-F17	0.799	BEARING, CLU REL (AC-DELCO #CT1073)	10203567
7.	1-F18	0.859	PLATE, CLU PRESS (W/CVR) (LT5)	10203573
	1-F18	0.859	PLATE, CLU PRESS (W/CVR) (L98)	10203570
8.	1-F19	0.862	BOLT, CLU PRESS PLT & CVR (LT5)	10111562
	1-F19	0.862	BOLT, CLU PRESS PLT & CVR (L98)	10079898
9.	1-F16	0.795	FORK, CLU	10085210
10.	1-F11	0.683	HOUSING, CLU (LT5)	10085201
		DISCON	HOUSING, CLU (L98)	10085208
11.	1-N25	4.085	BOLT, TRANS MT (LT5, L98)	10111696
12.	1-F17	0.796	BOLT, CLU FORK BALL STUD	10150035
13.	1-F17	0.796	STUD, CLU FORK BALL (LT5)	10054279
	1-F17	0.796	STUD, CLU FORK BALL (L98)	10227809
14.	1-F17	0.799	RETAINER, CLU REL BRG COLR (LT5)	10111569
	1-F17	0.799	BEARING, CLU REL (RETAINER) (L98) (AC-DELCO #CT1073)	10203567
15.	1-F10	0.669	BOLT, FLYWHL (LT5)	10085334
	1-F10	0.669	BOLT, FLYWHL (L98)	10085215
16.	1-F10	0.669	WEIGHT, FLYWHL (IN FLYWHL) (LT5)	3890192
17.	1-F10	0.669	PIN, FLYWHL DWL (LT5)	10067640
	1-F10	0.669	PIN, FLYWHL DWL (L98)	3701679
18.		8.977	SCREW, HWH (M6.3X1.81X19) [illegible]OR	12338139
19.	1-F8	0.649	BEARING, CLU PILOT (BU[illegible]9/32 I.D. 1 3/32 O.D.X3/4)	14061685
20.		DISCON	INSULATOR, CLU HSG (EN[illegible]E) (L98, ML9)	10174448

© 2000 GENERAL MOTORS SERVICE PARTS OPER[illegible]ONS-CHEVROLET-14Y

21.	N.S.	INSULATOR, CLU HSG (TRANS SIDE) (L98, ML9) .....
	N.S.	BOLT, CLU HSG INSL .....

RPO DEFINITIONS
LT5 – ENGINE,5.7L(5.7J),TPI
L98 – ENGINE, 5.7L, (5.7–8) 350 CID, V8, TPI
ML9 – TRANSMISSION,MANUAL 6–SPEED

© 2000 GENERAL MOTORS SERVICE PARTS OPERATIONS–CHEVROLET–14Y

MICROFICHE INDEX

GROUPS 0.000 & 21.000

FICHE 1 OF 11

GROUP	DESCRIPTION	STARTING GRID LOCATION PARTS	ILLUSTRATIONS
–	GENERAL INFORMATION	1–A2	1–G2
–	ALPHABETICAL INDEX	1–B13	N.A.
0.000	8–CYLINDER ENGINE	1–E2	1–G5
21.000	ACCESSORY REFERENCE LIST	1–D2	N.A.
–	OUT OF FICHE CALLS	N.A.	1–L13

1–K1

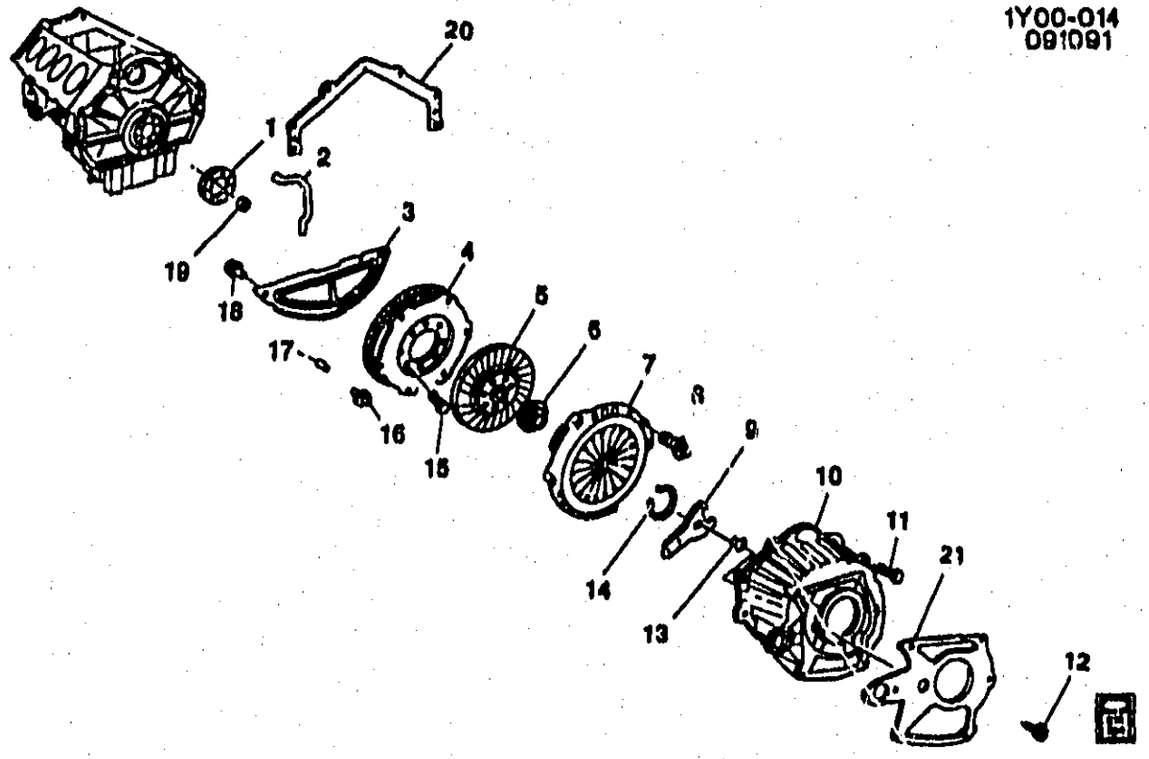

1991 Y CLUTCH (L98)
1991–1995 Y CLUTCH (LT5)
1992–1995 Y CLUTCH (LT1)
1996 Y CLUTCH (LT4)

1.	1–E20	0.137	SEAL, CR/SHF RR OIL	91	Y (L98)	1	10088158
	1–E20	0.137	SEAL, CR/SHF RR OIL	91–95	Y (LT5)	1	10088158
	1–E20	0.137	SEAL, CR/SHF RR OIL	92–95	Y (LT1)	1	10088158
	1–E20	0.137	SEAL, CR/SHF RR OIL	96	Y (LT4)	1	10088158
2.	1–E17	0.034	PIPE, ENG BLK OIL GAL	91–92	Y (LT5)	1	10122192
	1–E17	0.034	PIPE, ENG BLK OIL GAL	93–95	Y (LT5)	1	10168695
3.	1–F11	0.679	COVER, FLYWHL HSG	91	Y (LT5)	1	10225112
	1–F11	0.679	COVER, FLYWHL HSG	91–95	Y (LT5)	1	10225112
	1–F11	0.679	COVER, FLYWHL HSG	91	Y (L98, ML9)	1	10126500
	1–F11	0.679	COVER, FLYWHL HSG	92–95	Y (LT1, ML9)	1	10126500
	1–F11	0.679	COVER, FLYWHL HSG	96	Y (LT4, ML9)	1	10126500
4.	1–F9	0.666	FLYWHEEL, ENG ((DUAL MASS))	91	Y (L98, ML9)	1	10174482
	1–F9	0.666	FLYWHEEL, ENG ((DUAL MASS))	91–95	Y (LT5)	1	10174481
	1–F9	0.666	FLYWHEEL, ENG ((DUAL MASS))	92–95	Y (LT1, ML9)	1	10174482
	1–F9	0.666	FLYWHEEL, ENG ((DUAL MASS))	96	Y (LT4, ML9)	1	10174482
5.	1–F19	0.886	PLATE, CLU DRVN	91	Y (L98, ML9, NA5)	1	10174491
	1–F19	0.886	PLATE, CLU DRVN	91–95	Y (LT5)	1	10174491
	1–F19	0.886	PLATE, CLU DRVN	92–95	Y (LT1, ML9)	1	10174491
	1–F19	0.886	PLATE, CLU DRVN	96	Y (LT4, ML9)	1	10174491
6.	1–F17	0.799	BEARING, CLU REL (AC–DELCO #CT1073)	91	Y (L98, ML9, NA5)	1	10203567
	1–F17	0.799	BEARING, CLU REL (AC–DELCO #CT1073)	91–93	Y (LT5)	1	10203567
	1–F17	0.799	BEARING, CLU REL (AC–DELCO #CT1073)	92–93	Y (LT1, ML9)	1	10203567
	1–F17	0.799	BEARING, CLU REL	94–95	Y (LT1, ML9)	1	10222087
	1–F17	0.799	BEARING, CLU REL	94–95	Y (LT5)	1	10222087

© 2000 GENERAL MOTORS SERVICE PARTS OPERATIONS–CHEVROLET–14Y

							1Y00-0141
	1-F17	0.799	BEARING, CLU REL	96	Y (LT4, ML9)	1	10222087
7.	1-F18	0.859	PLATE, CLU PRESS (W/CVR & CLU REL BRG) (W/O CLU DISK)	91	Y (L98, ML9)	1	10203570
	1-F18	0.859	PLATE, CLU PRESS (W/CVR & CLU REL BRG)	91-93	Y (LT5)	1	10203573
	1-F18	0.859	PLATE, CLU PRESS (W/CVR & CLU REL BRG) (W/O CLU DISK)	92-93	Y (LT1, ML9)	1	10203570
	1-F18	0.859	PLATE, CLU PRESS (W/CVR & CLU REL BRG)	94-95	Y (LT1, ML9)	1	10222083
	1-F18	0.859	PLATE, CLU PRESS (W/CVR & CLU REL BRG)	94-95	Y (LT5)	1	10222084
	1-F18	0.859	PLATE, CLU PRESS (W/CVR & CLU REL BRG)	96	Y (LT4, ML9)	1	10222083
8.	1-F19	0.862	BOLT, CLU PRESS PLT (HFH, 3/8-16X1.62, .38 THD, .378 SHLD TAPERED TO .375, 280M)	91	Y (L98, ML9, NA5)	6	10079898
	1-F19	0.862	BOLT, CLU PRESS PLT	91-95	Y (LT5)	6	10111562
	1-F19	0.862	BOLT, CLU PRESS PLT (HFH, 3/8-16X1.62, .38 THD, .378 SHLD TAPERED TO .375, 280M)	92-95	Y (LT1, ML9)	6	10079898
	1-F19	0.862	BOLT, CLU PRESS PLT (SPL, FLAT HD M8XA.25X15.5, 11X5 SHLDR, 27 OD, STL, CA, INT HEX DRV) (0.796)	92-93	Y (LT1, ML9)	1	10150085
	1-F19	0.862	BOLT, CLU PRESS PLT (HFH, 3/8-16X1.62, .38 THD, .378 SHLD TAPERED TO .375, 280M)	96	Y (LT4, ML9)	6	10079898
9.	1-F16	0.795	FORK, CLU	91	Y (L93, ML9, NA5)	1	10085210
	1-F16	0.795	FORK, CLU	91-95	Y (LT5)	1	10085210
	1-F16	0.795	FORK, CLU	92-95	Y (LT1, ML9)	1	10085210
	1-F16	0.795	FORK, CLU	96	Y (LT4, ML9)	1	10085210
10.	1-F11	0.683	HOUSING, CLU	91	Y (L98, ML9)	1	10126448
	1-F11	0.683	HOUSING, FLYWHL	91-95	Y (LT5)	1	10085201
	1-F11	0.683	HOUSING, FLYWHL	92-95	Y (LT1, ML9)	1	10126448
	1-F11	0.683	HOUSING, FLYWHL	96	Y (LT4, ML9)	1	10126448
11.	1-N25	4.085	BOLT, TRANS (M12X1.75X40)	91-95	Y (LT5, ML9)	5	10111696
	1-N25	4.085	BOLT, TRANS (M12X1.75X45)	91	Y (L98)	5	10174418
	1-N25	4.085	BOLT, TRANS (M12X1.75X45)	92-95	Y (LT1, ML9)	5	10174418
	1-N25	4.085	BOLT, TRANS (M12X1.75X45)	96	Y (ML9)	5	10174418
12.	1-F17	0.796	BOLT, CLU FORK BALL STUD (SPL, FLAT HD M8XA.25X15.5, 11X5 SHLDR, 27 OD, STL, CA, INT HEX DRV)	91-95	Y (LT5)	1	10150085
	1-F17	0.796	BOLT, CLU FORK BALL STUD (SPL, FLAT HD M8XA.25X15.5, 11X5 SHLDR, 27 OD, STL, CA, INT HEX DRV)	91	Y (L98)	1	10150085
	1-F17	0.796	BOLT, CLU FORK BALL STUD (SPL, FLAT HD M8XA.25X15.5, 11X5 SHLDR, 27 OD, STL, CA, INT HEX DRV)	92-94	Y (LT1, ML9)	1	10150085
	1-F17	0.796	BOLT, CLU FORK BALL STUD	95	Y (LT1, ML9)	1	10227810
	1-F17	0.796	BOLT, CLU FORK BALL STUD	96	Y (LT4, ML9)	1	10227810
13.	1-F17	0.796	STUD, CLU FORK BALL	91-95	Y (LT5)	1	10054279
	1-F17	0.796	STUD, CLU FORK BALL	91	Y (L98, ML9, NA5)	1	10227809
	1-F17	0.796	STUD, CLU FORK BALL	92-95	Y (LT1, ML9)	1	10227809
	1-F17	0.796	STUD, CLU FORK BALL	96	Y (LT4, ML9)	1	10227809
14.	1-F17	0.799	RETAINER, CLU REL BRG COLR	91-95	Y (LT5)	1	10111569

© 2000 GENERAL MOTORS SERVICE PARTS OPERATIONS-CHEVROLET-14Y

15.	1-F10	0.669	BOLT, FLYWHL (7/16-20X1 3/4) .	91	Y (L98, ML9, NA5)	6	10065215
	1-F10	0.669	BOLT, FLYWHL (HEX HD. 7/16-20X2) (8.900)	91-95	Y (LT5)	8	10065334
	1-F10	0.669	BOLT, FLYWHL (7/16-20X1 3/4) .	92-95	Y (LT1, ML9)	6	10065215
	1-F10	0.669	BOLT, FLYWHL (7/16-20X1 3/4) .	96	Y (LT4, ML9)	6	10065215
16.	1-F10	0.669	WEIGHT, FLYWHL (IN FLYWHL) (2380/.2500 X .50) (BARREL-SHAPED PIN) (GROOVE-F)	91	Y (L98, ML9)	1	3890192
	1-F10	0.669	WEIGHT, FLYWHL (IN FLYWHL) (2380/.2500 X .50) (BARREL-SHAPED PIN) (GROOVE-F)	91-95	Y (LT5)	1	3890192
	1-F10	0.669	WEIGHT, FLYWHL (IN FLYWHL) (2380/.2500 X .50) (BARREL-SHAPED PIN) (GROOVE-F)	92-95	Y (LT1, ML9)	1	3890192
	1-F10	0.669	WEIGHT, FLYWHL (IN FLYWHL) (2380/.2500 X .50) (BARREL-SHAPED PIN) (GROOVE-F)	96	Y (LT4, ML9)	AR	3890192
17.	1-F10	0.669	PIN, FLYWHL LOC (7/16 DIA. X 7/8)	91	Y (L98)	1	3701679
	1-F10	0.669	PIN, FLYWHL LOC	91-95	Y (LT5)	1	10067640
	1-F10	0.669	PIN, FLYWHL LOC (7/16 DIA. X 7/8)	92-95	Y (LT1)	1	3701679
	1-F10	0.669	PIN, FLYWHL LOC (7/16 DIA. X 7/8)	96	Y (LT4, ML9)	1	3701679
18.		8.977	SCREW, HWH TAP M6.3X1.81X13 13 OD PZOR	91-96	.....	AR	12338139
19.	1-F8	0.649	BEARING, CLU PILOT (BUSHING TYPE 19/32 ID 1 3/32 O.D.X 3/4) .	91-95	Y (LT5)	1	10125896
	1-F8	0.649	BEARING, CLU PILOT	94-95	Y (LT1)	1	14061685
	1-F8	0.649	BEARING, CLU PILOT	96	Y (LT4, ML9)	1	14061685
	1-F8	0.649	BEARING, CLU PILOT (BUSH TYPE 19/32 ID 1 3/32 O.D.X3/4) ..	91	Y (L98, ML9)	1	14061685
	1-F8	0.649	BEARING, CLU PILOT (BUSH TYPE 19/32 ID 1 3/32 O.D.X3/4) ..	92-93	Y (LT1)	1	14061685
20.		DISCON	INSULATOR, CLU HSG (ENGINE SIDE)	91	Y (L98, ML9)	1	10174448
21.	1-F11	0.679	INSULATOR, CLU HSG (TRANS SIDE)	91	Y (L98, ML9)	1	10174449
		DISCON	BOLT, CLU HSG INSL	91	Y (L98, ML9)	1	10174450

RPO DEFINITIONS
LT1 – ENGINE-GAS, 8 CYL, 5.7L(5.7P),MFI,HO
LT4 – ENGINE GAS, 8 CYL, 5.7L, MFI, HIGH OUTPUT
LT5 – ENGINE,5.7L(5.7J),TPI
L98 – ENGINE, 5.7L, (5.7-8) 350 CID, V8, TPI
ML9 – TRANSMISSION,MANUAL 6-SPEED
NA5 – EMISSION SYSTEM,FEDERAL REQUIREMENTS

© 2000 GENERAL MOTORS SERVICE PARTS OPERATIONS-CHEVROLET-14Y

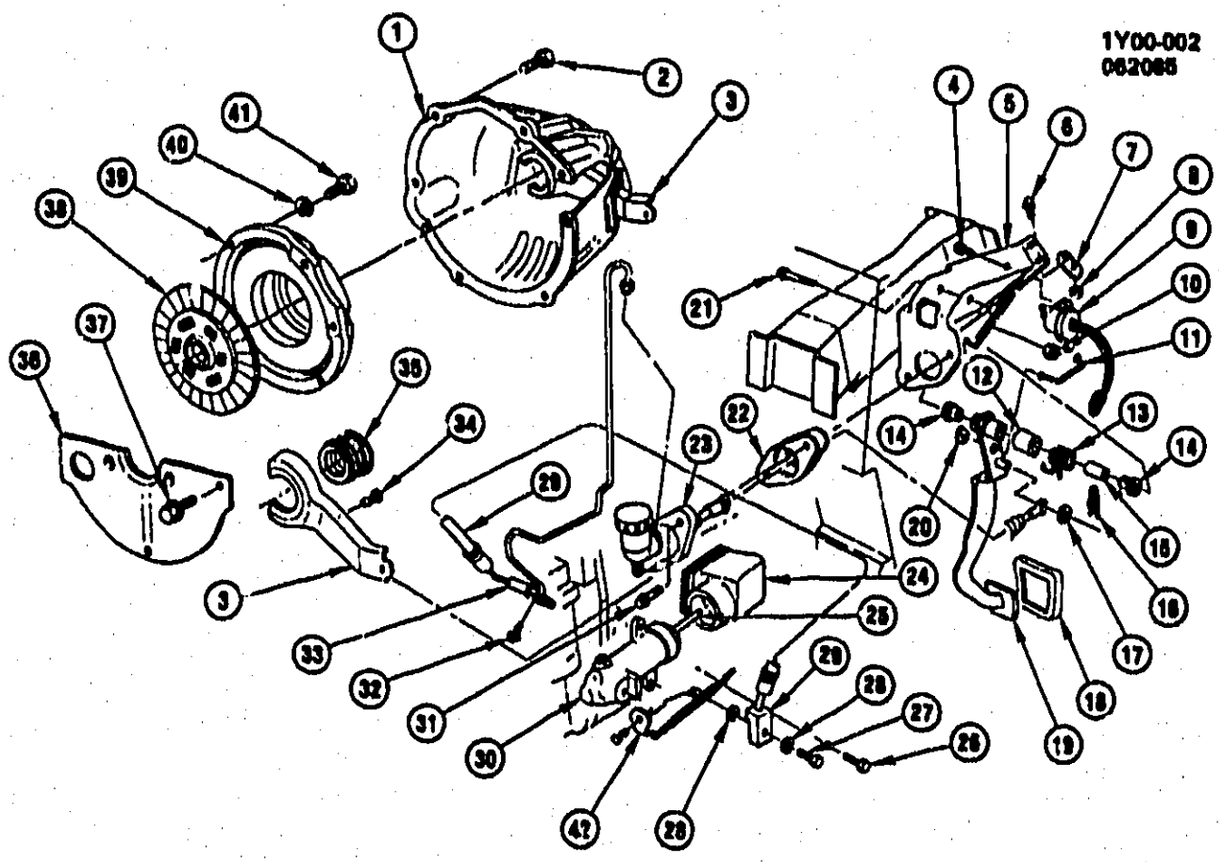

1Y00-002

1984-1988 Y CLUTCH LINKAGE

1.		DISCON	HOUSING, CLUTCH	14048867
2.		8.900	BOLT (CLU HSG (3/8"-16X1 1/4" 280M)) (AR)	10196997
3.	1-F16	0.795	FORK, CLUTCH	14048868
4.		8.977	SCREW, HWH TAP (M6.3X1.81X13) PZOR	12338139
5.		DISCON	BRACKET, CLUTCH PEDAL	14047676
6.		8.900	BOLT, HFH (M8X1.25X25 10.9 PC)	11509843
7.		N.S.	SHIM, CLU PED BRKT	
8.		8.915	NUT (HEX (M8 X 1.25 X 7.8) (W/CAST IRON HD)) (AR) (AC-DELCO #12337995)	12337995
		8.929	WASHER, FLAT (5/16" ID 47/64" OD 1/16" THK)	120386
9.	1-N24	4.054	SWITCH, TRANS NEU START (1984-86)	14047136
	1-N24	4.054	SWITCH, TRANS NEU START (1987-88) (AC-DELCO #D2213A)	10045822
	1-N24			
10.		8.917	NUT, HEX PREV TQ (M10X1.5) 10 CAD	11501033
11.	1-N24	4.054	ROD, CLUTCH START SWITCH	14080260
	1-N24			
12.	1-F18	0.831	BUSHING, CLU PED RTN SPR (4.626)	3908768
13.	1-F18	0.844	SPRING, CLU PED RETURN	14084055
14.	1-F18	0.831	BUSHING, CLUTCH PEDAL	15594358
15.	1-F18	0.831	SPACER, CLU PED PIV (4.634)	25505362
16.		8.934	RETAINER, TYPE B (.062 SPR STL WIRE) (1984-86 1ST DES) (1ST DESIGN 1986-NO BUSHING IN PUSH ROD EYELET OF CLUTCH CYLINDER)	
	1-F14	0.775	BUSHING, (RETAINER) (1986 1ST DES) (1987 2ND DES)	14094900
	1-N25	4.662	RETAINER, CLU PED LVR PIN (1987 2ND DES) (1988)	3817880

© 2000 GENERAL MOTORS SERVICE PARTS OPERATIONS-CHEVROLET-14Y

				1Y00-002
17.	1-F18	0.837	WASHER, CLU PED PUSH ROD (4.662) (1984-86 1ST DES) (1ST DESIGN 1986-NO BUSHING IN PUSH ROD EYELET OF CLUTCH CYLINDER)	1368917
18.	1-N25	4.630	COVER, CLU & BRK PEDAL	14053657
19.		DISCON	PEDAL, CLU (1984-85)	14047677
		DISCON	PEDAL, CLU (1986) (1ST DES-NO BUSHING)	14047677
	1-F18	0.830	PEDAL, CLU (1986) (2ND DES-PLASTIC BUSHING IN PUSHROD EYELET)	10079819
	1-F18	0.830	PEDAL, CLU (1987)	10079819
	1-F18	0.830	PEDAL, CLU (1988)	10079819
20.	1-N24	4.054	RETAINER, CLU PED POSN SW ROD (3.425)	3969067
	1-N25	4.662	RETAINER, CLU START SW ROD (3.425) (1987-88)	3817880
21.		8.900	BOLT, HFH M10X1.5X65 9.8 PZOR (AR)	11508208
22.	1-F15	0.777	SPACER, CLUTCH M/CYL	14066452
23.	1-F14	0.775	CYLINDER, CLUTCH MASTER (WHEN USING ON EARLY 87 & PRIOR MDLS W/NO PUSH ROD BUSH OR W/.43" DIA BUSH, ALSO ORDER NEW CLU PED 10079819 & RET 3817880.	10079820
24.		DISCON	BOOT, CLUTCH FORK	14053689
25.	1-F16	0.787	ROD, CLUTCH FORK	14047672
26.		8.900	BOLT, HFH M10X1.5X30 10.9 FL BLK 21.5 OD 26MM THD POINTED (AR)	12337993
27.		DISCON	FITTING, CLU ACTR CYL HOSE	14068715
28.	1-N25	4.671	GASKET, BRAKE HOSE (FL-C.R. COPPER (M10.3X17X1.30)) (AC-DELCO #10139097)	10139097
29.		DISCON	PIPE, CLU ACTR CYL (1984-85)	14047673
		DISCON	HOSE, CLU ACTR CYL (1986 SEE CAT)	14067674
	1-F16	0.785	HOSE, CLU ACTR CYL (1986-88 SEE CAT)	10016506
30.	1-F16	0.786	CYLINDER, CLU SECONDARY (SEE GROUP 0.000 "CLUTCH CYLINDERS/HYDRAULIC" FOR DETAIL ILLUSTRATED VIEW.)	14067254
31.	1-F15	0.777	BOLT, CLU M/CYL (M8X1.25X55 10.9)	14066450
32.		8.977	SCREW, HEX W/FL WA TAP (M4.2X1.41X16)	
33.		8.950	CLAMP, CLOSED LOOP (M6.3TUBE, 8.7 ATT HOLE, 16.2)	2044779
34.	1-F17	0.796	STUD, CLU FORK BALL	3790556
35.	1-F17	0.799	BEARING, CLU RELEASE (BALL BRG TYPE, 1 1/4" LONG) (AC-DELCO #CT24KVAL)	15613306
36.		DISCON	COVER, CLU HSG (1984-85)	14055161
	1-F11	0.679	COVER, CLU HSG (1986-87)	14067248
37.	1-F11	0.679	BOLT, W/LK WA, CLU HSG CVR (4.128) (AC-DELCO #14076110)	14076110
38.		DISCON	PLATE, CLU DRIVEN (1984)	10120988
	1-F19	0.886	PLATE, CLU DRIVEN (1985-88)	14064177
39.		DISCON	COVER, W/PLATE, CLU PRESS (1984)	14060624
	1-F18	0.859	COVER, W/PLATE, CLU PRESS (1985-88)	14064176
40.		8.931	WASHER, SPR LK (#10)	9439513
41.		8.900	BOLT, CLU CVR & PRESS PLT	9439914
42.		DISCON	SHIELD, CLU ACTR CYL HEAT	14067251

© 2000 GENERAL MOTORS SERVICE PARTS OPERATIONS-CHEVROLET-14Y

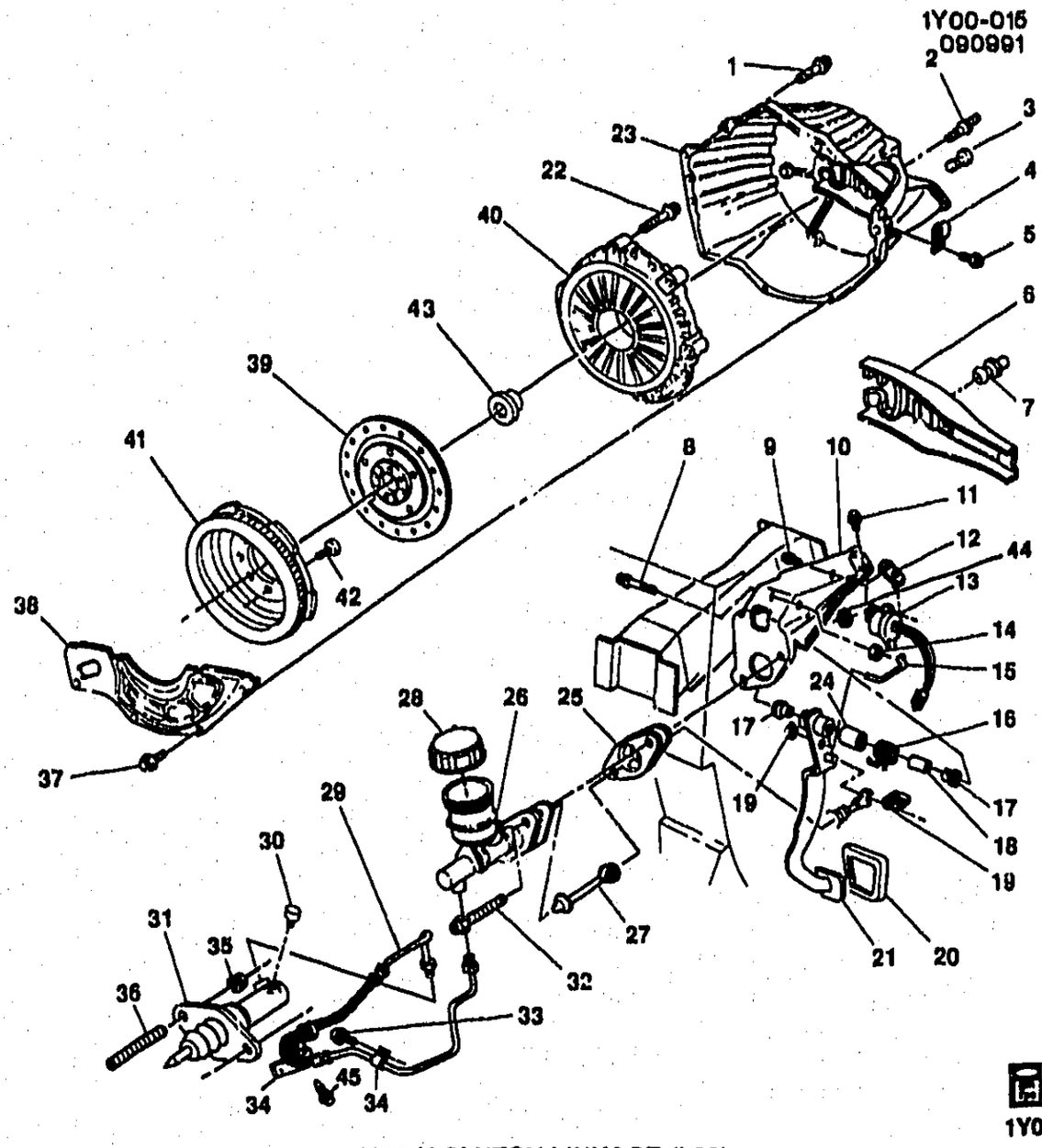

1989 Y CLUTCH LINKAGE (L98)

1.	1-F11	0.663	BOLT, HSG (3/8X16X1.25) 280M	10198997
2.		N.S.	STUD, HSG (3/8X16X0.78)	14091545
	1-F11	0.683	STUD, CLNT HSG (T/W SEALANT)	10085606
		8.800	SEALANT-LOCTITE PIPE-W/TEFLON 50CC TUBE (AR)	1052080
3.	1-F17	0.796	BOLT, CLU FORK BALL STUD LK (HEX) (M8X1.25X8.5)	10150085
4.		DISCON	CLIP, SPR STL (6.35MM TO 7.1MM)	10111599
5.		8.900	BOLT, HEX W/CON WA (M6X1X13) 9.8 ZP	11509699
6.	1-F16	0.795	FORK	10085210
7.	1-F17	0.796	STUD, FORK BALL	10227809
8.		8.900	BOLT, HFH (M10X1.5X65) 9.8 PZOR	11508208
9.		8.977	SCREW, HWH (M6.3X1.81X13) PZOR	12338139
10.		DISCON	BRACKET, PED	14047676
11.		8.900	BOLT, HFH (M8X1.25X20) 10.9 POR	12551177
12.		N.S.	SHIM, PED BRKT	
13.	1-N24 1-N24	4.054	SWITCH, TRANS NEU START (AC-DELCO #D2213A)	10246822

© 2000 GENERAL MOTORS SERVICE PARTS OPERATIONS-CHEVROLET-14Y

				1Y00-015
14.		8.917	NUT, HEX PREV TORQ (M10X1.5) 10 CAD	11501033
15.	1-N24 1-N24	4.054	ROD, TRANS CLU START SW	14080260
16.	1-F18	0.844	SPRING, PED RTN	14084055
17.	1-F18	0.831	BUSHING, PED	15594358
18.	1-F18	0.831	SPACER, CLU PED PIV	25505362
19.	1-F18	0.852	RETAINER, PED LVR PIN	3817880
20.	1-N25	4.630	COVER	14053657
21.	1-F18	0.830	PEDAL	10079819
22.	1-F19	0.862	BOLT, CVR HFH (3/8X16X1.62) 280M	10079898
23.		DISCON	HOUSING	10085208
24.	1-F18	0.831	BUSHING, PED RTN SPR (4.626)	3908768
25.	1-F15	0.777	SPACER, M/CYL	14066452
26.	1-F14	0.775	CYLINDER, MAS	10147953
27.	1-F14	0.775	ROD, MAS CYL PUSH	10147950
28.	1-F16	0.785	CAP, CLU M/CYL RSVR	10147952
29.	1-F16	0.785	HOSE, ACTR CYL	10147949
30.	1-F15	0.780	VALVE, CLU ACTR CYL BL	10181244
31.	1-F15	0.780	CYLINDER, ACTR	10147948
32.	1-F15	0.777	BOLT, CLU M/CYL (M8X1.25X55) (10.9)	14066450
33.		8.977	BOLT, SCR HEX W/FLAT WA 12 DIA TYPE AB (AR)	11509374
34.		DISCON	CLIP, CLU ACTR CYL HOSE (ML9)	10126475
35.		8.917	NUT, HFH (M8X1.25) 9 PEOR (AC-DELCO #11514596)	11514596
36.	1-F15	0.780	STUD, CLU ACTR CYL (M8X1.25X45) (3.613)	14062201
37.		8.900	BOLT, HEX W/CON WA (M6X1X13) 9.8 ZP	11509699
38.		DISCON	COVER, HSG	10085212
39.	1-F19	0.886	PLATE, DR	10174491
40.	1-F18	0.859	PLATE, CLU PRESS (W/CVR & CLU REL BRG)	10203570
41.	1-F9	0.666	FLYWHEEL, ENG	10174482
42.	1-F10	0.669	BOLT, FLYWHL	10085215
43.	1-F17	0.799	BEARING, CLU REL (AC-DELCO #CT1073)	10203567
44.	1-N24 1-N24	4.054	BUSHING, CLU PED POSN SW ROD	14006979
45.		8.900	BOLT, M6X1X12, 10 THD, 11.6 OD, 9.8 GM500-M, POR, MACH (AR) (AC-DELCO #11514149)	11514149

RPO DEFINITIONS
L98 – ENGINE, 5.7L, (5.7-8) 350 CID, V8, TPI
ML9 – TRANSMISSION,MANUAL 6-SPEED

© 2000 GENERAL MOTORS SERVICE PARTS OPERATIONS-CHEVROLET-14Y

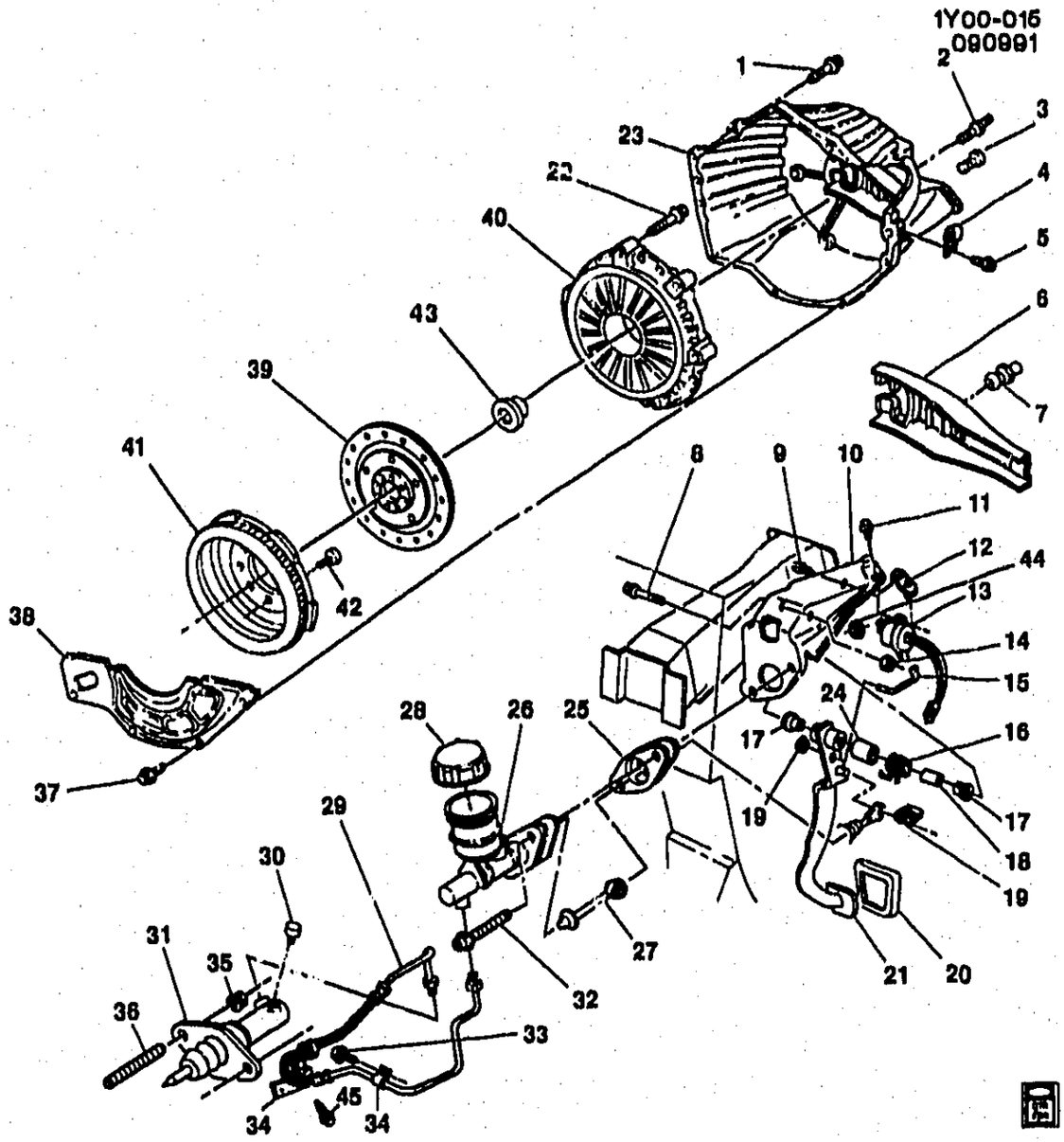

1Y00-0151

1990-1991 Y CLUTCH LINKAGE (L98,ML9)

1.		8.900	BOLT (3.275)	90-91		AR	10198997
2.	1-F11	0.683	STUD, FLYWHL HSG (3/8-16X25/32 BOTH ENDS) (3.275)	90-91	Y (L98, ML9)	1	10085606
3.	1-F17	0.796	BOLT, CLU FORK BALL STUD (SPL, FLAT HD M8XA.25X15.5, 11X5 SHLDR, 27 OD, STL, C., INT HEX DRV)	90-91	Y (L98)	1	10150085
4.		DISCON	(8.950)			AR	10111599
5.		8.977	BOLT, M6X1X13, 10 THD, 12.5 OD	90-91		AR	11509699
6.	1-F16	0.795	FORK, CLU	90-91	Y (L98, ML9, NA5)	1	10085210
7.	1-F17	0.796	STUD, CLU FORK BALL	90-91	Y (L98, ML9, NA5)	1	10227809
8.		8.900	BOLT, HFH M10X1.5X65 9.8 PZOR	90-91		AR	11508208

© 2000 GENERAL MOTORS SERVICE PARTS OPERATIONS-CHEVROLET-14Y

							1Y00-0151
9.		8.977	SCREW, HWH TAP M6.3X1.81X13 13 OD PZOR	90-91		AR	12338139
10.	1-F18	0.82[illegible]	BRACKET, CLU PED	90-91	Y (ML9)	1	10111642
11.		8.900	BOLT, HFH M8X1.25X21MM, 17 OD, 10.9	90-91		AR	12551177
12.	1-F18	0.829	SHIM, CLU PED BRKT	90-91	Y (ML9)	1	10126405
13.	1-N24 1-N24	4.054	SWITCH, M/TRNS CLU START (AC-DELCO #D2213A)	90-91	Y	1	10045822
14.		8.917	NUT, HEX PRVG TORQ M10X1.5XGR10XCAD	90-91		AR	11501033
15.	1-N24 1-N24	4.054	ROD, CLU PED POSN SW	90-91	Y	1	14080260
16.	1-F18	0.844	SPRING, CLU PED RTN	90-91	Y	1	14084055
17.	1-F18	0.831	BUSHING, CLU PED PIV	90-91	Y	2	15594358
18.	1-F18	0.831	SPACER, CLU PED PIV (4.6[illegible]4)	90-91	Y	1	25505362
19.	1-F18	0.852	RETAINER, CLU PED LVR PIN (4.662)	90-91	Y (ML9)	1	3817880
20.	1-N25	4.630	COVER, CLU PED	90-91	Y (ML9)	1	10150009
21.	1-F18	0.830	PEDAL, CLU (INCL 44)	90-91	Y (ML9)	1	10150008
22.	1-F19	0.862	BOLT, CLU PRESS PLT (HFH, 3/8-16X1.62, .38 THD, .378 SHLD TAPERED TO .375, 280M)	90-91	Y (L98, ML9, NA5)	6	10079898
23.	1-F11	0.683	HOUSING, CLU	91	Y (L98, ML9)	1	10126448
		DISCON	HOUSING, CLU (ID BY 4 BOLT MTG & SLOTTED STRTR MTR OPG)	90	Y (L98, ML9, NA5)	1	10085208
24.	1-F18	0.831	BUSHING, CLU PED RTN SPR (4.626)	90-91	Y (ML9)	1	3908768
25.	1-F15	0.777	SPACER, CLU M/CYL	90	Y (L98)	1	14066452
	1-F15	0.777	SPACER, CLU M/CYL	90-91	Y (ML9)	1	14066452
26.	1-F14	0.775	CYLINDER, CLU MAS (0.785)	90-91	Y (ML9)	1	10147953
27.	1-F14	0.775	ROD, CLU M/CYL PUSH, (0.785)	90-91	Y (ML9)	1	10147950
28.	1-F16	0.785	CAP, CLU M/CYL RSVR	90-91	Y (ML9)	1	10147952
29.	1-F16	0.785	HOSE, CLU ACTR CYL	90	Y (ML9)	1	10147949
	1-F16	0.785	HOSE, CLU MAIN CYL PIPE (M/CYL TO SEC CYL)	91	Y	1	12509314
30.	1-F15	0.780	VALVE, CLU ACTR CYL BL (W/CAP) (0.775)	91	Y (ML9)	1	10147951
	1-F15	0.780	VALVE, CLU ACTR CYL BL (MAY HAVE TO DRILL OUT OLD SCREW) (0.775)	90	Y (ML9)	1	10181243
31.	1-F15	0.780	CYLINDER, CLU ACTR (W/VLV & FTG)	91	Y (ML9)	1	12509313
	1-F15	0.780	CYLINDER, CLU ACTR (W/VLV & NO FTG) (0.775)	90	Y (ML9)	1	10147948
32.	1-F15	0.777	BOLT, CLU M/CYL (M8 X 1.25 X 55 10.9) (8.900)	90	Y (L98)	2	14066450
	1-F15	0.777	BOLT, CLU M/CYL (M8 X 1.25 X 55 10.9) (M8X1.25-6G, 10.9, PZO) (8.900)	90-91	Y (ML9)	2	14066450
33.		8.977	BOLT, SCR HEX W/FLAT WA 12 DIA TYPE AB	90-91		AR	11509374
34.		DISCON	CLIP, CLU ACTR CYL HOSE	90	Y (L98, ML9)	1	10126475
		DISCON	CLIP, CLU ACTR CYL HOSE (POS #2)	91	Y (L98, ML9)	1	10174463
	1-F16	0.785	CLIP, CLU ACTR CYL HOSE (POS #1)	91	Y (ML9)	1	10174434

© 2000 GENERAL MOTORS SERVICE PARTS OPERATIONS-CHEVROLET-14Y

							1Y00-0151
35.		8.917	NUT, HFH, M8X1.25, 17.0 OD, 738 THK, 13MM HEX, 10, ZF (8.915) (AC-DELCO #11514596)	90-91	.....	AR	11514596
36.	1-F15	0.780	STUD, CLU ACTR CYL (0.777) ...	91	Y (L98, ML9)	2	10150004
	1-F15	0.780	STUD, CLU ACTR CYL (M8X1.25X45) (3.613)	90	Y (ML9)	2	14062201
37.		8.977	BOLT, [illegible]1X13, 10 THD. 12.5 OD	90-91	.....	AR	11509699
38.		DISCON	[illegible], FLYWHL HSG	90	Y (L98, ML9, NA5)	1	10085212
	1-F11	0.679	COVER, FLYWHL HSG	91	Y (L98, ML9)	1	10126500
39.	1-F19	0.886	PLATE, CLU DRVN	90-91	Y (L98, ML9, NA5)	1	10174491
40.	1-F18	0.859	PLATE, CLU PRESS (W/CVR & CLU REL BRG) (W/O CLU DISK) .	90-91	Y (L98, ML9)	1	10203570
41.	1-F9	0.666	FLYWHEEL, ENG	90-91	Y (L98, ML9)	1	10174482
	1-F9	0.666	FLYWHEEL, ENG	90-91	Y (L98, MD8)	1	14088765
42.	1-F10	0.669	BOLT, FLYWHL (7/16-20 X 45/64) (0.685)	90-91	Y (L98, MD8)	6	14088764
	1-F10	0.669	BOLT, FLYWHL (7/16-20X1 3/4) .	90-91	Y (L98, ML9, NA5)	6	10085215
43.	1-F17	0.799	BEARING, CLU REL (PART OF 40) (AC-DELCO #CT1073)	90-91	Y (L98, ML9, NA5)	1	10203567
44.	1-N24	4.054	BUSHING, CLU PED POSN SW	90-91	Y	1	14006979
	1-N24		ROD				
45.		8.900	BOLT, M6X1X12, 10 THD, 11.6 OD, 9.8 GM500-M, POR, MACH (AC-DELCO #11514149)	90-91	.....	AR	11514149

RPO DEFINITIONS
L98 – ENGINE, 5.7L, (5.7-8) 350 CID, V8, TPI
MD8 – TRANSMISSION,AUTOMATIC 4-SPEED(THM700R4/4L60)
ML9 – TRANSMISSION,MANUAL 6-SPEED
NA5 – EMISSION SYSTEM,FEDERAL REQUIREMENTS

© 2000 GENERAL MOTORS SERVICE PARTS OPERATIONS-CHEVROLET-14Y

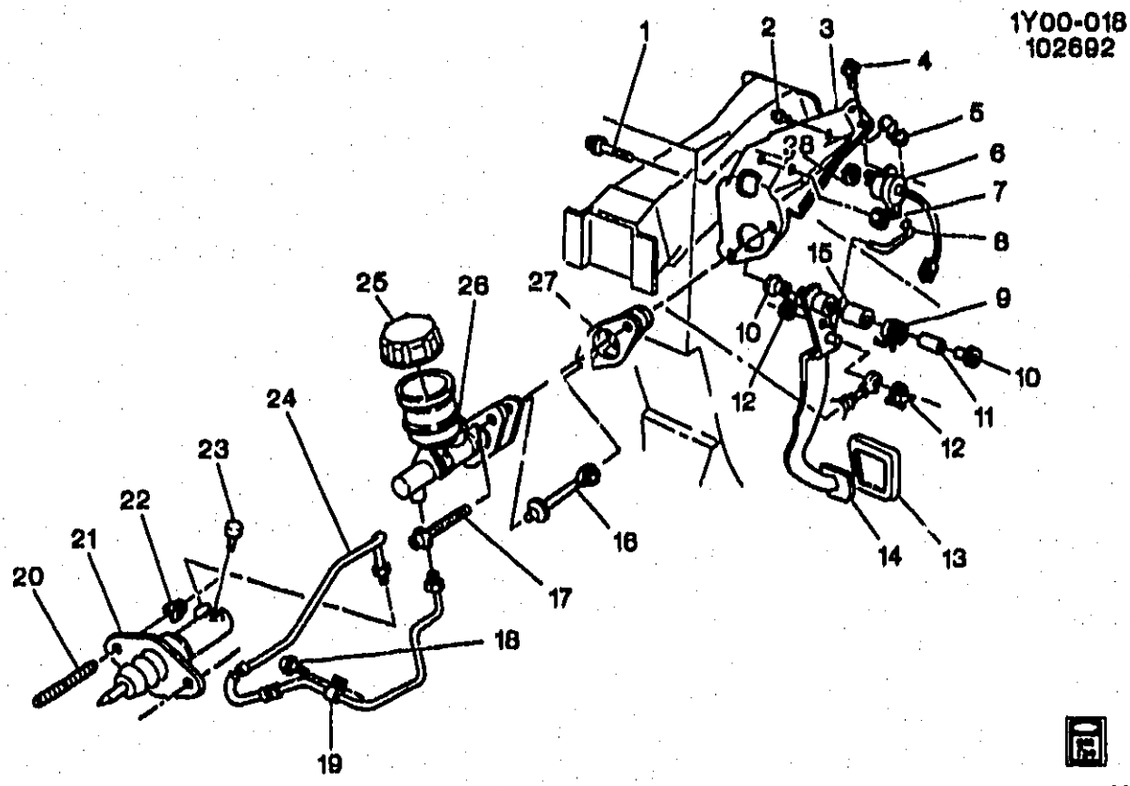

1Y00-018

1990–1995 Y CLUTCH LINKAGE (LT5)

1.		8.900	BOLT, HFH M10X1.5X65 9.8 PZOR	90–95		AR	11506208
2.		8.977	SCREW, HWH TAP M6.3X1.81X13 13 OD PZOR	90–95		AR	12338139
3.	1–F18	0.829	BRACKET, CLU PED	90–95	Y (ML9)	1	10111642
4.		8.900	BOLT, HFH M8X1.25X21MM, 17 OD, 10.9	90–95		AR	12551177
5.	1–F18	0.829	SHIM, CLU PED BRKT	90–95	Y (ML9)	1	10126405
6.	1–N24 1–N24	4.054	SWITCH, M/TRNS CLU START (AC–DELCO #D2213A)	90–92	Y	1	10045822
	1–N24 1–N24	4.054	SWITCH, CLU PED POSN (AC–DELCO #D2213A)	90–95	Y (ML9)	1	10045822
7.		8.917	NUT, HEX PRVG TORQ M10X1.5XGR10XCAD	90–95		AR	11501033
8.	1–N24 1–N24	4.054	ROD, CLU PED POSN SW	90–95	Y	1	14080260
9.	1–F18	0.844	SPRING, CLU PED RTN	90–95	Y	1	14084055
10.	1–F18	0.831	BUSHING, CLU PED PIV	90–95	Y	2	15594358
11.	1–F18	0.831	SPACER, CLU PED PIV (4.634)	90–95	Y	1	25505362
12.	1–N24	4.054	RETAINER, CLU PED POSN SW ROD (3.425)	90–91	Y	1	3989067
	1–N24	4.054	RETAINER, CLU PED POSN SW ROD (3.425)	92–95	Y	1	3989067
13.	1–N25	4.630	COVER, CLU PED	90–95	Y (ML9)	1	10150009
14.	1–F18	0.830	PEDAL, CLU (INCL 28)	90–95	Y (ML9)	1	10150008
15.	1–F18	0.831	BUSHING, CLU PED RTN SPR (4.626)	90–95	Y (ML9)	1	3908768
16.	1–F14	0.775	ROD, CLU M/CYL PUSH (0.785)	90–95	Y (ML9)	1	10147950
17.	1–F15	0.777	BOLT, CLU M/CYL (M8 X 1.25 X 55 10.9) (M8X1.25–6G, 10.9, PZO) (8.900)	90–95	Y (ML9)	2	14068450

© 2000 GENERAL MOTORS SERVICE PARTS OPERATIONS–CHEVROLET–14Y

							1Y00-018
18.		8.977	BOLT-HFH, M4.2X1.4X13, 11.6THD, 8.5OD, GM6010-M, POR, TAP (AC-DELCO #11508256)	90-95	.....	AR	11508256
19.		8.950	CLAMP, CLOSED LOOP CUSHION CLAMP M6.3 TUBE 8.7 ATTACH HOLE 16.2 DIM-A STEEL	90-95	.....	AR	2044779
20.	1-F15	0.780	STUD, CLU ACTR CYL	90-92	Y (LT5, ML9)	2	10186827
	1-F15	0.780	STUD, CLU ACTR CYL (3.275) ...	93-95	Y (LT5, ML9)	2	14086087
21.	1-F15	0.780	CYLINDER, CLU ACTR (W/VLV & FTG)	91-95	Y (ML9)	1	12509313
	1-F15	0.780	CYLINDER, CLU ACTR (W/VLV & NO FTG) (0.775)	90	Y (ML9)	1	10147948
22.		8.917	NUT, HFH, M8X1.25, 17.9 OD, 738 THK, 13MM HEX, 10, ZF (8.915) (AC-DELCO #11514596)	90-95	.....	AR	11514596
23.	1-F15	0.780	VALVE, CLU ACTR CYL BL (W/CAP) (0.775)	91-95	Y (ML9)	1	10147951
	1-F15	0.780	VALVE, CLU ACTR CYL BL (MAY HAVE TO DRILL OUT OLD SCREW) (0.775)	90	Y (ML9)	1	10181244
24.	1-F16	0.785	HOSE, CLU ACTR CYL	90	Y (ML9)	1	10147949
	1-F16	0.785	HOSE, CLU MAIN CYL PIPE (M/CYL TO SEC CYL)	91	Y	1	12509314
25.	1-F16	0.785	CAP, CLU M/CYL RSVR	90-92	Y (ML9)	1	10147952
	1-F16	0.785	CAP, CLU M/CYL RSVR (NOT RELEASED AT TIME OF PUBLICATION)	93	Y (ML9)	1	10147952
26.	1-F14	0.775	CYLINDER, CLU MAS (0.785) ...	90-95	Y (ML9)	1	10147953
27.	1-F15	0.777	SPACER, CLU M/CYL	90-95	Y (ML9)	1	14056452
28.	1-N24	4.054	BUSHING, CLU PED POSN SW	90-95	Y (ML9)	1	14006979
	1-N24		ROD (PART OF 14)				

RPO DEFINITIONS
LT5 – ENGINE,5.7L(5.7J),TPI
ML9 – TRANSMISSION,MANUAL 6-SPEED

© 2000 GENERAL MOTORS SERVICE PARTS OPERATIONS-CHEVROLET-14Y

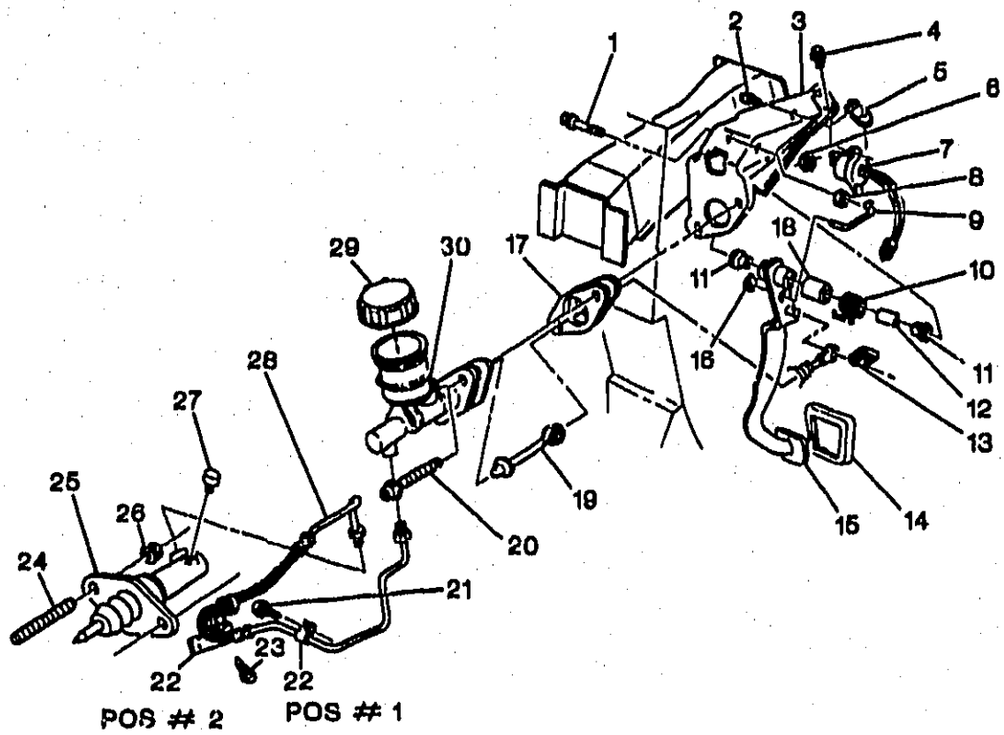

1Y00-021

1992-1995 Y CLUTCH LINKAGE (LT1)
1996 Y CLUTCH LINKAGE (LT4)

1.		8.900	BOLT, HFH M10X1.5X65 9.8 PZOR	92-96		AR	11508208
2.		8.977	SCREW, HWH TAP M6.3X1.81X13 13 OD PZOR	92-96		AR	12330139
3.	1-F18	0.829	BRACKET, CLU PED	92-96	Y (ML9)	1	10111642
4.		8.900	BOLT, HFH M8X1.25X21MM, 17 OD, 10.9	92-96		AR	12551177
5.	1-F18	0.829	SHIM, CLU PED BRKT	92-96	Y (ML9)	1	10126405
6.	1-N24 1-N24	4.054	BUSHING, CLU PED POSN SW ROD (PART OF 15)	92-96	Y (ML9)	1	14006979
7.	1-N24 1-N24	4.054	SWITCH, CLU PED POSN (AC-DELCO #D2213A)	92-96	Y (ML9)	1	10045822
8.		8.917	NUT, HEX PRVG TORQ M10X1.5XGR10XCAD	92-96		AR	11501033
9.	1-N24 1-N24	4.054	ROD, CLU PED POSN SW	92-95	Y	1	14080260
	1-N24 1-N24	4.054	ROD, CLU PED POSN SW	96	Y (ML9)	1	14080260
10.	1-F18	0.844	SPRING, CLU PED RTN	92-96	Y	1	14084055
11.	1-F18	0.831	BUSHING, CLU PED PIV	92-96	Y	2	15594358
12.	1-F18	0.831	SPACER, CLU PED PIV (4.634)	92-96	Y	1	25505362
13.	1-F18	0.852	RETAINER, CLU PED LVR PIN (4.662)	92-96	Y (ML9)	1	3817880
14.	1-N25	4.630	COVER, CLU PED	92-96	Y (ML9)	1	10150009
15.	1-F18	0.830	PEDAL, CLU (INCL 6)	92-96	Y (ML9)	1	10150008
16.	1-N24	4.054	RETAINER, CLU PED POSN SW ROD (3.425)	92-96	Y	1	3889067
17.	1-F15	0.777	SPACER, CLU M/CYL	92-96	Y (ML9)	1	14066452

© 2000 GENERAL MOTORS SERVICE PARTS OPERATIONS-CHEVROLET-14Y

							1Y00-021
18.	1-F18	0.331	BUSHING, CLU PED RTN SPR (4.626)	92-96	Y (ML9)	1	3908768
19.	1-F14	0.775	ROD, CLU M/CYL PUSH (0.785)	92-96	Y (ML9)	1	10147950
20.	1-F15	0.777	BOLT, CLU M/CYL (M8 X 1.25 X 55 10.9) (M8X1.25-6G, 10.9, PZO) (8.900)	92-96	Y (ML9)	2	14066450
21.		8.977	BOLT, SCR HEX W/FLAT WA 12 DIA TYPE AB (CLU ACTR CYL HOSE CLIP)	92-96		1	11509374
22.	1-F16	0.785	CLIP, CLU ACTR CYL HOSE (POS #1)	92-96	Y (ML9)	1	10174464
	1-F16	0.785	CLIP, CLU ACTR CYL HOSE (POS #2)	92-95	Y (LT1, ML9)	1	10186811
	1-F16	0.785	CLIP, CLU ACTR CYL HOSE (POS #2)	96	Y (LT4, ML9)	1	10186811
23.		8.900	BOLT-METRIC HEAVY HEX FLANGE HEAD (CLU ACTR CYL HOSE CLIP)	92-96		1	11516061
24.	1-F15	0.780	STUD, CLU ACTR CYL (0.777)	92	Y (LT1, ML9)	2	10150004
	1-F15	0.780	STUD, CLU ACTR CYL	93-94	Y (LT1, ML9)	2	10210489
	1-F15	0.780	STUD, CLU ACTR CYL (0.777)	95	Y (LT1, ML9)	2	10150004
	1-F15	0.780	STUD, CLU ACTR CYL (0.777)	96	Y (LT4, ML9)	2	10150004
25.	1-F15	0.780	CYLINDER, CLU ACTR	96	Y (ML9)	1	12509313
	1-F15	0.780	CYLINDER, CLU ACTR (W/VLV & FTG)	92-95	Y (ML9)	1	12509313
26.		8.917	NUT, HFH, M8X1.25, 17.9 OD, 738 THK, 13MM HEX, 10, ZF (CLU ACTR CYL) (8.915) (AC-DELCO #11514596)	92-96		2	11514596
27.	1-F15	0.780	VALVE, CLU ACTR CYL BL (0.775)	92-93	Y (ML9)	1	10181244
28.	1-F16	0.785	HOSE, CLU MAIN CYL PIPE	96	Y (ML9)	1	12509314
	1-F16	0.785	HOSE, CLU MAIN CYL PIPE (M/CYL TO SEC CYL)	92-95	Y	1	12509314
29.	1-F16	0.785	CAP, CLU M/CYL RSVR	92	Y (ML9)	1	10147952
	1-F16	0.785	CAP, CLU M/CYL RSVR	93	Y	1	10147952
30.	1-F14	0.775	CYLINDER, CLU MAS (0.785)	92-96	Y (ML9)	1	10147953

RPC DEFINITIONS
LT1 – ENGINE-GAS, 8 CYL, 5.7L(5.7P),MFI,HO
LT4 – ENGINE GAS, 8 CYL, 5.7L, MFI, HIGH OUTPUT
ML9 – TRANSMISSION,MANUAL 6-SPEED

© 2000 GENERAL MOTORS SERVICE PARTS OPERATIONS-CHEVROLET-14Y

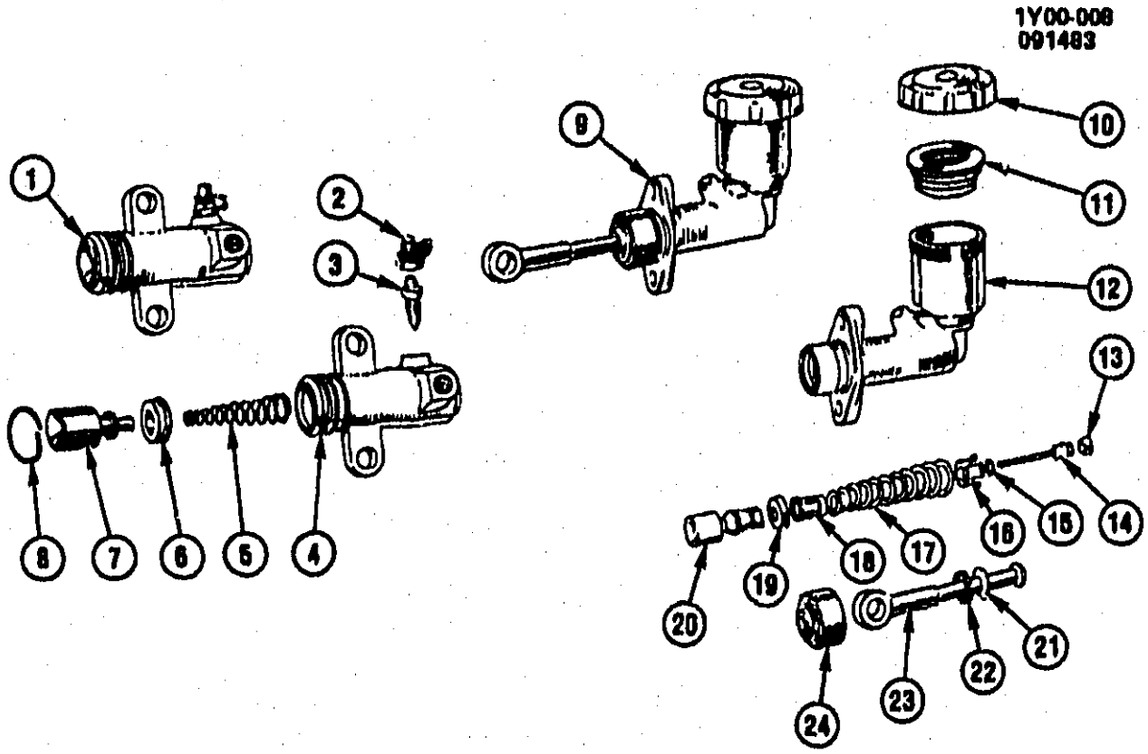

1Y00–008

1984–1985 Y CLUTCH CYLINDERS/HYDRAULIC

1.	1–F16	0.786	**CYLINDER**, CLU SECONDARY (INCLS #2 THRU 8)	14087254
2.		N.S.	**COVER**, BLEED SCREW DUST (PART OF GROUP 0.780 14079422 REPAIR KIT, CLU SECONDARY CYL)	
3.		DISCON	**SCREW**, CLU SEC CYL BLEED	14079424
4.		N.S.	**BODY**, CLU SEC CYL (PART OF #1)	
5.		N.S.	**SPRING**, PISTON (PART OF #1)	
6.		N.S.	**SEAL**, PISTON (PART OF GROUP 0.780 14079422 REPAIR KIT, CLU SECONDARY CYL)	
7.		N.S.	**PISTON**, SEC CYL (PART OF #1)	
8.		N.S.	**RING**, PISTON RET (PART OF GROUP 0.780 14079422 REPAIR KIT, CLU SECONDARY CYL)	
9.	1–F14	0.775	**CYLINDER**, CLUTCH MASTER (1984–86)	10079820
10.	1–F14	0.775	**CAP KIT**, CLU MASTER CYL (INCLS #11)	10028824
11.		N.S.	**SEAL**, MOISTURE BARRIER (PART OF GROUP 0.775 14079421 REPAIR KIT, CLU MASTER CYL)	
12.		N.S.	**BODY**, CLU MAS CYL (PART OF #9)	
13.		N.S.	**SEAL**, VALVE (PART OF GROUP 0.775 14079421 REPAIR KIT, CLU MASTER CYL)	
14.		N.S.	**VALVE**, CENTER (PART OF #9)	
15.		N.S.	**WASHER**, SPRING (PART OF GROUP 0.775 14079421 REPAIR KIT, CLU MASTER CYL)	
16.		N.S.	**SPACER**, VALVE (PART OF #9)	
17.		N.S.	**SPRING**, PISTON (PART OF #9)	
18.		N.S.	**RETAINER**, SPRING (PART OF #9)	
19.		N.S.	**SEAL**, PISTON (PART OF GROUP 0.775 14079421 REPAIR KIT, CLU MASTER CYL)	
20.		N.S.	**PISTON**, CLU MAS CL (PART OF #9)	
21.		N.S.	**WASHER**, ROD RET (PART OF #23)	
22.		N.S.	**CLIP**, RET (PART OF GROUP 0.775 14079421 REPAIR KIT, CLU MASTER CYL)	

© 2000 GENERAL MOTORS SERVICE PARTS OPERATIONS–CHEVROLET–14Y

			1Y00-008
23.	DISCON	PUSH ROD, CLU MAS CYL PUSH	14003523
24.	N.S.	COVER, DUST (PART OF GROUP 0.775 14079421 REPAIR KIT, CLU MASTER CYL)	

© 2000 GENERAL MOTORS SERVICE PARTS OPERATIONS-CHEVROLET-14Y

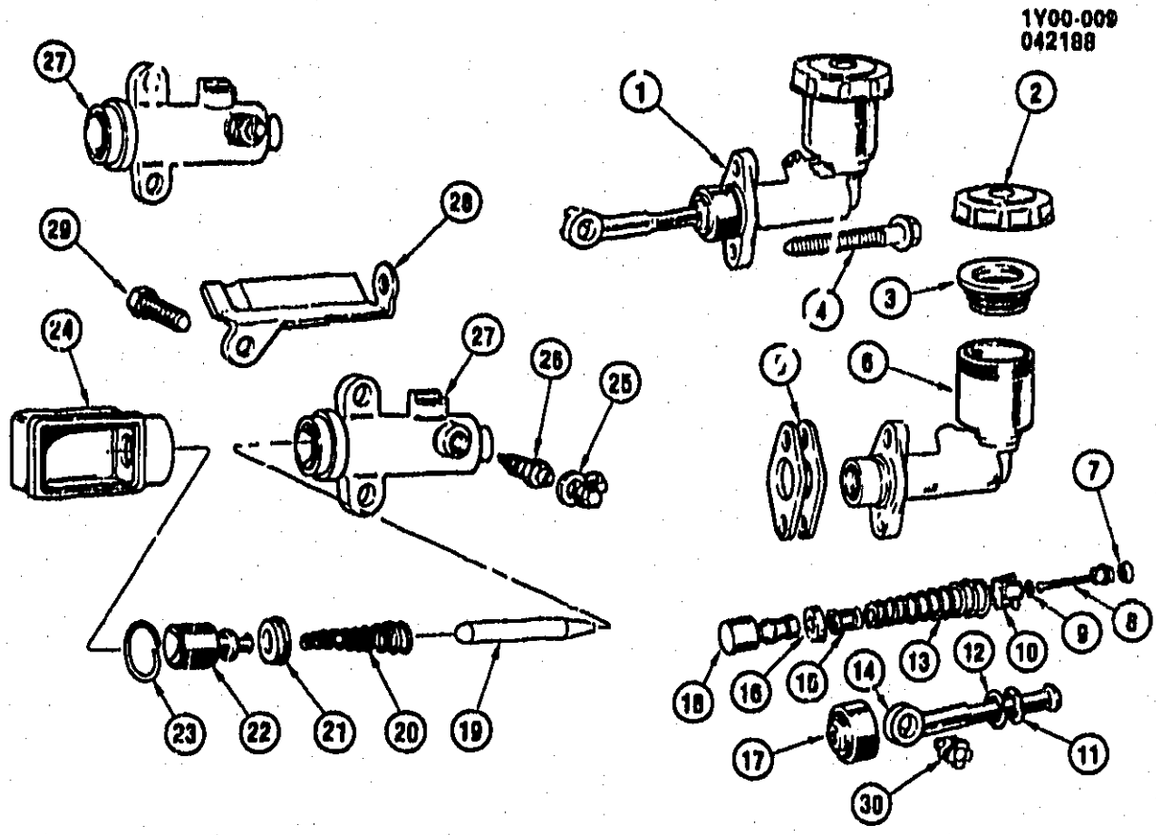

1Y00–009

1986–1988 Y CLUTCH CYLINDERS/HYDRAULIC

1.	1–F14	0.775	CYLINDER, CLUTCH MASTER	10079820
2.	1–F14	0.775	CAP KIT, CLU MASTER CYL (INCLS #11) (1986)	10028824
3.		N.S.	SEAL, MOISTURE BARRIER (PART OF GROUP 0.775 14079421 REPAIR KIT, CLU MASTER CYL)	
4.	1–F15	0.777	BOLT, CLU M/CYL (M8X1.25X55)	14066450
5.	1–F15	0.777	SPACER, CLU M/CYL	14066452
6.		N.S.	BODY, CLU M/CYL (PART OF #9)	
7.		N.S.	SEAL, VALVE (PART OF GROUP 0.775 14079421 REPAIR KIT, CLU SECONDARY CYL)	
8.		N.S.	VALVE, CENTER (PART OF #9)	
9.		N.S.	WASHER, SPRING (PART OF GROUP 0.775 14079421 REPAIR KIT, CLU MASTER CYL)	
10.		N.S.	SPACER, VALVE (PART OF #9)	
11.		N.S.	WASHER, ROD RET (PART OF #23)	
12.		N.S.	CLIP, RET (PART OF GROUP 0.775 14079421 REPAIR KIT, CLU MASTER CYL)	
13.		N.S.	SPRING, PISTON (PART OF #9)	
14.		N.S.	ROD, CLU M/CYL PUSH (PART OF #1)	
15.		N.S.	RETAINER, SPRING (PART OF #9)	
16.		N.S.	SEAL, PISTON (PART OF GROUP 0.775 14079421 REPAIR KIT, CLU MASTER CYL)	
17.		N.S.	COVER, DUST (PART OF GROUP 0.775 14079421 REPAIR KIT, CLU MASTER CYL)	
18.		N.S.	PISTON, CLU M/CYL (PART OF #9)	
19.	1–F16	0.787	ROD, CLU SECD CYL PUSH	14047672
20.		N.S.	SPRING, PISTON (PART OF #1)	
21.		N.S.	SEAL, PISTON (PART OF GROUP 0.780 14079422 REPAIR KIT, CLU SECONDARY CYL)	

© 2000 GENERAL MOTORS SERVICE PARTS OPERATIONS–CHEVROLET–14Y

22.		N.S.	PISTON, SECD CYL (PART OF #1)	
23.		N.S.	RING, PISTON RET (PART OF GROUP 0.780 14079422 REPAIR KIT, CLU SECONDARY CYL)	
24.		DISCON	BOOT, CLU FORK	14053689
25.		N.S.	COVER, BLEED SCREW DUST (PART OF GROUP 0.780 14079422 REPAIR KIT, CLU SECONDARY CYL)	
26.		DISCON	SCREW, CLU SECD CYL BLEED	14079424
27.	1-F16	0.786	CYLINDER, CLU SECONDARY (INCL'S #19, 20, 21, 22, 23)	14087254
28.		DISCON	SHIELD, CLU ACTR CYL HEAT	14087251
29.		8.900	BOLT, HEX FLG HD (M10 X 1.5 X 30)	
30.	1-F14	0.775	BUSHING, CLU M/CYL (1986 2ND DES) (1987 1ST DES)	14094900
		N.S.	BUSHING, CLU M/CYL (1987 2ND) (1988)	

© 2000 GENERAL MOTORS SERVICE PARTS OPERATIONS-CHEVROLET-14Y

MICROFICHE INDEX

GROUPS 0.000 & 21.000

FICHE 1 OF 11

GROUP	DESCRIPTION	STARTING GRID LOCATION PARTS	ILLUSTRATIONS
–	GENERAL INFORMATION	1–A2	1–G2
–	ALPHABETICAL INDEX	1–B13	N.A.
0.000	8–CYLINDER ENGINE	1–E2	1–G5
21.000	ACCESSORY REFERENCE LIST	1–D2	N.A.
–	OUT OF FICHE CALLS	N.A.	1–L13

1–L1

1.020 ELBOW, Engine Air Cooling

90–95	Y 5.7J (LT5)	10153519	LH	34.68	ELBOW, PLNM COOL AIR BL (30X19)

1.035 VALVE, Engine Air Cooling Control

92–96	Y 5.7P (LT1)	10070107	1	3.60	VALVE, ENG COOL AIR BL
96	Y 5.7–5 (LT4)	10070107	1	3.60	VALVE, ENG COOL AIR BL

1.055 BOLT – BOLT KIT – BRACKET – BRACKET KIT – CONNECTOR – FAN – FAN KIT – MOTOR KIT – NUT – RELAY – RETAINER – SWITCH, Engine Air Cooling (Electrical)

Note: FOR ADDITIONAL INFORMATION, SEE ELECTRIC COOLING MOTOR AND FAN APPLICATION CHARTS IN THE REFERENCE CATALOG (CODE 88R).

88–89	Y 5.7–8) M/TRNS	14104140	1	1.88	BRACKET, FAN CONT RLY (M.T. O/D SW RELAY)
90–94	Y	14104140	1	1.88	BRACKET, FAN CONT RLY (STEEL) (3.0"X2.0") (76.7MMX51.0MM))
84	Y	14078902	1	16.26	RELAY, FAN CONT (AC–DELCO #15–8218)
85–87	Y	10038311	1	16.26	RELAY, FAN CONT (AC–DELCO #15–8333)
88–94	Y	14089936	2	16.26	RELAY, FAN CONT (5–PIN OVAL SHAPE) (USE W/CONN 15306002) (AC–DELCO #15–8240)
95–96	Y	12193601	1	23.44	RELAY, FAN CONT (BLACK) (5–WAY M) (USED W/CONNECTOR 15306045) (09.277) (AC–DELCO #15–8719)
95–96	Y	12193603	2	20.30	RELAY, FAN CONT (GRAY) (SPST 280 MINI) (4–WAY) (02.100) (AC–DELCO #12193603)
86	Y B4P (2ND DES)	10074160	1	DISCON	RETAINER, ELEC CLG FAN (SPR CLIP RETAINING FAN BLADE) (NO COMPARABLE 1ST DES)
85	Y HVY DUTY CLG (V08)	10074160	1	DISCON	RETAINER, ENG COOL FAN MOT LEAD
87–89	Y B4P	10074160	1	DISCON	RETAINER, ENG COOL FAN MOT LEAD
84–88	Y	20664092	AR	*.40	RETAINER, ENG COOL FAN RLY (PUSH–IN) (01.276)
95–96	Y	12129271	3	.73	RETAINER, FAN CONT RLY (ATCHS TO RELAY CONN)
84	Y	03040674	1	22.44	SWITCH, FAN CONT (1 BUTTON TERM, 3/8–18 THD) (TEMP STMP 108C) (AC–DELCO #15–5403)
85	Y	14043276	1	10.51	SWITCH, FAN CONT (1 BUTTON TERM. 3/8–18 THD) (USED ON VEHS W/TWO SPD CLG FAN) (AC–DELCO #D1852B)
86–89	Y 5.7–8 (L98), FAN (B4P)	14043276	1	10.51	SWITCH, FAN CONT (1 BUTTON TERM, 3/8–18 THD) (USE ON VEHS W/2 SPD CLG FAN) (AC–DELCO #D1852B)

1.060 BOLT – SHIELD – TENSIONER – WASHER, Engine Fan Coolant

84	Y	14055164	1	102.10	TENSIONER, DR BELT
85–87	Y	14084312	1	82.10	TENSIONER, DR BELT
88–91	Y 5.7–8 (L98)	10055897	1	82.10	TENSIONER, DRV BELT
90–95	Y 5.7J (LT5)	10067479	1	60.60	TENSIONER, DRV BELT
92	Y 5.7P (LT1)	10186197	1	54.10	TENSIONER, DRV BELT
93	Y 5.7P (LT1), (1ST DES)	10186197	1	54.10	TENSIONER, DRV BELT (HAS GROOVED PUL)

© 2000 GENERAL MOTORS SERVICE PARTS OPERATIONS

1.060 BOLT – SHIELD – TENSIONER – WASHER, Engine Fan Coolant(Con't)

93	Y 5.7P (LT1), (2ND DES)	10227507	1	41.15	TENSIONER, DRV BELT (HAS FLAT PUL)
94–96	Y 5.7P (LT1)	10227507	1	41.15	TENSIONER, DRV BELT
96	Y 5.7–5 (LT4)	10227507	1	41.15	TENSIONER, DRV BELT
90–95	Y 5.7J (LT5)	10067747	1	2.30	WASHER, DRV BELT TENSR (FLAT)

1.062 BOLT – PULLEY, Fan and Coolant Pump

89–91	Y 5.7–8 (L98)	15517450	4	1.02	BOLT, FAN & W/PMP PUL (5/16X15/64X7/8 PC) (05.586)
84–87	Y	14067335	4	DISCON	BOLT, PULLEY
88	Y 5.7–8 (L98), (M/TRNS)	14067335	4	DISCON	BOLT, PULLEY
90–95	Y 5.7J (LT5)	11516061	4	*1.10	BOLT, W/PMP PUL (M6X1X12, FL HD) (08.900)
84	Y	14055117	1	DISCON	PULLEY, CLNT PUMP (ANC)
92	Y 5.7P (LT1)	10186174	1	34.03	PULLEY, DRV BELT IDLER
93	Y 5.7P (LT1), (2ND DES)	10105355	1	34.28	PULLEY, DRV BELT IDLER (ID BY FLAT PUL)
93	Y 5.7P (LT1), (1ST DES)	10186174	1	34.03	PULLEY, DRV BELT IDLER (ID BY GROOVED PUL)
94–96	Y 5.7P (LT1)	10105355	1	34.28	PULLEY, DRV BELT IDLER
96	Y 5.7–5 (LT4)	10105355	1	34.28	PULLEY, DRV BELT IDLER
85–91	Y 5.7–8 (L98)	10105209	1	34.03	PULLEY, W/PMP
90–95	Y 5.7J (LT5)	10067478	1	34.03	PULLEY, W/PMP

1.066 BELT, Drive

Note: FOR USAGE REFER TO V–BELT CHART GRP 1.066

84	Y	14055157	1	45.50	BELT, FAN (21.36M X 2240.0M) (UXA)
85	Y	14092306	1	39.00	BELT, FAN & A/C CMPR & A.I.R. PUMP & GEN & P/S PUMP (21.36M X 2260M) (UXW)
86–87	Y Y FOR MDL APPL SEE BELT CHARTS	14092308	1	39.00	BELT, FAN & A/C CMPR & A.I.R. PUMP & GEN & P/S PUMP (UXX)
92	Y 5.7P (LT1)	10186198	1	45.00	BELT, GEN & A/C CMPR & P/S PUMP (CODE UKM)
93	Y 5.7P (LT1), (1ST DES)	10186198	1	45.00	BELT, GEN & A/C CMPR & P/S PUMP (CODE UKM) (HAS DUAL SIDE GROOVES, 2ND DES HAS SINGLE SIDE GROOVES)
93	Y 5.7P (LT1), (2ND DES)	10230259	1	32.00	BELT, GEN & A/C CMPR & P/S PUMP (CODE UNM) (HAS SINGLE SIDE GROOVES, 1ST DES HAS DUAL SIDE GROOVES)
94–96	Y 5.7P (LT1)	10230259	1	32.00	BELT, GEN & A/C CMPR & P/S PUMP (CODE UNM)
96	Y 5.7–5 (LT4)	10230259	1	32.00	BELT, GEN & A/C CMPR & P/S PUMP (CODE UNM)
90–95	Y 5.7J (LT5)	10067477	1	39.00	BELT, W/PMP & A/C CMPR & GEN & P/S PUMP
88–91	Y 5.7–8 (L98)	24505041	1	45.00	BELT, W/PMP, A/C, A.I.R., GEN, P/S

1.069 DAMPENER – PUMP – PUMP KIT, Engine Coolant

88	Y	10105252	1	32.75	DAMPENER, CLNT PUMP PUL VIB
89–91	Y 5.7–8 (L98)	10105252	1	32.75	DAMPENER, CLNT PUMP PUL VIB
84	Y 5.7–8 (L83)	12522035	1	230.72	PUMP KIT, WAT (AC–DELCO #251–500)
85–91	Y 5.7–8 (L98)	12522035	1	230.72	PUMP KIT, WAT (AC–DELCO #251–500)
92	Y 5.7P (LT1)	12529560	1	242.82	PUMP KIT, WAT (AC–DELCO #251–537)

© 2000 GENERAL MOTORS SERVICE PARTS OPERATIONS

1.069 DAMPENER - PUMP - PUMP KIT, Engine Coolant(Con't)

90-95	Y 5.7J (LT5)	10159599	1	561.43	PUMP, WAT (CONTAINS PUMP & GASKET) (AC-DELCO #251-561)
93-96	Y 5.7P (LT1)	12527739	1	259.61	PUMP, WAT (W/GASKET) (AC-DELCO #251-554)
96	Y 5.7-5 (LT4)	12527739	1	259.61	PUMP, WAT (W/GASKET) (AC-DELCO #251-554)

1.073 BOLT - INLET - STUD, Engine Coolant Pump

92-96	Y 5.7P (LT1)	10108667	1	12.75	INLET, W/PMP (W/THERM HSG & BLEDR SCREW)
96	Y 5.7-5 (LT4)	10108667	1	12.75	INLET, W/PMP (W/THERM HSG & BLEDR SCREW)
84-88	Y	14055139	AR	17.80	STUD (3/8-16X2.73/3/8-16X1.32)
84-88	Y	10046099	AR	6.15	STUD, CLNT PUMP (3/8 16X2.19, 3/8 16X1.85)
84	Y	14085701	1	23.25	STUD, CLNT PUMP (3/8-16X1.85/3/8-16X.96) (03.655)

1.079 BOLT - GASKET - PIN - STUD, Engine Coolant Pump

90-95	Y 5.7J (LT5)	11514566	2	1.45	BOLT, W/PMP (8X1.25X40, 37.5 THD, 14 OD, TORX T40 DR, 9.8, PE 4067M)
90-95	Y 5.7J (LT5)	24572579	2	.67	BOLT, W/PMP (HFH, M8X1.25X35) (00.206)
92-95	Y 5.7J (LT5)	03522444	3	.63	BOLT, W/PMP (8X1.25X55, 22 THD, 18 OD, 9.8, PZOR, MACH) (01.840)
92-96	Y 5.7P (LT1)	09423592	1	6.15	BOLT, W/PMP (USED W/SEALANT) (08.900)
92-96	Y 5.7P (LT1)	09440073	2	2.25	BOLT, W/PMP (HFH 3/8-16X2.00 280M POR 6174M) (08.900)
96	Y 5.7-5 (LT4)	09423592	1	6.15	BOLT, W/PMP (USED W/SEALANT) (08.900)
96	Y 5.7-5 (LT4)	09440073	2	2.25	BOLT, W/PMP (HFH 3/8-16X2.00 280M POR 6174M) (08.900)
92-93	Y 5.7P (LT1)	11508805	2	*.41	BOLT, W/PMP INL (HFH M6X1X16 9.8 POR 14 OD 14MM THD) (08.900)
92-95	Y 5.7P (LT1)	22539278	2	.61	BOLT, W/PMP INL (M6 X 1.0 X 25.0 FLG HD) (08.900)
84-91	Y	03754587	2	*.73	GASKET, W/PMP (LEFT OR RIGHT, 13/32 LARGE ID, CORK)
90-95	Y 5.7J (LT5)	10168678	1	11.42	GASKET, W/PMP
92-96	Y 5.7P (LT1)	10128343	2	*.34	GASKET, W/PMP
96	Y 5.7-5 (LT4)	10128343	2	*.34	GASKET, W/PMP
92-96	Y 5.7P (LT1)	10128487	1	9.80	PIN, W/PMP LOC (DOWELL, 0.31X1.25, STL-HRD, PL, CHAM ENDS)
96	Y 5.7-5 (LT4)	10128487	1	9.80	PIN, W/PMP LOC (DOWELL, 0.31X1.25, STL-HRD, PL, CHAM ENDS)

1.097 BOLT - BRACKET - HOSE - NUT - PIPE - SEAL, Engine Coolant By-Pass

92-94	Y 5.7P (LT1)	12552974	1	3.95	BOLT, ENG COOL AIR BL PIPE
95-96	Y 5.7P (LT1)	12552974	2	3.95	BOLT, ENG COOL AIR BL PIPE
96	Y 5.7-5 (LT4)	12552974	2	3.95	BOLT, ENG COOL AIR BL PIPE
96	Y 5.7P (LT1)	09442958	3	*1.00	NUT, ENG COOL AIR BL PIPE (3/8-16 PC, 286M) (HEX, FLANGE) (08.917)
96	Y 5.7-5 (LT4)	09442958	3	*1.00	NUT, ENG COOL AIR BL PIPE (3/8-16 PC, 286M) (HEX, FLANGE) (08.917)
90	Y 5.7J (LT5)	10146245	LH	9.35	PIPE, COOLANT AIR BLEED
86-89	Y 5.7-8 (L98)	14087587	1	8.25	PIPE, ENG COOL (INT MANIF VPR PIPE TO HTR OTLT PIPE)
92-94	Y 5.7P (LT1)	10108636	1	39.50	PIPE, ENG COOL AIR BL

© 2000 GENERAL MOTORS SERVICE PARTS OPERATIONS

1.097 BOLT – BRACKET – HOSE – NUT – PIPE – SEAL, Engine Coolant By-Pass(Con't)

95–96	Y 5.7P (LT1)	12556260	1	39.50	PIPE, ENG COOL AIR BL (INCLUDES BOLTS & SEALS)
96	Y 5.7–5 (LT4), 6–SPD M/TRANS (ML9)	12556260	1	39.50	PIPE, ENG COOL AIR BL (INCLUDES BOLTS & SEALS)
92–94	Y 5.7P (LT1)	10108689	2	5.78	SEAL, ENG COOL AIR BL PIPE (O RING)
95–96	Y 5.7P (LT1)	10108689	4	5.78	SEAL, ENG COOL AIR BL PIPE (O RING)
96	Y 5.7–5 (LT4)	10108689	4	5.78	SEAL, ENG COOL AIR BL PIPE (O RING)

1.105 BOLT – COUPLING – SEAL – SHAFT, Coolant Pump, with Bearing

92–96	Y 5.7P (LT1)	14093637	2	*.78	BOLT, W/PMP DRV SHF BRG RET (HEX SOC TORQ DR 1/4–20 X 1/2, 15/32 OD) (00.529)
96	Y 5.7–5 (LT4)	14093637	2	*.78	BOLT, W/PMP DRV SHF BRG RET (HEX SOC TORQ DR 1/4–20 X 1/2, 15/32 OD) (00.529)
92–96	Y 5.7P (LT1)	10128334	1	51.75	COUPLING, W/PMP DRV SHF
96	Y 5.7–5 (LT4)	10128334	1	51.75	COUPLING, W/PMP DRV SHF
92–96	Y 5.7P (LT1)	12553792	1	*.08	SEAL, W/PMP DRV SHF
96	Y 5.7–5 (LT4)	12553792	1	*.08	SEAL, W/PMP DRV SHF
92–96	Y 5.7P (LT1)	10219554	1	57.00	SHAFT, W/PMP DRV
96	Y 5.7–5 (LT4), 6–SPD M/TRANS (ML9)	12551727	1	75.50	SHAFT, W/PMP DRV

1.123 SEAL, Engine Coolant Pump

92–96	Y 5.7P (LT1)	10217886	1	4.98	SEAL, W/PMP BRG
96	Y 5.7–5 (LT4)	10217886	1	4.98	SEAL, W/PMP BRG
92–96	Y 5.7P (LT1)	10128329	1	.97	SEAL, W/PMP CVR (O RING) (01.114)
96	Y 5.7–5 (LT4)	10128329	1	.97	SEAL, W/PMP CVR (O RING) (01.114)

1.150 CONNECTOR – SENSOR, Coolant Temperature (Engine Unit)

84	Y	10045847	1	36.59	SENSOR, ENG COOL T/GA ((BUTN OTR & CNTR TERM, 3/8–18 THD) (WHITE) (AC12V STAMPED) (3.682)) (AC–DELCO #213–52)
84–89	Y	25036135	1	34.89	SENSOR, ENG COOL T/GA (1 PLAIN BLADE TERM, 3/8–18 THD) (AC–DELCO #25036135)
90	Y	08993146	1	27.25	SENSOR, ENG COOL T/GA (LOCK BLADE, 3/8–18 THD (MAY ALSO REQ TERM #6288704 TO ENABLE CHANGE FROM BUTTON TO BLADE TERM) (AC–DELCO #D1885)
90–95	Y 5.7J (LT5)	25037346	1	28.54	SENSOR, ENG COOL T/GA (3/8–18 THD, COLLAR BUTTON) (AC–DELCO #213–80)
91	Y 5.7J (LT5)	08993146	1	27.25	SENSOR, ENG COOL T/GA (LOCK BLADE, 3/8–18 THD) (MAY ALSO REQ TERM #6288704 TO ENABLE CHANGE FROM BUTTON TO BLADE TERM) (AC–DELCO #D1885)
91	Y 5.7–8 (L98)	25037346	1	28.54	SENSOR, ENG COOL T/GA (3/8–18 THD, COLLAR BUTTON) (AC–DELCO #213–80)
92–96	Y 5.7P (LT1)	25037332	1	18.82	SENSOR, ENG COOL T/GA (2 BLADE TERM) (3/8–18 THD) (2 TERM, CAN BE USED AS 1 TERM CONN) (AC–DELCO #213–77)

© 2000 GENERAL MOTORS SERVICE PARTS OPERATIONS

1.150 CONNECTOR – SENSOR, Coolant Temperature (Engine Unit)(Con't)

96	Y 5.7–5 (LT4)	25037332	1	18.82	SENSOR, ENG COOL T/GA (2 BLADE TERM) (3/8–18 THD) (2 TERM, CAN BE USED AS 1 TERM CONN) (AC–DELCO #213–77)
86–96	Y	12146312	1	9.10	SENSOR, ENG COOL TEMP (UND PLENUM) (USED FOR CLUSTERS W/OIL GAGE & LGT COMB) (2–WAY M) (03.682) (AC–DELCO #213–310)

1.152 CORD – HEATER, Engine Coolant Heater

84	Y 5.7–8 (L83)	52353021	1	23.46	CORD, ENG COOL HTR (DIST BETWEEN TERMS 12.30 MM)
84	Y 5.7–8 (L83)	52353026	1	24.63	CORD, ENG COOL HTR (DIST BETWEEN TERMS 13.46 MM)
85–91	Y 5.7–8 (L98)	52353021	1	23.46	CORD, ENG COOL HTR (DIST BETWEEN TERMS 12.30 MM)
85–89	Y 5.7–8 (L98)	52353026	1	24.63	CORD, ENG COOL HTR (DIST BETWEEN TERMS 13.46 MM)
92–95	Y 5.7P (LT1), ENG BLK HTR (K05)	52353021	1	23.46	CORD, ENG COOL HTR
96	Y ENG BLK HTR (K05)	52353021	1	23.46	CORD, ENG COOL HTR
84	Y 5.7–8 (L83)	15531982	1	26.50	HEATER, ENG COOL (DIST BETWEEN TERMS 13.46 MM) (STAMPED 15531982)
85–90	Y 5.7–8 (L98)	15531982	1	26.50	HEATER, ENG COOL (DIST BETWEEN TERMS 13.46 MM) (STAMPED 15531982)

1.153 BOLT – OUTLET – PIPE – STUD, Engine Coolant

84	Y 5.7–8 (L83)	10198997	AR	*.57	BOLT, CLNT OTLT (3/8–16X1.25 280M) (03.275)
85–90	Y 5.7–8 (L98)	10198997	AR	*.57	BOLT, CLNT OTLT (3/8–16X1.25 280M) (03.275)
90–95	Y 5.7J (LT5)	11514494	8	.73	BOLT, WAT OTLT (PIPE) (6X1X50, 10.5 OD, T30 TORX DR)
84	Y	14047010	1	DISCON	OUTLET, WAT
85–91	Y 5.7–8 (L98)	14084383	1	16.02	OUTLET, WAT (AC–DELCO #15–1443)
90–95	Y 5.7J (LT5)	10146270	LH	191.00	OUTLET, WAT
90–95	Y 5.7J (LT5)	10146271	RH	191.00	OUTLET, WAT
85–87	Y	14091545	1	1.65	STUD, CLNT OTLT (3/8–16X0.78 BOTH ENDS) (03.275)

1.154 GASKET, Engine Coolant Outlet

84	Y 5.7–8 (L83)	10105135	1	*1.63	GASKET, WAT OTLT (AC–DELCO #10105135)
85–91	Y 5.7–8 (L98)	10105135	1	*1.63	GASKET, WAT OTLT (AC–DELCO #10105135)
90–92	Y 5.7J (LT5)	10168677	2	6.89	GASKET, WAT OTLT (PIPE)
93–95	Y 5.7J (LT5)	10168677	2	6.89	GASKET, WAT OTLT (PIPE)

1.166 CLAMP – GUARD – SUPPORT, Hose (Radiator, Heater, A/C)

84–87	Y	02012781	1	3.70	CLAMP, A/C CMPR & CNDSR HOSE
90–95	Y 5.7J (LT5)	10157995	2	2.00	CLAMP, RAD BYPASS HOSE (08.948)
91	Y 5.7–8 (L98)	21030917	1	4.35	CLAMP, RAD INL HOSE ((37.5MM TO 44.5MM) NOMINAL SIZE 42MM, STAMPED "P") (08.948)
90–94	Y 5.7J (LT5)	10108248	5	1.85	CLAMP, RAD INL HOSE ENG (44MM) (08.948)
92–94	Y 5.7P (LT1)	21030917	1	4.35	CLAMP, RAD INL HOSE ENG ((37.5MM TO 44.5MM) NOMINAL SIZE 42MM, STAMPED "P") (08.948)

© 2000 GENERAL MOTORS SERVICE PARTS OPERATIONS

1.166 CLAMP – GUARD – SUPPORT, Hose (Radiator, Heater, A/C)(Con't)

90–94	Y	21030894	1	3.05	CLAMP, RAD INL HOSE RAD (47MM)
95	Y 5.7P (LT1)	21030894	1	3.05	CLAMP, RAD INL HOSE RAD (47MM)
96	Y	21030894	1	3.05	CLAMP, RAD INL HOSE RAD (47MM)
90–91	Y 5.7–8 (L98)	21030894	1	3.05	CLAMP, RAD OTLT HOSE ENG (47MM)
91	Y	11516239	1	6.90	CLAMP, RAD OTLT HOSE ENG (LT BROWN) (08.948)
92–94	Y 5.7P (LT1)	21030917	1	4.35	CLAMP, RAD OTLT HOSE ENG ((37.5MM TO 44.5MM) NOMINAL SIZE 42MM, STAMPED "P") (08.948)
90–91	Y 5.7–8 (L98)	10158012	AR	3.05	CLAMP, RAD OTLT HOSE RAD (53MM) (08.948)
90–95	Y 5.7J (LT5)	10158012	AR	3.05	CLAMP, RAD OTLT HOSE RAD (53MM) (08.948)
92–96	Y 5.7P (LT1)	10158012	AR	3.05	CLAMP, RAD OTLT HOSE RAD (53MM) (08.948)
90–94	Y 5.7J (LT5)	11516239	2	6.90	CLAMP, RAD OTLT RR HOSE ENG (51MM) (LT BROWN) (08.948)
90–95	Y 5.7J (LT5)	10019739	1	1.10	CLAMP, SECD AIR INJN CHK VLV HOSE (31.5 TO 36MM) (01.762)
92–93	Y 5.7P (LT1)	22518665	AR	*.93	CLAMP, SECD AIR INJN CHK VLV HOSE (9/16 TO 1 1/16 DIA) (08.948)
84–91	Y	22518665	AR	*.93	CLAMP, WORM TYPE (9/16 TO 1 1/16 DIA) (08.948)

1.173 CLIP – COCK – HOSE, Radiator Outlet (Lower)

90–95	Y 5.7J (LT5)	10187787	1	5.00	CLIP, COOL AIR PURGE PIPE
84	Y	14051150	1	27.25	HOSE, RAD OTLT
85–86	Y07	14078648	1	27.25	HOSE, RAD OTLT
86–87	Y67	14092705	1	45.25	HOSE, RAD OTLT
87	Y07 (EXC 1BL PERF HDLG PKG Z51, B2B SPORT HDLG PKG Z52)	14078648	1	27.25	HOSE, RAD OTLT
87	Y07 1BL (PERF HDLG PKG Z51), B2B (SPORT HDLG PKG Z52)	14092705	1	45.25	HOSE, RAD OTLT
88–89	Y	10135651	1	23.75	HOSE, RAD OTLT
90–91	Y 5.7–8 (L98)	10135653	1	25.75	HOSE, RAD OTLT
90–95	Y 5.7J (LT5)	10135660	1	4.65	HOSE, RAD OTLT (UPR)
92–95	Y 5.7P (LT1)	10257252	1	23.55	HOSE, RAD OTLT
96	Y	10257252	1	23.55	HOSE, RAD OTLT
90–95	Y 5.7J (LT5)	10157990	1	15.10	HOSE, RAD OTLT FR (LWR)

1.246 THERMOSTAT, Engine Coolant Temperature

84–88	Y	12514334	1	7.66	THERMOSTAT, ENG COOL (195 DEG) (AC–DELCO #131–87)
89–91	Y 5.7–8 (L98)	12514334	1	7.66	THERMOSTAT, ENG COOL (AC–DELCO #131–87)
90–95	Y 5.7J (LT5)	10135627	1	21.62	THERMOSTAT, ENG COOL (AC–DELCO #131–51)
90–95	Y 5.7J (LT5)	14104599	1	236.64	THERMOSTAT, ENG COOL (INCLS HSG (UPR/LWR), THERM, BRKT & BOLTS)
92–96	Y 5.7P (LT1)	12555290	1	21.32	THERMOSTAT, ENG COOL (180 DEG) (AC–DELCO #131–100)
96	Y 5.7–5 (LT4)	12555290	1	21.32	THERMOSTAT, ENG COOL (180 DEG) (AC–DELCO #131–100)

1.252 GASKET – SEAL, Engine Coolant Thermostat Housing

92–96	Y 5.7P (LT1)	12553106	1	3.78	SEAL, ENG COOL THERM (O RING) (AC–DELCO #12553106)
96	Y 5.7–5 (LT4)	12553106	1	3.78	SEAL, ENG COOL THERM (O RING) (AC–DELCO #12553106)

© 2000 GENERAL MOTORS SERVICE PARTS OPERATIONS

1.426 BAFFLE – BOLT – PAN – PAN KIT – REINFORCEMENT, Engine Oil

93–95	Y 5.7J (LT5)	10187733	1	174.80	BAFFLE, OIL PAN FRT (01.430)
93–95	Y 5.7J (LT5)	10187737	1	184.90	BAFFLE, OIL PAN RR (01.430)
90–95	Y 5.7J (LT5)	10122138	2	1.80	BOLT, LWR C/CASE (M8 X 1.5 X 100) (01.428)
90–92	Y 5.7J (LT5)	10135848	17	.81	BOLT, LWR C/CASE (M8 X 1.5 X 65.0 6G) (01.428)
90–95	Y 5.7J (LT5)	10135849	1	1.10	BOLT, LWR C/CASE (M8 X 1.5 X 80.0 6G) (01.428)
90–95	Y 5.7J (LT5)	24572579	2	.67	BOLT, LWR C/CASE (HFH, M8 (1.25X35) (00.206)
93–95	Y 5.7J (LT5)	10135848	15	.81	BOLT, LWR C/CASE (M8 X 1.5 X 65.0 6G) (01.428)
93–95	Y 5.7J (LT5)	11509666	2	.86	BOLT, LWR C/CASE (8X1.25X50, 27 THD) (08.900)
91	Y 5.7–8 (L98)	12528503	1	133.40	PAN KIT, OIL (W/GSKT)
92–96	Y 5.7P (LT1)	12528503	1	133.40	PAN KIT, OIL (W/GSKT)
96	Y 5.7–5 (LT4)	12528503	1	133.40	PAN KIT, OIL (W/GSKT)
84–85	Y	14082350	1	DISCON	PAN, OIL (IF REPLC 14067363, MUST ALSO USE:14082341–OIL PAN LH REINF, 14082340–OIL PAN RH REINF, 9440033–BOLTS)
86–87	Y	10055765	1	133.40	PAN, OIL
88–90	Y 5.7–8 (L98)	10055765	1	133.40	PAN, OIL
90	Y 5.7J (LT5)	10122165	1	971.70	PAN, OIL
91	Y 5.7–8 (L98)	10108584	1	133.40	PAN, OIL
91–92	Y 5.7J (LT5)	10153593	1	DISCON	PAN, OIL
93–95	Y 5.7J (LT5)	10225138	1	808.00	PAN, OIL (W/BAFFLE)
85	Y	14082340	RH	5.00	REINFORCEMENT, OIL PAN
85	Y	14082341	LH	5.00	REINFORCEMENT, OIL PAN
86–88	Y	12553058	LH	3.10	REINFORCEMENT, OIL PAN (MAY NEED TO REWK W/LH KNOCK SENSOR)
86–88	Y	12553059	RH	3.90	REINFORCEMENT, OIL PAN
89–91	Y 5.7–8 (L98)	12553058	LH	3.10	REINFORCEMENT, OIL PAN
89–91	Y 5.7–8 (L98)	12553059	RH	3.90	REINFORCEMENT, OIL PAN
92–96	Y 5.7P (LT1)	12553058	LH	3.10	REINFORCEMENT, OIL PAN
92–96	Y 5.7P (LT1)	12553059	RH	3.90	REINFORCEMENT, OIL PAN
96	Y 5.7–5 (LT4)	12553058	LH	3.10	REINFORCEMENT, OIL PAN
96	Y 5.7–5 (LT4)	12553059	RH	3.90	REINFORCEMENT, OIL PAN

1.428 BOLT – NUT – PIN – STUD, Engine Oil Pan

89–90	Y 5.7–8 (L98)	09440033	AR	*1.05	BOLT, OIL PAN (1/4–20 X 9/16, 275M) (08.900)
90–93	Y 5.7J (LT5)	11517518	3	1.85	BOLT, OIL PAN (HEAVY HEX FLANGE HD) (HFH, M6X1X20, 19 THD, 14.2 OD, 9.8, 6280M, MACH HD PT) (08.900) (AC–DELCO #11517518)
92–95	Y 5.7P (LT1)	09424877	1	*1.25	BOLT, OIL PAN (5/16–18 X 3/4, 300M) (HEX HD, STEEL) (08.900)
92–96	Y 5.7P (LT1)	09440033	13	*1.05	BOLT, OIL PAN (HFH 1/4–20 X 5/8 280M POR) (08.900)
93–95	Y 5.7J (LT5)	11514150	AR	7.50	BOLT, OIL PAN ((6X1X20) (PE 9.8)) (08.900)
96	Y 5.7–5 (LT4)	09440033	10	*1.05	BOLT, OIL PAN (HFH 1/4–20 X 5/8 280M POR) (08.900)
92–96	Y 5.7P (LT1)	01359887	2	*.38	NUT, OIL PAN (5/16–18X20, 296M) (PC) (08.917)
92–95	Y 5.7P (LT1)	12338130	2	*1.50	NUT, OIL PAN (5/16–18 X 1/4, 286M) (POR) (08.915)

© 2000 GENERAL MOTORS SERVICE PARTS OPERATIONS

1.428 BOLT – NUT – PIN – STUD, Engine Oil Pan(Con't)

96	Y 5.7-5 (LT4)	01359887	2	*.38	NUT, OIL PAN (5/16-18X20, 286M) (PC) (08.317)
90-92	Y 5.7J (LT5)	10153560	2	12.05	PIN, LWR C/CASE LOC
93-95	Y 5.7J (LT5)	10153560	10	12.05	PIN, LWR C/CASE LOC (OUTBOARD MAIN BRG BOLT LOCATIONS)
85-88	Y A/TRNS	14084059	1	5.05	STUD, OIL PAN (5/16-18X.66, 5/16-18X.49)
84-87	Y	14080362	AR	*1.65	STUD, OIL PAN (5/16X18X1.44)
84	Y 5.7-8 (L83)	14101092	4	*1.90	STUD, OIL PAN (1/4X20X.64/1/4X20X.50)
85-91	Y 5.7-8 (L98)	14101092	4	*1.90	STUD, OIL PAN (1/4X20X.64/1/4X20X.50) (14X20X.56-1/4X20X.50)
89-91	Y 5.7-8 (L98), 4-SPD A/TRANS (MD8)	14084059	1	5.05	STUD, OIL PAN (5/16-18X.66, 5/16-18X.49)
90-95	Y 5.7J (LT5)	10044165	4	4.15	STUD, OIL PAN (01.153)
92-95	Y 5.7P (LT1)	14084059	1	5.05	STUD, OIL PAN (5/16-18X.66, 5/16-18X.49)
92-96	Y 5.7P (LT1)	14101092	4	*1.90	STUD, OIL PAN (14X20X.56-1/4X20X.50) (1/4X20X.64/1/4X20X.50)
96	Y 5.7-5 (LT4)	14101092	4	*1.90	STUD, OIL PAN (14X20X.56-1/4X20X.50) (1/4X20X.64/1/4X20X.50)

1.429 GASKET – GASKET KIT – SEAL, Engine Oil Pan

84-85	Y	14079398	1	17.24	GASKET KIT, OIL PAN
86-88	Y	14088505	1	40.29	GASKET, OIL PAN
89-91	Y 5.7-8 (L98)	14088505	1	40.29	GASKET, OIL PAN
90-92	Y 5.7J (LT5)	10106193	1	36.47	GASKET, OIL PAN
92	Y 5.7P (LT1)	14088505	1	40.29	GASKET, OIL PAN
93-96	Y 5.7P (LT1)	10108676	1	40.29	GASKET, OIL PAN
93-95	Y 5.7J (LT5)	10187750	1	76.50	GASKET, OIL PAN
96	Y 5.7-5 (LT4)	10108676	1	40.29	GASKET, OIL PAN
84	Y 5.7-8 (L83)	12337940	1	*2.45	SEAL, OIL PAN FRT
85	Y 5.7-8 (L98)	12337940	1	*2.45	SEAL, OIL PAN FRT
84-85	Y	00458625	1	4.23	SEAL, RR

1.430 BAFFLE – BOLT – DEFLECTOR, Engine Oil Pan

90	Y 5.7J (LT5)	10146222	1	156.60	BAFFLE, OIL PAN
91-92	Y 5.7J (LT5)	10153532	1	222.20	BAFFLE, OIL PAN
93-95	Y 5.7J (LT5)	10199037	1	73.30	BAFFLE, OIL PAN
93-95	Y 5.7J (LT5)	10225115	1	42.00	BAFFLE, OIL PAN SI
84-89	Y	12554816	1	4.90	DEFLECTOR, CR/SHF OIL (HORIZ UPR)
90-91	Y 5.7-8 (L98)	12554816	1	4.90	DEFLECTOR, CR/SHF OIL (HORIZ UPR)
92-96	Y 5.7P (LT1)	12554816	1	4.90	DEFLECTOR, CR/SHF OIL
96	Y 5.7-5 (LT4)	12554816	1	4.90	DEFLECTOR, CR/SHF OIL

1.453 INSERT – NUT – PLUG, Engine Oil Pan Drain

93-95	Y 5.7J (LT5)	00452796	1	4.70	INSERT, OIL PAN DRN PLUG THD
88-91	Y 5.7-8 (L98)	03921988	1	*2.15	PLUG, OIL PAN DRN (1/2-20, 81LG)
90-95	Y 5.7J (LT5)	10110927	1	9.65	PLUG, OIL PAN DRN
92-95	Y 5.7P (LT1)	03921988	1	*2.15	PLUG, OIL PAN DRN (1/2-20, 81LG)
92-95	Y 5.7P (LT1)	24100042	1	2.35	PLUG, OIL PAN DRN (M12X1.75-6G THD, 44.45MM LNG, 15MM FLG HEX HD) (W/MAGNET & SEAL)

© 2000 GENERAL MOTORS SERVICE PARTS OPERATIONS

1.453 INSERT – NUT – PLUG, Engine Oil Pan Drain(Con't)

96	Y 5.7P (LT1), (1ST DES)	03921988	1	*2.15	PLUG, OIL PAN DRN (1/2–20, 81LG) (HAS ENGLISH THDS, FOR 2ND DES SEE 24100042 METRIC THDS)
96	Y 5.7–5 (LT4)	10017615	1	*2.45	PLUG, OIL PAN DRN (M12X1.75X26.5)
96	Y 5.7P (LT1), (2ND DES)	24100042	1	2.35	PLUG, OIL PAN DRN (M12X1.75–6G THD, 44.45MM LNG, 15MM FLG HEX HD) (W/MAGNET & SEAL) (HAS METRIC THDS) (FOR 1ST DES SEE 39219988 ENGLISH THDS)

1.456 GASKET, Engine Oil Pan Drain Plug

90–93	Y 5.7J (LT5)	10135843	1	*1.05	GASKET, OIL PAN DRN PLUG (ALUMINUM PLUG) (00.413)
90–95	Y 5.7J (LT5)	10174313	1	6.56	GASKET, OIL PAN DRN PLUG (STEEL PLUG)
92–96	Y 5.7P (LT1)	14090908	1	*1.12	GASKET, OIL PAN DRN PLUG
96	Y 5.7–5 (LT4)	14090908	1	*1.12	GASKET, OIL PAN DRN PLUG
84–87	Y	14090908	AR	*1.12	GASKET, OIL PAN DRN SCR (NYLON 1/2"ID X29/32" O.D.)
88–91	Y 5.7–8 (L98)	14090908	1	*1.12	GASKET, OIL PAN DRN SCR

1.516 CONNECTOR – INDICATOR – NUT – SEAL – SENSOR – TUBE, Engine Oil Level

84	Y	14060661	1	DISCON	INDICATOR (DIP STICK)
85–88	Y 5.7–8 (L98)	14094758	1	9.43	INDICATOR (DIP STICK)
89–91	Y 5.7–8 (L98), FEDERAL EMIS (NA5)	10108430	1	9.90	INDICATOR, OIL LVL
90–95	Y 5.7J (LT5)	10067418	1	18.52	INDICATOR, OIL LVL
92–94	Y 5.7P (LT1)	10108430	1	9.90	INDICATOR, OIL LVL
95–96	Y 5.7P (LT1)	12553510	1	9.90	INDICATOR, OIL LVL
96	Y 5.7–5 (LT4)	12553510	1	9.90	INDICATOR, OIL LVL
92–96	Y 5.7P (LT1)	09442958	1	*1.00	NUT, OIL LVL IND TUBE (3/8–16 PC, 286M) (HEX, FLANGE) (08.917)
96	Y 5.7–5 (LT4)	09442958	1	*1.00	NUT, OIL LVL IND TUBE (3/8–16 PC, 286M) (HEX, FLANGE) (08.917)
91–96	Y	10151633	1	*1.89	SEAL, ENG OIL LVL SEN
90–95	Y 5.7J (LT5)	10106190	1	2.35	SEAL, OIL LVL IND TUBE
90–92	Y	10137678	1	28.57	SENSOR, ENG OIL LVL (2 TERM, M20X1.5–6G)
93–95	Y 5.7P (LT1), 5.7J (LT5)	24507190	1	30.35	SENSOR, ENG OIL LVL
94–95	Y 5.7J (LT5)	10137676	1	28.57	SENSOR, ENG OIL LVL
96	Y 5.7P (LT1), 5.7–5 (LT4)	24507190	1	30.35	SENSOR, ENG OIL LVL
84	Y	14081026	1	23.35	TUBE, OIL LVL IND
85–88	Y	14084338	1	10.25	TUBE, OIL LVL IND
89–91	Y 5.7–8 (L98)	14084338	1	10.25	TUBE, OIL LVL IND
90–95	Y 5.7J (LT5)	10135867	1	27.28	TUBE, OIL LVL IND
92–94	Y 5.7P (LT1)	10108520	1	10.25	TUBE, OIL LVL IND
95–96	Y 5.7P (LT1)	12551155	1	5.10	TUBE, OIL LVL IND
96	Y 5.7–5 (LT4)	12551155	1	5.10	TUBE, OIL LVL IND

1.531 PLUG – RESTRICTOR, Engine Oil Distribution

92–96	Y 5.7P (LT1)	03701638	1	*.97	PLUG, ENG BLK OIL GAL (1/2" STEEL EXPANSION PLUG) (08.970)
92–96	Y 5.7P (LT1)	10110897	2	.40	PLUG, ENG BLK OIL GAL (37/64X1/4, 1/4 MM HOLE IN CTR, 1008, PL)
92–96	Y 5.7P (LT1)	14081701	AR	1.25	PLUG, ENG BLK OIL GAL (08.971)
92–96	Y 5.7P (LT1)	14091563	1	*1.30	PLUG, ENG BLK OIL GAL (CUP 15/32 X 5/16)
96	Y 5.7–5 (LT4)	03701638	1	*.97	PLUG, ENG BLK OIL GAL (1/2" STEEL EXPANSION PLUG) (08.970)

© 2000 GENERAL MOTORS SERVICE PARTS OPERATIONS

1.531 PLUG – RESTRICTOR, Engine Oil Distribution(Con't)

96	Y 5.7–5 (LT4)	10110897	2	.40	PLUG, ENG BLK OIL GAL (37/64X1/4, 1/4 MM HOLE IN CTR, 1008, PL)
96	Y 5.7–5 (LT4)	14081701	AR	1.25	PLUG, ENG BLK OIL GAL (08.971)
96	Y 5.7–5 (LT4)	14091563	1	*1.30	PLUG, ENG BLK OIL GAL (CUP 15/32 X 5/16)
86–91	Y	14091563	AR	*1.30	PLUG, ENG OIL MANIF HOLE (CUP 15/32 X 5/16)
92–93	Y 5.7P (LT1)	00444654	1	1.25	PLUG, ENG OIL PRESS GA SEN OR IND SW HOLE (1/4–18 NPTF) (08.971)

1.540 BOLT – BRACKET – CLAMP – CLIP – COOLER – FITTING – HOSE – PIPE – PLUG – RETAINER – RING – SEAL – SEAT – STUD – VALVE, Engine Oil Cooler

84	Y	12364237	1	DISCON	COOLER, ENG OIL
85–91	Y 5.7–8 (L98)	14084369	1	261.60	COOLER, ENG OIL
90–93	Y 5.7J (LT5)	14104653	1	313.00	COOLER, ENG OIL
94–95	Y 5.7J (LT5)	10219643	1	313.00	COOLER, ENG OIL
84	Y	10070158	2	4.32	FITTING, ENG OIL CLR HOSE (04.931)
85–91	Y 5.7–8 (L98), ENG OIL CLG (KC4)	14084019	1	11.60	FITTING, ENG OIL CLR HOSE (1/4–18X16MM)
90–95	Y 5.7J (LT5)	14104403	2	11.60	FITTING, ENG OIL CLR PIPE (HEX NUT)
85	Y	14084014	1	DISCON	PIPE, CLR
84	Y	14084035	1	DISCON	PIPE, CLR INL (LWR ON CLR)
84	Y	14084036	1	DISCON	PIPE, CLR OTLT (UPR ON CLR)
86–91	Y 5.7–8 (L98), ENG OIL CLG (KC4)	10077544	1	26.75	PIPE, ENG OIL CLR
90–95	Y 5.7J (LT5)	10067688	1	73.00	PLUG, ENG OIL CLR BYPASS VLV (01.800)
90–95	Y 5.7J (LT5)	10067722	1	32.13	RING, ENG OIL CLR BYPASS VLV PLUG RET (01.800)
90–95	Y 5.7J (LT5)	10067687	1	159.12	SEAT, ENG OIL CLR BYPASS VLV (01.800)
90–95	Y 5.7J (LT5)	10067599	1	24.02	VALVE, ENG OIL CLR BYPASS (01.800)

1.550 GASKET – SEAL, Engine Oil Cooler

85–88	Y	14087586	1	12.80	GASKET, CLR ADAPT
89–91	Y 5.7–8 (L98)	14087586	1	12.80	GASKET, ENG OIL CLR HOSE FTG

1.609 PIN – PLUG – RETAINER – SPRING – VALVE, Engine Oil Pressure

90–95	Y 5.7J (LT5)	10110941	1	4.34	RETAINER, OIL PRESS REG VLV

1.639 BOLT – DRIVE – RETAINER – SEAT – SHAFT, Engine Oil Pump

92–96	Y 5.7P (LT1)	09424877	1	*1.25	BOLT, O/PMP DRV SHF (5/16–18 X 3/4, 300M) (HEX HD, STEEL) (08.900)
96	Y 5.7–5 (LT4)	09424877	1	*1.25	BOLT, O/PMP DRV SHF (5/16–18 X 3/4, 300M) (HEX HD, STEEL) (08.900)
92–96	Y 5.7P (LT1)	01103868	1	49.80	DRIVE, O/PMP (AC–DELCO #1103868)
96	Y 5.7–5 (LT4)	01103868	1	49.80	DRIVE, O/PMP (AC–DELCO #1103868)
84	Y 5.7–8 (L83)	03764554	1	*.70	RETAINER, O/PMP DRV SHF
85–91	Y 5.7–8 (L98)	03764554	1	*.70	RETAINER, O/PMP DRV SHF
92–96	Y 5.7P (LT1)	03764554	1	*.70	RETAINER, O/PMP DRV SHF
96	Y 5.7–5 (LT4)	03764554	1	*.70	RETAINER, O/PMP DRV SHF
90–95	Y 5.7J (LT5)	10067685	1	60.90	SEAT, O/PMP SEAL
84	Y 5.7–8 (L83)	03998207	1	13.30	SHAFT, O/PMP DRV

© 2000 GENERAL MOTORS SERVICE PARTS OPERATIONS

1.639 BOLT – DRIVE – RETAINER – SEAT – SHAFT, Engine Oil Pump(Con't)

85–91	Y 5.7–8 (L98)	03998287	1	13.30	SHAFT, O/PMP DRV
92–96	Y 5.7P (LT1)	03998287	1	13.30	SHAFT, O/PMP DRV
96	Y 5.7–5 (LT4)	03998287	1	13.30	SHAFT, O/PMP DRV

1.652 BOLT – PIN – PUMP, Engine Oil Pump

84–86	Y (1ST DES)	03892078	1	*1.90	BOLT (7/16–14 X 2) (IS 2.0" LG & USED FOR ENGS WHERE OIL PUMP MTG SURF ON BRG CAP HAS PKT DEPTH OF 0.30" OR LESS)
84–86	Y (2ND DES)	10046007	1	2.15	BOLT (7/16–14X2.36) (IS 2.36" LG & USED FOR ENGS WHERE OIL PUMP MTG SURF ON BRG CAP HAS PKT DEPTH OF 0.32"–0.42")
87–91	Y 5.7–8 (L98)	10046007	1	2.15	BOLT, O/PMP (7/16–14X2 3/8)
92–96	Y 5.7P (LT1)	10046007	1	2.15	BOLT, O/PMP (7/16–14X2 3/8)
96	Y 5.7–5 (LT4)	10046007	1	2.15	BOLT, O/PMP (7/16–14X2 3/8)
84	Y 5.7–8 (L83)	12555284	1	85.40	PUMP, OIL
85–91	Y 5.7–8 (L98)	12555284	1	85.40	PUMP, OIL
90–92	Y 5.7J (LT5)	10135871	1	551.80	PUMP, OIL
92	Y 5.7P (LT1)	12555284	1	85.40	PUMP, OIL
93–95	Y 5.7J (LT5)	10187763	1	552.50	PUMP, OIL
93	Y 5.7P (LT1), (1ST DES)	12555283	1	81.40	PUMP, OIL (.742 TUBE DIA, 2ND DES SEE 12555284) (INCLS BOLTS, COVERS, GEARS, HSGS, PIN, PLUG, SHFS, SPR & VLV)
93	Y 5.7P (LT1), (2ND DES)	12555284	1	85.40	PUMP, OIL (.620 TUBE DIA, 1ST DES SEE 12555283)
94	Y 5.7P (LT1), (2ND DES)	12555283	1	81.40	PUMP, OIL (INCLS BOLTS, COVERS, GEARS, HSGS, PIN, PLUG, SHFS, SPR & VLV) (.742 DIA TUBE, FOR 1ST DES SEE 12555284)
94	Y 5.7P (LT1), (1ST DES)	12555284	1	85.40	PUMP, OIL (.620 TUBE DIA, 2ND DES SEE 12555283)
95	Y	12555283	1	81.40	PUMP, OIL (INCLS BOLTS, COVERS, GEARS, HSGS, PIN, PLUG, SHFS, SPR & VLV)
96	Y 5.7P (LT1)	12555283	1	81.40	PUMP, OIL (INCLS BOLTS, COVERS, GEARS, HSGS, PIN, PLUG, SHFS, SPR & VLV)
96	Y 5.7–5 (LT4)	12555283	1	81.40	PUMP, OIL (INCLS BOLTS, COVERS, GEARS, HSGS, PIN, PLUG, SHFS, SPR & VLV)

1.656 BOLT – PIPE – SCREEN – SEAL – SPACER, Engine Oil Pump

93–95	Y 5.7J (LT5)	11514151	2	4.35	BOLT, O/PMP SUC PIPE BRKT (M6X1X25) (08.900)
91–92	Y 5.7J (LT5)	11508805	1	*.41	BOLT, O/PMP SUC PIPE RET (HFH M6X1X16 9.8 PCR 14 OD 14MM THD) (08.900)
91–92	Y 5.7J (LT5)	11509037	2	.48	BOLT, O/PMP SUC PIPE RET (HFH M6X1X40, DIM A–25, 14.2–OD 9.8 PEOR) (M6X1X40, DIM A–25, 14.2–OD 9.8 PEOR) (08.900)
90–92	Y 5.7J (LT5)	10135840	1	76.25	PIPE, O/PMP SUC
93–95	Y 5.7J (LT5)	10187741	1	169.00	PIPE, O/PMP SUC
84	Y 5.7–8 (L83)	03830080	1	11.90	SCREEN, O/PMP
85–91	Y 5.7–8 (L98)	03830080	1	11.90	SCREEN, O/PMP (TUBE DIA 0.62)
92	Y 5.7P (LT1)	03830080	1	11.90	SCREEN, O/PMP (TUBE DIA 0.62)
93	Y 5.7P (LT1), (2ND DES)	03830080	1	11.90	SCREEN, O/PMP (TUBE DIA 0.62) (1ST DES SEE 10168453)

© 2000 GENERAL MOTORS SERVICE PARTS OPERATIONS

1.656 BOLT – PIPE – SCREEN – SEAL – SPACER, Engine Oil Pump(Con't)

93	Y 5.7P (LT1), (1ST DES)	10168453	1	11.90	SCREEN, O/PMP (2ND DES SEE 03830080/.742 USED UNTIL MID NOV)
94	Y 5.7P (LT1), (1ST DES)	03830080	1	11.90	SCREEN, O/PMP (TUBE DIA 0.62) (2ND DES SEE 12550106)
94	Y 5.7P (LT1), (2ND DES)	12550106	1	11.90	SCREEN, O/PMP (1ST DES SEE 03830080/.742 USED UNTIL MID NOV)
95–96	Y 5.7P (LT1)	12550106	1	11.90	SCREEN, O/PMP (1ST DES SEE 03830080)
96	Y 5.7–5 (LT4)	12550106	1	11.90	SCREEN, O/PMP (1ST DES SEE 03830080)
90–92	Y 5.7J (LT5)	10106189	1	18.90	SEAL, O/PMP SUC PIPE (O RING)
93–95	Y 5.7J (LT5)	10187747	1	19.02	SEAL, O/PMP SUC PIPE (O RING)

1.723 BOLT – COVER, Oil Pump

84–86	Y	10055887	1	23.80	COVER
87–88	Y	14046552	1	40.20	COVER, O/PMP
89–91	Y 5.7–8 (L98)	14046552	1	40.20	COVER, O/PMP (W/COVER, PIN, PLUGS, SPRING & VALVE)
90–95	Y 5.7J (LT5)	10110922	1	11.75	COVER, O/PMP (ACCESS TO C/CASE) (01.609)
92–93	Y 5.7P (LT1)	14046552	1	40.20	COVER, O/PMP (W/COVER, PIN, PLUGS, SPRING & VALVE)
94	Y 5.7P (LT1), (2ND DES)	10168528	1	40.20	COVER, O/PMP (INCLS COVER, PLUGS, SPRING & VALVE) (FOR 1ST DES SEE 14046552)
94	Y 5.7P (LT1), (1ST DES)	14046552	1	40.20	COVER, O/PMP (W/COVER, PIN, PLUGS, SPRING & VALVE) (.620 DIA TUBE, FOR 2ND DES SEE 10168528)
95–96	Y 5.7P (LT1)	10168528	1	40.20	COVER, O/PMP (INCLS COVER, PLUGS, SPRING & VALVE)
96	Y 5.7–5 (LT4)	10168528	1	40.20	COVER, O/PMP (INCLS COVER, PLUGS, SPRING & VALVE)

1.724 GASKET – SEAL, Engine Oil Pump Cover

90–95	Y 5.7J (LT5)	10168683	1	13.20	GASKET, O/PMP ACC CVR (TO C/CASE) (01.609)
90–95	Y 5.7J (LT5)	10067512	1	26.78	SEAL, O/PMP (O RING) (01.639)
90–95	Y 5.7J (LT5)	10067538	1	1.02	SEAL, O/PMP (O RING) (00.423)
90–95	Y 5.7J (LT5)	10106142	2	2.85	SEAL, O/PMP (O RING) (.931 ID O–RING)
90–95	Y 5.7J (LT5)	10135870	1	6.15	SEAL, O/PMP (O RING) (1.73 I.D. O RING)

1.745 BOLT – CONNECTOR – COVER – FILTER – GASKET – GROMMET – NIPPLE – SEAL – STRAP – TEE – VALVE, Engine Crankcase

Note: SEE GROUP 2.270 FOR TUNE–UP PARTS CHART

90–95	Y 5.7J (LT5)	10153503	1	3.60	CONNECTOR, PCV VLV (01.762)
92–96	Y 5.7P (LT1)	00336018	1	1.52	CONNECTOR, PCV VLV HOSE (1/4–18 NPTF W/3/8 NIPPLE)
96	Y 5.7–5 (LT4)	00336018	1	1.52	CONNECTOR, PCV VLV HOSE (1/4–18 NPTF W/3/8 NIPPLE)
90–95	Y 5.7J (LT5)	10168603	1	284.90	COVER, PCV VLV (01.762)
90–95	Y 5.7J (LT5)	10135879	2	.22	FILTER, PCV (00.386)
90–95	Y	10168682	1	21.43	GASKET, CYL CASE VENT CVR
85–87	Y	14082445	1	4.70	GROMMET, PCV TUBE
89–91	Y 5.7–8 (L98), FEDERAL EMIS (NA5)	10088198	1	4.70	GROMMET, PCV VLV
90–95	Y 5.7J (LT5)	14078872	2	6.30	GROMMET, PCV VLV (15/32I.D. X 25/32O.D)

© 2000 GENERAL MOTORS SERVICE PARTS OPERATIONS

1.745 BOLT – CONNECTOR – COVER – FILTER – GASKET – GROMMET – NIPPLE – SEAL – STRAP – TEE – VALVE, Engine Crankcase(Con't)

92–93	Y 5.7P (LT1)	10207699	1	3.05	GROMMET, PCV VLV (01.762)
94–96	Y 5.7P (LT1)	10240678	1	3.05	GROMMET, PCV VLV (01.762)
96	Y 5.7–5 (LT4)	10240678	1	3.05	GROMMET, PCV VLV (01.762)
84	Y	03989348	1	*1.95	GROMMET, VENT (3/4 IDX1 1/8 OD SQ FLAT)
84–88	Y	03989349	LH	2.65	GROMMET, VENT (3/4 IDX1 1/8 OD SQ RAMPED)
90–95	Y 5.7J (LT5)	10110955	RH	15.20	SEAL, PCV TUBE
84–90	Y	14023108	1	2.80	TEE, INT MANIF PCV HOSE 3–WAY (04.931)
84	Y 5.7–8 (L83)	25040026	1	*4.59	VALVE, PCV (AC–DELCO #CV853C)
85–86	Y 5.7–8 (L98)	06487779	1	*3.50	VALVE, PCV (AC–DELCO #CV774C)
89–91	Y 5.7–8 (L98)	08995284	1	*5.40	VALVE, PCV (AC–DELCO #CV789C)
90–95	Y 5.7J (LT5)	06487532	LH	*3.50	VALVE, PCV (AC–DELCO #CV769C)
90–95	Y 5.7J (LT5)	25098197	RH	*9.41	VALVE, PCV (AC–DELCO #CV913C)
92–96	Y 5.7P (LT1)	25095452	1	*7.65	VALVE, PCV (CV895C, 1 VACUUM PORT) (AC–DELCO #CV895C)
96	Y 5.7–5 (LT4)	25095452	1	*7.65	VALVE, PCV (CV895C, 1 VACUUM PORT) (AC–DELCO #CV895C)

1.750 CLAMP, Engine Oil Filler Tube

90–95	Y 5.7J (LT5)	12338017	1	*3.50	CLAMP, PCV TUBE (28.6–86.2 DIA WORM GEAR) (08.948) (AC–DELCO #12338017)
91–94	Y 5.7J (LT5)	22527587	1	1.75	CLAMP, PCV TUBE (20.0 X 12.4) (WORM GEAR, 1/2–13/16) (08.948)

1.758 CAP, Engine Oil Filler

84–87	Y	14094763	1	6.94	CAP, OIL FIL (AC–DELCO #14094763)
88–91	Y 5.7–8 (L98)	12558300	1	1.84	CAP, OIL FIL (THREADED, NYLON) (AC–DELCO #FC180)
90–92	Y 5.7J (LT5)	10122162	1	6.58	CAP, OIL FIL (AC–DELCO #FC137)
92	Y 5.7P (LT1)	10108650	1	4.08	CAP, OIL FIL (AC–DELCO #FC158)
93	Y	12554955	1	3.06	CAP, OIL FIL ("MOBIL 1") (AC–DELCO #FC183)
94–95	Y 5.7J (LT5)	10108650	1	4.08	CAP, OIL FIL (AC–DELCO #FC158)
94–95	Y 5.7P (LT1)	12554955	1	3.06	CAP, OIL FIL ("MOBIL 1") (AC–DELCO #FC183)
96	Y	12554955	1	3.06	CAP, OIL FIL ("MOBIL 1") (AC–DELCO #FC183)

1.762 BOLT – CLAMP – CONNECTOR – FITTING – GROMMET – HOSE – PIPE – PLUG – STUD – TUBE, Engine Crankcase Ventilation

90–95	Y 5.7J (LT5)	11514119	1	3.10	BOLT, PCV TUBE (M12X1.75X110)
85–87	Y	14082446	1	3.82	CONNECTOR, C/CASE VENT TUBE
88–91	Y 5.7–8 (L98)	10055873	1	3.60	CONNECTOR, PCV HOSE
90–95	Y 5.7J (LT5)	10110946	2	10.10	CONNECTOR, PCV HOSE (TO PLNM) (01.750)
92–96	Y 5.7P (LT1)	12550625	1	*.98	CONNECTOR, PCV HOSE
96	Y 5.7–5 (LT4)	12550625	1	*.98	CONNECTOR, PCV HOSE
90–95	Y 5.7J (LT5)	10110911	1	13.10	CONNECTOR, PCV TUBE (03.305)
84	Y	00366846	1	3.82	CONNECTOR, VENT HOSE (A/CL TO CVR)
88–91	Y 5.7–8 (L98)	14087402	1	3.40	FITTING, PCV
92	Y 5.7P (LT1)	10088198	1	4.70	GROMMET, PCV HOSE CONN (01.745)
93	Y 5.7P (LT1)	10207699	1	3.05	GROMMET, PCV HOSE CONN
94–96	Y 5.7P (LT1)	10240678	1	3.05	GROMMET, PCV HOSE CONN
85–87	Y	14082442	1	11.12	HOSE, CR/CASE VENT VLV

© 2000 GENERAL MOTORS SERVICE PARTS OPERATIONS

1.762 BOLT – CLAMP – CONNECTOR – FITTING – GROMMET – HOSE – PIPE – PLUG – STUD – TUBE, Engine Crankcase Ventilation(Con't)

88–91	Y 5.7–8 (L98)	10055872	1	9.28	HOSE, PCV
90–95	Y 5.7J (LT5)	10122196	1	36.72	HOSE, PCV (01.745)
92	Y 5.7P (LT1)	10128365	1	7.14	HOSE, PCV
90–95	Y 5.7J (LT5)	10110950	RH	7.45	HOSE, PCV TUBE
90–95	Y 5.7J (LT5)	10135802	1	6.94	HOSE, PCV TUBE
88–91	Y 5.7–8 (L98)	14088538	1	10.00	HOSE, PCV VLV (TO PCV VLV)
90–95	Y 5.7J (LT5)	10110907	LH	9.28	HOSE, PCV VLV
90–95	Y 5.7J (LT5)	10110908	RH	9.28	HOSE, PCV VLV
90–95	Y 5.7J (LT5)	10174350	1	22.34	HOSE, PCV VLV (W/90 DEGREE CONN)
92–95	Y 5.7P (LT1)	10128361	1	3.62	HOSE, PCV VLV
96	Y 5.7P (LT1)	12551389	1	3.15	HOSE, PCV VLV
96	Y 5.7–5 (LT4)	12551389	1	3.15	HOSE, PCV VLV
90–92	Y 5.7J (LT5)	10110988	1	6.94	HOSE, PORTED PURGE SOL
90	Y 5.7J (LT5)	10110980	1	10.00	HOSE, PURGE & PCV VLV, W/STRAIGHT CONN
84	Y A/TRNS	14045839	1	DISCON	HOSE, VENT
84	Y	14057007	1	10.00	HOSE, VENT TUBE
85	Y	14082449	1	DISCON	PIPE, CR/CASE VENT
86–87	Y	14087569	1	DISCON	PIPE, CR/CASE VENT
85	Y	14080634	1	DISCON	PIPE, CR/CASE VENT VLV
86	Y	14087570	1	DISCON	PIPE, CR/CASE VENT VLV
87	Y	10046142	1	DISCON	PIPE, CR/CASE VENT VLV
90–95	Y 5.7J (LT5)	10146296	RH	29.07	PIPE, PCV VLV (INJ HSG TO PCV VLV) (01.745)
90–95	Y 5.7J (LT5)	10146298	LH	29.07	PIPE, PCV VLV (INJ HSG TO PCV VLV) (01.745)
90–95	Y 5.7J (LT5)	10153501	1	58.17	PIPE, PCV VLV (PCV VALVE PLENUM)
96	Y 5.7P (LT1), 4–SPD A/TRANS (M30)	12556257	1	7.14	PIPE, PCV VLV
96	Y 5.7–5 (LT4), 6–SPD M/TRANS (ML9)	12556257	1	7.14	PIPE, PCV VLV
90–95	Y 5.7J (LT5)	10110936	2	1.20	STUD, C/BLK VENT VAC RSVR (M6X1.0–THD)
86–87	Y	14087571	1	DISCON	STUD, CR/CASE VENT TUBE (M6X1X25, M6X1X12, TL 43)
86–87	Y	14087572	1	DISCON	STUD, CR/CASE VENT TUBE (M6X1X12, M6X1.12)
90–92	Y 5.7J (LT5)	10110936	1	1.20	STUD, OIL PICKUP PIPE (M6X1.0–THD)
85–87	Y	14087567	1	5.30	TUBE, CR/CASE VENT (01.745)
90–95	Y 5.7J (LT5)	10135804	LH	21.45	TUBE, PCV
90–95	Y 5.7J (LT5)	10135857	RH	21.45	TUBE, PCV
93–96	Y 5.7P (LT1)	12550624	1	4.18	TUBE, PCV
96	Y 5.7–5 (LT4)	12550624	1	4.18	TUBE, PCV

1.780 BAFFLE – STUD, Engine Crankcase Ventilator

90–95	Y 5.7J (LT5)	10199011	1	80.60	BAFFLE, PCV

1.800 CONNECTOR – ELBOW – FITTING – RING – SENSOR – SWITCH, Engine Oil Pressure/Temperature

90–91	Y 5.7–8 (L98)	14078987	1	7.52	ELBOW, ENG OIL PRESS GA SEN (TO BLK (105 DEG W/HEX BODY) (01.803)
90–91	Y 5.7–8 (L98)	14078988	1	9.45	ELBOW, ENG OIL PRESS GA SEN (TO BLK) (01.803)

© 2000 GENERAL MOTORS SERVICE PARTS OPERATIONS

1.800 CONNECTOR – ELBOW – FITTING – RING – SENSOR – SWITCH, Engine Oil Pressure/Temperature(Con't)

92–96	Y 5.7P (LT1)	14078988	1	9.45	ELBOW, ENG OIL PRESS GA SEN (TO BLK) (01.803) (USED W/1052080, SEALER)
96	Y 5.7–5 (LT4)	14078988	1	9.45	ELBOW, ENG OIL PRESS GA SEN (TO BLK) (01.803) (USED W/1052080, SEALER)
84	Y (2ND DES)	14078988	1	9.45	ELBOW, OIL PRESS GA SEN TO BLK FTG (DOUBLE OUTLET W/HEX BODY) (01.803)
92–96	Y 5.7P (LT1)	10137636	1	8.11	FITTING, ENG OIL PRESS GA SEN
96	Y 5.7–5 (LT4)	10137636	1	8.11	FITTING, ENG OIL PRESS GA SEN
90–95	Y 5.7J (LT5)	10122195	1	10.25	FITTING, ENG OIL TEMP SEN
89	Y FEDERAL EMIS (NA5), (5.7–8)	10096122	2	DISCON	FITTING, F/PMP & ENG OIL PRESS IND SW (01.803)
85–88	Y	14078988	1	9.45	FITTING, OIL PRESS GA SEN TO BLK FTG (01.803)
90–95	Y 5.7J (LT5)	00274843	1	3.70	RING, ENG OIL TEMP CONT VLV RET (08.934)
84	Y 1ST DES	14073454	1	53.40	SENSOR, ENG OIL PRESS GA (3 BLADE TERM, 1/8–27 THD) (AC–DELCO #14073454)
84	Y 2ND DES	14078954	1	33.65	SENSOR, ENG OIL PRESS GA (1 BLADE TERM, 1/8–27 THD) (AC–DELCO #14078954)
85–88	Y	14078954	1	33.65	SENSOR, ENG OIL PRESS GA (1 BLADE TERM, 1/8–27 THD) (AC–DELCO #14078954)
90–95	Y 5.7J (LT5)	12555492	1	32.91	SENSOR, ENG OIL PRESS GA (3 TERMINALS:A, C, D) (AC–DELCO #D1808A)
90–91	Y 5.7–8 (L98)	10096136	1	26.04	SENSOR, ENG OIL T/GA (CHG MON & TEMP GA) (3 BLADE TERM, 1/4–18 THD) (AC–DELCO #10096136)
90–91	Y 5.7J (LT5)	10096136	1	26.04	SENSOR, ENG OIL T/GA (3 BLADE TERM, 1/4–18 THD) (AC–DELCO #10096136)
92–95	Y 5.7J (LT5)	10096181	1	20.00	SENSOR, ENG OIL T/GA (3 BLADE TERM) (W/IND SW) (03.682) (AC–DELCO #213–815)
92–96	Y 5.7P (LT1)	10096136	1	26.04	SENSOR, ENG OIL T/GA & OIL CHANGE IND (AC–DELCO #10096136)
96	Y 5.7–5 (LT4)	10096136	1	26.04	SENSOR, ENG OIL T/GA & OIL CHANGE IND (AC–DELCO #10096136)
84–88	Y	25036292	1	28.97	SENSOR, ENG OIL TEMP (1 BLADE TERM, 1/4–18 THD) (AC–DELCO #25036292)
89	Y 5.7–8	25036292	1	28.97	SENSOR, ENG OIL TEMP (AC–DELCO #25036292)
89	Y 5.7–8 (L98)	10201491	1	32.12	SENSOR, F/PMP SW & ENG OIL PRESS GA (3 BLADE TERM, 1/8–27 THD) (AC–DELCO #10201491)
90	Y 5.7–8	10201491	1	32.12	SENSOR, F/PMP SW & ENG OIL PRESS GA (3 BLADE TERM, 1/8–27 THD) (AC–DELCO #10201491)
90–91	Y 5.7–8 (L98)	10201491	1	32.12	SENSOR, F/PMP SW & ENG OIL PRESS GA (1/8–27 THD SIZE) (3 BLADE TERM) (AC–DELCO #10201491)

© 2000 GENERAL MOTORS SERVICE PARTS OPERATIONS

MICROFICHE INDEX

GROUPS 0.000 & 21.000

FICHE 1 OF 11

GROUP	DESCRIPTION	STARTING GRID LOCATION PARTS	ILLUSTRATIONS
–	GENERAL INFORMATION	1–A2	1–G2
–	ALPHABETICAL INDEX	1–B13	N.A.
0.000	8–CYLINDER ENGINE	1–E2	1–G5
21.000	ACCESSORY REFERENCE LIST	1–D2	N.A.
–	OUT OF FICHE CALLS	N.A.	1–L13

1 – M1

1.800 CONNECTOR – ELBOW – FITTING – RING – SENSOR – SWITCH, Engine Oil Pressure/Temperature(Con't)

92–96	Y 5.7P (LT1)	10201491	1	32.12	SENSOR, F/PMP SW & ENG OIL PRESS GA (1/8–27 THD SIZE) (3 BLADE TERM) (AC–DELCO #10201491)
96	Y 5.7–5 (LT4)	10201491	1	32.12	SENSOR, F/PMP SW & ENG OIL PRESS GA (1/8–27 THD SIZE) (3 BLADE TERM) (AC–DELCO #10201491)
90–91	Y 5.7–8 (L98)	25036935	1	16.32	SWITCH, ENG OIL PRESS IND (OIL FLTR HSG) (1 BLADE TERM, 1/8–27 THD) (AC–DELCO #D1846)
90–92	Y 5.7J (LT5)	25036935	1	16.32	SWITCH, ENG OIL PRESS IND (OIL FLTR HSG (1 BLADE TERM, 1/8–27 THD)) (AC–DELCO #D1846)
92–96	Y 5.7P (LT1)	25036935	1	16.32	SWITCH, ENG OIL PRESS IND (OIL FLTR HSG (1 BLADE TERM, 1/8–27 THD)) (AC–DELCO #D1846)
93–95	Y 5.7J (LT5)	25036935	1	16.32	SWITCH, ENG OIL PRESS IND (AC–DELCO #D1846)
96	Y 5.7–5 (LT4)	25036935	1	16.32	SWITCH, ENG OIL PRESS IND (OIL FLTR HSG (1 BLADE TERM, 1/8–27 THD)) (AC–DELCO #D1846)
85–87	Y	25036553	2	12.65	SWITCH, OIL PRESS (2 BLADE TERM, 1/8–27 THD) (AC–DELCO #D1818)
88	Y	25036936	1	14.59	SWITCH, OIL PRESS IND (2 BLADE TERM, 1/8–27 THD) (AC–DELCO #D1835)

1.803 FITTING, Engine Oil Pressure Gage

84	Y	14047169	2	9.20	FITTING, OIL PRESS GA
84	Y (1ST DES)	14066510	1	DISCON	FITTING, OIL PRESS GA SEN (1/8–27 NPT 1 EXT 1 INT AT 90 DEG M42 X 25) (SINGLE OUTLET W/SQUARE BODY)
84	Y (1ST DES)	14066511	1	DISCON	FITTING, OIL PRESS GA SEN (1/8–27 1 INT, 1 EXT AT 90 DEG M23 X 21) (90 DEG W/SQUARE BODY)
84	Y (2ND DES)	14078987	1	7.52	FITTING, OIL PRESS GA SEN TO BLK (105 DEG W/HEX BODY)
85–88	Y	14078987	1	7.52	FITTING, OIL PRESS GA SEN TO BLK (105 DEG W/HEX BODY)

1.836 FILTER, Engine Oil Filter

Note: SEE GROUP 2.270 FOR TUNE–UP PARTS CHART

84	Y 5.7–8 (L83)	06438261	1	N.L.	FILTER, OIL (AC–DELCO #PF25) (DURAGUARD)
84	Y 5.7–8 (L83)	25322833	1	N.L.	FILTER, OIL (AC–DELCO #UPF25) (ULTRAGUARD GOLD)
84	Y 5.7–8 (L83)	25325405	1	N.L.	FILTER, OIL (AC–DELCO #SPF25) (DURAGUARD SILVER)
85–91	Y 5.7–8 (L98)	06438261	1	N.L.	FILTER, OIL (AC–DELCO #PF25) (DURAGUARD)
85–91	Y 5.7–8 (L98)	25322833	1	N.L.	FILTER, OIL (AC–DELCO #UPF25) (ULTRAGUARD GOLD)
85–91	Y 5.7–8 (L98)	25325405	1	N.L.	FILTER, OIL (AC–DELCO #SPF25) (DURAGUARD SILVER)
90–95	Y 5.7J (LT5)	25014155	1	N.L.	FILTER, OIL (FILTER, ENG OIL (BLACK)) (PF970C) (AC–DELCO #PF970C)

© 2000 GENERAL MOTORS SERVICE PARTS OPERATIONS

1.836 FILTER, Engine Oil Filter(Con't)

92–96	Y 5.7P (LT1)	25171377	1	N.L.	FILTER, OIL (AC–DELCO #PF52) (DURAGUARD)
92–96	Y 5.7P (LT1)	25322836	1	N.L.	FILTER, OIL (AC–DELCO #UPF52) (ULTRAGUARD GOLD)
92–96	Y 5.7P (LT1)	25325403	1	N.L.	FILTER, OIL (AC–DELCO #SPF52) (DURAGUARD SILVER)
96	Y 5.7–5 (LT4)	25171377	1	N.L.	FILTER, OIL (AC–DELCO #PF52) (DURAGUARD)
96	Y 5.7–5 (LT4)	25322836	1	N.L.	FILTER, OIL (AC–DELCO #UPF52) (ULTRAGUARD GOLD)
96	Y 5.7–5 (LT4)	25325403	1	N.L.	FILTER, OIL (AC–DELCO #SPF52) (DURAGUARD SILVER)

1.837 PLUG – SPRING – VALVE, Engine Oil Filter

90–95	Y 5.7J (LT5)	10067690	2	1.48	PLUG, OIL FLTR BYPASS HOLE (01.844)
90–95	Y 5.7J (LT5)	10135808	2	2.20	SPRING, OIL FLTR BYPASS VLV (01.540)
84	Y ENG OIL CLG (KC4)	25013759	1	N.L.	VALVE, OIL FLTR BYPASS (AC–DELCO #25013759)
90–95	Y 5.7J (LT5)	10067609	2	3.30	VALVE, OIL FLTR BYPASS (01.540)
92–96	Y 5.7P (LT1)	25014006	1	N.L.	VALVE, OIL FLTR BYPASS (W/CAGE, SEAT, SPRING & VALVE) (AC–DELCO #25014006)
96	Y 5.7–5 (LT4)	25014006	1	N.L.	VALVE, OIL FLTR BYPASS (W/CAGE, SEAT, SPRING & VALVE) (AC–DELCO #25014006)
	*EXPORT*********EXPORT*********EXPORT*********EXPORT*********EXPORT*				
84	Y LEADED FUEL EMIS EXPORT (NM8)	25013759	1	N.L.	VALVE, OIL FLTR BYPASS (AC–DELCO #25013759)

1.840 ADAPTER – BOLT – GASKET – PLUG – STUD – WASHER, Engine Oil Filter

84	Y KC4	12558732	1	80.10	ADAPTER, OIL FLTR
85–88	Y ENG OIL CLG (KC4)	10055722	1	16.10	ADAPTER, OIL FLTR
89–91	Y 5.7–8 (L98), ENG OIL CLG (KC4)	10055722	1	16.10	ADAPTER, OIL FLTR
90–95	Y 5.7J (LT5)	10067656	1	11.80	ADAPTER, OIL FLTR (M20X1.5X24)
90–95	Y 5.7J (LT5)	10[illegible]18	1	318.20	ADAPTER, OIL FLTR (01.837)
92	Y 5.7P (LT1)	10[illegible]8497	1	18.00	ADAPTER, OIL FLTR
93	Y 5.7P (LT1)	10168497	1	18.00	ADAPTER, OIL FLTR
94	Y 5.7P (LT1)	12556204	1	80.10	ADAPTER, OIL FLTR
95–96	Y 5.7P (LT1)	12556204	1	80.10	ADAPTER, OIL FLTR
96	Y 5.7–5 (LT4)	12556204	1	80.10	ADAPTER, OIL FLTR
84–85	Y	03952301	1	16.80	ADAPTER, OIL FLTR BY–PASS VLV
86–88	Y (EXC ENG OIL CLG (KC4)	03952301	1	16.80	ADAPTER, OIL FLTR BY–PASS VLV
89–91	Y 5.7–8 (L98), (EXC ENG OIL CLG (KC4)	03952301	1	16.80	ADAPTER, OIL FLTR BY–PASS VLV (INCLS ADAP, PLUG, SPR&VLV)
91–95	Y 5.7J (LT5)	11514158	AR	4.15	BOLT, OIL FLTR (M8X1.25X45, 22 THD, 17 OD, 9.8, PE) (08.900)
92–93	Y 5.7P (LT1)	10168445	2	1.30	BOLT, OIL FLTR ADAP (5/16–18X3,)
94	Y 4.3W (L99)	14092398	2	2.25	BOLT, OIL FLTR ADAP (5/16–18X1.875)
94–96	Y 5.7P (LT1)	14092398	2	2.25	BOLT, OIL FLTR ADAP (5/16–18X1.875)
96	Y 5.7–5 (LT4)	14092398	2	2.25	BOLT, OIL FLTR ADAP (5/16–18X1.875)
91–92	Y 5.7J (LT5)	24572579	AR	.67	BOLT, OIL FLTR HSG & W/PMP (HFH, M8X1.25X35) (00.206)
84	Y	12551589	1	N.L.	GASKET, OIL FLTR ADAP
90–95	Y 5.7J (LT5)	10168686	1	N.L.	GASKET, OIL FLTR ADAP
92–96	Y 5.7P (LT1)	12551589	1	N.L.	GASKET, OIL FLTR ADAP
96	Y 5.7–5 (LT4)	12551589	1	N.L.	GASKET, OIL FLTR ADAP

© 2000 GENERAL MOTORS SERVICE PARTS OPERATIONS

1.840 ADAPTER – BOLT – GASKET – PLUG – STUD – WASHER, Engine Oil Filter(Con't)

90–95	Y 5.7J (LT5)	10106197	2	3.10	PLUG, OIL FLTR ADAP HOLE (01.837)
92–96	Y 5.7P (LT1)	14090911	1	.86	PLUG, OIL FLTR ADAP HOLE (AUTO DRAIN, INT SQ, 3/8–18X.42 PEOR STL) (08.971)
96	Y 5.7–5 (LT4)	14090911	1	.86	PLUG, OIL FLTR ADAP HOLE (AUTO DRAIN, INT SQ, 3/8–18X.42 PEOR STL) (08.971)
86–88	Y ENG OIL CLG (KC4)	14101106	2	2.40	STUD, OIL FLTR (5/16–18 X 1.88)
89–91	Y 5.7–8 (L98), ENG OIL CLG (KC4)	14101106	2	2.40	STUD, OIL FLTR ADAP (5/16–18 X 1.88)
92–96	Y 5.7P (LT1)	00120393	1	.34	WASHER, OIL FLTR ADAP (08.929)
95	Y 5.7P (LT1)	00120392	1	*.33	WASHER, OIL FLTR ADAP (.276X.64X.080 ZP) (08.929)
96	Y 5.7–5 (LT4)	00120393	1	.34	WASHER, OIL FLTR ADAP (08.929)

1.844 SEAL, Engine Oil Filter

84–91	Y	10244495	1	*1.53	SEAL, OIL FLTR ADAP (3.359") (3.359")
92–96	Y 5.7P (LT1)	10244495	1	*1.53	SEAL, OIL FLTR ADAP (3.359")
96	Y 5.7–5 (LT4)	10244495	1	*1.53	SEAL, OIL FLTR ADAP (3.359")

1.855 CLAMP – CONNECTOR – FITTING, Engine Oil Filter

84	Y ENG OIL CLG (KC4)	03853870	1	5.00	CONNECTOR, OIL FLTR
92–96	Y 5.7P (LT1)	00462659	1	4.80	FITTING, OIL FLTR (01.840)
96	Y 5.7–5 (LT4)	00462659	1	4.80	FITTING, OIL FLTR (01.840)

2.041 STARTER, Starter Motor

Note: FOR 1984–87 USAGE REFER TO STARTER MOTOR CHART GRP 2.041

Note: STARTER MOTOR SERVICED BY COMPLETE ASSEMBLY ONLY FOR 1988–1991

84–87	Y 6.5P (L49)	10496871	1	90.00	STARTER, (REMAN) (AC–DELCO #323–365)
88	Y	10455702	1	382.37	STARTER, (AC–DELCO #10455702)
89–91	Y 5.7–8 (L98)	10455702	1	382.37	STARTER, (AC–DELCO #10455702)
90–95	Y 5.7J (LT5)	10455704	1	359.49	STARTER, (SERVICED BY COMPL ASM ONLY) (AC–DELCO #10455704)
92–95	Y 5.7P (LT1)	10455709	1	289.54	STARTER, (AC–DELCO #10455709)
96	Y	10455709	1	289.54	STARTER, (AC–DELCO #10455709)

2.042 BOLT – BRACE – SHIM, Starter Motor

84–87	Y	14097278	1	*4.20	BOLT, ATTACH (HFH 3/8–16 X 4.65 W/KNURL 280M PZOR)
84–87	Y	14097279	AR	4.40	BOLT, ATTACH (HFH 3/8–16 X 1.87 W/KNURL 280 PZOR)
88–91	Y 5.7–8 (L98)	14097278	1	*4.20	BOLT, STRTR (HFH 3/8–16 X 4.65 W/KNURL 280M PZOR) (3/8–16X4 11/16)
88–91	Y 5.7–8 (L98)	14097279	AR	4.40	BOLT, STRTR (HFH 3/8–16 X 1.87 W/KNURL 280 PZOR) (3/8–16X1.87)
92–96	Y 5.7P (LT1)	14097278	1	*4.20	BOLT, STRTR (INBOARD) (3/8–16X4 11/16)
92–96	Y 5.7P (LT1)	14097279	1	4.40	BOLT, STRTR (OUTBOARD) (3/8–16X1.87)
84–88	Y	01246249	AR	1.90	SHIM, START MOT (1 X 1 7/8 X .015) (STEEL)
84–89	Y	10008053	AR	*1.00	SHIM, START MTR (24.4 X 106.7 X 0.38 STEEL)
89–91	Y 5.7–8 (L98)	01246249	AR	1.90	SHIM, STRTR (1 X 1 7/8 X 5/32, STEEL)
91	Y 5.7–8 (L98)	10008053	AR	*1.00	SHIM, STRTR (24.4X106.7X0.38 STL) (FULL)

© 2000 GENERAL MOTORS SERVICE PARTS OPERATIONS

2.042 BOLT – BRACE – SHIM, Starter Motor(Con't)

92–95	Y 5.7P (LT1)	01246240	AR	1.90	SHIM, STRTR (SHORT) (1 X 1 7/8 X 5/32, STEEL)
92–96	Y 5.7P (LT1)	10008053	AR	*1.00	SHIM, STRTR (LONG) (24.4X106.7X0.38 STL) (FULL)
96	Y	01246249	AR	1.90	SHIM, STRTR (1 X 1 7/8 X 5/32, STEEL)

2.070 SEALER, Starter Motor

90–91	Y 5.7–8 (L98)	10096162	1	2.43	SEALER, STRTR
92–95	Y 5.7P (LT1)	10096162	1	2.43	SEALER, STRTR
96	Y	10096162	1	2.43	SEALER, STRTR

2.170 COIL – CONNECTOR, Ignition Coil

Note: FOR 1985–1991 USAGE REFER TO DISTRIBUTOR CHART GRP 2.361

84	Y	01985474	1	53.31	COIL, IGN (WITH 1103538) (AC–DELCO #D531)
85–91	Y FOR MDL APPL & POA INFO SEE DISTR CHT	01985474	1	53.31	COIL, IGN (AC–DELCO #D531)
90–95	Y 5.7J (LT5)	10467067	4	53.55	COIL, IGN (AC–DELCO #D545)
92–93	Y 5.7P (LT1)	01115315	1	54.57	COIL, IGN (AC–DELCO #D535)
94–95	Y 5.7P (LT1)	10477208	1	53.55	COIL, IGN (AC–DELCO #D573)
96	Y 5.7P (LT1), 5.7–5 (LT4)	10489421	1	48.72	COIL, IGN (AC–DELCO #D577)

2.183 BOLT – BRACKET – NUT – SCREW – SEAL – STRAP – STUD, Ignition Coil Mounting

Note: FOR 1985–1991 USAGE REFER TO DISTRIBUTOR CHART GRP 2.361

92–96	Y 5.7P (LT1)	11507041	2	3.95	BOLT, BRKT MTG (TO COIL) (HWH, M4X0.7X30, 9.8 PC) (08.900)
90–95	Y 5.7J (LT5)	10467064	8	*.82	BOLT, IGN COIL (02.383) (AC–DELCO #10467064)
91–93	Y 5.7J (LT5)	11508805	2	*.41	BOLT, IGN COIL (HFH M6X1X16 9.8 POR 14 OD 14MM THD) (08.900)
92–96	Y 5.7P (LT1)	10474609	2	*2.45	BOLT, IGN COIL (AC–DELCO #10474609)
96	Y 5.7–5 (LT4)	10474609	2	*2.45	BOLT, IGN COIL (AC–DELCO #10474609)
92–95	Y 5.7P (LT1)	14057279	1	*1.90	STUD, IGN COIL (STUD, HEX 3/8–16X.80–3/8–16X.80 300M POR) (08.981)
95–96	Y 5.7P (LT1)	12555065	1	1.55	STUD, IGN COIL (INBOARD & OUTBOARD)
96	Y 5.7–5 (LT4)	12555065	1	1.55	STUD, IGN COIL (INBOARD & OUTBOARD)

2.239 WIRE KIT, Spark or Glow Plug Ignition

Note: SEE GROUP 2.270 FOR TUNE–UP PARTS CHART

84	Y	12043753	1	58.19	WIRE KIT, SPLG (AC–DELCO #618K)
85–88	Y	12073939	1	53.71	WIRE KIT, SPLG (AC–DELCO #618W)
89–91	Y 5.7–8 (L98)	12073939	1	53.71	WIRE KIT, SPLG (AC–DELCO #618W)
90–95	Y 5.7J (LT5)	12073977	1	61.45	WIRE KIT, SPLG (AC–DELCO #628D)
92–95	Y 5.7P (LT1)	12074093	1	77.52	WIRE KIT, SPLG (AC–DELCO #708W)
96	Y 5.7P (LT1), 4–SPD A/TRANS (M30)	12173585	1	180.15	WIRE KIT, SPLG (AC–DELCO #748C)
96	Y 5.7–5 (LT4), 6–SPD M/TRANS (ML9)	12173591	1	180.15	WIRE KIT, SPLG (W/COIL WIRE) (AC–DELCO #748D)

2.240 HARNESS – WIRE, Spark Plug or Coil

Note: FOR 1984–1991 USAGE REFER TO SPARK PLUG WIRE CHART GRP 2.240

93–95	Y	12048976	1	17.50	HARNESS, IGN COIL WRG (W/O CONDUIT) (PRIMARY)

© 2000 GENERAL MOTORS SERVICE PARTS OPERATIONS

2.240 HARNESS – WIRE, Spark Plug or Coil(Con't)

96	Y 5.7P (LT1), 4–SPD A/TRANS (M30)	12173589	1	16.70	HARNESS, IGN COIL WRG (AC–DELCO #347E)
96	Y 5.7–5 (LT4), 6–SPD M/TRANS (ML9)	12192000	1	16.70	HARNESS, IGN COIL WRG (AC–DELCO #347R)
92–95	Y 5.7P (LT1)	12173444	1	16.70	WIRE, IGN COIL (FROM DIST TO COIL) (AC–DELCO #344S)
84	Y	12036913	2	13.23	WIRE, SPARK PLUG #1, 4, 36"LONG (AC–DELCO #312S)
84	Y	12036914	2	10.34	WIRE, SPARK PLUG #2 & 7, 40"LONG (AC–DELCO #312T)
85–86	Y (5.7–8)	12036914	2	10.34	WIRE, SPARK PLUG #2, 3, 40"LONG, STYLE S (AC–DELCO #312T)
87–88	Y (5.7–8)	12036914	1	10.34	WIRE, SPARK PLUG #3, 40"LONG, STYLE S (AC–DELCO #312T)
84	Y	12036915	1	16.46	WIRE, SPARK PLUG #3, 44"LONG (AC–DELCO #312U)
85–91	Y 5.7–8 (L98)	12002172	1	12.59	WIRE, SPARK PLUG #4, 32"LONG, STYLE S (AC–DELCO #310W)
84	Y	12036910	2	9.51	WIRE, SPARK PLUG #5 & 8, 26"LONG (AC–DELCO #312M)
84	Y	12036938	1	11.23	WIRE, SPARK PLUG #6, 26"LONG (AC–DELCO #314A)
85–86	Y (5.7–8)	12036910	2	9.51	WIRE, SPLG (WIRE, SPARK PLUG #5, 8, 26"LONG, STYLE S) (AC–DELCO #312M)
87–88	Y	12036910	3	9.51	WIRE, SPLG (WIRE, SPARK PLUG #5, 7, 8, 26"LONG, STYLE S) (AC–DELCO #312M)
89–91	Y 5.7–8 (L98)	12036910	2	9.51	WIRE, SPLG (#5, 8, 26"LONG, STYLE S) (AC–DELCO #312M)
89–91	Y 5.7–8 (L98)	12036914	1	10.34	WIRE, SPLG (#2, 3, 40"LONG, STYLE S) (AC–DELCO #312T)
85–86	Y (5.7–8)	12036915	1	16.46	WIRE, SPLG #1 CYL (44"LONG, STYLE S) (AC–DELCO #312U)
87–88	Y	12036915	2	16.46	WIRE, SPLG #1 CYL (#1, 2, 44"LONG, STYLE S) (AC–DELCO #312U)
89–91	Y 5.7–8 (L98)	12036915	1	16.46	WIRE, SPLG #1 CYL (44"LONG, STYLE S) (AC–DELCO #312U)
90–95	Y 5.7J (LT5)	12192020	1	13.03	WIRE, SPLG #1 CYL (RED) (36"LONG) (AC–DELCO #336B)
92–95	Y 5.7P (LT1)	1217[illegible]42	1	21.81	WIRE, SPLG #1 CYL (AC–DELCO #344N)
96	Y 5.7P (LT1), 4–SPD A/TRANS (M30)	12173586	1	21.81	WIRE, SPLG #1 CYL (26"LONG) (STYLE 26V, 7MM LEAD) (AC–DELCO #347B)
96	Y 5.7P (LT1), 6–SPD M/TRANS (ML9)	12173594	1	21.81	WIRE, SPLG #1 CYL (AC–DELCO #347G)
96	Y 5.7–5 (LT4), 6–SPD M/TRANS (ML9)	12173594	1	21.81	WIRE, SPLG #1 CYL (AC–DELCO #347G)
90–95	Y 5.7J (LT5)	12192021	1	13.34	WIRE, SPLG #2 CYL (&#4) (32"LONG) (RED) (AC–DELCO #336C)
92–95	Y 5.7P (LT1)	12096460	1	16.40	WIRE, SPLG #2 CYL (24"LONG) (LEAD STYLE 24 VV) (AC–DELCO #340J)
96	Y 5.7P (LT1), 4–SPD A/TRANS (M30)	12173574	1	16.40	WIRE, SPLG #2 CYL (24"LONG) (STYLE 24VV, 7MM LEAD) (AC–DELCO #346N)
96	Y 5.7–5 (LT4)	12173595	1	16.40	WIRE, SPLG #2 CYL (AC–DELCO #347H)
90–95	Y 5.7J (LT5)	12192022	1	12.18	WIRE, SPLG #3 CYL (RED) (28"LONG) (AC–DELCO #336D)

© 2000 GENERAL MOTORS SERVICE PARTS OPERATIONS

2.240 HARNESS – WIRE, Spark Plug or Coil(Con't)

92–95	Y 5.7P (LT1)	12173442	1	21.81	WIRE, SPLG #3 CYL (AC–DELCO #344N)
96	Y 5.7P (LT1), 4–SPD A/TRANS (M30)	12173574	1	16.40	WIRE, SPLG #3 CYL (24"LONG) (STYLE 24VV, 7MM LEAD) (AC–DELCO #346N)
96	Y 5.7–5 (LT4), 6–SPD M/TRANS (ML9)	12173595	1	16.40	WIRE, SPLG #3 CYL (AC–DELCO #347H)
92–95	Y 5.7P (LT1)	12096459	1	16.40	WIRE, SPLG #4 CYL (22"LONG) (LEAD STYLE 22–VV) (AC–DELCO #340H)
96	Y 5.7P (LT1), 4–SPD A/TRANS (M30)	12173580	1	16.40	WIRE, SPLG #4 CYL (22"LONG) (STYLE 22VV, 7MM LEAD) (AC–DELCO #346V)
96	Y 5.7–5 (LT4), 6–SPD M/TRANS (ML9)	12173596	1	16.40	WIRE, SPLG #4 CYL (AC–DELCO #347J)
92–95	Y 5.7P (LT1)	12096465	1	17.04	WIRE, SPLG #5 CYL (32" LONG) (LEAD STYLE 32VV, 7MM DIA) (AC–DELCO #340N)
96	Y 5.7P (LT1), 4–SPD A/TRANS (M30)	12173587	1	21.81	WIRE, SPLG #5 CYL (32" LONG) (AC–DELCO #347C)
96	Y 5.7–5 (LT4), 6–SPD M/TRANS (ML9)	12173597	1	17.04	WIRE, SPLG #5 CYL (AC–DELCO #347K)
85–91	Y 5.7–8 (L98)	12002143	1	11.11	WIRE, SPLG #6 CYL (28"LONG, STYLE X) (AC–DELCO #308T)
90–95	Y 5.7J (LT5)	12192023	1	15.44	WIRE, SPLG #6 CYL (&#5) (RED) (24" LONG) (AC–DELCO #336E)
92–95	Y 5.7P (LT1)	12173443	1	20.57	WIRE, SPLG #6 CYL (AC–DELCO #344R)
96	Y 5.7P (LT1), 4–SPD A/TRANS (M30)	12173588	1	20.57	WIRE, SPLG #6 CYL (36" LONG) (STYLE 36YY, 7MM LEAD) (AC–DELCO #347D)
96	Y 5.7–5 (LT4), 6–SPD M/TRANS (ML9)	12173599	1	20.57	WIRE, SPLG #6 CYL (AC–DELCO #347N)
85–86	Y (5.7–8)	12073993	1	15.36	WIRE, SPLG #7 CYL (WIRE, SPARK PLUG #7, 24"LONG, STYLE S) (AC–DELCO #319C)
89–91	Y 5.7–8	12073993	1	15.36	WIRE, SPLG #7 CYL (24"LONG, STYLE S) (AC–DELCO #319C)
90–95	Y 5.7J (LT5)	12192024	1	16.70	WIRE, SPLG #7 CYL (RED) (20"LONG) (AC–DELCO #336F)
92–95	Y 5.7P (LT1)	12096465	1	17.04	WIRE, SPLG #7 CYL (32" LONG) (LEAD STYLE 32VV, 7MM DIA) (AC–DELCO #340N)
96	Y 5.7P (LT1), 4–SPD A/TRANS (M30)	12173587	1	21.81	WIRE, SPLG #7 CYL (32" LONG) (AC–DELCO #347C)
96	Y 5.7–5 (LT4), 6–SPD M/TRANS (ML9)	12173598	1	16.40	WIRE, SPLG #7 CYL (AC–DELCO #347M)
90–95	Y 5.7J (LT5)	12192025	1	15.44	WIRE, SPLG #8 CYL (RED) (26" LONG) (AC–DELCO #336G)
92–95	Y 5.7P (LT1)	12173443	1	20.57	WIRE, SPLG #8 CYL (AC–DELCO #344R)
96	Y 5.7P (LT1), 4–SPD A/TRANS (M30), 6–SPD M/TRANS (MM6)	12173587	1	21.81	WIRE, SPLG #8 CYL (32" LONG) (AC–DELCO #347C)
96	Y 5.7P (LT1), 4–SPD A/TRANS (M30)	12173588	1	20.57	WIRE, SPLG #8 CYL (36" LONG) (STYLE 36YY, 7MM LEAD) (AC–DELCO #347D)
96	Y 5.7–5 (LT4), 6–SPD M/TRANS (ML9)	12173599	1	20.57	WIRE, SPLG #8 CYL (AC–DELCO #347N)

2.251 BOLT – CLIP – NUT – RETAINER – SHIELD – STUD – SUPPORT – WASHER, Spark Plug Ignition Wire

92–93	Y 5.7P (LT1)	09439930	8	*.58	BOLT, SPLG WIRE SUPT (08.000)
92–93	Y 5.7P (LT1)	11516186	2	*.70	BOLT, SPLG WIRE SUPT (M8X1.25X16 17.6.9.8PZOR) (08.900)
93–96	Y 5.7P (LT1)	09439930	1	*.58	BOLT, SPLG WIRE SUPT (08.900)
96	Y 5.7–5 (LT4)	09439930	1	*.58	BOLT, SPLG WIRE SUPT (08.900)
85–88	Y	08917256	1	7.10	CLIP, ACCEL CONT CBL
89–90	Y 5.7–8 (L98)	08917256	1	7.10	CLIP, ACCEL CONT CBL
89–91	Y 5.7–8 (L98)	08917256	1	7.10	CLIP, SPLG WIRE (4 LOOM)
90–95	Y 5.7J (LT5)	10135818	2	14.54	CLIP, SPLG WIRE (TO INJ HSG)
85–88	Y	08917256	1	7.10	CLIP, SPLG WIRE 4 LOOM
85–88	Y	12041472	1	3.26	RETAINER, SPLG WIRE (5–WIRE 8MM CBL)
89–91	Y 5.7–8 (L98)	12041472	1	3.26	RETAINER, SPLG WIRE (5–WIRE 8MM CBL)
89–91	Y 5.7–8 (L98)	12043550	6	3.26	RETAINER, SPLG WIRE (4–WIRE)
92–95	Y 5.7P (LT1)	12043158	AR	1.84	RETAINER, SPLG WIRE (W/CVR, 2–WIRE)
92–96	Y 5.7P (LT1)	12059510	1	.88	RETAINER, SPLG WIRE (4–WIRE) (CLIP, LWR)
92–96	Y 5.7P (LT1)	12059514	AR	3.85	RETAINER, SPLG WIRE (UPR) (4–WIRE, BRKT MT, TWO LK PIN TOP)
92–93	Y 5.7P (LT1)	12073948	AR	5.88	RETAINER, SPLG WIRE (4/WIRE) (AC–DELCO #8073)
96	Y 5.7P (LT1), 4–SPD A/TRANS (M30)	12047523	2	.70	RETAINER, SPLG WIRE (RETAINS 3–7MM LEADS, BRKT MT, HINGE STYLE)
96	Y 5.7P (LT1)	12059510	AR	.38	RETAINER, SPLG WIRE (4–WIRE) (CLIP, LWR)
96	Y 5.7P (LT1)	12065767	1	.66	RETAINER, SPLG WIRE (RETAINS 4–7MM LEADS, CROSS SHAPED)
96	Y 5.7P (LT1), 4–SPD A/TRANS (M30)	12073948	RH	5.88	RETAINER, SPLG WIRE (AC–DELCO #8073)
96	Y 5.7P (LT1)	12132229	1	*.88	RETAINER, SPLG WIRE (RETAINS 2–7MM LEADS, HINGE LOCKING CVR, NARROW BLADE MT)
84–86	Y	12004716	1	*11.41	RETAINER, SPLG WIRE TO DIST (4 TO 8 WIRES) (AC–DELCO #12004716)
84–88	Y	12043158	7	1.84	RETAINER, W/COVER, SPLG WIRE (2–WIRE)
84–88	Y	12043550	6	3.26	RETAINER, W/COVER, SPLG WIRE (4–WIRE)
84	Y	52350585	1	1.50	STUD, SPLG WIRE SUPT (3/8–16X1.52 LONG) (02.277)
84–85	Y	14055123	LH	1.22	SUPPORT, SPLG WIRE (TO VLV CVR)
84–85	Y	14055124	RH	1.22	SUPPORT, SPLG WIRE (TO VLV CVR)
84–86	Y	14055125	LH	DISCON	SUPPORT, SPLG WIRE (TO ENG LH OTR)
84–86	Y	14055126	RH	DISCON	SUPPORT, SPLG WIRE (TO ENG RH OTR)
86	Y CAST IRON HD (KB2)	14101139	1	DISCON	SUPPORT, SPLG WIRE
89–91	Y 5.7–8 (L98)	14087574	RH	3.57	SUPPORT, SPLG WIRE (CYL HD SI RR, USE W/ALUM HDS)
89–91	Y 5.7–8 (L98)	14087575	RH	1.22	SUPPORT, SPLG WIRE (CYL HD SI FRT, USE W/ALUM HDS)
89–91	Y 5.7–8 (L98)	14087576	2	1.22	SUPPORT, SPLG WIRE (LH CYL HD SI, USE W/ALUM HDS)
89–91	Y 5.7–8 (L98)	14087578	RH	2.19	SUPPORT, SPLG WIRE (CYL HD R/END, STRAIGHT)

© 2000 GENERAL MOTORS SERVICE PARTS OPERATIONS

2.251 BOLT – CLIP – NUT – RETAINER – SHIELD – STUD – SUPPORT – WASHER, Spark Plug Ignition Wire(Con't)

92–96	Y 5.7P (LT1)	10096185	RH	3.57	SUPPORT, SPLG WIRE
92–93	Y 5.7P (LT1)	10096186	LH	3.57	SUPPORT, SPLG WIRE
92–96	Y 5.7P (LT1)	10137631	1	3.57	SUPPORT, SPLG WIRE
93	Y 5.7–5 (LT4)	10096185	RH	3.57	SUPPORT, SPLG WIRE
96	Y 5.7–5 (LT4)	10096186	LH	3.57	SUPPORT, SPLG WIRE
96	Y 5.7–5 (LT4)	10137631	1	3.57	SUPPORT, SPLG WIRE
86–88	Y	14087578	RH	2.19	SUPPORT, SPLG WIRE CYL HD R/END (STRAIGHT)
86–88	Y	14087575	RH	1.22	SUPPORT, SPLG WIRE CYL HD SI FRT (USE W/ALUM HDS)
86–88	Y	14087574	RH	3.57	SUPPORT, SPLG WIRE CYL HD SI RR (USE W/ALUM HDS)
86–88	Y	14087576	2	1.22	SUPPORT, SPLG WIRE LH CYL HD SI (USE W/ALUM HDS)

2.270 SPARK PLUG, Engine Tune–up (Spark, Glow)

Note: SEE GROUP 2.270 FOR TUNE–UP PARTS CHARTS

84	Y 5.7–8 (L83)	05613957	AR	N.L.	SPARK PLUG, (AC–DELCO #R45TS) (STANDARD PLUG)
84	Y 5.7–8 (L83)	05614243	8	N.L.	SPARK PLUG, (AC–DELCO #41–905) (PLATINUM PLUG)
85	Y 5.7–8 (L98)	05613325	8	N.L.	SPARK PLUG, (AC–DELCO #R43TS) (STANDARD PLUG)
86	Y 5.7–8 (L98), (CAST IRON HEADS)	05613325	8	N.L.	SPARK PLUG, (AC–DELCO #R43TS) (STANDARD PLUG)
86–87	Y 5.7–8 (L98), (ALUMINUM HEADS)	05613796	8	N.L.	SPARK PLUG, (AC–DELCO #FR3LS) (STANDARD PLUG)
88–91	Y 5.7–8 (L98), (ALUMINUM HEADS)	05614106	8	N.L.	SPARK PLUG, (AC–DELCO #FR5LS) (STANDARD PLUG)
90–92	Y 5.7J (LT5)	05614167	8	N.L.	SPARK PLUG, (AC–DELCO #FR2LS) (STANDARD PLUG)
92	Y 5.7P (LT1)	05614238	8	N.L.	SPARK PLUG, (41–904) (AC–DELCO #41–904) (PLATINUM PLUG)
92–95	Y 5.7J (LT5)	05614355	8	N.L.	SPARK PLUG, (AC–DELCO #41–913) (PLATINUM PLUG)
93–95	Y 5.7P (LT1)	05614244	8	N.L.	SPARK PLUG, (41–906) (AC–DELCO #41–906) (PLATINUM PLUG)
96	Y 5.7P (LT1), 4–SPD A/TRANS (M30)	25166821	8	N.L.	SPARK PLUG, (41–943) (AC–DELCO #41–943) (PLATINUM PLUG)
96	Y 5.7–5 (LT4), 6–SPD M/TRANS (ML9)	25166821	8	N.L.	SPARK PLUG, (41–943) (AC–DELCO #41–943) (PLATINUM PLUG)

2.277 BOLT – BRACE – BRACKET – SHIELD – SPACER, Generator Mounting

92–95	Y 5.7P (LT1)	10105345	1	3.06	BOLT, GEN
96	Y 5.7P (LT1), 5.7–5 (LT4)	10105345	1	3.06	BOLT, GEN
90–95	Y 5.7J (LT5)	10049639	1	3.70	BOLT, GEN BRKT (M10X1.5X100 13HEX) (00.002)
90–95	Y 5.7J (LT5)	11508355	1	.95	BOLT, GEN BRKT (TOP) (M10X1.5X50 10.9 POR) (08.900)
92	Y 5.7P (LT1)	09440073	1	2.25	BOLT, GEN BRKT (HFH 3/8–16X2.00 280M POR 6174M) (08.900)
92–96	Y 5.7P (LT1)	09441560	2	*1.50	BOLT, GEN BRKT (HFH, 3/8–16X1.75, 1.12–THD LEN 0.75–OD, 300M, POR) (3/8–16X1.75, 1.12–THD) (08.900)
91	Y 5.7J (LT5)	11508687	2	1.82	BOLT, GEN BRKT BTM (HEX M8X1.25X20) (08.900) (AC–DELCO #11508687)

© 2000 GENERAL MOTORS SERVICE PARTS OPERATIONS

2.277 BOLT – BRACE – BRACKET – SHIELD – SPACER, Generator Mounting(Con't)

95–96	Y	11516523	1	DISCON	BOLT, GEN RR BR (08.900)
84	Y	14003758	1	DISCON	BRACKET, GEN
85	Y	14084364	1	19.84	BRACKET, GEN
86–89	Y	14087519	1	19.43	BRACKET, GEN
90–95	Y 5.7J (LT5)	10067545	1	51.00	BRACKET, GEN (TOP) (02.017)
90–95	Y 5.7J (LT5)	10067686	1	32.39	BRACKET, GEN (BOTTOM)
90–91	Y 5.7–8 (L98)	14087519	1	19.43	BRACKET, GEN
92–95	Y 5.7P (LT1)	12550052	1	77.01	BRACKET, GEN & A/C CMPR & P/S PUMP
93	Y 5.7J (LT5)	12550052	1	77.01	BRACKET, GEN & A/C CMPR & P/S PUMP
96	Y	12550052	1	77.01	BRACKET, GEN & A/C CMPR & P/S PUMP
85–90	Y	14087559	1	43.35	BRACKET, GEN & P/S PUMP
91	Y 5.7–8 (L98)	14087559	1	43.35	BRACKET, GEN & P/S PUMP
85	Y	14085724	1	DISCON	BRACKET, GEN SUP RR
92–96	Y 5.7P (LT1)	10028767	1	1.58	SPACER, GEN
93	Y 5.7J (LT5)	10028767	1	1.58	SPACER, GEN
96	Y 5.7–5 (LT4), 6–SPD M/TRANS (ML9)	10028767	1	1.58	SPACER, GEN

2.361 DISTRIBUTOR, Ignition

Note: FOR 1985–1991 USAGE REFER TO DISTRIBUTOR CHART GRP 2.361

92–94	Y 5.7P (LT1)	10457702	1	601.80	DISTRIBUTOR, (AC–DELCO #10457702)
95–96	Y 5.7P (LT1)	01104032	1	432.48	DISTRIBUTOR, (W/PUMP GSKT SHOULD BE ORDERED ALSO) (AC–DELCO #1104032)
96	Y 5.7–5 (LT4)	01104032	1	432.48	DISTRIBUTOR, (W/PUMP GSKT SHOULD BE ORDERED ALSO) (AC–DELCO #1104032)

2.363 BOLT – CLAMP – GASKET – SCREEN – SEAL, Ignition Distributor Housing

Note: FOR 1985–1991 USAGE REFER TO DISTRIBUTOR CHART GRP 2.361

92–96	Y 5.7P (LT1)	09442398	3	.80	BOLT, DISTR (HFH, 1/4–20X2, .75 THD, .52 OD, 280M, PO) (08.900)
96	Y 5.7–5 (LT4)	09442398	3	.80	BOLT, DISTR (HFH, 1/4–20X2, .75 THD, .52 OD, 280M, PO) (08.900)
88–90	Y 5.7–8 (L98)	09440901	1	1.35	BOLT, DISTR CLA (3/8–16X1.1/8) (ALSO USE 12346001 SEALER) (08.900)
88–90	Y 5.7–8 (L98)	14091544	1	1.35	BOLT, DISTR CLA (3/8–16X1.1/8) (08.900)
84	Y 5.7–8 (L83)	10198997	AR	*.57	BOLT, IGN TIMER DIST CLA (3/8–16X1.25 280M) (03.275)
85–88	Y 5.7–8 (L98)	10198997	AR	*.57	BOLT, IGN TIMER DIST CLA (3/8–16X1.25 280M) (03.275)
84–90	Y 5.7–8	10096197	1	*.99	CLAMP, DISTR
91	Y 5.7–8 (L98)	10096197	1	*.99	CLAMP, DISTR
84–88	Y	10096197	1	*.99	CLAMP, IGN TIMER DIST
84–91	Y 5.7–8	10108445	1	*.10	GASKET, DISTR (AC–DELCO #10108445)
95–96	Y 5.7P (LT1)	10474278	2	*.27	SEAL, DISTR HSG OIL (O RING) (02.372) (AC–DELCO #10474278)
96	Y 5.7–5 (LT4)	10474278	2	*.27	SEAL, DISTR HSG OIL (O RING) (02.372) (AC–DELCO #10474278)
84	Y	01950569	1	*1.22	SEAL, HSG OIL (AC–DELCO #1950569)

© 2000 GENERAL MOTORS SERVICE PARTS OPERATIONS

2.364 WASHER, Distributor Lubri[illegible]

84	Y 5.7-8 (L83)	03754153		*.97	WASHER, IGN TIMER DIST CLA (05.383)
85-88	Y 5.7-8 (L98)	03754153	1	*.97	WASHER, IGN TIMER DIST CLA (05.383)

2.372 PIN – POLE – POLE PIECE – POLE PIECE & PLATE – RETAINER – SEAL – SHAFT, Distributor Shaft

Note: FOR 1985-1991 USAGE REFER TO DISTRIBUTOR CHART GRP 2.361

92-94	Y 5.7P (LT1)	10128317	1	2.35	SEAL, DISTR DRV SHF (IN ENG FRT CVR)
95-96	Y 5.7P (LT1)	12552428	1	5.10	SEAL, DISTR DRV SHF (02.363)
96	Y 5.7-5 (LT4)	12552428	1	5.10	SEAL, DISTR DRV SHF (02.363)

2.383 BOLT – BRACKET – CONNECTOR – GASKET – HARNESS – HEAT SINK – MODULE – RING – SCREW – SEAL – SENSOR – SHIELD – SHIM – SLEEVE – TERMINAL BLOCK, Distributor (also Knock Sensor)

Note: FOR 1985-1991 USAGE REFER TO DISTRIBUTOR CHART GRP 2.361

92-93	Y 5.7J (LT5)	11508805	1	*.41	BOLT, CM/SHF POSN SEN (HFH M6X1X16 9.8 POR 14 OD 14MM THD) (08.900)
91-93	Y 5.7J (LT5)	11508805	1	*.41	BOLT, CR/SHF POSN SEN (HFH M6X1X16 9.8 POR 14 OD 14MM THD) (08.900)
92-93	Y 5.7J (LT5)	11508805	4	*.41	BOLT, CR/SHF POSN SEN (HFH M6X1X16 9.8 POR 14 OD 14MM THD) (08.900)
96	Y 5.7-5 (LT4)	11508805	1	*.41	BOLT, CR/SHF POSN SEN (HFH M6X1X16 9.8 POR 14 OD 14MM THD) (08.900)
90-92	Y 5.7J (LT5)	11517518	4	1.85	BOLT, ELEK ICM (HEAVY HEX FLANGE HD) (HFH, M6X1X20, 19 THD, 14.2 OD, 9.8, 6280M, MACH HD PT) (08.900) (AC-DELCO #11517518)
93-95	Y 5.7J (LT5)	11514150	4	7.50	BOLT, ELEK ICM ((6X1X20) (PE 9.8)) (08.900)
93-95	Y	12126487	1	37.29	CONNECTOR, MDL-DISTR IGN CONT (4-WAY F) (W/LEADS) (AC-DELCO #PT757)
94	Y 5.7P (LT1)	12126456	1	55.52	CONNECTOR, MDL-DISTR IGN CONT (1-WAY M, W/LEADS, HIGH TEMP) (01.150) (AC-DELCO #PT727)
90-95	Y 5.7J (LT5)	12101855	1	19.95	CONNECTOR, MDL-ELEK IGN CONT (2-WAY F) (W/LEADS) (W/SEAL) (02.535) (AC-DELCO #PT247)
90-95	Y 5.7J (LT5)	12102776	1	30.66	CONNECTOR, MDL-ELEK IGN CONT (4-WAY F, W/LEADS) (02.170) (AC-DELCO #PT402)
90	Y 5.7J (LT5)	12167116	1	31.13	CONNECTOR, MDL-ELEK IGN CONT (3 -WAY F W/LEADS) (AC-DELCO #PT782)
91-95	Y 5.7J (LT5)	12117339	1	26.83	CONNECTOR, MDL-ELEK IGN CONT (3-WAY F) (W/LEADS) (10.150) (AC-DELCO #PT472)
90	Y 5.7J (LT5)	12117025	1	21.82	CONNECTOR, SEN-CM/SHF POSN (AC-DELCO #PT420)
92-95	Y 5.7J (LT5)	12117025	1	21.82	CONNECTOR, SEN-CM/SHF POSN (BLACK) (3-WAY F) (W/LEADS) (AC-DELCO #PT420)

© 2000 GENERAL MOTORS SERVICE PARTS OPERATIONS

2.383 BOLT – BRACKET – CONNECTOR – GASKET – HARNESS – HEAT SINK – MODULE – RING – SCREW – SEAL – SENSOR – SHIELD – SHIM – SLEEVE – TERMINAL BLOCK, Distributor (also Knock Sensor)(Con't)

96	Y	12085495	1	26.46	CONNECTOR, SEN–CR/SHF POSN (BLACK) (3–WAY F) (W/LEADS) (02.535) (AC–DELCO #PT117)
91–96	Y	12126456	1	55.52	CONNECTOR, SEN–KNOCK (1–WAY M, W/LEADS, HIGH TEMP) (01.150) (AC–DELCO #PT727)
92	Y 5.7P (LT1)	12106522	1	DISCON	HARNESS, DISTR WRG (02.240)
93	Y 5.7P (LT1)	12106559	1	88.07	HARNESS, DISTR WRG
94	Y 5.7P (LT1), (1ST DES)	12106559	1	83.07	HARNESS, DISTR WRG (DISTR CONN IS APPX 1" LG)
94	Y 5.7P (LT1), (2ND DES)	12130319	1	38.32	HARNESS, DISTR WRG (DISTR CONN IS APPX 2" LG)
95–96	Y 5.7P (LT1)	12130319	1	38.32	HARNESS, DISTR WRG
96	Y 5.7–5 (LT4)	12130319	1	38.32	HARNESS, DISTR WRG
84–85	Y	10482832	1	67.83	MODULE, DISTR (AC–DELCO #D1961A)
90–95	Y 5.7J (LT5)	01103841	1	748.54	MODULE, DISTR IGN CONT
87–89	YY V8, 5.7L ALL, (350–8)	10482832	AR	67.83	MODULE, ELEK IGN CONT (AC–DELCO #D1961A)
90–91	YY V8, 5.7L ALL, (350–8)	10482827	AR	67.83	MODULE, ELEK IGN CONT (AC–DELCO #D1943A)
90–91	YY V8, 5.7L ALL, CANADIAN, (350–8)	10482832	AR	67.83	MODULE, ELEK IGN CONT (AC–DELCO #D196[illegible]
92	Y 5.7P (LT1)	10483131	1	124.44	MODULE, ELEK IGN CONT (W/O COIL) (AC–DELCO #D1971A)
93	Y 5.7P (LT1), 4–SPD A/TRANS (MD8), 6–SPD M/TRANS (ML9)	10483131	1	124.44	MODULE, ELEK IGN CONT (W/O COIL) (AC–DELCO #D1971A)
94–95	Y 5.7P (LT1)	10483139	1	96.15	MODULE, ELEK IGN CONT (W/O COIL) (AC–DELCO #D1986A)
96	Y	10482803	1	111.18	MODULE, ELEK IGN CONT (W/O COIL) (AC–DELCO #D579)
90	Y 5.7J (LT5)	16080211	1	70.89	MODULE, ELEK SPARK CONT (AC–DELCO #D1931A)
84–86	Y	16126761	1	84.64	MODULE, KNOCK SEN (AC–DELCO #216–45)
87–89	Y 5.7–8 (L98)	16128261	1	84.64	MODULE, KNOCK SEN (AC–DELCO #216–47)
94–95	Y 5.7P (LT1)	16177690	1	75.48	MODULE, KNOCK SEN (8 PIN MDL PLUGS INTO PCM LIKE A PROM)
96	Y 5.7P (LT1)	16214671	1	50.59	MODULE, KNOCK SEN (PLUGS INTO PCM MDL) (AC–DELCO #216–66)
96	Y 5.7–5 (LT4)	16214681	1	50.59	MODULE, KNOCK SEN (AC–DELCO #216–67)
96	Y 5.7P (LT1), 4–SPD A/TRANS (M30)	10190917	1	6.89	RING, CR/SHF POSN SEN RELUCTOR
96	Y 5.7–5 (LT4), 6–SPD M/TRANS (ML9)	10190917	1	6.89	RING, CR/SHF POSN SEN RELUCTOR
90–94	Y 5.7J (LT5)	01989866	1	*.59	SEAL, CR/SHF POSN SEN (O RING) (02.170) (AC–DELCO #1989866)
96	Y 5.7P (LT1), 4–SPD A/TRANS (M30)	10476885	1	*1.08	SEAL, CR/SHF POSN SEN (O RING) (AC–DELCO #219–194)
96	Y 5.7–5 (LT4)	10476885	1	*1.08	SEAL, CR/SHF POSN SEN (O RING) (AC–DELCO #219–194)
90–95	Y 5.7J (LT5)	10137658	1	205.65	SENSOR, CM/SHF POSN (IF USE IN PLC OF 10096172 MUST ALSO USE 10199080 SHLD) (AC–DELCO #213–141)

© 2000 GENERAL MOTORS SERVICE PARTS OPERATIONS

2.383 BOLT – BRACKET – CONNECTOR – GASKET – HARNESS – HEAT SINK – MODULE – RING – SCREW – SEAL – SENSOR – SHIELD – SHIM – SLEEVE – TERMINAL BLOCK, Distributor (also Knock Sensor)(Con't)

90–95	Y 5.7J (LT5)	10457661	1	22.58	SENSOR, CR/SHF POSN (AC–DELCO #213–153)
96	Y 5.7P (LT1), 4–SPD A/TRANS (M30)	10456534	1	62.98	SENSOR, CR/SHF POSN (AC–DELCO #213–314)
96	Y 5.7–5 (LT4), 6–SPD M/TRANS (ML9)	10456534	1	62.98	SENSOR, CR/SHF POSN (AC–DELCO #213–314)
96	Y 5.7P (LT1), 6–SPD M/TRANS (MM6)	10456534	1	62.98	SENSOR, CR/SHF POSN (AC–DELCO #213–314)
84–86	Y	10456287	1	45.12	SENSOR, KNOCK (DR–562 STAMPED) (AC–DELCO #213–325)
87–89	Y	10456288	1	46.06	SENSOR, KNOCK (AC–DELCO #213–324)
90	Y 5.7J (LT5)	10456075	1	54.22	SENSOR, KNOCK (AC–DELCO #213–94)
90–91	Y 5.7–8 (L98)	10456549	1	46.18	SENSOR, KNOCK (1 BUTTON TYPE TERM, 1/4–18 THD) (AC–DELCO #213–92)
91–95	Y 5.7J (LT5)	10456207	1	50.59	SENSOR, KNOCK (AC–DELCO #213–266)
92–95	Y 5.7P (LT1)	10456126	2	30.64	SENSOR, KNOCK (AC–DELCO #213–96)
93–96	Y	10456287	1	45.12	SENSOR, KNOCK (AC–DELCO #213–325)
90–91	Y 5.7J (LT5)	10135807	1	7.10	SHIELD, CM/SHF POSN SEN HT (03.320) (AC–DELCO #10135807)
92	Y 5.7J (LT5), (1ST DES)	10135807	1	7.10	SHIELD, CM/SHF POSN SEN HT (03.320) (ID BY 8.0MM CLER RADIUS) (AC–DELCO #10135807)
92	Y 5.7J (LT5), (2ND DES)	10199080	1	8.22	SHIELD, CM/SHF POSN SEN HT (ID BY 9.5MM CLER RADIUS) (AC–DELCO #10199080)
93–95	Y 5.7J (LT5)	10199080	1	8.22	SHIELD, CM/SHF POSN SEN HT (AC–DELCO #10199080)
92	Y 5.7J (LT5)	10168649	1	54.83	SHIELD, CR/SHF POSN SEN
93–95	Y 5.7J (LT5)	10168649	1	54.83	SHIELD, CR/SHF POSN SEN (W/OIL LVL IND TUBE SHLD)
84	Y	14067303	1	DISCON	SHIELD, DISTR
84–88	Y	10096158	1	2.50	SHIELD, ESC KNOCK SEN
89–91	Y 5.7–8 (L98)	10096158	1	2.50	SHIELD, KNOCK SEN
90–95	Y 5.7J (LT5)	10199007	1	68.34	SHIELD, KNOCK SEN
92–95	Y 5.7P (LT1)	10096158	RH	2.50	SHIELD, KNOCK SEN
92–95	Y 5.7P (LT1)	10204240	LH	2.50	SHIELD, KNOCK SEN
96	Y	10096158	RH	2.50	SHIELD, KNOCK SEN
96	Y	10204240	LH	2.50	SHIELD, KNOCK SEN
84	Y	01984382	1	1.69	SHIELD, MODULE (AC–DELCO #1984382)
85–91	Y FOR MDL APPL & POA INFO SEE DISTR CHT	01984382	1	1.69	SHIELD, MODULE (AC–DELCO #1984382)

2.420 HARNESS, Distributor Vacuum Control

95	Y 5.7P (LT1)	12554393	1	12.84	HARNESS, DISTR VAC (INCLS CK VLVS)
96	Y 5.7P (LT1), 5.7–5 (LT4)	12556174	1	12.84	HARNESS, DISTR VAC

© 2000 GENERAL MOTORS SERVICE PARTS OPERATIONS

2.480 BRACKET – CONNECTOR – HARNESS – WIRE, Chassis Wiring

94	Y 4–SPD A/TRANS (M30)	15320479	1	119.63	HARNESS, A/TRNS WRG (AC–DELCO #15320479) .....
95	Y 4–SPD A/TRANS (M30)	15320477	1	75.73	HARNESS, A/TRNS WRG (INCLS TCC SOLENOID W/TCC DRAINDOWN FEATURE) (AC–DELCO #15320477)
96	Y 4–SPD A/TRANS (M30)	15320476	1	81.04	HARNESS, A/TRNS WRG (INCLS TCC SOL VLV) (AC–DELCO #15320476) .
85	Y A/TRNS (MD8)	12048732	1	DISCON	HARNESS, E .C .M. .....
85	Y M/TRNS (MH5, MK2) W/FED (NA5)	12048733	1	DISCON	HARNESS, E .C .M. .....
84	Y A/TRNS, FED, CALIF (1ST DES) ..	12028754	1	DISCON	HARNESS, ELEK CONT MDL WRG (SGL WIRE OIL PRESS SW CONN) ..
84	Y M/TRNS, FED, CALIF (1ST DES) .	12029199	1	DISCON	HARNESS, ELEK CONT MDL WRG (SGL WIRE OIL PRESS SW CONN) ..
84	Y M/TRNS, FED, CALIF (2ND DES) .	12029216	1	DISCON	HARNESS, ELEK CONT MDL WRG (DBL WIRE OIL PRESS SW CONN) ..
84	Y A/TRNS, FED, CALIF (2ND DES) .	12029217	1	DISCON	HARNESS, ELEK CONT MDL WRG (DBL WIRE OIL PRESS SW CONN) ..
89	Y (5.7–8) A/TRNS, A/C (C68)	12090323	1	1266.25	HARNESS, ENG & ECM (02.525) .....
86	Y M/TRNS, A/C (C60), FED (NA5) (EXC NM8 EXPORT)	12048815	1	DISCON	HARNESS, ENG & ECM WRG (02.525) .
86	Y A/TRNS, A/C (C60) (EXC NM8 EXPORT)	12048817	1	DISCON	HARNESS, ENG & ECM WRG (02.525) .
86	Y A/TRNS, A/C (C68) (EXC NM8 EXPORT)	12048818	1	DISCON	HARNESS, ENG & ECM WRG (02.525) .
86	Y07 M/TRNS, A/C (C68), FED (NA5) (EXC NM8 EXPORT)	12048816	1	DISCON	HARNESS, ENG & ECM WRG (02.525) .
87	Y M/TRNS, A/C (C60)	12067670	1	DISCON	HARNESS, ENG & ECM WRG (02.525) .
87	Y M/TRNS, A/C (C68)	12067671	1	DISCON	HARNESS, ENG & ECM WRG (02.525) .
87	Y A/TRNS, A/C, FED (NA5) (EXC NM8 EXPORT)	12067672	1	DISCON	HARNESS, ENG & ECM WRG (02.525) .
87	Y A/TRNS, A/C (C68), FED (NA5) (EXC NM8 EXPORT)	12067673	1	DISCON	HARNESS, ENG & ECM WRG (02.525) .
88	Y A/TRNS, A/C (C60)	12055808	1	DISCON	HARNESS, ENG & ECM WRG (02.525) .
88	Y A/TRNS, A/C (C68)	12055809	1	DISCON	HARNESS, ENG & ECM WRG (02.525) .
88	Y M/TRNS, A/C (C60)	12080840	1	DISCON	HARNESS, ENG & ECM WRG (02.525) .
88	Y M/TRNS, A/C (C68)	12080841	1	DISCON	HARNESS, ENG & ECM WRG (02.525) .
89	Y (5.7–8) M/TRNS, A/C (C60) (2ND DES)	12090320	1	1266.25	HARNESS, ENG & ECM WRG (02.525) (ORANGE WIRE IN B–8 CAV OF VATS MDL CONN) .....
89	Y (5.7–8) M/TRNS, A/C (C68)	12090321	1	1266.25	HARNESS, ENG & ECM WRG (02.525) .
89	Y (5.7–8) A/TRNS, A/C (C60) (2ND DES)	12090322	1	1266.25	HARNESS, ENG & ECM WRG (02.525) (ORANGE WIRE IN B–8 CAV OF VATS MDL CONN) .....
89	Y (5.7J)	12090324	1	1266.25	HARNESS, ENG & ECM WRG (02.525) .
91	Y 5.7J (LT5)	12106549	1	26.14	HARNESS, ENG PWR SW WRG (I/P TO VALET MODE SW) (USE W/4 PIN ENG PWR SW CONN) .....
87–89	Y	12067418	1	DISCON	HARNESS, F/FLR CNSL .....
84–86	Y	12029153	1	DISCON	HARNESS, FRT FLR CNSL WRG .....
85	Y (EXC VB4, VD1, VE1, VT7 EXPORT)	12050645	1	DISCON	HARNESS, FWD LP .....
86	Y (EXC VB4, VD1, VE1, VT7 EXPORT)	12048809	1	DISCON	HARNESS, FWD LP .....
87	Y (EXC T72, T84 EXPORT)	12067732	1	DISCON	HARNESS, FWD LP .....
84	Y	12028953	1	DISCON	HARNESS, FWD LP WRG .....
88	Y (EXC T72, T84 EXPORT)	12073487	1	666.86	HARNESS, FWD LP WRG .....
89	Y (5.7–8)	12073487	1	666.86	HARNESS, FWD LP WRG .....
90	Y (5.7–8) (EXC CANADIAN T61) ...	12073776	1	666.86	HARNESS, FWD LP WRG .....

© 2000 GENERAL MOTORS SERVICE PARTS OPERATIONS

2.480 BRACKET – CONNECTOR – HARNESS – WIRE, Chassis Wiring(Con't)

90	Y (5.7J) SOFT RIDE SUSP (FE1), H .D .SUSP (EXC CANADIAN T61) ...	12090331	1	985.50	HARNESS, FWD LP WRG .....
91	Y 5.7–8 (L98), (EXC DAYTIME RUNNING LGT (T61)	12080863	1	985.50	HARNESS, FWD LP WRG .....
91	Y 5.7J (LT5), SOFT RIDE SUSP (FE1), HVY DUTY SUSP (FE7), (EXC DAYTIME RUNNING LGT (T61)	12080864	1	666.86	HARNESS, FWD LP WRG .....
92	Y 5.7P (LT1), (EXC DAYTIME RUNNING LGT (T61)	12090371	1	292.85	HARNESS, FWD LP WRG .....
92	Y 5.7J (LT5), (EXC DAYTIME RUNNING LGT (T61)	12090372	1	315.14	HARNESS, FWD LP WRG .....
93	Y 5.7P (LT1), (EXC DIAGNOSTIC SYSTEM (BAK), DAYTIME RUNNING LGT (T61)	12106580	1	816.00	HARNESS, FWD LP WRG .....
93–94	Y 5.7J (LT5), (EXC DAYTIME RUNNING LGT (T61)	12106583	1	985.50	HARNESS, FWD LP WRG .....
93	Y 5.7F (LT1), DIAGNOSTIC SYSTEM (BAK), (EXC DAYTIME RUNNING LGT (T61)	12141822	1	292.85	HARNESS, FWD LP WRG .....
94	Y 5.7P (LT1), (EXC HDLP (T72) (EXPORT), RH RULE OF ROAD HDLP (T84) (EXPORT), LH RULE OF ROAD HDLP (T85) (EXPORT), SIG & MKR LP (T90) (EXPORT) ...	12130480	1	292.85	HARNESS, FWD LP WRG .....
94	Y 5.7J (LT5), (EXC HDLP (T72) (EXPORT), RH RULE OF ROAD HDLP (T84) (EXPORT), LH RULE OF ROAD HDLP (T85) (EXPORT), SIG & MKR LP (T90) (EXPORT) ...	12154336	1	292.85	HARNESS, FWD LP WRG .....
95	Y 5.7P (LT1), (EXC HDLP (T72) (EXPORT), RH RULE OF ROAD HDLP (T84) (EXPORT), LH RULE OF ROAD HDLP (T85) (EXPORT), SIG & MKR LP (T90) (EXPORT) ...	12130484	1	292.85	HARNESS, FWD LP WRG .....
95	Y 5.7J (LT5), (EXC HDLP (T72) (EXPORT), RH RULE OF ROAD HDLP (T84) (EXPORT), LH RULE OF ROAD HDLP (T85) (EXPORT), SIG & MKR LP (T90) (EXPORT) ...	12130486	1	292.85	HARNESS, FWD LP WRG .....
95	Y (EXC HDLP (T72) (EXPORT), RH RULE OF ROAD HDLP (T84) (EXPORT), LH RULE OF ROAD HDLP (T85) (EXPORT), SIG & MKR LP (T90) (EXPORT)	12163717	1	292.85	HARNESS, FWD LP WRG .....
85	Y A/TRNS (MD8), A/C (C60)	12048741	1	DISCON	HARNESS, I/P .....
85	Y M/TRNS (MH5, MK2), A/C (C60) ..	12048742	1	DISCON	HARNESS, I/P .....
86	Y M/TRNS, A/C (C60)	12048793	1	DISCON	HARNESS, I/P .....
86	Y A/TRNS, A/C (C60)	12048794	1	DISCON	HARNESS, I/P .....
86	Y M/TRNS, A/C (C68)	12048795	1	DISCON	HARNESS, I/P .....
86	Y A/TRNS, A/C (C68)	12048796	1	DISCON	HARNESS, I/P .....
87	Y A/TRNS, A/C (C68)	12068102	1	1257.59	HARNESS, I/P .....
87	Y M/TRNS, A/C (C68)	12068103	1	1257.59	HARNESS, I/P .....
87	Y A/TRNS, A/C (C60)	12073820	1	DISCON	HARNESS, I/P .....
84	Y A/TRNS (1ST DES)	12036383	1	DISCON	HARNESS, I/P WRG (BLACK 5–WAY AC CONN W/2 DBL WIRES IN CAVS C & D) .....
84	Y M/TRNS	12043083	1	DISCON	HARNESS, I/P WRG .....
84	Y A/TRNS (2ND DES)	12043276	1	DISCON	HARNESS, I/P WRG (1 DBL WIRE IN CAV D) .....
87	Y M/TRNS (MH5, MK2), A/C (C60) ..	12073821	1	DISCON	HARNESS, I/P WRG .....

© 2000 GENERAL MOTORS SERVICE PARTS OPERATIONS

2.480 BRACKET – CONNECTOR – HARNESS – WIRE, Chassis Wiring(Con't)

88	Y (5.7–8) M/TRNS, A/C (C60)	12073824	1	DISCON	HARNESS, I/P WRG .....
88	Y (5.7–8) A/TRNS, A/C (C60)	12073825	1	DISCON	HARNESS, I/P WRG .....
88	Y (5.7–8) M/TRNS, A/C (C68)	12073826	1	DISCON	HARNESS, I/P WRG .....
88	Y (5.7–8) A/TRNS, A/C (C68)	12073827	1	DISCON	HARNESS, I/P WRG .....
89	Y (5.7–8) ML9, A/C (C60) (1ST DES)	12073507	1	1548.75	HARNESS, I/P WRG (PINK WIRE IN B–8 CAV OF VATS MDL CONN) .....
89	Y (5.7–8) A/TRNS (MD8), A/C (C60) (1ST DES)	12073509	1	1548.75	HARNESS, I/P WRG (PINK WIRE IN B–8 CAV OF VATS MDL CONN) .....
89	Y (5.7–8) M/TRNS (ML9), A/C (C68) (1ST DES)	12073511	1	1548.75	HARNESS, I/P WRG (PINK WIRE IN B–8 CAV OF VATS MDL CONN) .....
89	Y (5.7–8) A/TRNS (MD8), A/C (C68) (1ST DES)	12073513	1	1548.75	HARNESS, I/P WRG (PINK WIRE IN B–8 CAV OF VATS MDL CONN) .....
89	Y (5.7–8) ML9, A/C (C60) (2ND DES)	12090315	1	1548.75	HARNESS, I/P WRG (ORANGE WIRE IN B–8 CAV OF VATS MDL CONN) .....
89	Y (5.7–8) A/TRNS (MD8), A/C (C60) (2ND DES)	12090316	1	1257.59	HARNESS, I/P WRG (ORANGE WIRE IN B–8 CAV OF VATS MDL CONN) .....
89	Y (5.7–8) M/TRNS (ML9), A/C (C68) (2ND DES)	12090318	1	1548.75	HARNESS, I/P WRG (ORANGE WIRE IN B–8 CAV OF VATS MDL CONN) .....
89	Y (5.7–8) A/TRNS (MD8), A/C (C68) (2ND DES)	12090319	1	1266.25	HARNESS, I/P WRG (ORANGE WIRE IN B–8 CAV OF VATS MDL CONN) .....
90	Y M/TRNS (ML9), A/C (C60) (EXC CANADIAN T61)	12101432	1	1239.00	HARNESS, I/P WRG (**VPI 1–877–846–8243) .....
90	Y M/TRNS (ML9), A/C (C68) (EXC CANADIAN T61)	12101434	1	1548.75	HARNESS, I/P WRG .....
90	Y 4–SPD A/TRANS (MD8), A/C MAN CONT (C60), (EXC DAYTIME RUNNING LGT (T61)	12102274	1	1257.59	HARNESS, I/P WRG .....
90	Y A/TRNS (MD8), A/C (C68) (EXC CANADIAN T61)	12102538	1	1257.59	HARNESS, I/P WRG .....
91	Y 4–SPD A/TRANS (MD8), A/C MAN CONT (C60), (EXC DAYTIME RUNNING LGT (T61)	12116436	1	1028.20	HARNESS, I/P WRG .....
91	Y 6–SPD M/TRANS (ML9), A/C MAN CONT (C60), (EXC DAYTIME RUNNING LGT (T61)	12116438	1	1028.20	HARNESS, I/P WRG .....
91	Y 4–SPD A/TRANS (MD8), A/C AUTO ELEC CONT (C68), (EXC DAYTIME RUNNING LGT (T61)	12116500	1	1266.25	HARNESS, I/P WRG (MAY REQ 12106563 WIRE IF JMPR PRESENT AT THE PWR SEAT FEED) .....
91	Y 6–SPD M/TRANS (ML9), A/C AUTO ELEC CONT (C68), (EXC DAYTIME RUNNING LGT (T61)	12116502	1	1028.20	HARNESS, I/P WRG .....
92	Y 4–SPD A/TRANS (MD8), A/C MAN CONT (C60), (EXC DAYTIME RUNNING LGT (T61)	12125005	1	1028.20	HARNESS, I/P WRG .....
92	Y 6–SPD M/TRANS (ML9), A/C MAN CONT (C60), (EXC DAYTIME RUNNING LGT (T61)	12125007	1	1257.59	HARNESS, I/P WRG .....
92	Y 4–SPD A/TRANS (MD8), A/C AUTO ELEC CONT (C68), (EXC DAYTIME RUNNING LGT (T61)	12125813	1	881.59	HARNESS, I/P WRG .....
92	Y 6–SPD M/TRANS (ML9), A/C AUTO ELEC CONT (C68), (EXC DAYTIME RUNNING LGT (T61)	12125815	1	881.59	HARNESS, I/P WRG .....
93	Y 4–SPD A/TRANS (MD8), A/C MAN CONT (C60), (EXC SIG & MKR LP (T90) (EXPORT)	12141443	1	1257.59	HARNESS, I/P WRG .....
93	Y 6–SPD M/TRANS (ML9), A/C AUTO ELEC CONT (C68), (EXC SIG & MKR LP (T90) (EXPORT) ...	12141444	1	1257.59	HARNESS, I/P WRG (FOR VEH –DRL, SPLICE CAV D TO CAV E @ BLUE 8–WAY DRL MDL CONN.) .....

© 2000 GENERAL MOTORS SERVICE PARTS OPERATIONS

2.480 BRACKET – CONNECTOR – HARNESS – WIRE, Chassis Wiring(Con't)

93	Y 6–SPD M/TRANS (ML9), A/C MAN CONT (C60), (EXC SIG & MKR LP (T90) (EXPORT)	12141445	1	1257.59	HARNESS, I/P WRG .....
93	Y 4–SPD A/TRANS (MD8), A/C AUTO ELEC CONT (C68), (EXC SIG & MKR LP (T90) (EXPORT) ...	12141446	1	1257.59	HARNESS, I/P WRG (ON VEHS W/O DAYTIME RUNNING LPS SPLICE CAV D & E WIRES TOGETHER AT BLUE DRL MDL CONN.) .....
94	Y 6–SPD M/TRANS (ML9), A/C MAN CONT (C60), (EXC DAYTIME RUNNING LGT (T61), HDLP (T72) (EXPORT), RH RULE OF ROAD HDLP (T84) (EXPORT), LH RULE OF ROAD HDLP (T85) (EXPORT), SIG & MKR LP (T90) (EXPORT) ...	12130324	1		HARNESS, I/P WRG .....
94	Y 6–SPD M/TRANS (ML9), A/C AUTO ELEC CONT (C68), (EXC DAYTIME RUNNING LGT (T61), HDLP (T72) (EXPORT), RH RULE OF ROAD HDLP (T84) (EXPORT), LH RULE OF ROAD HDLP (T85) (EXPORT), SIG & MKR LP (T90) (EXPORT)	12130326	1	1548.75	HARNESS, I/P WRG .....
94	Y 4–SPD A/TRANS (M30), A/C MAN CONT (C60), (EXC DAYTIME RUNNING LGT (T61), HDLP (T72) (EXPORT), RH RULE OF ROAD HDLP (T84) (EXPORT), LH RULE OF ROAD HDLP (T85) (EXPORT), SIG & MKR LP (T90) (EXPORT), (2ND DES)	12130491	1		HARNESS, I/P WRG .....
94	Y 4–SPD A/TRANS (M30), A/C MAN CONT (C60), DAYTIME RUNNING LGT (T61), (EXC HDLP (T72) (EXPORT), RH RULE OF ROAD HDLP (T84) (EXPORT), LH RULE OF ROAD HDLP (T85) (EXPORT), SIG & MKR LP (T90) (EXPORT) ...	12130492	1		HARNESS, I/P WRG .....
94	Y 4–SPD A/TRANS (M30), A/C AUTO ELEC CONT (C68), (EXC DAYTIME RUNNING LGT (T61), HDLP (T72) (EXPORT), RH RULE OF ROAD HDLP (T84) (EXPORT), LH RULE OF ROAD HDLP (T85) (EXPORT), SIG & MKR LP (T90) (EXPORT)	12130493	1	1488.75	HARNESS, I/P WRG .....
94	Y 4–SPD A/TRANS (M30), A/C AUTO ELEC CONT (C68), DAYTIME RUNNING LGT (T61), (EXC HDLP (T72) (EXPORT), RH RULE OF ROAD HDLP (T84) (EXPORT), LH RULE OF ROAD HDLP (T85) (EXPORT), SIG & MKR LP (T90) (EXPORT)	12130494	1		HARNESS, I/P WRG .....
94	Y 4–SPD A/TRANS (M30), A/C MAN CONT (C60), DAYTIME RUNNING LGT (T61), (EXC HDLP (T72) (EXPORT), RH RULE OF ROAD HDLP (T84) (EXPORT), LH RULE OF ROAD HDLP (T85) (EXPORT), SIG & MKR LP (T90) (EXPORT), (1ST DES)	12141787	1		HARNESS, I/P WRG (TAGGED 0320 OR 0321) (ON VEH W/O DRL, AT 8–WAY BLUE CONN TO DRL MDL SPLICE CAV D & CAV E LEADS TOGETHER.) .....

© 2000 GENERAL MOTORS SERVICE PARTS OPERATIONS

2.480 BRACKET – CONNECTOR – HARNESS – WIRE, Chassis Wiring(Con't)

94	Y 4–SPD A/TRANS (M30), A/C AUTO ELEC CONT (C68), DAYTIME RUNNING LGT (T61), (EXC HDLP (T72) (EXPORT), RH RULE OF ROAD HDLP (T84) (EXPORT), LH RULE OF ROAD HDLP (T85) (EXPORT), SIG & MKR LP (T90) (EXPORT), (1ST DES) ...	12141788	1		HARNESS, I/P WRG (TAGGED 0322 OR 0323) (ON VEH W/DAYTIME RUNNING LGHTS, ADD 8–WAY BLUE CONN TO DAYTIME RUNNING LGHT, SPLICE CAV D & CAV E WIRES TOGETHER) .....
94	Y 6–SPD M/TRANS (ML9), A/C MAN CONT (C60), DAYTIME RUNNING LGT (T61), (EXC HDLP (T72) (EXPORT), RH RULE OF ROAD HDLP (T84) (EXPORT), LH RULE OF ROAD HDLP (T85) (EXPORT), SIG & MKR LP (T90) (EXPORT) ...	12141789	1		HARNESS, I/P WRG .....
94	Y 6–SPD M/TRANS (ML9), A/C AUTO ELEC CONT (C68), DAYTIME RUNNING LGT (T61), (EXC HDLP (T72) (EXPORT), RH RULE OF ROAD HDLP (T84) (EXPORT), LH RULE OF ROAD HDLP (T85) (EXPORT), SIG & MKR LP (T90) (EXPORT)	12141790	1		HARNESS, I/P WRG .....
94	Y 6–SPD M/TRANS (ML9), A/C AUTO ELEC CONT (C68), (EXC HDLP (T72) (EXPORT), RH RULE OF ROAD HDLP (T84) (EXPORT), LH RULE OF ROAD HDLP (T85) (EXPORT), SIG & MKR LP (T90) (EXPORT)	12163703	1	1257.59	HARNESS, I/P WRG .....
95	Y 5.7J (LT5), 6–SPD M/TRANS (ML9), A/C AUTO ELEC CONT (C68), (EXC DAYTIME RUNNING LGT (T61)	12130326	1	1548.75	HARNESS, I/P WRG .....
95	Y 5.7P (LT1), 4–SPD A/TRANS (M30), A/C MAN CONT (C60), DAYTIME RUNNING LGT (T61), (EXC HDLP (T72) (EXPORT), RH RULE OF ROAD HDLP (T84) (EXPORT), LH RULE OF ROAD HDLP (T85) (EXPORT), SIG & MKR LP (T90) (EXPORT)	12130389	1	1424.85	HARNESS, I/P WRG .....
95	Y 5.7P (LT1), 4–SPD A/TRANS (M30), A/C AUTO ELEC CONT (C68), DAYTIME RUNNING LGT (T61), (EXC HDLP (T72) (EXPORT), RH RULE OF ROAD HDLP (T84) (EXPORT), LH RULE OF ROAD HDLP (T85) (EXPORT), SIG & MKR LP (T90) (EXPORT)	12130391	1	1424.85	HARNESS, I/P WRG (SPLICE CAV D & E WIRES @ BLUE DRL MDL CONN FOR VEH W/O DRL.) .....
95	Y 5.7J (LT5), 6–SPD M/TRANS (ML9), A/C AUTO ELEC CONT (C68), DAYTIME RUNNING LGT (T61)	12141790	1		HARNESS, I/P WRG .....
95	Y 5.7P (LT1), 6–SPD M/TRANS (ML9), A/C MAN CONT (C60), (EXC DAYTIME RUNNING LGT (T61), HDLP (T72) (EXPORT), RH RULE OF ROAD HDLP (T84) (EXPORT), LH RULE OF ROAD HDLP (T85) (EXPORT), SIG & MKR LP (T90) (EXPORT)	12163700	1	1548.75	HARNESS, I/P WRG .....

© 2000 GENERAL MOTORS SERVICE PARTS OPERATIONS

2.480 BRACKET – CONNECTOR – HARNESS – WIRE, Chassis Wiring(Con't)

95	Y 5.7P (LT1), 6–SPD M/TRANS (ML9), A/C AUTO ELEC CONT (C68), (EXC DAYTIME RUNNING LGT (T61), HDLP (T72) (EXPORT), RH RULE OF ROAD HDLP (T84) (EXPORT), LH RULE OF ROAD HDLP (T85) (EXPORT), SIG & MKR LP (T90) (EXPORT)	12163702	1	1257.59	HARNESS, I/P WRG .....
95	Y 5.7J (LT5), 6–SPD M/TRANS (ML9), A/C AUTO ELEC CONT (C68)	12163703	1	1257.59	HARNESS, I/P WRG .....
96	Y 4–SPD A/TRANS (M30), A/C MAN CONT (C60), (EXC HDLP (T72) (EXPORT), RH RULE OF ROAD HDLP (T84) (EXPORT), LH RULE OF ROAD HDLP (T85) (EXPORT), SIG & MKR LP (T90) (EXPORT) ...	12130468	1	1548.75	HARNESS, I/P WRG (WHEN USE ON VEH W/O DAYTIME RUN LIGHTS, SPLICE CAV D&E TOGETHER @ BLUE 8–WAY DRL MOD CONN) .....
96	Y 4–SPD A/TRANS (M30), A/C AUTO ELEC CONT (C68), (EXC HDLP (T72) (EXPORT), RH RULE OF ROAD HDLP (T84) (EXPORT), LH RULE OF ROAD HDLP (T85) (EXPORT), SIG & MKR LP (T90) (EXPORT)	12130470	1	1061.69	HARNESS, I/P WRG (WHEN USE ON VEH W/O DAYTIME RUN LIGHTS, SPLICE CAV D&E TOGETHER @ BLUE 8–WAY DRL MOD CONN) .....
96	Y 6–SPD M/TRANS (ML9), A/C MAN CONT (C60), (EXC HDLP (T72) (EXPORT), RH RULE OF ROAD HDLP (T84) (EXPORT), LH RULE OF ROAD HDLP (T85) (EXPORT), SIG & MKR LP (T90) (EXPORT) ...	12130472	1	1257.59	HARNESS, I/P WRG (WHEN USE ON VEH W/O DAYTIME RUN LIGHTS, SPLICE CAV D&E TOGETHER @ BLUE 8–WAY DRL MOD CONN) .....
96	Y 6–SPD M/TRANS (ML9), A/C AUTO ELEC CONT (C68), (EXC HDLP (T72) (EXPORT), RH RULE OF ROAD HDLP (T84) (EXPORT), LH RULE OF ROAD HDLP (T85) (EXPORT), SIG & MKR LP (T90) (EXPORT)	12130474	1	1257.59	HARNESS, I/P WRG (WHEN USE ON VEH W/O DAYTIME RUN LIGHTS, SPLICE CAV D&E TOGETHER @ BLUE 8–WAY DRL MOD CONN) .....
84–91	Y RECL FRT BKT ST (AQ9)	12028999	1	DISCON	HARNESS, I/P WRG HARN EXTN .....
91	Y	12126533	1	DISCON	HARNESS, I/P WRG HARN EXTN (VALET MODE) (USE W/4 PIN ENG PWR SW CONN) ... .
92–93	Y RECL FRT BKT ST (AQ9)	12106560	1	47.45	HARNESS, I/P WRG HARN EXTN .....
85–91	Y	12029463	1	25.75	HARNESS, INT AIR TEMP SEN WRG ...
84–85	Y	12028667	1	DISCON	HARNESS, MIR LP WRG .....
	*EXPORT**********EXPORT**********EXPORT**********EXPORT**********EXPORT*				
84	Y NM5 (EXPORT CANADA) (2ND DES)	12029435	1	DISCON	HARNESS, ELEK CONT MDL (OIL PRESS SW HAS 3 SINGLE WIRES) ..
84	Y NM5 (EXPORT CANADA) (1ST DES)	12029044	1	DISCON	HARNESS, ELEK CONT MDL WRG (OIL PRESS SW CONN HAS 1 DBL WIRE & 1 SGL WIRE) .....
86	Y M/TRNS, A/C (C60), (NM5) EXPORT, CANADA (EXC NM8 EXPORT)	12048815	1	DISCON	HARNESS, ENG & ECM WRG (02.525) .
86	Y A/TRNS, NM8 (EXPORT)	12048819	1	DISCON	HARNESS, ENG & ECM WRG (02.525) .
86	Y07 M/TRNS, A/C (C68), (NM5) EXPORT, CANADA (EXC NM8 EXPORT)	12048816	1	DISCON	HARNESS, ENG & ECM WRG (02.525) .
87	Y A/TRNS, A/C, NM5 (EXPORT, CANADA) (EXC NM8 EXPORT)	12067672	1	DISCON	HARNESS, ENG & ECM WRG (02.525) .
87	Y A/TRNS, A/C (C68), NM5 (EXPORT, CANADA) (EXC NM8 EXPORT)	12067673	1	DISCON	HARNESS, ENG & ECM WRG (02.525) .

© 2000 GENERAL MOTORS SERVICE PARTS OPERATIONS

2.480 BRACKET – CONNECTOR – HARNESS – WIRE, Chassis Wiring(Con't)

87	Y A/TRNS, NM8 (EXPORT)	12067674	1	DISCON	HARNESS, ENG & ECM WRG (02.525) .
84	Y VB4, VD1, VE1, VT7 (EXPORT) ...	12029218	1	DISCON	HARNESS, FWD LP .....
85	Y VB4, VD1, VE1, VT7 (EXPORT) ...	12050642	1	DISCON	HARNESS, FWD LP .....
86	Y VB4, VD1, VE1, VT7 (EXPORT) ...	12055776	1	DISCON	HARNESS, FWD LP .....
87	Y T72, T84 (EXPORT)	12067734	1	DISCON	HARNESS, FWD LP .....
88	Y T72, T84 (EXPORT)	12055815	1	DISCON	HARNESS, FWD LP WRG .....
90	Y (5.7–8) T61 (CANADIAN)	12090336	1	667.87	HARNESS, FWD LP WRG .....
90	Y (5.7J) T61 (CANADIAN)	12090337	1	987.00	HARNESS, FWD LP WRG .....
91	Y 5.7–8 (L98), DAYTIME RUNNING LGT (T61)	12090346	1	667.87	HARNESS, FWD LP WRG .....
91	Y 5.7J (LT5), DAYTIME RUNNING LGT (T61)	12090347	1	667.87	HARNESS, FWD LP WRG .....
92	Y 5.7P (LT1), DAYTIME RUNNING LGT (T61)	12090373	1	667.87	HARNESS, FWD LP WRG .....
92	Y 5.7J (LT5), DAYTIME RUNNING LGT (T61)	12090374	1	667.87	HARNESS, FWD LP WRG .....
93	Y 5.7P (LT1), DAYTIME RUNNING LGT (T61)	12106581	1	666.86	HARNESS, FWD LP WRG .....
93	Y 5.7J (LT5), DAYTIME RUNNING LGT (T61)	12106582	1	611.03	HARNESS, FWD LP WRG .....
94	Y 5.7P (LT1), HDLP (T72) (EXPORT), RH RULE OF ROAD HDLP (T84) (EXPORT), LH RULE OF ROAD HDLP (T85) (EXPORT), SIG & MKR LP (T90) (EXPORT)	12130481	1		HARNESS, FWD LP WRG .....
94	Y 5.7J (LT5), HDLP (T72) (EXPORT), RH RULE OF ROAD HDLP (T84) (EXPORT), LH RULE OF ROAD HDLP (T85) (EXPORT), SIG & MKR LP (T90) (EXPORT)	12154337	1		HARNESS, FWD LP WRG .....
95	Y 5.7P (LT1), HDLP (T72) (EXPORT), RH RULE OF ROAD HDLP (T84) (EXPORT), LH RULE OF ROAD HDLP (T85) (EXPORT), SIG & MKR LP (T90) (EXPORT)	12130485	1	292.85	HARNESS, FWD LP WRG .....
96	Y HDLP (T72) (EXPORT), RH RULE OF ROAD HDLP (T84) (EXPORT), LH RULE OF ROAD HDLP (T85) (EXPORT), SIG & MKR LP (T90) (EXPORT)	12163718	1	272.58	HARNESS, FWD LP WRG .....
94–96	Y HDLP (T72) (EXPORT), RH RULE OF ROAD HDLP (T84) (EXPORT), LH RULE OF ROAD HDLP (T85) (EXPORT), SIG & MKR LP (T90) (EXPORT)	12130344	2	40.09	HARNESS, FWD LP WRG HARN EXTN .
90	Y M/TRNS (ML9), A/C (C60), T61 (CANADIAN)	12101433	1	1266.25	HARNESS, I/P WRG .....
90	Y M/TRNS (ML9), A/C (C68), T61 (CANADIAN)	12101435	1	1266.25	HARNESS, I/P WRG .....
90	Y A/TRNS (MD8), A/C (C68), T61 (CANADIAN)	12102273	1	1028.20	HARNESS, I/P WRG .....
90	Y A/TRNS (MD8), A/C (C60), T61 (CANADIAN)	12102537	1		HARNESS, I/P WRG .....
91	Y 4–SPD A/TRANS (MD8), A/C MAN CONT (C60), DAYTIME RUNNING LGT (T61)	12116437	1	1028.20	HARNESS, I/P WRG .....
91	Y 6–SPD M/TRANS (ML9), A/C MAN CONT (C60), DAYTIME RUNNING LGT (T61)	12116439	1	1028.20	HARNESS, I/P WRG .....

© 2000 GENERAL MOTORS SERVICE PARTS OPERATIONS

2.480 BRACKET -- CONNECTOR -- HARNESS -- WIRE, Chassis Wiring(Con't)

91	Y 4-SPD A/TRANS (MD8), A/C AUTO ELEC CONT (C68), DAYTIME RUNNING LGT (T61)	12116501	1	1028.20	HARNESS, I/P WRG .....
91	Y 6-SPD M/TRANS (ML9), A/C AUTO ELEC CONT (C68), DAYTIME RUNNING LGT (T61)	12116503	1	1028.20	HARNESS, I/P WRG .....
92	Y 4-SPD A/TRANS (MD8), A/C MAN CONT (C60), DAYTIME RUNNING LGT (T61)	12125006	1	1028.20	HARNESS, I/P WRG .....
92	Y 6-SPD M/TRANS (ML9), A/C MAN CONT (C60), DAYTIME RUNNING LGT (T61)	12125008	1	1028.20	HARNESS, I/P WRG .....
92	Y 4-SPD A/TRANS (MD8), A/C AUTO ELEC CONT (C68), DAYTIME RUNNING LGT (T61)	12125814	1	1028.20	HARNESS, I/P WRG .....
92	Y 6-SPD M/TRANS (ML9), A/C AUTO ELEC CONT (C68), DAYTIME RUNNING LGT (T61)	12125816	1	1028.20	HARNESS, I/P WRG .....
93	Y 6-SPD M/TRANS (ML9), A/C AUTO ELEC CONT (C68), SIG & MKR LP (T90) (EXPORT)	12141441	1	1547.50	HARNESS, I/P WRG .....
93	Y 4-SPD A/TRANS (MD8), A/C AUTO ELEC CONT (C68), SIG & MKR LP (T90) (EXPORT)	12141442	1	1256.57	HARNESS, I/P WRG .....
94	Y 4-SPD A/TRANS (M30), A/C AUTO ELEC CONT (C68), HDLP (T72) (EXPORT), RH RULE OF ROAD HDLP (T84) (EXPORT), LH RULE OF ROAD HDLP (T85) (EXPORT), SIG & MKR LP (T90) (EXPORT)	12130495	1		HARNESS, I/P WRG .....
94	Y 4-SPD A/TRANS (M30), A/C AUTO ELEC CONT (C68), HDLP (T72) (EXPORT), RH RULE OF ROAD HDLP (T84) (EXPORT), LH RULE OF ROAD HDLP (T85) (EXPORT), SIG & MKR LP (T90) (EXPORT), (1ST DES)	12141791	1		HARNESS, I/P WRG (TAGGED 0328) ...
94	Y 6-SPD M/TRANS (ML9), A/C AUTO ELEC CONT (C68), HDLP (T72) (EXPORT), RH RULE OF ROAD HDLP (T84) (EXPORT), LH RULE OF ROAD HDLP (T85) (EXPORT), SIG & MKR LP (T90) (EXPORT)	12141792	1		HARNESS, I/P WRG .....
95	Y 5.7P (LT1), 4-SPD A/TRANS (M30), A/C AUTO ELEC CONT (C68), HDLP (T72) (EXPORT), RH RULE OF ROAD HDLP (T84) (EXPORT), LH RULE OF ROAD HDLP (T85) (EXPORT), SIG & MKR LP (T90) (EXPORT), (EXC DAYTIME RUNNING LGT (T61)	12130396	1	1257.59	HARNESS, I/P WRG .....
95	Y 5.7P (LT1), 6-SPD M/TRANS (ML9), A/C MAN CONT (C60), DAYTIME RUNNING LGT (T61), (EXC HDLP (T72) (EXPORT), RH RULE OF ROAD HDLP (T84) (EXPORT), LH RULE OF ROAD HDLP (T85) (EXPORT), SIG & MKR LP (T90) (EXPORT)	12163701	1	1257.59	HARNESS, I/P WRG .....

© 2000 GENERAL MOTORS SERVICE PARTS OPERATIONS

2.480 BRACKET – CONNECTOR – HARNESS – WIRE, Chassis Wiring(Con't)

95	Y 5.7P (LT1), 6–SPD M/TRANS (ML9), A/C AUTO ELEC CONT (C68), DAYTIME RUNNING LGT (T61), (EXC HDLP (T72) (EXPORT), RH RULE OF ROAD HDLP (T84) (EXPORT), LH RULE OF ROAD HDLP (T85) (EXPORT), SIG & MKR LP (T90) (EXPORT)	12163703	1	1257.59	HARNESS, I/P WRG .....
95	Y 5.7P (LT1), 6–SPD M/TRANS (ML9), A/C AUTO ELEC CONT (C68), HDLP (T72) (EXPORT), RH RULE OF ROAD HDLP (T84) (EXPORT), LH RULE OF ROAD HDLP (T85) (EXPORT), SIG & MKR LP (T90) (EXPORT), (EXC DAYTIME RUNNING LGT (T61)	12163704	1	1257.59	HARNESS, I/P WRG .....
96	Y 4–SPD A/TRANS (M30), A/C AUTO ELEC CONT (C68), HDLP (T72) (EXPORT), RH RULE OF ROAD HDLP (T84) (EXPORT), LH RULE OF ROAD HDLP (T85) (EXPORT), SIG & MKR LP (T90) (EXPORT), (EXC DAYTIME RUNNING LGT (T61)	12130475	1	1257.59	HARNESS, I/P WRG .....
96	Y 5.7–5 (LT4), 6–SPD M/TRANS (ML9), A/C AUTO ELEC CONT (C68), HDLP (T72) (EXPORT), RH RULE OF ROAD HDLP (T84) (EXPORT), LH RULE OF ROAD HDLP (T85) (EXPORT), SIG & MKR LP (T90) (EXPORT), (EXC DAYTIME RUNNING LGT (T61)	12163715	1	1257.59	HARNESS, I/P WRG .....

2.559 BOLT – BRACKET – CLIP – COVER – INSULATOR – PLATE – RETAINER – SHIELD – SPACER – STRAP – STUD – WASHER, Chassis/Engine Wiring Harness

84–89	Y 5.7–8	14062552	1	1.12	BRACKET, ECM WRG HARN .....
90–91	Y 5.7–8 (L98)	14062552	1	1.12	BRACKET, ECM WRG HARN .....
84	Y	14066570	2	DISCON	BRACKET, ELEC CONT MDL HARN (TO ENG HD CVR) .....
84	Y	14057560	1	DISCON	BRACKET, ENG WRG HARN (TO CASL, ...
84–91	Y	14062511	AR	2.04	BRACKET, ENG WRG HARN (R/SI RR) .
84–85	Y	14062552	1	1.12	BRACKET, ENG WRG HARN (TO OIL PAN) .....
84–88	Y	14062599	AR	.68	BRACKET, ENG WRG HARN (ABOVE LH ENG MT) .....
84–88	Y	14073493	1	2.04	BRACKET, ENG WRG HARN (L/SI RR) ..
85–87	Y	14100810	1	DISCON	BRACKET, ENG WRG HARN (RH SI INT MANIF) .....
89–91	Y 5.7–8 (L98)	14062599	AR	.68	BRACKET, ENG WRG HARN (ABOVE LH ENG MT) .....
89–01	Y 5.7–8 (L98), 4–SPD A/TRANS (MD8)	14073493	1	2.04	BRACKET, ENG WRG HARN (L/SI RR) ..
89	Y M/TRNS	14104953	1	DISCON	BRACKET, ENG WRG HARN (L/SI RR) ..
90	Y 5.7J (LT5), A/C MAN CONT (C60), A/C AUTO ELEC CONT (C68), SOFT RIDE SUSP (FE1), HVY DUTY SUSP (FE7)	14104749	1	2.04	BRACKET, ENG WRG HARN (ALUM, LOC AT RR OF ENG) .....

© 2000 GENERAL MOTORS SERVICE PARTS OPERATIONS

2.559 BOLT – BRACKET – CLIP – COVER – INSULATOR – PLATE – RETAINER – SHIELD – SPACER – STRAP – STUD – WASHER, Chassis/Engine Wiring Harness(Con't)

90–91	Y 5.7J (LT5)	14104938	1	35.45	BRACKET, ENG WRG HARN (AT OXY & KNOCK SEN CABLES) (STEEL) (LWR LH SI OF BLK NEAR OIL PAN)
91–95	Y 5.7J (LT5)	14104749	1	2.04	BRACKET, ENG WRG HARN (ALUM, LOC AT RR OF ENG)
91–92	Y 5.7J (LT5)	14104941	1	12.90	BRACKET, ENG WRG HARN (TO OIL PAN) (03.682)
91	Y 5.7–8 (L98)	15664822	1	1.05	BRACKET, ENG WRG HARN (01.166)
92–95	Y 5.7J (LT5)	10098912	1	12.90	BRACKET, ENG WRG HARN (03.682)
92–95	Y 5.7P (LT1)	12553341	4	1.12	BRACKET, ENG WRG HARN
92–95	Y 5.7J (LT5)	14104938	1	35.45	BRACKET, ENG WRG HARN (STEEL) (LWR LH SI OF BLK NEAR OIL PAN)
96	Y	12553341	5	1.12	BRACKET, ENG WRG HARN (POS#RH–3, 6, 8, LH–6, 7)
89	Y A/C MAN CONT (C60), A/C AUTO ELEC CONT (C68), SOFT RIDE SUSP (FE1), HVY DUTY SUSP (FE7)	14104961	1	11.32	BRACKET, ENG WRG HARN SHLD
90–91	Y 5.7J (LT5), A/C MAN CONT (C60), A/C AUTO ELEC CONT (C68), SOFT RIDE SUSP (FE1), HVY DUTY SUSP (FE7)	14104961	1	11.32	BRACKET, ENG WRG HARN SHLD
92–95	Y 5.7J (LT5)	14104961	1	11.32	BRACKET, ENG WRG HARN SHLD
84–86	Y	14066531	LH	DISCON	BRACKET, FWD LP WRG HARN (TO FRT BPR IMPACT BAR)
84–86	Y	14066532	RH	DISCON	BRACKET, FWD LP WRG HARN (TO FRT BPR IMPACT BAR)
84–90	Y	14091207	LH	7.55	BRACKET, FWD LP WRG HARN (TO REINFORCEMENT OTR)
84–89	Y	14091208	RH	7.55	BRACKET, FWD LP WRG HARN (TO REINFORCEMENT OTR)
90	Y SOFT RIDE SUSP (FE1), H .D .SUSP (FE7)	14091208	RH	7.55	BRACKET, FWD LP WRG HARN (TO REINFORCEMENT OTR)
84–86	Y	14062523	1	DISCON	BRACKET, I/P WRG HARN
90–93	Y	10165378	1	DISCON	BRACKET, I/P WRG HARN
94–96	Y	10251214	1	6.03	BRACKET, I/P WRG HARN
84–96	Y	14066583	2	3.26	BRACKET, I/P WRG HARN DR LEAD
84–88	Y M/TRNS	14081179	1	DISCON	BRACKET, TBI HARNESS CLIP
88–89	Y A/C (C68)	09798835	1	1.20	CLIP, A .C. DA WIRE TO EVAP HSNG
84–93	Y 4–SPD A/TRANS (MD8)	08673068	2	1.82	CLIP, A/TRNS WRG HARN (04.197) (AC–DELCO #8673068)
90–91	Y 5.7J (LT5), A/C MAN CONT (C60), A/C AUTO ELEC CONT (C68), SOFT RIDE SUSP (FE1), HVY DUTY SUSP (FE7)	14104936	1	.94	CLIP, ENG WRG HARN (2 HOLES) (FRT CVR CYL CASE)
90–95	Y 5.7J (LT5)	14104937	1	.94	CLIP, ENG WRG HARN (1 HOLE) (OIL FILTER HSG)
92–95	Y 5.7J (LT5)	14104936	1	.94	CLIP, ENG WRG HARN (2 HOLES) (FRT CVR CYL CASE)
93–95	Y 5.7P (LT1)	01864022	1	.77	CLIP, ENG WRG HARN (1/2 DIA HARD STL)
93–94	Y 5.7P (LT1)	01864022	1	.77	CLIP, FWD LP WRG HARN (1/2 DIA HARD STL)
93–94	Y	03816659	AR	*.87	CLIP, FWD LP WRG HARN (7" ADJ, W/ROSEBUD FOR .25 DIA HOLE .031–.14 TH) (08.965) (STRAP)
94	Y 5.7J (LT5)	01864022	1	.77	CLIP, FWD LP WRG HARN (1/2 DIA HARD STL)

© 2000 GENERAL MOTORS SERVICE PARTS OPERATIONS

2.559 BOLT – BRACKET – CLIP – COVER – INSULATOR – PLATE – RETAINER – SHIELD – SPACER – STRAP – STUD – WASHER, Chassis/Engine Wiring Harness(Con't)

85	Y	09798835	1	1.20	CLIP, I/P WRG HARN
93–94	Y	01839906	1	*.13	CLIP, I/P WRG HARN (LARGE 3–5 WIRE) (08.965) (AC–DELCO #1839906)
93	Y	01864022	1	.77	CLIP, I/P WRG HARN (1/2 DIA HARD STL)
92–93	Y RECL FRT BKT ST (AQ9)	01864022	1	.77	CLIP, I/P WRG HARN EXTN HARN (1/2 DIA HARD STL)
94–95	Y	01864022	1	.77	CLIP, WRG HARN (BRK PRESS MOD VLV) (1/2 DIA HARD STL)
86–96	Y	14090618	1	7.05	PLATE, ECM WRG HARN GROM RET STUD (03.675)
92–96	Y	10086254	1	3.37	PLATE, ELEK BRK CONT WRG HARN GROM MT
90–96	Y	10086254	1	3.37	PLATE, ENG WRG HARN GROM BKG
84–87	Y	00480534	AR	*.84	RETAINER, PNL HOLE (DIA.250, THK .03–.30) (11.419)
93	Y 5.7P (LT1), 6–SPD M/TRANS (ML9), DIAGNOSTIC SYSTEM (BAK), A/C MAN CONT (C60)	12129021	4	1.52	RETAINER, ECM WRG HARN (BLACK) (32–WAY F)
93	Y 5.7P (LT1), 6–SPD M/TRANS (ML9), DIAGNOSTIC SYSTEM (BAK), A/C MAN CONT (C60)	12129022	4	1.52	RETAINER, ECM WRG HARN (CLEAR) (USE W/32–WAY CONN)
93	Y 5.7P (LT1), 6–SPD M/TRANS (ML9), DIAGNOSTIC SYSTEM (BAK), A/C MAN CONT (C60)	12129023	4	1.52	RETAINER, ECM WRG HARN (BLUE) (USE W/32–WAY CONN)
94	Y 5.7P (LT1)	12129021	4	1.52	RETAINER, ECM WRG HARN (BLACK) (32–WAY F)
94	Y 5.7P (LT1)	12129022	4	1.52	RETAINER, ECM WRG HARN (CLEAR) (USE W/32–WAY CONN)
94	Y 5.7P (LT1)	12129023	4	1.52	RETAINER, ECM WRG HARN (BLUE) (USE W/32–WAY CONN)
89–91	Y	12020833	1	*.73	RETAINER, ECM WRG HARN CONN (GRAY) (1" LONG) (PUSH–IN)
94–96	Y	12129030	2	2.50	RETAINER, ECM WRG HARN CONN (GRAY) (STRAIN RELIEF)
96	Y	12129021	4	1.52	RETAINER, ECM WRG HARN CONN (BLACK) (32–WAY F)
96	Y	12129022	4	1.52	RETAINER, ECM WRG HARN CONN (CLEAR) (USE W/32–WAY CONN)
96	Y	12129023	4	1.52	RETAINER, ECM WRG HARN CONN (BLUE) (USE W/32–WAY CONN)
96	Y	12129024	3	2.50	RETAINER, ECM WRG HARN CONN (RED) (USE W/32–WAY CONN)
96	Y	12129028	2	2.50	RETAINER, ECM WRG HARN CONN (GRAY) (32–WAY)
84–88	Y	14066575	1	DISCON	RETAINER, ENG WRG HARN
89–91	Y 5.7–8 (L98)	14104541	1	4.13	RETAINER, ENG WRG HARN
92–95	Y 5.7P (LT1)	14104541	1	4.13	RETAINER, ENG WRG HARN
96	Y	14104541	1	4.13	RETAINER, ENG WRG HARN
90–91	Y	12077396	1	.52	RETAINER, F/INJR WRG HARN CONN (02.535)
84	Y 5.7–8 (L83)	08917236	1	1.45	RETAINER, OXY SEN CONN
85–91	Y 5.7–8 (L98)	08917236	1	1.45	RETAINER, OXY SEN CONN
92–94	Y 5.7P (LT1), (EXC LEADED FUEL EMIS EXPORT (NM8)	08917236	1	1.45	RETAINER, OXY SEN CONN

© 2000 GENERAL MOTORS SERVICE PARTS OPERATIONS

3.130 BRACKET – CANISTER – NUT – SHIELD – VALVE, Fuel Tank Evaporator Control (Engine End)

91–95	Y	10234809	1	15.05	BRACKET, EVAP EMIS CNSTR
96	Y 5.7P (LT1), 5.7–5 (LT4)	10234809	1	15.05	BRACKET, EVAP EMIS CNSTR
90–95	Y 5.7J (LT5)	10174301	1	8.16	BRACKET, EVAP EMIS CNSTR PURGE SOL VLV
91	Y	10137634	1	4.13	BRACKET, EVAP EMIS CNSTR PURGE SOL VLV (03.145)
92–95	Y 5.7P (LT1)	10137656	1	4.13	BRACKET, EVAP EMIS CNSTR PURGE SOL VLV
96	Y 5.7P (LT1), 4–SPD A/TRANS (M30)	12551612	1	3.11	BRACKET, EVAP EMIS CNSTR PURGE SOL VLV
96	Y 5.7–5 (LT4), 6–SPD M/TRANS (ML9)	12551612	1	3.11	BRACKET, EVAP EMIS CNSTR PURGE SOL VLV
84–90	Y	10105270	1	40.04	BRACKET, FUEL VPR CNSTR
84	Y	17087180	1	56.98	CANISTER, EVAP EMIS (AC–DELCO #215–59)
85–90	Y	17113150	1	72.87	CANISTER, EVAP EMIS (AC–DELCO #215–155)
91–95	Y	17090139	1	47.88	CANISTER, EVAP EMIS (AC–DELCO #215–75)
96	Y	17113065	1	61.51	CANISTER, EVAP EMIS (AC–DELCO #215–127)
89–90	Y	12337995	2	*.46	NUT, BOOS TO BRK PED BRKT @ DA (00.334) (AC–DELCO #12337995)
92–96	Y 5.7P (LT1)	09442958	1	*1.00	NUT, EVAP EMIS CNSTR PURGE SOL VLV (3/8–16 PC, 286M) (HEX, FLANGE) (08.917)
96	Y 5.7–5 (LT4)	09442958	1	*1.00	NUT, EVAP EMIS CNSTR PURGE SOL VLV (3/8–16 PC, 286M) (HEX, FLANGE) (08.917)
91–95	Y	10105360	1	12.90	SHIELD, EVAP EMIS CNSTR SPH (03.120)
96	Y 5.7P (LT1), 5.7–5 (LT4)	10105360	1	12.90	SHIELD, EVAP EMIS CNSTR SPH (03.120)
84	Y	01997629	1	25.59	VALVE, EVAP EMIS CNSTR PURGE SOL (03.140) (AC–DELCO #214–383)
85	Y	01997101	1	25.37	VALVE, EVAP EMIS CNSTR PURGE SOL (03.140) (AC–DELCO #214–370)
87	Y	01997101	1	25.37	VALVE, EVAP EMIS CNSTR PURGE SOL (03.140) (AC–DELCO #214–370)
88–90	Y	01997181	1	26.10	VALVE, EVAP EMIS CNSTR PURGE SOL (03.140) (AC–DELCO #214–375)
90	Y 5.7J (LT5)	01997201	1	25.89	VALVE, EVAP EMIS CNSTR PURGE SOL (AC–DELCO #214–565)
91–96	Y	01997201	1	25.89	VALVE, EVAP EMIS CNSTR PURGE SOL (2 PORT VAC, 2 BLADE TERM) (AC–DELCO #214–565)
85–87	Y	17087240	1	27.70	VALVE, EVAP EMIS PRESS CONT (AC–DELCO #214–548)
88–90	Y	17087240	1	27.70	VALVE, EVAP EMIS PRESS CONT (AC–DELCO #214–548)
91	Y	10105329	1	63.77	VALVE, EVAP EMIS PRESS CONT (W/CONN & CLAMPS) (AC–DELCO #214–531)
91	Y	17091140	1	32.27	VALVE, EVAP EMIS PRESS CONT (W/O CONN & CLAMPS) (AC–DELCO #214–558)

© 2000 GENERAL MOTORS SERVICE PARTS OPERATIONS

3.130 BRACKET – CANISTER – NUT – SHIELD – VALVE, Fuel Tank Evaporator Control (Engine End)(Con't)

92–96	Y	10105386	1	53.77	VALVE, EVAP EMIS PRESS CONT (PKG, W/CONN & CLAMPS) (AC–DELCO #214–532)
92–95	Y	17091151	1	27.23	VALVE, EVAP EMIS PRESS CONT (W/O CONN & CLAMPS) (AC–DELCO #214–559)
96	Y 5.7P (LT1), 5.7–5 (LT4)	17091151	1	27.23	VALVE, EVAP EMIS PRESS CONT (AC–DELCO #214–559)

3.140 BRACKET – CONNECTOR – COVER – SOLENOID – SWITCH, Early Fuel Evaporation Control

96	Y 5.7P (LT1), 4–SPD A/TRANS (M30)	12551614	1	.87	BRACKET, EVAP EMIS CNSTR PURGE VAC DIAGN SW
96	Y 5.7–5 (LT4), 6–SPD M/TRANS (ML9)	12551614	1	.87	BRACKET, EVAP EMIS CNSTR PURGE VAC DIAGN SW
86	Y	01997153	1	23.42	SOLENOID, FUEL VPR CNSTR PURGE (AC–DELCO #1997153)
96	Y 5.7P (LT1)	12555984	1	13.52	SWITCH, EVAP EMIS CNSTR PURGE VAC (SWITCH W/2 CONNECTIONS W/VENT HOLE)
96	Y 5.7–5 (LT4)	12555984	1	13.52	SWITCH, EVAP EMIS CNSTR PURGE VAC (SWITCH W/2 CONNECTIONS W/VENT HOLE)

3.145 BRACKET – CLAMP – CLIP – CONNECTOR – HARNESS – HOSE – PIPE – SHIELD – TUBE, Early Fuel Evaporation

86–89	Y67	14092701	1	7.75	BRACKET, BRK & FUEL VPR PIPE
87	Y07 1BL (PERF HDLG PKG Z51), B2B (SPORT HDLG PKG Z52)	14092701	1	7.75	BRACKET, BRK & FUEL VPR PIPE
88–89	Y07 PERF HDLG PKG (Z51), SPORT HDLG PKG (Z52)	14092701	1	7.75	BRACKET, BRK & FUEL VPR PIPE
90–91	Y	14092701	1	7.75	BRACKET, FUEL VPR PIPE
96	Y 5.7P (LT1), 5.7–5 (LT4)	12555830	1	.75	CONNECTOR, EVAP EMIS CNSTR PURGE HOSE (90 DEG ELBOW)
91–95	Y	10046034	1	.77	CONNECTOR, EVAP EMIS HOSE (03.130)
96	Y 5.7P (LT1), 5.7–5 (LT4)	10046084	1	.77	CONNECTOR, EVAP EMIS HOSE (03.130)
84–96	Y	00474793	1	13.42	CONNECTOR, EVAP EMIS INTER HOSE (THREADS MUST BE SEALED W/THREAD SEALANT 12346004.) (03.680)
85–86	Y	10496084	1	DISCON	CONNECTOR, TEE
87	Y	10046010	1	DISCON	HARNESS, FUEL VPR CNSTR
88–89	Y	10055891	1	23.36	HARNESS, FUEL VPR CNSTR
90	Y (5.7–8)	10055891	1	23.36	HARNESS, FUEL VPR CNSTR
90	Y (5.7J) SOFT RIDE SUSP (FE1), H.D .SUSP (FE7)	14104815	1	33.66	HARNESS, FUEL VPR CNSTR
91–95	Y	10105300	1	43.35	HOSE, EVAP EMIS CNSTR PURGE
96	Y 5.7P (LT1), 5.7–5 (LT4)	12552593	1	32.39	HOSE, EVAP EMIS CNSTR PURGE
92–95	Y 5.7P (LT1)	10105299	1	3.67	HOSE, EVAP EMIS CNSTR PURGE SOL VLV
96	Y 5.7P (LT1), 4–SPD A/TRANS (M30)	12551611	1	3.16	PIPE, EVAP EMIS CNSTR PURGE SOL VLV
96	Y 5.7–5 (LT4), 6–SPD M/TRANS (ML9)	12551611	1	3.16	PIPE, EVAP EMIS CNSTR PURGE SOL VLV
86–96	Y	14104690	1	18.26	SHIELD, BRK & EVAP EMIS PIPE
88–90	Y 5.7–8	10055892	1	5.41	TUBE, EVAP EMIS CNSTR PURGE

© 2000 GENERAL MOTORS SERVICE PARTS OPERATIONS

3.145 BRACKET – CLAMP – CLIP – CONNECTOR – HARNESS – HOSE – PIPE – SHIELD – TUBE, Early Fuel Evaporation(Con't)

96	Y 5.7P (LT1), 4–SPD A/TRANS (M30)	12551608	1	3.25	TUBE, EVAP EMIS CNSTR PURGE
96	Y 5.7–5 (LT4), 6–SPD M/TRANS (ML9)	12551608	1	3.25	TUBE, EVAP EMIS CNSTR PURGE
87	Y	10046011	1	DISCON	TUBE, FUEL VPR CNSTR

3.163 CONNECTOR – FITTING – GASKET – HOSE – INSULATOR – PIPE – PIPE KIT – SEAL – SEAL KIT – SHIELD – SPACER, Fuel Line

Note: FOR 1984 USAGE REFER TO ELECTRONIC FUEL INJECTION CHART GRP 3.725

90–95	Y 5.7J (LT5)	10110987	1	5.46	HOSE, CARB FUEL FEED
84	Y	14060103	1	DISCON	HOSE, FUEL FEED FRT
84	Y	14060104	1	DISCON	HOSE, FUEL RTN FRT
87	Y	10080721	1	DISCON	HOSE, FUEL RTN FRT
87	Y	10066662	1	DISCON	HOSE, FUEL RTN RR

3.265 BOLT – EMBLEM – EXTENSION – GUARD – MANIFOLD – PIPE – PLENUM – PLUG – RETAINER – SHIELD – TUBE, Engine Fuel Intake Manifold

Note: EXHAUST MANIFOLD IN GROUP 3.601.

92–96	Y 5.7P (LT1)	11514149	4	1.82	BOLT, INT MANIF OIL SPH SHLD (M6 X 1 X 12) (HFH, 9.8 PE, 12.8 OD DR) (08.900) (AC–DELCO #11514149)
96	Y 5.7–5 (LT4)	11514149	4	1.82	BOLT, INT MANIF OIL SPH SHLD (M6 X 1 X 12) (HFH, 9.8 PE, 12.8 OD DR) (08.900) (AC–DELCO #11514149)
90–95	Y 5.7J (LT5)	11514168	12	1.82	BOLT, INT MANIF PLNM (M8X1.25X25) (08.913) (AC–DELCO #11514168)
90–95	Y 5.7J (LT5)	10174309	1	84.00	EMBLEM, ENG
92–96	Y 5.7P (LT1)	10108673	2	8.85	EMBLEM, ENG
85–88	Y	10108425	1	19.70	EXTENSION, INT MANIF PLNM
89–90	Y (5.7–8)	10108425	1	19.70	EXTENSION, INT MANIF PLNM
91	Y 5.7–8 (L98)	10108425	1	19.70	EXTENSION, INT MANIF PLNM
84	Y A/TRNS	14057016	1	DISCON	MANIFOLD, INT
84	Y M/TRNS, FED & CALIF	14085703	1	DISCON	MANIFOLD, INT
85	Y	14081004	1	DISCON	MANIFOLD, INT
86	Y	14087098	1	DISCON	MANIFOLD, INT
87–88	Y	10108517	1	430.30	MANIFOLD, INT
89–91	Y 5.7–8 (L98)	10066012	1	515.10	MANIFOLD, INT
92	Y 5.7P (LT1)	12518284	1	403.00	MANIFOLD, INT
93	Y 5.7P (LT1), 6–SPD M/TRANS (ML9)	12518284	1	403.00	MANIFOLD, INT
93	Y 5.7P (LT1), 4–SPD A/TRANS (MD8)	12518284	1	403.00	MANIFOLD, INT
94–96	Y 5.7P (LT1)	12552137	1	274.80	MANIFOLD, INT
96	Y 5.7–5 (LT4), 6–SPD M/TRANS (ML9)	12550630	1	274.80	MANIFOLD, INT
85–88	Y (5.7–8)	10108443	1	DISCON	PLENUM, INT MANIF
89	Y FEDERAL EMIS (NA5), (5.7–8)	10108468	1	163.70	PLENUM, INT MANIF
90–91	Y 5.7–8 (L98)	10077151	1	163.70	PLENUM, INT MANIF
90–92	Y 5.7J (LT5)	10090512	1	655.50	PLENUM, INT MANIF (W/O FITTINGS, HOSES, ETC.)
93–95	Y 5.7J (LT5)	12522045	1	1722.10	PLENUM, INT MANIF
96	Y 5.7–5 (LT4)	00144011	1	.41	PLUG, EGR VLV INT MANIF HOLE (1/4–18X.44 AM STD PIPE THD, STL, CZ (USED W/SEALER) (08.971)
89–90	Y (5.7–8)	14090911	1	.86	PLUG, INL MANIF HOLE (08.971)
93–96	Y 5.7P (LT1)	00444595	1	1.70	PLUG, INT MANIF CORE HOLE (04.510)

© 2000 GENERAL MOTORS SERVICE PARTS OPERATIONS

3.265 BOLT – EMBLEM – EXTENSION – GUARD – MANIFOLD – PIPE – PLENUM – PLUG – RETAINER – SHIELD – TUBE, Engine Fuel Intake Manifold(Con't)

96	Y 5.7–5 (LT4)	00444595	1	1.70	PLUG, INT MANIF CORE HOLE (04.510)
93–95	Y 5.7J (LT5)	10067516	1	78.80	PLUG, PLNM AIR BL LWR FRT
85–91	Y 5.7–8 (L98)	14087401	1	10.20	SHIELD, INT MANIF OIL SPH
92–96	Y 5.7P (LT1)	10128305	1	10.56	SHIELD, INT MANIF OIL SPH
96	Y 5.7–5 (LT4)	10128305	1	10.56	SHIELD, INT MANIF OIL SPH
85–88	Y	14081007	LH	DISCON	TUBE, INT MANIF
85–91	Y 5.7–8 (L98)	14081008	RH	DISCON	TUBE, INT MANIF
89–91	Y 5.7–8 (L98), FEDERAL EMIS (NA5)	10108469	LH	166.00	TUBE, INT MANIF (DULL)
	*EXPORT**********EXPORT**********EXPORT**********EXPORT**********EXPORT*				
84	Y M/TRNS, NM8 (EXPORT)	14057016	1	DISCON	MANIFOLD, INT

3.270 GASKET – GASKET KIT, Manifold to Cylinder Head

84	Y (5.7–8)	10174677	1	30.86	GASKET KIT, INT MANIF
85	Y (5.7–8)	10159564	1	28.56	GASKET KIT, INT MANIF
86	Y CAST IRON CYL HD (KB2)	10174956	1	56.87	GASKET KIT, INT MANIF
86	Y ALUM HD	12506770	1	33.66	GASKET KIT, INT MANIF
87–88	Y	12506770	1	33.66	GASKET KIT, INT MANIF
89–90	Y 5.7–8	10146096	1	33.66	GASKET KIT, INT MANIF
91	Y 5.7–8 (L98)	12525814	1	27.80	GASKET KIT, INT MANIF (FOA)
92–96	Y 5.7P (LT1)	12524653	1	24.53	GASKET KIT, INT MANIF
96	Y 5.7–5 (LT4)	12528884	2	22.34	GASKET KIT, INT MANIF
85–89	Y (5.7–8)	12508751	1	11.27	GASKET KIT, INT MANIF PLNM
85–90	Y (5.7–8)	10174951	1	12.24	GASKET KIT, INT MANIF TUBE
84–87	Y	10088110	4	9.74	GASKET, EXH MANIF (FRT & RR) (03.602)
84–87	Y	10088112	2	9.74	GASKET, EXH MANIF (CTR) (03.602)

3.272 GASKET, Intake to Exhaust Manifold

88–91	Y 5.7–8 (L98)	10088110	4	9.74	GASKET, EXH MANIF (FRT & RR) (03.602)
88–91	Y 5.7–8 (L98)	10088112	2	9.74	GASKET, EXH MANIF (CTR) (03.602)
90–95	Y 5.7J (LT5)	10187776	2	11.27	GASKET, EXH MANIF (03.270)
92–95	Y 5.7P (LT1)	12552470	2	14.18	GASKET, EXH MANIF (03.270)
96	Y	12552470	2	14.18	GASKET, EXH MANIF (03.270)

3.275 BOLT – STUD, Intake & Exhaust Manifold

92–93	Y 5.7P (LT1)	09440073	2	2.25	BOLT, EXH MANIF (HFH 3/8–16X2.00 280M POR 6174M) (08.900)
92–95	Y 5.7J (LT5)	10065580	2	.54	BOLT, EXH MANIF (HFH M8X1.25X37) (02.277)
92–95	Y 5.7J (LT5)	10187720	2	23.40	BOLT, EXH MANIF
94–96	Y 5.7P (LT1)	12552096	1	*.86	BOLT, EXH MANIF (3/8–16 X 2 1/8) (01.079)
95	Y 5.7P (LT1)	09440073	2	2.25	BOLT, EXH MANIF (HFH 3/8–16X2.00 280M POR 6174M) (08.900)
96	Y 5.7–5 (LT4)	12552096	1	*.86	BOLT, EXH MANIF (3/8–16 X 2 1/8) (01.079)
85–90	Y	14082425	1	.42	BOLT, INL MANIF PLNM EXTN (4X.7X13)
84	Y	14067336	9	DISCON	BOLT, INT MANIF (3/8–16X1.00 280M)
90–91	Y 5.7–8 (L98)	10108661	4	DISCON	BOLT, INT MANIF (PAN HD TORX MACH, 3/8–16X1.375, 280M, PE) (03.265)
85–88	Y	14081014	7	1.00	BOLT, INT MANIF PLNM (M8X1.25X30)

© 2000 GENERAL MOTORS SERVICE PARTS OPERATIONS

MICROFICHE INDEX

GROUPS 0.000 & 21.000

FICHE 1 OF 11

GROUP	DESCRIPTION	STARTING GRID LOCATION PARTS	ILLUSTRATIONS
–	GENERAL INFORMATION	1–A2	1–G2
–	ALPHABETICAL INDEX	1–B13	N.A.
0.000	8–CYLINDER ENGINE	1–E2	1–G5
21.000	ACCESSORY REFERENCE LIST	1–D2	N.A.
–	OUT OF FICHE CALLS	N.A.	1–L13

3.275 BOLT – STUD, Intake & Exhaust Manifold(Con't)

91	Y 5.7–8 (L98)	14082425	1	.42	BOLT, INT MANIF PLNM EXTN (4X.7X13)
85–88	Y	14081014	4	1.00	BOLT, INT MANIF TUBE (M8X1.25X30)
85–88	Y	14081015	2	1.90	BOLT, INT MANIF TUBE (M8X1.25X34.5)
85–88	Y	14081016	2	*1.55	BOLT, INT MANIF TUBE (M8X1.25X39.5)
85–88	Y	14081017	4	*1.85	BOLT, INT MANIF TUBE (TORX HEAD 8X1.25X54)
89–91	Y 5.7–8 (L98)	14081014	AR	1.00	BOLT, PLNM AIR INT TUBE (M8X1.25X30)
89–91	Y 5.7–8 (L98)	14081015	2	1.90	BOLT, PLNM AIR INT TUBE (M8X1.25X34.5)
89–91	Y 5.7–8 (L98)	14081016	2	*1.55	BOLT, PLNM AIR INT TUBE (M8X1.25X39.5)
89–91	Y 5.7–8 (L98)	14081017	4	*1.85	BOLT, PLNM AIR INT TUBE (TORX HEAD 8X1.25X54)
91	Y 5.7–8 (L98), 6–SPD M/TRANS (ML9)	10085606	1	1.65	STUD, CLU HSG (3/8–16X25/32 BOTH ENDS)
84–85	Y	03932448	1	7.45	STUD, EXH MANIF (NO.3 HOLE LH)
84–87	Y	14057002	3	3.95	STUD, EXH MANIF (#1–4 RH, #2 LH)
88–91	Y 5.7–8 (L98)	12550726	3	*1.48	STUD, EXH MANIF (#3–4 RH & #2 LH)
88–91	Y 5.7–8 (L98)	14057002	3	3.95	STUD, EXH MANIF (#1–4 RH, #2 LH) (3/8 X 16 X 2.08)
90–91	Y 5.7J (LT5)	10122101	2	5.50	STUD, EXH MANIF
92–95	Y 5.7J (LT5)	10187719	2	23.40	STUD, EXH MANIF
92–96	Y 5.7P (LT1)	12550726	3	*1.48	STUD, EXH MANIF
92–93	Y 5.7P (LT1)	14057002	3	3.95	STUD, EXH MANIF (#1–4 RH, #2 LH) (3/8 X 16 X 2.08)
96	Y 5.7–5 (LT4)	12550726	3	*1.48	STUD, EXH MANIF
84–87	Y (5.7–8)	12550726	3	*1.48	STUD, EXH MANIF #1–4 RH & #2 LH
92–96	Y 5.7P (LT1)	10106420	3	1.45	STUD, INT MANIF (3/8X16X1 3/8)
96	Y 5.7–5 (LT4)	10106420	3	1.45	STUD, INT MANIF (3/8X16X1 3/8)
84	Y	12552858	1	*1.30	STUD, INT MANIF #1 RH (01.153)
89–91	Y 5.7–8 (L98)	14091678	1	2.25	STUD, INT MANIF PLENUM (M8X1.25X30)
86–88	Y	14091678	1	2.25	STUD, INT MANIF PLNM (M8 X 1.25 X 30)
85	Y	14084304	1	DISCON	STUD, INT MANIF PLNM #2 LH

3.278 CAP – FITTING, Intake Manifold Vacuum

84	Y	03989020	AR	3.25	FITTING, INL MANIF VAC
85–88	Y	14082470	2	3.20	FITTING, INT MANIF VAC (IN PLENUM)
89–91	Y 5.7–8 (L98)	14082470	2	3.20	FITTING, INT MANIF VAC (IN PLENUM)
92–96	Y 5.7P (LT1)	14082470	3	3.20	FITTING, INT MANIF VAC (IN PLENUM)
96	Y 5.7–5 (LT4)	14082470	3	3.20	FITTING, INT MANIF VAC (IN PLENUM)

3.280 BOLT – BRACKET – CLIP – CONNECTOR – HOSE – NUT – PUMP – WASHER, Engine Vacuum Pump

90	Y (5.7J) SOFT RIDE SUSP (FE1), H.D .SUSP (FE7)	10098476	1	DISCON	BRACKET, VAC PUMP
91	Y 5.7J (LT5), SOFT RIDE SUSP (FE1), HVY DUTY SUSP (FE7)	10098485	1	5.10	BRACKET, VAC PUMP
92–95	Y 5.7J (LT5)	10098485	1	5.10	BRACKET, VAC PUMP
90–95	Y 5.7J (LT5)	10090505	1	14.10	CLIP, VAC SCE HARN
90	Y (5.7J)	10098477	1	3.88	HOSE, VAC PUMP
91	Y 5.7J (LT5), SOFT RIDE SUSP (FE1), HVY DUTY SUSP (FE7)	10098477	1	3.88	HOSE, VAC PUMP
92–95	Y 5.7J (LT5)	10098477	1	3.88	HOSE, VAC PUMP

© 2000 GENERAL MOTORS SERVICE PARTS OPERATIONS

3.280 BOLT – BRACKET – CLIP – CONNECTOR – HOSE – NUT – PUMP – WASHER, Engine Vacuum Pump(Con't)

90–95	Y 5.7J (LT5)	11503749	2	*.31	NUT, SECD PORT THROT VAC ACTR RSVR (PREV TORQ (STYLE–1) (M6X1, 5.9, 510M (10), CA) (NUT–HEX LOCK, PREV TORQ) (08.917) (AC–DELCO #11503749)
90	Y (5.7J)	10098474	1	209.71	PUMP, VAC (AC–DELCO #215–118)
91–95	Y 5.7J (LT5)	10098493	1	201.96	PUMP, VAC
92–95	Y 5.7J (LT5)	11500322	2	*.34	WASHER, SECD PORT THROT VAC ACTR RSVR (M6.3X16.75X1.5 PH) (08.929)

3.305 BOLT – GASKET – HOUSING – PLUG, Fuel Injector

90–95	Y 5.7J (LT5)	03522444	2	.63	BOLT, F/INJR HSG (8X1.25X55, 22 THD, 18 OD, 9.8, PZOR, MACH) (01.840)
90–95	Y 5.7J (LT5)	11509016	16	*.56	BOLT, F/INJR HSG (8X1.25X70) (08.900)
90–92	Y 5.7J (LT5)	10067600	4	19.07	GASKET, F/INJR HSG
90–92	Y 5.7J (LT5)	10110912	2	27.03	GASKET, F/INJR HSG (TO CYL HEAD)
90–95	Y 5.7J (LT5)	10168684	2	44.64	GASKET, F/INJR HSG (TO PLENUM)
93–95	Y 5.7J (LT5)	10225120	1	19.75	GASKET, F/INJR HSG (TO CYL HD)
90	Y 5.7J (LT5)	10159505	LH	709.00	HOUSING, F/INJR
90	Y 5.7J (LT5)	10159506	RH	709.00	HOUSING, F/INJR
91–92	Y 5.7J (LT5), (1ST DES)	10159505	LH	709.00	HOUSING, F/INJR (1ST DES FOR 91, FOR 2ND DES SEE 12507649, 1ST DES ID BY INJR HOLE PLUGS, 2ND DES W/O INJR HOLE PLUGS)
91–92	Y 5.7J (LT5), (1ST DES)	10159506	RH	709.00	HOUSING, F/INJR (1ST DES FOR 91, FOR 2ND DES SEE 12507650, 1ST DES ID BY INJR HOLE PLUGS, 2ND DES W/O INJR HOLE PLUGS)
91–92	Y 5.7J (LT5), (2ND DES)	12507649	LH	716.04	HOUSING, F/INJR (2ND DES FOR 91, FOR 1ST DES SEE 10159505, 1ST DES ID BY INJR HOLE PLUGS, 2ND DES W/O INJR HOLE PLUGS)
91–92	Y 5.7J (LT5), (2ND DES)	12507650	RH	716.04	HOUSING, F/INJR (2ND DES FOR 91, FOR 1ST DES SEE 10159506, 1ST DES ID BY INJR HOLE PLUGS, 2ND DES W/O INJR HOLE PLUGS)
92	Y 5.7J (LT5)	10153541	LH		HOUSING, F/INJR
92	Y 5.7J (LT5)	10153542	RH		HOUSING, F/INJR
93–95	Y 5.7J (LT5)	12522327	LH	784.00	HOUSING, F/INJR
93–95	Y 5.7J (LT5)	12522328	RH	738.48	HOUSING, F/INJR

3.314 BOLT, Fuel or Air Meter

90–95	Y 5.7J (LT5)	10110934	4	3.01	BOLT, THROT BODY ACTR (BUTN HD 6 LOBED SOC) (M5X0.8X22) (03.407)

3.330 BOLT – CONNECTION KIT – COVER – FASTENER KIT – FITTING KIT – PIPE KIT – RAIL & TUBES KIT – RAIL KIT – REGULATOR – REGULATOR KIT – RETAINER – STUD – TUBE – TUBE KIT – VALVE KIT, Fuel Injection

86–87	Y	14081021	2	*1.25	BOLT, F/INJ RAIL FRT (08.913)
88–91	Y 5.7–8 (L98)	14081021	2	*1.25	BOLT, F/INJ RAIL FRT (TORX HD 8X1.25X20) (08.913)
90–95	Y 5.7J (LT5)	11516186	4	*.70	BOLT, F/INJN FUEL RL (M8X1.25X16 17.6.9.8PZOR) (08.900)
92–94	Y 5.7P (LT1)	10108666	4	.73	BOLT, F/INJN FUEL RL (HFH, M8X1.25X35, 28 THD, 14 OD, 9.8;USE T/W 12345382 ADHES)

© 2000 GENERAL MOTORS SERVICE PARTS OPERATIONS

3.330 BOLT – CONNECTION KIT – COVER – FASTENER KIT – FITTING KIT – PIPE KIT – RAIL & TUBES KIT – RAIL KIT – REGULATOR – REGULATOR KIT – RETAINER – STUD – TUBE – TUBE KIT – VALVE KIT, Fuel Injection(Con't)

93–96	Y 5.7P (LT1)	11514667	4	.40	BOLT, F/INJN FUEL RL (6X1X35) (9.8 PEOR) (08.900)
96	Y 5.7–5 (LT4)	11514667	4	.40	BOLT, F/INJN FUEL RL (6X1X35) (9.8 PEOR) (08.900)
92–93	Y 5.7P (LT1)	10224935	LH	29.85	COVER, F/INJN FUEL RL
92–93	Y 5.7P (LT1)	10224936	RH	29.85	COVER, F/INJN FUEL RL
94–96	Y 5.7P (LT1)	10208794	LH	30.60	COVER, F/INJN FUEL RL
94–96	Y 5.7P (LT1)	10208795	RH	30.60	COVER, F/INJN FUEL RL
96	Y 5.7–5 (LT4)	12552431	LH	66.67	COVER, F/INJN FUEL RL
96	Y 5.7–5 (LT4)	12552432	RH	66.67	COVER, F/INJN FUEL RL
85	Y 5.7–8 (L98)	17110858	1	DISCON	PIPE KIT, COLD START F/INJR (03.329)
85–88	Y 5.7–8 (L98)	17112061	1	105.47	PIPE KIT, COLD START F/INJR (03.329) (AC–DELCO #17112061)
88	Y	17113230	RH	311.16	RAIL KIT, M/PORT F/INJN FUEL (AC–DELCO #17113230)
89–91	Y 5.7–8 (L98)	17113230	RH	311.16	RAIL KIT, M/PORT F/INJN FUEL (AC–DELCO #17113230)
89–91	Y 5.7–8 (L98)	17113232	LH	187.74	RAIL KIT, M/PORT F/INJN FUEL (AC–DELCO #17113232)
90–92	Y 5.7J (LT5)	17112218	LH	445.68	RAIL KIT, M/PORT F/INJN FUEL (AC–DELCO #17112218)
90–92	Y 5.7J (LT5)	17112219	RH	445.68	RAIL KIT, M/PORT F/INJN FUEL (AC–DELCO #17112219)
92–93	Y 5.7P (LT1)	17112635	LH	154.08	RAIL KIT, M/PORT F/INJN FUEL (AC–DELCO #17112635)
92–93	Y 5.7P (LT1)	17113241	RH	155.61	RAIL KIT, M/PORT F/INJN FUEL (AC–DELCO #17113241)
93–95	Y 5.7J (LT5)	17113024	LH	445.68	RAIL KIT, M/PORT F/INJN FUEL (AC–DELCO #17113024)
93–95	Y 5.7J (LT5)	17113025	RH	454.59	RAIL KIT, M/PORT F/INJN FUEL (AC–DELCO #17113025)
94–96	Y 5.7P (LT1)	17113249	LH	329.46	RAIL KIT, M/PORT F/INJN FUEL
94–96	Y 5.7P (LT1)	17113250	RH	329.46	RAIL KIT, M/PORT F/INJN FUEL
96	Y 5.7–5 (LT4)	17113249	LH	329.46	RAIL KIT, M/PORT F/INJN FUEL
96	Y 5.7–5 (LT4)	17113250	RH	329.46	RAIL KIT, M/PORT F/INJN FUEL
92–95	Y 5.7P (LT1)	10108672	4	1.53	STUD, F/INJN FUEL RL
96	Y 5.7P (LT1), 5.7–5 (LT4)	10108672	4	1.53	STUD, F/INJN FUEL RL
94–96	Y 5.7P (LT1)	17113088	1	26.52	TUBE, F/INJN FUEL RL C/OVR
96	Y 5.7–5 (LT4)	17113088	1	26.52	TUBE, F/INJN FUEL RL C/OVR
92	Y 5.7P (LT1)	10105322	1	2.04	TUBE, FUEL PRESS REG VAC
93	Y 5.7P (LT1), 4–SPD A/TRANS (MD8)	10105322	1	2.04	TUBE, FUEL PRESS REG VAC
93	Y 5.7P (LT1), 6–SPD M/TRANS (ML9)	10105322	1	2.04	TUBE, FUEL PRESS REG VAC
94–96	Y 5.7P (LT1)	10216953	1	2.35	TUBE, FUEL PRESS REG VAC
96	Y 5.7–5 (LT4)	10216953	1	2.35	TUBE, FUEL PRESS REG VAC

3.335 BODY – BODY KIT – BOLT – HORN – THROTTLE – VALVE, Fuel Injection Air Meter

Note: FOR 1985–1991 USAGE REFER TO THROTTLE BODY CHART GRP 3.335

85–86	Y FOR MDL APPL & POA SEE THROT BODY CHT	17110843	1	404.98	BODY KIT, THROTTLE (AC–DELCO #17110843)
87–88	Y FOR MDL APPL & POA SEE THROT BODY CHT	17110849	1	404.98	BODY KIT, THROTTLE (AC–DELCO #17110849)
89	Y FOR MDL APPL & POA SEE THROT BODY CHT	17112126	1	381.81	BODY KIT, THROTTLE (AC–DELCO #17112126)

© 2000 GENERAL MOTORS SERVICE PARTS OPERATIONS

3.335 BODY – BODY KIT – BOLT – HORN – THROTTLE – VALVE, Fuel Injection Air Meter(Con't)

92–95	Y 5.7J (LT5)	17088018	1		BODY, THROT
92–93	Y 5.7P (LT1)	17092076	1	638.05	BODY, THROT (AC–DELCO #17092076)
94	Y 5.7P (LT1)	17094051	1	565.00	BODY, THROT
95	Y 5.7P (LT1)	17095239	1	480.26	BODY, THROT (AC–DELCO #17095239)
96	Y 5.7P (LT1), 4–SPD A/TRANS (M30)	17096245	1	423.52	BODY, THROT (03.725) (AC–DELCO #17096245)
96	Y 5.7–5 (LT4), 6–SPD M/TRANS (ML9)	17096246	1	423.52	BODY, THROT (03.725) (AC–DELCO #17096246)
85	Y (5.7–8)	17085049	1		BODY, THROTTLE
86	Y (5.7–8)	17086049	1		BODY, THROTTLE
87–88	Y (5.7–8)	17086051	1		BODY, THROTTLE
90–95	Y 5.7J (LT5)	11508805	1	*.41	BOLT, SOL (TO CYL CASE) (HFH M6X1X16 9.8 POR 14 OD 14MM THD) (08.900)
90	Y 5.7J (LT5)	10140623	1	450.84	HORN, THROT BODY AIR (03.407)
91–95	Y 5.7J (LT5)	12509722	1	520.20	HORN, THROT BODY AIR
90–95	Y 5.7J (LT5)	01997222	1	28.60	VALVE, INT MANIF RUNNER C/VLV ACTR SOL (AC–DELCO #1997222)

3.336 ATTACHMENT KIT – BOLT – FASTENER – GASKET – GASKET KIT, Multi Port Fuel Injection Throttle Body

Note: FOR 1985–1991 USAGE REFER TO THROTTLE BODY CHARTS GRP 3.335

90–95	Y 5.7J (LT5)	11514493	2	12.75	BOLT, THROT BODY (TO PLENUM) (M8X1.25X35)
91–95	Y 5.7J (LT5)	11514556	3	4.55	BOLT, THROT BODY (TO PLENUM) (M8X1.25X70, 38 THD, 9.8, PE) (08.913)
92–96	Y 5.7P (LT1)	11508083	4	*1.10	BOLT, THROT BODY (HFH M8X1.25X65 9.8 POR 17.6 OD) (08.900)
96	Y 5.7–5 (LT4)	11508083	4	*1.10	BOLT, THROT BODY (HFH M8X1.25X65 9.8 POR 17.6 OD) (08.900)
89–91	Y FOR MDL APPL & POA SEE THROT BODY CHT	17112133	1	DISCON	GASKET KIT
85–88	Y FOR MDL APPL & POA SEE THROT BODY CHT	17113115	1	18.58	GASKET KIT, THROT BODY (NO LONGER CONTAINS FLANGE GASKET–MUST ORDER SEPARATELY) (AC–DELCO #40–709)
89–91	Y FOR MDL APPL & POA SEE THROT BODY CHT	17113115	1	18.58	GASKET KIT, THROT BODY (FLANGE GASKET IS NOT INCLUDED IN KIT) (AC–DELCO #40–709)
90–91	Y FOR MDL APPL & POA SEE THROT BODY CHT	17112267	1	12.40	GASKET KIT, THROT BODY (AC–DELCO #40–738)
92–95	Y 5.7J (LT5)	17112267	1	12.40	GASKET KIT, THROT BODY (AC–DELCO #40–738)
92	Y 5.7P (LT1)	17112833	1	33.76	GASKET KIT, THROT BODY (AC–DELCO #40–742)
93	Y 5.7P (LT1), 4–SPD A/TRANS (MD8), 6–SPD M/TRANS (ML9)	17112833	1	33.76	GASKET KIT, THROT BODY (AC–DELCO #40 -742)
94–95	Y 5.7P (LT1)	17113074	1	8.28	GASKET KIT, THROT BODY (AC–DELCO #40–743)
95–96	Y 5.7P (LT1)	17113178	1	18.73	GASKET KIT, THROT BODY (AC–DELCO #40–744)
96	Y 5.7–5 (LT4)	17113178	1	18.73	GASKET KIT, THROT BODY (AC–DELCO #40–744)
85–88	Y (5.7–8)	10105379	1	2.67	GASKET, THROT BODY (AC–DELCO #40–718)

© 2000 GENERAL MOTORS SERVICE PARTS OPERATIONS

3.336 ATTACHMENT KIT – BOLT – FASTENER – GASKET – GASKET KIT, Multi Port Fuel Injection Throttle Body(Con't)

89–91	Y 5.7–8 (L98)	10105351	1	*3.43	GASKET, THROT BODY (AC–DELCO #40–717)
90–95	Y 5.7J (LT5)	10067759	1	2.24	GASKET, THROT BODY (BETWEEN THROTTLE BODY & HORN) (03.335)
90–95	Y 5.7J (LT5)	10168680	1	21.06	GASKET, THROT BODY (BETWEEN PLENUM & THROTTLE BODY)
92–96	Y 5.7P (LT1)	10105379	1	2.67	GASKET, THROT BODY (AC–DELCO #40–718)
96	Y 5.7–5 (LT4)	10105379	1	2.67	GASKET, THROT BODY (AC–DELCO #40–718)

3.337 CLAMP – COVER KIT – HOSE, Throttle Body Coolant Supply

Note: FOR 1985–1991 USAGE REFER TO THROTTLE BODY CHART GRP 3.335

92–94	Y 5.7P (LT1)	10115739	2	1.50	CLAMP, THROT BODY HT INL HOSE (20MM) (STAMPED "20") (200N FORCE) (08.948)
92	Y 5.7P (LT1)	25665982	1	1.99	CLAMP, THROT BODY HT INL HOSE (08.948)
96	Y 5.7P (LT1)	22527587	AR	1.75	CLAMP, THROT BODY HT INL HOSE (20.0 X 12.4) (WORM GEAR, 1/2–13/16) (08.948)
96	Y 5.7–5 (LT4)	22527587	AR	1.75	CLAMP, THROT BODY HT INL HOSE (20.0 X 12.4) (WORM GEAR, 1/2–13/16) (08.948)
85–88	Y	10108509	1	5.76	HOSE, THROT BODY HTR
89	Y (5.7–8)	10108509	1	5.76	HOSE, THROT BODY HTR
92–94	Y 5.7P (LT1)	10108618	1	7.14	HOSE, THROT BODY HTR INL (03.726)
95–96	Y 5.7P (LT1)	12553625	1	1.84	HOSE, THROT BODY HTR INL
96	Y 5.7–5 (LT4)	12553625	1	1.84	HOSE, THROT BODY HTR INL

3.338 ACTUATOR – BEARING – BOLT – BRACKET – BUSHING – CONNECTOR – COVER – HOSE – HOUSING KIT – LEVER – LINK – NUT – RETAINER – SEAL – SHAFT – TANK – VALVE – VALVE KIT – WASHER, Multi Port Fuel Injection Idle Air

Note: FOR 1985–1991 USAGE REFER TO THROTTLE BODY CHART GRP 3.335

90–95	Y 5.7J (LT5)	01996743	2	42.84	ACTUATOR, INT MANIF RUNNER C/VLV (03.314)
90–95	Y 5.7J (LT5)	10122114	8	67.83	BEARING, INT MANIF RUNNER C/VLV SHF (03.302)
90–95	Y 5.7J (LT5)	11514887	16	2.14	BOLT, INT MANIF RUNNER C/VLV (M3X0.5X5) (03.302)
90–95	Y 5.7J (LT5)	10146242	1	10.46	BRACKET, INT MANIF RUNNER C/VLV ACTR (03.415)
90–95	Y 5.7J (LT5)	10110925	2	27.00	COVER, INT MANIF RUNNER C/VLV LNKG (03.415)
90–92	Y 5.7J (LT5)	10146221	1	15.91	HOSE, INT MANIF RUNNER C/VLV ACTR VAC (03.415)
93–95	Y 5.7J (LT5)	10168624	1	60.44	HOSE, INT MANIF RUNNER C/VLV ACTR VAC (03.415)
90–95	Y 5.7J (LT5)	10122108	8	5.05	LEVER, INT MANIF RUNNER C/VLV (03.415)
90–95	Y 5.7J (LT5)	10122102	2	104.04	LEVER, INT MANIF RUNNER C/VLV ACTR (03.415)
90–95	Y 5.7J (LT5)	10122105	2	19.07	LINK, INT MANIF RUNNER C/VLV (03.415)
90–95	Y 5.7J (LT5)	10122113	8	6.30	NUT, INT MANIF RUNNER C/VLV LVR (M4X0.7–6H) (03.415)
92–93	Y 5.7J (LT5)	11514252	4	*.81	NUT, SECD FUEL INJ AIR CONT ACTR (M5X0.8) (08.917)

© 2000 GENERAL MOTORS SERVICE PARTS OPERATIONS

3.338 ACTUATOR – BEARING – BOLT – BRACKET – BUSHING – CONNECTOR – COVER – HOSE – HOUSING KIT – LEVER – LINK – NUT – RETAINER – SEAL – SHAFT – TANK – VALVE – VALVE KIT – WASHER, Multi Port Fuel Injection Idle Air(Con't)

90–95	Y 5.7J (LT5)	10228856	2	.70	RETAINER, INT MANIF RUNNER C/VLV ACTR LVR (PUSH ON) (03.415)
90–95	Y 5.7J (LT5)	10135892	8	10.05	SEAL, INT MANIF RUNNER C/VLV SHF (03.335)
90–95	Y 5.7J (LT5)	10122112	8	87.48	SHAFT, INT MANIF RUNNER C/VLV (03.302)
90–95	Y 5.7J (LT5)	10067563	1	14.02	TANK, INT MANIF RUNNER C/VLV ACTR VAC (03.682)
90–95	Y 5.7J (LT5)	10135872	8	9.59	VALVE, INT MANIF RUNNER CONT (03.302)
92–95	Y 5.7P (LT1)	17101908	1	21.09	VALVE, INT MANIF RUNNER CONT (ACDELCO #17101908)
90–95	Y 5.7J (LT5)	10135893	8	1.95	WASHER, INT MANIF RUNNER C/VLV LVR (03.[illegible]4)

3.373 CONNECTOR – HOSE – PIPE, Turbocharger/Supercharger Coolant

90–95	Y 5.7J (LT5)	10153518	2	2.14	CONNECTOR, PLNM COOL AIR BL (LH/RH) (.43X1.7[illegible]G)
90–95	Y 5.7J (LT5)	10153526	1	42.84	CONNECTOR, PLNM COOL AIR BL (TEE)
90–95	Y 5.7J (LT5)	10174347	1	42.84	CONNECTOR, PURGE RTN (TO PLNM)
90–95	Y 5.7J (LT5)	10153524	1	56.61	HOSE, PLNM COOL AIR BL
94–95	Y 5.7J (LT5)	10225109	RH	5.56	HOSE, PLNM COOL AIR BL (FRT)
90–95	Y 5.7J (LT5)	10187790	RH	31.11	PIPE, COOL AIR BL

3.402 CLEANER, Air Intake

84	Y	25041409	1	1224.63	CLEANER, AIR

3.403 NUT – SCREW – SEAL, Air Cleaner and Silencer

84–85	Y	14055160	2	DISCON	NUT, W/INSERT, A/CL RET
85–89	Y	14081888	2	3.95	SCREW, A/CL COVER
84	Y	10019332	2	4.69	SEAL, A/CL

3.407 CONNECTOR – DUCT – RETAINER, Air Cleaner and Silencer

90–95	Y 5.7J (LT5)	10067708	2	4.90	CONNECTOR, THROT BODY (TO CAM CVR) (1/2" DIA)
90–91	Y 5.7J (LT5)	10067704	1	4.08	CONNECTOR, THROT BODY EXT (3/16" DIA)
90–95	Y 5.7J (LT5)	10110935	4	1.55	RETAINER, A/CL OTLT DUCT ADAP BOLT

3.415 ACTUATOR – BOLT – BRACKET – NUT – RETAINER – SEAL – VALVE, Air Cleaner Controls

90–95	Y 5.7J (LT5)	11514253	4	2.10	BOLT, SECD FUEL INJN AIR CONT VLV LNKG CVR (M4.7X8–7.3 THD 9[illegible]) (08.913)
85–89	Y (5.7–8)	14081880	1	1.00	SEAL, MASS AIR FLOW SEN

3.417 CLAMP – DUCT – ELBOW – PIN – RESONATOR – RETAINER – SCREW – SEAL – STOVE – TUBE, Air Cleaner Air Intake

90–91	Y 5.7–8 (L98)	14104556	1	6.45	CLAMP, INTER INT AIR DUCT
90–95	Y 5.7J (LT5)	14104556	2	6.45	CLAMP, INTER INT AIR DUCT
92–94	Y 5.7P (LT1)	14104556	1	6.45	CLAMP, INTER INT AIR DUCT

© 2000 GENERAL MOTORS SERVICE PARTS OPERATIONS

3.417 CLAMP – DUCT – ELBOW – PIN – RESONATOR – RETAINER – SCREW – SEAL – STOVE – TUBE, Air Cleaner Air Intake(Con't)

85–91	Y 5.7–8 (L98)	10146626	1	4.85	CLAMP, RR INT AIR DUCT (3.31 TO 4.25)
85–89	Y (5.7–8)	14084404	1	50.25	DUCT, A/CL FRT AIR METER INT
90–91	Y 5.7–8 (L98)	12553505	1	56.75	DUCT, FRT INT AIR (WHEN USING IN PLACE OF 14104555;MUST BLOCK OFF HOSE CONN.)
90–95	Y 5.7J (LT5)	12553505	1	56.75	DUCT, FRT INT AIR (WHEN USING IN PLACE OF 14104555, MUST BLOCK OFF HOSE CONN.)
92–96	Y 5.7P (LT1)	12553505	1	56.75	DUCT, FRT INT AIR (WHEN USING IN PLACE OF 14104555, MUST BLOCK OFF HOSE CONN.)
96	Y 5.7–5 (LT4)	12553505	1	56.75	DUCT, FRT INT AIR
90–91	Y 5.7–8 (L98)	10108444	1	44.00	DUCT, INTER INT AIR
90–95	Y 5.7J (LT5)	14104557	1	26.25	DUCT, INTER INT AIR
92	Y 5.7P (LT1)	25099598	1	155.00	DUCT, INTER INT AIR (MAY REQUIRE CLAMP 14104556)
93	Y 5.7P (LT1), DIAGNOSTIC SYSTEM (BAK)	25099264	1	36.98	DUCT, INTER INT AIR
93	Y 5.7P (LT1)	25099598	1	155.00	DUCT, INTER INT AIR
94	Y 5.7P (LT1)	25099264	1	36.98	DUCT, INTER INT AIR
85–89	Y (5.7–8)	14081891	1	7.65	DUCT, RR AIR INT
93	Y 5.7P (LT1), DIAGNOSTIC SYSTEM (BAK)	25099266	1	49.47	DUCT, RR INT AIR
94	Y 5.7P (LT1)	25099266	1	49.47	DUCT, RR INT AIR
95	Y 5.7P (LT1)	25147192	1	49.75	DUCT, RR INT AIR (03.407)
96	Y	25147192	1	49.75	DUCT, RR INT AIR (03.407)
85–89	Y (5.7–8)	14081885	2	3.40	PIN, A/CL FRT AIR INT DUCT RET
85–89	Y (5.7–8)	14081886	2	8.35	RETAINER, A/CL FRT AIR INT DUCT
85–89	Y (5.7–8)	14084405	2	4.05	SCREW, FRT AIR INT DUCT
84–85	Y	14046756	2	20.35	SEAL, FRT AIR INT DUCT
84	Y 5.7–8 (L83)	14055131	2	13.35	STOVE, ENG AIR HT INR
85–91	Y 5.7–8 (L98)	14055131	2	13.35	STOVE, ENG AIR HT INR
84	Y	14055129	LH	DISCON	STOVE, ENG AIR HT OTR

3.454 ADJUSTER – BRACE – BRACKET – CONNECTOR – COVER – PLATE – SUPPORT – WASHER, Accelerator Pedal Lever

92–95	Y 5.7J (LT5)	10177907	1	8.72	BRACE, ACCEL CONT & CRCONT SERVO CBL ADJR BRKT
92–95	Y 5.7P (LT1)	12553404	1	7.75	BRACE, ACCEL CONT & CRCONT SERVO CBL ADJR BRKT
96	Y	12553404	1	7.75	BRACE, ACCEL CONT & CRCONT SERVO CBL ADJR BRKT
92–95	Y 5.7J (LT5)	10143548	1	11.68	BRACKET, ACCEL CONT & CRCONT SERVO CBL ADJR (UPR)
92–95	Y 5.7J (LT5)	10177905	1	20.25	BRACKET, ACCEL CONT & CRCONT SERVO CBL ADJR (LWR)
92–93	Y 5.7P (LT1)	10212361	1	11.68	BRACKET, ACCEL CONT & CRCONT SERVO CBL ADJR
94–95	Y 5.7P (LT1)	12553403	1	8.16	BRACKET, ACCEL CONT & CRCONT SERVO CBL ADJR
96	Y	12553403	1	8.16	BRACKET, ACCEL CONT & CRCONT SERVO CBL ADJR
85–88	Y	14084305	1	11.68	BRACKET, ACCEL CONT CBL
89–91	Y 5.7–8 (L98)	10077566	1	3.47	BRACKET, ACCEL CONT CBL
92	Y 5.7P (LT1)	10226089	1	5.15	BRACKET, ACCEL CONT CBL
93	Y 5.7P (LT1), 4–SPD A/TRANS (MD8)	10226089	1	5.15	BRACKET, ACCEL CONT CBL

© 2000 GENERAL MOTORS SERVICE PARTS OPERATIONS

3.454 ADJUSTER – BRACE – BRACKET – CONNECTOR – COVER – PLATE – SUPPORT – WASHER, Accelerator Pedal Lever(Con't)

94–96	Y 5.7P (LT1), 4–SPD A/TRANS (M30)	10192221	1	4.79	BRACKET, ACCEL CONT CBL
96	Y 5.7–5 (LT4), 6–SPD M/TRANS (ML9)	10192221	1	4.79	BRACKET, ACCEL CONT CBL

3.463 BOLT, Throttle Control Lever

91	Y 5.7–8 (L98)	11514149	AR	1.82	BOLT, ACCEL CONT CBL BRKT (M6 X 1 X 12) (HFH, 9.8 PE, 12.8 OD DR) (08.900) (AC–DELCO #11514149)
92–96	Y 5.7P (LT1)	11514149	3	1.82	BOLT, ACCEL CONT CBL BRKT (M6 X 1 X 12) (HFH, 9.8 PE, 12.8 OD DR) (08.900) (AC–DELCO #11514149)
96	Y 5.7–5 (LT4)	11514149	3	1.82	BOLT, ACCEL CONT CBL BRKT (M6 X 1 X 12) (HFH, 9.8 PE, 12.8 OD DR) (08.900) (AC–DELCO #11514149)

3.601 MANIFOLD, Engine Exhaust Manifold

84–85	Y	10046139	RH	DISCON	MANIFOLD, EXH
84–85	Y	10046140	LH	DISCON	MANIFOLD, EXH
86–91	Y 5.7–8 (L98)	14087511	LH	439.89	MANIFOLD, EXH
86	Y	14087512	RH	439.89	MANIFOLD, EXH
87–91	Y 5.7–8 (L98)	10055734	RH	439.89	MANIFOLD, EXH
90–92	Y 5.7J (LT5)	25127591	LH	DISCON	MANIFOLD, EXH (W/CTLTC CONV)
90–92	Y 5.7J (LT5)	25143612	RH	696.66	MANIFOLD, EXH (WHEN USING ON 1990–1992 MDLS REFER TO CHEV SERV BULLETIN 776106 DTD 2–97 FOR ADDITIONAL INFORMATION.USE T/W 25129503 CTLC CONV)
92–95	Y 5.7P (LT1)	12554232	2	123.78	MANIFOLD, EXH (W/H/SHLD) (WHEN USED IN PLC OF 12554231 (1992–95), MUST USE GSKT 15713154)
93–95	Y 5.7J (LT5)	25129492	LH	1110.98	MANIFOLD, EXH
93–95	Y 5.7J (LT5)	25143612	RH	696.66	MANIFOLD, EXH
96	Y 5.7P (LT1)	12554232	2	123.78	MANIFOLD, EXH (W/H/SHLD)
96	Y 5.7–5 (LT4)	12554232	2	123.78	MANIFOLD, EXH (W/H/SHLD)

3.602 BOLT – SHIELD, Exhaust Manifold

92–96	Y 5.7P (LT1)	10228350	3	.36	BOLT, EXH MANIF H/SHLD (M6X12)
96	Y 5.7–5 (LT4)	10228350	3	.36	BOLT, EXH MANIF H/SHLD (M6X12)
90–91	Y 5.7J (LT5)	10128251	LH	47.06	SHIELD, EXH MANIF INR HT
90–92	Y 5.7J (LT5)	10128252	RH	35.04	SHIELD, EXH MANIF INR HT
92–95	Y 5.7P (LT1)	10128311	2	9.41	SHIELD, EXH MANIF INR HT
93–95	Y 5.7J (LT5)	25036039	RH	94.12	SHIELD, EXH MANIF INR HT
93–95	Y 5.7J (LT5)	25129498	LH	94.12	SHIELD, EXH MANIF INR HT
96	Y 5.7–5 (LT4)	10128311	2	9.41	SHIELD, EXH MANIF INR HT
84	Y 5.7–8 (L83)	14055130	2	DISCON	SHIELD, EXH MANIF OTR HT
85–91	Y 5.7–8 (L98)	14055130	2	DISCON	SHIELD, EXH MANIF OTR HT
90–91	Y 5.7J (LT5)	10128253	LH	35.04	SHIELD, EXH MANIF OTR HT
90–92	Y 5.7J (LT5)	10128254	RH	DISCON	SHIELD, EXH MANIF OTR HT
92–96	Y 5.7P (LT1)	10128312	2	9.41	SHIELD, EXH MANIF OTR HT
92–95	Y 5.7J (LT5)	25129500	LH	94.12	SHIELD, EXH MANIF OTR HT
93–95	Y 5.7J (LT5)	25034884	RH	47.06	SHIELD, EXH MANIF OTR HT (FRT)
93–95	Y 5.7J (LT5)	25034993	RH	66.75	SHIELD, EXH MANIF OTR HT (RR)
96	Y 5.7–5 (LT4)	10128312	2	9.41	SHIELD, EXH MANIF OTR HT

© 2000 GENERAL MOTORS SERVICE PARTS OPERATIONS

3.604 SPACER, Exhaust Manifold Bolt

90–95	Y 5.7J (LT5)	10110994	14	1.64	SPACER, EXH MANIF BOLT (9.8ID, 15.6 OD, 19THK, 6047M, 1035STL)
92–95	Y 5.7J (LT5)	03983422	2	2.20	SPACER, EXH MANIF BOLT (.42X.68" STL) (06 306)

3.613 BOLT – NUT – STUD, Exhaust Pipe

84–88	Y	14057005	6	6.15	STUD, EXH PIPE (M10X1.5X57)
89–91	Y 5.7–8 (L98)	14057005	6	6.15	STUD, EXH PIPE (M10X1.5X57)
92–93	Y 5.7P (LT1)	14057005	6	6.15	STUD, EXH PIPE (M10X1.5X57)
94–96	Y 5.7P (LT1)	10220453	6	*1.55	STUD, EXH PIPE
96	Y 5.7–5 (LT4)	10220453	6	*1.55	STUD, EXH PIPE

3.670 CONNECTOR – COVER – EPROM – FILTER – MODULE – RELAY – SCREW – SOLENOID – SWITCH – VALVE, Emission Control System

Note: SEE GROUP 3.671 FOR ATTACHING PARTS.

84	Y M/TRNS, CALIF	01225428	1	58.73	EPROM, ECM (CODE 3679CDF, 9842DBP) (AC–DELCO #1225428)
84	Y M/TRNS, FED	01225429	1	59.34	EPROM, ECM (CODE 3661CDK, 9846DBR) (AC–DELCO #1225429)
84	Y A/TRNS, CLSD LOOP	01226466	1	58.73	EPROM, ECM (CODE 3235CCC, 3940CDR) (AC–DELCO #1226466)
85	Y (5.7–8) A/TRNS (MD8), FED	01227805	1	53.73	EPROM, ECM (CODE 3200HLH) (AC–DELCO #1227805)
85	Y (5.7–8) M/TRNS (MK2), FED	01227806	1	58.73	EPROM, ECM (CODE 3266HLP) (AC–DELCO #1227806)
85	Y M/TRNS (MK2), FED	16042430	1	19.87	EPROM, ECM (16042431 STAMPED) (CALPAK) (AC–DELCO #16042430)
85	Y A/TRNS (MD8)	16042437	1	19.87	EPROM, ECM (16042438 STAMPED) (CALPAK) (AC–DELCO #16042437)
85	Y M/TRNS (MK2)	16042437	1	19.87	EPROM, ECM (16042438 STAMPED) (CALPAK) (AC–DELCO #16042437)
85	Y M/TRNS (MH5), FED	16052307	1	58.73	EPROM, ECM (CODE 9573FTW, 2300HLS) (AC–DELCO #16052307)
86	Y07 (5.7–8) A/TRNS (MD8) 2.59R (GM1), KB2, FED	01227942	1	58.73	EPROM, ECM (CODE 9355BUC, 9555BUC, 1724BUC) (AC–DELCO #1227942)
86	Y07 M/TRNS (MK2) 3.07R (G44), KB2, (EXC VD1 EXPORT)	01227943	1	58.73	EPROM, ECM (CODE 9348BUB, 1726BUB) (AC–DELCO #1227943)
86	Y07 (5.7–8) M/TRNS (MH5) 3.07R, KB2, FED	01227943	1	58.73	EPROM, ECM (CODE 9398BUM) (AC–DELCO #1227943)
86	Y07 (5.7–8) A/TRNS (MD8) 3.07R (G44) (EXC EXPORT NM8, VE1)	01227944	1	58.73	EPROM, ECM (CODE 1728BUA, 9340BUA) (AC–DELCO #1227944)
86	Y07 (5.7–8) A/TRNS (MD8) 2.59R (GM1), 2.73R (GU2), FED (EXC KB2)	01228107	1	58.73	EPROM, ECM (CODE 1732AANK) (AC–DELCO #1228107)
86	Y07 (5.7–8) A/TRNS (MD8) 3.07R, FED (NA5) (EXC KB2, NM8, VE1 EXPORT)	01228109	1	58.73	EPROM, ECM (CODE 4045AANL, 8840ALZ, 1736AANM) (AC–DELCO #1228109)
86	Y07 (5.7–8) M/TRNS (MK2) 3.07R, FED	01228473	1	58.73	EPROM, ECM (CODE 8848AMA, 1734AARL, 1010AARL) (AC–DELCO #1228473)
86	Y07 (5.7–8) M/TRNS (MH5), 3.07R (G44) (EXC KB2)	16063919	1	58.73	EPROM, ECM (CODE 3921AARK, 8934AML) (AC–DELCO #16063919)
86	Y67 MD8, 2.73R (GU2), 3.07R (G44) (EXC KB2, EXPORT)	01228109	1	58.73	EPROM, ECM (CODE 2770AANM, 0504AMH, 1736AANM) (AC–DELCO #1228109)
86	Y67 M/TRNS (MK2), 3.07R (G44) (EXC KB2, EXPORT)	01228473	1	58.73	EPROM, ECM (CODE 0499AMJ, 1734AARL, 1010AARL) (AC–DELCO #1228473)

© 2000 GENERAL MOTORS SERVICE PARTS OPERATIONS

3.670 CONNECTOR – COVER – EPROM – FILTER – MODULE – RELAY – SCREW – SOLENOID – SWITCH – VALVE, Emission Control System(Con't)

87	Y07 M/TRNS (MK2), 3.07R (G44), FED (EXC VD1 EXPORT)	16070312	1	58.73	EPROM, ECM (CODE 0315ABTR, 9539HCY) (AC–DELCO #16070312) .
87	Y07 M/TRNS (MH5), 3.07R (G44), FED	16070318	1	58.73	EPROM, ECM (CODE 0321ABTC, 4423HCZ) (AC–DELCO #16070318) .
87	Y07 A/TRNS (MD8), 2.59R (GM1), FED	16070729	1	58.73	EPROM, ECM (CODE 4427HDA, 0731ABTD) (AC–DELCO #16070729) .....
87	Y07 A/TRNS (MD8), 3.07R (G44), FED (EXC VB4, VD1, VE1, VT7 EXPORT)	16070733	1	58.73	EPROM, ECM (CODE 0735ABTF, 4431HDB) (AC–DELCO #16070733) .
87	Y67 M/TRNS (MK2), 3.07R (G44), FED (EXC VD1 EXPORT)	16070323	1	58.73	EPROM, ECM (CODE 0323ABTJ, 4439HDD) (AC–DELCO #16070323) .
87	Y67 M/TRNS (MH5), 3.07R (G44), FED	16070333	1	58.73	EPROM, ECM (CODE 0336ABTH, 4435HDC) (AC–DELCO #16070333) .
87	Y67 A/TRNS (MD8), 2.73R (GU2), FED	16070737	1	58.73	EPROM, ECM (CODE 0739ABTK, 4443HDF) (AC–DELCO #16070737) .
87	Y67 (5.7–8) A/TRNS (MD8), 3.07R (G44), FED (EXC VB4, VD1, VE1, VT7 EXPORT)	16071623	1	58.73	EPROM, ECM (CODE 1825ADJR) (AC–DELCO #16071823) .....
88	Y07 (5.7–8) M/TRNS (MK2), 3.07R (G44), FED (EXK20 EXPORT)	16074756	1	58.73	EPROM, ECM (CODE 4757ABTP) (AC–DELCO #16074756) .....
88	Y07 (5.7–8) M/TRNS (MH5), 3.07R (G44), FED	16074762	1	58.73	EPROM, ECM (CODE 4763ABTR) (AC–DELCO #16074762) .....
88	Y07 (5.7–8) A/TRNS (MD8), 2.59R (GM1), FED	16074766	1	58.73	EPROM, ECM (CODE 4767ABTS) (AC–DELCO #16074766) .....
88	Y07 (5.7–8) A/TRNS (MD8), 3.07R (G44), FED (EXC K20 EXPORT) ...	16074772	1	58.73	EPROM, ECM (CODE 4773ABTT) (AC–DELCO #16074772) .....
88	Y67 (5.7–8) M/TRNS (MH5), 3.07R (G44), FED	16074800	1	58.73	EPROM, ECM (CODE 4802ABTU) (AC–DELCO #16074800) .....
88	Y67 (5.7–8) M/TRNS (MK2), 3.07R (G44), FED (EXC K20 EXPORT) ...	16074805	1	58.73	EPROM, ECM (CODE 4806ABTW) (AC–DELCO #16074805) .....
88	Y67 (5.7–8) A/TRNS (MD8), 2.73R (GU2), 3.07R (G44), FED (EXC K20 EXPORT)	16079967	1	58.73	EPROM, ECM (CODE 9968ACKY) (AC–DELCO #16079967) .....
89	Y (5.7–8) M/TRNS (ML9), 3.54R (GH0), 3.33R (GT7), FED (NA5), NN5	16133472	1	58.73	EPROM, ECM (3499APYP, 9314ANYL) (02.560) (AC–DELCO #16133472) ...
89	Y (5.7–8) A/TRNS (MD8), 2.59R (GM1), STEREO (UM6/UU8)	16134197	1	58.73	EPROM, ECM (3536APZA, 1374APKD, 4198ARAR) (02.560) (AC–DELCO #16134197) .....
89	Y07 (5.7–8) A/TRNS (MD8), 3.07R (G44), FED (NA5), NN5	16134193	1	58.73	EPROM, ECM (3533APYZ, 1304APKC, 4194ARAP) (02.560) (AC–DELCO #16134193) .....
89	Y07 (5.7–8) A/TRNS (MD8), 2.59R (GM1) (EXC RDO)	16141874	1	58.73	EPROM, ECM (1875ASXB) (02.560) (AC–DELCO #16141874) .....
89	Y67 (5.7–8) A/TRNS (MD8), 2.73R (GU2), 3.07R (G44), FED (NA5), NN5	16134203	1	58.73	EPROM, ECM (3539APZB, 1379APKF, 4204ARAS) (T/W 1227165) (02.560) (AC–DELCO #16134203) .....
90	Y 5.7–8 (L98), 2.73R (GU2)	16134293	1	75.83	EPROM, ECM (4294ANHW) (AC–DELCO #16134293) .....
90	Y 5.7–8 (L98), 3.07R (G44)	16134297	1	75.07	EPROM, ECM (4298ANHT) (AC–DELCO #16134297) .....
90	Y 5.7–8 (L98), 2.59R (GM1)	16134302	1	75.07	EPROM, ECM (4303ANHU) (AC–DELCO #16134302) .....
90	Y 5.7–8 (L98), 6–SPD M/TRANS (ML9)	16137184	1	75.07	EPROM, ECM (7185ARFP) (AC–DELCO #16137184) .....
90	Y 5.7J (LT5)	16163905	1	45.65	EPROM, ECM (9718ANHX, 8555AUAH, 4168AYBK) .....

© 2000 GENERAL MOTORS SERVICE PARTS OPERATIONS

3.670 CONNECTOR – COVER – EPROM – FILTER – MODULE – RELAY – SCREW – SOLENOID – SWITCH – VALVE, Emission Control System(Con't)

90	Y07 5.7–8 (L98), 4–SPD A/TRANS (MD8), 2.59R (GM1)	16137184	1	75.07	EPROM, ECM (1875ASXB) (AC–DELCO #16137184)
91	Y 5.7–8 (L98), 6–SPD M/TRANS (ML9)	16159798	1	75.07	EPROM, ECM (0706ARYU, 9806AXCN) (AC–DELCO #16159798)
91	Y 5.7–8 (L98), 3.07R (G44)	16159799	1	75.07	EPROM, ECM (0710ARYW, 9814AXCP) (AC–DELCO #16159799)
91	Y 5.7–8 (L98), 2.59R (GM1)	16159800	1	75.07	EPROM, ECM (0714ARYX, 9819AXCR) (AC–DELCO #16159800)
91	Y 5.7–8 (L98), 2.73R (GU2)	16159802	1	75.07	EPROM, ECM (0716ARYY, 9826AXCS) (AC–DELCO #16159802)
91	Y 5.7J (LT5)	16193416	1	75.07	EPROM, ECM (8992ARZR, 0277AXFK, 3417BFXB) (AC–DELCO #16193416)
92–93	Y 5.7P (LT1), 6–SPD M/TRANS (ML9), (EXC LEADED FUEL EMIS EXPORT (NM8)	16173866	1	75.07	EPROM, ECM (1692AZUM, 3867BAFL) (AC–DELCO #16173866)
92–93	Y 5.7P (LT1), 3.07R (G44), (EXC LEADED FUEL EMIS EXPORT (NM8)	16184669	1	75.07	EPROM, ECM (1698AZUN, 3872BAFM) (AC–DELCO #16184669)
92–93	Y 5.7P (LT1), 2.59R (GM1), (EXC LEADED FUEL EMIS EXPORT (NM8)	16184672	1	75.07	EPROM, ECM (1702AZUP, 3876BAFN, 4779BDBK) (AC–DELCO #16184672)
92–93	Y 5.7P (LT1), 2.73R (GU2), (EXC LEADED FUEL EMIS EXPORT (NM8)	16184678	1	75.07	EPROM, ECM (1707AZUR, 3880BAFP, 4782BDBL) (AC–DELCO #16184678)
92	Y 5.7J (LT5), (EXC EUROPEAN PROVISIONS (VD1) (EXPORT), VE1 (EXPORT)	16219916	1	75.07	EPROM, ECM (8044AYWT, 2700AZZC, BPPA) (AC–DELCO #16219916)
92	Y67 5.7P (LT1), 3.07R (G44), (EXC LEADED FUEL EMIS EXPORT (NM8)	16184667	1	75.07	EPROM, ECM (8018AYWM, 3863BAFK) (AC–DELCO #16184667)
93–95	Y 5.7J (LT5)	12528772	1	74.33	EPROM, ECM (AC–DELCO #12528772)
93	Y 5.7P (LT1), 3.07R (G44), (EXC LEADED FUEL EMIS EXPORT (NM8)	16184669	1	75.07	EPROM, ECM (4776BDBJ) (AC–DELCO #16184669)
93–95	Y 5.7J (LT5)	16160359	1	71.64	MODULE, EGR VLV REG SOL VLV SIG MODIFIER (AC–DELCO #216–31)
84	Y A/TRNS, FED, CALIF	01226026	1	160.66	MODULE, ENG CONT (REMAN) (1226026 LABELED) (AC–DELCO #1226026)
84	Y M/TRNS (MK2)	01226430	1	DISCON	MODULE, ENG CONT (REMAN) (1226430 LABELED)
85	Y	01226870	1	157.49	MODULE, ENG CONT (REMAN) (1226870 LABELED) (AC–DELCO #1226870)
86–89	Y 5.7–8 (L98)	16198259	1	210.70	MODULE, ENG CONT (REMAN) (1227165 LABELED) (AC–DELCO #16198259)
90–91	Y 5.7J (LT5), SOFT RIDE SUSP (FE1), HVY DUTY SUSP (FE7)	01228331	1	184.38	MODULE, ENG CONT (REMAN) (1228331 LABELED) (AC–DELCO #1228331)
90	Y 5.7–8 (L98)	16198260	1	210.70	MODULE, ENG CONT (REMAN) (1227727 LABELED) (AC–DELCO #16198260)
91	Y 5.7–8 (L98)	16198260	1	210.70	MODULE, ENG CONT (REMAN) (1227727 LABELED) (AC–DELCO #16198260)
92–93	Y 5.7P (LT1)	16159278	1	215.96	MODULE, ENG CONT (REMAN) (AC–DELCO #16159278)

© 2000 GENERAL MOTORS SERVICE PARTS OPERATIONS

3.670 CONNECTOR – COVER – EPROM – FILTER – MODULE – RELAY – SCREW – SOLENOID – SWITCH – VALVE, Emission Control System(Con't)

92–93	Y 5.7J (LT5)	16163993	1	210.70	MODULE, ENG CONT (REMAN) (16163993 LABELED) (AC–DELCO #16163993)
94–95	Y 5.7J (LT5)	16196394	1	206.55	MODULE, ENG CONT (REMAN) (16196394 LABELED) (AC–DELCO #16196394)
94–95	Y 5.7P (LT1)	16181333	1	210.70	MODULE, PWRT CONT (REMAN) (REPROGRAMABLE MODULE) (AC–DELCO #16181333)
96	Y	16214399	1	215.96	MODULE, PWRT CONT (REMAN) (AC–DELCO #16214399)
84	Y	01997125	1	22.36	SOLENOID, EGR VAC REG VLV (AC–DELCO #214–333)
85	Y	01997111	1	22.71	SOLENOID, EGR VAC REG VLV (AC–DELCO #214–331)
86–88	Y	01997195	1	24.29	SOLENOID, EGR VAC REG VLV (AC–DELCO #214–340)
89–91	Y 5.7–8 (L98)	01997195	1	24.29	SOLENOID, EGR VAC REG VLV (AC–DELCO #214–340)
92–96	Y 5.7P (LT1)	01997223	1	23.13	SOLENOID, EGR VAC REG VLV (AC–DELCO #214–396)
85	Y	14087416	1	11.46	SWITCH, EGR TEMP IND (W/WIRE LEAD, INTERN THD M10X1.0X6G) (AC–DELCO #212–337)
86–89	Y	14087415	1	10.98	SWITCH, EGR TEMP IND (AC–DELCO #212–336)
84	Y A/TRNS, CLSD LOOP	17073963	1	DISCON	VALVE, AIR INJ CONT (STAMPED 17073963)
84	Y M/TRNS	17074435	1	DISCON	VALVE, AIR INJ CONT (STAMPED 17074435)
86–90	Y	22062561	1	20.64	VALVE, CTLTC CONV SECD AIR INJN CHK (AC–DELCO #214–423)
91	Y 5.7–8 (L98)	22062561	1	20.64	VALVE, CTLTC CONV SECD AIR INJN CHK (AC–DELCO #214–423)
84	Y A/TRNS, FED	17113422	1	71.73	VALVE, EGR (PROD 17083813)) (AC–DELCO #214–5501)
85	Y FEDERAL EMIS (NA5), (A/TRNS)	17113406	1	70.30	VALVE, EGR (PROD 17085815) (AC–DELCO #214–5591)
85	Y FEDERAL EMIS (NA5), (M/TRNS)	17113459	1	70.30	VALVE, EGR (PROD 17085817) (AC–DELCO #214–5538)
86–88	Y	17113456	1	70.30	VALVE, EGR (PROD #17086078) (AC–DELCO #214–5535)
86–89	Y 5.7–8 (L98)	17113456	1	70.30	VALVE, EGR (PROD #17086078, 17086062, 17086061) (AC–DELCO #214–5535)
89	Y 5.7–8 (L98)	17113456	1	70.30	VALVE, EGR (PROD #17086078) (AC–DELCO #214–5535)
90–91	Y 5.7–8 (L98)	17113456	1	70.30	VALVE, EGR (PROD #17090106) (AC–DELCO #214–5535)
92–95	Y 5.7P (LT1), 6–SPD M/TRANS (ML9), (EXC LEADED FUEL EMIS EXPORT (NM8)	17113381	1	71.73	VALVE, EGR (PROD 17092160) (FOR EXPORT REPL EGR VLV W/ EGR VLV CVR & VAC CAP) (AC–DELCO #214–5083)
92–93	Y 5.7P (LT1), 4–SPD A/TRANS (MD8)	17113382	1	71.73	VALVE, EGR (PROD 17092172) (FOR EXPORT REPL EGR W/ EGR CVR & VAC CAP) (AC–DELCO #214–5084)
93–95	Y 5.7J (LT5)	17113280	1	190.58	VALVE, EGR (W/O GSKT) (AC–DELCO #214–5008)

© 2000 GENERAL MOTORS SERVICE PARTS OPERATIONS

3.670 CONNECTOR – COVER – EPROM – FILTER – MODULE – RELAY – SCREW – SOLENOID – SWITCH – VALVE, Emission Control System(Con't)

94–96	Y 5.7P (LT1), 4–SPD A/TRANS (M30), (EXC LEADED FUEL EMIS EXPORT (NM8)	17113382	1	71.73	VALVE, EGR (PROD 17092172) (FOR EXPORT REPL EGR W/ EGR CVR & VAC CAP) (AC–DELCO #214–5084)
94–95	Y 5.7P (LT1)	10235337	1	4.02	VALVE, SECD AIR INJN BL (AC–DELCO #214–614)
96	Y 5.7P (LT1), 5.7–5 (LT4)	01997201	1	25.89	VALVE, SECD AIR INJN BL SOL (2 PORT VAC, 2 BLADE TERM) (03.130) (AC–DELCO #214–565)
88–89	Y	17088106	1	317.02	VALVE, SECD AIR INJN BYPASS (AC–DELCO #214–117)
90–91	Y 5.7–8 (L98)	17088106	1	317.02	VALVE, SECD AIR INJN BYPASS (AC–DELCO #214–117)
90–91	Y 5.7J (LT5)	17089059	1	158.19	VALVE, SECD AIR INJN BYPASS (AC–DELCO #214–119)
92–93	Y 5.7P (LT1)	17092085	1	155.08	VALVE, SECD AIR INJN BYPASS (AC–DELCO #214–124)
92–95	Y 5.7J (LT5)	17092132	1	158.19	VALVE, SECD AIR INJN BYPASS (AC–DELCO #214–125)
84–85	Y	22050642	1	26.46	VALVE, SECD AIR INJN CHK (AC–DELCO #214–422)
85–87	Y	22048212	1	21.48	VALVE, SECD AIR INJN CHK (AC–DELCO #214–419)
88–91	Y 5.7–8 (L98)	12562568	2	17.10	VALVE, SECD AIR INJN CHK (AC–DELCO #214–998)
90–95	Y 5.7J (LT5)	22048212	4	21.48	VALVE, SECD AIR INJN CHK (AC–DELCO #214–419)
92–95	Y 5.7P (LT1)	22048212	2	21.48	VALVE, SECD AIR INJN CHK (AC–DELCO #214–419)
96	Y 5.7P (LT1), 5.7–5 (LT4)	22048212	2	21.48	VALVE, SECD AIR INJN CHK (AC–DELCO #214–419)
85–86	Y	17085740	1	215.55	VALVE, SECD AIR INJN SW (VALVE, AIR INJ CONT) (AC–DELCO #214–78)
85–86	Y FED	17085741	1	71.30	VALVE, SECD AIR INJN SW (VALVE, AIR INJ SW) (AC–DELCO #214–79)
87	Y	17087221	1	211.34	VALVE, SECD AIR INJN SW (AC–DELCO #214–107)
87	Y (EXC NM8 EXPORT)	17087222	1	185.27	VALVE, SECD AIR INJN SW (AC–DELCO #214–108)
92–95	Y 5.7J (LT5)	17092132	1	158.19	VALVE, SECD AIR INJN SW (AC–DELCO #214–125)
	*EXPORT**********EXPORT**********EXPORT**********EXPORT**********EXPORT*				
84	Y NM5 (EXPORT, CANADA)	01226642	1	58.73	EPROM, ECM (CODE 4044CFB, 8577CFB) (AC–DELCO #1226642)
85	Y A/TRNS (MD8), NM8 (EXPORT)	01227177	1	58.73	EPROM, ECM (CODE 4515CUN) (AC–DELCO #1227177)
85	Y NM8 (EXPORT)	01227734	1	DISCON	EPROM, ECM (CODE 2433CUN, 9567FTU, 2303HLR)
86	Y (5.7–8) MK2, 3.07R, VD1 (EXP) (EXC KB2)	16063909	1	58.73	EPROM, ECM (CODE 3921AARK, 8947AMN) (AC–DELCO #16063909)
86	Y07 (5.7–8) A/TRNS (MD8) 3.07R, NM5 (EXPORT, CANADA) (EXC KB2, NM8, VE1 EXPORT)	01228109	1	58.73	EPROM, ECM (CODE 4045AANL, 8840ALZ, 1736AANM) (AC–DELCO #1228109)
86	Y07 (5.7–8) M/TRNS (MK2) 3.07R, NM5 (EXPORT, CANADA) (EXC KB2, VD1 EXPORT)	01228473	1	58.73	EPROM, ECM (CODE 8848AMA, 1734AARL, 1010AARL) (AC–DELCO #1228473)
86	Y07 A/TRNS (MD8), 3.07R (G44), KB2, VB4, VT7	16059638	1	57.56	EPROM, ECM (CODE 9642BUF) (AC–DELCO #16059638)

© 2000 GENERAL MOTORS SERVICE PARTS OPERATIONS

3.670 CONNECTOR – COVER – EPROM – FILTER – MODULE – RELAY – SCREW – SOLENOID – SWITCH – VALVE, Emission Control System(Con't)

86	Y07 A/TRNS (MD8), 3.07R (G44), KB2, VE1	16059644	1	58.73	EPROM, ECM (CODE 9647BUH) (AC–DELCO #16059644)
86	Y07 M/TRNS (MK2), 3.07R, KB2, VD1 (EXPORT)	16059672	1	58.73	EPROM, ECM (CODE 9676BUP) (AC–DELCO #16059672)
86	Y07 A/TRNS (MD8), 3.07R (G44), VB4, VT7 (EXC KB2)	16064047	1	58.73	EPROM, ECM (CODE 4048AANN, 8867AMD) (AC–DELCO #16064047)
86	Y07 (5.7–8) A/TRNS (MD8) 3.07R (G44) (VE1, EXPORT) (EXC KB2)	16064050	1	58.73	EPROM, ECM (CODE 4051AANP, 8873AMF) (AC–DELCO #16064050)
87	Y M/TRNS (MK2), 3.07R (G44), VD1 (EXPORT)	16070328	1	58.73	EPROM, ECM (CODE 0331ABTM, 4461HDK) (AC–DELCO #16070328)
87	Y A/TRNS (MD8), 3.07R (G44), EXPORT (VB4, VT7)	16070741	1	58.73	EPROM, ECM (CODE 0743ABTL, 4457HDJ) (AC–DELCO #16070741)
87	Y A/TRNS (MD8), 3.07R (G44), VD1, VE1 (EXPORT)	16070745	1	57.58	EPROM, ECM (CODE 0747ABTN, 4465HDM) (AC–DELCO #16070745)
87	Y07 M/TRNS (MK2), 3.07R (G44), NM5 (EXPORT, CANADA) (EXC VD1 EXPORT)	16070312	1	58.73	EPROM, ECM (CODE 0315ABTB, 9539HCY) (AC–DELCO #16070312)
87	Y07 A/TRNS (MD8), 3.07R (G44), NM5 (EXPORT, CANADA) (EXC VB4, VD1, VE1, VT7 EXPORT)	16070733	1	58.73	EPROM, ECM (CODE 0735ABTF, 4431HDB) (AC–DELCO #16070733)
87	Y 87 M/TRNS (MK2), 3.07R (G44), NM5 (EXPORT, CANADA (EXC VD1 EXPORT)	16070323	1	58.73	EPROM, ECM (CODE 0326ABTJ, 4439HDD) (AC–DELCO #16070323)
87	Y67 A/TRNS (MD8), 2.73R (GU2), NM5 (EXPORT, CANADA)	16070737	1	58.73	EPROM, ECM (CODE 0739ABTK, 4443HDF) (AC–DELCO #16070737)
87	Y67 (5.7–8) A/TRNS (MD8), 3.07R (G44), NM5 (EXPORT, CANADA) (VB4, VD1, VE1, VT7 EXPORT)	16071823	1	58.73	EPROM, ECM (CODE 1825ADJR) (AC–DELCO #16071823)
88	Y (5.7–8) M/TRNS (MK2), 3.07R (G44) W/K20 (EXPORT)	16074820	1	58.73	EPROM, ECM (CODE 4822ABTZ) (AC–DELCO #16074820)
88	Y (5.7–8) A/TRNS (MD8), 3.07R (G44), K20 (EXPORT)	16074825	1	58.73	EPROM, ECM (CODE 4826ABUA) (AC–DELCO #16074825)
92	Y 5.7J (LT5), EUROPEAN PROVISIONS (VD1) (EXPORT), VE1 (EXPORT)	16175910	1	75.07	EPROM, ECM (5912BATL) (AC–DELCO #16175910)
92–93	Y 5.7P (LT1), LEADED FUEL EMIS EXPORT (NM8)	16176868	1	45.65	EPROM, ECM (6869BAWS)
84	Y NM5 (EXPORT, CANADA)	01226430	1	DISCON	MODULE, ENG CONT (REMAN) (1226430 LABELED)
84	Y A/TRNS, NM8 (EXPORT)	17073307	1	DISCON	VALVE, AIR INJ CONT (STAMPED 17073307)
84	Y NM8 (EXPORT)	17113422	1	71.73	VALVE, EGR (PROD 17083813)) (AC–DELCO #214–5501)
85	Y LEADED FUEL EMIS EXPORT (NM5), (A/TRNS, EXPORT)	17113406	1	70.30	VALVE, EGR (PROD 17085819) (AC–DELCO #214–5591)

3.671 ADAPTER – BOLT – BOLT KIT – BRACKET – CLAMP – CLIP – COVER – FILTER – GASKET – GROMMET – HOUSING – NUT – PLATE – RETAINER – SPACER – STUD, Emission Control System

84–93	Y	12337892	2	*1.13	BOLT, ECM BRKT (M5X.8X16 THD) (SPECIAL) (AC–DELCO #12337892)
93–95	Y 5.7J (LT5)	12337892	4	*1.13	BOLT, ECM BRKT (M5X.8X16 THD) (SPECIAL) (AC–DELCO #12337892)
92–94	Y 5.7P (LT1)	09441894	2	2.85	BOLT, EGR VLV (TO BE USED W/WASHER 11501869) (HFH, 5/16–18X1.00, 280M, PC, .65 OD) (08.900)
85–87	Y	14082472	1	DISCON	BRACKET, AIR INJ CONT VLV
85	Y FED	14082477	1	DISCON	BRACKET, AIR INJ SW VLV

© 2000 GENERAL MOTORS SERVICE PARTS OPERATIONS

3.671 ADAPTER – BOLT – BOLT KIT – BRACKET – CLAMP – CLIP – COVER – FILTER – GASKET – GROMMET – HOUSING – NUT – PLATE – RETAINER – SPACER – STUD, Emission Control System(Con't)

86–87	Y (EXC NM8 EXPORT)	14082477	1	DISCON	BRACKET, AIR INJ SW VLV
90–91	Y (5.7J)	10086315	1	31.11	BRACKET, ECM
92–96	Y	10143544	1	31.11	BRACKET, ECM
90–91	Y (5.7–8)	10143544	1	31.11	BRACKET, ECM W/SEAL
84	Y	14057008	1	DISCON	BRACKET, EGR SOL
85	Y	14087565	1	DISCON	BRACKET, EGR SOL
85	Y	14087418	1	DISCON	BRACKET, EGR TEMP SW WIRE
85–89	Y	14080604	1	11.68	BRACKET, ELEK FUEL CONT MDL
84	Y	14062575	1	DISCON	BRACKET, ELEK FUEL CONT MDL LWR
84	Y	14062576	1	DISCON	BRACKET, ELEK FUEL CONT MDL UPR
94–95	Y 5.7P (LT1)	10211331	1	8.72	BRACKET, PCM
96	Y	10211331	1	8.72	BRACKET, PCM
90–91	Y 5.7J (LT5), SOFT RIDE SUSP (FE1), HVY DUTY SUSP (FE7)	14104859	1	7.29	BRACKET, SECD AIR INJN BYPASS VLV
94	Y 5.7P (LT1)	12129073	1	.45	BRACKET, SECD AIR INJN PUMP RLY (BLACK) (04.720) (AC–DELCO #12129073)
96	Y	12129073	1	.45	BRACKET, SECD AIR INJN PUMP RLY (BLACK) (04.720) (AC–DELCO #12129073)
84–88	Y	01985870	1	1.68	CLIP, FILTER RET
89–91	Y 5.7–8 (L98)	01985870	1	1.68	CLIP, FILTER RET
96	Y 5.7–5 (LT4), LEADED FUEL EMIS EXPORT (NM8)	10054880	1	6.22	COVER, EGR VLV OPG
85–89	Y	14080605	1	DISCON	COVER, ELEK FUEL CONT MDL HSG
90–92	Y 5.7J (LT5)	01977796	1	.18	FILTER, EGR VAC REG SOL VLV (AC–DELCO #219–14)
92–96	Y 5.7P (LT1)	01977880	1	*.39	FILTER, EGR VAC REG SOL VLV (03.140) (AC–DELCO #219–15)
93–95	Y 5.7J (LT5)	10159525	1	2.47	FILTER, EGR VAC REG SOL VLV (03.670) (AC–DELCO #219–16)
90–91	Y SOFT RIDE SUSP (FE1), H .D .SUSP (FE7)	10086259	1	11.27	HOUSING, ECM
92–93	Y	10086259	1	11.27	HOUSING, ECM
94–95	Y 5.7J (LT5)	10086259	1	11.27	HOUSING, ECM
92–96	Y 5.7P (LT1)	09442958	1	*1.00	NUT, EGR VAC REG VLV SOL (3/8–16 PC, 286M) (HEX, FLANGE) (08.917)
94–96	Y 5.7P (LT1)	14080362	2	*1.65	STUD, EGR VLV (5/16 X 18 X 1 43/64) (01.428)
96	Y 5.7–5 (LT4)	14080362	2	*1.65	STUD, EGR VLV (5/16 X 18 X 1 43/64) (01.428)
	*EXPORT**********EXPORT**********EXPORT**********EXPORT**********EXPORT*				
94–96	Y 5.7P (LT1), LEADED FUEL EMIS EXPORT (NM8)	10054880	1	6.22	COVER, EGR VLV OPG

3.675 BOLT – CLAMP – DUCT – GASKET – HARNESS – HOSE – PIPE – SHIELD – SLEEVE – STUD – SUPPORT, Emission System

87–88	Y	10055726	2	1.94	GASKET, EGR VLV PIPE
92–95	Y 5.7P (LT1)	10055726	2	1.94	GASKET, SECD AIR INJN CHK VLV PIPE
96	Y 5.7P (LT1), 5.7–5 (LT4)	10055726	1	1.94	GASKET, SECD AIR INJN CHK VLV PIPE
84	Y M/TRNS	14067357	1	DISCON	HARNESS, AIR INJN CONT VLV VAC
85	Y	14082463	1	8.77	HARNESS, AIR INJN CONT VLV VAC
86–87	Y (EXC NM8 EXPORT)	14082463	1	8.77	HARNESS, AIR INJN CONT VLV VAC

© 2000 GENERAL MOTORS SERVICE PARTS OPERATIONS

3.675 BOLT – CLAMP – DUCT – GASKET – HARNESS – HOSE – PIPE – SHIELD – SLEEVE – STUD – SUPPORT, Emission System(Con't)

96	Y 5.7P (LT1), 5.7–5 (LT4)	12552798	1	6.65	HARNESS, DCLR VLV VAC
84	Y	14057089	1	DISCON	HARNESS, EGR VALVE VAC
85	Y	14082441	1	8.47	HARNESS, EGR VLV VAC
86	Y	14087573	1	DISCON	HARNESS, EGR VLV VAC
87	Y	10046113	1	11.99	HARNESS, EGR VLV VAC
88	Y	10055893	1	11.99	HARNESS, EGR VLV VAC
89–90	Y 5.7–8	10055893	1	11.99	HARNESS, EGR VLV VAC
91	Y 5.7–8 (L98)	10105375	1	11.99	HARNESS, EGR VLV VAC
92–93	Y 5.7P (LT1)	10105325	1	11.77	HARNESS, EGR VLV VAC
94–96	Y 5.7P (LT1)	10105323	1	6.32	HARNESS, EGR VLV VAC
88–91	Y 5.7–8 (L98)	14082433	1	3.77	HARNESS, EMIS CONT VAC (RR)
84	Y	14057048	1	3.98	HOSE, AIR INJN CONT VLV
84	Y	14063751	1	DISCON	HOSE, AIR INJN CONT VLV DVTR (HOSE TO VLV)
85–87	Y (EXC NM0 EXPORT)	14082471	1	3.11	HOSE, AIR INJN CONT VLV DVTR (45 DEG ANGLE)
85–87	Y (EXC NM8 EXPORT)	14082473	1	3.11	HOSE, AIR INJN CONT VLV DVTR (90 DEG ANGLE)
85	Y	14084382	1	11.02	HOSE, AIR INJN CONT VLV DVTR
85–87	Y	14082475	1	3.01	HOSE, AIR INJN CONT VLV SIL
88–91	Y (5.7–8)	10105320	1	DISCON	HOSE, AIR INJN CONT VLV SIL
85–87	Y	14085800	2	3.37	HOSE, AIR INJN ENG CHK VLV
88–91	Y (5.7–8)	10105316	1	8.06	HOSE, AIR INJN ENG CHK VLV (TEE TO AIR CONT VLV)
88–91	Y (5.7–8)	10105317	RH	8.06	HOSE, AIR INJN ENG CHK VLV
88–91	Y (5.7–8)	10105318	LH	8.06	HOSE, AIR INJN ENG CHK VLV (TEE TO LH PIPE)
89–91	Y (5.7–8)	10105321	1	DISCON	HOSE, AIR INJN ENG CHK VLV
90–91	Y (5.7J) SOFT RIDE SUSP (FE1), H .D .SUSP (FE7)	14104704	1	14.03	HOSE, AIR INJN ENG CHK VLV
90	Y (5.7J)	14104845	RH	14.38	HOSE, AIR INJN ENG CHK VLV
86–87	Y	14092379	1	DISCON	HOSE, AIR INJN PUMP
88–91	Y (5.7–8)	10105319	1	DISCON	HOSE, CTLCT CONV AIR INJN CHK VLV
84–87	Y	14047784	1	3.06	HOSE, CTLTC CONV AIR INJN CHK VLV
84	Y M/TRNS	14067356	1	DISCON	HOSE, DCLR VLV VAC (FROM T.B.I.)
84	Y	14057083	1	DISCON	HOSE, MANIF DIFF PRESS SEN (TO T.B.I.)
90–95	Y 5.7J (LT5)	10106118	1	9.28	HOSE, MAP SEN VAC
90–91	Y 5.7J (LT5), SOFT RIDE SUSP (FE1), HVY DUTY SUSP (FE7)	10105366	1	DISCON	HOSE, SECD AIR INJN BYPASS VLV
92–93	Y 5.7P (LT1)	10108556	1	11.02	HOSE, SECD AIR INJN BYPASS VLV (INJN CHK VLV, 173.5MM LGTH)
92–93	Y 5.7P (LT1)	10108567	1	11.02	HOSE, SECD AIR INJN BYPASS VLV (INJN CONT VLV, 738.3MM LGTH)
92–95	Y 5.7J (LT5)	10108567	1	11.02	HOSE, SECD AIR INJN BYPASS VLV (INJN CONT VLV, 738.3MM LGTH)
96	Y 5.7P (LT1), 5.7–5 (LT4)	12552797	1	11.02	HOSE, SECD AIR INJN BYPASS VLV
90–92	Y 5.7J (LT5)	09438381	1	1.10	HOSE, SECD AIR INJN BYPASS VLV VAC (BULK 5/32 X 25 FT) (08.962)
94–95	Y 5.7P (LT1)	12551242	1	11.88	HOSE, SECD AIR INJN BYPASS VLV VAC (840MM)
94–95	Y 5.7P (LT1)	12551244	1	7.40	HOSE, SECD AIR INJN BYPASS VLV VAC (192MM)
91	Y 5.7J (LT5)	10174329	1	25.76	HOSE, SECD AIR INJN CHK VLV (RH)

© 2000 GENERAL MOTORS SERVICE PARTS OPERATIONS

3.675 BOLT – CLAMP – DUCT – GASKET – HARNESS – HOSE – PIPE – SHIELD – SLEEVE – STUD – SUPPORT, Emission System(Con't)

92–95	Y 5.7J (LT5)	10105399	1	11.02	HOSE, SECD AIR INJN CHK VLV (RH) (ATCHS TO 10105398 A.I.R VLV HOSE ASM LOC NEXT TO LFT FRT WHLHSE BELOW CLU MSTR CYL)
92–95	Y 5.7P (LT1)	10108554	LH	11.02	HOSE, SECD AIR INJN CHK VLV
92–95	Y 5.7P (LT1)	10108557	RH	11.02	HOSE, SECD AIR INJN CHK VLV
92–95	Y 5.7J (LT5)	10186105	1	25.76	HOSE, SECD AIR INJN CHK VLV (ATTACHES TO A.I.R. VLV LOCATED NEXT TO LEFT FRT W/HLHS & BELOW CLU MSTR CYL.)
96	Y 5.7P (LT1), 5.7–5 (LT4)	10108554	LH	11.02	HOSE, SECD AIR INJN CHK VLV
96	Y 5.7P (LT1), 5.7–5 (LT4)	10108557	RH	11.02	HOSE, SECD AIR INJN CHK VLV
94–95	Y 5.7P (LT1)	10186185	1	5.46	HOSE, SECD AIR INJN PUMP
96	Y 5.7P (LT1), 5.7–5 (LT4)	10186185	1	5.46	HOSE, SECD AIR INJN PUMP
88–90	Y	10055827	1	27.36	PIPE, AIR INJ CONT VLV (AC–DELCO #219–69)
84	Y	14055198	1	DISCON	PIPE, AIR INJN CONT (CHK VLV TO CHK VLV)
84	Y CLSD LOOP	14060642	1	DISCON	PIPE, AIR INJN CONT VLV VAC
84	Y (1ST DES)	14050070	1	DISCON	PIPE, CTLTC CONV AIR INJN (CONV TO CHK VLV) (THREADED FITTINGS ON BOTH ENDS)
84	Y	14060158	1	DISCON	PIPE, CTLTC CONV AIR INJN CHK VLV (TO AIR VLV)
85–87	Y (EXC NM8 EXPORT)	14082469	1	DISCON	PIPE, CTLTC CONV AIR INJN CHK VLV TO PUMP
86–90	Y	10097662	1	26.89	PIPE, CTLTC CONV SECD AIR INJN (VLV TO CONV) (AC–DELCO #219–77)
91	Y 5.7–8 (L98)	10097662	1	26.89	PIPE, CTLTC CONV SECD AIR INJN (VLV TO CONV) (AC–DELCO #219–77)
86	Y	14092329	1	40.55	PIPE, EGR
87–88	Y	10055728	1	62.22	PIPE, EGR VLV
89	Y 5.7–8	10055728	1	62.22	PIPE, EGR VLV
90–91	Y 5.7–8 (L98)	10108433	1	62.22	PIPE, EGR VLV
93–95	Y 5.7J (LT5)	10168641	1	105.06	PIPE, EGR VLV
93–95	Y 5.7J (LT5)	10168691	1	597.72	PIPE, EGR VLV ADAP
91	Y 5.7–8 (L98)	10055827	1	27.36	PIPE, SECD AIR INJN BYPASS VLV (AC–DELCO #219–69)
88–89	Y	10055834	1	7.24	PIPE, SECD AIR INJN CHK VLV (AC–DELCO #219–70)
90–91	Y 5.7–8 (L98)	10055834	1	7.24	PIPE, SECD AIR INJN CHK VLV (AC–DELCO #219–70)
90	Y 5.7J (LT5)	14104844	1	DISCON	PIPE, SECD AIR INJN CHK VLV
90–95	Y 5.7J (LT5)	14104873	LH	13.04	PIPE, SECD AIR INJN CHK VLV (AC–DELCO #219–140)
90–95	Y 5.7J (LT5)	14104887	RH	97.88	PIPE, SECD AIR INJN CHK VLV (AC–DELCO #219–141)
90–91	Y 5.7J (LT5)	14104923	1	78.85	PIPE, SECD AIR INJN CHK VLV (SIDE) (AC–DELCO #219–142)
91–95	Y 5.7J (LT5)	10174328	RH	37.01	PIPE, SECD AIR INJN CHK VLV (CROSSUNDER) (AC–DELCO #219–83)
92–95	Y 5.7P (LT1)	10108553	RH	51.67	PIPE, SECD AIR INJN CHK VLV (INCLUDES HEAT SHIELD) (AC–DELCO #10108553)
92	Y 5.7P (LT1)	10108555	LH	12.44	PIPE, SECD AIR INJN CHK VLV

© 2000 GENERAL MOTORS SERVICE PARTS OPERATIONS

3.675 BOLT – CLAMP – DUCT – GASKET – HARNESS – HOSE – PIPE – SHIELD – SLEEVE – STUD – SUPPORT, Emission System(Con't)

93–96	Y 5.7P (LT1)	10221302	LH	11.79	PIPE, SECD AIR INJN CHK VLV (AC–DELCO #10221302)
96	Y 5.7P (LT1), 5.7–5 (LT4)	10108553	RH	51.67	PIPE, SECD AIR INJN CHK VLV (INCLUDES HEAT SHIELD) (AC–DELCO #10108553)
96	Y 5.7–5 (LT4)	10221302	LH	11.79	PIPE, SECD AIR INJN CHK VLV (AC–DELCO #10221302)
86	Y ALUM HD	14087579	1	12.09	SHIELD, EGR PIPE
86	Y CAST IRON HD	14101107	1	20.09	SHIELD, EGR PIPE
87–88	Y	10055729	1	13.46	SHIELD, EGR PIPE (120X290MM W/20MM HOLE)
87–88	Y	10055730	1	0.64	SHIELD, EGR PIPE (100X120MM W/NO HOLE)
92–96	Y 5.7P (LT1)	10186157	1	3.83	SHIELD, EGR VLV PIPE HT
96	Y 5.7–5 (LT4)	10186157	1	3.83	SHIELD, EGR VLV PIPE HT
	*EXPORT**********EXPORT**********EXPORT**********EXPORT**********EXPORT*				
86–87	Y NM8 (EXPORT)	14085722	1	DISCON	HARNESS, AIR INJN CONT VLV VAC
85	Y NM8, VB4, VD1, VT7 (EXPORT)	14085723	1	13.92	HOSE, AIR INJN CONT VLV DVTR
86	Y VB4, VD1, VT7 (EXPORT)	14085723	1	13.92	HOSE, AIR INJN CONT VLV DVTR
87	Y NM8 (EXPORT)	14085723	1	13.92	HOSE, AIR INJN CONT VLV DVTR
84	Y NM4 (EXPORT CANADA)	14060641	1	DISCON	PIPE, AIR INJN CONT VLV VAC

3.680 ADAPTER – BOLT – CLAMP – CONNECTOR – GASKET, Emission System

86–88	Y	14081021	AR	*1.25	BOLT, EGR TUBE (08.913)
89–91	Y 5.7–8 (L98)	14081021	AR	*1.25	BOLT, EGR TUBE (TORX HD 8X1.25X20) (08.913)
92–95	Y 5.7P (LT1)	09442052	3	*1.25	BOLT, SECD AIR INJN CHK VLV PIPE (3/8–16X3/4) (08.900)
86–90	Y	14093102	1	2.45	CLAMP, CTLTC CONV AIR INJN CK VLV RR (CONV INLET PIPE)
91	Y 5.7–8 (L98)	14093102	1	2.45	CLAMP, CTLTC CONV AIR INJN CK VLV RR (CONV INLET PIPE)
84–00	Y	14034744	1	2.45	CLAMP, CTLTC CONV AIR INJN PIPE (AT CONV)
84	Y	14091221	2	3.15	CLAMP, CTLTC CONV AIR INJN PIPE (EXH UPR)
84	Y	14091222	2	3.15	CLAMP, CTLTC CONV AIR INJN PIPE (EXH LWR)
85	Y FED	14091221	1	3.15	CLAMP, CTLTC CONV AIR INJN PIPE (EXH UPR)
85–87	Y (EXC NM8 EXPORT)	14091222	2	3.15	CLAMP, CTLTC CONV AIR INJN PIPE (EXH LWR)
86–37	Y (EXC NM8 EXPORT)	14091221	1	3.15	CLAMP, CTLTC CONV AIR INJN PIPE (EXH UPR)
88	Y	14091221	1	3.15	CLAMP, CTLTC CONV AIR INJN PIPE (EXH UPR)
88	Y	14091222	2	3.15	CLAMP, CTLTC CONV AIR INJN PIPE (EXH LWR)
89–91	Y (5.7–8)	14091221	1	3.15	CLAMP, CTLTC CONV AIR INJN PIPE (EXH UPR)
89–91	Y (5.7–8)	14091222	2	3.15	CLAMP, CTLTC CONV AIR INJN PIPE (EXH LWR)
91	Y 5.7–8 (L98)	14034744	1	2.45	CLAMP, CTLTC CONV AIR INJN PIPE (AT CONV)
86	Y	14087580	1	3.02	CLAMP, EGR PIPE (25MM ID)
93–95	Y 5.7J (LT5)	14034744	1	2.45	CLAMP, EGR VLV PIPE (AT RH EXH MANIF)

© 2000 GENERAL MOTORS SERVICE PARTS OPERATIONS

3.680 ADAPTER – BOLT – CLAMP – CONNECTOR – GASKET, Emission System(Con't)

92–95	Y 5.7P (LT1)	12338017	1	*3.50	CLAMP, SECD AIR INJN PUMP DUCT (28.6–86.2 DIA WORM GEAR) (08.948) (AC–DELCO #12338017)
92–96	Y 5.7J (LT5)	12338017	1	*3.50	CLAMP, SECD AIR INJN PUMP DUCT (28.6–86.2 DIA WORM GEAR) (08.948) (AC–DELCO #12338017)
88–90	Y	10046154	1	3.87	CONNECTOR, AIR INJ ENG CHK VLV
91	Y 5.7–8 (L98)	10046154	1	3.87	CONNECTOR, AIR INJ ENG CHK VLV
90–91	Y (5.7J) H .D .SUSP (FE7), SOFT RIDE SUSP (FE1)	14104881	1	13.47	CONNECTOR, AIR INJ ENG CHK VLV HOSE (TEE)
90–91	Y (5.7J) H .D .SUSP (FE7), SOFT RIDE SUSP (FE1)	14104922	1	13.47	CONNECTOR, AIR INJ ENG CHK VLV HOSE
88–91	Y 5.7–8 (L98)	10046119	1	DISCON	CONNECTOR, EGR VLV VAC HARN (03.675)
92–93	Y 5.7P (LT1)	12550629	1	1.52	CONNECTOR, EMIS CONT VAC HARN
92–96	Y 5.7P (LT1)	14082470	1	3.20	CONNECTOR, EMIS CONT VAC HARN (03.278) (1 PORT HOSE CONN 4.5 OD, SAE 1113, PZOR)
91–94	Y 5.7J (LT5)	14062223	1	.88	CONNECTOR, MAP SEN VAC HOSE (ELBOW) (5.6X3.6 ID, RUBBER, PL)
90–91	Y 5.7J (LT5), SOFT RIDE SUSP (FE1), HVY DUTY SUSP (FE7)	10105382	1	13.47	CONNECTOR, SECD AIR INJN CHK VLV HOSE (HOSE 50 DEG RAD, 6259M PL)
90–91	Y 5.7J (LT5), SOFT RIDE SUSP (FE1), HVY DUTY SUSP (FE7)	14088584	1	1.78	CONNECTOR, SECD AIR INJN CHK VLV HOSE (VAC, 94–LONG NYLON BLACK) (24.3X18.5X18.5) (TEE) (03.675)
92–93	Y 5.7P (LT1)	10108508	1	2.92	CONNECTOR, SECD AIR INJN CHK VLV HOSE (AC–DELCO #10108508)
92–95	Y 5.7J (LT5)	10186106	1	13.52	CONNECTOR, SECD AIR INJN CHK VLV HOSE
92–95	Y 5.7J (LT5)	14088584	1	1.78	CONNECTOR, SECD AIR INJN CHK VLV HOSE (VAC, 94–LONG NYLON BLACK) (24.3X18.5X18.5) (TEE) (03.675)
94–96	Y 5.7P (LT1)	10105352	1	1.78	CONNECTOR, SECD AIR INJN CHK VLV HOSE
96	Y 5.7–5 (LT4)	10105352	1	1.78	CONNECTOR, SECD AIR INJN CHK VLV HOSE
90–95	Y 5.7J (LT5)	14104888	RH	2.69	CONNECTOR, SECD AIR INJN CHK VLV PIPE (AC–DELCO #14104888)
96	Y 5.7P (LT1), 5.7–5 (LT4)	24504030	1	.90	CONNECTOR, SECD AIR INJN PUMP HOSE (TO BLEED SOL) (5/8 X 5/8 X 3/16)
84	Y (5.7–8)	12554530	AR	*.45	GASKET, E .G .R. VLV (03.671) (AC–DELCO #219–20)
85–87	Y	14088262	1	2.06	GASKET, EGR VLV (AC–DELCO #14088262)
88–91	Y 5.7–8 (L98)	10077547	1	*.68	GASKET, EGR VLV (AC–DELCO #10077547)
92–96	Y 5.7P (LT1)	12337972	1	*.31	GASKET, EGR VLV (AC–DELCO #219–21)
93–95	Y 5.7J (LT5)	03522442	1	3.10	GASKET, EGR VLV (AC–DELCO #219–175)
96	Y 5.7–5 (LT4)	12337972	1	*.31	GASKET, EGR VLV (AC–DELCO #219–21)
89–91	Y 5.7–8 (L98)	10055726	2	1.94	GASKET, EGR VLV PIPE (03.675)
93–95	Y 5.7J (LT5)	10187784	1	.97	GASKET, EGR VLV PIPE

© 2000 GENERAL MOTORS SERVICE PARTS OPERATIONS

3.680 ADAPTER – BOLT – CLAMP – CONNECTOR – GASKET, Emission System(Con't)

88–90	Y	14015367	2	*.85	GASKET, SECD AIR INJN BYPASS VLV PIPE (03.671)
91	Y 5.7–8 (L98)	14015367	2	*.85	GASKET, SECD AIR INJN BYPASS VLV PIPE (03.671)

3.682 BOLT – BRACKET – BUFFER – CLAMP – CONNECTOR – COVER – MODULE – PLUG – RELAY – RETAINER – SEAL – SENSOR – SPACER, Computer Control Sensors

90–95	Y 5.7J (LT5)	11514491	2	4.75	BOLT, MAP SEN (TO BRKT) (5X.8X30, 28.4 THD, 5.9 OD, T25 TORX DR. 9.8 STL) (08.907)
90–95	Y 5.7J (LT5)	10192577	2	1.30	BOLT, MAP SEN BRKT (TO PLENUM) (M6X1.0X13.0) (METRIC TORX HD) (08.913)
92	Y 5.7J (LT5)	11516061	1	*1.10	BOLT, OXY SEN BRKT (M6X1X12, FL HD) (08.900)
90–95	Y 5.7J (LT5)	10192577	4	1.30	BOLT, SECD PORT THROT VLV BRKT (M6X1.0X13.0) (METRIC TORX HD) (08.913)
90–95	Y 5.7J (LT5)	10067781	1	8.68	BRACKET, MAP SEN
90–91	Y 5.7–8 (L98)	10096141	1	4.44	BRACKET, MAP SEN
85	Y	14080660	1	DISCON	BRACKET, MASS AIR FLOW SEN BURNOFF MDL
88–89	Y 5.7–8	14104140	1	1.88	BRACKET, MASS AIRFLOW SEN RLY (01.055)
93–95	Y 5.7J (LT5)	10168422	1	26.01	BRACKET, MDP SEN (03.671)
89	Y	14062552	1	1.12	BRACKET, OXY SEN CONN RET (02.559)
90–91	Y 5.7–8 (L98)	14062552	1	1.12	BRACKET, OXY SEN CONN RET (02.559)
92–92	Y 5.7J (LT5)	14104941	1	12.90	BRACKET, OXY SEN CONN RET
92–96	Y 5.7P (LT1)	10165378	1	2.50	BRACKET, OXY SEN CONN RET (02.559)
93–95	Y 5.7J (LT5)	10225129	1	7.75	BRACKET, OXY SEN CONN RET
96	Y 5.7–5 (LT4)	10165388	1	2.50	BRACKET, OXY SEN CONN RET (02.559)
93–95	Y 5.7J (LT5)	10168670	1	31.60	CLAMP MDP SEN (01.750)
90–95	Y 5.7J (LT5)	10090513		15.44	COVER, MAP SEN (AC–DELCO #10090513)
85	Y 5.7–8 (L98)	14080620	1	882.82	MODULE, MASS AIRFLOW SEN (AC–DELCO #216–52)
92–96	Y 5.7P (LT1)	03738198	1	.71	PLUG, MAP SEN HOLE (08.153)
96	Y 5.7–5 (LT4)	03738198	1	.71	PLUG, MAP SEN HOLE (08.153)
84–90	Y	12338069	1	*3.67	RETAINER, VEH SPD SEN (4338) (AC–DELCO #12338069)
86–96	Y	12146312	1	9.10	SENSOR, ENG COOL TEMP (UND PLENUM) (USED FOR CLUSTERS W/OIL GAGE & LGT COMB) (2–WAY M) (AC–DELCO #213–310)
90–91	Y 5.7J (LT5)	25176708	2	94.75	SENSOR, EXH OXY (STAMPED 10096129) (AC–DELCO #213–632) (RETAIL SENSOR)
92	Y 5.7J (LT5), (1ST DES)	25176708	2	104.75	SENSOR, EXH OXY (W/HARN THAT IS 350MM LG) (STAMPED 10096129) (AC–DELCO #213–632) (RETAIL SENSOR)
92	Y 5.7J (LT5), (2ND DES)	25176709	2	117.30	SENSOR, EXH OXY (W/HARNESS THAT IS 240MM LG) (STAMPED 10137641) (AC–DELCO #213–633)

© 2000 GENERAL MOTORS SERVICE PARTS OPERATIONS

3.682 BOLT – BRACKET – BUFFER – CLAMP – CONNECTOR – COVER – MODULE – PLUG – RELAY – RETAINER – SEAL – SENSOR – SPACER, Computer Control Sensors(Con't)

93–95	Y 5.7J (LT5)	25176709	2	117.30	SENSOR, HTD OXY (STAMPED 10137641) (AC–DELCO #213–633)
94	Y 5.7P (LT1), (EXC LEADED FUEL EMIS EXPORT (NM6)	25312184	3	62.81	SENSOR, HTD OXY (AC–DELCO #AFS75) (OEM SENSOR)
95	Y 5.7P (LT1), (EXC LEADED FUEL EMIS EXPORT (NM8), EUROPEAN PROVISIONS (VD1) (EXPORT), VE1 (EXPORT)	25312184	3	62.81	SENSOR, HTD OXY (AC–DELCO #AFS75) (OEM SENSOR)
96	Y 5.7–C (LT4)	25312184	4	62.81	SENSOR, HTD OXY (2–PRE CONVERTER, 2–POST CONVERTER) (AC–DELCO #AFS75) (OEM SENSOR)
96	Y 5.7P (LT1), (EXC LEADED FUEL EMIS EXPORT (NM8)	25312184	4	62.81	SENSOR, HTD OXY (2–PRE CONVERTER, 2–POST CONVERTER) (AC–DELCO #AFS75) (OEM SENSOR)
90–95	Y 5.7J (LT5)	25036751	1	33.33	SENSOR, INT AIR TEMP (2 BLADE TERM, 3/8–18 THD) (STAMPED AC12V) (AC–DELCO #213–190)
92–95	Y 5.7P (LT1)	12160244	1	14.61	SENSOR, INT AIR TEMP (AC–DELCO #213–243)
96	Y	12160244	1	14.61	SENSOR, INT AIR TEMP (AC–DELCO #213–243)
85–90	Y	12146312	1	9.10	SENSOR, MANIF AIR TEMP (AT INT MANIF) (2 BLADE TERM, 3/8–18 THD) (USED FOR CLUSTERS W/OIL GAGE & LIGHT COMB) (AC–DELCO #213–310)
85	Y (1ST DES)	25036751	1	33.33	SENSOR, MANIF AIR TEMP (2 BLADE TERM, 3/8–18 THD) (STAMPED AC12V) (HOLES IN PROBE & MATES W/SQUARE SLOTTED CONN) (AC–DELCO #213–190)
91	Y 5.7–8 (L98)	12146312	1	9.10	SENSOR, MANIF AIR TEMP (AT INT MANIF) (USED FOR CLUSTER W/OIL GAGE & LIGHT COMB) (2–WAY M) (AC–DELCO #213–310)
84	Y	16137039	1	65.40	SENSOR, MAP (1 PORT, 3 BLADE TERM, 2 BOLT HOLES) (AC–DELCO #213–185)
90	Y	16137039	1	65.40	SENSOR, MAP (1 PORT, 3 TERM, 2 BOLT HOLES) (AC–DELCO #213–185)
91	Y 5.7–8 (L98)	16137039	1	65.40	SENSOR, MAP (1 PORT, 3 TERM, 2 BOLT HOLES) (AC–DELCO #213–185)
91–95	Y 5.7J (LT5)	16137039	1	65.40	SENSOR, MAP (1 PORT, 3 TERM, 2 BOLT HOLES) (AC–DELCO #213–185)
92–95	Y 5.7P (LT1)	16137039	1	65.40	SENSOR, MAP (1 PORT, 3 TERM, 2 BOLT HOLES) (AC–DELCO #213–185)
96	Y	16137039	1	65.40	SENSOR, MAP (AC–DELCO #213–185)
85	Y	14081243	1	540.26	SENSOR, MASS AIRFLOW (AC–DELCO #213–162)
86–87	Y	14094712	1	507.44	SENSOR, MASS AIRFLOW (AC–DELCO #213–163)

© 2000 GENERAL MOTORS SERVICE PARTS OPERATIONS

3.682 BOLT – BRACKET – BUFFER – CLAMP – CONNECTOR – COVER – MODULE – PLUG – RELAY – RETAINER – SEAL – SENSOR – SPACER, Computer Control Sensors(Con't)

88	Y	10055877	1	397.22	SENSOR, MASS AIRFLOW (AC–DELCO #213–161)
89	Y 5.7–8 (L98)	10055877	1	397.22	SENSOR, MASS AIRFLOW (AC–DELCO #213–161)
94–95	Y 5.7P (LT1)	25008308	1	367.42	SENSOR, MASS AIRFLOW (INCLS SNSR & 2 CLMPS) (AC–DELCO #213–252)
94	Y 5.7P (LT1)	25099215	1	579.98	SENSOR, MASS AIRFLOW (W/INT AIR TEMP SEN) (W/DUCT) (AC–DELCO #213–238)
96	Y	25008308	1	367.42	SENSOR, MASS AIRFLOW (INCLS SNSR & 2 CLMPS) (AC–DELCO #213–252)
90–95	Y 5.7J (LT5)	16006834	1	61.77	SENSOR, MDP (AC–DELCO #16006834)
84–87	Y	25162693	1	51.12	SENSOR, OXY (1 WIRE) (AC–DELCO #AFS20) (OEM SENSOR)
87	Y (EXC LEADED FUEL EMIS EXPORT (NM8)	25166816	2	51.55	SENSOR, OXY (1 WIRE) (AC–DELCO #AFS21) (OEM SENSOR)
88–91	Y 5.7–8 (L98)	25166816	2	51.55	SENSOR, OXY (PURPLE WIRE) (18 X 1.5) (TYPE #21 MATES W/12015791) (AC–DELCO #AFS21) (OEM SENSOR)
92–93	Y 5.7P (LT1), (EXC LEADED FUEL EMIS EXPORT (NM8)	25166816	2	51.55	SENSOR, OXY (PURPLE WIRE) (18 X 1.5) (TYPE #21 MATES W/12015791) (AC–DELCO #AFS21) (OEM SENSOR)
84–90	Y D9A	25007224	1	99.55	SENSOR, VEH SPD (TRANS MTD) (USED W/AXLE RATIO 2.59, 2.73) (AC–DELCO #213–210)
84–90	Y D9B	25007309	1	98.96	SENSOR, VEH SPD (TRANS MTD) (USED W/AXLE RATIO 3.07, 3.33, 3.45) (AC–DELCO #213–223)
91–93	Y (D8I)	10456089	1	36.09	SENSOR, VEH SPD (W/ O–RING) (04.329) (AC–DELCO #213–198)
91–93	Y (D8K)	10456091	1	32.70	SENSOR, VEH SPD (NATURAL COLOR) (PART NO STAMPED ON HSG) (04.329) (AC–DELCO #213–199)
91–93	Y (D8L)	10456092	1	32.70	SENSOR, VEH SPD (BLACK COLOR) (PART NO STAMPED ON HSG) (04.329) (AC–DELCO #213–200)
94–96	Y 6–SPD M/TRANS (ML9)	10456089	1	36.09	SENSOR, VEH SPD (W/ O–RING) (04.329) (AC–DELCO #213–198)

*EXPORT**********EXPORT**********EXPORT**********EXPORT**********EXPORT*

05	Y 5.7P (LT1), EUROPEAN PROVISIONS (VD1) (EXPORT), VE1 (EXPORT)	25312184	2	62.81	SENSOR, HTD OXY (AC–DELCO #AFS75) (OEM SENSOR)

3.725 THROTTLE – THROTTLE BODY, Throttle Body Injection

Note: FOR 1984 USAGE REFER TO ELECTRONIC FUEL INJECTION CHART GRP 3.725

3.726 BOLT – COVER KIT – GASKET, Throttle Body/Carburetor

Note: FOR 1984 USAGE REFER TO ELECTRONIC FUEL INJECTION CHART GRP 3.725

93–95	Y	11514492	2	1.55	BOLT, TBI ADAP (M5X.8X16 HRD PT 4.8 T25, PE FULL THD) (M5X.8X16 THD PT 4.8 T25) (08.913)
84	Y (5.7–8)	10140668	1	17.14	GASKET, TBI (INL MANIF CVR)

© 2000 GENERAL MOTORS SERVICE PARTS OPERATIONS

3.729 BODY KIT, Throttle Body/Carburetor

Note: FOR 1984 USAGE REFER TO ELECTRONIC FUEL INJECTION CHART GRP 3.725

90-95	Y 5.7J (LT5), (FOR MDL APPL AND POA SEE THROT BODY CHT)	17112264	1	1541.61	BODY KIT, THROT (03.335) (AC-DELCO #17112264) .....
90-91	Y 5.7-8 (L98), (FOR MDL APPL & POA SEE THROT BODY CHT)	17112385	1	468.05	BODY KIT, THROT (03.335) (AC-DELCO #17112385) .....
92-93	Y 5.7P (LT1)	17092076	1	638.05	BODY KIT, THROT (03.335) (AC-DELCO #17092076) .....

3.886 CONNECTOR - HOSE - VALVE, Cruise Control Vacuum

91	Y 5.7J (LT5)	14062217	2	*1.02	CONNECTOR, CRCONT SERVO HOSE (90 DEGREE ELBOW) (3.6X4.0 ID, PLASTIC) (08.963) .....
90-95	Y 5.7J (LT5)	10067705	1	5.50	CONNECTOR, CRCONT VAC HOSE (1/4" DIA) (01.020) .....
90-95	Y 5.7J (LT5)	10110989	1	13.11	HOSE, CRCONT VAC (TO PLENUM) ...
91	Y	10174377	1	DISCON	HOSE, CRCONT VAC .....
85-96	Y	14091289	1	10.40	HOSE, CRCONT VAC REL SW .....
84	Y	14056665	1	DISCON	HOSE, VAC REL SW .....

3.901 BOLT - BRACKET - COVER - NUT - STUD, Fuel Pump

89-91	Y 5.7-8 (L98)	14094069	1	4.08	COVER, F/PMP OPG .....
84-88	Y	14094069	1	4.08	COVER, FUEL PUMP OPG .....

3.904 GASKET - INSULATOR, Fuel Pump Mounting

84-88	Y	12560223	1	*4.00	GASKET, FUEL PUMP OPG CVR .....
89-91	Y 5.7-8 (L98)	12560223	1	*4.00	GASKET, F/PMP OPG CVR .....

3.910 SENSOR - SWITCH, Fuel Pump Pressure

84	Y	25036553	1	12.65	SWITCH, FUEL PUMP (2 BLADE TERM, 1/8-27 THD) (01.800) (AC-DELCO #D1818) .....

4.054 BUSHING - ROD - SWITCH, Transmission Safety Starting Switch Or Speed Sensing [4-SPEED MANUAL]

86-88	Y	14006979	2	.99	BUSHING, CLU OPER NEU START SW .
84-88	Y	14080260	1	6.85	ROD, CLU START SW .....
84-86	Y	14047136	1	22.05	SWITCH, TRANS NEU START (ON CLU PED BRKT) .....
87-88	Y	10045822	1	30.87	SWITCH, TRANS NEU START (AC-DELCO #D2213A) .....

4.054 BUSHING - CONNECTOR - RELAY - RETAINER - ROD - SOLENOID - SWITCH, Safety Starting Switch Or Speed Sensing [6-SPEED MANUAL]

90-96	Y 6-SPD M/TRANS (ML9)	14006979	1	.99	BUSHING, CLU PED POSN SW ROD ...
90-92	Y 6-SPD M/TRANS (ML9)	14089936	1	16.26	RELAY, M/TRNS 2ND & 3RD GR BLOCKOUT (5-PIN OVAL SHAPE) (USE W/CONN 15306002) (01.055) (AC-DELCO #15-8240) .....
96	Y 6-SPD M/TRANS (ML9), (EXCVE1 (EXPORT)	12193603	2	20.30	RELAY, M/TRNS 2ND & 3RD GR BLOCKOUT (GRAY) (SPST 280 MINI) (4-WAY) (02.100) (AC-DELCO #12193603) .....
84-96	Y	03989067	1	*.94	RETAINER, CLU PED POSN SW ROD (03.425) .....
89-95	Y	14080260	1	6.85	ROD, CLU PED POSN SW .....
96	Y 6-SPD M/TRANS (ML9)	14080260	1	6.85	ROD, CLU PED POSN SW .....
89-96	Y 6-SPD M/TRANS (ML9)	10045822	1	30.87	SWITCH, CLU PED POSN (AC-DELCO #D2213A) .....

© 2000 GENERAL MOTORS SERVICE PARTS OPERATIONS

4.085 BOLT – STUD, Transmission Mount and Support [6–SPEED MANUAL]

89–90	Y	10111696	5	1.80	BOLT, TRANS
91–95	Y 5.7J (LT5), 6–SPD M/TRANS (ML9)	10111696	5	1.80	BOLT, TRANS (M12X1.75X40)
91	Y 5.7–8 (L98)	10174418	5	3.00	BOLT, TRANS (M12X1.75X45)
92–95	Y 5.7P (LT1), 6–SPD M/TRANS (ML9)	10174418	5	3.00	BOLT, TRANS (M12X1.75X45)
96	Y 6–SPD M/TRANS (ML9)	10174418	5	3.00	BOLT, TRANS (M12X1.75X45)
89	Y	10140805	1	DISCON	STUD, TRANSAXLE

4.115 BOLT – BUSHING – CONNECTOR – CONVERTER – SEAL – SWITCH, Transmission Converter [AUTOMATIC]

94–96	Y 4–SPD A/TRANS (M30)	20616587	3	*1.82	BOLT, STAT SHF (M6X1X19.0) (11.561) (AC–DELCO #20616587)
84–91	Y	01261968	AR	*1.82	BOLT, TRANS T/CV (TO FLYWHEEL) (M10X1.5X15 12.5 THD) (AC–DELCO #1261968)
92–93	Y 4–SPD A/TRANS (MD8)	01261968	3	*1.82	BOLT, TRANS T/CV (M10X1.5X15 12.5 THD) (AC–DELCO #1261968)
94–96	Y 4–SPD A/TRANS (M30)	01261968	3	*1.82	BOLT, TRANS T/CV (M10X1.5X15 12.5 THD) (AC–DELCO #1261968)
84–93	Y 4–SPD A/TRANS (MD8)	08634383	1	11.02	CONNECTOR, A/TRNS WRG (W/SEAL CONVR CLU) (ELECTRICAL) (3–WAY) (AC–DELCO #8634383)
92	Y 4–SPD A/TRANS (MD8)	08682294	1	4.60	CONNECTOR, A/TRNS WRG (5 TERM, W/SEAL) (AC–DELCO #8682294)
96	Y 4–SPD A/TRANS (M30)	12162202	1	.77	CONNECTOR, SOL–TCC PWM VLV (BLUE) (2–WAY F) (W/O LEADS)
92–93	Y 5.7P (LT1), 4–SPD A/TRANS (MD8)	12102612	1	42.12	CONNECTOR, TCC WRG (BLACK) (5–WAY M)
84–90	Y	10054241	1	*1.82	SEAL, O–RING, ELEC CONN (04.338) (AC–DELCO #10054241)

4.630 COVER, Brake/Clutch Pedal

84–89	Y M/TRNS	14053657	2	4.35	COVER, BRK PED
84–89	Y A/TRNS	14053658	1	6.40	COVER, BRK PED
90–96	Y 6–SPD M/TRANS (ML9)	10150010	1	2.75	COVER, BRK PED
90–91	Y 5.7–8 (L98), 4–SPD A/TRANS (MD8)	14053658	1	6.40	COVER, BRK PED
92–93	Y 5.7P (LT1), 4–SPD A/TRANS (MD8)	14053658	1	6.40	COVER, BRK PED
94–96	Y 5.7P (LT1), 4–SPD A/TRANS (M30)	14053658	1	6.40	COVER, BRK PED
84–89	Y	14053657	2	4.35	COVER, CLU PED
90–96	Y 6–SPD M/TRANS (ML9)	10150009	1	2.75	COVER, CLU PED

4.662 NUT – PIN – RETAINER – WASHER, Brake Master Cylinder Adjusting

90–96	Y	03817880	1	*.41	RETAINER, BRK PED PUSH ROD

4.671 FITTING – GASKET, Brake Hose

84–88	Y	10139097	AR	*.24	GASKET, BRAKE HOSE (04.686) (AC–DELCO #10139097)

4.845 NUT – SEAL – STUD, Hydraulic Power Brake Booster

84–90	Y	26001594	AR	*2.45	SEAL (7.65MM I.D.X 1.63MM THICK) (HI TEMP SEAL) (06.674)
85	Y	52350585	1	1.50	STUD, P/B BOOS VAC PIPE (3/8–16X1.52 LONG) (02.277)

© 2000 GENERAL MOTORS SERVICE PARTS OPERATIONS

4.931 FITTING – HOSE, Vacuum Power Brake

90–95	Y 5.7J (LT5)	00336018	1	1.52	FITTING, P/B BOOS VAC TUBE (1/4–18 NPTF W/3/8 NIPPLE) (01.745)
92–96	Y 5.7P (LT1)	00336018	1	1.52	FITTING, P/B BOOS VAC TUBE (1/4–18 NPTF W/3/8 NIPPLE) (01.745)
96	Y 5.7–5 (LT4)	00336018	1	1.52	FITTING, P/B BOOS VAC TUBE (1/4–18 NPTF W/3/8 NIPPLE) (01.745)
84	Y	14057031	1	DISCON	FITTING, PWR BRK BOOS TUBE

6.635 BRACKET – CAP – HOSE – NUT – RESERVOIR – SEAL – STRAP, Steering Pump

84	Y (1ST DES)	14060187	1	DISCON	BRACKET, HYD FLUID RSVR (HAS 1 HOLE, 1 SLOT)
85–86	Y07	14084030	1	11.34	BRACKET, HYD FLUID RSVR
86–87	Y67	14092700	1	DISCON	BRACKET, HYD FLUID RSVR
87	Y07 (EXC 1BL PERF HDLG PKG Z51, B2B SPORT HDLG PKG Z52)	14084030	1	11.34	BRACKET, HYD FLUID RSVR
87	Y07 1BL (PERF HDLG PKG Z51), B2B (SPORT HDLG PKG Z52)	14092700	1	DISCON	BRACKET, HYD FLUID RSVR
88	Y	14084030	1	11.34	BRACKET, HYD FLUID RSVR
89	Y (5.7–8)	14084030	1	11.34	BRACKET, P/S FLUID RSVR
90	Y (5.7–8)	10098183	1	DISCON	BRACKET, P/S FLUID RSVR
91	Y 5.7–8 (L98)	10098183	1	DISCON	BRACKET, P/S FLUID RSVR
92–96	Y 5.7P (LT1)	10157972	1	26.57	BRACKET, P/S FLUID RSVR
96	Y 5.7–5 (LT4)	10157972	1	26.57	BRACKET, P/S FLUID RSVR
92–96	Y 5.7P (LT1)	09442958	1	*1.00	NUT, P/S FLUID RSVR BRKT (3/8–16 PC, 286M) (HEX, FLANGE) (08.917)
96	Y 5.7–5 (LT4), 6–SPD M/TRANS (ML9)	09442958	1	*1.00	NUT, P/S FLUID RSVR BRKT (3/8–16 PC, 286M) (HEX, FLANGE) (08.917)

7.039 BOLT – BRACE – BRACKET – COVER – GUSSET – NUT – PLATE – REINFORCEMENT – SHIM – SPACER, Frame Front Cross Member

91–96	Y	11508331	8	1.80	BOLT, DRIVETRAIN & FRT SUSP FRM (M10X1.5X45) (TO RR) (08.900)
84–88	Y	14069669	2	*1.10	BOLT, FRT C/MBR (M10–1.25X21.5)
89–90	Y 5.7–8 (L98)	14069669	2	*1.10	BOLT, FRT C/MBR (M10–1.25X21.5)
91	Y 5.7–8 (L98)	14069669	4	*1.10	BOLT, FRT C/MBR (M10X1.5X25 13HEX)
90	Y	11516186	AR	*.70	BOLT, OTR FRT SI MBR UPR BR (M8X1.25X16) (08.900)
91–95	Y	11504611	2	2.10	BOLT, U/B FRT S/RL UPR BR (08.900)
95–96	Y	14088310	4	*1.30	BOLT, U/B RR C/MBR GUSS (M8X1.25X24) (03.671)
84–85	Y	14094299	LH	DISCON	BRACE, FRT C/MBR RR
84–85	Y	14094300	RH	DISCON	BRACE, FRT C/MBR RR
86	Y07	14094299	LH	DISCON	BRACE, FRT C/MBR RR
86	Y07	14094300	RH	DISCON	BRACE, FRT C/MBR RR
86 -88	Y67	14092611	LH	43.20	BRACE, FRT C/MBR RR
86–88	Y67	14092612	RH	43.20	BRACE, FRT C/MBR RR
87	Y07 1BL (PERF HDLG PKG Z51), B2B (SPORT HDLG PKG Z52)	14092611	LH	43.20	BRACE, FRT C/MBR RR
87	Y07 1BL (PERF HDLG PKG Z51), B2B (SPORT HDLG PKG Z52)	14092612	RH	43.20	BRACE, FRT C/MBR RR
87–88	Y07 (EXC 1BL PERF HDLG PKG Z51, B2B SPORT HDLG PKG Z52)	14094299	LH	DISCON	BRACE, FRT C/MBR RR
87–88	Y07 (EXC 1BL PERF HDLG PKG Z51, B2B SPORT HDLG PKG Z52)	14094300	RH	DISCON	BRACE, FRT C/MBR RR

© 2000 GENERAL MOTORS SERVICE PARTS OPERATIONS

7.039 BOLT – BRACE – BRACKET – COVER – GUSSET – NUT – PLATE – REINFORCEMENT – SHIM – SPACER, Frame Front Cross Member(Con't)

88	Y07 PERF HDLG PKG (Z51), SPORT HDLG PKG (Z52)	14092611	LH	43.20	BRACE, FRT C/MBR RR
88	Y07 PERF HDLG PKG (Z51), SPORT HDLG PKG (Z52)	14092612	RH	43.20	BRACE, FRT C/MBR RR
89–91	Y 5.7–8 (L98)	14092611	LH	43.20	BRACE, FRT C/MBR RR
89–91	Y 5.7–8 (L98)	14092612	RH	43.20	BRACE, FRT C/MBR RR
84–89	Y	10208440	RH	31.90	BRACE, OTR FRT S/MBR UPR
84–89	Y	14081859	LH	DISCON	BRACE, OTR FRT S/MBR UPR
90–96	Y	10208440	RH	31.90	BRACE, U/B FRT S/RL UPR
90–96	Y	10208441	LH	31.90	BRACE, U/B FRT S/RL UPR
84–86	Y07	14090675	2	DISCON	BRACKET, FRT C/MBR
86–88	Y67	14092617	LH	40.80	BRACKET, FRT C/MBR (RR)
86–88	Y67	14092618	RH	40.80	BRACKET, FRT C/MBR (RR)
87–88	Y07 (EXC 1BL PERF HDLG PKG Z51, B2B SPORT HDLG PKG Z52)	14090675	2	DISCON	BRACKET, FRT C/MBR
87	Y07 1BL (PERF HDLG PKG Z51), B2B (SPORT HDLG PKG Z52)	14092617	LH	40.80	BRACKET, FRT C/MBR (RR)
87	Y07 1BL (PERF HDLG PKG Z51), B2B (SPORT HDLG PKG Z52)	14092618	RH	40.80	BRACKET, FRT C/MBR (RR)
88	Y07 PERF HDLG PKG (Z51), SPORT HDLG PKG (Z52)	14092617	LH	40.80	BRACKET, FRT C/MBR (RR)
88	Y07 PERF HDLG PKG (Z51), SPORT HDLG PKG (Z52)	14092618	RH	40.80	BRACKET, FRT C/MBR (RR)
89–96	Y	14092617	LH	40.80	BRACKET, FRT C/MBR (RR)
89–96	Y	14092618	RH	40.80	BRACKET, FRT C/MBR (RR)
84–96	Y	14078627	LH	6.60	COVER, RR SI MBR
84–96	Y	14078628	RH	6.60	COVER, RR SI MBR
84–96	Y	14064523	LH	11.40	GUSSET, U/B RR C/MBR
84–96	Y	14064524	RH	11.40	GUSSET, U/B RR C/MBR
84–85	Y	14100201	1	DISCON	REINFORCEMENT, FRT C/MBR (LWR)
86	Y07	14100201	1	DISCON	REINFORCEMENT, FRT C/MBR (LWR)
86–88	Y67	14092613	1	DISCON	REINFORCEMENT, FRT C/MBR (UPR)
87	Y07 1BL (PERF HDLG PKG Z51), B2B (SPORT HDLG PKG Z52)	14092613	1	DISCON	REINFORCEMENT, FRT C/MBR (UPR)
87	Y07 (EXC 1BL PERF HDLG PKG Z51, B2B SPORT HDLG PKG Z52)	14100201	1	DISCON	REINFORCEMENT, FRT C/MBR (LWR)
88	Y PERF HDLG PKG (Z51), SPORT HDLG PKG (Z52)	14092613	1	DISCON	REINFORCEMENT, FRT C/MBR (UPR)
88	Y07 (EXC PERF HDLG PKG Z51, SPORT HDLG PKG Z52)	14100201	1	DISCON	REINFORCEMENT, FRT C/MBR (LWR)
89–90	Y (5.7–8)	14092613	1	DISCON	REINFORCEMENT, FRT C/MBR (UPR)
89–90	Y (5.7–8)	14100201	1	DISCON	REINFORCEMENT, FRT C/MBR (LWR)
90–91	Y 5.7J (LT5)	10098136	1	32.40	REINFORCEMENT, FRT C/MBR
91	Y 5.7–8 (L98)	14092613	1	DISCON	REINFORCEMENT, FRT C/MBR (UPR)
91	Y 5.7–8 (L98)	14100201	1	DISCON	REINFORCEMENT, FRT C/MBR (LWR)
92–96	Y	10098136	1	32.40	REINFORCEMENT, FRT C/MBR
84–88	Y	14060122	AR	1.60	SHIM, DRIVETRAIN AND FRT SUSP FRM
84–96	Y	14044588	4	1.10	SPACER, DRIVETRAIN & FRT SUSP FRM

8.846 BRACKET – CLAMP – FITTING – HOSE – PIPE – RETAINER – SLEEVE – TEE, Heater

88–91	Y 5.7–8 (L98), FEDERAL EMIS (NA5)	10088196	1	4.32	FITTING, HTR HOSE
93–94	Y 5.7P (LT1)	10157918	1	16.67	FITTING, HTR OTLT HOSE
86–88	Y A/C	14093180	1	DISCON	HOSE, HTR & A/C CONT VAC
89	Y (5.7–8)	14093180	1	DISCON	HOSE, HTR & A/C CONT VAC

© 2000 GENERAL MOTORS SERVICE PARTS OPERATIONS

8.846 BRACKET – CLAMP – FITTING – HOSE – PIPE – RETAINER – SLEEVE – TEE, Heater(Con't)

84	Y	14046044	1	12.90	HOSE, HTR INL
85–87	Y	14081348	1	12.90	HOSE, HTR INL
88–91	Y 5.7–8 (L98), FEDERAL EMIS (NA5)	10108510	1	14.32	HOSE, HTR INL
92	Y 5.7P (LT1)	10213634	1	26.92	HOSE, HTR INL
93–95	Y 5.7P (LT1)	10157913	1	40.90	HOSE, HTR INL
96	Y	10157913	1	40.90	HOSE, HTR INL
89	Y (5.7J)	10135629	1	161.54	HOSE, HTR INL & OTLT
90–92	Y 5.7J (LT5), SOFT RIDE SUSP (FE1), HVY DUTY SUSP (FE7)	10135629	1	161.54	HOSE, HTR INL & OTLT
93–95	Y 5.7J (LT5), SOFT RIDE SUSP (FE1)	10135629	1	161.54	HOSE, HTR INL & OTLT
84	Y	14052406	1	DISCON	HOSE, HTR OTLT
85–87	Y A/C MAN CONT (C60), A/C AUTO ELEC CONT (C68), (EXC ENG OIL CLG (KC4)	14081349	1	10.36	HOSE, HTR OTLT
85	Y ENG OIL CLG (KC4)	14091278	1	40.00	HOSE, HTR OTLT (MOLDED FITTING) (01.540)
88	Y ENG OIL CLG (KC4)	10158081	1	97.30	HOSE, HTR OTLT
88–89	Y A/C MAN CONT (C60), A/C AUTO ELEC CONT (C68), (EXC ENG OIL CLG (KC4)	10158082	1	DISCON	HOSE, HTR OTLT
89	Y 5.7–8 (L98), ENG OIL CLG (KC4)	10158081	1	97.30	HOSE, HTR OTLT
90	Y 5.7–8 (L98), (EXC ENG OIL CLG (KC4)	10135656	1	17.06	HOSE, HTR OTLT
90–91	Y 5.7–8 (L98), ENG OIL CLG (KC4)	10135657	1	40.90	HOSE, HTR OTLT
91	Y 5.7–8 (L98), (EXC ENG OIL CLG (KC4)	10135656	1	17.06	HOSE, HTR OTLT
92	Y 5.7P (LT1)	10135697	1	21.50	HOSE, HTR OTLT
93–94	Y 5.7P (LT1)	10157915	1	18.66	HOSE, HTR OTLT (FROM RAD SURGE TK TO TEE)
93–94	Y 5.7P (LT1)	10157916	1	18.66	HOSE, HTR OTLT (FROM W/PMP TO TEE)
93–94	Y 5.7P (LT1)	10157917	1	18.66	HOSE, HTR OTLT (FROM THROT BODY TO TEE)
95	Y 5.7P (LT1)	10262505	1	28.96	HOSE, HTR OTLT
96	Y	10262505	1	28.96	HOSE, HTR OTLT
90–92	Y 5.7J (LT5)	10089613	1	*1.07	RETAINER, HTR PIPE (BLACK)
90–95	Y 5.7J (LT5)	10089613	1	*1.07	RETAINER, HTR WAT FLOW C/VLV HOSE (BLACK)
92–94	Y 5.7P (LT1)	10157956	1	12.55	TEE, HTR WAT BYPASS VLV OTLT HOSE

8.866 NIPPLE – RETAINER – VALVE, Heater Coolant Flow

84–85	Y	03771940	1		NIPPLE, HTR HOSE OTLT (08.963)
84–85	Y	06272959	1	5.18	NIPPLE, HTR HOSE OTLT
90–95	Y 5.7J (LT5)	24503681	1	9.20	NIPPLE, HTR WAT ENG INL (USE T/W 1052080 SEALER) (W/O–RING & RET) (1/2 THD, 39.5 TL) (OLD PART MAY APPEAR LARGER DUE TO HEAT EXPANSION)
85–87	Y	22532158	1	9.62	VALVE, HTR WAT FLOW CONT (AC–DELCO #15–5372)
88–91	Y 5.7–8 (L98)	22532158	1	9.62	VALVE, HTR WAT FLOW CONT (16 MM) (AC–DELCO #15–5372)
92–95	Y 5.7P (LT1)	10157988	1	17.64	VALVE, HTR WAT FLOW CONT (W/O HOSE) (AC–DELCO #15–5423)
96	Y	10157988	1	17.64	VALVE, HTR WAT FLOW CONT (W/O HOSE) (AC–DELCO #15–5423)

© 2000 GENERAL MOTORS SERVICE PARTS OPERATIONS

MICROFICHE INDEX

GROUP 1.000

FICHE 2 OF 11

GROUP	DESCRIPTION	STARTING GRID LOCATION PARTS	ILLUSTRATIONS
–	GENERAL INFORMATION	1–A2	1–G2
–	ALPHABETICAL INDEX	1–B13	N.A.
1.000	COOLING SYSTEM – GRILLE – OIL SYSTEM	2–A2	2–C2
–	OUT OF FICHE CALLS	N.A.	2–N8

2–A1

CHEVROLET
CHASSIS GROUP 1.000

COOLING SYSTEM – GRILLE – OIL SYSTEM

ALPHABETICAL INDEX

A

ADAPTER, Engine Oil Filter 1.840 2–B15

B

BAFFLE, Engine Crankcase Ventilator .. 1.780 2–B12
BAFFLE, Engine Oil Pan 1.430 2–B3
BAFFLE, Engine Oil 1.426 2–A20
BAFFLE, Radiator Air 1.272 2–A26
BELT, Drive 1.066 2–A12
BOLT KIT, Engine Air Cooling (Electrical) 1.055 2–A8
BOLT, Coolant Pump, with Bearing 1.105 2–A15
BOLT, Engine Air Cooling (Electrical) ... 1.055 2–A8
BOLT, Engine Coolant By–Pass 1.097 2–A15
BOLT, Engine Coolant Pump 1.073 2–A14
BOLT, Engine Coolant Pump 1.079 2–A14
BOLT, Engine Coolant Recovery 1.240 2–A24
BOLT, Engine Coolant 1.153 2–A17
BOLT, Engine Crankcase Ventilation ... 1.762 2–B11
BOLT, Engine Crankcase 1.745 2–B9
BOLT, Engine Fan Coolant 1.060 2–A11
BOLT, Engine Oil Cooler 1.540 2–B5
BOLT, Engine Oil Filter 1.840 2–B15
BOLT, Engine Oil Pan 1.428 2–B2
BOLT, Engine Oil Pan 1.430 2–B3
BOLT, Engine Oil Pump 1.639 2–B7
BOLT, Engine Oil Pump 1.652 2–B7
BOLT, Engine Oil Pump 1.656 2–B8
BOLT, Engine Oil 1.426 2–A28
BOLT, Fan and Coolant Pump 1.062 2–A11
BOLT, Oil Pump 1.723 2–B9
BOLT, Radiator Air 1.272 2–A26
BOLT, Radiator and Front End Tie 1.271 2–A26
BOLT, Radiator Fan Shroud 1.277 2–A28
BRACE, Radiator Air 1.272 2–A26
BRACKET KIT, Engine Air Cooling (Electrical) 1.055 2–A8
BRACKET, Engine Air Cooling (Electrical) 1.055 2–A8
BRACKET, Engine Coolant By–Pass ... 1.097 2–A15
BRACKET, Engine Coolant Recovery ... 1.240 2–A24
BRACKET, Engine Coolant Thermostat . 1.251 2–A25
BRACKET, Engine Oil Cooler 1.540 2–B5
BRACKET, Radiator Air 1.272 2–A26
BRACKET, Radiator Grille and Front End Panel 1.267 2–A25
BRACKET, Radiator Support Mounting . 1.274 2–A28

C

CAP, Engine Coolant Recovery 1.240 2–A24
CAP, Engine Oil Filler 1.758 2–B10
CAP, Radiator Tank 1.203 2–A19
CLAMP, Engine Coolant Recovery 1.240 2–A24
CLAMP, Engine Crankcase Ventilation .. 1.762 2–B11
CLAMP, Engine Oil Cooler 1.540 2–B5
CLAMP, Engine Oil Filler Tube 1.750 2–B10
CLAMP, Engine Oil Filter 1.855 2–B16
CLAMP, Hose (Radiator, Heater, A/C) ... 1.166 2–A18
CLIP, Engine Coolant Recovery 1.240 2–A24
CLIP, Engine Oil Cooler 1.540 2–B5
CLIP, Radiator Outlet (Lower) 1.173 2–A19
COCK, Radiator Outlet (Lower) 1.173 2–A19
CONNECTOR, Coolant Temperature (Engine Unit) 1.150 2–A16
CONNECTOR, Engine Air Cooling (Electrical) 1.055 2–A8
CONNECTOR, Engine Coolant Temperature (Dash Unit) 1.148 2–A16
CONNECTOR, Engine Crankcase Ventilation 1.762 2–B11
CONNECTOR, Engine Crankcase 1.745 2–B9
CONNECTOR, Engine Oil Filter 1.855 2–B16
CONNECTOR, Engine Oil Level 1.516 2–B4
CONNECTOR, Engine Oil Pressure/Temperature 1.800 2–B12
CONNECTOR, Radiator Tank 1.203 2–A19
COOLER, Engine Oil Cooler 1.540 2–B5
CORD, Engine Coolant Heater 1.152 2–A17
CORE, Radiator 1.219 2–A20
COUPLING, Coolant Pump, with Bearing 1.105 2–A15
COVER, Engine Crankcase 1.745 2–B9
COVER, Oil Pump 1.723 2–B9

D

DAMPENER, Engine Coolant 1.069 2–A14

DEFLECTOR PKG, Radiator Air 1.272 2–A26
DEFLECTOR, Engine Oil Pan 1.430 2–B3
DEFLECTOR, Radiator Air 1.272 2–A26
DRIVE, Engine Oil Pump 1.639 2–B7

E

ELBOW, Engine Air Cooling 1.020 2–A8
ELBOW, Engine Oil Pressure/Temperature 1.800 2–B12

F

FAN KIT, Engine Air Cooling (Electrical) 1.055 2–A8
FAN, Engine Air Cooling (Electrical) 1.055 2–A8
FILTER, Engine Crankcase 1.745 2–B9
FILTER, Engine Oil Filter 1.836 2–B15
FITTING, Engine Crankcase Ventilation 1.762 2–B11
FITTING, Engine Oil Cooler 1.540 2–B5
FITTING, Engine Oil Filter 1.855 2–B16
FITTING, Engine Oil Pressure Gage ... 1.803 2–B14
FITTING, Engine Oil Pressure/Temperature 1.800 2–B12

G

GASKET KIT, Engine Oil Pan 1.429 2–B3
GASKET KIT, Radiator 1.219 2–A20
GASKET, Engine Coolant Outlet 1.154 2–A18
GASKET, Engine Coolant Pump to Cover 1.114 2–A16
GASKET, Engine Coolant Pump 1.079 2–A14
GASKET, Engine Coolant Thermostat Housing 1.252 2–A25
GASKET, Engine Crankcase 1.745 2–B9
GASKET, Engine Oil Cooler 1.550 2–B6
GASKET, Engine Oil Filter 1.840 2–B15
GASKET, Engine Oil Pan Drain Plug ... 1.456 2–B4
GASKET, Engine Oil Pan 1.429 2–B3
GASKET, Engine Oil Pump Cover 1.724 2–B9
GROMMET, Engine Crankcase Ventilation 1.762 2–B11
GROMMET, Engine Crankcase 1.745 2–B9
GUARD, Hose (Radiator, Heater, A/C) .. 1.166 2–A18

H

HEATER, Engine Coolant Heater 1.152 2–A17
HOSE KIT, Engine Coolant Recovery ... 1.240 2–A24
HOSE KIT, Radiator Inlet (Upper) 1.159 2–A18
HOSE, Engine Coolant By–Pass 1.097 2–A15
HOSE, Engine Coolant Recovery 1.240 2–A24
HOSE, Engine Crankcase Ventilation .. 1.762 2–B11
HOSE, Engine Oil Cooler 1.540 2–B5
HOSE, Radiator Inlet (Upper) 1.159 2–A18
HOSE, Radiator Outlet (Lower) 1.173 2–A19
HOUSING, Engine Coolant Thermostat 1.251 2–A25

I

INDICATOR, Engine Oil Level 1.516 2–B4
INLET, Engine Coolant Pump 1.073 2–A14
INSERT, Engine Oil Pan Drain 1.453 2–B3
INSULATOR, Radiator 1.270 2–A26

M

MODULE, Radiator Tank 1.203 2–A19
MOTOR KIT, Engine Air Cooling (Electrical) 1.055 2–A8

N

NIPPLE, Engine Crankcase 1.745 2–B9
NUT, Engine Air Cooling (Electrical) 1.055 2–A8
NUT, Engine Coolant By–Pass 1.097 2–A15
NUT, Engine Oil Level 1.516 2–B4
NUT, Engine Oil Pan Drain 1.453 2–B3
NUT, Engine Oil Pan 1.428 2–B2
NUT, Radiator Support Mounting 1.274 2–A28

O

OUTLET, Engine Coolant 1.153 2–A17

P

PAN KIT, Engine Oil 1.426 2–A28
PAN, Engine Oil 1.426 2–A28
PANEL, Radiator Grille and Front End Panel 1.267 2–A25
PIN, Engine Coolant Pump 1.079 2–A14
PIN, Engine Oil Pan 1.428 2–B2
PIN, Engine Oil Pressure 1.609 2–B6
PIN, Engine Oil Pump 1.652 2–B7
PIPE, Engine Coolant By–Pass 1.097 2–A15
PIPE, Engine Coolant 1.153 2–A17
PIPE, Engine Crankcase Ventilation 1.762 2–B11
PIPE, Engine Oil Cooler 1.540 2–B5
PIPE, Engine Oil Pump 1.656 2–B8
PIPE, Radiator Inlet (Upper) 1.159 2–A18
PLUG, Engine Crankcase Ventilation ... 1.762 2–B11
PLUG, Engine Oil Cooler 1.540 2–B5
PLUG, Engine Oil Distribution 1.531 2–B5
PLUG, Engine Oil Filter 1.837 2–B15
PLUG, Engine Oil Filter 1.840 2–B15
PLUG, Engine Oil Pan Drain 1.453 2–B3

PLUG, Engine Oil Pressure 1.609 2–B6
PULLEY, Fan and Coolant Pump 1.062 2–A11
PUMP KIT, Engine Coolant 1.069 2–A14
PUMP, Engine Coolant 1.069 2–A14
PUMP, Engine Oil Pump 1.652 2–B7

R

RADIATOR, Radiator 1.219 2–A20
REINFORCEMENT, Engine Oil 1.426 2–A28
RELAY, Engine Air Cooling (Electrical) .. 1.055 2–A8
RESERVOIR, Engine Coolant Recovery 1.240 2–A24
RESTRICTOR, Engine Oil Distribution .. 1.531 2–B5
RETAINER, Engine Air Cooling (Electrical) 1.055 2–A8
RETAINER, Engine Coolant Recovery .. 1.240 2–A24
RETAINER, Engine Oil Cooler 1.540 2–B5
RETAINER, Engine Oil Pressure 1.609 2–B6
RETAINER, Engine Oil Pump 1.639 2–B7
RETAINER, Radiator Air 1.272 2–A26
RETAINER, Radiator Baffle and Shroud 1.276 2–A28
RING, Engine Oil Cooler 1.540 2–B5
RING, Engine Oil Pressure/Temperature 1.800 2–B12

S

SCREEN, Engine Oil Pump 1.656 2–B8
SCREW, Radiator Air 1.272 2–A26
SEAL, Coolant Pump, with Bearing 1.105 2–A15
SEAL, Engine Coolant By–Pass 1.097 2–A15
SEAL, Engine Coolant Pump 1.123 2–A16
SEAL, Engine Coolant Thermostat Housing 1.252 2–A25
SEAL, Engine Crankcase 1.745 2–B9
SEAL, Engine Oil Cooler 1.540 2–B5
SEAL, Engine Oil Cooler 1.550 2–B6
SEAL, Engine Oil Filter 1.844 2–B16
SEAL, Engine Oil Level 1.516 2–B4
SEAL, Engine Oil Pan 1.429 2–B3
SEAL, Engine Oil Pump Cover 1.724 2–B9
SEAL, Engine Oil Pump 1.656 2–B8
SEAT, Engine Oil Cooler 1.540 2–B5
SEAT, Engine Oil Pump 1.639 2–B7
SENSOR, Coolant Temperature (Engine Unit) 1.150 2–A16
SENSOR, Engine Oil Level 1.516 2–B4
SENSOR, Engine Oil Pressure/Temperature 1.800 2–B12
SENSOR, Radiator Tank 1.203 2–A19
SHAFT, Coolant Pump, with Bearing ... 1.105 2–A15
SHAFT, Engine Oil Pump 1.639 2–B7
SHIELD, Engine Fan Coolant 1.060 2–A11
SHROUD KIT, Radiator Fan Shroud 1.277 2–A28
SHROUD, Radiator Fan Shroud 1.277 2–A28
SPACER, Engine Oil Pump 1.656 2–B8
SPRING, Engine Oil Filter 1.837 2–B15
SPRING, Engine Oil Pressure 1.609 2–B6
STRAP, Engine Crankcase 1.745 2–B9
STRIPE, Radiator 1.263 2–A25
STUD, Engine Coolant Pump 1.073 2–A14
STUD, Engine Coolant Pump 1.079 2–A14
STUD, Engine Coolant Pump 1.113 2–A16
STUD, Engine Coolant 1.153 2–A17
STUD, Engine Crankcase Ventilation ... 1.762 2–B11
STUD, Engine Crankcase Ventilator 1.780 2–B12
STUD, Engine Oil Cooler 1.540 2–B5
STUD, Engine Oil Filter 1.840 2–B15
STUD, Engine Oil Pan 1.428 2–B2
SUPPORT, Hose (Radiator, Heater, A/C) 1.166 2–A18
SUPPORT, Radiator 1.219 2–A20
SUPPORT, Radiator 1.270 2–A26
SWITCH, Engine Air Cooling (Electrical) 1.055 2–A8
SWITCH, Engine Oil Pressure/Temperature 1.800 2–B12
SWITCH, Radiator Tank 1.203 2–A19

T

TANK, Engine Coolant Recovery 1.240 2–A24
TANK, Radiator 1.219 2–A20
TEE, Engine Crankcase 1.745 2–B9
TENSIONER, Engine Fan Coolant 1.060 2–A11
THERMOSTAT, Engine Coolant Temperature 1.246 2–A25
TUBE, Engine Crankcase Ventilation ... 1.762 2–B11
TUBE, Engine Oil Level 1.516 2–B4
TUBE, Radiator Filler 1.210 2–A20

V

VALVE, Engine Air Cooling Control 1.035 2–A8
VALVE, Engine Crankcase 1.745 2–B9
VALVE, Engine Oil Cooler 1.540 2–B5
VALVE, Engine Oil Filter 1.837 2–B15
VALVE, Engine Oil Pressure 1.609 2–B6

W

WASHER, Engine Coolant Recovery ... 1.240 2–A24
WASHER, Engine Fan Coolant 1.060 2–A11
WASHER, Engine Oil Filter 1.840 2–B15

CHART INDEX

GROUP 1 GRID

ILLUS INDEX (GRP 1) 2–A7
V–BELTS 2–A13
RADIATOR 2–A22

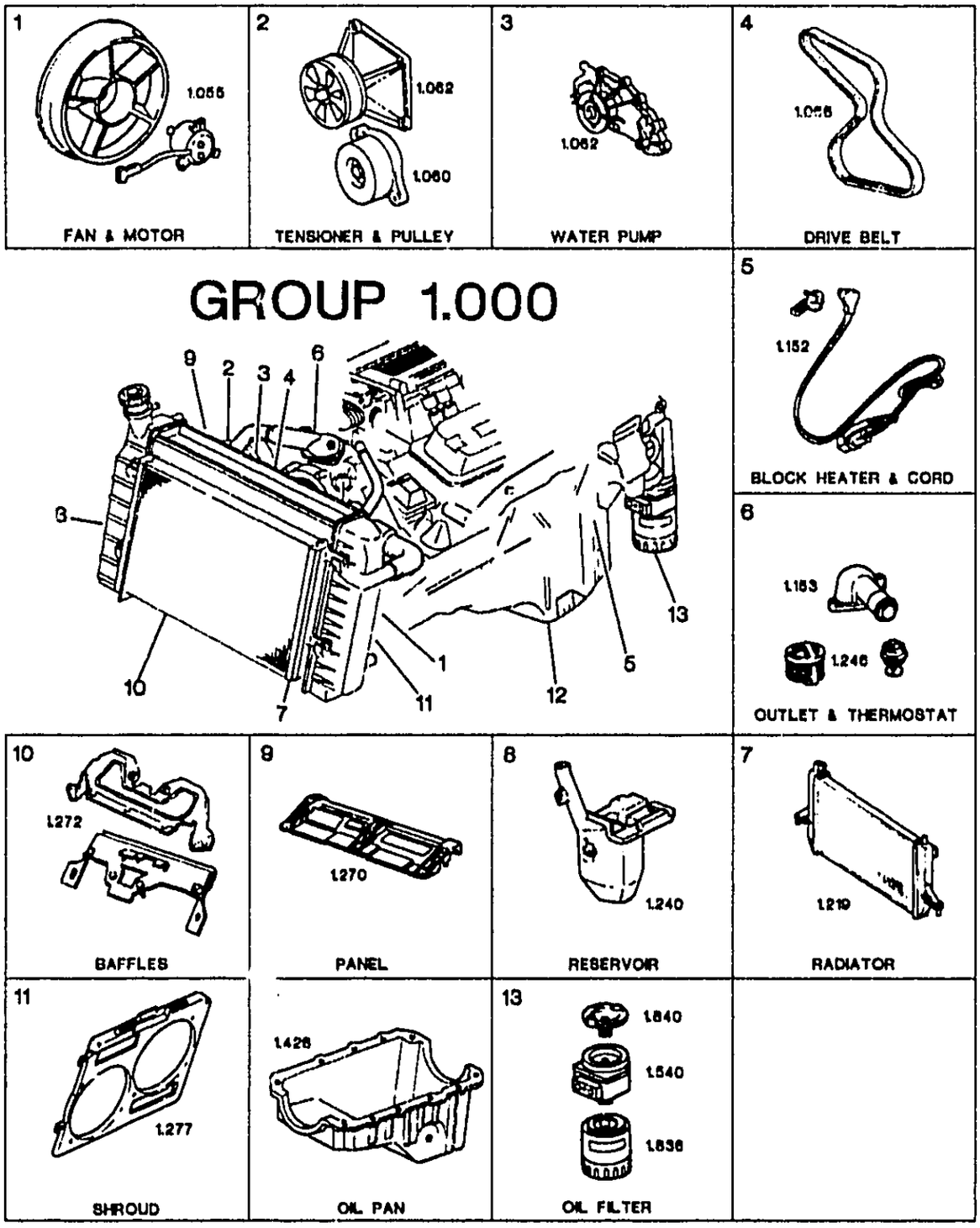
1
1.056
FAN & MOTOR
2
1.062
1.060
TENSIONER & PULLEY
3
1.062
WATER PUMP
4
1.058
DRIVE BELT
GROUP 1.000
9
2
3
4
6
8
10
7
11
1
12
5
13
5
1.152
BLOCK HEATER & CORD
6
1.153
1.246
OUTLET & THERMOSTAT
10
1.272
BAFFLES
9
1.270
PANEL
8
1.240
RESERVOIR
7
1.219
RADIATOR
11
1.277
SHROUD
1.426
OIL PAN
13
1.840
1.540
1.836
OIL FILTER

1.020 ELBOW, Engine Air Cooling

90–95	Y 5.7J (LT5)	10153519	LH	34.68	ELBOW, PLNM COOL AIR BL (30X19)	1–H20,513

1.035 VALVE, Engine Air Cooling Control

92–96	Y 5.7P (LT1)	10070107	1	3.60	VALVE, ENG COOL AIR BL	2–D6,36
96	Y 5.7–5 (LT4)	10070107	1	3.60	VALVE, ENG COOL AIR BL	2–D6,36

1.055 BOLT – BOLT KIT – BRACKET – BRACKET KIT – CONNECTOR – FAN – FAN KIT – MOTOR KIT – NUT – RELAY – RETAINER – SWITCH, Engine Air Cooling (Electrical)

NOTE: FOR ADDITIONAL INFORMATION, SEE ELECTRIC COOLING MOTOR AND FAN APPLICATION CHARTS IN THE REFERENCE CATALOG (CODE 88R).

90–93	Y	22062547	1	1.68	BOLT KIT, ENG COOL FAN MOT (W/WA, MOT MTG, CONTAINS 3 BOLTS)	
94–95	Y	1635219	8	*1.80	BOLT, ENG COOL FAN (M6X1X30) (08.900)	
85	Y H.D.C. (V08)	14089160	1	18.87	BRACKET KIT, ELEC CLG FAN (IN FRT OF RAD)	2–C7,11
86–89	Y B4P	14089160	1	18.87	BRACKET KIT, ELEC CLG FAN (IN FRT OF RAD)	2–C7,11
90–96	Y	22074984	2	36.47	BRACKET KIT, ENG COOL FAN (RT OR LFT HAND SI)	2–C7,11
88–89	Y 5.7–8) M/TRNS	14104140	1	1.88	BRACKET, FAN CONT RLY (M.T. O/D SW RELAY)	2–C8,15
90–94	Y	14104140	1	1.88	BRACKET, FAN CONT RLY (STEEL) (3.0"X2.0") (76.7MMX51.0MM))	2–C8,15
91	Y 5.7J (LT5), 5.7–8 (L98)	12101917	2	20.58	CONNECTOR, ENG COOL FAN WRG (OVAL) (2–WAY F) (W/LEADS) (02.535) (AC–DELCO #PT189)	2–C10,3
93–96	Y	12101917	2	20.58	CONNECTOR, ENG COOL FAN WRG (OVAL) (2–WAY F) (W/LEADS) (02.535) (AC–DELCO #PT189)	2–C10,3
93–94	Y	12102491	1	28.96	CONNECTOR, ENG COOL FAN WRG (4–WAY F) (W/LEADS) (AC–DELCO #PT282)	
94	Y	12126446	1	60.39	CONNECTOR, ENG COOL FAN WRG (2–WAY F, W/LEADS & COVER) (02.535)	
96	Y	12101917	2	20.58	CONNECTOR, MOT–ENG COOL FAN (OVAL) (2–WAY F) (W/LEADS) (02.535) (AC–DELCO #PT189)	2–C10,3
91	Y 5.7J (LT5), 5.7–8 (L98)	12102491	2	28.96	CONNECTOR, RLY–AUX FAN CONT (4–WAY F) (W/LEADS) (AC–DELCO #PT282)	
92	Y 5.7P (LT1), DAYTIME RUNNING LGT (T61)	12102491	1	28.96	CONNECTOR, RLY–AUX FAN CONT (4–WAY F) (W/LEADS) (AC–DELCO #PT282)	
92	Y 5.7J (LT5), DAYTIME RUNNING LGT (T61)	12102491	1	28.96	CONNECTOR, RLY–AUX FAN CONT (4–WAY F) (W/LEADS) (AC–DELCO #PT282)	
93–96	Y	15305875	1		CONNECTOR, RLY–FAN CONT (5–WAY F) (W/LEADS & RELAY) (08.855) (AC–DELCO #PT1016) .	2–C10,15

© 2000 GENERAL MOTORS SERVICE PARTS OPERATIONS–CHEVROLET–14Y

1.055 BOLT – BOLT KIT – BRACKET – BRACKET KIT – CONNECTOR – FAN – FAN KIT – MOTOR KIT – NUT – RELAY – RETAINER – SWITCH, Engine Air Cooling (Electrical) (Con't)

93–96	Y	15306045	1	28.78	CONNECTOR, RLY–FAN CONT (TW/O 12GA AND THREE 14GA WIRES) (08.855) (AC–DELCO #PT1205)	2–C10,15
95–96	Y	15306045	2	28.78	CONNECTOR, RLY–FAN CONT (TWO 12GA AND THREE 14GA WIRES) (08.855) (AC–DELCO #PT1205)	2–C10,15
96	Y	15305875	2		CONNECTOR, RLY–FAN CONT (5–WAY F) (W/LEADS & RELAY) (08.855) (AC–DELCO #PT1016)	2–C10,15
84	Y	12102621	1	14.54	CONNECTOR, SW–FAN CONT (1–WAY M, W/LEADS) (02.535) (AC–DELCO #PT308)	
85	Y HVY DUTY CLG (V08)	10045629	1	219.00	FAN KIT, ELEC CLG (COMPL)	
84	Y (1ST DES)	22036292	1	48.72	FAN KIT, ENG ELEC COOL (410 MM DIA, 5 CURVED BLADES) (AC–DELCO #15–8460)	2–C12,3
84	Y (2ND DES)	22098793	1	48.72	FAN KIT, ENG ELEC COOL (415MM DIA, 5 STRAIGHT BLADES) (AC–DELCO #15–8476)	2–C7,3
85	Y HVY DUTY CLG (V08)	10074159	1	40.62	FAN KIT, ENG ELEC COOL (IN FRT OF RAD) (AC–DELCO #15–8603)	2–C7,13
85–86	Y	22098793	1	48.72	FAN KIT, ENG ELEC COOL (AC–DELCO #15–8476)	2–C7,3
86–89	Y FAN (B4P)	10045629	1	219.00	FAN KIT, ENG ELEC COOL	
86	Y FAN (B4P), (1ST DES)	10074159	1	40.62	FAN KIT, ENG ELEC COOL (IN FRT OF RAD) ;RETAINING CLIP, 2ND DES SEE 12459838) (AC–DELCO #15–8603)	2–C7,13
86	Y FAN (B4P), (1ST DES)	10074159	1	40.62	FAN KIT, ENG ELEC COOL (RETAINING CLIP, 2ND DES SEE 12459838; IN FRT OF RAD) (AC–DELCO #15–8603)	2–C7,13
87–89	Y FAN (B4P), (1ST DES)	10074159	1	40.62	FAN KIT, ENG ELEC COOL (IN FRT OF RAD;RETAINING CLIP, 2ND DES SEE 12459838) (AC–DELCO #15–8603)	2–C7,13
87	Y (2ND DES)	22098793	1	48.72	FAN KIT, ENG ELEC COOL (AC–DELCO #15–8476)	2–C7,3
88–89	Y 5.7–8 (L98)	22098793	1	48.72	FAN KIT, ENG ELEC COOL (AC–DELCO #15–8476)	2–C7,3
90–96	Y	22098785	2	48.72	FAN KIT, ENG ELEC COOL (RT OR LFT HAND SI) (AC–DELCO #15–8468)	2–C7,3
86–89	Y FAN (B4P)	10045629	1	219.00	FAN, ENG COOL	
84	Y	22137318	1	93.20	MOTOR KIT, ENG COOL FAN (UTILIZES A 2 PIN CONN) (MUST USE W/22098793 FAN KIT, 415MM DIA., 5 STRAIGHT BLADES) (AC–DELCO #15–8498)	2–C7,4
85	Y HVY DUTY CLG (V08)	10074158	1	279.86	MOTOR KIT, ENG COOL FAN (FAN ASM IN FRT OF RAD) (AC–DELCO #15–8262)	2–C7,12
85–87	Y	22137318	1	93.20	MOTOR KIT, ENG COOL FAN (AC–DELCO #15–8498)	2–C7,4

© 2000 GENERAL MOTORS SERVICE PARTS OPERATIONS–CHEVROLET–14Y

1.055 BOLT – BOLT KIT – BRACKET – BRACKET KIT – CONNECTOR – FAN – FAN KIT – MOTOR KIT – NUT – RELAY – RETAINER – SWITCH, Engine Air Cooling (Electrical) (Con't)

86–89	Y FAN (B4P)	10074158	1	279.86	MOTOR KIT, ENG COOL FAN (AC–DELCO #15 -8262)	2–C7,12
88–89	Y 5.7–8 (L98)	22137318	1	93.20	MOTOR KIT, ENG COOL FAN (AC–DELCO #15–8498)	2–C7,4
90–96	Y	22104439	1	93.20	MOTOR KIT, ENG COOL FAN (AC–DELCO #15–8404)	2–C7,4
84–86	Y	22082538	AR	3.24	NUT, ENG COOL FAN BLADE (FAN ASM BHD RAD) (AC–DELCO #22082538)	2–C7,14
87–95	Y	22082538	AR	3.24	NUT, ENG COOL FAN BLADE (M8X1.25 LH THD, USE W/CLOCKWISE ROTATION MOTORS) (AC–DELCO #22082538)	2–C7,14
89	Y (2ND DES)	22082538	AR	3.24	NUT, ENG COOL FAN BLADE (FAN ASM BHD RAD) (AC–DELCO #22082538)	2–C7,14
96	Y	22082538	1	3.24	NUT, ENG COOL FAN BLADE (M8X1.25 LH THD, USE W/CLOCKWISE ROTATION MOTORS) (AC–DELCO #22082538)	2–C7,14
84	Y	14078902	1	16.26	RELAY, FAN CONT (AC–DELCO #15–6218)	2–C12,38
85–87	Y	10038311	1	16.26	RELAY, FAN CONT (AC–DELCO #15–8333)	2–C7,8
88–94	Y	14089936	2	16.26	RELAY, FAN CONT (5–PIN OVAL SHAPE) (USE W/CONN 15306002) (AC–DELCO #15–8240)	2–C7,8
95–96	Y	12193601	1	23.44	RELAY, FAN CONT (BLACK) (5–WAY M) (USED W/CONNECTOR 15306045) (09.277) (AC–DELCO #15–8719)	2–C10,15
95–96	Y	12193603	2	20.30	RELAY, FAN CONT (GRAY) (SPST 280 MINI) (4–WAY) (02.100) (AC–DELCO #12193603)	2–C10,15
86	Y B4P (2ND DES)	10074160	1	DISCON	RETAINER, ELEC CLG FAN (SPR CLIP RETAINING FAN BLADE) (NO COMPARABLE 1ST DES) .	
85	Y HVY DUTY CLG (V08)	10074160	1	DISCON	RETAINER, ENG COOL FAN MOT LEAD	
87–89	Y B4P	10074160	1	DISCON	RETAINER, ENG COOL FAN MOT LEAD	
84–88	Y	20664092	AR	*.40	RETAINER, ENG COOL FAN RLY (PUSH–IN) (01.276)	2–C7,7
95–96	Y	12129271	3	.73	RETAINER, FAN CONT RLY (ATCHS TO RELAY CONN)	2–C10,14
84	Y	3040674	1	22.44	SWITCH, FAN CONT (1 BUTTON TERM, 3/8–18 THD) (TEMP STMP 108C) (AC–DELCO #15–5403)	

1.055 BOLT – BOLT KIT – BRACKET – BRACKET KIT – CONNECTOR – FAN – FAN KIT – MOTOR KIT – NUT – RELAY – RETAINER – SWITCH, Engine Air Cooling (Electrical) (Con't)

85	Y	14043276	1	10.51	SWITCH, FAN CONT (1 BUTTON TERM, 3/8–18 THD) (USED ON VEHS W/TWO SPD CLG FAN) (AC–DELCO #D1852B)	1–H2,52
86–89	Y 5.7–8 (L98), FAN (B4P)	14043276	1	10.51	SWITCH, FAN CONT (1 BUTTON TERM, 3/8–18 THD) (USE ON VEHS W/2 SPD CLG FAN) (AC–DELCO #D1852B)	1–H2,52

1.060 BOLT – SHIELD – TENSIONER – WASHER, Engine Fan Coolant

86–88	Y	14094731	1	4.35	BOLT, DR BELT TENS	
92–96	Y 5.7P (LT1)	10105370	1	2.25	BOLT, DRV BELT IDLER PUL	2–D22,4
96	Y 5.7–5 (LT4)	10105370	1	2.25	BOLT, DRV BELT IDLER PUL	2–D22,4
89–90	Y 5.7–8 (L98)	14094731	1	4.35	BOLT, DRV BELT TENSR	
92–96	Y 5.7P (LT1)	9440111	AR	2.65	BOLT, DRV BELT TENSR (08.900)	2–D22,5
96	Y 5.7–5 (LT4)	9440111	AR	2.65	BOLT, DRV BELT TENSR (08.900)	2–D22,5
92–96	Y 5.7P (LT1)	10210440	1	2.20	SHIELD, DRV BELT IDLER PUL	2–D22,3
96	Y 5.7–5 (LT4)	10210440	1	2.20	SHIELD, DRV BELT IDLER PUL	2–D22,3
84	Y	14055164	1	102.10	TENSIONER, DR BELT	6–I24,13
85–87	Y	14084312	1	82.10	TENSIONER, DR BELT	
88–91	Y 5.7–8 (L98)	10055897	1	82.10	TENSIONER, DRV BELT	
90–95	Y 5.7J (LT5)	10067479	1	60.60	TENSIONER, DRV BELT	1–H13,324
92	Y 5.7P (LT1)	10186197	1	54.10	TENSIONER, DRV BELT	2–D22,6
93	Y 5.7P (LT1), (1ST DES)	10186197	1	54.10	TENSIONER, DRV BELT (HAS GROOVED PUL)	2–D22,6
93	Y 5.7P (LT1), (2ND DES)	10227507	1	41.15	TENSIONER DRV BELT (HAS FLAT PUL)	2–D22,6
94–96	Y 5.7P (LT1)	10227507	1	41.15	TENSIONER, DRV BELT	2–D22,6
96	Y 5.7–5 (LT4)	10227507	1	41.15	TENSIONER, DRV BELT	2–D22,6
90–95	Y 5.7J (LT5)	10067747	1	2.30	WASHER, DRV BELT TENSR (FLAT)	1–H13,323
	*EXPORT**********EXPORT**********EXPORT**********EXPORT**********EXPORT*					
85–86	Y VB4, VD1, VT7 (EXPORT)	14085747	1	DISCON	SHIELD, FAN	
87	Y NM8 (EXPORT)	14085747	1	DISCON	SHIELD, FAN	

1.062 BOLT – PULLEY, Fan and Coolant Pump

89–91	Y 5.7–8 (L98)	15517450	4	1.02	BOLT, FAN & W/PMP PUL (5/16X15/64X7/8 PC) (05.586)	1–G23,90
84–87	Y	14067335	4	DISCON	BOLT, PULLEY	
88	Y 5.7–8 (L98), (M/TRNS)	14067335	4	DISCON	BOLT, PULLEY	
90–95	Y 5.7J (LT5)	11516061	4	*1.10	BOLT, W/PMP PUL (M6X1X12, FL HD) (08.900)	1–H13,321
84	Y	14055117	1	DISCON	PULLEY, CLNT PUMP (ANC)	
92	Y 5.7P (LT1)	10186174	1	34.03	PULLEY, DRV BELT IDLER	2–D22,2
93	Y 5.7P (LT1), (2ND DES)	10105355	1	34.28	PULLEY, DRV BELT IDLER (ID BY FLAT PUL)	2–D22,2
93	Y 5.7P (LT1), (1ST DES)	10186174	1	34.03	PULLEY, DRV BELT IDLER (ID BY GROOVED PUL)	2–D22,2
94–96	Y 5.7P (LT1)	10105355	1	34.28	PULLEY, DRV BELT IDLER	2–D22,2
96	Y 5.7–5 (LT4)	10105355	1	34.28	PULLEY, DRV BELT IDLER	2–D22,2
85–91	Y 5.7–8 (L98)	10105209	1	34.03	PULLEY, W/PMP	1–G23,92
90–95	Y 5.7J (LT5)	10067478	1	34.03	PULLEY, W/PMP	1–H13,320

© 2000 GENERAL MOTORS SERVICE PARTS OPERATIONS–CHEVROLET–14Y

1.066 BELT, Drive

NOTE: FOR USAGE REFER TO V-BELT CHART GRP 1.068

84	Y	14055157	1	45.50	BELT, FAN (21.36M X 2240.0M) (UXA)	
85	Y	14092306	1	39.00	BELT, FAN & A/C CMPR & A.I.R. PUMP & GEN & P/S PUMP (21.36M X 2260M) (UXW)	
86-87	Y Y FOR MDL APPL SEE BELT CHARTS	14092308	1	39.00	BELT, FAN & A/C CMPR & A.I.R. PUMP & GEN & P/S PUMP (UXX)	
92	Y 5.7P (LT1)	10186198	1	45.00	BELT, GEN & A/C CMPR & P/S PUMP (CODE UKM)	2-D22,1
93	Y 5.7P (LT1), (1ST DES)	10186198	1	45.00	BELT, GEN & A/C CMPR & P/S PUMP (CODE UKM) (HAS DUAL SIDE GROOVES, 2ND DES HAS SINGLE SIDE GROOVES)	2-D22,1
93	Y 5.7P (LT1), (2ND DES)	10230259	1	32.00	BELT, GEN & A/C CMPR & P/S PUMP (CODE UNM) (HAS SINGLE SIDE GROOVES, 1ST DES HAS DUAL SIDE GROOVES)	2-D22,1
94-96	Y 5.7P (LT1)	10230259	1	32.00	BELT, GEN & A/C CMPR & P/S PUMP (CODE UNM)	2-D22,1
96	Y 5.7-5 (LT4)	10230259	1	32.00	BELT, GEN & A/C CMPR & P/S PUMP (CODE UNM)	2-D22,1
90-95	Y 5.7J (LT5)	10067477	1	39.00	BELT, W/PMP & A/C CMPR & GEN & P/S PUMP	1-H13,322
88-91	Y 5.7-8 (L98)	24505041	1	45.00	BELT, W/PMP, A/C, A.I.R., GEN, P/S	

© 2000 GENERAL MOTORS SERVICE PARTS OPERATIONS-CHEVROLET-14Y

V-BELTS (1.066)
CHEVROLET "Y"

THIS CHART CAN BE USED BY DETERMINING BODY STYLE (LOCATED AT TOP OF EACH PAGE), THEN ENGINE CODE, THEN MODEL YEAR. NEXT, USE ALPHA CODE ON BELT, IF AVAILABLE, OR DIMENSIONS.

		L83 (5.7-8) 8 CYL			
84	Y	UXA	14055157	W/P,A/C,A.I.R.,GEN,P/S,FR CR/SHF	21.36MM X 2250.0MM
		LT5 (5.7J) 8 CYL			
90-92	Y	---	10067477	(6-RIB) ACCESSORY DRIVE	21.40MM X 2037.0MM
		LT1 (5.7P) 8 CYL			
92	Y	UXM	10186198	GEN,A/C,P/S	21.34MM X 1708.0MM
		L98 (5.7-8) 8 CYL			
85	Y	UXW	14092306	W/P,A/C,A.I.R.,GEN,P/S,FR CR/SHF	21.36MM X 2260.0MM
86	Y	UXX	14092308	W/P,A/C,A.I.R.,GEN,P/S,FR CR/SHF	21.36MM X 2250.0MM
87	Y	UXX	14092308	P/S,GEN,A.I.R.,W/P,A/C.TENS,FR CR/SHF	21.36MM X 2250.0MM
88-91	Y	UJL,SFZ	24505041	TENS,A/C,W/P,A.I.R.,GEN,P/S,FR CR/SHF	20.5MM X 2344.0MM

ABBREVIATIONS:
A/C.....AIR CONDITIONING COMPRESSOR
A.I.R.....AIR INJECTION REACTOR
FR CR/SHF.....FROM CRANKSHAFT
GEN.....GENERATOR
P/S.....POWER STEERING PUMP
VAC.....VACUUM PUMP
W/P.....WATER PUMP
TENS.....TENSIONER PULLEY

© 2000 GENERAL MOTORS SERVICE PARTS OPERATIONS–CHEVROLET–14Y

1.069 DAMPENER – PUMP – PUMP KIT, Engine Coolant

88	Y	10105252	1	32.75	DAMPENER, CLNT PUMP PUL VIB	1–G23,109
89–91	Y 5.7–8 (L98)	10105252	1	32.75	DAMPENER, CLNT PUMP PUL VIB	1–G23,109
84	Y 5.7–8 (L83)	12522035	1	230.72	PUMP KIT, WAT (AC–DELCO #251–500)	1–G23,93
85–91	Y 5.7–8 (L98)	12522035	1	230.72	PUMP KIT, WAT (AC–DELCO #251–500)	1–G23,93
92	Y 5.7P (LT1)	12529560	1	242.82	PUMP KIT, WAT (AC–DELCO #251–537)	1–I6,312
90–95	Y 5.7J (LT5)	10159599	1	561.43	PUMP, WAT (CONTAINS PUMP & GASKET) (AC–DELCO #251–561)	1–H13,318
93–96	Y 5.7P (LT1)	12527739	1	259.61	PUMP, WAT (W/GASKET) (AC–DELCO #251–554)	1–J12,312
96	Y 5.7–5 (LT4)	12527739	1	259.61	PUMP, WAT (W/GASKET) (AC–DELCO #251–554)	1–J12,312

1.070 , Coolant Pump

92	Y 5.7P (LT1)	12345493	AR	*13.80	(HI STRENGTH/TEMP, THREAD) (10 ML) (08.800)	

1.073 BOLT – INLET – STUD, Engine Coolant Pump

84	Y 5.7–8 (L83)	14076110	1	4.07	BOLT, W/PMP BKG PLT (W/LK WA (1/4–20X.53) (04.128) (AC–DELCO #14076110)	
85–91	Y 5.7–8 (L98)	14076110	1	4.07	BOLT, W/PMP BKG PLT (W/LK WA (1/4–20X.53) (04.128) (AC–DELCO #14076110)	
92–96	Y 5.7P (LT1)	10108667	1	12.75	INLET, W/PMP (W/THERM HSG & BLEDR SCREW)	2–D6,1
96	Y 5.7–5 (LT4)	10108667	1	12.75	INLET, W/PMP (W/THERM HSG & BLEDR SCREW)	2–D6,1
84–88	Y	14055139	AR	17.80	STUD (3/8–16X2.73/3/8–16X1.32)	1–G23,95
84–88	Y	10046099	AR	6.15	STUD, CLNT PUMP (3/8 16X2.19, 3/8 16X1.85)	1–G7,103
84	Y	14085701	1	20.25	STUD, CLNT PUMP (3/8–16X1.85/3/8–16X.96) (03.655)	

1.079 BOLT – GASKET – PIN – STUD, Engine Coolant Pump

90–95	Y 5.7J (LT5)	11514566	2	1.45	BOLT, W/PMP (8X1.25X40, 37.5 THD, 14 OD, TORX T40 DR, 9.8, PE 4067M)	1–H13,319
90–95	Y 5.7J (LT5)	24572579	2	.67	BOLT, W/PMP (HFH, M8X1.25X35) (00.206)	1–H13,319
92–95	Y 5.7J (LT5)	3522444	3	.63	BOLT, W/PMP (8X1.25X55, 22 THD, 18 OD, 9.8, PZOR, MACH) (01.840)	1–H13,319
92–96	Y 5.7F (LT1)	9423592	1	6.15	BOLT, W/PMP (USED W/SEALANT) (08.900)	1–J12,315
92–96	Y 5.7P (LT1)	9440073	2	[illegible]	BOLT, W/PMP (HFH 3/8–16X2.00 280M POR 6174M) (08.900)	1–J12,316
96	Y 5.7–5 (LT4)	9423592	1	6.15	BOLT, W/PMP (USED W/SEALANT) (08.900)	1–J12,315
96	Y 5.7–5 (LT4)	9440073	2	2.25	BOLT, W/PMP (HFH 3/8–16X2.00 280M POR 6174M) (08.900)	1–J12,316
92–93	Y 5.7P (LT1)	11508805	2	*.41	BOLT, W/PMP INL (HFH M6X1X16 9.8 POR 14 OD 14MM THD) (08.900)	
92–95	Y 5.7P (LT1)	22539278	2	.61	BOLT, W/PMP INL (M6 X 1.0 X 25.0 FLG HD) (08.900)	1–J12,323

© 2000 GENERAL MOTORS SERVICE PARTS OPERATIONS–CHEVROLET–14Y

1.079 BOLT – GASKET – PIN – STUD, Engine Coolant Pump (Con't)

84–91	Y	3754587	2	*.73	GASKET, W/PMP (LEFT OR RIGHT, 13/32 LARGE ID, CORK)	1–H13,317
90–95	Y 5.7J (LT5)	10168678	1	11.42	GASKET, W/PMP	1–H13,317
92–96	Y 5.7P (LT1)	10128343	2	*.34	GASKET, W/PMP	1–J12,310
96	Y 5.7–5 (LT4)	10128343	2	*.34	GASKET, W/PMP	1–J12,310
92–96	Y 5.7P (LT1)	10128487	1	9.80	PIN, W/PMP LOC (DOWELL, 0.31X1.25, STL–HRD, PL, CHAM ENDS)	1–J12,301
96	Y 5.7–5 (LT4)	10128487	1	9.80	PIN, W/PMP LOC (DOWELL, 0.31X1.25, STL–HRD, PL, CHAM ENDS)	1–J12,301
89–91	Y 5.7–8 (L98)	10105228	1	DISCON	STUD, W/PMP (3/8 16 BOTH ENDS 2.5 LG)	

1.097 BOLT – BRACKET – HOSE – NUT – PIPE – SEAL, Engine Coolant By–Pass

92–94	Y 5.7P (LT1)	12552974	1	3.95	BOLT, ENG COOL AIR BL PIPE	1–J12,330
95–96	Y 5.7P (LT1)	12552974	2	3.95	BOLT, ENG COOL AIR BL PIPE	1–J12,330
96	Y 5.7–5 (LT4)	12552974	2	3.95	BOLT, ENG COOL AIR BL PIPE	1–J12,330
90–95	Y 5.7J (LT5)	14104771	1	10.87	BRACKET, RAD BYPASS HOSE	2–C19,44
90–95	Y 5.7J (LT5)	10135661	1	11.20	HOSE, RAD BYPASS	2–C19,50
96	Y 5.7P (LT1)	9442958	3	*1.00	NUT, ENG COOL AIR BL PIPE (3/8–16 PC, 286M) (HEX, FLANGE) (08.917)	1–J12,327
96	Y 5.7–5 (LT4)	9442958	3	*1.00	NUT, ENG COOL AIR BL PIPE (3/8–16 PC, 286M) (HEX, FLANGE) (08.917)	1–J12,327
90	Y 5.7J (LT5)	10146245	LH	9.35	PIPE, COOLANT AIR BLEED	
86–89	Y 5.7–8 (L98)	14087587	1	8.25	PIPE, ENG COOL (INT MANIF VPR PIPE TO HTR OTLT PIPE)	8–G20,1
92–94	Y 5.7P (LT1)	10108636	1	39.50	PIPE, ENG COOL AIR BL	1–I23,224
95–96	Y 5.7P (LT1)	12556260	1	39.50	PIPE, ENG COOL AIR BL (INCLUDES BOLTS & SEALS)	1–J12,326
96	Y 5.7–5 (LT4), 6–SPD M/TRANS (ML9)	12556260	1	39.50	PIPE, ENG COOL AIR BL (INCLUDES BOLTS & SEALS)	1–J12,326
92–94	Y 5.7P (LT1)	10108689	2	5.78	SEAL, ENG COOL AIR BL PIPE (O RING)	1–J12,331
95–96	Y 5.7P (LT1)	10108689	4	5.78	SEAL, ENG COOL AIR BL PIPE (O RING)	1–J12,331
96	Y 5.7–5 (LT4)	10108689	4	5.78	SEAL, ENG COOL AIR BL PIPE (O RING)	1–J12,331

1.105 BOLT – COUPLING – SEAL – SHAFT, Coolant Pump, with Bearing

92–96	Y 5.7P (LT1)	14093637	2	*.78	BOLT, W/PMP DRV SHF BRG RET (HEX SOC TORQ DR 1/4–20 X 1/2, 15/32 OD) (00.529)	1–J12,303
96	Y 5.7–5 (LT4)	14093637	2	*.78	BOLT, W/PMP DRV SHF BRG RET (HEX SOC TORQ DR 1/4–20 X 1/2, 15/32 OD) (00.529)	1–J12,303
92–96	Y 5.7P (LT1)	10128334	1	51.75	COUPLING, W/PMP DRV SHF	1–J12,317
96	Y 5.7–5 (LT4)	10128334	1	51.75	COUPLING, W/PMP DRV SHF	1–J12,317
92–96	Y 5.7P (LT1)	12553792	1	*.08	SEAL, W/PMP DRV SHF	1–J12,318
96	Y 5.7–5 (LT4)	12553792	1	*.08	SEAL, W/PMP DRV SHF	1–J12,318
92–96	Y 5.7P (LT1)	10219554	1	57.00	SHAFT, W/PMP DRV	1–J10,302
96	Y 5.7–5 (LT4), 6–SPD M/TRANS (ML9)	12551727	1	75.50	SHAFT, W/PMP DRV	1–J12,302

© 2000 GENERAL MOTORS SERVICE PARTS OPERATIONS–CHEVROLET–14Y

1.113 STUD, Engine Coolant Pump

89–91	Y 5.7–8 (L98)	14055139	1	17.80	STUD, W/PMP CVR (3/8–16X2.73/3/8–16X1.32) (01.073)	

1.114 GASKET, Engine Coolant Pump to Cover

88	Y	12555493	1	1.94	GASKET, CLNT PUMP PLT (01.079)	
89–91	Y (5.7–8)	12555493	1	1.94	GASKET, CLNT PUMP PLT (01.079)	

1.123 SEAL, Engine Coolant Pump

92–96	Y 5.7P (LT1)	10217886	1	4.98	SEAL, W/PMP BRG	1–J12,304
96	Y 5.7–5 (LT4)	10217886	1	4.98	SEAL, W/PMP BRG	1–J12,304
92–96	Y 5.7P (LT1)	10128329	1	.97	SEAL, W/PMP CVR (O RING) (01.114)	1–J12,333
96	Y 5.7–5 (LT4)	10128329	1	.97	SEAL, W/PMP CVR (O RING) (01.114)	1–J12,333

1.148 CONNECTOR, Engine Coolant Temperature (Dash Unit)

93–94	Y 5.7J (LT5)	6288704	1	*.43	CONNECTOR, GA–TEMP (1–WAY F) (AC–DELCO #6288704)	

1.150 CONNECTOR – SENSOR, Coolant Temperature (Engine Unit)

90	Y	6288704	1	*.43	CONNECTOR, SEN–ENG COOL TEMP (1–WAY F) (01.148) (AC–DELCO #6288704)	
90–92	Y	12101899	1	17.95	CONNECTOR, SEN–ENG COOL TEMP (FEM METR–PACK, PULL TO ST) (BLACK) (2–WAY F) (W/LEADS) (02.383) (AC–DELCO #PT169)	
91	Y 5.7–8 (L98)	6288704	1	*.43	CONNECTOR, SEN–ENG COOL TEMP (1–WAY F) (01.148) (AC–DELCO #6288704)	
91–94	Y 5.7J (LT5)	6288704	1	*.43	CONNECTOR, SEN–ENG COOL TEMP (1–WAY F) (01.148) (AC–DELCO #6288704)	
92–95	Y 5.7P (LT1)	12116958	1	20.24	CONNECTOR, SEN–ENG COOL TEMP (GRAY) (2–WAY F) (W/LEADS) (02.535) (AC–DELCO #PT419)	
94–96	Y	12101899	1	17.95	CONNECTOR, SEN–ENG COOL TEMP (BLACK) (2–WAY F) (W/LEADS) (02.383) (AC–DELCO #PT169)	
94	Y 5.7P (LT1)	12102747	1	21.07	CONNECTOR, SEN–ENG COOL TEMP (BLACK) (2–WAY F) (W/LEADS) (03.670) (AC–DELCO #PT374)	
96	Y	12116958	1	20.24	CONNECTOR, SEN–ENG COOL TEMP (GRAY) (2–WAY F) (W/LEADS) (02.535) (AC–DELCO #PT419)	
84	Y	10045847	1	36.58	SENSOR, ENG COOL T/GA ((BUTN OTR & CNTR TERM, 3/8–18 THD) (WHITE) (AC12V STAMPED) (3.682)) (AC–DELCO #213–52)	
84–89	Y	25036135	1	34.89	SENSOR, ENG COOL T/GA (1 PLAIN BLADE TERM, 3/8–18 THD) (AC–DELCO #25036135)	2–C15,11

© 2000 GENERAL MOTORS SERVICE PARTS OPERATIONS–CHEVROLET–14Y

1.150 CONNECTOR – SENSOR, Coolant Temperature (Engine Unit) (Con't)

90	Y	8993146	1	27.25	SENSOR, ENG COOL T/GA (LOCK BLADE, 3/8–18 THD (MAY ALSO REQ TERM #6288704 TO ENABLE CHANGE FROM BUTTON TO BLADE TERM) (AC–DELCO #D1885)	1–H25,609
90–95	Y 5.7J (LT5)	25037346	1	28.54	SENSOR, ENG COOL T/GA (3/8–18 THD, COLLAR BUTTON) (AC–DELCO #213–80)	1–H25,609
91	Y 5.7J (LT5)	8993146	1	27.25	SENSOR, ENG COOL T/GA (LOCK BLADE, 3/8–18 THD) (MAY ALSO REQ TERM #6288704 TO ENABLE CHANGE FROM BUTTON TO BLADE TERM) (AC–DELCO #D1885)	1–H25,609
91	Y 5.7–8 (L98)	25037346	1	28.54	SENSOR, ENG COOL T/GA (3/8–18 THD, COLLAR BUTTON) (AC–DELCO #213–80)	1–H25,609
92–96	Y 5.7P (LT1)	25037332	1	18.82	SENSOR, ENG COOL T/GA (2 BLADE TERM) (3/8–18 THD) (2 TERM, CAN BE USED AS 1 TERM CONN) (AC–DELCO #213–77)	1–J6,253
96	Y 5.7–5 (LT4)	25037332	1	18.82	SENSOR, ENG COOL T/GA (2 BLADE TERM) (3/8–18 THD) (2 TERM, CAN BE USED AS 1 TERM CONN) (AC–DELCO #213–77)	1–J6,253
86–96	Y	12146312	1	9.10	SENSOR, ENG COOL TEMP (UND PLENUM) (USED FOR CLUSTERS W/OIL GAGE & LGT COMB) (2–WAY M) (03.682) (AC–DELCO #213–310)	2–D6,10

1.152 CORD – HEATER, Engine Coolant Heater

84	Y 5.7–8 (L83)	52353021	1	23.46	CORD, ENG COOL HTR (DIST BETWEEN TERMS 12.30 MM)	1–G23,59
84	Y 5.7–8 (L83)	52353026	1	24.63	CORD, ENG COOL HTR (DIST BETWEEN TERMS 13.46 MM)	
85–91	Y 5.7–8 (L98)	52353021	1	23.46	CORD, ENG COOL HTR (DIST BETWEEN TERMS 12.30 MM)	1–G23,59
85–89	Y 5.7–8 (L98)	52353026	1	24.63	CORD, ENG COOL HTR (DIST BETWEEN TERMS 13.46 MM)	
92–95	Y 5.7P (LT1), ENG BLK HTR (K05)	52353021	1	23.46	CORD, ENG COOL HTR	1–G23,59
96	Y ENG BLK HTR (K05)	52353021	1	23.46	CORD, ENG COOL HTR	1–G23,59
84	Y 5.7–8 (L83)	15531982	1	26.50	HEATER, ENG COOL (DIST BETWEEN TERMS 13.46 MM) (STAMPED 15531982)	
85–90	Y 5.7–8 (L98)	15531982	1	26.50	HEATER, ENG COOL (DIST BETWEEN TERMS 13.46 MM) (STAMPED 15531982)	

1.153 BOLT – OUTLET – PIPE – STUD, Engine Coolant

84	Y 5.7–8 (L83)	10198997	AR	*.57	BOLT, CLNT OTLT (3/8–16X1.25 280M) (03.275)	2–C15,16
85–90	Y 5.7–8 (L98)	10198997	AR	*.57	BOLT, CLNT OTLT (3/8–16X1.25 280M) (03.275)	2–C15,16
90–95	Y 5.7J (LT5)	11514494	8	.73	BOLT, WAT OTLT (PIPE) (6X1X50, 10.6 OD, T30 TORX DR)	1–H13,303
84	Y	14047010	1	DISCON	OUTLET, WAT	

© 2000 GENERAL MOTORS SERVICE PARTS OPERATIONS–CHEVROLET–14Y

1.153 BOLT – OUTLET – PIPE – STUD, Engine Coolant (Con't)

85–91	Y 5.7–8 (L98)	14084383	1	16.02	OUTLET, WAT (AC–DELCO #15–1443)	2–C15,15
90–95	Y 5.7J (LT5)	10146270	LH	191.00	OUTLET, WAT	1–H13,302
90–95	Y 5.7J (LT5)	10146271	RH	191.00	OUTLET, WAT	1–H13,302
95	Y 5.7J (LT5)	10146270	LH	191.00	PIPE, W/PMP OTLT	1–H13,302
85–87	Y	14091545	1	1.65	STUD, CLNT OTLT (3/8–16X0.78 BOTH ENDS) (03.275)	1–G19,85

1.154 GASKET, Engine Coolant Outlet

84	Y 5.7–8 (L83)	10105135	1	*1.63	GASKET, WAT OTLT (AC–DELCO #10105135)	2–C15,14
85–91	Y 5.7–8 (L98)	10105135	1	*1.63	GASKET, WAT OTLT (AC–DELCO #10105135)	2–C15,14
90–92	Y 5.7J (LT5)	10168677	2	6.89	GASKET, WAT OTLT (PIPE)	1–H13,301
93–95	Y 5.7J (LT5)	10168677	2	6.89	GASKET, WAT OTLT (PIPE)	1–H13,301

1.159 HOSE – HOSE KIT – PIPE, Radiator Inlet (Upper)

90–91	Y 5.7J (LT5)	10157951	1	62.75	HOSE KIT, RAD	
84	Y	14064509	1	22.75	HOSE, RAD INL	2–C12,35
85–88	Y	10135650	1	18.90	HOSE, RAD INL	2–C12,35
89	Y 5.7–8 (L98)	10135650	1	18.90	HOSE, RAD INL	2–C12,35
90–91	Y 5.7–8 (L98)	10135652	1	12.40	HOSE, RAD INL	2–C17,12
90–95	Y 5.7J (LT5)	10135659	1	13.55	HOSE, RAD INL (FROM THE T–SHAPED INL PIPE TO RAD)	2–C19,61
95	Y 5.7P (LT1)	10278338	1	13.55	HOSE, RAD INL	2–D13,5
96	Y	10278338	1	13.55	HOSE, RAD INL	2–D13,5
92–94	Y 5.7P (LT1)	10258277	1	19.30	HOSE, RAD INL FRT	2–D2,15
90–95	Y 5.7J (LT5)	10135658	2	7.05	HOSE, RAD INL RR (FROM BOTH SIDES OF ENG TO T–SHAPED INL PIPE)	2–C19,51
92–94	Y 5.7P (LT1)	10258276	1	19.30	HOSE, RAD INL RR	2–D2,13
90–95	Y 5.7J (LT5)	14104460	1	32.00	PIPE, RAD INL	2–C19,53

1.166 CLAMP – GUARD – SUPPORT, Hose (Radiator, Heater, A/C)

84–87	Y	2012781	1	3.70	CLAMP, A/C CMPR & CNDSR HOSE	8–J2,20
90–95	Y 5.7J (LT5)	10157995	2	2.00	CLAMP, RAD BYPASS HOSE (08.948)	2–C19,49
91	Y 5.7–8 (L98)	21030917	1	4.35	CLAMP, RAD INL HOSE ((37.5MM TO 44.5MM) NOMINAL SIZE 42MM, STAMPED "P") (08.948)	
90–94	Y 5.7J (LT5)	10108248	5	1.85	CLAMP, RAD INL HOSE ENG (44MM) (08.948)	2–C19,52
92–94	Y 5.7P (LT1)	21030917	1	4.35	CLAMP, RAD INL HOSE ENG ((37.5MM TO 44.5MM) NOMINAL SIZE 42MM, STAMPED "P") (08.948)	
90–94	Y	21030894	1	3.05	CLAMP, RAD INL HOSE RAD (47MM)	2–C17,13
95	Y 5.7P (LT1)	21030894	1	3.05	CLAMP, RAD INL HOSE RAD (47MM)	2–C17,13
96	Y	21030894	1	3.05	CLAMP, RAD INL HOSE RAD (47MM)	2–C17,13
90–91	Y 5.7–8 (L98)	21030894	1	3.05	CLAMP, RAD OTLT HOSE ENG (47MM)	2–C17,13
91	Y	11516239	1	6.00	CLAMP, RAD OTLT HOSE ENG (LT BROWN) (08.948)	

© 2000 GENERAL MOTORS SERVICE PARTS OPERATIONS–CHEVROLET–14Y

1.166 CLAMP – GUARD – SUPPORT, Hose (Radiator, Heater, A/C) (Con't)

92–94	Y 5.7P (LT1)	21030917	1	4.35	CLAMP, RAD OTLT HOSE ENG ((37.5MM TO 44.5MM) NOMINAL SIZE 42MM, STAMPED "P") (08.948)	
90–91	Y 5.7–8 (L98)	10158012	AR	3.05	CLAMP, RAD OTLT HOSE RAD (53MM) (08.948)	2–C17,23
90–95	Y 5.7J (LT5)	10158012	AR	3.05	CLAMP, RAD OTLT HOSE RAD (53MM) (08.948)	2–C17,23
92–96	Y 5.7P (LT1)	10158012	AR	3.05	CLAMP, RAD OTLT HOSE RAD (53MM) (08.948)	2–C17,23
90–94	Y 5.7J (LT5)	11516239	2	6.90	CLAMP, RAD OTLT RR HOSE ENG (51MM) (LT BROWN) (08.948)	
90–95	Y 5.7J (LT5)	10019739	1	1.10	CLAMP, SECD AIR INJN CHK VLV HOSE (31.5 TO 36MM) (01.762)	4–H6,10
92–93	Y 5.7P (LT1)	22518665	AR	*.93	CLAMP, SECD AIR INJN CHK VLV HOSE (9/16 TO 1 1/16 DIA) (08.948)	2–C12,29
84–91	Y	22518665	AR	*.93	CLAMP, WORM TYPE (9/16 TO 1 1/16 DIA) (08.948)	2–C12,29
84	Y	14069673	1	DISCON	GUARD, RAD OTLT HOSE	
85–86	Y07	14078650	1	DISCON	GUARD, RAD OTLT HOSE	
86–87	Y67	14092706	1	DISCON	GUARD, RAD OTLT HOSE (01.173)	
87	Y07 (EXC 1BL PERF HDLG PKG Z51, B2B SPORT HDLG PKG Z52)	14078650	1	DISCON	GUARD, RAD OTLT HOSE	
87	Y07 1BL (PERF HDLG PKG Z51), B2B (SPORT HDLG PKG Z52)	14092706	1	DISCON	GUARD, RAD OTLT HOSE (01.173)	
84	Y	14064510	1	DISCON	SUPPORT, HOSE	
85–89	Y	14084441	1	DISCON	SUPPORT, HOSE	
90–91	Y 5.7–8 (L98)	10086195	1	5.90	SUPPORT, RAD HOSE	2–C17,6
92–95	Y 5.7P (LT1)	10086195	1	5.90	SUPPORT, RAD HOSE	2–C17,6
96	Y	10086195	1	5.90	SUPPORT, RAD HOSE	2–C17,6

1.173 CLIP – COCK – HOSE, Radiator Outlet (Lower)

90–95	Y 5.7J (LT5)	10187787	1	5.00	CLIP, COOL AIR PURGE PIPE	1–H20,570
90–96	Y	3056858	1	2.81	COCK, RAD DRN (08.951) (AC–DELCO #3056858)	2–C4,4
84	Y	14051150	1	27.25	HOSE, RAD OTLT	2–C12,32
85–86	Y07	14078648	1	27.25	HOSE, RAD OTLT	2–C12,32
86–87	Y67	14092705	1	45.25	HOSE, RAD OTLT	2–C12,32
87	Y07 (EXC 1BL PERF HDLG PKG Z51, B2B SPORT HDLG PKG Z52)	14078648	1	27.25	HOSE, RAD OTLT	2–C12,32
87	Y07 1BL (PERF HDLG PKG Z51), B2B (SPORT HDLG PKG Z52)	14092705	1	45.25	HOSE, RAD OTLT	2–C12,32
88–89	Y	10135651	1	23.75	HOSE, RAD OTLT	2–C12,32
90–91	Y 5.7–8 (L98)	10135653	1	25.75	HOSE, RAD OTLT	2–C17,22
90–95	Y 5.7J (LT5)	10135660	1	4.65	HOSE, RAD OTLT (UPR)	2–C19,42
92–95	Y 5.7P (LT1)	10257252	1	23.55	HOSE, RAD OTLT	2–D2,42
96	Y	10257252	1	23.55	HOSE, RAD OTLT	2–D2,42
90–95	Y 5.7J (LT5)	10157990	1	15.10	HOSE, RAD OTLT RR (LWR)	2–C19,48

1.203 CAP – CONNECTOR – MODULE – SENSOR – SWITCH, Radiator Tank

84	Y	10409635	1	6.64	CAP, RAD FIL (AC–DELCO #RC27)	2–C12,4
85–90	Y	6410962	1	12.34	CAP, RAD FIL (AC–DELCO #RC44)	2–C12,4

© 2000 GENERAL MOTORS SERVICE PARTS OPERATIONS–CHEVROLET–14Y

1.203 CAP – CONNECTOR – MODULE – SENSOR – SWITCH, Radiator Tank (Con't)

90	Y 5.7J (LT5)	12102747	1	21.07	CONNECTOR, SW–ENG COOL LVL IND (03.670) (AC–DELCO #PT374)	2–D2,55
90–91	Y 5.7–8 (L98)	12102747	1	21.07	CONNECTOR, SW–ENG COOL LVL IND (BLACK) (2–WAY F) (W/LEADS) (03.670) (AC–DELCO #PT374)	2–D2,55
92–96	Y	12102747	1	21.07	CONNECTOR, SW–ENG COOL LVL IND (BLACK) (2–WAY F) (W/LEADS) (03.670) (AC–DELCO #PT374)	2–D2,55
86–89	Y	22533547	1	22.37	MODULE, LOW ENG CLNT IND	
91–95	Y 5.7J (LT5)	25037346	1	28.54	SENSOR, ENG COOL FAN IND FLUID LVL (3/8–18 THD, COLLAR BUTTON) (01.150) (AC–DELCO #213–80)	
86–89	Y 5.7–8 (L98)	10054615	1	4.92	SWITCH, LOW ENG COOL LVL (AC–DELCO #10054615)	2–C12,44

1.210 TUBE, Radiator Filler

84	Y 5.7–8 (L83), (EXC HVY DUTY RAD (V01)	12489201	1	88.80	TUBE, RAD FIL (AC–DELCO #12489201)
85	Y 5.7–8 (L98), (EXC EXPORT (VB4), EUROPEAN PROVISIONS (VD1) (EXPORT), VT7 (EXPORT)	12489201	1	88.80	TUBE, RAD FIL (AC–DELCO #12489201)
86–89	Y 5.7–8 (L98)	12489201	1	88.80	TUBE, RAD FIL (AC–DELCO #12489201)
90–91	Y 5.7–8 (L98), 6–SPD M/TRANS (ML9)	12489201	1	88.80	TUBE, RAD FIL (FOR ALUMINUM RADIATOR REPAIR) (AC–DELCO #12489201)
90–93	Y 4–SPD A/TRANS (MD8)	12489201	1	88.80	TUBE, RAD FIL (CODE YD, YT) (FOR ALUMINUM RADIATOR REPAIR) (AC–DELCO #12489201)
92–96	Y 6–SPD M/TRANS (ML9)	12489201	1	88.80	TUBE, RAD FIL (FOR ALUMINUM RADIATOR REPAIR) (AC–DELCO #12489201)
94–96	Y 4–SPD A/TRANS (M30)	12489201	1	88.80	TUBE, RAD FIL (CODE YT) (FOR ALUMINUM RADIATOR REPAIR) (AC–DELCO #12489201)

1.219 CORE – GASKET KIT – RADIATOR – SUPPORT – TANK, Radiator

NOTE: FOR RADIATOR APPLICATION REFER TO CHART GRP 1.219

85–86	Y (EXC H.D.C. V01)	3049535	1	DISCON	CORE, RAD (AC–DELCO #9535)	
85	Y H .D .C. (V08) (EXC VB4, VD1, VT7 EXPORT)	3049562	1	DISCON	CORE, RAD (AC–DELCO #10058)	
86–88	Y HVY DUTY RAD (V01)	3049562	1	DISCON	CORE, RAD (AC–DELCO #10058)	
89	Y (5.7–8) (EXC H.D.C. V01)	3049535	1	DISCON	CORE, RAD (AC–DELCO #9535)	
89	Y 5.7–8 (L98), HVY DUTY RAD (V01)	3049562	1	DISCON	CORE, RAD (AC–DELCO #10058)	
90–96	Y	52450317	1	DISCON	CORE, RAD (W/RAD CODE:YD)	
84	Y (EXC HVY DUTY RAD (V01)	3092236	1	36.50	GASKET KIT, RAD TK (AC–DELCO #3092236)	2–C4,5
85	Y (EXC HVY DUTY CLG (V08)	3092236	1	36.50	GASKET KIT, RAD TK (AC–DELCO #3092236)	2–C4,5
85	Y HVY DUTY CLG (V08), (EXC EXPORT (VB4), EUROPEAN PROVISIONS (VD1) (EXPORT), VT7 (EXPORT)	3092236	1	36.50	GASKET KIT, RAD TK (AC–DELCO #3092236)	2–C4,5

© 2000 GENERAL MOTORS SERVICE PARTS OPERATIONS–CHEVROLET–14Y

1.219 CORE – GASKET KIT – RADIATOR – SUPPORT – TANK, Radiator (Con't)

86–88	Y	3092236	1	36.50	GASKET KIT, RAD TK (AC–DELCO #3092236)	2–C4,5
89–96	Y	52484143	1	43.22	GASKET KIT, RAD TK (AC–DELCO #52484143)	2–C5,5
84	Y 5.7–8 (L83), (EXC HVY DUTY RAD (V01)	52453612	1	376.18	RADIATOR, (CODE MR, MS, MW) (AC–DELCO #20461)	2–C15,4
92–96	Y 6–SPD M/TRANS (ML9)	52460411	1	491.45	RADIATOR, (CODE LO, YC) (AC–DELCO #20620)	2–C6,1
92–93	Y 4–SPD A/TRANS (MD8)	52473260	1	441.92	RADIATOR, (CODE YD, YT) (AC–DELCO #20681)	2–C6,1
94–96	Y 4–SPD A/TRANS (M30)	52473260	1	441.92	RADIATOR, (CODE YT) (AC–DELCO #20681)	2–C6,1
89	Y (5.7–8)	10065785	1	46.99	SUPPORT, RAD (UPR)	2–C12,24
84–88	Y	10065785	1	46.99	SUPPORT, RAD UPR	2–C12,24
84	Y (EXC HVY DUTY RAD (V01)	3054255	1	57.47	TANK, RAD INL (AC–DELCO #3054255)	2–C4,6
85	Y HVY DUTY CLG (V08), (EXC EUROPEAN PROVISIONS (VD1) (EXPORT), EXPORT (VB4), VT7 (EXPORT)	3054255	1	57.47	TANK, RAD INL (AC–DELCO #3054255)	2–C4,6
86–88	Y	3054255	1	57.47	TANK, RAD INL (AC–DELCO #3054255)	2–C4,6
89	Y 5.7–8 (L98)	3054255	1	57.47	TANK, RAD INL (AC–DELCO #3054255)	2–C4,6
90–96	Y	3050908	1	42.66	TANK, RAD INL (AC–DELCO #3050908)	2–C5,6
84	Y (EXC HVY DUTY RAD (V01)	52458801	1	40.11	TANK, RAD OTLT (USE ON ASM 3052025, 3053501) (AC–DELCO #52458801)	
85	Y HVY DUTY CLG (V08), (EXC EXPORT (VB4), EUROPEAN PROVISIONS (VD1) (EXPORT), VT7 (EXPORT)	52458801	1	40.11	TANK, RAD OTLT (AC–DELCO #52458801)	
85	Y (EXC HVY DUTY CLG (V08)	52458801	1	40.11	TANK, RAD OTLT (AC–DELCO #52458801)	
86–88	Y	3092029	1	90.71	TANK, RAD OTLT (AC–DELCO #3092029)	2–C4,2
89	Y 5.7–8 (L98)	3092029	1	90.71	TANK, RAD OTLT (AC–DELCO #3092029)	2–C4,2
90–96	Y 6–SPD M/TRANS (ML9)	52450316	1	48.79	TANK, RAD OTLT (AC–DELCO #52450316)	2–C5,2
90–93	Y 4–SPD A/TRANS (MD8)	52454666	1	45.18	TANK, RAD OTLT (AC–DELCO #52454666)	2–C5,2
94–96	Y 4–SPD A/TRANS (M30)	52454666	1	45.18	TANK, RAD OTLT (AC–DELCO #52454666)	2–C5,2

© 2000 GENERAL MOTORS SERVICE PARTS OPERATIONS–CHEVROLET–14Y

1984 RADIATOR(1.219)
CHEVROLET Y

VIN ENGINE CODE		8						
ENGINE SIZE		5.7						
ENGINE OPTION		L83						
SERIES	USAGE							
Y	(EXC H.D.C.V01)	52453612						
Y	W/H.D.C.(V01)	52481572						

1985 RADIATOR(1.219)
CHEVROLET Y

VIN ENGINE CODE		8						
ENGINE SIZE		5.7						
ENGINE OPTION		L98						
SERIES	USAGE							
Y	W/H.D.C.(V08),VB4,V01,VT7	52481572						
Y	(EXC H.D.C.V08)	52453612						
Y	W/H.D.C.(V08)(EXC VB4,V01,VT7)	52453612						

1986-89 RADIATOR(1.219)
CHEVROLET Y

VIN ENGINE CODE		8						
ENGINE SIZE		5.7						
ENGINE OPTION		L98						
SERIES	USAGE							
Y		52453612						

1990 - 91 RADIATOR(1.219)
CHEVROLET Y

VIN ENGINE CODE		J	8					
ENGINE SIZE		5.7	5.7					
ENGINE OPTION		LT5	L98					
SERIES	USAGE							
Y		52460411						
Y	W/M.T.(ML9)		52460411					
Y	W/A.T.(MD8)		52461766					

1.240 BOLT - BRACKET - CAP - CLAMP - CLIP - HOSE - HOSE KIT RESERVOIR - RETAINER - TANK - WASHER, Engine Coolant Recovery

94-96	Y	22538027	2	.59	BOLT, COOL RCVY RSVR (POSN #2) (M6.3X1.81X25) (07.833)	
90-96	Y	10082901	1	6.50	BRACKET, RAD SURGE TK	2-C17,45
92-94	Y 5.7P (LT1)	52463838	1	9.85	BRACKET, RAD SURGE TK (09.211)	2-C17,53
95	Y 5.7P (LT1), (1ST DES)	52463838	1	9.85	BRACKET, RAD SURGE TK (USED ON VEHICLES W/VIN OF 119804 AND PRIOR) (09.211)	2-C17,53
95	Y 5.7P (LT1), (2ND DES)	52475992	1	9.85	BRACKET, RAD SURGE TK (USED ON VEHICLES W/VIN OF 119805 AND GREATER) (09.211)	2-D13,32
96	Y 5.7P (LT1)	52475992	1	9.85	BRACKET, RAD SURGE TK (09.211)	2-D13,32
84-96	Y	10239665	1	3.78	CAP, COOL RCVY RSVR	2-C12,30
90	Y	6410962	1	12.34	CAP, RAD SURGE TK (01.203) (AC-DELCO #RC44)	2-C24,25
91-96	Y	10409635	1	6.64	CAP, RAD SURGE TK (01.203) (AC-DELCO #RC27)	2-C24,25
90-91	Y	22527587	AR	1.75	CLAMP, RAD SURGE TK AIR BL HOSE (20.0 X 12.4) (WORM GEAR, 1/2-13/16) (08.948)	2-C17,36
95	Y 5.7P (LT1)	22527587	AR	1.75	CLAMP, RAD SURGE TK AIR BL HOSE (20.0 X 12.4) (WORM GEAR, 1/2-13/16) (08.948)	2-C17,36
96	Y	22527587	AR	1.75	CLAMP, RAD SURGE TK AIR BL HOSE (20.0 X 12.4) (WORM GEAR, 1/2-13/16) (08.948)	2-C17,36
92-96	Y	10108255	1	3.75	CLAMP, RAD SURGE TK INL HOSE (AT HTR) (BLACK) (08.948)	2-D6,23
91-96	Y	10217444	1	.95	CLIP, COOL RCVY RSVR HOSE	2-D6,35
84	Y 5.7-8 (L83), (EXC HVY DUTY RAD (V01)	12487371	1	180.40	HOSE KIT, RAD OVFL (RPR) (CODE MR, MS, MW) (AC-DELCO #12487371)	
85	Y 5.7-8 (L98), (EXC EXPORT (VB4), EUROPEAN PROVISIONS (VD1) (EXPORT), VT7 (EXPORT)	12487371	1	180.40	HOSE KIT, RAD OVFL (RPR) (CODE MR, MS, MW, M9) (AC-DELCO #12487371)	
86-89	Y 5.7-8 (L98)	12487371	1	180.40	HOSE KIT, RAD OVFL (RPR) (CODE MU, MT) (AC-DELCO #12487371)	
90-91	Y 5.7-8 (L98), 6-SPD M/TRANS (ML9)	12487371	1	180.40	HOSE KIT, RAD OVFL (RPR) (CODE LO, YC) (FOR ALUMINUM RADIATOR REPAIR) (AC-DELCO #12487371)	
90-93	Y 4-SPD A/TRANS (MD8)	12487371	1	180.40	HOSE KIT, RAD OVFL (RPR) (CODE YD, YT) (FOR ALUMINUM RADIATOR REPAIR) (AC-DELCO #12487371)	
92-96	Y 6-SPD M/TRANS (ML9)	12487371	1	180.40	HOSE KIT, RAD OVFL (RPR) (CODE LO, YC) (FOR ALUMINUM RADIATOR REPAIR) (AC-DELCO #12487371)	
94-96	Y 4-SPD A/TRANS (M30)	12487371	1	180.40	HOSE KIT, RAD OVFL (RPR) (CODE YT) (FOR ALUMINUM RADIATOR REPAIR) (AC-DELCO #12487371)	
90-91	Y 5.7-8 (L98)	10135654	1	112.00	HOSE, RAD SURGE TK AIR BFL & OVERFLOW	2-C17,40

© 2000 GENERAL MOTORS SERVICE PARTS OPERATIONS-CHEVROLET-14Y

1.240 BOLT – BRACKET – CAP – CLAMP – CLIP – HOSE – HOSE KIT – RESERVOIR – RETAINER – TANK – WASHER, Engine Coolant Recovery (Con't)

90–91	Y 5.7J (LT5)	10135654	1	112.00	HOSE, RAD SURGE TK AIR BFL & OVERFLOW	2–C17,40
90–94	Y	10135654	1	112.00	HOSE, RAD SURGE TK AIR BL & OVFL	2–C17,40
95	Y 5.7J (LT5)	10135654	1	112.00	HOSE, RAD SURGE TK AIR BL & OVFL	2–C17,40
95	Y 5.7P (LT1)	10262504	1	112.00	HOSE, RAD SURGE TK AIR BL & OVFL	2–D13,27
96	Y	10262504	1	112.00	HOSE, RAD SURGE TK AIR BL & OVFL	2–D13,27
90–96	Y	10257254	1	10.90	HOSE, RAD SURGE TK INL	2–C17,42
84–96	Y	10239666	1	11.85	RESERVOIR, COOL RCVY	2–C12,31
90–96	Y	14104598	1	2.15	RETAINER, RAD SURGE TK	2–C17,46
90–96	Y	10157994	1	40.75	TANK, RAD SURGE (W/SEN) (INCLS SWITCH)	2–C17,47
87–91	Y	14016675	3	1.10	WASHER, CLNT RCVY RSVR (.281 I/D)	

1.246 THERMOSTAT, Engine Coolant Temperature

84–88	Y	12514334	1	7.66	THERMOSTAT, ENG COOL (195 DEG) (AC–DELCO #131–87)	2–C15,13
89–91	Y 5.7–8 (L98)	12514334	1	7.66	THERMOSTAT, ENG COOL (AC–DELCO #131–87)	2–C15,13
90–95	Y 5.7J (LT5)	10135627	1	21.62	THERMOSTAT, ENG COOL (AC–DELCO #131–51)	2–C19,68
90–95	Y 5.7J (LT5)	14104599	1	236.64	THERMOSTAT, ENG COOL (INCLS HSG (UPR/LWR), THERM, BRKT & BOLTS)	2–C19,68
92–96	Y 5.7P (LT1)	12555290	1	21.32	THERMOSTAT, ENG COOL (180 DEG) (AC–DELCO #131–100)	2–D6,8
96	Y 5.7–5 (LT4)	12555290	1	21.32	THERMOSTAT, ENG COOL (180 DEG) (AC–DELCO #131–100)	2–D6,8

1.251 BRACKET – HOUSING, Engine Coolant Thermostat

90–95	Y 5.7J (LT5)	14104911	1	11.10	BRACKET, ENG COOL THERM HSG	2–C19,73
90–95	Y 5.7J (LT5)	14104784	1	116.00	HOUSING, ENG COOL THERM UPR	2–C19,70

1.252 GASKET – SEAL, Engine Coolant Thermostat Housing

90–95	Y 5.7J (LT5)	10226107	1	2.24	GASKET, ENG COOL THERM (AC–DELCO #10226107)	2–C19,69
92–96	Y 5.7P (LT1)	12553106	1	3.78	SEAL, ENG COOL THERM (O RING) (AC–DELCO #12553106)	2–D6,37
96	Y 5.7–5 (LT4)	12553106	1	3.78	SEAL, ENG COOL THERM (O RING) (AC–DELCO #12553106)	2–D6,37

1.263 STRIPE, Radiator

95	Y INDY PACE CAR (Z4Z)	10278398	1	DISCON	STRIPE, F/END FASCIA (07.832)	

1.267 BRACKET – PANEL, Radiator Grille and Front End Panel

84–89	Y	14058299	LH	7.90	BRACKET, INR	2–C12,14
84–89	Y	14058300	RH	7.90	BRACKET, INR	2–C12,14
84–90	Y	10077355	1	7.20	BRACKET, RAD GRL (CTR)	2–C12,18
90	Y	14104983	LH	7.90	BRACKET, RAD GRL INR	2–C17,29
90	Y	14104984	RH	DISCON	BRACKET, RAD GRL INR	

© 2000 GENERAL MOTORS SERVICE PARTS OPERATIONS–CHEVROLET–14Y

1.267 BRACKET – PANEL, Radiator Grille and Front End Panel (Con't)

84–88	Y	14058670	1	15.30	PANEL, GRL MT	2–C12,19
89	Y 5.7–8 (L98)	14058670	1	15.30	PANEL, GRL MT	2–C12,19
90	Y SOFT RIDE SUSP (FE1), HVY DUTY SUSP (FE7)	14104982	1	22.70	PANEL, RAD GRL MT	2–C17,33

1.270 INSULATOR – SUPPORT, Radiator

84–85	Y	14043103	2	2.47	INSULATOR, MT (LH)	2–C12,21
84–85	Y	14043104	2	DISCON	INSULATOR, MT (RH)	
86–88	Y	14081867	2	2.47	INSULATOR, MT (LH)	2–C12,21
86–88	Y	14081868	2	2.47	INSULATOR, MT (RH)	2–C12,22
89	Y 5.7–8 (L98)	14081867	2	2.47	INSULATOR, MT (LH)	2–C12,21
89	Y 5.7–8 (L98)	14081868	2	2.47	INSULATOR, MT (RH)	2–C12,22
90–93	Y	10082904	RH	2.47	INSULATOR, RAD LWR	2–C17,25
90–93	Y	10082905	LH	3.57	INSULATOR, RAD LWR	2–C17,25
94–96	Y	10219101	LH	4.45	INSULATOR, RAD LWR	2–D2,21
94–96	Y	10219102	RH	4.45	INSULATOR, RAD LWR	2–D2,21
90–91	Y 5.7–8 (L98)	10086303	RH	4.52	INSULATOR, RAD MT (UPR)	2–C17,20
90–93	Y	10082902	LH	2.47	INSULATOR, RAD UPR	2–C19,28
90–93	Y 5.7J (LT5)	10082903	RH	3.57	INSULATOR, RAD UPR	2–C19,28
92–93	Y 5.7P (LT1)	10086303	RH	4.52	INSULATOR, RAD UPR	2–C17,20
94–96	Y	10219097	LH	4.45	INSULATOR, RAD UPR	2–D2,43
94–96	Y	10219098	RH	4.45	INSULATOR, RAD UPR	2–D2,43
89	Y 5.7–8 (L98)	14076564	1	57.75	SUPPORT, LWR	2–C12,7
84–88	Y	14076564	1	57.75	SUPPORT, RAD (LWR) (ON 1984, RR FRM MTG HOLES MUST BE SHIMED TO 20MM, TO OBTAIN PROPER RAD RELATIONSHIP)	2–C12,7
90–96	Y	10219096	1	51.25	SUPPORT, RAD LWR	2–C8,10
90–94	Y	10265847	1	54.50	SUPPORT, RAD UPR	2–C8,17
95–96	Y	10265847	1	54.50	SUPPORT, RAD UPR	2–C8,17

1.271 BOLT, Radiator and Front End Tie

90–96	Y	10135646	4	1.80	BOLT, RAD SUPT (M6 X 1 X 24)	2–C10,8

1.272 BAFFLE – BOLT – BRACE – BRACKET – DEFLECTOR – DEFLECTOR PKG – NUT – RETAINER – SCREW, Radiator Air

84	Y	14030214	1	56.18	BAFFLE, LWR	2–C12,17
85–88	Y	14078642	1	56.18	BAFFLE, LWR	2–C12,17
89	Y 5.7–8 (L98)	14078642	1	56.18	BAFFLE, LWR	2–C12,17
84	Y	14049232	1	DISCON	BAFFLE, UPR	
85–88	Y	14078651	1	56.18	BAFFLE, UPR	2–C12,6
89	Y 5.7–8 (L98)	14078651	1	56.18	BAFFLE, UPR	2–C12,6
91–96	Y	10149273	1	2.80	BOLT, FRT A/DFL (07.833)	7–J11,30
84–90	Y	10077360	1	8.56	BRACE, FRT A/DFL UPR CTR	7–J5,32
91–96	Y	10149267	1	8.30	BRACE, FRT A/DFL UPR CTR	7–J11,37
92–93	Y	10212816	RH	5.00	BRACKET, RAD AIR SI DFL	2–D2,51
92–96	Y	10212817	LH	5.00	BRACKET, RAD AIR SI DFL	2–D2,51
94–96	Y (EXC MODIFICATION–NOISE CONTROL (B4H) (EXPORT)	10212816	RH	5.00	BRACKET, RAD AIR SI DFL	2–D2,51
84	Y	10107825	1	30.19	DEFLECTOR PKG, FRT AIR	7–J5,30
85	Y (2ND DES)	10107824	1	34.60	DEFLECTOR PKG, FRT AIR (W/STIFFENING RIBS)	7–J5,30
85	Y (1ST DES)	10107825	1	30.19	DEFLECTOR PKG, FRT AIR (W/O STIFFENING RIBS)	7–J5,30
86	Y	10107824	1	34.60	DEFLECTOR PKG, FRT AIR	7–J5,30

© 2000 GENERAL MOTORS SERVICE PARTS OPERATIONS–CHEVROLET–14Y

1.272 BAFFLE – BOLT – BRACE – BRACKET – DEFLECTOR – DEFLECTOR PKG – NUT – RETAINER – SCREW, Radiator Air (Con't)

87	Y07 1BL (PERF HDLG PKG Z51)	10107824	1	34.60	DEFLECTOR PKG, FRT AIR	7–J5,30
87	Y07 (EXC 1BL PERF HDLG PKG Z51)	10107825	1	30.19	DEFLECTOR PKG, FRT AIR	7–J5,30
88–90	Y PERFORMANCE HANDLING PKG (Z51), CALLAWAY CONVERSION (Z5G)	10107824	1	34.60	DEFLECTOR PKG, FRT AIR	7–J5,30
88–90	Y (EXC PERFORMANCE HANDLING PKG (Z51), CALLAWAY CONVERSION (Z5G)	10107825	1	30.19	DEFLECTOR PKG, FRT AIR	7–J5,30
84	Y	14043135	LH	23.05	DEFLECTOR, FRT	7–J5,28
84	Y	14043136	RH	23.05	DEFLECTOR, FRT	7–J5,28
85	Y (1ST DES)	14043135	LH	23.05	DEFLECTOR, FRT (W/O STIFFENING RIBS)	7–J5,28
85	Y (1ST DES)	14043136	RH	23.05	DEFLECTOR, FRT (W/O STIFFENING RIBS)	7–J5,28
85	Y (2ND DES)	14089635	LH	24.50	DEFLECTOR, FRT (W/STIFFENING RIBS)	7–J5,28
85	Y (2ND DES)	14089636	RH	24.50	DEFLECTOR, FRT (W/STIFFENING RIBS)	7–J5,28
86	Y	14089635	LH	24.50	DEFLECTOR, FRT	7–J5,28
86	Y	14089636	RH	24.50	DEFLECTOR, FRT	7–J5,28
87–90	Y (EXC PERF HDLG PKG Z51)	14043135	LH	23.05	DEFLECTOR, FRT	7–J5,28
87–90	Y (EXC PERF HDLG PKG Z51)	14043136	RH	23.05	DEFLECTOR, FRT	7–J5,28
87	Y07 1BL (PERF HDLG PKG Z51)	14089635	LH	24.50	DEFLECTOR, FRT	7–J5,28
87	Y07 1BL (PERF HDLG PKG Z51)	14089636	RH	24.50	DEFLECTOR, FRT	7–J5,28
88	Y (EXC SEO Z5G)	14043135	LH	23.05	DEFLECTOR, FRT	7–J5,28
88	Y (EXC SEO Z5G)	14043136	RH	23.05	DEFLECTOR, FRT	7–J5,28
88–89	Y PERF HDLG PKG (Z51)	14089635	LH	24.50	DEFLECTOR, FRT	7–J5,28
88–89	Y PERF HDLG PKG (Z51)	14089636	RH	24.50	DEFLECTOR, FRT	7–J5,28
91–96	Y	10149263	LH	18.45	DEFLECTOR, FRT AIR	7–J11,28
91–96	Y	10149264	RH	18.45	DEFLECTOR, FRT AIR	7–J11,28
84	Y	14043137	1	23.05	DEFLECTOR, FRT CTR	7–J5,30
85	Y (1ST DES)	14043137	1	23.05	DEFLECTOR, FRT CTR (W/O STIFFENING RIBS)	7–J5,30
85	Y (2ND DES)	14089634	1	24.50	DEFLECTOR, FRT CTR (W/STIFFENING RIBS)	7–J5,30
86	Y	14089634	1	24.50	DEFLECTOR, FRT CTR (W/STIFFENING RIBS)	7–J5,30
87–90	Y (EXC PERF HDLG PKG Z51)	14043137	1	23.05	DEFLECTOR, FRT CTR	7–J5,30
87–89	Y PERF HDLG PKG (Z51)	14089634	1	24.50	DEFLECTOR, FRT CTR (W/STIFFENING RIBS)	7–J5,30
88	Y SEO (Z5G)	14089634	1	24.50	DEFLECTOR, FRT CTR (W/STIFFENING RIBS)	7–J5,30
90	Y CALLAWAY CONVERSION (Z5G)	14089634	1	24.50	DEFLECTOR, FRT CTR (W/STIFFENING RIBS)	7–J5,30
90	Y PERF HDLG PKG (Z51), H .D .SUSP (FE7)	14089634	1	24.50	DEFLECTOR, FRT CTR (W/STIFFENING RIBS)	7–J5,30
90	Y CALLAWAY CONVERSION (Z5G)	14089635	LH	24.50	DEFLECTOR, FRT CTR (LONG) (W/STIFFENING RIBS)	7–J5,28
90	Y PERF HDLG PKG (Z51), H .D .SUSP (FE7)	14089635	LH	24.50	DEFLECTOR, FRT CTR (LONG) (W/STIFFENING RIBS)	7–J5,28

1.272 BAFFLE – BOLT – BRACE – BRACKET – DEFLECTOR – DEFLECTOR PKG – NUT – RETAINER – SCREW, Radiator Air (Con't)

90	Y CALLAWAY CONVERSION (Z5G)	14089636	RH	24.50	DEFLECTOR, FRT CTR (LONG) (W/STIFFENING RIBS)	7–J5,28
90	Y PERF HDLG PKG (Z51), H .D .SUSP (FE7)	14089636	RH	24.50	DEFLECTOR, FRT CTR (LONG) (W/STIFFENING RIBS)	7–J5,28
91–96	Y	10149265	1	18.45	DEFLECTOR, FRT CTR AIR	7–J11,32
92–96	Y	10204533	LH	2.80	DEFLECTOR, RAD AIR SI	2–D2,50
92–93	Y	10204534	RH	2.80	DEFLECTOR, RAD AIR SI	2–D2,50
94–96	Y (EXC MODIFICATION–NOISE CONTROL (B4H) (EXPORT)	10204534	RH	2.80	DEFLECTOR, RAD AIR SI	2–D2,50
87–91	Y	14104753	1	9.40	DEFLECTOR, RAD AIR UPR	2–C17,4
92–96	Y	10204532	1	9.10	DEFLECTOR, RAD AIR UPR	2–D2,1
92–95	Y	20032850	2	*.64	RETAINER, RAD AIR UPR DFL (PUSH IN) (14.683)	2–D2,49
96	Y	20032850	3	*.64	RETAINER, RAD AIR UPR DFL (PUSH IN) (14.683)	2–D2,49
84–88	Y Y (FOR FIELD FIX ONLY)	11517518	2	1.85	SCREW, FRT AIR DEFLECTOR PKG (08.900) (AC–DELCO #11517518)	7–J5,35

1.274 BRACKET – NUT, Radiator Support Mounting

90–96	Y	14104391	1	11.15	BRACKET, RAD SUPT (01.270)	2–C8,12
90–94	Y (5.7J)	14104386	6	2.90	NUT, RAD SUPT BRKT	

1.276 RETAINER, Radiator Baffle and Shroud

84–96	Y	14043167	1	4.15	RETAINER, RAD AIR LWR BFL	2–C12,13

1.277 BOLT – SHROUD – SHROUD KIT, Radiator Fan Shroud

92–95	Y	1635219	8	*1.80	BOLT, ENG COOL FAN SHRD (M6X1X30) (08.900)	
84–87	Y	22040195	1	75.38	SHROUD KIT, ENG ELEC COOL FAN (LABEL 22073985) (AC–DELCO #22040195)	2–C7,5
88–89	Y 5.7–8 (L98)	22040195	1	75.38	SHROUD KIT, ENG ELEC COOL FAN (LABEL 22073985) (AC–DELCO #22040195)	2–C7,5
90–96	Y	10157958	1	64.26	SHROUD, ENG COOL FAN	2–C8,5

1.426 BAFFLE – BOLT – PAN – PAN KIT – REINFORCEMENT, Engine Oil

93–95	Y 5.7J (LT5)	10187733	1	174.80	BAFFLE, OIL PAN FRT (01.430)	1–H16,413
93–95	Y 5.7J (LT5)	10187737	1	184.90	BAFFLE, OIL PAN RR (01.430)	1–H16,411
90–95	Y 5.7J (LT5)	10122138	2	1.80	BOLT, LWR C/CASE (M8 X 1.5 X 100) (01.428)	1–H16,121
90–92	Y 5.7J (LT5)	10135848	17	.81	BOLT, LWR C/CASE (M8 X 1.5 X 65.0 6G) (01.428)	1–H16,121
90–95	Y 5.7J (LT5)	10135849	1	1.10	BOLT, LWR C/CASE (M8 X 1.5 X 80.0 6G) (01.428)	1–H16,121
90–95	Y 5.7J (LT5)	24572579	2	.67	BOLT, LWR C/CASE (HFH, M8X1.25X35) (00.206)	1–H16,121
93–95	Y 5.7J (LT5)	10135848	15	.81	BOLT, LWR C/CASE (M8 X 1.5 X 65.0 6G) (01.428)	1–H16,121
93–95	Y 5.7J (LT5)	11509666	2	.86	BOLT, LWR C/CASE (8X1.25X50, 27 THD) (08.900)	1–H16,121
91	Y 5.7–8 (L98)	12528503	1	133.40	PAN KIT, OIL (W/GSKT)	1–J15,413
92–96	Y 5.7P (LT1)	12528503	1	133.40	PAN KIT, OIL (W/GSKT)	1–J15,413
96	Y 5.7–5 (LT4)	12528503	1	133.40	PAN KIT, OIL (W/GSKT)	1–J15,413

© 2000 GENERAL MOTORS SERVICE PARTS OPERATIONS–CHEVROLET–14

MICROFICHE INDEX

GROUP 1.000

FICHE 2 OF 11

GROUP	DESCRIPTION	STARTING GRID LOCATION PARTS	ILLUSTRATIONS
–	GENERAL INFORMATION	1–A2	1–G2
–	ALPHABETICAL INDEX	1–B13	N.A.
1.000	COOLING SYSTEM – GRILLE – OIL SYSTEM	2–A2	2–C2
–	OUT OF FICHE CALLS	N.A.	2–N8

2–B1

1.426 BAFFLE – BOLT – PAN – PAN KIT – REINFORCEMENT, Engine Oil(Con't)

84–85	Y	14082350	1	DISCON	PAN, OIL (IF REPLC 14067363, MUST ALSO USE:14082341–OIL PAN LH REINF, 14082340–OIL PAN RH REINF, 9440033–BOLTS)	
86–87	Y	10055765	1	133.40	PAN, OIL	1–G23,62
88–90	Y 5.7–8 (L98)	10055765	1	133.40	PAN, OIL	1–G23,62
90	Y 5.7J (LT5)	10122165	1	971.70	PAN, OIL	1–H16,414
91	Y 5.7–8 (L98)	10108564	1	133.40	PAN, OIL	1–G23,62
91–92	Y 5.7J (LT5)	10153593	1	DISCON	PAN, OIL	
93–95	Y 5.7J (LT5)	10225138	1	808.00	PAN, OIL (W/BAFFLE)	1–H16,414
85	Y	14082340	RH	5.00	REINFORCEMENT, OIL PAN	
85	Y	14082341	LH	5.00	REINFORCEMENT, OIL PAN	1–G7,67
86–88	Y	12553058	LH	3.10	REINFORCEMENT, OIL PAN (MAY NEED TO REWK W/LH KNOCK SENSOR)	1–J15,414
86–88	Y	12553059	RH	3.90	REINFORCEMENT, OIL PAN	1–J15,414
89–91	Y 5.7–8 (L98)	12553058	LH	3.10	REINFORCEMENT, OIL PAN	1–J15,414
89–91	Y 5.7–8 (L98)	12553059	RH	3.90	REINFORCEMENT, OIL PAN	1–J15,414
92–96	Y 5.7P (LT1)	12553058	LH	3.10	REINFORCEMENT, OIL PAN	1–J15,414
92–96	Y 5.7P (LT1)	12553059	RH	3.90	REINFORCEMENT, OIL PAN	1–J15,414
96	Y 5.7–5 (LT4)	12553058	LH	3.10	REINFORCEMENT, OIL PAN	1–J15,414
96	Y 5.7–5 (LT4)	12553059	RH	3.90	REINFORCEMENT, OIL PAN	1–J15,414

1.428 BOLT – NUT – PIN – STUD, Engine Oil Pan

89–90	Y 5.7–8 (L98)	9440033	AR	*1.05	BOLT, OIL PAN (1/4–20 X 9/16, 275M) (08.900)	1–J15,423
90–93	Y 5.7J (LT5)	11517518	3	1.85	BOLT, OIL PAN (HEAVY HEX FLANGE HD) (HFH, M6X1X20, 19 THD, 14.2 OD, 9.8, 6280M, MACH HD PT) (08.900) (AC–DELCO #11517518)	
92–95	Y 5.7P (LT1)	9424877	1	*1.25	BOLT, OIL PAN (5/16–18 X 3/4, 300M) (HEX HD, STEEL) (08.900)	1–I14,423
92–96	Y 5.7P (LT1)	9440033	13	*1.05	BOLT, OIL PAN (HFH 1/4–20 X 5/8 280M POR) (08.900)	1–J15,423
93–95	Y 5.7J (LT5)	11514150	AR	7.50	BOLT, OIL PAN ((6X1X20) (PE 9.8)) (08.900)	
96	Y 5.7–5 (LT4)	9440033	10	*1.05	BOLT, OIL PAN (HFH 1/4–20 X 5/8 280M POR) (08.900)	1–J15,423
92–96	Y 5.7P (LT1)	1359887	2	*.38	NUT, OIL PAN (5/16–18X20, 286M) (PC) (08.917)	1–J15,417
92–95	Y 5.7P (LT1)	12338130	2	*1.50	NUT, OIL PAN (5/16–18 X 1/4, 286M) (POR) (08.915)	1–I14,417
96	Y 5.7–5 (LT4)	1359887	2	*.38	NUT, OIL PAN (5/16–18X20, 286M) (PC) (08.917)	1–J15,417
90–92	Y 5.7J (LT5)	10153560	2	12.05	PIN, LWR C/CASE LOC	1–H6,150
93–95	Y 5.7J (LT5)	10153560	10	12.05	PIN, LWR C/CASE LOC (OUTBOARD MAIN BRG BOLT LOCATIONS)	1–H6,150
85–88	Y A/TRNS	14084059	1	5.05	STUD, OIL PAN (5/16–18X.66, 5/16–18X.49)	1–J15,425
84–87	Y	14080362	AR	*1.65	STUD, OIL PAN (5/16X18X1.44)	1–G7,75
84	Y 5.7–8 (L83)	14101092	4	*1.90	STUD, OIL PAN (1/4X20X.64/1/4X20X.50)	1–J15,420
85–91	Y 5.7–8 (L98)	14101092	4	*1.90	STUD, OIL PAN (1/4X20X.64/1/4X20X.50) (14X20X.56–1/4X20X.50)	1–J15,420
89–91	Y 5.7–8 (L98), 4–SPD A/TRANS (MD8)	14084059	1	5.05	STUD, OIL PAN (5/16–18X.66, 5/16–18X.49)	1–J15,425

© 2000 GENERAL MOTORS SERVICE PARTS OPERATIONS–CHEVROLET–14Y

1.428 BOLT – NUT – PIN – STUD, Engine Oil Pan (Con't)

90–95	Y 5.7J (LT5)	10044165	4	4.15	STUD, OIL PAN (01.153)	1–H16,418
92–95	Y 5.7P (LT1)	14084059	1	5.05	STUD, OIL PAN (5/16 -18X.66, 5/16–18X.49)	1–J15,425
92–96	Y 5.7P (LT1)	14101092	4	*1.90	STUD, OIL PAN (14X20X.53–1/4X20X.50) (1/4X20X.64/1/4X20X.50)	1–J15,420
96	Y 5.7–5 (LT4)	14101092	4	*1.90	STUD, OIL PAN (14X20X.56–1/4X20X.50) (1/4X20X.64/1/4X20X.50)	1–J15,420

1.429 GASKET – GASKET KIT – SEAL, Engine Oil Pan

84–85	Y	14079398	1	17.24	GASKET KIT, OIL PAN	1–G7,82
86–88	Y	14088505	1	40.29	GASKET, OIL PAN	1–I14,412
89–91	Y 5.7–8 (L98)	14088505	1	40.29	GASKET, OIL PAN	1–I14,412
90–92	Y 5.7J (LT5)	10106193	1	36.47	GASKET, OIL PAN	1–H16,406
92	Y 5.7P (LT1)	14088505	1	40.29	GASKET, OIL PAN	1–I14,412
93–96	Y 5.7P (LT1)	10108676	1	40.29	GASKET, OIL PAN	1–J15,412
93–95	Y 5.7J (LT5)	10187750	1	76.50	GASKET, OIL PAN	1–H16,406
96	Y 5.7–5 (LT4)	10108676	1	40.29	GASKET, OIL PAN	1–J15,412
84	Y 5.7–8 (L83)	12337940	1	*2.45	SEAL, OIL PAN FRT	1–G7,77
85	Y 5.7–8 (L98)	12337940	1	*2.45	SEAL, OIL PAN FRT	1–G7,77
84–85	Y	453625	1	4.23	SEAL, RR	1–G7,66

1.430 BAFFLE – BOLT – DEFLECTOR, Engine Oil Pan

90	Y 5.7J (LT5)	10146222	1	156.60	BAFFLE, OIL PAN	1–H16,413
91–92	Y 5.7J (LT5)	10153532	1	222.20	BAFFLE, OIL PAN	1–H16,413
93–95	Y 5.7J (LT5)	10199037	1	73.30	BAFFLE, OIL PAN	1–H16,407
93–95	Y 5.7J (LT5)	10225115	1	42.00	BAFFLE, OIL PAN SI	1–H16,412
91–92	Y 5.7J (LT5)	11516061	4	*1.10	BOLT, OIL PAN BFL (M6X1X12, FL HD) (08.900)	
84–89	Y	12554816	1	4.90	DEFLECTOR, CR/SHF OIL (HORIZ UPR)	1–J15,429
90–91	Y 5.7–8 (L98)	12554816	1	4.90	DEFLECTOR, CR/SHF OIL (HORIZ UPR)	1–J15,429
92–96	Y 5.7P (LT1)	12554816	1	4.90	DEFLECTOR, CR/SHF OIL	1–J15,429
96	Y 5.7–5 (LT4)	12554816	1	4.90	DEFLECTOR, CR/SHF OIL	1–J15,429

1.453 INSERT – NUT – PLUG, Engine Oil Pan Drain

93–95	Y 5.7J (LT5)	452796	1	4.70	INSERT, OIL PAN DRN PLUG THD	1–H16,415
84	Y	1359887	4	*.38	NUT, OIL PAN (08.917)	
88–91	Y 5.7–8 (L98)	3921988	1	*2.15	PLUG, OIL PAN DRN (1/2–20, 81LG)	1–I14,416
90–95	Y 5.7J (LT5)	10110927	1	9.65	PLUG, OIL PAN DRN	1–H16,417
92–95	Y 5.7P (LT1)	3921988	1	*2.15	PLUG, OIL PAN DRN (1/2–20, 81LG)	1–I14,416
92–95	Y 5.7P (LT1)	24100042	1	2.35	PLUG, OIL PAN DRN (M12X1.75–6G THD, 44.45MM LNG, 15MM FLG HEX HD) (W/MAGNET & SEAL)	1–I14,416
96	Y 5.7P (LT1), (1ST DES)	3921988	1	*2.15	PLUG, OIL PAN DRN (1/2–20, 81LG) (HAS ENGLISH THDS, FOR 2ND DES SEE 24100042 METRIC THDS)	1–I14,416

© 2000 GENERAL MOTORS SERVICE PARTS OPERATIONS–CHEVROLET–14Y

1.453 INSERT – NUT – PLUG, Engine Oil Pan Drain (Con't)

96	Y 5.7–5 (LT4)	10017615	1	*2.45	PLUG, OIL PAN DRN (M12X1.75X26.5)	1–J15,416
96	Y 5.7P (LT1), (2ND DES)	24100042	1	2.35	PLUG, OIL PAN DRN (M12X1.75–6G THD, 44.45MM LNG, 15MM FLG HEX HD) (W/MAGNET & SEAL) (HAS METRIC THDS) (FOR 1ST DES SEE 39219988 ENGLISH THDS)	1–I14,416

1.456 GASKET, Engine Oil Pan Drain Plug

90–93	Y 5.7J (LT5)	10135843	1	*1.05	GASKET, OIL PAN DRN PLUG (ALUMINUM PLUG) (00.413)	1–H16,416
90–95	Y 5.7J (LT5)	10174313	1	6.56	GASKET, OIL PAN DRN PLUG (STEEL PLUG)	1–H16,416
92–96	Y 5.7P (LT1)	14090908	1	*1.12	GASKET, OIL PAN DRN PLUG	1–J15,415
96	Y 5.7–5 (LT4)	14090908	1	*1.12	GASKET, OIL PAN DRN PLUG	1–J15,415
84–87	Y	14090908	AR	*1.12	GASKET, OIL PAN DRN SCR (NYLON 1/2"ID X29/32" O.D.)	1–J15,415
88–91	Y 5.7–8 (L98)	14090908	1	*1.12	GASKET, OIL PAN DRN SCR	1–J15,415

1.516 CONNECTOR – INDICATOR – NUT – SEAL – SENSOR – TUBE, Engine Oil Level

91	Y 5.7J (LT5)	12101899	1	17.95	CONNECTOR, SEN–ENG OIL LVL (BLACK) (2–WAY F) (W/LEADS) (02.383) (AC–DELCO #PT169)	
91	Y 5.7–8 (L98)	12101899	1	17.95	CONNECTOR, SEN–ENG OIL LVL (BLACK) (2–WAY F) (W/LEADS) (02.383) (AC–DELCO #PT169)	
92	Y 5.7P (LT1)	12101899	1	17.95	CONNECTOR, SEN–ENG OIL LVL (BLACK) (2–WAY F) (W/LEADS) (02.383) (AC–DELCO #PT169)	
93	Y	12101899	1	17.95	CONNECTOR, SEN–ENG OIL LVL (BLACK) (2–WAY F) (W/LEADS) (02.383) (AC–DELCO #PT169)	
93–96	Y	12102747	2	21.07	CONNECTOR, SEN–ENG OIL LVL (BLACK) (2–WAY F) (W/LEADS) (03.670) (AC–DELCO #PT374)	
94	Y 5.7J (LT5)	12102747	2	21.07	CONNECTOR, SEN–ENG OIL LVL (BLACK) (2–WAY F) (W/LEADS) (03.670) (AC–DELCO #PT374)	
84	Y	14060661	1	DISCON	INDICATOR (DIP STICK)	
85–88	Y 5.7–8 (L98)	14094758	1	9.43	INDICATOR (DIP STICK)	1–G23,3
89–91	Y 5.7–8 (L98), FEDERAL EMIS (NA5)	10108430	1	9.90	INDICATOR, OIL LVL	1–I14,401
90–95	Y 5.7J (LT5)	10067418	1	18.52	INDICATOR, OIL LVL	1–H16,460
92–94	Y 5.7P (LT1)	10108430	1	9.90	INDICATOR, OIL LVL	1–I14,401
95–96	Y 5.7P (LT1)	12553510	1	9.90	INDICATOR, OIL LVL	1–J15,401
96	Y 5.7–5 (LT4)	12553510	1	9.90	INDICATOR, OIL LVL	1–J15,401
92–96	Y 5.7P (LT1)	9442958	1	*1.00	NUT, OIL LVL IND TUBE (3/8–16 PC, 286M) (HEX, FLANGE) (08.917)	1–J15,436
96	Y 5.7–5 (LT4)	9442958	1	*1.00	NUT, OIL LVL IND TUBE (3/8–16 PC, 286M) (HEX, FLANGE) (08.917)	1–J15,436
91–96	Y	10151633	1	*1.89	SEAL, ENG OIL LVL SEN	1–J15,419
90–95	Y 5.7J (LT5)	10106190	1	2.35	SEAL, OIL LVL IND TUBE	1–H16,457
90–92	Y	10137676	1	28.57	SENSOR, ENG OIL LVL (2 TERM, M20X1.5–6G)	1–I14,418
93–95	Y 5.7P (LT1), 5.7J (LT5)	24507190	1	30.35	SENSOR, ENG OIL LVL	1–J15,418

© 2000 GENERAL MOTORS SERVICE PARTS OPERATIONS–CHEVROLET–14Y

1.516 CONNECTOR – INDICATOR – NUT – SEAL – SENSOR – TUBE, Engine Oil Level (Con't)

94–95	Y 5.7J (LT5)	10137676	1	28.57	SENSOR, ENG OIL LVL	1–I14,418
96	Y 5.7P (LT1), 5.7–5 (LT4)	24507190	1	30.35	SENSOR, ENG OIL LVL	1–J15,418
84	Y	14081026	1	23.35	TUBE, OIL LVL IND	1–G7,4
85–88	Y	14084338	1	10.25	TUBE, OIL LVL IND	1–G23,4
89–91	Y 5.7–8 (L98)	14084338	1	10.25	TUBE, OIL LVL IND	1–G23,4
90–95	Y 5.7J (LT5)	10135867	1	27.28	TUBE, OIL LVL IND	1–H16,458
92–94	Y 5.7P (LT1)	10108520	1	10.25	TUBE, OIL LVL IND	1–I14,402
95–96	Y 5.7P (LT1)	12551155	1	5.10	TUBE, OIL LVL IND	1–J15,402
96	Y 5.7–5 (LT4)	12551155	1	5.10	TUBE, OIL LVL IND	1–J15,402

1.531 PLUG – RESTRICTOR, Engine Oil Distribution

92–96	Y 5.7P (LT1)	3701638	1	*.97	PLUG, ENG BLK OIL GAL (1/2" STEEL EXPANSION PLUG) (08.970)	
92–96	Y 5.7P (LT1)	10110897	2	.40	PLUG, ENG BLK OIL GAL (37/64X1/4, 1/4 MM HOLE IN CTR, 1008, PL)	1–J2,164
92–96	Y 5.7P (LT1)	14081701	AR	1.25	PLUG, ENG BLK OIL GAL (08.971)	1–J2,107
92–96	Y 5.7P (LT1)	14091563	1	*1.30	PLUG, ENG BLK OIL GAL (CUP 15/32 X 5/16)	1–J2,165
96	Y 5.7–5 (LT4)	3701638	1	*.97	PLUG, ENG BLK OIL GAL (1/2" STEEL EXPANSION PLUG) (08.970)	
96	Y 5.7–5 (LT4)	10110897	2	.40	PLUG, ENG BLK OIL GAL (37/64X1/4, 1/4 MM HOLE IN CTR, 1008, PL)	1–J2,164
96	Y 5.7–5 (LT4)	14081701	AR	1.25	PLUG, ENG BLK OIL GAL (08.971)	1–J2,107
96	Y 5.7–5 (LT4)	14091563	1	*1.30	PLUG, ENG BLK OIL GAL (CUP 15/32 X 5/16)	1–J2,165
86–91	Y	14091563	AR	*1.30	PLUG, ENG OIL MANIF HOLE (CUP 15/32 X 5/16)	1–J2,165
92–93	Y 5.7P (LT1)	444654	1	1.25	PLUG, ENG OIL PRESS GA SEN OR IND SW HOLE (1/4–18 NPTF) (08.971)	
90–95	Y 5.7J (LT5)	10135835	4	8.20	RESTRICTOR, ENG BLK OIL GAL	

1.540 BOLT – BRACKET – CLAMP – CLIP – COOLER – FITTING – HOSE – PIPE – PLUG – RETAINER – RING – SEAL – SEAT – STUD – VALVE, Engine Oil Cooler

94	Y 5.7J (LT5)	1635219	2	*1.80	BOLT, ENG OIL CLR HOSE (M6X1X30) (08.900)	
95	Y 5.7J (LT5)	1635219	1	*1.80	BOLT, ENG OIL CLR HOSE (M6X1X30) (08.900)	
84	Y	14049231	2	DISCON	BRACKET, CLR	
84	Y	14050067	1	DISCON	BRACKET, CLR HOSE	
85	Y	14084015	1	DISCON	BRACKET, CLR HOSE	
86–88	Y ENG OIL CLG (KC4)	14093147	1	DISCON	BRACKET, CLR HOSE	
85–87	Y KC4	15160330	2	3.35	CLAMP, CLR PIPE (11.1X16X25.4) (09.242)	2–D21,9
85–91	Y 5.7–8 (L98), ENG OIL CLG (KC4)	15505991	1	6.25	CLAMP, CLR PIPE (1[illegible].1X16X51) (04.866)	2–D21,6
84	Y	14047982	1	3.50	CLAMP, ENG OIL CLR HOSE	
85–87	Y KC4	15160330	2	3.35	CLAMP, ENG OIL CLR PIPE (09.242)	2–D21,9
88	Y 5.7–8 (L98)	15664822	AR	1.05	CLAMP, 12.7 LOOP CUSHIONED (01.166)	
84	Y	14047899	1	1.95	CLIP, CLR PIPE (02.343)	

© 2000 GENERAL MOTORS SERVICE PARTS OPERATIONS–CHEVROLET–14Y

1.540 BOLT – BRACKET – CLAMP – CLIP – COOLER – FITTING – HOSE – PIPE – PLUG – RETAINER – RING – SEAL – SEAT – STUD – VALVE, Engine Oil Cooler (Con't)

84	Y	12364237	1	DISCON	COOLER, ENG OIL	
85–91	Y 5.7–8 (L98)	14084369	1	261.60	COOLER, ENG OIL	2–D21,14
90–93	Y 5.7J (LT5)	14104653	1	313.00	COOLER, ENG OIL	2–C19,7
94–95	Y 5.7J (LT5)	10219643	1	313.00	COOLER, ENG OIL	2–D9,7
84	Y	10070158	2	4.32	FITTING, ENG OIL CLR HOSE (04.931)	
85–91	Y 5.7–8 (L98), ENG OIL CLG (KC4)	14084019	1	11.60	FITTING, ENG OIL CLR HOSE (1/4–18X16MM)	2–D21,1
90–95	Y 5.7J (LT5)	14104403	2	11.60	FITTING, ENG OIL CLR PIPE (HEX NUT)	1–H16,447
84	Y	14060152	1	DISCON	HOSE, CLR INL (LOWER ON RAD)	
84	Y	14060151	1	DISCON	HOSE, CLR OTLT (UPPER ON RAD)	
85–87	Y ENG OIL CLG (KC4)	14091278	1	40.00	HOSE, ENG OIL CLR (MOLDED FITTING)	2–D21,13
85–91	Y 5.7–8 (L98), ENG OIL CLG (KC4)	14084012	1	7.15	HOSE, ENG OIL CLR COOL OTLT (UPR ON RAD)	2–D21,4
85–91	Y 5.7–8 (L98), ENG OIL CLG (KC4)	14084013	1	8.65	HOSE, ENG OIL CLR COOL OTLT (LWR ON RAD)	2–D21,3
90–93	Y 5.7J (LT5)	12472184	1	108.00	HOSE, ENG OIL CLR INL & OTLT	2–C19,62
94–95	Y 5.7J (LT5)	10219644	1	120.00	HOSE, ENG OIL CLR INL & OTLT	2–D9,62
85	Y	14084014	1	DISCON	PIPE, CLR	
84	Y	14084035	1	DISCON	PIPE, CLR INL (LWR ON CLR)	
84	Y	14084036	1	DISCON	PIPE, CLR OTLT (UPR ON CLR)	
86–91	Y 5.7–8 (L98), ENG OIL CLG (KC4)	10077544	1	26.75	PIPE, ENG OIL CLR	2–D21,5
90–95	Y 5.7J (LT5)	10067688	1	73.00	PLUG, ENG OIL CLR BYPASS VLV (01.800)	1–H16,450
91–95	Y 5.7J (LT5)	9411714	1	.94	RETAINER, ENG OIL CLR OTLT PIPE (08.934)	
90–95	Y 5.7J (LT5)	10067722	1	32.13	RING, ENG OIL CLR BYPASS VLV PLUG RET (01.800)	1–H16,453
90–95	Y 5.7J (LT5)	10067723	1	20.60	SEAL, ENG OIL CLR BYPASS VLV PLUG (O RING) (01.800)	
90–95	Y 5.7J (LT5)	10067687	1	159.12	SEAT, ENG OIL CLR BYPASS VLV (01.800)	1–H16,452
96	Y 5.7–5 (LT4)	6558459	1	2.24	STUD, ENG OIL CLR PIPE BRKT (09.175) (AC–DELCO #15–2537)	
90–95	Y 5.7J (LT5)	10067699	1	24.02	VALVE, ENG OIL CLR BYPASS (01.800)	1–H16,451

1.550 GASKET – SEAL, Engine Oil Cooler

85–88	Y	14087586	1	12.80	GASKET, CLR ADAPT	1–G23,25
89–91	Y 5.7–8 (L98)	14087586	1	12.80	GASKET, ENG OIL CLR HOSE FTG	1–G23,25
90–95	Y 5.7J (LT5)	10067691	2	1.48	SEAL, ENG OIL CLR (01.844)	
90–95	Y 5.7J (LT5)	10135642	2	*.90	SEAL, ENG OIL CLR HOSE	2–C19,74

1.609 PIN – PLUG – RETAINER – SPRING – VALVE, Engine Oil Pressure

84	Y 5.7–8 (L83)	838839	1	.36	PIN, OIL PRESS RLF VLV SPR ST
85–91	Y 5.7–8 (L98)	838839	1	.36	PIN, OIL PRESS RLF VLV SPR ST
92–96	Y 5.7P (LT1)	838839	1	.36	PIN, OIL PRESS RLF VLV SPR ST
96	Y 5.7–5 (LT4)	838839	1	.36	PIN, OIL PRESS RLF VLV SPR ST
84	Y 5.7–8 (L83)	3704871	1	2.80	PLUG, OIL PRESS RLF VLV BORE
85–91	Y 5.7–8 (L98)	3704871	1	2.80	PLUG, OIL PRESS RLF VLV BORE (NON–THD 7/16 DIA, 13/32 LGTH) (CHAM ENDS, STL)

© 2000 GENERAL MOTORS SERVICE PARTS OPERATIONS–CHEVROLET–14Y

1.609 PIN – PLUG – RETAINER – SPRING – VALVE, Engine Oil Pressure (Con't)

92–96	Y 5.7P (LT1)	3704871	1	2.80	PLUG, OIL PRESS RLF VLV BORE (NON–THD 7/16 DIA, 13/32 LGTH) (CHAM ENDS, STL)	
96	Y 5.7–5 (LT4)	3704871	1	2.80	PLUG, OIL PRESS RLF VLV BORE (NON–THD 7/16 DIA, 13/32 LGTH) (CHAM ENDS, STL)	
90–95	Y 5.7J (LT5)	10110941	1	4.34	RETAINER, OIL PRESS REG VLV	1–H16,443
84	Y 5.7–8 (L83)	10044435	1	1.45	SPRING, OIL PRESS RLF VLV	
85–91	Y 5.7–8 (L98)	10044435	1	1.45	SPRING, OIL PRESS RLF VLV	
92–96	Y 5.7P (LT1)	10044435	1	1.45	SPRING, OIL PRESS RLF VLV	
96	Y 5.7–5 (LT4)	10044435	1	1.45	SPRING, OIL PRESS RLF VLV	
84	Y 5.7–8 (L83)	3702366	1	3.40	VALVE, OIL PRESS RLF	
85–91	Y 5.7–8 (L98)	3702366	1	3.40	VALVE, OIL PRESS RLF	
92–96	Y 5.7P (LT1)	3702366	1	3.40	VALVE, OIL PRESS RLF	
96	Y 5.7–5 (LT4)	3702366	1	3.40	VALVE, OIL PRESS RLF	

1.639 BOLT – DRIVE – RETAINER – SEAT – SHAFT, Engine Oil Pump

92–96	Y 5.7P (LT1)	9424877	1	*1.25	BOLT, O/PMP DRV SHF (5/16–18 X 3/4, 300M) (HEX HD, STEEL) (08.900)	1–J15,403
96	Y 5.7–5 (LT4)	9424877	1	*1.25	BOLT, O/PMP DRV SHF (5/16–18 X 3/4, 300M) (HEX HD, STEEL) (08.900)	1–J15,403
92–96	Y 5.7P (LT1)	1103868	1	49.80	DRIVE, O/PMP (AC–DELCO #1103868)	1–J15,404
96	Y 5.7–5 (LT4)	1103868	1	49.80	DRIVE, O/PMP (AC–DELCO #1103868)	1–J15,404
84	Y 5.7–8 (L83)	3764554	1	*.70	RETAINER, O/PMP DRV SHF	1–J15,432
85–91	Y 5.7–8 (L98)	3764554	1	*.70	RETAINER, O/PMP DRV SHF	1–J15,432
92–96	Y 5.7P (LT1)	3764554	1	*.70	RETAINER, O/PMP DRV SHF	1–J15,432
96	Y 5.7–5 (LT4)	3764554	1	*.70	RETAINER, O/PMP DRV SHF	1–J15,432
90–95	Y 5.7J (LT5)	10067685	1	60.90	SEAT, O/PMP SEAL	1–H13,347
84	Y 5.7–8 (L83)	3998287	1	13.30	SHAFT, O/PMP DRV	1–J15,433
85–91	Y 5.7–8 (L98)	3998287	1	13.30	SHAFT, O/PMP DRV	1–J15,433
92–96	Y 5.7P (LT1)	3998287	1	13.30	SHAFT, O/PMP DRV	1–J15,433
96	Y 5.7–5 (LT4)	3998287	1	13.30	SHAFT, O/PMP DRV	1–J15,433

1.652 BOLT – PIN – PUMP, Engine Oil Pump

84–86	Y (1ST DES)	3892678	1	*1.90	BOLT (7/16–14 X 2) (IS 2.0" LG & USED FOR ENGS WHERE OIL PUMP MTG SURF ON BRG CAP HAS PKT DEPTH OF 0.30" OR LESS)	1–G7,57
84–86	Y (2ND DES)	10046007	1	2.15	BOLT (7/16–14X2.36) (IS 2.36" LG & USED FOR ENGS WHERE OIL PUMP MTG SURF ON BRG CAP HAS PKT DEPTH OF 0.32"–0.42")	1–J15,428
87–91	Y 5.7–8 (L98)	10046007	1	2.15	BOLT, O/PMP (7/16–14X2 3/8)	1–J15,428
92–96	Y 5.7P (LT1)	10046007	1	2.15	BOLT, O/PMP (7/16–14X2 3/8)	1–J15,428
96	Y 5.7–5 (LT4)	10046007	1	2.15	BOLT, O/PMP (7/16–14X2 3/8)	1–J15,428
89–90	Y 5.7–8 (L98)	12554553	2	.20	PIN, OIL PUMP (1/4X5/8) (08.939)	
84	Y 5.7–8 (L83)	12555284	1	85.40	PUMP, OIL	1–I14,430
85–91	Y 5.7–8 (L98)	12555284	1	85.40	PUMP, OIL	1–I14,430
90–92	Y 5.7J (LT5)	10135871	1	551.80	PUMP, OIL	1–H16,432
92	Y 5.7P (LT1)	12555284	1	85.40	PUMP, OIL	1–I14,430
93–95	Y 5.7J (LT5)	10187763	1	552.50	PUMP, OIL	1–H16,432

© 2000 GENERAL MOTORS SERVICE PARTS OPERATIONS–CHEVROLET–14Y

1.652 BOLT – PIN – PUMP, Engine Oil Pump (Con't)

93	Y 5.7P (LT1), (1ST DES)	12555283	1	81.40	PUMP, OIL (.742 TUBE DIA, 2ND DES SEE 12555284) (INCLS BOLTS, COVERS, GEARS, HSGS, PIN, PLUG, SHFS, SPR & VLV)	1–J15,430
93	Y 5.7P (LT1), (2ND DES)	12555284	1	85.40	PUMP, OIL (.620 TUBE DIA, 1ST DES SEE 12555283)	1–I14,430
94	Y 5.7P (LT1), (2ND DES)	12555283	1	81.40	PUMP, OIL (INCLS BOLTS, COVERS, GEARS, HSGS, PIN, PLUG, SHFS, SPR & VLV) (.742 DIA TUBE, FOR 1ST DES SEE 12555284)	1–J15,430
94	Y 5.7P (LT1), (1ST DES)	12555284	1	85.40	PUMP, OIL (.620 TUBE DIA, 2ND DES SEE 12555283)	1–I14,430
95	Y	12555283	1	81.40	PUMP, OIL (INCLS BOLTS, COVERS, GEARS, HSGS, PIN, PLUG, SHFS, SPR & VLV)	1–J15,430
96	Y 5.7P (LT1)	12555283	1	81.40	PUMP, OIL (INCLS BOLTS, COVERS, GEARS, HSGS, PIN, PLUG, SHFS, SPR & VLV)	1–J15,430
96	Y 5.7–5 (LT4)	12555283	1	81.40	PUMP, OIL (INCLS BOLTS, COVERS, GEARS, HSGS, PIN, PLUG, SHFS, SPR & VLV)	1–J15,430

1.656 BOLT – PIPE – SCREEN – SEAL – SPACER, Engine Oil Pump

93–95	Y 5.7J (LT5)	11514151	2	4.35	BOLT, O/PMP SUC PIPE BRKT (M6X1X25) (08.900)	1–H16,409
91–92	Y 5.7J (LT5)	11508805	1	*.41	BOLT, O/PMP SUC PIPE RET (HFH M6X1X16 9.8 POR 14 OD 14MM THD) (08.900)	
91–92	Y 5.7J (LT5)	11509037	2	.48	BOLT, O/PMP SUC PIPE RET (HFH M6X1X40, DIM A–25, 14.2–OD 9.8 PEOR) (M6X1X40, DIM A–25, 14.2–OD 9.8 PEOR) (08.900) .	
90–92	Y 5.7J (LT5)	10135840	1	76.25	PIPE, O/PMP SUC	1–H16,408
93–95	Y 5.7J (LT5)	10187741	1	169.00	PIPE, O/PMP SUC	1–H16,408
84	Y 5.7–8 (L83)	3830060	1	11.90	SCREEN, O/PMP	1–I14,430
85–91	Y 5.7–8 (L98)	3830080	1	11.90	SCREEN, O/PMP (UBE DIA 0.62) .	1–I14,430
92	Y 5.7P (LT1)	3830080	1	11.90	SCREEN, O/PMP (TUBE DIA 0.62) .	1–I14,430
93	Y 5.7P (LT1), (2ND DES)	3830080	1	11.90	SCREEN, O/PMP TUBE DIA 0.62) (1ST DES SEE 0168453)	1–I14,430
93	Y 5.7P (LT1), (1ST DES)	10168453	1	11.90	SCREEN, O/PMP (2ND DES SEE 03830080/.742 USED UNTIL MID NOV)	1–I14,430
94	Y 5.7P (LT1), (1ST DES)	3830080	1	11.90	SCREEN, O/PMP (TUBE DIA 0.62) (2ND DES SEE 12550106)	1–I14,430
94	Y 5.7P (LT1), (2ND DES)	12550106	1	11.90	SCREEN, O/PMP (1ST DES SEE 03830080/.742 USED UNTIL MID NOV)	1–I14,430
95–96	Y 5.7P (LT1)	12550106	1	11.90	SCREEN, O/PMP (1ST DES SEE 03830080)	1–I14,430
96	Y 5.7–5 (LT4)	12550106	1	11.90	SCREEN, O/PMP (1ST DES SEE 03830080)	1–I14,430
90–92	Y 5.7J (LT5)	10106189	1	18.90	SEAL, O/PMP SUC PIPE (O RING) .	1–H16,421
93–95	Y 5.7J (LT5)	10187747	1	19.02	SEAL, O/PMP SUC PIPE (O RING) .	1–H16,421
90–92	Y 5.7J (LT5)	10146230	1	31.60	SPACER, OIL PICKUP PIPE BOLT	

© 2000 GENERAL MOTORS SERVICE PARTS OPERATIONS–CHEVROLET–14Y

1.723 BOLT – COVER, Oil Pump

91–95	Y 5.7J (LT5)	11508805	1	*.41	BOLT, O/PMP ACC CVR (TO C/CASE) (HFH M6X1X16 9.8 POR 14 OD 14MM THD) (08.900)	
92–93	Y 5.7P (LT1)	11508600	6	1.82	BOLT, O/PMP CVR (HFH M6X1X20 9.8 PZOR) (08.900) (AC–DELCO #11508600)	
84–86	Y	10055887	1	23.80	COVER	
87–88	Y	14046552	1	40.20	COVER, O/PMP	
89–91	Y 5.7–8 (L98)	14046552	1	40.20	COVER, O/PMP (W/COVER, PIN, PLUGS, SPRING & VALVE)	
90–95	Y 5.7J (LT5)	10110922	1	11.75	COVER, O/PMP (ACCESS TO C/CASE) (01.609)	1–H16,423
92–93	Y 5.7P (LT1)	14046552	1	40.20	COVER, O/PMP (W/COVER, PIN, PLUGS, SPRING & VALVE)	
94	Y 5.7P (LT1), (2ND DES)	10168528	1	40.20	COVER, O/PMP (INCLS COVER, PLUGS, SPRING & VALVE) (FOR 1ST DES SEE 14046552)	
94	Y 5.7P (LT1), (1ST DES)	14046552	1	40.20	COVER, O/PMP (W/COVER, PIN, PLUGS, SPRING & VALVE) (.620 DIA TUBE, FOR 2ND DES SEE 10168528)	
95–96	Y 5.7P (LT1)	10168528	1	40.20	COVER, O/PMP (INCLS COVER, PLUGS, SPRING & VALVE)	
96	Y 5.7–5 (LT4)	10168528	1	40.20	COVER, O/PMP (INCLS COVER, PLUGS, SPRING & VALVE)	

1.724 GASKET – SEAL, Engine Oil Pump Cover

90–95	Y 5.7J (LT5)	10168683	1	13.20	GASKET, O/PMP ACC CVR (TO C/CASE) (01.609)	1–H16,422
90–95	Y 5.7J (LT5)	10067512	1	26.78	SEAL, O/PMP (O RING) (01.639)	1–H16,434
90–95	Y 5.7J (LT5)	10067538	1	1.02	SEAL, O/PMP (O RING) (00.423)	1–H16,445
90–95	Y 5.7J (LT5)	10106142	2	2.85	SEAL, O/PMP (O RING) (.931 ID O–RING)	1–H16,444
90–95	Y 5.7J (LT5)	10135870	1	6.15	SEAL, O/PMP (O RING) (1.73 I.D. O RING)	1–H16,434

1.745 BOLT – CONNECTOR – COVER – FILTER – GASKET – GROMMET – NIPPLE – SEAL – STRAP – TEE – VALVE, Engine Crankcase

NOTE: SEE GROUP 2.270 FOR TUNE–UP PARTS CHART

91–92	Y 5.7J (LT5)	11509037	2	.48	BOLT, PCV OIL SEP (HFH M6X1X40, DIM A–25, 14.2–OD 9.8 PEOR) (M6X1X40, DIM A–25, 14.2–OD 9.8 PEOR) (08.900)	
90–95	Y 5.7J (LT5)	10153503	1	3.60	CONNECTOR, PCV VLV (01.762)	1–H20,511
92–96	Y 5.7P (LT1)	336018	1	1.52	CONNECTOR, PCV VLV HOSE (1/4–18 NPTF W/3/8 NIPPLE)	1–J17,511
96	Y 5.7–5 (LT4)	336018	1	1.52	CONNECTOR, PCV VLV HOSE (1/4–18 NPTF W/3/8 NIPPLE)	1–J17,511
90–95	Y 5.7J (LT5)	10168603	1	284.90	COVER, PCV VLV (01.762)	1–H20,548
90–95	Y 5.7J (LT5)	10135879	2	.22	FILTER, PCV (00.386)	1–H10,205
90–95	Y	10168682	1	24.43	GASKET, CYL CASE VENT CVR	1–H20,547
85–87	Y	14082445	1	4.70	GROMMET, PCV TUBE	1–G19,111
89–91	Y 5.7–8 (L98), FEDERAL EMIS (NA5)	10088198	1	4.70	GROMMET, PCV VLV	1–H2,91
90–95	Y 5.7J (LT5)	14078872	2	6.30	GROMMET, PCV VLV (15/32I.D. X 25/32O.D)	1–H25,614
92–93	Y 5.7P (LT1)	10207699	1	3.05	GROMMET, PCV VLV (01.762)	1–I18,513
94–96	Y 5.7P (LT1)	10240678	1	3.05	GROMMET, PCV VLV (01.762)	1–J17,548
96	Y 5.7–5 (LT4)	10240678	1	3.05	GROMMET, PCV VLV (01.762)	1–J17,548

© 2000 GENERAL MOTORS SERVICE PARTS OPERATIONS–CHEVROLET–14Y

1.745 BOLT – CONNECTOR – COVER – FILTER – GASKET – GROMMET – NIPPLE – SEAL – STRAP – TEE – VALVE, Engine Crankcase (Con't)

84	Y	3989348	1	*1.95	GROMMET, VENT (3/4 IDX1 1/8 OD SQ FLAT)	1–G11,78
84–88	Y	3989349	LH	2.65	GROMMET, VENT (3/4 IDX1 1/8 OD SQ RAMPED)	1–H2,24
84	Y	336018	1	1.52	NIPPLE, CR/CASE VENT TO MANIF HOSE (1/4–18)	1–J17,511
90–91	Y 5.7J (LT5)	336018	1	1.52	NIPPLE, CR/CASE VENT TO MANIF HOSE (1/4–18 NPTF W/3/8 NIPPLE)	1–J17,511
90–95	Y 5.7J (LT5)	10110955	RH	*5.20	SEAL, PCV TUBE	1–H10,246
91–94	Y 5.7J (LT5)	3816659	AR	*.87	STRAP, PCV HOSE (7" ADJ, W/ROSEBUD FOR .25 DIA HOLE .031–.14 TH) (08.965)	
84–90	Y	14023108	1	2.80	TEE, INT MANIF PCV HOSE 3–WAY (04.931)	4–J13,29
84	Y 5.7–8 (L83)	25040026	1	*4.59	VALVE, PCV (AC–DELCO #CV853C)	1–G11,15
85–88	Y 5.7–8 (L98)	6487779	1	*3.50	VALVE, PCV (AC–DELCO #CV774C)	1–H2,23
89–91	Y 5.7–8 (L98)	8995284	1	*5.40	VALVE, PCV (AC–DELCO #CV789C)	1–H2,23
90–95	Y 5.7J (LT5)	6487532	LH	*3.50	VALVE, PCV (AC–DELCO #CV769C)	1–H20,521
90–95	Y 5.7J (LT5)	25093197	RH	*9.41	VALVE, PCV (AC–DELCO #CV913C)	1–H20,521
92–96	Y 5.7P (LT1)	25095452	1	*7.65	VALVE, PCV (CV895C, 1 VACUUM PORT) (AC–DELCO #CV895C)	1–J17,514
96	Y 5.7–5 (LT4)	25095452	1	*7.65	VALVE, PCV (CV895C, 1 VACUUM PORT) (AC–DELCO #CV895C)	1–J17,514

1.750 CLAMP, Engine Oil Filler Tube

90–95	Y 5.7J (LT5)	12338017	1	*3.50	CLAMP, PCV TUBE (28.6–86.2 DIA WORM GEAR) (08.948) (AC–DELCO #12338017)	1–H20,551
91–94	Y 5.7J (LT5)	22527537	1	1.75	CLAMP, PCV TUBE (20.0 X 12.4) (WORM GEAR, 1/2–13/16) (08.948)	

1.758 CAP, Engine Oil Filler

84–87	Y	14094763	1	3.94	CAP, OIL FIL (AC–DELCO #14094763)	1–G19,63
88–91	Y 5.7–8 (L98)	12558300	1	1.84	CAP, OIL FIL (THREADED, NYLON) (AC–DELCO #FC180)	1–H2,63
90–92	Y 5.7J (LT5)	10122162	1	6.58	CAP, OIL FIL (AC–DELCO #FC137)	
92	Y 5.7P (LT1)	10108650	1	4.08	CAP, OIL FIL (AC–DELCO #FC158)	1–I2,201
93	Y	12554955	1	3.06	CAP, OIL FIL ("MOBIL 1") (AC–DELCO #FC183)	1–J6,201
94–95	Y 5.7J (LT5)	10108650	1	4.08	CAP, OIL FIL (AC–DELCO #FC158)	1–I2,201
94–95	Y 5.7P (LT1)	12554955	1	3.06	CAP, OIL FIL ("MOBIL 1") (AC–DELCO #FC183)	1–J6,201
96	Y	12554955	1	3.06	CAP, OIL FIL ("MOBIL 1") (AC–DELCO #FC183)	1–J6,201

© 2000 GENERAL MOTORS SERVICE PARTS OPERATIONS–CHEVROLET–14Y

1.762 BOLT – CLAMP – CONNECTOR – FITTING – GROMMET – HOSE – PIPE – PLUG – STUD – TUBE, Engine Crankcase Ventilation

90–95	Y 5.7J (LT5)	11514119	1	3.10	BOLT, PCV TUBE (M12X1.75X110)	1–H10,244
91–94	Y 5.7J (LT5)	12337891	1	*.80	CLAMP, PCV VLV HOSE (15.7 TO 31.9 ALL SS) (08.948) (AC–DELCO #12337891)	
92	Y 5.7P (LT1), 4–SPD A/TRANS (MD8)	10019739	2	1.10	CLAMP, PCV VLV HOSE	
91–92	Y 5.7J (LT5)	25665982	1	1.99	CLAMP, PCV VLV PIPE HOSE (08.948)	
85–87	Y	14082446	1	3.82	CONNECTOR, C/CASE VENT TUBE	1–G19,90
88–91	Y 5.7–8 (L98)	10055873	1	3.60	CONNECTOR, PCV HOSE	1–H2,89
90–95	Y 5.7J (LT5)	10110946	2	10.10	CONNECTOR, PCV HOSE (TO PLNM) (01.750)	1–H20,518
92–96	Y 5.7P (LT1)	12550625	1	*.98	CONNECTOR, PCV HOSE	1–J17,549
96	Y 5.7–5 (LT4)	12550625	1	*.98	CONNECTOR, PCV HOSE	1–J17,549
90–95	Y 5.7J (LT5)	10110911	1	13.10	CONNECTOR, PCV TUBE (03.305)	1–H25,607
84	Y	366846	1	3.82	CONNECTOR, VENT HOSE (A/CL TO CVR)	1–G11,80
88–91	Y 5.7–8 (L98)	14087402	1	3.40	FITTING, PCV	1–H2,18
92	Y 5.7P (LT1)	10088198	1	4.70	GROMMET, PCV HOSE CONN (01.745)	1–I18,548
93	Y 5.7P (LT1)	10207699	1	3.05	GROMMET, PCV HOSE CONN	1–I18,548
94–96	Y 5.7P (LT1)	10240678	1	3.05	GROMMET, PCV HOSE CONN	1–I18,548
85–87	Y	14092442	1	11.12	HOSE, CR/CASE VENT VLV	1–G19,22
88–91	Y 5.7–8 (L98)	10055872	1	9.28	HOSE, PCV	1–H2,85
90–95	Y 5.7J (LT5)	10122196	1	36.72	HOSE, PCV (01.745)	1–H20,522
92	Y 5.7P (LT1)	10128365	1	7.14	HOSE, PCV	1–I18,547
90–95	Y 5.7J (LT5)	10110950	RH	7.45	HOSE, PCV TUBE	4–J7,15
90–95	Y 5.7J (LT5)	10135802	1	6.94	HOSE, PCV TUBE	4–J7,12
88–91	Y 5.7–8 (L98)	14088538	1	10.00	HOSE, PCV VLV (TO PCV VLV)	1–H2,22
90–95	Y 5.7J (LT5)	10110907	LH	9.28	HOSE, PCV VLV	1–H20,550
90–95	Y 5.7J (LT5)	10110908	RH	9.28	HOSE, PCV VLV	1–H20,550
90–95	Y 5.7J (LT5)	10174350	1	22.34	HOSE, PCV VLV (W/90 DEGREE CONN)	1–H20,555
92–95	Y 5.7P (LT1)	10128361	1	3.62	HOSE, PCV VLV	1–I18,515
93	Y 5.7P (LT1)	12551339	1	3.15	HOSE, PCV VLV	1–J17,560
96	Y 5.7–5 (LT4)	12551389	1	3.15	HOSE, PCV VLV	1–J17,560
90–92	Y 5.7J (LT5)	10110988	1	6.94	HOSE, PORTED PURGE SOL	
90	Y 5.7J (LT5)	10110980	1	10.00	HOSE, PURGE & PCV VLV, W/STRAIGHT CONN	
84	Y A/TRNS	14045839	1	DISCON	HOSE, VENT	
84	Y	14057007	1	10.00	HOSE, VENT TUBE	1–G11,81
85	Y	14082449	1	DISCON	PIPE, CR/CASE VENT	
86–87	Y	14087569	1	DISCON	PIPE, CR/CASE VENT	
85	Y	14080634	1	DISCON	PIPE, CR/CASE VENT VLV	
86	Y	14087570	1	DISCON	PIPE, CR/CASE VENT VLV	
87	Y	10046142	1	DISCON	PIPE, CR/CASE VENT VLV	
90–95	Y 5.7J (LT5)	10146296	RH	29.07	PIPE, PCV VLV (INJ HSG TO PCV VLV) (01.745)	1–H25,611
90–95	Y 5.7J (LT5)	10146298	LH	29.07	PIPE, PCV VLV (INJ HSG TO PCV VLV) (01.745)	1–H25,611
90–95	Y 5.7J (LT5)	10153501	1	58.17	PIPE, PCV VLV (PCV VALVE PLENUM)	1–H20,512
96	Y 5.7P (LT1), 4–SPD A/TRANS (M30)	12556257	1	7.14	PIPE, PCV VLV	1–J17,515
96	Y 5.7–5 (LT4), 6–SPD M/TRANS (ML9)	12556257	1	7.14	PIPE, PCV VLV	1–J17,515

© 2000 GENERAL MOTORS SERVICE PARTS OPERATIONS–CHEVROLET–14Y

1.762 BOLT – CLAMP – CONNECTOR – FITTING – GROMMET – HOSE – PIPE – PLUG – STUD – TUBE, Engine Crankcase Ventilation (Con't)

85	Y	14050440	1	.43	PLUG, CR/CASE VENT VLV PIPE (03.163)	
90–95	Y 5.7J (LT5)	10110936	2	1.20	STUD, C/BLK VENT VAC RSVR (M6X1.0–THD)	1–H20,549
86–87	Y	14087571	1	DISCON	STUD, CR/CASE VENT TUBE (M6X1X25, M6X1X12, TL 43)	
86–87	Y	14087572	1	DISCON	STUD, CR/CASE VENT TUBE (M6X1X12, M6X1X12)	
90–92	Y 5.7J (LT5)	10110936	1	1.20	STUD, OIL PICKUP PIPE (M6X1.0–THD)	1–H20,549
85–87	Y	14087567	1	5.30	TUBE, CR/CASE VENT (01.745)	1–G19,110
90–95	Y 5.7J (LT5)	10135804	LH	21.45	TUBE, PCV	1–H10,245
90–95	Y 5.7J (LT5)	10135857	RH	21.45	TUBE, PCV	1–H10,245
93–96	Y 5.7P (LT1)	12550624	1	4.18	TUBE, PCV	1–J17,547
96	Y 5.7–5 (LT4)	12550624	1	4.18	TUBE, PCV	1–J17,547

1.780 BAFFLE – STUD, Engine Crankcase Ventilator

90–95	Y 5.7J (LT5)	10199011	1	80.60	BAFFLE, PCV	1–H20,546
94–95	Y 5.7J (LT5)	10110936	2	1.20	STUD, PCV OIL SEP BRKT (M6X1.0–THD) (01.762)	

1.800 CONNECTOR – ELBOW – FITTING – RING – SENSOR – SWITCH, Engine Oil Pressure/Temperature

90	Y	12085499	1	26.00	CONNECTOR, SEN–ENG OIL PRESS GA (3–WAY F W/LEADS) (02.535) (AC–DELCO #PT121)	
92–94	Y 5.7J (LT5)	12085499	1	26.00	CONNECTOR, SEN–ENG OIL PRESS GA (GRAY) (3–WAY F) (W/LEADS) (02.535) (AC–DELCO #PT121)	
93–94	Y 5.7P (LT1)	12085499	1	26.00	CONNECTOR, SEN–ENG OIL PRESS GA (GRAY) (3–WAY F) (W/LEADS) (02.535) (AC–DELCO #PT121)	
93–95	Y 5.7P (LT1)	12085500	1	17.46	CONNECTOR, SEN–ENG OIL PRESS GA (BLACK) (1–WAY F) (W/LEADS) (02.535) (AC–DELCO #PT100)	
96	Y	12085500	1	17.46	CONNECTOR, SEN–ENG OIL PRESS GA (BLACK) (1–WAY F) (W/LEADS) (02.535) (AC–DELCO #PT100)	
93–96	Y	12102748	1	23.24	CONNECTOR, SEN–ENG OIL TEMP GA (BLACK) (3–WAY F) (W/LEADS) (02.535) (AC–DELCO #PT375)	
88–96	Y	12085499	1	26.00	CONNECTOR, SW–ENG OIL PRESS IND (GRAY) (3–WAY F) (W/LEADS) (02.535) (AC–DELCO #PT121)	
90–91	Y 5.7–8 (L98)	12085500	1	17.46	CONNECTOR, SW–ENG OIL PRESS IND (BLACK) (1–WAY F) (W/LEADS) (02.535) (AC–DELCO #PT100)	
92–93	Y 5.7P (LT1)	12085500	1	17.46	CONNECTOR, SW–ENG OIL PRESS IND (BLACK) (1–WAY F) (W/LEADS) (02.535) (AC–DELCO #PT100)	

© 2000 GENERAL MOTORS SERVICE PARTS OPERATIONS–CHEVROLET–14Y

1.800 CONNECTOR – ELBOW – FITTING – RING – SENSOR – SWITCH, Engine Oil Pressure/Temperature (Con't)

90–91	Y 5.7–8 (L98)	14078987	1	7.52	ELBOW, ENG OIL PRESS GA SEN (TO BLK (105 DEG W/HEX BODY) (01.803)	
90–91	Y 5.7–8 (L98)	14078988	1	9.45	ELBOW, ENG OIL PRESS GA SEN (TO BLK) (01.803)	1–J2,104
92–96	Y 5.7P (LT1)	14078988	1	9.45	ELBOW, ENG OIL PRESS GA SEN (TO BLK) (01.803) (USED W/1052080, SEALER)	1–J2,104
96	Y 5.7–5 (LT4)	14078988	1	9.45	ELBOW, ENG OIL PRESS GA SEN (TO BLK) (01.803) (USED W/1052080, SEALER)	1–J2,104
84	Y (2ND DES)	14078988	1	9.45	ELBOW, OIL PRESS GA SEN TO BLK FTG (DOUBLE OUTLET W/HEX BODY) (01.803)	1–J2,104
92–96	Y 5.7P (LT1)	10137636	1	8.11	FITTING, ENG OIL PRESS GA SEN	1–J2,108
96	Y 5.7–5 (LT4)	10137636	1	8.11	FITTING, ENG OIL PRESS GA SEN	1–J2,108
90–95	Y 5.7J (LT5)	10122195	1	10.25	FITTING, ENG OIL TEMP SEN	
89	Y FEDERAL EMIS (NA5), (5.7–8)	10096122	2	DISCON	FITTING, F/PMP & ENG OIL PRESS IND SW (01.803)	
85–88	Y	14078988	1	9.45	FITTING, OIL PRESS GA SEN TO BLK FTG (01.803)	1–J2,104
90–95	Y 5.7J (LT5)	274843	1	3.70	RING, ENG OIL TEMP CONT VLV RET (08.934)	1–H16,449
84	Y 1ST DES	14073454	1	53.40	SENSOR, ENG OIL PRESS GA (3 BLADE TERM, 1/8–27 THD) (AC–DELCO #14073454)	1–G7,12
84	Y 2ND DES	14078954	1	33.65	SENSOR, ENG OIL PRESS GA (1 BLADE TERM, 1/8–27 THD) (AC–DELCO #14078954)	1–G23,12
85–88	Y	14078954	1	33.65	SENSOR, ENG OIL PRESS GA (1 BLADE TERM, 1/8–27 THD) (AC–DELCO #14078954)	1–G23,12
90–95	Y 5.7J (LT5)	12555492	1	32.91	SENSOR, ENG OIL PRESS GA (3 TERMINALS:A, C, D) (AC–DELCO #D1808A)	1–H16,462
90–91	Y 5.7–8 (L98)	10096136	1	26.04	SENSOR, ENG OIL T/GA (CHG MON & TEMP GA) (3 BLADE TERM, 1/4–18 THD) (AC–DELCO #10096136)	1–J2,119
90–91	Y 5.7J (LT5)	10096136	1	26.04	SENSOR, ENG OIL T/GA (3 BLADE TERM, 1/4–18 THD) (AC–DELCO #10096136)	1–J2,119
92–95	Y 5.7J (LT5)	10096181	1	20.00	SENSOR, ENG OIL T/GA (3 BLADE TERM) (W/IND SW) (03.682) (AC–DELCO #213–815)	1–H16,446
92–96	Y 5.7P (LT1)	10096136	1	26.04	SENSOR, ENG OIL T/GA & OIL CHANGE IND (AC–DELCO #10096136)	1–J2,119
96	Y 5.7–5 (LT4)	10096136	1	26.04	SENSOR, ENG OIL T/GA & OIL CHANGE IND (AC–DELCO #10096136)	1–J2,119
84–88	Y	25036292	1	28.97	SENSOR, ENG OIL TEMP (1 BLADE TERM, 1/4–18 THD) (AC–DELCO #25036292)	1–G23,24
89	Y 5.7–8	25036292	1	28.97	SENSOR, ENG OIL TEMP (AC–DELCO #25036292)	1–G23,24
89	Y 5.7–8 (L98)	10201491	1	32.12	SENSOR, F/PMP SW & ENG OIL PRESS GA (3 BLADE TERM, 1/8–27 THD) (AC–DELCO #10201491)	1–J2,103

© 2000 GENERAL MOTORS SERVICE PARTS OPERATIONS–CHEVROLET–14Y

1.800 CONNECTOR – ELBOW – FITTING – RING – SENSOR – SWITCH, Engine Oil Pressure/Temperature (Con't)

90	Y 5.7–8	10201491	1	32.12	SENSOR, F/PMP SW & ENG OIL PRESS GA (3 BLADE TERM, 1/8–27 THD) (AC–DELCO #10201491)	1–J2,103
90–91	Y 5.7–8 (L98)	10201491	1	32.12	SENSOR, F/PMP SW & ENG OIL PRESS GA (1/8–27 THD SIZE) (3 BLADE TERM) (AC–DELCO #10201491)	1–J2,103
92–96	Y 5.7P (LT1)	10201491	1	32.12	SENSOR, F/PMP SW & ENG OIL PRESS GA (1/8–27 THD SIZE) (3 BLADE TERM) (AC–DELCO #10201491)	1–J2,103
96	Y 5.7–5 (LT4)	10201491	1	32.12	SENSOR, F/PMP SW & ENG OIL PRESS GA (1/8–27 THD SIZE) (3 BLADE TERM) (AC–DELCO #10201491)	1–J2,103
90–91	Y 5.7–8 (L98)	25036935	1	16.32	SWITCH, ENG OIL PRESS IND (OIL FLTR HSG) (1 BLADE TERM, 1/8–27 THD) (AC–DELCO #D1846)	1–J2,105
90–92	Y 5.7J (LT5)	25036935	1	16.32	SWITCH, ENG OIL PRESS IND (OIL FLTR HSG (1 BLADE TERM, 1/8–27 THD)) (AC–DELCO #D1846)	1–J2,105
92–96	Y 5.7P (LT1)	25036935	1	16.32	SWITCH, ENG OIL PRESS IND (OIL FLTR HSG (1 BLADE TERM, 1/8–27 THD)) (AC–DELCO #D1846)	1–J2,105
93–95	Y 5.7J (LT5)	25036935	1	16.32	SWITCH, ENG OIL PRESS IND (AC–DELCO #D1846)	1–J2,105
96	Y 5.7–5 (LT4)	25036935	1	16.32	SWITCH, ENG OIL PRESS IND (OIL FLTR HSG (1 BLADE TERM, 1/8–27 THD)) (AC–DELCO #D1846)	1–J2,105
85–87	Y	25036553	2	12.65	SWITCH, OIL PRESS (2 BLADE TERM, 1/8–27 THD) (AC–DELCO #D1818)	1–G23,14
88	Y	25036936	1	14.59	SWITCH, OIL PRESS IND (2 BLADE TERM, 1/8–27 THD) (AC–DELCO #D1835)	1–G23,14

1.803 FITTING, Engine Oil Pressure Gage

84	Y	14047169	2	9.20	FITTING, OIL PRESS GA	
84	Y (1ST DES)	14066510	1	DISCON	FITTING, OIL PRESS GA SEN (1/8–27 NPT 1 EXT 1 INT AT 90 DEG M42 X 25) (SINGLE OUTLET W/SQUARE BODY)	
84	Y (1ST DES)	14066511	1	DISCON	FITTING, OIL PRESS GA SEN (1/8–27 1 INT, 1 EXT AT 90 DEG M23 X 21) (90 DEG W/SQUARE BODY)	
84	Y (2ND DES)	14078987	1	7.52	FITTING, OIL PRESS GA SEN TO BLK (105 DEG W/HEX BODY)	1–G23,15
85–88	Y	14078987	1	7.52	FITTING, OIL PRESS GA SEN TO BLK (105 DEG W/HEX BODY)	1–G23,15

1.836 FILTER, Engine Oil Filter

NOTE: SEE GROUP 2.270 FOR TUNE–UP PARTS CHART

84	Y 5.7–8 (L83)	6438261	1	N.L.	FILTER, OIL (AC–DELCO #PF25) (DURAGUARD)	1–G23,41
84	Y 5.7–8 (L83)	25322833	1	N.L.	FILTER, OIL (AC–DELCO #UPF25) (ULTRAGUARD GOLD)	
84	Y 5.7–8 (L83)	25325405	1	N.L.	FILTER, OIL (AC–DELCO #SPF25) (DURAGUARD SILVER)	
85–91	Y 5.7–8 (L98)	6438261	1	N.L.	FILTER, OIL (AC–DELCO #PF25) (DURAGUARD)	1–G23,41
85–91	Y 5.7–8 (L98)	25322833	1	N.L.	FILTER, OIL (AC–DELCO #UPF25) (ULTRAGUARD GOLD)	
85–91	Y 5.7–8 (L98)	25325405	1	N.L.	FILTER, OIL (AC–DELCO #SPF25) (DURAGUARD SILVER)	
90–95	Y 5.7J (LT5)	25014155	1	N.L.	FILTER, OIL (FILTER, ENG OIL (BLACK)) (PF970C) (AC–DELCO #PF970C)	1–H16,461
92–96	Y 5.7P (LT1)	25171377	1	N.L.	FILTER, OIL (AC–DELCO #PF52) (DURAGUARD)	1–J15,411
92–96	Y 5.7P (LT1)	25322836	1	N.L.	FILTER, OIL (AC–DELCO #UPF52) (ULTRAGUARD GOLD)	1–J15,411
92–96	Y 5.7P (LT1)	25325403	1	N.L.	FILTER, OIL (AC–DELCO #SPF52) (DURAGUARD SILVER)	1–J15,411
96	Y 5.7–5 (LT4)	25171377	1	N.L.	FILTER, OIL (AC–DELCO #PF52) (DURAGUARD)	1–J15,411
96	Y 5.7–5 (LT4)	25322836	1	N.L.	FILTER, OIL (AC–DELCO #UPF52) (ULTRAGUARD GOLD)	1–J15,411
96	Y 5.7–5 (LT4)	25325403	1	N.L.	FILTER, OIL (AC–DELCO #SPF52) (DURAGUARD SILVER)	1–J15,411

1.837 PLUG – SPRING – VALVE, Engine Oil Filter

90–95	Y 5.7J (LT5)	10067690	2	1.48	PLUG, OIL FLTR BYPASS HOLE (01.844)	1–H16,454
90–95	Y 5.7J (LT5)	10135808	2	2.20	SPRING, OIL FLTR BYPASS VLV (01.540)	1–H16,455
84	Y ENG OIL CLG (KC4)	25013759	1	N.L.	VALVE, OIL FLTR BYPASS (AC–DELCO #25013759)	1–G7,35
90–95	Y 5.7J (LT5)	10067689	2	3.30	VALVE, OIL FLTR BYPASS (01.540)	1–H16,456
92–96	Y 5.7P (LT1)	25014006	1	N.L.	VALVE, OIL FLTR BYPASS (W/CAGE, SEAT, SPRING & VALVE) (AC–DELCO #25014006)	
96	Y 5.7–5 (LT4)	25014006	1	N.L.	VALVE, OIL FLTR BYPASS (W/CAGE, SEAT, SPRING & VALVE) (AC–DELCO #25014006)	
	*EXPORT*********EXPORT*********EXPORT*********EXPORT*********EXPORT*					
84	Y LEADED FUEL EMIS EXPORT (NM8)	25013759	1	N.L.	VALVE, OIL FLTR BYPASS (AC–DELCO #25013759)	1–G7,35

1.840 ADAPTER – BOLT – GASKET – PLUG – STUD – WASHER, Engine Oil Filter

84	Y KC4	12558732	1	80.10	ADAPTER, OIL FLTR	1–G7,35
85–88	Y ENG OIL CLG (KC4)	10055722	1	16.10	ADAPTER, OIL FLTR	1–G23,32
89–91	Y 5.7–8 (L98), ENG OIL CLG (KC4)	10055722	1	16.10	ADAPTER, OIL FLTR	1–G23,32
90–95	Y 5.7J (LT5)	10067656	1	11.80	ADAPTER, OIL FLTR (M20X1.5X24)	1–H16,465
90–95	Y 5.7J (LT5)	10146218	1	318.20	ADAPTER, OIL FLTR (01.837)	1–H16,466
92	Y 5.7P (LT1)	10168497	1	18.00	ADAPTER, OIL FLTR	1–I14,408
93	Y 5.7P (LT1)	10168497	1	18.00	ADAPTER, OIL FLTR	1–I14,408
94	Y 5.7P (LT1)	12556204	1	80.10	ADAPTER, OIL FLTR	1–J15,408
95–96	Y 5.7P (LT1)	12556204	1	80.10	ADAPTER, OIL FLTR	1–J15,408

© 2000 GENERAL MOTORS SERVICE PARTS OPERATIONS–CHEVROLET–14Y

1.840 ADAPTER – BOLT – GASKET – PLUG – STUD – WASHER 'ngine Oil Filter (Con't)

96	Y 5.7–5 (LT4)	12556204	1	80.10	ADAPTER, OIL FLTR	1–J15,408
84–85	Y	3952301	1	16.80	ADAPTER, OIL FLTR BY–PASS VLV	1–G7,34
86–88	Y (EXC ENG OIL CLG (KC4)	3952301	1	16.80	ADAPTER, OIL FLTR BY–PASS VLV	1–G7,34
89–91	Y 5.7–8 (L98), (EXC ENG OIL CLG (KC4)	3952301	1	16.80	ADAPTER, OIL FLTR BY–PASS VLV (INCLS ADAP, PLUG, SPR&VLV)	1–G7,34
91–95	Y 5.7J (LT5)	11514158	AR	4.15	BOLT, OIL FLTR (M8X1.25X45, 22 THD, 17 OD, 9.8, PE) (08.900)	
92–93	Y 5.7P (LT1)	10168445	2	1.30	BOLT, OIL FLTR ADAP (5/16–18X3,)	1–I14,410
94	Y 4.3W (L99)	14092398	2	2.25	BOLT, OIL FLTR ADAP (5/16–18X1.875)	1–J15,410
94–96	Y 5.7P (LT1)	14092398	2	2.25	BOLT, OIL FLTR ADAP (5/16–18X1.875)	1–J15,410
96	Y 5.7–5 (LT4)	14092398	2	2.25	BOLT, OIL FLTR ADAP (5/16–18X1.875)	1–J15,410
91–92	Y 5.7J (LT5)	24572579	AR	.67	BOLT, OIL FLTR HSG & W/PMP (HFH, M8X1.25X35) (00.206)	
84	Y	12551589	1	N.L.	GASKET, OIL FLTR ADAP	1–J15,406
90–95	Y 5.7J (LT5)	10168686	1	N.L.	GASKET, OIL FLTR ADAP	1–H16,467
92–96	Y 5.7P (LT1)	12551589	1	N.L.	GASKET, OIL FLTR ADAP	1–J15,406
96	Y 5.7–5 (LT4)	12551589	1	N.L.	GASKET, OIL FLTR ADAP	1–J15,406
90–95	Y 5.7J (LT5)	10106197	2	3.10	PLUG, OIL FLTR ADAP HOLE (01.837)	
92–96	Y 5.7P (LT1)	14090911	1	.86	PLUG, OIL FLTR ADAP HOLE (AUTO DRAIN, INT SQ, 3/8–18X.42 PEOR STL) (08.971)	1–J15,435
96	Y 5.7–5 (LT4)	14090911	1	.86	PLUG, OIL FLTR ADAP HOLE (AUTO DRAIN, INT SQ, 3/8–18X.42 PEOR STL) (08.971)	1–J15,435
86–88	Y ENG OIL CLG (KC4)	14101106	2	2.40	STUD, OIL FLTR (5/16–18 X 1.88)	1–G23,27
89–91	Y 5.7–8 (L98), ENG OIL CLG (KC4)	14101106	2	2.40	STUD, OIL FLTR ADAP (5/16–18 X 1.88)	1–G23,27
92–96	Y 5.7P (LT1)	120393	1	.34	WASHER, OIL FLTR ADAP (08.929)	1–J15,409
95	Y 5.7P (LT1)	120392	1	*.33	WASHER, OIL FLTR ADAP (.276X.64X.080 ZP) (08.929)	1–I14,409
96	Y 5.7–5 (LT4)	120393	1	.34	WASHER, OIL FLTR ADAP (08.929)	1–J15,409

1.844 SEAL, Engine Oil Filter

84–91	Y	10244495	1	*1.53	SEAL, OIL FLTR ADAP (3.359") (3.359")	1–J15,407
92–96	Y 5.7P (LT1)	10244495	1	*1.53	SEAL, OIL FLTR ADAP (3.359")	1–J15,407
96	Y 5.7–5 (LT4)	10244495	1	*1.53	SEAL, OIL FLTR ADAP (3.359")	1–J15,407

1.855 CLAMP – CONNECTOR – FITTING, Engine Oil Filter

84–86	Y	22518665	AR	*.93	CLAMP, C/CASE VENT VLV HOSE (.56" TO 1.06" DIA) (08.948)	
84	Y ENG OIL CLG (KC4)	3853870	1	5.00	CONNECTOR, OIL FLTR	1–G7,32
92–96	Y 5.7P (LT1)	462659	1	4.80	FITTING, OIL FLTR (01.840)	1–J15,434
96	Y 5.7–5 (LT4)	462659	1	4.80	FITTING, OIL FLTR (01.840)	1–J15,434

© 2000 GENERAL MOTORS SERVICE PARTS OPERATIONS–CHEVROLET–14Y

MICROFICHE INDEX

GROUP 1.000

FICHE 2 OF 11

GROUP	DESCRIPTION	STARTING GRID LOCATION PARTS	ILLUSTRATIONS
–	GENERAL INFORMATION	1–A2	1–G2
–	ALPHABETICAL INDEX	1–B13	N.A.
1.000	COOLING SYSTEM – GRILLE – OIL SYSTEM	2–A2	2–C2
–	OUT OF FICHE CALLS	N.A.	2–N8

2–C1

CHEVROLET
CHASSIS GROUP 1.000

ILLUSTRATION INDEX

	TITLE	GRID
1984–1989	Y RADIATOR ASM–DETAILS(ALUMINUM)	2–C4
1990–1993	Y RADIATOR ASM–DETAILS(ALUMINUM)	2–C5
1994–1996	Y RADIATOR ASM (DETAILS)	2–C6
1985–1991	Y ENGINE COOLANT FAN (L98)	2–C7
1990–1994	Y ENGINE COOLANT FAN (LT5)	2–C8
1992–1994	Y ENGINE COOLANT FAN (LT1)	2–C8
1995	Y ENGINE COOLANT FAN (LT5)	2–C10
1995–1996	Y ENGINE COOLANT FAN (LT1)	2–C10
1996	Y ENGINE COOLANT FAN (LT4)	2–C10
1984	Y HOSES & PIPES/RADIATOR RADIATOR & RELATED PARTS–5.7L V8 (L83/5.7–8)	2–C12
1985–1989	Y HOSES & PIPES/RADIATOR RADIATOR & RELATED PARTS–5.7L V8 (L98/5.7–8)	2–C12
1984	Y HOSES & PIPES/RADIATOR (L83)	2–C15
1985–1989	Y HOSES & PIPES/RADIATOR (L98)	2–C15
1990–1991	Y HOSES & PIPES/RADIATOR RADIATOR & RELATED PARTS(L98)	2–C17
1990–1991	Y HOSES & PIPES/RADIATOR RADIATOR & RELATED PARTS(LT5)	2–C19
1990–1991	Y HOSES & PIPES/RADIATOR (L98)	2–C22
1990–1995	Y HOSES & PIPES/RADIATOR (LT5)	2–C24
1992–1994	Y HOSES & PIPES/RADIATOR (& RELATED PARTS)(LT1)	2–D2
1992–1994	Y HOSES & PIPES/RADIATOR (LT1)	2–D6
1992–1995	Y HOSES & PIPES/RADIATOR RADIATOR & RELATED PARTS(LT5)	2–D9
1995–1996	Y HOSES & PIPES/RADIATOR RADIATOR & RELATED PARTS(LT1)	2–D13
1995–1996	Y HOSES & PIPES/RADIATOR (LT1)	2–D17
1990–1995	Y ENGINE OIL COOLER (LT5)	2–D20
1985–1991	Y ENGINE OIL COOLER LINES (L98,KC4)	2–D21
1992–1996	Y TENSIONER/DRIVE BELT (LT1)	2–D22
1996	Y TENSIONER/DRIVE BELT (LT4)	2–D22

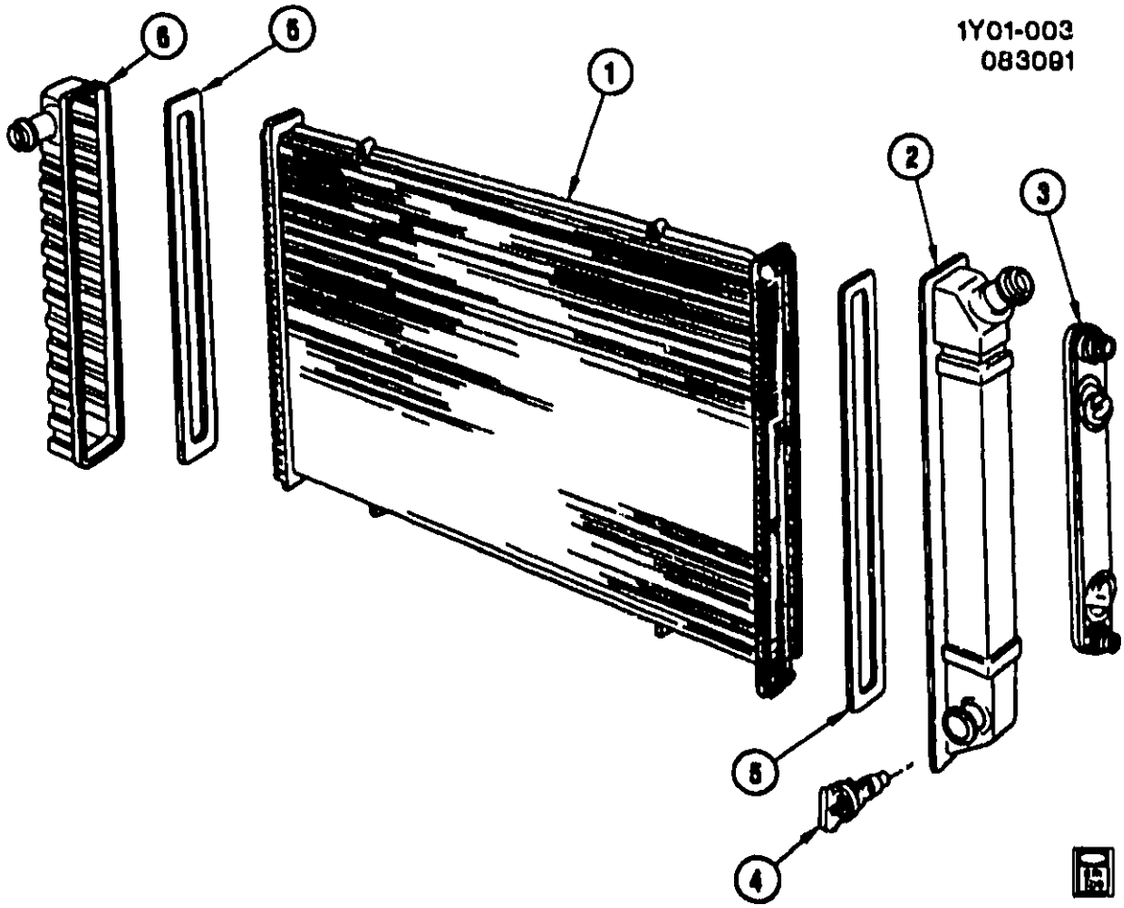

1Y01-003

1984-1989 Y RADIATOR ASM-DETAILS(ALUMINUM)

1.		DISCON	CORE, RAD (H.D.C.) (AC-DELCO #10058)	3049562
		DISCON	CORE, RAD (EXC H.D.C.) (AC-DELCO #9535)	3049535
2.	2-A20	1.219	TANK, RAD OTLT (AC-DELCO #3092029)	3092029
3.		DISCON	COOLER, TRANS OIL (AC-DELCO #3056569)	3056569
4.	2-A19	1.173	COCK, RAD DRN (PLSTC) (AC-DELCO #3056858)	3056858
5.	2-A20	1.219	GASKET KIT, RAD (AC-DELCO #3092236)	3092236
6.	2-A20	1.219	TANK, INL (AC-DELCO #3054255)	3054255

© 2000 GENERAL MOTORS SERVICE PARTS OPERATIONS-CHEVROLET-14

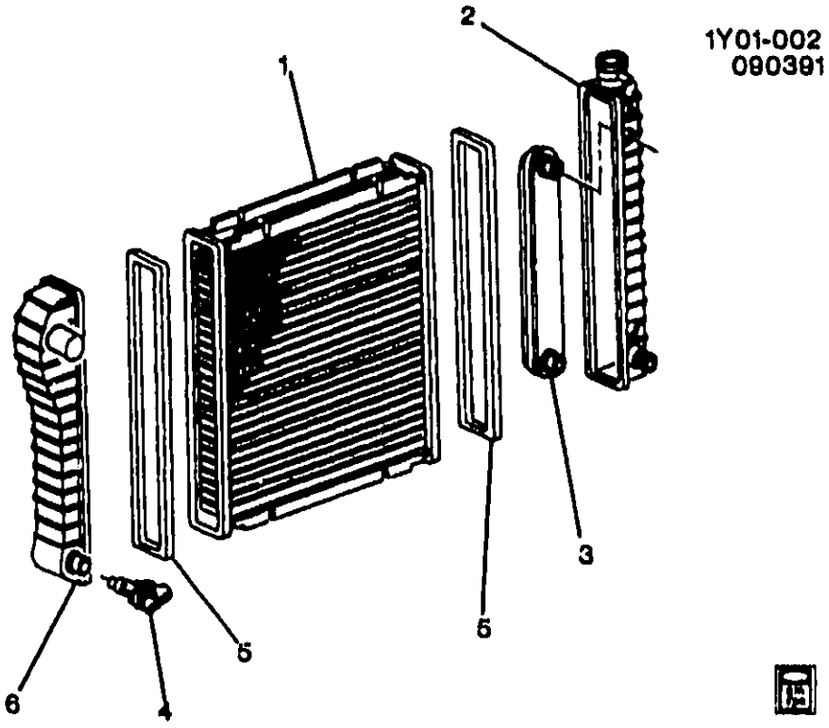

1990-1993 Y RADIATOR ASM-DETAILS(ALUMINUM)

1.		DISCON	CORE, RAD (W/RAD CODE:YD) .	90-93	Y	1	52450317
2.	2-A20	1.219	TANK, RAD OTLT (AC-DELCO #52450316)	90-93	Y (ML9)	1	52450316
	2-A20	1.219	TANK, RAD OTLT (AC-DELCO #52454666)	90-93	Y (MD8)	1	52454666
3.	2-N23	4.128	COOLER, TRANS FLUID (AC-DELCO #3055675)	90-93	Y (MD8)	1	3055675
4.	2-A19	1.173	COCK, RAD DRN (8.951) (AC-DELCO #3056858)	90-93	Y	1	3056858
5.	2-A20	1.219	GASKET KIT, RAD TK (AC-DELCO #52484143)	90-93	Y	1	52484143
6.	2-A20	1.219	TANK, RAD INL (AC-DELCO #3050908)	90-93	Y	1	3050908

RPO DEFINITIONS
MD8 - TRANSMISSION,AUTOMATIC 4-SPEED(THM700R4/4L60)
ML9 - TRANSMISSION,MANUAL 6-SPEED

© 2000 GENERAL MOTORS SERVICE PARTS OPERATIONS-CHEVROLET-14Y

1Y01-004 05/27/93

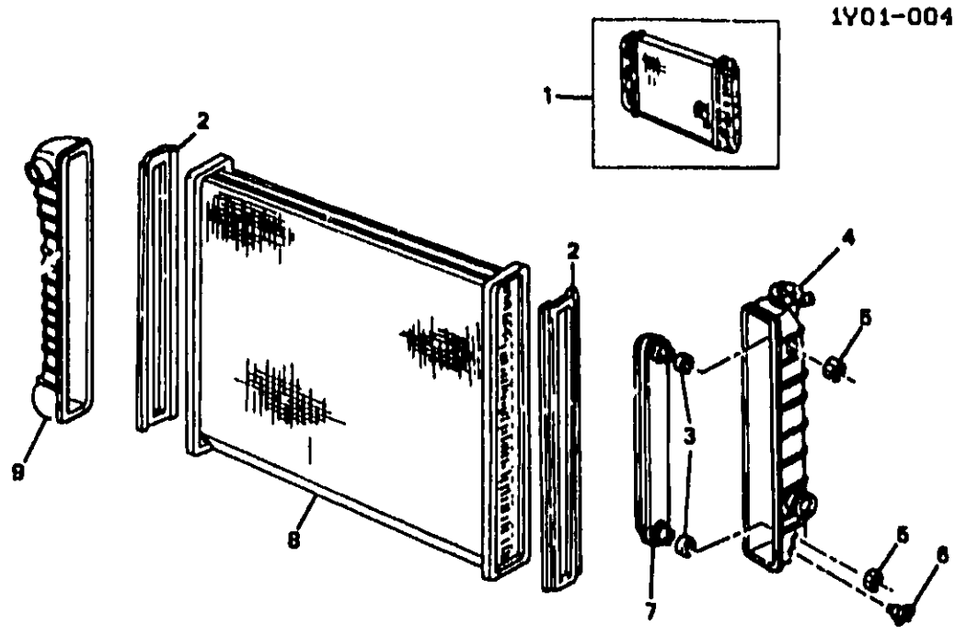

1Y01-004

1994-1996 Y RADIATOR ASM (DETAILS)

1.	2-A20	1.219	RADIATOR, (CODE LO, YC) (INCLS 3, 5, 8) (AC-DELCO #20620)	94-96	Y (ML9)	1	52460411
	2-A20	1.219	RADIATOR, (CODE YT) (INCLS 3, 5, 8) (AC-DELCO #20681)	94-96	Y (M30)	1	52473260
2.	2-A20	1.219	GASKET KIT, RAD TK (INCLS 3) (AC-DELCO #52484143)	94-96	Y	1	52484143
3.		N.S.	GASKET, RAD TK (SERVICED BY GASKET KITS)				
4.	2-A20	1.219	TANK, RAD OTLT (AC-DELCO #52450316)	94-96	Y (ML9)	1	52450316
	2-A20	1.219	TANK, RAD OTLT (AC-DELCO #52454666)	94-96	Y (M30)	1	52454666
5.		N.S.	NUT, RAD (PART OF 1)				
6.		8.951	DRAIN COCK, RADIATOR (PART OF 1) (AC-DELCO #3056858)	94-96		1	3056858
7.	2-N23	4.128	COOLER, TRANS FLUID (AC-DELCO #3055675)	94-96	Y (M30)	1	3055675
8.		DISCON	CORE, RAD (PART OF 1) (W/RAD CODE:YD)	94-96	Y	1	52450317
9.	2-A20	1.219	TANK, RAD INL (AC-DELCO #3050908)	94-96	Y	1	3050908

RPO DEFINITIONS
ML9 - TRANSMISSION,MANUAL 6-SPEED
M30 - TRANSMISSION,AUTOMATIC 4 SPEED,4L60E,ELECTRONIC

© 2000 GENERAL MOTORS SERVICE PARTS OPERATIONS--CHEVROLET-14Y

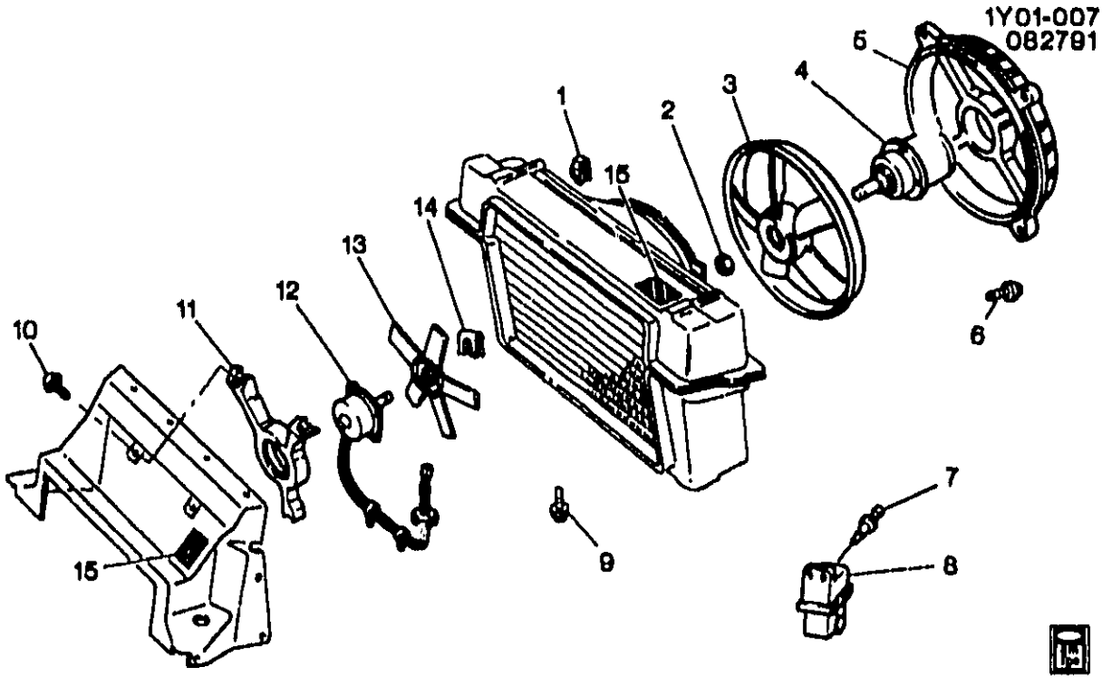

1Y01-007

1985-1991 Y ENGINE COOLANT FAN (L98)

1.		8.921	NUT, U SHAPE MULTI THD (M8X1.25)	11516150
2.	2-A8	1.055	NUT, ELEC CLG FAN (AC-DELCO #22082538)	22082538
3.	2-A8	1.055	FAN KIT, ELEC CLG-LH (AC-DELCO #15-8476)	22098793
	2-A8	1.055	FAN KIT, ELEC CLG (1990-91) (AC-DELCO #15-8468)	22098785
4.	2-A8	1.055	MOTOR KIT, ELEC CLG FAN (1985-89) (AC-DELCO #15-8498)	22137318
	2-A8	1.055	MOTOR KIT, ELEC CLG FAN W/BRKT (1990-91) (AC-DELCO #15-8404)	22104439
5.	2-A28	1.277	SHROUD KIT, ELEC CLG FAN (1985-89) (AC-DELCO #22040195)	22040195
	2-A28	1.277	SHROUD KIT, ELEC CLG FAN (1990-91)	
6.		8.900	BOLT, HEX W/CON WA (M8X1.25X25) 9.8 POR	11508269
7.	2-A8	1.055	RETAINER, FAN RLY PUSH IN (1.276)	20664092
8.	2-A8	1.055	RELAY, ENG COOL FAN (1985-87) (AC-DELCO #15-8333)	10038311
	2-A8	1.055	RELAY, ENG COOL FAN (1988-91) (AC-DELCO #15-8240)	14089936
9.		8.977	SCREW, SEMS HEX W/FL WA (M6.3X1.81X20) 6010M PZOR	12337828
10.		8.977	SCREW, BRKT CLG FAN (M6.3X1.81X25) POR	11505023
11.	2-A8	1.055	BRACKET KIT, ELEC CLG FAN (1985-89)	14089160
	2-A8	1.055	BRACKET KIT, ELEC CLG FAN (1990-91)	22074984
12.	2-A8	1.055	MOTOR KIT, ELEC CLG FAN (1985-89 B4P) (AC-DELCO #15-8262)	10074158
13.	2-A8	1.055	FAN KIT, ELEC CLG (1985-89 B4P) (AC-DELCO #15-8603)	10074159
	2-A8	1.055	FAN KIT, ELEC CLG (1990-91) (AC-DELCO #15-8468)	22098785
14.		DISCON	RETAINER, ELEC CLG FAN (1985-89 B4P)	10074160
	2-A8	1.055	NUT, ELEC CLG FAN (AC-DELCO #22082538)	22082538
15.	2-N23	8.808	LABEL, FAN BLADE CAUTION (1990-91)	10120010

RPO DEFINITIONS
L98 – ENGINE, 5.7L, (5.7-8) 350 CID, V8, TPI

© 2000 GENERAL MOTORS SERVICE PARTS OPERATIONS-CHEVROLET-14Y

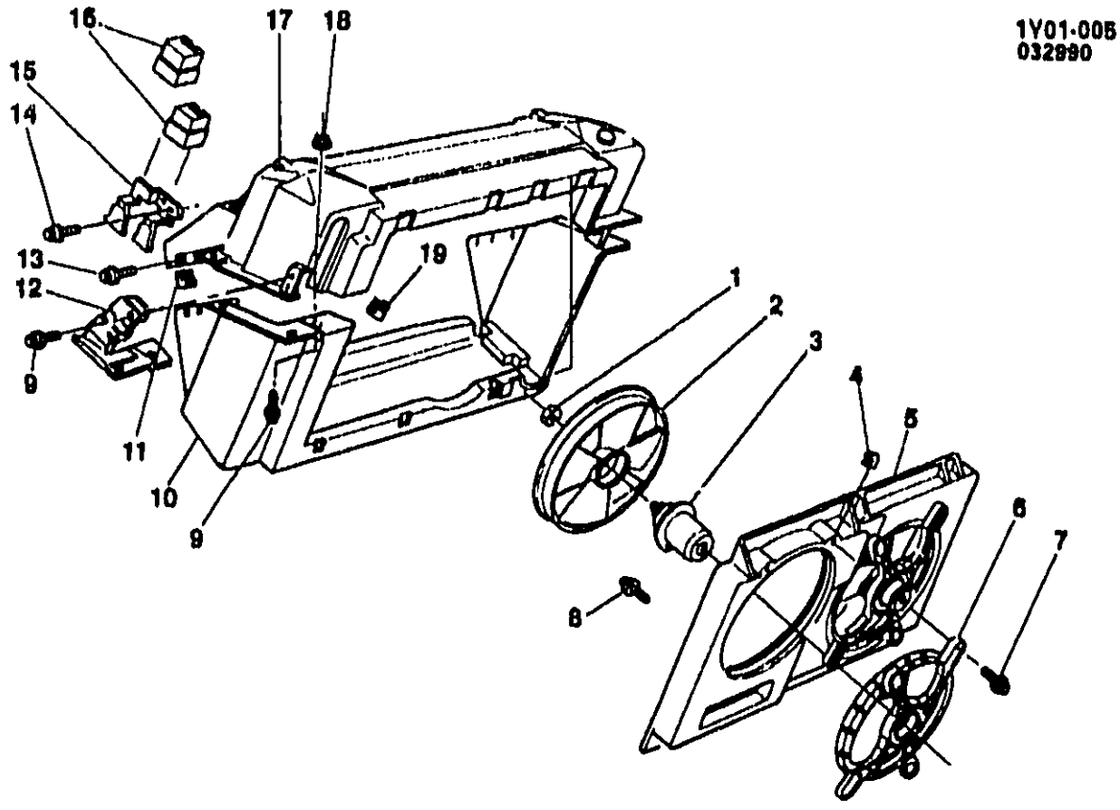

1Y01-C05

1990-1994 Y ENGINE COOLANT FAN (LT5)
1992-1994 Y ENGINE COOLANT FAN (LT1)

1.	2-A8	1.055	NUT, ENG COOL FAN BLADE (M8X1.25 LH THD, USE W/CLOCKWISE ROTATION MOTORS) (AC-DELCO #22082538)	90-94	Y	AR	22082538
2.	2-A8	1.055	FAN KIT, ENG ELEC COOL (RT OR LFT HAND SI) (AC-DELCO #15-8468)	90-94	Y	2	22098785
3.	2-A8	1.055	MOTOR KIT, ENG COOL FAN (AC-DELCO #15-8404)	90-94	Y	1	22104439
4.		8.921	NUT, U SHAPE TYPE P, M6.3X1.81, PNL RANGE.65-3.8, PEOR	90-94		AR	11514290
5.	2-A28	1.277	SHROUD, ENG COOL FAN	90-94	Y	1	10157958
	2-N23	8.808	LABEL, FAN BLADE CAUTION (BLACK NYLON)	90-94	Y	1	10120010
6.	2-A8	1.055	BRACKET KIT, ENG COOL FAN (RT OR LFT HAND SI)	90-94	Y	2	22074984
7.		8.900	BOLT, HEX W/CON WA	90-94		AR	11508269
8.		8.977	SCREW, HWH TAP W/FL WA M6.3X1.81X25 POR	90-94		AR	11505023
9.		8.900	BOLT ASM, HEX W/CON WA, M6X1X25, 17 OD, FULL THD, AC PT, 9.8, CD CHROMATE BLK	90-94		AR	11509363
10.	2-A26	1.270	SUPPORT, RAD LWR	90-94	Y	1	10219096
11.		8.921	NUT, M4.2X1.4, 19.3X213.6.8.9 (AC-DELCO #15650655)	90-94		AR	15650655

© 2000 GENERAL MOTORS SERVICE PARTS OPERATIONS-CHEVROLET-14Y

							1Y01-005
12.	2-A28	1.274	BRACKET, RAD SUPT (1.270) ...	90-94	Y	1	14104391
13.		8.977	BOLT, SCR HEX W/FLAT WA 12 DIA TYPE AB	90-94	.....	AR	11509374
14.		8.900	BOLT, M6X1X12, 10 THD, 11.6 OD, 9.8 GM500-M, POR, MACH (AC-DELCO #11514149)	90-94	.....	AR	11514149
15.	2-A8	1.055	BRACKET, FAN CONT RLY (STEEL) (3.0"X2.0") (76.7MMX51.0MM))	90-94	Y	1	14104140
16.	2-A8	1.055	RELAY, FAN CONT (5-PIN OVAL SHAPE) (USE W/CONN 15306002) (AC-DELCO #15-8240)	90-94	Y	2	14089936
17.	2-A26	1.270	SUPPORT, RAD UPR	90-94	Y	1	10265847
18.		8.917	NUT, HEX W/CON WA M6X1X5 (9) 7111M 16-OD	90-94	.....	AR	11510793
19.		8.921	NUT, (SPRING, TYPE C, U-SHAPED, MULTI THD) (M6X1, 1060 PEOR)	90-94	.....	AR	12337917

RPO DEFINITIONS
LT1 - ENGINE-GAS, 8 CYL, 5.7L(5.7P),MFI,HO
LT5 - ENGINE,5.7L(5.7J),TPI

1Y01-019 01/20/95

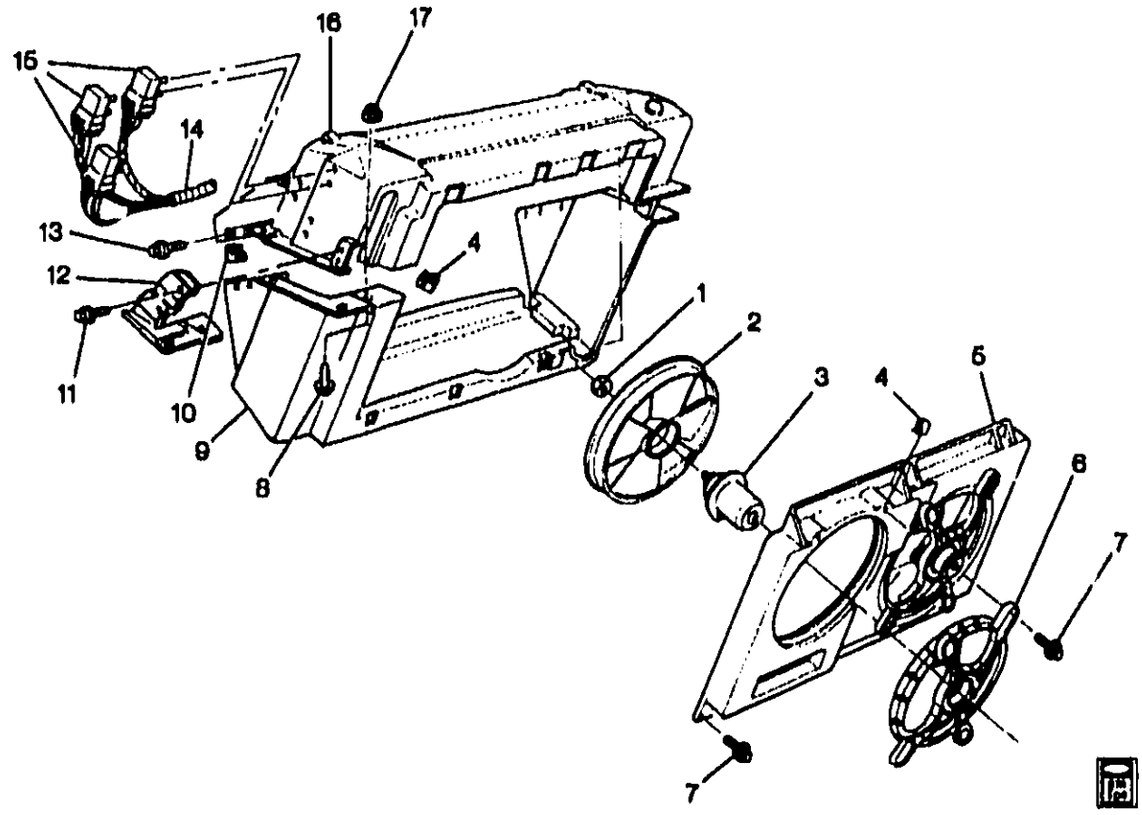

1Y01-019

1995 Y ENGINE COOLANT FAN (LT5)
1995-1996 Y ENGINE COOLANT FAN (LT1)
1996 Y ENGINE COOLANT FAN (LT4)

1.	2-A8	1.055	NUT, ENG COOL FAN BLADE (M8X1.25 LH THD, USE W/CLOCKWISE ROTATION MOTORS) (AC-DELCO #22082538)	95-96	Y	1	22082538
2.	2-A8	1.055	FAN KIT, ENG ELEC COOL (RT OR LFT HAND SI) (AC-DELCO #15-8468)	95-96	Y	2	22098785
3.	2-A8	1.055	MOTOR KIT, ENG COOL FAN (AC-DELCO #15-8404)	95-96	Y	1	22104439
	2-A8	1.055	CONNECTOR, ENG COOL FAN WRG (OVAL) (2-WAY F) (W/LEADS) (2.535) (AC-DELCO #PT189)	95-96	Y	2	12101917
4.		8.921	NUT, (SPRING, TYPE C, U-SHAPED, MULTI THD) (M6X1, 1060 PEOR)	95-96	.....	AR	12337917
5.	2-A28	1.277	SHROUD, ENG COOL FAN	95-96	Y	1	10157958
6.	2-A8	1.055	BRACKET KIT, ENG COOL FAN (RT OR LFT HAND SI)	95-96	Y	2	22074984
7.		8.900	BOLT, 6.0X1.0X30.0, GM 6174M (ENG OIL CLR HOSE)	95-96	.....	1	1635219
8.	2-A26	1.271	BOLT, RAD SUPT (M6 X 1 X 24) ..	95-96	Y	4	10135646
9.	2-A26	1.270	SUPPORT, RAD LWR	95-96	Y	1	10219096
10.		8.921	NUT, M4.2X1.4, 19.3X213.6.8.9 (AC-DELCO #15650655)	95-96	.....	AR	15650655

© 2000 GENERAL MOTORS SERVICE PARTS OPERATIONS-CHEVROLET-14Y

							1Y01-019
11.		8.900	**BOLT ASM**, HEX W/CON WA, M6X1X25, 17 C D, FULL THD, AC PT, 9.8, CD CHROMATE BLK	95-96	.....	AR	11509363
12.	2-A28	1.274	**BRACKET**, RAD SUPT (1.270) ...	95-96	Y	1	14104391
13.		8.977	**BOLT**, SCR HEX W/FLAT WA 12 DIA TYPE AB	95-96	.....	AR	11509374
14.	2-N9	2.480	**HARNESS**, FWD LP WRG	95	Y (LT1) (EXC T72, T84, T85, T90)	1	12130484
	2-N9	2.480	**HARNESS**, FWD LP WRG	95	Y (LT5) (EXC T72, T84, T85, T90)	1	12130486
	2-N9	2.480	**HARNESS**, FWD LP WRG	96	Y (EXC T72, T84, T85, T90)	1	12163717
	2-A8	1.055	**RETAINER**, FAN CONT RLY (ATCHS TO RELAY CONN)	95	Y	3	12129271
	2-N9	2.480	**HARNESS**, FWD LP WRG	95	Y (LT1, T72, T84, T85, T90) (EXPORT)	1	12130485
	2-N9	2.480	**HARNESS**, FWD LP WRG	96	Y (T72, T84, T85, T90) (EXPORT)	1	12163718
15.	2-A8	1.055	**RELAY**, FAN CONT (BLACK) (5-WAY M) (USED W/CONNECTOR 15306045) (9.277) (AC-DELCO #15-8719)	95-96	Y	1	12193601
	2-A8	1.055	**RELAY**, FAN CONT (GRAY) (SPST 280 MINI) (4-WAY) (2.100) (AC-DELCO #12193603)	95-96	Y	2	12193603
	2-A8	1.055	**CONNECTOR**, RLY-FAN CONT (5-WAY F) (W/LEADS & RELAY) (8.855) (AC-DELCO #PT1016) ..	95-96	Y	1	15305875
	2-A8	1.055	**CONNECTOR**, RLY-FAN CONT (TWO 12GA AND THREE 14GA WIRES) (8.855) (AC-DELCO #PT1205)	95-96	Y	1	15306045
16.	2-A26	1.270	**SUPPORT**, RAD UPR	95-96	Y	1	10265847
17.		8.917	**NUT**, HEX W/CON WA M6X1X5.5 (9) 7111M 16-OD	95-96	.....	AR	11516793

RPO DEFINITIONS

LT1 – ENGINE-GAS, 8 CYL, 5.7L(5.7P),MFI,HO
LT4 – ENGINE GAS, 8 CYL, 5.7L, MFI, HIGH OUTPUT
LT5 – ENGINE,5.7L(5.7J),TPI
T72 – HEADLAMPS,LH RULE OF THE ROAD(EXPORT)
T84 – HEADLAMPS,RH RULE OF THE ROAD,RECTANGULAR(MARKED E)(EXPORT)
T85 – HEADLAMPS,LH RULE OF THE ROAD,RECTANGULAR(MARKED E)(EXPORT)
T90 – LAMP,SIGNALING AND MARKER(EXPORT)

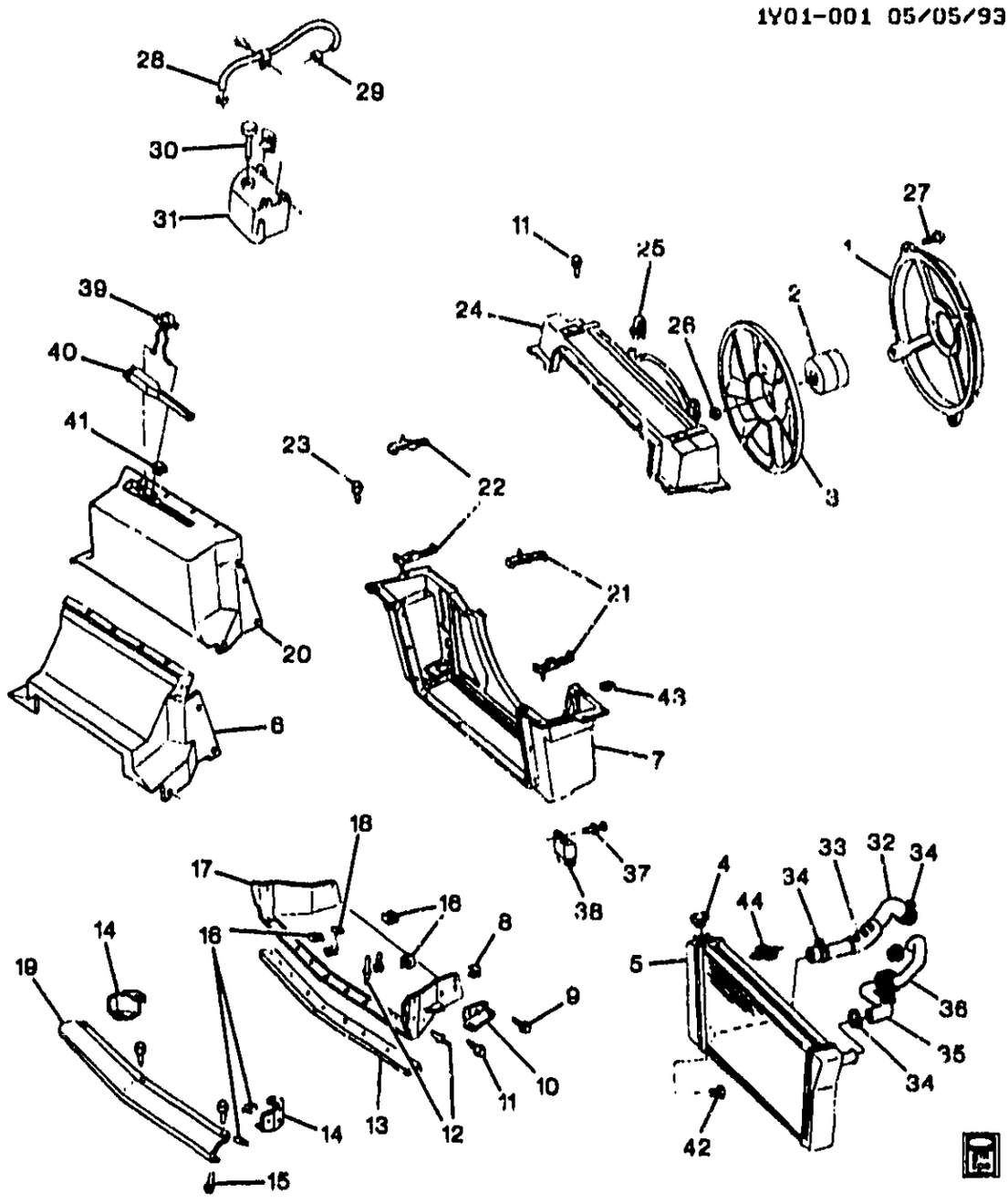

1Y01-001

1984 Y HOSES & PIPES/RADIATOR RADIATOR & RELATED PARTS-5.7L V8 (L83/5.7-8)
1985-1989 Y HOSES & PIPES/RADIATOR RADIATOR & RELATED PARTS-5.7L V8 (L98/5.7-8)

1.	2-A26	1.277	SHROUD KIT, ELEC CLG FAN (AC-DELCO #22040195)	22040195
2.	2-A8	1.055	MOTOR KIT, ELEC CLG FAN (1984) (UTILIZES A 2-PIN CONN) (MUST USE WITH 22098793 FAN KIT) (415MM DIA, 5 STRAIGHT BLADES) (AC-DELCO #15-8498)	22137318
	2-A8	1.055	MOTOR KIT, ELEC CLG FAN (1985-88) (A NEW FAN MAY BE REQUIRED WHEN USING 22088773) (AC-DELCO #15-8498)	22137318
	2-A8	1.055	MOTOR KIT, ENG COOL FAN (1989) (5.7-8) (AC-DELCO #15-8498)	22137318
3.	2-A8	1.055	FAN KIT, ELEC CLG (1984) (AC-DELCO #15-8460)	22036292
	2-A8	1.055	FAN KIT, ELEC CLG-LH (AC-DELCO #15-8476)	22098793
4.	2-A19	1.203	CAP, RAD FIL (1984) (AC-DELCO #RC27)	10409635

© 2000 GENERAL MOTORS SERVICE PARTS OPERATIONS-CHEVROLET-14Y

				1Y01-001
	2-A19	1.203	CAP, RAD FIL (1985-89) (AC- DELCO #RC44)	6410962
5.	2-A20	1.219	RADIATOR (REFER TO CATALOG FOR USAGE) (AC-DELCO #20461)	
	2-A20	1.219	COCK, RAD DRN	
6.	2-A26	1.272	BAFFLE, RAD AIR (UPR) (1985-89)	14078651
7.	2-A26	1.270	SUPPORT, RAD LWR (1984)	14076564
	2-A26	1.270	SUPPORT, RAD LWR (1985-89)	14076564
8.		8.921	NUT, U-SHAPE (M4.2 X 1.41 X .065) (ZOR) (AC-DELCO #15650655)	15650655
9.		8.977	SCREW, P/HD W/WA (M6.3 X 1.81 X 25)	
10.		DISCON	BRACKET, WHL HSE PNL-LH (1984)	14069627
		DISCON	BRACKET, WHL HSE PNL-RH (1984)	14069628
		DISCON	BRACKET, WHL HSE PNL-LH (1985-87)	14081835
		DISCON	BRACKET, WHL HSE PNL-RH (1985-87)	14081836
11.		8.900	SCREW, HWH (M4.2 X 1.41 X 16)	
12.		N.S.	RIVET	
13.	2-A28	1.276	RETAINER, RAD AIR LWR BFL	14043167
14.	2-A25	1.267	BRACKET, RAD GRL INR-LH	14058299
	2-A25	1.267	BRACKET, RAD GRL INR-RH	14058300
15.		8.977	SCREW, HWH C/R TAP (M4.2 X 1.41 X 20) ZOR	16516859
		8.929	WASHER, FL (M5.46 X 15 X 1.6)	
16.		8.921	NUT, (#8-18) (.78X.53X.06-.12)	12338121
17.	2-A26	1.272	BAFFLE, RAD AIR LWR (1984)	14030214
	2-A26	1.272	BAFFLE, RAD AIR LWR (1985-89)	14078642
18.	2-A25	1.267	BRACKET, RAD GRL CTR	10077355
19.	2-A25	1.267	PANEL, RAD GRL MT	14058670
20		DISCON	BAFFLE, RAD AIR UPR (1984)	14049232
21.	2-A26	1.270	INSULATOR, RAD MT-LH (1984-85)	14043103
	2-A26	1.270	INSULATOR, RAD MT-LH (1986-89)	14081867
22.		DISCON	INSULATOR, RAD MT-RH (1984-85)	14043104
	2-A26	1.270	INSULATOR, RAD MT-RH (1986-89)	14081868
23.		DISCON	BOLT, HEX (M8X1.25X30)	11508517
		8.928	WASHER, SPL (5/32" ID 7/5)	
24.	2-A20	1.219	SUPPORT, RAD UPR	10065785
25.		8.921	NUT, U/SPR (M8 X 1.25)	11516150
26.	2-A8	1.055	NUT, CLG FAN (AC-DELCO #22082538)	22082538
27.		8.900	BOLT, WA (M8 X 1.25 X 25)	11508269
28.		8.982	HOSE, BULK (3/8"ID) (AC-DELCO #9438373)	9438373
29.	2-A18	1.166	CLAMP, WORM TYPE (.56"TO 1.06"DIA)	22518665
30.	2-A24	1.240	CAP, CLNT RCVY TANK	10239665
31.	2-A24	1.240	RESERVOIR, RCVY	10239666
32.	2-A19	1.173	HOSE, RAD OLT (1984)	14051150
	2-A19	1.173	HOSE, RAD OLT (Y07) (1985-86)	14078648
	2-A19	1.173	HOSE, RAD OLT (Y67) (1986-87)	14092705
	2-A19	1.173	HOSE, RAD OLT (Y07) (EXC PERF, SPT HDLG PKG) (1987)	14078643
	2-A19	1.173	HOSE, RAD OLT (Y07) (W/PERF, SPT HDLG PKG) (1987)	14092705
	2-A19	1.173	HOSE, RAD OTLT (1988-89)	10135651
33.		N.S.	GUARD, RAD OTLT HOSE	
34.		8.948	CLAMP, HOSE (WORM GEAR, ALL SS BLK) (84-89) (AC-DELCO #12338017)	12338017
		8.948	CLAMP, WORM GEAR (28.6 TO 76.2 DIA) (1989) (AC-DELCO #12338017)	12338017
35.	2-A18	1.159	HOSE, RAD INLT (1984)	14064509
	2-A18	1.159	HOSE, RAD INLT (1985-89)	10135650
36.		DISCON	SUPPORT, INLT HOSE (1984)	14064710
		DISCON	SUPPORT, INLT HOSE (1985-89)	14084441
37.	2-A8	1.055	RETAINER, FAN (1.276)	20664092

© 2000 GENERAL MOTORS SERVICE PARTS OPERATIONS-CHEVROLET-14Y

				1Y01-001
38.	2-A8	1.055	RELAY, ENG COOL FAN (1984) (AC-DELCO #15-8218)	14078902
	2-A8	1.055	RELAY, ENG COOL FAN (1985-87) (AC-DELCO #15-8333)	10038311
	2-A8	1.055	RELAY, ENG COOL FAN (1988-89) (AC-DELCO #15-8240)	14089936
39.		DISCON	LATCH, JACK HDL STOW (1984-85)	14079409
40.	2-N27	6.821	HANDLE, JACK/WHL WRENCH (INCL WHL NUT SOCKET)	14050029
41.		6.921	NUT, U-SHAPE (M6 X 1 X 6.3 X 13.5)	
42.		6.951	DRAIN COCK, RADIATOR (PLAS) (AC-DELCO #3056858)	3056858
43.		6.921	NUT, SPRING TYPE-C U-SHAPE (M6X1)	12037917
44.	2-A19	1.203	SWITCH, LOW ENG COOL LVL (86-89) (AC-DELCO #10054615)	10054615

© 2000 GENERAL MOTORS SERVICE PARTS OPERATIONS--CHEVROLET-141

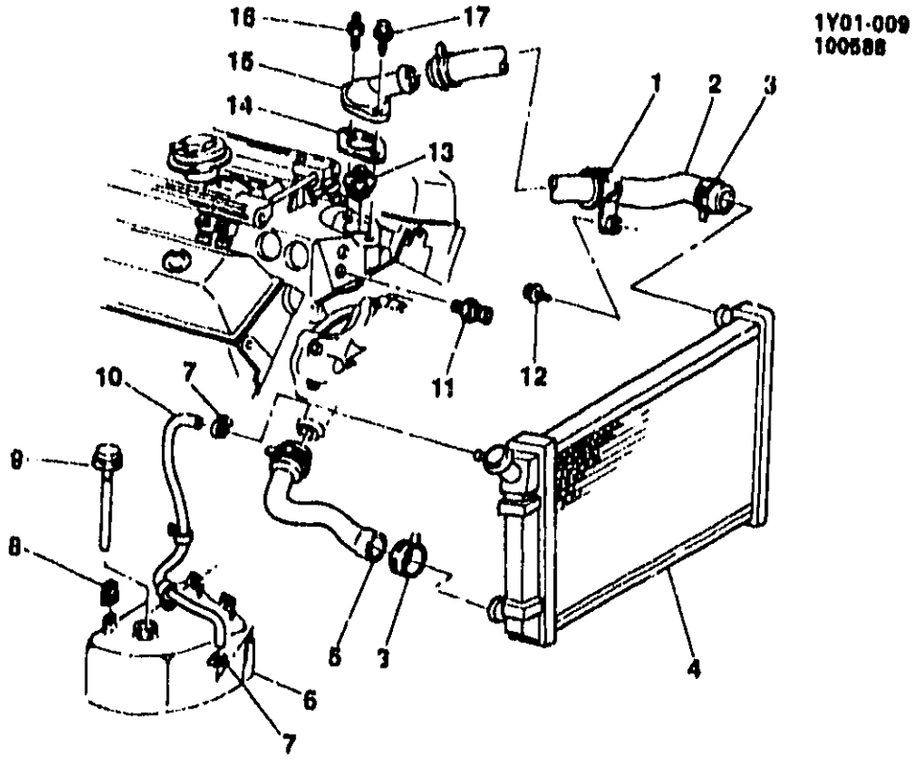

1Y01-009

1984 Y HOSES & PIPES/RADIATOR (L83)
1985-1989 Y HOSES & PIPES/RADIATOR (L98)

1.		DISCON	SUPPORT, RAD HOSE (1984)	14064510
		DISCON	SUPPORT, RAD HOSE (1985-89)	14084441
2.	2-A18	1.159	HOSE, RAD INL (1984)	14064509
	2-A18	1.159	HOSE, RAD INL (1985-89)	10135650
3.		8.948	CLAMP, WORM GR (28.6 TO 76.2) SST BLA (AC-DELCO #12338017)	12338017
4.	2-A20	1.219	RADIATOR (SEE CHART IN GROUP 1.000 FOR USAGE) (AC-DELCO #20461)	52453612
5.	2-A19	1.173	HOSE, RAD OTLT (1984) (SEE PARTS SECTION FOR ADDITIONAL USAGE)	14051150
6.	2-A24	1.240	RESERVOIR, RCVY	10239666
7.		8.948	CLAMP, WORM GR (.250 TO .625) SST BLA (AC-DELCO #1648216)	1648216
8.		8.921	NUT, U SHAPE SPR (M6X1) PHOS	12337917
9.	2-A24	1.240	CAP, CLNT RCVY RESVR	10239665
10.		8.962	HOSE, (3/8) (CUT AS REQD) (AC-DELCO #9438373)	9438373
11.	2-A16	1.150	SENSOR, ENG COOL TEMP GA (1984) (AC-DELCO #25036135)	25036135
	2-N20	3.682	SENSOR, ENG COOL TEMP GA (1985-89) (AC-DELCO #213-310)	12146312
12.		8.900	BOLT, HEX W/CON WA (M8X1.25X25) 9.8 POR	11508269
13.	2-A25	1.246	THERMOSTAT (195 DEG) (AC-DELCO #131-87)	12514334
14.	2-A18	1.154	GASKET, CLNT OTLT (AC-DELCO #10105135)	10105135
15.	2-A17	1.153	OUTLET, CLNT (AC-DELCO #15-1443)	14084383
16.	2-A17	1.153	BOLT, CLNT OTLT (3/8-16X1.25) 280M PZOR (1984-85)	10198997
	2-A17	1.153	BOLT, CLNT OTLT (3/8-16X1.25) 280M PZO (1986-89) (0.683)	10198997
17	2-A17	1.153	BOLT, CLNT OTLT (3/8-16X1.25) 280M PZO	10198997

© 2000 GENERAL MOTORS SERVICE PARTS OPERATIONS-CHEVROLET-14Y

RPO DEFINITIONS
L83 – ENGINE, 5.7L (5.7–8), V8,(CFI–CROSSFIRE)(TBI)
L98 – ENGINE, 5.7L, (5.7–8) 350 CID, V8, TPI

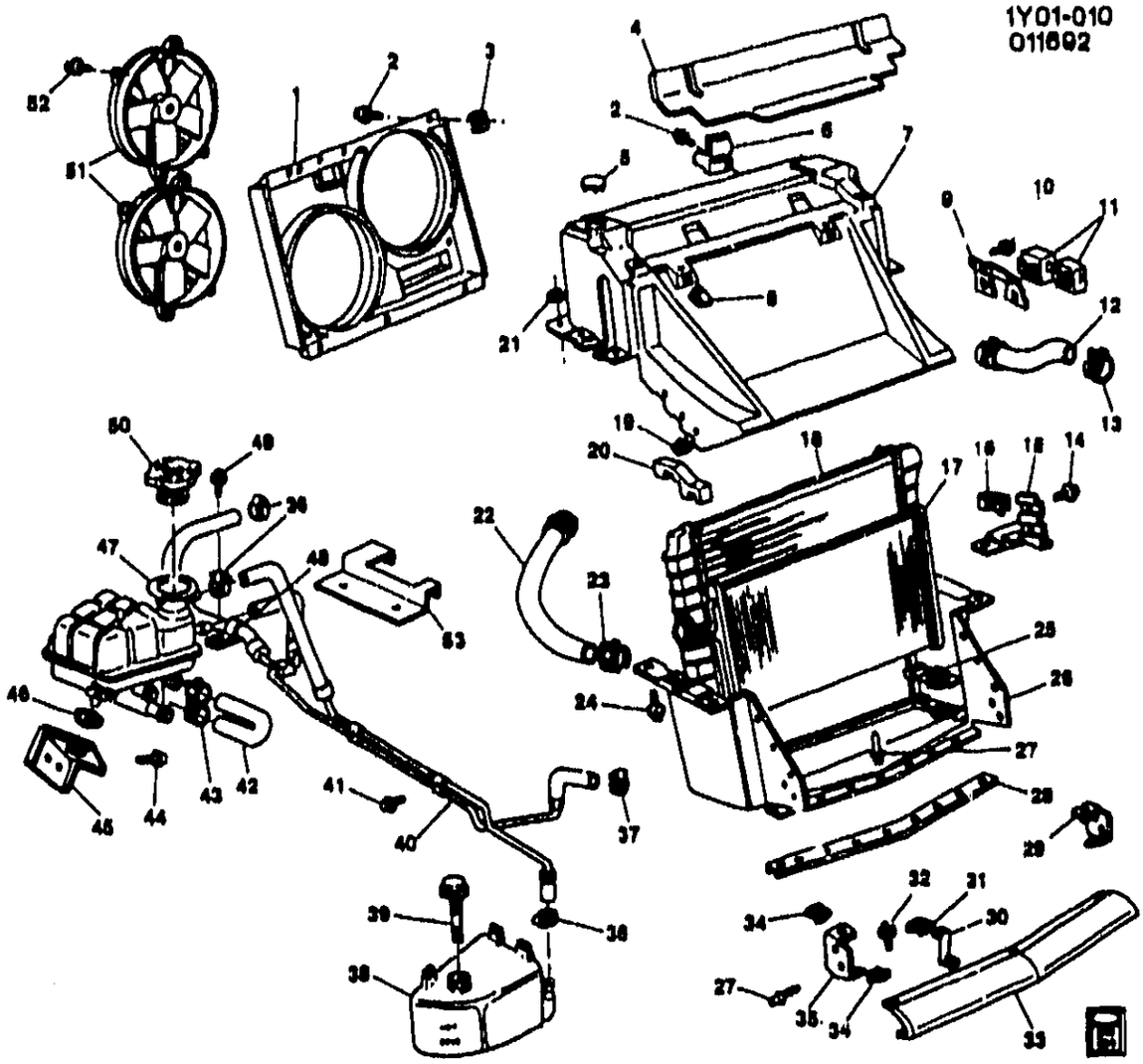

1Y01-010

1990-1991 Y HOSES & PIPES/RADIATOR RADIATOR & RELATED PARTS(L98)

1.	2-A28	1.277	SHROUD, RAD SHRD	10157958
2.		8.977	SCREW, HWH TAP W/FL WA M6.3X1.81X25 POR (AR)	11505023
3.		8.921	NUT, U SHAPE TYPE P, M6.3X1.81, PNL RANGE.65-3.8, PEOR (AR)	11514290
4.	2-A26	1.272	DEFLECTOR, RAD AIR (UPR)	14104753
5.		N.S.	PLUG, COOL RCVY RSVR HOSE \CC HOLE	
6.	2-A18	1.166	SUPPORT, RAD HOSE	10086195
7.	2-A26	1.270	SUPPORT, RAD UPR	10265847
8.		8.921	NUT, (SPRING, TYPE C, U-SHAPED, MULTI THD) (M6X1, 1060 PEOR) (AR)	12337917
9.	2-A8	1.055	BRACKET, FAN CONT RLY	14104140
10.		8.900	BOLT, M6X1X12, 10 THD, 11.6 OD, 9.8 GM500-M, POR, MACH (AR) (AC-DELCO #11514149)	11514149
11.	2-A8	1.055	RELAY, ENG COOL FAN (AC-DELCO #15-8240)	14089936
12.	2-A18	1.159	HOSE, RAD INL	10135652
13.	2-A18	1.166	CLAMP, RAD INL HOSE RAD	21030894
14.		8.900	BOLT ASM, HEX W/CON WA, M6X1X25, 17 OD, FULL THD, AC PT, 9.8, CD CHROMATE BLK (AR)	11509363
15.	2-A28	1.274	BRACKET, RAD SUPT	14104391
16.		8.921	NUT, (SPRING, TYPE C, U-SHAPED, MULTI THD) (M6X1, 1060 PEOR) (AR)	12337917

© 2000 GENERAL MOTORS SERVICE PARTS OPERATIONS - CHEVROLET - 14Y

				1Y01-010
17.	2-N28	9.190	CONDENSER, A .C. (AC-DELCO #15-6688)	52456459
18.	2-A20	1.219	RADIATOR (CODE LO) (SEE GROUP 1.000 RADIATOR CHART FOR USAGE) (AC-DELCO #20620)	52460411
	2-A19	1.173	COCK, RAD DRN (AC-DELCO #3056858)	3056858
19.		8.921	NUT, M4.2X1.4, 19.3X213.6.8.9 (AR) (AC-DELCO #15650656)	15650656
20.	2-A26	1.270	INSULATOR, RAD MT	10086303
21.		8.917	NUT, HEX W/CON WA M6X1X5.5 (9) 7111M 16-OD (AR)	11516793
22.	2-A19	1.173	HOSE, RAD OTLT	10135653
23.	2-A18	1.166	CLAMP, RAD OTLT HOSE RAD	10158012
24.	2-A26	1.271	BOLT, RAD SUPT (6X1X24) 9.8 POR	10135646
25.	2-A26	1.270	INSULATOR, RAD MT LWR-RH	10082904
	2-A26	1.270	INSULATOR, RAD MT LWR-LH	10082905
26.	2-A26	1.270	SUPPORT, RAD LWR	10219096
27.		N.S.	RIVET, LRG DOME HD BLIND	
28.	2-A28	1.276	RETAINER, RAD AIR BFL LWR	14043167
29.	2-A25	1.267	BRACKET, RAD GRL INNER--LH (1990)	14104983
30.	2-A25	1.267	BRACKET, RAD GRL CTR (1990)	10077355
31.		8.921	NUT, M6X1-6.3 PNLS 13.5 DEEP ZOR (AR)	11504978
32.		8.977	BOLT, HWH M4.2X1.41X25 PZOR TAP 17 OD (AR)	11508233
33.	2-A25	1.267	PANEL, RAD GRL MT (1990)	14104982
34.		8.921	NUT, U SHAPE (M4.2X1.41) ZOR (1990) (AC-DELCO #15650655)	15650655
35.		DISCON	BRACKET, RAD GRL INNER-RH (1990)	14104984
36.		8.948	CLAMP, WORM GR (.250 TO .625) SST BLA (1990) (AC-DELCO #1648216)	1648216
	2-A24	1.240	CLAMP, RAD SURGE TK AIR BL HOSE ((1991))	22527587
37.	2-A18	1.166	CLAMP, RAD OTLT HOSE RAD	10158012
38.	2-A24	1.240	RESERVOIR, RCVY	10239666
39.	2-A24	1.240	CAP, CLNT RCVY RESVR	10239665
40.	2-A24	1.240	HOSE, RAD SURGE TK AIR BFL & OVERFLOW	10135654
41.		8.977	SCREW, HWH TAP M4.2X1.41X16 9.2-OD DRILPT BLK PZOR (AR)	11509135
42.	2-A24	1.240	HOSE, RAD SURGE TK INL	10257254
43.		8.948	CLAMP, WORM GEAR (15.7 TO 31.8) SS (AC-DELCO #12337891)	12337891
44.		8.977	SCREW, HEX W/FLAT WA (AR)	12337828
45.	2-A24	1.240	BRACKET, HI FILL CLNT RCVY RSVR ON W/H PNL	10082901
46.	2-A24	1.240	RETAINER, CLNT RCVY RSVR BRKT	14104598
47.	2-A24	1.240	TANK, RAD SURGE (HI FILL) (INCLS SENSOR) (1990)	10157994
	2-A24	1.240	TANK, RAD SURGE (HI FILL) (INCLS SENSOR) (1991)	10157994
48.		8.950	CLAMP, STEEL LOOP CUSHIONED (1/2)	797923
49.		8.977	SCREW, HEX W/FL WA M4.2X2.25X20 TAP POR (AR)	11508443
50.	2-A19	1.203	CAP, RAD FIL (1990) (AC-DELCO #RC44)	6410962
	2-A19	1.203	CAP, RAD FIL (1991) (AC-DELCO #RC27)	10409635
51.		N.S.	FAN, ENG CLNT (CMPTS SERV) (1990) (SEE GROUP 1.000 "ENGINE COOLANT FAN" FOR DETAIL ILLUSTRATED VIEW.)	
		N.S.	FAN, ENG CLNT (CMPTS SERV) (1991) (SEE GROUP 1.000 "ENGINE COOLANT FAN" FOR DETAIL ILLUSTRATED VIEW.)	
52.		8.900	BOLT, HEX W/CON WA (AR)	11508269
53.	2-A24	1.240	BRACKET, RAD SURGE TK	52463838
		8.977	BOLT, HWH M4.2X1.41X25 PZOR TAP 17 OD (BOLT, HWH M4.2X1.41X25 PZOR TAP 17 OD) (AR)	11508233

RPO DEFINITIONS
L98 – ENGINE, 5.7L, (5.7-8) 350 CID, V8, TPI

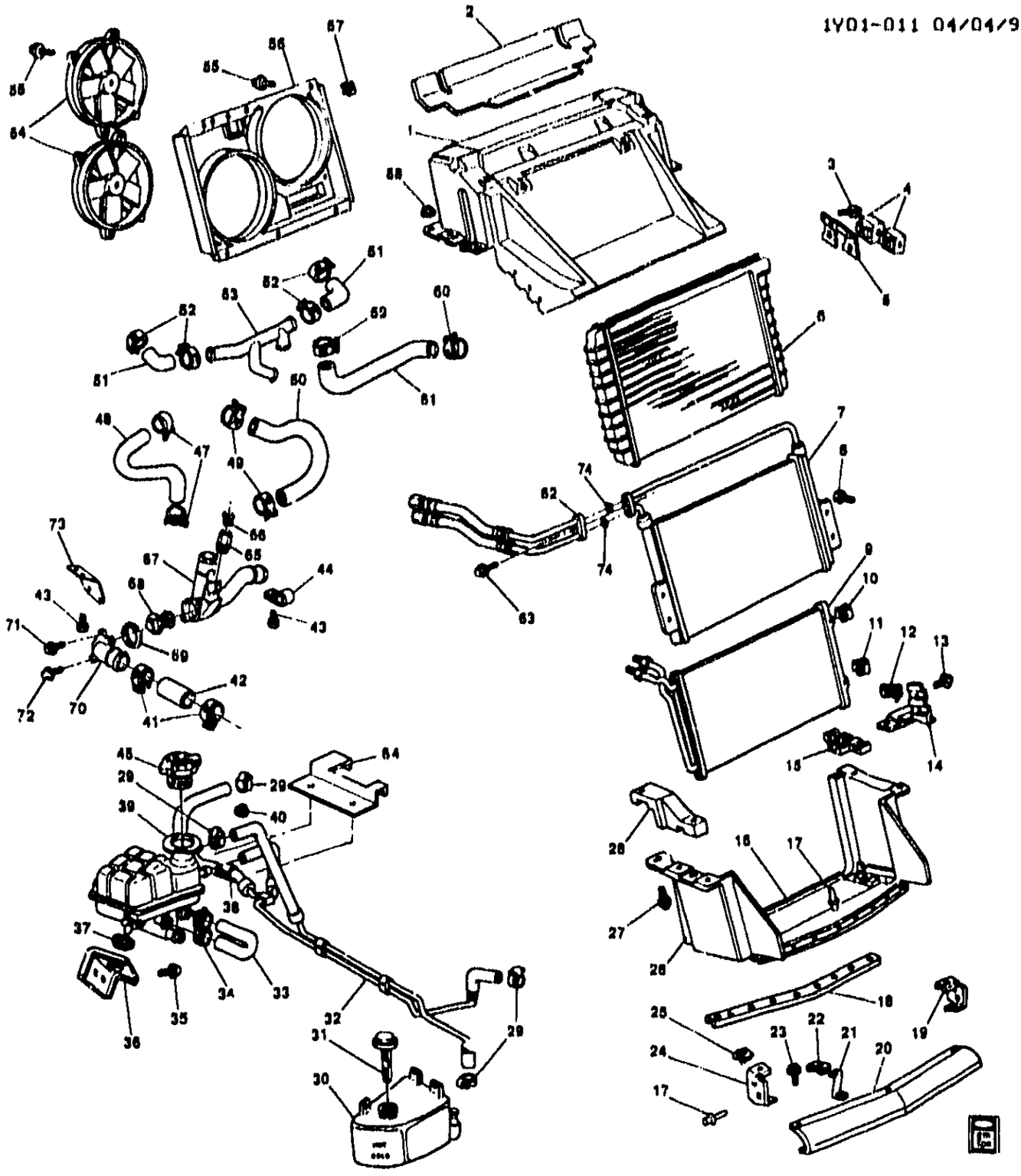

1Y01-011

1990-1991 Y HOSES & PIPES/RADIATOR RADIATOR & RELATED PARTS(LT5)

1.	2-A26	1.270	SUPPORT, RAD UPR	10265847
2.	2-A26	1.272	DEFLECTOR, RAD AIR UPR	14104753
3.		8.900	BOLT, M6X1X12, 10 THD, 11.6 OD, 9.8 GM500-M, POR, MACH (AR) (AC-DELCO #11514149)	11514149
4.	2-A8	1.055	RELAY, FAN CONT (AC-DELCO #15-8240)	14089936
5.	2-A8	1.055	BRACKET, FAN CONT RLY	14104140

© 2000 GENERAL MOTORS SERVICE PARTS OPERATIONS-CHEVROLET-14Y

				1Y01-011
6.	2-A20	1.219	RADIATOR, COOL (CODE LC, YC) (AC-DELCO #20620)	52460411
7.	2-B5	1.540	COOLER, ENG OIL	14104653
8.		8.977	BOLT, SCR HEX W/FLAT WA 12 DIA TYPE AB (AR)	11509374
9.	2-N28	9.190	CONDENSER, A/C (1990-91) (AC-DELCO #15-6668)	52456459
10.		8.921	NUT, U-TYPE, 4.2X1.41, DIM A-15, DIM B-14 DIM C-8.63, 1050, PZOR (AR)	12338121
11.		8.921	NUT, WU SHAPE SPR/P/#8-18X.585, PC (AR)	9433155
12.		8.921	NUT, (SPRING, TYPE C, U-SHAPED, MULTI THD) (M6X1, 1060 PEOR) (AR)	12337917
13.		8.900	BOLT ASM, HEX W/CON WA, M6X1X25, 17 OD, FULL THD, AC PT, 9.0, CD CHROMATE BLK (AR)	11509363
14.	2-A28	1.274	BRACKET, RAD SUPT	14104391
15.	2-A26	1.270	INSULATOR, RAD LWR (RH)	10082904
	2-A26	1.270	INSULATOR, RAD LWR (LH)	10082905
16.	2-A26	1.270	SUPPORT, RAD LWR	10219096
17.		8.967	RIVET, POP, .188 SHANK DIA, .43 LEN, .625 OD, .188-.25 GRIP, ALUM, BA (AR)	9439559
18.	2-A28	1.276	RETAINER, RAD AIR LWR BFL	14043167
19.	2-A25	1.267	BRACKET, RAD GRL INR-LH (1990)	14104983
20.	2-A25	1.267	PANEL, RAD GRL MT (1990)	14104982
21.	2-A25	1.267	BRACKET, RAD GRL CTR (1990)	10077355
22.		8.921	NUT, M4.2X1.4, 19.3X213.6.8.9 (AR) (AC-DELCO #15650655)	15650655
23.		8.977	BOLT, HWH M4.2X1.41X25 PZOR TAP 17 OD (AR)	11508233
24.		DISCON	BRACKET, RAD GRL INR-RH (1990)	14104984
25.		8.921	NUT, M4.2X1.4, 19.3X213.6.8.9 (AR) (AC-DELCO #15650655)	15650655
26.	2-A26	1.270	SUPPORT, RAD LWR	10219096
27.	2-A26	1.271	BOLT, RAD SUPT	10135646
28.	2-A26	1.270	INSULATOR, RAD UPR (RH)	10082903
	2-A26	1.270	INSULATOR, RAD UPR (LH)	10082902
29.	2-A24	1.240	CLAMP, RAD SURGE TK AIR BL HOSE	22527587
30.	2-A24	1.240	RESERVOIR, COOL RCVY	10239666
31.	2-A24	1.240	CAP, COOL RCVY RSVR	10239665
32.	2-A24	1.240	HOSE, RAD SURGE TK AIR BL & OVFL	10135654
33.	2-A24	1.240	HOSE, RAD SURGE TK INL	10257254
34.		8.948	CLAMP, WORM GEAR (AR) (AC-DELCO #12337891)	12337891
35.		8.977	SCREW, HEX W/FLAT WA (AR)	12337828
36.	2-A24	1.240	BRACKET, COOL RCVY RSVR	10082901
37.	2-A24	1.240	RETAINER, COOL RCVY RSVR BRKT	14104598
38.		8.950	CLAMP, 1/2" STEEL LOOP CUSHIONED (AR)	797923
39.	2-A24	1.240	TANK, RAD SURGE	10157994
		DISCON	WIRE, ENG HARN TO CONT RESV	12069329
40.		8.917	NUT, HFH 6X1X7 SELF LK 14.2-OD (9) 7111M ALL MET PREV TORQ (AR)	11516075
41.	2-A18	1.166	CLAMP, RAD OTLT HOSE RAD	10158012
42.	2-A19	1.173	HOSE, RAD OTLT	10135660
43.		8.900	BOLT, HEX W/WA, M8X1.25X20, 8.8, PC (AR)	11504611
44.	2-A15	1.097	BRACKET, RAD BYPASS HOSE	14104771
45.	2-A24	1.240	CAP, COOL RCVY RSVR	10239665
47.		8.048	CLAMP, SPR (43.5MM TO 53.0MM) NOMINAL SIZE 50MM, STAMPED "U" (AR)	10108249
48.	2-A19	1.173	HOSE, RAD OTLT RR	10157990
49.	2-A18	1.166	CLAMP, RAD BYPASS HOSE	10157995
50.	2-A15	1.097	HOSE, RAD BYPASS	10135661
51.	2-A18	1.159	HOSE, RAD INL (ENG TO TEE)	10135658
52.	2-A18	1.166	CLAMP, RAD INL HOSE ENG	10108248
53.	2-A18	1.159	PIPE, RAD INL	14104460

© 2000 GENERAL MOTORS SERVICE PARTS OPERATIONS-CHEVROLET-14Y

54.		N.S.	FAN, ENG COOL (SEE GROUP 1.000 "ENGINE COOLANT FAN" FOR DETAIL ILLUSTRATED VIEW.)	
55.		8.977	SCREW, HWH TAP W/FL WA M6.3X1.81X25 PCR (AR)	11505023
56.	2-A28	1.277	SHROUD, ENG COOL FAN	10157958
57.		8.921	NUT, TYPE P-WU SPR M6.3X1.81 PHOS ORG (AR)	11504035
58.		8.921	NUT, (SPRING, TYPE C, U-SHAPED, MULTI THD) (M6X1, 1060 PEOR) (AR)	12337917
59.	2-A18	1.166	CLAMP, RAD INL HOSE ENG	10108248
60.	2-A18	1.166	CLAMP, RAD INL HOSE RAD	21030894
61.	2-A18	1.159	HOSE, RAD INL RR (TEE TO RAD)	10135659
62.	2-B5	1.540	HOSE, ENG OIL CLR INL & OTLT (INCLS ITEM 74)	12472184
63.		8.900	SCREW, (AR)	11505209
64.	2-A24	1.240	BRACKET, RAD SURGE TK	52463838
		8.977	BOLT, HWH M4.2X1.41X25 PZOR TAP 17 OD (BOLT, HWH M4.2X1.41X25 PZOR TAP 17 OD) (AR)	11508233
65.	2-N26	8.866	NIPPLE, HTR WAT ENG INL (INCLS ITEM 66)	24503681
66.	2-N27	8.846	RETAINER, HTR WAT FLOW C/VLV HOSE (ALSO PART OF ITEM 65 & 46)	10089613
67.		N.S.	HOUSING, ENG COOL THERM LWR (PART OF ITEM 46)	
68.	2-A25	1.246	THERMOSTAT, ENG COOL (AC-DELCO #131-51)	10135627
	2-A25	1.246	THERMOSTAT, ENG COOL (INCLS ITEM 65 THRU 73)	14104599
69.	2-A25	1.252	GASKET, ENG COOL THERM (AC-DELCO #10226107)	10226107
70.	2-A25	1.251	HOUSING, ENG COOL THERM UPR	14104784
71.		8.900	BOLT, HFH, M8X1.25X14, PC (BOLT, HFH M8X1.25X14, 9.8 PC) (AR) (AC-DELCO #11504986)	11504986
72.		8.900	BOLT, FLG HD (M8X1.25X35, 32 THD, 28OD) (BOLT, HFH M8X1.25X35, 9.8 PC) (AR)	1647551
73.	2-A25	1.251	BRACKET, ENG COOL THERM HSG	14104911
74.	2-B6	1.550	SEAL, ENG OIL CLR HOSE	10135642

RPO DEFINITIONS
LT5 - ENGINE,5.7L(5.7J),TPI

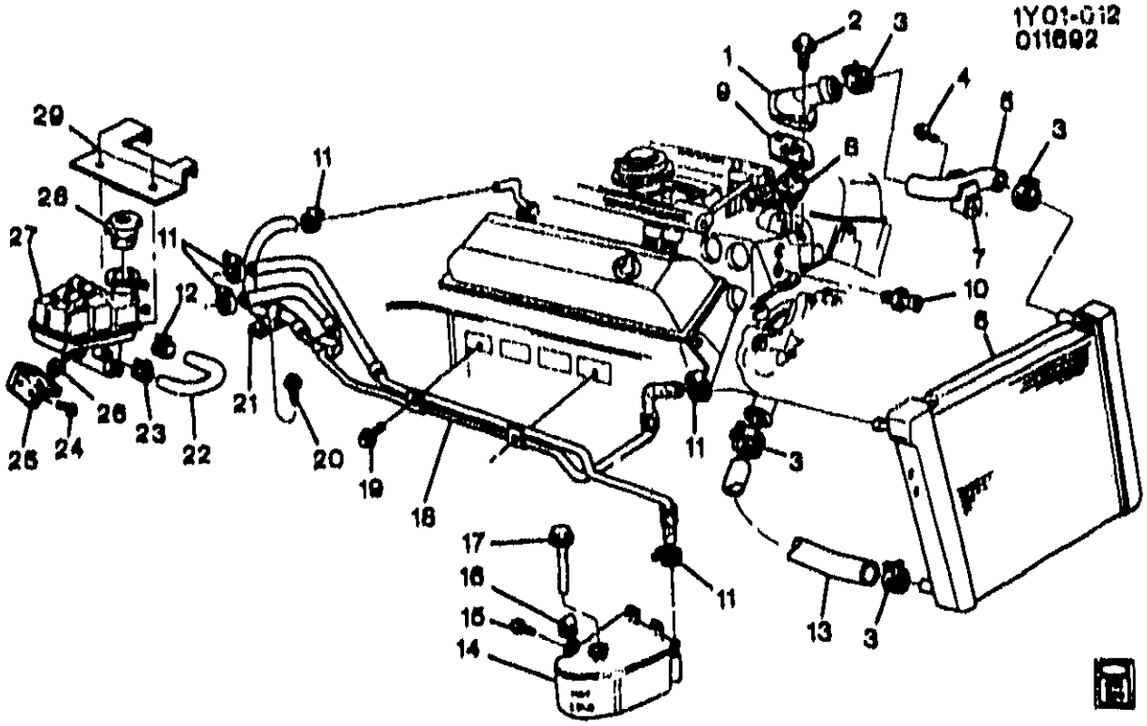

1Y01-012

1990-1991 Y HOSES & PIPES/RADIATOR (L98)

1.	2-A17	1.153	OUTLET, CLNT (AC-DELCO #15-1443)	14084383
2.	2-A17	1.153	BOLT, CLNT OTLT (3/8-16 X 1.25) 280M PZOR	10198997
3.	2-A18	1.166	CLAMP, RAD OTLT HOSE ENG	21030894
4.		8.977	SCREW, HWH W/FL WA (M6.3X1.851X25) POR	11503023
5.	2-A18	1.159	HOSE, RAD INL	10135652
6.	2-A20	1.219	RADIATOR (CODE CX) (A.T.) (AC-DELCO #20681)	52473260
	2-A20	1.219	RADIATOR (M.T.) (AC-DELCO #20620)	52460411
7.	2-A18	1.166	SUPPORT, RAD HOSE	10086195
8.	2-A25	1.246	THERMOSTAT 195 DEG (AC-DELCO #131-87)	12514334
9.	2-A18	1.154	GASKET, CLNT OTLT (AC-DELCO #10105135)	10105135
10.	2-N20	3.682	SENSOR, MANIF TEMP (UNDER PLNM) (AC-DELCO #213-310)	12146312
11.		8.948	CLAMP, HEX HD WORM GR (20X12.4) BLA OX	22527587
12.		8.948	CLAMP, SPR (37.5MM TO 44.5MM) NOMINAL SIZE 42MM, STAMPED "P" (RAD INL HOSE) (1991) (1)	21030917
13.	2-A19	1.173	HOSE, RAD OTLT	10135653
14.	2-A24	1.240	RESERVOIR, CLNT RCVY	10239668
15.		8.977	BOLT, HEX W/WA (M6X1X20) 9.8 POR	11514623
16.		8.921	NUT, SPR U SHAPE (M6X1) PHOS	12337917
17.	2-A24	1.240	CAP, CLNT RCVY RESVR	10239665
18.	2-A24	1.240	HOSE, RAD SURGE TK AIR BFL & OVFL	10135654
19.		8.977	SCREW, HEX WA HD (M4.2X1.41X16) BLA PZOR	11509135
20.		8.977	SCREW, HEX W/FL WA (4.2X2.25X20) POR	11508443
21.		8.950	CLIP, SPL CLSD TUBE (11/16-11/32) ZN VNL	797923
22.	2-A24	1.240	HOSE, RAD SURGE TK INL	10257254
23.		8.948	CLAMP, WORM GR (15.7 TO 31.8) SST (AC-DELCO #12337891)	12337891
24.		8.977	SCREW, SEMS HEX W/FL WA (M6.3X1.81X20) 6010M	12337[illegible]8
25.	2-A24	1.240	BRACKET, COOL RCVY RSVR	10082901
26.	2-A24	1.240	RETAINER, CLNT RCVY RSVR BRKT	14104598
27.	2-A24	1.240	TANK, RAD SURGE HI FILL (INCL SENSOR)	10157994
28.	2-A19	1.203	CAP, RAD FIL (AC-DELCO #RC44)	6410962

© 2000 GENERAL MOTORS SERVICE PARTS OPERATIONS - CHEVROLET - 14Y

				1Y01-012
29.	2-A24	1.240	BRACKET, RAD SURGE TK	52463838
		8.977	BOLT, HWH M4.2X1.41X25 PZOR TAP 17 OD (BOLT, HWH M4.2X1.41X25 PZOR TAP 17 OD) (AR)	11508233

RPO DEFINITIONS
L98 -- ENGINE, 5.7L, (5.7-8) 350 CID, V8, TPI

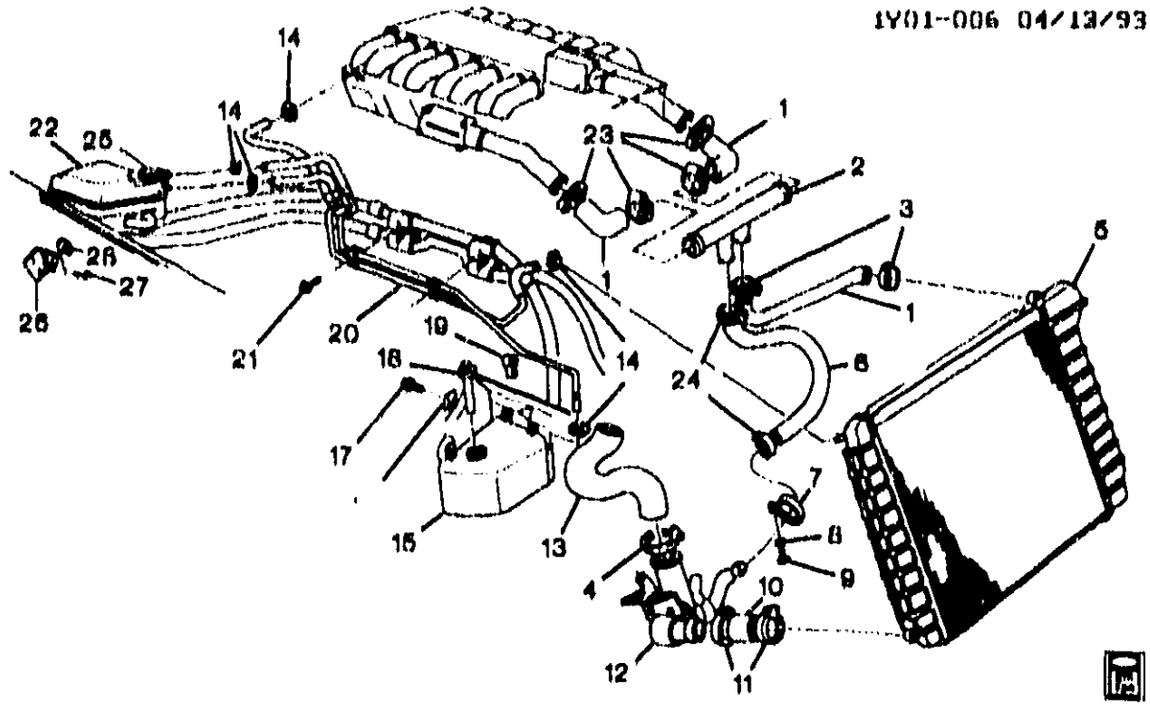

1990-1995 Y HOSES & PIPES/RADIATOR (LT5)

1.	2-A18	1.159	**HOSE**, RAD INL RR (FROM BOTH SIDES OF ENG TO T-SHAPED INL PIPE)	90-[illegible]	Y (LT5)	2	10135656
2.	2-A18	1.159	**PIPE**, RAD INL	90-95	Y (LT5)	1	14104460
3.	2-A18	1.166	**CLAMP** SPR (41.5MM TO 50.0MM) NOMINAL SIZE 47MM, STAMPED "T" (RAD INL HOSE RAD)	90-95	.....	AR	21030694
4.		5.948	**CLAMP**, SPR (43.5MM TO 53.0MM) NOMINAL SIZE 50MM, STAMPED "U" (RAD OTLT RR HOSE ENG)	90-95	.....	AR	10108249
5.	2-A20	1[illegible]	**RADIATOR**, (CODE LO, YC) (SEE GROUP 1.000 "RADIATOR DETAILS" FOR DETAIL ILLUSTRATED VIEW) (AC-DELCO #20620)	92-95	Y (ML9)	1	52460411
	2-A20	1.219	**RADIATOR**, (CODE YD, YT) (SEE GROUP 1.000 "RADIATOR DETAILS" FOR DETAIL ILLUSTRATED VIEW) (AC-DELCO #20681)	92-93	Y (MD8)	1	52473260
	2-A20	1.219	**RADIATOR**, (CODE YT) (SEE GROUP 1.000 "RADIATOR DETAILS" FOR DETAIL ILLUSTRATED VIEW) (AC-DELCO #20681)	94-95	Y (M30)	1	52473260
6.	2-A15	1.097	**HOSE**, RAD BYPASS	90-95	Y (LT5)	1	10135661
7.	2-A15	1.097	**BRACKET**, RAD BYPASS HOSE .	90-95	Y (LT5)	1	14104771
		8.977	**SCREW**, HEX W/FLAT WA	90-95	ALL MODELS ALL YEARS	AR	12337828
8.		6.931	**WASHER**, SPR LK M8.0X15.22X2.58 PL	90-95	.....	AR	11500045

© 2000 GENERAL MOTORS SERVICE PARTS OPERATIONS-CHEVROLET-14Y

							1Y01-006
9.		DISCON	.....		.....	AR	11508517
10.	2-A19	1.173	HOSE, RAD OTLT (UPR)	90-95	Y (LT5)	1	10138660
11.	2-A18	1.166	CLAMP, RAD OTLT HOSE RAD (53MM) (8.948)	90-95	Y (LT5)	AR	10158012
12.	2-A25	1.246	THERMOSTAT, ENG COOL (SEE GROUP 1.000 "RADIATOR & RELATED PARTS" FOR DETAIL ILLUSTRATED VIEW) (AC-DELCO #131-51)	90-95	Y (LT5)	1	10135627
	2-A25	1.246	THERMOSTAT, ENG COOL (INCLS HSG (UPR/LWR), THERM, BRKT & BOLTS) (SEE GROUP 1.000 "RADIATOR & RELATED PARTS" FOR DETAIL ILLUSTRATED VIEW)	90-95	Y (LT5)	1	14104599
13.	2-A19	1.173	HOSE, RAD OTLT RR (LWR)	90-95	Y (LT5)	1	10157990
14.		8.948	CLAMP, WORM GEAR, 1/2-13/16	90-95	.....	AR	22527587
15.	2-A24	1.240	RESERVOIR, COOL RCVY	90-95	Y	1	10239656
16.		8.921	NUT, (SPRING, TYPE C, U-SHAPED, MULTI THD) (M6X1, 1060 PEOR) (COOL RCVY RSVR)	90-95	.....	AR	12337917
17.		8.900	BOLT, HEX W/CON WA, M6X1X20 (COOL RCVY RSVR) ...	90-95	.....	AR	11514623
18.	2-A24	1.240	CAP, COOL RCVY RSVR	90-95	Y	1	10239665
19.		8.950	CLAMP, 1/2" STEEL LOOP CUSHIONED	90-95	.....	AR	797923
20.	2-A24	1.240	HOSE, RAD SURGE TK AIR BL & OVFL	90-94	Y	1	10135654
	2-A24	1.240	HOSE, RAD SURGE TK AIR BL & OVFL	95	Y (LT5)	1	10135654
21.		8.900	BOLT, HEX M6X1X40 W/CON WA 9.8 POR	90-95	.....	AR	11504612
22.	2-A24	1.240	TANK, RAD SURGE (W/SEN) (INCLS SWITCH)	90-95	Y	1	10157994
23.		8.948	CLAMP, SPR (37.5MM TO 46.5MM) NOMINAL SIZE 44MM, STAMPED "S" (RAD INL HOSE ENG)	90-95	.....	AR	10108248
24.	2-A18	1.166	CLAMP, RAD BYPASS HOSE (8.948)	90-95	Y (LT5)	2	10157995
25.	2-A24	1.240	CAP, RAD SURGE TK (1.203) (AC-DELCO #RC44)	90	Y	1	6410962
	2-A24	1.240	CAP, RAD SURGE TK (1.203) (AC-DELCO #RC27)	91-95	Y	1	10409635
26.	2-A24	1.240	BRACKET, RAD SURGE TK	90-95	Y	1	10082901
	2-A24	1.240	BRACKET, RAD SURGE TK (9.211)	90-91	Y (FOR MOD APPL & POA SEE BLOWER CHT)	1	52463838
27.		8.977	SCREW, HEX W/FLAT WA (RAD SURGE TK BRKT)	90-95	.....	AR	12337828
28.	2-A24	1.240	RETAINER, RAD SURGE TK	90-95	Y	1	14104598

RPO DEFINITIONS
LT5 - ENGINE,5.7L(5.7J),TPI
MD8 - TRANSMISSION,AUTOMATIC 4-SPEED(THM700R4/4L60)
ML9 - TRANSMISSION,MANUAL 6-SPEED
M30 - TRANSMISSION,AUTOMATIC 4 SPEED,4L60E,ELECTRONIC

MICROFICHE INDEX

GROUP 1.000

FICHE 2 OF 11

GROUP	DESCRIPTION	STARTING GRID LOCATION PARTS	ILLUSTRATIONS
–	GENERAL INFORMATION	1–A2	1–G2
–	ALPHABETICAL INDEX	1–B13	N.A.
1.000	COOLING SYSTEM – GRILLE – OIL SYSTEM	2–A2	2–C2
–	OUT OF FICHE CALLS	N.A.	2–N8

2–D1

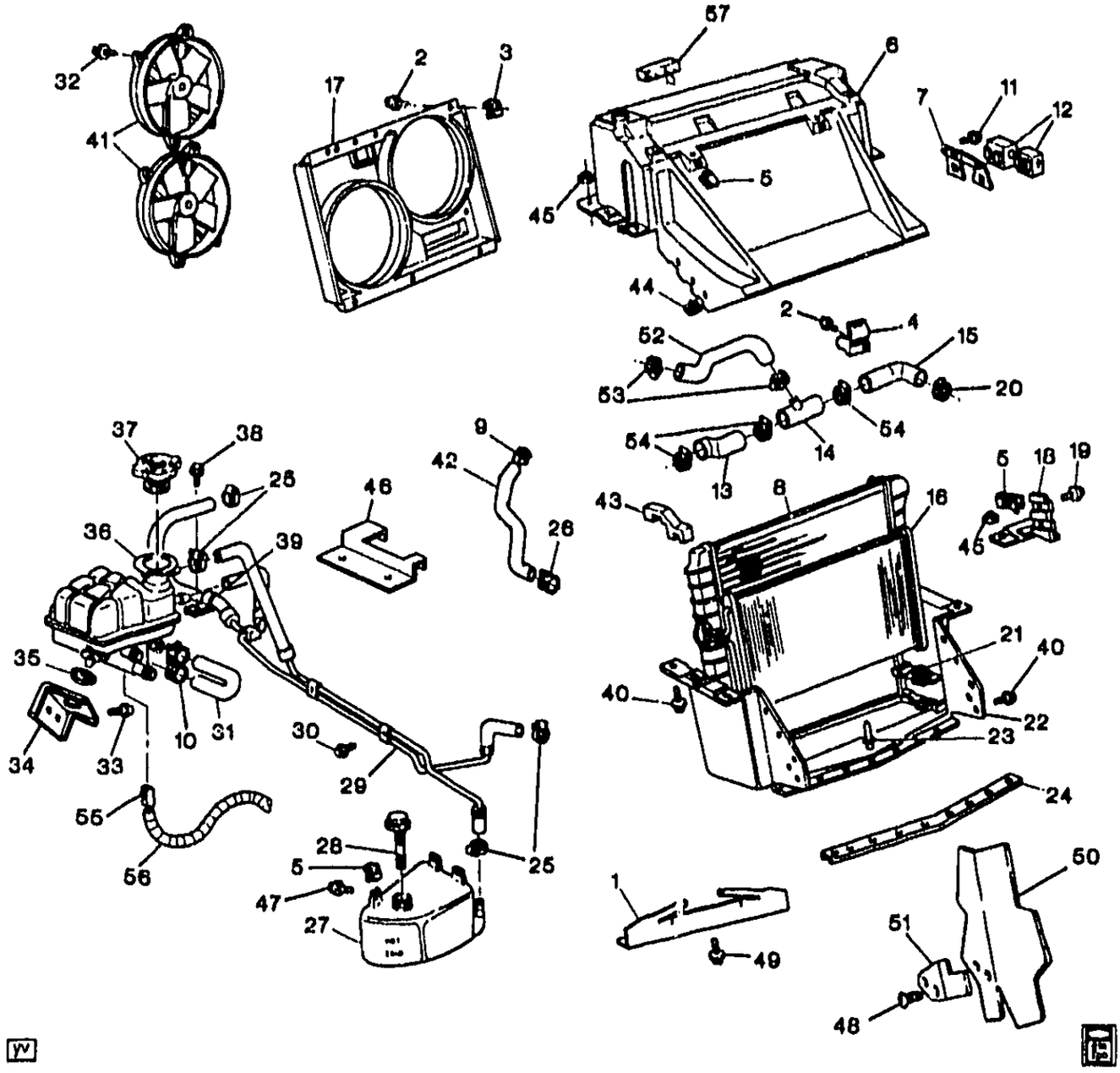

1Y01-013

1992-1994 Y HOSES & PIPES/RADIATOR (& RELATED PARTS)(LT1)

1.	2-A26	1.272	DEFLECTOR, RAD AIR UPR	92-94	Y	1	10204532
2.		8.977	SCREW, HWH TAP W/FL WA M6.3X1.81X25 POR	92-94	.....	AR	11505023
3.		8.921	NUT, U SHAPE TYPE P, M6.3X1.81, PNL RANGE.65-3.8, PEOR	92-94	.....	AR	11514290
4.	2-A18	1.166	SUPPORT, RAD HOSE	92-94	Y (LT1)	1	10086195
5.		8.921	NUT, (SPRING, TYPE C, U-SHAPED, MULTI THD) (M6X1, 1060 PEOR)	92-94	.....	AR	12337917
6.	2-A26	1.270	SUPPORT, RAD UPR	92-94	Y	1	10265847

© 2000 GENERAL MOTORS SERVICE PARTS OPERATIONS-CHEVROLET-14Y

							1Y01-013
7.	2-A8	1.055	BRACKET, FAN CONT RLY (STEEL) (3.0"X2.0") (76.7MMX51.0MM))	92-94	Y	1	14104140
8.	2-A20	1.219	RADIATOR, (CODE LO, YC) (SEE GROUP 1.000 "RADIATOR & RELATED PARTS" FOR DETAIL ILLUSTRATED VIEW.) (AC-DELCO #20620)	92-94	Y (ML9)	1	52460411
	2-A20	1.219	RADIATOR, (CODE YD, YT) (SEE GROUP 1.000 "RADIATOR & RELATED PARTS" FOR DETAIL ILLUSTRATED VIEW.) (AC-DELCO #20681)	92-93	Y (MD8)	1	52473260
	2-A20	1.219	RADIATOR, (CODE YT) (SEE GROUP 1.000 "RADIATOR & RELATED PARTS" FOR DETAIL ILLUSTRATED VIEW.) (AC-DELCO #20681)	94	Y (M30)	1	52473260
9.		8.948	CLAMP, SPR (37.5MM TO 44.5MM) NOMINAL SIZE 42MM, STAMPED "P" (RAD OTLT HOSE ENG)	92-94	.....	1	21030917
10.		8.948	CLAMP, WORM GEAR (AC-DELCO #12337891)	92-94	.....	AR	12337891
11.		8.900	BOLT, M6X1X12, 10 THD, 11.6 OD, 9.8 GM500-M, POR, MACH (AC-DELCO #11514149)	92-94	.....	AR	11514149
12.	2-A8	1.055	RELAY, FAN CONT (6-PIN OVAL SHAPE) (USE W/CONN 15306002) (AC-DELCO #15-8240)	92-94	Y	2	14089936
13.	2-A18	1.159	HOSE, RAD INL RR	92-94	Y (LT1)	1	10258276
14.	2-N27	8.846	TEE, HTR WAT BYPASS VLV OTLT HOSE	92-94	Y (LT1)	1	10157953
15.	2-A18	1.159	HOSE, RAD INL FRT	92-94	Y (LT1)	1	10258277
16.	2-N28	9.190	CONDENSER, A/C (AC-DELCO #15-6688)	92-93	Y	1	52456459
	2-N28	9.190	CONDENSER, A/C (AC-DELCO #15-6726)	94	Y	1	52463706
17.	2-A28	1.277	SHROUD, ENG COOL FAN	92-94	Y	1	10157958
18.	2-A28	1.274	BRACKET, RAD SUPT (1.270) ...	92-94	Y	1	14104391
19.		8.900	BOLT ASM, HEX W/CON WA, M6X1X25, 17 OD, FULL THD, AC PT, 9.8, CD CHROMATE BLK	92-94	.....	AR	11509363
20.	2-A18	1.166	CLAMP, RAD INL HOSE RAD (47MM)	92-94	Y	1	21030894
21.	2-A26	1.270	INSULATOR, RAD LWR	92-93	Y	RH	10082904
	2-A26	1.270	INSULATOR, RAD LWR	92-93	Y	LH	10082905
	2-A26	1.270	INSULATOR, RAD LWR	94	Y	LH	10219101
	2-A26	1.270	INSULATOR, RAD LWR	94	Y	RH	10219102
22.	2-A26	1.270	SUPPORT, RAD LWR	92-94	Y	1	10219096
23.		8.967	RIVET, POP, .188 SHANK DIA, .43 LEN, .625 OD, .188-.25 GRIP, ALUM, BA	92-94	.....	AR	9439559
24.	2-A28	1.276	RETAINER, RAD AIR LWR BFL ..	92-94	Y	1	14043167
25.		8.948	CLAMP, WORM GEAR, 1/2-13/16	92-94	.....	AR	22527587

© 2000 GENERAL MOTORS SERVICE PARTS OPERATIONS-CHEVROLET-14Y

							1Y01-013
26.	2-A18	1.166	CLAMP, RAD OTLT HOSE RAD (53MM) (8.948)	92-94	Y (LT1)	AR	10158012
27.	2-A24	1.240	RESERVOIR, COOL RCVY	92-94	Y	1	10239666
28.	2-A24	1.240	CAP, COOL RCVY RSVR	92-94	Y	1	10239665
29.	2-A24	1.240	HOSE, RAD SURGE TK AIR BL & OVFL	92-94	Y	1	10135654
30.		8.977	SCREW, HWH TAP M4.2X1.41X16 9.2-OD DRILPT BLK PZOR	92-94		AR	11509135
31.	2-A24	1.240	HOSE, RAD SURGE TK INL	92-94	Y	1	10257254
32.		8.900	BOLT, HEX W/CON WA	92-94		AR	11508269
33.		8.977	SCREW, HEX W/FLAT WA	92-94		AR	12337828
34.	2-A24	1.240	BRACKET, RAD SURGE TK	92-94	Y	1	10082901
	2-A24	1.240	BRACKET, RAD SURGE TK (9.211)	92-94	Y (LT1)	1	52463838
35.	2-A24	1.240	RETAINER, RAD SURGE TK	92-94	Y	1	14104598
36.	2-A24	1.240	TANK, RAD SURGE (W/SEN) (HIGH FILL) (INCLS SWITCH)	92-94	Y	1	10157994
37.	2-A24	1.240	CAP, COOL RCVY RSVR	92-94	Y	1	10239665
38.		8.977	SCREW, HEX W/FL WA M4.2X2.25X20 TAP POR	92-94		AR	11508443
39.		8.950	CLAMP, 1/2" STEEL LOOP CUSHIONED	92-94		AR	797923
40.	2-A26	1.271	BOLT, RAD SUPT (M6 X 1 X 24)	92-94	Y	4	10135646
41.	2-A8	1.055	FAN KIT, ENG ELEC COOL (RT OR LFT HAND SI) (AC-DELCO #15-8468)	92-94	Y	2	22098785
42.	2-[illegible]19	1.173	HOSE, RAD OTLT	92-94	Y (LT1)	1	10257252
43.	2-[illegible]26	1.270	INSULATOR, RAD UPR	92-93	Y	LH	10082902
	2-A26	1.270	INSULATOR, RAD UPR	92-93	Y (LT1)	RH	10086303
	2-A26	1.270	INSULATOR, RAD UPR	94	Y	LH	10219097
	2-A26	1.270	INSULATOR, RAD UPR	94	Y	RH	10219098
44.		8.921	NUT, M4.2X1.4, 19.3X213.6.8.9 (AC-DELCO #15650655)	92-94		AR	15650655
45.		8.917	NUT, HEX W/CON WA M6X1X5.5 (9) 7111M 16-OD	92-94		AR	11516793
46.	2-A24	1.240	BRACKET, RAD SURGE TK	92-94	Y	1	10082901
	2-A24	1.240	BRACKET, RAD SURGE TK (9.211)	92-94	Y (LT1)	1	52463838
47.		8.900	BOLT, HEX W/CON WA, M6X1X20	92-94		AR	11514623
48.		8.950	RETAINER, PUSH-IN, FITS .250 HOLE, 1.01LG.700-OD NYLON BLACK	92-94		AR	10121502
49.	2-A26	1.272	RETAINER, RAD AIR UPR DFL (PUSH IN) (14.683)	92-94	Y	2	20032850
50.	2-A26	1.272	DEFLECTOR, RAD AIR SI	92-94	Y	LH	10204533
	2-A26	1.272	DEFLECTOR, RAD AIR SI	92-93	Y	RH	10204534
	2-A26	1.272	DEFLECTOR, RAD AIR SI	94	Y (EXC B4H)	RH	10204534
51.	2-A26	1.272	BRACKET, RAD AIR SI DFL	92-93	Y	RH	10212816
	2-A26	1.272	BRACKET, RAD AIR SI DFL	92-94	Y	LH	10212817
	2-A26	1.272	BRACKET, RAD AIR SI DFL	94	Y (EXC B4H)	RH	10212816
52.	2-N19	3.337	HOSE, THROT BODY HTR INL (3.726)	92-94	Y (LT1)	1	10108618
53.	2-N19	3.337	CLAMP, THROT BODY HT INL HOSE (20MM) (STAMPED "20") (200N FORCE) (8.948)	92-94	Y (LT1)	2	10115739

							1Y01-013
	2-N19	3.337	CLAMP, THROT BODY HT INL HOSE (8.948)	92	Y (LT1)	1	25665982
54.		8.948	CLAMP, SPR (37.5MM TO 44.5MM) NOMINAL SIZE 42MM, STAMPED "P" (RAD INL HOSE ENG)	92-94	.....	1	21030917
55.	2-A12	1.203	CONNECTOR, SW-ENG COOL LVL IND (BLACK) (2-WAY F) (W/LEADS) (3.670) (AC-DELCO #PT374)	92-94	Y	1	12102747
56.	2-N17	2.525	HARNESS, ENG WRG	92	Y (LT1, MD8, C60)	1	12125009
	2-N17	2.525	HARNESS, ENG WRG	92	Y (LT1, ML9, C60)	1	12125010
	2-N17	2.525	HARNESS, ENG WRG	92	Y (LT1, MD8, C68)	1	12125011
	2-N17	2.525	HARNESS, ENG WRG	92	Y (LT1, ML9, C68)	1	12125012
	2-N17	2.525	HARNESS, ENG WRG	93	Y (LT1, ML9, C60)	1	12154081
	2-N17	2.525	HARNESS, ENG WRG	93	Y (LT1, ML9, C68)	1	12154082
	2-N17	2.525	HARNESS, ENG WRG	93	Y (LT1, MD8, C60)	1	12154083
	2-N17	2.525	HARNESS, ENG WRG	93	Y (LT1, MD8, C68)	1	12154084
	2-N17	2.525	HARNESS, ENG WRG	94	Y (LT1, ML9, C60) (EXC VE1)	1	12141752
	2-N17	2.525	HARNESS, ENG WRG	94	Y (LT1, ML9, C68) (EXC VE1)	1	12141753
	2-N17	2.525	HARNESS, ENG WRG	94	Y (LT1, M30, C60) (EXC VE1)	1	12141754
	2-N17	2.525	HARNESS, ENG WRG	94	Y (LT1, M30, C68) (EXC VE1)	1	12141755
	2-N17	2.525	HARNESS, ENG WRG	94	Y (LT1, M30, C68, VE1) (EXPORT)	1	12141756
	2-N17	2.525	HARNESS, ENG WRG	94	Y (LT1, ML9, C68, VE1) (EXPORT)	1	12141757
57.	2-N23	8.010	SEAL, HOOD BFL	92-94	Y (LT1, LT5) (EXC B4H)	2	10212812

RPO DEFINITIONS
B4H – MODIFICATION-NOISE CONTROL, EXPORT
C60 – AIR CONDITIONER,FRONT,MANUAL CONTROLS
C68 – AIR CONDITIONER,FRONT,AUTOMATIC,ELECTRONIC CONTROLS
LT1 – ENGINE-GAS, 8 CYL, 5.7L(5.7P),MFI,HO
LT5 – ENGINE,5.7L(5.7J),TFI
MD8 – TRANSMISSION,AUTOMATIC 4-SPEED(THM700R4/4L60)
ML9 – TRANSMISSION,MANUAL 6-SPEED
M30 – TRANSMISSION,AUTOMATIC 4 SPEED,4L60E,ELECTRONIC
VE1 – PROVISION OPTIONS,JAPAN(EXPORT)

© 2000 GENERAL MOTORS SERVICE PARTS OPERATIONS-CHEVROLET-14Y

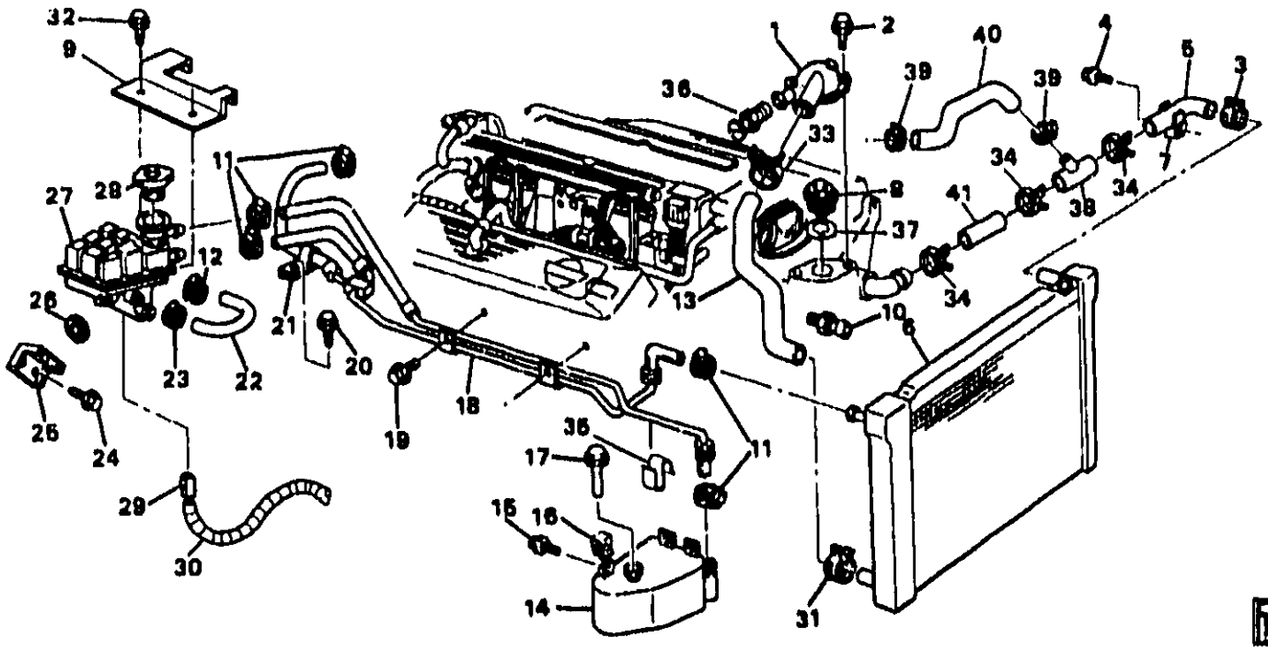

1Y01-015

1992-1994 Y HOSES & PIPES/RADIATOR (LT1)

1.	2-A14	1.073	INLET, W/PMP (W/THERM HSG & BLEDR SCREW) (INCLS ITEM 36)	92-94	Y (LT1)	1	10108667
2.		8.900	BOLT, HFH M6X1X16 9.8 POR	92-94		AR	11508805
3.	2-A18	1.166	CLAMP, RAD INL HOSE RAD (47MM)	92-94	Y	1	21030894
4.		8.977	SCREW, HWH TAP W/FL WA M6.3X1.81X25 POR	92-94		AR	11505023
5.	2-A18	1.159	HOSE, RAD INL FRT	92-94	Y (LT1)	1	10258277
6.	2-A20	1.219	RADIATOR, (CODE LO, YC) (SEE GROUP 1.000 "RADIATOR DETAILS" FOR DETAIL ILLUSTRATED VIEW) (AC-DELCO #20620)	92-94	Y (ML9)	1	52460411
	2-A20	1.219	RADIATOR, (CODE YD, YT) (SEE GROUP 1.000 "RADIATOR DETAILS" FOR DETAIL ILLUSTRATED VIEW) (AC-DELCO #20681)	92-93	Y (MD8)	1	52473260
	2-A20	1.219	RADIATOR, (CODE YT) (SEE GROUP 1.000 "RADIATOR DETAILS" FOR DETAIL ILLUSTRATED VIEW) (AC-DELCO #20681)	94	Y (M30)	1	52473260
7.	2-A18	1.166	SUPPORT, RAD HOSE	92-94	Y (LT1)	1	10086195
8.	2-A25	1.246	THERMOSTAT, ENG COOL (180 DEG) (INCL ITEM 37) (AC-DELCO #131-100)	92-94	Y (LT1)	1	12555290
9.	2-A24	1.240	BRACKET, RAD SURGE TK	92-94	Y	1	10082901
	2-A24	1.240	BRACKET, RAD SURGE TK (9.211)	92-94	Y (LT1)	1	52463838

© 2000 GENERAL MOTORS SERVICE PARTS OPERATIONS-CHEVROLET-14Y

							1Y01-015
10.	2-N20	3.682	SENSOR, ENG COOL TEMP (UND PLENUM) (USED FOR CLUSTERS W/OIL GAGE & LGT COMB) (2-WAY M) (AC-DELCO #213-310)	92-94	Y	1	12146312
	2-A16	1.150	SENSOR, ENG COOL TEMP (UND PLENUM) (USED FOR CLUSTERS W/OIL GAGE & LGT COMB) (2-WAY M) (3.682) (AC-DELCO #213-310)	92-94	Y	1	12146312
11.		8.948	CLAMP, WORM GEAR, 1/2-13/16	92-94		AR	22527587
12.		8.948	CLAMP, 28.6-86.2 DIA WORM GEAR (AC-DELCO #12338017)	92-94		AR	12338017
13.	2-A19	1.173	HOSE, RAD OTLT	92-94	Y (LT1)	1	10257252
14.	2-A24	1.240	RESERVOIR, COOL RCVY	92-94	Y	1	10239666
15.		8.900	BOLT, HEX W/CON WA, M6X1X20 (COOL RCVY RSVR)	92-94		AR	11514523
16.		8.921	NUT, (SPRING, TYPE C, U-SHAPED, MULTI THD) (M6X1, 1060 PEOR) (COOL RCVY RSVR)	92-94		AR	12337917
17.	2-A24	1.240	CAP, COOL RCVY RSVR	92-94	Y	1	10239665
18.	2-A24	1.240	HOSE, RAD SURGE TK AIR BL & OVFL	92-94	Y	1	10135664
19.		8.977	SCREW, HWH TAP M4.2X1.41X16 9.2-OD DRILPT BLK PZOR	92-94		AR	11509135
20.		8.977	SCREW, HEX W/FL WA M4.2X2.25X20 TAP POR	92-94		AR	11508443
21.		8.950	CLAMP, 1/2" STEEL LOOP CUSHIONED	92-94		AR	797923
22.	2-A24	1.240	HOSE, RAD SURGE TK INL	92-94	Y	1	10257254
23.	2-A24	1.240	CLAMP, RAD SURGE TK INL HOSE (AT HTR) (BLACK) (8.948)	92-94	Y	1	10108255
24.		8.977	SCREW, HEX W/FLAT WA (RAD SURGE TK BRKT)	92-94		AR	12337828
25.	2-A24	1.240	BRACKET, RAD SURGE TK	92-94	Y	1	10082901
	2-A24	1.240	BRACKET, RAD SURGE TK (9.211)	92-94	Y (LT1)	1	52463838
26.	2-A24	1.240	RETAINER, RAD SURGE TK	92-94	Y	1	14104598
27.	2-A24	1.240	TANK, RAD SURGE (W/SEN) (HI-FILL) (INCL SENSOR) (INCLS SWITCH)	92-94	Y	1	10157994
28.	2-A24	1.240	CAP, RAD SURGE TK (1.203) (AC-DELCO #RC27)	92-94	Y	1	10409635
29.	2-A19	1.203	CONNECTOR, SW-ENG COOL LVL IND (BLACK) (2-WAY F) (W/LEADS) (3.670) (AC-DELCO #PT374)	92-94	Y	1	12102747
30.	2-N17	2.525	HARNESS, ENG WRG	92	Y (LT1, MD8, C60)	1	12125009
	2-N17	2.525	HARNESS, ENG WRG	92	Y (LT1, ML9, C60)	1	12125010
	2-N17	2.525	HARNESS, ENG WRG	92	Y (LT1, MD8, C68)	1	12125011
	2-N17	2.525	HARNESS, ENG WRG	92	Y (LT1, ML9, C68)	1	12125012
	2-N17	2.525	HARNESS, ENG WRG	93	Y (LT1, ML9, C60)	1	12154081
	2-N17	2.525	HARNESS, ENG WRG	93	Y (LT1, ML9, C68)	1	12154082
	2-N17	2.525	HARNESS, ENG WRG	93	Y (LT1, MD8, C60)	1	12154083
	2-N17	2.525	HARNESS, ENG WRG	93	Y (LT1, MD8, C68)	1	12154084

							1Y01-015
	2-N17	2.525	HARNESS, ENG WRG	94	Y (LT1, ML9, C60) (EXC VE1)	1	12141752
	2-N17	2.525	HARNESS, ENG WRG	94	Y (LT1, ML9, C68) (EXC VE1)	1	12141753
	2-N17	2.525	HARNESS, ENG WRG	94	Y (LT1, M30, C60) (EXC VE1)	1	12141754
	2-N17	2.525	HARNESS, ENG WRG	94	Y (LT1, M30, C68) (EXC VE1)	1	12141755
	2-N17	2.525	HARNESS, ENG WRG	94	Y (LT1, M30, C68, VE1) (EXPORT)	1	12141756
	2-N17	2.525	HARNESS, ENG WRG	94	Y (LT1, ML9, C68, VE1) (EXPORT)	1	12141757
31.	2-A18	1.166	CLAMP, RAD OTLT HOSE RAD (53MM) (8.948)	92-94	Y (LT1)	AR	10158012
32.		8.977	BOLT, HWH M4.2X1.41X25 PZOR TAP 17 OD (COOL RCVY RSVR) .	92-94	.....	2	11508233
33.		8.948	CLAMP, SPR (37.5MM TO 44.5MM) NOMINAL SIZE 42MM, STAMPED "P" (RAD OTLT HOSE ENG)	92-94	.....	1	21030917
34.		8.948	CLAMP, SPR (37.5MM TO 44.5MM) NOMINAL SIZE 42MM, STAMPED "P" (RAD INL HOSE ENG)	92-94	.....	1	21030917
35.	2-A24	1.240	CLIP, COOL RCVY RSVR HOSE ..	92-94	Y	1	10217444
36.	2-A8	1.035	VALVE, ENG COOL AIR BL (PART OF ITEM 1)	92-94	Y (LT1)	1	10070107
37.	2-A25	1.252	SEAL, ENG COOL THERM (O RING) (PART OF ITEM 8) (AC-DELCO #12553106)	92-94	Y (LT1)	1	12553106
38.	2-N27	8.846	TEE, HTR WAT BYPASS VLV OTLT HOSE	92-94	Y (LT1)	1	10157956
39.	2-N19	3.337	CLAMP, THROT BODY HT INL HOSE (20MM) (STAMPED "20") (200N FORCE) (8.948)	92-94	Y (LT1)	2	10115739
	2-N19	3.337	CLAMP, THROT BODY HT INL HOSE (8.948)	92	Y (LT1)	1	25665982
40.	2-N19	3.337	HOSE, THROT BODY HTR INL (3.726)	92-94	Y (LT1)	1	10108618
41.	2-A18	1.159	HOSE, RAD INL RR	92-94	Y (LT1)	1	10253276

RPO DEFINITIONS

C60 - AIR CONDITIONER,FRONT,MANUAL CONTROLS
C68 - AIR CONDITIONER,FRONT,AUTOMATIC,ELECTRONIC CONTROLS
LT1 - ENGINE-GAS, 8 CYL, 5.7L(5.7P),MFI,HO
MD8 - TRANSMISSION,AUTOMATIC 4-SPEED(THM700R4/4L60)
ML9 - TRANSMISSION,MANUAL 6-SPEED
M30 - TRANSMISSION,AUTOMATIC 4 SPEED,4L60E,ELECTRONIC
VE1 - PROVISION OPTIONS,JAPAN(EXPORT)

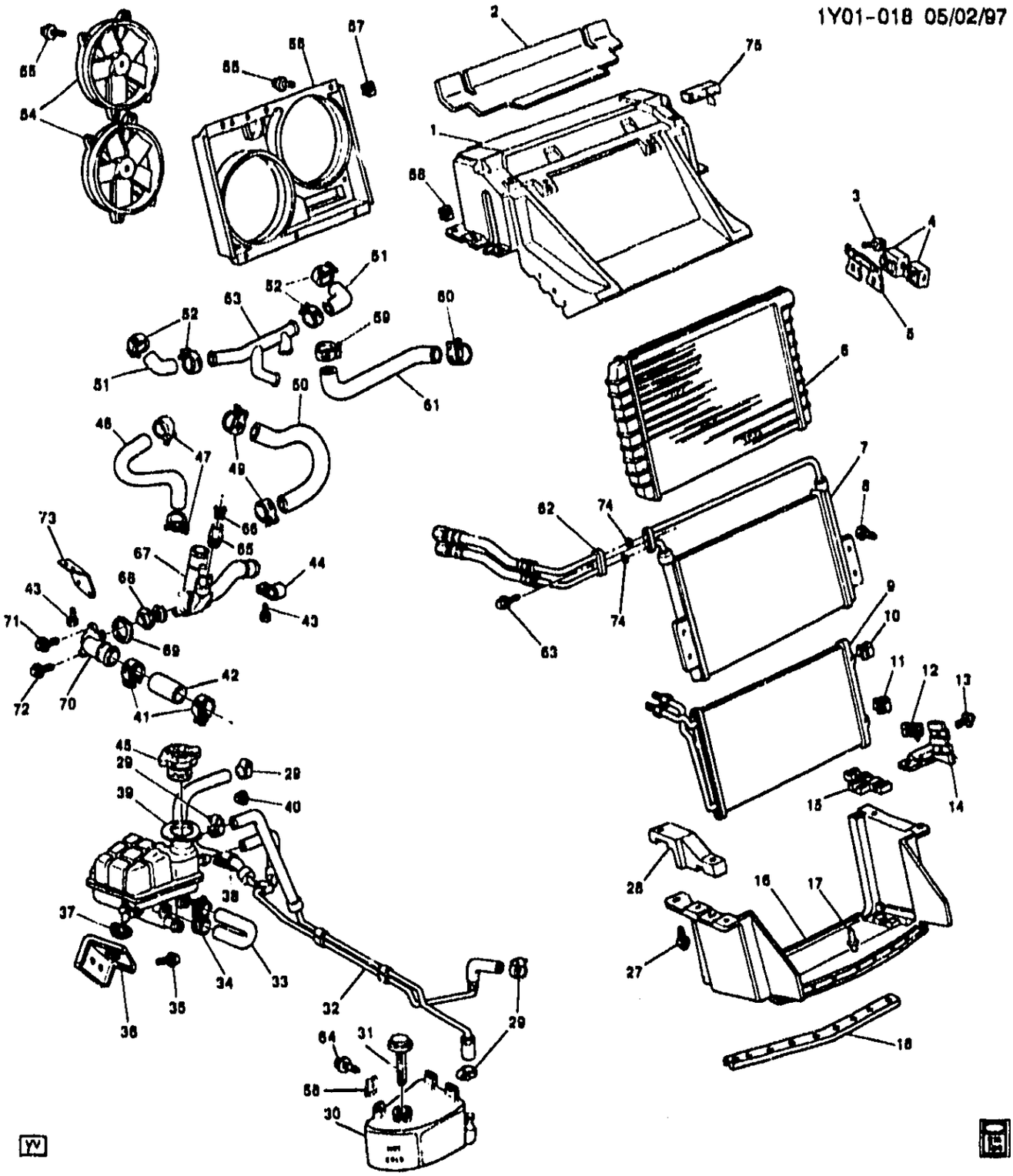

1Y01-018

1992-1995 Y HOSES & PIPES/RADIATOR RADIATOR & RELATED PARTS(LT5)

1.	2-A26	1.270	SUPPORT, RAD UPR	92-95	Y	1	10265847
2.	2-A26	1.272	DEFLECTOR, RAD AIR UPR	92-95	Y	1	10204532
3.		8.900	BOLT-METRIC HEAVY HEX FLANGE HEAD (ENG COOL FAN RLY)	92-95	.....	AR	11516061

© 2000 GENERAL MOTORS SERVICE PARTS OPERATIONS-CHEVROLET-14Y

							1Y01-018
4.	2-A8	1.055	RELAY, FAN CONT (5-PIN OVAL SHAPE) (USE W/CONN 15306002) (AC-DELCO #15-8240)	92-94	Y	2	14089936
	2-A8	1.055	RELAY, FAN CONT (BLACK) (5-WAY M) (USED W/CONNECTOR 15306045) (9.277) (AC-DELCO #15-8719)	95	Y	1	12193601
	2-A8	1.055	RELAY, FAN CONT (GRAY) (SPST 280 MINI) (4-WAY) (2.100) (AC-DELCO #12193603)	95	Y	2	12193603
5.	2-A8	1.055	BRACKET, FAN CONT RLY (STEEL) (3.0"X2.0") (76.7MMX51.0MM))	92-94	Y	1	14104140
6.	2-A20	1.219	RADIATOR, (A/T) (AC-DELCO #20681)	92-95	Y	1	52473260
	2-A20	1.219	RADIATOR, (M/T) (AC-DELCO #20620)	92-95	Y	1	52460411
7.	2-B5	1.540	COOLER, ENG OIL	92-93	Y (LT5)	1	14104653
	2-B5	1.540	COOLER, ENG OIL	94-95	Y (LT5)	1	10219643
8.		8.977	BOLT, SCR HEX W/FLAT WA 12 DIA TYPE AB	92-95		AR	11509374
9.	2-N28	9.190	CONDENSER, A/C (AC-DELCO #15-6688)	92-93	Y	1	52456459
	2-N28	9.190	CONDENSER, A/C (AC-DELCO #15-6726)	94-95	Y	1	52463706
10.		8.921	NUT, U-TYPE, 4.2X1.41, DIM A-15, DIM B-14 DIM C-8.65, 1050, PZOR	92-95		AR	12338121
11.		8.921	NUT, WU SHAPE SPR/P/#8-18X.585, PC	92-95		AR	9433155
12.		8.921	NUT, (SPRING, TYPE C, U-SHAPED, MULTI THD) (M6X1, 1060 PEOR)	92-95		AR	12337917
13.		8.900	BOLT ASM, HEX W/CON WA, M6X1X25, 17 OD, FULL THD, AC PT, 8.8, CD CHROMATE BLK	92-95		AR	11509363
14.	2-A28	1.274	BRACKET, RAD SUPT (1.270)	92-95	Y	1	14104391
15.	2-A26	1.270	INSULATOR, RAD LWR	92-93	Y	RH	10082904
	2-A26	1.270	INSULATOR, RAD LWR	94-95	Y	RH	10219102
16.	2-A26	1.270	SUPPORT, RAD LWR	92-95	Y	1	10219096
17.		8.967	RIVET, POP, .188 SHANK DIA, .43 LEN, .625 OD, .188-.25 GRIP, ALUM, BA	92-95		AR	9439559
18.	2-A28	1.276	RETAINER, RAD AIR LWR BFL	92-95	Y	1	14043167
27.	2-A26	1.271	BOLT, RAD SUPT (M6 X 1 X 24)	92-95	Y	4	10135646
28.	2-A26	1.270	INSULATOR, RAD UPR	92-93	Y (LT5)	RH	10082903
	2-A26	1.270	INSULATOR, RAD UPR	94-95	Y	RH	10219098
	2-A26	1.270	INSULATOR, RAD UPR	92-93	Y	LH	10082902
	2-A26	1.270	INSULATOR, RAD UPR	94-95	Y	LH	10219097
29.	2-A24	1.240	CLAMP, RAD SURGE TK INL HOSE (AT HTR) (BLACK) (8.948)	92-95	Y	1	10108255
30.	2-A24	1.240	RESERVOIR, COOL RCVY	92-95	Y	1	10239666
31.	2-A24	1.240	CAP, COOL RCVY RSVR	92-95	Y	1	10239365
32.	2-A24	1.240	HOSE, RAD SURGE TK AIR BL & OVFL	92-94	Y	1	10135654
	2-A24	1.240	HOSE, RAD SURGE TK AIR BL & OVFL	95	Y (LT5)	1	10135654

							1Y01-016
33.	2-A24	1.240	HOSE, RAD SURGE TK INL	92-95	Y	1	10257254
34.		8.948	CLAMP, WORM GEAR (AC-DELCO #12337891)	92-95		AR	12337891
35.		8.977	SCREW, HEX W/FLAT WA	92-95		AR	12337828
36.	2-A24	1.140	BRACKET, RAD SURGE TK	92-95	Y	1	10082901
37.	2-A24	1.240	RETAINER, RAD SURGE TK	92-95	Y	1	14104598
38.		8.950	CLAMP, 1/2" STEEL LOOP CUSHIONED	92-95		AR	797923
39.	2-A24	1.240	TANK, RAD SURGE (W/SEN) (HIGH FILL) (INCLS SWITCH)	92-95	Y	1	10157994
40.		8.917	NUT, HFH 6X1X7 SELF LK 14.2-OD (9) 7111M ALL MET PREV TORQ	92-95		AR	11516075
41.	2-A18	1.166	CLAMP, RAD OTLT HOSE RAD (53MM) (8.948)	92-95	Y (LT5)	AR	10158012
42.	2-A19	1.173	HOSE, RAD OTLT (UPR)	92-95	Y (LT5)	1	10135660
43.		8.900	BOLT, HEX W/WA, M8X1.25X20, 8.8, PC	92-95		AR	11504611
44.	2-A18	1.097	BRACKET, RAD BYPASS HOSE	92-95	Y (LT5)	1	14104771
45.	2-A24	1.240	CAP, COOL RCVY RSVR	92-95	Y	1	10239665
47.		8.948	CLAMP, SPR (43.5MM TO 53.0MM) NOMINAL SIZE 50MM, STAMPED "U" (RAD OTLT RR HOSE ENG)	92-95		AR	
48.	2-A19	1.173	HOSE, RAD OTLT RR (LWR)	92-95	Y (LT5)	1	10157990
49.	2-A18	1.166	CLAMP, RAD BYPASS HOSE (8.948)	92-95	Y (LT5)	2	10157995
50.	2-A15	1.097	HOSE, RAD BYPASS	92-95	Y (LT5)	1	10135661
51.	2-A13	1.159	HOSE, RAD INL RR (FROM BOTH SIDES OF ENG TO T-SHAPED INL PIPE)	92-95	Y (LT5)	2	10135658
52.		8.948	CLAMP, SPR (37.5MM TO 46.5MM) NOMINAL SIZE 44MM, STAMPED "S" (RAD INL HOSE ENG)	92-95		AR	10108248
53.	2-A18	1.159	PIPE, RAD INL	92-95	Y (LT5)	1	14104460
54.		N.S.	FAN, ENG COOL (SEE GROUP 1.000 "ENGINE COOLANT FAN" FOR DETAIL ILLUSTRATED VIEW)				
55.		8.977	SCREW, HWH TAP W/FL WA M6.3X1.81X25 POR	92-95		AR	11505023
56.	2-A28	1.277	SHROUD, ENG COOL FAN	92-95	Y	1	10157958
57.		8.921	NUT, TYPE P-WU SPR M6.3X1.81 PHOS ORG	92-95		AR	11504035
58.		8.921	NUT, (SPRING, TYPE C, U-SHAPED, MULTI THD) (M6X1, 1060 PEOR)	92-95		AR	12337917
59.		8.948	CLAMP, SPR (37.5MM TO 46.5MM) NOMINAL SIZE 44MM, STAMPED "S" (RAD INL HOSE ENG)	92-95		AR	10108248
60.	2-A18	1.166	CLAMP, SPR (41.5MM TO 50.0MM) NOMINAL SIZE 47MM, STAMPED "T" (RAD INL HOSE RAD)	92-95		AR	21030894
61.	2-A18	1.159	HOSE, RAD INL (FROM THE T-SHAPED INL PIPE TO RAD)	92-95	Y (LT5)	1	10135659

© 2000 GENERAL MOTORS SERVICE PARTS OPERATIONS-CHEVROLET-14Y

							1Y01-018
62.	2-B5	1.540	HOSE, ENG OIL CLR INL & OTLT (INCLS 74)	92-93	Y (LT5)	1	12472184
	2-B5	1.540	HOSE, ENG OIL CLR INL & OTLT (INCLS 74)	94-95	Y (LT5)	1	10219644
63.		8.900	SCREW,	92-95		AR	11505209
64.		8.900	BOLT, HEX W/CON WA, M6X1X20 (COOL RCVY RSVR)	92-95		AR	11514623
65.	2-N28	8.866	NIPPLE, HTR WAT ENG INL (INCL 66) (PART OF 68) (USE T/W 1052080 SEALER) (W/O-RING & RET) (1/2 THD, 59.5 TL) (OLD PART MAY APPEAR LARGER DUE TO HEAT EXPANSION)	92-95	Y (LT5)	1	24503681
66.	2-N27	8.846	RETAINER, HTR WAT FLOW C/VLV HOSE (PART OF 65 & 68) (BLACK)	92-95	Y (LT5)	1	10089613
67.		N.S.	HOUSING, ENG COOL THERM LWR (PART OF 68)				
68.	2-A25	1.246	THERMOSTAT, ENG COOL (INCLS 65-73 AND 10135627)	92-95	Y (LT5)	1	14104599
	2-A25	1.246	THERMOSTAT, ENG COOL (PART OF 14104599) (AC-DELCO #131-51)	92-95	Y (LT5)	1	10135627
69.	2-A25	1.252	GASKET, ENG COOL THERM (PART OF 68) (AC-DELCO #10226107)	92-95	Y (LT5)	1	10226107
70.	2-A25	1.251	HOUSING, ENG COOL THERM UPR (PART OF 63)	92-95	Y (LT5)	1	14104784
71.		8.900	BOLT, HFH, M8X1.25X14, PC (PART OF 68) (AC-DELCO #11504986)	92-95		AR	1150498[illegible]
72.		8.900	BOLT, FLG HD (M6X1.25X35, 32 THD, 28OD) (PART OF 68)	92-95		AR	1647351
73.	2-A25	1.251	BRACKET, ENG COOL THERM HSG (PART OF 68)	92-95	Y (LT5)	1	14104911
74.	2-B6	1.550	SEAL, ENG OIL CLR HOSE (PART OF 62)	92-95	Y (LT5)	2	10135642
75.	2-N23	8.010	SEAL, HOOD BFL	92-95	Y (LT1, LT5) (EXC B4H)	2	10212812

RPO DEFINITIONS
B4H - MODIFICATION-NOISE CONTROL, EXPORT
LT1 - ENGINE-GAS, 8 CYL, 5.7L(5.7P),MFI,HO
LT5 - ENGINE,5.7L(5.7J),TPI

© 2000 GENERAL MOTORS SERVICE PARTS OPERATIONS-CHEVROLET-14Y

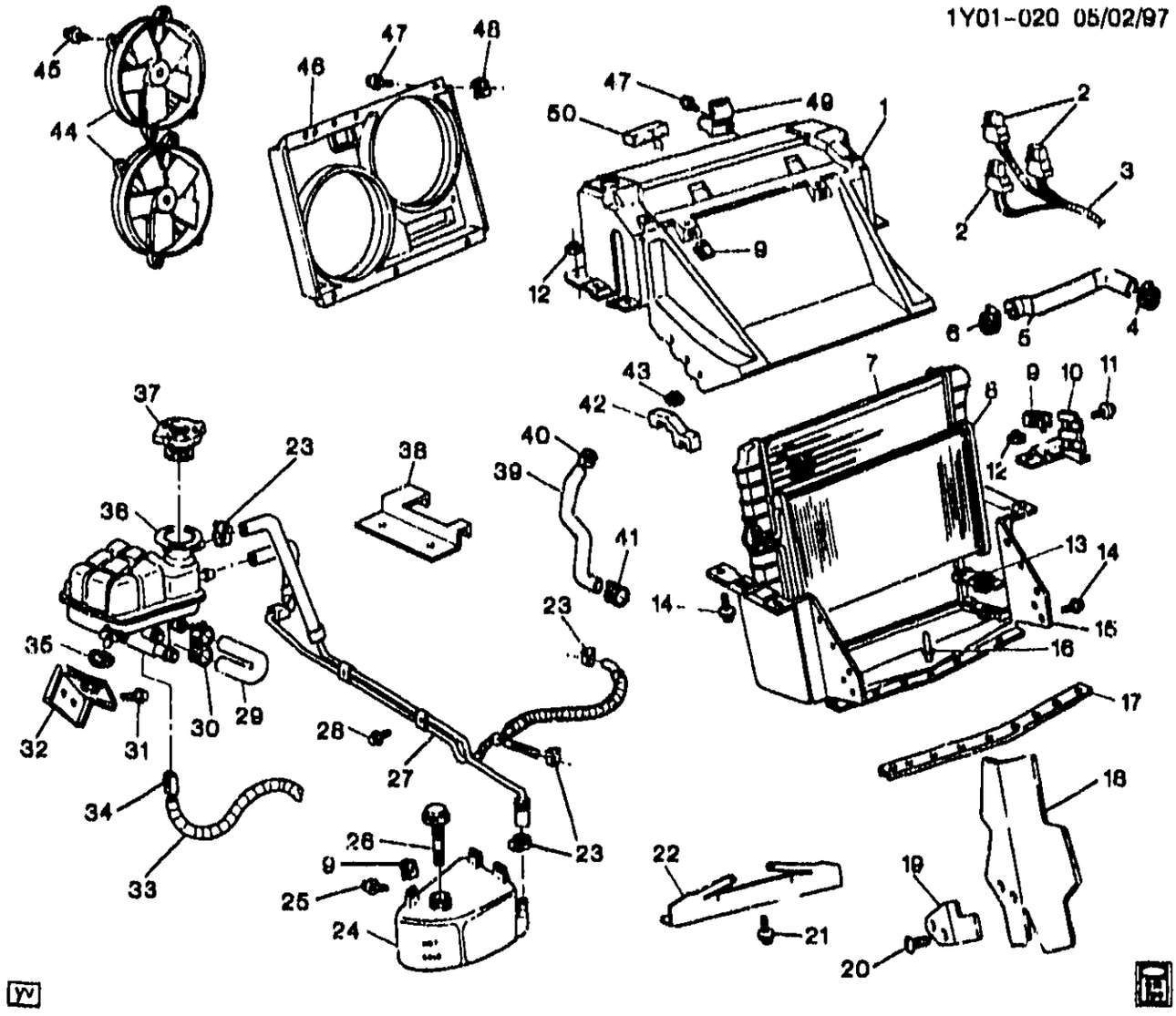

1Y01-020

1995-1996 Y HOSES & PIPES/RADIATOR RADIATOR & RELATED PARTS(LT1)

1.	2-A26	1.270	SUPPORT, RAD UPR	95-96	Y	1	10265847
2.	2-A8	1.055	RELAY, FAN CONT (BLACK) (5-WAY M) (USED W/CONNECTOR 15306046) (9.277) (AC-DELCO #15-8719)	95-96	Y	1	12193601
	2-A8	1.055	RELAY, FAN CONT (GRAY) (SPST 280 MINI) (4-WAY) (2.100) (AC-DELCO #12193603)	95-96	Y	2	12193603
	2-A8	1.055	CONNECTOR, RLY-FAN CONT (5-WAY F) (W/LEADS & RELAY) (8.855) (AC-DELCO #PT1016) ..	95-96	Y	1	15305875
	2-A8	1.055	CONNECTOR, RLY-FAN CONT (TWO 12GA AND THREE 14GA WIRES) (8.855) (AC-DELCO #PT1205)	95-96	Y	1	15306045
3.	2-N9	2.480	HARNESS, FWD LP WRG	95	Y (LT1) (EXC T72, T84, T85, T90)	1	12130484
	2-N9	2.480	HARNESS, FWD LP WRG	96	Y (EXC T72, T84, T85, T90)	1	12163717

© 2000 GENERAL MOTORS SERVICE PARTS OPERATIONS-CHEVROLET-14Y

							1Y01-020
	2-N9	2.480	HARNESS, FWD LP WRG	95	Y (LT1, T72, T84, T85, T90) (EXPORT)	1	12130465
	2-N9	2.480	HARNESS, FWD LP WRG	96	Y (T72, T84, T85, T90) (EXPORT)	1	12163718
4.	2-A18	1.166	CLAMP, RAD INL HOSE RAD (47MM)	95	Y (LT1)	1	21030894
	2-A18	1.166	CLAMP, RAD INL HOSE RAD (47MM)	96	Y	1	21030894
5.	2-A18	1.169	HOSE, RAD INL	95	Y (LT1)	1	10278338
	2-A18	1.169	HOSE, RAD INL	96	Y	1	10278338
6.		8.948	CLAMP, SPR (37.5MM TO 44.5MM) NOMINAL SIZE 42MM, STAMPED "P" (RAD INL HOSE ENG)	95-96		1	21030917
7.	2-A20	1.219	RADIATOR, (CODE LO, YC) (AC-DELCO #20620)	95-96	Y (ML9)	1	52460411
	2-A20	1.219	RADIATOR, (CODE YT) (AC-DELCO #20651)	95-96	Y (M30)	1	52473260
8.	2-N28	9.190	CONDENSER, A/C (SEE GROUP 9.000 "A/C COMPRESSOR ASM" FOR DETAILED ILLUSTRATED VIEW.) (AC-DELCO #15-6720)	95-96	Y	1	52463706
9.		8.921	NUT, (SPRING, TYPE C, U-SHAPED, MULTI THD) (M6X1, 1060 PEOR)	95-96		AR	12337917
10.	2-A28	1.274	BRACKET, RAD SUPT (1.270)	95-96	Y	1	14104391
11.		8.900	BOLT ASM, HEX W/CON WA, M6X1X25, 17 OD, FULL THD, AC PT, 9.8, CD CHROMATE BLK	95-96		AR	11509363
12.		8.917	NUT, HEX W/CON WA M6X1X5.5 (9) 7111M 16-OD	95-96		AR	11516793
13.	2-A26	1.270	INSULATOR, RAD LWR	95-96	Y	LH	10219101
	2-A26	1.270	INSULATOR, RAD LWR	95-96	Y	RH	10219102
14.	2-A26	1.271	BOLT, RAD SUPT (M6 X 1 X 24)	95-96	Y	4	10135646
15.	2-A26	1.270	SUPPORT, RAD LWR	95-96	Y	1	10219096
16.		8.967	RIVET, POP, .188 SHANK DIA, .43 LEN, .625 OD, .188-.25 GRIP, ALUM, BA	95-96		AR	9439559
17.	2-A28	1.276	RETAINER, RAD AIR LWR BFL	95-96	Y	1	14043167
18.	2-A26	1.272	DEFLECTOR, RAD AIR SI	95-96	Y	LH	10204533
	2-A26	1.272	DEFLECTOR, RAD AIR SI	95-96	Y (EXC B4H)	RH	10204534
19.	2-A26	1.272	BRACKET, RAD AIR SI DFL	95-96	Y	LH	10212817
	2-A26	1.272	BRACKET, RAD AIR SI DFL	95-96	Y (EXC B4H)	RH	10212816
20.		8.950	RETAINER, PUSH-IN, FITS .250 HOLE, 1.01LG.700-OD NYLON BLACK	95-96		AR	10121502
21.	2-A26	1.272	RETAINER, RAD AIR UPR DFL (PUSH IN) (14.683)	95-96	Y	3	20032850
22.	2-A26	1.272	DEFLECTOR, RAD AIR UPR	95-96	Y	1	10204532
23.		8.948	CLAMP, WORM GEAR, 1/2-13/16	95-96		AR	22527587
24.	2-A24	1.240	RESERVOIR, COOL RCVY	95-96	Y	1	10239666
25.		8.900	BOLT, HEX W/CON WA, M6X1X20	95-96		AR	11514623
26.	2-A24	1.240	CAP, COOL RCVY RSVR	95-96	Y	1	10239665
27.	2-A24	1.240	HOSE, RAD SURGE TK AIR BL & OVFL	95	Y (LT1)	1	10262504
	2-A24	1.240	HOSE, RAD SURGE TK AIR BL & OVFL	96	Y	1	10262504

© 2000 GENERAL MOTORS SERVICE PARTS OPERATIONS-CHEVROLET DIV

							1Y01 -020	
28.		8.977	SCREW, HWH TAP M4.2X1.41X16 9.2-OD DRILPT BLK PZOR	95-96			AR	11509135
29.	2-A24	1.240	HOSE, RAD SURGE TK INL	95-96	Y		1	10257254
30.		8.948	CLAMP WORM GEAR (AC-DELCO #12337891)	95-96			AR	12337891
31.		8.977	SCREW, HEX W/FLAT WA	95-96			AR	12337828
32.	2-A24	1.240	BRACKET, RAD SURGE TK	95-96	Y		1	10082901
	2-A24	1.240	BRACKET, RAD SURGE TK (9.211)	96	Y (LT1)		1	52475992
	2-A24	1.240	BRACKET, RAD SURGE TK (USED ON VEHICLES W/VIN OF 119804 AND PRIOR) (9.211)	95	Y (LT1) (1ST DES)		1	52463838
	2-A24	1.240	BRACKET, RAD SURGE TK (USED ON VEHICLES W/VIN OF 119805 AND GREATER) (9.211)	95	Y (LT1) (2ND DES)		1	52475992
33.	2-N17	2.525	HARNESS, ENG WRG	95	Y (LT1, ML9, C60) (EXC VE1)		1	12130370
	2-N17	2.525	HARNESS, ENG WRG	95	Y (LT1, M30, C60) (EXC VE1)		1	12130371
	2-N17	2.525	HARNESS, ENG WRG	95	Y (LT1, ML9, C68) (EXC VE1)		1	12130372
	2-N17	2.525	HARNESS, ENG WRG	95	Y (LT1, M30, C68) (EXC VE1)		1	12130373
	2-N17	2.525	HARNESS, ENG WRG	96	Y (ML9, C60) (EXC VE1)		1	12130461
	2-N17	2.525	HARNESS, ENG WRG	96	Y (M30, C60) (EXC VE1)		1	12130462
	2-N17	2.525	HARNESS, ENG WRG	96	Y (ML9, C68) (EXC VE1)		1	12130463
	2-N17	2.525	HARNESS, ENG WRG	96	Y (M30, C68) (EXC VE1)		1	12130464
	2-N17	2.525	HARNESS, ENG WRG	95	Y (LT1, M30, C68, VE1) (EXPORT)		1	12130374
	2-N17	2.525	HARNESS, ENG WRG	95	Y (LT1, ML9, C68, VE1) (EXPORT)		1	12130375
	2-N17	2.525	HARNESS, ENG WRG	96	Y (M30, C68, VE1) (EXPORT)		1	12130465
34.	2-A19	1.203	CONNECTOR, SW-ENG COOL LVL IND (BLACK) (2-WAY F) (W/LEADS) (3.670) (AC-DELCO #PT374)	95-96	Y		1	12102747
35.	2-A24	1.240	RETAINER, RAD SURGE TK	95-96	Y		1	14104598
36.	2-A24	1.240	TANK, RAD SURGE (W/SEN) (HIGH FILL) (INCLS SWITCH)	95-96	Y		1	10157994
37.	2-A24	1.240	CAP, COOL RCVY RSVR	95-96	Y		1	10239665
38.	2-A24	1.240	BRACKET, RAD SURGE TK	95-96	Y		1	10082901
	2-A24	1.240	BRACKET, RAD SURGE TK (9.211)	96	Y (LT1)		1	52475992
	2-A24	1.240	BRACKET, RAD SURGE TK (USED ON VEHICLES W/VIN OF 119804 AND PRIOR) (9.211)	95	Y (LT1) (1ST DES)		1	52463838
	2-A24	1.240	BRACKET, RAD SURGE TK (USED ON VEHICLES W/VIN OF 119805 AND GREATER) (9.211)	95	Y (LT1) (2ND DES)		1	52475992
39.	2-A19	1.173	HOSE, RAD OTLT	95	Y (LT1)		1	10257252
	2-A19	1.173	HOSE, RAD OTLT	96	Y		1	10257252

© 2000 GENERAL MOTORS SERVICE PARTS OPERATIONS-CHEVROLET-14Y

							1Y01-020
40.		8.948	CLAMP, SPR (37.5MM TO 44.5MM) NOMINAL SIZE 42MM, STAMPED "P" (RAD OTLT HOSE ENG)	95-96		1	21030917
41.	2-A18	1.166	CLAMP, RAD OTLT HOSE RAD (53MM) (F.948)	95-96	Y (LT1)	AR	10158012
42.	2-A26	1.270	INSULATOR, RAD UPR	95-96	Y	LH	10219097
	2-A26	1.270	INSULATOR, RAD UPR	95-96	Y	RH	10219096
43.		8.921	NUT, M4.2X1.4, 19.3X213.6.8.9 (AC-DELCO #15650655)	95-96		AR	15650655
44.	2-A8	1.055	FAN KIT, ENG ELEC COOL (RT OR LFT HAND SI) (AC-DELCO #15-8468)	95-96	Y	2	22098785
45.		8.900	BOLT, HEX W/CON WA	95-96		AR	11508269
46.	2-A28	1.277	SHROUD, ENG COOL FAN	95-96	Y	1	10157958
47.		8.977	SCREW, HWH TAP W/FL WA M6.3X1.81X25 POR	95-96		AR	11505023
48.		8.921	NUT, U SHAPE TYPE P, M6.3X1.81, PNL RANGE.65-3.0, PEOR	95-96		AR	11514290
49.	2-A18	1.166	SUPPORT, RAD HOSE	95	Y (LT1)	1	10086195
	2-A18	1.166	SUPPORT, RAD HOSE	96	Y	1	10086195
50.	2-N23	8.010	SEAL, HOOD BFL	95	Y (LT1, LT5) (EXC B4H)	2	10212812
	2-N23	8.010	SEAL, HOOD BFL	96	Y (LT1, LT4) (EXC B4H)	2	10212812

RPO DEFINITIONS
B4H - MODIFICATION-NOISE CONTROL, EXPORT
C60 - AIR CONDITIONER,FRONT,MANUAL CONTROLS
C68 - AIR CONDITIONER,FRONT,AUTOMATIC,ELECTRONIC CONTROLS
LT1 - ENGINE-GAS, 8 CYL, 5.7L(5.7P),MFI,HO
LT4 - ENGINE GAS, 8 CYL, 5.7L, MFI, HIGH OUTPUT
LT5 - ENGINE,5.7L(5.7J),TPI
ML9 - TRANSMISSION,MANUAL 6-SPEED
M30 - TRANSMISSION,AUTOMATIC 4 SPEED,4L60E,ELECTRONIC
T72 - HEADLAMPS,LH RULE OF THE ROAD(EXPORT)
T84 - HEADLAMPS,RH RULE OF THE ROAD,RECTANGULAR(MARKED E)(EXPORT)
T85 - HEADLAMPS,LH RULE OF THE ROAD,RECTANGULAR(MARKED E)(EXPORT)
T90 - LAMP,SIGNALING AND MARKER(EXPORT)
VE1 - PROVISION OPTIONS,JAPAN(EXPORT)

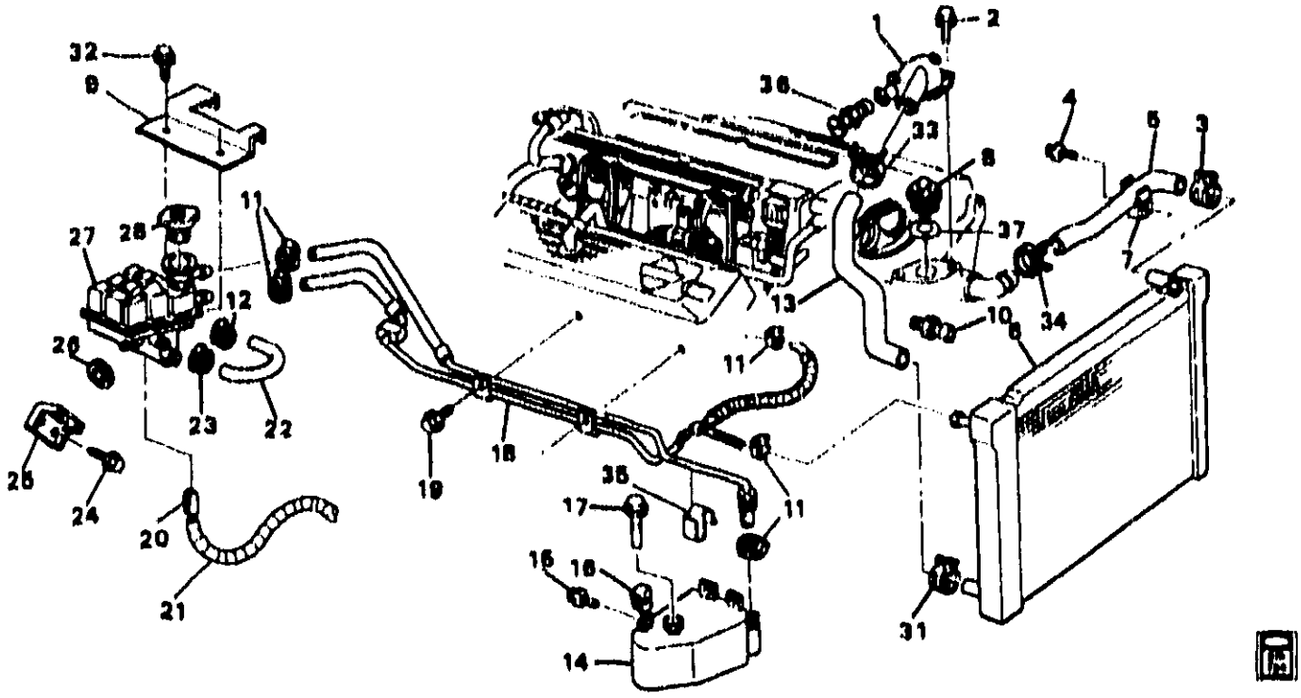

1Y01-021

1995-1996 Y HOSES & PIPES/RADIATOR (LT1)

1.	2-A14	1.073	INLET, W/PMP (W/THERM HSG & BLEDR SCREW) (INCLS 36)	95-96	Y (LT1)	1	10108667
2.		6.900	BOLT, HFH M6X1X16 9.8 POR ...	95-96	.....	AR	11508805
3.	2-A18	1.166	CLAMP, RAD INL HOSE RAD (47MM)	95	Y (LT1)	1	21030894
	2-A18	1.166	CLAMP, RAD INL HOSE RAD (47MM)	96	Y	1	21030894
4.		6.977	SCREW, HWH TAP W/FL WA M6.3X1.81X25 POR	95-96	.....	AR	11505023
5.	2-A18	1.159	HOSE, RAD INL	95	Y (LT1)	1	10278338
	2-A18	1.159	HOSE, RAD INL	96	Y	1	10278338
6.	2-A20	1.219	RADIATOR, (CODE LO, YC) (SEE GROUP 1.000 "RADIATOR DETAILS" FOR DETAILED ILLUSTRATED VIEW) (AC-DELCO #20620)	95-96	Y (ML9)	1	52460411
	2-A20	1.219	RADIATOR, (CODE YT) (SEE GROUP 1.000 "RADIATOR DETAILS" FOR DETAILED ILLUSTRATED VIEW) (AC-DELCO #20681)	95-96	Y (M30)	1	52473260
7.	2-A18	1.166	SUPPORT, RAD HOSE	95	Y (LT1)	1	10086195
	2-A18	1.166	SUPPORT, RAD HOSE	96	Y	1	10086195
8.	2-A25	1.246	THERMOSTAT, ENG COOL (180 DEG) (INCLS ITEM 37) (AC-DELCO #131-100)	95-96	Y (LT1)	1	12555290
9.	2-A24	1.240	BRACKET, RAD SURGE TK	95-96	Y	1	10082901
	2-A24	1.240	BRACKET, RAD SURGE TK (9.211)	96	Y (LT1)	1	52475992

© 2000 GENERAL MOTORS SERVICE PARTS OPERATIONS-CHEVROLET-14Y

							1Y01-021
	2-A24	1.240	**BRACKET**, RAD SURGE TK (USED ON VEHICLES W/VIN OF 119804 AND PRIOR) (9.211)	95	Y (LT1) (1ST DES)	1	52463838
	2-A24	1.240	**BRACKET**, RAD SURGE TK (USED ON VEHICLES W/VIN OF 119805 AND GREATER) (9.211) ..	95	Y (LT1) (2ND DES)	1	52475992
10.	2-N20	3.682	**SENSOR**, ENG COOL TEMP (UND PLENUM) (USED FOR CLUSTERS W/OIL GAGE & LGT COMB) (2-WAY M) (AC-DELCO #213-310)	95-96	Y	1	12146312
	2-A16	1.150	**SENSOR**, ENG COOL TEMP (UND PLENUM) (USED FOR CLUSTERS W/OIL GAGE & LGT COMB) (2-WAY M) (3.682) (AC-DELCO #213-310)	95-96	Y	1	12146312
11.		8.948	**CLAMP**, WORM GEAR, 1/2-13/16	95-96	.....	AR	22527587
12.		8.948	**CLAMP**, 28.8-86.2 DIA WORM GEAR (AC-DELCO #12338017) .	95-96	.....	AR	12338017
13.	2-A19	1.173	**HOSE**, RAD OTLT	95	Y (LT1)	1	10257252
	2-A19	1.173	**HOSE**, RAD OTLT	96	Y	1	10257252
14.	2-A24	1.240	**RESERVOIR**, COOL RCVY	95-96	Y	1	10239666
15.		8.900	**BOLT**, HEX W/CON WA, M6X1X20 (COOL RCVY RSVR) ...	95-96	.....	AR	11514623
16.		8.921	**NUT**, (SPRING, TYPE C, U-SHAPED, MULTI THD) (M6X1, 1060 PEOR) (COOL RCVY RSVR)	95-96	.....	AR	12337917
17.	2-A24	1.240	**CAP**, COOL RCVY RSVR	95-96	Y	1	10239665
18.	2-A24	1.240	**HOSE**, RAD SURGE TK AIR BL & OVFL	95	Y (LT1)	1	10262504
	2-A24	1.240	**HOSE**, RAD SURGE TK AIR BL & OVFL	96	Y	1	10262504
19.		8.977	**SCREW**, HWH TAP M4.2X1.41X16 9.2-OD DRILPT BLK PZOR	95-96	.....	AR	11509135
20.	2-A19	1.203	**CONNECTOR**, SW-ENG COOL LVL IND (BLACK) (2-WAY F) (W/LEADS) (3.670) (AC-DELCO #PT374)	95-96	Y	1	12102747
21.	2-N17	2.525	**HARNESS**, ENG WRG	95	Y (LT1, ML9, C60) (EXC VE1)	1	12130370
	2-N17	2.525	**HARNESS**, ENG WRG	95	Y (LT1, M30, C60) (EXC VE1)	1	12130371
	2-N17	2.525	**HARNESS**, ENG WRG	95	Y (LT1, ML9, C68) (EXC VE1)	1	12130372
	2-N17	2.525	**HARNESS**, ENG WRG	95	Y (LT1, M30, C68) (EXC VE1)	1	12130373
	2-N17	2.525	**HARNESS**, ENG WRG	96	Y (ML9, C60) (EXC VE1)	1	12130461
	2-N17	2.525	**HARNESS**, ENG WRG	96	Y (M30, C60) (EXC VE1)	1	12130462
	2-N17	2.525	**HARNESS**, ENG WRG	96	Y (ML9, C68) (EXC VE1)	1	12130463
	2-N17	2.525	**HARNESS**, ENG WRG	96	Y (M30, C68) (EXC VE1)	1	12130464
	2-N17	2.525	**HARNESS**, ENG WRG	95	Y (LT1, M30, C68, VE1) (EXPORT)	1	12130374
	2-N17	2.525	**HARNESS**, ENG WRG	95	Y (LT1, ML9, C68, VE1) (EXPORT)	1	12130375

							1Y01-021
	2-N17	2.525	HARNESS, ENG WRG	96	Y (M30, C68, VE1) (EXPORT)	1	12130465
22.	2-A24	1.240	HOSE, RAD SURGE TK INL	95-96	Y	1	10257254
23.	2-A24	1.240	CLAMP, RAD SURGE TK INL HOSE (AT HTR) (BLACK) (8.948) .	95-96	Y	1	10108255
24.		8.977	SCREW, HEX W/FLAT WA (RAD SURGE TK BRKT)	95-96	.....	AR	12337828
25.	2-A24	1.240	BRACKET, RAD SURGE TK	95-96	Y	1	10082901
	2-A24	1.240	BRACKET, RAD SURGE TK (9.211)	96	Y (LT1)	1	52475992
	2-A24	1.240	BRACKET, RAD SURGE TK (USED ON VEHICLES W/VIN OF 119804 AND PRIOR) (9.211)	95	Y (LT1) (1ST DES)	1	52463838
	2-A24	1.240	BRACKET, RAD SURGE TK (USED ON VEHICLES W/VIN OF 119805 AND GREATER) (9.211) ..	95	Y (LT1) (2ND DES)	1	52475992
26.	2-A24	1.240	RETAINER, RAD SURGE TK	95-96	Y	1	14104598
27.	2-A24	1.240	TANK, RAD SURGE (W/SEN) (HI-FILL) (INCLS SWITCH)	95-96	Y	1	10157994
28.	2-A24	1.240	CAP, RAD SURGE TK (1.203) (AC-DELCO #RC27)	95-96	Y	1	10409635
31.	2-A16	1.166	CLAMP, RAD OTLT HOSE RAD (53MM) (8.948)	95-96	Y (LT1)	AR	10158012
32.		8.977	BOLT, HWH M4.2X1.41X25 PZOR TAP 17 OD (COOL RCVY RSVR) .	95-96	.....	2	11508233
33.		8.948	CLAMP, SPR (37.5MM TO 44.5MM) NOMINAL SIZE 42MM, STAMPED "P" (RAD OTLT HOSE ENG)	95-96	.....	1	21030917
34.		8.948	CLAMP, SPR (37.5MM TO 44.5MM) NOMINAL SIZE 42MM, STAMPED "P" (RAD INL HOSE ENG)	95-96	.....	1	21030917
35.	2-A24	1.240	CLIP, COOL RCVY RSVR HOSE ..	95-96	Y	1	10217444
36.	2-A8	1.035	VALVE, ENG COOL AIR BL (PART OF 1)	95-96	Y (LT1)	1	10070107
37.	2-A25	1.252	SEAL, ENG COOL THERM (O RING) (PART OF 8) (AC-DELCO #12553106)	95-96	Y (LT1)	1	12553106

RPO DEFINITIONS

C60 – AIR CONDITIONER,FRONT,MANUAL CONTROLS
C68 – AIR CONDITIONER,FRONT,AUTOMATIC,ELECTRONIC CONTROLS
LT1 – ENGINE-GAS, 8 CYL, 5.7L(5.7P),MFI,HO
ML9 – TRANSMISSION,MANUAL 6-SPEED
M30 – TRANSMISSION,AUTOMATIC 4 SPEED,4L60E,ELECTRONIC
VE1 – PROVISION OPTIONS,JAPAN(EXPORT)

1Y01-017
112088

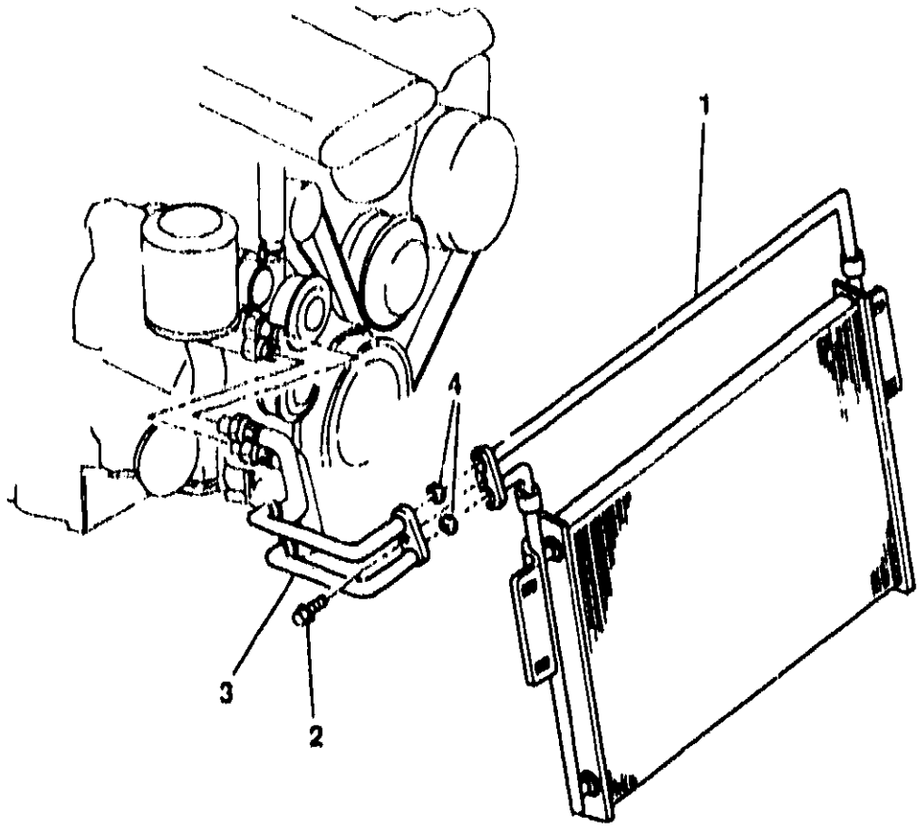

1Y01-017

1990-1995 Y ENGINE OIL COOLER (LT5)

1.	2-B5	1.540	COOLER, ENG OIL	90-93	Y (LT5)	1	14104653
	2-B5	1.540	COOLER, ENG OIL	94-95	Y (LT5)	1	10219643
2.		8.900	BOLT, HFH (M6X1X20 9.8 PZOR (AC-DELCO #11508600)	90-95		AR	11508600
3.	2-B5	1.540	HOSE, ENG OIL CLR INL & OTLT (INCLS 4)	90-93	Y (LT5)	1	12472184
	2-B5	1.540	HOSE, ENG OIL CLR INL & OTLT (INCLS 4)	94-95	Y (LT5)	1	10219644
4.	2-B5	1.550	SEAL, ENG OIL CLR HOSE (PART OF 3) ("REQUIRED FOR SERVICE--DO NOT SUBSTITUTE")	90-95	Y (LT5)	2	10135642

RPO DEFINITIONS
LT5 - ENGINE,5.7L(5.7J),TPI

© 2000 GENERAL MOTORS SERVICE PARTS OPERATIONS-CHEVROLET-14Y

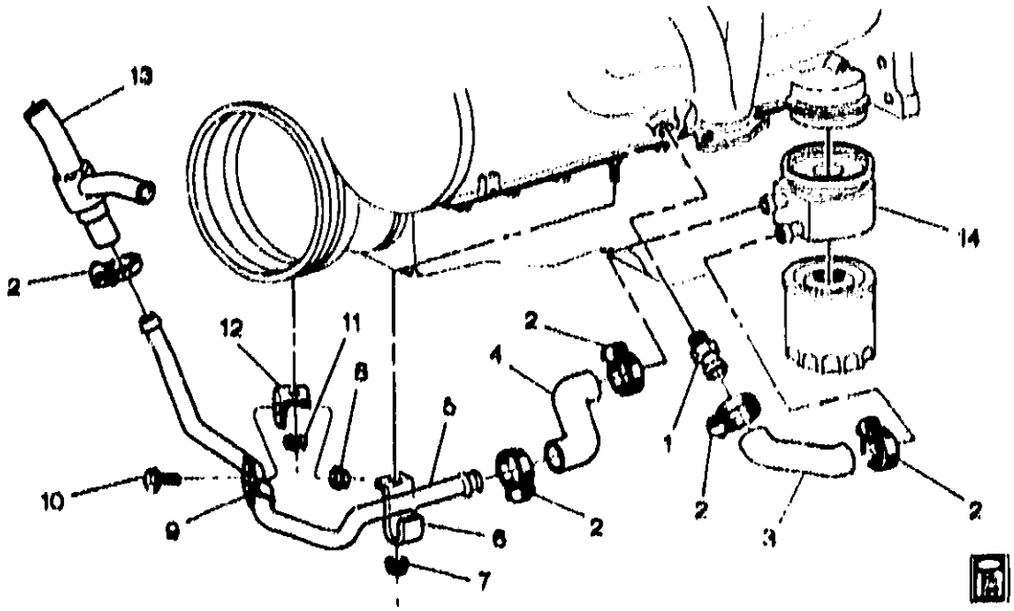

1Y01-008

1985-1991 Y ENGINE OIL COOLER LINES (L98,KC4)

1.	2-B5	1.540	FITTING, HOSE (1/4-18X16MM)	14084019
2.		8.948	CLAMP, WORM GR (15.7 TO 31.8) SST (AC-DELCO #12337891)	12337891
3.	2-B5	1.540	HOSE, OTLT (LWR ON RAD)	14084013
4.	2-B5	1.540	HOSE, INL (UPR ON CLR)	14084012
5.		DISCON	PIPE, INL (1985)	14084014
	2-B5	1.540	PIPE, INL (1986-91)	10077544
6.	2-B5	1.540	CLAMP, PIPE (4.866)	15505991
7.		8.917	NUT, HFH (.25-20) 284M POR	12337984
8.		8.917	NUT, HEX FLG (.25X20) ZN	9418840
9.	2-B5	1.540	CLAMP, PIPE (1985-87) (4.866)	15160330
	2-B5	1.540	CLAMP, PIPE (1988-91) (4.866)	15505991
10.		8.900	BOLT, HFH (.25-20X.56) 260M PZOR	9439930
11.		8.917	NUT, HFH (.312-18) 286M PHOS	1359887
12.		DISCON	BRACKET, HOSE (1985-88)	14093147
13.	2-B5	1.540	HOSE, HTR OTLT (1985-87)	14091278
	2-N27	8.846	HOSE, HTR OTLT (1988-89)	10158081
	2-N27	8.846	HOSE, HTR OTLT (1990-91)	10135657
14.	2-B5	1.540	COOLER, ENG OIL	14084369

RPO DEFINITIONS
KC4 - COOLING SYSTEM,ENGINE OIL
L98 - ENGINE, 5.7L, (5.7-8) 350 CID, V8, TPI

© 2000 GENERAL MOTORS SERVICE PARTS OPERATIONS - CHEVROLET - 14Y

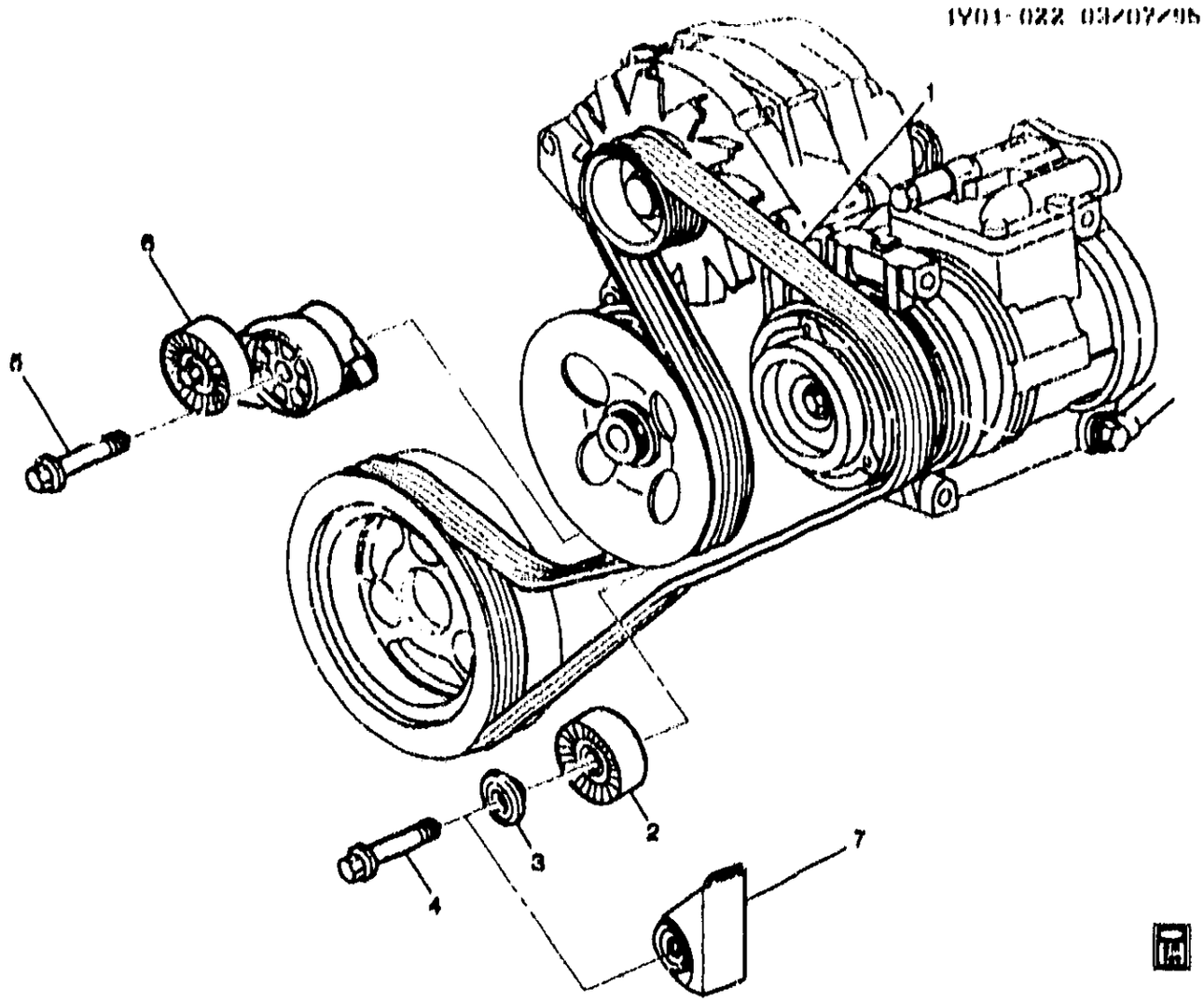

1Y01-022

1992-1996 Y TENSIONER/DRIVE BELT (LT1)
1996 Y TENSIONER/DRIVE BELT (LT4)

1.	2-A12	1.066	BELT, GEN & A/C CMPR & P/S PUMP (CODE UKM)	92 Y (LT1)	1	10186198
	2-A12	1.066	BELT, GEN & A/C CMPR & P/S PUMP (CODE UKM) (HAS DUAL SIDE GROOVES, 2ND DES HAS SINGLE SIDE GROOVES)	93 Y (LT1) (1ST DES)	1	10186198
	2-A12	1.066	BELT, GEN & A/C CMPR & P/S PUMP (CODE UNM) (HAS SINGLE SIDE GROOVES, 1ST DES HAS DUAL SIDE GROOVES)	93 Y (LT1) (2ND DES)	1	10230259
	2-A12	1.066	BELT, GEN & A/C CMPR & P/S PUMP (CODE UNM)	94-96 Y (LT1)	1	10230259
	2-A12	1.066	BELT, GEN & A/C CMPR & P/S PUMP (CODE UNM)	96 Y (LT4)	1	10230259
2.	2-A11	1.062	PULLEY, DRV BELT IDLER	92 Y (LT1)	1	10186174
	2-A11	1.062	PULLEY, DRV BELT IDLER (ID BY FLAT PUL)	93 Y (LT1) (2ND DES)	1	10105355
	2-A11	1.062	PULLEY, DRV BELT IDLER (ID BY GROOVED PUL)	93 Y (LT1) (1ST DES)	1	10186174
	2-A11	1.062	PULLEY, DRV BELT IDLER	94-96 Y (LT1)	1	10105355

© 2000 GENERAL MOTORS SERVICE PARTS OPERATIONS - CHEVROLET - 14Y

								1Y01-022
	2-A11	1.062	PULLEY, DRV BELT IDLER	96	Y (LT4)	1	10105355
3.	2-A11	1.060	SHIELD, DRV BELT IDLER PUL ..	92-96	Y (LT1)	1	10210440
	2-A11	1.060	SHIELD, DRV BELT IDLER PUL ..	96	Y (LT4)	1	10210440
4.	2-A11	1.060	BOLT, DRV BELT IDLER PUL.	92-96	Y (LT1)	1	10105370
	2-A11	1.060	BOLT, DRV BELT IDLER PUL.	96	Y (LT4)	1	10105370
5.	2-A11	1.060	BOLT, DRV BELT TENSR (8.900) .	92-96	Y (LT1)	AR	9440111
	2-A11	1.060	BOLT, DRV BELT TENSR (8.900) .	96	Y (LT4)	AR	9440111
6.	2-A11	1.060	TENSIONER, DRV BELT	92	Y (LT1)	1	10186197
	2-A11	1.060	TENSIONER, DRV BELT	94-96	Y (LT1)	1	10227507
	2-A11	1.060	TENSIONER, DRV BELT	96	Y (LT4)	1	10227507
	2-A11	1.060	TENSIONER, DRV BELT (HAS FLAT PUL)	93	Y (LT1) (2ND DES)	1	10227507
	2-A11	1.060	TENSIONER, DRV BELT (HAS GROOVED PUL)	93	Y (LT1) (1ST DES)	1	10186197
7.		N.S.	SHIELD, DRV BELT IDLER PUL (SHIELD NOT REQ'D, USE SHIELD LISTED AS ITEM #3)	92	.....		

RPO DEFINITIONS
LT1 – ENGINE-GAS, 8 CYL, 5.7L(5.7P),MFI,HO
LT4 – ENGINE GAS, 8 CYL, 5.7L, MFI, HIGH OUTPUT

MICROFICHE INDEX

GROUP 1.000

FICHE 2 OF 11

GROUP	DESCRIPTION	STARTING GRID LOCATION PARTS	ILLUSTRATIONS
–	GENERAL INFORMATION	1–A2	1–G2
–	ALPHABETICAL INDEX	1–B13	N.A.
1.000	COOLING SYSTEM – GRILLE – OIL SYSTEM	2–A2	2–C2
–	OUT OF FICHE CALLS	N.A.	2–N8

2–E1

MICROFICHE INDEX

GROUP 1.000

FICHE 2 OF 11

GROUP	DESCRIPTION	STARTING GRID LOCATION PARTS	ILLUSTRATIONS
–	GENERAL INFORMATION	1–A2	1–G2
--	ALPHABETICAL INDEX	1–B13	N.A.
1.000	COOLING SYSTEM – GRILLE – OIL SYSTEM	2–A2	2–C2
–	OUT OF FICHE CALLS	N.A.	2–N8

2–F1

MICROFICHE INDEX

GROUP 1.000

FICHE 2 OF 11

GROUP	DESCRIPTION	STARTING GRID LOCATION PARTS	ILLUSTRATIONS
–	GENERAL INFORMATION	1–A2	1–G2
–	ALPHABETICAL INDEX	1–B13	N.A.
1.000	COOLING SYSTEM – GRILLE – OIL SYSTEM	2–A2	2–C2
–	OUT OF FICHE CALLS	N.A.	2–N8

2–G1

MICROFICHE INDEX

GROUP 1.000

FICHE 2 OF 11

GROUP	DESCRIPTION	STARTING GRID LOCATION PARTS	ILLUSTRATIONS
--	GENERAL INFORMATION	1-A2	1-G2
--	ALPHABETICAL INDEX	1-B13	N.A.
1.000	COOLING SYSTEM - GRILLE - OIL SYSTEM	2-A2	2-C2
-	OUT OF FICHE CALLS	N.A.	2-N8

2-H1

MICROFICHE INDEX

GROUP 1.000

FICHE 2 OF 11

GROUP	DESCRIPTION	STARTING GRID LOCATION PARTS	ILLUSTRATIONS
–	GENERAL INFORMATION	1–A2	1–G2
–	ALPHABETICAL INDEX	1–B13	N.A.
1.000	COOLING SYSTEM – GRILLE – OIL SYSTEM	2–A2	2–C2
–	OUT OF FICHE CALLS	N.A.	2–N8

2–11

MICROFICHE INDEX

GROUP 1.000

FICHE 2 OF 11

GROUP	DESCRIPTION	STARTING GRID LOCATION PARTS	ILLUSTRATIONS
–	GENERAL INFORMATION	1–A2	1–G2
–	ALPHABETICAL INDEX	1–B13	N.A.
1.000	COOLING SYSTEM – GRILLE – OIL SYSTEM	2–A2	2–C2
–	OUT OF FICHE CALLS	N.A.	2–N8

2–J1

MICROFICHE INDEX

GROUP 1.000

FICHE 2 OF 11

GROUP	DESCRIPTION	STARTING GRID LOCATION PARTS	ILLUSTRATIONS
–	GENERAL INFORMATION	1–A2	1–G2
–	ALPHABETICAL INDEX	1–B13	N.A.
1.000	COOLING SYSTEM – GRILLE – OIL SYSTEM	2–A2	2–C2
–	OUT OF FICHE CALLS	N.A.	2–H8

2–K1

MICROFICHE INDEX

GROUP 1.000

FICHE 2 OF 11

GROUP	DESCRIPTION	STARTING GRID LOCATION PARTS	ILLUSTRATIONS
–	GENERAL INFORMATION	1–A2	1–G1
–	ALPHABETICAL INDEX	1–B13	N.A.
1.000	COOLING SYSTEM – GRILLE – OIL SYSTEM	2–A2	2–C2
–	OUT OF FICHE CALLS	N.A.	2–N8

2–L1

MICROFICHE INDEX

GROUP 1.000

FICHE 2 OF 11

GROUP	DESCRIPTION	STARTING GRID LOCATION PARTS	ILLUSTRATIONS
–	GENERAL INFORMATION	1–A2	1–G2
–	ALPHABETICAL INDEX	1–B13	N.A.
1.000	COOLING SYSTEM – GRILLE – OIL SYSTEM	2–A2	2–C2
–	OUT OF FICHE CALLS	N.A.	2–N8

2–M1

MICROFICHE INDEX

GROUP 1.000

FICHE 2 OF 11

GROUP	DESCRIPTION	STARTING GRID LOCATION PARTS	ILLUSTRATIONS
–	GENERAL INFORMATION	1–A2	1–G2
–	ALPHABETICAL INDEX	1–B13	N.A.
1.000	COOLING SYSTEM – GRILLE – OIL SYSTEM	2–A2	2–C2
–	OUT OF FICHE CALLS	N.A.	2–N8

2—N1

2.480 BRACKET – CONNECTOR – HARNESS – WIRE, Chassis Wiring

94	Y 4–SPD A/TRANS (M30)	15320479	1	119.63	HARNESS, A/TRNS WRG (AC–DELCO #15320479)
95	Y 4–SPD A/TRANS (M30)	15320477	1	76.73	HARNESS, A/TRNS WRG (INCLS TCC SOLENOID W/TCC DRAINDOWN FEATURE) (AC–DELCO #15320477)
96	Y 4–SPD A/TRANS (M30)	15320476	1	81.04	HARNESS, A/TRNS WRG (INCLS TCC SOL VLV) (AC–DELCO #15320476)
85	Y A/TRNS (MD8)	12[illegible]8732	1	DISCON	HARNESS, E.C.M.
85	Y M/TRNS (MH5, MK2) W/FED (NA5)	12[illegible]48733	1	DISCON	HARNESS, E.C.M.
84	Y A/TRNS, FED, CALIF (1ST DES)	12[illegible]28754	1	DISCON	HARNESS, ELEK CONT MDL WRG (SGL WIRE OIL PRESS SW CONN)
84	Y M/TRNS, FED, CALIF (1ST DES)	120[illegible]199	1	DISCON	HARNESS, ELEK CONT MDL WRG (SGL WIRE OIL PRESS SW CONN)
84	Y M/TRNS, FED, CALIF (2ND DES)	12029216	1	DISCON	HARNESS, ELEK CONT MDL WRG (DBL WIRE OIL PRESS SW CONN)
84	Y A/TRNS, FED, CALIF (2ND DES)	12029217	1	DISCON	HARNESS, ELEK CONT MDL WRG (DBL WIRE OIL PRESS SW CONN)
89	Y (5.7–8) A/TRNS, A/C (C68)	12090323	1	1266.25	HARNESS, ENG & ECM (02.525)
86	Y M/TRNS, A/C (C60), FED (NA5) (EXC NM8 EXPORT)	12048815	1	DISCON	HARNESS, ENG & ECM WRG (02.525)
86	Y A/TRNS, A/C (C60) (EXC NM8 EXPORT)	12048817	1	DISCON	HARNESS, ENG & ECM WRG (02.525)
86	Y A/TRNS, A/C (C68) (EXC NM8 EXPORT)	12048818	1	DISCON	HARNESS, ENG & ECM WRG (02.525)
86	Y07 M/TRNS, A/C (C68), FED (NA5) (EXC NM8 EXPORT)	12048816	1	DISCON	HARNESS, ENG & ECM WRG (02.525)
87	Y M/TRNS, A/C (C60)	12067670	1	DISCON	HARNESS, ENG & ECM WRG (02.525)
87	Y M/TRNS, A/C (C68)	12067671	1	DISCON	HARNESS, ENG & ECM WRG (02.525)
87	Y A/TRNS, A/C, FED (NA5) (EXC NM8 EXPORT)	12067672	1	DISCON	HARNESS, ENG & ECM WRG (02.525)
87	Y A/TRNS, A/C (C68), FED (NA5) (EXC NM8 EXPORT)	12067673	1	DISCON	HARNESS, ENG & ECM WRG (02.525)
88	Y A/TRNS, A/C (C60)	12055808	1	DISCON	HARNESS, ENG & ECM WRG (02.525)
88	Y A/TRNS, A/C (C68)	12055809	1	DISCON	HARNESS, ENG & ECM WRG (02.525)
88	Y M/TRNS, A/C (C60)	12080840	1	DISCON	HARNESS, ENG & ECM WRG (02.525)
88	Y M/TRNS, A/C (C68)	12080841	1	DISCON	HARNESS, ENG & ECM WRG (02.525)
89	Y (5.7–8) M/TRNS, A/C (C60) (2ND DES)	12090320	1	1266.25	HARNESS, ENG & ECM WRG (02.525) (ORANGE WIRE IN B–8 CAV OF VATS MDL CONN)
89	Y (5.7–8) M/TRNS, A/C (C68)	12090321	1	1266.25	HARNESS, ENG & ECM WRG (02.525)
89	Y (5.7–8) A/TRNS, A/C (C60) (2ND DES)	12090322	1	1266.25	HARNESS, ENG & ECM WRG (02.525) (ORANGE WIRE IN B–8 CAV OF VATS MDL CONN)
89	Y (5.7J)	12090324	1	1266.25	HARNESS, ENG & ECM WRG (02.525)
91	Y 5.7J (LT5)	12106549	1	26.14	HARNESS, ENG PWR SW WRG (I/P TO VALET MODE SW) (USE W/4 PIN ENG PWR SW CONN)
87–89	Y	12067418	1	DISCON	HARNESS, F/FLR CNSL
84–86	Y	12029153	1	DISCON	HARNESS, FRT FLR CNSL WRG
85	Y (EXC VB4, VD1, VE1, VT7 EXPORT)	12050645	1	DISCON	HARNESS, FWD LP
86	Y (EXC VB4, VD1, VE1, VT7 EXPORT)	12048809	1	DISCON	HARNESS, FWD LP
87	Y (EXC T72, T84 EXPORT)	12067732	1	DISCON	HARNESS, FWD LP
84	Y	12028953	1	DISCON	HARNESS, FWD LP WRG
88	Y (EXC T72, T84 EXPORT)	12073487	1	666.86	HARNESS, FWD LP WRG
89	Y (5.7–8)	12073487	1	666.86	HARNESS, FWD LP WRG
90	Y (5.7–8) (EXC CANADIAN T61)	12073776	1	666.86	HARNESS, FWD LP WRG

© 2000 GENERAL MOTORS SERVICE PARTS OPERATIONS

2.480 BRACKET – CONNECTOR – HARNESS – WIRE, Chassis Wiring(Con't)

90	Y (5.7J) SOFT RIDE SUSP (FE1), H .D .SUSP (EXC CANADIAN T61) ...	12090331	1	985.50	HARNESS, FWD LP WRG .....
91	Y 5.7–8 (L98), (EXC DAYTIME RUNNING LGT (T61)	12080863	1	985.50	HARNESS, FWD LP WRG .....
91	Y 5.7J (LT5), SOFT RIDE SUSP (FE1), HVY DUTY SUSP (FE7), (EXC DAYTIME RUNNING LGT (T61)	12080864	1	666.86	HARNESS, FWD LP WRG .....
92	Y 5.7P (LT1), (EXC DAYTIME RUNNING LGT (T61)	12090371	1	292.85	HARNESS, FWD LP WRG .....
92	Y 5.7J (LT5), (EXC DAYTIME RUNNING LGT (T61)	12090372	1	315.14	HARNESS, FWD LP WRG .....
93	Y 5.7P (LT1), (EXC DIAGNOSTIC SYSTEM (BAK), DAYTIME RUNNING LGT (T61)	12106580	1	816.00	HARNESS, FWD LP WRG .....
93–94	Y 5.7J (LT5), (EXC DAYTIME RUNNING LGT (T61)	12106583	1	985.50	HARNESS, FWD LP WRG .....
93	Y 5.7P (LT1), DIAGNOSTIC SYSTEM (BAK), (EXC DAYTIME RUNNING LGT (T61)	12141822	1	292.85	HARNESS, FWD LP WRG .....
94	Y 5.7P (LT1), (EXC HDLP (T72) (EXPORT), RH RULE OF ROAD HDLP (T84) (EXPORT), LH RULE OF ROAD HDLP (T85) (EXPORT), SIG & MKR LP (T90) (EXPORT) ...	12130480	1	292.85	HARNESS, FWD LP WRG .....
94	Y 5.7J (LT5), (EXC HDLP (T72) (EXPORT), RH RULE OF ROAD HDLP (T84) (EXPORT), LH RULE OF ROAD HDLP (T85) (EXPORT), SIG & MKR LP (T90) (EXPORT) ...	12154336	1	292.85	HARNESS, FWD LP WRG .....
95	Y 5.7P (LT1), (EXC HDLP (T72) (EXPORT), RH RULE OF ROAD HDLP (T84) (EXPORT), LH RULE OF ROAD HDLP (T85) (EXPORT), SIG & MKR LP (T90) (EXPORT) ...	12130484	1	292.85	HARNESS, FWD LP WRG .....
95	Y 5.7J (LT5), (EXC HDLP (T72) (EXPORT), RH RULE OF ROAD HDLP (T84) (EXPORT), LH RULE OF ROAD HDLP (T85) (EXPORT), SIG & MKR LP (T90) (EXPORT) ...	12130486	1	292.85	HARNESS, FWD LP WRG .....
96	Y (EXC HDLP (T72) (EXPORT), RH RULE OF ROAD HDLP (T84) (EXPORT), LH RULE OF ROAD HDLP (T85) (EXPORT), SIG & MKR LP (T90) (EXPORT)	12163717	1	292.85	HARNESS, FWD LP WRG .....
85	Y A/TRNS (MD8), A/C (C60)	12048741	1	DISCON	HARNESS, I/P .....
85	Y M/TRNS (MH5, MK2), A/C (C60) ..	12048742	1	DISCON	HARNESS, I/P .....
86	Y M/TRNS, A/C (C60)	12048793	1	DISCON	HARNESS, I/P .....
86	Y A/TRNS, A/C (C60)	12048794	1	DISCON	HARNESS, I/P .....
86	Y M/TRNS, A/C (C68)	12048795	1	DISCON	HARNESS, I/P .....
86	Y A/TRNS, A/C (C68)	12048796	1	DISCON	HARNESS, I/P .....
87	Y A/TRNS, A/C (C68)	12068102	1	1257.59	HARNESS, I/P .....
87	Y M/TRNS, A/C (C68)	12068103	1	1257.59	HARNESS, I/P .....
87	Y A/TRNS, A/C (C60)	12073820	1	DISCON	HARNESS, I/P .....
84	Y A/TRNS (1ST DES)	12036383	1	DISCON	HARNESS, I/P WRG (BLACK 5–WAY AC CONN W/2 DBL WIRES IN CAVS C & D) .....
84	Y M/TRNS	12043083	1	DISCON	HARNESS, I/P WRG .....
84	Y A/TRNS (2ND DES)	12043276	1	DISCON	HARNESS, I/P WRG (1 DBL WIRE IN CAV D) .....
87	Y M/TRNS (MH5, MK2), A/C (C60) ..	12073821	1	DISCON	HARNESS, I/P WRG .....

© 2000 GENERAL MOTORS SERVICE PARTS OPERATIONS

2.480 BRACKET – CONNECTOR – HARNESS – WIRE, Chassis Wiring(Con't)

88	Y (5.7–8) M/TRNS, A/C (C60)	12073824	1	DISCON	HARNESS, I/P WRG
88	Y (5.7–8) A/TRNS, A/C (C60)	12073825	1	DISCON	HARNESS, I/P WRG
88	Y (5.7–8) M/TRNS, A/C (C68)	12073826	1	DISCON	HARNESS, I/P WRG
88	Y (5.7–8) A/TRNS, A/C (C68)	12073827	1	DISCON	HARNESS, I/P WRG
89	Y (5.7–8) ML9, A/C (C60) (1ST DES)	12073507	1	1548.75	HARNESS, I/P WRG (PINK WIRE IN B–8 CAV OF VATS MDL CONN)
89	Y (5.7–8) A/TRNS (MD8), A/C (C60) (1ST DES)	12073509	1	1548.75	HARNESS, I/P WRG (PINK WIRE IN B–8 CAV OF VATS MDL CONN)
89	Y (5.7–8) M/TRNS (ML9), A/C (C68) (1ST DES)	12073511	1	1548.75	HARNESS, I/P WRG (PINK WIRE IN B–8 CAV OF VATS MDL CONN)
89	Y (5.7–8) A/TRNS (MD8), A/C (C68) (1ST DES)	12073513	1	1548.75	HARNESS, I/P WRG (PINK WIRE IN B- 8 CAV OF VATS MDL CONN)
89	Y (5.7–8) ML9, A/C (C60) (2ND DES)	12090315	1	1548.75	HARNESS, I/P WRG (ORANGE WIRE IN B–8 CAV OF VATS MDL CONN)
89	Y (5.7–8) A/TRNS (MD8), A/C (C60) (2ND DES)	12090316	1	1257.59	HARNESS, I/P WRG (ORANGE WIRE IN B–8 CAV OF VATS MDL CONN)
89	Y (5.7–8) M/TRNS (ML9), A/C (C68) (2ND DES)	12090318	1	1548.75	HARNESS, I/P WRG (ORANGE WIRE IN B–8 CAV OF VATS MDL CONN)
89	Y (5.7–8) A/TRNS (MD8), A/C (C68) (2ND DES)	12090319	1	1266.25	HARNESS, I/P WRG (ORANGE WIRE IN B–8 CAV OF VATS MDL CONN)
90	Y M/TRNS (ML9), A/C (C60) (EXC CANADIAN T61)	12101432	1	1239.00	HARNESS, I/P WRG (**VPI 1–877–846–8243)
90	Y M/TRNS (ML9), A/C (C68) (EXC CANADIAN T61)	12101434	1	1548.75	HARNESS, I/P WRG
90	Y 4–SPD A/TRANS (MD8), A/C MAN CONT (C60), (EXC DAYTIME RUNNING LGT (T61)	12102274	1	1257.59	HARNESS, I/P WRG
90	Y A/TRNS (MD8), A/C (C68) (EXC CANADIAN T61)	12102538	1	1257.59	HARNESS, I/P WRG
91	Y 4–SPD A/TRANS (MD8), A/C MAN CONT (C60), (EXC DAYTIME RUNNING LGT (T61)	12116436	1	1028.20	HARNESS, I/P WRG
91	Y 6–SPD M/TRANS (ML9), A/C MAN CONT (C60), (EXC DAYTIME RUNNING LGT (T61)	12116438	1	1028.20	HARNESS, I/P WRG
91	Y 4–SPD A/TRANS (MD8), A/C AUTO ELEC CONT (C68), (EXC DAYTIME RUNNING LGT (T61)	12116500	1	1266.25	HARNESS, I/P WRG (MAY REQ 12106563 WIRE IF JMPR PRESENT AT THE PWR SEAT FEED)
91	Y 6–SPD M/TRANS (ML9), A/C AUTO ELEC CONT (C68), (EXC DAYTIME RUNNING LGT (T61)	12116502	1	1028.20	HARNESS, I/P WRG
92	Y 4–SPD A/TRANS (MD8), A/C MAN CONT (C60), (EXC DAYTIME RUNNING LGT (T61)	12125005	1	1028.20	HARNESS, I/P WRG
92	Y 6–SPD M/TRANS (ML9), A/C MAN CONT (C60), (EXC DAYTIME RUNNING LGT (T61)	12125007	1	1257.59	HARNESS, I/P WRG
92	Y 4–SPD A/TRANS (MD8), A/C AUTO ELEC CONT (C68), (EXC DAYTIME RUNNING LGT (T61)	12125813	1	881.59	HARNESS, I/P WRG
92	Y 6–SPD M/TRANS (ML9), A/C AUTO ELEC CONT (C68), (EXC DAYTIME RUNNING LGT (T61)	12125815	1	881.59	HARNESS, I/P WRG
93	Y 4–SPD A/TRANS (MD8), A/C MAN CONT (C60), (EXC SIG & MKR LP (T90) (EXPORT)	12141443	1	1257.59	HARNESS, I/P WRG
93	Y 6–SPD M/TRANS (ML9), A/C AUTO ELEC CONT (C68), (EXC SIG & MKR LP (T90) (EXPORT)	12141444	1	1257.59	HARNESS, I/P WRG (FOR VEH –DRL, SPLICE CAV D TO CAV E @ BLUE 8–WAY DRL MDL CONN.)

© 2000 GENERAL MOTORS SERVICE PARTS OPERATIONS

2.480 BRACKET – CONNECTOR – HARNESS – WIRE, Chassis Wiring(Con't)

93	Y 6–SPD M/TRANS (ML9), A/C MAN CONT (C60), (EXC SIG & MKR LP (T90) (EXPORT)	12141445	1	1257.59	HARNESS, I/P WRG .....
93	Y 4–SPD A/TRANS (MD8), A/C AUTO ELEC CONT (C68), (EXC SIG & MKR LP (T90) (EXPORT) ...	12141446	1	1257.59	HARNESS, I/P WRG (ON VEHS W/O DAYTIME RUNNING LPS SPLICE CAV D & E WIRES TOGETHER AT BLUE DRL MDL CONN.) .....
94	Y 6–SPD M/TRANS (ML9), A/C MAN CONT (C60), (EXC DAYTIME RUNNING LGT (T61), HDLP (T72) (EXPORT), RH RULE OF ROAD HDLP (T84) (EXPORT), LH RULE OF ROAD HDLP (T85) (EXPORT), SIG & MKR LP (T90) (EXPORT) ...	12130324	1		HARNESS, I/P WRG .....
94	Y 6–SPD M/TRANS (ML9), A/C AUTO ELEC CONT (C68), (EXC DAYTIME RUNNING LGT (T61), HDLP (T72) (EXPORT), RH RULE OF ROAD HDLP (T84) (EXPORT), LH RULE OF ROAD HDLP (T85) (EXPORT), SIG & MKR LP (T90) (EXPORT)	12130326	1	1548.75	HARNESS, I/P WRG .....
94	Y 4–SPD A/TRANS (M30), A/C MAN CONT (C60), (EXC DAYTIME RUNNING LGT (T61), HDLP (T72) (EXPORT), RH RULE OF ROAD HDLP (T84) (EXPORT), LH RULE OF ROAD HDLP (T85) (EXPORT), SIG & MKR LP (T90) (EXPORT), (2ND DES)	12130491	1		HARNESS, I/P WRG .....
94	Y 4–SPD A/TRANS (M30), A/C MAN CONT (C60), DAYTIME RUNNING LGT (T61), (EXC HDLP (T72) (EXPORT), RH RULE OF ROAD HDLP (T84) (EXPORT), LH RULE OF ROAD HDLP (T85) (EXPORT), SIG & MKR LP (T90) (EXPORT) ...	12130492	1		HARNESS, I/P WRG .....
94	Y 4–SPD A/TRANS (M30), A/C AUTO ELEC CONT (C68), (EXC DAYTIME RUNNING LGT (T61), HDLP (T72) (EXPORT), RH RULE OF ROAD HDLP (T84) (EXPORT), LH RULE OF ROAD HDLP (T85) (EXPORT), SIG & MKR LP (T90) (EXPORT)	12130493	1	1488.75	HARNESS, I/P WRG .....
94	Y 4–SPD A/TRANS (M30), A/C AUTO ELEC CONT (C68), DAYTIME RUNNING LGT (T61), (EXC HDLP (T72) (EXPORT), RH RULE OF ROAD HDLP (T84) (EXPORT), LH RULE OF ROAD HDLP (T85) (EXPORT), SIG & MKR LP (T90) (EXPORT)	12130494	1		HARNESS, I/P WRG .....
94	Y 4–SPD A/TRANS (M30), A/C MAN CONT (C60), DAYTIME RUNNING LGT (T61), (EXC HDLP (T72) (EXPORT), RH RULE OF ROAD HDLP (T84) (EXPORT), LH RULE OF ROAD HDLP (T85) (EXPORT), SIG & MKR LP (T90) (EXPORT), (1ST DES)	12141787	1		HARNESS, I/P WRG (TAGGED 0320 OR 0321) (ON VEH W/O DRL, AT 8–WAY BLUE CONN TO DRL MDL SPLICE CAV D & CAV E LEADS TOGETHER.) .....

© 2000 GENERAL MOTORS SERVICE PARTS OPERATIONS

2.480 BRACKET - CONNECTOR - HARNESS - WIRE, Chassis Wiring(Con't)

94	Y 4-SPD A/TRANS (M30), A/C AUTO ELEC CONT (C68), DAYTIME RUNNING LGT (T61), (EXC HDLP (T72) (EXPORT), RH RULE OF ROAD HDLP (T84) (EXPORT), LH RULE OF ROAD HDLP (T85) (EXPORT), SIG & MKR LP (T90) (EXPORT), (1ST DES) ...	12141788	1		HARNESS, I/P WRG (TAGGED 0322 OR 0323) (ON VEH W/DAYTIME RUNNING LGHTS, ADD 8-WAY BLUE CONN TO DAYTIME RUNNING LGHT, SPLICE CAV D & CAV E WIRES TOGETHER) .....
94	Y 6-SPD M/TRANS (ML9), A/C MAN CONT (C60), DAYTIME RUNNING LGT (T61), (EXC HDLP (T72) (EXPORT), RH RULE OF ROAD HDLP (T84) (EXPORT), LH RULE OF ROAD HDLP (T85) (EXPORT), SIG & MKR LP (T90) (EXPORT) ...	12141789	1		HARNESS, I/P WRG .....
94	Y 6-SPD M/TRANS (ML9), A/C AUTO ELEC CONT (C68), DAYTIME RUNNING LGT (T61), (EXC HDLP (T72) (EXPORT), RH RULE OF ROAD HDLP (T84) (EXPORT), LH RULE OF ROAD HDLP (T85) (EXPORT), SIG & MKR LP (T90) (EXPORT)	12141790	1		HARNESS, I/P WRG .....
94	Y 6-SPD M/TRANS (ML9), A/C AUTO ELEC CONT (C68), (EXC HDLP (T72) (EXPORT), RH RULE OF ROAD HDLP (T84) (EXPORT), LH RULE OF ROAD HDLP (T85) (EXPORT), SIG & MKR LP (T90) (EXPORT)	12163703	1	1257.59	HARNESS, I/P WRG .....
95	Y 5.7J (LT5), 6-SPD M/TRANS (ML9), A/C AUTO ELEC CONT (C68), (EXC DAYTIME RUNNING LGT (T61)	12130326	1	1548.75	HARNESS, I/P WRG .....
95	Y 5.7P (LT1), 4-SPD A/TRANS (M30), A/C MAN CONT (C60), DAYTIME RUNNING LGT (T61), (EXC HDLP (T72) (EXPORT), RH RULE OF ROAD HDLP (T84) (EXPORT), LH RULE OF ROAD HDLP (T85) (EXPORT), SIG & MKR LP (T90) (EXPORT)	12130389	1	1424.85	HARNESS, I/P WRG .....
95	Y 5.7P (LT1), 4-SPD A/TRANS (M30), A/C AUTO ELEC CONT (C68), DAYTIME RUNNING LGT (T61), (EXC HDLP (T72) (EXPORT), RH RULE OF ROAD HDLP (T84) (EXPORT), LH RULE OF ROAD HDLP (T85) (EXPORT), SIG & MKR LP (T90) (EXPORT)	12130391	1	1424.85	HARNESS, I/P WRG (SPLICE CAV D & E WIRES @ BLUE DRL MDL CONN FOR VEH W/O DRL.) .....
95	Y 5.7J (LT5), 6-SPD M/TRANS (ML9), A/C AUTO ELEC CONT (C68), DAYTIME RUNNING LGT (T61)	12141790	1		HARNESS, I/P WRG .....
95	Y 5.7P (LT1), 6-SPD M/TRANS (ML9), A/C MAN CONT (C60), (EXC DAYTIME RUNNING LGT (T61), HDLP (T72) (EXPORT), RH RULE OF ROAD HDLP (T84) (EXPORT), LH RULE OF ROAD HDLP (T85) (EXPORT), SIG & MKR LP (T90) (EXPORT)	12163700	1	1548.75	HARNESS, I/P WRG .....

© 2000 GENERAL MOTORS SERVICE PARTS OPERATIONS

2.480 BRACKET – CONNECTOR – HARNESS – WIRE, Chassis Wiring(Con't)

95	Y 5.7P (LT1), 6–SPD M/TRANS (ML9), A/C AUTO ELEC CONT (C68), (EXC DAYTIME RUNNING LGT (T61), HDLP (T72) (EXPORT), RH RULE OF ROAD HDLP (T84) (EXPORT), LH RULE OF ROAD HDLP (T85) (EXPORT), SIG & MKR LP (T90) (EXPORT)	12163702	1	1257.59	HARNESS, I/P WRG .....
95	Y 5.7J (LT5), 6–SPD M/TRANS (ML9), A/C AUTO ELEC CONT (C68)	12163703	1	1257.59	HARNESS, I/P WRG .....
96	Y 4–SPD A/TRANS (M30), A/C MAN CONT (C60), (EXC HDLP (T72) (EXPORT), RH RULE OF ROAD HDLP (T84) (EXPORT), LH RULE OF ROAD HDLP (T85) (EXPORT), SIG & MKR LP (T90) (EXPORT) ...	12130468	1	1548.75	HARNESS, I/P WRG (WHEN USE ON VEH W/O DAYTIME RUN LIGHTS, SPLICE CAV D&E TOGETHER @ BLUE 8–WAY DRL MOD CONN) .....
96	Y 4–SPD A/TRANS (M30), A/C AUTO ELEC CONT (C68), (EXC HDLP (T72) (EXPORT), RH RULE OF ROAD HDLP (T84) (EXPORT), LH RULE OF ROAD HDLP (T85) (EXPORT), SIG & MKR LP (T90) (EXPORT)	12130470	1	1061.69	HARNESS, I/P WRG (WHEN USE ON VEH W/O DAYTIME RUN LIGHTS, SPLICE CAV D&E TOGETHER @ BLUE 8–WAY DRL MOD CONN) .....
96	Y 6–SPD M/TRANS (ML9), A/C MAN CONT (C60), (EXC HDLP (T72) (EXPORT), RH RULE OF ROAD HDLP (T84) (EXPORT), LH RULE OF ROAD HDLP (T85) (EXPORT), SIG & MKR LP (T90) (EXPORT) ...	12130472	1	1257.59	HARNESS, I/P WRG (WHEN USE ON VEH W/O DAYTIME RUN LIGHTS, SPLICE CAV D&E TOGETHER @ BLUE 8–WAY DRL MOD CONN) .....
96	Y 6–SPD M/TRANS (ML9), A/C AUTO ELEC CONT (C68), (EXC HDLP (T72) (EXPORT), RH RULE OF ROAD HDLP (T84) (EXPORT), LH RULE OF ROAD HDLP (T85) (EXPORT), SIG & MKR LP (T90) (EXPORT)	12130474	1	1257.59	HARNESS, I/P WRG (WHEN USE ON VEH W/O DAYTIME RUN LIGHTS, SPLICE CAV D&E TOGETHER @ BLUE 8–WAY DRL MOD CONN) .....
84–91	Y RECL FRT BKT ST (AQ9)	12028999	1	DISCON	HARNESS, I/P WRG HARN EXTN .....
91	Y	12126533	1	DISCON	HARNESS, I/P WRG HARN EXTN (VALET MODE) (USE W/4 PIN ENG PWR SW CONN) .....
92–93	Y RECL FRT BKT ST (AQ9)	12106560	1	47.45	HARNESS, I/P WRG HARN EXTN .....
85–91	Y	12029463	1	25.75	HARNESS, INT AIR TEMP SEN WRG ...
84–85	Y	12028667	1	DISCON	HARNESS, MIR LP WRG .....
	*EXPORT**********EXPORT**********EXPORT**********EXPORT**********EXPORT*				
84	Y NM5 (EXPORT CANADA) (2ND DES)	12029435	1	DISCON	HARNESS, ELEK CONT MDL (OIL PRESS SW HAS 3 SINGLE WIRES) ..
84	Y NM5 (EXPORT, CANADA) (1ST DES)	12029044	1	DISCON	HARNESS, ELEK CONT MDL WRG (OIL PRESS SW CONN HAS 1 DBL WIRE & 1 SGL WIRE) .....
86	Y M/TRNS, A/C (C60), (NM5) EXPORT, CANADA (EXC NM8 EXPORT)	12048815	1	DISCON	HARNESS, ENG & ECM WRG (02.525) .
86	Y A/TRNS, NM8 (EXPORT)	12048819	1	DISCON	HARNESS, ENG & ECM WRG (02.525) .
86	Y07 M/TRNS, A/C (C68), (NM5) EXPORT, CANADA (EXC NM8 EXPORT)	12048816	1	DISCON	HARNESS, ENG & ECM WRG (02.525) .
87	Y A/TRNS, A/C, NM5 (EXPORT, CANADA) (EXC NM8 EXPORT)	12067672	1	DISCON	HARNESS, ENG & ECM WRG (02.525) .
87	Y A/TRNS, A/C (C68), NM5 (EXPORT, CANADA) (EXC NM8 EXPORT)	12067673	1	DISCON	HARNESS, ENG & ECM WRG (02.525) .

© 2000 GENERAL MOTORS SERVICE PARTS OPERATIONS

2.480 BRACKET – CONNECTOR – HARNESS – WIRE, Chassis Wiring(Con't)

87	Y A/TRNS, NM8 (EXPORT)	12067674	1	DISCON	HARNESS, ENG & ECM WRG (02.525) .
84	Y VB4, VD1, VE1, VT7 (EXPORT) ...	12029218	1	DISCON	HARNESS, FWD LP .....
85	Y VB4, VD1, VE1, VT7 (EXPORT) ...	12050642	1	DISCON	HARNESS, FWD LP .....
86	Y VB4, VD1, VE1, VT7 (EXPORT) ...	12055776	1	DISCON	HARNESS, FWD LP .....
87	Y T72, T84 (EXPORT)	12067734	1	DISCON	HARNESS, FWD LP .....
88	Y T72, T84 (EXPORT)	12055815	1	DISCON	HARNESS, FWD LP WRG .....
90	Y (5.7 –8) T61 (CANADIAN)	12090336	1	667.87	HARNESS, FWD LP WRG .....
90	Y (5.7J) T61 (CANADIAN)	12090337	1	987.00	HARNESS, FWD LP WRG .....
91	Y 5.7–8 (L98), DAYTIME RUNNING LGT (T61)	12090346	1	667.87	HARNESS, FWD LP WRG .....
91	Y 5.7J (LT5), DAYTIME RUNNING LGT (T61)	12090347	1	667.87	HARNESS, FWD LP WRG .....
92	Y 5.7P (LT1), DAYTIME RUNNING LGT (T61)	12090373	1	667.87	HARNESS, FWD LP WRG .....
92	Y 5.7J (LT5), DAYTIME RUNNING LGT (T61)	12090374	1	667.87	HARNESS, FWD LP WRG .....
93	Y 5.7P (LT1), DAYTIME RUNNING LGT (T61)	12106581	1	666.86	HARNESS, FWD LP WRG .....
93	Y 5.7J (LT5), DAYTIME RUNNING LGT (T61)	12106582	1	611.03	HARNESS, FWD LP WRG .....
94	Y 5.7P (LT1), HDLP (T72) (EXPORT), RH RULE OF ROAD HDLP (T84) (EXPORT), LH RULE OF ROAD HDLP (T85) (EXPORT), SIG & MKR LP (T90) (EXPORT)	12130481	1		HARNESS, FWD LP WRG .....
94	Y 5.7J (LT5), HDLP (T72) (EXPORT), RH RULE OF ROAD HDLP (T84) (EXPORT), LH RULE OF ROAD HDLP (T85) (EXPORT), SIG & MKR LP (T90) (EXPORT)	12154337	1		HARNESS, FWD LP WRG .....
95	Y 5.7P (LT1), HDLP (T72) (EXPORT), RH RULE OF ROAD HDLP (T84) (EXPORT), LH RULE OF ROAD HDLP (T85) (EXPORT), SIG & MKR LP (T90) (EXPORT)	12130485	1	292.85	HARNESS, FWD LP WRG .....
96	Y HDLP (T72) (EXPORT), RH RULE OF ROAD HDLP (T84) (EXPORT), LH RULE OF ROAD HDLP (T85) (EXPORT), SIG & MKR LP (T90) (EXPORT)	12163718	1	272.58	HARNESS, FWD LP WRG .....
94–96	Y HDLP (T72) (EXPORT), RH RULE OF ROAD HDLP (T84) (EXPORT), LH RULE OF ROAD HDLP (T85) (EXPORT), SIG & MKR LP (T90) (EXPORT)	12130344	2	40.09	HARNESS, FWD LP WRG HARN EXTN .
90	Y M/TRNS (ML9), A/C (C60), T61 (CANADIAN)	12101433	1	1266.25	HARNESS, I/P WRG .....
90	Y M/TRNS (ML9), A/C (C68), T61 (CANADIAN)	12101435	1	1266.25	HARNESS, I/P WRG .....
90	Y A/TRNS (MD8), A/C (C68), T61 (CANADIAN)	12102273	1	1028.20	HARNESS, I/P WRG .....
90	Y A/TRNS (MD8), A/C (C60), T61 (CANADIAN)	12102537	1		HARNESS, I/P WRG .....
91	Y 4–SPD A/TRANS (MD8), A/C MAN CONT (C60), DAYTIME RUNNING LGT (T61)	12116437	1	1028.20	HARNESS, I/P WRG .....
91	Y 6–SPD M/TRANS (ML9), A/C MAN CONT (C60), DAYTIME RUNNING LGT (T61)	12116439	1	1028.20	HARNESS, I/P WRG .....

© 2000 GENERAL MOTORS SERVICE PARTS OPERATIONS

2.480 BRACKET – CONNECTOR – HARNESS – WIRE, Chassis Wiring(Con't)

91	Y 4–SPD A/TRANS (MD8), A/C AUTO ELEC CONT (C68), DAYTIME RUNNING LGT (T61)	12116501	1	1028.20	HARNESS, I/P WRG .....
91	Y 6–SPD M/TRANS (ML9), A/C AUTO ELEC CONT (C68), DAYTIME RUNNING LGT (T61)	12116503	1	1028.20	HARNESS, I/P WRG .....
92	Y 4–SPD A/TRANS (MD8), A/C MAN CONT (C60), DAYTIME RUNNING LGT (T61)	12125006	1	1028.20	HARNESS, I/P WRG .....
92	Y 6–SPD M/TRANS (ML9), A/C MAN CONT (C60), DAYTIME RUNNING LGT (T61)	12125008	1	1028.20	HARNESS, I/P WRG .....
92	Y 4–SPD A/TRANS (MD8), A/C AUTO ELEC CONT (C68), DAYTIME RUNNING LGT (T61)	12125814	1	1028.20	HARNESS, I/P WRG .....
92	Y 6–SPD M/TRANS (ML9), A/C AUTO ELEC CONT (C68), DAYTIME RUNNING LGT (T61)	12125816	1	1028.20	HARNESS, I/P WRG .....
93	Y 6–SPD M/TRANS (ML9), A/C AUTO ELEC CONT (C68), SIG & MKR LP (T90) (EXPORT)	12141441	1	1547.50	HARNESS, I/P WRG .....
93	Y 4–SPD A/TRANS (MD8), A/C AUTO ELEC CONT (C68), SIG & MKR LP (T90) (EXPORT)	12141442	1	1256.57	HARNESS, I/P WRG .....
94	Y 4–SPD A/TRANS (M30), A/C AUTO ELEC CONT (C68), HDLP (T72) (EXPORT), RH RULE OF ROAD HDLP (T84) (EXPORT), LH RULE OF ROAD HDLP (T85) (EXPORT), SIG & MKR LP (T90) (EXPORT)	12130495	1		HARNESS, I/P WRG .....
94	Y 4–SPD A/TRANS (M30), A/C AUTO ELEC CONT (C68), HDLP (T72) (EXPORT), RH RULE OF ROAD HDLP (T84) (EXPORT), LH RULE OF ROAD HDLP (T85) (EXPORT), SIG & MKR LP (T90) (EXPORT), (1ST DES)	12141791	1		HARNESS, I/P WRG (TAGGED 0328) ...
94	Y 6–SPD M/TRANS (ML9), A/C AUTO ELEC CONT (C68), HDLP (T72) (EXPORT), RH RULE OF ROAD HDLP (T84) (EXPORT), LH RULE OF ROAD HDLP (T85) (EXPORT), SIG & MKR LP (T90) (EXPORT)	12141792	1		HARNESS, I/P WRG .....
95	Y 5.7P (LT1), 4–SPD A/TRANS (M30), A/C AUTO ELEC CONT (C68), HDLP (T72) (EXPORT), RH RULE OF ROAD HDLP (T84) (EXPORT), LH RULE OF ROAD HDLP (T85) (EXPORT), SIG & MKR LP (T90) (EXPORT), (EXC DAYTIME RUNNING LGT (T61)	12130396	1	1257.59	HARNESS, I/P WRG .....
95	Y 5.7P (LT1), 6–SPD M/TRANS (ML9), A/C MAN CONT (C60), DAYTIME RUNNING LGT (T61), (EXC HDLP (T72) (EXPORT), RH RULE OF ROAD HDLP (T84) (EXPORT), LH RULE OF ROAD HDLP (T85) (EXPORT), SIG & MKR LP (T90) (EXPORT)	12163701	1	1257.59	HARNESS, I/P WRG .....

© 2000 GENERAL MOTORS SERVICE PARTS OPERATIONS

2.480 BRACKET – CONNECTOR – HARNESS – WIRE, Chassis Wiring(Con't)

95	Y 5.7P (LT1), 6–SPD M/TRANS (ML9), A/C AUTO ELEC CONT (C68), DAYTIME RUNNING LGT (T61), (EXC HDLP (T72) (EXPORT), RH RULE OF ROAD HDLP (T84) (EXPORT), LH RULE OF ROAD HDLP (T85) (EXPORT), SIG & MKR LP (T90) (EXPORT)	12163703	1	1257.59	HARNESS, I/P WRG .....
95	Y 5.7P (LT1), 6–SPD M/TRANS (ML9), A/C AUTO ELEC CONT (C68), HDLP (T72) (EXPORT), RH RULE OF ROAD HDLP (T84) (EXPORT), LH RULE OF ROAD HDLP (T85) (EXPORT), SIG & MKR LP (T90) (EXPORT), (EXC DAYTIME RUNNING LGT (T61)	12163704	1	1257.59	HARNESS, I/P WRG .....
96	Y 4–SPD A/TRANS (M30), A/C AUTO ELEC CONT (C68), HDLP (T72) (EXPORT), RH RULE OF ROAD HDLP (T84) (EXPORT), LH RULE OF ROAD HDLP (T85) (EXPORT), SIG & MKR LP (T90) (EXPORT), (EXC DAYTIME RUNNING LGT (T61)	12130475	1	1257.59	HARNESS, I/P WRG .....
96	Y 5.7–5 (LT4), 6–SPD M/TRANS (ML9), A/C AUTO ELEC CONT (C68), HDLP (T72) (EXPORT), RH RULE OF ROAD HDLP (T84) (EXPORT), LH RULE OF ROAD HDLP (T85) (EXPORT), SIG & MKR LP (T90) (EXPORT), (EXC DAYTIME RUNNING LGT (T61)	12163715	1	1257.59	HARNESS, I/P WRG .....

2.525 HARNESS, Engine Wiring

86	Y M/TRNS, A/C (C60), FED (NA5) (EXC NM8 EXPORT)	12048815	1	DISCON	HARNESS, ENG & ECM WRG .....
86	Y A/TRNS, A/C (C60) (EXC NM8 EXPORT)	12048817	1	DISCON	HARNESS, ENG & ECM WRG .....
86	Y A/TRNS, A/C (C68) (EXC NM8 EXPORT)	12048818	1	DISCON	HARNESS, ENG & ECM WRG .....
86	Y07 M/TRNS, A/C (C68), FED (NA5) (EXC NM8 EXPORT)	12048816	1	DISCON	HARNESS, ENG & ECM WRG .....
87	Y M/TRNS, A/C (C60)	12067670	1	DISCON	HARNESS, ENG & ECM WRG .....
87	Y M/TRNS, A/C (C68)	12067671	1	DISCON	HARNESS, ENG & ECM WRG .....
87	Y A/TRNS, A/C, FED (NA5) (EXC NM8 EXPORT)	12067672	1	DISCON	HARNESS, ENG & ECM WRG .....
87	Y A/TRNS, A/C (C68), FED (NA5) (EXC NM8 EXPORT)	12067673	1	DISCON	HARNESS, ENG & ECM WRG .....
88	Y A/TRNS, A/C (C60)	12055808	1	DISCON	HARNESS, ENG & ECM WRG .....
88	Y A/TRNS, A/C (C68)	12055809	1	DISCON	HARNESS, ENG & ECM WRG .....
88	Y M/TRNS, A/C (C60)	12080840	1	DISCON	HARNESS, ENG & ECM WRG .....
88	Y M/TRNS, A/C (C68)	12080841	1	DISCON	HARNESS, ENG & ECM WRG .....
89	Y (5.7–8) M/TRNS, A/C (C60) (2ND DES)	12090320	1	1266.25	HARNESS, ENG & ECM WRG (ORANGE WIRE IN B–8 CAV OF VATS MDL CONN) .....
89	Y (5.7–8) M/TRNS, A/C (C68)	12090321	1	1266.25	HARNESS, ENG & ECM WRG .....
89	Y (5.7–8) A/TRNS, A/C (C60) (2ND DES)	12090322	1	1266.25	HARNESS, ENG & ECM WRG (ORANGE WIRE IN B–8 CAV OF VATS MDL CONN) .....
89	Y (5.7–8) A/TRNS, A/C (C68)	12090323	1	1266.25	HARNESS, ENG & ECM WRG .....
89	Y (5.7J)	12090324	1	1266.25	HARNESS, ENG & ECM WRG .....

© 2000 GENERAL MOTORS SERVICE PARTS OPERATIONS

2.525 HARNESS, Engine Wiring(Con't)

84	Y	12029248	1	DISCON	HARNESS, ENG WRG
85	Y	12029301	1	DISCON	HARNESS, ENG WRG
90	Y 5.7J (LT5), A/C MAN CONT (C60), SOFT RIDE SUSP (FE1), HVY DUTY SUSP (FE7)	12090375	1	1337.50	HARNESS, ENG WRG
90	Y 5.7J (LT5), A/C AUTO ELEC CONT (C68), SOFT RIDE SUSP (FE1), HVY DUTY SUSP (FE7)	12090376	1	1311.25	HARNESS, ENG WRG
90	Y (5.7-8) M/TRNS (ML9), A/C (C60)	12090377	1	1086.05	HARNESS, ENG WRG
90	Y (5.7-8) M/TRNS (ML9), A/C (C68)	12090378	1	1086.05	HARNESS, ENG WRG
90	Y (5.7-8) A/TRNS (MD8), A/C (C60)	12090379	1	1311.25	HARNESS, ENG WRG
90	Y (5.7-8) A/TRNS (MD8), A/C (C68)	12090380	1	1311.25	HARNESS, ENG WRG
91	Y 5.7-8 (L98), 4-SPD A/TRANS (MD8), A/C MAN CONT (C60)	12080865	1	1086.05	HARNESS, ENG WRG
91	Y 5.7-8 (L98), 6-SPD M/TRANS (ML9), A/C MAN CONT (C60)	12080866	1	1086.05	HARNESS, ENG WRG
91	Y 5.7-8 (L98), 4-SPD A/TRANS (MD8), A/C AUTO ELEC CONT (C68)	12080867	1	1086.05	HARNESS, ENG WRG
91	Y 5.7-8 (L98), 6-SPD M/TRANS (ML9), A/C AUTO ELEC CONT (C68)	12080868	1	1086.05	HARNESS, ENG WRG
91	Y 5.7J (LT5), A/C AUTO ELEC CONT (C68), SOFT RIDE SUSP (FE1), HVY DUTY SUSP (FE7)	12080870	1	1086.05	HARNESS, ENG WRG
92	Y 5.7J (LT5)	12117829	1	1086.05	HARNESS, ENG WRG
92	Y 5.7P (LT1), 4-SPD A/TRANS (MD8), A/C MAN CONT (C60)	12125009	1	1086.05	HARNESS, ENG WRG
92	Y 5.7P (LT1), 6-SPD M/TRANS (ML9), A/C MAN CONT (C60)	12125010	1	1086.05	HARNESS, ENG WRG
92	Y 5.7P (LT1), 4-SPD A/TRANS (MD8), A/C AUTO ELEC CONT (C68)	12125011	1	867.83	HARNESS, ENG WRG
92	Y 5.7P (LT1), 6-SPD M/TRANS (ML9), A/C AUTO ELEC CONT (C68)	12125012	1	1086.05	HARNESS, ENG WRG
93-95	Y 5.7J (LT5)	12141078	1	1086.05	HARNESS, ENG WRG
93	Y 5.7P (LT1), 6-SPD M/TRANS (ML9), A/C MAN CONT (C60)	12154081	1		HARNESS, ENG WRG
93	Y 5.7P (LT1), 6-SPD M/TRANS (ML9), A/C AUTO ELEC CONT (C68)	12154082	1	3054.14	HARNESS, ENG WRG
93	Y 5.7P (LT1), 4-SPD A/TRANS (MD8), A/C MAN CONT (C60)	12154083	1	1086.05	HARNESS, ENG WRG
93	Y 5.7P (LT1), 4-SPD A/TRANS (MD8), A/C AUTO ELEC CONT (C68)	12154084	1	1086.05	HARNESS, ENG WRG
94	Y 5.7P (LT1), 6-SPD M/TRANS (ML9), A/C MAN CONT (C60), (EXC VE1 (EXPORT)	12141752	1	1086.05	HARNESS, ENG WRG
94	Y 5.7P (LT1), 6-SPD M/TRANS (ML9), A/C AUTO ELEC CONT (C68), (EXC VE1 (EXPORT)	12141753	1	1337.50	HARNESS, ENG WRG
94	Y 5.7P (LT1), 4-SPD A/TRANS (M30), A/C MAN CONT (C60), (EXC VE1 (EXPORT)	12141754	1	1086.05	HARNESS, ENG WRG
94	Y 5.7P (LT1), 4-SPD A/TRANS (M30), A/C AUTO ELEC CONT (C68), (EXC VE1 (EXPORT)	12141755	1	1068.75	HARNESS, ENG WRG

© 2000 GENERAL MOTORS SERVICE PARTS OPERATIONS

2.525 HARNESS, Engine Wiring(Con't)

95	Y 5.7P (LT1), 6-SPD M/TRANS (ML9), A/C MAN CONT (C60), (EXC VE1 (EXPORT)	12130370	1	1337.50	HARNESS, ENG WRG .....
95	Y 5.7P (LT1), 4-SPD A/TRANS (M30), A/C MAN CONT (C60), (EXC VE1 (EXPORT)	12130371	1	1086.05	HARNESS, ENG WRG .....
95	Y 5.7P (LT1), 6-SPD M/TRANS (ML9), A/C AUTO ELEC CONT (C68), (EXC VE1 (EXPORT)	12130372	1	1086.05	HARNESS, ENG WRG .....
95	Y 5.7P (LT1), 4-SPD A/TRANS (M30), A/C AUTO ELEC CONT (C68), (EXC VE1 (EXPORT)	12130373	1	1068.75	HARNESS, ENG WRG .....
96	Y 6-SPD M/TRANS (ML9), A/C MAN CONT (C60), (EXC VE1 (EXPORT) .	12130461	1	1337.50	HARNESS, ENG WRG .....
96	Y 4-SPD A/TRANS (M30), A/C MAN CONT (C60), (EXC VE1 (EXPORT) .	12130462	1	1086.05	HARNESS, ENG WRG .....
96	Y 6-SPD M/TRANS (ML9), A/C AUTO ELEC CONT (C68), (EXC VE1 (EXPORT)	12130463	1	1337.50	HARNESS, ENG WRG .....
96	Y 4-SPD A/TRANS (M30), A/C AUTO ELEC CONT (C68), (EXC VE1 (EXPORT)	12130464	1	842.45	HARNESS, ENG WRG .....
86-91	Y	12048806	1	DISCON	HARNESS, ENG WRG HARN EXTN (WSW PUMP JPR) .....
	*EXPORT***************EXPORT***************EXPORT***************EXPORT***************EXPORT*				
86	Y M/TRNS, A/C (C60), (NM5) EXPORT, CANADA (EXC NM8 EXPORT)	12048815	1	DISCON	HARNESS, ENG & ECM WRG .....
86	Y A/TRNS, NM8 (EXPORT)	12048819	1	DISCON	HARNESS, ENG & ECM WRG .....
86	Y07 M/TRNS, A/C (C68), (NM5) EXPORT, CANADA (EXC NM8 EXPORT)	12048816	1	DISCON	HARNESS, ENG & ECM WRG .....
87	Y A/TRNS, A/C, NM5 (EXPORT, CANADA) (EXC NM8 EXPORT)	12067672	1	DISCON	HARNESS, ENG & ECM WRG .....
87	Y A/TRNS, A/C (C68), NM5 (EXPORT, CANADA) (EXC NM8 EXPORT)	12067673	1	DISCON	HARNESS, ENG & ECM WRG .....
87	Y A/TRNS, NM8 (EXPORT)	12067674	1	DISCON	HARNESS, ENG & ECM WRG .....
94	Y 5.7P (LT1), 4-SPD A/TRANS (M30), A/C AUTO ELEC CONT (C68), VE1 (EXPORT)	12141756	1	851.59	HARNESS, ENG WRG .....
94	Y 5.7P (LT1), 6-SPD M/TRANS (ML9), A/C AUTO ELEC CONT (C68), VE1 (EXPORT)	12141757	1	1064.74	HARNESS, ENG WRG .....
95	Y 5.7P (LT1), 4-SPD A/TRANS (M30), A/C AUTO ELEC CONT (C68), VE1 (EXPORT)	12130374	1	867.83	HARNESS, ENG WRG .....
95	Y 5.7P (LT1), 6-SPD M/TRANS (ML9), A/C AUTO ELEC CONT (C68), VE1 (EXPORT)	12130375	1	1086.05	HARNESS, ENG WRG .....
96	Y 4-SPD A/TRANS (M30), A/C AUTO ELEC CONT (C68), VE1 (EXPORT)	12130465	1	867.83	HARNESS, ENG WRG .....

3.337 CLAMP – COVER KIT – HOSE, Throttle Body Coolant Supply

Note: FOR 1985-1991 USAGE REFER TO THROTTLE BODY CHART GRP 3.335

92-94	Y 5.7P (LT1)	10115739	2	1.50	CLAMP, THROT BODY HT INL HOSE (20MM) (STAMPED "20") (200N FORCE) (08.948) .....
92	Y 5.7P (LT1)	25665982	1	1.99	CLAMP, THROT BODY HT INL HOSE (08.948) .....

© 2000 GENERAL MOTORS SERVICE PARTS OPERATIONS

3.337 CLAMP – COVER KIT – HOSE, Throttle Body Coolant Supply(Con't)

96	Y 5.7P (LT1)	22527587	AR	1.75	CLAMP, THROT BODY HT INL HOSE (20.0 X 12.4) (WORM GEAR, 1/2–13/16) (08.948)
96	Y 5.7–5 (LT4)	22527587	AR	1.75	CLAMP, THROT BODY HT INL HOSE (20.0 X 12.4) (WORM GEAR, 1/2–13/16) (08.948)
85–88	Y	10108509	1	5.76	HOSE, THROT BODY HTR
89	Y (5.7–8)	10108509	1	5.76	HOSE, THROT BODY HTR
92–94	Y 5.7P (LT1)	10108618	1	7.14	HOSE, THROT BODY HTR INL (03.726)
95–96	Y 5.7P (LT1)	12553625	1	1.84	HOSE, THROT BODY HTR INL
96	Y 5.7–5 (LT4)	12553625	1	1.84	HOSE, THROT BODY HTR INL

3.682 BOLT – BRACKET – BUFFER – CLAMP – CONNECTOR – COVER – MODULE – PLUG – RELAY – RETAINER – SEAL – SENSOR – SPACER, Computer Control Sensors

90–95	Y 5.7J (LT5)	11514491	2	4.75	BOLT, MAP SEN (TO BRKT) (5X.8X30, 28.4 THD, 5.9 OD, T25 TORX DR. 9.8 STL) (08.907)
90–95	Y 5.7J (LT5)	10192577	2	1.30	BOLT, MAP SEN BRKT (TO PLENUM) (M6X1.0X13.0) (METRIC TORX HD) (08.913)
92	Y 5.7J (LT5)	1151606[illegible]	1	*1.10	BOLT, OXY SEN BRKT (M6X1X12, FL HD) (08.900)
90–9[illegible]	Y 5.7J (LT5)	10192577	4	1.30	BOLT, SECD PORT THROT VLV BRKT (M6X1.0X13.0) (METRIC TORX HD) (08.913)
90–95	Y 5.7J (LT5)	10067781	1	8.68	BRACKET, MAP SEN
90–91	Y 5.7–8 (L98)	10096141	1	4.44	BRACKET, MAP SEN
85	Y	1408J660	1	DISCON	BRACKET, MASS AIR FLOW SEN BURNOFF MDL
88–89	Y 5.7–8	14104140	1	1.88	BRACKET, MASS AIRFLOW SEN RLY (01.055)
93–95	Y 5.7J (LT5)	10168622	1	26.01	BRACKET, MDP SEN (03.671)
89	Y	14062552	1	1.12	BRACKET, OXY SEN CONN RET (02.559)
90–91	Y 5.7–8 (L98)	14062552	1	1.12	BRACKET, OXY SEN CONN RET (02.559)
90–92	Y 5.7J (LT5)	14104941	1	12.90	BRACKET, OXY SEN CONN RET
92–96	Y 5.7P (LT1)	10165388	1	2.50	BRACKET, OXY SEN CONN RET (02.559)
93–95	Y 5.7J (LT5)	10225129	1	7.75	BRACKET, OXY SEN CONN RET
96	Y 5.7–5 (LT4)	10165388	1	2.50	BRACKET, OXY SEN CONN RET (02.559)
93–95	Y 5.7J (LT5)	10168670	1	31.60	CLAMP, MDP SEN (01.750)
90–95	Y 5.7J (LT5)	10090513	1	15.44	COVER, MAP SEN (AC–DELCO #10090513)
85	Y 5.7–8 (L98)	14080620	1	882.82	MODULE, MASS AIRFLOW SEN (AC–DELCO #216–52)
92–96	Y 5.7P (LT1)	03738198	1	.71	PLUG, MAP SEN HOLE (08.153)
96	Y 5.7–5 (LT4)	03738198	1	.71	PLUG, MAP SEN HOLE (08.153)
84–90	Y	12338069	1	*3.67	RETAINER, VEH SPD SEN (4338) (AC–DELCO #12338069)
86–96	Y	12146312	1	9.10	SENSOR, ENG COOL TEMP (UND PLENUM) (USED FOR CLUSTERS W/OIL GAGE & LGT COMB) (2–WAY M) (AC–DELCO #213–310)
90–91	Y 5.7J (LT5)	25176708	2	104.75	SENSOR, EXH OXY (STAMPED 10096129) (AC–DELCO #213–632) (RETAIL SENSOR)

© 2000 GENERAL MOTORS SERVICE PARTS OPERATIONS

3.682 BOLT – BRACKET – BUFFER – CLAMP – CONNECTOR – COVER – MODULE – PLUG – RELAY – RETAINER – SEAL – SENSOR – SPACER, Computer Control Sensors(Con't)

92	Y 5.7J (LT5), (1ST DES)	25176708	2	104.75	SENSOR, EXH OXY (W/HARN THAT IS 350MM LG) (STAMPED 10096129) (AC–DELCO #213–632) (RETAIL SENSOR)
92	Y 5.7J (LT5), (2ND DES)	25176709	2	117.30	SENSOR, EXH OXY (W/HARNESS THAT IS 240MM LG) (STAMPED 10137641) (AC–DELCO #213–633)
93–95	Y 5.7J (LT5)	25176709	2	117.30	SENSOR, HTD OXY (STAMPED 10137641) (AC–DELCO #213–633)
94	Y 5.7P (LT1), (EXC LEADED FUEL EMIS EXPORT (NM8)	25312184	3	62.81	SENSOR, HTD OXY (AC–DELCO #AFS75) (OEM SENSOR)
95	Y 5.7P (LT1), (EXC LEADED FUEL EMIS EXPORT (NM8), EUROPEAN PROVISIONS (VD1) (EXPORT), VE1 (EXPORT)	25312184	3	62.81	SENSOR, HTD OXY (AC–DELCO #AFS75) (OEM SENSOR)
96	Y 5.7–5 (LT4)	25312184	4	62.81	SENSOR, HTD OXY (2–PRE CONVERTER, 2–POST CONVERTER) (AC–DELCO #AFS75) (OEM SENSOR)
96	Y 5.7P (LT1), (EXC LEADED FUEL EMIS EXPORT (NM8)	25312184	4	62.81	SENSOR, HTD OXY (2–PRE CONVERTER, 2–POST CONVERTER) (AC–DELCO #AFS75) (OEM SENSOR)
90–95	Y 5.7J (LT5)	25036751	1	33.33	SENSOR, INT AIR TEMP (2 BLADE TERM, 3/8–18 THD) (STAMPED AC12V) (AC–DELCO #213–190)
92–95	Y 5.7P (LT1)	12160244	1	14.61	SENSOR, INT AIR TEMP (AC–DELCO #213–243)
96	Y	12160244	1	14.61	SENSOR, INT AIR TEMP (AC–DELCO #213–243)
85–90	Y	12146312	1	9.10	SENSOR, MANIF AIR TEMP (AT INT MANIF) (2 BLADE TERM, 3/8–18 THD) (USED FOR CLUSTERS W/OIL GAGE & LIGHT COMB) (AC–DELCO #213–310)
85	Y (1ST DES)	25036751	1	33.33	SENSOR, MANIF AIR TEMP (2 BLADE TERM, 3/8–18 THD) (STAMPED AC12V) (HOLES IN PROBE & MATES W/SQUARE SLOTTED CONN) (AC–DELCO #213–190)
91	Y 5.7–8 (L98)	12146312	1	9.10	SENSOR, MANIF AIR TEMP (AT INT MANIF) (USED FOR CLUSTER W/OIL GAGE & LIGHT COMB) (2–WAY M) (AC–DELCO #213–310)
84	Y	16137039	1	65.40	SENSOR, MAP (1 PORT, 3 BLADE TERM, 2 BOLT HOLES) (AC–DELCO #213–185)
[illegible]	Y	16137039	1	65.40	SENSOR, MAP (1 PORT, 3 TERM, 2 BOLT HOLES) (AC–DELCO #213–185)
91	Y 5.7–8 (L98)	16137039	1	65.40	SENSOR, MAP (1 PORT, 3 TERM, 2 BOLT HOLES) (AC–DELCO #213–185)
91–95	Y 5.7J (LT5)	16137039	1	65.40	SENSOR, MAP (1 PORT, 3 TERM, 2 BOLT HOLES) (AC–DELCO #213–185)
92–95	Y 5.7P (LT1)	16137039	1	65.40	SENSOR, MAP (1 PORT, 3 TERM, 2 BOLT HOLES) (AC–DELCO #213–185)

© 2000 GENERAL MOTORS SERVICE PARTS OPERATIONS

3.682 BOLT – BRACKET – BUFFER – CLAMP – CONNECTOR – COVER – MODULE – PLUG – RELAY – RETAINER – SEAL – SENSOR – SPACER, Computer Control Sensors(Con't)

96	Y	16137039	1	65.40	SENSOR, MAP (AC–DELCO #213–185)
85	Y	14081243	1	540.26	SENSOR, MASS AIRFLOW (AC–DELCO #213–162)
86–87	Y	14094712	1	507.44	SENSOR, MASS AIRFLOW (AC–DELCO #213–163)
88	Y	10055877	1	397.22	SENSOR, MASS AIRFLOW (AC–DELCO #213–161)
89	Y 5.7–8 (L98)	10055877	1	397.22	SENSOR, MASS AIRFLOW (AC–DELCO #213–161)
94–95	Y 5.7P (LT1)	25008308	1	367.42	SENSOR, MASS AIRFLOW (INCLS SNSR & 2 CLMPS) (AC–DELCO #213–252)
94	Y 5.7P (LT1)	25099216	1	579.98	SENSOR, MASS AIRFLOW (W/INT AIR TEMP SEN) (W/DUCT) (AC–DELCO #213–238)
96	Y	25008308	1	367.42	SENSOR, MASS AIRFLOW (INCLS SNSR & 2 CLMPS) (AC–DELCO #213–252)
90–95	Y 5.7J (LT5)	16006834	1	61.77	SENSOR, MDP (AC–DELCO #16006834)
84–87	Y	25162693	1	51.12	SENSOR, OXY (1 WIRE) (AC–DELCO #AFS20) (OEM SENSOR)
87	Y (EXC LEADED FUEL EMIS EXPORT (NM8)	25166816	2	51.55	SENSOR, OXY (1 WIRE) (AC–DELCO #AFS21) (OEM SENSOR)
88–91	Y 5.7–8 (L98)	25166816	2	51.55	SENSOR, OXY (PURPLE WIRE) (18 X 1.5) (TYPE #21 MATES W/12015791) (AC–DELCO #AFS21) (OEM SENSOR)
92–93	Y 5.7P (LT1), (EXC LEADED FUEL EMIS EXPORT (NM8)	25166816	2	51.55	SENSOR, OXY (PURPLE WIRE) (18 X 1.5) (TYPE #21 MATES W/12015791) (AC–DELCO #AFS21) (OEM SENSOR)
84–90	Y D9A	25007224	1	99.55	SENSOR, VEH SPD (TRANS MTD) (USED W/AXLE RATIO 2.59, 2.73) (AC–DELCO #213–210)
84–90	Y D9B	25007308	1	98.86	SENSOR, VEH SPD (TRANS MTD) (USED W/AXLE RATIO 3.07, 3.33, 3.45) (AC–DELCO #213–223)
91–93	Y (D8I)	10456089	1	36.09	SENSOR, VEH SPD (W/ O–RING) (04.329) (AC–DELCO #213–198)
91–93	Y (D8K)	10456091	1	32.70	SENSOR, VEH SPD (NATURAL COLOR) (PART NO STAMPED ON HSG) (04.329) (AC–DELCO #213–199)
91–93	Y (D8L)	10456092	1	32.70	SENSOR, VEH SPD (BLACK COLOR) (PART NO STAMPED ON HSG) (04.329) (AC–DELCO #213–200)
94–96	Y 6–SPD M/TRANS (ML9)	10456089	1	36.09	SENSOR, VEH SPD (W/ O–RING) (04.329) (AC–DELCO #213–198)
	*EXPORT***************EXPORT***************EXPORT***************EXPORT***************EXPORT*				
95	Y 5.7P (LT1), EUROPEAN PROVISIONS (VD1) (EXPORT), VE1 (EXPORT)	25312184	2	62.81	SENSOR, HTD OXY (AC–DELCO #AFS75) (OEM SENSOR)

© 2000 GENERAL MOTORS SERVICE PARTS OPERATIONS

4.128 CLIP – COOLER – FITTING – NUT – PLUG, Transmission Oil Cooler [AUTOMATIC]

85	Y H.D.C. (V08) (EXC VB4, VD1, VT7)	03056569	1	DISCON	COOLER, OIL (TRANS) (AC–DELCO #3056569)
86–88	Y	03056569	1	DISCON	COOLER, OIL (TRANS) (AC–DELCO #3056569)
89	Y (5.7–8)	03056569	1	DISCON	COOLER, OIL (TRANS) (AC–DELCO #3056569)
84	Y (EXC HVY DUTY RAD (V01)	03053016	1	70.12	COOLER, TRANS FLUID (USE ON ASM 3052025, 3053501) (AC–DELCO #3053016)
85	Y HVY DUTY CLG (V08), (EXC EXPORT (VB4), EUROPEAN PROVISIONS (VD1) (EXPORT), VT7 (EXPORT)	03053016	1	70.12	COOLER, TRANS FLUID (AC–DELCO #3053016)
85	Y (EXC HVY DUTY CLG (V08)	03053016	1	70.12	COOLER, TRANS FLUID (AC–DELCO #3053016)
90–93	Y 4–SPD A/TRANS (MD8)	03055675	1	106.26	COOLER, TRANS FLUID (AC–DELCO #3055675)
94–96	Y 4–SPD A/TRANS (M30)	03055675	1	106.26	COOLER, TRANS FLUID (AC–DELCO #3055675)

8.010 PLUG – SEAL, Hood Panel

92–95	Y 5.7P (LT1), 5.7J (LT5), (EXC MODIFICATION–NOISE CONTROL (B4H) (EXPORT)	10212812	2	11.32	SEAL, HOOD BFL
96	Y 5.7P (LT1), 5.7–5 (LT4), (EXC MODIFICATION–NOISE CONTROL (B4H) (EXPORT)	10212812	2	11.32	SEAL, HOOD BFL
93–96	Y	10272963	1	11.88	SEAL, HOOD RR (POSN #1) (1LEFT SIDE OF HOOD REAR)
93–96	Y	10272964	1	12.29	SEAL, HOOD RR (POSN #2) (RIGHT SIDE OF HOOD REAR)
93–96	Y	10272962	1	4.85	SEAL, HOOD RR CTR (CENTER OF HOOD REAR)
89–93	Y	10123073	LH	18.51	SEAL, HOOD RR OTR
89–93	Y	10123074	RH	18.51	SEAL, HOOD RH OTR
84–88	Y	14065081	LH	DISCON	SEAL, RR OTR
84–88	Y	14065082	RH	21.88	SEAL, RR OTR

8.808 LABEL, Emission, Cautionary and Informative

94–96	Y	10231210	1	N.L.	LABEL, A/C REFRIG & ENG OIL NTC
88–91	Y 5.7–8 (L98)	10077567	1	N.L.	LABEL, ACSRY BELT ROUTING
90–91	Y 5.7J (LT5), SOFT RIDE SUSP (FE1), HVY DUTY SUSP (FE7)	10105211	1	N.L.	LABEL, ACSRY BELT ROUTING
92–95	Y 5.7J (LT5)	10105211	1	N.L.	LABEL, ACSRY BELT ROUTING
92	Y 5.7P (LT1)	10186199	1	N.L.	LABEL, ACSRY BELT ROUTING
93	Y 5.7P (LT1), (1ST DES)	10186199	1	N.L.	LABEL, ACSRY BELT ROUTING (DUAL SIDED POLY V–BELT)
93	Y 5.7P (LT1), (2ND DES)	10241175	1	N.L.	LABEL, ACSRY BELT ROUTING (SINGLE SIDED POLY V–BELT)
94–95	Y 5.7P (LT1)	10241175	1	N.L.	LABEL, ACSRY BELT ROUTING
96	Y67 HAS STEP 1–STATMENT "E" INCLUDING "AND WHL LOCK KEY" (1ST DES)	14093193	1	DISCON	LABEL, AUTO JK USAGE
90–91	Y	10210318	1	N.L.	ABEL, ENG CLG SYS
92–94	Y 5.7P (LT1)	10210318	1	N.L.	LABEL, ENG CLG SYS
95	Y 5.7P (LT1), (1ST DES)	10210318	1	N.L.	LABEL, ENG CLG SYS (USED ON VEHICLES W/A IN OF 119804 AND PRIOR)

© 2000 GENERAL MOTORS SERVICE PARTS OPERATIONS

8.808 LABEL, Emission, Cautionary and Informative(Con't)

95	Y 5.7P (LT1), (2ND DES)	10286902	1	N.L.	LABEL, ENG CLG SYS (USED ON VEHICLES W/VIN OF 119805 AND GREATER)
96	Y 5.7P (LT1)	10286902	1	N.L.	LABEL, ENG CLG SYS
92-93	Y 5.7P (LT1)	10225998	1	N.L.	LABEL, ENG OIL RECOMMENDATIONS
93-96	Y	10236268	1	N.L.	LABEL, ENG OIL RECOMMENDATIONS ("MOBIL 1")
84	Y	14063772	1	DISCON	LABEL, FAN BLADE CAUTION
85	Y	10120010	1	N.L.	LABEL, FAN BLADE CAUTION
85	Y APPLIED TO HOOD INNER PANEL	14084390	1	DISCON	LABEL, FAN BLADE CAUTION
90-96	Y	10120010	1	N.L.	LABEL, FAN BLADE CAUTION (BLACK NYLON)
86-87	Y	14092380	1	N.L.	LABEL, FAN BLADE ROUTING (APPLY TO LEFT HAND SIDE OF TOP RAD SUPT)
91-96	Y LOW TIRE PRESSURE IND (UJ6)	10180847	2	N.L.	LABEL, FRT TIRE PRESS IND SEN (INSTALL 90 DEGREES FROM VLV STEM ON I/S LIP OF WHL)
94	Y (EXC EUROPEAN PROVISIONS (VD1) (EXPORT)	15001737	2	N.L.	LABEL, INFL RST SYS CAUTION (140.0X40.0)
95-96	Y	15001737	2	N.L.	LABEL, INFL RST SYS CAUTION (140.0X40.0)
90-94	Y	10153622	1	N.L.	LABEL, INFL RST SYS INFO
90-93	Y	26017956	1	N.L.	LABEL, INFL RST SYS SERV NTC
94-95	Y	10247726	1	N.L.	LABEL, INFL RST SYS SERV NTC (USE ON R/H SIDE)
94-96	Y F/SEAT INFL RST SYS (AK5)	26017956	1	N.L.	LABEL, INFL RST SYS SERV NTC
96	Y F/SEAT INFL RST SYS (AK5)	10247726	1	N.L.	LABEL, INFL RST SYS SERV NTC (USE ON R/H SIDE)
84-96	Y	21011879	1	N.L.	LABEL, JK CAUTION
90	Y	10153623	1	N.L.	LABEL, JK LOC INFO
92-93	Y	10153623	1	N.L.	LABEL, JK LOCATION INFO
85	Y WHL NUT KEY IS ATTACHED TO THE WHL WRENCH (1ST DES)	14084072	1	N.L.	LABEL, JK USAGE
86	Y07 SHOWS NEW JACKING LOCATION 10 INCHES FROM RR WHL OPG (2ND DES)	14093200	1	N.L.	LABEL, JK USAGE
86-89	Y67	14093194	1	N.L.	LABEL, JK USAGE (INCLS INSTRUCTIONS 5 THRU 8)
86	Y67 STEP 1 & 2 (2ND DES)	14093198	1	N.L.	LABEL, JK USAGE
86	Y67 STEPS 3 & 4; NEW JACKING LOCATION-BETWEEN DARTS & TEN INCHES FROM RR WHL OPG (2ND DES)	14093199	1	N.L.	LABEL, JK USAGE
87	Y07	14093200	1	N.L.	LABEL, JK USAGE
87	Y67 STEPS 1 & 2	14093198	1	N.L.	LABEL, JK USAGE
87	Y67 STEPS 3 & 4	14093199	1	N.L.	LABEL, JK USAGE
88-89	Y07	10075210	1	N.L.	LABEL, JK USAGE
88-89	Y67	10075208	1	N.L.	LABEL, JK USAGE (STEP 1 & 2)
88-89	Y67	10075209	1	N.L.	LABEL, JK USAGE (STEP 3 & 4)
90-92	Y SPECIAL PERFORMANCE PKG (ZR1)	10149277	1	N.L.	LABEL, JK USAGE
90-92	Y (EXC SPECIAL PERFORMANCE PKG (ZR1)	10153625	1	N.L.	LABEL, JK USAGE
93	Y	10219501	1	N.L.	LABEL, JK USAGE
94-95	Y	10224195	1	N.L.	LABEL, JK USAGE
96	Y (EXC (E C SPA TIRE)	10276417	1	N.L.	LABEL, JK USAGE
94-96	Y	10241098	1	N.L.	LABEL, LOW TIRE PRESS CAUTION

© 2000 GENERAL MOTORS SERVICE PARTS OPERATIONS

8.808 LABEL, Emission, Cautionary and Informative(Con't)

89-96	Y	10135621	AR	N.L.	LABEL, ODOM SERV NTC (70MM SQUARE) (FOR USE WHEN ODOMETER OR CLUSTER IS SERVICED) (5621)
90-95	Y07 SPECIAL PERFORMANCE PKG (ZR1)	10140274	1	N.L.	LABEL, PASS COMPT SPA WHL STOW INSTR
96	Y07 GRAND SPORT EDITION (Z16)	10140274	1	N.L.	LABEL, PASS COMPT SPA WHL STOW INSTR
95-96	Y	10283878	1	N.L.	LABEL, RAD FIL NTC
93	Y	10233569	1	N.L.	LABEL, RDO DMG NTC
94-96	Y	10238375	1	N.L.	LABEL, RDO DMG NTC
91-96	Y LOW TIRE PRESSURE IND (UJ6)	10180848	2	N.L.	LABEL, RR TIRE PRESS IND SEN (INSTALL 90 DEGREES FROM VLV STEM ON I/S LIP OF WHL)
92	Y STYLED AL WHL (QA1), SPECIAL PERFORMANCE WHL (QA2), EUROPEAN PROVISIONS (VD1) (EXPORT)	25558496	1	N.L.	LABEL, SPA WHL CAUTION (SYMBOLS)
93	Y EUROPEAN PROVISIONS (VD1) (EXPORT)	2555[illegible]	[illegible]	N.L.	LABEL, SPA WHL CAUTION (SYMBOLS)
94-96	Y	25558496	1	N.L.	LABEL, SPA WHL CAUTION (SYMBOLS)
85-89	Y07	14084074	1	N.L.	LABEL, SPA WHL STOW INFO
89	Y07 (EXC SPL PERF PKG ZR1)	14084074	1	N.L.	LABEL, SPA WHL STOW INFO
89	Y67 (EXC SPL PERF PKG ZR1)	14093195	1	N.L.	LABEL, SPA WHL STOW INFO
86-88	Y67	14093195	1	N.L.	LABEL, SPA WHL STOWAGE INFO
94-95	Y07 5.7P (LT1)	10244479	1	N.L.	LABEL, TIRE PRESS
96	Y07	10244479	1	N.L.	LABEL, TIRE PRESS
88-90	Y LOW TIRE PRESSURE IND (UJ6)	10180847	4	N.L.	LABEL, TIRE PRESS IND SEN (INSTALL 90 DEGREES FROM VLV STEM ON I/S LIP OF WHL)
84	Y (5.7-8) MK2, FED (NA5)	14073597	1	DISCON	LABEL, VEH EMIS CONT INFO (XTW)
85	Y (5.7-8) FED (NA5), NN5	14086592	1	DISCON	LABEL, VEH EMIS CONT INFO (UNM)
86	Y (5.7-8) FED (NA5), CALIF (ND2)	14086582	1	DISCON	LABEL, VEH EMIS CONT INFO
86	Y (5.7-8) FED (NA5) (EXC NN5)	14100950	1	DISCON	LABEL, VEH EMIS CONT INFO (YDJ)
87	Y FED (NA5) (EXC NN5)	10051453	1	N.L.	LABEL, VEH EMIS CONT INFO (ZDY)
87	Y FED, NN5	10051454	1	DISCON	LABEL, VEH EMIS CONT INFO (ZDZ)
88	Y (5.7-8) FED (NA5) (EXC NN5, Z49 CANADIAN	10079619	1	DISCON	LABEL, VEH EMIS CONT INFO (CNK)
88	Y (5.7-8) FED (NA5), NN5 (EXC Z49 CANADIAN	10079621	1	N.L.	LABEL, VEH EMIS CONT INFO (CNM)
89	Y	10116659	1	DISCON	LABEL, VEH EMIS CONT INFO (DCN)
89	Y	10116660	1	DISCON	LABEL, VEH EMIS CONT INFO (DCP)
89	Y (5.7J) (EXC NN5)	10116661	1	N.L.	LABEL, VEH EMIS CONT INFO (DCX)
89	Y (5.7J) NN5	10116662	1	N.L.	LABEL, VEH EMIS CONT INFO (DCY)
90	Y (5.7J) (EXC NN5)	10136278	1	N.L.	LABEL, VEH EMIS CONT INFO (FKW)
90	Y (5.7J) NN5	10136279	1	N.L.	LABEL, VEH EMIS CONT INFO (FKX)
90	Y 5.7-8 (L98), (EXC EMIS OVERRIDE (NN5)	10165211	1	N.L.	LABEL, VEH EMIS CONT INFO (FNM)
90	Y 5.7-8 (L98), EMIS OVERRIDE (NN5)	10165212	1	N.L.	LABEL, VEH EMIS CONT INFO (FNN)
91	Y 5.7-8 (L98), (EXC EMIS OVERRIDE (NN5)	10145484	1	N.L.	LABEL, VEH EMIS CONT INFO (LBZ)
91	Y 5.7-8 (L98), EMIS OVERRIDE (NN5)	10145485	1	N.L.	LABEL, VEH EMIS CONT INFO (LCA)
91	Y 5.7J (LT5), (EXC EMIS OVERRIDE (NN5)	10145486	1	N.L.	LABEL, VEH EMIS CONT INFO (LCL)
91	Y 5.7J (LT5), EMIS OVERRIDE (NN5)	10145487	1	N.L.	LABEL, VEH EMIS CONT INFO (LCM)

© 2000 GENERAL MOTORS SERVICE PARTS OPERATIONS

8.808 LABEL, Emission, Cautionary and Informative(Con't)

92	Y 5.7P (LT1), (EXC LEADED FUEL EMIS EXPORT (NM8), EMIS OVERRIDE (NN5)	10165175	1	N.L.	LABEL, VEH EMIS CONT INFO (PCK)
92	Y 5.7P (LT1), EMIS OVERRIDE (NN5)	10165176	1	N.L.	LABEL, VEH EMIS CONT INFO (PCL)
92	Y 5.7J (LT5), (EXC EMIS OVERRIDE (NN5)	10165177	1	N.L.	LABEL, VEH EMIS CONT INFO (PCM)
92	Y 5.7J (LT5), EMIS OVERRIDE (NN5)	10165178	1	N.L.	LABEL, VEH EMIS CONT INFO (PCN)
93	Y 5.7P (LT1), FEDERAL EMIS (NA5), (EXC LEADED FUEL EMIS EXPORT (NM8), EMIS OVERRIDE (NN5)	10189453	1	N.L.	LABEL, VEH EMIS CONT INFO (RCX)
93	Y 5.7P (LT1), EMIS OVERRIDE (NN5)	10189454	1	N.L.	LABEL, VEH EMIS CONT INFO (RDY)
93	Y 5.7J (LT5), (EXC EMIS OVERRIDE (NN5)	10221625	1	N.L.	LABEL, VEH EMIS CONT INFO
93	Y 5.7J (LT5), EMIS OVERRIDE (NN5)	10221626	1	N.L.	LABEL, VEH EMIS CONT INFO
94	Y 5.7J (LT5), EMIS OVERRIDE (NN5)	10224724	1	N.L.	LABEL, VEH EMIS CONT INFO
94	Y 5.7P (LT1), 6-SPD M/TRANS (ML9), FEDERAL EMIS (NA5), (EXC EMIS OVERRIDE (NN5), LEADED FUEL EMIS EXPORT (NM8)	12550655	1	N.L.	LABEL, VEH EMIS CONT INFO
94	Y 5.7P (LT1), 6-SPD M/TRANS (ML9), EMIS OVERRIDE (NN5)	12550656	1	N.L.	LABEL, VEH EMIS CONT INFO
94	Y 5.7P (LT1), 4-SPD A/TRANS (M30), FEDERAL EMIS (NA5), CALIFORNIA EMIS (NB2), (EXC LEADED FUEL EMIS EXPORT (NM8)	12550703	1	N.L.	LABEL, VEH EMIS CONT INFO
94	Y 5.7J (LT5), (EXC EMIS OVERRIDE (NN5)	12550754	1	N.L.	LABEL, VEH EMIS CONT INFO
95	Y 5.7P (LT1), 4-SPD A/TRANS (M30), FEDERAL EMIS (NA5), (EXC LEADED FUEL EMIS EXPORT (NM8)	10243019	1	N.L.	LABEL, VEH EMIS CONT INFO
95	Y 5.7P (LT1), 6-SPD M/TRANS (ML9), FEDERAL EMIS (NA5), (EXC LEADED FUEL EMIS EXPORT (NM8), EMIS OVERRIDE (NN5)	10243020	1	N.L.	LABEL, VEH EMIS CONT INFO
95	Y 5.7P (LT1), EMIS OVERRIDE (NN5)	10243021	1	N.L.	LABEL, VEH EMIS CONT INFO
95	Y 5.7P (LT1), CALIF EMIS, TIER 1 (NB6)	10243022	1	N.L.	LABEL, VEH EMIS CONT INFO
95	Y 5.7J (LT5), FEDERAL EMIS (NA5), (EXC EMIS OVERRIDE (NN5)	10243023	1	N.L.	LABEL, VEH EMIS CONT INFO
95	Y 5.7J (LT5), EMIS OVERRIDE (NN5)	10243024	1	N.L.	LABEL, VEH EMIS CONT INFO
96	Y 5.7P (LT1), LEADED FUEL EMIS EXPORT (NM8)	12553944	1	N.L.	LABEL, VEH EMIS CONT INFO
96	Y 5.7P (LT1), POWERTRAIN CONT MODULE (K29), (EXC CANADIAN (Z49)	12553944	1	N.L.	LABEL, VEH EMIS CONT INFO
96	Y 5.7P (LT1)	12555482	1	N.L.	LABEL, VEH EMIS CONT INFO
96	Y 5.7-5 (LT4)	12555483	1	N.L.	LABEL, VEH EMIS CONT INFO
96	Y 5.7-5 (LT4), 6-SPD M/TRANS (ML9), CALIF EMIS, TIER 1 (NB6)	12555600	1	N.L.	LABEL, VEH EMIS CONT INFO
96	Y 5.7-5 (LT4), 6-SPD M/TRANS (ML9), FED EMIS SYS (NF2), (EXC POWERTRAIN CONT MODULE (K29), CANADIAN (Z49)	12555600	1	N.L.	LABEL, VEH EMIS CONT INFO
96	Y 5.7P (LT1), 4-SPD A/TRANS (M30), CALIF EMIS, TIER 1 (NB6)	12555869	1	N.L.	LABEL, VEH EMIS CONT INFO

© 2000 GENERAL MOTORS SERVICE PARTS OPERATIONS

8.808 LABEL, Emission, Cautionary and Informative(Con't)

96	Y 5.7P (LT1), 4-SPD A/TRANS (M30), FED EMIS SYS (NF2)	12555869	1	N.L.	LABEL, VEH EMIS CONT INFO
96	Y 5.7-8 (LT4), POWERTRAIN CONT MODULE (K20), (EXC CANADIAN (Z49)	12556111	1	N.L.	LABEL, VEH EMIS CONT INFO
	*EXPORT*********EXPORT*********EXPORT*********EXPORT*********EXPORT*				
84-87	YB VB4, VD1, VE1, VT7 (EXPORT	14022422	1	DISCON	LABEL, IGN & START SW
94-96	Y EUROPEAN PROVISIONS (VD1) (EXPORT)	15001737	LH	N.L.	LABEL, INFL RST SYS CAUTION (140.0X40.0)
85	Y (5.7-8) NM8 (EXPORT)	14086593	1	DISCON	LABEL, VEH EMIS CONT INFO (UNN)
87	Y	10051455	1	DISCON	LABEL, VEH EMIS CONT INFO (ZFA)
88	Y	10079620	1	DISCON	LABEL, VEH EMIS CONT INFO (CNL)
92	Y 5.7P (LT1), LEADED FUEL EMIS EXPORT (NM8)	10222060	1	N.L.	LABEL, VEH EMIS CONT INFO (PPJ)
93	Y 5.7P (LT1), LEADED FUEL EMIS EXPORT (NM8)	10221953	1	N.L.	LABEL, VEH EMIS CONT INFO (RLC)
94	Y 5.7P (LT1), LEADED FUEL EMIS EXPORT (NM8)	12550704	1	N.L.	LABEL, VEH EMIS CONT INFO
95	Y 5.7P (LT1), LEADED FUEL EMIS EXPORT (NM8)	10243025	1	N.L.	LABEL, VEH EMIS CONT INFO

8.821 BAG – CLIP – HANDLE – PLATE – WRENCH, Wheel, Jack and Miscellaneous Wrench

89-96	Y67 AUX RF (CC2)	10149268	1	32.04	BAG, TOOL STOW (13.346)
84-96	Y	14050029	1	16.07	HANDLE, JK/WHL WRENCH (INCLUDES WRENCH FOR 84-90) (08.820)
91-96	Y	10180890	1	29.84	WRENCH, WHL

8.846 BRACKET – CLAMP – FITTING – HOSE – PIPE – RETAINER – SLEEVE – TEE, Heater

88-91	Y 5.7-8 (L98), FEDERAL EMIS (NA5)	1000 3196	1	4.32	FITTING, HTR HOSE
93-94	Y 5.7P (LT1)	10157918	1	19.67	FITTING, HT OTLT HOSE
86-88	Y A/C	14093180	1	DISCON	HOSE, HTR A/C CONT VAC
89	Y (5.7-8)	14093180	1	DISCON	HOSE, HTR & A/C CONT VAC
8	Y	14046044	1	12.90	HOSE, HTR INL
85-87	Y	14081348	1	12.90	HOSE, HTR INL
88-91	Y 5.7-8 (L98), FEDERAL EMIS (NA5)	10108510	1	14.32	HOSE, HTR INL
92	Y 5.7P (LT1)	10213634	1	26.32	HOSE, HTR INL
93-95	Y 5.7P (LT1)	10157913	1	40.90	HOSE, HTR INL
96	Y	10157913	1	40.90	HOSE, HTR INL
89	Y (5.7J)	10135629	1	161.54	HOSE, HTR INL & OTLT
90-92	Y 5.7J (LT5), SOFT RIDE SUSP (FE1), HVY DUTY SUSP (FE7)	10135629	1	161.54	HOSE, HTR INL & OTLT
93-95	Y 5.7J (LT5), SOFT RIDE SUSP (FE1)	10135629	1	161.54	HOSE, HTR INL & OTLT
84	Y	14052406	1	DISCON	HOSE, HTR OTLT
85-87	Y A/C MAN CONT (C60), A/C AUTO ELEC CONT (C68), (EXC ENG OIL CLG (KC4)	14081349	1	10.36	HOSE, HTR OTLT
85	Y ENG OIL CLG (KC4)	14091278	1	40.00	HOSE, HTR OTLT (MOLDED FITTING) (01.540)
88	Y ENG OIL CLG (KC4)	10158081	1	97.30	HOSE, HTR OTLT
88-89	Y A/C MAN CONT (C60), A/C AUTO ELEC CONT (C68), (EXC ENG OIL CLG (KC4)	10158082	1	DISCON	HOSE, HTR OTLT
89	Y 5.7-8 (L98), ENG OIL CLG (KC4)	10158081	1	97.30	HOSE, HTR OTLT

© 2000 GENERAL MOTORS SERVICE PARTS OPERATIONS

8.846 BRACKET – CLAMP – FITTING – HOSE – PIPE – RETAINER – SLEEVE – TEE, Heater(Con't)

90	Y 5.7–8 (L98), (EXC ENG OIL CLG (KC4)	10135656	1	17.06	HOSE, HTR OTLT
90–91	Y 5.7–8 (L98), ENG OIL CLG (KC4)	10135657	1	40.90	HOSE, HTR OTLT
91	Y 5.7–8 (L98), (EXC ENG OIL CLG (KC4)	10135656	1	17.06	HOSE, HTR OTLT
92	Y 5.7P (LT1)	10135697	1	21.50	HOSE, HTR OTLT
93–94	Y 5.7P (LT1)	10157915	1	18.66	HOSE, HTR OTLT (FROM RAD SURGE TK TO TEE)
93–94	Y 5.7P (LT1)	10157916	1	18.66	HOSE, HTR OTLT (FROM W/PMP TO TEE)
93–94	Y 5.7P (LT1)	10157917	1	18.66	HOSE, HTR OTLT (FROM THROT BODY TO TEE)
95	Y 5.7P (LT1)	10262505	1	28.96	HOSE, HTR OTLT
96	Y	10262505	1	28.96	HOSE, HTR OTLT
90–92	Y 5.7J (LT5)	10089613	1	*1.07	RETAINER, HTR PIPE (BLACK)
90–95	Y 5.7J (LT5)	10089613	1	*1.07	RETAINER, HTR WAT FLOW C/VLV HOSE (BLACK)
92–94	Y 5.7P (LT1)	10157956	1	12.55	TEE, HTR WAT BYPASS VLV OTLT HOSE

8.866 NIPPLE – RETAINER – VALVE, Heater Coolant Flow

84–85	Y	03771040	1		NIPPLE, HTR HOSE OTLT (08.963)
84–85	Y	08272959	1	5.18	NIPPLE, HTR HOSE OTLT
90–95	Y 5.7J (LT5)	24503681	1	9.20	NIPPLE, HTR WAT ENG INL (USE T/W 1052080 SEALER) (W/O–RING & RET) (1/2 THD, 59.5 TL) (OLD PART MAY APPEAR LARGER DUE TO HEAT EXPANSION)
84–87	Y	22532158	1	9.62	VALVE, HTR WAT FLOW CONT (AC–DELCO #15–5372)
88–91	Y 5.7–8 (L98)	22532158	1	9.62	VALVE, HTR WAT FLOW CONT (16 MM) (AC–DELCO #15–5372)
92–95	Y 5.7P (LT1)	10157988	1	17.64	VALVE, HTR WAT FLOW CONT (W/O HOSE) (AC–DELCO #15–5423)
96	Y	10157988	1	17.64	VALVE, HTR WAT FLOW CONT (W/O HOSE) (AC–DELCO #15–5423)

9.190 CONDENSER – WASHER, A/C Condenser

84–87	Y	03056639	1	239.86	CONDENSER, A/C (AC–DELCO #15–6543)
88	Y	03096179	1	213.20	CONDENSER, A/C (AC–DELCO #15–6591)
89	Y 5.7–8 (L98) 4–SPD A/TRANS (MD8)	03056639	1	239.86	CONDENSER, A/C (AC–DELCO #15–6543)
90–93	Y	52456459	1	213.20	CONDENSER, A/C (AC–DELCO #15–6688)
94–96	Y	52463700	1	253.20	CONDENSER, A/C (AC–DELCO #15–6726)

© 2000 GENERAL MOTORS SERVICE PARTS OPERATIONS

MICROFICHE INDEX

GROUP 2.000

FICHE 3 OF 11

GROUP	DESCRIPTION	STARTING GRID LOCATION PARTS	ILLUSTRATIONS
–	GENERAL INFORMATION	1–A2	1–G2
–	ALPHABETICAL INDEX	1–B13	N.A.
2.000	CHASSIS WIRING – LAMPS	3–A2	3–F2
–	OUT OF FICHE CALLS	N.A.	3–M20

3–A1

CHEVROLET
CHASSIS GROUP 2.000

CHASSIS WIRING – LAMPS

ALPHABETICAL INDEX

A

ACTUATOR KIT, Concealed Capsule/Headlamp Control Drive ... 2.760 3–E2
ACTUATOR, Capsule/Headlamp Dimmer 2.459 3–C9
ACTUATOR, Concealed Capsule/Headlamp Control Drive ... 2.760 3–E2
ACTUATOR, Ignition Switch Warning, Lock, Headlamp, Theft Deterrent or Rear/Side Object 2.195 3–A21
ACTUATOR, Stop Lamp Switch 2.447 3–C8
ACTUATOR, Turn Signal Lamp 2.895 3–E6
ADAPTER KIT, Battery Cable 2.343 3–B21
ADJUSTER, Capsule/Headlamp Adjuster 2.737 3–D28
ALARM, Capsule/Headlamp Warning .. 2.461 3–C9
ALARM, Ignition Switch Warning, Lock, Headlamp, Theft Deterrent or Rear/Side Object 2.195 3–A21
ARMATURE, Starter Motor 2.043 3–A15

B

BALL, Generator Commutator End Frame 2.298 3–B16
BEARING, Concealed Capsule/Headlamp Opening Cover . 2.765 3–E3
BEARING, Generator Commutator End Frame 2.298 3–B16
BEARING, Generator Drive End 2.306 3–B16
BEZEL, Capsule/Headlamp/Fog Lamp . 2.728 3–D28
BEZEL, Tail Lamp 2.681 3–D21
BEZEL, Turn Signal 2.880 3–E5
BLOCK, Main Wiring Junction and Fuse Block 2.483 3–C20
BOLT, Battery Hold Down 2.334 3–B20
BOLT, Body Multifunction Electric Computer 2.560 3–D15
BOLT, Capsule/Headlamp Mounting ... 2.726 3–D26
BOLT, Capsule/Headlamp Retaining ... 2.731 3–D28
BOLT, Chassis/Engine Wiring Harness . 2.559 3–D11
BOLT, Concealed Capsule/Headlamp Control Drive 2.760 3–E2
BOLT, Concealed Capsule/Headlamp Opening Cover 2.765 3–E3
BOLT, Distributor (also Knock Sensor) .. 2.383 3–C4
BOLT, Distributor Cap Retaining 2.368 3–C3
BOLT, Generator Brush 2.291 3–B15
BOLT, Generator Mounting 2.277 3–B14
BOLT, Generator Output 2.319 3–B19
BOLT, Generator Thru 2.316 3–B18
BOLT, Horn Button 2.819 3–E5
BOLT, Horn 2.812 3–E3
BOLT, Ignition Coil Mounting 2.183 3–A18
BOLT, Ignition Distributor Housing 2.363 3–C2
BOLT, Ignition Switch Warning, Lock, Headlamp, Theft Deterrent or Rear/Side Object 2.195 3–A21
BOLT, Ignition Switch 2.188 3–A20
BOLT, Rear License Lamp 2.708 3–D25
BOLT, Spark Plug Ignition Wire 2.251 3–A26
BOLT, Starter Motor 2.042 3–A15
BOLT, Starter Motor 2.077 3–A16
BOLT, Tail Lamp Mounting 2.662 3–D20
BOLT, Turn Signal Lamp 2.895 3–E6
BOOT, Chassis Electrical 2.530 3–D2
BRACE, Generator Mounting 2.277 3–B14
BRACE, Starter Motor 2.042 3–A15
BRACKET, Body Multifunction Electric Computer 2.560 3–D15
BRACKET, Capsule/Headlamp Mounting 2.726 3–D26
BRACKET, Capsule/Headlamp/Fog Lamp 2.485 3–C23
BRACKET, Chassis Electric Diagnostic . 2.440 3–C8
BRACKET, Chassis Wiring 2.480 3–C9
BRACKET, Chassis/Engine Wiring Harness 2.559 3–D11
BRACKET, Concealed Capsule/Headlamp Control 2.755 3–D28
BRACKET, Concealed Capsule/Headlamp Opening Cover . 2.765 3–E3
BRACKET, Distributor (also Knock Sensor) 2.383 3–C4
BRACKET, Generator Mounting 2.277 3–B14
BRACKET, Horn 2.812 3–E3
BRACKET, Ignition Coil Mounting 2.183 3–A18
BRACKET, Ignition Switch Warning, Lock, Headlamp, Theft Deterrent or Rear/Side Object 2.195 3–A21
BRACKET, Main Wiring Junction and Fuse Block 2.483 3–C20
BRACKET, Parking, Turn Signal & Cornering Lamp 2.587 3–D18
BRACKET, Side Marker and Hazard Flasher 2.575 3–D15

© GENERAL MOTORS SERVICE PARTS OPERATIONS–CHEVROLET–14Y

BRACKET, Stop Lamp Switch 2.447 3-C8
BRACKET, Tail Lamp 2.694 3-D22
BREAKER, Main Wiring Junction and Fuse Block 2.483 3-C20
BRIDGE, Generator Output 2.319 3-B19
BRUSH KIT, Generator Brush 2.291 3-B15
BRUSH, Distributor Cap Retaining 2.368 3-C3
BRUSH, Generator Brush 2.291 3-B15
BRUSH, Starter Motor 2.051 3-A15
BULB, Back Up Lamp 2.697 3-D23
BULB, Capsule/Headlamp/Fog Lamp .. 2.727 3-D27
BULB, Tail Lamp 2.679 3-D20
BUMPER, Capsule/Headlamp Mounting 2.726 3-D26
BUTTON, Side Marker and Hazard Flasher 2.575 3-D15

C

CABLE, Battery (Negative) 2.341 3-B20
CABLE, Battery (Positive) 2.342 3-B20
CAM, Turn Signal Switch Cancelling ... 2.896 3-E6
CAP KIT, Distributor 2.367 3-C2
CAP, Distributor 2.367 3-C2
CAP, Horn Button 2.820 3-E5
CAPACITOR, Generator Output 2.319 3-B19
CAPSULE, Capsule/Headlamp/Foglamp 2.725 3-D25
CLAMP, Ignition Distributor Housing ... 2.363 3-C2
CLIP, Back Up Lamp 2.698 3-D24
CLIP, Battery Cable 2.343 3-B21
CLIP, Capsule/Headlamp Mounting 2.726 3-D26
CLIP, Capsule/Headlamp/Fog Lamp ... 2.727 3-D27
CLIP, Chassis/Engine Wiring Harness .. 2.559 3-D11
CLIP, Horn 2.815 3-E4
CLIP, Ignition Switch Warning, Lock, Headlamp, Theft Deterrent or Rear/Side Object 2.195 3-A21
CLIP, Main Wiring Junction and Fuse Block 2.483 3-C20
CLIP, Side Marker and Hazard Flasher . 2.575 3-D15
CLIP, Spark Plug Ignition Wire 2.251 3-A26
CLIP, Turn Signal Lamp 2.892 3-E5
COIL, Ignition Coil 2.170 3-A18
COIL, Starter Motor 2.049 3-A15
COLLAR, Generator Drive End 2.307 3-B17
COLLAR, Starter Motor Thrust 2.063 3-A16
CONDUIT, Chassis Electrical 2.530 3-D2
CONN, Concealed Capsule/Headlamp Control 2.755 3-D28
CONNECTOR KIT, Concealed Capsule/Headlamp Control 2.755 3-D28
CONNECTOR KIT, Electrical Wiring Repair Kit 2.535 3-D9
CONNECTOR, Back Up Lamp 2.698 3-D24
CONNECTOR, Battery (Positive) 2.342 3-B20
CONNECTOR, Capsule/Headlamp Dimmer 2.459 3-C9
CONNECTOR, Capsule/Headlamp/Fog Lamp 2.485 3-C23
CONNECTOR, Capsule/Headlamp/Fog Lamp 2.727 3-D27
CONNECTOR, Chassis Electric Diagnostic 2.440 3-C8
CONNECTOR, Chassis Electrical 2.530 3-D2
CONNECTOR, Chassis Wiring 2.460 3-C9
CONNECTOR, Concealed Capsule/Headlamp Control Drive ... 2.760 3-E2
CONNECTOR, Concealed Capsule/Headlamp Control 2.755 3-D28
CONNECTOR, Distributor (also Knock Sensor) 2.383 3-C4
CONNECTOR, Electrical Wiring Repair Kit 2.535 3-D9
CONNECTOR, Generator 2.313 3-B18
CONNECTOR, Horn 2.815 3-E4
CONNECTOR, Ignition Coil 2.170 3-A18
CONNECTOR, Ignition Switch Warning, Lock, Headlamp, Theft Deterrent or Rear/Side Object 2.195 3-A21
CONNECTOR, Ignition Switch 2.188 3-A20
CONNECTOR, Instrument Panel/Interior Lamp Switch 2.490 3-C25
CONNECTOR, Main Wiring Junction and Fuse Block 2.483 3-C20
CONNECTOR, Parking, Turn Signal & Cornering Lamp 2.596 3-D19
CONNECTOR, Side Marker and Hazard Flasher 2.575 3-D15
CONNECTOR, Starter Motor 2.100 3-A17
CONNECTOR, Stop Lamp Switch 2.447 3-C8
CONNECTOR, Tail Lamp 2.394 3-D22
CONNECTOR, Turn Signal Lamp 2.892 3-E5
CONNECTOR, Voltage and Glow Plug . 2.510 3-C25
CONTACT, Horn Button 2.819 3-E5
CONTACT, Starter Motor Switch 2.102 3-A17
COVER, Battery Cable 2.343 3-B21
COVER, Chassis Electric Diagnostic ... 2.440 3-C8
COVER, Chassis Electrical 2.530 3-D2
COVER, Chassis/Engine Wiring Harness 2.559 3-D11
COVER, Concealed Capsule/Headlamp Control 2.755 3-D28
COVER, Distributor Cap Retaining 2.368 3-C3
COVER, Main Wiring Junction and Fuse Block 2.483 3-C20
COVER, Parking, Turn Signal & Cornering Lamp 2.593 3-D18
CYLINDER, Ignition Switch 2.188 3-A20

D

DIMMER, Instrument Panel/Interior Lamp Switch 2.490 3-C25
DIODE, Generator Output 2.319 3-B19
DIODE, Voltage and Glow Plug 2.510 3-C25
DISTRIBUTOR, Ignition 2.361 3-B21
DOOR, Capsule/Headlamp/Fog Lamp . 2.728 3-D28
DRIVE, Starter Motor Drive 2.086 3-A17

© GENERAL MOTORS SERVICE PARTS OPERATIONS-CHEVROLET-14Y

E

EMBLEM, Horn Button 2.820 3-E5

F

FAN, Generator Drive 2.274 3-B6
FILLER, Side Marker and Hazard Flasher 2.575 3-D15
FLASHER, Side Marker and Hazard Flasher 2.575 3-D15
FLASHER, Turn Signal Lamp 2.892 3-E5
FRAME, Generator Commutator 2.297 3-B16
FRAME, Generator Drive End 2.305 3-B16
FRAME, Starter Motor Commutator End 2.067 3-A16

G

GASKET, Distributor (also Knock Sensor) 2.383 3-C4
GASKET, Ignition Distributor Housing .. 2.363 3-C2
GEAR KIT, Distributor Drive and Driven . 2.374 3-C3
GEAR, Distributor Drive and Driven 2.374 3-C3
GENERATOR, Engine Electrical 2.275 3-B6
GRILLE, Capsule/Headlamp/Fog Lamp 2.465 3-C23
GROMMET, Starter Motor Switch 2.102 3-A17

H

HARNESS, Capsule/Headlamp/Fog Lamp 2.727 3-D27
HARNESS, Chassis Wiring 2.480 3-C9
HARNESS, Distributor (also Knock Sensor) 2.383 3-C4
HARNESS, Distributor Vacuum Control . 2.420 3-C8
HARNESS, Engine Wiring 2.525 3-C26
HARNESS, Parking, Turn Signal & Cornering Lamp 2.596 3-D19
HARNESS, Spark Plug or Coil 2.240 3-A22
HARNESS, Tail Lamp 2.694 3-D22
HEAT SINK, Distributor (also Knock Sensor) 2.383 3-C4
HINGE, Parking, Turn Signal & Cornering Lamp 2.587 3-D18
HOLDER, Starter Motor Brush 2.052 3-A15
HORN KIT, Horn 2.810 3-E3
HORN, Horn 2.810 3-E3
HOUSING, Capsule/Headlamp/Foglamp 2.725 3-D25
HOUSING, Ignition Distributor 2.362 3-C2
HOUSING, Main Wiring Junction and Fuse Block 2.483 3-C20
HOUSING, Starter Motor Drive Housing 2.085 3-A17
HOUSING, Tail Lamp 2.680 3-D21

I

INSULATOR, Battery 2.333 3-B20
INSULATOR, Body Multifunction Electric Computer 2.560 3-D15
INSULATOR, Capsule/Headlamp Trim .. 2.729 3-D28
INSULATOR, Chassis Electrical 2.530 3-D2
INSULATOR, Chassis/Engine Wiring Harness 2.559 3-D11
INSULATOR, Generator 2.313 3-B18
INSULATOR, Main Wiring Junction and Fuse Block 2.483 3-C20
INSULATOR, Voltage & Current 2.515 3-C26

K

KEY, Ignition and Locks 2.187 3-A19
KNOB, Capsule/Headlamp/Fog Lamp Switch 2.486 3-C25
KNOB, Side Marker and Hazard Flasher 2.575 3-D15

L

LABEL, Main Wiring Junction and Fuse Block 2.483 3-C20
LAMP, Back Up Lamp 2.697 3-D23
LAMP, Capsule/Headlamp/Fog Lamp Switch 2.487 3-C25
LAMP, Capsule/Headlamp/Fog Lamp .. 2.485 3-C23
LAMP, Parking, Turn Signal & Cornering & Daytime Running 2.585 3-D17
LAMP, Rear License Lamp 2.700 3-D24
LAMP, Side Marker and Hazard Flasher 2.575 3-D15
LAMP, Tail Lamp 2.679 3-D20
LAMP, Tail Lamp 2.682 3-D21
LEAD, Horn Lead 2.859 3-E5
LEAD, Starter Motor Brush 2.055 3-A16
LENS, Parking, Turn Signal & Cornering Lamp 2.589 3-D18
LENS, Tail Lamp 2.682 3-D21
LEVER, Starter Motor Drive Shift 2.108 3-A17
LEVER, Turn Signal Control 2.897 3-E7
LOCK, Chassis Electrical 2.530 3-D2

M

MODULE, Body Multifunction Electric Computer 2.560 3-D15
MODULE, Capsule/Headlamp/Fog Lamp 2.485 3-C23
MODULE, Concealed Capsule/Headlamp Control 2.755 3-D28
MODULE, Distributor (also Knock Sensor) 2.383 3-C4

MODULE, Ignition Switch Warning, Lock, Headlamp, Theft Deterrent or Rear/Side Object 2.195 3-A21
MODULE, Voltage and Glow Plug 2.510 3-C25

N

NUT, Back Up Lamp 2.698 3-D24
NUT, Battery Cable 2.343 3-B21
NUT, Body Multifunction Electric Computer 2.560 3-D15
NUT, Capsule/Headlamp Mounting 2.726 3-D26
NUT, Capsule/Headlamp Trim 2.729 3-D28
NUT, Capsule/Headlamp/Fog Lamp Switch 2.487 3-C25
NUT, Generator Rotor Shaft 2.280 3-B15
NUT, Generator 2.313 3-B18
NUT, Ignition Coil Mounting 2.183 3-A18
NUT, Instrument Panel/Interior Lamp Switch 2.490 3-C25
NUT, Main Wiring Junction and Fuse Block 2.483 3-C20
NUT, Parking, Turn Signal & Cornering Lamp 2.586 3-D18
NUT, Parking, Turn Signal & Cornering Lamp 2.587 3-D18
NUT, Spark Plug Ignition Wire 2.251 3-A26
NUT, Stop Lamp Switch 2.447 3-C8

P

PIN, Capsule/Headlamp Dimmer 2.459 3-C9
PIN, Distributor Shaft 2.372 3-C3
PIN, Starter Motor Brush 2.052 3-A15
PIN, Starter Motor Drive Shift 2.108 3-A17
PIVOT, Capsule/Headlamp Dimmer 2.459 3-C9
PLATE, Chassis/Engine Wiring Harness 2.559 3-D11
PLATE, Generator Drive End 2.307 3-B17
PLATE, Tail Lamp Mounting 2.662 3-D20
PLUG, Chassis Electrical 2.530 3-D2
PLUNGER, Starter Motor Solenoid 2.113 3-A18
POLE PIECE & PLATE, Distributor Shaft 2.372 3-C3
POLE, Distributor Shaft 2.372 3-C3
POLE, Starter Motor 2.077 3-A16
PROTECTOR, Chassis Electrical 2.530 3-D2
PROTECTOR, Turn Signal Switch 2.906 3-E7
PULLER, Main Wiring Junction and Fuse Block 2.483 3-C20
PULLEY, Generator Drive 2.274 3-B6
PUSHBUTTON, Side Marker and Hazard Flasher 2.575 3-D15

R

RACK KIT, Ignition Switch Warning, Lock, Headlamp, Theft Deterrent or Rear/Side Object 2.195 3-A21
RACK, Ignition Switch Warning, Lock, Headlamp, Theft Deterrent or Rear/Side Object 2.195 3-A21
RECTIFIER, Generator Output 2.319 3-B19
REFLECTOR, Tail Lamp/Rear End Panel Reflector 2.689 3-D21
REGULATOR, Voltage Regulator 2.500 3-C25
RELAY, Capsule/Headlamp/Fog Lamp . 2.485 3-C23
RELAY, Concealed Capsule/Headlamp Control 2.755 3-D28
RELAY, Horn 2.815 3-E4
RELAY, Ignition Switch Warning, Lock, Headlamp, Theft Deterrent or Rear/Side Object 2.195 3-A21
RELAY, Parking, Turn Signal & Cornering Lamp 2.596 3-D19
RELAY, Starter Motor 2.100 3-A17
RELAY, Voltage and Glow Plug 2.510 3-C25
RESISTOR, Generator Output 2.319 3-B19
RETAINER, Battery Hold Down 2.335 3-B20
RETAINER, Chassis/Engine Wiring Harness 2.550 3-D11
RETAINER, Distributor Shaft 2.372 3-C3
RETAINER, Ignition Switch 2.188 3-A20
RETAINER, Main Wiring Junction and Fuse Block 2.483 3-C20
RETAINER, Spark Plug Ignition Wire ... 2.251 3-A26
RETAINER, Stop Lamp Switch 2.447 3-C8
RETAINER, Tail Lamp Mounting 2.662 3-D20
RETAINER, Tail Lamp 2.660 3-D19
RETAINER, Turn Signal Switch Cancelling 2.896 3-E6
RING, Capsule/Headlamp Mounting ... 2.726 3-D26
RING, Capsule/Headlamp Retaining ... 2.731 3-D28
RING, Distributor (also Knock Sensor) . 2.383 3-C4
RING, Starter Motor Thrust 2.063 3-A16
RIVET, Main Wiring Junction and Fuse Block 2.483 3-C20
ROD, Capsule/Headlamp Dimmer 2.459 3-C9
ROTOR, Distributor 2.382 3-C4
ROTOR, Generator 2.279 3-B15

S

SCREEN, Ignition Distributor Housing .. 2.363 3-C2
SCREW & WASHER, Generator Output 2.319 3-B19
SCREW, Distributor (also Knock Sensor) 2.383 3-C4
SCREW, Distributor Cap Retaining 2.368 3-C3
SCREW, Generator Brush 2.291 3-B15
SCREW, Generator Drive End 2.307 3-B17
SCREW, Generator Output 2.319 3-B19
SCREW, Ignition Coil Mounting 2.183 3-A18
SCREW, Ignition Switch Warning, Lock, Headlamp, Theft Deterrent or Rear/Side Object 2.195 3-A21
SCREW, Starter Motor 2.077 3-A16
SCREW, Tail Lamp 2.679 3-D20
SCREW, Voltage Regulator 2.500 3-C25
SEAL, Chassis Electrical 2.530 3-D2
SEAL, Distributor (also Knock Sensor) . 2.383 3-C4
SEAL, Distributor Shaft 2.372 3-C3
SEAL, Ignition Coil Mounting 2.183 3-A18

SEAL, Ignition Distributor Housing 2.363 3–C2
SEAL, Tail Lamp 2.660 3–D19
SEALBEAM, Capsule/Headlamp/Fog Lamp 2.727 3–D27
SEALER, Starter Motor 2.070 3–A16
SENSOR, Capsule/Headlamp/Fog Lamp 2.485 3–C23
SENSOR, Distributor (also Knock Sensor) 2.383 3–C4
SHAFT, Distributor Shaft 2.372 3–C3
SHAFT, Ignition Switch Warning, Lock, Headlamp, Theft Deterrent or Rear/Side Object 2.195 3–A21
SHAFT, Starter Motor Drive Shift 2.108 3–A17
SHIELD, Chassis/Engine Wiring Harness 2.559 3–D11
SHIELD, Distributor (also Knock Sensor) 2.383 3–C4
SHIELD, Generator Mounting 2.277 3–B14
SHIELD, Spark Plug Ignition Wire 2.251 3–A26
SHIM, Distributor (also Knock Sensor) . 2.383 3–C4
SHIM, Starter Motor 2.042 3–A15
SLEEVE, Distributor (also Knock Sensor) 2.383 3–C4
SOCKET, Back Up Lamp 2.697 3–D23
SOCKET, Capsule/Headlamp/Fog Lamp 2.485 3–C23
SOCKET, Parking, Turn Signal & Cornering & Daytime Running ... 2.585 3–D17
SOCKET, Parking, Turn Signal & Cornering Lamp 2.596 3–D19
SOCKET, Rear License Lamp 2.714 3–D25
SOCKET, Side Marker and Hazard Flasher 2.575 3–D15
SOCKET, Tail Lamp 2.694 3–D22
SOCKET, Turn Signal Lamp 2.892 3–E5
SPACER, Chassis/Engine Wiring Harness 2.559 3–D11
SPACER, Generator Adjust 2.317 3–B18
SPACER, Generator Mounting 2.277 3–B14
SPACER, Parking, Turn Signal & Cornering Lamp 2.587 3–D18
SPARK PLUG, Engine Tune–up (Spark, Glow) 2.270 3–A27
SPRING, Capsule/Headlamp Adjuster .. 2.737 3–D28
SPRING, Capsule/Headlamp Dimmer .. 2.459 3–C9
SPRING, Capsule/Headlamp Mounting . 2.726 3–D26
SPRING, Generator Brush 2.286 3–B15
SPRING, Horn Button 2.819 3–E5
SPRING, Ignition Switch Warning, Lock, Headlamp, Theft Deterrent or Rear/Side Object 2.195 3–A21
SPRING, Parking, Turn Signal & Cornering Lamp 2.587 3–D18
SPRING, Side Marker and Hazard Flasher 2.575 3–D15
SPRING, Starter Motor Brush 2.053 3–A16
SPRING, Starter Motor Drive Shift 2.108 3–A17
SPRING, Turn Signal Switch Cancelling 2.896 3–E6
STARTER, Starter Motor 2.041 3–A10
STATOR, Generator Field 2.310 3–B17
STOP, Capsule/Headlamp Mounting ... 2.726 3–D26
STRAP, Battery (Negative) 2.341 3–B20
STRAP, Chassis/Engine Wiring Harness 2.559 3–D11
STRAP, Distributor 2.400 3–C7
STUD, Chassis/Engine Wiring Harness . 2.559 3–D11
STUD, Ignition Coil Mounting 2.183 3–A18
STUD, Ignition Switch 2.188 3–A20
STUD, Spark Plug Ignition Wire 2.251 3–A26
SUPPORT KIT, Starter Motor Brush 2.052 3–A15
SUPPORT, Spark Plug Ignition Wire 2.251 3–A26
SUPPORT, Tail Lamp Mounting 2.662 3–D20
SWITCH, Back Up Lamp 2.698 3–D24
SWITCH, Capsule/Headlamp Dimmer .. 2.459 3–C9
SWITCH, Capsule/Headlamp/Fog Lamp 2.485 3–C23
SWITCH, Horn Button 2.819 3–E5
SWITCH, Ignition Switch Warning, Lock, Headlamp, Theft Deterrent or Rear/Side Object 2.195 3–A21
SWITCH, Ignition Switch 2.188 3–A20
SWITCH, Starter Motor 2.100 3–A17
SWITCH, Stop Lamp Switch 2.447 3–C8
SWITCH, Turn Signal Lamp 2.895 3–E6

T

TERMINAL BLOCK, Distributor (also Knock Sensor) 2.383 3–C4
TERMINAL KIT, Generator 2.313 3–B18
TERMINAL, Chassis Electrical 2.530 3–D2
TERMINAL, Generator 2.313 3–B18
TOWER, Horn Button 2.819 3–E5
TRAY, Battery 2.333 3–B20

W

WASHER, Battery Cable 2.343 3–B21
WASHER, Chassis/Engine Wiring Harness 2.559 3–D11
WASHER, Distributor Drive Gear 2.379 3–C4
WASHER, Distributor Lubrication 2.364 3–C2
WASHER, Generator Rotor Shaft 2.280 3–B15
WASHER, Spark Plug Ignition Wire 2.251 3–A26
WASHER, Starter Motor Thrust 2.063 3–A16
WIRE KIT, Spark or Glow Plug Ignition . 2.239 3–A22
WIRE, Capsule/Headlamp/Fog Lamp .. 2.727 3–D27
WIRE, Chassis Wiring 2.480 3–C9
WIRE, Horn Lead 2.859 3–E5
WIRE, Horn 2.815 3–E4
WIRE, Spark Plug or Coil 2.240 3–A22
WIRE, Tail Lamp 2.694 3–D22

CHART INDEX

GROUP 2 GRID

ILLUS INDEX (GRP 2) 3–A9
STARTER MOTOR 3–A11
SPARK PLUG WIRE 3–A25
TUNE–UP CHARTS 3–A28
GENERATOR 3–B8
DISTRIBUTOR 3–B22
LAMP SOCKETS 3–E8

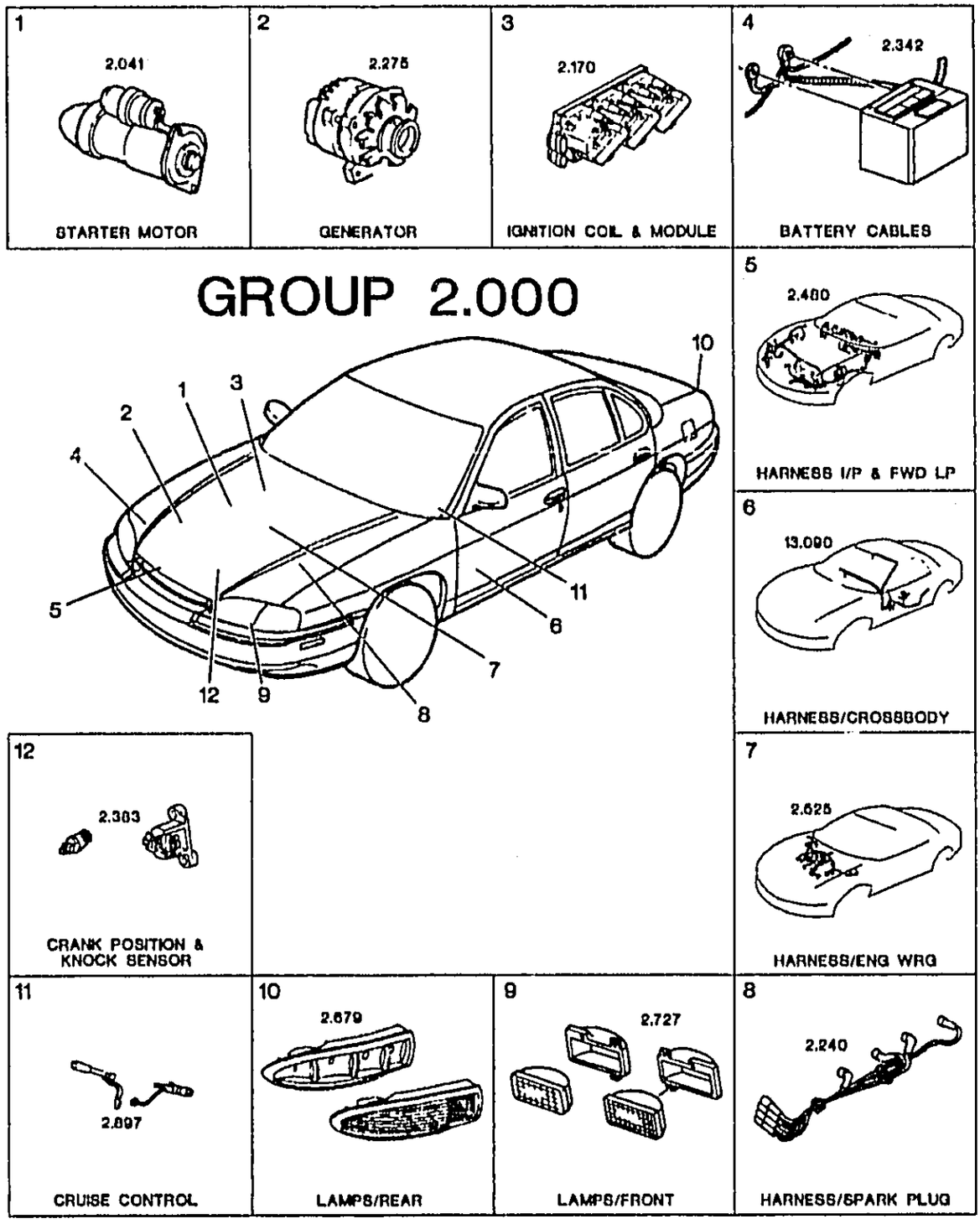
1
2.041
STARTER MOTOR
2
2.275
GENERATOR
3
2.170
IGNITION COIL & MODULE
4
2.342
BATTERY CABLES
GROUP 2.000
5
2.480
HARNESS I/P & FWD LP
6
13.090
HARNESS/CROSSBODY
7
2.625
HARNESS/ENG WRG
8
2.240
HARNESS/SPARK PLUG
9
2.727
LAMPS/FRONT
10
2.679
LAMPS/REAR
11
2.697
CRUISE CONTROL
12
2.383
CRANK POSITION & KNOCK SENSOR

2.041 STARTER, Starter Motor

NOTE: FOR 1984–87 USAGE REFER TO STARTER MOTOR CHART GRP 2.041
NOTE: STARTER MOTOR SERVICED BY COMPLETE ASSEMBLY ONLY FOR 1988–1991

84–87	Y 6.5P (L49)	10496871	1	90.00	STARTER, (REMAN) (AC–DELCO #323–365)	3–F5,1
88	Y	10455702	1	382.37	STARTER, (AC–DELCO #10455702)	1–G23,76
89–91	Y 5.7–8 (L98)	10455702	1	382.37	STARTER, (AC–DELCO #10455702)	1–G23,76
90–95	Y 5.7J (LT5)	10455704	1	359.49	STARTER, (SERVICED BY COMPL ASM ONLY) (AC–DELCO #10455704)	3–F7,1
92–95	Y 5.7P (LT1)	10455709	1	289.54	STARTER, (AC–DELCO #10455709)	3–F8,3
96	Y	10455709	1	289.54	STARTER, (AC–DELCO #10455709)	3–F8,3

1984 STARTER MOTORS

NOTE: A01 (WHEN AVAILABLE REMANUFACTURED STARTER MOTORS ARE SHOWN IN TEXT GROUP 2.041)

PRODUCTION NUMBER	DIV.	USAGE	COLUMN
01998400	1	Y	1
01998435	1	Y	2
01998557	1	Y	3

GROUP	DESCRIPTION	QTY	1	2	3	4	5
2.041	STARTER MOTOR(PRODUCTION)	1	1998400	1998435	1998557	—	—
2.041	STARTER MOTOR(SERVICE)	1	10496871	10496871	10496871	—	—
2.043	ARMATURE	1	10490501	10490501	10490501	—	—
2.077	BOLT THRU	AR	1939970	1939970	1939970	—	—
2.077	BOLT,W/EXT THRU	1	1941111	1941111	1941111	—	—
2.051	BRUSH	4	1906945	1906945	1906945	—	—
2.049	COIL,FIELD	1	10470770	10470770	10470770	—	—
2.063	COLLAR,PINION STOP D.E.	1	1927849	1927849	1927849	—	—
2.063	COLLAR,THRUST D.E.	1	10495828	10495828	10495828	—	—
2.102	CONTACT,W/PUSH ROD,SOL	1	1978337	1978337	1978337	—	—
2.086	DRIVE	1	10470757	10470757	10470757	—	—
2.067	FRAME,C.E.	1	1974157	1974157	1974157	—	—
2.102	GROMMET,FIELD FRAME	1	1893370	1846097	1846097	—	—
2.052	HOLDER,BRUSH GRD	2	1940477	1940477	1940477	—	—
2.052	HOLDER,BRUSH INSUL	AR	800091	800091	800091	—	—
2.085	HOUSING,DRIVE	1	1876881	1876881	1876881	—	—
2.055	LEAD,BRUSH GRD	2	1960864	1960864	1960864	—	—
2.108	LEVER,SHIFT	1	801433	801433	801433	—	—
2.052	PIN,BRUSH HOLDER SUPT	2	1966923	1966923	1966923	—	—
2.108	PIN,DOWEL	1	809593	809593	1985696	—	—
2.108	PIN,PLUNGER ATTACH TO SHIFT LVR	1	1987049	1987049	1987049	—	—
2.113	PLUNGER	1	10470764	10470764	10470764	—	—
2.077	POLE,SHOE	4	810601	810601	810601	—	—
2.063	RING,PINION STOP RET,D.E.	1	1927848	1927848	1927848	—	—
2.077	SCREW,POLE SHOE	AR	1968396	1968396	1969396	—	—
2.108	SHAFT,SHIFT LEVER	1	1945804	1945804	1945804	—	—
2.053	SPRING,BRUSH	2	10498866	10498866	10498866	—	—
2.108	SPRING,PLUNGER RETURN	1	1958679	1958679	1958679	—	—
2.052	SUPPORT KIT,BRUSH HOLDER	2	1928015	1928015	1928015	—	—
2.100	SWITCH,SOLENOID	1	1114531	1114531	1114531	—	—
2.063	WASHER,BRAKE C.E.	1	10498921	10498921	10498921	—	—

© 2000 GENERAL MOTORS SERVICE PARTS OPERATIONS-CHEVROLET-14Y

1985 STARTER MOTORS

NOTE: A01 (WHEN AVAILABLE REMANUFACTURED STARTER MOTORS ARE SHOWN IN TEXT GROUP 2.041)

PRODUCTION NUMBER	DIV.	USAGE	COLUMN
01998435	1	Y	1
01998557	1	Y	2

GROUP	DESCRIPTION	QTY	1	2	3	4	5
2.041	STARTER MOTOR(PRODUCTION)	1	1998435	1998557	—	—	—
2.041	STARTER MOTOR(SERVICE)	1	10496871	10496871	—	—	—
2.043	ARMATURE	1	10490501	10490501	—	—	—
2.077	BOLT THRU	AR	1939970	1939970	—	—	—
2.077	BOLT,W/EXT THRU	1	1941111	1941111	—	—	—
2.051	BRUSH	4	1906945	1906945	—	—	—
2.049	COIL,FIELD	1	10470770	10470770	—	—	—
2.063	COLLAR,PINION STOP D.E.	1	1927849	1927849	—	—	—
2.063	COLLAR,THRUST D.E.	1	10495828	10495828	—	—	—
2.102	CONTACT,W/PUSH ROD,SOL	1	1978337	1978337	—	—	—
2.086	DRIVE	1	10470757	10470757	—	—	—
2.067	FRAME,C.E.	1	1974157	1974157	—	—	—
2.102	GROMMET,FIELD FRAME	1	1846097	1846097	—	—	—
2.052	HOLDER,BRUSH GRD	2	1940477	1940477	—	—	—
2.052	HOLDER,BRUSH INSUL	AR	800091	800091	—	—	—
2.085	HOUSING,DRIVE	1	1876881	1876881	—	—	—
2.055	LEAD,BRUSH GRD	2	1960864	1960864	—	—	—
2.108	LEVER,SHIFT	1	801433	801433	—	—	—
2.052	PIN,BRUSH HOLDER SUPT	2	1966923	1966923	—	—	—
2.108	PIN,DOWEL	1	1985696	1985696	—	—	—
2.108	PIN,PLUNGER ATTACH TO SHIFT LVR	1	1987049	1987049	—	—	—
2.113	PLUNGER	1	10470764	10470764	—	—	—
2.077	POLE,SHOE	4	810601	810601	—	—	—
2.063	RING,PINION STOP RET,D.E.	1	1927848	1927848	—	—	—
2.077	SCREW,POLE SHOE	AR	1968396	1968396	—	—	—
2.108	SHAFT,SHIFT LEVER	1	1945804	1945804	—	—	—
2.053	SPRING,BRUSH	2	10498866	10498866	—	—	—
2.108	SPRING,PLUNGER RETURN	1	1958679	1958679	—	—	—
2.052	SUPPORT KIT,BRUSH HOLDER	2	1928015	1928015	—	—	—
2.100	SWITCH,SOLENOID	1	1114531	1114531	—	—	—
2.063	WASHER,BRAKE C.E.	1	10498921	10498921	—	—	—

© 2000 GENERAL MOTORS SERVICE PARTS OPERATIONS-CHEVROLET-14Y

1986 STARTER MOTORS

NOTE: A01 (WHEN AVAILABLE REMANUFACTURED STARTER MOTORS ARE SHOWN IN TEXT GROUP 2.041)

PRODUCTION NUMBER	DIV.	USAGE	COLUMN
01998557	1	Y	1

GROUP	DESCRIPTION	QTY	1	2	3	4	5
2.041	STARTER MOTOR(PRODUCTION)	1	1998557	—	—	—	—
2.041	STARTER MOTOR(SERVICE)	1	10496871	—	—	—	—
2.043	ARMATURE	1	10490501	—	—	—	—
2.077	BOLT THRU	AR	1939970	—	—	—	—
2.077	BOLT,W/EXT THRU	1	1941111	—	—	—	—
2.051	BRUSH	4	1906945	—	—	—	—
2.049	COIL,FIELD	1	10470770	—	—	—	—
2.063	COLLAR,PINION STOP D.E.	1	1927849	—	—	—	—
2.063	COLLAR,THRUST D.E.	1	10495828	—	—	—	—
2.102	CONTACT,W/PUSH ROD,SOL	1	1978337	—	—	—	—
2.086	DRIVE	1	10470757	—	—	—	—
2.067	FRAME,C.E.	1	1974157	—	—	—	—
2.102	GROMMET,FIELD FRAME	1	1846097	—	—	—	—
2.052	HOLDER,BRUSH GRD	2	1940477	—	—	—	—
2.052	HOLDER,BRUSH INSUL	AR	800091	—	—	—	—
2.085	HOUSING,DRIVE	1	1876881	—	—	—	—
2.055	LEAD,BRUSH GRD	2	1960864	—	—	—	—
2.108	LEVER,SHIFT	1	801433	—	—	—	—
2.052	PIN,BRUSH HOLDER SUPT	2	1966923	—	—	—	—
2.108	PIN,DOWEL	1	1985696	—	—	—	—
2.108	PIN,PLUNGER ATTACH TO SHIFT LVR	1	1987049	—	—	—	—
2.113	PLUNGER	1	10470764	—	—	—	—
2.077	POLE,SHOE	4	810601	—	—	—	—
2.063	RING,PINION STOP RET,D.E.	1	1927848	—	—	—	—
2.077	SCREW,POLE SHOE	AR	1968396	—	—	—	—
2.108	SHAFT,SHIFT LEVER	1	1945804	—	—	—	—
2.053	SPRING,BRUSH	2	10498866	—	—	—	—
2.108	SPRING,PLUNGER RETURN	1	1958679	—	—	—	—
2.052	SUPPORT KIT,BRUSH HOLDER	2	1928015	—	—	—	—
2.100	SWITCH,SOLENOID	1	1114531	—	—	—	—
2.063	WASHER,BRAKE C.E.	1	10498921	—	—	—	—

© 2000 GENERAL MOTORS SERVICE PARTS OPERATIONS–CHEVROLET–14Y

1987 STARTER MOTORS

NOTE: A01 (WHEN AVAILABLE REMANUFACTURED STARTER MOTORS ARE SHOWN IN TEXT GROUP 2.041)

PRODUCTION NUMBER	DIV.	USAGE	COLUMN
01998577	1	Y	1

GROUP	DESCRIPTION	QTY	1	2	3	4	5
2.041	STARTER MOTOR(PRODUCTION)	1	1998577	—	—	—	—
2.041	STARTER MOTOR(SERVICE)	1	10496871	—	—	—	—
2.043	ARMATURE	1	10490501	—	—	—	—
2.077	BOLT THRU	AR	1939970	—	—	—	—
2.077	BOLT,W/EXT THRU	1	1941111	—	—	—	—
2.051	BRUSH	4	1906945	—	—	—	—
2.049	COIL,FIELD	1	10470770	—	—	—	—
2.063	COLLAR,PINION STOP D.E.	1	1927849	—	—	—	—
2.063	COLLAR,THRUST D.E.	1	10495828	—	—	—	—
2.102	CONTACT,W/PUSH ROD,SOL	1	1978337	—	—	—	—
2.086	DRIVE	1	10470757	—	—	—	—
2.067	FRAME,C.E.	1	1974157	—	—	—	—
2.102	GROMMET,FIELD FRAME	1	1846097	—	—	—	—
2.052	HOLDER,BRUSH GRD	2	1940477	—	—	—	—
2.052	HOLDER,BRUSH INSUL	AR	800091	—	—	—	—
2.085	HOUSING,DRIVE	1	1876881	—	—	—	—
2.055	LEAD,BRUSH GRD	2	1960864	—	—	—	—
2.108	LEVER,SHIFT	1	801433	—	—	—	—
2.052	PIN,BRUSH HOLDER SUPT	2	1966923	—	—	—	—
2.108	PIN,DOWEL	1	1985696	—	—	—	—
2.108	PIN,PLUNGER ATTACH TO SHIFT LVR	1	1987049	—	—	—	—
2.113	PLUNGER	1	10470764	—	—	—	—
2.077	POLE,SHOE	4	810601	—	—	—	—
2.063	RING,PINION STOP RET,D.E.	1	1927848	—	—	—	—
2.077	SCREW,POLE SHOE	AR	1968396	—	—	—	—
2.108	SHAFT,SHIFT LEVER	1	1945804	—	—	—	—
2.085	SHIELD,DR HOUSING	1	DISCON	—	—	—	—
2.053	SPRING,BRUSH	2	10498866	—	—	—	—
2.108	SPRING,PLUNGER RETURN	1	1958679	—	—	—	—
2.052	SUPPORT KIT,BRUSH HOLDER	2	1928015	—	—	—	—
2.100	SWITCH,SOLENOID	1	1114531	—	—	—	—
2.063	WASHER,BRAKE C.E.	1	10498921	—	—	—	—

© 2000 GENERAL MOTORS SERVICE PARTS OPERATIONS–CHEVROLET–14Y

2.042 BOLT – BRACE – SHIM, Starter Motor

84–87	Y	14097278	1	*4.20	BOLT, ATTACH (HFH 3/8–16 X 4.65 W/KNURL 280M PZOR)	3–F8,5
84–87	Y	14097279	AR	4.40	BOLT, ATTACH (HFH 3/8–16 X 1.87 W/KNURL 280 PZOR)	3–F8,4
88–91	Y 5.7–8 (L98)	14097278	1	*4.20	BOLT, STRTR (HFH 3/8–16 X 4.65 W/KNURL 280M PZOR) (3/8–16X4 11/16)	3–F8,5
88–91	Y 5.7–8 (L98)	14097279	AR	4.40	BOLT, STRTR (HFH 3/8–16 X 1.87 W/KNURL 280 PZOR) (3/8–16X1.87)	3–F8,4
92–96	Y 5.7P (LT1)	14097278	1	*4.20	BOLT, STRTR (INBOARD) (3/8–16X4 11/16)	3–F8,5
92–96	Y 5.7P (LT1)	14097279	1	4.40	BOLT, STRTR (OUTBOARD) (3/8–16X1.87)	3–F8,4
84–87	Y	14057081	1	DISCON	BRACE, START MTR	
84–88	Y	1246249	AR	1.90	SHIM, START MOT (1 X 1 7/8 X .015) (STEEL)	3–F8,2
84–89	Y	10008053	AR	*1.00	SHIM, START MTR (24.4 X 106.7 X 0.38 STEEL)	3–F8,1
89–91	Y 5.7–8 (L98)	1246249	AR	1.90	SHIM, STRTR (1 X 1 7/8 X 5/32, STEEL)	3–F8,2
91	Y 5.7–8 (L98)	10008053	AR	*1.00	SHIM, STRTR (24.4X106.7X0.38 STL) (FULL)	3–F8,1
92–95	Y 5.7P (LT1)	1246249	AR	1.90	SHIM, STRTR (SHORT) (1 X 1 7/8 X 5/32, STEEL)	3–F8,2
92–96	Y 5.7P (LT1)	10008053	AR	*1.00	SHIM, STRTR (LONG) (24.4X106.7X0.38 STL) (FULL)	3–F8,1
96	Y	1246249	AR	1.90	SHIM, STRTR (1 X 1 7/8 X 5/32, STEEL)	3–F8,2

2.043 ARMATURE, Starter Motor

NOTE: FOR 1984–1987 USAGE REFER TO STARTER MOTOR CHART GRP 2.041

84	Y	10490501	1	161.43	ARMATURE, STRTR (AC–DELCO #D4159)	3–F5,19
85–87	Y FOR MDL APPL & POA SEE STARTER MTR CHT	10490501	1	161.43	ARMATURE, STRTR (AC–DELCO #D4159)	3–F5,19

2.049 COIL, Starter Motor

NOTE: FOR 1984–1987 USAGE REFER TO STARTER MOTOR CHART GRP 2.041

84	Y	10470770	1	47.27	COIL, FLD (AC–DELCO #D4264)	3–F5,22
85–87	Y FOR MDL APPL & POA SEE STARTER MTR CHT	10470770	1	47.27	COIL, FLD (AC–DELCO #D4264)	3–F5,22

2.051 BRUSH, Starter Motor

NOTE: FOR 1984–1987 USAGE REFER TO STARTER MOTOR CHART GRP 2.041

84	Y	1906945	4	*1.22	BRUSH (AC–DELCO #D757)	3–F5,27
85–87	Y FOR MDL APPL & POA SEE STARTER MTR CHT	1906945	4	*1.22	BRUSH (AC–DELCO #D757)	3–F5,27

2.052 HOLDER – PIN – SUPPORT KIT, Starter Motor Brush

NOTE: FOR 1984–1987 USAGE REFER TO STARTER MOTOR CHART GRP 2.041

84	Y	1940477	2	1.99	HOLDER, BRUSH GRD (AC–DELCO #1940477)	3–F5,26
85–87	Y FOR MDL APPL & POA SEE STARTER MTR CHT	1940477	2	1.99	HOLDER, BRUSH GRD (AC–DELCO #1940477)	3–F5,26
84–87	Y FOR MDL APPL & POA SEE STARTER MTR CHT	600091	2	5.28	HOLDER, BRUSH INSUL (AC–DELCO #D771)	3–F5,28
84	Y	1988414	2	.80	HOLDER, BRUSH INSUL (AC–DELCO #1988414)	

© 2000 GENERAL MOTORS SERVICE PARTS OPERATIONS–CHEVROLET–14Y

2.052 HOLDER – PIN – SUPPORT KIT, Starter Motor Brush (Con't)

84	Y	1966923	2	*1.19	PIN, BRUSH HLDR SUPT (AC–DELCO #1966923)	3–F5,31
85–87	Y FOR MDL APPL & POA SEE STARTER MTR CHT	1966923	2	*1.19	PIN, BRUSH HLDR SUPT (AC–DELCO #1966923)	3–F5,31
84	Y	1928015	2	3.78	SUPPORT KIT, BRUSH HLDR (AC–DELCO #1928015)	3–F5,30
85–87	Y FOR MDL APPL & POA SEE STARTER MTR CHT	1928015	2	3.78	SUPPORT KIT, BRUSH HLDR (AC–DELCO #1928015)	3–F5,30

2.053 SPRING, Starter Motor Brush

NOTE: FOR 1984–1987 USAGE REFER TO STARTER MOTOR CHART GRP 2.041

84	Y	10498866	2	*2.27	SPRING, BRUSH (AC–DELCO #D4954)	3–F5,29
85–87	Y FOR MDL APPL & POA SEE STARTER MTR CHT	10498866	2	*2.27	SPRING, BRUSH (AC–DELCO #D4954)	3–F5,29

2.055 LEAD, Starter Motor Brush

NOTE: FOR 1984–1987 USAGE REFER TO STARTER MOTOR CHART GRP 2.041

84	Y	1960864	2	*1.64	LEAD, BRUSH GRD (AC–DELCO #1960864)	3–F5,25
85–87	Y FOR MDL APPL & POA SEE STARTER MTR CHT	1960864	2	*1.64	LEAD, BRUSH GRD (AC–DELCO #1960864)	3–F5,25

2.063 COLLAR – RING – WASHER, Starter Motor Thrust

NOTE: FOR 1984–1987 USAGE REFER TO STARTER MOTOR CHART GRP 2.041

84	Y	1927849	1	*2.20	COLLAR, PINION STOP D .E. (AC–DELCO #1927849)	3–F5,7
85–87	Y FOR MDL APPL & POA SEE STARTER MTR CHT	1927849	1	*2.20	COLLAR, PINION STOP D .E. (AC–DELCO #1927849)	3–F5,7
84	Y	10495828	1	*1.50	COLLAR, THRUST D .E. (AC–DELCO #10495828)	3–F5,5
85–87	Y FOR MDL APPL & POA SEE STARTER MTR CHT	10495828	1	*1.50	COLLAR, THRUST D .E. (AC–DELCO #10495828)	3–F5,5
84	Y	1927848	1	*.13	RING, PINION STOP RET, D .E. (AC–DELCO #1927848)	3–F5,6
85–87	Y FOR MDL APPL & POA SEE STARTER MTR CHT	1927848	1	*.13	RING, PINION STOP RET, D .E. (AC–DELCO #1927848)	3–F5,6
84	Y	10498921	1	*.52	WASHER, BRAKE C .E. (AC–DELCO #10498921)	3–F5,34
85–87	Y FOR MDL APPL & POA SEE STARTER MTR CHT	10498921	1	*.52	WASHER, BRAKE C .E. (AC–DELCO #10498921)	3–F5,34

2.067 FRAME, Starter Motor Commutator End

NOTE: FOR 1984–1987 USAGE REFER TO STARTER MOTOR CHART GRP 2.041

84	Y	1974157	1	8.08	FRAME, C .E. (AC–DELCO #D4307)	3–F5,35
85–87	Y FOR MDL APPL & POA SEE STARTER MTR CHT	1974157	1	8.08	FRAME, C .E. (AC–DELCO #D4307)	3–F5,35

2.070 SEALER, Starter Motor

90–91	Y 5.7–8 (L98)	10096162	1	2.43	SEALER, STRTR	3–F8,6
92–95	Y 5.7P (LT1)	10096162	1	2.43	SEALER, STRTR	3–F8,6
96	Y	10096162	1	2.43	SEALER, STRTR	3–F8,6

2.077 BOLT – POLE – SCREW, Starter Motor

NOTE: FOR 1984–1987 USAGE REFER TO STARTER MOTOR CHART GRP 2.041

84	Y	1939970	AR	*6.05	BOLT, STRTR THRU (AC–DELCO #1939970)	3–F5,32

© 2000 GENERAL MOTORS SERVICE PARTS OPERATIONS–CHEVROLET–14Y

2.077 BOLT – POLE – SCREW, Starter Motor (Con't)

84–87	Y FOR MDL APPL & POA SEE STARTER MTR CHT	1939970	AR	*6.05	BOLT, STRTR THRU (AC–DELCO #1939970)	3–F5,32
84	Y	1931654	AR	4.58	BOLT, W/EXT, THRU (AC–DELCO #1931654)	3–F5,36
84–87	Y FOR MDL APPL & POA SEE STARTER MTR CHT	1931654	AR	4.58	BOLT, W/EXT, THRU (AC–DELCO #1931654)	3–F5,36
84	Y	810601	4	3.11	POLE, SHOE (AC–DELCO #810601)	3–F5,20
85–87	Y FOR MDL APPL & POA SEE STARTER MTR CHT	810601	4	3.11	POLE, SHOE (AC–DELCO #810601)	3–F5,20
85–87	Y FOR MDL APPL & POA SEE STARTER MTR CHT	1968396	4	*1.64	SCREW, POLE SHOE (AC–DELCO #1968396)	3–F5,24
84	Y	1968396	4	*1.64	SCREW, POLE SHOE) (3/8–24 X 11/16 (AC–DELCO #1968396)	3–F5,24

2.085 HOUSING, Starter Motor Drive Housing

NOTE: FOR 1984–1987 USAGE REFER TO STARTER MOTOR CHART GRP 2.041

84–87	Y FOR MDL APPL & POA SEE STARTER MTR CHT	1876881	1	19.55	HOUSING, DRIVE (AC–DELCO #1876881)	3–F5,3

2.086 DRIVE, Starter Motor Drive

NOTE: FOR 1984–1987 USAGE REFER TO STARTER MOTOR CHART GRP 2.041

84	Y	10470757	1	28.40	DRIVE (AC–DELCO #D2051) ...	3–F5,9
85–87	Y FOR MDL APPL & POA SEE STARTER MTR CHT	10470757	1	28.40	DRIVE (AC–DELCO #D2051) ...	3–F5,9

2.100 CONNECTOR – RELAY – SWITCH, Starter Motor

NOTE: FOR 1984–1987 USAGE REFER TO STARTER MOTOR CHART GRP 2.041

91	Y 5.7J (LT5)	12102491	1	28.96	CONNECTOR, RLY–START MOT (4–WAY F) (W/LEADS) (01.055) (AC–DELCO #PT282)	
90–96	Y	14100455	1	16.26	RELAY, STRTR (BLACK) (5–WAY) (09.277) (AC–DELCO #15–8426)	3–H21,31
84	Y	1114531	1	37.06	SWITCH, SOL (AC–DELCO #D984)	3–F5,17
85–87	Y FOR MDL APPL & POA SEE STARTER MTR CHT	1114531	1	37.06	SWITCH, SOL (AC–DELCO #D984)	3–F5,17

2.102 CONTACT – GROMMET, Starter Motor Switch

NOTE: FOR 1984–1987 USAGE REFER TO STARTER MOTOR CHART GRP 2.041

84	Y	1978337	1	1.78	CONTACT, W/PUSH ROD, SOL (AC–DELCO #1978337)	3–F5,14
85–87	Y FOR MDL APPL & POA SEE STARTER MTR CHT	1978337	1	1.78	CONTACT, W/PUSH ROD, SOL (AC–DELCO #1978337)	3–F5,14
84–87	Y FOR MDL APPL & POA SEE STARTER MTR CHT	1846097	1	*.57	GROMMET, FLD FRM (AC–DELCO #1846097)	3–F5,21
84	Y	1893370	1	*2.20	GROMMET, FLD FRM (W/1998400) (AC–DELCO #1893370)	

2.108 LEVER – PIN – SHAFT – SPRING, Starter Motor Drive Shift

NOTE: FOR 1984–1987 USAGE REFER TO STARTER MOTOR CHART GRP 2.041

84	Y	801433	1	2.94	LEVER, SHIFT (AC–DELCO #D4910)	3–F5,11
85–87	Y FOR MDL APPL & POA SEE STARTER MTR CHT	801433	1	2.94	LEVER, SHIFT (AC–DELCO #D4910)	3–F5,11
84	Y	809593	1	DISCON	PIN, DOWEL C.E.	

© 2000 GENERAL MOTORS SERVICE PARTS OPERATIONS–CHEVROLET–14Y

2.108 LEVER – PIN – SHAFT – SPRING, Starter Motor Drive Shift (Con't)

84–87	Y FOR MDL APPL & POA SEE STARTER MTR CHT	1985696	1	*.55	PIN, DOWEL D .E. (AC–DELCO #1985696)	3–F5,8
85–87	Y FOR MDL APPL & POA SEE STARTER MTR CHT	1987049	1	*.59	PIN, PLUNGER ATCH TO SHIFT LVR (AC–DELCO #1987049) ..	3–F5,10
84	Y	1987049	1	*.59	PIN, PLUNGER ATTACH TO SHIFT LVR (AC–DELCO #1987049) ..	3–F5,10
84	Y	10476038	1		SHAFT, SHIFT LEVER	
85–87	Y FOR MDL APPL & POA SEE STARTER MTR CHT	10476038	1		SHAFT, SHIFT LEVER	
84–87	Y FOR MDL APPL & POA SEE STARTER MTR CHT	1958679	1	1.61	SPRING, PLUNGER RETURN (AC–DELCO #1958679)	3–F5,13

2.113 PLUNGER, Starter Motor Solenoid

NOTE: FOR 1984–1987 USAGE REFER TO STARTER MOTOR CHART GRP 2.041

84	Y	10470764	1	14.06	PLUNGER (AC–DELCO #10470764)	3–F5,12
85–87	Y FOR MDL APPL & POA SEE STARTER MTR CHT	10470764	1	14.06	PLUNGER (AC–DELCO #10470764)	3–F5,12

2.170 COIL – CONNECTOR, Ignition Coil

NOTE: FOR 1985–1991 USAGE REFER TO DISTRIBUTOR CHART GRP 2.361

84	Y	1985474	1	53.31	COIL, IGN (WITH 1103538) (AC–DELCO #D531)	3–F24,3
85–91	Y FOR MDL APPL & POA INFO SEE DISTR CHT	1985474	1	53.31	COIL, IGN (AC–DELCO #D531) .	3–F24,3
90–95	Y 5.7J (LT5)	10467067	4	53.55	COIL, IGN (AC–DELCO #D545) .	3–F28,3
92–93	Y 5.7P (LT1)	1115315	1	54.57	COIL, IGN (AC–DELCO #D535) .	3–G2,5
94–95	Y 5.7P (LT1)	10477208	1	53.55	COIL, IGN (AC–DELCO #D573) .	3–G2,5
96	Y 5.7P (LT1), 5.7–5 (LT4)	10489421	1	48.72	COIL, IGN (AC–DELCO #D577) .	3–G4,5
90–91	Y 5.7–8 (L98)	8917052	AR	*4.00	CONNECTOR, COIL–IGN (1–WAY F)	
92	Y 5.7P (LT1)	12121133	1	DISCON	CONNECTOR, COIL–IGN (W/LEADS)	
96	Y	12146121	1	1.52	CONNECTOR, COIL–IGN (3–WAY F)	

2.183 BOLT – BRACKET – NUT – SCREW – SEAL – STRAP – STUD, Ignition Coil Mounting

NOTE: FOR 1985–1991 USAGE REFER TO DISTRIBUTOR CHART GRP 2.361

92–96	Y 5.7P (LT1)	11507041	2	3.95	BOLT, BRKT MTG (TO COIL) (HWH, M4X0.7X30, 9.8 PC) (08.900) ..	
90–95	Y 5.7J (LT5)	10467064	8	*.82	BOLT, IGN COIL (02.383) (AC–DELCO #10467064)	3–F28,5
91–93	Y 5.7J (LT5)	11508805	2	*.41	BOLT, IGN COIL (HFH M6X1X16 9.8 POR 14 OD 14MM THD) (08.900)	1–H20,525
92–96	Y 5.7P (LT1)	10474609	2	*2.45	BOLT, IGN COIL (AC–DELCO #10474609)	3–G2,8
96	Y 5.7–5 (LT4)	10474609	2	*2.45	BOLT, IGN COIL (AC–DELCO #10474609)	3–G2,8
92–93	Y 5.7P (LT1)	10471138	1	12.00	BRACKET, IGN COIL (LOWER) (AC–DELCO #10471138)	3–G2,6
92–96	Y 5.7P (LT1)	10471206	1	8.83	BRACKET, IGN COIL (UPPER) (AC–DELCO #10471206)	3–G2,4
94–95	Y 5.7P (LT1)	10477207	1	4.69	BRACKET, IGN COIL (LOWER) ..	3–G2,6
96	Y 5.7P (LT1), 5.7–5 (LT4)	10471138	1	12.00	BRACKET, IGN COIL (LOWER) (AC–DELCO #10471138)	3–G2,6
96	Y 5.7–5 (LT4)	10471206	1	8.83	BRACKET, IGN COIL (UPPER) (AC–DELCO #10471206)	3–G2,4

© 2000 GENERAL MOTORS SERVICE PARTS OPERATIONS–CHEVROLET–14Y

2.183 BOLT – BRACKET – NUT – SCREW – SEAL – STRAP – STUD, Ignition Coil Mounting (Con't)

92–96	Y 5.7P (LT1)	10180301	2	*.42	NUT, IGN COIL BRKT (M4X.7X4.5, 5, NO) (HEX W/CON WA, M4X.7X4.5, 5) (08.915)	
96	Y 5.7P (LT1), 5.7–5 (LT4)	10180301	2	*.42	NUT, IGN COIL BRKT (M4X.7X4.5, 5, NO) (HEX W/CON WA, M4X.7X4.5, 5) (08.915)	
84	Y	1985472	4	*.73	SCREW, W/WA, IGN COIL ATTACH (AC–DELCO #1985472)	3–F24,11
85–91	Y FOR MDL APPL & POA INFO SEE DISTR CHT	1985472	4	*.73	SCREW, W/WA, IGN COIL ATTACH (HFH, 8–18X1.050, .61 THD, .38 OD GM 6010–M STL, PC, TAP) (AC–DELCO #1985472)	3–F24,11
84	Y	1875962	1	6.39	SEAL, UNDER IGN COIL (AC–DELCO #1875962)	3–F24,4
85–91	Y FOR MDL APPL & POA INFO SEE DISTR CHT	1875962	1	6.39	SEAL, UNDER IGN COIL (AC–DELCO #1875962)	3–F24,4
92–95	Y 5.7P (LT1)	14057279	1	*1.90	STUD, IGN COIL (STUD, HEX 3/8–16X.80–3/8–16X.80 300M POR) (08.981)	1–I23,250
95–96	Y 5.7P (LT1)	12555065	1	1.55	STUD, IGN COIL (INBOARD & OUTBOARD)	1–J6,250
96	Y 5.7–5 (LT4)	12555065	1	1.55	STUD, IGN COIL (INBOARD & OUTBOARD)	1–J6,250

2.187 KEY, Ignition and Locks

NOTE: FOR 1986–1991 USAGE REFER TO TO STRG COLUMN CHART GRP 6.518

84–86	Y	1154611	AR	*1.12	KEY, DR LK (UNCODED) (OVAL HD) (GRV B)	9–G10,3
87–90	Y	1154605	AR	*1.17	KEY, DR LK (UNCODED) (OVAL HD) (GRV D)	9–G10,3
91–96	Y	1154607	2	*1.17	KEY, DR LK (OVAL HD, GRV H, B&S 320405A, CAN USE 20364745 BOOT)	9–G14,68
90	Y 5.7J (LT5), SOFT RIDE SUSP (FE1), HVY DUTY SUSP (FE7)	12505009	1	30.35	KEY, ENG PWR SW (CODED) ...	9–E8,70
91–95	Y 5.7J (LT5)	12508275	1	13.57	KEY, ENG PWR SW (CODED) ...	
86–96	Y	26019393	1	22.90	KEY, IGN LK (RESISTOR CODE #3)	3–G12,21
86–96	Y	26019395	3	22.90	KEY, IGN LK (RESISTOR CODE #5)	3–G12,21
86–96	Y	26019396	1	22.90	KEY, IGN LK (RESISTOR CODE #6)	3–G12,21
86–96	Y	26019397	3	22.90	KEY, IGN LK (RESISTOR CODE #7)	3–G12,21
86–96	Y	26019398	3	22.90	KEY, IGN LK (RESISTOR CODE #8)	3–G12,21
86–96	Y	26019399	3	22.90	KEY, IGN LK (RESISTOR CODE #9)	3–G12,21
86–96	Y	26019400	3	22.90	KEY, IGN LK (RESISTOR CODE #10)	3–G12,21
86–96	Y	26019401	3	22.90	KEY, IGN LK (RESISTOR CODE #11)	3–G12,21
86–96	Y	26019402	3	22.90	KEY, IGN LK (RESISTOR CODE #12)	3–G12,21
86–96	Y	26019403	3	22.90	KEY, IGN LK (RESISTOR CODE #13)	3–G12,21
86–96	Y	26019404	3	22.90	KEY, IGN LK (RESISTOR CODE #14)	3–G12,21
86–96	Y	26019405	3	22.90	KEY, IGN LK (RESISTOR CODE #15)	3–G12,21
91	Y	26007687	1	*1.12	KEY, IGN LK (SQUARE HD W/O RES PELLET) (GRV C)	3–G12,21
91–96	Y	26019392	1	22.90	KEY, IGN LK (RESISTOR CODE #2)	3–G10,21
91–96	Y	26019394	3	22.90	KEY, IGN LK (RESISTOR CODE #4)	3–G12,21

© 2000 GENERAL MOTORS SERVICE PARTS OPERATIONS–CHEVROLET–14Y

2.187 KEY, Ignition and Locks (Con't)

92–96	Y	26007687	1	*1.12	KEY, IGN LK (SQUARE HD W/O RES PELLET) (GRV C)	3–G12,21
84–85	Y	1154610	AR	*1.12	KEY, SQUARE HD (BLANK) (PRIM) (GRV A)	
86	Y	26007687	1	*1.12	KEY, SQUARE HEAD WITHOUT RESISTOR PELLET	3–G12,21
86–89	Y	26019391	AR	22.90	KEY, THEFT DTRNT IGN (RESISTOR CODE #1)	
86–90	Y	26019392	AR	22.90	KEY, THEFT DTRNT IGN (RESISTOR CODE #2)	3–G10,21
86–89	Y	26019394	AR	22.90	KEY, THEFT DTRNT IGN (RESISTOR CODE #4)	3–G12,21
86–89	Y	26019398	AR	22.90	KEY, THEFT DTRNT IGN (RESISTOR CODE #8)	3–G12,21
86–89	Y	26019405	AR	22.90	KEY, THEFT DTRNT IGN (RESISTOR CODE #15)	3–G12,21

2.188 BOLT – CONNECTOR – CYLINDER – RETAINER – SCREW – STUD – SWITCH, Ignition Switch

NOTE: FOR 1986–1991 USAGE REFER TO STEERING COLUMN CHART GRP 6.510

NOTE: WHEN ORDERING CYLINDER/LOCK FOR VEHICLES EQUIPPED WITH "VATS" (VEHICLE ANTI–THEFT SYSTEM), YOU MUST ALSO ORDER RESISTOR KEY (GRP 2.187). REFER TO SERVICE MANUAL FOR DETAILS.

84–86	Y	7806433	2	2.40	**BOLT**, IGN SW	7–F13,78
91–96	Y	7806433	2	2.40	**BOLT**, IGN SW (10–24X1/4) (RD WSHR HD C/R)	7–F13,78
90	Y	12126028	1	35.27	**CONNECTOR**, SW–ENG PWR (W/LEADS) (AC–DELCO #PT659)	
91	Y	12102900	1	35.27	**CONNECTOR**, SW–ENG PWR (4–WAY F) (W/LEADS) (02.535) (AC–DELCO #PT382)	
92	Y (EXC METHANOL FUEL CONVERSION (N14)	12102635	1	24.13	**CONNECTOR**, SW–ENG PWR (BLUE) (20 PIN, 4 WAY, W/LEADS) (AC–DELCO #PT322)	
92–95	Y 6–SPD M/TRANS (ML9)	12102635	1	24.13	**CONNECTOR**, SW–ENG PWR (BLUE) (20 PIN, 4 WAY, W/LEADS) (AC–DELCO #PT322)	
90–95	Y	12102603	1	20.54	**CONNECTOR**, SW–IGN & START (BLUE) (4–WAY F) (W/LEADS) (AC–DELCO #PT290)	
91–96	Y	12102602	1	21.35	**CONNECTOR**, SW–IGN & START (BLUE) (5–WAY F) (W/LEADS) (02.195) (AC–DELCO #PT289)	
84–85	Y	7830380	1	25.26	**CYLINDER**, STRG COL LK & IGN SW (CODED W/KEY) (B&S 607872) (CHROME) (AC–DELCO #D1403B)	
84–85	Y	7840574	1	29.07	**CYLINDER**, STRG COL LK & IGN SW (CODED W/KEY, B&S 609532) (BLACK) (AC–DELCO #D1414B)	
86	Y	26033390	1	48.45	**CYLINDER**, STRG COL LK & IGN SW (AC–DELCO #D1456C)	7–F13,20
89	Y M/TRANS	26033387	1	81.09	**CYLINDER**, STRG COL LK & IGN SW (AC–DELCO #D1453C)	7–F13,20
90–96	Y 6–SPD M/TRANS (ML9)	26033387	1	81.09	**CYLINDER**, STRG COL LK & IGN SW (AC–DELCO #D1453C)	7–F13,20
90–93	Y 4–SPD A/TRANS (MD8)	26033390	1	48.45	**CYLINDER**, STRG COL LK & IGN SW (AC–DELCO #D1456C)	7–F13,20
94–96	Y 4–SPD A/TRANS (M30)	26033390	1	48.45	**CYLINDER**, STRG COL LK & IGN SW (AC–DELCO #D1456C)	7–F13,20

© 2000 GENERAL MOTORS SERVICE PARTS OPERATIONS–CHEVROLET–14Y

2.188 BOLT – CONNECTOR – CYLINDER – RETAINER – SCREW – STUD – SWITCH, Ignition Switch (Con't)

90	Y 5.7J (LT5)	5713260	1	3.76	RETAINER, ENG PWR SW (17.188)	9–E8,72
84–86	Y	7829779	1	3.85	STUD, DIMMER & IGN SW MTG	7–F13,82
91–96	Y	7829779	1	3.85	STUD, IGN & START SW	7–F13,82
90	Y 5.7J (LT5)	14104646	1	30.86	SWITCH, ENG PWR (W/KEYS)	9–E8,70
91	Y 5.7J (LT5), SOFT RIDE SUSP (FE1), HVY DUTY SUSP (FE7)	12514730	1	180.54	SWITCH, ENG PWR (W/KEYS) (MUST USE 12126533 HARNESS)	9–E8,70
92–95	Y 5.7J (LT5)	12514730	1	180.54	SWITCH, ENG PWR	9–E8,70
84–85	Y T&T WHL (N37)	1990116	1	20.67	SWITCH, IGN & START (AC–DELCO #D1405B)	7–F13,80
86	Y	1990116	1	20.67	SWITCH, IGN & START (AC–DELCO #D1405B)	7–F13,80
91–96	Y	1990116	1	20.67	SWITCH, IGN & START (AC–DELCO #D1405B)	7–F13,80

2.195 ACTUATOR – ALARM – BOLT – BRACKET – CLIP – CONNECTOR – MODULE – RACK – RACK KIT – RELAY – SCREW – SHAFT – SPRING – SWITCH, Ignition Switch Warning, Lock, Headlamp, Theft Deterrent or Rear/Side Object

NOTE: FOR 1986–1991 USAGE REFER TO STEERING COLUMN CHART GRP 6.518

91–96	Y	26015728	1	11.78	ACTUATOR, IGN & START SW	7–F13,76
84–86	Y	7840683	1	DISCON	ACTUATOR, IGN SW	
84	Y	14062571	1	42.33	ALARM, ST BELT & IGN KEY & LPS	3–H18,45
85–89	Y	10037040	1	54.57	ALARM, ST BELT & IGN KEY & LPS	3–H18,45
90–93	Y	25518745	1	55.34	ALARM, ST BELT & IGN KEY & LPS (W/R/CON DR LK RCVR) (09.765)	3–I12,51
90–96	Y	25518745	1	55.34	ALARM, ST BELT & IGN KEY & LPS (09.765)	3–I12,51
91–96	Y	7841678	1	4.15	BOLT, STRG COL LK & IGN SW CYL (THD SECT AT TOP OF SCREW)	7–F13,18
90–92	Y	10098454	1	4.64	BRACKET, ST BELT & IGN KEY & LPS ALARM	3–H21,41
84–89	Y	10098473	1	DISCON	BRACKET, THEFT DTRNT MDL	
86	Y	14091266	1	DISCON	BRACKET, THEFT DTRNT MDL (USE W/KEY DECODER MDL)	
87–88	Y	14093186	1	DISCON	BRACKET, THEFT DTRNT MDL (USE W/KEY DECODER MDL)	
89	Y	14104799	1	DISCON	BRACKET, THEFT DTRNT MODULE	
84–86	Y	7830376	1	5.60	CLIP, ALARM SW RET	
90	Y	12084944	1	2.49	CONNECTOR, MDL–THEFT DTRNT (16–WAY F, W/LEADS)	
95–96	Y	12085481	1	17.56	CONNECTOR, MDL–THEFT DTRNT (BLACK) (2–WAY M) (W/LEADS) (02.535) (AC–DELCO #PT103)	
84–89	Y	16158276	1	109.10	MODULE, THEFT DETER (FORCED ENTRY ALARM)	3–G6,12
86–88	Y	1228548	1	262.14	MODULE, THEFT DTRNT (KEY DECODER, PASS KEY SYS) (THIS MDL ONLY AVAIL W/RANDOM SELECTION KEY CODES & A NEW KEY WILL HAVE TO BE CUT USING THE CODE PROVIDED W/NEW MDL)	
89	Y	16135270	1	175.44	MODULE, THEFT DTRNT (PASS KEY SYS)	3–G8,20
91–96	Y	7844651	1	27.29	RACK KIT, IGN SW (W/SECTOR)	7–F13,1
84–86	Y	7844651	1	27.29	RACK KIT, W/COL SECTOR	7–F13,1

© 2000 GENERAL MOTORS SERVICE PARTS OPERATIONS–CHEVROLET–14Y

2.195 ACTUATOR – ALARM – BOLT – BRACKET – CLIP – CONNECTOR – MODULE – RACK – RACK KIT – RELAY – SCREW – SHAFT – SPRING – SWITCH, Ignition Switch Warning, Lock, Headlamp, Theft Deterrent or Rear/Side Object (Con't)

91–96	Y	7827157	1	6.73	RACK, IGN & START SW (USED W/ TILT COL)	7–F13,44
84–86	Y T&T WHL (N37)	7827157	1	6.73	RACK, IGN SW ACTR	7–F13,44
84–85	Y	1616422	1	11.22	RELAY, THEFT DTRNT	3–G6,3
86–89	Y	14093107	1	12.85	RELAY, THEFT DTRNT (AC–DELCO #14093107)	3–G8,17
84–86	Y	7841670	1	4.15	SCREW, COL LK RET	7–F13,18
91–96	Y	7837466	1	16.93	SHAFT, IGN & START SW ACTR	7–F13,37
84–86	Y	7837466	1	16.93	SHAFT, STRG COL IGN SW SEL DRIVE	7–F13,37
91–96	Y	7804908	1	4.35	SPRING, IGN & START SW RACK	7–F13,45
84–86	Y	7804908	1	4.35	SPRING, IGN SW RACK PRELOAD	7–F13,45
91–96	Y	26022717	1	5.81	SWITCH, IGN KEY ALARM (BUZZER ONLY) (AC–DELCO #D1458C)	7–F13,16
84–86	Y	26022717	1	5.81	SWITCH, IGN KEY WARNING ALARM (AC–DELCO #D1458C)	7–F13,16
84–87	Y (EXC ELEC S/D LK (AU3)	14066515	LH	42.59	SWITCH, THEFT DTRNT DR LK	3–G6,6
84–87	Y (EXC ELEC S/D LK (AU3)	14066516	RH	DISCON	SWITCH, THEFT DTRNT DR LK	
	*EXPORT**********EXPORT**********EXPORT**********EXPORT**********EXPORT*					
93–96	Y EUROPEAN PROVISIONS (VD1) (EXPORT) VE1 (EXPORT)	10098454	1	4.64	BRACKET, ST BELT & IGN KEY & LPS ALARM	3–H21,41

2.239 WIRE KIT, Spark or Glow Plug Ignition

NOTE: SEE GROUP 2.270 FOR TUNE–UP PARTS CHART

84	Y	12043753	1	58.19	WIRE KIT, SPLG (AC–DELCO #618K)	
85–88	Y	12073939	1	53.71	WIRE KIT, SPLG (AC–DELCO #618W)	1–H2,15
89–91	Y 5.7–8 (L98)	12073939	1	53.71	WIRE KIT, SPLG (AC–DELCO #618W)	1–H2,15
90–95	Y 5.7J (LT5)	12073977	1	61.45	WIRE KIT, SPLG (AC–DELCO #628D)	1–H20,523
92–95	Y 5.7P (LT1)	12074093	1	77.52	WIRE KIT, SPLG (AC–DELCO #708W)	1–I23,236
96	Y 5.7P (LT1), 4–SPD A/TRANS (M30)	12173585	1	180.15	WIRE KIT, SPLG (AC–DELCO #748C)	1–I23,236
96	Y 5.7–5 (LT4), 6–SPD M/TRANS (ML9)	12173591	1	180.15	WIRE KIT, SPLG (W/COIL WIRE) (AC–DELCO #748D)	1–J6,230

2.240 HARNESS – WIRE, Spark Plug or Coil

NOTE: FOR 1984–1991 USAGE REFER TO SPARK PLUG WIRE CHART GRP 2.240

93–95	Y	12048976	1	17.50	HARNESS, IGN COIL WRG (W/O CONDUIT) (PRIMARY)	
96	Y 5.7P (LT1), 4–SPD A/TRANS (M30)	12173589	1	16.70	HARNESS, IGN COIL WRG (AC–DELCO #347E)	
96	Y 5.7–5 (LT4), 6–SPD M/TRANS (ML9)	12192000	1	16.70	HARNESS, IGN COIL WRG (AC–DELCO #347R)	1–J6,247
92–95	Y 5.7P (LT1)	12173444	1	16.70	WIRE, IGN COIL (FROM DIST TO COIL) (AC–DELCO #344S)	1–I23,247
84	Y	12036913	2	13.23	WIRE, SPARK PLUG #1, 4, 36"LONG (AC–DELCO #312S)	
84	Y	12036914	2	10.34	WIRE, SPARK PLUG #2 & 7, 40"LONG (AC–DELCO #312T)	

© 2000 GENERAL MOTORS SERVICE PARTS OPERATIONS–CHEVROLET–14Y

2.240 HARNESS – WIRE, Spark Plug or Coil (Con't)

85–86	Y (5.7–8)	12036914	2	10.34	WIRE, SPARK PLUG #2, 3, 40"LONG, STYLE S (AC–DELCO #312T)	
87–88	Y (5.7–8)	12036914	1	10.34	WIRE, SPARK PLUG #3, 40"LONG, STYLE S (AC–DELCO #312T)	
84	Y	12036915	1	16.46	WIRE, SPARK PLUG #3, 44"LONG (AC–DELCO #312U)	
85–91	Y 5.7–8 (L98)	12002172	1	12.59	WIRE, SPARK PLUG #4, 32"LONG, STYLE S (AC–DELCO #310W)	
84	Y	12036910	2	9.51	WIRE, SPARK PLUG #5 & 8, 26"LONG (AC–DELCO #312M)	
84	Y	12036938	1	11.23	WIRE, SPARK PLUG #6, 26"LONG (AC–DELCO #314A)	
85–86	Y (5.7–8)	12036910	2	9.51	WIRE, SPLG (WIRE, SPARK PLUG #5, 8, 26"LONG, STYLE S) (AC–DELCO #312M)	
87–88	Y	12036910	3	9.51	WIRE, SPLG (WIRE, SPARK PLUG #5, 7, 8, 26"LONG, STYLE S) (AC–DELCO #312M)	
89–91	Y 5.7–8 (L98)	12036910	2	9.51	WIRE, SPLG (#5, 8, 26"LONG, STYLE S) (AC–DELCO #312M)	
89–91	Y 5.7–8 (L98)	12036914	1	10.34	WIRE, SPLG (#2, 3, 40"LONG, STYLE S) (AC–DELCO #312T)	
85–86	Y (5.7–8)	12036915	1	16.46	WIRE, SPLG #1 CYL (44"LONG, STYLE S) (AC–DELCO #312U)	
87–88	Y	12036915	2	16.46	WIRE, SPLG #1 CYL (#1, 2, 44"LONG, STYLE S) (AC–DELCO #312U)	
89–91	Y 5.7–8 (L98)	12036915	1	16.46	WIRE, SPLG #1 CYL (44"LONG, STYLE S) (AC–DELCO #312U)	
90–95	Y 5.7J (LT5)	12192020	1	13.03	WIRE, SPLG #1 CYL (RED) (36"LONG) (AC–DELCO #336B)	
92–95	Y 5.7P (LT1)	12173442	1	21.81	WIRE, SPLG #1 CYL (AC–DELCO #344N)	
96	Y 5.7P (LT1), 4–SPD A/TRANS (M30)	12173586	1	21.81	WIRE, SPLG #1 CYL (26"LONG) (STYLE 26V, 7MM LEAD) (AC–DELCO #347B)	
96	Y 5.7P (LT1), 6–SPD M/TRANS (ML9)	12173594	1	21.81	WIRE, SPLG #1 CYL (AC–DELCO #347G)	1–J6,236
96	Y 5.7–5 (LT4), 6–SPD M/TRANS (ML9)	12173594	1	21.81	WIRE, SPLG #1 CYL (AC–DELCO #347G)	1–J6,236
90–95	Y 5.7J (LT5)	12192021	1	13.34	WIRE, SPLG #2 CYL (&#4) (32"LONG) (RED) (AC–DELCO #336C)	
92–95	Y 5.7P (LT1)	12096460	1	16.40	WIRE, SPLG #2 CYL (24"LONG) (LEAD STYLE 24 VV) (AC–DELCO #340J)	
96	Y 5.7P (LT1), 4–SPD A/TRANS (M30)	12173574	1	16.40	WIRE, SPLG #2 CYL (24"LONG) (STYLE 24VV, 7MM LEAD) (AC–DELCO #346N)	
96	Y 5.7–5 (LT4)	12173595	1	16.40	WIRE, SPLG #2 CYL (AC–DELCO #347H)	1–J6,236
90–95	Y 5.7J (LT5)	12192022	1	12.18	WIRE, SPLG #3 CYL (RED) (28"LONG) (AC–DELCO #336D)	
92–95	Y 5.7P (LT1)	12173442	1	21.81	WIRE, SPLG #3 CYL (AC–DELCO #344N)	
96	Y 5.7P (LT1), 4–SPD A/TRANS (M30)	12173574	1	16.40	WIRE, SPLG #3 CYL (24"LONG) (STYLE 24VV, 7MM LEAD) (AC–DELCO #346N)	
96	Y 5.7–5 (LT4), 6–SPD M/TRANS (ML9)	12173595	1	16.40	WIRE, SPLG #3 CYL (AC–DELCO #347H)	1–J6,236

© 2000 GENERAL MOTORS SERVICE PARTS OPERATIONS–CHEVROLET–14Y

2.240 HARNESS – WIRE, Spark Plug or Coil (Con't)

92–95	Y 5.7P (LT1)	12096459	1	16.40	WIRE, SPLG #4 CYL (22"LONG) (LEAD STYLE 22–VV) (AC–DELCO #340H)	
96	Y 5.7P (LT1), 4–SPD A/TRANS (M30)	12173580	1	16.40	WIRE, SPLG #4 CYL (22"LONG) (STYLE 22VV, 7MM LEAD) (AC–DELCO #346V)	
96	Y 5.7–5 (LT4), 6–SPD M/TRANS (ML9)	12173596	1	16.40	WIRE, SPLG #4 CYL (AC–DELCO #347J)	1–J6,236
92–95	Y 5.7P (LT1)	12096465	1	17.04	WIRE, SPLG #5 CYL (32" LONG) (LEAD STYLE 32VV, 7MM DIA) (AC–DELCO #340N)	
96	Y 5.7P (LT1), 4–SPD A/TRANS (M30)	12173587	1	21.81	WIRE, SPLG #5 CYL (32" LONG) (AC–DELCO #347C)	
96	Y 5.7–5 (LT4), 6–SPD M/TRANS (ML9)	12173597	1	17.04	WIRE, SPLG #5 CYL (AC–DELCO #347K)	1–J6,236
85–91	Y 5.7–8 (L98)	12002143	1	11.11	WIRE, SPLG #6 CYL (28"LONG, STYLE X) (AC–DELCO #308T)	
90–95	Y 5.7J (LT5)	12192023	1	15.44	WIRE, SPLG #6 CYL (&#5) (RED) (24" LONG) (AC–DELCO #336E)	
92–95	Y 5.7P (LT1)	12173443	1	20.57	WIRE, SPLG #6 CYL (AC–DELCO #344R)	
96	Y 5.7P (LT1), 4–SPD A/TRANS (M30)	12173588	1	20.57	WIRE, SPLG #6 CYL (36" LONG) (STYLE 36YY, 7MM LEAD) (AC–DELCO #347D)	
96	Y 5.7–5 (LT4), 6–SPD M/TRANS (ML9)	12173599	1	20.57	WIRE, SPLG #6 CYL (AC–DELCO #347N)	1–J6,236
85–86	Y (5.7–8)	12073993	1	15.36	WIRE, SPLG #7 CYL (WIRE, SPARK PLUG #7, 24"LONG, STYLE S) (AC–DELCO #319C)	
89–91	Y 5.7–8	12073993	1	15.36	WIRE, SPLG #7 CYL (24"LONG, STYLE S) (AC–DELCO #319C)	
90–95	Y 5.7J (LT5)	12192024	1	16.70	WIRE, SPLG #7 CYL (RED) (20"LONG) (AC–DELCO #336F)	
92–95	Y 5.7P (LT1)	12096465	1	17.04	WIRE, SPLG #7 CYL (32" LONG) (LEAD STYLE 32VV, 7MM DIA) (AC–DELCO #340N)	
96	Y 5.7P (LT1), 4–SPD A/TRANS (M30)	12173587	1	21.81	WIRE, SPLG #7 CYL (32" LONG) (AC–DELCO #347C)	
96	Y 5.7–5 (LT4), 6–SPD M/TRANS (ML9)	12173598	1	16.40	WIRE, SPLG #7 CYL (AC–DELCO #347M)	1–J6,236
90–95	Y 5.7J (LT5)	12192025	1	15.44	WIRE, SPLG #8 CYL (RED) (26" LONG) (AC–DELCO #336G) ..	
92–95	Y 5.7P (LT1)	12173443	1	20.57	WIRE, SPLG #8 CYL (AC–DELCO #344R)	
96	Y 5.7P (LT1), 4–SPD A/TRANS (M30), 6–SPD M/TRANS (MM6)	12173587	1	21.81	WIRE, SPLG #8 CYL (32" LONG) (AC–DELCO #347C)	
96	Y 5.7P (LT1), 4–SPD A/TRANS (M30)	12173588	1	20.57	WIRE, SPLG #8 CYL (36" LONG) (STYLE 36YY, 7MM LEAD) (AC–DELCO #347D)	
96	Y 5.7–5 (LT4), 6–SPD M/TRANS (ML9)	12173599	1	20.57	WIRE, SPLG #8 CYL (AC–DELCO #347N)	1–J6,236

1984 SPARK PLUG WIRES

	PLUG NO.1	PLUG NO.2	PLUG NO.3	PLUG NO.4	PLUG NO.5	PLUG NO.6	PLUG NO.7	PLUG NO.8
Y	12036913	12036914	12036915	12036913	12036910	12036930	12036914	12036910

1985 SPARK PLUG WIRES

	PLUG NO.1	PLUG NO.2	PLUG NO.3	PLUG NO.4	PLUG NO.5	PLUG NO.6	PLUG NO.7	PLUG NO.8
Y(5.7-8)	12002175	12002174	12002174	12002172	12002170	12002143	12002083	12002170

1986 SPARK PLUG WIRES

	PLUG NO.1	PLUG NO.2	PLUG NO.3	PLUG NO.4	PLUG NO.5	PLUG NO.6	PLUG NO.7	PLUG NO.8
Y(5.7-8)	12002175	12002174	12002174	12002172	12002170	12002143	12002083	12002170

1987 SPARK PLUG WIRES

	PLUG NO.1	PLUG NO.2	PLUG NO.3	PLUG NO.4	PLUG NO.5	PLUG NO.6	PLUG NO.7	PLUG NO.8
Y(5.7-8)	12002175	12002175	12002174	12002172	12002170	12002143	12002170	12002170

1988 SPARK PLUG WIRES

	PLUG NO.1	PLUG NO.2	PLUG NO.3	PLUG NO.4	PLUG NO.5	PLUG NO.6	PLUG NO.7	PLUG NO.8
Y(5.7-8)	12002175	12002175	12002174	12002172	12002170	12002143	12002170	12002170

1989 SPARK PLUG WIRES

	PLUG NO.1	PLUG NO.2	PLUG NO.3	PLUG NO.4	PLUG NO.5	PLUG NO.6	PLUG NO.7	PLUG NO.8
Y(5.7-8)	12002175	12002174	12002174	12002172	12002170	12002143	12002083	12002170

1990 SPARK PLUG WIRES

	PLUG NO.1	PLUG NO.2	PLUG NO.3	PLUG NO.4	PLUG NO.5	PLUG NO.6	PLUG NO.7	PLUG NO.8
Y(5.7-8)	12002175	12002174	12002174	12002172	12002170	12002143	12002083	12002170

1991 SPARK PLUG WIRES

	PLUG NO.1	PLUG NO.2	PLUG NO.3	PLUG NO.4	PLUG NO.5	PLUG NO.6	PLUG NO.7	PLUG NO.8
Y(5.7-8)	12002175	12002174	12002174	12002172	12002170	12002143	12002083	12002170

© 2000 GENERAL MOTORS SERVICE PARTS OPERATIONS–CHEVROLET–14Y

2.251 BOLT – CLIP – NUT – RETAINER – SHIELD – STUD – SUPPORT – WASHER, Spark Plug Ignition Wire

92–93	Y 5.7P (LT1)	9439930	8	*.58	BOLT, SPLG WIRE SUPT (08.900)	1–J6,223
92–93	Y 5.7P (LT1)	11516186	2	*.70	BOLT, SPLG WIRE SUPT (M8X1.25X16 17.6.9.8PZOR) (08.900)	1–I23,241
93–96	Y 5.7P (LT1)	9439930	1	*.58	BOLT, SPLG WIRE SUPT (08.900)	1–J6,223
96	Y 5.7–5 (LT4)	9439930	1	*.58	BOLT, SPLG WIRE SUPT (08.900)	1–J6,223
85–88	Y	8917256	1	7.10	CLIP, ACCEL CONT CBL	1–H2,16
89–90	Y 5.7–8 (L98)	8917256	1	7.10	CLIP, ACCEL CONT CBL	1–H2,16
89–91	Y 5.7–8 (L98)	8917256	1	7.10	CLIP, SPLG WIRE (4 LOOM)	1–H2,16
90–95	Y 5.7J (LT5)	10135818	2	14.54	CLIP, SPLG WIRE (TO INJ HSG)	
85–88	Y	8917256	1	7.10	CLIP, SPLG WIRE 4 LOOM	1–H2,16
90–94	Y 5.7J (LT5)	11516075	1	*.16	NUT, ENG HARN (M6X1 THD W/NYLON INSERT) (08.917)	
85–88	Y	12041472	1	3.26	RETAINER, SPLG WIRE (5–WIRE 8MM CBL)	1–H2,17
89–91	Y 5.7–8 (L98)	12041472	1	3.26	RETAINER, SPLG WIRE (5–WIRE 8MM CBL)	1–H2,17
89–91	Y 5.7–8 (L98)	12043550	6	3.26	RETAINER, SPLG WIRE (4–WIRE)	1–H2,109
92–95	Y 5.7P (LT1)	12043158	AR	1.84	RETAINER, SPLG WIRE (W/CVR, 2–WIRE)	1–I23,233
92–96	Y 5.7P (LT1)	12059510	1	.88	RETAINER, SPLG WIRE (4–WIRE) (CLIP, LWR)	1–J6,235
92–96	Y 5.7P (LT1)	12059514	AR	3.85	RETAINER, SPLG WIRE (UPR) (4–WIRE, BRKT MT, TWO LK PIN TOP)	1–I23,235
92–93	Y 5.7P (LT1)	12073948	AR	5.88	RETAINER, SPLG WIRE (4/WIRE) (AC–DELCO #8073)	1–J6,234
96	Y 5.7P (LT1), 4–SPD A/TRANS (M30)	12047523	2	.70	RETAINER, SPLG WIRE (RETAINS 3–7MM LEADS, BRKT MT, HINGE STYLE)	1–J6,262
96	Y 5.7P (LT1)	12059510	AR	.88	RETAINER, SPLG WIRE (4–WIRE) (CLIP, LWR)	1–J6,235
96	Y 5.7P (LT1)	12065767	1	.66	RETAINER, SPLG WIRE (RETAINS 4–7MM LEADS, CROSS SHAPED)	
96	Y 5.7P (LT1), 4–SPD A/TRANS (M30)	12073948	RH	5.88	RETAINER, SPLG WIRE (AC–DELCO #8073)	1–J6,234
96	Y 5.7P (LT1)	12132229	1	*.88	RETAINER, SPLG WIRE (RETAINS 2–7MM LEADS, HINGE LOCKING CVR, NARROW BLADE MT)	1–J6,263
84–86	Y	12004716	1	*11.41	RETAINER, SPLG WIRE TO DIST (4 TO 8 WIRES) (AC–DELCO #12004716)	
84–88	Y	12043158	7	1.84	RETAINER, W/COVER, SPLG WIRE (2–WIRE)	1–I23,233
84–88	Y	12043550	6	3.26	RETAINER, W/COVER, SPLG WIRE (4–WIRE)	1–H2,109
86	Y	14091677	2	DISCON	SHIELD, SPLG WIRE	
84	Y	52350585	1	1.50	STUD, SPLG WIRE SUPT (3/8–16X1.52 LONG) (02.277)	1–G11,42
84–85	Y	14055123	LH	1.22	SUPPORT, SPLG WIRE (TO VLV CVR)	1–G14,15
84–85	Y	14055124	RH	1.22	SUPPORT, SPLG WIRE (TO VLV CVR)	
84–86	Y	14055125	LH	DISCON	SUPPORT, SPLG WIRE (TO ENG LH OTR)	
84–86	Y	14055126	RH	DISCON	SUPPORT, SPLG WIRE (TO ENG RH OTR)	

© 2000 GENERAL MOTORS SERVICE PARTS OPERATIONS–CHEVROLET–14Y

2.251 BOLT – CLIP – NUT – RETAINER – SHIELD – STUD – SUPPORT – WASHER, Spark Plug Ignition Wire (Con't)

88	Y CAST IRON HD (KB2)	14101139	1	DISCON	SUPPORT, SPLG WIRE	
89–91	Y 5.7–8 (L98)	14087574	RH	3.57	SUPPORT, SPLG WIRE (CYL HD SI RR, USE W/ALUM HDS)	1–H2,61
89–91	Y 5.7–8 (L98)	14087575	RH	1.22	SUPPORT, SPLG WIRE (CYL HD SI FRT, USE W/ALUM HDS)	1–H2,20
89–91	Y 5.7–8 (L98)	14087576	2	1.22	SUPPORT, SPLG WIRE (LH CYL HD SI, USE W/ALUM HDS)	1–H2,20
89–91	Y 5.7–8 (L98)	14087578	RH	2.19	SUPPORT, SPLG WIRE (CYL HD R/END, STRAIGHT)	1–H2,70
92–96	Y 5.7P (LT1)	10096185	RH	3.57	SUPPORT, SPLG WIRE	1–J6,254
92–96	Y 5.7P (LT1)	10096186	LH	3.57	SUPPORT, SPLG WIRE	1–J6,222
92–96	Y 5.7P (LT1)	10137631	1	3.57	SUPPORT, SPLG WIRE	1–J6,240
96	Y 5.7–5 (LT4)	10096185	RH	3.57	SUPPORT, SPLG WIRE	1–J6,254
96	Y 5.7–5 (LT4)	10096186	LH	3.57	SUPPORT, SPLG WIRE	1–J6,222
96	Y 5.7–5 (LT4)	10137631	1	3.57	SUPPORT, SPLG WIRE	1–J6,240
86–88	Y	14087578	RH	2.19	SUPPORT, SPLG WIRE CYL HD R/END (STRAIGHT)	1–H2,70
86–88	Y	14087575	RH	1.22	SUPPORT, SPLG WIRE CYL HD SI FRT (USE W/ALUM HDS)	1–H2,20
86–88	Y	14087574	RH	3.57	SUPPORT, SPLG WIRE CYL HD SI RR (USE W/ALUM HDS)	1–H2,61
86–88	Y	14087576	2	1.22	SUPPORT, SPLG WIRE LH CYL HD SI (USE W/ALUM HDS)	1–H2,20
90–95	Y 5.7J (LT5)	11501869	2	.25	WASHER, ENG WRG HARN GUARD (M8X15X1.52 ZC) (M8X15X1.52) (ZC) (08,932) (AC–DELCO #11501869)	

2.270 SPARK PLUG, Engine Tune–up (Spark, Glow)

NOTE: SEE GROUP 2.270 FOR TUNE–UP PARTS CHARTS

84	Y 5.7–8 (LF3)	5613957	AR	N.L.	SPARK PLUG, (AC–DELCO #R45TS) (STANDARD PLUG) .	1–G11,55
84	Y 5.7–8 (L83)	5614243	8	N.L.	SPARK PLUG, (AC–DELCO #41–905) (PLATINUM PLUG) .	
85	Y 5.7–8 (L98)	5613325	8	N.L.	SPARK PLUG, (AC–DELCO #R43TS) (STANDARD PLUG) .	1–G14,55
86	Y 5.7–8 (L98), (CAST IRON HEADS)	5613325	8	N.L.	SPARK PLUG, (AC–DELCO #R43TS) (STANDARD PLUG) .	1–G14,55
86–87	Y 5.7–8 (L98), (ALUMINUM HEADS)	5613796	8	N.L.	SPARK PLUG, (AC–DELCO #FR3LS) (STANDARD PLUG) .	1–G14,55
88–91	Y 5.7–8 (L98), (ALUMINUM HEADS)	5614106	8	N.L.	SPARK PLUG, (AC–DELCO #FR5LS) (STANDARD PLUG) .	1–H2,35
90–92	Y 5.7J (LT5)	5614167	8	N.L.	SPARK PLUG, (AC–DELCO #FR2LS) (STANDARD PLUG) .	1–H10,202
92	Y 5.7P (LT1)	5614238	8	N.L.	SPARK PLUG, (41–904) (AC–DELCO #41–904) (PLATINUM PLUG)	1–I2,220
92–95	Y 5.7J (LT5)	5614355	8	N.L.	SPARK PLUG, (AC–DELCO #41–913) (PLATINUM PLUG) .	1–H10,202
93–95	Y 5.7P (LT1)	5614244	8	N.L.	SPARK PLUG, (41–906) (AC–DELCO #41–906) (PLATINUM PLUG)	1–I23,220
96	Y 5.7P (LT1), 4–SPD A/TRANS (M30)	25166821	8	N.L.	SPARK PLUG, (41–943) (AC–DELCO #41–943) (PLATINUM PLUG)	1–J6,220
96	Y 5.7–5 (LT4), 6–SPD M/TRANS (ML9)	25166821	8	N.L.	SPARK PLUG, (41–943) (AC–DELCO #41–943) (PLATINUM PLUG)	1–J6,220

© 2000 GENERAL MOTORS SERVICE PARTS OPERATIONS–CHEVROLET–14Y

TUNE-UP CHARTS

NAME	GROUP	1984 L83 (350-8) GM SPO	1984 L83 (350-8) AC DELCO	1985 L98 (5.7-8) GM SPO	1985 L98 (5.7-8) AC DELCO
SPARKPLUG	2.270	05613957	R45TS	05613325	R43TS
ELEMENT	3.410	25042383	A862C	25042562	A917C
FILTER,AIR BTHR	3.410	25042206	FB93	N/A	N/A
FILTER,FUEL	3.890	25055066	GF482	25055052	GF481
VALVE,PCV	1.745	25040020	CV853C	06487779	CV774C
WIRE KIT	2.239	12043753	618K	12073939	618W
FILTER,OIL	1.836	06438261	PF25	06438261	PF25
CAP	2.367	01974408	D336	01977046	D338
ROTOR	2.382	10498150	D448	10498150	D448

NAME	GROUP	1986 L98 (5.7-8) GM SPO	1986 L98 (5.7-8) AC DELCO
SPARKPLUG	2.270	A-05613325	R43TS
SPARKPLUG	2.270	B-05613796	FR3LS
FILTER,AIR	3.410	25042562	A917C
FILTER,AIR BTHR	3.410	N/A	N/A
FILTER,FUEL	3.890	25055052	GF481
VALVE,PCV	1.745	06487779	CV774C
WIRE KIT	2.239	12073939	618W
FILTER,OIL	1.836	06438261	PF25
CAP	2.367	01977046	D338
ROTOR	2.382	10498150	D448

NAME	GROUP	1987 L98 (5.7-8) GM SPO	1987 L98 (5.7-8) AC DELCO	1988 L98 (5.7-8) GM SPO	1988 L98 (5.7-8) AC DELCO
SPARKPLUG	2.270	05614106	FR5LS	05614106	FR5LS
FILTER,AIR	3.410	25042562	A917C	25042562	A917C
FILTER,AIR BTHR	3.410	N/A	N/A	N/A	N/A
FILTER,FUEL	3.890	25055052	GF481	25055052	GF481
VALVE,PCV	1.745	06487779	CV774C	06487779	CV774C
WIRE KIT	2.239	12073939	618W	12073939	618W
FILTER,OIL	1.836	06438261	PF25	06438261	PF25
CAP	2.367	01977046	D338	01977046	D338
ROTOR	2.382	10498150	D448	10498150	D448

© 2000 GENERAL MOTORS SERVICE PARTS OPERATIONS - CHEVROLET - 14Y

MICROFICHE INDEX

GROUP 2.000

FICHE 3 OF 11

GROUP	DESCRIPTION	STARTING GRID LOCATION PARTS	ILLUSTRATIONS
–	GENERAL INFORMATION	1–A2	1–G2
–	ALPHABETICAL INDEX	1–B13	N.A.
2.000	CHASSIS WIRING – LAMPS	3–A2	3–F2
–	OUT OF FICHE CALLS	N.A.	3–M20

3–B1

NAME	GROUP	1989 L98 (5.7-3) GM SPO	AC DELCO	1990 L98 (5.7-8) GM SPO	AC DELCO
SPARKPLUG	2.270	05614106	FR5LS	05614106	FR5LS
FILTER,AIR	3.410	25042562	A917C	N/A	N/A
FILTER,AIR BTHR	3.410	N/A	N/A	25096933	A10973
FILTER,FUEL	3.890	25055052	GF481	25055052	GF481
VALVE,PCV	1.745	08995284	CV789C	08995284	CV789C
WIRE KIT	2.239	12073939	618W	12073939	618W
FILTER,OIL	1.836	06438261	PF25	06438261	PF25
CAP	2.367	01977046	D338	01977046	D338
ROTOR	2.382	10498150	D448	10498150	D448

A- = FOR CAST IRON HD
B- = FOR ALUM. HD
N/A = NOT AVAILABLE

© 2000 GENERAL MOTORS SERVICE PARTS OPERATIONS-CHEVROLET-14Y

TUNE-UP CHARTS (CON'T)

NAME	GROUP	1991 L98 (5.7-8) GM SPO	AC DELCO
SPARKPLUG	2.270	05614106	FR5LS
FILTER,AIR	3.410	N/A	N/A
FILTER,AIR BTHR	3.410	25096933	A1097C
FILTER,FUEL	3.890	25055052	GF481
VALVE,PCV	1.745	08995284	CV789C
WIRE KIT	2.239	12073939	618W
FILTER,OIL	1.836	06438261	PF25
CAP	2.367	01977046	D338
ROTOR	2.382	10498150	D448

NAME	GROUP	1991 LT5 (5.7J) GM SPO	AC DELCO	1992 LT5 (5.7J) GM SPO	AC DELCO
SPARKPLUG	2.270	05614167	FR2LS	05614167	FR2LS
FILTER,AIR	3.410	25096933	A1097C	25096933	A1097C
FILTER,AIR BTHR	3.410	N/A	N/A	N/A	N/A
FILTER,FUEL	3.890	25055052	GF481	25055052	GF481
VALVE,PCV	1.745	06487532	CV769C	06487532	CV769C
WIRE KIT	2.239	12073977	628D	12073977	628B
FILTER,OIL	1.836	25014155	PF970C	25014155	PF970C
CAP	2.367	N/A	N/A	N/A	N/A
ROTOR	2.382	N/A	N/A	N/A	N/A

NAME	GROUP	1993-95 LT5 (5.7J) GM SPO	AC DELCO
SPARKPLUG	2.270	05614355	41-913
FILTER,AIR	3.410	25096933	A1097C
FILTER,AIR BTHR	3.410	N/A	N/A
FILTER,FUEL	3.890	A-25055052	GF481
VALVE,PCV	1.745	25042723	CV746CB
WIRE KIT	2.239	12073977	628B
FILTER,OIL	1.836	25014155	PF970C
CAP	2.367	N/A	N/A
ROTOR	2.382	N/A	N/A

NAME	GROUP	1992 LT1 (5.7P) GM SPO	1992 LT1 (5.7P) AC DELCO	1993-95 LT1 (5.7P) GM SPO	1993-95 LT1 (5.7P) AC DELCO
SPARKPLUG	2.270	05614238	41.904	05614244	41-906
FILTER,AIR	3.410	25096933	A1097C	25096933	A1097C
FILTER,AIR BTHR	3.410	NA	NA	NA	N/A
FILTER,FUEL	3.890	25055052	GF481	A-25055052	GF481
VALVE,PCV	1.745	25095452	CV895C	25095452	CV895C
WIRE KIT	2.239	12074093	708W	12074093	708W
FILTER,OIL	1.836	25010908	PF51	25171377	PF52
CAP	2.377	N/A	N/A	N/A	N/A
ROTOR	2.332	N/A	N/A	N/A	N/A

N/A = NOT AVAILABLE
A = THREADED FITTINGS ON BOTH ENDS

TUNE-UP CHARTS (CON'T)

NAME	GROUP	1996 LT1 (5.7P)		1996 LT4 (5.7-5)	
		GM SPO	AC DELCO	GM SPO	AC DELCO
SPARKPLUG	2.270	25166821	41-943	25166821	41-943
FILTER,AIR	3.410	25096933	A1097C	25096933	A1097C
FILTER,AIR BTHR	3.410	NA	NA	NA	NA
FILTER,FUEL	3.890	25055052	GF481	25055052	GF481
VALVE,PCV	1.745	25095452	CV895C	25095452	CV895C
WIRE KIT	2.239	N/A	N/A	N/A	N/A
FILTER,OIL	1.836	25160560	PF52	25160560	PF52
CAP	2.367	N/A	N/A	N/A	N/A
ROTOR	2.382	N/A	N/A	N/A	N/A

N/A = NOT AVAILABLE
A = THREADED FITTINGS ON BOTH ENDS

© 2000 GENERAL MOTORS SERVICE PARTS OPERATIONS – CHEVROLET – 14Y

2.274 FAN – PULLEY, Generator Drive

NOTE: FOR 1984–1991 USAGE REFER TO GENERATOR CHART GRP 2.275

84–85	Y FOR MOD APPL & POA INFO SEE GEN CHT	1978026	1	19.07	FAN, GEN (AC–DELCO #1978026)	3–F11,23
86–91	Y FOR MOD APPL & POA INFO SEE GEN CHT	1989581	1	4.69	FAN, GEN (AC–DELCO #1989581)	
89–91	Y FOR MOD APPL & POA INFO SEE GEN CHT	1978026	1	19.07	FAN, GEN (AC–DELCO #1978026)	3–F11,23
92–93	Y 5.7P (LT1), 124 AMP (KW2)	1978026	1	19.07	FAN, GEN (AC–DELCO #1978026)	3–F11,23
92–95	Y 5.7J (LT5)	1978026	1	19.07	FAN, GEN (AC–DELCO #1978026)	3–F11,23
93–96	Y 5.7P (LT1), 140 AMP (KG9)	10471962	1	20.40	FAN, GEN (AC–DELCO #10471962)	3–F11,23
96	Y 5.7–5 (LT4), 140 AMP (KG9)	10471962	1	20.40	FAN, GEN (AC–DELCO #10471962)	3–F11,23
84	Y 97 AMP	1985964	1	22.54	PULLEY, GEN (AC–DELCO #1985964)	3–F11,25
84	Y	1989104	1	18.05	PULLEY, GEN (AC–DELCO #1989104)	
85	Y FOR MOD APPL & POA INFO SEE GEN CHT	1985964	1	22.54	PULLEY, GEN (AC–DELCO #1985964)	3–F11,25
85	Y FOR MOD APPL & POA SEE GENERATOR CHT	1989104	1	18.05	PULLEY, GEN (AC–DELCO #1989104)	
86–87	Y FOR MOD APPL & POA INFO SEE GEN CHT	10496580	1	17.81	PULLEY, GEN (AC–DELCO #10496580)	
88–91	Y FOR MOD APPL & POA INFO SEE GEN CHT	1985964	1	22.54	PULLEY, GEN (AC–DELCO #1985964)	3–F11,25
89–91	Y FOR MOD APPL & POA SEE GENERATOR CHT	10498550	1	18.07	PULLEY, GEN (AC–DELCO #10498550)	3–F11,25
92–96	Y 5.7P (LT1)	1985964	1	22.54	PULLEY, GEN (AC–DELCO #1985964)	3–F11,25
92–95	Y 5.7J (LT5)	10498550	1	18.97	PULLEY, GEN (AC–DELCO #10498550)	3–F11,25
96	Y 5.7–5 (LT4)	1985964	1	22.54	PULLEY, GEN (AC–DELCO #1985964)	3–F11,25

2.275 GENERATOR, Engine Electrical

NOTE: FOR 1984–1991 USAGE REFER TO GENERATOR CHART GRP 2.275

86	Y 105 AMP	10497122	1	167.90	GENERATOR, (REMAN) (AC–DELCO #321–286)	
87	Y 105 AMP (K68)	10463007	1	167.90	GENERATOR, (REMAN) (AC–DELCO #321–306)	
88–90	Y 5.7–8 (L98), 105 AMP (K68)	10463097	1	169.92	GENERATOR, (REMAN) (AC–DELCO #321–388)	
90	Y 5.7J (LT5), SOFT RIDE SUSP (FE1), HVY DUTY SUSP (FE7)	10463081	1	220.19	GENERATOR, (REMAN) (AC–DELCO #321–372)	3–F18,1
90	Y 5.7J (LT5), A/C MAN CONT (C60), A/C AUTO ELEC CONT (C68), SOFT RIDE SUSP (FE1), HVY DUTY SUSP (FE7)	10463257	1	220.19	GENERATOR, (REMAN) (AC–DELCO #321–567)	3–F11,1
91	Y 5.7–8 (L98), 105 AMP (K68)	10463097	1	169.92	GENERATOR, (REMAN) (AC–DELCO #321–388)	
91	Y 5.7J (LT5)	10463257	1	220.19	GENERATOR, (REMAN) (AC–DELCO #321–567)	3–F11,1
92–93	Y 5.7P (LT1), 124 AMP (KW2)	10463242	1	211.14	GENERATOR, (REMAN) (PROD #1102634) (AC–DELCO #321–552)	3–F11,1
92–95	Y 5.7J (LT5)	10463257	1	220.19	GENERATOR, (REMAN) (PROD 10479904) (AC–DELCO #321–567)	3–F11,1

© 2000 GENERAL MOTORS SERVICE PARTS OPERATIONS–CHEVROLET–14Y

2.275 GENERATOR, Engine Electrical (Con't)

93–94	Y 5.7P (LT1), 140 AMP (KG9)	10463679	1	244.32	GENERATOR, (REMAN) (AC–DELCO #321–1112)	3–F11,1
95–96	Y 5.7P (LT1), 140 AMP (KG9)	10463679	1	244.32	GENERATOR, (REMAN) (ID BY P/N 10480202 STAMPED ON PART) (AC–DELCO #321–1112)	3–F11,1
96	Y 5.7–5 (LT4)	10463677	1	241.30	GENERATOR, (REMAN) (140 AMP) (AC–DELCO #321–1110)	3–F11,1

© 2000 GENERAL MOTORS SERVICE PARTS OPERATIONS–CHEVROLET–14Y

1984 GENERATOR CHART

PRODUCTION NUMBER	DIV.	USAGE	COLUMN
01105513	1	Y W/97 AMP	1

GROUP	DESCRIPTION	QTY	1	2	3	4	5
2.275	GENERATOR(PRODUCTION)	1	1105513 (97AMP)	—	—	—	—
2.275	GENERATOR(SERVICE)	1	10479865 (108AMP)	—	—	—	—
2.306	BEARING,BALL DRIVE END	1	908419	—	—	—	—
2.298	BEARING,ROLLER,SLIP RING END	1	9441879	—	—	—	—
2.316	BOLT,THRU	4	1956975	—	—	—	—
2.291	BRUSH,HOLDER & BRUSH	1	1988986	—	—	—	—
2.319	CAPACITOR & BRACKET	1	1978146	—	—	—	—
2.307	COLLAR,SHAFT,FAN TO PULLEY	1	1978064	—	—	—	—
2.307	COLLAR,SHAFT,INSIDE DRIVE END	1	1986000	—	—	—	—
2.307	COLLAR,SHAFT,OUTSIDE DRIVE END	1	1985999	—	—	—	—
2.319	DIODE TRIO	1	1984459	—	—	—	—
2.274	FAN	1	1978026	—	—	—	—
2.305	FRAME,DRIVE END	1	1985669	—	—	—	—
2.297	FRAME,SLIP RING END	1	1985671	—	—	—	—
2.280	LOCKWASHER,SHAFT NUT,DRIVE END	1	1941278	—	—	—	—
8.915	NUT,RECTIFIER CRIDGE	3	120622	—	—	—	—
2.280	NUT,SHAFT,DRIVE END	1	1915172	—	—	—	—
2.307	PLATE,BALL BEARING RETAINER	1	1977674	—	—	—	—
2.274	PULLEY	1	1985964	—	—	—	—
2.319	RECTIFIER BRIDGE	1	1985801	—	—	—	—
2.500	REGULATOR	1	1116423	—	—	—	—
2.319	RESISTOR,REGULATOR TO BRUSH GROUND	1	830478	—	—	—	—
2.279	ROTOR	1	10472051	—	—	—	—
2.307	SCREW,BALL BRG RET PLATE ATTACH	3	1975736	—	—	—	—
2.291	SCREW,BRUSH HOLDER ATTACH(GRD)	1	1975737	—	—	—	—
2.291	SCREW,BRUSH HOLDER ATTACH(INSUL)	2	1876681	—	—	—	—
2.319	SCREW,RECTIFIER BRIDGE ATTACH	1	14058081	—	—	—	—
2.286	SPRING,BRUSH	2	1975325	—	—	—	—
2.310	STATOR	1	1987510	—	—	—	—
2.313	TERMINAL PKG,BATTERY	1	1975471	—	—	—	—

© 2000 GENERAL MOTORS SERVICE PARTS OPERATIONS-CHEVROLET-14Y

1985 GENERATOR CHART

PRODUCTION NUMBER	DIV.	USAGE	COLUMN
01105585	1	Y W/120 AMP	1
01105450	1	Y W/108 AMP	2
10464392	1	Y W/120 AMP	3

GROUP	DESCRIPTION	QTY	1	2	3	4	5
2.275	GENERATOR(PRODUCTION)	1	1105585 (120AMP)	1105450 (120AMP)	10479865 (120AMP)	—	—
2.275	GENERATOR(SERVICE)	1	10464392 (120AMP)	10464392 (120AMP)	10464392 (120AMP)	—	—
2.306	BEARING,BALL DRIVE END	1	908419	908419	908419	—	—
2.298	BEARING,ROLLER,SLIP RING END	1	944 879	9441879	9441879	—	—
2.316	BOLT,THRU	4	1956975	1956975	1956975	—	—
2.291	BRUSH,HOLDER & BRUSH	1	1988986	1988986	1988986	—	—
2.319	CAPACITOR & BRACKET	1	1988972	1978146	1988972	—	—
2.307	COLLAR,SHAFT,FAN TO PULLEY	1	1978064	1978064	1978064	—	—
2.307	COLLAR,SHAFT,INSIDE DRIVE END	1	1986000	1986000	10470799	—	—
2.307	COLLAR,SHAFT,OUTSIDE DRIVE END	1	1985999	1985999	1985999	—	—
2.319	DIODE TRIO	1	1988985	1984459	1988985	—	—
2.274	FAN	1	1978026	1978026	1978026	—	—
2.305	FRAME,DRIVE END	1	---	---	---	—	—
2.297	FRAME,SLIP RING END	1	1988991	1985671	1988991	—	—
2.280	LOCKWASHER,SHAFT NUT,DRIVE END	1	1941978	1941978	1941978	—	—
8.915	NUT,RECTIFIER BRIDGE	3	120622	120622	120622	—	—
2.280	NUT,SHAFT,DRIVE END	1	1915172	1915172	1915172	—	—
2.307	PLATE,BALL BEARING RETAINER	1	1977674	1977674	1977674	—	—
2.274	PULLEY	1	1989104	1985964	1989104	—	—
2.319	RECTIFIER BRIDGE	1	—	1985801	—	—	—
2.319	RECTIFIER BRIDGE,POS	1	10467052	—	10467052	—	—
2.500	REGULATOR	1	1988988	1116423	1988988	—	—
2.319	RESISTOR,REGULATOR TO BRUSH GROUND	1	830478	830478	830478	—	—
2.279	ROTOR	1	10472051	10472051	10472051	—	—
2.307	SCREW,BALL BRG RET PLATE ATTACH	1	1975736	1975736	1975736	—	—
2.291	SCREW,BRUSH HOLDER ATTACH(GRD)	1	1975737	1975737	1975737	—	—
2.291	SCREW,BRUSH HOLDER ATTACH(INSUL)	2	1876681	1876681	1876681	—	—
2.319	SCREW,CAPACITOR ATTCH	1			1988970	—	—
2.319	SCREW,RECTIFIER BRIDGE ATTACH	2	1988971	14058081	1988971	—	—
2.286	SPRING,BRUSH	2	1975325	1975325	1975325	—	—
2.310	STATOR	1	1988989	1985625	1988989	—	—
2.313	TERMINAL PKG,BATTERY	1	1975471	1975471	1975471	—	—

© 2000 GENERAL MOTORS SERVICE PARTS OPERATIONS-CHEVROLET-14Y

1986 GENERATOR CHART

PRODUCTION NUMBER	DIV.	USAGE	COLUMN
01105678	1	Y W/105AMP	1

01105678 NOTE: SERVICED BY REMAN 10497122,ONLY PARTIAL CPS SERVICED

GROUP	DESCRIPTION	QTY	1	2	3	4	5
2.275	GENERATOR(PRODUCTION)	1	1105678 (105AMP)	—	—	—	—
2.274	FAN	1	1989581	—	—	—	—
2.280	NUT,SHAFT,DRIVE END	1	1915172	—	—	—	—
2.274	PULLEY	1	10496580	—	—	—	—

1987 GENERATOR CHART

PRODUCTION NUMBER	DIV.	USAGE	COLUMN
01101127	1	Y W/105AMP	1

01101127 NOTE: SERVICED BY REMAN 10463007,ONLY PARTIAL CPS SERVICED

GROUP	DESCRIPTION	QTY	1	2	3	4	5
2.275	GENERATOR(PRODUCTION)	1	1101127 (105AMP)	—	—	—	—
2.274	FAN	1	1989581	—	—	—	—
2.280	NUT,SHAFT,DRIVE END	1	1915172	—	—	—	—
2.274	PULLEY	1	10496580	—	—	—	—

1988 GENERATOR CHART

PRODUCTION NUMCER	DIV.	USAGE	COLUMN
01101264	1	Y W/105AMP	1

01101264 NOTE: SERVICED BY REMAN 10463097,ONLY PARTIAL CPS SERVICED

GROUP	DESCRIPTION	QTY	1	2	3	4	5
2.275	GENERATOR(PRODUCTION)	1	1101264 (105AMP)	—	—	—	—
2.274	FAN	1	1989581	—	—	—	—
2.280	NUT,SHAFT,DRIVE END	1	1915172	—	—	—	—
2.274	PULLEY	1	1985964	—	—	—	—

© 2000 GENERAL MOTORS SERVICE PARTS OPERATIONS–CHEVROLET–14Y

1989 GENERATOR CHART

PRODUCTION NUMBER	DIV.	USAGE	COLUMN
01101264	1	Y W/105AMP	1
01101238	1	Y(5.7J)	2

NOTE: 001 IF PRODUCTION GENERATORS HAVE NO COMPONENT PARTS SEE GROUP 2.275 FOR REMANS.
01101238 NOTE: SERVICED BY 10463081 REMAN ONLY OR COMPONENTS SHOWN ON CHART
01101264 NOTE: SERVICED BY REMAN 10463097,ONLY PARTIAL CPS SERVICED

GROUP	DESCRIPTION	QTY	1	2	3	4	5
2.275	GENERATOR(PRODUCTION)	1	1101264 (105AMP)	1101238 (120AMP)	—	—	—
2.306	BEARING,BALL DRIVE END	1	—	908419	—	—	—
2.298	BEARING,BALL,SLIP RING END	1	—	10474532	—	—	—
2.316	BOLT,THRU	4	—	1989690	—	—	—
2.291	BRUSH,HOLDER & BRUSH	1	—	1989702	—	—	—
2.319	CAPACITOR	1	—	1989703	—	—	—
2.307	COLLAR,SHAFT,FAN TO PULLEY	1	—	1978064	—	—	—
2.307	COLLAR,SHAFT,INSIDE DRIVE END	1	—	1986000	—	—	—
2.307	COLLAR,SHAFT,OUTSIDE DRIVE END	1	—	1985999	—	—	—
2.313	CONNECTOR,RECT BRIDGE TO STATOR LEAD	1	—	10497789	—	—	—
2.274	FAN	1	1989581	1978026	—	—	—
2.305	FRAME,DRIVE END	1	—	10470801	—	—	—
2.297	FRAME,SLIP RING END	1	—	1989706	—	—	—
2.280	LOCKWASHER,SHAFT NUT,DRIVE END	1	—	1941978	—	—	—
8.915	NUT,RECTIFIER BRIDGE	3	—	120622	—	—	—
2.280	NUT,SHAFT,DRIVE END	1	1915172	1915172	—	—	—
2.307	PLATE,BALL BEARING RETAINER	1	—	1977674	—	—	—
2.274	PULLEY	1	1985964	10498550	—	—	—
2.319	RECTIFIER BRIDGE,POS	1	—	1989774	—	—	—
2.500	REGULATOR	1	—	1116437	—	—	—
2.279	ROTOR	1	—	10470798	—	—	—
2.307	SCREW,BALL BRG RET PLATE ATTACH	3	—	1[illegible]5736	—	—	—
2.291	SCREW,BRUSH HOLDER ATTACH(GRD)	2	—	1894586	—	—	—
2.500	SCREW,BRUSH HOLDER ATTACH(INSUL)	1	—	1989699	—	—	—
2.319	SCREW,CAPACITOR LEAD	1	—	1988970	—	—	—
2.319	SCREW,RECTIFIER BRIDGE ATTACH	2	—	1988971	—	—	—
2.286	SPRING,BRUSH	2	—	10471998	—	—	—
2.310	STATOR	1	—	1989705	—	—	—
2.313	TERMINAL PKG,BATTERY	1	—	1975471	—	—	—

© 2000 GENERAL MOTORS SERVICE PARTS OPERATIONS-CHEVROLET-14Y

1990 GENERATOR CHART

PRODUCTION NUMBER	DIV.	USAGE	COLUMN
01101264	1	Y W/105AMP	1
01101238	1	Y(5.7J)W/SOFT RIDE SUSP(FE1),H.D.SUSP(FE7)	2
01101849	1	Y(5.7J)W/SOFT RIDE SUSP,HVY DUTY SUSP,A.C.(SEE NOTE)	3
01101843	1	Y(5.7-B)W/105AMP	4

01101238 NOTE: SERVICED BY 10463081 REMAN ONLY OR COMPONENTS SHOWN ON CHART
01101264 NOTE: SERVICED BY REMAN 10463097,ONLY PARTIAL CPS SERVICED
01101843 NOTE: SERVICED BY REMAN 10463097,ONLY PARTIAL CPS SERVICED
01101849 NOTE: SERVICED BY 10463156 REMAN ONLY OR COMPONENTS SHOWN ON CHART

GROUP	DESCRIPTION	QTY	1	2	3	4	5
2.275	GENERATOR(PRODUCTION)	1	1101264 (105AMP)	1101238 (120AMP)	1101849 (120AMP)	1101843 (105AMP)	—
2.306	BEARING,BALL DRIVE END	1	—	908419	908419	—	—
2.298	BEARING,BALL,SLIP RING END	1	—	10474532	10474532	—	—
2.316	BOLT,THRU	4	—	1989690	1989690	—	—
2.291	BRUSH,HOLDER & BRUSH	1	—	1989702	1989702	—	—
2.319	CAPACITOR	1	—	1989703	1989703	—	—
2.307	COLLAR,SHAFT,FAN TO PULLEY	1	—	1978064	1978064	—	—
2.307	COLLAR,SHAFT,INSIDE DRIVE END	1	—	1986000	1986000	—	—
2.307	COLLAR,SHAFT,OUTSIDE DRIVE END	1	—	1985999	1985999	—	—
2.313	CONNECTOR,RECT BRIDGE TO STATOR LEAD	1	—	10497789	10497789	—	—
2.274	FAN	1	1989581	1978026	1978026	1989581	—
2.305	FRAME,DRIVE END	1	—	10470801	10470801	—	—
2.297	FRAME,SLIP RING END	1	—	1989706	1989706	—	—
2.280	LOCKWASHER,SHAFT NUT,DRIVE END	1	—	1941978	1941978	—	—
8.915	NUT,RECTIFIER BRIDGE	3	—	120622	120622	—	—
2.280	NUT,SHAFT,DRIVE END	1	1915172	1915172	1915172	1915172	—
2.307	PLATE,BALL BEARING RETAIN.	1	—	1977674	1977674	—	—
2.274	PULLEY	1	1985964	10498550	10498550	1985964	—
2.319	RECTIFIER BRIDGE,POS	1	—	1989774	10467052	—	—
2.500	REGULATOR	1	—	1116437	1116437	—	—
2.279	ROTOR	1	—	10470798	10470798	—	—
2.307	SCREW,BALL BRG RET PLATE ATTACH	3	—	1975736	1975736	—	—
2.291	SCREW,BRUSH HOLDER ATTACH(GRD)	2	—	1894586	1894586	—	—
2.500	SCREW,BRUSH HOLDER ATTACH(INSUL)	1	—	1989699	1989699	—	—
2.319	SCREW,CAPACITOR LEAD	1	—	1988970	1988970	—	—
2.319	SCREW,RECTIFIER BRIDGE ATTACH	2	—	1988971	1988971	—	—
2.286	SPRING,BRUSH	2	—	10471998	10471998	—	—
2.310	STATOR	1	—	1989705	1989705	—	—
2.313	TERMINAL PKG,BATTERY	1	—	1975471	1975471	—	—

© 2000 GENERAL MOTORS SERVICE PARTS OPERATIONS–CHEVROLET–14Y

1991 GENERATOR CHART

PRODUCTION NUMBER	DIV.	USAGE	COLUMN
01101601	1	Y(5.7-0)W/105AMP(K68)(SEE NOTE)	1
01101597	1	Y(5.7J)W/124AMP	2

01101597 NOTE: SERVICED BY 10463194 REMAN ONLY OR COMPONENTS SHOWN ON CHART
01101601 NOTE: SERVICED BY REMAN 10463173,ONLY PARTIAL CPS SERVICED

GROUP	DESCRIPTION	QTY	1	2	3	4	5
2.275	GENERATOR(PRODUCTION)	1	1101601 (105AMP)	1101597 (124AMP)	—	—	—
2.298	BEARING,BALL,SLIP RING END	1	—	10474532	—	—	—
2.316	BOLT,THRU	4	—	1989690	—	—	—
2.291	BRUSH,HOLDER & BRUSH	1	—	1989702	—	—	—
2.319	CAPACITOR	1	—	1989703	—	—	—
2.307	COLLAR,SHAFT,FAN TO PULLEY	1	—	1978064	—	—	—
2.307	COLLAR,SHAFT,INSIDE DRIVE END	1	—	10470799	—	—	—
2.307	COLLAR,SHAFT,OUTSIDE DRIVE END	1	—	1985999	—	—	—
2.313	CONNECTOR,RECT BRIDGE TO STATOR LEAD	1	—	10497789	—	—	—
2.274	FAN	1	1989581	1978026	—	—	—
2.305	FRAME,DRIVE END	1	—	10470800	—	—	—
2.297	FRAME,SLIP RING END	1	—	1989706	—	—	—
2.280	LOCKWASHER,SHAFT NUT,DRIVE END	1	—	1941978	—	—	—
8.915	NUT,RECTIFIER BRIDGE	3	—	120622	—	—	—
2.280	NUT,SHAFT,DRIVE END	1	1915172	1915172	—	—	—
2.274	PULLEY	1	1985964	10498550	—	—	—
2.319	RECTIFIER BRIDGE,POS	1	—	10467052	—	—	—
2.500	REGULATOR	1	—	1116437	—	—	—
2.279	ROTOR	1	—	10470798	—	—	—
2.291	SCREW,BRUSH HOLDER ATTACH(GRD)	2	—	1894586	—	—	—
2.500	SCREW,BRUSH HOLDER ATTACH(INSUL)	1	—	1989699	—	—	—
2.319	SCREW,CAPACITOR LEAD	1	—	1988970	—	—	—
2.319	SCREW,RECTIFIER BRIDGE ATTACH	2	—	1988971	—	—	—
2.286	SPRING,BRUSH	2	—	10471998	—	—	—
2.310	STATOR	1	—	1989705	—	—	—
2.313	TERMINAL PKG,BATTERY	1	—	1975471	—	—	—

© 2000 GENERAL MOTORS SERVICE PARTS OPERATIONS-CHEVROLET-14Y

2.277 BOLT – BRACE – BRACKET – SHIELD – SPACER, Generator Mounting

92–95	Y 5.7P (LT1)	10105345	1	3.06	BOLT, GEN	3–F20,8
96	Y 5.7P (LT1), 5.7–5 (LT4)	10105345	1	3.06	BOLT, GEN	3–F20,8
90–95	Y 5.7J (LT5)	10049639	1	3.70	BOLT, GEN BRKT (M10X1.5X100 13HEX) (00.002)	3–F18,1
90–95	Y 5.7J (LT5)	11508355	1	.95	BOLT, GEN BRKT (TOP) (M10X1.5X50 10.9 POR) (08.900)	
92	Y 5.7P (LT1)	9440073	1	2.25	BOLT, GEN BRKT (HFH 3/8–16X2.00 280M POR 6174M) (08.900)	1–J6,243
92–96	Y 5.7P (LT1)	9441560	2	*1.50	BOLT, GEN BRKT (HFH, 3/8–16X1.75, 1.12–THD LEN 0.75–OD, 300M, POR) (3/8–16X1.75, 1.12–THD) (08.900)	1–J6,242
91	Y 5.7J (LT5)	11508687	2	1.82	BOLT, GEN BRKT BTM (HEX M8X1.25X20) (08.900) (AC–DELCO #11508687)	
95–96	Y	11516523	1	DISCON	BOLT, GEN RR BR (08.900)	
84–85	Y	14084334	1	DISCON	BRACE, GEN RR (ATCH TO 3RD STUD)	
84	Y	14084335	1	4.74	BRACE, GEN RR (ATCH TO 1ST STUD)	3–F16,6
84	Y	14084336	1	DISCON	BRACE, GEN RR (ATCH TO 2ND STUD)	
86–89	Y	14092391	1	4.49	BRACE, GEN RR (AC–DELCO #14092391)	3–F17,7
90–95	Y 5.7J (LT5)	10135866	1	10.00	BRACE, GEN RR	3–F18,8
90–91	Y 5.7–8 (L98)	14092391	1	4.49	BRACE, GEN RR (AC–DELCO #14092391)	3–F17,7
92–95	Y 5.7P (LT1)	10186193	1	11.58	BRACE, GEN RR INR	3–F20,2
96	Y	10186193	1	11.58	BRACE, GEN RR INR	3–F20,2
92–95	Y 5.7P (LT1)	10186188	1	5.36	BRACE, GEN RR OTR	3–F20,5
96	Y 5.7P (LT1), 5.7–5 (LT4)	10186188	1	5.36	BRACE, GEN RR OTR	3–F20,5
84	Y	14063758	1	DISCON	BRACKET, GEN	
85	Y	14084384	1	19.84	BRACKET, GEN	3–F17,1
86–89	Y	14087519	1	19.43	BRACKET, GEN	3–F17,1
90–95	Y 5.7J (LT5)	10067545	1	51.00	BRACKET, GEN (TOP) (02.317)	3–F18,6
90–95	Y 5.7J (LT5)	10067686	1	32.39	BRACKET, GEN (BOTTOM)	3–F18,5
90–91	Y 5.7–8 (L98)	14087519	1	19.43	BRACKET, GEN	3–F17,1
92–95	Y 5.7P (LT1)	12550052	1	77.01	BRACKET, GEN & A/C CMPR & P/S PUMP	3–F20,10
93	Y 5.7J (LT5)	12550052	1	77.01	BRACKET, GEN & A/C CMPR & P/S PUMP	3–F20,10
96	Y	12550052	1	77.01	BRACKET, GEN & A/C CMPR & P/S PUMP	3–F20,10
85–90	Y	14087559	1	43.35	BRACKET, GEN & P/S PUMP	3–F17,10
91	Y 5.7–8 (L98)	14087559	1	43.35	BRACKET, GEN & P/S PUMP	3–F17,10
85	Y	14085724	1	DISCON	BRACKET, GEN SUP RR	
90–95	Y 5.7J (LT5)	10153529	1	8.57	SHIELD, GEN	3–F18,2
93–96	Y 5.7P (LT1), 140 AMP (KG9)	10470414	1	3.06	SHIELD, GEN (02.291) (AC–DELCO #10470414)	
96	Y 5.7–5 (LT4), 140 AMP (KG9)	10470414	1	3.06	SHIELD, GEN (02.291) (AC–DELCO #10470414)	
92–96	Y 5.7P (LT1)	10028767	1	1.58	SPACER, GEN	3–F20,10
93	Y 5.7J (LT5)	10028767	1	1.58	SPACER, GEN	3–F20,10
96	Y 5.7–5 (LT4), 6–SPD M/TRANS (ML9)	10028767	1	1.58	SPACER, GEN	3–F20,10

© 2000 GENERAL MOTORS SERVICE PARTS OPERATIONS–CHEVROLET–14Y

2.279 ROTOR, Generator

NOTE: FOR 1984–1991 USAGE REFER TO GENERATOR CHART GRP 2.275

84–85	Y FOR MOD APPL & POA INFO SEE GEN CHT	10472051	1	122.40	ROTOR (AC–DELCO #10472051) .	
89–90	Y FOR MOD APPL & POA INFO SEE GEN CHART	10474573	1	136.68	ROTOR (AC–DELCO #D3184) ..	3–F11,11
91–95	Y 5.7J (LT5)	10474573	1	136.68	ROTOR, GEN (AC–DELCO #D3184)	3–F11,11
92–93	Y 5.7P (LT1), 124 AMP (KW2)	10474573	1	136.68	ROTOR, GEN (AC–DELCO #D3184)	3–F11,11
93–96	Y 5.7P (LT1), 140 AMP (KG9)	10472724	1	202.98	ROTOR, GEN (AC–DELCO #10472724)	3–F11,11
96	Y 5.7–5 (LT4), 140 AMP (KG9)	10489903	1	205.02	ROTOR, GEN (AC–DELCO #D3198)	3–F11,11

2.280 NUT – WASHER, Generator Rotor Shaft

NOTE: FOR 1984–1991 USAGE REFER TO GENERATOR CHART GRP 2.275

86–91	Y FOR MOD APPL & POA INFO SEE GEN CHT	1915172	1	*3.05	NUT, GEN ROT SHF DRV END ...	3–F11,27
92–96	Y	1915172	1	*3.05	NUT, GEN ROT SHF DRV END ...	3–F11,27
84–85	Y FOR MOD APPL & POA INFO SEE GEN CHT	1915172	1	*3.05	NUT, GEN SHF DR END	3–F11,27
84–85	Y FOR MOD APPL & POA INFO SEE GEN CHT	1941978	1	*1.19	WASHER, GEN ARM SPG (DR END) (AC–DELCO #1941978)	3–F11,26
89–91	Y FOR MOD APPL & POA INFO SEE GEN CHT	1941978	1	*1.19	WASHER, GEN ARM SPG (DR END) (AC–DELCO #1941978)	3–F11,26
92–96	Y	1941978	1	*1.19	WASHER, GEN ROT SHF DRV END (AC–DELCO #1941978)	3–F11,26

2.286 SPRING, Generator Brush

NOTE: FOR 1984–1991 USAGE REFER TO GENERATOR CHART GRP 2.275

84–85	Y FOR MOD APPL & POA INFO SEE GEN CHT	1975325	1	*.87	SPRING, GEN BRUSH (AC–DELCO #1975325)	
89–91	Y FOR MOD APPL & POA INFO SEE GEN CHART	10471998	2	*.55	SPRING, GEN BRUSH (AC–DELCO #D786)	3–F11,8
92–93	Y 5.7P (LT1), 124 AMP (KW2)	10471998	2	*.55	SPRING, GEN BRUSH (AC–DELCO #D786)	3–F11,8
92–95	Y 5.7J (LT5)	10471998	2	*.55	SPRING, GEN BRUSH (AC–DELCO #D786)	3–F11,8
93–96	Y 5.7P (LT1), 140 AMP (KG9)	10471998	2	*.55	SPRING, GEN BRUSH (AC–DELCO #D786)	3–F11,8
96	Y 5.7–5 (LT4)	10471998	2	*.55	SPRING, GEN BRUSH (AC–DELCO #D786)	3–F11,8

2.291 BOLT – BRUSH – BRUSH KIT – SCREW, Generator Brush

NOTE: FOR 1984–1991 USAGE REFER TO GENERATOR CHART GRP 2.275

92–96	Y	1894586	1	*1.01	BOLT, GEN BRUSH HLDR GND (M4.2X0.8X21.0, 500M) (AC–DELCO #1894586)	3–F11,15
92–96	Y	1989699	1	*1.80	BOLT, GEN BRUSH HLDR INSL (02.500) (AC–DELCO #1989699)	3–F11,12
92–96	Y	1989702	1	16.79	BRUSH KIT, GEN (AC–DELCO #D775)	3–F11,9
89–91	Y FOR MOD APPL & POA INFO SEE GEN CHART	1989702	1	16.79	BRUSH, HOLDER (AC–DELCO #D775)	3–F11,9
84–85	Y FOR MOD APPL & POA INFO SEE GEN CHT	1975737	1	*1.15	SCREW, BRUSH HLDR ATCH (GRD) (AC–DELCO #1975737)	
89–91	Y FOR MOD APPL & POA SEE GENERATOR CHT	1894586	1	*1.01	SCREW, BRUSH HOLDER ATTACH (GROUND) (M4.2X0.8X21.0, 500M) (AC–DELCO #1894586)	3–F11,15

© 2000 GENERAL MOTORS SERVICE PARTS OPERATIONS–CHEVROLET–14Y

2.297 FRAME, Generator Commutator

NOTE: FOR 1984–1991 USAGE REFER TO GENERATOR CHART GRP 2.275

89–91	Y FOR MOD APPL & POA INFO SEE GEN CHART	1989706	1	52.02	FRAME, GEN SLIP RING END (AC–DELCO #1989706)	3–F11,3
92–93	Y 5.7P (LT1), 124 AMP (KW2)	1989706	1	52.02	FRAME, GEN SLIP RING END (AC–DELCO #1989706)	3–F11,3
92–95	Y 5.7J (LT5)	1989706	1	52.02	FRAME, GEN SLIP RING END (AC–DELCO #1989706)	3–F11,3
93–96	Y 5.7P (LT1), 140 AMP (KG9)	10476416	1	60.45	FRAME, GEN SLIP RING END (AC–DELCO #10476416)	3–F11,3
96	Y 5.7–5 (LT4), 140 AMP (KG9)	10476416	1	60.45	FRAME, GEN SLIP RING END (AC–DELCO #10476416)	3–F11,3
84–85	Y FOR MOD APPL & POA INFO SEE GEN CHT	1985671	1	DISCON	FRAME, SLIP RING END	

2.298 BALL – BEARING Generator Commutator End Frame

NOTE: FOR 1984–1991 USAGE REFER TO GENERATOR CHART GRP 2.275

89–91	Y FOR MOD APPL & POA INFO SEE GEN CHART	10474532	1	15.26	BALL, BEARING (AC–DELCO #10474532)	3–F11,4
84–85	Y FOR MOD APPL & POA INFO SEE GEN CHT	9441879	2	9.91	BEARING, GEN ROT SHF SLIP RING END (AC–DELCO #MNJ711)	
92–93	Y 5.7P (LT1), 124 AMP (KW2)	10474532	1	15.26	BEARING, GEN ROT SHF SLIP RING END (AC–DELCO #10474532)	3–F11,4
92–95	Y 5.7J (LT5)	10474532	1	15.26	BEARING, GEN ROT SHF SLIP RING END (AC–DELCO #10474532)	3–F11,4
93–96	Y 5.7P (LT1), 140 AMP (KG9)	10476418	1	7.71	BEARING, GEN ROT SHF SLIP RING END (INCLS BRG) (AC–DELCO #10476418)	3–F11,4
96	Y 5.7–5 (LT4)	10476418	1	7.71	BEARING, GEN ROT SHF SLIP RING END (INCLS BRG) (AC–DELCO #10476418)	3–F11,4

2.305 FRAME, Generator Drive End

NOTE: FOR 1984–1991 USAGE REFER TO GENERATOR CHART GRP 2.275

84	Y FOR MOD APPL & POA INFO SEE GEN CHT	1985669	1	38.76	FRAME, DR END (AC–DELCO #1985669)	
85	Y 120 AMP	1988983	1	DISCON	FRAME, DR END	
89–90	Y FOR MOD APPL & POA INFO SEE GEN CHART	10470800	1	40.56	FRAME, GEN DRV END (AC–DELCO #D3462)	3–F11,21
91	Y FOR MDL APPL & POA SEE GEN CHT	10470800	1	40.56	FRAME, GEN DRV END (W/BRG) (AC–DELCO #D3462)	3–F11,21
92–95	Y 5.7J (LT5)	10470800	1	40.56	FRAME, GEN DRV END (W/BRG) (AC–DELCO #D3462)	3–F11,21
92–94	Y 5.7P (LT1), 124 AMP (KW2)	10471936	1	42.84	FRAME, GEN DRV END (AC–DELCO #D3466)	3–F11,21
93–96	Y 5.7P (LT1), 140 AMP (KG9)	10470419	1	47.19	FRAME, GEN DRV END (AC–DELCO #D3465)	3–F11,21
96	Y 5.7–5 (LT4), 140 AMP (KG9)	10470419	1	47.19	FRAME, GEN DRV END (AC–DELCO #D3465)	3–F11,21

2.306 BEARING, Generator Drive End

NOTE: FOR 1984–1991 USAGE REFER TO GENERATOR CHART GRP 2.275

84–85	Y FOR MOD APPL & POA INFO SEE GEN CHT	908419	1	20.40	BEARING, GEN ROT DRV END (AC–DELCO #Z99503–6) ....
89–90	Y FOR MOD APPL & POA INFO SEE GEN CHT	908419	1	20.40	BEARING, GEN ROT DRV END (AC–DELCO #Z99503–6) ....

© 2000 GENERAL MOTORS SERVICE PARTS OPERATIONS–CHEVROLET–14Y

2.307 COLLAR – PLATE – SCREW, Generator Drive End

NOTE: FOR 1984–1991 USAGE REFER TO GENERATOR CHART GRP 2.275

84–85	Y FOR MOD APPL & POA INFO SEE GEN CHT	1978064	1	*1.90	COLLAR, FAN & PULLEY (AC–DELCO #1978064)	3–F11,24
89–91	Y FOR MDL APPL & POA SEE GENERATOR CHART	1978064	1	*1.90	COLLAR, FAN & PULLEY (AC–DELCO #1978064)	3–F11,24
92–96	Y	1978064	1	*1.90	COLLAR, GEN ROT DR END FAN (AC–DELCO #1978064)	3–F11,24
84–85	Y FOR MDL APPL & POA SEE GEN CHT	10470799	1	2.71	COLLAR, GEN ROT DRV END BRG I/S (AC–DELCO #10470799) ..	3–F11,19
89–90	Y FOR MOD APPL & POA INFO SEE GEN CHT	1986000	1	4.15	COLLAR, GEN ROT DRV END BRG I/S (AC–DELCO #1986000) ...	
91	Y FOR MDL APPL & POA SEE GEN CHT	10470799	1	2.71	COLLAR, GEN ROT DRV END BRG I/S (AC–DELCO #10470799) ..	3–F11,19
92–93	Y 5.7P (LT1), 124 AMP (KW2)	10470799	1	2.71	COLLAR, GEN ROT DRV END BRG I/S (AC–DELCO #10470799) ..	3–F11,19
92–95	Y 5.7J (LT5)	10470799	1	2.71	COLLAR, GEN ROT DRV END BRG I/S (AC–DELCO #10470799) ..	3–F11,19
93–96	Y 5.7P (LT1), 140 AMP (KG9)	10470412	1	2.71	COLLAR, GEN ROT DRV END BRG I/S (AC–DELCO #10470412) ..	3–F11,19
96	Y 5.7–5 (LT4), 140 AMP (KG9)	10470412	1	2.71	COLLAR, GEN ROT DRV END BRG I/S (AC–DELCO #10470412) ..	3–F11,19
84–85	Y	1985999	1	4.02	COLLAR, GEN ROT DRV END BRG O/S (AC–DELCO #1985999) ..	3–F11,22
89–91	Y FOR MDL APPL & POA SEE GENERATOR CHART	1985999	1	4.02	COLLAR, GEN ROT DRV END BRG O/S (AC–DELCO #1985999) ..	3–F11,22
92–96	Y	1985999	1	4.02	COLLAR, GEN ROT DRV END BRG O/S (AC–DELCO #1985999) ..	3–F11,22
84–85	Y FOR MOD APPL & POA INFO SEE GEN CHT	1986000	1	4.15	COLLAR, INSIDE, DR END (AC–DELCO #1986000)	
84–85	Y FOR MOD APPL & POA INFO SEE GEN CHT	1977674	1	1.78	PLATE, BRG RET DR END (AC–DELCO #1977674)	
89–90	Y FOR MOD APPL & POA INFO SEE GEN CHT	1977674	1	1.78	PLATE, BRG RET DR END (AC–DELCO #1977674)	
84–85	Y FOR MOD APPL & POA INFO SEE GEN CHT	1975736	1	*1.40	SCREW, BRG RET PLT (AC–DELCO #1975736)	
89–90	Y FOR MOD APPL & POA INFO SEE GEN CHT	1975736	1	*1.40	SCREW, BRG RET PLT (AC–DELCO #1975736)	

2.310 STATOR, Generator Field

NOTE: FOR 1984–1991 USAGE REFER TO GENERATOR CHART GRP 2.275

84	Y FOR MOD APPL & POA INFO SEE GEN CHT	1987510	1	74.73	STATOR (AC–DELCO #D3164) .	
85	Y FOR MOD APPL & POA INFO SEE GEN CHT	1985625	1	DISCON	STATOR	
85	Y FOR MOD APPL & POA SEE GENERATOR CHT	1988969	1	DISCON	STATOR	
89–91	Y FOR MOD APPL & POA INFO SEE GEN CHART	1989705	1	88.23	STATOR, GEN (AC–DELCO #1989705)	
92–93	Y 5.7P (LT1), 124 AMP (KW2)	10472882	1	122.40	STATOR, GEN (AC–DELCO #10472882)	3–F11,18
92–95	Y 5.7J (LT5)	10472882	1	122.40	STATOR, GEN (AC–DELCO #10472882)	3–F11,18
93–96	Y 5.7P (LT1), 140 AMP (KG9)	10470439	1	113.22	STATOR, GEN (AC–DELCO #10470439)	3–F11,18
96	Y 5.7–5 (LT4), 140 AMP (KG9)	10470439	1	113.22	STATOR, GEN (AC–DELCO #10470439)	3–F11,18

© 2000 GENERAL MOTORS SERVICE PARTS OPERATIONS–CHEVROLET–14Y

2.313 CONNECTOR – INSULATOR – NUT – TERMINAL – TERMINAL KIT, Generator

NOTE: FOR 1984–1991 USAGE REFER TO GENERATOR CHART GRP 2.275

86–94	Y	12117361	1	22.77	CONNECTOR, GEN (4–WAY F) (W/LEADS) (02.535) (AC–DELCO #PT494)	
95	Y 5.7J (LT5)	12117361	1	22.77	CONNECTOR, GEN (4–WAY F) (W/LEADS) (02.535) (AC–DELCO #PT494)	
96	Y	12117361	1	22.77	CONNECTOR, GEN (4–WAY F) (W/LEADS) (02.535) (AC–DELCO #PT494)	
89–91	Y FOR MOD APPL & POA INFO SEE GEN CHART	10497789	1	1.49	CONNECTOR, GEN RECTIFIER BRIDGE (STRAP) (AC–DELCO #10497789)	3–F11,10
92–96	Y	10497789	1	1.49	CONNECTOR, GEN RECTIFIER BRIDGE (AC–DELCO #10497789)	3–F11,10
92–93	Y 5.7P (LT1), 124 AMP (KW2)	10470416	1	.69	INSULATOR, GEN BAT TERM (AC–DELCO #10470416)	3–F11,29
93–95	Y 5.7P (LT1), 140 AMP (KG9)	10470416	1	.69	INSULATOR, GEN BAT TERM (AC–DELCO #10470416)	3–F11,29
92–93	Y 5.7P (LT1), 124 AMP (KW2)	10474210	1	*1.12	NUT, GEN BAT TERM (AC–DELCO #10474210)	3–F11,2
93–96	Y 5.7P (LT1), 140 AMP (KG9)	10474210	1	*1.12	NUT, GEN BAT TERM (AC–DELCO #10474210)	3–F11,2
96	Y 5.7–5 (LT4), 140 AMP (KG9)	10474210	1	*1.12	NUT, GEN BAT TERM (AC–DELCO #10474210)	3–F11,2
84–85	Y FOR MOD APPL & POA INFO SEE GEN CHT	1975471	1	4.90	TERMINAL KIT, GEN BAT (AC–DELCO #1975471)	3–F11,1
89–91	Y FOR MOD APPL & POA INFO SEE GEN CHT	1975471	1	4.90	TERMINAL KIT, GEN BAT (AC–DELCO #1975471)	3–F11,1
92–93	Y 5.7P (LT1), 124 AMP (KW2)	1975471	1	4.90	TERMINAL KIT, GEN BAT (AC–DELCO #1975471)	3–F11,1
92–95	Y 5.7J (LT5)	1975471	1	4.90	TERMINAL KIT, GEN BAT (AC–DELCO #1975471)	3–F11,1
93–96	Y 5.7P (LT1), 140 AMP (KG9)	1975471	1	4.90	TERMINAL KIT, GEN BAT (AC–DELCO #1975471)	3–F11,1
92–93	Y 5.7P (LT1), 124 AMP (KW2)	10474201	1	7.75	TERMINAL, GEN BAT (AC–DELCO #10474201)	3–F11,28
93–96	Y 5.7P (LT1), 140 AMP (KG9)	10474201	1	7.75	TERMINAL, GEN BAT (AC–DELCO #10474201)	3–F11,28
96	Y 5.7–5 (LT4), 140 AMP (KG9)	10474201	1	7.75	TERMINAL, GEN BAT (AC–DELCO #10474201)	3–F11,28

2.316 BOLT, Generator Thru

NOTE: FOR 1984–1991 USAGE REFER TO GENERATOR CHART GRP 2.275

84–85	Y FOR MOD APPL & POA INFO SEE GEN CHT	1956975	1	*1.40	BOLT, GEN THRU (AC–DELCO #1956975)	
89–91	Y FOR MOD APPL & POA INFO SEE GEN CHART	1989690	4	*.70	BOLT, GEN THRU (#10–24X2.6) (AC–DELCO #1989690)	3–F11,17
92–96	Y	1989690	4	*.70	BOLT, GEN THRU (#10–24X2.6) (AC–DELCO #1989690)	3–F11,17

2.317 SPACER, Generator Adjust

90–95	Y 5.7J (LT5)	10067546	1	12.39	SPACER, GEN PIV	3–F18,7

© 2000 GENERAL MOTORS SERVICE PARTS OPERATIONS–CHEVROLET–14Y

2.319 BOLT – BRIDGE – CAPACITOR – DIODE – RECTIFIER – RESISTOR – SCREW – SCREW & WASHER, Generator Output

NOTE: FOR 1984–1991 USAGE REFER TO GENERATOR CHART GRP 2.275

93–95	Y 5.7P (LT1), 140 AMP (KG9)	10474211	1	*2.51	**BOLT**, GEN CAPAC BRKT (8–32 X 1.24") (AC–DELCO #10474211) .	3–F11,6
96	Y 5.7–5 (LT4), 140 AMP (KG9)	10474211	1	*2.51	**BOLT**, GEN CAPAC BRKT (8–32 X 1.24") (AC–DELCO #10474211) .	3–F11,6
89–91	Y FOR MOD APPL & POA SEE GENERATOR CHT	1988970	2	*2.97	**BOLT**, GEN RECTIFIER BRIDGE (AC–DELCO #1988970)	3–F11,6
89–91	Y FOR MOD APPL & POA SEE GENERATOR CHT	1988971	2	*.82	**BOLT**, GEN RECTIFIER BRIDGE (8–32 X 1.14") (AC–DELCO #1988971)	3–F11,6
92–93	Y 5.7P (LT1), 124 AMP (KW2)	1988970	1	*2.97	**BOLT**, GEN RECTIFIER BRIDGE (AC–DELCO #1988970)	3–F11,6
92–95	Y 5.7J (LT5), (CAPAC ATTCH)	1988970	1	*2.97	**BOLT**, GEN RECTIFIER BRIDGE (AC–DELCO #1988970)	3–F11,6
92–96	Y	1988971	2	*.82	**BOLT**, GEN RECTIFIER BRIDGE (8–32 X 1.14") (AC–DELCO #1988971)	3–F11,6
93–96	Y 5.7P (LT1), 140 AMP (KG9)	10474207	2	*2.51	**BOLT**, GEN RECTIFIER BRIDGE (INSULATED) (8–32 X 0.82") (AC–DELCO #10474207)	3–F11,6
93–95	Y 5.7P (LT1), 140 AMP (KG9)	10474211	1	*2.51	**BOLT**, GEN RECTIFIER BRIDGE (8–32 X 1.24") (AC–DELCO #10474211)	3–F11,6
96	Y 5.7–5 (LT4), 140 AMP (KG9)	10474207	2	*2.51	**BOLT**, GEN RECTIFIER BRIDGE (INSULATED) (8–32 X 0.82") (AC–DELCO #10474207)	3–F11,6
96	Y 5.7–5 (LT4), 140 AMP (KG9)	10474211	1	*2.51	**BOLT**, GEN RECTIFIER BRIDGE (8–32 X 1.24") (AC–DELCO #10474211)	3–F11,6
89–91	Y FOR MOD APPL & POA INFO SEE GEN CHART	10467052	1	58.65	**BRIDGE**, GEN RECTIFIER (AC–DELCO #D3990)	3–F11,5
92–93	Y 5.7P (LT1), 124 AMP (KW2)	10467052	1	58.65	**BRIDGE**, GEN RECTIFIER (AC–DELCO #D3990)	3–F11,5
92–95	Y 5.7J (LT5)	10467052	1	58.65	**BRIDGE**, GEN RECTIFIER (AC–DELCO #D3990)	3–F11,5
93–96	Y 5.7P (LT1), 140 AMP (KG9)	10472095	1	110.16	**BRIDGE**, GEN RECTIFIER (AC–DELCO #10472095)	3–F11,5
96	Y 5.7–5 (LT4), 140 AMP (KG9)	10472095	1	110.16	**BRIDGE**, GEN RECTIFIER (AC–DELCO #10472095)	3–F11,5
85	Y FOR MOD APPL & POA SEE GENERATOR CHT	1988972	1	5.66	**CAPACITOR**, BRACKET GEN (AC–DELCO #1988972)	
84–85	Y FOR MOD APPL & POA INFO SEE GEN CHT	1978146	1	7.34	**CAPACITOR**, GEN (AC–DELCO #1978146)	
89–91	Y FOR MOD APPL & POA INFO SEE GEN CHART	1989703	1	9.18	**CAPACITOR**, GEN (AC–DELCO #1989703)	3–F11,14
92–96	Y	1989703	1	9.18	**CAPACITOR**, GEN (AC–DELCO #1989703)	3–F11,14
84–85	Y FOR MOD APPL & POA INFO SEE GEN CHT	1984459	1	3.60	**DIODE**, TRIO (NEG) (AC–DELCO #D3922)	
85	Y FOR MOD APPL & POA SEE GENERATOR CHT	1988985	1	4.58	**DIODE**, TRIO NEG (AC–DELCO #D3927)	
84–85	Y FOR MOD APPL & POA INFO SEE GEN CHT	1985801	1	49.98	**RECTIFIER**, BRIDGE POS (AC–DELCO #D3985)	
85	Y FOR MOD APPL & POA SEE GENERATOR CHT	10467052	1	58.65	**RECTIFIER**, BRIDGE POS (AC–DELCO #D3990)	3–F11,5
84–85	Y FOR MOD APPL & POA INFO SEE GEN CHT	830478	1	*1.33	**RESISTOR**, GEN REG TO BRUSH GRD (AC–DELCO #830478) ..	
85	Y FOR MOD APPL & POA SEE GENERATOR CHT	1988971	2	*.82	**SCREW & WASHER**, RECTIFIER BRDG ATTACH (AC–DELCO #1988971)	3–F11,6

© 2000 GENERAL MOTORS SERVICE PARTS OPERATIONS–CHEVROLET–14Y

2.319 BOLT – BRIDGE – CAPACITOR – DIODE – RECTIFIER – RESISTOR – SCREW – SCREW & WASHER, Generator Output (Con't)

85	Y FOR MOD APPL & POA SEE GENERATOR CHT	1988070	1	*2.97	SCREW, CAPACITOR ATTACH (AC–DELCO #1988070)	3–F11,6
84–85	Y FOR MOD APPL & POA INFO SEE GEN CHT	14058081	1	.13	SCREW, GEN RETIFIER BRIDGE ATCH (09.269) (AC–DELCO #14058081)	

2.333 INSULATOR – TRAY, Battery

92–96	Y	22611064	1	12.35	INSULATOR, BAT	3–G18,1
84–96	Y	14064574	1	28.50	TRAY, BAT	3–G18,6

2.334 BOLT, Battery Hold Down

94–96	Y	22538027	2	.59	BOLT, BAT TRAY (POSN #1) (M6.3X1.81X25) (07.833)	

2.335 RETAINER, Battery Hold Down

84–96	Y	14005061	1	1.60	RETAINER, BAT HOLDN	3–G18,3

2.341 CABLE – STRAP, Battery (Negative)

84–88	Y	12157315	1	21.57	CABLE, BAT NEG (W/O CLIPS & CONDUIT) (AC–DELCO #2XX37–1Y)	3–G18,9
89–91	Y 5.7–8 (L98)	12157315	1	21.57	CABLE, BAT NEG (W/O CLIPS & CONDUIT) (AC–DELCO #2XX37–1Y)	3–G18,9
90–95	Y 5.7J (LT5)	12157286	1	18.03	CABLE, BAT NEG (37"LG) (W/O CLIPS & CONDUIT) (AC–DELCO #2SX37–1V)	3–G18,9
92–95	Y 5.7P (LT1)	12157315	1	21.57	CABLE, BAT NEG (W/O CLIPS & CONDUIT) (AC–DELCO #2XX37–1Y)	3–G18,9
96	Y	12157315	1	21.57	CABLE, BAT NEG (W/O CLIPS & CONDUIT) (AC–DELCO #2XX37–1Y)	3–G18,9
91	Y 5.7–8 (L98)	6286800	AR	19.61	STRAP, ENG GND (19")	3–G23,21
92–95	Y 5.7P (LT1)	6286800	1	19.61	STRAP, ENG GND (19")	3–G23,21
96	Y	6286800	1	19.61	STRAP, ENG GND	3–G23,21
84–90	Y	6286800	AR	19.61	STRAP, ENG GRD (19")	3–G23,21

2.342 CABLE – CONNECTOR, Battery (Positive)

84	Y	12157458	1	34.63	CABLE, BAT POS (55") (CONN 12030290 & 12015791 REQD) (AC–DELCO #SOX55–1)	3–G23,6
85	Y H.D.C.	8912120	1	25.59	CABLE BAT POS (50") (AC–DELCO #2SX50)	
85	Y EXC H.D.C.	12157458	1	34.63	CABLE, BAT POS (55") (CONN 12030290 & 12015791 REQD) (AC–DELCO #SOX55–1)	3–G23,6
86–87	Y	12157332	1	45.36	CABLE, BAT POS (56"LG) (ON 1986–87 VEH, CONN 12126451 IS ALSO REQ) (AC–DELCO #2SW56–3SY)	3–G23,6
88	Y	12157332	1	45.36	CABLE, BAT POS (56"LG) (AC–DELCO #2SW56–3SY) ..	3–G23,6
89–90	Y 5.7–8 (L98)	12157332	1	45.36	CABLE, BAT POS (56"LG) (AC–DELCO #2SW56–3SY) ..	3–G23,6
90–92	Y 5.7J (LT5)	15320755	1	48.70	CABLE, BAT POS (AC–DELCO #2SX40–2)	3–F7,2

© 2000 GENERAL MOTORS SERVICE PARTS OPERATIONS–CHEVROLET–14Y

2.342 CABLE – CONNECTOR, Battery (Positive) (Con't)

91	Y 5.7–8 (L98), 4–SPD A/TRANS (MD8)	12157332	1	45.36	CABLE, BAT POS (56"LG) (AC–DELCO #2SW56–3SY) ..	3–G23,6
91	Y 5.7–8 (L98), 6–SPD M/TRANS (ML9)	15320767	1	44.70	CABLE, BAT POS (AC–DELCO #2SX55–2)	3–H5,9
92	Y 5.7P (LT1), 6–SPD M/TRANS (ML9)	12157260	1	16.42	CABLE, BAT POS (AC–DELCO #2CX07–2)	3–G18,10
93–95	Y 5.7J (LT5)	12106586	1	93.07	CABLE, BAT POS (AC–DELCO #2SW36–3)	3–F7,2
93–96	Y 5.7P (LT1)	12157343	1	62.44	CABLE, BAT POS (W/O CONDUIT & CLIPS) (66"LG) (AC–DELCO #2SX66–2G)	3–G20,6
96	Y 5.7–5 (LT4)	12157343	1	62.44	CABLE, BAT POS (66"LG) (AC–DELCO #2SX66–2G) ...	3–G20,6
92–94	Y 5.7J (LT5)	12085669	AR	22.81	CONNECTOR, BAT POS CBL J/BLK (METRIC PACK 280 SERIES) (1–WAY M) (W/LEAD) (BLACK) (02.530) (AC–DELCO #PT1223) .	

2.343 ADAPTER KIT – CLIP – COVER – NUT – WASHER, Battery Cable

84–90	Y	1846855	1	34.17	ADAPTER KIT, SI TERM BAT (08.965) (AC–DELCO #1846855)	
95–96	Y	11516700	1	.83	CLIP, AUX BAT WRG HARN (08.900)	
86–96	Y	14103304	1	1.68	CLIP, BAT CBL	3–G18,13
93–96	Y	8905794	1	.99	CLIP, BAT POS CBL (RETAINS 10/13MM CVLTD CONDUIT; HAS ROSEBUD PUSHIN) (09.276) ..	
93–96	Y	12092332	1	3.30	COVER, BAT POS CBL & ENG WRG HARN TERM (RED)	3–G20,7
93–96	Y	12092332	2	3.30	COVER, BAT POS CBL TERM (RED)	3–G20,7
90–95	Y 5.7J (LT5)	11509480	1	*.39	NUT, BAT POS CBL (08.915) (AC–DELCO #11509480)	3–H2,29
96	Y	21021808	1	*.36	NUT, BAT POS CBL (8X1.25X5.95 BRASS)	
90–95	Y 5.7J (LT5)	11501869	1	.25	WASHER, BAT POS CBL (M8X15X1.52) (ZC) (08.932) (AC–DELCO #11501869)	

2.361 DISTRIBUTOR, Ignition

NOTE: FOR 1985–1991 USAGE REFER TO DISTRIBUTOR CHART GRP 2.361

92–94	Y 5.7P (LT1)	10457702	1	601.80	DISTRIBUTOR, (AC–DELCO #10457702)	3–F26,1
95–96	Y 5.7P (LT1)	1104032	1	432.48	DISTRIBUTOR, (W/PUMP GSKT SHOULD BE ORDERED ALSO) (AC–DELCO #1104032)	3–F27,1
96	Y 5.7–5 (LT4)	1104032	1	432.48	DISTRIBUTOR, (W/PUMP GSKT SHOULD BE ORDERED ALSO) (AC–DELCO #1104032)	3–F27,1

© 2000 GENERAL MOTORS SERVICE PARTS OPERATIONS–CHEVROLET–14Y

1985 DISTRIBUTORS

NOTE: A01 NEW SERVICE CONCEPT - AS DISTRIBUTORS ARE DISCONTINUED,COMPONENT PARTS ONLY
NOTE: A02 WILL BE AVAILABLE FOR SERVICE - DO NOT ORDER DISTRIBUTOR ASSEMBLY

PRODUCTION NUMBER	DIV.	USAGE	COLUMN
01103595	1	Y(5.7-8)(SEE NOTE)	1
10497134	1	Y	2

01103595 NOTE: IF REPLACING COIL,MAKE SURE MODULE IS STAMPED 16139869.
01103595 NOTE: IF REPLACING MODULE,MAKE SURE COIL IS STAMPED 1985474.

GROUP	DESCRIPTION	QTY	1	2	3	4	5
2.361	DISTRIBUTOR(PRODUCTION)	1	1103595	10497134	—	—	—
2.360	BRUSH,RESISTOR	1	1989880	1989880	—	—	—
2.367	CAP	1	1977046	1977046	—	—	—
2.170	COIL,IGNITION	1	1985474	1985474	—	—	—
2.360	COVER,CAP	1	1875960	1875960	—	—	—
2.374	GEAR	1	1960599	10466413	—	—	—
2.362	HOUSING	1	1988614	1988614	—	—	—
2.372	MAINSHAFT(COMPLETE)	1	1976909	1976909	—	—	—
2.383	MODULE	1	16139869	16139869	—	—	—
2.372	P[illegible],POLE PIECE & PLATE LOCATOR ...	1	—	456969	—	—	—
2.372	P[illegible] PIECE & PLATE(PICK-UP COIL) .	1	1977207	1977207	—	—	—
2.372	R[illegible]NER,POLE PIECE & PLATE	1	1892222	1892222	—	—	—
2.382	ROTOR	1	10498160	10498160	—	—	—
2.363	SCREEN,W/SUPPORT	1	—	10469035	—	—	—
2.368	SCREW,CAP	2	1876163	1876163	—	—	—
2.183	SCREW,W/LW,CAP ATTACH	4	1977377	1977377	—	—	—
2.383	SCREW,W/LW,MODULE ATTACH	2	1891234	1891234	—	—	—
2.183	SCREW,W/WASHER,IGN COIL ATTACH ...	4	1985472	1985472	—	—	—
2.383	SCREW,W/WASHER,ROTOR ATTACH	2	1875948	1875948	—	—	—
2.183	SEAL,UNDER IGN COIL(RUBBER)	1	1875962	1875962	—	—	—
2.383	SHIELD,MODULE	1	1984382	1984382	—	—	—
2.400	STRAP,GROUND	1	1894868	1894868	—	—	—
2.383	TERMINAL BLOCK(INCL CAPACITOR) ...	1	1892261	1892261	—	—	—
2.383	TERMINAL BLOCK(TO ELEK PKG)	1	1986260	1986260	—	—	—
2.379	WASHER,UNDER GEAR	1	1837617	1837617	—	—	—
2.379	WASHER,UNDER GEAR TANG	1	1965864	1965864	—	—	—

© 2000 GENERAL MOTORS SERVICE PARTS OPERATIONS-CHEVROLET-14Y

1986 DISTRIBUTORS

NOTE: A01 NEW SERVICE CONCEPT - AS DISTRIBUTORS ARE DISCONTINUED,COMPONENT PARTS ONLY
NOTE: A02 WILL BE AVAILABLE FOR SERVICE - DO NOT ORDER DISTRIBUTOR ASSEMBLY

PRODUCTION NUMBER	DIV.	USAGE	COLUMN
10497134	1	Y	1
01103680	1	Y	2

GROUP	DESCRIPTION	QTY	1	2	3	4	5
2.361	DISTRIBUTOR	1	10497134	1103680	—	—	—
2.368	BRUSH,RESISTOR	1	1989880	1989880	—	—	—
2.367	CAP	1	1977046	1977046	—	—	—
2.170	COIL,IGNITION	1	1985474	1985474	—	—	—
2.368	COVER,CAP	1	1875960	1875960	—	—	—
2.374	GEAR	1	10456413	10456413	—	—	—
2.362	HOUSING	1	1988614	1988614	—	—	—
2.372	MAINSHAFT(COMPLETE)	1	1976909	1976909	—	—	—
2.383	MODULE	1	16139869	16139869	—	—	—
2.372	PIN,POLE PIECE & PLATE LOCATOR	1	456969	456969	—	—	—
2.372	POLE PIECE & PLATE(PICK-UP COIL)	1	1977207	1977207	—	—	—
2.372	RETAINER,POLE PIECE & PLATE	1	1892222	1892222	—	—	—
2.382	ROTOR	1	10498160	10498160	—	—	—
2.363	SCREEN,W/SUPPORT	1	10469035	10469035	—	—	—
2.368	SCREW,CAP	2	1876153	1876153	—	—	—
2.183	SCREW,W/LW,CAP ATTACH	4	1977377	1977377	—	—	—
2.383	SCREW,W/LW,MODULE ATTACH	2	1891234	1891234	—	—	—
2.183	SCREW,W/WASHER,IGN COIL ATTACH	4	1985472	1985472	—	—	—
2.383	SCREW,W/WASHER,ROTOR ATTACH	2	1875948	1875948	—	—	—
2.183	SEAL,UNDER IGN COIL(RUBBER)	1	1875962	1875962	—	—	—
2.383	SHIELD,MODULE	1	1984382	1984382	—	—	—
2.400	STRAP,GROUND	1	1894868	1894868	—	—	—
2.383	TERMINAL BLOCK(INCL CAPACITOR)	1	1892261	1892261	—	—	—
2.383	TERMINAL BLOCK(TO ELEK PKG)	1	1986260	1986260	—	—	—
2.379	WASHER,UNDER GEAR	1	1837617	1837617	—	—	—
2.379	WASHER,UNDER GEAR TANG	1	1965864	1965864	—	—	—

© 2000 GENERAL MOTORS SERVICE PARTS OPERATIONS - CHEVROLET - 14Y

1987 DISTRIBUTORS

NOTE: A01 NEW SERVICE CONCEPT - AS DISTRIBUTORS ARE DISCONTINUED,COMPONENT PARTS ONLY
NOTE: A02 WILL BE AVAILABLE FOR SERVICE - DO NOT ORDER DISTRIBUTOR ASSEMBLY

PRODUCTION NUMBER	DIV.	USAGE	COLUMN
10497134	1	Y	1
01103680	1	Y	2

GROUP	DESCRIPTION	QTY	1	2	3	4	5
2.361	DISTRIBUTOR	1	10497134	1103680	—	—	—
2.366	BRUSH,RESISTOR	1	1989880	1989880	—	—	—
2.367	CAP	1	1977046	1977046	—	—	—
2.170	COIL,IGNITION	1	1985474	1985474	—	—	—
2.368	COVER,CAP	1	1876960	1876960	—	—	—
2.374	GEAR	1	10466413	10466413	—	—	—
2.362	HOUSING	1	1988614	1988614	—	—	—
2.372	MAINSHAFT(COMPLETE)	1	1976909	1976909	—	—	—
2.383	MODULE	1	16139069	16139069	—	—	—
2.372	PIN,POLE PIECE & PLATE LOCATOR ...	1	456969	456969	—	—	—
2.372	POLE PIECE & PLATE(PICK-UP COIL) .	1	1977207	1977207	—	—	—
2.372	RETAINER,POLE PIECE & PLATE	1	1892222	1892222	—	—	—
2.382	ROTOR	1	10498160	10498160	—	—	—
2.363	SCREEN,W/SUPPORT	1	10469035	10469035	—	—	—
2.368	SCREW,CAP	2	1876163	1876163	—	—	—
2.183	SCREW,W/LW,CAP ATTACH	4	1977377	1977377	—	—	—
2.383	SCREW,W/LW,MODULE ATTACH	2	1891234	1891234	—	—	—
2.183	SCREW,W/WASHER,IGN COIL ATTACH ...	4	1985472	1985472	—	—	—
2.383	SCREW,W/WASHER,ROTOR ATTACH	2	1875948	1875948	—	—	—
2.183	SEAL,UNDER IGN COIL(RUBBER)	1	1875962	1875962	—	—	—
2.383	SHIELD,MODULE	1	1984382	1984382	—	—	—
2.400	STRAP,GROUND	1	1894868	1894868	—	—	—
2.383	TERMINAL BLOCK(INCL CAPACITOR) ...	1	1892261	1892261	—	—	—
2.383	TERMINAL BLOCK(TO ELEK PKG)	1	1986260	1986260	—	—	—
2.379	WASHER,UNDER GEAR	1	1837617	1837617	—	—	—
2.379	WASHER,UNDER GEAR TANG	1	1965864	1965864	—	—	—

© 2000 GENERAL MOTORS SERVICE PARTS OPERATIONS-CHEVROLET-14Y

1980 DISTRIBUTORS

NOTE: A01 NEW SERVICE CONCEPT - AS DISTRIBUTORS ARE DISCONTINUED,COMPONENT PARTS ONLY
NOTE: A02 WILL BE AVAILABLE FOR SERVICE - DO NOT ORDER DISTRIBUTOR ASSEMBLY

PRODUCTION NUMBER	DIV.	USAGE	COLUMN
10497134	1	Y	1
01103680	1	Y	2

GROUP	DESCRIPTION	QTY	1	2	3	4	5
2.361	DISTRIBUTOR	1	10497134	1103680	—	—	—
2.368	BRUSH,RESISTOR	1	1989880	1989880	—	—	—
2.367	CAP	1	1977046	1977046	—	—	—
2.170	COIL,IGNITION	1	1985474	1985474	—	—	—
2.368	COVER,CAP	1	1876960	1876960	—	—	—
2.374	GEAR	1	10456413	10456413	—	—	—
2.362	HOUSING	1	1988614	1988614	—	—	—
2.372	MAINSHAFT(COMPLETE)	1	1976909	1976909	—	—	—
2.383	MODULE	1	16139069	16139069	—	—	—
2.372	PIN,POLE PIECE & PLATE LOCATOR	1	456969	456969	—	—	—
2.372	POLE PIECE & PLATE(PICK-UP COIL)	1	1977207	1977207	—	—	—
2.372	RETAINER,POLE PIECE & PLATE	1	1892222	1892222	—	—	—
2.382	ROTOR	1	10498160	10498160	—	—	—
2.363	SCREEN,W/SUPPORT	1	10469036	10469036	—	—	—
2.368	SCREW,CAP	2	1876163	1876163	—	—	—
2.183	SCREW,W/LW,CAP ATTACH	4	1977377	1977377	—	—	—
2.383	SCREW,W/LW,MODULE ATTACH	2	1891234	1891234	—	—	—
2.183	SCREW,W/WASHER,IGN COIL ATTACH	4	1985472	1985472	—	—	—
2.383	SCREW,W/WASHER,ROTOR ATTACH	2	1875948	1875948	—	—	—
2.183	SEAL,UNDER IGN COIL(RUBBER)	1	1875962	1875962	—	—	—
2.383	SHIELD,MODULE	1	1984382	1984382	—	—	—
2.400	STRAP,GROUND	1	1894868	1894868	—	—	—
2.383	TERMINAL BLOCK(INCL CAPACITOR)	1	1892261	1892261	—	—	—
2.383	TERMINAL BLOCK(TO ELEK PKG)	1	1986260	1986260	—	—	—
2.379	WASHER,UNDER GEAR	1	1837617	1837617	—	—	—
2.379	WASHER,UNDER GEAR TANG	1	1965864	1965864	—	—	—

© 2000 GENERAL MOTORS SERVICE PARTS OPERATIONS-CHEVROLET-14Y

1969 DISTRIBUTORS

NOTE: A01 NEW SERVICE CONCEPT - AS DISTRIBUTORS ARE DISCONTINUED,COMPONENT PARTS ONLY
NOTE: A02 WILL BE AVAILABLE FOR SERVICE - DO NOT ORDER DISTRIBUTOR ASSEMBLY

PRODUCTION NUMBER	DIV.	USAGE	COLUMN
10497134	1	Y	1
01103600	1	Y(5.7-8)	2

GROUP	DESCRIPTION	QTY	1	2	3	4	5
2.361	DISTRIBUTOR	1	10497134	1103600	—	—	—
2.368	BRUSH,RESISTOR	1	1989000	1989000	—	—	—
2.367	CAP	1	1977046	1977046	—	—	—
2.170	COIL,IGNITION	1	1985474	1985474	—	—	—
2.368	COVER,CAP	1	1875960	1875960	—	—	—
2.374	GEAR	1	10456413	10456413	—	—	—
2.362	HOUSING	1	1988614	1988614	—	—	—
2.372	MAINSHAFT(COMPLETE)	1	1976909	1976909	—	—	—
2.303	MODULE	1	16139869	16139869	—	—	—
2.372	PIN,POLE PIECE & PLATE LOCATOR	1	456969	456969	—	—	—
2.372	POLE PIECE & PLATE(PICK-UP COIL)	1	1977207	1977207	—	—	—
2.372	RETAINER,POLE PIECE & PLATE	1	1892222	1892222	—	—	—
2.302	ROTOR	1	10498150	10498150	—	—	—
2.363	SCREEN,W/SUPPORT	1	10469035	10469035	—	—	—
2.360	SCREW,CAP	2	1876153	1876153	—	—	—
2.103	SCREW,W/LW,CAP ATTACH	4	1977377	1977377	—	—	—
2.303	SCREW,W/LW,MODULE ATTACH	2	1891234	1891234	—	—	—
2.103	SCREW,W/WASHER,IGN COIL ATTACH	4	1985472	1985472	—	—	—
2.303	SCREW,W/WASHER,ROTOR ATTACH	2	1875948	1875948	—	—	—
2.103	SEAL,UNDER IGN COIL(RUBBER)	1	1875962	1875962	—	—	—
2.303	SHIELD,MODULE	1	1984382	1984382	—	—	—
2.400	STRAP,GROUND	1	1894868	1894868	—	—	—
2.303	TERMINAL BLOCK(INCL CAPACITOR)	1	1892261	1892261	—	—	—
2.303	TERMINAL BLOCK(TO ELEK PKG)	1	1986260	1986260	—	—	—
2.379	WASHER,UNDER GEAR	1	1837617	1837617	—	—	—
2.379	WASHER,UNDER GEAR TANG	1	1965864	1965864	—	—	—

© 2000 GENERAL MOTORS SERVICE PARTS OPERATIONS-CHEVROLET-14Y

1990 DISTRIBUTORS

NOTE: A01 NEW SERVICE CONCEPT - AS DISTRIBUTORS ARE DISCONTINUED,COMPONENT PARTS ONLY
NOTE: A02 WILL BE AVAILABLE FOR SERVICE - DO NOT ORDER DISTRIBUTOR ASSEMBLY

PRODUCTION NUMBER	DIV.	USAGE	COLUMN
10497134	1	Y	1
01103680	1	Y(5.7-8)	2
01103679	1	Y(5.7-8)	3

GROUP	DESCRIPTION	QTY	1	2	3	4	5
2.361	DISTRIBUTOR	1	10497134	1103680	1103679	—	—
2.368	BRUSH,RESISTOR	1	1989000	1989000	1989000	—	—
2.367	CAP	1	1977046	1977046	1977046	—	—
2.170	COIL,IGNITION	1	1985474	1985474	1985474	—	—
2.368	COVER,CAP	1	1875960	1875960	1875960	—	—
2.374	GEAR	1	10456413	10456413	10456413	—	—
2.362	HOUSING	1	1988614	1988614	1988614	—	—
2.372	MAINSHAFT(COMPLETE)	1	1976909	1976909	1976909	—	—
2.383	MODULE	1	16139869	16139869	16139869	—	—
2.372	PIN,POLE PIECE & PLATE LOCATOR	1	456969	456969	456969	—	—
2.372	POLE PIECE & PLATE(PICK-UP COIL)	1	1977207	1977207	1977207	—	—
2.372	RETAINER,POLE PIECE & PLATE	1	1892222	1892222	1892222	—	—
2.382	ROTOR	1	10498150	10498150	10498150	—	—
2.363	SCREEN,W/SUPPORT	1	10469035	10469035	10469035	—	—
2.368	SCREW,CAP	2	1876153	1876153	1876153	—	—
2.183	SCREW,W/LW,CAP ATTACH	4	1977377	1977377	1977377	—	—
2.383	SCREW,W/LW,MODULE ATTACH	2	1891234	1891234	1891234	—	—
2.183	SCREW,W/WASHER,IGN COIL ATTACH	4	1985472	1985472	1985472	—	—
2.383	SCREW,W/WASHER,ROTOR ATTACH	2	1875948	1875948	1875948	—	—
2.183	SEAL,UNDER IGN COIL(RUBBER)	1	1875962	1875962	1875962	—	—
2.383	SHIELD,MODULE	1	1984382	1984382	1984382	—	—
2.400	STRAP,GROUND	1	1894868	1894868	1894868	—	—
2.383	TERMINAL BLOCK(INCL CAPACITOR)	1	1892261	1892261	1892261	—	—
2.383	TERMINAL BLOCK(TO ELEK PKG)	1	1986260	1986260	1986260	—	—
2.379	WASHER,UNDER GEAR	1	1837617	1837617	1837617	—	—
2.379	WASHER,UNDER GEAR TANG	1	1965864	1965864	1965864	—	—

© 2000 GENERAL MOTORS SERVICE PARTS OPERATIONS - CHEVROLET - 14Y

1991 DISTRIBUTORS

NOTE: A01 NEW SERVICE CONCEPT - AS DISTRIBUTORS ARE DISCONTINUED,COMPONENT PARTS ONLY
NOTE: A02 WILL BE AVAILABLE FOR SERVICE - DO NOT ORDER DISTRIBUTOR ASSEMBLY

PRODUCTION NUMBER	DIV.	USAGE	COLUMN
01103079	1	Y(6.7-8)	1

GROUP	DESCRIPTION	QTY	1	2	3	4	5
2.361	DISTRIBUTOR(PRODUCTION)	1	1103079	—	—	—	—
2.368	BRUSH,RESISTOR	1	1989880	—	—	—	—
2.367	CAP	1	1977046	—	—	—	—
2.170	COIL,IGNITION	1	1986474	—	—	—	—
2.368	COVER,CAP	1	1876960	—	—	—	—
2.374	GEAR	1	10466413	—	—	—	—
2.362	HOUSING	1	1988614	—	—	—	—
2.372	MAINSHAFT(COMPLETE)	1	1976909	—	—	—	—
2.383	MODULE	1	16139869	—	—	—	—
2.372	PIN,POLE PIECE & PLATE LOCATOR ...	1	466969	—	—	—	—
2.372	POLE PIECE & PLATE(PICK-UP COIL) .	1	1977207	—	—	—	—
2.372	RETAINER,POLE PIECE & PLATE	1	1892222	—	—	—	—
2.382	ROTOR	1	10498160	—	—	—	—
2.363	SCREEN & SUPPORT	1	10469035	—	—	—	—
2.368	SCREW,CAP	2	1876163	—	—	—	—
2.183	SCREW,W/LW,CAP ATTACH	4	1977377	—	—	—	—
2.383	SCREW,W/LW,MODULE ATTACH	2	1891234	—	—	—	—
2.183	SCREW,W/WASHER,IGN COIL ATTACH ...	4	1985472	—	—	—	—
2.383	SCREW,W/WASHER,ROTOR ATTACH	2	1876948	—	—	—	—
2.183	SEAL,UNDER IGN COIL(RUBBER)	1	1876962	—	—	—	—
2.383	SHIELD,MODULE	1	1984382	—	—	—	—
2.400	STRAP,GROUND	1	1894868	—	—	—	—
2.383	TERMINAL BLOCK(INCL CAPACITOR) ...	1	1892261	—	—	—	—
2.383	TERMINAL BLOCK(TO ELEK PKG)	1	1986260	—	—	—	—
2.379	WASHER,UNDER GEAR	1	1837617	—	—	—	—
2.379	WASHER,UNDER GEAR TANG	1	1965864	—	—	—	—

MICROFICHE INDEX

GROUP 2.000

FICHE 3 OF 11

GROUP	DESCRIPTION	STARTING GRID LOCATION PARTS	ILLUSTRATIONS
–	GENERAL INFORMATION	1–A2	1–G2
–	ALPHABETICAL INDEX	1–B13	N.A.
2.000	CHASSIS WIRING – LAMPS	3–A2	3–F2
–	OUT OF FICHE CALLS	N.A.	3–M20

3–C1

2.362 COVER – HOUSING, Ignition Distributor

NOTE: FOR 1985–1991 USAGE REFER TO DISTRIBUTOR CHART GRP 2.361

85	Y 5.7–8	1988614	1	93.09	HOUSING, DISTR (AC–DELCO #1988614)	3–F24,22
86–91	Y FOR MDL APPL & POA INFO SEE DISTR CHT	1988614	1	93.09	HOUSING, DISTR (AC–DELCO #1988614)	3–F24,22
90–95	Y 5.7J (LT5)	10467063	1	38.52	HOUSING, DISTR (AC–DELCO #10467063)	3–F28,1
84	Y	1978152	1	DISCON	HOUSING, IGN DISTR	

2.363 BOLT – CLAMP – GASKET – SCREEN – SEAL, Ignition Distributor Housing

NOTE: FOR 1985–1991 USAGE REFER TO DISTRIBUTOR CHART GRP 2.361

92–96	Y 5.7P (LT1)	9442398	3	.80	BOLT, DISTR (HFH, 1/4–20X2, .75 THD, .52 OD, 280M, PO) (08.900)	1–J6,239
96	Y 5.7–5 (LT4)	9442398	3	.80	BOLT, DISTR (HFH, 1/4–20X2, .75 THD, .52 OD, 280M, PO) (08.900)	1–J6,239
88–90	Y 5.7–8 (L98)	9440901	1	1.35	BOLT, DISTR CLA (3/8–16X1.1/8) (ALSO USE 12346001 SEALER) (08.900)	
88–90	Y 5.7–8 (L98)	14091544	1	1.35	BOLT, DISTR CLA (3/8–16X1.1/8) (08.900)	1–H2,103
84	Y 5.7–8 (L83)	10198997	AR	*.57	BOLT, IGN TIMER DIST CLA (3/8–16X1.25 280M) (03.275)	1–G19,103
85–88	Y 5.7–8 (L98)	10198997	AR	*.57	BOLT, IGN TIMER DIST CLA (3/8–16X1.25 280M) (03.275)	1–G19,103
84–90	Y 5.7–5	10096197	1	*.99	CLAMP, DISTR	1–H2,101
91	Y 5.7–8 (L98)	10096197	1	*.99	CLAMP, DISTR	1–H2,101
84–88	Y	10096197	1	*.99	CLAMP, IGN TIMER DIST	1–H2,101
84–91	Y 5.7–8	10108445	1	*.10	GASKET, DISTR (AC–DELCO #10108445)	1–H2,84
85–91	Y FOR MDL APPL & POA INFO SEE DISTR CHT	10469035	1	3.47	SCREEN, W/SUPPORT, DISTR (02.362) (AC–DELCO #10469035)	3–F24,24
95–96	Y 5.7P (LT1)	10474278	2	*.27	SEAL, DISTR HSG OIL (O RING) (02.372) (AC–DELCO #10474278)	3–F27,4
96	Y 5.7–5 (LT4)	10474278	2	*.27	SEAL, DISTR HSG OIL (O RING) (02.372) (AC–DELCO #10474278)	3–F27,4
84	Y	1950569	1	*1.22	SEAL, HSG OIL (AC–DELCO #1950569)	

2.364 WASHER, Distributor Lubrication

84	Y 5.7–8 (L83)	3754153	1	*.97	WASHER, IGN TIMER DIST CLA (05.383)	1–G19,102
85–88	Y 5.7–8 (L98)	3754153	1	*.97	WASHER, IGN TIMER DIST CLA (05.383)	1–G19,102

2.367 CAP – CAP KIT – SEAL, Distributor

NOTE: FOR 1985–1991 USAGE REFER TO DISTRIBUTOR CHART GRP 2.361

NOTE: SEE GROUP 2.270 FOR TUNE–UP PARTS CHART

92–94	Y 5.7P (LT1)	10457735	1	408.00	CAP KIT, DISTR (W/ROT) (AC–DELCO #D327A)	
95–96	Y 5.7P (LT1)	10457293	1	205.02	CAP KIT, DISTR (W/ROT) (INCL CVR & O–RING) (AC–DELCO #D8301)	3–F27,2
96	Y 5.7–5 (LT4)	10457293	1	205.02	CAP KIT, DISTR (W/ROT) (INCL CVR & O–RING) (AC–DELCO #D8301)	3–F27,2

© 2000 GENERAL MOTORS SERVICE PARTS OPERATIONS–CHEVROLET–14Y

2.367 CAP – CAP KIT – SEAL, Distributor (Con't)

84	Y	1974408	1	22.85	CAP, DISTR (AC–DELCO #D336)	
85–91	Y FOR MDL APPL & POA INFO SEE DISTR CHT	1977046	1	31.89	CAP, DISTR (AC–DELCO #D338)	3–F24,5

2.368 BOLT – BRUSH – COVER – SCREW, Distributor Cap Retaining

NOTE: FOR 1985–1991 USAGE REFER TO DISTRIBUTOR CHART GRP 2.361

85–91	Y FOR MDL APPL & POA INFO SEE DISTR CHT	1876153	2	1.50	BOLT, DISTR CAP (CVR ATTACH) (HEX, 8–18X.50, .328 OD, GM160–M, PC, TAP) (AC–DELCO #1876153)	3–F24,10
84	Y	1989880	1	*3.53	BRUSH, DISTR CAP RES (AC–DELCO #1989880)	3–F24,6
85–91	Y FOR MDL APPL & POA INFO SEE DISTR CHT	1989880	1	*3.53	BRUSH, DISTR CAP RES (AC–DELCO #1989880)	3–F24,6
84–85	Y	1875960	1	11.69	COVER, DISTR CAP (AC–DELCO #1875960)	3–F24,1
86–91	Y FOR MDL APPL & POA INFO SEE DISTR CHT	1875960	1	11.69	COVER, DISTR CAP (AC–DELCO #1875960)	3–F24,1
84	Y	1876153	2	1.50	SCREW, DISTR CAP CVR ATTACH (AC–DELCO #1876153)	3–F24,10
85–91	Y FOR MDL APPL & POA INFO SEE DISTR CHT	1977377	4	*.67	SCREW, W/LW, CAP ATTACH (10–24 UNC X 0.72, 0.37 THD, 0.383 OD, GM275M, PC, MACH) (AC–DELCO #1977377)	3–F24,12

2.372 PIN – POLE – POLE PIECE – POLE PIECE & PLATE – RETAINER – SEAL – SHAFT, Distributor Shaft

NOTE: FOR 1985–1991 USAGE REFER TO DISTRIBUTOR CHART GRP 2.361

85–91	Y FOR MDL APPL & POA INFO SEE DISTR CHT	456969	1	1.10	PIN, POLE PIECE & PLT LOCATOR (AC–DELCO #456969)	3–F24,13
86–91	Y FOR MDL APPL & POA INFO SEE DISTR CHT	1977207	1	46.21	POLE PIECE & PLATE, DISTR (AC–DELCO #D1945)	3–F24,25
84–85	Y	1977207	1	46.21	POLE PIECE AND PLATE (AC–DELCO #D1945)	3–F24,25
91	Y FOR MDL APPL & POA SEE DISTR CHT	1892222	1	*.94	RETAINER, DISTR POLE PIECE (AC–DELCO #1892222)	3–F24,26
84	Y	1892222	1	*.94	RETAINER, POLE PIECE AND PLATE (AC–DELCO #1892222)	3–F24,26
85–90	Y FOR MDL APPL & POA INFO SEE DISTR CHT	1892222	1	*.94	RETAINER, POLE PIECE AND PLATE (AC–DELCO #1892222) .	3–F24,26
92–94	Y 5.7P (LT1)	10128317	1	2.35	SEAL, DISTR DRV SHF (IN ENG FRT CVR)	1–I23,237
95–96	Y 5.7P (LT1)	12552428	1	5.10	SEAL, DISTR DRV SHF (02.363) .	1–I12,226
96	Y 5.7L (LT4)	12552428	1	5.10	SEAL, DISTR DRV SHF (02.363) .	1–I12,226
84	Y	1976909	1	58.14	SHAFT, DISTR (AC–DELCO #1976909)	3–F24,9
85–91	Y FOR MDL APPL & POA INFO SEE DISTR CHT	1976909	1	58.14	SHAFT, DISTR (AC–DELCO #1976909)	3–F24,9

2.374 GEAR – GEAR KIT, Distributor Drive and Driven

NOTE: FOR 1985–1991 USAGE REFER TO DISTRIBUTOR CHART GRP 2.361

84	Y	1958599	1	29.34	GEAR KIT, DISTR (AC–DELCO #1958599)	
84–85	Y	1958599	1	29.34	GEAR, DISTR (AC–DELCO #1958599)	
85–91	Y FOR MDL APPL & POA INFO SEE DISTR CHT	10456413	1	34.44	GEAR, DISTR SHF (HARDENED GEAR FOR STEEL CAMSHAFT) (AC–DELCO #10456413)	3–F24,18

© 2000 GENERAL MOTORS SERVICE PARTS OPERATIONS–CHEVROLET–14Y

2.379 WASHER, Distributor Drive Gear

NOTE: FOR 1985–1991 USAGE REFER TO DISTRIBUTOR CHART GRP 2.361

84	Y	1965864	1	*1.35	WASHER, TANG UNDER GEAR (AC–DELCO #1965864)	3–F24,21
85–91	Y FOR MDL APPL & POA SEE DISTR CHT	1965864	1	*1.35	WASHER, TANG UNDER GEAR (AC–DELCO #1965864)	3–F24,21
84	Y	1837617	1	*1.20	WASHER, UNDER GEAR (AC–DELCO #1837617)	3–F24,20
85–91	Y FOR MDL APPL & POA INFO SEE DISTR CHT	1837617	1	*1.20	WASHER, UNDER GEAR (AC–DELCO #1837617)	3–F24,20

2.382 ROTOR, Distributor

NOTE: FOR 1985–1991 USAGE REFER TO DISTRIBUTOR CHART GRP 2.361

NOTE: SEE GROUP 2.270 FOR TUNE–UP PARTS CHART

84	Y	10498150	1	7.55	ROTOR, DISTR (AC–DELCO #D448)	3–F24,8
85–91	Y FOR MDL APPL & POA INFO SEE DISTR CHT	10498150	1	7.55	ROTOR, DISTR (AC–DELCO #D448)	3–F24,8

2.383 BOLT – BRACKET – CONNECTOR – GASKET – HARNESS – HEAT SINK – MODULE – RING – SCREW – SEAL – SENSOR – SHIELD – SHIM – SLEEVE – TERMINAL BLOCK, Distributor (also Knock Sensor)

NOTE: FOR 1985–1991 USAGE REFER TO DISTRIBUTOR CHART GRP 2.361

92–93	Y 5.7J (LT5)	11508805	1	*.41	BOLT, CM/SHF POSN SEN (HFH M6X1X16 9.8 POR 14 OD 14MM THD) (08.900)	1–J6,282
91–93	Y 5.7J (LT5)	11508805	1	*.41	BOLT, CR/SHF POSN SEN (HFH M6X1X16 9.8 POR 14 OD 14MM THD) (08.900)	1–J6,282
92–93	Y 5.7J (LT5)	11508805	4	*.41	BOLT, CR/SHF POSN SEN (HFH M6X1X16 9.8 POR 14 OD 14MM THD) (08.900)	1–J6,282
96	Y 5.7–5 (LT4)	11508805	1	*.41	BOLT, CR/SHF POSN SEN (HFH M6X1X16 9.8 POR 14 OD 14MM THD) (08.900)	1–J6,282
90–92	Y 5.7J (LT5)	11517518	4	1.85	BOLT, ELEK ICM (HEAVY HEX FLANGE HD) (HFH, M6X1X20, 19 THD, 14.2 OD, 9.8, 6280M, MACH HD PT) (08.900) (AC–DELCO #11517518)	1–H20,533
93–95	Y 5.7J (LT5)	11514150	4	7.50	BOLT, ELEK ICM ((6X1X20) (PE 9.8)) (08.900)	1–H20,533
90–95	Y 5.7J (LT5)	10467062	1	48.72	BRACKET, ELEK ICM (02.170) (AC–DELCO #10467062)	3–F28,4
84–89	Y	14087642	1	DISCON	BRACKET, ELEK SPARK CONT MDL	
90	Y SOFT RIDE SUSP (FE1), HVY DUTY SUSP (FE7)	14087342	1	DISCON	BRACKET, ELEK SPARK CONT MDL	
93–95	Y	12126487	1	37.29	CONNECTOR, MDL–DISTR IGN CONT (4–WAY F) (W/LEADS) (AC–DELCO #PT757)	
94	Y 5.7P (LT1)	12126456	1	55.52	CONNECTOR, MDL–DISTR IGN CONT (1–WAY M, W/LEADS, HIGH TEMP) (01.150) (AC–DELCO #PT727)	4–J9,6
90–95	Y 5.7J (LT5)	12101855	1	19.95	CONNECTOR, MDL–ELEK IGN CONT (2–WAY F) (W/LEADS) (W/SEAL) (02.535) (AC–DELCO #PT247)	

© 2000 GENERAL MOTORS SERVICE PARTS OPERATIONS–CHEVROLET–14Y

2.383 BOLT – BRACKET – CONNECTOR – GASKET – HARNESS – HEAT SINK – MODULE – RING – SCREW – SEAL – SENSOR – SHIELD – SHIM – SLEEVE – TERMINAL BLOCK, Distributor (also Knock Sensor) (Con't)

90–95	Y 5.7J (LT5)	12102776	1	30.66	CONNECTOR, MDL–ELEK IGN CONT (4–WAY F, W/LEADS) (02.170) (AC–DELCO #PT402)	
90	Y 5.7J (LT5)	12167116	1	31.13	CONNECTOR, MDL–ELEK IGN CONT (3–WAY F W/LEADS) (AC–DELCO #PT782)	
91–95	Y 5.7J (LT5)	12117339	1	26.83	CONNECTOR, MDL–ELEK IGN CONT (3–WAY F) (W/LEADS) (10.150) (AC–DELCO #PT472)	
90	Y 5.7J (LT5)	12117025	1	21.82	CONNECTOR, SEN–CM/SHF POSN (AC–DELCO #PT420) ..	
92–95	Y 5.7J (LT5)	12117025	1	21.82	CONNECTOR, SEN–CM/SHF POSN (BLACK) (3–WAY F) (W/LEADS) (AC–DELCO #PT420)	
96	Y	12085495	1	26.46	CONNECTOR, SEN–CR/SHF POSN (BLACK) (3–WAY F) (W/LEADS) (02.535) (AC–DELCO #PT117)	
91–96	Y	12126456	1	55.52	CONNECTOR, SEN–KNOCK (1–WAY M, W/LEADS, HIGH TEMP) (01.150) (AC–DELCO #PT727)	4–J9,6
90–95	Y 5.7J (LT5)	1989579	8	*2.00	GASKET, ELEK ICM (TYPE II, DELCO REMY, 2 TERMS) (02.183) (AC–DELCO #1989579)	3–F28,2
92	Y 5.7P (LT1)	12106522	1	DISCON	HARNESS, DISTR WRG (02.240)	
93	Y 5.7P (LT1)	12106559	1	88.07	HARNESS, DISTR WRG	1–I23,246
94	Y 5.7P (LT1), (1ST DES)	12106559	1	88.07	HARNESS, DISTR WRG (DISTR CONN IS APPX 1" LG)	1–I23,246
94	Y 5.7P (LT1), (2ND DES)	12130319	1	38.32	HARNESS, DISTR WRG (DISTR CONN IS APPX 2" LG)	1–J6,246
95–96	Y 5.7P (LT1)	12130319	1	38.32	HARNESS, DISTR WRG	1–J6,246
96	Y 5.7–5 (LT4)	12130319	1	38.32	HARNESS, DISTR WRG	1–J6,246
92–96	Y 5.7P (LT1)	10474610	1	10.51	HEAT SINK, ELEK ICM (AC–DELCO #10474610)	3–G2,2
96	Y 5.7–5 (LT4)	10474610	1	10.51	HEAT SINK, ELEK ICM (AC–DELCO #10474610)	3–G2,2
84–85	Y	10482832	1	67.83	MODULE, DISTR (AC–DELCO #D1961A)	3–F24,16
90–95	Y 5.7J (LT5)	1103841	1	748.54	MODULE, DISTR IGN CONT	1–H20,526
87–89	YY V8, 5.7L ALL, (350–8) ...	10482832	AR	67.83	MODULE, ELEK IGN CONT (AC–DELCO #D1961A)	3–F24,16
90–91	YY V8, 5.7L ALL, (350–8) ...	10482827	AR	67.83	MODULE, ELEK IGN CONT (AC–DELCO #D1943A)	
90–91	YY V8, 5.7L ALL, CANADIAN, (350–8)	10482832	AR	67.83	MODULE, ELEK IGN CONT (AC–DELCO #D1961A)	3–F24,16
92	Y 5.7P (LT1)	10483131	1	124.44	MODULE, ELEK IGN CONT (W/O COIL) (AC–DELCO #D1971A)	3–G2,1
93	Y 5.7P (LT1), 4–SPD A/TRANS (MD8), 6–SPD M/TRANS (ML9)	10483131	1	124.44	MODULE, ELEK IGN CONT (W/O COIL) (AC–DELCO #D1971A)	3–G2,1
94–95	Y 5.7P (LT1)	10483139	1	96.15	MODULE, ELEK IGN CONT (W/O COIL) (AC–DELCO #D1986A)	3–G2,1
96	Y	10482803	1	111.18	MODULE, ELEK IGN CONT (W/O COIL) (AC–DELCO #D579) ...	3–G4,1
90	Y 5.7J (LT5)	16080211	1	70.89	MODULE, ELEK SPARK CONT (AC–DELCO #D1931A)	4–K12,1

© 2000 GENERAL MOTORS SERVICE PARTS OPERATIONS–CHEVROLET–14Y

2.383 BOLT – BRACKET – CONNECTOR – GASKET – HARNESS – HEAT SINK – MODULE – RING – SCREW – SEAL – SENSOR – SHIELD – SHIM – SLEEVE – TERMINAL BLOCK, Distributor (also Knock Sensor) (Con't)

84–86	Y	16126761	1	84.64	MODULE, KNOCK SEN (AC–DELCO #216–45)	4–J13,15
87–89	Y 5.7–8 (L98)	16126261	1	84.64	MODULE, KNOCK SEN (AC–DELCO #216–47)	4–J24,20
94–95	Y 5.7P (LT1)	16177690	1	75.48	MODULE, KNOCK SEN (8 PIN MDL PLUGS INTO PCM LIKE A PROM)	3–I12,10
96	Y 5.7P (LT1)	16214671	1	50.59	MODULE, KNOCK SEN (PLUGS INTO PCM MDL) (AC–DELCO #216–66)	3–I12,10
96	Y 5.7–5 (LT4)	16214681	1	50.59	MODULE, KNOCK SEN (AC–DELCO #216–67)	3–I12,10
96	Y 5.7P (LT1), 4–SPD A/TRANS (M30)	10190917	1	6.89	RING, CR/SHF POSN SEN RELUCTOR	1–J10,335
96	Y 5.7–5 (LT4), 6–SPD M/TRANS (ML9)	10190917	1	6.89	RING, CR/SHF POSN SEN RELUCTOR	1–J10,335
84	Y	1891234	2	*.67	SCREW, W/LW, MODULE ATTACH (AC–DELCO #1891234)	3–F24,14
85–91	Y FOR MDL APPL & POA INFO SEE DISTR CHT	1891234	2	*.67	SCREW, W/LW, MODULE ATTACH (, (5.1), ZP, TAP) (HEX W/EXTERNAL TOOTH LOCK WASHER, 6–32UNC–2AX.75, .25 OD, GM275M) (AC–DELCO #1891234)	3–F24,14
84	Y	1875948	2	*.67	SCREW, W/WA, ROTOR ATTACH (AC–DELCO #1875948)	3–F24,7
85–91	Y FOR MDL APPL & POA INFO SEE DISTR CHT	1875948	2	*.67	SCREW, W/WA, ROTOR ATTACH (GM275, PC, TAP) (W/SQUARE CONE WASHER, 10–32 UNF–2AX.44, .22 THD, .425 OD, GM275) (AC–DELCO #1875948)	3–F24,7
90–94	Y 5.7J (LT5)	1989866	1	*.59	SEAL, CR/SHF POSN SEN (O RING) (02.170) (AC–DELCO #1989866)	4–J7,18
96	Y 5.7P (LT1), 4–SPD A/TRANS (M30)	10476885	1	*1.08	SEAL, CR/SHF POSN SEN (O RING) (AC–DELCO #216–194) .	1–J6,283
96	Y 5.7–5 (LT4)	10476885	1	*1.08	SEAL, CR/SHF POSN SEN (O RING) (AC–DELCO #216–194) .	1–J6,283
90–95	Y 5.7J (LT5)	10137658	1	205.65	SENSOR, CM/SHF POSN (IF USE IN PLC OF 10096172 MUST ALSO USE 10199080 SHLD) (AC–DELCO #213–141)	4–K12,19
90–95	Y 5.7J (LT5)	10457661	1	22.58	SENSOR, CR/SHF POSN (AC–DELCO #213–153)	1–H6,126
96	Y 5.7P (LT1), 4–SPD A/TRANS (M30)	10456534	1	62.98	SENSOR, CR/SHF POSN (AC–DELCO #213–314)	1–J6,281
96	Y 5.7–5 (LT4), 6–SPD M/TRANS (ML9)	10456534	1	62.98	SENSOR, CR/SHF POSN (AC–DELCO #213–314)	1–J6,281
96	Y 5.7P (LT1), 6–SPD M/TRANS (MM6)	10456534	1	62.98	SENSOR, CR/SHF POSN (AC–DELCO #213–314)	1–J6,281
84–86	Y	10456287	1	45.12	SENSOR, KNOCK (DR–562 STAMPED) (AC–DELCO #213–325)	1–J2,123
87–89	Y	10456288	1	46.06	SENSOR, KNOCK (AC–DELCO #213–324)	1–G23,19
90	Y 5.7J (LT5)	10456075	1	54.22	SENSOR, KNOCK (AC–DELCO #213–94)	1–H6,133
90–91	Y 5.7–8 (L98)	10456549	1	48.18	SENSOR, KNOCK (1 BUTTON TYPE TERM, 1/4–18 THD) (AC–DELCO #213–92)	1–G23,19

© 2000 GENERAL MOTORS SERVICE PARTS OPERATIONS–CHEVROLET–14Y

2.383 BOLT – BRACKET – CONNECTOR – GASKET – HARNESS – HEAT SINK – MODULE – RING – SCREW – SEAL – SENSOR – SHIELD – SHIM – SLEEVE – TERMINAL BLOCK, Distributor (also Knock Sensor) (Con't)

91–95	Y 5.7J (LT5)	10456207	1	50.59	SENSOR, KNOCK (AC–DELCO #213–266)	1–H6,133
92–95	Y 5.7P (LT1)	10456126	2	30.64	SENSOR, KNOCK (AC–DELCO #213–96)	1–I8,123
93–96	Y	10456287	1	45.12	SENSOR, KNOCK (AC–DELCO #213–325)	1–J2,123
90–91	Y 5.7J (LT5)	10135807	1	7.10	SHIELD, CM/SHF POSN SEN HT (03.320) (AC–DELCO #10135807)	
92	Y 5.7J (LT5), (1ST DES)	10135807	1	7.10	SHIELD, CM/SHF POSN SEN HT (03.320) (ID BY 8.0MM CLER RADIUS) (AC–DELCO #10135807)	
92	Y 5.7J (LT5), (2ND DES)	10199080	1	8.22	SHIELD, CM/SHF POSN SEN HT (ID BY 9.5MM CLER RADIUS) (AC–DELCO #10199080)	
93–95	Y 5.7J (LT5)	10199080	1	8.22	SHIELD, CM/SHF POSN SEN HT (AC–DELCO #10199080)	
92	Y 5.7J (LT5)	10168649	1	54.83	SHIELD, CR/SHF POSN SEN	1–H20,544
93–95	Y 5.7J (LT5)	10168649	1	54.83	SHIELD, CR/SHF POSN SEN (W/OIL LVL IND TUBE SHLD) ..	1–H20,544
84	Y	14067303	1	DISCON	SHIELD, DISTR	
84–88	Y	10096158	1	2.50	SHIELD, ESC KNOCK SEN	1–G23,75
89–91	Y 5.7–8 (L98)	10096158	1	2.50	SHIELD, KNOCK SEN	1–G23,75
90–95	Y 5.7J (LT5)	10199007	1	68.34	SHIELD, KNOCK SEN	1–H20,544
92–95	Y 5.7P (LT1)	10096158	RH	2.50	SHIELD, KNOCK SEN	1–G23,75
92–95	Y 5.7P (LT1)	10204240	LH	2.50	SHIELD, KNOCK SEN	
96	Y	10096158	RH	2.50	SHIELD, KNOCK SEN	1–G23,75
96	Y	10204240	LH	2.50	SHIELD, KNOCK SEN	
84	Y	1984382	1	1.69	SHIELD, MODULE (AC–DELCO #1984382)	3–F24,15
85–91	Y FOR MDL APPL & POA INFO SEE DISTR CHT	1984382	1	1.69	SHIELD, MODULE (AC–DELCO #1984382)	3–F24,15
90–95	Y 5.7J (LT5)	10174314	AR	22.45	SHIM, CR/SHF POSN SEN (3.0 MM THK)	
90–95	Y 5.7J (LT5)	10174315	AR	22.90	SHIM, CR/SHF POSN SEN (3.25 MM THK)	
90–95	Y 5.7J (LT5)	10174316	AR	26.27	SHIM, CR/SHF POSN SEN (3.65 MM THK)	
90–95	Y 5.7J (LT5)	10146300	1	26.27	SLEEVE, CR/SHF TMG SEN	
84	Y	1892261	1	21.11	TERMINAL BLOCK (INCL CAPACITOR) (AC–DELCO #1892261)	3–F24,17
85–91	Y FOR MDL APPL & POA INFO SEE DISTR CHT	1892261	1	21.11	TERMINAL BLOCK (INCL CAPACITOR) (AC–DELCO #1892261)	3–F24,17
84	Y	1986260	1	32.40	TERMINAL BLOCK, (TO ELEK PKG) (AC–DELCO #1986260)	3–F24,23
85–91	Y FOR MDL APPL & POA INFO SEE DISTR CHT	1936260	1	32.40	TERMINAL BLOCK, (TO ELEK PKG) (AC–DELCO #1986260)	3–F24,23

2.400 STRAP, Distributor

NOTE: FOR 1985–1991 USAGE REFER TO DISTRIBUTOR CHART GRP 2.361

84	Y	1894868	1	*1.53	STRAP, GROUND (METAL STRAP CONST) (AC–DELCO #1894868)	3–F24,2
85–91	Y FOR MDL APPL & POA INFO SEE DISTR CHT	1894868	1	*1.53	STRAP, GROUND (AC–DELCO #1894868)	3–F24,2

© 2000 GENERAL MOTORS SERVICE PARTS OPERATIONS–CHEVROLET–14Y

2.420 HARNESS, Distributor Vacuum Control

95	Y 5.7P (LT1)	12554393	1	12.84	HARNESS, DISTR VAC (INCLS CK VLVS)	4–G6,16
96	Y 5.7P (LT1), 5.7–5 (LT4)	12556174	1	12.84	HARNESS, DISTR VAC	1–J6,285

2.440 BRACKET – CONNECTOR – COVER, Chassis Electric Diagnostic

84–96	Y	14073479	1	1.63	BRACKET, I/P WRG HARN ECM DATA LINK CONN (DIAG CONN)	3–H16,10
94–96	Y	12110250	1	*1.68	CONNECTOR, DATA LINK (16–WAY F) (W/O LEADS) (INCLDS MOUNTING TABS)	
84–93	Y	10021766	1	2.24	COVER, I/P WRG HARN DATA LINK CONN	3–H16,26

2.447 ACTUATOR – BRACKET – CONNECTOR – NUT – RETAINER – SWITCH, Stop Lamp Switch

84–90	Y	14047682	1	DISCON	ACTUATOR, S/LP SW	
84–89	Y	14053686	1	3.72	BRACKET, S/LP SW	3–H16,23
90–91	Y	10097689	1	7.55	BRACKET, S/LP SW	3–H21,20
92	Y 6–SPD M/TRANS (ML0)	10097689	1	7.55	BRACKET, S/LP SW	3–H21,20
92	Y 5.7P (LT1), 3–SPD A/TRANS (MD9)	10097689	1	7.55	BRACKET, S/LP SW	3–H21,20
93	Y 5.7P (LT1), 4–SPD A/TRANS (MD8)	10214036	1	7.55	BRACKET, S/LP SW	3–I12,20
93–96	Y 6–SPD M/TRANS (ML9)	10214036	1	7.55	BRACKET, S/LP SW	3–I12,20
94–96	Y 5.7P (LT1), 4–SPD A/TRANS (M30)	10214036	1	7.55	BRACKET, S/LP SW	3–I12,20
93–96	Y	12166226	1	43.07	CONNECTOR, SW–S/LP (2–WAY F) (W/LEADS & CAPACITOR)	
85–93	Y	12085532	1	17.46	CONNECTOR, SW–S/LP & TCC (2–WAY F) (W/LEADS) (02.535) (AC–DELCO #PT142)	
93–94	Y	12117350	1	22.35	CONNECTOR, SW–S/LP & TCC (4–WAY F) (W/LEADS) (09.764) (AC–DELCO #PT483)	
96	Y	12125631	1	18.43	CONNECTOR, SW–S/LP & TCC (W/LEADS) (02.485) (AC–DELCO #PT543)	
84–87	Y	12337995	1	*.46	NUT, S/LP SW ACTR (00.334) (AC–DELCO #12337995)	11–E26,13
84–92	Y	22534155	1	.14	RETAINER, S/LP SW (STEEL) (AC–DELCO #22534155)	3–H18,24
93–96	Y	10211657	1	24.54	SWITCH, ELEK BRK CONT BRK PED (W/ S/LP SW) (04.710) (AC–DELCO #10211657)	3–I12,22
84–86	Y (EXC CRCONT (K34), (M/TRNS)	25524844	1	8.22	SWITCH, S/LP (AC–DELCO #D889)	3–H18,21
84–86	Y CRCONT (K34)	25524845	1	13.46	SWITCH, S/LP (AC–DELCO #D850A)	3–H18,21
84–86	Y (EXC CRCONT (K34), (A/TRNS)	25524848	1	11.63	SWITCH, S/LP (AC–DELCO #D851A)	3–H18,21
87	Y A/TRNS (EXC CRUISE CONT K34)	25529861	1	15.40	SWITCH, S/LP (AC–DELCO #D853A)	3–H18,21
87	Y (EXC CRCONT (K34), (M/TRNS)	25529862	1	5.81	SWITCH, S/LP (AC–DELCO #D854A)	3–H18,21
89–92	Y	25529860	1	11.69	SWITCH, S/LP (AC–DELCO #D852A)	3–H18,21
87–88	Y 3–SPD A/TRANS (MD9), (EXC CRCONT (K34)	25523465	1	6.17	SWITCH, S/LP & TCC	
87–88	Y CRUISE CONT (K34)	25523463	1	6.94	SWITCH, STOP LP	

© 2000 GENERAL MOTORS SERVICE PARTS OPERATIONS–CHEVROLET–14Y

2.459 ACTUATOR – CONNECTOR – PIN – PIVOT – ROD – SPRING – SWITCH, Capsule/Headlamp Dimmer

NOTE: FOR 1988–1991 USAGE REFER TO STEERING COLUMN CHART GRP 6.518

84–86	Y	7841321	1	DISCON	ACTUATOR, D/SW ROD	
91–96	Y	7827028	1	13.67	ACTUATOR, HDLP D/SW (AC–DELCO #D844)	7–F13,21
90–96	Y	12102757	1	19.37	CONNECTOR, SW–HDLP DIMR (4–WAY F) (02.535) (AC–DELCO #PT387)	
91–96	Y	7829787	1	2.24	PIN, T/SIG LVR PIV (AC–DELCO #7829787)	7–F13,22
84–86	Y	7841314	1	20.71	PIVOT, STRG COL SW ACTR	
84–86	Y	7840668	1	10.46	ROD, D/SW	
91–93	Y	26012347	1	10.20	ROD, HDLP D/SW ACTR	7–F13,77
94–96	Y	26035679	1	10.20	ROD, HDLP D/SW ACTR	7–F21,77
94–96	Y	7828351	1	2.80	SPRING, T/SIG LVR PIV PIN	
91	Y	26019660	1	29.07	SWITCH, HDLP DIMR (COLUMN) (AC–DELCO #D834)	7–F13,83
92–96	Y	26035239	1	14.59	SWITCH, HDLP DIMR (AC–DELCO #D8041A)	7–F13,83
84	Y (EXC EXPORT VB4, VD1, VE1, VT7)	26035239	1	14.59	SWITCH, STRG COL DIMR (AC–DELCO #D8041A)	7–F13,83
85–86	Y	26035239	1	14.59	SWITCH, STRG COL DIMR (AC–DELCO #D8041A)	7–F13,83
	*EXPORT**********EXPORT**********EXPORT**********EXPORT**********EXPORT*					
84	Y EXPORT	7829781	1	34.44	SWITCH, DIMR (AC–DELCO #D816)	

2.461 ALARM, Capsule/Headlamp Warning

90–96	Y	25518746	1	55.34	ALARM, ST BELT & IGN KEY & LPS (09.765)	3–H21,42

2.480 BRACKET – CONNECTOR – HARNESS – WIRE, Chassis Wiring

84–86	Y	14062600	1	DISCON	BRACKET, ENG WRG HARN (RR MANIF BY DISTR)	
84–85	Y	8905220	1	*3.77	CONNECTOR, THEFT DETERRENT WRG (02.530)	
94	Y 4–SPD A/TRANS (M30)	15320479	1	119.63	HARNESS, A/TRNS WRG (AC–DELCO #15320479)	5–K2,66
95	Y 4–SPD A/TRANS (M30)	15320477	1	75.73	HARNESS, A/TRNS WRG (INCLS TCC SOLENOID W/TCC DRAINDOWN FEATURE) (AC–DELCO #15320477)	5–K2,66
96	Y 4–SPD A/TRANS (M30)	15320476	1	81.04	HARNESS, A/TRNS WRG (INCLS TCC SOL VLV) (AC–DELCO #15320476)	5–L2,66
85	Y A/TRNS (MD8)	12048732	1	DISCON	HARNESS, E.C.M.	
85	Y M/TRNS (MH5, MK2) W/FED (NA5)	12048733	1	DISCON	HARNESS, E.C.M.	
84	Y A/TRNS, FED, CALIF (1ST DES)	12028754	1	DISCON	HARNESS, ELEK CONT MDL WRG (SGL WIRE OIL PRESS SW CONN)	
84	Y M/TRNS, FED, CALIF (1ST DES)	12029199	1	DISCON	HARNESS, ELEK CONT MDL WRG (SGL WIRE OIL PRESS SW CONN)	
84	Y M/TRNS, FED, CALIF (2ND DES)	12029216	1	DISCON	HARNESS, ELEK CONT MDL WRG (DBL WIRE OIL PRESS SW CONN)	

© 2000 GENERAL MOTORS SERVICE PARTS OPERATIONS–CHEVROLET–14Y

2.480 BRACKET – CONNECTOR – HARNESS – WIRE, Chassis Wiring (Con't)

84	Y A/TRNS, FED, CALIF (2ND DES)	12029217	1	DISCON	HARNESS, ELEK CONT MDL WRG (DBL WIRE OIL PRESS SW CONN)	
89	Y (5.7–8) A/TRNS, A/C (C68)	12090323	1	1266.25	HARNESS, ENG & ECM (02.525)	
86	Y M/TRNS, A/C (C60), FED (NA5) (EXC NM8 EXPORT) .	12048815	1	DISCON	HARNESS, ENG & ECM WRG (02.525)	
86	Y A/TRNS, A/C (C60) (EXC NM8 EXPORT)	12048817	1	DISCON	HARNESS, ENG & ECM WRG (02.525)	
86	Y A/TRNS, A/C (C68) (EXC NM8 EXPORT)	12048818	1	DISCON	HARNESS, ENG & ECM WRG (02.525)	
86	Y07 M/TRNS, A/C (C68), FED (NA5) (EXC NM8 EXPORT) .	12048816	1	DISCON	HARNESS, ENG & ECM WRG (02.525)	
87	Y M/TRNS, A/C (C60)	12067670	1	DISCON	HARNESS, ENG & ECM WRG (02.525)	
87	Y M/TRNS, A/C (C68)	12067671	1	DISCON	HARNESS, ENG & ECM WRG (02.525)	
87	Y A/TRNS, A/C, FED (NA5) (EXC NM8 EXPORT)	12067672	1	DISCON	HARNESS, ENG & ECM WRG (02.525)	
87	Y A/TRNS, A/C (C68), FED (NA5) (EXC NM8 EXPORT) .	12067673	1	DISCON	HARNESS, ENG & ECM WRG (02.525)	
88	Y A/TRNS, A/C (C60)	12055808	1	DISCON	HARNESS, ENG & ECM WRG (02.525)	
88	Y A/TRNS, A/C (C68)	12055809	1	DISCON	HARNESS, ENG & ECM WRG (02.525)	
88	Y M/TRNS, A/C (C60)	12080840	1	DISCON	HARNESS, ENG & ECM WRG (02.525)	
88	Y M/TRNS, A/C (C68)	12080841	1	DISCON	HARNESS, ENG & ECM WRG (02.525)	
89	Y (5.7–8) M/TRNS, A/C (C60) (2ND DES)	12090320	1	1266.25	HARNESS, ENG & ECM WRG (02.525) (ORANGE WIRE IN B–8 CAV OF VATS MDL CONN)	
89	Y (5.7–8) M/TRNS, A/C (C68)	12090321	1	1266.25	HARNESS, ENG & ECM WRG (02.525)	
89	Y (5.7–8) A/TRNS, A/C (C60) (2ND DES)	12090322	1	1266.25	HARNESS, ENG & ECM WRG (02.525) (ORANGE WIRE IN B–8 CAV OF VATS MDL CONN)	
89	Y (5.7J)	12090324	1	1266.25	HARNESS, ENG & ECM WRG (02.525)	
91	Y 5.7J (LT5)	12106549	1	26.14	HARNESS, ENG PWR SW WRG (I/P TO VALET MODE SW) (USE W/4 PIN ENG PWR SW CONN)	3–I2,49
87–89	Y	12067418	1	DISCON	HARNESS, F/FLR CNSL	
84–86	Y	12029153	1	DISCON	HARNESS, FRT FLR CNSL WRG	
85	Y (EXC VB4, VD1, VE1, VT7 EXPORT)	12050645	1	DISCON	HARNESS, FWD LP	
86	Y (EXC VB4, VD1, VE1, VT7 EXPORT)	12048809	1	DISCON	HARNESS, FWD LP	
87	Y (EXC T72, T84 EXPORT) ..	12067732	1	DISCON	HARNESS, FWD LP	
84	Y	12028953	1	DISCON	HARNESS, FWD LP WRG	
88	Y (EXC T72, T84 EXPORT) ..	12073487	1	666.86	HARNESS, FWD LP WRG	3–I20,36
89	Y (5.7–8)	12073487	1	666.86	HARNESS, FWD LP WRG	3–I20,36
90	Y (5.7–8) (EXC CANADIAN T61)	12073776	1	666.86	HARNESS, FWD LP WRG	3–I23,1
90	Y (5.7J) SOFT RIDE SUSP (FE1), H .D .SUSP (EXC CANADIAN T61)	12090331	1	985.50	HARNESS, FWD LP WRG	8–K10,20
91	Y 5.7–8 (L98), (EXC DAYTIME RUNNING LGT (T61)	12080863	1	985.50	HARNESS, FWD LP WRG	3–J2,1

© 2000 GENERAL MOTORS SERVICE PARTS OPERATIONS–CHEVROLET–14Y

2.480 BRACKET – CONNECTOR – HARNESS – WIRE, Chassis Wiring (Con't)

91	Y 5.7J (LT5), SOFT RIDE SUSP (FE1), HVY DUTY SUSP (FE7), (EXC DAYTIME RUNNING LGT (T61)	12080864	1	666.06	HARNESS, FWD LP WRG	3–J2,1
92	Y 5.7P (LT1), (EXC DAYTIME RUNNING LGT (T61)	12090371	1	292.85	HARNESS, FWD LP WRG	3–J2,1
92	Y 5.7J (LT5), (EXC DAYTIME RUNNING LGT (T61)	12090372	1	315.14	HARNESS, FWD LP WRG	3–J2,1
93	Y 5.7P (LT1), (EXC DIAGNOSTIC SYSTEM (BAK), DAYTIME RUNNING LGT (T61)	12106580	1	816.00	HARNESS, FWD LP WRG	3–J2,1
93–94	Y 5.7J (LT5), (EXC DAYTIME RUNNING LGT (T61)	12106583	1	985.50	HARNESS, FWD LP WRG	3–J2,1
93	Y 5.7P (LT1), DIAGNOSTIC SYSTEM (BAK), (EXC DAYTIME RUNNING LGT (T61)	12141822	1	292.85	HARNESS, FWD LP WRG	3–J2,1
94	Y 5.7P (LT1), (EXC HDLP (T72) (EXPORT), RH RULE OF ROAD HDLP (T84) (EXPORT), LH RULE OF ROAD HDLP (T85) (EXPORT), SIG & MKR LP (T90) (EXPORT)	12130480	1	292.85	HARNESS, FWD LP WRG	3–J2,1
94	Y 5.7J (LT5), (EXC HDLP (T72) (EXPORT), RH RULE OF ROAD HDLP (T84) (EXPORT), LH RULE OF ROAD HDLP (T85) (EXPORT), SIG & MKR LP (T90) (EXPORT)	12164336	1	292.85	HARNESS, FWD LP WRG	3–J2,1
95	Y 5.7P (LT1), (EXC HDLP (T72) (EXPORT), RH RULE OF ROAD HDLP (T84) (EXPORT), LH RULE OF ROAD HDLP (T85) (EXPORT), SIG & MKR LP (T90) (EXPORT)	12130484	1	292.85	HARNESS, FWD LP WRG	3–J2,1
95	Y 5.7J (LT5), (EXC HDLP (T72) (EXPORT), RH RULE OF ROAD HDLP (T84) (EXPORT), LH RULE OF ROAD HDLP (T85) (EXPORT), SIG & MKR LP (T90) (EXPORT)	12130486	1	292.85	HARNESS, FWD LP WRG	3–J2,1
96	Y (EXC HDLP (T72) (EXPORT), RH RULE OF ROAD HDLP (T84) (EXPORT), LH RULE OF ROAD HDLP (T85) (EXPORT), SIG & MKR LP (T90) (EXPORT)	12163717	1	292.85	HARNESS, FWD LP WRG	3–J2,1
85	Y A/TRNS (MD8), A/C (C60) .	12048741	1	DISCON	HARNESS, I/P	
85	Y M/TRNS (MH5, MK2), A/C (C60)	12048742	1	DISCON	HARNESS, I/P	
86	Y M/TRNS, A/C (C60)	12048793	1	DISCON	HARNESS, I/P	
86	Y A/TRNS, A/C (C60)	12048794	1	DISCON	HARNESS, I/P	
86	Y M/TRNS, A/C (C68)	12048795	1	DISCON	HARNESS, I/P	
86	Y A/TRNS, A/C (C68)	12048796	1	DISCON	HARNESS, I/P	
87	Y A/TRNS, A/C (C68)	12068102	1	1257.59	HARNESS, I/P	
87	Y M/TRNS, A/C (C68)	12068103	1	1257.59	HARNESS, I/P	8–K6,23

© 2000 GENERAL MOTORS SERVICE PARTS OPERATIONS–CHEVROLET–14Y

2.480 BRACKET – CONNECTOR – HARNESS – WIRE, Chassis Wiring (Con't)

87	Y A/TRNS, A/C (C60)	12073820	1	DISCON	HARNESS, I/P	
84	Y A/TRNS (1ST DES)	12036383	1	DISCON	HARNESS, I/P WRG (BLACK 5–WAY AC CONN W/2 DBL WIRES IN CAVS C & D)	
84	Y M/TRNS	12043083	1	DISCON	HARNESS, I/P WRG	
84	Y A/TRNS (2ND DES)	12043276	1	DISCON	HARNESS, I/P WRG (1 DBL WIRE IN CAV D)	
87	Y M/TRNS (MH5, MK2), A/C (C60)	12073821	1	DISCON	HARNESS, I/P WRG	
88	Y (5.7–8) M/TRNS, A/C (C60)	12073824	1	DISCON	HARNESS, I/P WRG	
88	Y (5.7–8) A/TRNS, A/C (C60)	12073825	1	DISCON	HARNESS, I/P WRG	
88	Y (5.7–8) M/TRNS, A/C (C68)	12073826	1	DISCON	HARNESS, I/P WRG	
88	Y (5.7–8) A/TRNS, A/C (C68)	12073827	1	DISCON	HARNESS, I/P WRG	
89	Y (5.7–8) ML9, A/C (C60) (1ST DES)	12073507	1	1548.75	HARNESS, I/P WRG (PINK WIRE IN B–8 CAV OF VATS MDL CONN) .	6–I4,8
89	Y (5.7–8) A/TRNS (MD8), A/C (C60) (1ST DES)	12073509	1	1548.75	HARNESS, I/P WRG (PINK WIRE IN B–8 CAV OF VATS MDL CONN) .	
89	Y (5.7–8) M/TRNS (ML9), A/C (C68) (1ST DES)	12073511	1	1548.75	HARNESS, I/P WRG (PINK WIRE IN B–8 CAV OF VATS MDL CONN) .	
89	Y (5.7–8) A/TRNS (MD8), A/C (C68) (1ST DES)	12073513	1	1548.75	HARNESS, I/P WRG (PINK WIRE IN B–8 CAV OF VATS MDL CONN) .	
89	Y (5.7–8) ML9, A/C (C60) (2ND DES)	12090315	1	1548.75	HARNESS, I/P WRG (ORANGE WIRE IN B–8 CAV OF VATS MDL CONN)	
89	Y (5.7–8) A/TRNS (MD8), A/C (C60) (2ND DES)	12090316	1	1257.59	HARNESS, I/P WRG (ORANGE WIRE IN B–8 CAV OF VATS MDL CONN)	
89	Y (5.7–8) M/TRNS (ML9), A/C (C68) (2ND DES)	12090318	1	1548.75	HARNESS, I/P WRG (ORANGE WIRE IN B–8 CAV OF VATS MDL CONN)	
89	Y (5.7–8) A/TRNS (MD8), A/C (C68) (2ND DES)	12090319	1	1266.25	HARNESS, I/P WRG (ORANGE WIRE IN B–8 CAV OF VATS MDL CONN)	
90	Y M/TRNS (ML9), A/C (C60) (EXC CANADIAN T61)	12101432	1	1239.00	HARNESS, I/P WRG (**VPI 1–877–846–8243)	6–I4,8
90	Y M/TRNS (ML9), A/C (C68) (EXC CANADIAN T61)	12101434	1	1548.75	HARNESS, I/P WRG	6–I4,8
90	Y 4–SPD A/TRANS (MD8), A/C MAN CONT (C60), (EXC DAYTIME RUNNING LGT (T61)	12102274	1	1257.59	HARNESS, I/P WRG	6–I4,8
90	Y A/TRNS (MD8), A/C (C68) (EXC CANADIAN T61)	12102538	1	1257.59	HARNESS, I/P WRG	6–I4,8
91	Y 4–SPD A/TRANS (MD8), A/C MAN CONT (C60), (EXC DAYTIME RUNNING LGT (T61)	12116436	1	1028.20	HARNESS, I/P WRG	3–G12,13
91	Y 6–SPD M/TRANS (ML9), A/C MAN CONT (C60), (EXC DAYTIME RUNNING LGT (T61)	12116438	1	1028.20	HARNESS, I/P WRG	3–G12,13
91	Y 4–SPD A/TRANS (MD8), A/C AUTO ELEC CONT (C68), (EXC DAYTIME RUNNING LGT (T61)	12116500	1	1266.25	HARNESS, I/P WRG (MAY REQ 12106563 WIRE IF JMPR PRESENT AT THE PWR SEAT FEED)	3–G12,13
91	Y 6–SPD M/TRANS (ML9), A/C AUTO ELEC CONT (C68), (EXC DAYTIME RUNNING LGT (T61)	12116502	1	1028.20	HARNESS, I/P WRG	3–G12,13

© 2000 GENERAL MOTORS SERVICE PARTS OPERATIONS–CHEVROLET–14Y

2.480 BRACKET – CONNECTOR – HARNESS – WIRE, Chassis Wiring (Con't)

92	Y 4–SPD A/TRANS (MD8), A/C MAN CONT (C60), (EXC DAYTIME RUNNING LGT (T61)	12125005	1	1026.20	HARNESS, I/P WRG	3–G12,13
92	Y 6–SPD M/TRANS (ML9), A/C MAN CONT (C60), (EXC DAYTIME RUNNING LGT (T61)	12125007	1	1257.59	HARNESS, I/P WRG	3–G12,13
92	Y 4–SPD A/TRANS (MD8), A/C AUTO ELEC CONT (C68), (EXC DAYTIME RUNNING LGT (T61)	12125813	1	881.59	HARNESS, I/P WRG	3–G12,13
92	Y 6–SPD M/TRANS (ML9), A/C AUTO ELEC CONT (C68), (EXC DAYTIME RUNNING LGT (T61)	12125815	1	881.59	HARNESS, I/P WRG	3–G12,13
93	Y 4–SPD A/TRANS (MD8), A/C MAN CONT (C60), (EXC SIG & MKR LP (T90) (EXPORT)	12141443	1	1257.59	HARNESS, I/P WRG	3–G12,13
93	Y 6–SPD M/TRANS (ML9), A/C AUTO ELEC CONT (C68), (EXC SIG & MKR LP (T90) (EXPORT)	12141444	1	1257.59	HARNESS, I/P WRG (FOR VEH –DRL, SPLICE CAV D TO CAV E @ BLUE 8–WAY DRL MDL CONN.)	3–G12,13
93	Y 6–SPD M/TRANS (ML9), A/C MAN CONT (C60), (EXC SIG & MKR LP (T90) (EXPORT)	12141445	1	1257.59	HARNESS, I/P WRG	3–G12,13
93	Y 4–SPD A/TRANS (MD8), A/C AUTO ELEC CONT (C68), (EXC SIG & MKR LP (T90) (EXPORT)	12141446	1	1257.59	HARNESS, I/P WRG (ON VEHS W/O DAYTIME RUNNING LPS SPLICE CAV D & E WIRES TOGETHER AT BLUE DRL MDL CONN.)	3–G12,13
94	Y 6–SPD M/TRANS (ML9), A/C MAN CONT (C60), (EXC DAYTIME RUNNING LGT (T61), HDLP (T72) (EXPORT), RH RULE OF ROAD HDLP (T84) (EXPORT), LH RULE OF ROAD HDLP (T85) (EXPORT), SIG & MKR LP (T90) (EXPORT)	12130324	1		HARNESS, I/P WRG	3–G12,13
94	Y 6–SPD M/TRANS (ML9), A/C AUTO ELEC CONT (C68), (EXC DAYTIME RUNNING LGT (T61), HDLP (T72) (EXPORT), RH RULE OF ROAD HDLP (T84) (EXPORT), LH RULE OF ROAD HDLP (T85) (EXPORT), SIG & MKR LP (T90) (EXPORT)	12130326	1	1548.75	HARNESS, I/P WRG	3–G12,13

© 2000 GENERAL MOTORS SERVICE PARTS OPERATIONS–CHEVROLET–14Y

2.480 BRACKET – CONNECTOR – HARNESS – WIRE, Chassis Wiring (Con't)

94	Y 4–SPD A/TRANS (M30), A/C MAN CONT (C60), (EXC DAYTIME RUNNING LGT (T61), HDLP (T72) (EXPORT), RH RULE OF ROAD HDLP (T84) (EXPORT), LH RULE OF ROAD HDLP (T85) (EXPORT), SIG & MKR LP (T90) (EXPORT), (2ND DES)	12130491	1		HARNESS, I/P WRG	3–G12,13
94	Y 4–SPD A/TRANS (M30), A/C MAN CONT (C60), DAYTIME RUNNING LGT (T61), (EXC HDLP (T72) (EXPORT), RH RULE OF ROAD HDLP (T84) (EXPORT), LH RULE OF ROAD HDLP (T85) (EXPORT), SIG & MKR LP (T90) (EXPORT)	12130492	1		HARNESS, I/P WRG	3–I12,34
94	Y 4–SPD A/TRANS (M30), A/C AUTO ELEC CONT (C68), (EXC DAYTIME RUNNING LGT (T61), HDLP (T72) (EXPORT), RH RULE OF ROAD HDLP (T84) (EXPORT), LH RULE OF ROAD HDLP (T85) (EXPORT), SIG & MKR LP (T90) (EXPORT)	12130493	1	1488.75	HARNESS, I/P WRG	3–G12,13
94	Y 4–SPD A/TRANS (M30), A/C AUTO ELEC CONT (C68), DAYTIME RUNNING LGT (T61), (EXC HDLP (T72) (EXPORT), RH RULE OF ROAD HDLP (T84) (EXPORT), LH RULE OF ROAD HDLP (T85) (EXPORT), SIG & MKR LP (T90) (EXPORT)	12130494	1		HARNESS, I/P WRG	3–I12,34
94	Y 4–SPD A/TRANS (M30), A/C MAN CONT (C60), DAYTIME RUNNING LGT (T61), (EXC HDLP (T72) (EXPORT), RH RULE OF ROAD HDLP (T84) (EXPORT), LH RULE OF ROAD HDLP (T85) (EXPORT), SIG & MKR LP (T90) (EXPORT), (1ST DES)	12141787	1		HARNESS, I/P WRG (TAGGED 0320 OR 0321) (ON VEH W/O DRL, AT 8–WAY BLUE CONN TO DRL MDL SPLICE CAV D & CAV E LEADS TOGETHER.)	3–I12,34
94	Y 4–SPD A/TRANS (M30), A/C AUTO ELEC CONT (C68), DAYTIME RUNNING LGT (T61), (EXC HDLP (T72) (EXPORT), RH RULE OF ROAD HDLP (T84) (EXPORT), LH RULE OF ROAD HDLP (T85) (EXPORT), SIG & MKR LP (T90) (EXPORT), (1ST DES)	12141788	1		HARNESS, I/P WRG (TAGGED 0322 OR 0323) (ON VEH W/DAYTIME RUNNING LGHTS, ADD 8–WAY BLUE CONN TO DAYTIME RUNNING LGHT, SPLICE CAV D & CAV E WIRES TOGETHER)	3–I12,34

© 2000 GENERAL MOTORS SERVICE PARTS OPERATIONS–CHEVROLET–14Y

2.480 BRACKET – CONNECTOR – HARNESS – WIRE, Chassis Wiring (Con't)

94	Y 6–SPD M/TRANS (ML9), A/C MAN CONT (C60), DAYTIME RUNNING LGT (T61), (EXC HDLP (T72) (EXPORT), RH RULE OF ROAD HDLP (T84) (EXPORT), LH RULE OF ROAD HDLP (T85) (EXPORT), SIG & MKR LP (T90) (EXPORT)	12141789	1		HARNESS, I/P WRG	3–I12,34
94	Y 6–SPD M/TRANS (ML9), A/C AUTO ELEC CONT (C68), DAYTIME RUNNING LGT (T61), (EXC HDLP (T72) (EXPORT), RH RULE OF ROAD HDLP (T84) (EXPORT), LH RULE OF ROAD HDLP (T85) (EXPORT), SIG & MKR LP (T90) (EXPORT)	12141790	1		HARNESS, I/P WRG	3–I12,34
94	Y 6–SPD M/TRANS (ML9), A/C AUTO ELEC CONT (C68), (EXC HDLP (T72) (EXPORT), RH RULE OF ROAD HDLP (T84) (EXPORT), LH RULE OF ROAD HDLP (T85) (EXPORT), SIG & MKR LP (T90) (EXPORT)	12163703	1	1257.59	HARNESS, I/P WRG	3–G12,13
95	Y 5.7J (LT5), 6–SPD M/TRANS (ML9), A/C AUTO ELEC CONT (C68), (EXC DAYTIME RUNNING LGT (T61)	12130326	1	1548.75	HARNESS, I/P WRG	3–G12,13
95	Y 5.7P (LT1), 4–SPD A/TRANS (M30), A/C MAN CONT (C60), DAYTIME RUNNING LGT (T61), (EXC HDLP (T72) (EXPORT), RH RULE OF ROAD HDLP (T84) (EXPORT), LH RULE OF ROAD HDLP (T85) (EXPORT), SIG & MKR LP (T90) (EXPORT)	12130389	1	1424.85	HARNESS, I/P WRG	3–I12,34
95	Y 5.7P (LT1), 4–SPD A/TRANS (M30), A/C AUTO ELEC CONT (C68), DAYTIME RUNNING LGT (T61), (EXC HDLP (T72) (EXPORT), RH RULE OF ROAD HDLP (T84) (EXPORT), LH RULE OF ROAD HDLP (T85) (EXPORT), SIG & MKR LP (T90) (EXPORT)	12130391	1	1424.85	HARNESS, I/P WRG (SPLICE CAV D & E WIRES @ BLUE DRL MDL CONN FOR VEH W/O DRL.) ...	3–I12,34
95	Y 5.7J (LT5), 6–SPD M/TRANS (ML9), A/C AUTO ELEC CONT (C68), DAYTIME RUNNING LGT (T61)	12141790	1		HARNESS, I/P WRG	3–I12,34

© 2000 GENERAL MOTORS SERVICE PARTS OPERATIONS–CHEVROLET–14Y

2.480 BRACKET – CONNECTOR – HARNESS – WIRE, Chassis Wiring (Con't)

95	Y 5.7P (LT1), 6–SPD M/TRANS (ML9), A/C MAN CONT (C60), (EXC DAYTIME RUNNING LGT (T61), HDLP (T72) (EXPORT), RH RULE OF ROAD HDLP (T84) (EXPORT), LH RULE OF ROAD HDLP (T85) (EXPORT), SIG & MKR LP (T90) (EXPORT)	12163700	1	1548.75	HARNESS, I/P WRG	3–G12,13
95	Y 5.7P (LT1), 6–SPD M/TRANS (ML9), A/C AUTO ELEC CONT (C68), (EXC DAYTIME RUNNING LGT (T61), HDLP (T72) (EXPORT), RH RULE OF ROAD HDLP (T84) (EXPORT), LH RULE OF ROAD HDLP (T85) (EXPORT), SIG & MKR LP (T90) (EXPORT)	12163702	1	1257.59	HARNESS, I/P WRG	3–G12,13
95	Y 5.7J (LT5), 6–SPD M/TRANS (ML9), A/C AUTO ELEC CONT (C68)	12163703	1	1257.59	HARNESS, I/P WRG	3–G12,13
96	Y 4–SPD A/TRANS (M30), A/C MAN CONT (C60), (EXC HDLP (T72) (EXPORT), RH RULE OF ROAD HDLP (T84) (EXPORT), LH RULE OF ROAD HDLP (T85) (EXPORT), SIG & MKR LP (T90) (EXPORT)	12130468	1	1548.75	HARNESS, I/P WRG (WHEN USE ON VEH W/O DAYTIME RUN LIGHTS, SPLICE CAV D&E TOGETHER @ BLUE 8–WAY DRL MOD CONN)	3–G12,13
96	Y 4–SPD A/TRANS (M30), A/C AUTO ELEC CONT (C68), (EXC HDLP (T72) (EXPORT), RH RULE OF ROAD HDLP (T84) (EXPORT), LH RULE OF ROAD HDLP (T85) (EXPORT), SIG & MKR LP (T90) (EXPORT)	12130470	1	1061.69	HARNESS, I/P WRG (WHEN USE ON VEH W/O DAYTIME RUN LIGHTS, SPLICE CAV D&E TOGETHER @ BLUE 8–WAY DRL MOD CONN)	3–G12,13
96	Y 6–SPD M/TRANS (ML9), A/C MAN CONT (C60), (EXC HDLP (T72) (EXPORT), RH RULE OF ROAD HDLP (T84) (EXPORT), LH RULE OF ROAD HDLP (T85) (EXPORT), SIG & MKR LP (T90) (EXPORT)	12130472	1	1257.59	HARNESS, I/P WRG (WHEN USE ON VEH W/O DAYTIME RUN LIGHTS, SPLICE CAV D&E TOGETHER @ BLUE 8–WAY DRL MOD CONN)	3–G12,13
96	Y 6–SPD M/TRANS (ML9), A/C AUTO ELEC CONT (C68), (EXC HDLP (T72) (EXPORT), RH RULE OF ROAD HDLP (T84) (EXPORT), LH RULE OF ROAD HDLP (T85) (EXPORT), SIG & MKR LP (T90) (EXPORT)	12130474	1	1257.59	HARNESS, I/P WRG (WHEN USE ON VEH W/O DAYTIME RUN LIGHTS, SPLICE CAV D&E TOGETHER @ BLUE 8–WAY DRL MOD CONN)	3–G12,13
84–91	Y RECL FRT BKT ST (AQ9) ..	12028999	1	DISCON	HARNESS, I/P WRG HARN EXTN	
91	Y	12126533	1	DISCON	HARNESS, I/P WRG HARN EXTN (VALET MODE) (USE W/4 PIN ENG PWR SW CONN)	
92–93	Y RECL FRT BKT ST (AQ9) ..	12106560	1	47.45	HARNESS, I/P WRG HARN EXTN	

© 2000 GENERAL MOTORS SERVICE PARTS OPERATIONS–CHEVROLET–14Y

2.480 BRACKET – CONNECTOR – HARNESS – WIRE, Chassis Wiring (Con't)

05–91	Y	12029403	1	25.75	HARNESS, INT AIR TEMP SEN WRG	3–G27,2
04–05	Y	12028667	1	DISCON	HARNESS, MIR LP WRG	
00–01	Y	12069329	1	DISCON	WIRE, ENG COOL LVL SW	
	*EXPORT**********EXPORT**********EXPORT**********EXPORT**********EXPORT*					
04	Y NM5 (EXPORT CANADA) (2ND DES)	12029435	1	DISCON	HARNESS, ELEK CONT MDL (OIL PRESS SW HAS 3 SINGLE WIRES)	
04	Y NM5 (EXPORT, CANADA) (1ST DES)	12029044	1	DISCON	HARNESS, ELEK CONT MDL WRG (OIL PRESS SW CONN HAS 1 DBL WIRE & 1 SGL WIRE)	
06	Y M/TRNS, A/C (C60), (NM5) EXPORT, CANADA (EXC NM8 EXPORT)	12046815	1	DISCON	HARNESS, ENG & ECM WRG (02.525)	
06	Y A/TRNS, NM8 (EXPORT)	12046819	1	DISCON	HARNESS, ENG & ECM WRG (02.525)	
06	Y07 M/TRNS, A/C (C68), (NM5) EXPORT, CANADA (EXC NM8 EXPORT)	12046816	1	DISCON	HARNESS, ENG & ECM WRG (02.525)	
07	Y A/TRNS, A/C, NM5 (EXPORT, CANADA) (EXC NM8 EXPORT)	12067672	1	DISCON	HARNESS, ENG & ECM WRG (02.525)	
07	Y A/TRNS, A/C (C68), NM5 (EXPORT, CANADA) (EXC NM8 EXPORT)	12067673	1	DISCON	HARNESS, ENG & ECM WRG (02.525)	
07	Y A/TRNS, NM8 (EXPORT)	12067674	1	DISCON	HARNESS, ENG & ECM WRG (02.525)	
04	Y VB4, VD1, VE1, VT7 (EXPORT)	12029218	1	DISCON	HARNESS, FWD LP	
05	Y VB4, VD1, VE1, VT7 (EXPORT)	12050642	1	DISCON	HARNESS, FWD LP	
06	Y VB4, VD1, VE1, VT7 (EXPORT)	12055776	1	DISCON	HARNESS, FWD LP	
07	Y T72, T84 (EXPORT)	12067734	1	DISCON	HARNESS, FWD LP	
00	Y T72, T84 (EXPORT)	12055815	1	DISCON	HARNESS, FWD LP WRG	
90	Y (5.7–8) T61 (CANADIAN)	12090336	1	667.87	HARNESS, FWD LP WRG	8–K10,20
90	Y (5.7J) T61 (CANADIAN)	12090337	1	987.00	HARNESS, FWD LP WRG	8–K10,20
91	Y 5.7–8 (L98), DAYTIME RUNNING LGT (T61)	12090346	1	667.87	HARNESS, FWD LP WRG	3–J2,1
91	Y 5.7J (LT5), DAYTIME RUNNING LGT (T61)	12090347	1	667.87	HARNESS, FWD LP WRG	3–J2,1
92	Y 5.7P (LT1), DAYTIME RUNNING LGT (T61)	12090373	1	667.87	HARNESS, FWD LP WRG	3–J2,1
92	Y 5.7J (LT5), DAYTIME RUNNING LGT (T61)	12090374	1	667.87	HARNESS, FWD LP WRG	3–J2,1
93	Y 5.7P (LT1), DAYTIME RUNNING LGT (T61)	12106581	1	666.86	HARNESS, FWD LP WRG	3–J2,1
93	Y 5.7J (LT5), DAYTIME RUNNING LGT (T61)	12106582	1	611.03	HARNESS, FWD LP WRG	3–J2,1
94	Y 5.7P (LT1), HDLP (T72) (EXPORT), RH RULE OF ROAD HDLP (T84) (EXPORT), LH RULE OF ROAD HDLP (T85) (EXPORT), SIG & MKR LP (T90) (EXPORT)	12130481	1		HARNESS, FWD LP WRG	3–J2,1

© 2000 GENERAL MOTORS SERVICE PARTS OPERATIONS–CHEVROLET–14Y

2.480 BRACKET – CONNECTOR – HARNESS – WIRE, Chassis Wiring (Con't)

94	Y 5.7J (LT5), HDLP (T72) (EXPORT), RH RULE OF ROAD HDLP (T84) (EXPORT), LH RULE OF ROAD HDLP (T85) (EXPORT), SIG & MKR LP (T90) (EXPORT)	12164337	1		HARNESS, FWD LP WRG	3–J2,1
95	Y 5.7P (LT1), HDLP (T72) (EXPORT), RH RULE OF ROAD HDLP (T84) (EXPORT), LH RULE OF ROAD HDLP (T85) (EXPORT), SIG & MKR LP (T90) (EXPORT)	12130485	1	202.85	HARNESS, FWD LP WRG	3–J2,1
96	Y HDLP (T72) (EXPORT), RH RULE OF ROAD HDLP (T84) (EXPORT), LH RULE OF ROAD HDLP (T85) (EXPORT), SIG & MKR LP (T90) (EXPORT)	12163718	1	272.58	HARNESS, FWD LP WRG	3–J2,1
94–96	Y HDLP (T72) (EXPORT), RH RULE OF ROAD HDLP (T84) (EXPORT), LH RULE OF ROAD HDLP (T85) (EXPORT), SIG & MKR LP (T90) (EXPORT)	12130344	2	40.09	HARNESS, FWD LP WRG HARN EXTN	3–J2,54
90	Y M/TRNS (ML9), A/C (C60), T61 (CANADIAN)	12101433	1	1266.25	HARNESS, I/P WRG	6–I4,8
90	Y M/TRNS (ML9), A/C (C68), T61 (CANADIAN)	12101435	1	1266.25	HARNESS, I/P WRG	6–I4,8
90	Y A/TRNS (MD8), A/C (C68), T61 (CANADIAN)	12102273	1	1028.20	HARNESS, I/P WRG	6–I4,8
90	Y A/TRNS (MD8), A/C (C60), T61 (CANADIAN)	12102537	1		HARNESS, I/P WRG	6–I4,8
91	Y 4–SPD A/TRANS (MD8), A/C MAN CONT (C60), DAYTIME RUNNING LGT (T61)	12116437	1	1028.20	HARNESS, I/P WRG	6–I4,8
91	Y 6–SPD M/TRANS (ML9), A/C MAN CONT (C60), DAYTIME RUNNING LGT (T61)	12116439	1	1028.20	HARNESS, I/P WRG	6–I4,8
91	Y 4–SPD A/TRANS (MD8), A/C AUTO ELEC CONT (C68), DAYTIME RUNNING LGT (T61)	12116501	1	1028.20	HARNESS, I/P WRG	6–I4,8
91	Y 6–SPD M/TRANS (ML9), A/C AUTO ELEC CONT (C68), DAYTIME RUNNING LGT (T61)	12116503	1	1028.20	HARNESS, I/P WRG	6–I4,8
92	Y 4–SPD A/TRANS (MD8), A/C MAN CONT (C60), DAYTIME RUNNING LGT (T61)	12125006	1	1028.20	HARNESS, I/P WRG	6–I4,8
92	Y 6–SPD M/TRANS (ML9), A/C MAN CONT (C60), DAYTIME RUNNING LGT (T61)	12125008	1	1028.20	HARNESS, I/P WRG	6–I4,8
92	Y 4–SPD A/TRANS (MD8), A/C AUTO ELEC CONT (C68), DAYTIME RUNNING LGT (T61)	12125814	1	1028.20	HARNESS, I/P WRG	6–I4,8

© 2000 GENERAL MOTORS SERVICE PARTS OPERATIONS–CHEVROLET–14Y

2.480 BRACKET – CONNECTOR – HARNESS – WIRE, Chassis Wiring (Con't)

92	Y 6–SPD M/TRANS (ML9), A/C AUTO ELEC CONT (C68), DAYTIME RUNNING LGT (T61)	12125816	1	1028.20	HARNESS, I/P WRG	6–I4,5
93	Y 6–SPD M/TRANS (ML9), A/C AUTO ELEC CONT (C68), SIG & MKR LP (T90) (EXPORT)	12141441	1	1547.50	HARNESS, I/P WRG	3–G12,13
93	Y 4–SPD A/TRANS (MD8), A/C AUTO ELEC CONT (C68), SIG & MKR LP (T90) (EXPORT)	12141442	1	1256.57	HARNESS, I/P WRG	3–G12,13
94	Y 4–SPD A/TRANS (M30), A/C AUTO ELEC CONT (C68), HDLP (T72) (EXPORT), RH RULE OF ROAD HDLP (T84) (EXPORT), LH RULE OF ROAD HDLP (T85) (EXPORT), SIG & MKR LP (T90) (EXPORT)	12130495	1		HARNESS, I/P WRG	3–G12,13
94	Y 4–SPD A/TRANS (M30), A/C AUTO ELEC CONT (C68), HDLP (T72) (EXPORT), RH RULE OF ROAD HDLP (T84) (EXPORT), LH RULE OF ROAD HDLP (T85) (EXPORT), SIG & MKR LP (T90) (EXPORT), (1ST DES)	12141791	1		HARNESS, I/P WRG (TAGGED 0328)	3–G12,13
94	Y 6–SPD M/TRANS (ML9), A/C AUTO ELEC CONT (C68), HDLP (T72) (EXPORT), RH RULE OF ROAD HDLP (T84) (EXPORT), LH RULE OF ROAD HDLP (T85) (EXPORT), SIG & MKR LP (T90) (EXPORT)	12141792	1		HARNESS, I/P WRG	3–G12,13
95	Y 5.7P (LT1), 4–SPD A/TRANS (M30), A/C AUTO ELEC CONT (C68), HDLP (T72) (EXPORT), RH RULE OF ROAD HDLP (T84) (EXPORT), LH RULE OF ROAD HDLP (T85) (EXPORT), SIG & MKR LP (T90) (EXPORT), (EXC DAYTIME RUNNING LGT (T61)	12130396	1	1257.59	HARNESS, I/P WRG	3–G12,13
97	Y 5.7P (LT1), 6–SPD M/TRANS (ML9), A/C MAN CONT (C60), DAYTIME RUNNING LGT (T61), (EXC HDLP (T72) (EXPORT), RH RULE OF ROAD HDLP (T84) (EXPORT), LH RULE OF ROAD HDLP (T85) (EXPORT), SIG & MKR LP (T90) (EXPORT)	12163701	1	1257.59	HARNESS, I/P WRG	3–I12,34

© 2000 GENERAL MOTORS SERVICE PARTS OPERATIONS–CHEVROLET–14Y

2.480 BRACKET – CONNECTOR – HARNESS – WIRE, Chassis Wiring (Con't)

95	Y 5.7P (LT1), 6–SPD M/TRANS (ML9), A/C AUTO ELEC CONT (C68), DAYTIME RUNNING LGT (T61), (EXC HDLP (T72) (EXPORT), RH RULE OF ROAD HDLP (T84) (EXPORT), LH RULE OF ROAD HDLP (T85) (EXPORT), SIG & MKR LP (T90) (EXPORT)	12163703	1	1257.59	HARNESS, I/P WRG	3–G12,13
95	Y 5.7P (LT1), 6–SPD M/TRANS (ML9), A/C AUTO ELEC CONT (C68), HDLP (T72) (EXPORT), RH RULE OF ROAD HDLP (T84) (EXPORT), LH RULE OF ROAD HDLP (T85) (EXPORT), SIG & MKR LP (T90) (EXPORT), (EXC DAYTIME RUNNING LGT (T61)	12163704	1	1257.59	HARNESS, I/P WRG	3–G12,13
96	Y 4–SPD A/TRANS (M30), A/C AUTO ELEC CONT (C68), HDLP (T72) (EXPORT), RH RULE OF ROAD HDLP (T84) (EXPORT), LH RULE OF ROAD HDLP (T85) (EXPORT), SIG & MKR LP (T90) (EXPORT), (EXC DAYTIME RUNNING LGT (T61)	12133475	1	1257.59	HARNESS, I/P WRG	3–G12,13
96	Y 5.7–5 (LT4), 6–SPD M/TRANS (ML9), A/C AUTO ELEC CONT (C68), HDLP (T72) (EXPORT), RH RULE OF ROAD HDLP (T84) (EXPORT), LH RULE OF ROAD HDLP (T85) (EXPORT), SIG & MKR LP (T90) (EXPORT), (EXC DAYTIME RUNNING LGT (T61)	12163715	1	1257.59	HARNESS, I/P WRG	3–G12,13

2.483 BLOCK – BRACKET – BREAKER – CLIP – CONNECTOR – COVER – HOUSING – INSULATOR – LABEL – NUT – PULLER – RETAINER – RIVET, Main Wiring Junction and Fuse Block

86–92	Y	10098794	1	*1.58	BLOCK, ENG WRG HARN JUNC .	3–G18,4
93–95	Y 5.7P (LT1)	12077534	2	12.08	BLOCK, FUSE (02.480)	3–G20,30
93–95	Y 5.7J (LT5)	12077534	2	12.08	BLOCK, FUSE (02.480)	3–G20,30
94–96	Y	12160559	1	11.15	BLOCK, FUSE (101–WAY)	
96	Y	12077534	2	12.08	BLOCK, FUSE (02.480)	3–G20,30
93–96	Y	12092231	1	49.65	BLOCK, PWR DISTR–FUSE (BUS BAR ON RH SIDE) (02.530) ...	3–G20,28
94	Y 4–SPD A/TRANS (M30), A/C MAN CONT (C60), A/C AUTO ELEC CONT (C68) ...	12077571	1	10.71	BLOCK, PWR DISTR–RLY (I/P WRG HARN) (RETAINS 6 MINI–RELAYS)	

© 2000 GENERAL MOTORS SERVICE PARTS OPERATIONS–CHEVROLET–14Y

2.483 BLOCK – BRACKET – BREAKER – CLIP – CONNECTOR – COVER – HOUSING – INSULATOR – LABEL – NUT – PULLER – RETAINER – RIVET, Main Wiring Junction and Fuse Block (Con't)

94–96	Y	12077571	1	10.71	BLOCK, PWR DISTR–RLY (ST ADJR & LUMBAR CONT WRG) (BODY WRG HARN) (RETAINS 6 MINI–RELAYS)	
95	Y 3–SPD M/TRANS (ML9), A/C MAN CONT (C60), A/C AUTO ELEC CONT (C68)	12077571	1	10.71	BLOCK, PWR DISTR–RLY (I/P WRG HARN) (RETAINS 6 MINI–RELAYS)	
93	Y	10165399	1	4.34	BRACKET, ENG WRG HARN FUSE BLK (LOCATED BEHIND BATT)	3–G20,20
94–95	Y 5.7J (LT5)	10165399	1	4.34	BRACKET, ENG WRG HARN FUSE BLK (LOCATED BEHIND BATT)	3–G20,20
94–96	Y 5.7P (LT1)	10252093	1	4.34	BRACKET, ENG WRG HARN FUSE BLK (LOCATED BEHIND BATT)	3–G20,20
86–92	Y	14093148	1	DISCON	BRACKET, ENG WRG HARN J/BLK	
93–96	Y	10202843	1	4.34	BRACKET, FWD LP WRG HARN FUSE BLK (LOCATED ON WHL/HSE PNL)	3–G20,24
84–96	Y	14062568	1	3.72	BRACKET, I/P WRG HARN FUSE BLK	3–G10,14
84–85	Y	14062512	1	DISCON	BRACKET, MULTIUSE RLY	
90–96	Y	10172488	1	6.58	BRACKET, MULTIUSE RLY (RIGHT BRKT) (4.0", 102.0 MM LG) (PLASTIC)	3–G12,10
90–91	Y	10175542	LH	22.29	BRACKET, MULTIUSE RLY (LEFT BRKT) (5.2", 132.0 MM LG) (PLASTIC)	3–G12,10
90–93	Y	10240571	1	11.58	BRACKET, MULTIUSE RLY (BLACK) (18.3", 465.0MM LONG) (PLASTIC)	3–G10,10
90	Y 5.7J (LT5), A/C MAN CONT (C60)	14104778	1	3.06	BRACKET, MULTIUSE RLY (STEEL) (8.7"X3.5") (220.0MMX88.5MM)	3–H2,15
92	Y 5.7P (LT1), 6–SPD M/TRANS (ML9), A/C MAN CONT (C60)	10165350	1	6.58	BRACKET, MULTIUSE RLY (7.4", 188.0 MM LG) (STEEL)	3–G12,10
92	Y 5.7J (LT5)	10165350	1	6.58	BRACKET, MULTIUSE RLY (7.4", 188.0 MM LG) (STEEL)	3–G12,10
92	Y 5.7P (LT1), 4–SPD A/TRANS (MD8), A/C MAN CONT (C60)	10165387	1	DISCON	BRACKET, MULTIUSE RLY (5.4", 136.0 MM LG) (STEEL)	
92–96	Y	10167109	1	11.58	BRACKET, MULTIUSE RLY (5.2", 132 MM LG) (PLASTIC)	3–G12,10
92	Y 5.7P (LT1), 6–SPD M/TRANS (ML9), A/C AUTO ELEC CONT (C68)	14104140	1	1.88	BRACKET, MULTIUSE RLY (STEEL) (3.0"X2.0") (76.7MMX51.0MM)) (01.055)	3–G12,10
93–95	Y 5.7J (LT5)	10204735	1	6.58	BRACKET, MULTIUSE RLY	3–G12,10
93–95	Y 5.7P (LT1), A/C AUTO ELEC CONT (C68)	10214029	1	6.58	BRACKET, MULTIUSE RLY	3–G12,10
93–95	Y 5.7P (LT1), A/C MAN CONT (C60)	10214030	1	6.58	BRACKET, MULTIUSE RLY	3–G12,10
94–96	Y	10161867	1	11.58	BRACKET, MULTIUSE RLY	3–G12,10
96	Y A/C AUTO ELEC CONT (C68)	10214029	1	6.58	BRACKET, MULTIUSE RLY	3–G12,10
96	Y A/C MAN CONT (C60)	10214030	1	6.58	BRACKET, MULTIUSE RLY	3–G12,10
94–95	Y 5.7P (LT1)	12077863	1	8.68	BREAKER, CIRC (GREEN) (30 AMP) (08.965)	
96	Y	12077863	1	8.68	BREAKER, CIRC (GREEN) (30 AMP) (08.965)	

© 2000 GENERAL MOTORS SERVICE PARTS OPERATIONS–CHEVROLET–14Y

2.483 BLOCK – BRACKET – BREAKER – CLIP – CONNECTOR – COVER – HOUSING – INSULATOR – LABEL – NUT – PULLER – RETAINER – RIVET, Main Wiring Junction and Fuse Block (Con't)

93	Y	12077663	1	8.68	BREAKER, I/P WRG HARN FUSE BLK CIRC (GREEN) (30 AMP) (08.965)	
93–96	Y	12077630	2	2.79	CLIP, FUSE BLK CVR	3–G20,27
87–89	Y	12085491	AR	16.07	CONNECTOR, INJ–FUEL/MAIN SOL. (W/LEADS) (02.535) (AC–DELCO #PT113)	
85	Y	12102691	1	DISCON	CONNECTOR, INJR–FUEL (02.535)	
92–96	Y	12085491	8	16.07	CONNECTOR, INJR–FUEL (2–WAY F) (W/LEADS) (02.535) (AC–DELCO #PT113)	
92–95	Y 5.7J (LT5)	12102774	1	10.48	CONNECTOR, INJR–FUEL (03.300) (AC–DELCO #12102774)	
84–89	Y	14062543	1	DISCON	COVER, F/FLR CNSL COMPT LP	
93–96	Y	12077538	2	5.57	COVER, FUSE BLK	3–G20,26
84–89	Y	14047597	1	7.29	COVER, FUSE BOX ACC HOLE (SCREW LOCK IS PART OF ASM)	9–E2,16
90–92	Y	10172473	1	22.38	COVER, I/P FUSE BLK ACC HOLE	9–E8,10
93	Y	10221936	1	22.38	COVER, I/P FUSE BLK ACC HOLE	9–E10,10
94	Y	10257359	1	19.23	COVER, I/P FUSE BLK ACC HOLE (BLACK)	9–F2,16
95	Y	10257359	1	19.23	COVER, I/P FUSE BLK ACC HOLE (BLACK)	9–F2,16
96	Y	10280357	1	22.38	COVER, I/P FUSE BLK ACC HOLE (BLACK)	9–F2,16
94	Y 4–SPD A/TRANS (M30), A/C MAN CONT (C60), A/C AUTO ELEC CONT (C68)	12077573	1	3.80	COVER, MULTIUSE RLY & FUSE (PART OF HARN) (FROM I/P HARNESS)	
95	Y 6–SPD M/TRANS (ML9), A/C MAN CONT (C60), A/C AUTO ELEC CONT (C68)	12077573	1	3.80	COVER, MULTIUSE RLY & FUSE (PART OF HARN) (FROM I/P HARNESS)	
96	Y	12077573	1	3.80	COVER, MULTIUSE RLY & FUSE (FROM I/P HARNESS)	
93–96	Y RECL FRT BKT ST (AQ9)	12084910	1	6.58	HOUSING, FUSE BLK (BLACK) (HOLDS (1) –FUSE BLOCK) (13.090)	
95–96	Y	3999572	1	4.98	INSULATOR, MULTIUSE RLY BRKT (09.260)	
96	Y	12162327	2	.30	LABEL, ENG WRG HARN ACSRY RLY & FUSE IDENT	
84–92	Y	14049066	1	1.05	NUT, I/P FUSE BLK ACC HOLE CVR	9–E2,16
90–92	Y	10023333	1	6.89	PULLER, FUSE	
93–96	Y	12084791	1	.54	PULLER, FUSE (MINI) (I/P COVER)	
84	Y	14048083	1	DISCON	RETAINER, WRG HARN	
95	Y 5.7P (LT1)	10125439	2	*.65	RIVET, ENG WRG HARN FUSE BLK BRKT (23.5LG 9.89 OD) (08.967)	

© 2000 GENERAL MOTORS SERVICE PARTS OPERATIONS–CHEVROLET–14Y

2.485 BRACKET – CONNECTOR – GRILLE – LAMP – MODULE – RELAY – SENSOR – SOCKET – SWITCH, Capsule/Headlamp/Fog Lamp

90–96	Y	12101075	1	32.61	CONNECTOR, MDL–DAYTIME RUNNING LP CONT (BLUE) (8–WAY F) (W/LEADS) (02.535) (AC–DELCO #PT266)	
93	Y	12102485	1	19.29	CONNECTOR, MDL–DAYTIME RUNNING LP CONT (6–WAY F) (W/LEADS) (09.276) (AC–DELCO #PT276)	
95	Y 5.7J (LT5), 6–SPD M/TRANS (ML9), A/C AUTO ELEC CONT (C68), DAYTIME RUNNING LGT (T61), (EXC HDLP (T72) (EXPORT), RH RULE OF ROAD HDLP (T84) (EXPORT), LH RULE OF ROAD HDLP (T85) (EXPORT), SIG & MKR LP (T90) (EXPORT)	15306181	1	40.94	CONNECTOR, MDL–DAYTIME RUNNING LP CONT (8–WAY F) (W/LEADS) (W/8–12 GA WIRES) (02.535) (AC–DELCO #PT1338)	
96	Y07	15306181	1	40.94	CONNECTOR, MDL–DAYTIME RUNNING LP CONT (8–WAY F) (W/LEADS) (W/8–12 GA WIRES) (02.535) (AC–DELCO #PT1338)	
91–94	Y	12102775	1	30.66	CONNECTOR, MDL–HDLP CONT (5–WAY F, W/LEADS) (02.760) (AC–DELCO #PT284)	
91–94	Y	12102776	1	30.66	CONNECTOR, MDL–HDLP CONT (4–WAY F, W/LEADS) (02.170) (AC–DELCO #PT402)	
96	Y	12102775	1	30.66	CONNECTOR, MDL–HDLP CONT (5–WAY F, W/LEADS) (02.760) (AC–DELCO #PT284)	
96	Y	12102776	1	30.66	CONNECTOR, MDL–HDLP CONT (4–WAY F, W/LEADS) (02.170) (AC–DELCO #PT402)	
93	Y	12117350	1	22.35	CONNECTOR, SW–FOG LP (4–WAY F) (W/LEADS) (09.764) (AC–DELCO #PT483)	
90	Y 4–SPD A/TRANS (MD8), 6–SPD M/TRANS (ML9), A/C MAN CONT (C60)	12102757	1	19.37	CONNECTOR, SW–HDLP (W/LEADS) (02.535) (AC–DELCO #PT387)	
90	Y 5.7–8 (L98), (EXC DAYTIME RUNNING LGT (T61)	12102757	1	19.37	CONNECTOR, SW–HDLP (W/LEADS) (02.535) (AC–DELCO #PT387)	
93–95	Y	12126446	1	60.39	CONNECTOR, SW–HDLP (2–WAY F, W/LEADS & COVER) (02.535)	
94–96	Y	12117350	1	22.35	CONNECTOR, SW–HDLP (4–WAY F) (W/LEADS) (09.764) (AC–DELCO #PT483)	
90–96	Y	10159561	1	3.11	LAMP, HDLP SW (FOG LP) (CARTRIDGE TYPE–CLEAR BULB W/ORANGE CAP)	3–H21,4
90–91	Y	14100455	1	16.26	RELAY, FOG LP (BLACK) (5–WAY) (09.277) (AC–DELCO #15–8426)	3–I23,57
94–95	Y 6–SPD M/TRANS (ML9), 4–SPD A/TRANS (M30), A/C MAN CONT (C60), A/C AUTO ELEC CONT (C68)	12065125	1	16.73	RELAY, FOG LP (13.095) (AC–DELCO #D1703A)	

© 2000 GENERAL MOTORS SERVICE PARTS OPERATIONS–CHEVROLET–14Y

2.485 BRACKET – CONNECTOR – GRILLE – LAMP – MODULE – RELAY – SENSOR – SOCKET – SWITCH, Capsule/Headlamp/Fog Lamp (Con't)

95	Y 5.7P (LT1), 6–SPD M/TRANS (ML9), A/C MAN CONT (C60), A/C AUTO ELEC CONT (C68)	12135084	1	9.55	RELAY, FOG LP (02.815) (AC–DELCO #D1719A)	
96	Y	12135084	1	9.55	RELAY, FOG LP (02.815) (AC–DELCO #D1719A)	
84–86	Y (EXC EXPORT)	14066536	1	13.01	SWITCH, FOG LP	3–H18,6
87–88	Y (EXC T90 EXPORT)	14066536	1	13.01	SWITCH, FOG LP	3–H18,6
89	Y	14066536	1	13.01	SWITCH, FOG LP	3–H18,6
84–89	Y	1995257	1	31.62	SWITCH, HDLP (AC–DELCO #D1530A)	3–H18,9
84–89	Y	10098435	1	24.75	SWITCH, HDLP (W/TIMER, INTR LP) (02.490) (AC–DELCO #10098435)	3–G8,14
90–91	Y	10098487	1	138.72	SWITCH, HDLP & I/P LP DIMR & ACSRY (W/HSG) (AC–DELCO #D1527C)	3–H21,4
92–93	Y	10098500	1	160.54	SWITCH, HDLP & I/P LP DIMR & ACSRY & ELEK TRACT CONT (W/HSG) (AC–DELCO #D1588C)	3–I7,4
94–96	Y	10210758	1	206.04	SWITCH, HDLP & I/P LP DIMR & ACSRY & ELEK TRACT CONT (W/HSG)	3–I12,4
	*EXPORT****************EXPORT****************EXPORT****************EXPORT****************EXPORT*					
93–96	Y DAYTIME RUNNING LGT (T61)	10177914	1	8.93	BRACKET, DAYTIME RUNNING LP CONT MDL	3–I12,54
90–92	Y DAYTIME RUNNING LGT (T61)	10098711	1	DISCON	BRACKET, HDLP AUTO CONT AMB LGT SEN	
90	Y 4–SPD A/TRANS (MD8), 6–SPD M/TRANS (ML9), A/C AUTO ELEC CONT (C68), DAYTIME RUNNING LGT (T61)	12101875	1	32.61	CONNECTOR, MDL–DAYTIME RUNNING LP CONT (8–WAY F, W/LEADS, BLUE) (02.535) (AC–DELCO #PT266)	
91–92	Y 4–SPD A/TRANS (MD8), 6–SPD M/TRANS (ML9), A/C MAN CONT (C60), A/C AUTO ELEC CONT (C68), DAYTIME RUNNING LGT (T61)	15306161	1	40.94	CONNECTOR, MDL–DAYTIME RUNNING LP CONT (8–WAY F) (W/LEADS) (W/8–12 GA WIRES) (02.535) (AC–DELCO #PT1330) .	
94	Y 4–SPD A/TRANS (M30), 6–SPD M/TRANS (ML9), A/C MAN CONT (C60), A/C AUTO ELEC CONT (C68), DAYTIME RUNNING LGT (T61)	15306161	1	40.94	CONNECTOR, MDL–DAYTIME RUNNING LP CONT (8–WAY F) (W/LEADS) (W/8–12 GA WIRES) (02.535) (AC–DELCO #PT1330) .	
90	Y 4–SPD A/TRANS (MD8), 6–SPD M/TRANS (ML9), A/C MAN CONT (C60), DAYTIME RUNNING LGT (T61)	12101875	1	32.61	CONNECTOR, MDL–DAYTIME RUNNING LP (8–WAY F, W/LEADS, BLUE) (02.535) (AC–DELCO #PT266)	
91–93	Y	12187138	1	15.40	CONNECTOR, SEN–DAYTIME RUNNING LP AMB LGT (W/LEADS, USES 09421330/L194 BULB) (AC–DELCO #LS71) ..	
90–91	Y DAYTIME RUNNING LGT (T61)	10067987	1	2.45	GRILLE, DAYTIME RUNNING LP AMB LGT SEN	9–F8,44
92–96	Y DAYTIME RUNNING LGT (T61)	10067987	1	2.45	GRILLE, HDLP AUTO CONT AMB LGT SEN	9–F8,44
90–96	Y DAYTIME RUNNING LGT (T61)	10098712	1	122.40	MODULE, HDLP AUTO CONT (LESS BRKT & BOLTS)	3–I12,24

© 2000 GENERAL MOTORS SERVICE PARTS OPERATIONS–CHEVROLET–14Y

2.485 BRACKET – CONNECTOR – GRILLE – LAMP – MODULE – RELAY – SENSOR – SOCKET – SWITCH, Capsule/Headlamp/Fog Lamp (Con't)

90–96	Y DAYTIME RUNNING LGT (T81)	10067986	1	11.02	SENSOR, DAYTIME RUNNING LP AMB LGT	9–F8,43
90–95	Y 4–SPD A/TRANS (MD8), 6–SPD M/TRANS (ML9)	12167136	1	16.40	SOCKET, DAYTIME RUNNING LP AMB LGT SEN (W/LEADS, USES 09421330/L194 BULB) (AC–DELCO #LS71)	
84–86	Y EXPORT	14066546	1	DISCON	SWITCH, FOG LP	
87–88	Y T90 EXPORT	14066546	1	DISCON	SWITCH, FOG LP	
84–86	Y EXPORT (VE1)	14066546	1	DISCON	SWITCH, PARK LP	
87	Y T72 EXPORT	14066546	1	DISCON	SWITCH, PARK LP	

2.486 KNOB, Capsule/Headlamp/Fog Lamp Switch

84–89	Y	1009672s	1	6.17	KNOB, HDLP SW	3–H10,7

2.487 LAMP – NUT, Capsule/Headlamp/Fog Lamp Switch

90–96	Y	12506368	1	3.11	LAMP, FOG LP SW (02.485)	3–H21,4
84–89	Y	3916710	1	3.70	NUT, LGT SW ROD	3–H10,8

2.490 CONNECTOR – DIMMER – NUT, Instrument Panel/Interior Lamp Switch

91–93	Y	12125632	1	19.67	CONNECTOR, LP PWR FEED (4–WAY F) (W/LEADS) (AC–DELCO #PT544)	
94–95	Y	12125632	1	19.67	CONNECTOR, MDL–DISPLAY ILLUM CONT (4–WAY F) (W/LEADS) (AC–DELCO #PT544)	
94–95	Y	12125632	1	19.67	CONNECTOR, SW–I/P LP DIMR (4–WAY F) (W/LEADS) (AC–DELCO #PT544)	
89–96	Y	1995263	1	39.27	DIMMER, I/P LP (AC–DELCO #D1509B)	9–E8,16
86–90	Y	14013246	AR	*1.10	NUT (M4.2 DIA SCR M7.8 RND HOLE) (02.729)	

2.500 REGULATOR – SCREW, Voltage Regulator

NOTE: FOR 1984–1991 USAGE REFER TO GENERATOR CHARTS GRP 2.275

84–85	Y FOR MOD APPL & POA INFO SEE GEN CHT	1116423	1	21.85	REGULATOR, GEN (AC–DELCO #D680)	
85	Y FOR MOD APPL & POA INFO SEE GEN CHART	1988988	1	39.78	REGULATOR, GEN (AC–DELCO #D674)	
89–91	Y FOR MOD APPL & POA INFO SEE GEN CHART	1116437	1	66.19	REGULATOR, GEN VOLTAGE (AC–DELCO #D685)	3–F11,16
92–96	Y	1116437	1	66.19	REGULATOR, GEN VOLTAGE (AC–DELCO #D685)	3–F11,16
89–91	Y FOR MOD APPL & POA INFO SEE GEN CHART	1989699	1	*1.80	SCREW, REG ATTACH (AC–DELCO #1989699)	

2.510 CONNECTOR – DIODE – MODULE – RELAY, Voltage and Glow Plug

92–95	Y 5.7J (LT5)	12117271	1	57.63	CONNECTOR, RLY–IGN (WHITE) (8–WAY F) (W/LEADS) (02.535) (AC–DELCO #PT444)	
84–96	Y	12112421	1	*1.53	DIODE, M/FUNC (1 AMP) (AED05021)	
84–95	Y	12112422	1	*2.24	DIODE, M/FUNC (3 AMP) (AED5051)	

© 2000 GENERAL MOTORS SERVICE PARTS OPERATIONS–CHEVROLET–14Y

2.510 CONNECTOR – DIODE – MODULE – RELAY, Voltage and Glow Plug (Con't)

91	Y	12088520	1	22.20	MODULE, I/P WRG HARN (IF USE IN PLC OF MDL W/4–WAY CONN, MUST ALSO ORDER 1–12116930 SINGLE ROW 4–WAY CONN)	3–G12,12
92–95	Y	12088520	1	22.20	MODULE, I/P WRG HARN	3–G12,12
92–93	Y 4–SPD A/TRANS (MD8), 6–SPD M/TRANS (ML9), A/C MAN CONT (C60), A/C AUTO ELEC CONT (C68)	12088520	1	22.20	MODULE, 3–DIODE ARRAY SP	3–G12,12
92–96	Y	14100455	1	16.26	RELAY, ACSRY TIME DELAY CUTOFF (BLACK) (5–WAY) (09.277) (AC–DELCO #15–8420)	3–I2,31
92	Y 5.7J (LT5)	14089936	1	16.26	RELAY, ENG WRG (5–PIN OVAL SHAPE) (USE W/CONN 16306002) (01.055) (AC–DELCO #15–8240)	
93	Y	14100455	1	16.26	RELAY, FOG LP (BLACK) (5–WAY) (09.277) (AC–DELCO #15–8420)	3–I2,31
93–96	Y 6 SPKR SYS (UX0)	14100455	1	16.26	RELAY, I/P WRG HARN (BLACK) (5–WAY) (09.277) (AC–DELCO #15–8420)	3–I2,31
90–96	Y	14100455	1	16.26	RELAY, STRTR (BLACK) (5–WAY) (09.277) (AC–DELCO #15–8420)	3–I2,31

2.515 INSULATOR, Voltage & Current

89	Y	10137725	1	DISCON	INSULATOR, I/P WRG HARN	

2.525 HARNESS, Engine Wiring

86	Y M/TRNS, A/C (C60), FED (NA5) (EXC NM8 EXPORT)	12048815	1	DISCON	HARNESS, ENG & ECM WRG	
86	Y A/TRNS, A/C (C60) (EXC NM8 EXPORT)	12048817	1	DISCON	HARNESS, ENG & ECM WRG	
86	Y A/TRNS, A/C (C68) (EXC NM8 EXPORT)	12048818	1	DISCON	HARNESS, ENG & ECM WRG	
86	Y07 M/TRNS, A/C (C68), FED (NA5) (EXC NM8 EXPORT)	12048816	1	DISCON	HARNESS, ENG & ECM WRG	
87	Y M/TRNS, A/C (C60)	12067670	1	DISCON	HARNESS, ENG & ECM WRG	
87	Y M/TRNS, A/C (C68)	12067671	1	DISCON	HARNESS, ENG & ECM WRG	
87	Y A/TRNS, A/C, FED (NA5) (EXC NM8 EXPORT)	12067672	1	DISCON	HARNESS, ENG & ECM WRG	
87	Y A/TRNS, A/C (C68), FED (NA5) (EXC NM8 EXPORT)	12067673	1	DISCON	HARNESS, ENG & ECM WRG	
88	Y A/TRNS, A/C (C60)	12058808	1	DISCON	HARNESS, ENG & ECM WRG	
88	Y A/TRNS, A/C (C68)	12058809	1	DISCON	HARNESS, ENG & ECM WRG	
88	Y M/TRNS, A/C (C60)	12080840	1	DISCON	HARNESS, ENG & ECM WRG	
88	Y M/TRNS, A/C (C68)	12080841	1	DISCON	HARNESS, ENG & ECM WRG	
89	Y (5.7–8) M/TRNS, A/C (C60) (2ND DES)	12090320	1	1266.25	HARNESS, ENG & ECM WRG (ORANGE WIRE IN B–8 CAV OF VATS MDL CONN)	3–G27,3
89	Y (5.7–8) M/TRNS, A/C (C68)	12090321	1	1266.25	HARNESS, ENG & ECM WRG	3–G27,3
89	Y (5.7–8) A/TRNS, A/C (C60) (2ND DES)	12090322	1	1266.25	HARNESS, ENG & ECM WRG (ORANGE WIRE IN B–8 CAV OF VATS MDL CONN)	3–G27,3
89	Y (5.7–8) A/TRNS, A/C (C68)	12090323	1	1266.25	HARNESS, ENG & ECM WRG	3–G27,3
89	Y (5.7J)	12090324	1	1266.25	HARNESS, ENG & ECM WRG	

© 2000 GENERAL MOTORS SERVICE PARTS OPERATIONS–CHEVROLET–14Y

2.525 HARNESS, Engine Wiring (Con't)

84	Y	12029240	1	DISCON	HARNESS, ENG WRG	
85	Y	12029301	1	DISCON	HARNESS, ENG WRG	
90	Y 5.7J (LT5), A/C MAN CONT (C60), SOFT RIDE SUSP (FE1), HVY DUTY SUSP (FE7)	12090375	1	1337.50	HARNESS, ENG WRG	3–H2,1
90	Y 5.7J (LT5), A/C AUTO ELEC CONT (C68), SOFT RIDE SUSP (FE1), HVY DUTY SUSP (FE7)	12090376	1	1311.25	HARNESS, ENG WRG	3–H2,1
90	Y (5.7–8) M/TRNS (ML9), A/C (C60)	12090377	1	1086.05	HARNESS, ENG WRG	3–H5,20
90	Y (5.7–8) M/TRNS (ML9), A/C (C68)	12090378	1	1086.05	HARNESS, ENG WRG	3–H5,20
90	Y (5.7–8) A/TRNS (MD8), A/C (C60)	12090379	1	1311.25	HARNESS, ENG WRG	3–H5,20
90	Y (5.7–8) A/TRNS (MD8), A/C (C68)	12090380	1	1311.25	HARNESS, ENG WRG	3–H5,20
91	Y 5.7–8 (L98), 4–SPD A/TRANS (MD8), A/C MAN CONT (C60)	12080865	1	1086.05	HARNESS, ENG WRG	3–H5,20
91	Y 5.7–8 (L98), 6–SPD M/TRANS (ML9), A/C MAN CONT (C60)	12080866	1	1086.05	HARNESS, ENG WRG	3–H5,20
91	Y 5.7–8 (L98), 4–SPD A/TRANS (MD8), A/C AUTO ELEC CONT (C68)	12080867	1	1086.05	HARNESS, ENG WRG	3–H5,20
91	Y 5.7–8 (L98), 6–SPD M/TRANS (ML9), A/C AUTO ELEC CONT (C68)	12080868	1	1086.05	HARNESS, ENG WRG	3–H5,20
91	Y 5.7J (LT5), A/C AUTO ELEC CONT (C68), SOFT RIDE SUSP (FE1), HVY DUTY SUSP (FE7)	12080870	1	1086.05	HARNESS, ENG WRG	3–H7,1
92	Y 5.7J (LT5)	12117829	1	1086.05	HARNESS, ENG WRG	3–H10,1
92	Y 5.7P (LT1), 4–SPD A/TRANS (MD8), A/C MAN CONT (C60)	12125009	1	1086.05	HARNESS, ENG WRG	3–H12,1
92	Y 5.7P (LT1), 6–SPD M/TRANS (ML9), A/C MAN CONT (C60)	12125010	1	1086.05	HARNESS, ENG WRG	2–D6,30
92	Y 5.7P (LT1), 4–SPD A/TRANS (MD8), A/C AUTO ELEC CONT (C68)	12125011	1	867.83	HARNESS, ENG WRG	3–H12,1
92	Y 5.7P (LT1), 6–SPD M/TRANS (ML9), A/C AUTO ELEC CONT (C68)	12125012	1	1086.05	HARNESS, ENG WRG	2–D6,30
93–95	Y 5.7J (LT5)	12141078	1	1086.05	HARNESS, ENG WRG	3–H15,4
93	Y 5.7P (LT1), 6–SPD M/TRANS (ML9), A/C MAN CONT (C60)	12154081	1		HARNESS, ENG WRG	2–D6,30
93	Y 5.7P (LT1), 6–SPD M/TRANS (ML9), A/C AUTO ELEC CONT (C68)	12154082	1	3054.14	HARNESS, ENG WRG	2–D6,30
93	Y 5.7P (LT1), 4–SPD A/TRANS (MD8), A/C MAN CONT (C60)	12154083	1	1086.05	HARNESS, ENG WRG	3–H12,1
93	Y 5.7P (LT1), 4–SPD A/TRANS (MD8), A/C AUTO ELEC CONT (C68)	12154084	1	1086.05	HARNESS, ENG WRG	3–H12,1

© 2000 GENERAL MOTORS SERVICE PARTS OPERATIONS–CHEVROLET–14Y

2.525 HARNESS, Engine Wiring (Con't)

94	Y 5.7P (LT1), 6–SPD M/TRANS (ML9), A/C MAN CONT (C60), (EXC VE1 (EXPORT)	12141752	1	1066.05	HARNESS, ENG WRG	2–D6,30
94	Y 5.7P (LT1), 6–SPD M/TRANS (ML9), A/C AUTO ELEC CONT (C68), (EXC VE1 (EXPORT)	12141753	1	1337.50	HARNESS, ENG WRG	2–D6,30
94	Y 5.7P (LT1), 4–SPD A/TRANS (M30), A/C MAN CONT (C60), (EXC VE1 (EXPORT)	12141754	1	1066.05	HARNESS, ENG WRG	3–H12,1
94	Y 5.7P (LT1), 4–SPD A/TRANS (M30), A/C AUTO ELEC CONT (C68), (EXC VE1 (EXPORT)	12141755	1	1066.75	HARNESS, ENG WRG	3–H12,1
95	Y 5.7P (LT1), 6–SPD M/TRANS (ML9), A/C MAN CONT (C60), (EXC VE1 (EXPORT)	12130370	1	1337.50	HARNESS, ENG WRG	2–D17,21
95	Y 5.7P (LT1), 4–SPD A/TRANS (M30), A/C MAN CONT (C60), (EXC VE1 (EXPORT)	12130371	1	1066.05	HARNESS, ENG WRG	3–H12,1
95	Y 5.7P (LT1), 6–SPD M/TRANS (ML9), A/C AUTO ELEC CONT (C68), (EXC VE1 (EXPORT)	12130372	1	1066.05	HARNESS, ENG WRG	2–D17,21
95	Y 5.7P (LT1), 4–SPD A/TRANS (M30), A/C AUTO ELEC CONT (C68), (EXC VE1 (EXPORT)	12130373	1	1066.75	HARNESS, ENG WRG	3–H12,1
96	Y 6–SPD M/TRANS (ML9), A/C MAN CONT (C60), (EXC VE1 (EXPORT)	12130461	1	1337.50	HARNESS, ENG WRG	2–D17,21
96	Y 4–SPD A/TRANS (M30), A/C MAN CONT (C60), (EXC VE1 (EXPORT)	12130462	1	1066.05	HARNESS, ENG WRG	3–H12,1
96	Y 6–SPD M/TRANS (ML9), A/C AUTO ELEC CONT (C68), (EXC VE1 (EXPORT) .	12130463	1	1337.50	HARNESS, ENG WRG	2–D17,21
96	Y 4–SPD A/TRANS (M30), A/C AUTO ELEC CONT (C68), (EXC VE1 (EXPORT) .	12130464	1	842.45	HARNESS, ENG WRG	3–H12,1
86–91	Y	12046806	1	DISCON	HARNESS, ENG WRG HARN EXTN (WSW PUMP JPR)	
	*EXPORT*********EXPORT*********EXPORT*********EXPORT*********EXPORT*					
86	Y M/TRNS, A/C (C60), (NM5) EXPORT, CANADA (EXC NM8 EXPORT)	12046815	1	DISCON	HARNESS, ENG & ECM WRG ...	
86	Y A/TRNS, NM8 (EXPORT) ..	12046819	1	DISCON	HARNESS, ENG & ECM WRG ...	
86	Y07 M/TRNS, A/C (C68), (NM5) EXPORT, CANADA (EXC NM8 EXPORT)	12046816	1	DISCON	HARNESS, ENG & ECM WRG ...	
87	Y A/TRNS, A/C, NM5 (EXPORT, CANADA) (EXC NM8 EXPORT)	12067672	1	DISCON	HARNESS, ENG & ECM WRG ...	
87	Y A/TRNS, A/C (C68), NM5 (EXPORT, CANADA) (EXC NM8 EXPORT)	12067673	1	DISCON	HARNESS, ENG & ECM WRG ...	
87	Y A/TRNS, NM8 (EXPORT) ..	12067674	1	DISCON	HARNESS, ENG & ECM WRG ...	

© 2000 GENERAL MOTORS SERVICE PARTS OPERATIONS–CHEVROLET–14Y

MICROFICHE INDEX

GROUP 2.000

FICHE 3 OF 11

GROUP	DESCRIPTION	STARTING GRID LOCATION PARTS	ILLUSTRATIONS
–	GENERAL INFORMATION	1–A2	1–G2
–	ALPHABETICAL INDEX	1–B13	N.A.
2.000	CHASSIS WIRING – LAMPS	3–A2	3–F2
–	OUT OF FICHE CALLS	N.A.	3–M20

3–D1

2.525 HARNESS, Engine Wiring(Con't)

94	Y 5.7P (LT1), 4–SPD A/TRANS (M30), A/C AUTO ELEC CONT (C68), VE1 (EXPORT)	12141756	1	851.59	HARNESS, ENG WRG	3–H12,1
94	Y 5.7P (LT1), 6–SPD M/TRANS (ML9), A/C AUTO ELEC CONT (C68), VE1 (EXPORT)	12141757	1	1064.74	HARNESS, ENG WRG	2–D6,30
95	Y 5.7P (LT1), 4–SPD A/TRANS (M30), A/C AUTO ELEC CONT (C68), VE1 (EXPORT)	12130374	1	867.83	HARNESS, ENG WRG	3–H12,1
95	Y 5.7P (LT1), 6–SPD M/TRANS (ML9), A/C AUTO ELEC CONT (C68), VE1 (EXPORT)	12130375	1	1086.05	HARNESS, ENG WRG	2–D17,21
96	Y 4–SPD A/TRANS (M30), A/C AUTO ELEC CONT (C68), VE1 (EXPORT)	12130465	1	867.83	HARNESS, ENG WRG	3–H12,1

2.530 BOOT – CONDUIT – CONNECTOR – COVER – INSULATOR – LOCK – PLUG – PROTECTOR – SEAL – TERMINAL, Chassis Electrical

NOTE: FOR ILLUSTRATION ON TERMINALS AND CONNECTORS SEE STANDARD PARTS BOOK GRP 8.965

93–95	Y 5.7P (LT1)	2984033	1	1.40	BOOT, WRG HARN TERM (GEN CONN)	
84–96	Y	10098907	2	12.55	CONDUIT, S/D WRG	3–H10,16
87–93	Y	12101857	1	18.70	CONNECTOR, AIR DVTR VLV WRG (WHITE) (2–WAY F, W/LEADS) (02.535) (AC–DELCO #PT249)	
93	Y 5.7P (LT1)	15306045	1	28.78	CONNECTOR, AIR SW VLV (W/LEADS) (TWO 12GA AND THREE 14GA WIRES) (08.855) (AC–DELCO #PT1205)	
94	Y 5.7P (LT1)	12117025	1	21.82	CONNECTOR, AIR SW VLV (W/LEADS) (BLACK) (3–WAY F) (W/LEADS) (02.383) (AC–DELCO #PT420)	6–E11,17
90	Y 4–SPD A/TRANS (MD8), 6–SPD M/TRANS (ML9) ...	12116930	1	29.89	CONNECTOR, DIODE NETWORK (W/LEADS) (02.535) (AC–DELCO #PT418)	
90–91	Y07 STEREO CASSETTE (UM6), CASSETTE STEREO (UU8), CASSETTE/CD PLAYER (U1F)	12116930	1	29.89	CONNECTOR, DIODE NETWORK (4–WAY FEMALE EDGE BOARD) (W/LEADS) (02.535) (AC–DELCO #PT418)	
91–95	Y	12116930	1	29.89	CONNECTOR, DIODE NETWORK (4–WAY FEMALE EDGE BOARD) (W/LEADS) (02.535) (AC–DELCO #PT418)	
92	Y STEREO CASSETTE (UM6), CASSETTE STEREO (UU8), CASSETTE/CD PLAYER (U1F)	12116930	1	29.89	CONNECTOR, DIODE NETWORK (4–WAY FEMALE EDGE BOARD) (W/LEADS) (02.535) (AC–DELCO #PT418)	
93	Y07	12069433	1	94.88	CONNECTOR, DIODE NETWORK (02.342) (AC–DELCO #4SW37FS)	
90–91	Y 5.7–8 (L98)	12101910	1	35.81	CONNECTOR, DISTR (BLACK) (4–WAY F) (W/LEADS) (02.535) (AC–DELCO #PT182)	
93	Y	15305942	1	36.08	CONNECTOR, DISTR (W/LEADS) (4–WAY F, W/LEADS) (02.383) (AC–DELCO #PT1174)	

© 2000 GENERAL MOTORS SERVICE PARTS OPERATIONS–CHEVROLET–14Y

2.530 BOOT – CONDUIT – CONNECTOR – COVER – INSULATOR – LOCK – PLUG – PROTECTOR – SEAL – TERMINAL, Chassis Electrical (Con't)

95–96	Y 5.7P (LT1)	12129619	1	2.79	CONNECTOR, DISTR (4–WAY F, W/O LEADS)	
96	Y 5.7–5 (LT4)	12129619	1	2.79	CONNECTOR, DISTR (4–WAY F, W/O LEADS)	
90–93	Y	12101918	1	27.21	CONNECTOR, I/P WRG HARN DATA LINK CONN BYPASS (12–WAY F) (W/LEADS) (02.535) (AC–DELCO #PT190)	
91	Y 5.7–8 (L98)	12126446	1	60.39	CONNECTOR, INLINE–FUSE (2–WAY F, W/LEADS & COVER) (02.535)	
92–93	Y 5.7J (LT5)	12126446	1	60.39	CONNECTOR, INLINE–FUSE (2–WAY F, W/LEADS & COVER) (02.535)	
92–95	Y ELEK RIDE & HANDLING (FX3)	12092249	2	2.44	CONNECTOR, INLINE–TO CHAS HARN (23–WAY F) (W/LEADS)	
92	Y	12116446	1	DISCON	CONNECTOR, INLINE–TO CHAS HARN (W/LEADS)	
92–95	Y 5.7J (LT5)	12117271	1	57.63	CONNECTOR, INLINE–TO CHAS HARN (WHITE) (8–WAY F) (W/LEADS) (02.535) (AC–DELCO #PT444)	
93	Y	12101853	1	19.29	CONNECTOR, INLINE–TO CHAS HARN (2–WAY M, W/LEADS, USED T/W 15300591) (02.535) (AC–DELCO #PT245)	
93	Y 5.7P (LT1)	12117271	1	57.63	CONNECTOR, INLINE–TO CHAS HARN (WHITE) (8–WAY F) (W/LEADS) (02.535) (AC–DELCO #PT444)	
94–95	Y	12092248	1	1.73	CONNECTOR, INLINE–TO CHAS HARN (23–WAY M) (W/O LEADS)	
95	Y	12101853	1	19.29	CONNECTOR, INLINE–TO CHAS HARN (2–WAY M, W/LEADS, USED T/W 15300591) (02.535) (AC–DELCO #PT245)	
94–96	Y	12117363	1	17.87	CONNECTOR, INLINE–TO COR LP (3–WAY F) (02.895) (AC–DELCO #PT496)	
92	Y 5.7P (LT1), 4–SPD A/TRANS (MD8), 6–SPD M/TRANS (ML9), A/C MAN CONT (C60), A/C AUTO ELEC CONT (C68)	12101854	1	43.66	CONNECTOR, INLINE–TO DISTR HARN (6–WAY F) (W/LEADS) (02.535) (AC–DELCO #PT246)	
93	Y 5.7P (LT1)	12085537	2	31.88	CONNECTOR, INLINE–TO DISTR HARN (4–WAY F) (W/LEADS) (02.535) (AC–DELCO #PT147)	
93–94	Y	12085537	2	31.88	CONNECTOR, INLINE–TO ELEK IGN (4–WAY F) (W/LEADS) (02.535) (AC–DELCO #PT147)	
96	Y	12085537	2	31.88	CONNECTOR, INLINE–TO ELEK IGN (4–WAY F) (W/LEADS) (02.535) (AC–DELCO #PT147)	
96	Y CHASSIS, REALTIME DAMPING (F45)	12117025	4	21.82	CONNECTOR, INLINE–TO ELEK SUSP POSN SEN (BLACK) (3–WAY F) (W/LEADS) (02.383) (AC–DELCO #PT420)	6–E11,17

© 2000 GENERAL MOTORS SERVICE PARTS OPERATIONS–CHEVROLET–14Y

2.530 BOOT – CONDUIT – CONNECTOR – COVER – INSULATOR – LOCK – PLUG – PROTECTOR – SEAL – TERMINAL, Chassis Electrical (Con't)

90	Y 5.7J (LT5), SOFT RIDE SUSP (FE1), HVY DUTY SUSP (FE7), (EXC DAYTIME RUNNING LGT (T61)	12085509	1	48.33	CONNECTOR, INLINE–TO ENG HARN (6–WAY F, W/LEADS) (02.535) (AC–DELCO #PT130)
90	Y 4–SPD A/TRANS (MD8), 6–SPD M/TRANS (ML9) ...	12101762	1	68.40	CONNECTOR, INLINE–TO ENG HARN (10–WAY F, W/LEADS) (02.535) (AC–DELCO #PT150)
90–96	Y	12101823	1	49.04	CONNECTOR, INLINE–TO ENG HARN (10–WAY M) (W/LEADS) (02.535) (AC–DELCO #PT215)
90	Y 5.7–8 (L98)	12101910	1	35.81	CONNECTOR, INLINE–TO ENG HARN (4–WAY F, W/LEADS) (02.535) (AC–DELCO #PT162)
90	Y 6–SPD M/TRANS (ML9), A/C MAN CONT (C60)	12125674	1	35.57	CONNECTOR, INLINE–TO ENG HARN (8–WAY M, W/LEADS) (AC–DELCO #PT586) .....
90	Y 6–SPD M/TRANS (ML9), A/C AUTO ELEC CONT (C68), SOFT RIDE SUSP (FE1), HVY DUTY SUSP (FE7), (EXC DAYTIME RUNNING LGT (T61)	12125674	1	35.57	CONNECTOR, INLINE–TO ENG HARN (8–WAY M, W/LEADS) (AC–DELCO #PT586) .....
90	Y 4–SPD A/TRANS (MD8), A/C MAN CONT (C60), A/C AUTO ELEC CONT (C68) ...	12125674	1	35.57	CONNECTOR, INLINE–TO ENG HARN (8–WAY M, W/LEADS) (AC–DELCO #PT586) .....
91	Y 6–SPD M/TRANS (ML9), A/C MAN CONT (C60), A/C AUTO ELEC CONT (C68) ...	12085461	1	17.56	CONNECTOR, INLINE–TO ENG HARN (BLACK) (2–WAY M) (W/LEADS) (02.535) (AC–DELCO #PT103) .....
91	Y 5.7J (LT5), SOFT RIDE SUSP (FE1), HVY DUTY SUSP (FE7), (EXC DAYTIME RUNNING LGT (T61)	12085509	1	48.33	CONNECTOR, INLINE–TO ENG HARN (6–WAY F) (W/LEADS) (02.535) (AC–DELCO #PT130)
91–93	Y 4–SPD A/TRANS (MD8), 6–SPD M/TRANS (ML9), A/C MAN CONT (C60), A/C AUTO ELEC CONT (C68) ...	12101762	1	68.40	CONNECTOR, INLINE–TO ENG HARN (10–WAY F) (W/LEADS) (02.535) (AC–DELCO #PT150)
91	Y 4–SPD A/TRANS (MD8), 6–SPD M/TRANS (ML9), A/C MAN CONT (C60), A/C AUTO ELEC CONT (C68) ...	12125674	1	35.57	CONNECTOR, INLINE–TO ENG HARN (8–WAY M) (W/LEADS) (AC–DELCO #PT586) .....
92–96	Y	12101832	1	45.10	CONNECTOR, INLINE–TO ENG HARN (BLUE) (10–WAY F, W/LEADS) (02.535) (AC–DELCO #PT224) .....
92–94	Y	12101854	1	43.66	CONNECTOR, INLINE–TO ENG HARN (6–WAY F) (W/LEADS) (02.535) (AC–DELCO #PT246)
92	Y	12116445	1	DISCON	CONNECTOR, INLINE–TO ENG HARN (W/LEADS) .....
92–96	Y	12117270	1	54.65	CONNECTOR, INLINE–TO ENG HARN (8–WAY M, W/LEADS) (AC–DELCO #PT443) .....
93–95	Y	12101855	1	19.95	CONNECTOR, INLINE–TO ENG HARN (2–WAY F) (W/LEADS) (W/SEAL) (02.535) (AC–DELCO #PT247) .....
94–96	Y 6–SPD M/TRANS (ML9) ...	12092248	1	1.73	CONNECTOR, INLINE–TO ENG HARN (23–WAY M) (W/O LEADS)

© 2000 GENERAL MOTORS SERVICE PARTS OPERATIONS–CHEVROLET–14Y

2.530 BOOT – CONDUIT – CONNECTOR – COVER – INSULATOR – LOCK – PLUG – PROTECTOR – SEAL – TERMINAL, Chassis Electrical (Con't)

94–95	Y	12101853	1	19.20	CONNECTOR, INLINE–TO ENG HARN (2–WAY M, W/LEADS, USED T/W 15300591) (02.535) (AC–DELCO #PT245)	
95	Y 5.7J (LT5)	12117270	1	54.65	CONNECTOR, INLINE–TO ENG HARN (8–WAY M, W/LEADS) (AC–DELCO #PT443)	
95–96	Y 5.7P (LT1)	12126023	1	48.08	CONNECTOR, INLINE–TO ENG HARN (4–WAY M, W/LEADS) (AC–DELCO #PT654)	
96	Y 4–SPD A/TRANS (M30) ...	12092248	1	1.73	CONNECTOR, INLINE–TO ENG HARN (23–WAY M) (W/O LEADS)	
96	Y	12101854	1	43.66	CONNECTOR, INLINE–TO ENG HARN (6–WAY F) (W/LEADS) (02.535) (AC–DELCO #PT246)	
90	Y	12058688	1	DISCON	CONNECTOR, INLINE–TO ENG HARN, ECM HARN (CRT MONITOR COAXIAL LEAD–IN) (32 PIN) (JUNC 2) (02.535)	
90	Y 5.7J (LT5), A/C MAN CONT (C60), SOFT RIDE SUSP (FE1), HVY DUTY SUSP (FE7), A/C AUTO ELEC CONT (C68)	12085491	AR	16.87	CONNECTOR, INLINE–TO F/INJR HARN (W/LEADS) (02.535) (AC–DELCO #PT113)	
90–91	Y 5.7–8 (L98), 6–SPD M/TRANS (ML9), 4–SPD A/TRANS (MD8), A/C MAN CONT (C60), A/C AUTO ELEC CONT (C68)	12085491	AR	16.87	CONNECTOR, INLINE–TO F/INJR HARN (2–WAY F) (W/LEADS) (02.535) (AC–DELCO #PT113)	
90–91	Y 5.7–8 (L98), 4–SPD A/TRANS (MD8), 6–SPD M/TRANS (ML9), A/C MAN CONT (C60), A/C AUTO ELEC CONT (C68)	12085534	1	32.61	CONNECTOR, INLINE–TO FWD LP HARN (4–WAY, W/LEADS) (02.535) (AC–DELCO #PT145)	
91–96	Y	2965810	2	.70	CONNECTOR, INLINE–TO FWD LP HARN (3–WAY F, W/O LEADS)	3–J2,49
91	Y 5.7J (LT5), A/C AUTO ELEC CONT (C68), SOFT RIDE SUSP (FE1), HVY DUTY SUSP (FE7)	12101892	1	47.82	CONNECTOR, INLINE–TO FWD LP HARN (W/LEADS) (02.535) (AC–DELCO #PT162)	
91–96	Y	12117367	2	24.98	CONNECTOR, INLINE–TO FWD LP HARN (3–WAY F) (W/LEADS, 59 SERIES) (AC–DELCO #PT500)	
92–96	Y	12101852	1	39.24	CONNECTOR, INLINE–TO FWD LP HARN (6–WAY M) (W/LEADS) (02.535) (AC–DELCO #PT244)	
94	Y	12102747	2	21.07	CONNECTOR, INLINE–TO HTD OXY SEN (BLACK) (2–WAY F) (W/LEADS) (03.670) (AC–DELCO #PT374)	
90–96	Y	12101762	1	68.40	CONNECTOR, INLINE–TO I/P HARN (10–WAY F) (W/LEADS) (02.535) (AC–DELCO #PT150)	
90	Y 5.7J (LT5), A/C MAN CONT (C60), A/C AUTO ELEC CONT (C68), SOFT RIDE SUSP (FE1), HVY DUTY SUSP (FE7)	12101823	1	49.04	CONNECTOR, INLINE–TO I/P HARN (10–WAY M, W/LEADS) (02.535) (AC–DELCO #PT215)	

© 2000 GENERAL MOTORS SERVICE PARTS OPERATIONS–CHEVROLET–14Y

2.530 BOOT – CONDUIT – CONNECTOR – COVER – INSULATOR – LOCK – PLUG – PROTECTOR – SEAL – TERMINAL, Chassis Electrical (Con't)

90–91	Y 5.7–8 (L98), 4–SPD A/TRANS (MD8), 6–SPD M/TRANS (ML9), A/C MAN CONT (C60), A/C AUTO ELEC CONT (C68)	12101823	1	49.04	CONNECTOR, INLINE–TO I/P HARN (10–WAY M) (W/LEADS) (02.535) (AC–DELCO #PT215)
90	Y STEREO CASSETTE (UM6), CASSETTE STEREO (UU8), CASSETTE/CD PLAYER (U1F)	12126015	1	28.45	CONNECTOR, INLINE–TO I/P HARN (4–WAY M, W/LEADS) (AC–DELCO #PT646) .....
90–92	Y67 STEREO CASSETTE (UM6), CASSETTE STEREO (UU8), CASSETTE/CD PLAYER (U1F)	12101823	1	49.04	CONNECTOR, INLINE–TO I/P HARN (10–WAY M) (W/LEADS) (02.535) (AC–DELCO #PT215)
91	Y 5.7J (LT5), A/C AUTO ELEC CONT (C68), SOFT RIDE SUSP (FE1), HVY DUTY SUSP (FE7)	12085535	1	17.46	CONNECTOR, INLINE–TO I/P HARN (2–WAY F) (W/LEADS) (HAS INDEX TAB @ OUTER EDGE OF CAVITY B) (02.535) (AC–DELCO #PT146) .....
91–95	Y	12101822	1	32.35	CONNECTOR, INLINE–TO I/P HARN (GRAY) (8–WAY F) (W/LEADS) (02.535) (AC–DELCO #PT214) .....
91	Y 5.7J (LT5), A/C AUTO ELEC CONT (C68), SOFT RIDE SUSP (FE1), HVY DUTY SUSP (FE7)	12101823	1	49.04	CONNECTOR, INLINE–TO I/P HARN (10–WAY M) (W/LEADS) (02.535) (AC–DELCO #PT215)
91	Y	12116926	1	61.00	CONNECTOR, INLINE–TO I/P HARN (PART OF SIR SUB HARN) (8–WAY F) (14.865) (AC–DELCO #PT415) .....
91–92	Y07 STEREO CASSETTE (UM6), CASSETTE STEREO (UU8), CASSETTE/CD PLAYER (U1F)	12126015	1	28.45	CONNECTOR, INLINE–TO I/P HARN (4–WAY M) (W/LEADS) (AC–DELCO #PT646) .....
92–96	Y	12002249	2	2.44	CONNECTOR, INLINE–TO I/P HARN (23–WAY F) (W/LEADS)
93–96	Y	12092248	1	1.73	CONNECTOR, INLINE–TO I/P HARN (23–WAY M) (W/O LEADS)
93–96	Y	12101823	1	49.04	CONNECTOR, INLINE–TO I/P HARN (10–WAY M) (W/LEADS) (02.535) (AC–DELCO #PT215)
93	Y	12101836	1	17.46	CONNECTOR, INLINE–TO I/P HARN (2–WAY M, W/LEADS) (02.535) (AC–DELCO #PT228)
93–96	Y	12103188	1	1.82	CONNECTOR, INLINE–TO I/P HARN (BLUE) (10–WAY M, W/O LEADS) .....
94	Y	12117371	1	13.24	CONNECTOR, INLINE–TO I/P HARN (3–WAY M) (W/LEADS) (AC–DELCO #PT504) .....
95–96	Y RECL FRT BKT ST (AQ9) ..	12117371	1	13.24	CONNECTOR, INLINE–TO I/P HARN (3–WAY M) (W/LEADS) (AC–DELCO #PT504) .....
94	Y 6–SPD M/TRANS (ML9) ...	12065803	1	2.20	CONNECTOR, INLINE–TO INST CSTR (34–WAY F) (09.735) ...
90–95	Y	12085461	1	17.56	CONNECTOR, INLINE–TO STRG COL HARN (BLACK) (2–WAY M) (W/LEADS) (02.535) (AC–DELCO #PT103) .....

© 2000 GENERAL MOTORS SERVICE PARTS OPERATIONS–CHEVROLET–14Y

2.530 BOOT – CONDUIT – CONNECTOR – COVER – INSULATOR – LOCK – PLUG – PROTECTOR – SEAL – TERMINAL, Chassis Electrical (Con't)

91–95	Y 5.7J (LT5)	12101899	1	17.95	CONNECTOR, INLINE–TO STRG COL HARN (FEM METRI–PACK, PULL TO ST) (BLACK) (2–WAY F) W/LEADS) (02.383) (AC–DELCO #PT169)	
90–95	Y	12102756	1	38.31	CONNECTOR, INLINE–TO T/SIG SW (TO STRG COL) (11–WAY F) (AC–DELCO #PT386)	
93	Y 4–SPD A/TRANS (M30) ...	12102633	1	18.27	CONNECTOR, INLINE–TO TRANS (5–WAY F, W/LEADS) (09.652) (AC–DELCO #12102633)	
93–94	Y 5.7P (LT1)	15306045	1	23.78	CONNECTOR, INLINE–TO TRANS (4TH & 6TH GR/RLY) (TWO 12GA AND THREE 14GA WIRES) (08.855) (AC–DELCO #PT1205) .	
94	Y	12126459	1	61.55	CONNECTOR, INLINE–TO TRANS (12–WAY F, W/LEADS) (AC–DELCO #PT729)	
96	Y 4–SPD A/TRANS (M30) ...	12160492	1	5.58	CONNECTOR, INLINE–TO TRANS (13–WAY F, W/O LEADS)	
96	Y 4–SPD A/TRANS (M30) ...	12160782	1	4.66	CONNECTOR, INLINE–TO TRANS (20–WAY M)	
90	Y 5.7J (LT5), SOFT RIDE SUSP (FE1), HVY DUTY SUSP (FE7), (EXC DAYTIME RUNNING LGT (T61)	12126032	1	15.88	CONNECTOR, INLINE–TO VAC PUMP HARN (W/LEADS) (02.575) (AC–DELCO #PT663)	
90	Y 5.7J (LT5), DAYTIME RUNNING LGT (T61)	12126032	1	15.88	CONNECTOR, INLINE–TO VAC PUMP HARN (W/LEADS) (02.575) (AC–DELCO #PT663)	
90–94	Y	12117379	1	29.43	CONNECTOR, PARK/NEU POSN SW WRG HARN (6 CAV F) (04.054) (AC–DELCO #PT512)	
90–94	Y	12101864	1	17.62	CONNECTOR, PWR FEED HARN (BLACK) (3–WAY F) (W/LEADS) (02.535) (AC–DELCO #PT256)	
96	Y	15305875	1		CONNECTOR, RLY–BLO MOT LOW SPD (5–WAY F) (W/LEADS & RELAY) (08.855) (AC–DELCO #PT1016)	
96	Y	15306045	1	28.78	CONNECTOR, RLY–BLO MOT LOW SPD (TWO 12GA AND THREE 14GA WIRES) (08.855) (AC–DELCO #PT1205)	
96	Y 4–SPD A/TRANS (M30) ...	12162201	1	.56	CONNECTOR, SOL–A SHFT VLV (NATURAL) (2–WAY F) (W/O LEADS)	
90	Y	10098903	1	11.82	COVER, ENG WRG HARN ECM CONN (02.525)	3–H21,46
91	Y 5.7J (LT5)	10098903	1	11.82	COVER, ENG WRG HARN ECM CONN (02.525)	3–H21,46
91	Y 5.7–8 (L98)	12064802	1	10.29	COVER, ENG WRG HARN ECM CONN	3–H15,1
92–93	Y	12064802	1	10.29	COVER, ENG WRG HARN ECM CONN	3–H15,1
94–95	Y 5.7J (LT5)	12064802	1	10.29	COVER, ENG WRG HARN ECM CONN	3–H15,1
93–95	Y	3999572	AR	4.98	INSULATOR, I/P WRG HARN (09.260)	

© 2000 GENERAL MOTORS SERVICE PARTS OPERATIONS–CHEVROLET–14Y

2.530 BOOT – CONDUIT – CONNECTOR – COVER – INSULATOR – LOCK – PLUG – PROTECTOR – SEAL – TERMINAL, Chassis Electrical (Con't)

93–95	Y	11515174	2	*1.50	INSULATOR, I/P WRG HARN (4 1/4"X7 1/2") (TRIM AS REQ'D) (15.492)	
96	Y A/C AUTO ELEC CONT (C68)	3999572	1	4.98	INSULATOR, I/P WRG HARN (09.260)	
91–95	Y	12045669	1	.61	LOCK, ELEC CONN BODY SECD	
91–95	Y	12045690	1	.61	LOCK, TERM–WRG SECD	
93–96	Y	12077532	2	.93	LOCK, TERM–WRG SECD (TO FUSE BLK) (USED W/MAXI FUSE BLK HOLDING 8 FUSES) (02.483)	3–G20,29
94–95	Y RECL FRT BKT ST (AQ9)	12077572	1	.93	LOCK, TERM–WRG SECD (USE ON CONVENIENCE CNTR)	
96	Y	12077572	1	.93	LOCK, TERM–WRG SECD (USE ON CONVENIENCE CNTR)	
96	Y	12110603	1	.65	LOCK, TERM–WRG SECD (BLUE) (5–ROW RETENTION)	
96	Y	12160561	1	.65	LOCK, TERM–WRG SECD (NATURAL) (9–ROW RETENTION)	
93	Y 5.7P (LT1)	12059168	2	.20	PLUG, WRG HARN CONN (UNUSED CAV) (BLACK) (1–WAY M)	
93–95	Y 5.7P (LT1), A/C AUTO ELEC CONT (C68)	12066082	2	.37	PLUG, WRG HARN CONN (GREEN)	
94–96	Y	12059168	2	.20	PLUG, WRG HARN CONN (UNUSED CAV) (BLACK) (1–WAY M)	
94–96	Y	10273760	1	1.22	PROTECTOR, I/P WRG HARN	
84–93	Y	10054241	1	*1.82	SEAL, A/TRNS WRG CONN (O RING) (.687 I.D. X .1" THK) (04.338) (AC–DELCO #10054241)	5–H5,34
94	Y 5.7P (LT1), 4–SPD A/TRANS (M30), 2.59R (GM1), 3.07R (G44)	10054241	1	*1.82	SEAL, A/TRNS WRG CONN (O RING) (.687 I.D. X .1" THK) (04.338) (AC–DELCO #10054241)	5–H5,34
84–85	Y	3033932	1	2.30	TERMINAL, BLO GRD	
	*EXPORT**********EXPORT**********EXPORT**********EXPORT**********EXPORT*					
96	Y SIG & MKR LP (T90) (EXPORT)	12101823	1	49.04	CONNECTOR, INLINE–TO ELEK BRK MDL (10–WAY M) (W/LEADS) (02.535) (AC–DELCO #PT215)	
90	Y 5.7J (LT5), DAYTIME RUNNING LGT (T61)	12085509	1	48.33	CONNECTOR, INLINE–TO ENG HARN (6–WAY F, W/LEADS) (02.535) (AC–DELCO #PT130)	
90	Y 6–SPD M/TRANS (ML9), A/C AUTO ELEC CONT (C68), DAYTIME RUNNING LGT (T61)	12125674	1	35.57	CONNECTOR, INLINE–TO ENG HARN (8–WAY M, W/LEADS) (AC–DELCO #PT586)	
91	Y 5.7J (LT5), DAYTIME RUNNING LGT (T61)	12085509	1	48.33	CONNECTOR, INLINE–TO ENG HARN (6–WAY F) (W/LEADS) (02.535) (AC–DELCO #PT130)	
94–95	Y07 SIG & MKR LP (T90) (EXPORT)	12084203	1	4.74	CONNECTOR, INLINE–TO F/PMP (4–WAY M) (03.107)	

© 2000 GENERAL MOTORS SERVICE PARTS OPERATIONS–CHEVROLET–14Y

2.530 BOOT – CONDUIT – CONNECTOR – COVER – INSULATOR – LOCK – PLUG – PROTECTOR – SEAL – TERMINAL, Chassis Electrical (Con't)

94–96	Y HDLP (T72) (EXPORT), RH RULE OF ROAD HDLP (T84) (EXPORT), LH RULE OF ROAD HDLP (T85) (EXPORT), SIG & MKR LP (T90) (EXPORT)	12085537	2	31.88	CONNECTOR, INLINE–TO FWD LP HARN (4–WAY F) (W/LEADS) (02.535) (AC–DELCO #PT147)
90	Y 4–SPD A/TRANS (MD8), A/C MAN CONT (C60), DAYTIME RUNNING LGT (T61)	12167138	1	15.40	CONNECTOR, INLINE–TO I/P HARN (W/LEADS) (02.485) (AC–DELCO #LS71) .....

2.535 CONNECTOR – CONNECTOR KIT, Electrical Wiring Repair Kit

86–91	Y	12078784	1	DISCON	CONNECTOR (W/LEADS) .....
86–88	Y	12083169	1	DISCON	CONNECTOR KIT, CRCONT SERVO (W/LEADS) (CONSISTS OF CLU SW, CRCONT SERVO, CRCONT & CRCONT/FUEL PUMP CYC RELAY) .....
86	Y BOSE RADIO	1227892	1	DISCON	CONNECTOR KIT, ELEC RPR BOSE AMP (W/LEADS) (INCL 1 4–WAY CONN FOR BOSE AMP IN DR & TERMS W/SEALS) ....
87	Y	12083025	1	DISCON	CONNECTOR KIT, ELEC RPR MISC CONTROLS (W/LEADS) (INCL OIL PRESS SW, VSS, THROT POS SEN & MAF SEN) .....
88	Y	12083143	1	DISCON	CONNECTOR KIT, ELEC RPR RR ENG/IGN CONT (W/LEADS) (INCL CONN FOR DIRECT IGN 1/VSS, DIRECT IGN 2, INJ HARN INTERCONN, IGN CONTROL & EST) .....
87	Y	12101908	1	17.46	CONNECTOR KIT, ELEC WRG REPAIR, ECC CMPR (INCL CONN FOR A/C COMPRESSOR CLUTCH) (W/LEADS) (AC–DELCO #PT180) .....
86–87	Y	12058900	1	DISCON	CONNECTOR KIT, ELEC WRG RPR, ECM (W/LEADS) (INCL CONN FOR ECM & SECD LK) .
86–87	Y	12042800	1	DISCON	CONNECTOR KIT, ELEC WRG RPR, PWR WDO (W/LEADS) (INCL CONN FOR LF, LR, RF, RR DR WDO SW, LF, RF, RR, LR DR WDO MTR) .....
88	Y	12083200	1	DISCON	CONNECTOR KIT, FUEL PUMP RELAY (W/LEADS) (CONSISTS OF FUEL RAIL INJ, C3I MDL, FUEL PUMP RELAY) .....
86–88	Y	12083209	2	DISCON	CONNECTOR KIT, RDO SPKR/ETR RDO (W/LEADS) (CONSISTS OF LH/RH FRT SPKR, LH/RH RDO SPKR/ETR RDO) .....
86–87	Y	12085493	AR	28.45	CONNECTOR, A .C. CONT SW (6–WAY F, W/LEADS) (AC–DELCO #PT115) .....
89–90	Y	12085507	AR	22.57	CONNECTOR, A/C PRESS SW (3–WAY, W/LEADS) (AC–DELCO #PT128) .....

© 2000 GENERAL MOTORS SERVICE PARTS OPERATIONS–CHEVROLET–14Y

2.535 CONNECTOR – CONNECTOR KIT, Electrical Wiring Repair Kit (Con't)

87–91	Y	12101856	1	18.29	CONNECTOR, AIR SW VLV (2–WAY F, W/LEADS) (AC–DELCO #PT248)
87–88	Y	12116252	1	17.70	CONNECTOR, COLD START VALVE (W/LEADS & BOOT) (AC–DELCO #PT425)
87–90	Y	12101822	AR	32.35	CONNECTOR, CRCONT (INLINE I/P) (W/LEADS) (AC–DELCO #PT214)
87–90	Y	12101827	AR	36.30	CONNECTOR, CRCONT .SERVO/CRUISE (ECM) (8–WAY M, W/LEADS) (AC–DELCO #PT219)
87–91	Y	12116930	1	20.89	CONNECTOR, DIODE MDL (4–WAY FEMALE EDGE BOARD) (W/LEADS) (AC–DELCO #PT418)
84–90	Y	12101861	1	16.22	CONNECTOR, DOOR AJAR SW (W/LEADS) (AC–DELCO #PT253)
84	Y	12085531	AR	19.55	CONNECTOR, EGR SOL (W/LEADS) (AC–DELCO #PT141)
84–90	Y	12101871	1	32.61	CONNECTOR, ESC MOD (4–WAY F, W/LEADS) (AC–DELCO #PT262)
90	Y	12085537	1	31.88	CONNECTOR, EVRV (W/LEADS) (AC–DELCO #PT147)
89	Y	12085509	AR	48.33	CONNECTOR, FOG LAMP (W/LEADS) (6–WAY F) (AC–DELCO #PT130)
87–88	Y	12085490	AR	16.87	CONNECTOR, FUEL INJECTOR (2–WAY, W/LEADS) (90 DEGREE BOOT) (AC–DELCO #PT112)
89	Y	12125629	1	76.25	CONNECTOR, IGN MDL (C3I) (14 WAY, W/LEADS) (AC–DELCO #PT541)
88–89	Y	12101855	1	19.95	CONNECTOR, IGNITION VSS (W/LEADS) (2–WAY F) (AC–DELCO #PT247)
90–91	Y	8907496	1	17.20	CONNECTOR, INLINE–DIODE (2–WAY M, W/LEADS) (04.720)
90–91	Y	12101865	1	19.16	CONNECTOR, INLINE–DIODE (BLACK) (2–WAY F) (W/LEADS) (AC–DELCO #PT257)
91–96	Y	15305874	1	21.86	CONNECTOR, INLINE–TO HDLP OPG DR ACTR MOT (5–WAY F) (W/LEADS) (02.530) (AC–DELCO #PT1015)
87–90	Y	12085484	AR	26.00	CONNECTOR, MAP LP (W/LEADS) (AC–DELCO #PT106)
85–89	Y	15305932	AR	59.86	CONNECTOR, MAP, MASS SIR FLOW, MASS AIR SEN (5–WAY F, W/LEADS) (03.670) (AC–DELCO #PT1072)
89–90	Y	12085536	AR	28.96	CONNECTOR, MIR MTR (W/LEADS) (AC–DELCO #PT144)
84–90	Y	12101860	1	DISCON	CONNECTOR, MIRROR ADJUSTER SW (W/LEADS)

© 2000 GENERAL MOTORS SERVICE PARTS OPERATIONS–CHEVROLET–14Y

2.535 CONNECTOR – CONNECTOR KIT, Electrical Wiring Repair Kit (Con't)

87	Y	12101859	1	30.89	CONNECTOR, MIRROR SELECTOR SW (W/LEADS) (AC–DELCO #PT251)
88–90	Y	12101823	AR	49.04	CONNECTOR, PASS ,PNEUMATIC SW (10–WAY F, W/LEADS) (AC–DELCO #PT215)
84–90	Y	12101862	1	27.44	CONNECTOR, PWR DR LK SW (W/LEADS) (AC–DELCO #PT254)
90	Y	12085486	AR	51.51	CONNECTOR, RADIO (10–WAY F, W/LEADS) (AC–DELCO #PT108)
84–91	Y	12085533	AR	25.49	CONNECTOR, TCC (WHITE) (3–WAY MALE, W/LEADS, FEMALE TERM USE 12354970, 16 GA) (AC–DELCO #PT143)
86	Y	12085505	AR	17.70	CONNECTOR, TO ELEC ANT (3–WAY F) (W/LEADS) (AC–DELCO #PT126)
88	Y	12085505	AR	17.70	CONNECTOR, TO ELEC ANT (3–WAY F) (W/LEADS) (AC–DELCO #PT126)
84–90	Y	12085462	AR	32.10	CONNECTOR, TO RH BODY HARN (6–WAY M, W/LEADS) (AC–DELCO #PT104)
91	Y	12085510	1	*20.30	CONNECTOR, WRG INFL RST SYS RPR (4 PER PKG) (W/LEADS)
85–90	Y	12085487	AR	22.15	CONNECTOR, WSW MTR (4 TERM FLAT, W/LEADS) (AC–DELCO #PT109)

2.559 BOLT – BRACKET – CLIP – COVER – INSULATOR – PLATE – RETAINER – SHIELD – SPACER – STRAP – STUD – WASHER, Chassis/Engine Wiring Harness

90–92	Y 5.7J (LT5)	11509589	2	*.92	BOLT, ENG WRG HARN GND (M8X1.25X16, 14.8 THD) (08.900)	3–H2,20
84–89	Y 5.7–8	14062552	1	1.12	BRACKET, ECM WRG HARN	3–G23,23
90–91	Y 5.7–8 (L98)	14062552	1	1.12	BRACKET, ECM WRG HARN	3–G23,23
84	Y	14066570	2	DISCON	BRACKET, ELEC CONT MDL HARN (TO ENG HD CVR)	
84	Y	14057560	1	DISCON	BRACKET, ENG WRG HARN (TO CASE)	
84–91	Y	14062511	AR	2.04	BRACKET, ENG WRG HARN (R/SI RR)	3–G23,27
84–85	Y	14062552	1	1.12	BRACKET, ENG WRG HARN (TO OIL PAN)	3–G23,23
84–86	Y	14062599	AR	.68	BRACKET, ENG WRG HARN (ABOVE LH ENG MT)	3–G23,29
84–88	Y	14073493	1	2.04	BRACKET, ENG WRG HARN (L/SI RR)	3–G23,13
85–87	Y	14100810	1	DISCON	BRACKET, ENG WRG HARN (RH SI INT MANIF)	
89–91	Y 5.7–8 (L98)	14062599	AR	.68	BRACKET, ENG WRG HARN (ABOVE LH ENG MT)	3–G23,29
89–91	Y 5.7–8 (L98), 4–SPD A/TRANS (MD8)	14073493	1	2.04	BRACKET, ENG WRG HARN (L/SI RR)	3–G23,13
89	Y M/TRNS	14104953	1	DISCON	BRACKET, ENG WRG HARN (L/SI RR)	

© 2000 GENERAL MOTORS SERVICE PARTS OPERATIONS–CHEVROLET–14Y

2.559 BOLT – BRACKET – CLIP – COVER – INSULATOR – PLATE – RETAINER – SHIELD – SPACER – STRAP – STUD – WASHER, Chassis/Engine Wiring Harness (Con't)

90	Y 5.7J (LT5), A/C MAN CONT (C60), A/C AUTO ELEC CONT (C68), SOFT RIDE SUSP (FE1), HVY DUTY SUSP (FE7)	14104749	1	2.04	BRACKET, ENG WRG HARN (ALUM, LOC AT RR OF ENG) ..	
90–91	Y 5.7J (LT5)	14104938	1	35.45	BRACKET, ENG WRG HARN (AT OXY & KNOCK SEN CABLES) (STEEL) (LWR LH SI OF BLK NEAR OIL PAN)	3–H2,30
91–95	Y 5.7J (LT5)	14104749	1	2.04	BRACKET, ENG WRG HARN (ALUM, LOC AT RR OF ENG) ..	
91–92	Y 5.7J (LT5)	14104941	1	12.90	BRACKET, ENG WRG HARN (TO OIL PAN) (03.682)	
91	Y 5.7–8 (L98)	15664822	1	1.05	BRACKET, ENG WRG HARN (01.166)	3–H5,26
92–95	Y 5.7J (LT5)	10098912	1	12.90	BRACKET, ENG WRG HARN (03.682)	
92–95	Y 5.7P (LT1)	12553341	4	1.12	BRACKET, ENG WRG HARN	3–H12,4
92–95	Y 5.7J (LT5)	14104938	1	35.45	BRACKET, ENG WRG HARN (STEEL) (LWR LH SI OF BLK NEAR OIL PAN)	3–H2,30
96	Y	12553341	5	1.12	BRACKET, ENG WRG HARN (POS#RH–3, 6, 8, LH–6, 7) ..	3–H12,4
89	Y A/C MAN CONT (C60), A/C AUTO ELEC CONT (C68), SOFT RIDE SUSP (FE1), HVY DUTY SUSP (FE7)	14104961	1	11.32	BRACKET, ENG WRG HARN SHLD	3–H2,31
90–91	Y 5.7J (LT5), A/C MAN CONT (C60), A/C AUTO ELEC CONT (C68), SOFT RIDE SUSP (FE1), HVY DUTY SUSP (FE7)	14104961	1	11.32	BRACKET, ENG WRG HARN SHLD	3–H2,31
92–95	Y 5.7J (LT5)	14104961	1	11.32	BRACKET, ENG WRG HARN SHLD	3–H2,31
84–86	Y	14066531	LH	DISCON	BRACKET, FWD LP WRG HARN (TO FRT BPR IMPACT BAR) ...	
84–86	Y	14066532	RH	DISCON	BRACKET, FWD LP WRG HARN (TO FRT BPR IMPACT BAR) ...	
84–90	Y	14091207	LH	7.55	BRACKET, FWD LP WRG HARN (TO REINFORCEMENT OTR) ..	3–I20,31
84–89	Y	14091208	RH	7.55	BRACKET, FWD LP WRG HARN (TO REINFORCEMENT OTR) ..	3–I20,31
90	Y SOFT RIDE SUSP (FE1), H .D .SUSP (FE7)	14091208	RH	7.55	BRACKET, FWD LP WRG HARN (TO REINFORCEMENT OTR) ..	3–I20,31
84–86	Y	14062523	1	DISCON	BRACKET, I/P WRG HARN	
90–93	Y	10165378	1	DISCON	BRACKET, I/P WRG HARN	
94–96	Y	10251214	1	6.03	BRACKET, I/P WRG HARN	3–I12,27
84–86	Y	14066583	2	3.26	BRACKET, I/P WRG HARN DR LEAD	9–D17.6
84–88	Y M/TRNS	14081179	1	DISCON	BRACKET, TBI HARNESS CLIP ..	
88–89	Y A/C (C68)	9798835	1	1.20	CLIP, A .C. DA WIRE TO EVAP HSNG	
84–93	Y 4–SPD A/TRANS (MD8) ...	8673068	2	1.82	CLIP, A/TRNS WRG HARN (04.197) (AC–DELCO #8673068)	5–H5,66
90–91	Y 5.7J (LT5), A/C MAN CONT (C60), A/C AUTO ELEC CONT (C68), SOFT RIDE SUSP (FE1), HVY DUTY SUSP (FE7)	14104936	1	.94	CLIP, ENG WRG HARN (2 HOLES) (FRT CVR CYL CASE)	3–H10,18

© 2000 GENERAL MOTORS SERVICE PARTS OPERATIONS–CHEVROLET–14Y

2.559 BOLT – BRACKET – CLIP – COVER – INSULATOR – PLATE – RETAINER – SHIELD – SPACER – STRAP – STUD – WASHER, Chassis/Engine Wiring Harness (Con't)

90–95	Y 5.7J (LT5)	14104937	1	.94	CLIP, ENG WRG HARN (1 HOLE) (OIL FILTER HSG)	3–H2,32
92–95	Y 5.7J (LT5)	14104936	1	.94	CLIP, ENG WRG HARN (2 HOLES) (FRT CVR CYL CASE)	3–H10,16
93–95	Y 5.7P (LT1)	1864022	1	.77	CLIP, ENG WRG HARN (1/2 DIA HARD STL)	
93–94	Y 5.7P (LT1)	1864022	1	.77	CLIP, FWD LP WRG HARN (1/2 DIA HARD STL)	
93–94	Y	3816659	AR	*.67	CLIP, FWD LP WRG HARN (7" ADJ, W/ROSEBUD FOR .25 DIA HOLE .031–.14 TH) (08.965) (STRAP)	
94	Y 5.7J (LT5)	1864022	1	.77	CLIP, FWD LP WRG HARN (1/2 DIA HARD STL)	
85	Y	9798835	1	1.20	CLIP, I/P WRG HARN	
93–94	Y	1839906	1	*.13	CLIP, I/P WRG HARN (LARGE 3–5 WIRE) (08.965) (AC–DELCO #1839906)	
93	Y	1864022	1	.77	CLIP, I/P WRG HARN (1/2 DIA HARD STL)	
92–93	Y RECL FRT BKT ST (AQ9) ..	1864022	1	.77	CLIP, I/P WRG HARN EXTN HARN (1/2 DIA HARD STL)	
94–95	Y	1864022	1	.77	CLIP, WRG HARN (BRK PRESS MOD VLV) (1/2 DIA HARD STL)	
85	Y	14080635	LH	DISCON	COVER, ELEK CONT MDL WRG HARN	
85	Y	14080636	RH	DISCON	COVER, ELEK CONT MDL WRG HARN	
92–95	Y 5.7P (LT1), 6–SPD M/TRANS (ML9)	10163877	1	2.70	INSULATOR, ENG WRG HARN CLIP (00.679)	
96	Y 5.7–5 (LT4), 6–SPD M/TRANS (ML9)	10163877	1	2.70	INSULATOR, ENG WRG HARN CLIP (00.679)	
86–96	Y	14090616	1	7.05	PLATE, ECM WRG HARN GROM RET STUD (03.675)	3–G27,18
92–96	Y	10086284	1	3.37	PLATE, ELEK BRK CONT WRG HARN GROM M.	4–K17,32
90–96	Y	10086254	1	3.37	PLATE, ENG WRG HARN GROM BKG	4–K17,32
84–87	Y	480534	AR	*.84	RETAINER, PNL HOLE (DIA.250, THK .03–.30) (11.419)	
93	Y 5.7P (LT1), 6–SPD M/TRANS (ML9), DIAGNOSTIC SYSTEM (BAK), A/C MAN CONT (C60)	12129021	4	1.52	RETAINER, ECM WRG HARN (BLACK) (32–WAY F)	
93	Y 5.7P (LT1), 6–SPD M/TRANS (ML9), DIAGNOSTIC SYSTEM (BAK), A/C MAN CONT (C60)	12129022	4	1.52	RETAINER, ECM WRG HARN (CLEAR) (USE W/32–WAY CONN)	
93	Y 5.7P (LT1), 6–SPD M/TRANS (ML9), DIAGNOSTIC SYSTEM (BAK), A/C MAN CONT (C60)	12129023	4	1.52	RETAINER, ECM WRG HARN (BLUE) (USE W/32–WAY CONN)	
94	Y 5.7P (LT1)	12129021	4	1.52	RETAINER, ECM WRG HARN (BLACK) (32–WAY F)	
94	Y 5.7P (LT1)	12129022	4	1.52	RETAINER, ECM WRG HARN (CLEAR) (USE W/32–WAY CONN)	

© 2000 GENERAL MOTORS SERVICE PARTS OPERATIONS – CHEVROLET – 14Y

2.559 BOLT – BRACKET – CLIP – COVER – INSULATOR – PLATE – RETAINER – SHIELD – SPACER – STRAP – STUD – WASHER, Chassis/Engine Wiring Harness (Con't)

94	Y 5.7P (LT1)	12129023	4	1.52	RETAINER, ECM WRG HARN (BLUE) (USE W/32–WAY CONN)	
89–91	Y	12020833	1	*.73	RETAINER, ECM WRG HARN CONN (GRAY) (1" LONG) (PUSH–IN)	3–G27,24
94–96	Y	12129030	2	2.50	RETAINER, ECM WRG HARN CONN (GRAY) (STRAIN RELIEF)	
96	Y	12129021	4	1.52	RETAINER, ECM WRG HARN CONN (BLACK) (32–WAY F)	
96	Y	12129022	4	1.52	RETAINER, ECM WRG HARN CONN (CLEAR) (USE W/32–WAY CONN)	
96	Y	12129023	4	1.52	RETAINER, ECM WRG HARN CONN (BLUE) (USE W/32–WAY CONN)	
96	Y	12129024	3	2.50	RETAINER, ECM WRG HARN CONN (RED) (USE W/32–WAY CONN)	
96	Y	12129028	2	2.50	RETAINER, ECM WRG HARN CONN (GRAY) (32–WAY)	
84–88	Y	14066575	1	DISCON	RETAINER, ENG WRG HARN	
89–91	Y 5.7–8 (L98)	14104541	1	4.13	RETAINER, ENG WRG HARN	3–G27,23
92–95	Y 5.7P (LT1)	14104541	1	4.13	RETAINER, ENG WRG HARN	3–G27,23
96	Y	14104541	1	4.13	RETAINER, ENG WRG HARN	3–G27,23
90–91	Y	12077996	1	.52	RETAINER, F/INJR WRG HARN CONN (02.535)	
84	Y 5.7–8 (L83)	6917236	1	1.45	RETAINER, OXY SEN CONN	1–H2,47
85–91	Y 5.7–8 (L98)	6917236	1	1.45	RETAINER, OXY SEN CONN	1–H2,47
92–94	Y 5.7P (LT1), (EXC LEADED FUEL EMIS EXPORT (NM8)	6917236	1	1.45	RETAINER, OXY SEN CONN	1–H2,47
84–89	Y	14066582	1	DISCON	SHIELD, I/P WRG HARN	
90–95	Y 5.7J (LT5)	14104942	1	9.85	SPACER, ENG WRG HARN BRKT (02.525)	3–H2,34
90–95	Y 5.7J (LT5)	3816659	1	*.87	STRAP, ENG WRG HARN (7" ADJ ROSEBUD STRP CLIP) (7" ADJ, W/ROSEBUD FOR .25 DIA HOLE .031–.14 TH) (08.965)	
93–96	Y 5.7P (LT1)	3816659	1	*.87	STRAP, ENG WRG HARN (7" ADJ, W/ROSEBUD FOR .25 DIA HOLE .031–.14 TH) (08.965)	
92–96	Y	25533564	3	DISCON	STRAP, I/P WRG HARN (POS #2, POS #3) (445 MM LONG) (09.786)	
93–96	Y	3816659	AR	*.87	STRAP, I/P WRG HARN (7" ADJ, W/ROSEBUD FOR .25 DIA HOLE .031–.14 TH) (08.965) (STRAP)	
92–96	Y	25533564	1	DISCON	STRAP, I/P WRG HARN FRT S/D LEAD (445 MM LONG) (09.786)	
88–91	Y	14087571	1	DISCON	STUD, ENG WRG HARN CLIP (M6X1X25, M6X1X12, TL 43) (01.762)	
88–91	Y 5.7–8 (L98)	14087572	3	DISCON	STUD, ENG WRG HARN CLIP (M6X1X12, M6X1X12) (01.762)	
92–93	Y 5.7P (LT1), 6–SPD M/TRANS (ML9)	10150037	1	1.00	WASHER, ENG WRG HARN BRKT (00.685)	

© 2000 GENERAL MOTORS SERVICE PARTS OPERATIONS–CHEVROLET–14Y

2.559 BOLT – BRACKET – CLIP – COVER – INSULATOR – PLATE – RETAINER – SHIELD – SPACER – STRAP – STUD – WASHER, Chassis/Engine Wiring Harness (Con't)

*EXPORT****************EXPORT****************EXPORT****************EXPORT****************EXPORT*

94–95	Y 5.7P (LT1), EUROPEAN PROVISIONS (VD1) (EXPORT)	12124742	1	7.09	COVER, ENG WRG HARN	
94–96	Y 5.7P (LT1), LEADED FUEL EMIS EXPORT (NM6)	12124742	3	7.09	COVER, ENG WRG HARN	

2.560 BOLT – BRACKET – INSULATOR – MODULE – NUT, Body Multifunction Electric Computer

91–96	Y	12337692	4	*1.13	BOLT, BCM BRKT (POSN #2) (M6X.8X16 THD) (SPECIAL) (03.671) (AC–DELCO #12337692)	3–G12,22
90–96	Y	10085989	1	3.37	BRACKET, BCM BRKT	3–G10,19
96–90	Y67	14100353	1	12.80	BRACKET, MULTIUSE RLY	7–H10,4
93–95	Y	3999572	2	4.98	INSULATOR, BCM (09.260)	9–F8,38
96	Y	3999572	1	4.98	INSULATOR, BCM (09.260)	9–F8,38
90	Y	16146688	1	172.55	MODULE, BODY CONT (REMAN)	3–G8,22
91	Y	16155502	1	172.55	MODULE, BODY CONT (REMAN)	3–G12,18
92–93	Y	16193458	1	168.00	MODULE, BODY CONT (REMAN)	3–G12,18
94	Y	16212971	1	210.70	MODULE, BODY CONT (REMAN) (AC–DELCO #16212971)	3–G12,18
95	Y	16223622	1	479.80	MODULE, BODY CONT (REMAN) (AC–DELCO #16223622)	3–G12,18
96	Y	16230561	1	399.63	MODULE, BODY CONT	3–G12,18
90–96	Y	10027015	2	.53	NUT, BCM (PUSH–ON) (OVERALL LENGTH 1.25") (03.671) (AC–DELCO #10027015)	3–G10,17

2.575 BRACKET – BUTTON – CLIP – CONNECTOR – FILLER – FLASHER – KNOB – LAMP – PUSHBUTTON – SOCKET – SPRING, Side Marker and Hazard Flasher

NOTE: IT IS NECESSARY TO CAREFULLY CHECK THE PARTS CATALOGS FOR CORRECT APPLICATION WHEN REPLACING LAMP SOCKET ASM. IF INCORRECT SOCKETS ARE USED FOR REPLACEMENT, THE BULB FILAMENT WILL BE IN THE WRONG LOCATION WITH RESPECT TO THE LENS AND/OR REFLECTOR. AS A RESULT, THE LAMP MAY FAIL TO MEET STANDAR

NOTE: FOR USAGE REFER TO LAMP SOCKET CHART GRP 2.999

84–87	Y (EXC EXPORT VB4, VD1, VE1, VT7)	12337876	1	*.58	BUTTON, HAZARD WRNG SW ..	3–I20,25
84–94	Y	25534019	2	*.60	CLIP, HAZARD LP FLSHR (02.892) .	3–H21,32
95–96	Y	25534019	1	*.60	CLIP, HAZARD LP FLSHR (02.892) .	3–H21,32
91–93	Y	12117363	1	17.87	CONNECTOR, BODY MKR LP SW (3–WAY F) (02.895) (AC–DELCO #PT496)	
90–96	Y	12126032	1	15.88	CONNECTOR, FLSHR–HAZARD LP (BLACK) (2–WAY F) (W/LEADS) (AC–DELCO #PT663)	
96	Y	12102756	1	38.31	CONNECTOR, SW–HAZARD WRNG (TO STRG COL) (11–WAY F) (02.530) (AC–DELCO #PT386)	
84–96	Y	491391	1	8.20	FLASHER, HAZARD LP (1 1/2" DIA) (6 LP FLSHR) (AC–DELCO #SF552)	3–H18,41
86	Y (EXC EXPORT VB4, VD1, VE1, VT7)	10039390	1	7.09	FLASHER, HAZARD LP	

© 2000 GENERAL MOTORS SERVICE PARTS OPERATIONS–CHEVROLET–14Y

2.575 BRACKET – BUTTON – CLIP – CONNECTOR – FILLER – FLASHER – KNOB – LAMP – PUSHBUTTON – SOCKET – SPRING, Side Marker and Hazard Flasher (Con't)

84–87	Y (EXC EXPORT VB4, VD1, VE1, VT7)	12337964	1	*.73	KNOB, HAZARD WRNG SW	3–I20,27
88–89	Y	12337964	1	*.73	KNOB, HAZARD WRNG SW	3–I20,27
90–93	Y	10098463	1	.20	KNOB, HAZARD WRNG SW	3–I23,8
94–96	Y (EXC EUROPEAN PROVISIONS (VD1) (EXPORT), VE1 (EXPORT) ..	12337964	1	*.73	KNOB, HAZARD WRNG SW	3–I20,27
94–96	Y (EXC SIG & MKR LP (T90) (EXPORT)	5975793	LH	62.70	LAMP, FRT SI MKR & COR (02.585)	3–J2,14
94–96	Y (EXC SIG & MKR LP (T90) (EXPORT)	5975794	RH	62.70	LAMP, FRT SI MKR & COR (02.585)	3–J2,14
84–87	Y	917901	LH	44.10	LAMP, RR SI MKR	3–J8,8
84–87	Y	917902	RH	44.10	LAMP, RR SI MKR	3–J8,8
88–90	Y	16508517	LH	44.10	LAMP, RR SI MKR & SI B/U	3–J8,8
88–90	Y	16508518	RH	44.10	LAMP, RR SI MKR & SI B/U	3–J8,8
91–93	Y	16514357	LH	44.10	LAMP, RR SI MKR & SI B/U	3–J13,12
91–93	Y	16514358	RH	44.10	LAMP, RR SI MKR & SI B/U	3–J13,12
94–96	Y (EXC SIG & MKR LP (T90) (EXPORT)	16514357	LH	44.10	LAMP, RR SI MKR & SI B/U	3–J13,12
94–96	Y (EXC SIG & MKR LP (T90) (EXPORT)	16514358	RH	44.10	LAMP, RR SI MKR & SI B/U	3–J13,12
88–93	Y	12337876	1	*.58	PUSHBUTTON, HAZARD WRNG SW (PAINT TO MATCH)	3–I20,25
94–96	Y (EXC EUROPEAN PROVISIONS (VD1) (EXPORT), VE1 (EXPORT) ..	12337876	1	*.58	PUSHBUTTON, HAZARD WRNG SW (PAINT TO MATCH)	3–I20,25
91–93	Y	12003758	2	18.54	SOCKET, FRT SI MKR LP (02.694) (AC–DELCO #LS53)	3–J2,14
93	Y	12083007	2	11.27	SOCKET, FRT SI MKR LP (AC–DELCO #LS13)	3–J2,14
94–96	Y (EXC SIG & MKR LP (T90) (EXPORT)	12003758	2	18.54	SOCKET, FRT SI MKR LP (02.694) (AC–DELCO #LS53)	3–J2,14
94	Y (EXC SIG & MKR LP (T90) (EXPORT)	12083007	2	11.27	SOCKET, FRT SI MKR LP (AC–DELCO #LS13)	3–J2,14
95–96	Y (EXC HDLP (T72) (EXPORT), RH RULE OF ROAD HDLP (T84) (EXPORT), LH RULE OF ROAD HDLP (T85) (EXPORT), SIG & MKR LP (T90) (EXPORT)	12083007	2	11.27	SOCKET, FRT SI MKR LP (AC–DELCO #LS13)	3–J2,14
90–96	Y	12003758	2	18.54	SOCKET, RR COR LP (02.694) (AC–DELCO #LS53)	3–J2,14
91–94	Y	12083007	2	11.27	SOCKET, RR SI MKR LP (AC–DELCO #LS13)	3–J2,14
95–96	Y (EXC SIG & MKR LP (T90) (EXPORT)	12083007	2	11	SOCKET, RR SI MKR LP (AC–DELCO #LS13)	3–J2,14
84–87	Y	12003758	2	18.54	SOCKET, W/CABLE, AUX RR SI MKR LP (02.694) (AC–DELCO #LS53)	3–J2,14
88–90	Y	12083007	2	11.27	SOCKET, W/CABLE, FRT SI MKR LP (AC–DELCO #LS13)	3–J2,14
88–90	Y	12083007	2	11.27	SOCKET, W/CABLE, RR SI MKR LP (AC–DELCO #LS13)	3–J2,14
84–87	Y	6298886	AR	6.95	SOCKET, W/CABLE, SI MARKER LP (AC–DELCO #7434)	3–I20,34
84–87	Y (EXC EXPORT VB4, VD1, VE1, VT7)	12337888	1	*.84	SPRING, HAZARD WRNG SW KNOB	3–I20,26

© 2000 GENERAL MOTORS SERVICE PARTS OPERATIONS–CHEVROLET–14Y

2.575 BRACKET – BUTTON – CLIP – CONNECTOR – FILLER – FLASHER – KNOB – LAMP – PUSHBUTTON – SOCKET – SPRING, Side Marker and Hazard Flasher (Con't)

88–93	Y	12337888	1	*.84	SPRING, HAZARD WRNG SW KNOB	3–I20,26
94–96	Y (EXC EUROPEAN PROVISIONS (VD1) (EXPORT), VE1 (EXPORT)	12337888	1	*.84	SPRING, HAZARD WRNG SW KNOB	3–I20,26
	*EXPORT**********EXPORT**********EXPORT**********EXPORT**********EXPORT*					
84–87	Y VE1 EXPORT	14034178	1	DISCON	BRACKET, FLASHLIGHT MTG	
94–96	Y SIG & MKR LP (T90) (EXPORT)	5976775	LH	30.60	FILLER, FRT SI MKR LP OPG	3–J2,14
94–96	Y SIG & MKR LP (T90) (EXPORT)	5976776	RH	30.60	FILLER, FRT SI MKR LP OPG	3–J2,14
84–86	Y VB4, VD1, VE1, VT7 (EXPORT)	491391	1	8.20	FLASHER, HAZARD LP (FLASHER, T/SIG LP) (AC–DELCO #SF552)	3–H10,41
87–88	Y T72, T84 (EXPORT)	491391	1	8.20	FLASHER, HAZARD LP (FLASHER, T/SIG LP) (AC–DELCO #SF552)	3–H10,41
94–96	Y EUROPEAN PROVISIONS (VD1) (EXPORT), VE1 (EXPORT)	3542859	1	1.68	KNOB, HAZARD WRNG SW (BLACK)	3–J2,7
84–87	Y EXPORT	14062550	1	DISCON	KNOB, TRAFFIC HAZARD WARNING SW	
94–96	Y EUROPEAN PROVISIONS (VD1) (EXPORT), VE1 (EXPORT)	3529383	1	.65	PUSHBUTTON, HAZARD WRNG SW	3–J2,5
94–96	Y HDLP (T72) (EXPORT), RH RULE OF ROAD HDLP (T84) (EXPORT), LH RULE OF ROAD HDLP (T85) (EXPORT), SIG & MKR LP (T90) (EXPORT)	12141388	1	36.48	SOCKET, FRT SI MKR LP (W/LEADS) (02.596) (AC–DELCO #LS44)	3–J2,14
96	Y HDLP (T72) (EXPORT), RH RULE OF ROAD HDLP (T84) (EXPORT), LH RULE OF ROAD HDLP (T85) (EXPORT), SIG & MKR LP (T90) (EXPORT)	12141388	2	36.48	SOCKET, FRT SI MKR LP (W/LEADS) (02.596) (AC–DELCO #LS44)	3–J2,14
94–96	Y EUROPEAN PROVISIONS (VD1) (EXPORT), VE1 (EXPORT)	3529384	1	*.20	SPRING, HAZARD WRNG SW KNOB	3–J2,6

2.585 LAMP – SOCKET, Parking, Turn Signal & Cornering & Daytime Running

NOTE: FOR SOME MODELS, COMPLETE LAMP ASM ARE NOT SERVICED, THEREFORE IT MAY BE NECESSARY TO ORDER COMPONENT PARTS.

NOTE: FOR USAGE REFER TO LAMP SOCKET CHART GRP 2.999

84–87	Y (EXC EXPORT)	917885	LH	44.10	LAMP, CORNERING AND SI MKR	3–I20,6
84–87	Y (EXC EXPORT)	917886	RH	44.10	LAMP, CORNERING AND SI MKR	3–I20,6
91–93	Y	5976667	LH	185.60	LAMP, FRT PARK & T/SIG & FOG	3–J2,39
91–93	Y	5976668	RH	185.60	LAMP, FRT PARK & T/SIG & FOG	3–J2,39
94–96	Y (EXC SIG & MKR LP (T90) (EXPORT)	5976667	LH	185.60	LAMP, FRT PARK & T/SIG & FOG	3–J2,39
94–96	Y (EXC SIG & MKR LP (T90) (EXPORT)	5976668	RH	185.60	LAMP, FRT PARK & T/SIG & FOG	3–J2,39
88–90	Y	16508513	LH	44.10	LAMP, FRT SI MKR & COR	3–I20,6
88–90	Y	16508514	RH	44.10	LAMP, FRT SI MKR & COR	3–I20,6
91–93	Y	5975793	LH	62.70	LAMP, FRT SI MKR & COR	3–J2,14
91–93	Y	5975794	RH	62.70	LAMP, FRT SI MKR & COR	3–J2,14
94–96	Y (EXC SIG & MKR LP (T90) (EXPORT)	5975793	LH	62.70	LAMP, FRT SI MKR & COR	3–J2,14

© 2000 GENERAL MOTORS SERVICE PARTS OPERATIONS–CHEVROLET 14Y

2.585 LAMP – SOCKET, Parking, Turn Signal & Cornering & Daytime Running (Con't)

94–96	Y (EXC SIG & MKR LP (T90) (EXPORT)	5975794	RH	62.70	LAMP, FRT SI MKR & COR	3–J2,14
84–88	Y (EXC EXPORT)	16500701	LH	107.10	LAMP, W/FOG, PK AND T/SIG ...	3–I20,62
84–88	Y (EXC EXPORT)	16500702	RH	107.10	LAMP, W/FOG, PK AND T/SIG ...	3–I20,62
89–90	Y	16500701	LH	107.10	LAMP, W/FOG, PK AND T/SIG ...	3–I20,62
89–90	Y	16500702	RH	107.10	LAMP, W/FOG, PK AND T/SIG ...	3–I20,62
88–90	Y	12003758	LH	18.54	SOCKET, FRT SI MKR & COR (02.694) (AC–DELCO #LS53) .	
	*EXPORT*****************EXPORT*****************EXPORT*****************EXPORT*****************EXPORT*					
84–87	Y EXPORT	918239	LH	DISCON	LAMP, CORNERING AND SI MKR	
84–87	Y EXPORT	918240	RH	DISCON	LAMP, CORNERING AND SI MKR	
94–96	Y SIG & MKR LP (T90) (EXPORT)	5977622	2	22.60	LAMP, FRT T/SIG (02.880)	3–J2,50
94–96	Y SIG & MKR LP (T90) (EXPORT)	5976931	LH	91.50	LAMP, PARK & T/SIG	3–J2,51
94–96	Y SIG & MKR LP (T90) (EXPORT)	5976932	RH	91.50	LAMP, PARK & T/SIG	3–J2,51
84–88	Y EXPORT	918175	LH	DISCON	LAMP, PK AND T/SIG	
84–88	Y EXPORT	918176	RH	DISCON	LAMP, PK AND T/SIG	

2.586 NUT, Parking, Turn Signal & Cornering Lamp

84–88	Y (EXC EXPORT)	16500692	1	15.00	NUT, FOG LP ADJ	3–I20,70
89	Y	16500692	1	15.00	NUT, FOG LP ADJ	3–I20,70

2.587 BRACKET – HINGE – NUT – SPACER – SPRING, Parking, Turn Signal & Cornering Lamp

91–96	Y	10153658	2	7.04	BRACKET, FRT T/SIG & FOG LP (02.585)	3–J2,43
91–96	Y	10153676	2	2.30	HINGE, FRT PARK & T/SIG & FOG LP	3–J2,40
84–90	Y	14049171	2	1.43	HINGE, PK, T/SIG AND FOG LP .	3–I20,61
91	Y	20451121	8	*.42	NUT, FRT SI MKR & COR LP (12.809)	3–J2,15
92–96	Y	347347	4	*1.00	NUT, FRT SI MKR & COR LP (UPLEVEL) (01.267)	3–J2,15
91–96	Y	10153677	2	3.32	SPRING, FRT PARK & T/SIG & FOG LP	3–J2,42
84–90	Y	14049172	2	2.14	SPRING, PK, T/SIG AND FOG LP	3–I20,60
	*EXPORT*****************EXPORT*****************EXPORT*****************EXPORT*****************EXPORT*					
94–96	Y SIG & MKR LP (T90) (EXPORT)	10224093	2	1.73	SPACER, FRT T/SIG LP	3–J2,25

2.589 LENS, Parking, Turn Signal & Cornering Lamp

91–93	Y	16514377	LH	64.30	LENS, FRT PARK & T/SIG & FOG LP	3–J2,38
91–93	Y	16514378	RH	64.30	LENS, FRT PARK & T/SIG & FOG LP	3–J2,38
94–96	Y (EXC SIG & MKR LP (T90) (EXPORT)	16514377	LH	64.30	LENS, FRT PARK & T/SIG & FOG LP	3–J2,38
94–96	Y (EXC SIG & MKR LP (T90) (EXPORT)	16514378	RH	64.30	LENS, FRT PARK & T/SIG & FOG LP	3–J2,38
96	Y (EXC SIG & MKR LP (T90) (EXPORT)	16514378	1	64.30	LENS, FRT PARK & T/SIG & FOG LP	3–J2,38

2.593 COVER, Parking, Turn Signal & Cornering Lamp

89	Y (5.7J)	14104381	2	DISCON	COVER, PARK LP ACC HOLE ...	

© 2000 GENERAL MOTORS SERVICE PARTS OPERATIONS - CHEVROLET - 14Y

2.596 CONNECTOR – HARNESS – RELAY – SOCKET, Parking, Turn Signal & Cornering Lamp

NOTE: IT IS NECESSARY TO CAREFULLY CHECK THE PARTS CATALOGS FOR CORRECT APPLICATION WHEN REPLACING LAMP SOCKET ASM. IF INCORRECT SOCKETS ARE USED FOR REPLACEMENT, THE BULB FILAMENT WILL BE IN THE WRONG LOCATION WITH RESPECT TO THE LENS AND/OR REFLECTOR. AS A RESULT, THE LAMP MAY FAIL TO MEET STANDAR

NOTE: FOR USAGE REFER TO LAMP SOCKET CHART GRP 2.990

03	Y	12117363	1	17.87	CONNECTOR, LP–COR (3–WAY F) (02.695) (AC–DELCO #PT496)	
04	Y	12065125	1	16.73	RELAY, T/SIG LP (13.095) (AC–DELCO #D1703A)	
90–96	Y	12003756	2	16.54	SOCKET, COR LP (02.694) (AC–DELCO #LS53)	3–I20,45
91–94	Y	12083007	2	11.27	SOCKET, COR LP (02.575) (AC–DELCO #LS13)	
95–96	Y (EXC SIG & MKR LP (T90) (EXPORT)	12083007	2	11.27	SOCKET, COR LP (02.575) (AC–DELCO #LS13)	
84–94	Y	12013813	AR	19.66	SOCKET, PARK & T/SIG LP (USE A & G WIRE CLIP THE THIRD WIRE (3 CAVITY) (AC–DELCO #LS8)	3–I20,33
95–96	Y (EXC SIG & MKR LP (T90) (EXPORT)	12013813	AR	19.66	SOCKET, PARK & T/SIG LP (USE A & G WIRE CLIP THE THIRD WIRE (3 CAVITY) (AC–DELCO #LS8)	3–I20,33
	*EXPORT****************EXPORT****************EXPORT****************EXPORT****************EXPORT*					
94–95	Y 5.7J (LT5), HDLP (T72) (EXPORT), RH RULE OF ROAD HDLP (T84) (EXPORT), LH RULE OF ROAD HDLP (T85) (EXPORT), SIG & MKR LP (T90) (EXPORT)	12124626	2	2.65	CONNECTOR, INLINE–TO T/SIG LP (14–WAY F, W/LEADS) (04.720)	
84–86	Y VE1 (EXPORT)	12055843	1	DISCON	HARNESS, PARK LP WRG	
87	Y VE1, T72 (EXPORT)	12055843	1	DISCON	HARNESS, PARK LP WRG (ON 1984–86 VEHS, (1) 8900612 CONN ALSO REQ)	
94–95	Y SIG & MKR LP (T90) (EXPORT)	12141368	1	36.48	SOCKET, FRT T/SIG LP (W/LEADS) (AC–DELCO #LS44)	
94–96	Y HDLP (T72) (EXPORT), RH RULE OF ROAD HDLP (T84) (EXPORT), LH RULE OF ROAD HDLP (T85) (EXPORT) SIG & MKR LP (T90) (EXPORT)	12159672	1	54.31	SOCKET, FRT T/SIG LP (AC–DELCO #LS60)	
94–96	Y HDLP (T72) (EXPORT), RH RULE OF ROAD HDLP (T84) (EXPORT), LH RULE OF ROAD HDLP (T85) (EXPORT), SIG & MKR LP (T90) (EXPORT)	12141368	1	36.48	SOCKET, PARK LP (W/LEADS) (AC–DELCO #LS44)	
84–88	Y EXPORT	8912750	1	10.44	SOCKET, POSN RR (AC–DELCO #LS51)	

2.660 RETAINER – SEAL, Tail Lamp

91–93	Y SPECIAL PERFORMANCE PKG (ZR1)	14103391	1	2.24	RETAINER, HIGH MT S/LP (02.662)	3–J8,25
94–95	Y SPECIAL PERFORMANCE PKG (ZR1), (EXC SIG & MKR LP (T90) (EXPORT)	14103391	1	2.24	RETAINER, HIGH MT S/LP (02.662)	3–J8,25
91–93	Y SPECIAL PERFORMANCE PKG (ZR1)	14103392	1	.53	SEAL, HIGH MT S/LP	3–J8,26

© 2000 GENERAL MOTORS SERVICE PARTS OPERATIONS–CHEVROLET–14Y

2.660 RETAINER – SEAL, Tail Lamp (Con't)

94–96	Y SPECIAL PERFORMANCE PKG (ZR1), (EXC SIG & MKR LP (T90) (EXPORT)	14103392	1	.53	SEAL, HIGH MT S/LP	3–J8,26
86	Y (EXC EXPORT)	14103392	1	.53	SEAL, HIGH MTD STOP LP	3–J8,26
87	Y (EXC T89, T90 EXPORT)	14103392	1	.53	SEAL, HIGH MTD STOP LP	3–J8,26
88–90	Y07	14103392	1	.53	SEAL, HIGH MTD STOP LP	3–J8,26
90	Y SPECIAL TAIL & S/LP (T93)	16510216	4	15.10	SEAL, T/LP (02.684)	3–J11,10
91–93	Y	16510216	4	15.10	SEAL, T/LP (02.684)	3–J11,10
94–96	Y (EXC SIG & MKR LP (T90) (EXPORT)	16510216	4	15.10	SEAL, T/LP (02.684)	3–J11,10

2.662 BOLT – PLATE – RETAINER – SUPPORT, Tail Lamp Mounting

91–93	Y	12338116	4	*1.12	BOLT, T/LP (02.737)	3–J11,8
94–96	Y (EXC SIG & MKR LP (T90) (EXPORT)	12338116	4	*1.12	BOLT, T/LP (02.737)	3–J11,8
84–86	Y (EXC EXPORT)	14078663	LH	21.40	PLATE, TAIL LP MT	3–J8,20
84–86	Y (EXC EXPORT)	14078664	RH	21.40	PLATE, TAIL LP MT	3–J8,20
87–88	Y (EXC T89, T90 EXPORT)	14078663	LH	21.40	PLATE, TAIL LP MT	3–J8,20
87–88	Y (EXC T89, T90 EXPORT)	14078664	RH	21.40	PLATE, TAIL LP MT	3–J8,20
89	Y	14078663	LH	21.40	PLATE, TAIL LP MT	3–J8,20
89	Y	14078664	RH	21.40	PLATE, TAIL LP MT	3–J8,20
90	Y (EXC SPECIAL TAIL & S/LP (T93)	14078663	LH	21.40	PLATE, TAIL LP MT	3–J8,20
90	Y (EXC SPECIAL TAIL & S/LP (T93)	14078664	RH	21.40	PLATE, TAIL LP MT	3–J8,20
86	Y (EXC EXPORT)	14103391	1	2.24	RETAINER, HIGH MTD STOP LP	
87	Y (EXC VB4, VT7 EXPORT)	14103391	1	2.24	RETAINER, HIGH MTD STOP LP	
88–90	Y07	14103391	1	2.24	RETAINER, HIGH MTD STOP LP	
	*EXPORT**********EXPORT**********EXPORT**********EXPORT**********EXPORT*					
84–86	Y EXPORT	14046630	4	DISCON	PLATE, TAIL LP MT	
87–88	Y T89, T90 (EXPORT)	14046630	4	DISCON	PLATE, TAIL LP MT	
84–86	Y EXPORT	14069622	2	DISCON	SUPPORT, TAIL LP MT PLT INR	
87–88	Y T89, T90 EXPORT)	14069622	2	DISCON	SUPPORT, TAIL LP MT PLT INR	
84–86	Y EXPORT	14069623	2	DISCON	SUPPORT, TAIL LP MT PLT OTR	
87–88	Y T89, T90 (EXPORT)	14069623	2	DISCON	SUPPORT, TAIL LP MT PLT OTR	

2.679 BULB – LAMP – SCREW, Tail Lamp

NOTE: FOR SOME MODELS, COMPLETE LAMP ASM ARE NOT SERVICED, THEREFORE IT MAY BE NECESSARYTO ORDER COMPONENTS

89–90	Y67	5975377	1	23.60	LAMP, HIGH MT STOP	3–J10,1
91–93	Y SPECIAL PERFORMANCE PKG (ZR1)	918411	1	135.70	LAMP, HIGH MT STOP	3–J8,21
91–93	Y (EXC SPECIAL PERFORMANCE PKG (ZR1)	5975799	1	24.50	LAMP, HIGH MT STOP	3–J16,2
94–95	Y SPECIAL PERFORMANCE PKG (ZR1), (EXC SIG & MKR LP (T90) (EXPORT)	918411	1	135.70	LAMP, HIGH MT STOP	3–J8,21
94–95	Y (EXC SIG & MKR LP (T90) (EXPORT), SPECIAL PERFORMANCE PKG (ZR1)	5975799	1	24.50	LAMP, HIGH MT STOP	3–J16,2
96	Y (EXC SIG & MKR LP (T90) (EXPORT)	5975799	1	24.50	LAMP, HIGH MT STOP	3–J16,2
86	Y07 (EXC EXPORT)	918411	1	135.70	LAMP, HIGH MTD STOP	3–J8,21
86	Y67	5974609	1	171.40	LAMP, HIGH MTD STOP	3–J10,1
87	Y07 (EXC T89, T90 EXPORT)	918411	1	135.70	LAMP, HIGH MTD STOP	3–J8,21
87	Y67 (EXC T89, T90 EXPORT)	5974609	1	171.40	LAMP, HIGH MTD STOP	3–J10,1
88–90	Y07	918411	1	135.70	LAMP, HIGH MTD STOP	3–J8,21
88	Y67	5974609	1	171.40	LAMP, HIGH MTD STOP	3–J10,1

© 2000 GENERAL MOTORS SERVICE PARTS OPERATIONS–CHEVROLET–14Y

2.679 BULB – LAMP – SCREW, Tail Lamp (Con't)

84–89	Y (EXC TAIL & S/LP (T89) (EXPORT), SIG & MKR LP (T90) (EXPORT)	915767	4	38.60	LAMP, TAIL	3–J8,7
85–90	Y (EXC SPECIAL TAIL & S/LP (T93)	915767	4	38.60	LAMP, TAIL	3–J8,7
90	Y SPL TAIL & STOP LP (T93)	12338116	4	*1.12	SCREW, RR COMB LP (02.737) ..	
	*EXPORT****************EXPORT****************EXPORT****************EXPORT****************EXPORT*					
94	Y SIG & MKR LP (T90) (EXPORT)	9442442	1	2.40	BULB, RR FOG LP (P21W) (08.991)	
95	Y SIG & MKR LP (T90) (EXPORT)	9442442	LH	2.40	BULB, RR FOG LP (P21W) (08.991)	
84–88	Y T89, T90 (EXPORT)	929392	2	DISCON	LAMP, RR COMB (RED LENS) ...	
94–96	Y SIG & MKR LP (T90) (EXPORT)	5976069	1	140.80	LAMP, RR FOG	3–J16,19
84–88	Y T89, T90 (EXPORT)	929439	2	56.90	LAMP, RR T/SIG (AMBER LENS) .	
94–96	Y SIG & MKR LP (T90) (EXPORT)	5976022	2	64.80	LAMP, TAIL	3–J16,25

2.680 HOUSING, Tail Lamp

NOTE: FOR SOME MODELS, COMPONENT PARTS ARE NOT SERVICED, THEREFORE IT MAY BE NECESSARY TO ORDER COMPLETE LAMP ASM.

90	Y SPECIAL TAIL & S/LP (T93)	16509624	4	21.90	HOUSING, T/LP	3–J11,11
91–93	Y	16509624	4	21.90	HOUSING, T/LP	3–J11,11
94–96	Y (EXC SIG & MKR LP (T90) (EXPORT)	16509624	4	21.90	HOUSING, T/LP	3–J11,11

2.681 BEZEL, Tail Lamp

NOTE: FOR SOME MODELS, COMPONENT PARTS ARE NOT SERVICED, THEREFORE IT MAY BE NECESSARY TO ORDER COMPLETE LAMP ASM.

90	Y	10213702	1	54.10	BEZEL, HIGH MT S/LP (PAINT TO MATCH)	3–J10,6
86	Y67	10213702	1	54.10	BEZEL, HIGH MTD STOP LP (PAINT TO MATCH)	3–J10,6
87	Y67 (EXC T89, T90 EXPORT)	10213702	1	54.10	BEZEL, HIGH MTD STOP LP (PAINT TO MATCH)	3–J10,6
88–89	Y67	10213702	1	54.10	BEZEL, HIGH MTD STOP LP (PAINT TO MATCH)	3–J10,6
	*EXPORT****************EXPORT****************EXPORT****************EXPORT****************EXPORT*					
94–96	Y SIG & MKR LP (T90) (EXPORT)	10212080	1	43.10	BEZEL, RR FOG LP (PAINT TO MATCH)	3–J16,23

2.682 LAMP – LENS, Tail Lamp

NOTE: FOR SOME MODELS, COMPONENT PARTS ARE NOT SERVICED, THEREFORE IT MAY BE NECESSARY TO ORDER COMPLETE LAMP ASM.

90	Y SPECIAL TAIL & S/LP (T93)	16509625	4	23.00	LENS, T/LP	3–J11,9
91–93	Y	16509625	4	23.00	LENS, T/LP	3–J11,9
94–96	Y (EXC SIG & MKR LP (T90) (EXPORT)	16509625	4	23.00	LENS, T/LP	3–J11,9
	*EXPORT****************EXPORT****************EXPORT****************EXPORT****************EXPORT*					
91–93	Y SIG & MKR LP (T90) (EXPORT)	5976712	2	64.00	LAMP, RR T/SIG (02.880)	3–J21,4

2.689 REFLECTOR, Tail Lamp/Rear End Panel Reflector

	*EXPORT****************EXPORT****************EXPORT****************EXPORT****************EXPORT*					
94–96	Y SIG & MKR LP (T90) (EXPORT)	5976351	2	19.00	REFLECTOR, R/END FASCIA ...	3–J16,22

© 2000 GENERAL MOTORS SERVICE PARTS OPERATIONS–CHEVROLET–14Y

2.689 REFLECTOR, Tail Lamp/Rear End Panel Reflector (Con't)

84–86	Y VB4, VD1, VE1, VT7 EXPORT	914273	2	DISCON	REFLECTOR, RR BPR	
87–88	Y T80, T00 EXPORT	914273	2	DISCON	REFLECTOR, RR BPR	

2.694 BRACKET – CONNECTOR – HARNESS – SOCKET – WIRE, Tail Lamp

NOTE: FOR USAGE REFER TO LAMP SOCKET CHART GRP 2.000

84–85	Y	14066577	1	DISCON	BRACKET, RR LP WRG HARN ...	
91	Y07 CASSETTE STEREO (UUF, CASSETTE/CD PLAYER (U1F)	12085535	1	17.46	CONNECTOR, INLINE–TO HIGH MT S/LP (2–WAY F) (W/LEADS) (HAS INDEX TAB @ OUTER EDGE OF CAVITY B) (02.535) (AC–DELCO #PT146)	
91	Y07 STEREO CASSETTE (UM6)	12085535	1	17.46	CONNECTOR, INLINE–TO HIGH MT S/LP (2–WAY F) (W/LEADS) (HAS INDEX TAB @ OUTER EDGE OF CAVITY B) (02.535) (AC–DELCO #PT146)	
95	Y07 SPECIAL PERFORMANCE PKG (ZR1)	12085535	1	17.46	CONNECTOR, INLINE–TO HIGH MT S/LP (2–WAY F) (W/LEADS) (HAS INDEX TAB @ OUTER EDGE OF CAVITY B) (02.535) (AC–DELCO #PT146)	
96	Y	12085535	1	17.46	CONNECTOR, INLINE–TO HIGH MT S/LP (2–WAY F) (W/LEADS) (HAS INDEX TAB @ OUTER EDGE OF CAVITY B) (02.535) (AC–DELCO #PT146)	
93	Y07	12085535	1	17.46	CONNECTOR, LP–HIGH MT STOP (2–WAY F) (W/LEADS) (HAS INDEX TAB @ OUTER EDGE OF CAVITY B) (02.535) (AC–DELCO #PT146)	
89–94	Y	12003758	2	18.54	SOCKET, HIGH MT S/LP (AC–DELCO #LS53)	3–J16,2
93	Y	12003759	4	17.63	SOCKET, HIGH MT S/LP (SPLICE WIRES AS REQ) (AC–DELCO #LS7)	3–J8,14
95	Y (EXC SIG & MKR LP (T90) (EXPORT), SPECIAL PERFORMANCE PKG (ZR1)	[illegible]	1	18.54	SOCKET, HIGH MT STOP LP (AC–DELCO #LS53)	3–J16,2
96	Y (EXC SIG & MKR LP (T90) (EXPORT)	12003758	1	18.54	SOCKET, HIGH MT STOP LP (AC–DELCO #LS53)	3–J16,2
84–93	Y	12003759	4	17.63	SOCKET, S/LP (SPLICE WIRES AS REQ) (AC–DELCO #LS7)	3–J8,14
94–96	Y (EXC SIG & MKR LP (T90) (EXPORT)	12003759	4	17.63	SOCKET, S/LP (SPLICE WIRES AS REQ) (AC–DELCO #LS7)	3–J8,14
89–92	Y (EXC SIG & MKR LP (T90) (EXPORT)	12003759	4	17.63	SOCKET, STOP & T/LP (SPLICE WIRES AS REQ) (AC–DELCO #LS7)	3–J8,14
93	Y	12003758	4	18.54	SOCKET, STOP & T/LP (AC–DELCO #LS53)	3–J16,2
84–93	Y	12003759	4	17.63	SOCKET, T/LP (SPLICE WIRES AS REQ) (AC–DELCO #LS7)	3–J8,14
94–96	Y (EXC SIG & MKR LP (T90) (EXPORT)	12003759	4	17.63	SOCKET, T/LP (SPLICE WIRES AS REQ) (AC–DELCO #LS7)	3–J8,14
84–87	Y	12003757	AR	29.12	SOCKET, W/CABLE, PARK, TAIL, STOP, SIG LP (AC–DELCO #LS6)	
88	Y	12003757	AR	29.12	SOCKET, W/CABLE, T/SIG LP (AC–DELCO #LS6)	

© 2000 GENERAL MOTORS SERVICE PARTS OPERATIONS–CHEVROLET–14Y

2.694 BRACKET – CONNECTOR – HARNESS – SOCKET – WIRE, Tail Lamp (Con't)

84–90	Y	12003759	4	17.63	SOCKET, W/CABLE, T/SIG, TAIL AND S/LP (3 LEAD SKT, SPLICE WIRES AS REQ) (AC–DELCO #LS7)	3–J8,14
84–87	Y	12003757	AR	29.12	SOCKET, W/CABLE, TAIL, STOP SIG LP (AC–DELCO #LS6)	
90	Y07	12090335	1	10.96	WIRE, S/LP	3–J8,26
91–95	Y07 SPECIAL PERFORMANCE PKG (ZR1)	12090335	1	10.96	WIRE, S/LP	3–J8,26
	*EXPORT**********EXPORT**********EXPORT**********EXPORT**********EXPORT*					
94	Y	12065535	1	17.46	CONNECTOR, INLINE–TO HIGH MT S/LP (2–WAY F) (W/LEADS) (HAS INDEX TAB @ OUTER EDGE OF CAVITY B) (02.535) (AC–DELCO #PT140)	
84–86	Y VB4, VD1, VT7 (EXPORT)	12065643	1	DISCON	HARNESS, RR FOG LP WRG (02.596)	
87–88	Y T00 (EXPORT)	12065643	1	DISCON	HARNESS, RR FOG LP WRG (02.596) (ON 1984–86 VEHS, (1) 6000612 CONN ALSO REQ)	
94–96	Y SIG & MKR LP (T90) (EXPORT)	12141301	2	68.72	SOCKET, RR FOG LP (02.535) (AC–DELCO #LS39)	3–J16,2
94	Y SIG & MKR LP (T90) (EXPORT)	12003756	2	16.54	SOCKET, S/LP (AC–DELCO #LS53)	3–J16,2
94–96	Y SIG & MKR LP (T90) (EXPORT)	12141301	2	68.72	SOCKET, S/LP (02.535) (AC–DELCO #LS39)	3–J16,2
94–96	Y SIG & MKR LP (T90) (EXPORT)	12013813	AR	19.66	SOCKET, STOP & T/LP (USE A & G WIRE CLIP THE THIRD WIRE (3 CAVITY) (02.396) (AC–DELCO #LS8)	3–J16,2
94–96	Y07 SIG & MKR LP (T90) (EXPORT)	12141302	2	30.16	SOCKET, STOP & T/LP (AC–DELCO #LS40)	3–J16,2
94	Y SIG & MKR LP (T90) (EXPORT)	12003756	2	16.54	SOCKET, T/LP (AC–DELCO #LS53)	3–J16,2
94–96	Y SIG & MKR LP (T90) (EXPORT)	12141301	2	68.72	SOCKET, T/LP (02.535) (AC–DELCO #LS39)	3–J16,2

2.697 BULB – LAMP – SOCKET, Back Up Lamp

NOTE: IT IS NECESSARY TO CAREFULLY CHECK THE PARTS CATALOGS FOR CORRECT APPLICATION WHEN REPLACING LAMP SOCKET ASM. IF INCORRECT SOCKETS ARE USED FOR REPLACEMENT, THE BULB FILAMENT WILL BE IN WRONG LOCATION WITH RESPECT TO THE LENS AND/OR REFLECTOR. AS A RESULT, THE LAMP MAY FAIL TO MEET STANDARDS

NOTE: FOR USAGE REFER TO LAMP SOCKET CHART GRP 2.999

84–88	Y (EXC EXPORT T90)	917889	LH	30.90	LAMP, B/U	3–J8,2
84–88	Y (EXC EXPORT T90)	917890	RH	30.90	LAMP, B/U	3–J8,2
89	Y	917889	LH	30.90	LAMP, B/U	3–J8,2
89	Y	917890	RH	30.90	LAMP, B/U	3–J8,2
90	Y (EXC SPL TAIL & STOP LP T93)	917889	LH	30.90	LAMP, B/U	3–J8,2
90	Y (EXC SPL TAIL & STOP LP T93)	917890	RH	30.90	LAMP, B/U	3–J8,2
90	Y SPL TAIL & STOP LP (T93)	5975069	LH	30.90	LAMP, B/U	3–J11,15
90	Y SPL TAIL & STOP LP (T93)	5975070	RH	30.90	LAMP, B/U	3–J11,15
91–93	Y	5975069	LH	30.90	LAMP, B/U	3–J11,15
91–93	Y	5975070	RH	30.90	LAMP, B/U	3–J11,15
94–96	Y (EXC SIG & MKR LP (T90) (EXPORT)	5975069	LH	30.90	LAMP, B/U	3–J11,15
94–96	Y (EXC SIG & MKR LP (T90) (EXPORT)	5975070	RH	30.90	LAMP, B/U	3–J11,15

© 2000 GENERAL MOTORS SERVICE PARTS OPERATIONS – CHEVROLET – 14Y

2.697 BULB – LAMP – SOCKET, Back Up Lamp (Con't)

94–96	Y (EXC SIG & MKR LP (T90) (EXPORT)	16514357	LH	44.10	LAMP, RR SI MKR & SI B/U (02.575)	3–J13,12
94–96	Y (EXC SIG & MKR LP (T90) (EXPORT)	16514358	RH	44.10	LAMP, RR SI MKR & SI B/U (02.575)	3–J13,12
69–93	Y	12027133	2	15.52	SOCKET, B/U LP (2 CAVITY) (AC–DELCO #LS50)	3–J8,15
94–96	Y (EXC SIG & MKR LP (T90) (EXPORT)	12027133	2	15.52	SOCKET, B/U LP (2 CAVITY) (AC–DELCO #LS50)	3–J8,15
84–88	Y (EXC T90 EXPORT)	12027133	2	15.52	SOCKET, W/CABLE, B/U LP (AC–DELCO #LS50)	3–J8,15
	*EXPORT****************EXPORT****************EXPORT****************EXPORT****************EXPORT*					
94–95	Y SIG & MKR LP (T90) (EXPORT)	9442442	2	2.40	BULB, B/U LP (P21W) (08.991) ..	
84–88	Y T90 (EXPORT)	920306	1	DISCON	LAMP, B/U	
94–96	Y SIG & MKR LP (T90) (EXPORT)	5976821	2	30.90	LAMP, B/U	3–J13,15
94–96	Y SIG & MKR LP (T90) (EXPORT)	12141301	2	68.72	SOCKET, B/U LP (02.535) (AC–DELCO #LS39)	3–J13,15
84–88	Y T90 (EXPORT)	12003759	4	17.63	SOCKET, W/CABLE, B/U LP (3 LEAD SKT, SPLICE WIRES AS REQ) (02.604) (AC–DELCO #LS7)	
89–90	Y07 SIG & MKR LP (T90) (EXPORT)	12003758	2	18.54	SOCKET, W/CABLE, HIGH MTD S/LP (02.604) (AC–DELCO #LS53)	3–J10,1

2.698 CLIP – CONNECTOR – NUT – SWITCH, Back Up Lamp

84–87	Y M/TRNS	3989067	1	*.94	CLIP, BKG LP SW CONT ROD (03.425)	
90–96	Y	12116958	1	20.24	CONNECTOR, SW–B/U LP (GRAY) (2–WAY F) (W/LEADS) (02.535) (AC–DELCO #PT419)	
84–88	Y M/TRNS	14057528	1	14.78	SWITCH, B/U LP (04.460) (AC–DELCO #14057528)	
89–96	Y 6–SPD M/TRANS (ML9) ...	10159402	1	72.69	SWITCH, B/U LP (AC–DELCO #D2245A)	5–G4,15
92–93	Y 4–SPD A/TRANS (MD8) ...	1994242	1	26.52	SWITCH, PARK/NEU POSN & B/U LP (04.054) (AC–DELCO #D2297)	5–L16,31
94–96	Y 4–SPD A/TRANS (M30) ...	1994242	1	26.52	SWITCH, PARK/NEU POSN & B/U LP (04.054) (AC–DELCO #D2297)	5–L16,31
84–91	Y A/TRNS	1994242	1	26.52	SWITCH, PART/NEU POSN & B/U LP (ON SHIFT CONT) (04.054) (AC–DELCO #D2297)	5–L16,31
	*EXPORT****************EXPORT****************EXPORT****************EXPORT****************EXPORT*					
84–88	Y T90 (EXPORT)	14047598	2	DISCON	NUT, B/UP LP (M4.2X1.41 THD) ..	

2.700 LAMP, Rear License Lamp

NOTE: FOR SOME MODELS, COMPLETE LAMP ASM ARE NOT SERVICED, THEREFORE IT MAY BE NECESSARY TO ORDER COMPONENT PARTS.

NOTE: FOR USAGE REFER TO LAMP SOCKET CHART GRP 2.999

84–87	Y (EXC EXPORT)	16519986	1	9.33	LAMP, RR LIC	3–J8,3
88–93	Y	16509351	3	6.32	LAMP, RR LIC PLT	3–J8,3
94–96	Y (EXC SIG & MKR LP (T90) (EXPORT)	16509351	AR	6.32	LAMP, RR LIC PLT	3–J8,3
	*EXPORT****************EXPORT****************EXPORT****************EXPORT****************EXPORT*					
84–88	Y T89, T90 (EXPORT)	914425	1	DISCON	LAMP, RR LIC	
94–96	Y SIG & MKR LP (T90) (EXPORT)	16519986	2	9.33	LAMP, RR LIC PLT	3–J8,3

© 2000 GENERAL MOTORS SERVICE PARTS OPERATIONS–CHEVROLET–14Y

2.708 BOLT, Rear License Lamp

84–96	Y	14091215	2	.92	BOLT, RR LIC PLT LP	3–J8,6

2.714 SOCKET, Rear License Lamp

NOTE: FOR USAGE REFER TO LAMP SOCKET CHART GRP 2.000

89–93	Y	12083007	2	11.27	SOCKET, RR LIC PLT LP (02.575) (AC–DELCO #LS13)	3–J2,14
94–96	Y (EXC SIG & MKR LP (T90) (EXPORT)	12083007	1	11.27	SOCKET, RR LIC PLT LP (02.575) (AC–DELCO #LS13)	3–J2,14
84	Y	12001470	1	16.50	SOCKET, SPA TIRE LP (AC–DELCO #LS6)	7–I16,4
84–88	Y (EXC EXPORT)	12001470	1	16.50	SOCKET, W/CABLE, LIC LP (AC–DELCO #LS6)	7–I16,4
88	Y (EXC T89, T90 EXPORT)	12083007	2	11.27	SOCKET, W/CABLE, RR LIC LP (02.575) (AC–DELCO #LS13)	3–J2,14
84	Y	12001470	1	16.50	SOCKET, W/CABLE, SPA TIRE LP (AC–DELCO #LS6)	7–I16,4
	*EXPORT****************EXPORT****************EXPORT****************EXPORT****************EXPORT*					
84–88	Y T89, T90 (EXPORT)	6918527	1	17.29	SOCKET, LIC PLT LP (AC–DELCO #LS9)	3–J2,14
94	Y SIG & MKR LP (T90) (EXPORT)	6918527	1	17.29	SOCKET, RR LIC PLT LP (AC–DELCO #LS9)	3–J2,14
94–96	Y SIG & MKR LP (T90) (EXPORT)	12141388	1	36.48	SOCKET, RR LIC PLT LP (W/LEADS) (02.596) (AC–DELCO #LS44)	3–J2,14

2.725 CAPSULE – HOUSING, Capsule/Headlamp/Foglamp

84–86	Y (EXC T72, T84, T85 EXPORT)	5972850	2	49.20	CAPSULE, HDLP	3–I20,51
87–88	Y (EXC T72, T84 EXPORT)	5972850	2	49.20	CAPSULE, HDLP	3–I20,51
89–93	Y	5972850	2	49.20	CAPSULE, HDLP	3–I20,51
94–96	Y (EXC HDLP (T72) (EXPORT), RH RULE OF ROAD HDLP (T84) (EXPORT), LH RULE OF ROAD HDLP (T85) (EXPORT)	5972850	2	49.20	CAPSULE, HDLP (IF JMPR TO FWD/LMP HARN NEEDED, ALSO ORDER CONN 02965810 & ACTUATOR 16516134)	3–I20,51
84–96	Y	16500351	LH	129.50	HOUSING, HDLP (W/BEARING ASM)	3–I20,9
84–93	Y	16500352	RH	129.50	HOUSING, HDLP (W/BEARING ASM)	3–I20,9
94–96	Y (EXC HDLP (T72) (EXPORT), RH RULE OF ROAD HDLP (T84) (EXPORT), LH RULE OF ROAD HDLP (T85) (EXPORT)	16500352	RH	129.50	HOUSING, HDLP	3–I20,9
	*EXPORT****************EXPORT****************EXPORT****************EXPORT****************EXPORT*					
84–87	Y T84 (EXPORT)	5968973	2	49.20	CAPSULE, HDLP	
84–87	Y T72 (EXPORT)	5969017	2	98.20	CAPSULE, HDLP	
84–88	Y T85 (EXPORT)	16524397	2	47.40	CAPSULE, HDLP	
94–96	Y RH RULE OF ROAD HDLP (T84) (EXPORT)	16501105	2	49.20	CAPSULE, HDLP	
94–96	Y RH RULE OF ROAD HDLP (T84) (EXPORT)	16501106	2	49.20	CAPSULE, HDLP (W/MTG RING) (HAS ONE BULB) (PLUG IN) (W/O PIGTAIL)	

© 2000 GENERAL MOTORS SERVICE PARTS OPERATIONS–CHEVROLET–14Y

2.726 BOLT – BRACKET – BUMPER – CLIP – NUT – RING – SPRING – STOP, Capsule/Headlamp Mounting

94–96	Y (EXC HDLP (T72) (EXPORT), RH RULE OF ROAD HDLP (T84) (EXPORT), LH RULE OF ROAD HDLP (T85) (EXPORT)	16510066	2	2.55	BOLT, HDLP (02.760)	3–J2,33
96	Y	11508027	4	1.35	BOLT, HDLP (08.977)	
92–93	Y	1640810	8	*.34	BOLT, HDLP HSG (4.2 X 1.41 X 25) (TAP) (10.783)	
94–96	Y (EXC HDLP (T72) (EXPORT), RH RULE OF ROAD HDLP (T84) (EXPORT), LH RULE OF ROAD HDLP (T85) (EXPORT)	1640810	8	*.34	BOLT, HDLP HSG (4.2 X 1.41 X 25) (TAP) (10.783)	
84–87	Y	16510405	LH	58.70	BRACKET, HDLP MT PNL (02.765) (DRILL HOLE AT INDENTATION AS REQ)	3–I20,13
88–96	Y	16510405	LH	58.70	BRACKET, HDLP MT PNL (02.765) .	3–I20,13
88–96	Y	16510406	RH	58.70	BRACKET, HDLP MT PNL (DRILL HOLE AT INDENTATION AS REQ) (02.765)	3–I23,24
91–93	Y	16502047	2	.41	BUMPER, HDLP OPG HSG STOP (08.075)	3–J2,26
94–96	Y (EXC HDLP (T72) (EXPORT), RH RULE OF ROAD HDLP (T84) (EXPORT), LH RULE OF ROAD HDLP (T85) (EXPORT)	16502047	2	.41	BUMPER, HDLP OPG HSG STOP (08.075)	3–J2,26
91	Y SPECIAL PERFORMANCE PKG (ZR1)	3816659	AR	*.87	CLIP, HDLP CONN (7" ADJ, W/ROSEBUD FOR .25 DIA HOLE .031–.14 TH) (08.965)	
90	Y SPECIAL PERFORMANCE PKG (ZR1)	347347	AR	*1.00	NUT, HDLP HSG (01.267)	3–J2,28
91–93	Y	347347	2	*1.00	NUT, HDLP HSG (UPLEVEL) (01.267)	3–J2,28
94–96	Y (EXC HDLP (T72) (EXPORT), RH RULE OF ROAD HDLP (T84) (EXPORT), LH RULE OF ROAD HDLP (T85) (EXPORT)	347347	2	*1.00	NUT, HDLP HSG (UPLEVEL) (01.267)	3–J2,28
84–96	Y	5966095	2	29.30	RING, HDLP MT	3–I20,54
84–93	Y	16503177	2	2.50	STOP, HDLP OPG HSG (W/BPR) (02.775)	3–I20,65
94–96	Y (EXC HDLP (T72) (EXPORT), RH RULE OF ROAD HDLP (T84) (EXPORT), LH RULE OF ROAD HDLP (T85) (EXPORT)	16503177	2	2.50	STOP, HDLP OPG HSG (W/BPR) (02.775)	3–I20,65
	*EXPORT**********EXPORT**********EXPORT**********EXPORT**********EXPORT*					
94–96	Y HDLP (T72) (EXPORT), RH RULE OF ROAD HDLP (T84) (EXPORT), LH RULE OF ROAD HDLP (T85) (EXPORT)	5966249	AR	*1.10	BOLT, HDLP BRKT (02.736)	
94–95	Y RH RULE OF ROAD HDLP (T84) (EXPORT), LH RULE OF ROAD HDLP (T85) (EXPORT)	1640810	8	*.34	BOLT, HDLP HSG EXTN (4.2 X 1.41 X 25) (TAP) (10.783)	
94–96	Y HDLP (T72) (EXPORT), RH RULE OF ROAD HDLP (T84) (EXPORT), LH RULE OF ROAD HDLP (T85) (EXPORT)	16510077	LH	63.00	BRACKET, HDLP	

© 2000 GENERAL MOTORS SERVICE PARTS OPERATIONS–CHEVROLET–14Y

2.726 BOLT – BRACKET – BUMPER – CLIP – NUT – RING – SPRING – STOP, Capsule/Headlamp Mounting (Con't)

94–96	Y HDLP (T72) (EXPORT), RH RULE OF ROAD HDLP (T84) (EXPORT), LH RULE OF ROAD HDLP (T85) (EXPORT)	16510076	RH	63.00	BRACKET, HDLP	
94–95	Y HDLP (T72) (EXPORT), RH RULE OF ROAD HDLP (T84) (EXPORT), LH RULE OF ROAD HDLP (T85) (EXPORT)	540396	4	*3.00	SPRING, HDLP RET (02.737)	
94–96	Y HDLP (T72) (EXPORT), RH RULE OF ROAD HDLP (T84) (EXPORT), LH RULE OF ROAD HDLP (T85) (EXPORT)	16503177	2	2.50	STOP, HDLP OPG HSG (W/DPR) (02.775)	3–I20,65

2.727 BULB – CLIP – CONNECTOR – HARNESS – SEALBEAM – WIRE, Capsule/Headlamp/Fog Lamp

84–88	Y (EXC SOFT FASCIA BUMPER)	25519386	AR	18.36	BULB, FOG LP TYPE H–2 (HALOGEN) (AC–DELCO #H2)	
90–93	Y	5972698	2	25.16	BULB, HDLP (AC–DELCO #H6054)	3–I20,53
94–96	Y (EXC HDLP (T72) (EXPORT), RH RULE OF ROAD HDLP (T84) (EXPORT), LH RULE OF ROAD HDLP (T85) (EXPORT)	5972698	2	25.16	BULB, HDLP (AC–DELCO #H6054)	3–I20,53
84–88	Y (EXC EXPORT)	9442876	2	14.22	BULB, W/SOCKET, FOG (HALOGEN) (AC–DELCO #L880)	3–I20,62
89	Y	9442876	2	14.22	BULB, W/SOCKET, FOG (HALOGEN) (AC–DELCO #L880)	3–I20,62
92–93	Y	3816659	AR	*.87	CLIP, HDLP CONN (7" ADJ, W/ROSEBUD FOR .25 DIA HOLE .031–.14 TH) (08.965)	
94–96	Y (EXC HDLP (T72) (EXPORT), RH RULE OF ROAD HDLP (T84) (EXPORT), LH RULE OF ROAD HDLP (T85) (EXPORT)	3816659	AR	*.87	CLIP, HDLP CONN (7" ADJ, W/ROSEBUD FOR .25 DIA HOLE .031–.14 TH) (08.965)	
96	Y (EXC HDLP (T72) (EXPORT), RH RULE OF ROAD HDLP (T84) (EXPORT), LH RULE OF ROAD HDLP (T85) (EXPORT), SIG & MKR LP (T90) (EXPORT)	12162343	2	.56	CONNECTOR, INLINE–TO FOG LP (2–WAY M) (W/O LEADS) (04.720)	
90	Y	12102664	1	21.23	CONNECTOR, LP–FOG (02.535) (AC–DELCO #PT331)	
84–90	Y	16500999	2	18.80	CONNECTOR, LP–HDLP (W/WIRE) (02.755)	3–I20,48
90	Y SPECIAL PERFORMANCE PKG (ZR1)	2965810	2	.70	CONNECTOR, LP–HDLP (02.530) .	3–I23,58
91–96	Y	2965810	2	.70	CONNECTOR, LP–HDLP (3–WAY F, W/O LEADS) (02.530)	3–I23,58
91–96	Y	12117367	2	24.98	CONNECTOR, LP–HDLP (3–WAY F) (W/LEADS, 59 SERIES) (02.530) (AC–DELCO #PT500)	
84–88	Y	12117065	1	DISCON	HARNESS, HDLP WRG HARN EXTN	
84–86	Y (EXC T72, T84, T85 EXPORT)	5972698	2	25.16	SEALBEAM, HDLP (RECT LPS) (AC–DELCO #H6054)	3–I20,53
87–88	Y (EXC T72, T84 EXPORT) ..	5972698	2	25.16	SEALBEAM, HDLP (RECT LPS) (AC–DELCO #H6054)	3–I20,53

© 2000 GENERAL MOTORS SERVICE PARTS OPERATIONS–CHEVROLET–14Y

2.727 BULB – CLIP – CONNECTOR – HARNESS – SEALBEAM – WIRE, Capsule/Headlamp/Fog Lamp (Con't)

89	Y	5972698	2	26.16	SEALBEAM, HDLP (RECT LPS) (AC–DELCO #H6064)	3–I20,63
91–96	Y	12090370	2	17.60	WIRE, FRT FOG LP	3–J2,45
	*EXPORT**********EXPORT**********EXPORT**********EXPORT**********EXPORT*					
94–96	Y LH RULE OF ROAD HDLP (T85) (EXPORT)	16501107	2	144.40	BULB, HDLP (W/O MTG RING)	3–J2,35
94–96	Y HDLP (T72) (EXPORT)	16523424	1	44.10	BULB, HDLP	3–J2,35
84–88	Y T84 (EXPORT)	5969967	2	43.90	SEALBEAM, HDLP	
84–88	Y T72 (EXPORT)	5969022	2	DISCON	SEALBEAM, HDLP	
84–88	Y T85 (EXPORT)	16524398	2	35.60	SEALBEAM, HDLP	

2.728 BEZEL – DOOR, Capsule/Headlamp/Fog Lamp

84–96	Y	10074299	LH	27.60	BEZEL, HDLP	3–I20,1
84–96	Y	10074300	RH	27.60	BEZEL, HDLP	3–I20,1
84–96	Y	10137733	LH	46.70	DOOR, HDLP OPG	3–I20,16
84–96	Y	10137734	RH	46.70	DOOR, HDLP OPG	3–I20,16

2.729 INSULATOR – NUT, Capsule/Headlamp Trim

92–96	Y	359270	4	1.78	INSULATOR, HDLP BZL (09.260)	
84–85	Y	14013246	AR	*1.10	NUT (M4.2 DIA SCR M7.6 DIA RND HOLE)	
84–90	Y	347347	AR	*1.00	NUT, SPL ANC (NYLON) (SQUARE HOLE) (01.267)	3–I20,7
	*EXPORT**********EXPORT**********EXPORT**********EXPORT**********EXPORT*					
94–96	Y HDLP (T72) (EXPORT), RH RULE OF ROAD HDLP (T84) (EXPORT), LH RULE OF ROAD HDLP (T85) (EXPORT)	347347	2	*1.00	NUT, HDLP BZL (UPLEVEL) (01.267)	3–I20,7

2.731 BOLT – RING, Capsule/Headlamp Retaining

84–96	Y	5966249	8	*1.10	BOLT, HDLP RET RING (02.730)	3–I20,42
84–96	Y	5969466	2	19.80	RING, HDLP RET	3–I20,62

2.737 ADJUSTER – SPRING, Capsule/Headlamp Adjuster

84–87	Y	557037	4	*2.95	ADJUSTER, HDLP (W/NUT)	3–I20,11
90	Y SPECIAL PERFORMANCE PKG (ZR1)	557057	4	*2.95	ADJUSTER, HDLP (W/NUT)	3–I20,11
91–96	Y	557057	4	*2.95	ADJUSTER, HDLP (W/NUT)	3–I20,11
84–87	Y	549398	4	*3.00	SPRING, HDLP ADJ	3–I20,56
90	Y SPECIAL PERFORMANCE PKG (ZR1)	549398	4	*3.00	SPRING, HDLP ADJ	3–I20,56
91–96	Y	549398	4	*3.00	SPRING, HDLP ADJ	3–I20,56

2.755 BRACKET – CONN – CONNECTOR – CONNECTOR KIT – COVER – MODULE – RELAY, Concealed Capsule/Headlamp Control

84–87	Y (1ST DES)	14057580	1	DISCON	BRACKET, HDLP ACTR RELAY (USE ON VEHS W/3–WIRE ACTR STAMPED 16500363–64)	
84–88	Y	12117267	1	23.85	CONN, RELAY HDLP ACTR ISOLATION (02.530) (AC–DELCO #PT44C)	
84–87	Y (2ND DES)	16517071	1	DISCON	CONNECTOR KIT, HDLP ACTR CONT MDL (USE ON VEHS W/2–WIRE ACTR HARN) (LH/RH)	

© 2000 GENERAL MOTORS SERVICE PARTS OPERATIONS – CHEVROLET – 14Y

MICROFICHE INDEX

GROUP 2.000

FICHE 3 OF 11

GROUP	DESCRIPTION	STARTING GRID LOCATION PARTS	ILLUSTRATIONS
–	GENERAL INFORMATION	1–A2	1–G2
–	ALPHABETICAL INDEX	1–B13	N.A.
2.000	CHASSIS WIRING – LAMPS	3–A2	3–F2
–	OUT OF FICHE CALLS	N.A.	3–M20

3–E1

2.755 BRACKET – CONN – CONNECTOR – CONNECTOR KIT – COVER – MODULE – RELAY, Concealed Capsule/Headlamp Control(Con't)

90	Y	12102775	1	30.66	CONNECTOR, MDL–HDLP OPG DR ACTR CONT (02.760) (AC–DELCO #PT204)	
84–87	Y (1ST DES)	14057579	1	DISCON	COVER, HDLP ACTR RELAY (USE ON VEHS W/3–WIRE ACTR STAMPED 16500363–4	
84–87	Y (2ND DES)	16521297	1	127.50	MODULE, HDLP OPG DR ACTR CONT (USE ON VEHS W/2–WIRE ACTR)	3–I20,68
88–96	Y	16521297	1	127.50	MODULE, HDLP OPG DR ACTR CONT	3–I20,68
84–87	Y	10031018	2	17.34	RELAY, HDLP ACTR (AC–DELCO #D1784)	3–I20,44
84–85	Y	10031837	1	16.26	RELAY, HDLP OPG HSG ACTR ISOLATION (ACTR ISOLATION) (09.277) (AC–DELCO #15–2370)	
86–88	Y	10039961	1	16.26	RELAY, HDLP OPG HSG ACTR ISOLATION (HDLP ACTR ISOLATION) (02.510) (AC–DELCO #15–2386)	3–I20,41

2.760 ACTUATOR – ACTUATOR KIT – BOLT – CONNECTOR, Concealed Capsule/Headlamp Control Drive

84–87	Y (1ST DES)	16517068	1	905.54	ACTUATOR KIT, HDLP OPG DR (CONTAINS LH&RH ACTR, HSG, BRKT&CONT–BOTH SIDES MUST BE REPLACED WHEN USING KIT, KIT SERVICES VEHS W/3–WIRE ACTR HARN) (AC–DELCO #16517068)	3–I20,19
84–87	Y (2ND DES)	16510051	LH	310.12	ACTUATOR, HDLP (HDLP (W/2–WIRE HARN) (W/BRKT) (AC–DELCO #16510051)	3–I20,19
84–87	Y (2ND DES)	16510052	RH	310.12	ACTUATOR, HDLP (W/2–WIRE HARN) (W/BRKT) (AC–DELCO #16510052)	3–I20,19
88–90	Y	16510051	LH	310.12	ACTUATOR, HDLP (W/BRKT) (AC–DELCO #16510051)	3–I20,19
88–90	Y	16310052	RH	310.12	ACTUATOR, HDLP (W/BRKT) (AC–DELCO #[illegible]510052)	3–I20,19
91–96	Y	16516133	LH	469.10	ACTUATOR, HDLP (INCLS JMPR WIRE) (AC–DELCO #16516133)	3–J2,31
91–96	Y	16516134	RH	386.97	ACTUATOR, HDLP (INCL ACTUATOR & HDLP JMPR HARN, ALSO ORDER CONN 2965810) (AC–DELCO #16516134)	3–J2,31
90–93	Y	16510068	4	2.55	BOLT, HDLP OPG DR ACTR	3–J2,48
90	Y W/SEAL	12126453	2	24.17	CONNECTOR, MOT–HDLP OPG DR ACTR (02.530) (AC–DELCO #PT724)	
	*EXPORT**********EXPORT**********EXPORT**********EXPORT**********EXPORT*					
94–96	Y HDLP (T72) (EXPORT), RH RULE OF ROAD HDLP (T84) (EXPORT), LH RULE OF ROAD HDLP (T85) (EXPORT)	16510068	6	2.55	BOLT, HDLP OPG DR ACTR	3–[illegible]

© 2000 GENERAL MOTORS SERVICE PARTS OPERATIONS–CHEVROLET–14Y

2.765 BEARING – BOLT – BRACKET, Concealed Capsule/Headlamp Opening Cover

84–96	Y	16500350	2	2.91	BEARING, HDLP OPG HSG	3–J2,32
96	Y	11508027	4	1.35	BOLT, HDLP (08.977)	
84–87	Y	16510406	RH	58.70	BRACKET, HDLP MTG (DRILL HOLE AT INDENTATION AS REQ)	3–I20,13

2.810 HORN – HORN KIT, Horn

87	Y	12368063	1	35.46	HORN KIT, A NOTE (AC–DELCO #D1925C)
84–86	Y (EXC HORN NOISE REGULATION (U03) (EXPORT)	12368063	1	35.46	HORN KIT, GENERIC (HIGH NOTE) (AC–DELCO #D1925C)
84–86	Y (EXC HORN NOISE REGULATION (U03) (EXPORT)	1999729	1	32.40	HORN, HIGH A NOTE (AC–DELCO #D1975)
87	Y	10456322	1	37.23	HORN, HIGH A NOTE (AC–DELCO #D1999)
87–96	Y	12368063	1	35.46	HORN, HIGH A NOTE (W/BRACKET) (AC–DELCO #D1925C)
88–96	Y	1999070	1	43.61	HORN, HIGH A NOTE
84–86	Y (EXC HORN NOISE REGULATION (U03) (EXPORT)	1999730	1	34.68	HORN, HIGH C NOTE (AC–DELCO #D1976)
84–86	Y (EXC HORN NOISE REGULATION (U03) (EXPORT)	12368063	1	35.46	HORN, HIGH C NOTE (AC–DELCO #D1925C)
87	Y	10456323	1	90.27	HORN, HIGH C NOTE (AC–DELCO #D1901A)
87	Y	12368063	1	35.46	HORN, HIGH C NOTE (AC–DELCO #D1925C)
88–90	Y	10456329	1	90.54	HORN, HIGH C NOTE (AC–DELCO #D1920A)
88–90	Y	12368063	1	35.46	HORN, HIGH C NOTE (C) (AC–DELCO #D1925C)
91	Y (1ST DES)	10456329	1	90.54	HORN, HIGH C NOTE (AC–DELCO #D1920A)
91	Y (1ST DES)	12368063	1	35.46	HORN, HIGH C NOTE (W/BRACKET) (AC–DELCO #D1925C)
91	Y (2ND DES)	10456327	LH	64.26	HORN, LOW F NOTE (AC–DELCO #D1918A)
92–96	Y	1999169	1	43.61	HORN, LOW F NOTE
	*EXPORT**********EXPORT**********EXPORT**********EXPORT**********EXPORT*				
94–96	Y HORN NOISE REGULATION (U03) (EXPORT)	1999268	1	89.76	HORN, HIGH A NOTE (AC–DELCO #D1990A)
94–96	Y HORN NOISE REGULATION (U03) (EXPORT)	12368063	1	35.46	HORN, HIGH A NOTE (W/BRACKET) (AC–DELCO #D1925C)
84–86	Y U03 (EXPORT)	14066525	1	DISCON	HORN, 400 HZ
84–86	Y U03 (EXPORT)	14066524	1	DISCON	HORN, 500 HZ

2.812 BOLT – BRACKET, Horn

85–93	Y	14091214	2	.86	BOLT, HORN (8X2.12X20) (02.815)
	*EXPORT**********EXPORT**********EXPORT**********EXPORT**********EXPORT*				
94–96	Y HORN NOISE REGULATION (U03) (EXPORT)	10213777	1	24.99	BRACKET, HORN

© 2000 GENERAL MOTORS SERVICE PARTS OPERATIONS–CHEVROLET–14Y

2.815 CLIP -- CONNECTOR -- RELAY -- WIRE, Horn

84–89	Y	25534019	1	*.60	CLIP, HORN RLY (02.092)	3–G8,10
89–94	Y	12116958	1	20.24	CONNECTOR, HORN (GRAY) (2–WAY F) (W/LEADS) (02.535) (AC–DELCO #PT419)	
96	Y	12116958	1	20.24	CONNECTOR, HORN (GRAY) (2–WAY F) (W/LEADS) (02.535) (AC–DELCO #PT419)	
91	Y 4–SPD A/TRANS (MD8), 6–SPD M/TRANS (ML9), A/C AUTO ELEC CONT (C68)	12125632	1	19.67	CONNECTOR, RLY–HORN (4–WAY F) (W/LEADS) (02.490) (AC–DELCO #PT544)	
84–89	Y	25523703	1	12.20	RELAY, HORN (AC–DELCO #D1776)	3–G8,11
90–93	Y	14100455	1	16.26	RELAY, HORN (BLACK) (5–WAY) (09.277) (AC–DELCO #15–8426)	3–G10,11
94	Y A/C AUTO ELEC CONT (C68)	12065125	1	16.73	RELAY, HORN (13.095) (AC–DELCO #D1703A)	3–G12,11
94	Y 6–SPD M/TRANS (ML9), A/C MAN CONT (C60), (EXC HDLP (T72) (EXPORT), RH RULE OF ROAD HDLP (T84) (EXPORT), LH RULE OF ROAD HDLP (T85) (EXPORT), SIG & MKR LP (T90) (EXPORT)	12065125	1	16.73	RELAY, HORN (13.095) (AC–DELCO #D1703A)	3–G12,11
95	Y 5.7J (LT5), 6–SPD M/TRANS (ML9), A/C AUTO ELEC CONT (C68)	12065125	1	16.73	RELAY, HORN (13.095) (AC–DELCO #D1703A)	3–G12,11
95	Y 5.7P (LT1), 4–SPD A/TRANS (M30), A/C AUTO ELEC CONT (C68)	12065125	1	16.73	RELAY, HORN (13.095) (AC–DELCO #D1703A)	3–G12,11
95	Y 5.7P (LT1), 4–SPD A/TRANS (M30), A/C MAN CONT (C60), (EXC HDLP (T72) (EXPORT), RH RULE OF ROAD HDLP (T84) (EXPORT), LH RULE OF ROAD HDLP (T85) (EXPORT), SIG & MKR LP (T90) (EXPORT)	12065125	1	16.73	RELAY, HORN (13.095) (AC–DELCO #D1703A)	3–G12,11
95	Y 5.7P (LT1), 6–SPD M/TRANS (ML9), A/C MAN CONT (C60), (EXC HDLP (T72) (EXPORT), RH RULE OF ROAD HDLP (T84) (EXPORT), LH RULE OF ROAD HDLP (T85) (EXPORT), SIG & MKR LP (T90) (EXPORT)	12135084	1	9.55	RELAY, HORN (AC–DELCO #D1719A)	3–G12,11
95	Y 5.7P (LT1), 6–SPD M/TRANS (ML9), A/C AUTO ELEC CONT (C68)	12135084	1	9.55	RELAY, HORN (AC–DELCO #D1719A)	3–G12,11
96	Y	12135084	1	9.55	RELAY, HORN (AC–DELCO #D1719A)	3–G12,11
84–85	Y	12021893	1	11.32	WIRE, HORN JPR	

© 2000 GENERAL MOTORS SERVICE PARTS OPERATIONS–CHEVROLET–14Y

2.815 CLIP – CONNECTOR – RELAY – WIRE, Horn (Con't)

	*EXPORT**********EXPORT**********EXPORT**********EXPORT**********EXPORT*					
94	Y 4–SPD A/TRANS (M30), A/C MAN CONT (C60), DAYTIME RUNNING LGT (T61), (EXC HDLP (T72) (EXPORT), RH RULE OF ROAD HDLP (T84) (EXPORT), LH RULE OF ROAD HDLP (T85) (EXPORT), SIG & MKR LP (T90) (EXPORT)	12066125	1	16.73	RELAY, HORN (13.095) (AC–DELCO #D1703A)	3–G12,11

2.819 BOLT – CONTACT – RETAINER – SPRING – SWITCH – TOWER, Horn Button

NOTE: FOR 1986–1991 USAGE REFER TO STEERING COLUMN CHART GRP 6.518

94–96	.....	10192577	2	1.30	BOLT, HORN CNCT MTG (M6X1.0X13.0) (METRIC TORX HD) (08.913)	7–F9,3
84–85	Y	9766584	1	20.04	CONTACT, HORN BLOW	7–F6,12
86–89	Y	17982941	1	9.23	CONTACT, STRG WHL HORN CAP	7–F6,12
84–89	Y	403745	1	DISCON	SPRING, HORN CONTACT	
90–91	Y	12506007	LH	6.78	SWITCH, STRG WHL HORN (GRAY) (BUTTON ONLY)	7–F7,3
90–91	Y	12506008	RH	6.78	SWITCH, STRG WHL HORN (GRAY) (BUTTON ONLY)	7–F7,3
92–93	Y	12516247	LH	6.78	SWITCH, STRG WHL HORN (BLACK) (W/O CONTACTS) ...	7–F7,3
92–93	Y	12516248	RH	6.78	SWITCH, STRG WHL HORN (BLACK)	7–F7,3
94–96	Y	17999094	1	10.81	SWITCH, STRG WHL HORN (AC–DELCO #D1774A)	7–F9,5
84–88	Y	9768768	1	10.97	TOWER, HORN LEAD	7–F6,13
89	Y SPORT WHL (NK4)	9768768	1	10.97	TOWER, HORN LEAD	7–F6,13

2.820 CAP – EMBLEM, Horn Button

84–85	Y	9768586	1	84.66	CAP, STRG WHL HORN	7–F6,9
86–87	Y	17983747	1	58.14	CAP, STRG WHL HORN	7–F6,9
88	Y (EXC B18)	17983747	1	58.14	CAP, STRG WHL HORN	7–F6,9
88	Y 35 ANNIV (Z01)	17989742	1	DISCON	CAP, STRG WHL HORN	
89	Y	17983747	1	58.14	CAP, STRG WHL HORN	7–F6,9
84–87	Y	9769808	1	24.60	EMBLEM, HORN CAP	7–F6,10
88	Y (EXC B18)	9769808	1	24.60	EMBLEM, HORN CAP	7–F6,10
88	Y 35 ANNIV (Z01)	17989520	1	DISCON	EMBLEM, HORN CAP	
89	Y	9769808	1	24.60	EMBLEM, HORN CAP	7–F6,10

2.859 LEAD – WIRE, Horn Lead

84	Y	9769073	1	DISCON	LEAD, ELEC	
84–89	Y	9769448	1	*2.54	WIRE, HORN SW	7–F6,11

2.880 BEZEL, Turn Signal

	*EXPORT**********EXPORT**********EXPORT**********EXPORT**********EXPORT*					
91–93	Y SIG & MKR LP (T90) (EXPORT)	10213702	1	54.10	BEZEL, RR T/SIG LP (PAINT TO MATCH) (02.681)	3–J21,2

2.892 CLIP – CONNECTOR – FLASHER – SOCKET, Turn Signal Lamp

84–87	Y	25534019	1	*.60	CLIP, T/SIG LP FLSHR	3–H18,36
92–93	Y	25534019	1	*.60	CLIP, T/SIG LP FLSHR	3–H18,36

© 2000 GENERAL MOTORS SERVICE PARTS OPERATIONS–CHEVROLET–14Y

2.892 CLIP – CONNECTOR – FLASHER – SOCKET, Turn Signal Lamp (Con't)

94–96	Y (EXC SIG & MKR LP (T90) (EXPORT)	25534019	1	*.60	CLIP, T/SIG LP FLSHR	3–H10,36
90–93	Y	12126032	1	15.88	CONNECTOR, FLSHR–T/SIG LP (BLACK) (2–WAY F) (W/LEADS) (02.575) (AC–DELCO #PT663)	
96	Y	12126032	1	15.88	CONNECTOR, FLSHR–T/SIG LP (BLACK) (2–WAY F) (W/LEADS) (02.575) (AC–DELCO #PT663)	
84–88	Y (EXC EXPORT)	10041073	1	9.80	FLASHER, T/SIG LP (AC–DELCO #SF323YB)	3–H10,44
89–92	Y	10041073	1	9.80	FLASHER, T/SIG LP (YELLOW) (AC–DELCO #SF323YB)	3–H10,44
93–96	Y (EXC SIG & MKR LP (T90) (EXPORT)	10041073	1	9.80	FLASHER, T/SIG LP (YELLOW) (AC–DELCO #SF323YB)	3–H10,44
84–94	Y	12003759	4	17.63	SOCKET, RR T/SIG LP (SPLICE WIRES AS REQ) (02.694) (AC–DELCO #LS7)	
95–96	Y (EXC SIG & MKR LP (T90) (EXPORT)	12003759	4	17.63	SOCKET, RR T/SIG LP (SPLICE WIRES AS REQ) (02.694) (AC–DELCO #LS7)	
	*EXPORT**************EXPORT****************EXPORT****************EXPORT****************EXPORT*					
93	Y SIG & MKR LP (T90) (EXPORT)	10041074	1	10.06	FLASHER, T/SIG LP (YELLOW) (2 LP FLSHR) (AC–DELCO #SF224)	3–I12,26
94–96	Y SIG & MKR LP (T90) (EXPORT)	9442495	1	20.80	FLASHER, T/SIG LP (AC–DELCO #9442495)	3–I12,26
94	Y SIG & MKR LP (T90) (EXPORT)	12003758	2	18.54	SOCKET, RR T/SIG LP (02.694) (AC–DELCO #LS53)	
94–96	Y SIG & MKR LP (T90) (EXPORT)	12141301	2	68.72	SOCKET, RR T/SIG LP (02.535) (AC–DELCO #LS39)	

2.895 ACTUATOR – ARM – BOLT – SCREW – SWITCH, Turn Signal Lamp

NOTE: FOR 1986–1991 USAGE REFER TO STEERING COLUMN CHART GRP 6.518

91–96	Y	26020396	1	12.65	ACTUATOR, T/SIG SW	7–F13,11
84–86	Y	7609128	3	2.65	BOLT, T/SIG SW	7–F13,9
91–96	Y	7609128	3	2.65	BOLT, T/SIG SW (9–18X17.52) (PAN HD C/R HILO TAP)	7–F13,9
94–96	Y	26019205	1	1.68	BOLT, T/SIG SW ACTR (M4.2X1.41X10) (FLATCS C/R HILO TAP)	7–F21,27
84–86	Y	1997984	1	28.25	SWITCH, DIR SIG AND TRAFFIC HAZARD (AC–DELCO #D6223) .	
89	YY	1995974	AR	56.61	SWITCH, T/SIG (AC–DELCO #D9001)	7–F13,12
91–93	Y	1995974	1	56.61	SWITCH, T/SIG (AC–DELCO #D9001)	7–F13,12
94–96	Y (EXC EUROPEAN PROVISIONS (VD1) (EXPORT), VE1 (EXPORT) ..	1995974	1	56.61	SWITCH, T/SIG (AC–DELCO #D9001)	7–F13,12
	*EXPORT**************EXPORT****************EXPORT****************EXPORT****************EXPORT*					
94–96	Y VE1 (EXPORT), EUROPEAN PROVISIONS (VD1) (EXPORT)	1995962	1	40.56	SWITCH, T/SIG (AC–DELCO #D6203A)	7–F21,12

2.896 CAM – RETAINER – SPRING, Turn Signal Switch Cancelling

NOTE: FOR 1986–1991 USAGE REFER TO STEERING COLUMN CHART GRP 6.518

84–86	Y	7849226	1	19.43	CAM, STRG COL T/SIG CANC ...	
91	Y	26047013	1	14.24	CAM, T/SIG CANC (AC–DELCO #26047013)	7–F13,7

© 2000 GENERAL MOTORS SERVICE PARTS OPERATIONS–CHEVROLET–14Y

2.896 CAM – RETAINER – SPRING, Turn Signal Switch Cancelling (Con't)

92	Y (2ND DES)	26047013	1	14.24	CAM, T/SIG CANC (USE W/COL ASM LABELED 26030971) (AC–DELCO #26047013)	7–F13,7
93–96	Y	26047013	1	14.24	CAM, T/SIG CANC (AC–DELCO #26047013)	7–F13,7
84–86	Y	7808305	1	6.68	RETAINER, T/SIG CANC CAM (02.819)	
84	Y	10499953	1	1.50	SPRING, LANE CHANGE	
90	Y FOR MDL APPL & POA INFO SEE COL CHART	10499953	1	1.50	SPRING, LANE CHANGE	
84	Y	1964784	RH	*.54	SPRING, T/SIG CANC (AC–DELCO #1964784)	7–F21,12
84	Y	1964785	LH	*.54	SPRING, T/SIG CANC (AC–DELCO #1964785)	7–F21,12
94–96	Y (EXC EUROPEAN PROVISIONS (VD1) (EXPORT), VE1 (EXPORT) ..	10476617	RH	2.00	SPRING, T/SIG SW CANC CAM .	7–F21,12
94–96	Y (EXC EUROPEAN PROVISIONS (VD1) (EXPORT), VE1 (EXPORT) ..	10476618	LH	2.00	SPRING, T/SIG SW CANC CAM .	7–F21,12
91–96	Y	10497876	1	*3.60	SPRING, T/SIG SW LVR (AC–DELCO #10497876)	7–F21,12
	*EXPORT*********EXPORT*********EXPORT*********EXPORT*********EXPORT*					
91–96	Y EUROPEAN PROVISIONS (VD1) (EXPORT), VE1 (EXPORT)	1964784	RH	*.54	SPRING, T/SIG SW CANC CAM (AC–DELCO #1964784)	7–F21,12
91–96	Y EUROPEAN PROVISIONS (VD1) (EXPORT), VE1 (EXPORT)	1964785	LH	*.54	SPRING, T/SIG SW CANC CAM (AC–DELCO #1964785)	7–F21,12

2.897 LEVER, Turn Signal Control

90–93	Y	25140558	1	108.71	LEVER, T/SIG & HDLP D/SW & CRCONT ACTR (AC–DELCO #25140558)	4–H21,1
94–96	Y	25140540	1	114.54	LEVER, T/SIG & HDLP D/SW & CRCONT ACTR (AC–DELCO #25140540)	4–I10,1
84–87	Y CRCONT (K34)	25111318	1	114.54	LEVER, T/SIG & HDLP DIMR SW & CRCONT (AC–DELCO #25111318)	4–H19,1
88–89	Y	25111318	1	114.54	LEVER, T/SIG & HDLP DIMR SW & CRCONT (AC–DELCO #25111318)	4–H19,1
84–87	Y (EXC CRUISE)	14047150	1	11.78	LEVER, T/SIG AND HDLP DIM/SW .	

2.906 PROTECTOR, Turn Signal Switch

NOTE: FOR 1986–1991 USAGE REFER TO STEERING COLUMN CHART GRP 6.518

84–86	Y07	7841606	1	DISCON	PROTECTOR, STRG COL WRG .
86	Y67	7849031	1	DISCON	PROTECTOR, STRG COL WRG .

© 2000 GENERAL MOTORS SERVICE PARTS OPERATIONS–CHEVROLET–14Y

CHEVROLET
LAMP SOCKET CHART

Y BODY

YEAR	BODY STYLE	2.575 FRT SI MKR	2.575 RR SI MKR	2.575 RR CORN-ERING	2.596 FRT PK & T/SIG	2.596 CORN-ERING
1982	Y				12003757	12003758
1984-85	Y	06290806	06290806		12013813	12003758
1984-85	Y		12003758(D)			
1986-87	Y	06290806	06290806		12013813	12003758
1988-90	Y	12083007	12083007		12013813	12003758
1991-93	Y	12003758	12083007	12003758	12013813	12083007
1994-96	Y	12083007	12083007	12003758	12013813	12003758
1994-96	Y	12141300(I)			12141300(I)	

YEAR	BODY STYLE	2.694 TAIL	2.694 STOP	2.694 RR T/SIG	2.697 BACK UP	2.714 LICENSE
1982	Y	12003759	12003759	12003759		12001470
1984-85	Y	12003759	12003759	12003759	12003759(E)	8918527(G)
1984-85	Y				12027133(F)	12001470(H)
1986-87	Y	12003759	12003759(D)	12003759	12003759(E)	8918527(G)
1986-87	Y				12027133(F)	12001470(H)
1988	Y	12003759	12003759	12003759	12003759(E)	8918527(G)
1988	Y				12027133(F)	12083007(H)
1989-96	Y	12003759	12003759	12003759	12027133	12083007(H)

YEAR	BODY STYLE	2.596 POSITION	2.727 FOG
1984-88	Y	08912750(A)	09442876(B)
1989-90	Y		09442876(B)

(A) W/VD1,VE1,VT7,VB4(EXPORT)
(B) SOCKET & BULB
(D) AUX
(E) W/T90(EXPORT)
(F) (EXC EXPORT T90)
(G) W/T89,T90(EXPORT)
(H) (EXC EXPORT T89,T90)
(I) T72,T84,T85,T90(EXPORT)

© 2000 GENERAL MOTORS SERVICE PARTS OPERATIONS–CHEVROLET–14Y

MICROFICHE INDEX

GROUP 2.000

FICHE 3 OF 11

GROUP	DESCRIPTION	STARTING GRID LOCATION PARTS	ILLUSTRATIONS
–	GENERAL INFORMATION	1–A2	1–G2
	ALPHABETICAL INDEX	1–B13	N.A.
2.000	CHASSIS WIRING – LAMPS	3–A2	3–F2
–	OUT OF FICHE CALLS	N.A.	3–M20

3–F1

CHEVROLET
CHASSIS GROUP 2.000

ILLUSTRATION INDEX

	TITLE	GRID
1984–1987	Y STARTER MOTOR	3–F5
1991–1995	Y STARTER MOTOR MOUNTING (LT5)	3–F7
1992–1996	Y STARTER MOTOR MOUNTING (LT1)	3–F8
1984–1985	Y GENERATOR ASM	3–F9
1992–1996	Y GENERATOR ASM	3–F11
1984	Y GENERATOR MOUNTING (L83)	3–F16
1985–1991	Y GENERATOR MOUNTING (L98)	3–F17
1990–1995	Y GENERATOR MOUNTING (LT5)	3–F18
1992–1996	Y GENERATOR MOUNTING (LT1)	3–F20
1984–1985	Y DISTRIBUTOR/IGNITION	3–F22
1986–1991	Y DISTRIBUTOR/IGNITION (L98)	3–F24
1992–1994	Y DISTRIBUTOR/IGNITION (LT1)	3–F26
1995–1996	Y DISTRIBUTOR/IGNITION (LT1)	3–F27
1996	Y DISTRIBUTOR/IGNITION (LT4)	3–F27
1990–1995	Y COIL & MODULE/IGNITION (LT5)	3–F28
1992–1995	Y COIL & MODULE/IGNITION (LT1)	3–G2
1996	Y COIL & MODULE/IGNITION	3–G4
1984–1985	Y ALARM SYSTEM/ANTI THEFT	3–G6
1986–1989	Y ALARM SYSTEM/ANTI THEFT (VATS)	3–G8
1990	Y ALARM SYSTEM/ANTI THEFT	3–G10
1991–1996	Y ALARM SYSTEM/ANTI THEFT	3–G12
1992	Y BATTERY CABLES	3–G18
1993–1996	Y BATTERY CABLES	3–G20
1984–1987	Y WIRING HARNESS/ENGINE	3–G23
1988	Y WIRING HARNERS/ENGINE	3–G25
1989	Y WIRING HARNESS/ENGINE	3–G27
1990	Y WIRING HARNESS/ENGINE (LT5)	3–H2
1990–1991	Y WIRING HARNESS/ENGINE (L98)	3–H5
1991	Y WIRING HARNESS/ENGINE (LT5)	3–H7
1992	Y WIRING HARNESS/ENGINE (LT5)	3–H10
1992–1996	Y WIRING HARNESS/ENGINE (LT1)	3–H12
1993–1995	Y WIRING HARNESS/ENGINE (LT5)	3–H15
1984–1989	Y WIRING HARNESS/INSTRUMENT PANEL	3–H18
1990	Y WIRING HARNESS/INSTRUMENT PANEL	3–H21
1991	Y WIRING HARNESS/INSTRUMENT PANEL	3–I2
1992	Y WIRING HARNESS/INSTRUMENT PANEL	3–I7
1993–1996	Y WIRING HARNESS/INSTRUMENT PANEL	3–I12
1984–1989	Y LAMPS/FRONT	3–I20
1990	Y LAMPS/FRONT	3–I23
1991–1996	Y LAMPS/FRONT	3–J2
1984–1989	Y LAMPS/REAR	3–J6
1990	Y LAMPS/REAR (EXC ZR1)	3–J8
1986–1990	Y LAMPS/REAR LAMP/HIGH MOUNT STOP(Y67)	3–J10
1990	Y LAMPS/REAR (ZR1)	3–J11
1991–1995	Y LAMPS/REAR (ZR1)	3–J13

ILLUSTRATION INDEX

	TITLE	GRID
1991–1995	Y LAMPS/REAR (EXC ZR1)	3–J16
1996	Y LAMPS/REAR	3–J16
1991–1996	Y67 LAMPS/REAR (LAMP/HIGH MOUNT STOP)	3–J20
1993	Y LAMPS/REAR (T90)	3–J21

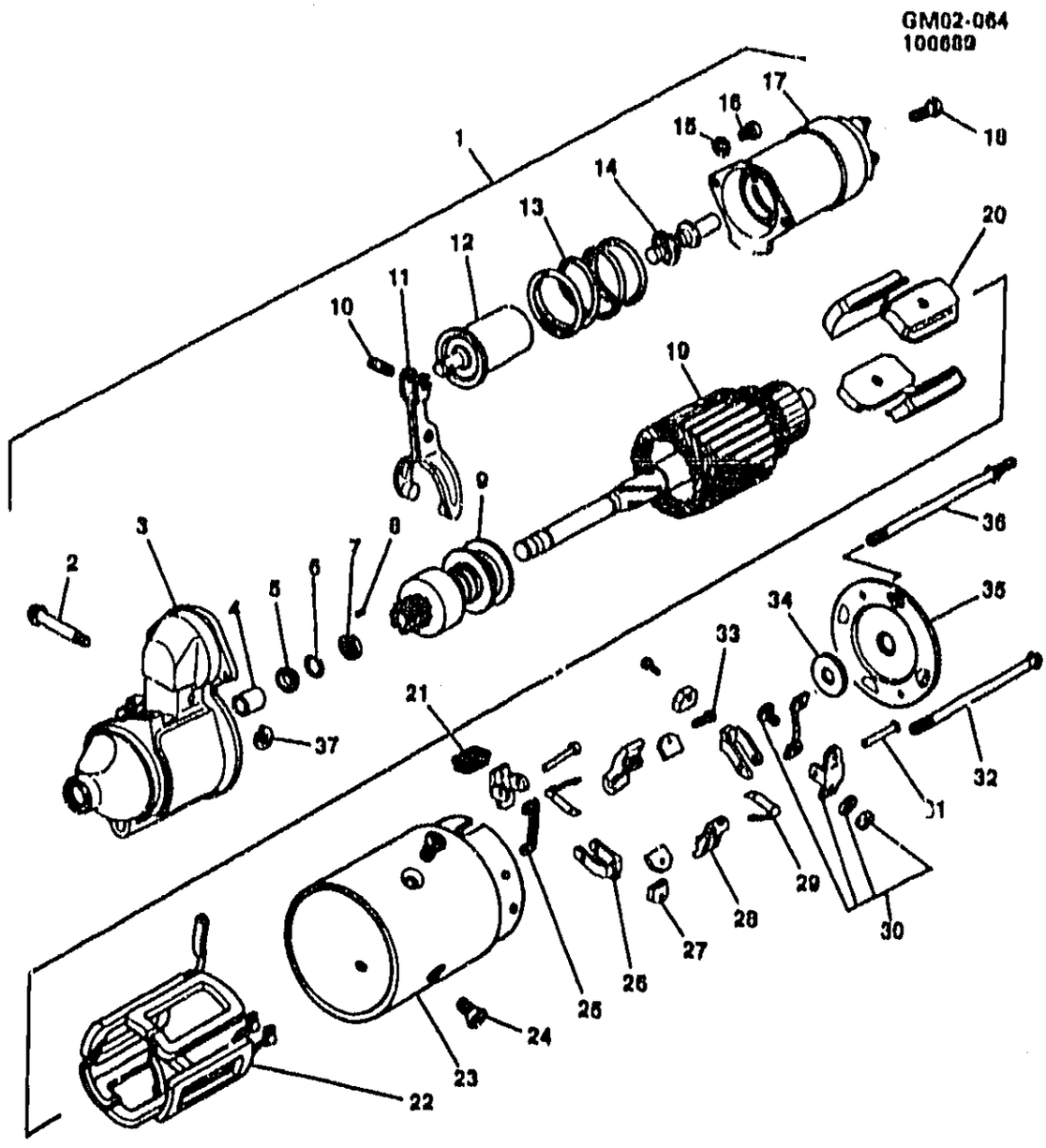

GM02-0641

1984-1987 Y STARTER MOTOR

NOTE: THIS ILLUSTRATION REPRESENTS PRODUCTION ASSEMBLIES: 1998400,1998435,1998557,1998577. UNLESS NOTED, PART NUMBERS IN TEXT SERVICE ALL ASSEMBLIES.

1.	3-A10	2.041	**STARTER**, (REMAN (AC-DELCO #323-365)	10496871
2.	3-A17	2.108	**SHAFT**, SHIFT LEVER (AC-DELCO #1945804)	1945804
3.	3-A17	2.085	**HOUSING**, DRIVE (*1) (AC-DELCO #1876881)	1876881
	3-A17	2.085	**HOUSING**, DRIVE (*2, 3, 4) (AC-DELCO #1876881)	1876881
4.		N.S.	**BUSHING**, DRIVE HOUSING	
5.	3-A16	2.063	**COLLAR**, THRUST D .E. (AC-DELCO #10495828)	10495828
6.	3-A16	2.063	**RING**, PINION STOP RET, D .E. (AC-DELCO #1927848)	1927848
7.	3-A16	2.063	**COLLAR**, PINION STOP D .E. (AC-DELCO #1927849)	1927849
8.	3-A17	2.108	**PIN**, DOWEL D .E. (AC-DELCO #1985696)	1985696
9.	3-A17	2.086	**DRIVE** (AC-DELCO #D2051)	10470757
10.	3-A17	2.108	**PIN**, PLUNGER ATCH TO SHIFT LVR (AC-DELCO #1987049)	1987049
11.	3-A17	2.108	**LEVER**, SHIFT (AC-DELCO #D4910)	801433

© 2000 GENERAL MOTORS SERVICE PARTS OPERATIONS-CHEVROLET-14Y

				GM02-0641
12.	3-A16	2.113	PLUNGER (AC-DELCO #10470764)	10470764
13.	3-A17	2.108	SPRING, PLUNGER RETURN (AC-DELCO #1958679)	1958679
14.	3-A17	2.102	CONTACT, W/PUSH ROD, SOL (AC-DELCO #1978337)	1978337
15.		8.931	WASHER, LOCK (1/4)	
16.		8.907	SCREW, (1/4X20X1/2)	
17.	3-A17	2.100	SWITCH, SOL (AC-DELCO #D984)	1114531
18.		8.977	SCREW, (#10X32X1/2)	
19.	3-A15	2.043	ARMATURE (*1, 2, 3, 4) (AC-DELCO #D4159)	10490501
20.	3-A16	2.077	POLE, SHOE (AC-DELCO #810601)	810601
21.	3-A17	2.102	GROMMET, FLD FRM (AC-DELCO #1846097)	1846097
22.	3-A15	2.049	COIL, FLD (AC-DELCO #D4264)	10470770
23.		N.S.	FRAME, W/FIELD	
24.	3-A16	2.077	SCREW, POLE SHOE (AC-DELCO #1966396)	1966396
25.	3-A16	2.055	LEAD, BRUSH GRD (AC-DELCO #1960864)	1960864
26.	3-A15	2.052	HOLDER, BRUSH GRD (AC-DELCO #1940477)	1940477
27.	3-A15	2.051	BRUSH (AC-DELCO #D757)	1906945
28.	3-A15	2.052	HOLDER, BRUSH INSUL (AC-DELCO #D771)	800091
29.	3-A16	2.053	SPRING, BRUSH (*1, 2, 3, 4) (AC-DELCO #D4054)	10498866
30.	3-A15	2.052	SUPPORT KIT, BRUSH HLDR (AC-DELCO #1928015)	1928015
31.	3-A15	2.052	PIN, BRUSH HLDR SUPT (PART OF #30) (AC-DELCO #1966923)	1966923
32.	3-A16	2.077	BOLT, THRU (AC-DELCO #1939970)	1939970
33.		8.977	SCREW, PAN HD C/R TAP (M4.2X1.41X16)	11504736
34.	3-A16	2.063	WASHER, BRAKE C.E. (*1) (AC-DELCO #10498921)	10498921
	3-A16	2.063	WASHER, BRAKE C.E. (*2, 3, 4) (AC-DELCO #10498921)	10498921
35.	3-A16	2.067	FRAME, C.E. (AC-DELCO #D4307)	1974157
36.	3-A16	2.077	BOLT, W/EXT, THRU (AC-DELCO #1931654)	1931654
37.		8.934	RING, SNAP ID 7.2-7, THK .66-.54, FITS GROOVE 7.50-7.40, WTH.8 (AR) (AC-DELCO #11505767)	11505767

NOTE 1: PART OF 1998577 (1987).
NOTE 2: PART OF 1998557 (1984-86).
NOTE 3: PART OF 1998435 (1984-85).
NOTE 4: PART OF 199[illegible]100 (1984).

© 2000 GENERAL MOTORS SERVICE PARTS OPERATIONS-CHEVROLET-14Y

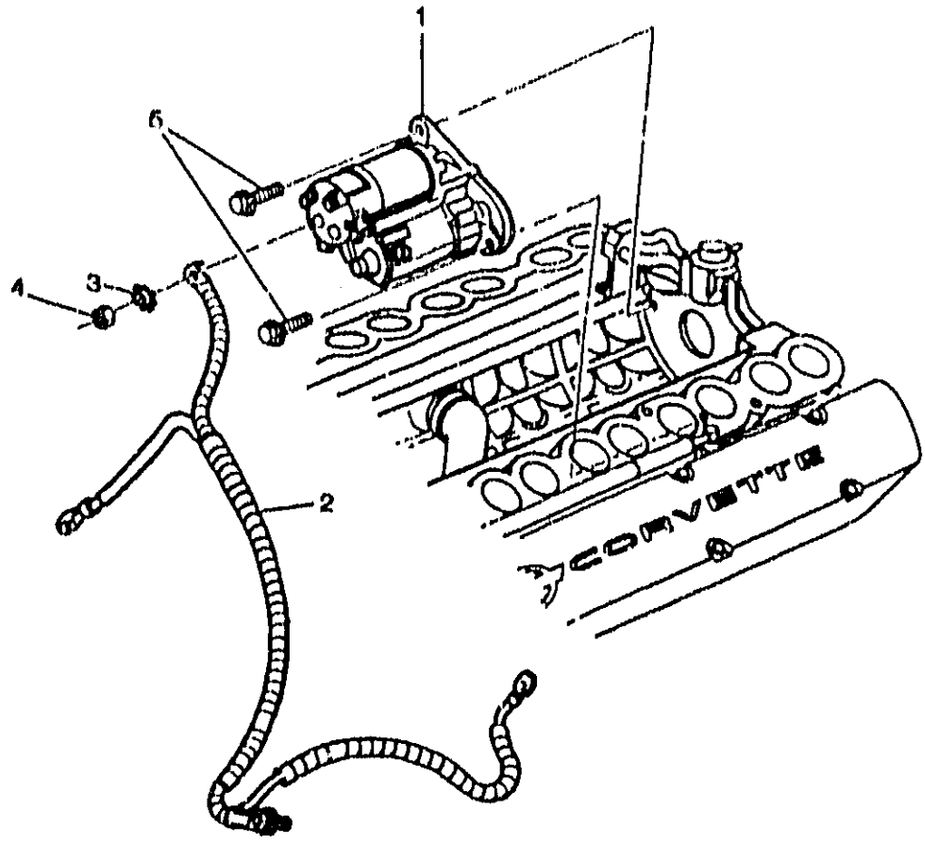

1Y02-040

1991-1995 Y STARTER MOTOR MOUNTING (LT5)

1.	3-A10	2.041	STARTER, (SERVICED BY COMPL ASM ONLY) (AC-DELCO #10455704)	91-95	Y (LT5)	1	10455704
2.	3-B20	2.342	CABLE, BAT POS (AC-DELCO #2SX40-2)	91-92	Y (LT5)	1	15320756
	3-B20	2.342	CABLE, BAT POS (AC-DELCO #2SW36-3)	93-95	Y (LT5)	1	12106586
3.		8.932	WASHER, EXT LK M8X15X1.52 ZC (STRTR SOL BAT TERM) (AC-DELCO #11501869)	91-95	.....	AR	11501869
4.		8.915	NUT-HEX, M8X1.25X4.0, BRASS, PLAIN (STRTR SOL BAT TERM) (AC-DELCO #11509480)	91-95	.....	AR	11509480
5.		8.900	BOLT, HFH M10X1.5X30 10.9 FL BLK 21.5 OD 26MM THD POINTED (STRTR)	91-95	.....	AR	12337993

RPO DEFINITIONS
LT5 - ENGINE,5.7L(5.7J),TPI

© 2000 GENERAL MOTORS SERVICE PARTS OPERATIONS-CHEVROLET-14Y

1Y02-039 10/27/94

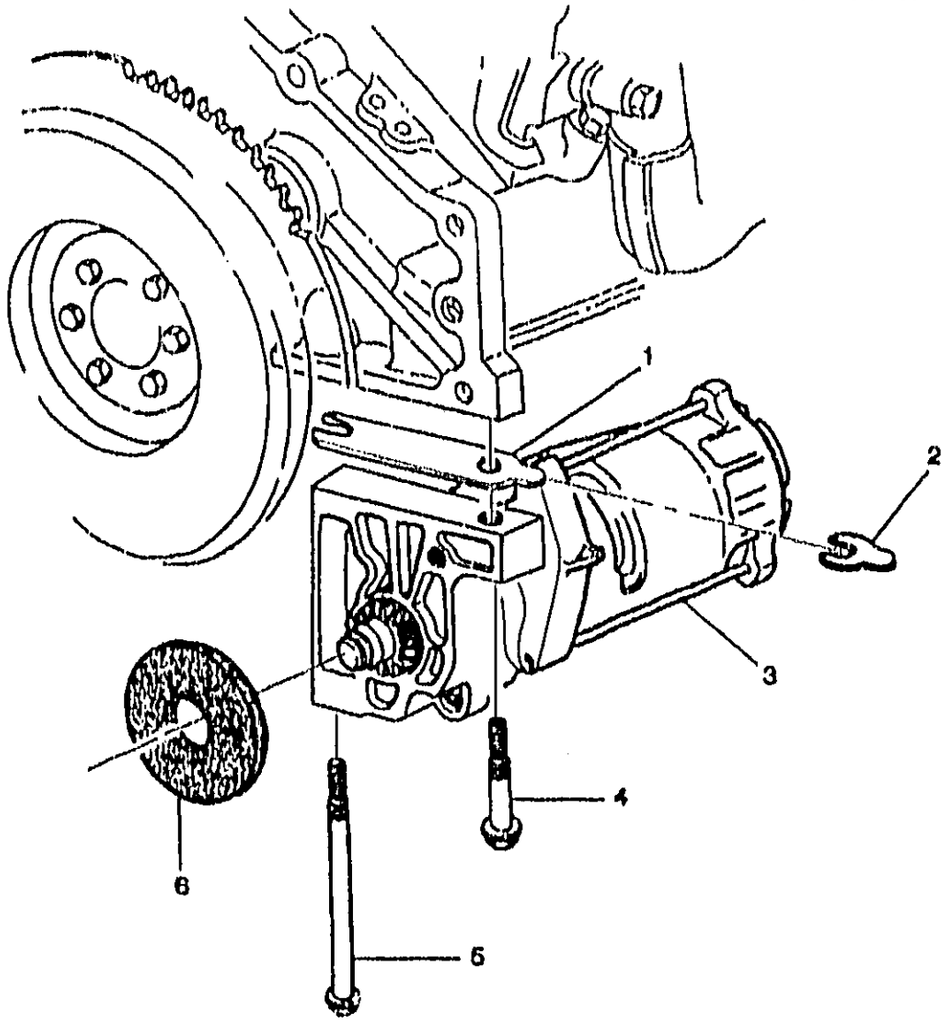

1Y02-039

1992-1996 Y STARTER MOTOR MOUNTING (LT1)

1.	3-A15	2.042	SHIM, STRTR (LONG) (24.4X106.7X0.38 STL) (FULL) ..	92-96	Y	AR	10008053
2.	3-A15	2.042	SHIM, STRTR (SHORT) (1 X 1 7/8 X 5/32, STEEL)	92-96	Y	AR	1246249
3.	3-A10	2.041	STARTER, (AC-DELCO #10455709)	92-95	Y (LT1)	1	10455709
	3-A10	2.041	STARTER, (AC-DELCO #10455709)	96	Y	1	10455709
4.	3-A15	2.042	BOLT, STRTR (OUTBOARD) (3/8-16X1.87)	92-96	Y	1	14097279
5.	3-A15	2.042	BOLT, STRTR (INBOARD) (3/8-16X4 11/16)	92-96	Y	1	14097278
6.	3-A16	2.070	SEALER, STRTR	92-95	Y (LT1)	1	10096162
	3-A16	2.070	SEALER, STRTR	96	Y	1	10096162

RPO DEFINITIONS
LT1 - ENGINE-GAS, 8 CYL, 5.7L(5.7P),MFI,HO

© 2000 GENERAL MOTORS SERVICE PARTS OPERATIONS-CHEVROLET-14Y

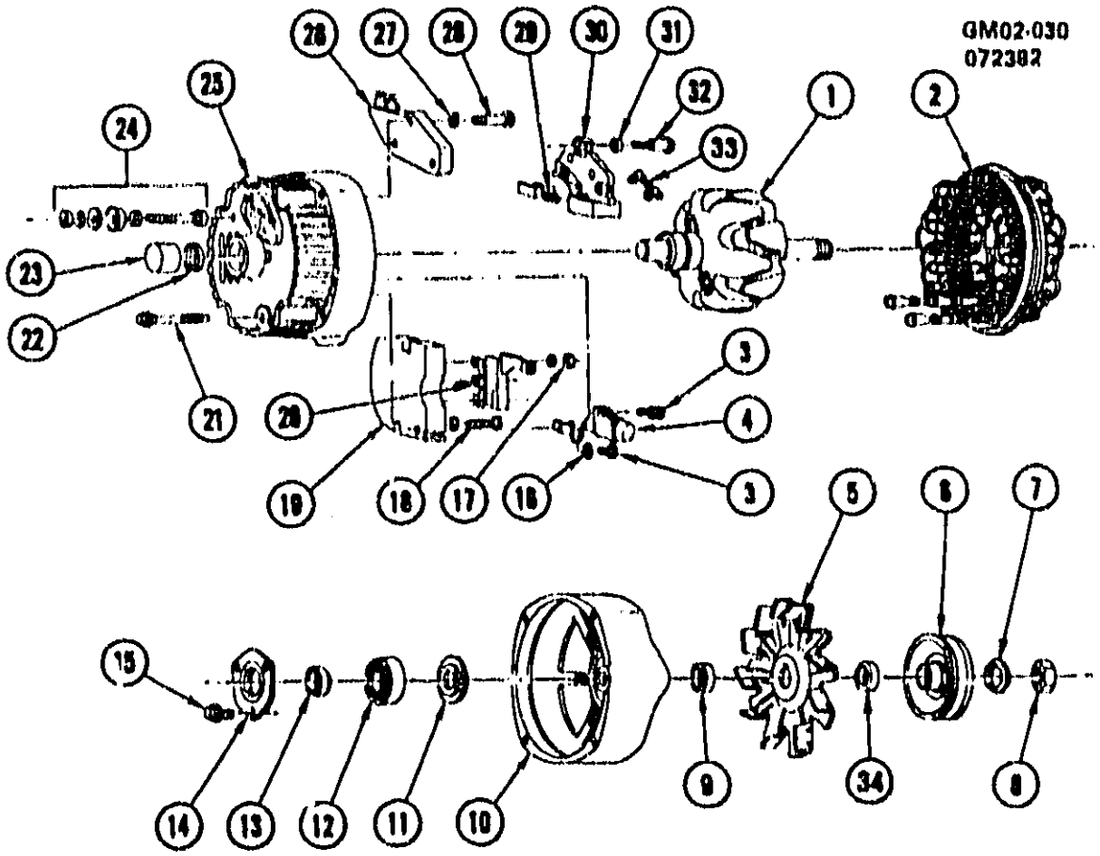

GM02-030

1984-1985 Y GENERATOR ASM

1.	3-B15	2.279	ROTOR, GEN (AC-DELCO #D3189)
2.	3-B17	2.310	STATOR, GEN (AC-DELCO #1984504)
3.		8.977	SCREW, (8/32X1/2)
4.	3-B19	2.319	CAPACITOR (AC-DELCO #1978146)
5.		DISCON	FAN, GEN
6.	3-B6	2.274	PULLEY, GEN (AC-DELCO #10476394)
7.	3-B15	2.280	WASHER, ARM SPR (AC-DELCO #1941978)
8.	3-B15	2.280	NUT, SHF DRV END
9.	3-B17	2.307	COLLAR, SHF DRV END O/S (AC-DELCO #1978250)
10.		DISCON	FRAME, DRV END
11.		N.S.	SLINGER, GREASE
12.	3-B16	2.306	BEARING, DRV END (AC-DELCO #7503-1)
13.	3-B17	2.307	COLLAR, SHF DRV END I/S (AC-DELCO #1978059)
14.	3-B17	2.307	PLATE, BRG RET DRV END (AC-DELCO #1971993)
15.	3-B17	2.307	SCREW, BRG RET PLT (AC-DELCO #1975736)
16.		8.929	WASHER
17.		8.915	NUT, HEX (#8-32)
		8.915	NUT, RECTIFIER BRIDGE HEX (8-32Z 284M) (AC-DELCO #120622)
18.	3-B19	2.319	SCREW, RECTIFIER BRIDGE ATTACHING (AC-DELCO #14058081)
19.	3-B19	2.319	RECTIFIER, BRIDGE (AC-DELCO #D3986)
20.	3-B19	2.319	DIODE, TRIO (AC-DELCO #D3923)
21.	3-B18	2.316	BOLT, THROUGH (AC-DELCO #1956975)
22.		N.S.	SEAL, BRG
23.	3-B16	2.298	BEARING, SLIP RING END (AC-DELCO #MNJ711)
24.	3-B18	2.313	TERMINAL, BAT (AC-DELCO #1975471)

© 2000 GENERAL MOTORS SERVICE PARTS OPERATIONS-CHEVROLET-14Y

25.		DISCON	FRAME, SLIP RING END .....
26.	3-C25	2.500	REGULATOR, (AC-DELCO #D660) .....
27.		8.929	WASHER, ...
28.	3-B15	2.291	SCREW, BRUSH HLDR ATTACHING (AC-DELCO #1976682) .....
29.	3-B15	2.266	SPRING, BRUSH (AC-DELCO #1977357) .....
30.	3-B15	2.291	BRUSH, W/HLDR (AC-DELCO #D766) .....
31.		8.929	WASHER, ...
32.	3-B15	2.291	SCREW, BRUSH HLDR ATTACHING (AC-DELCO #1976681) .....
33.	3-B19	2.319	RESISTOR, (REGULATOR TO BRUSH GROUND) (AC-DELCO #030478) .....
34.	3-B17	2.307	COLLAR, SHF (BETWEEN PUL AND FAN) (AC-DELCO #1976064) .

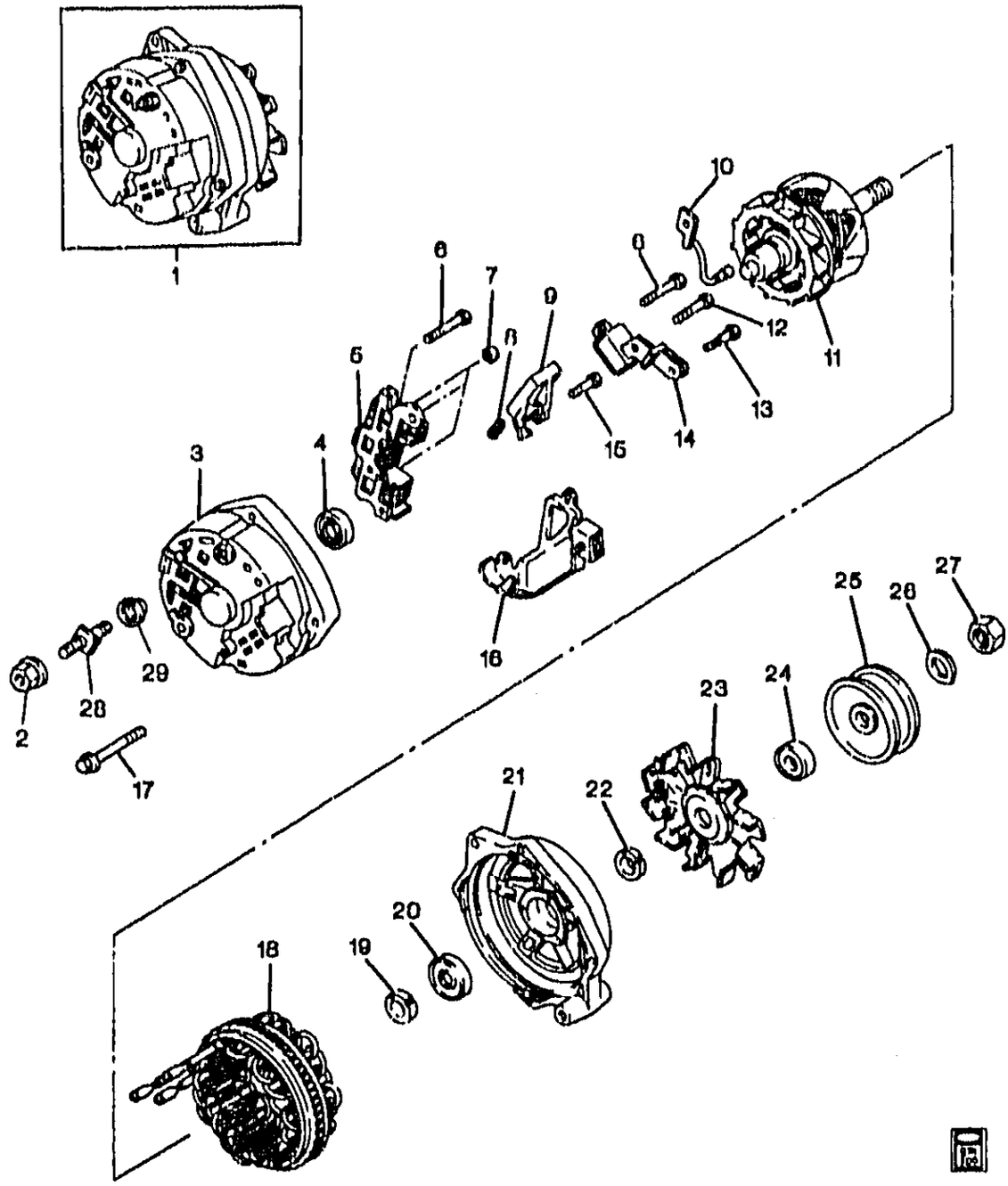

GM02-006Y

1992-1996 Y GENERATOR ASM

1.		N.S.	GENERATOR, (CPS) (INCLS 2-29)		.....		
	3-B6	2.275	GENERATOR, (REMAN) (AC-DELCO #321-567) (PROD 10479904)	92-95	Y (LT5)	1	10463257
	3-B6	2.275	GENERATOR, (REMAN) (AC-DELCO #321-1112)	93-94	Y (LT1, KG9)	1	10463679

© 2000 GENERAL MOTORS SERVICE PARTS OPERATIONS-CHEVROLET-14Y

	3-B6	2.275	GENERATOR, (REMAN) (ID B: P/N 10400202 STAMPED ON PART) (AC-DELCO #321-1112)	95-96	Y (LT1, KG9)	1	10463679
	3-B6	2.275	GENERATOR, (REMAN) (PROD #1102634) (AC-DELCO #321-552)	92-93	Y (LT1, KW2)	1	10463242
	3-B6	2.275	GENERATOR, (REMAN) (140 AMP) (AC-DELCO #321-1110) .	96	Y (LT4)	1	10463677
2.	3-B18	2.313	NUT, GEN BAT TERM (PART OF 1) (*KIT1) (AC-DELCO #10474210)	93	Y (LT1, KW2)	1	10474210
	3-B18	2.313	NUT, GEN BAT TERM (PART OF 1) (*KIT1) (AC-DELCO #10474210)	93-95	Y (LT1, KG9)	1	10474210
	3-B18	2.313	NUT, GEN BAT TERM (PART OF 1) (*KIT1) (AC-DELCO #10474210)	96	Y (LT4, KG9)	1	10474210
3.	3-B16	2.297	FRAME, GEN SLIP RING END (PART OF 1) (AC-DELCO #1989706)	92-93	Y (LT1, KW2)	1	1989706
	3-B16	2.297	FRAME, GEN SLIP RING END (PART OF 1) (AC-DELCO #1989706)	92-95	Y (LT5)	1	1989706
	3-B16	2.297	FRAME, GEN SLIP RING END (PART OF 1) (AC-DELCO #10476416)	93-96	Y (LT1, KG9)	1	10476416
	3-B16	2.297	FRAME, GEN SLIP RING END (PART OF 1) (AC-DELCO #10476416)	96	Y (LT4, KG9)	1	10476416
4.	3-B16	2.298	BEARING, GEN ROT SHF SLIP RING END (PART OF 1) (AC-DELCO #10474532)	92-93	Y (LT1, KW2)	1	10474532
	3-B16	2.298	BEARING, GEN ROT SHF SLIP RING END (PART OF 1) (AC-DELCO #10474532)	92-95	Y (LT5)	1	10474532
	3-B16	2.298	BEARING, GEN ROT SHF SLIP RING END (PART OF 1) (INCLS BRG) (AC-DELCO #10476418) .	93-96	Y (LT1, KG9)	1	10476418
	3-B16	2.298	BEARING, GEN ROT SHF SLIP RING END (PART OF 1) (INCLS BRG) (AC-DELCO #10476418) .	96	Y (LT4)	1	10476418
5.	3-B19	2.319	BRIDGE, GEN RECTIFIER (PART OF 1) (AC-DELCO #D3990)	92-93	Y (LT1, KW2)	1	10467052
	3-B19	2.319	BRIDGE, GEN RECTIFIER (PART OF 1) (AC-DELCO #D3990)	92-95	Y (LT5)	1	10467052
	3-B19	2.319	BRIDGE, GEN RECTIFIER (PART OF 1) (AC-DELCO #10472095) .	93-96	Y (LT1, KG9)	1	10472095
	3-B19	2.319	BRIDGE, GEN RECTIFIER (PART OF 1) (AC-DELCO #10472095) .	96	Y (LT4, KG9)	1	10472095
6.	3-B19	2.319	BOLT, GEN RECTIFIER BRIDGE (PART OF 1) (AC-DELCO #1988970)	92-93	Y (LT1, KW2)	1	1988970
	3-B19	2.319	BOLT, GEN RECTIFIER BRIDGE (PART OF 1) (AC-DELCO #1988970)	92-95	Y (LT5) (CAPAC ATTCH)	1	1988970
	3-B19	2.319	BOLT, GEN RECTIFIER BRIDGE (PART OF 1) (8-32 X 1.14") (AC-DELCO #1988971)	92-96	Y	2	1988971

© 2000 GENERAL MOTORS SERVICE PARTS OPERATIONS-CHEVROLET-14Y

	3-B19	2.319	BOLT, GEN RECTIFIER BRIDGE (PART OF 1) (8-32 X 1.24") (AC-DELCO #10474211)	93-95	Y (LT1, KG9)	1	10474211
	3-B19	2.319	BOLT, GEN RECTIFIER BRIDGE (PART OF 1) (8-32 X 1.24") (AC-DELCO #10474211)	96	Y (LT4, KG9)	1	10474211
	3-B19	2.319	BOLT, GEN RECTIFIER BRIDGE (INSULATED) (PART OF 1) (8-32 X 0.62") (AC-DELCO #10474207)	93-95	Y (LT1, KG9)	2	10474207
	3-B19	2.319	BOLT, GEN RECTIFIER BRIDGE (INSULATED) (PART OF 1) (8-32 X 0.62") (AC-DELCO #10474207)	96	Y (LT4, KG9)	2	10474207
7.		8.015	NUT, HEX 8-32, ZINC 284M (GEN RECTIFIER BRIDGE) (PART OF 1) (*KIT1) (AC-DELCO #120622)	92-96	.....	3	120622
8.	3-B15	2.286	SPRING, GEN BRUSH (PART OF 1) (AC-DELCO #D786)	[illegible]-93	Y (LT1, KW2)	2	10471998
	3-B15	2.286	SPRING, GEN BRUSH (PART OF 1) (AC-DELCO #D786)	92-95	Y (LT5)	2	10471998
	3-B15	2.286	SPRING, GEN BRUSH (PART OF 1) (AC-DELCO #D786)	93-96	Y (LT1, KG9)	2	10471998
	3-B15	2.286	SPRING, GEN BRUSH (PART OF 1) (AC-DELCO #D786)	[illegible]	Y (LT4)	2	10471998
9.	3-B15	2.291	BRUSH KIT, GEN (PART OF 1) (AC-DELCO #D775)	92-96	Y	1	1989702
10.	3-B18	2.313	CONNECTOR, GEN RECTIFIER BRIDGE (PART OF 1) (AC-DELCO #10497789)	92-96	Y	1	10497789
11.	3-B15	2.279	ROTOR, GEN (PART OF 1) (AC-DELCO #D3184)	92-95	Y (LT5)	1	10474573
	3-B15	2.279	ROTOR, GEN (PART OF 1) (AC-DELCO #D3184)	92-93	Y (LT1, KW2)	1	10474573
	3-B15	2.279	ROTOR, GEN (PART OF 1) (AC-DELCO #10472724)	93-96	Y (LT1, KG9)	1	10472724
	3-B15	2.279	ROTOR, GEN (PART OF 1) (AC-DELCO #D3198)	96	Y (LT4, KG9)	1	10489903
12.	3-B15	2.291	BOLT, GEN BRUSH HLDR INSL (PART OF 1) (2.500) (AC-DELCO #1989699)	92-96	Y	1	1989699
13.	3-B19	2.319	BOLT, GEN RECTIFIER BRIDGE (PART OF 1) (AC-DELCO #1988970)	92-93	Y (LT1, KW2)	1	1988970
	3-B19	2.319	BOLT, GEN RECTIFIER BRIDGE (PART OF 1) (AC-DELCO #1988970)	92-95	Y (LT5) (CAPAC ATTCH)	1	1988970
	3-B19	2.319	BOLT, GEN RECTIFIER BRIDGE (PART OF 1) (8-32 X 1.14") (AC-DELCO #1988971)	92-96	Y	2	1988971
	3-B19	2.319	BOLT, GEN RECTIFIER BRIDGE (PART OF 1) (8-32 X 1.24") (AC-DELCO #10474211)	93-95	Y (LT1, KG9)	1	10474211
	3-B19	2.319	BOLT, GEN RECTIFIER BRIDGE (PART OF 1) (8-32 X 1.24") (AC-DELCO #10474211)	96	Y (LT4, KG9)	1	10474211

© 2000 GENERAL MOTORS SERVICE PARTS OPERATIONS-CHEVROLET-14Y

	3-B19	2.319	BOLT, GEN RECTIFIER BRIDGE (INSULATED) (PART OF 1) (8-32 X 0.62") (AC-DELCO #10474207)	93-96	Y (LT1, KG9)	2	10474207
	3-B19	2.319	BOLT, GEN RECTIFIER BRIDGE (INSULATED) (PART OF 1) (8-32 X 0.62") (AC-DELCO #10474207)	96	Y (LT4, KG9)	2	10474207
14.	3-B19	2.319	CAPACITOR, GEN (PART OF 1) (AC-DELCO #1989703)	92-96	Y	1	1989703
15.	3-B15	2.291	BOLT, GEN BRUSH HLDR GND (PART OF 1) (M4.2X0.8X21.0, 500M) (AC-DELCO #1894566) ..	92-96	Y	1	189[illegible]
16.	3-C25	2.500	REGULATOR, GEN VOLTAGE (PART OF 1) (AC-DELCO #D685)	92-96	Y	1	1116437
17.	3-B18	2.316	BOLT, GEN THRU (PART OF 1) (#10-24X2.6) (AC-DELCO #1989690)	92-96	Y	4	1989690
18.	3-B17	2.310	STATOR, GEN (PART OF 1) (AC-DELCO #10472882)	92-93	Y (LT1, KW2)	1	10472882
	3-B17	2.310	STATOR, GEN (PART OF 1) (AC-DELCO #10472882)	92-95	Y (LT5)	1	10472882
	3-B17	2.310	STATOR, GEN (PART OF 1) (AC-DELCO #10470439)	93-96	Y (LT1, KG9)	1	10470439
	3-B17	2.310	STATOR, GEN (PART OF 1) (AC-DELCO #10470439)	96	Y (LT4, KG9)	1	10470439
19.	3-B17	2.307	COLLAR, GEN ROT DRV END BRG I/S (PART OF 1) (AC-DELCO #10470799)	92-93	Y (LT1, KW2)	1	10470799
	3-B17	2.307	COLLAR, GEN ROT DRV END BRG I/S (PART OF 1) (AC-DELCO #10470799)	92-95	Y (LT5)	1	10470799
	3-B17	2.307	COLLAR, GEN ROT DRV END BRG I/S (PART OF 1) (AC-DELCO #10470412)	93-96	Y (LT1, KG9)	1	10470412
	3-B17	2.307	COLLAR, GEN ROT DRV END BRG I/S (PART OF 1) (AC-DELCO #10470412)	96	Y (LT4, KG9)	1	10470412
20.		N.S.	BEARING, GEN ROT DRV END (PART OF 1)		.....		
21.	3-B16	2.305	FRAME, GEN DRV END (PART OF 1) (AC-DELCO #D3463)	92-94	Y (LT1, KW2)	1	10471936
	3-B16	2.305	FRAME, GEN DRV END (PART OF 1) (AC-DELCO #D3465)	93-96	Y (LT1, KG9)	1	10470419
	3-B16	2.305	FRAME, GEN DRV END (PART OF 1) (AC-DELCO #D3465)	96	Y (LT4, KG9)	1	10470419
	3-B16	2.305	FRAME, GEN DRV END (W/BRG) (PART OF 1) (AC-DELCO #D3462)	92-95	Y (LT5)	1	10470800
22.	3-B17	2.307	COLLAR, GEN ROT DRV END BRG O/S (PART OF 1) (AC-DELCO #1985999)	92-96	Y	1	1985999
23.	3-B6	2.274	FAN, GEN (PART OF 1) (AC-DELCO #1978026)	92-93	Y (LT1, KW2)	1	1978026
	3-B6	2.274	FAN, GEN (PART OF 1) (AC-DELCO #1978026)	92-95	Y (LT5)	1	1978026
	3-B6	2.274	FAN, GEN (PART OF 1) (AC-DELCO #10471962)	93-96	Y (LT1, KG9)	1	10471962

© 2000 GENERAL MOTORS SERVICE PARTS OPERATIONS-CHEVROLET-14Y

	3-B6	2.274	FAN, GEN (PART OF 1) (AC-DELCO #10471962)	96	Y (LT4, KG9)	1	10471962
24.	3-B17	2.307	COLLAR, GEN ROT DR END FAN (PART OF 1) (AC-DELCO #1978064)	92-96	Y	1	1978064
25.	3-B6	2.274	PULLEY, GEN (PART OF 1) (AC-DELCO #1985964)	92-96	Y (LT1)	1	1985964
	3-B6	2.274	PULLEY, GEN (PART OF 1) (AC-DELCO #10498550)	92-95	Y (LT5)	1	10498550
	3-B6	2.274	PULLEY, GEN (PART OF 1) (AC-DELCO #1985964)	96	Y (LT4)	1	1985964
26.	3-B15	2.280	WASHER, GEN ROT SHF DRV END (PART OF 1) (AC-DELCO #1941978)	92-96	Y	1	1941978
27.	3-B15	2.280	NUT, GEN ROT SHF DRV END (PART OF 1)	92-96	Y	1	1915172
28.	3-B18	2.313	TERMINAL, GEN BAT (PART OF 1) (*KIT1) (AC-DELCO #10474201)	93	Y (LT1, KW2)	1	10474201
	3-B18	2.313	TERMINAL, GEN BAT (PART OF 1) (*KIT1) (AC-DELCO #10474201)	93-96	Y (LT1, KG9)	1	10474201
	3-B18	2.313	TERMINAL, GEN BAT (PART OF 1) (*KIT1) (AC-DELCO #10474201)	96	Y (LT4, KG9)	1	10474201
29.	3-B18	2.313	INSULATOR, GEN BAT TERM (PART OF 1) (*KIT1) (AC-DELCO #10470416)	93	Y (LT1, KW2)	1	10470416
	3-B18	2.313	INSULATOR, GEN BAT TERM (PART OF 1) (*KIT1) (AC-DELCO #10470416)	93-95	Y (LT1, KG9)	1	10470416

SERVICE KITS

1.	3-B18	2.313	TERMINAL KIT, GEN BAT (INCLS 2, 7, 28, 29) (AC-DELCO #1975471)	92-93	Y (LT1, KW2)	1	1975471
	3-B18	2.313	TERMINAL KIT, GEN BAT (INCLS 2, 7, 28, 29) (AC-DELCO #1975471)	92-95	Y (LT5)	1	1975471
	3-B18	2.313	TERMINAL KIT, GEN BAT (INCLS 2, 7, 28, 29) (AC-DELCO #1975471)	93-95	Y (LT1, KG9)	1	1975471

RPO DEFINITIONS
KG9 – GENERATOR,140 AMPERE
KW2 – GENERATOR,124 AMP
LT1 – ENGINE-GAS, 8 CYL, 5.7L(5.7P),MFI,HO
LT4 – ENGINE GAS, 8 CYL, 5.7L, MFI, HIGH OUTPUT
LT5 – ENGINE,5.7L(5.7J),TPI

© 2000 GENERAL MOTORS SERVICE PARTS OPERATIONS-CHEVROLET-14Y

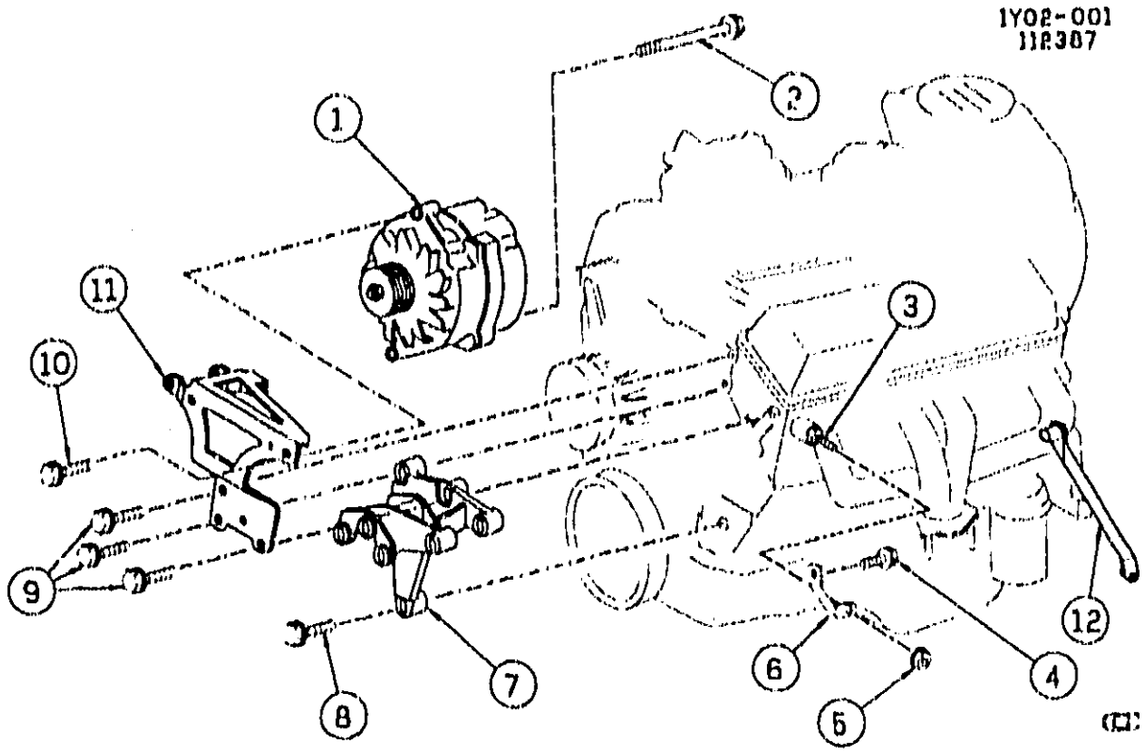

1Y02-001

1984 Y GENERATOR MOUNTING (L83)

1.	3-B6	2.275	GENERATOR (97 AMP) (AC-DELCO #321-1735)	10464391
2.		8.000	BOLT, HEX FLG HD (M10 X 1.5 X 80)	
3.	3-M22	3.275	STUD, EXH MANIF (3/8"-16)	14057002
4.		8.900	BOLT, HEX FLG HD (M10 X 1.5 X 20)	
5.		8.917	NUT, HEX FLG (3/8"-16)	
6.	3-B14	2.277	BRACE, GEN RR	14084335
7.	3-N10	6.606	BRACKET, HYD STRG PUMP	14087559
8.		8.900	BOLT, HEX FLG HD (3/8"-16 X 1 3/8")	
9.		8.900	BOLT, HEX FLG HD (3/8"-16 X 1 3/4")	
10.		8.000	BOLT, HEX FLG HD (M10 X 1.5 X 30)	
11.		DISCON	BRACKET, GEN	14063758
12.		DISCON	BRACE, GEN RR (ATTACHES TO 3RD STUD)	14084334

RPO DEFINITIONS
L83 -- ENGINE, 5.7L (5.7-8), V8,(CFI-CROSSFIRE)(TBI)

© 2000 GENERAL MOTORS SERVICE PARTS OPERATIONS-CHEVROLET-14Y

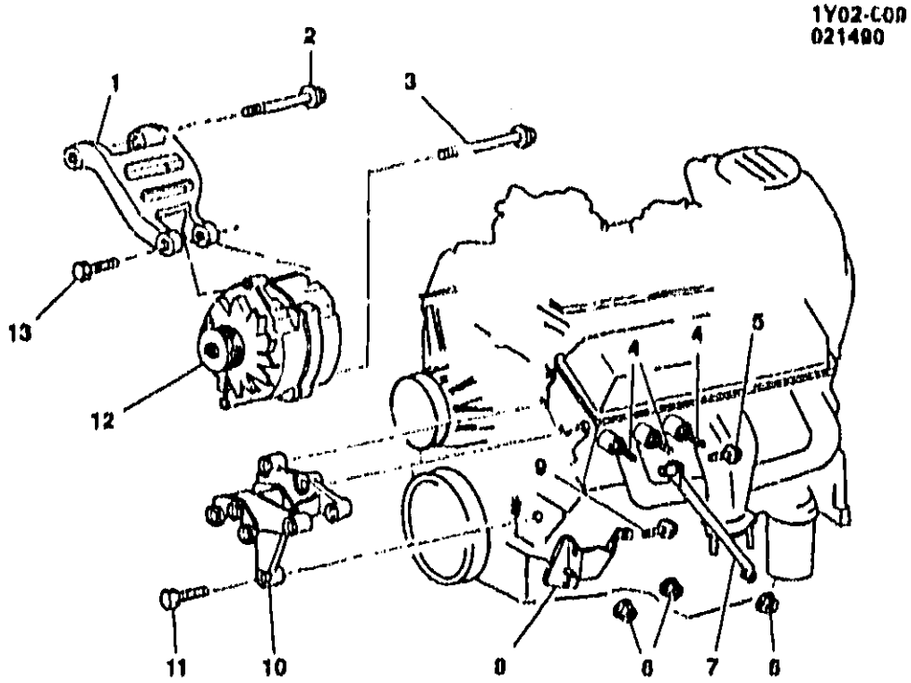

1Y02-009

1985-1991 Y GENERATOR MOUNTING (L98)

1.	3-D14	2.277	BRACKET (1985)	14084384
	3-B14	2.277	BRACKET (1986-91)	14087519
2.		8.900	BOLT, HFH (M10X1.5X105) 9.8 PZOR	11508112
3.		8.900	BOLT, HFH (M10X1.5X85) 10.9 POR	11509678
4.	3-M22	3.275	STUD, HFH (3/8-16X2.06, 3/8-16X.75) 300M (ENGINE STUD, 1985 USAGE (3), 1986-91 USAGE (1))	14057002
5.		8.900	BOLT, HFH (M8X1.25X45) SST (1985-90)	10067660
		8.900	BOLT, HFH (M8X1.25X20) (1991)	12551177
6.		8.917	NUT, HEX (3/8-16) 286M PHOS	14057004
7.		DISCON	BRACE, RR (ATCH TO 3RD STUD) (1985)	14084334
	3-B14	2.277	BRACE, RR (1986-91) (AC-DELCO #14092391)	14092391
8.		DISCON	BRACKET, SUP RR (NONE EXISTING FOR 1986-91, ITEMS USED ON 1985 DESIGN ONLY)	14085724
9.		8.900	BOLT, HFH (M10X1.5X20) 9.8 PZOR	11508202
10.	3-B14	2.277	BRACKET, HYD STRG PUMP	14087559
11.		8.900	BOLT, HFH (.375-16X1.38) 280M PZOR	9439918
12.	3-B6	2.275	GENERATOR (SEE CHART IN GROUP 2.000 FOR USAGE) (AC-DELCO #321-388)	
13.		8.900	BOLT, HFH (M8X1.25X45) 9.8 SST	10067660

RPO DEFINITIONS
L98 – ENGINE, 5.7L, (5.7-8) 350 CID, V8, TPI

© 2000 GENERAL MOTORS SERVICE PARTS OPERATIONS-CHEVROLET-14Y

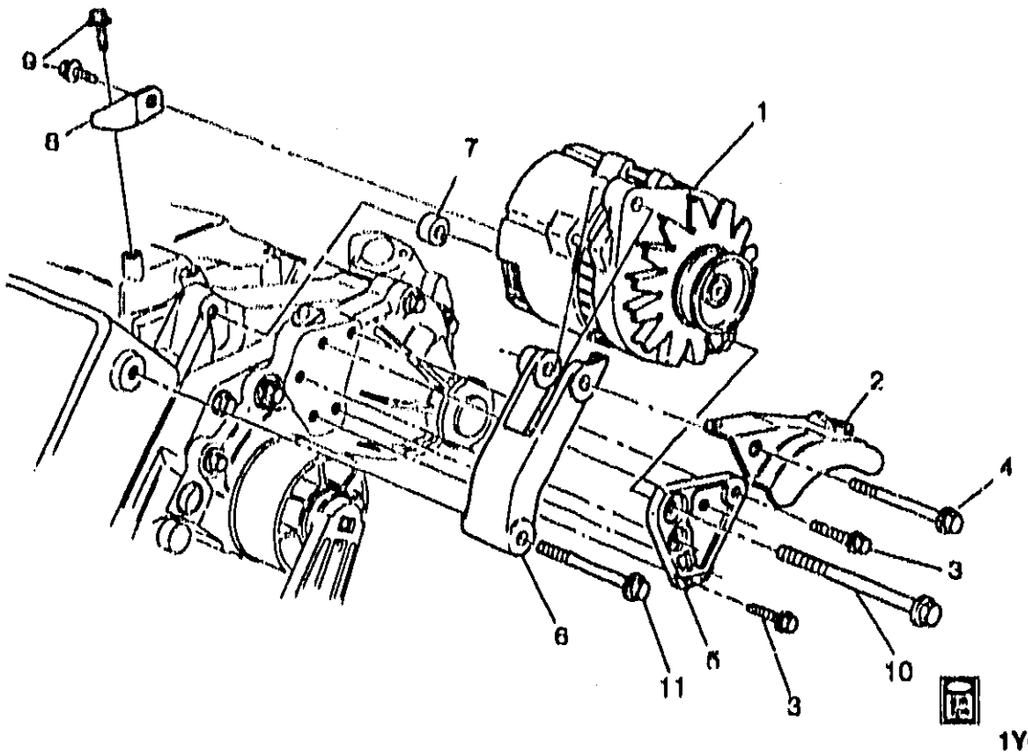

1Y02-017

1990-1995 Y GENERATOR MOUNTING (LT5)

1.	3-B6	2.275	GENERATOR, (REMAN) (AC-DELCO #321-372)	90	Y (LT5, FE1, FE7)	1	10463081
	3-B6	2.275	GENERATOR, (REMAN) (AC-DELCO #321-567)	90	Y (LT5, C60, C68, FE1, FE7)	1	10463257
	3-B6	2.275	GENERATOR, (REMAN) (AC-DELCO #321-567) (PROD 10479904)	91-95	Y (LT5)	1	10463257
	3-B14	2.277	BOLT, GEN BRKT (TO GEN BRKT UPR) (M10X1.5X100 13HEX) (0.002)	90-95	Y	1	10049639
2.	3-B14	2.277	SHIELD, GEN	90-95	Y (LT5)	1	10153529
3.		8.900	BOLT, HFH M8X1.25X21MM, 17 OD, 10.9 (BOLT, BOTTOM GEN BRKT)	90-95	.....	2	12551177
4.		8.900	BOLT, HFH, M10X1.5X70, 33.5 THD, RED BODY, 9.8, PO (BOLT, TOP GEN BRKT)	90-95	.....	1	11514689
5.	3-B14	2.277	BRACKET, GEN (BOTTOM)	90-95	Y (LT5)	1	10067686
6.	3-B14	2.277	BRACKET, GEN (TOP) (2.317) ...	90-95	Y (LT5)	1	10067545
7.	3-B18	2.317	SPACER, GEN PIV	90-95	Y (LT5)	1	10067546
8.	3-B14	2.277	BRACE, GEN RR	90-95	Y (LT5)	1	10135866
9.		N.S.	BOLT, GEN RR BR		.....		
10.		8.900	BOLT, M8X1.25X25 9.8 (BOLT, BOTTOM GEN BRKT)	90-95	.....	1	11508476
11.		8.900	BOLT, HFH M10X1.5X50 10.9 POR (BOLT, TOP GEN BRKT)	90-95	.....	1	11508355

RPO DEFINITIONS
C60 – AIR CONDITIONER,FRONT,MANUAL CONTROLS
C68 – AIR CONDITIONER,FRONT,AUTOMATIC,ELECTRONIC CONTROLS
FE1 – SUSPENSION SYSTEM,SOFT RIDE

© 2000 GENERAL MOTORS SERVICE PARTS OPERATIONS–CHEVROLET–14Y

FE7 -- SUSPENSION SYSTEM,FRONT AND REAR,HEAVY DUTY(USED WITH PERFORMANCE HANDLING PACKAGE Z51)
LT6 -- ENGINE,5.7L(5.7J),TPI

© 2000 GENERAL MOTORS SERVICE PARTS OPERATIONS-CHEVROLET-14Y

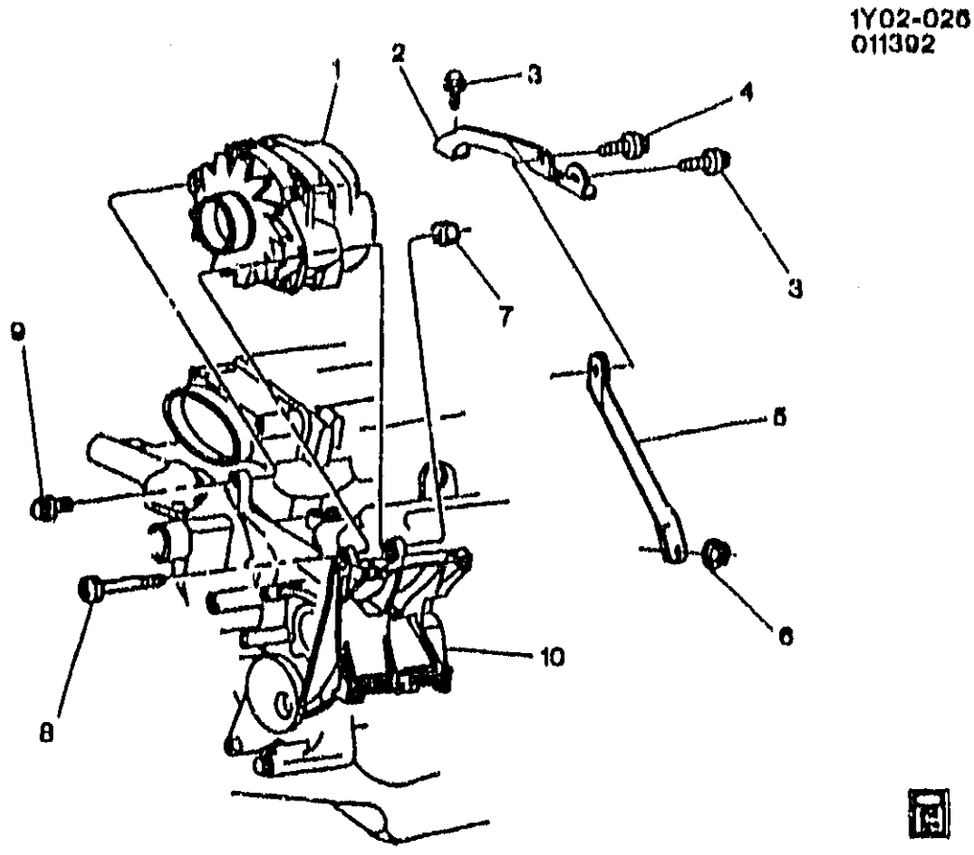

1Y02-026

1992-1996 Y GENERATOR MOUNTING (LT1)

1.	3-B6	2.275	GENERATOR, (REMAN) (AC-DELCO #321-1112)	93-94	Y (LT1, KG9)	1	10463679
	3-B6	2.275	GENERATOR, (REMAN) (ID BY P/N 10480202 STAMPED ON PART) (AC-DELCO #321-1112)	95-96	Y (LT1, KG9)	1	10463679
	3-B6	2.275	GENERATOR, (REMAN) (PROD #1102634) (AC-DELCO #321-552)	92-93	Y (LT1, KW2)	1	10463242
2.	3-B14	2.277	BRACE, GEN RR INR	92-95	Y (LT1)	1	10186193
	3-B14	2.277	BRACE, GEN RR INR	96	Y	1	10186193
3.		8.900	BOLT, HFH 3/8-16X1.12 280M ZP FULL THD .75-OD (ENG LIFT FRT BRKT)	92-96	.....	AR	9440071
4.		8.900	BOLT, HFH M10X1.5X30 10.9 FL BLK 21.5 OD 26MM THD POINTED	92-96	.....	AR	12337993
5.	3-B14	2.277	BRACE, GEN RR OTR	92-95	Y (LT1)	1	10186188
	3-B14	2.277	BRACE, GEN RR OTR	96	Y (LT1, LT4)	1	10186188
6.		8.917	NUT (GEN BR)	92-96	.....	AR	14057004
7.		8.915	NUT, HFH, 10X1.5 6H THD, 21.3 OD, 9.8 THK 13 HEX DR, GRD 9, ZF (8.917)	92-96	.....	AR	10255957
8.	3-B14	2.277	BOLT, GEN	92-95	Y (LT1)	1	10105345
	3-B14	2.277	BOLT, GEN	96	Y (LT1, LT4)	1	10105345
9.		8.900	BOLT, M10X1.5X32, 28.10 THD, 20.28 OD, 10.9, GM 7114M	92-96	.....	AR	14056165
10.	3-B14	2.277	BRACKET, GEN & A/C CMPR & P/S PUMP (CPS)	92-95	Y (LT1)	1	12550052

© 2000 GENERAL MOTORS SERVICE PARTS OPERATIONS-CHEVROLET-14Y

						1Y02-026
3-N13	9.171	BRACKET, GEN & A/C CMPR & P/S PUMP (CPS) (2.277)	92-95	Y (LT1)	1	12550052
3-D14	2.277	BRACKET, GEN & A/C CMPR & P/S PUMP (CPS)	96	Y	1	12550052
3-N10	6.606	BRACKET, GEN & A/C CMPR & P/S PUMP (CPS) (2.277)	96	Y	1	12550052
3-B14	2.277	SPACER, GEN	92-96	Y (LT1)	1	10020767

RPO DEFINITIONS
KG9 – GENERATOR,140 AMPERE
KW2 – GENERATOR,124 AMP
LT1 – ENGINE–GAS, 8 CYL, 5.7L(5.7P),MFI,HO
LT4 – ENGINE GAS, 8 CYL, 5.7L, MFI, HIGH OUTPUT

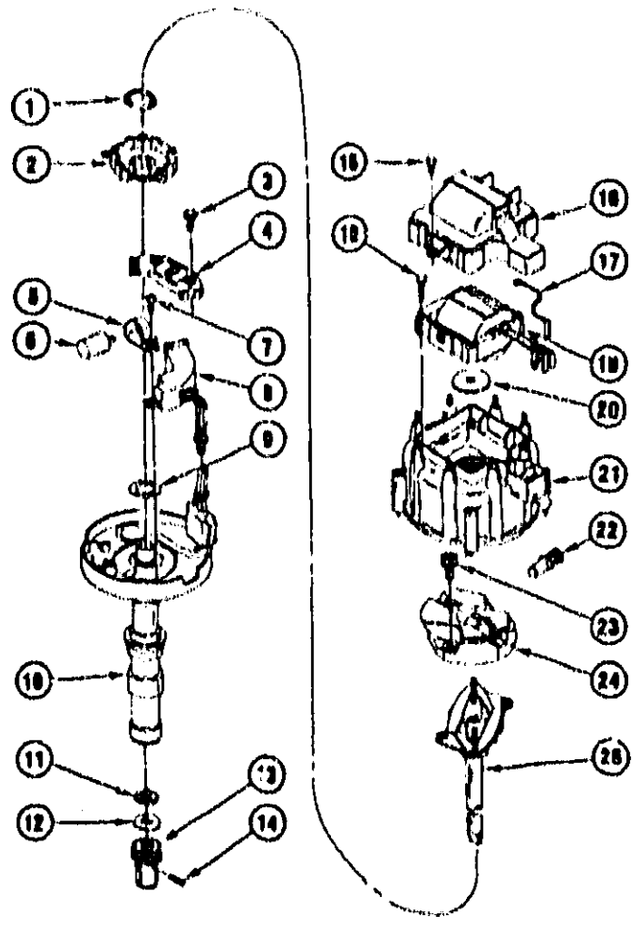

1Y02-008

1984-1985 Y DISTRIBUTOR/IGNITION

NOTE: SEE CHART IN GROUP 2.000 FOR USAGE.

1.	3-C3	2.372	RETAINER, POLE PIECE & PLATE (AC-DELCO #1892222) .....
2.	3-C3	2.372	POLE PIECE, W/PLATE (AC-DELCO #D1945) .....
3.	3-C4	2.383	SCREW, W/LK WA, MODULE ATTACHING (AC-DELCO #1891234) .
4.	3-C4	2.383	MODULE, DISTR (AC-DELCO #D1961A) .....
	3-C4	2.383	SHIELD, MODULE (AC-DELCO #1984382) .....
5.		N.S.	BRACKET, CAPACITOR (PART OF #8 & 10) .....
6.		N.S.	CAPACITOR, DISTR (PART OF #8 & 10) .....
7.		N.S.	SCREW, CAPACITOR BRKT (PART OF #8 & 10) .....
8.	3-C4	2.383	TERMINAL BLOCK (INCLS #5-7) (LESS CAP) (AC-DELCO #1892261) .....
9.	3-C2	2.383	SEAL, HOUSING (AC-DELCO #1950509) .....
10.		DISCON	HOUSING, DISTR .....
11.	3-C4	2.379	WASHER, TANG UNDER GEAR (AC-DELCO #1965664) .....
12.	3-C4	2.379	WASHER, UNDER GEAR (AC-DELCO #1837617) .....
13.	3-C3	2.374	GEAR, DISTR (AC-DELCO #1958599) .....
14.		6.939	PIN, DISTR GEAR, ROLL (3/16" X 7/8") .....
15.	3-C3	2.368	SCREW, DISTR CAP CVR ATT (AC-DELCO #1876153) .....
16.	3-C3	2.368	COVER, DISTR CAP (AC-DELCO #1875960) .....
17.	3-C7	2.400	STRAP, GROUND (AC-DELCO #1894868) .....
18.	3-A18	2.183	SCREW, W/WA, IGN COIL ATTACHING (AC-DELCO #1985472) ....
19.	3-A18	2.170	COIL, IGNITION (AC-DELCO #D531) .....
20.	3-A18	2.183	SEAL, UNDER IGN COIL (AC-DELCO #1875962) .....
21.	3-C2	2.367	CAP, DISTR (AC-DELCO #D336) .....
22.	3-C3	2.368	BRUSH, DISTR CAP RES (AC-DELCO #1989880) .....

© 2000 GENERAL MOTORS SERVICE PARTS OPERATIONS - CHEVROLET - 14Y

23.	3-C4	2.303	SCREW, W/WA, ROTOR ATTACHING (AC-DELCO #1876040) .....
24.	3-C4	2.302	ROTOR, DISTR (AC-DELCO #D4[illegible]0) .....
25.	3-C3	2.372	MAIN SHAFT (AC-DELCO #1876009) .....

© 2000 GENERAL MOTORS SERVICE PARTS OPERATIONS-CHEVROLET-14Y

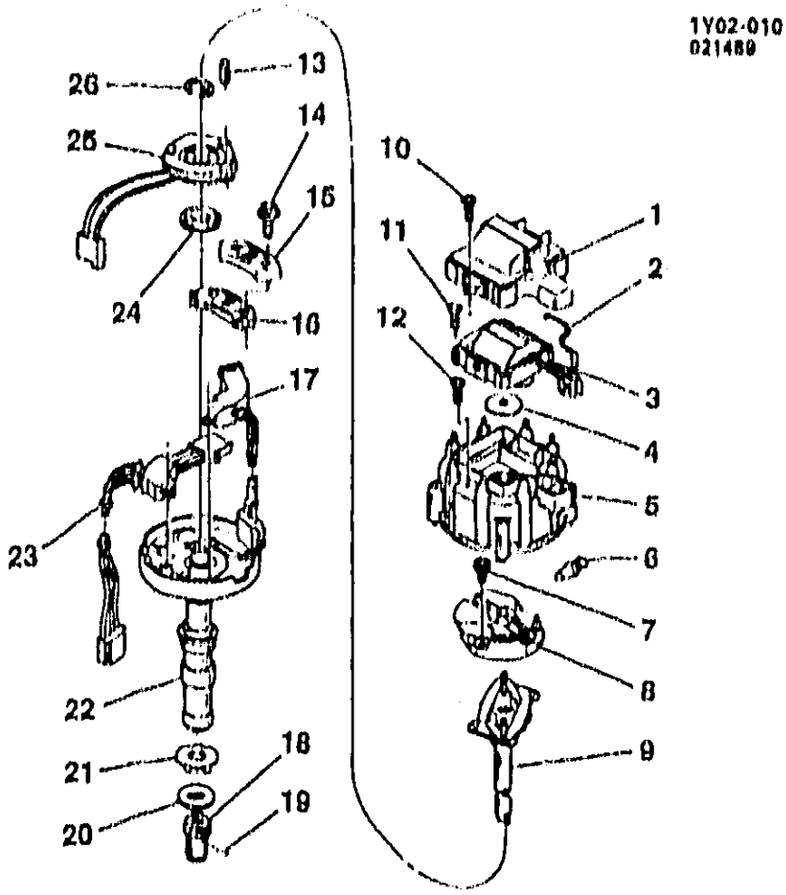

1Y02-010

1986-1991 Y DISTRIBUTOR/IGNITION (L98)

1.	3-C3	2.368	COVER, DISTR CAP (AC-DELCO #1875960)	1875960
2.	3-C7	2.400	STRAP, GROUND (AC-DELCO #1894868)	1894868
3.	3-A18	2.170	COIL, IGN (AC-DELCO #D531)	1985474
4.	3-A18	2.183	SEAL, UNDER IGN COIL (AC-DELCO #1875962)	1875962
5.	3-C2	2.367	CAP, DISTR (*1) (AC-DELCO #D338)	1977048
6.	3-C3	2.368	BRUSH, DISTR CAP RES (AC-DELCO #1989860)	1989860
7.	3-C4	2.383	SCREW, W/WA, ROTOR ATTACH (AC-DELCO #1875948)	1875948
8.	3-C4	2.382	ROTOR, DISTR (AC-DELCO #D448)	10498150
9.	3-C3	2.372	SHAFT, DISTR (*1) (AC-DELCO #1976909)	1976909
10.	3-C3	2.368	SCREW, DISTR CAP CVR ATTACH (AC-DELCO #1876153)	1876153
11.	3-A18	2.183	SCREW, W/WA, IGN COIL ATTACH (AC-DELCO #1985472)	1985472
12.	3-C3	2.368	SCREW, W/LW, CAP ATTACH (AC-DELCO #1977377)	1977377
13.	3-C3	2.372	PIN, POLE PIECE & PLT LOCATOR (SEE CHART IN GROUP 2.000 FOR ADDITIONAL USAGE) (AC-DELCO #456969)	456969
14.	3-C4	2.383	SCREW, W/LW MODULE ATTACH (AC-DELCO #1891234)	1891234
15.	3-C4	2.383	SHIELD, MODULE (AC-DELCO #1984382)	1984382
16.	3-C4	2.383	MODULE, DISTR IGN CONT (AC-DELCO #D1961A)	10482632
17.	3-C4	2.383	TERMINAL BLOCK (INCL CAPACITOR) (AC-DELCO #1892261)	1892261
18.	3-C3	2.374	GEAR, DISTR (AC-DELCO #10456413)	10456413
19.		8.939	PIN, SPRING SLOT (TYPE A) (3/16X7/8) PL (AC-DELCO #456652)	456652
20.	3-C4	2.379	WASHER, UNDER GEAR (AC-DELCO #1837617)	1837617
21.	3-C4	2.379	WASHER, TANG UNDER GEAR (AC-DELCO #1965864)	1965864
22.	3-C2	2.362	HOUSING, DISTR (*1) (AC-DELCO #1988614)	1988614
23.	3-C4	2.383	TERMINAL BLOCK, (TO ELEK PKG) (AC-DELCO #1986260)	1986260

© 2000 GENERAL MOTORS SERVICE PARTS OPERATIONS-CHEVROLET-14Y

				1Y02-010
24.	3-C2	2.363	SCREEN, W/SUPPORT, DISTR (AC-DELCO #10469035)	10469035
25.	3-C3	2.372	POLE PIECE AND PLATE (AC-DELCO #D1946)	1977207
26.	3-C3	2.372	RETAINER, DISTR POLE PIECE (AC-DELCO #1892222)	1892222

NOTE 1: SEE CHART IN GROUP 2 FOR ADDITIONAL USAGE.

RPO DEFINITIONS
L98 – ENGINE, 5.7L, (5.7-8) 350 CID, V8, TPI

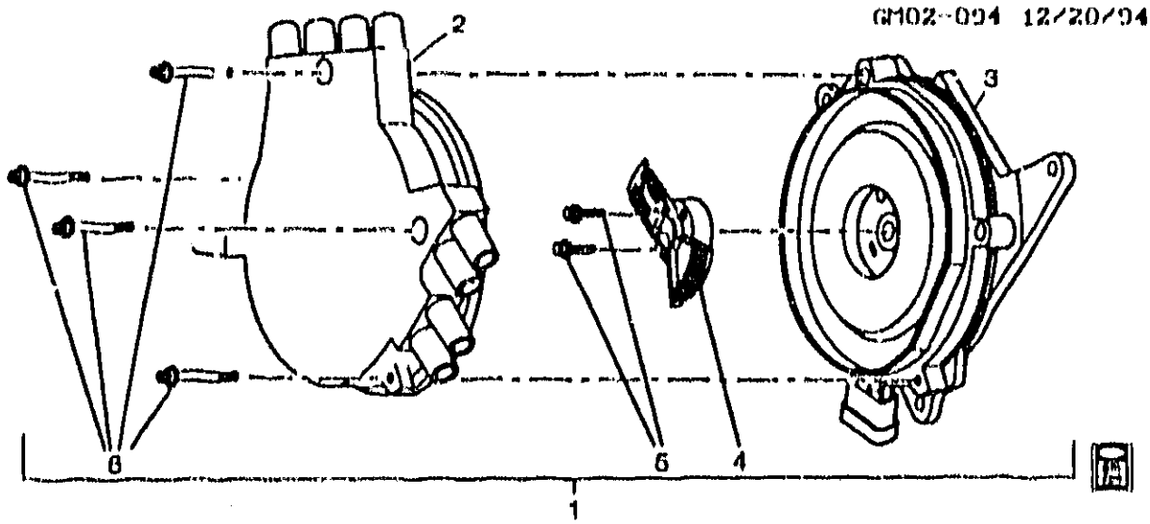

GM02-09/

1992-1994 Y DISTRIBUTOR/IGNITION (LT1)

1.	3-B21	2.361	DISTRIBUTOR, (INCL'S #2-6) (AC-DELCO #10457702)	92-94	Y (LT1)	1	104.7702
2.		N.S.	CAP, DISTR (PART OF 1)		.....		
3.		N.S.	HOUSING, DISTR (PART OF 1) ..		.....		
4.		N.S.	ROTOR, DISTR (PART OF 1)		.....		
5.		N.S.	BOLT, DISTR ROT (PART OF 1) ..		.....		
6.		N.S.	BOLT, DISTR CAP (PART OF 1) ..		.....		

RPO DEFINITIONS
LT1 - ENGINE-GAS, 8 CYL, 5.7L(5.7P),MFI,HO

© 2000 GENERAL MOTORS SERVICE PARTS OPERATIONS-CHEVROLET-14Y

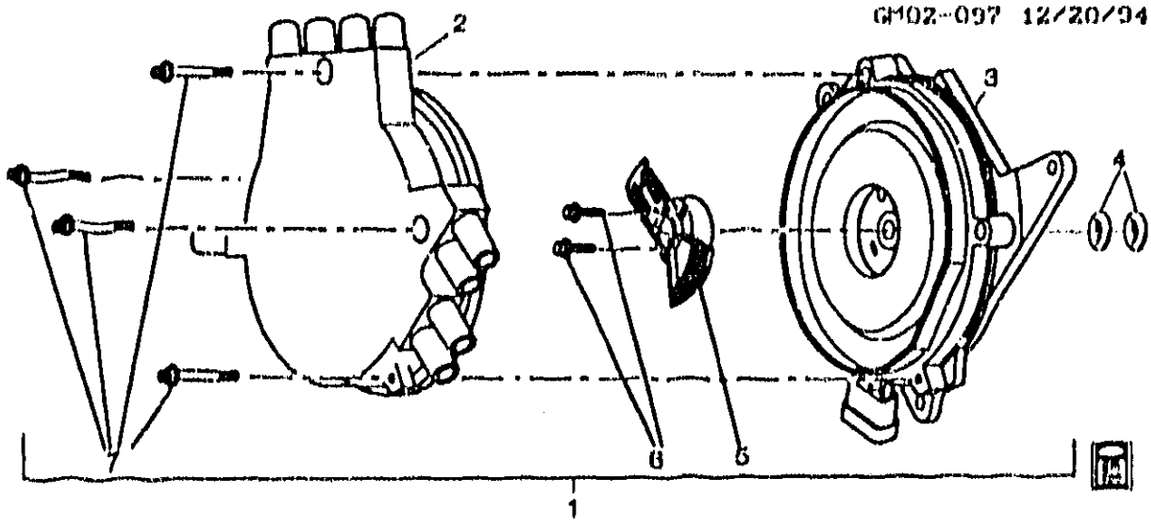

GM02-097

1995-1996 Y DISTRIBUTOR/IGNITION (LT1)
1996 Y DISTRIBUTOR/IGNITION (LT4)

1.	3-B21	2.361	DISTRIBUTOR, (INCLS 2-7) (W/PUMP GSKT SHOULD BE ORDERED ALSO) (AC-DELCO #1104032)	95-96	Y (LT1)	1	1104032
	3-B21	2.361	DISTRIBUTOR, (INCLS 2-7) (W/PUMP GSKT SHOULD BE ORDERED ALSO) (AC-DELCO #1104032)	96	Y (LT4)	1	1104032
2.	3-C2	2.367	CAP KIT, DISTR (W/ROT) (INCL CVR & O-RING) (INLCS 2, 5, 6) (AC-DELCO #D8301)	95-96	Y (LT1)	1	10457293
	3-C2	2.367	CAP KIT, DISTR (W/ROT) (INCL CVR & O-RING) (INLCS 2, 5, 6) (AC-DELCO #D8301)	96	Y (LT4)	1	10457293
3.		N.S.	HOUSING, DISTR (PART OF 1) ..		....		
4.	3-C2	2.363	SEAL, DISTR HSG OIL (O RING) (ALSO PART OF 1) (2.372) (AC-DELCO #10474278)	95-96	Y (LT1)	2	10474278
	3-C2	2.363	SEAL, DISTR HSG OIL (O RING) (ALSO PART OF 1) (2.372) (AC-DELCO #10474278)	96	Y (LT4)	2	10474278
5.		N.S.	ROTOR, DISTR (PART OF 1 & 2) .		....		
6.		N.S.	BOLT, DISTR ROT (PART OF 1 & 2)		....		
7.		N.S.	BOLT, DISTR CAP (PART OF 1) ..		.....		

RPO DEFINITIONS
LT1 – ENGINE-GAS, 8 CYL, 5.7L(5.7P),MFI,HO
LT4 – ENGINE GAS, 8 CYL, 5.7L, MFI, HIGH OUTPUT

© 2000 GENERAL MOTORS SERVICE PARTS OPERATIONS-CHEVROLET-14Y

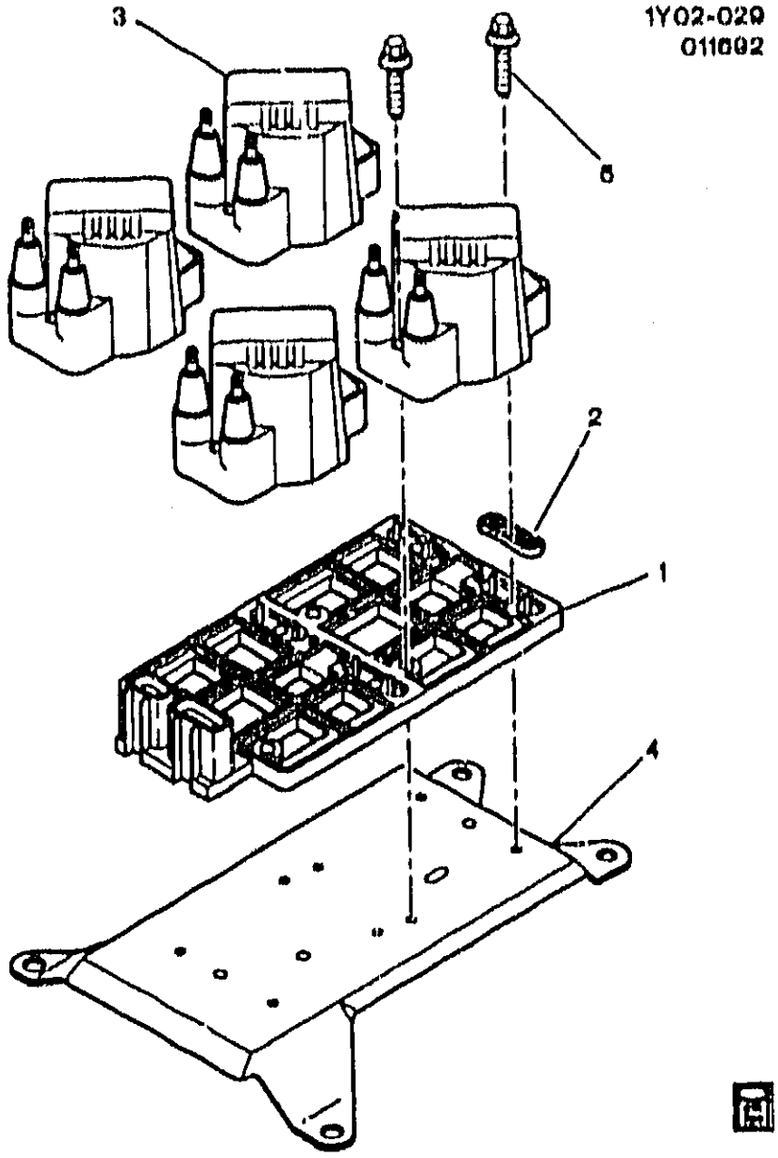

1Y02-029

1990-1995 Y COIL & MODULE/IGNITION (LT5)

1.	3-C2	2.362	HOUSING, DISTR (AC-DELCO #10467063)	90-95	Y (LT5)	1	10467063
2.	3-C4	2.383	GASKET, ELEK ICM (TYPE II, DELCO REMY, 2 TERMS) (2.183) (AC-DELCO #1989579)	90-95	Y (LT5)	8	1989579
3.	3-A18	2.170	COIL, IGN (AC-DELCO #D531)	90-91	YY (857) (350-8)	AR	1985474
	3-A18	2.170	COIL, IGN (AC-DELCO #D545)	90-95	Y (LT5)	4	10467067
	3-A18	2.170	COIL, IGN (AC-DELCO #D531)	90-91	YY (857, Z49) (350-8)	AR	1985474
4.	3-C4	2.383	BRACKET, ELEK ICM (2.170) (AC-DELCO #10467062)	90-95	Y (LT5)	1	10467062
5.	3-A18	2.183	BOLT, IGN COIL (2.383) (AC-DELCO #10467064)	90-95	Y (LT5)	8	10467064

RPO DEFINITIONS
LT5 – ENGINE,5.7L(5.7J),TPI
857 – ENGINE, 5.7L ALL
Z49 – ACDELCO CANADIAN

© 2000 GENERAL MOTORS SERVICE PARTS OPERATIONS-CHEVROLET-14Y

MICROFICHE INDEX

GROUP 2.000

FICHE 3 OF 11

GROUP	DESCRIPTION	STARTING GRID LOCATION PARTS	ILLUSTRATIONS
–	GENERAL INFORMATION	1–A2	1–G2
–	ALPHABETICAL INDEX	1–B13	N.A.
2.000	CHASSIS WIRING – LAMPS	3–A2	3–F2
–	OUT OF FICHE CALLS	N.A.	3–M20

3–G1

GM02-092 07/22/93

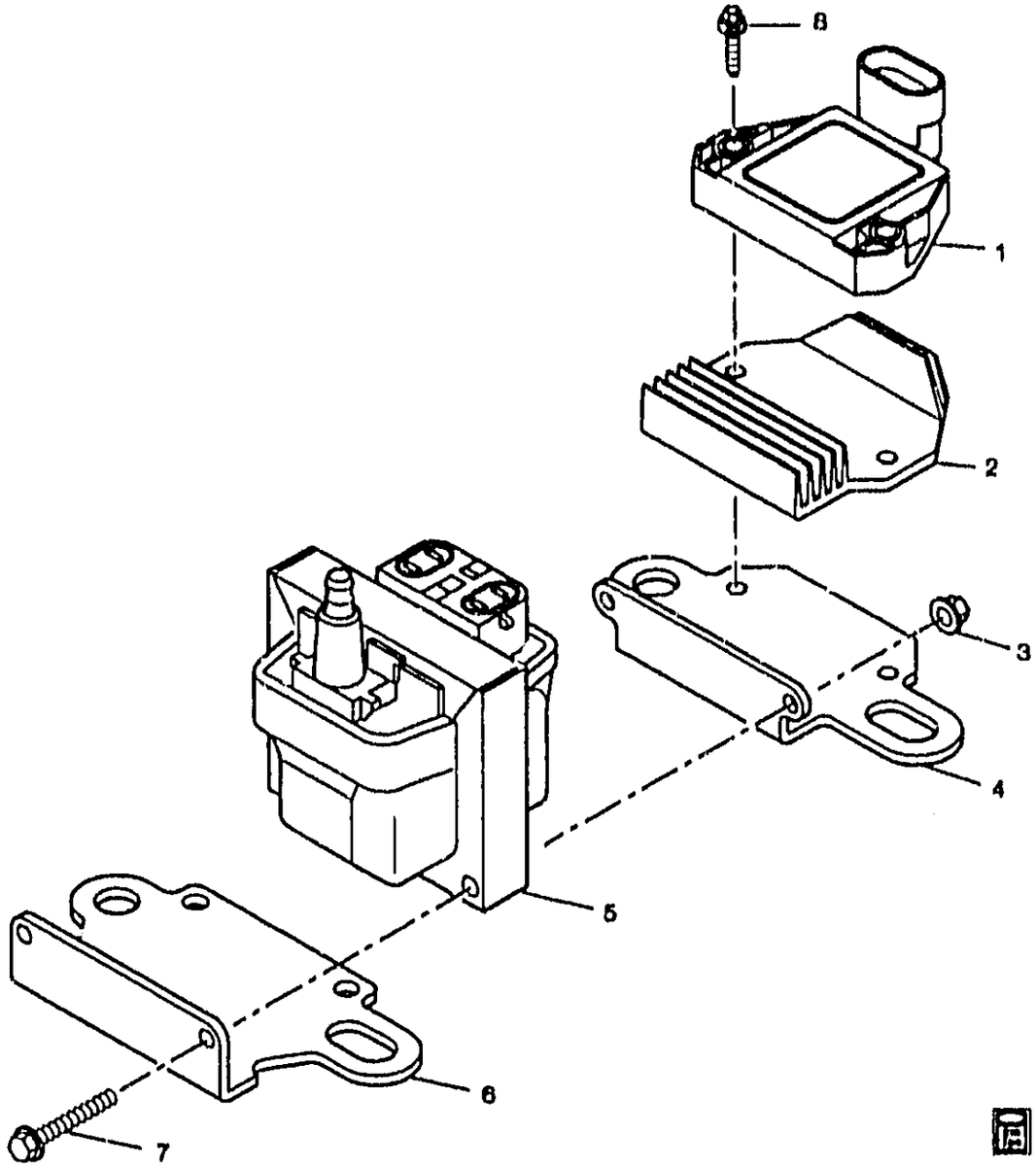

GM02-092

1992-1995 Y COIL & MODULE/IGNITION (LT1)

1.	3-C4	2.383	MODULE, ELEK IGN CONT (W/O COIL) (AC-DELCO #D1971A) ...	92	Y (LT1)	1	10483131
	3-C4	2.383	MODULE, ELEK IGN CONT (W/O COIL) (AC-DELCO #D1971A) ...	93	Y (LT1, MD8, ML9)	1	10483131
	3-C4	2.383	MODULE, ELEK IGN CONT (W/O COIL) (AC-DELCO #D1986A) ...	94-95	Y (LT1)	1	10483139
2.	3-C4	2.383	HEAT SINK, ELEK ICM (AC-DELCO #10474610)	92-95	Y (LT1)	1	10474610
3.		6.915	NUT (IGN COIL BRKT)	92-95	.....	2	10180301
4.	3-A18	2.103	BRACKET, IGN COIL (UPPER) (AC-DELCO #10471206)	92-95	Y		10471206
5.	3-A18	2.170	COIL, IGN (AC-DELCO #D535) .	92-93	Y (LT1)	1	1115315
	3-A18	2.170	COIL, IGN (AC-DELCO #D573) .	94-95	Y (LT1)	1	10477208

© 2000 GENERAL MOTORS SERVICE PARTS OPERATIONS-CHEVROLET-14Y

							GM02-002
6.	3-A18	2.183	BRACKET, IGN COIL (LOWER) (AC-DELCO #10471138)	92-93	Y (LT1)	1	10471138
	3-A18	2.183	BRACKET, IGN COIL (LOWER) ..	94-95	Y (LT1)	1	10477207
7.		6.900	BOLT (ATTACHING TO COIL)	92-95	.....	2	11507041
8.	3-A18	2.183	BOLT, IGN COIL (AC-DELCO #10474609)	92-95	Y (LT1)	2	10474609

RPO DEFINITIONS
LT1 - ENGINE-GAS, 8 CYL, 5.7L(5.7P),MFI,HO
MD8 - TRANSMISSION,AUTOMATIC 4-SPEED(THM700R4/4L60)
ML9 - TRANSMISSION,MANUAL 6-SPEED

© 2000 GENERAL MOTORS SERVICE PARTS OPERATIONS-CHEVROLET-14Y

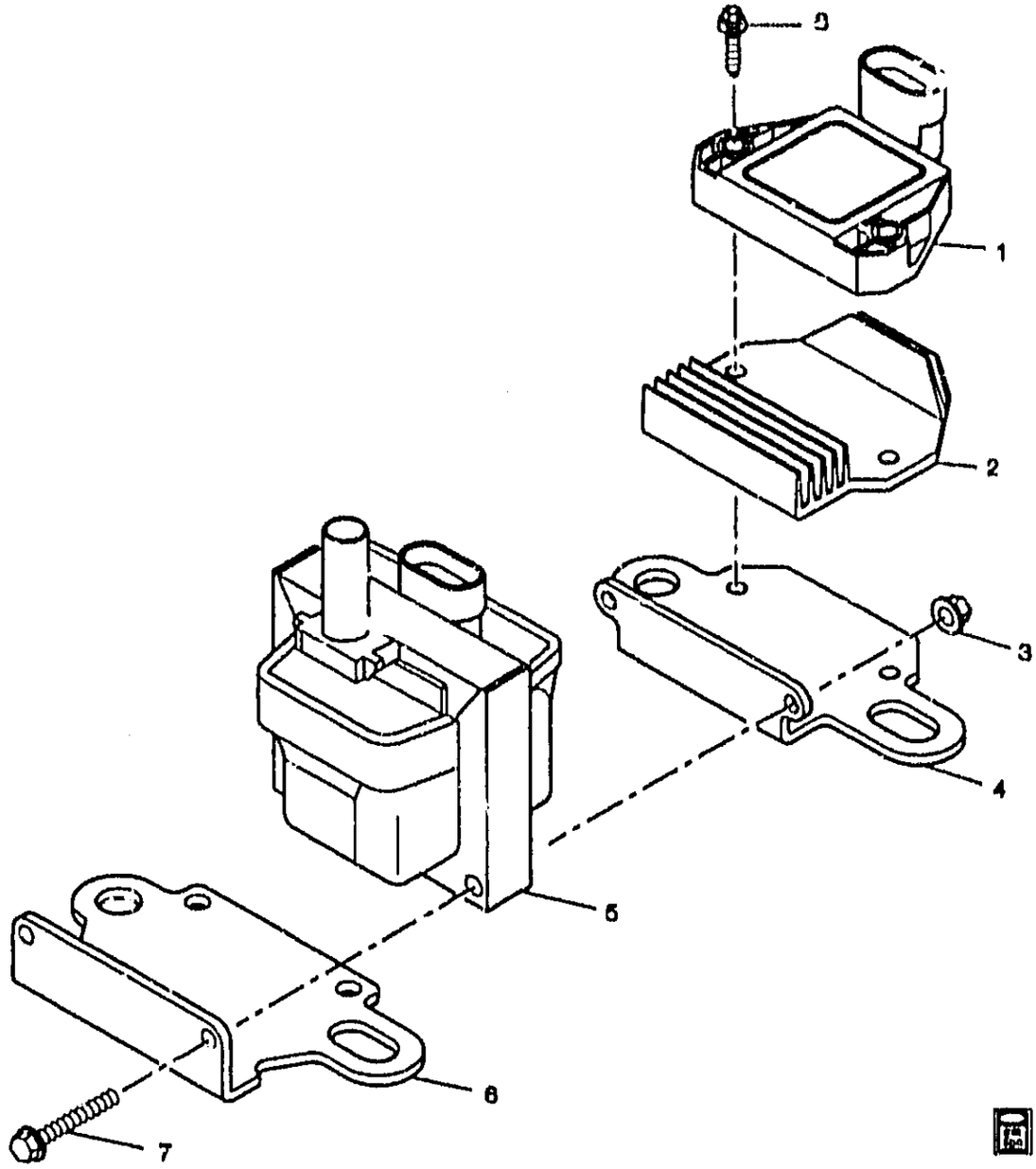

GM02-102Y

1996 Y COIL & MODULE/IGNITION

1.	3-C4	2.383	MODULE, ELEK IGN CONT (W/O COIL) (AC-DELCO #D579)	96	Y	1	10482803
2.	3-C4	2.383	HEAT SINK, ELEK ICM (AC-DELCO #10474610)	96	Y (LT1)	1	10474610
	3-C4	2.383	HEAT SINK, ELEK ICM (AC-DELCO #10474610)	96	Y (LT4)	1	10474610
3.		8.915	NUT (IGN COIL BRKT)	96	Y	AR	10180301
4.	3-A18	2.183	BRACKET, IGN COIL (AC-DELCO #10471206)	96	Y	1	10471206
5.	3-A18	2.170	COIL, IGN (AC-DELCO #D577) .	96	Y (LT1, LT4)	1	10489421
6.	3-A18	2.183	BRACKET, IGN COIL (LOWER) (STAMPED WITH MODEL #1106026) (AC-DELCO #10471138)	96	Y (LT1, LT4)	1	10471138

© 2000 GENERAL MOTORS SERVICE PARTS OPERATIONS-CHEVROLET-14Y

	3-A18	2.183	BRACKET, IGN COIL (UPPER) (STAMPED WITH MODEL #1106026) (AC-DELCO #10471206)	96	Y (LT1)	1	10471206
	3-A18	2.183	BRACKET, IGN COIL (UPPER) (STAMPED WITH MODEL #1106026) (AC-DELCO #10471206)	96	Y (LT4)	1	10471206
	3-A18	2.183	BRACKET, IGN COIL (LOWER) (STAMPED WITH MODEL #1106011) (AC-DELCO #10471138)	96	Y (LT1, LT4)	1	10471138
	3-A18	2.183	BRACKET, IGN COIL (UPPER) (STAMPED WITH MODEL #1106011) (AC-DELCO #10471206)	96	Y (LT1)	1	10471206
	3-A18	2.183	BRACKET, IGN COIL (UPPER) (STAMPED WITH MODEL #1106011) (AC-DELCO #10471206)	96	Y (LT4)	1	10471206
7.		8.900	BOLT (ATTACHING TO COIL)	96	Y	2	11507041
8.	3-A18	2.183	BOLT, IGN COIL (AC-DELCO #10474609)	96	Y (LT1)	2	10474609
	3-A18	2.183	BOLT, IGN COIL (AC-DELCO #10474609)	96	Y (LT4)	2	10474609

RPO DEFINITIONS
LT1 – ENGINE-GAS, 8 CYL, 5.7L(5.7P),MFI,HO
LT4 – ENGINE GAS, 8 CYL, 5.7L, MFI, HIGH OUTPUT

© 2000 GENERAL MOTORS SERVICE PARTS OPERATIONS-CHEVROLET-14Y

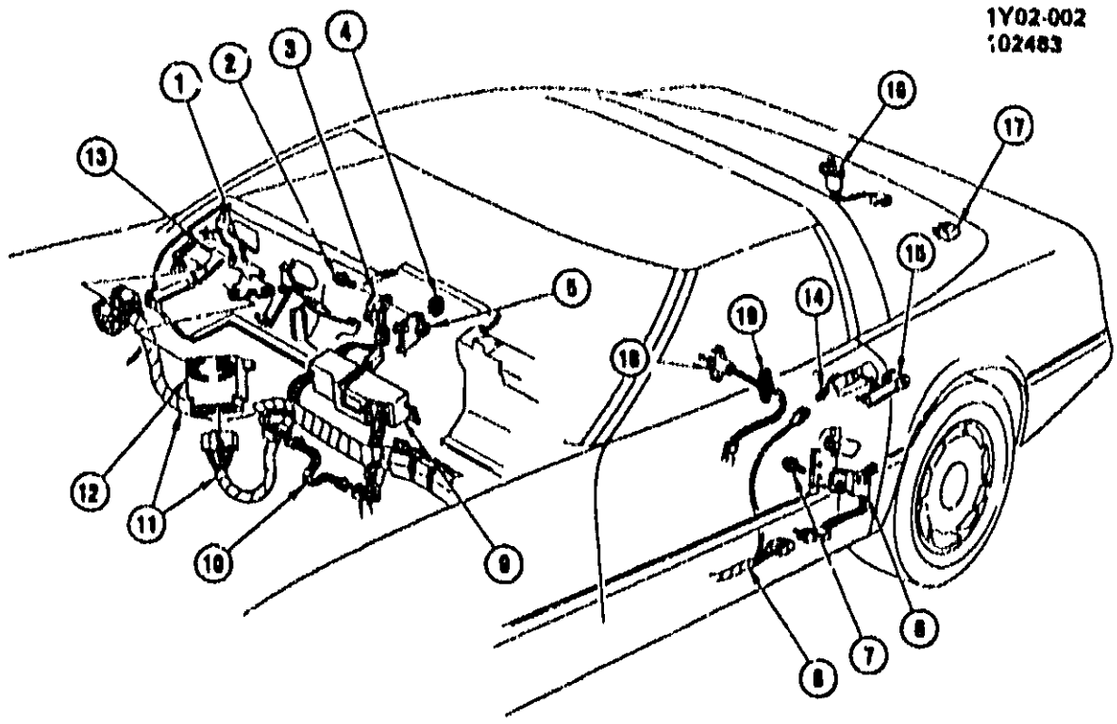

1Y02-002

1984-1985 Y ALARM SYSTEM/ANTI THEFT

1.		DISCON	BRACKET, THEFT DETER MODULE (W/CIRCUIT INTERRUPT)	10098473
2.		8.977	SCREW, W/FL WA (M4X1.41X16)	11509374
3.	3-A21	2.195	RELAY, THEFT DETER	1616422
4.		8.921	NUT, SPR U-SHAPE (M4.2X1.41X3.2 TO 3.7)	12338121
5.		N.S.	PARTITIONS, (PART OF ITEM 9)	
6.	3-A21	2.195	SWITCH, THEFT DETER DR LK-LH (EXC AU3)	14066515
		DISCON	SWITCH, THEFT DETER DR LK-RH (EXC AU3)	14066516
7.		8.900	BOLT, HEX, W/CON WA (M6X1X15) PZOR (AC-DELCO #8639743)	8639743
8.		DISCON	HARNESS, PWR WDO DR WRG-LH (EXC AU3)	12016811
		DISCON	HARNESS, PWR WDO DR WRG-RH (EXC AU3)	12016810
		DISCON	HARNESS, PWR WDO DR WRG-LH (W/AU3)	12028821
		DISCON	HARNESS, PWR WDO DR WRG-RH (W/AU3)	12028822
9.		DISCON	BRACKET, MULTIUSE RELAY (INCLS #5)	14062512
10.		N.S.	WIRE, ANTI THEFT DR LK JPR (FOR SERVICE USE 20 GAGE WIRE AND CONNECTORS 8905220, 8905222 & 8900524 FROM GROUP 2.530)	
11.	3-C9	2.480	HARNESS, I/P WIRING (FOR PART NUMBERS AND USAGE, REFER TO CATALOG (GROUP 2.480)	
12.	3-A21	2.195	MODULE, THEFT DETER (FORCED ENTRY ALARM)	16158276
13.		8.915	NUT, HEX (M8X1.25)	
14.	3-N21	10.485	SWITCH, W/WIRE LEAD, DR ANTI-THEFT-LH	14047191
	3-N21	10.485	SWITCH, W/WIRE LEAD, DR ANTI-THEFT-RH	14047192
15.	3-N22	10.527	HANDLE, DOOR-LH (LESS LOCK)	14075359
	3-N22	10.527	HANDLE, DOOR-RH (LESS LOCK)	14075358
	3-N22	10.550	CYLINDER KIT, FRT S/D LK (UNCODED) (INCLS UNIT SHUTTER, LK CYL, CASE, E-RING, RETAINER & SPRGS)	12522046
16.	3-N22	12.243	SWITCH, HATCH AJAR IND (AC-DELCO #D6065)	10283365
17.	3-N22	12.243	RELAY, HATCH REL (2.815) (AC-DELCO #D1776)	25523703
18.	3-N22	11.950	SWITCH, DR AJAR IND (1984)	14062556

© 2000 GENERAL MOTORS SERVICE PARTS OPERATIONS-CHEVROLET-14Y

				1Y02-002
	3-N22	11.060	SWITCH, DR AJAR IND (1986) (AC-DELCO #D6036)	10046836
19.		DISCON	RETAINER, DR AJAR IND	14087602

© 2000 GENERAL MOTORS SERVICE PARTS OPERATIONS-CHEVROLET-14Y

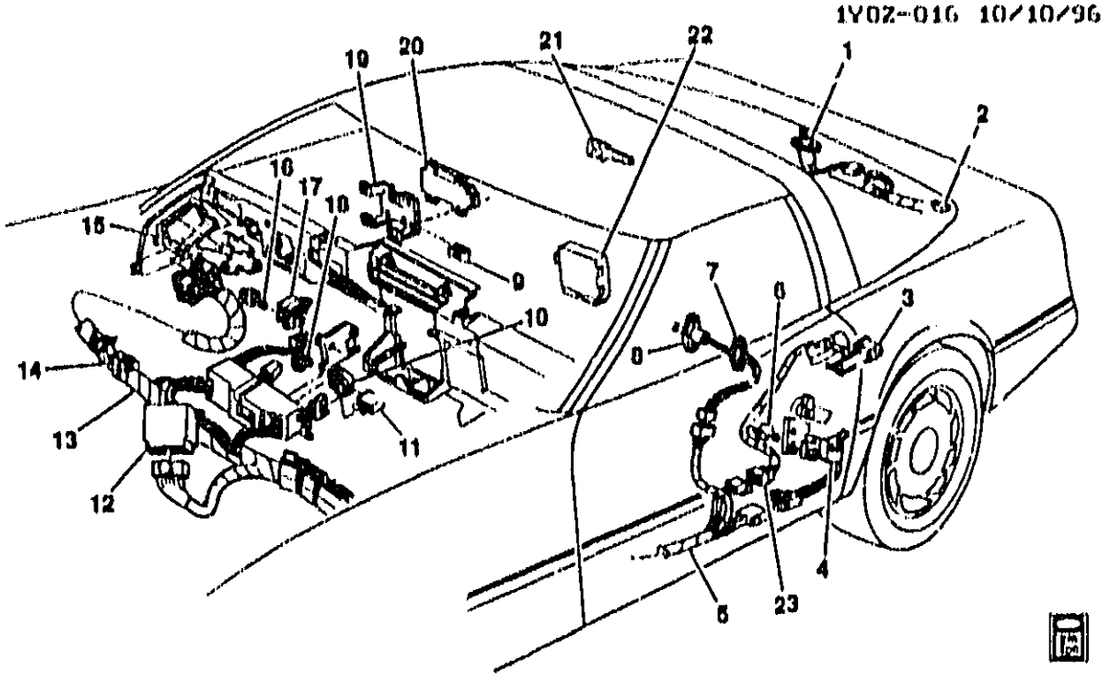

1Y02-016

1986-1989 Y ALARM SYSTEM/ANTI THEFT (VATS)

1.	3-N22	12.243	SWITCH, HATCH AJAR IND (AC-DELCO #D6085)	10283365
2.	3-N22	12.243	RELAY, L/COMPT LID REL (2.815) (AC-DELCO #D1776)	25523703
3.	3-N22	10.527	HANDLE, SI F/D O/S-LH (LESS LOCK)	14075359
	3-N22	10.527	HANDLE, SI F/D O/S-RH (LESS LOCK)	14075358
	3-N22	10.550	CYLINDER KIT, FRT S/D LK (UNCODED) (INCLS UNIT SHUTTER, LK CYL, CASE, E-RING, RETAINER, SPRINGS)	12522046
	3-N22	10.550	CYLINDER KIT, FRT S/D LK (UNCODED	12522046
4.	3-A21	2.195	SWITCH, THEFT DETER DR LK-LH (EXC AU3) (1986-87)	14066515
		DISCON	SWITCH, THEFT DETER DR LK-RH (EXC AU3) (1986-87)	14066516
5.		DISCON	HARNESS, PWR WDO DR WRG-LH (1986-87)	12069840
		DISCON	HARNESS, PWR WDO DR WRG-RH (1986-87)	12069841
		DISCON	HARNESS, ELEC DR WRG-LH (1988)	12055829
		DISCON	HARNESS, ELEC DR WRG-RH (1988)	12055831
	3-N23	13.090	HARNESS, (1989) (SEE PARTS SECTION FOR USAGE)	
6.		8.900	BOLT, HEX W/CON WA (M6X1X15) (AC-DELCO #8639743)	8639743
7.		DISCON	RETAINER, DR AJAR IND SW	14087682
8.	3-N22	11.950	SWITCH, DR AJAR IND (1986-87) (AC-DELCO #D6036)	10045838
	3-N22	11.950	SWITCH, DR AJAR IND (1988-89) (AC-DELCO #D6055)	10098478
9.		8.921	NUT, U TYPE (4.2X1.41)	12338121
10.	3-E4	2.815	CLIP, HORN RLY (2.892)	25534019
11.	3-E4	2.815	RELAY, HORN (AC-DELCO #D1776)	25523703
12.	3-A21	2.195	MODULE, THEFT DETER (FORCED ENTRY ALARM)	16158276
13.	3-C9	2.480	HARNESS, I/P WRG	
14.	3-C23	2.485	SWITCH, HDLP (AC-DELCO #10098435)	10098435
15.		DISCON	BRACKET, THEFT DETER MDL	10098473
16.		8.977	SCREW, HEX TAP W/WA (M4.2X1.41X16) POR	25512804
17.	3-A21	2.195	RELAY, THEFT DETER (AC-DELCO #14093107)	14093107
18.		8.921	NUT, U TYPE (4.2X1.41)	12338121
19.		DISCON	BRACKET, THEFT DETER MDL (1989)	14104799
		DISCON	BRACKET, THEFT DETER MDL (1986)	14091266
		DISCON	BRACKET, THEFT DETER MDL (1987-88)	14093186
20.	3-A21	2.195	MODULE, THEFT DETER (1989)	16135270
21.	3-A19	2.187	KEY, THEFT DETER IGN (RESISTOR CODE #2)	

© 2000 GENERAL MOTORS SERVICE PARTS OPERATIONS-CHEVROLET-14Y

				1Y02-016
22.	3-D16	2.560	MODULE, BODY CONT (1999) (CENTRAL CONTROL MODULE ADDED FOR '99 TO INC SEVERAL BDY AND CHASSIS ELECTRONIC FEATURES PREVIOUSLY USING STAND ALONE MODULES)	16146688
23.	3-N21	10.465	SWITCH, THEFT DTRNT DR LK (W/WIRE LEAD) (RH)	10074163
	3-N21	10.465	SWITCH, THEFT DTRNT DR LK (W/WIRE LEAD) (LH)	10074164

© 2000 GENERAL MOTORS SERVICE PARTS OPERATIONS--CHEVROLET-14Y

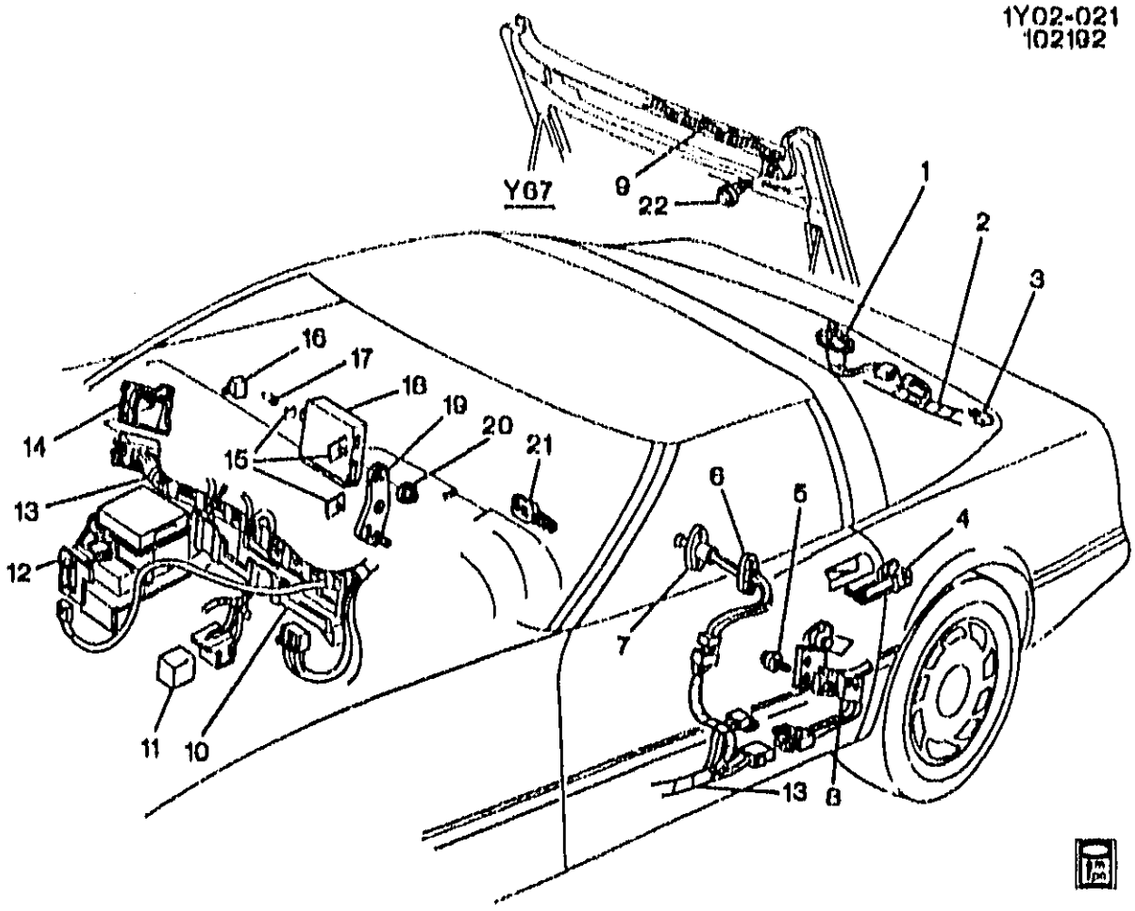

1Y02-021

1990 Y ALARM SYSTEM/ANTI THEFT

1.	3-N22	12.243	SWITCH, R/COMPT L/WDO AJAR IND (AC-DELCO #D6066)	10280365
2.		DISCON	HARNESS, BODY FRT WRG (Y67 UM6 (SEE PARTS SECTION FOR ADDITIONAL USAGE))	12090311
		DISCON	HARNESS, BODY RR WRG (Y67 (SEE PARTS SECTION FOR ADDITIONAL USAGE))	12073839
3.	3-N22	12.243	RELAY, L/COMPT LID REL (AC-DELCO #D1776)	25523703
4.	3-N22	10.527	HANDLE, FRT S/D O/S (LESS LOCK) (B&S 593094) (RH)	14075358
	3-N22	10.527	HANDLE, FRT S/D O/S (LESS LOCK) (B&S 593095) (LH)	14075359
5.		8.900	BOLT, HEX W/CON WA M6X1X15 9.8 PZOR 12.5-OD FULL THD (AR) (AC-DELCO #8639743)	8639743
6.		DISCON	RETAINER, DR AJAR IND SW	14087682
7.	3-N22	11.950	SWITCH, DR AJAR IND (AC-DELCO #D6055)	10098478
8.	3-A21	2.195	SWITCH, THEFT DTRNT DR LK (RH)	10074163
	3-A21	2.195	SWITCH, THEFT DTRNT DR LK (LH)	10074164
9.		DISCON	WIRE, R/CMPT LID LID REL	12080875
10.	3-C20	2.483	BRACKET, MULTIUSE RLY	10240571
11.	3-E4	2.815	RELAY, HORN (AC-DELCO #15-8426)	14100455
12.	3-N23	13.090	MODULE, BODY WRG HARN	12088529
13.		DISCON	HARNESS, I/P WRG (SEE PARTS SECTION FOR ADDITIONAL USAGE) (C60, ML9)	12101432
14.	3-C20	2.483	BRACKET, I/P WRG HARN FUSE BLK	14062568
15.		8.900	BOLT, HEX, M5X.8X16, 14.5 THD, 4.3, PC (POSITION #1) (AR)	11502982
		8.900	BOLT, HEX, M5X.8X16, 14.5 THD, 4.8, PC (POSITION #2) (AR)	11502982
16.		N.S.	INSULATOR, BCM ANTIRATTLE	
17.	3-D15	2.560	NUT, BCM (AC-DELCO #10027015)	10027015
18.	3-D15	2.560	MODULE, BODY CONT (REMAN)	16146688

© 2000 GENERAL MOTORS SERVICE PARTS OPERATIONS-CHEVROLET-14Y

				1Y02-021
19.	3-D15	2.550	BRACKET, BCM BRKT	10005909
20.		0.917	NUT, HEX FLG M5X0.8 GRD 9 ZP (AR)	11514252
		0.932	WASHER, EXT LK M8X16X1.52 ZC (AR) (AC-DELCO #11501860)	11501869
21.	3-A19	2.107	KEY, IGN LK (RESISTER CODE 2) (SEE PARTS SECTION FOR ADDITIONAL USAGE)	26019392
22.	3-N26	14.463	SWITCH, F/TOP STOW COMPT LID REL	1626530

RPO DEFINITIONS
C60 -- AIR CONDITIONER,FRONT,MANUAL CONTROLS
ML0 -- TRANSMISSION,MANUAL 6--SPEED

© 2000 GENERAL MOTORS SERVICE PARTS OPERATIONS-CHEVROLET-14Y

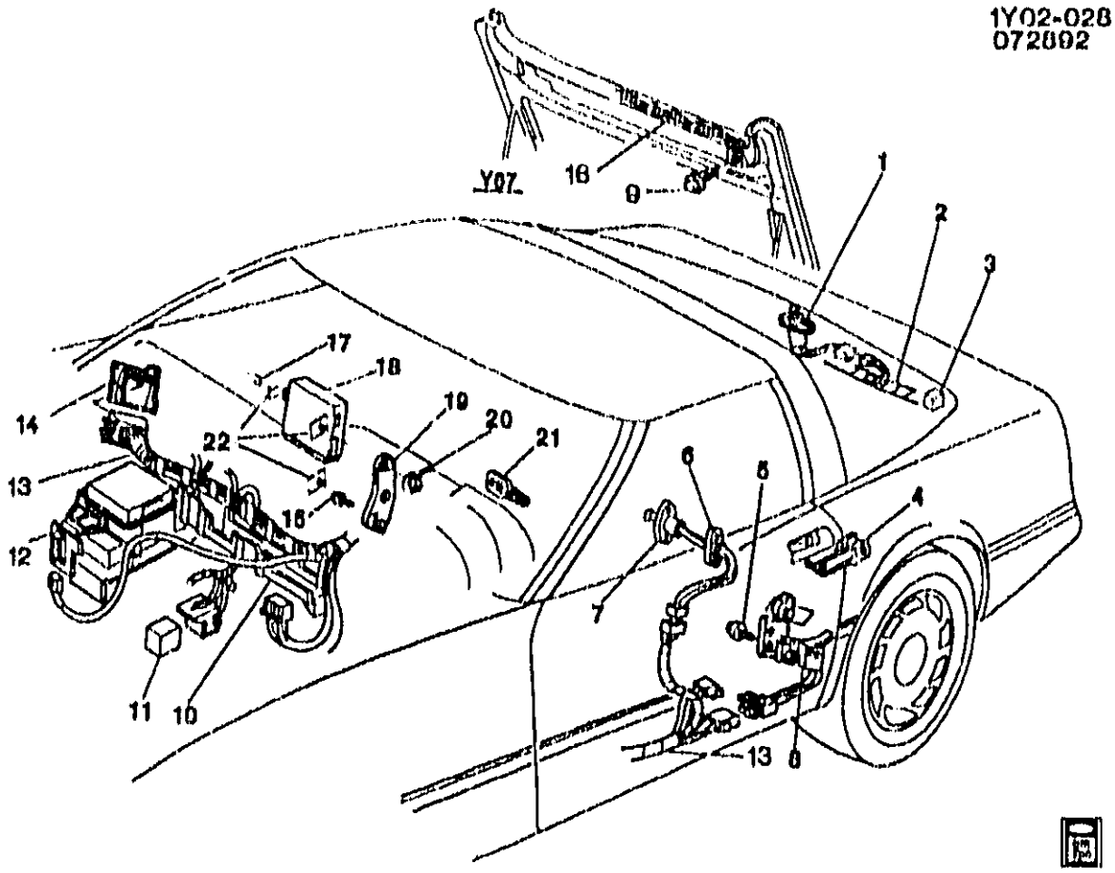

1Y02-028

1991-1996 Y ALARM SYSTEM/ANTI THEFT

1.	3-N22	12.243	SWITCH, R/COMPT L/WDO AJAR IND (PLUNGER DIA 12MM) (AC-DELCO #D6065)	91-96	Y07	1	10283365
2.		DISCON	HARNESS, BODY FRT WRG (13.090)	91	Y07 (UM6)	1	12112419
		DISCON	HARNESS, BODY FRT WRG (13.090)	91	Y07 (UU8, U1F)	1	12112460
		DISCON	HARNESS, BODY FRT WRG (13.090)	91	Y67 (UM6)	1	12090311
		DISCON	HARNESS, BODY FRT WRG (13.090)	91	Y67 (UU8, U1F)	1	12090312
		DISCON	HARNESS, BODY FRT WRG (13.090)	92	Y07 (UU8, U1F)	1	12125811
		DISCON	HARNESS, BODY FRT WRG (13.090)	92	Y07 (UM6)	1	12125812
		DISCON	HARNESS, BODY FRT WRG (13.090)	92	Y67 (UM6)	1	12106537
		DISCON	HARNESS, BODY FRT WRG (13.090)	92	Y67 (UU8, U1F)	1	12106538
	3-N23	13.090	HARNESS, BODY FRT WRG	93	Y07	1	12141786
	3-N23	13.090	HARNESS, BODY FRT WRG	93	Y67	1	12130311
	3-N23	13.090	HARNESS, BODY FRT WRG	94	Y07 (T90)	1	12141786
	3-N23	13.090	HARNESS, BODY FRT WRG	94	Y07 (EXC T90)	1	12141796
	3-N23	13.090	HARNESS, BODY FRT WRG	94	Y67 (EXC T90)	1	12130355
	3-N23	13.090	HARNESS, BODY FRT WRG	95	Y07 (EXC T90, ZR1) ...	1	12130403
	3-N23	13.090	HARNESS, BODY FRT WRG	95	Y07 (ZR1)	1	12141796
	3-N23	13.090	HARNESS, BODY FRT WRG	95	Y67 (EXC T90)	1	12130478

© 2000 GENERAL MOTORS SERVICE PARTS OPERATIONS-CHEVROLET-14Y

							1Y02-028
	3-N23	13.090	HARNESS, BODY FRT WRG	96	Y07 (EXC T90)	1	12130456
	3-N23	13.090	HARNESS, BODY FRT WRG	96	Y67 (EXC T90)	1	12130456
		DISCON	HARNESS, BODY RR WRG	91-92	Y67	1	12073039
		DISCON	HARNESS, BODY RR WRG	91-92	Y07 (ZR1)	1	12067493
		DISCON	HARNESS, BODY RR WRG	91-92	Y07 (EXC ZR1)	1	12090341
	3-N23	13.090	HARNESS, BODY RR WRG	93	Y (EXC T90)	1	12130377
	3-N23	13.090	HARNESS, BODY RR WRG	94-95	Y07 (EXC T90, ZR1) ...	1	12130357
	3-N23	13.090	HARNESS, BODY RR WRG	94-95	Y07 (ZR1) (EXC T90) ..	1	12130377
	3-N23	13.090	HARNESS, BODY RR WRG	94-96	Y67 (EXC T90)	1	12130356
	3-N23	13.090	HARNESS, BODY RR WRG	96	Y07 (EXC T90)	1	12130357
	3-N23	13.090	HARNESS, BODY FRT WRG	94	Y67 (T90) (EXPORT) ...	1	12130341
	3-N23	13.090	HARNESS, BODY FRT WRG	95	Y07 (T90) (EXPORT) ...	1	12130402
	3-N23	13.090	HARNESS, BODY FRT WRG	95	Y67 (T90) (EXPORT) ...	1	12130477
	3-N23	13.090	HARNESS, BODY FRT WRG	96	Y07 (T90) (EXPORT) ...	1	12130457
	3-N23	13.090	HARNESS, BODY FRT WRG	96	Y67 (T90) (EXPORT) ...	1	12130455
		DISCON	HARNESS, BODY RR WRG	93	Y07 (T90) (EXPORT) ...	1	12130370
	3-N23	13.090	HARNESS, BODY RR WRG	93	Y67 (T90) (EXPORT) ...	1	12130380
	3-N23	13.090	HARNESS, BODY RR WRG	94-96	Y07 (T90) (EXPORT) ...	1	12130335
	3-N23	13.090	HARNESS, BODY RR WRG	94-96	Y67 (T90) (EXPORT) ...	1	12130336
3.	3-N22	12.243	RELAY, R/CMPT LID REL (BLACK) (5-WAY) (9.277) (AC-DELCO #15-8426)	91-96	Y07	1	14100455
4.	3-N22	10.527	HANDLE, FRT S/D O/S (LESS LOCK) (B&S 593094)	91-96	Y	RH	14075358
	3-N22	10.527	HANDLE, FRT S/D O/S (LESS LOCK) (B&S 593095)	91-96	Y	LH	14075359
5.		8.900	BOLT, HEX W/CON WA M6X1X15 9.8 PZOR 12.5-OD FULL THD (AC-DELCO #8639743)	91-96	.....	1	8639743
6.	3-N22	11.950	RETAINER, DR AJAR IND SW ...	91-96	Y	2	14087682
7.	3-N22	11.950	SWITCH, DR AJAR IND (AC-DELCO #D6055)	91-96	Y	2	10098476
8.	3-N21	10.485	SWITCH, THEFT DTRNT DR LK (W/WIRE LEAD) (2.195)	91-96	Y	RH	10074163
	3-N21	10.485	SWITCH, THEFT DTRNT DR LK (W/WIRE LEAD)	91-96	Y	LH	10074164
9.	3-N26	14.483	SWITCH, F/TOP STOW COMPT LID REL (BUTTON IN GLOVE BOX) (12.243)	91-96	Y67	1	1626530
10.	3-C20	2.483	BRACKET, MULTIUSE RLY (BLACK) (18.3", 465.0MM LONG) (PLASTIC)	91-93	Y	1	10240571
	3-C20	2.483	BRACKET, MULTIUSE RLY (7.4", 188.0 MM LG) (STEEL)	92	Y (LT1, ML9, C60)	1	10165350
	3-C20	2.483	BRACKET, MULTIUSE RLY (7.4", 188.0 MM LG) (STEEL)	92	Y (LT5)	1	10165350
		DISCON	BRACKET, MULTIUSE RLY (5.4", 136.0 MM LG) (STEEL)	92	Y (LT1, MD8, C60)	1	10165387
	3-C20	2.483	BRACKET, MULTIUSE RLY (5.2", 132 MM LG) (PLASTIC)	92-96	Y	1	10167109
	3-C20	2.483	BRACKET, MULTIUSE RLY (STEEL) (3.0"X2.0") (76.7MMX51.0MM)) (1.055)	92	Y (LT1, ML9, C68)	1	14104140
	3-C20	2.483	BRACKET, MULTIUSE RLY	93-95	Y (LT5)	1	10204735
	3-C20	2.483	BRACKET, MULTIUSE RLY	93-95	Y (LT1, C68)	1	10214029
	3-C20	2.483	BRACKET, MULTIUSE RLY	93-95	Y (LT1, C60)	1	10214030
	3-C20	2.483	BRACKET, MULTIUSE RLY	94-96	Y	1	10161867
	3-C20	2.483	BRACKET, MULTIUSE RLY	96	Y (C68)	1	10214029

© 2000 GENERAL MOTORS SERVICE PARTS OPERATIONS-CHEVROLET-14Y

							1Y02-020
	3-C20	2.483	BRACKET, MULTIUSE RLY	96	Y (C60)	1	10214030
	3-C20	2.483	BRACKET, MULTIUSE RLY (LEFT BRKT) (5.2", 132.0 MM LG) (PLASTIC)	91	Y	LH	10175542
	3-C20	2.483	BRACKET, MULTIUSE RLY (RIGHT BRKT) (4.0", 102.0 MM LG) (PLASTIC)	91-96	Y	1	10172488
11.	3-E4	2.815	RELAY, HORN (BLACK) (5-WAY) (9.277) (AC-DELCO #15-0420)	91-93	Y	1	14100455
	3-E4	2.815	RELAY, HORN (13.095) (AC-DELCO #D1703A)	94	Y (C68)	1	12065125
	3-E4	2.815	RELAY, HORN (13.095) (AC-DELCO #D1703A)	94	Y (ML9, C60) (EXC T72, T84, T85, T90)	1	12065125
	3-E4	2.815	RELAY, HORN (13.095) (AC-DELCO #D1703A)	95	Y (LT1, M30, C60) (EXC T72, T84, T85, T90)	1	12065125
	3-E4	2.815	RELAY, HORN (13.095) (AC-DELCO #D1703A)	95	Y (LT1, M30, C68)	1	12065125
	3-E4	2.815	RELAY, HORN (13.095) (AC-DELCO #D1703A)	95	Y (LT5, ML9, C68)	1	12065125
	3-E4	2.815	RELAY, HORN (AC-DELCO #D1719A)	95	Y (LT1, ML9, C60) (EXC T72, T84, T85, T90)	1	12135064
	3-E4	2.815	RELAY, HORN (AC-DELCO #D1719A)	95	Y (LT1, ML9, C68)	1	12135064
	3-E4	2.815	RELAY, HORN (AC-DELCO #D1719A)	96	Y	1	12135064
	3-E4	2.815	RELAY, HORN (13.095) (AC-DELCO #D1703A)	96	Y (M30, C60, T61) (EXC T72, T84, T85, T90) (EXPORT)	1	12065125
12.	3-N23	13.090	MODULE, BODY WRG HARN (2.510) (IF USE IN PLC OF MDL W/DBL 4-WAY CONN, MUST ALSO ORDER 1-12116930 SINGLE ROW 4-WAY CONN) ...	91	Y	1	12088529
	3-N23	13.090	MODULE, BODY WRG HARN (3 DIODE ARRAY) (2.510)	91-92	Y07 (UM6, UU8, U1F) ..	1	12088529
	3-N23	13.090	MODULE, BODY WRG HARN (3 DIODE ARRAY) (2.510)	93	Y07	1	12088529
	3-N23	13.090	MODULE, BODY WRG HARN (3 DIODE ARRAY) (2.510)	94	Y	1	12088529
	3-C25	2.510	MODULE, 3-DIODE ARRAY SP .	92-93	Y (MD8, ML9, C60, C68)	1	12088529
13.	3-C9	2.480	HARNESS, I/P WRG	91	Y (MD8, C60) (EXC T61)	1	12116436
	3-C9	2.480	HARNESS, I/P WRG	91	Y (ML9, C60) (EXC T61)	1	12116438
	3-C9	2.480	HARNESS, I/P WRG (MAY REQ 12106563 WIRE IF JMPR PRESENT AT THE PWR SEAT FEED)	91	Y (MD8, C68) (EXC T61)	1	12116500
	3-C9	2.480	HARNESS, I/P WRG	91	Y (ML9, C68) (EXC T61)	1	12116502
	3-C9	2.480	HARNESS, I/P WRG	92	Y (MD8, C60) (EXC T61)	1	12125005
	3-C9	2.480	HARNESS, I/P WRG	92	Y (ML9, C60) (EXC T61)	1	12125007
	3-C9	2.480	HARNESS, I/P WRG	92	Y (MD8, C68) (EXC T61)	1	12125813
	3-C9	2.480	HARNESS, I/P WRG	92	Y (ML9, C68) (EXC T61)	1	12125815
	3-C9	2.480	HARNESS, I/P WRG	93	Y (MD8, C60) (EXC T90)	1	12141443

© 2000 GENERAL MOTORS SERVICE PARTS OPERATIONS-CHEVROLET-14Y

					1Y02-028
3-C9	2.480	HARNESS, I/P WRG (FOR VEH -DRL, SPLICE CAV D TO CAV E @ BLUE 8-WAY DRL MDL CONN.)	93	Y (ML9, C68) (EXC T90)	1 12141444
3-C9	2.480	HARNESS, I/P WRG	93	Y (ML9, C60) (EXC T90)	1 12141445
3-C9	2.480	HARNESS, I/P WRG (ON VEHS W/O DAYTIME RUNNING LPS SPLICE CAV D & E WIRES TOGETHER AT BLUE DRL MDL CONN.)	93	Y (MD8, C68) (EXC T90)	1 12141446
3-C9	2.480	HARNESS, I/P WRG	94	Y (ML9, C60) (EXC T61, T72, T84, T85, T90)	1 12130324
3-C9	2.480	HARNESS, I/P WRG	94	Y (ML9, C68) (EXC T61, T72, T84, T85, T90)	1 12130326
3-C9	2.480	HARNESS, I/P WRG	94	Y (M30, C60) (EXC T61, T72, T84, T85, T90) (2ND DES)	1 12130491
3-C9	2.480	HARNESS, I/P WRG	94	Y (M30, C68) (EXC T61, T72, T84, T85, T90)	1 12130493
3-C9	2.480	HARNESS, I/P WRG	94	Y (ML9, C68) (EXC T72, T84, T85, T90)	1 12163703
3-C9	2.480	HARNESS, I/P WRG	95	Y (LT5, ML9, C68) (EXC T61)	1 12130326
3-C9	2.480	HARNESS, I/P WRG	95	Y (LT1, ML9, C60) (EXC T61, T72, T84, T85, T90)	1 12163700
3-C9	2.480	HARNESS, I/P WRG	95	Y (LT1, ML9, C68) (EXC T61, T72, T84, T85, T90)	1 12163702
3-C9	2.480	HARNESS, I/P WRG	95	Y (LT5, ML9, C68)	1 12163703
3-C9	2.480	HARNESS, I/P WRG (WHEN USE ON VEH W/O DAYTIME RUN LIGHTS, SPLICE CAV D&E TOGETHER @ BLUE 8-WAY DRL MOD CONN)	96	Y (M30, C60) (EXC T72, T84, T85, T90)	1 12130468
3-C9	2.480	HARNESS, I/P WRG (WHEN USE ON VEH W/O DAYTIME RUN LIGHTS, SPLICE CAV D&E TOGETHER @ BLUE 8-WAY DRL MOD CONN)	96	Y (M30, C68) (EXC T72, T84, T85, T90)	1 12130470
3-C9	2.480	HARNESS, I/P WRG (WHEN USE ON VEH W/O DAYTIME RUN LIGHTS, SPLICE CAV D&E TOGETHER @ BLUE 8-WAY DRL MOD CONN)	96	Y (ML9, C60) (EXC T72, T84, T85, T90)	1 12130472
3-C9	2.480	HARNESS, I/P WRG (WHEN USE ON VEH W/O DAYTIME RUN LIGHTS, SPLICE CAV D&E TOGETHER @ BLUE 8-WAY DRL MOD CONN)	96	Y (ML9, C68) (EXC T72, T84, T85, T90)	1 12130474
3-C9	2.480	HARNESS, I/P WRG	93	Y (ML9, C68, T90) (EXPORT)	1 12141441
3-C9	2.480	HARNESS, I/P WRG	93	Y (MD8, C68, T90) (EXPORT)	1 12141442
3-C9	2.480	HARNESS, I/P WRG	94	Y (M30, C68, T72, T84, T85, T90) (EXPORT) ...	1 12130495
3-C9	2.480	HARNESS, I/P WRG	94	Y (ML9, C68, T72, T84, T85, T90) (EXPORT) ...	1 12141792

© 2000 GENERAL MOTORS SERVICE PARTS OPERATIONS-CHEVROLET-14Y

							1V02-020
	3-C9	2.400	HARNESS, I/P WRG	95	Y (LT1, M30, C68, T72, T84, T85, T90) (EXC T61) (EXPORT)	1	12130396
	3-C9	2.400	HARNESS, I/P WRG	95	Y (LT1, ML9, C68, T72, T84, T85, T90) (EXC T61) (EXPORT)	1	12163704
	3-C9	2.400	HARNESS, I/P WRG	96	Y (M30, C68, T72, T84, T85, T90) (EXC T61) (EXPORT)	1	12130475
	3-C9	2.400	HARNESS, I/P WRG	96	Y (LT4, ML9, C68, T72, T84, T85, T90) (EXC T61) (EXPORT)	1	12163715
	3-C9	2.400	HARNESS, I/P WRG (TAGGED 0320)	94	Y (M30, C68, T72, T84, T85, T90) (1ST DES) (EXPORT)	1	12141791
14.	3-C20	2.483	BRACKET, I/P WRG HARN FUSE BLK	91-96	Y	1	1406. 568
15.		8.900	BOLT, HEX, M6X.8X16, 14.5 THD, 4.8, PC (BCM BRKT) (POSN #1) .	91-96	.....	2	11502982
16.		DISCON	WIRE, CONV TOP (13.090)	91-92	Y	1	12090348
		DISCON	WIRE, CONV TOP (13.090)	93	Y67	LH	12106597
	3-N23	13.090	WIRE, CONV TOP	94-96	Y67	LH	12130363
17.	3-D15	2.560	NUT, BCM (PUSH-ON) (POSN #1) (OVERALL LENGTH 1.25") (3.671) (AC-DELCO #10027015)	91-96	Y	2	10027015
18.	3-D15	2.560	MODULE, BODY CONT (REMAN)	91	Y	1	16155302
	3-D15	2.560	MODULE, BODY CONT (REMAN)	92-93	Y	1	16193456
	3-D15	2.560	MODULE, BODY CONT (REMAN) (AC-DELCO #16212971)	94	Y	1	16212971
	3-D15	2.560	MODULE, BODY CONT (REMAN) (AC-DELCO #16223622)	95	Y	1	16223622
	3-D15	2.560	MODULE, BODY CONT	96	Y	1	16230561
19.	3-D15	2.560	BRACKET, BCM BRKT	91-96	Y	1	10085989
20.		8.917	NUT, CONICAL SPR WA HEX (METRIC STYLE 2) M5 X 0.8 (BCM BRKT) (POSN #2)	91-96	.....	2	11503647
21.	3-A19	2.187	KEY, IGN LK (RESISTOR CODE #3)	91-96	Y	1	26019393
	3-A19	2.187	KEY, IGN LK (RESISTOR CODE #5)	91-96	Y	3	26019395
	3-A19	2.187	KEY, IGN LK (RESISTOR CODE #6)	91-96	Y	1	26019396
	3-A19	2.187	KEY, IGN LK (RESISTOR CODE #7)	91-96	Y	3	26019397
	3-A19	2.187	KEY, IGN LK (RESISTOR CODE #8)	91-96	Y	3	26019398
	3-A19	2.187	KEY, IGN LK (RESISTOR CODE #9)	91-96	Y	3	26019399
	3-A19	2.187	KEY, IGN LK (RESISTOR CODE #10)	91-96	Y	3	26019400
	3-A19	2.187	KEY, IGN LK (RESISTOR CODE #11)	91-96	Y	3	26019401
	3-A19	2.187	KEY, IGN LK (RESISTOR CODE #12)	91-96	Y	3	26019402
	3-A19	2.187	KEY, IGN LK (RESISTOR CODE #13)	91-96	Y	3	26019403
	3-A19	2.187	KEY, IGN LK (RESISTOR CODE #14)	91-96	Y	3	26019404

© 2000 GENERAL MOTORS SERVICE PARTS OPERATIONS-CHEVROLET-14Y

								1Y02-020
	3-A19	2.187	KEY, IGN LK (RESISTOR CODE #15)	91-96	Y		3	26019405
	3-A19	2.187	KEY, IGN LK (RESISTOR CODE #2)	91-96	Y		1	26019302
	3-A19	2.187	KEY, IGN LK (RESISTOR CODE #4)	91-96	Y		3	26019304
	3-A19	2.187	KEY, IGN LK (SQUARE HD W/O RES PELLET) (GRV C)	91-96	Y		1	26007687
22.	3-D15	2.560	BOLT, BCM BRKT (POSN #2) (POSN #2) (M5X.8X16 THD) (SPECIAL) (3.671) (AC-DELCO #12337892)	91-96	Y		4	12337892

RPO DEFINITIONS

C60 – AIR CONDITIONER,FRONT,MANUAL CONTROLS
C68 – AIR CONDITIONER,FRONT,AUTOMATIC,ELECTRONIC CONTROLS
LT1 – ENGINE-GAS, 8 CYL, 5.7L (5.7P),MFI,HO
LT4 – ENGINE GAS, 8 CYL. 5.7L, MFI, HIGH OUTPUT
LT5 – ENGINE,5.7L(5.7J),TPI
MD8 – TRANSMISSION,AUTOMATIC 4-SPEED(THM700R4/4L60)
ML9 – TRANSMISSION,MANUAL 6-SPEED
M30 – TRANSMISSION,AUTOMATIC 4 SPEED,4L60E,ELECTRONIC
T61 – LIGHTING,DAYTIME RUNNING
T72 – HEADLAMPS,LH RULE OF THE ROAD(EXPORT)
T84 – HEADLAMPS,RH RULE OF THE ROAD,RECTANGULAR(MARKED E)(EXPORT)
T85 – HEADLAMPS,LH RULE OF THE ROAD,RECTANGULAR(MARKED E)(EXPORT)
T90 – LAMP,SIGNALING AND MARKER(EXPORT)
UM6 – RADIO,AM/FM STEREO,CASSETTE,ETR,INCLUDES CLOCK
UU8 – RADIO,AM/FM STEREO,CASSETTE,ETR,DELCO/BOSE,DOLBY,INCLUDES CLOCK
U1F – RADIO,AM/FM STEREO,CASSETTE,C.D. PLAYER,ETR,BOSE,INCLUDES CLOCK
ZR1 – PACKAGE,SPECIAL PERFORMANCE COUPE(1YY07 + ZR1 == 1YZ07)

© 2000 GENERAL MOTORS SERVICE PARTS OPERATIONS-CHEVROLET-14Y

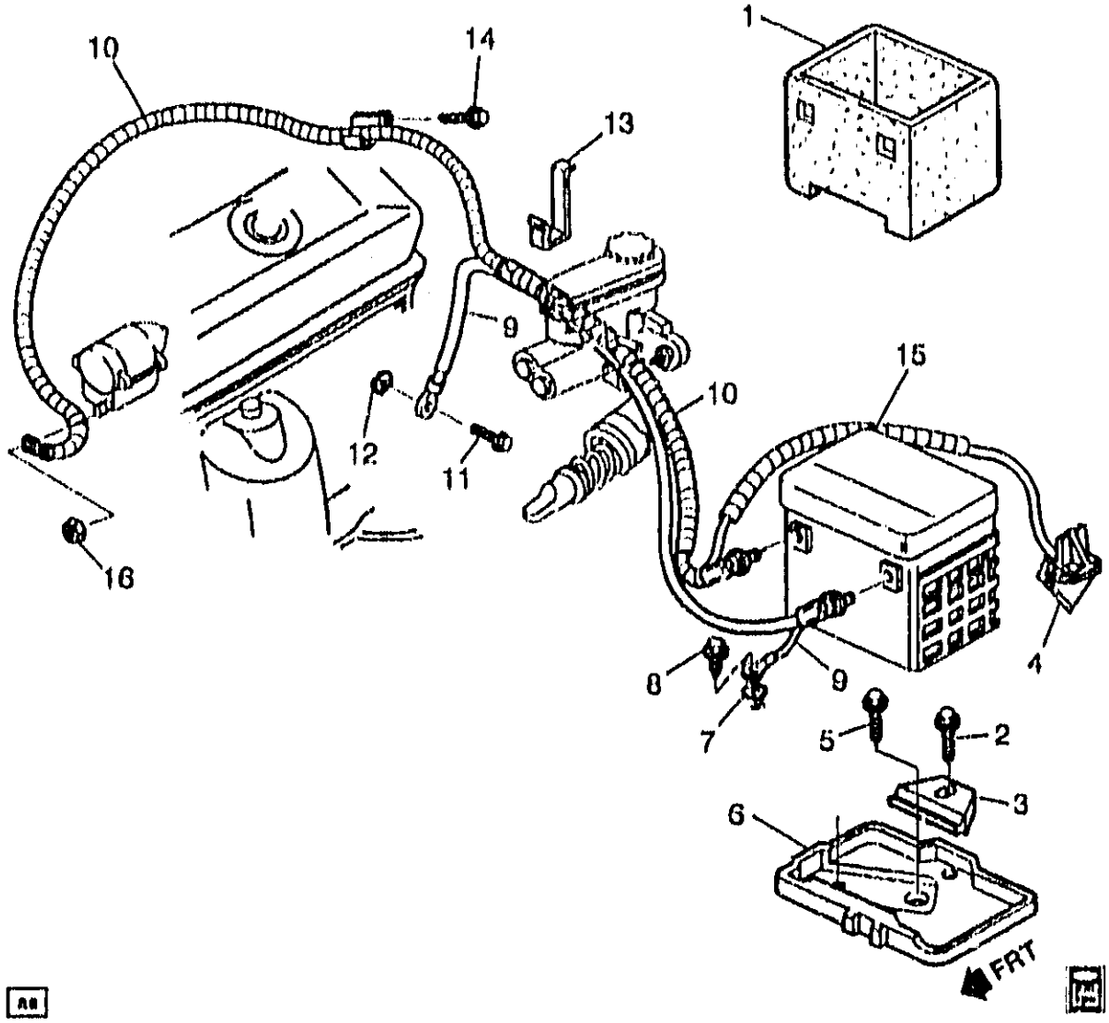

1Y02-036

1992 Y BATTERY CABLES

1.	3-B20	2.333	INSULATOR, BAT	92 Y	1	22611064
2.		8.977	SCREW, HEX. W/FLAT WA (BAT TRAY)	92	2	12337820
3.	3-B20	2.335	RETAINER, BAT HOLDN	92 Y	1	14005061
4.	3-C20	2.493	BLOCK, ENG WRG HARN JUNC .	92 Y	1	10098794
5.		8.977	SCREW, HWH TAP M6.3X1.81X20 ZOR (BAT TRAY) ..	92	2	11503615
6.	3-B20	2.333	TRAY, BAT	92 Y	1	14064574
7.		8.932	WASHER, EXT TOOTH LK ZN 1/4 (BAT NEG CBL GND) (AC-DELCO #121753)	92	1	121753
8.		8.900	BOLT, HFH M8X1.25X21MM, 17 OD, 10.9 (BAT NEG CBL GND) ...	92	1	12551177
9.	3-B20	2.341	CABLE, BAT NEG (37"LG) (W/O CLIPS & CONDUIT) (AC-DELCO #2SX37-1V)	92 Y (LT5)	1	12157286
	3-B20	2.341	CABLE, BAT NEG (W/O CLIPS & CONDUIT) (AC-DELCO #2XX37-1Y)	92 Y (LT1)	1	12157315

© 2000 GENERAL MOTORS SERVICE PARTS OPERATIONS-CHEVROLET-14Y

							1Y02 -030
10.	3-B20	2.342	CABLE, BAT POS (AC-DELCO #26X40-2)	92	Y (LT5)	1	15320758
	3-B20	2.342	CABLE, BAT POS (AC-DELCO #2CX67-2)	92	Y (LT1, ML9)	1	12157260
11.		0.900	BOLT, HEX, M8X1.25X16, FULL, 9.8, PS (BAT NEG CBL GND)	92	Y (LT5)	1	11509680
		0.900	BOLT, 1/2-13 X 1 CAD/ZC (BAT NEG CBL GND)	92	Y (LT1)	1	454998
12.		0.032	WASHER, EXT LK M8X15X1.52 ZC (BAT NEG CBL GND) (AC-DELCO #11501869)	92	Y (LT5)	1	11501869
		N.S.	WASHER, BAT NEG CBL (BAT NEG CBL GND)	92	Y (LT1)	1	
13.	3-B21	2.343	CLIP, BAT CBL	92	Y	1	14103384
14.		0.077	SCREW, HWH TAP M6.3X1.81X13 13 OD PZOR (BAT POS CBL BRKT)	92	Y	1	12336139
15.		N.S.	BATTERY, (FOR SPECIFIC USAGE SEE AC DELCO CATALOG)		.....		
16.		0.015	NUT-HEX, M8X1.25X4.0, BRASS, PLAIN (BAT POS CBL) (AC-DELCO #11509480)	92	.....	1	11509480

HPO DEFINITIONS
LT1 - ENGINE-GAS, 8 CYL, 5.7L(5.7P),MFI,HO
LT5 - ENGINE,5.7L(5.7J),TPI
ML9 - TRANSMISSION,MANUAL 6-SPEED

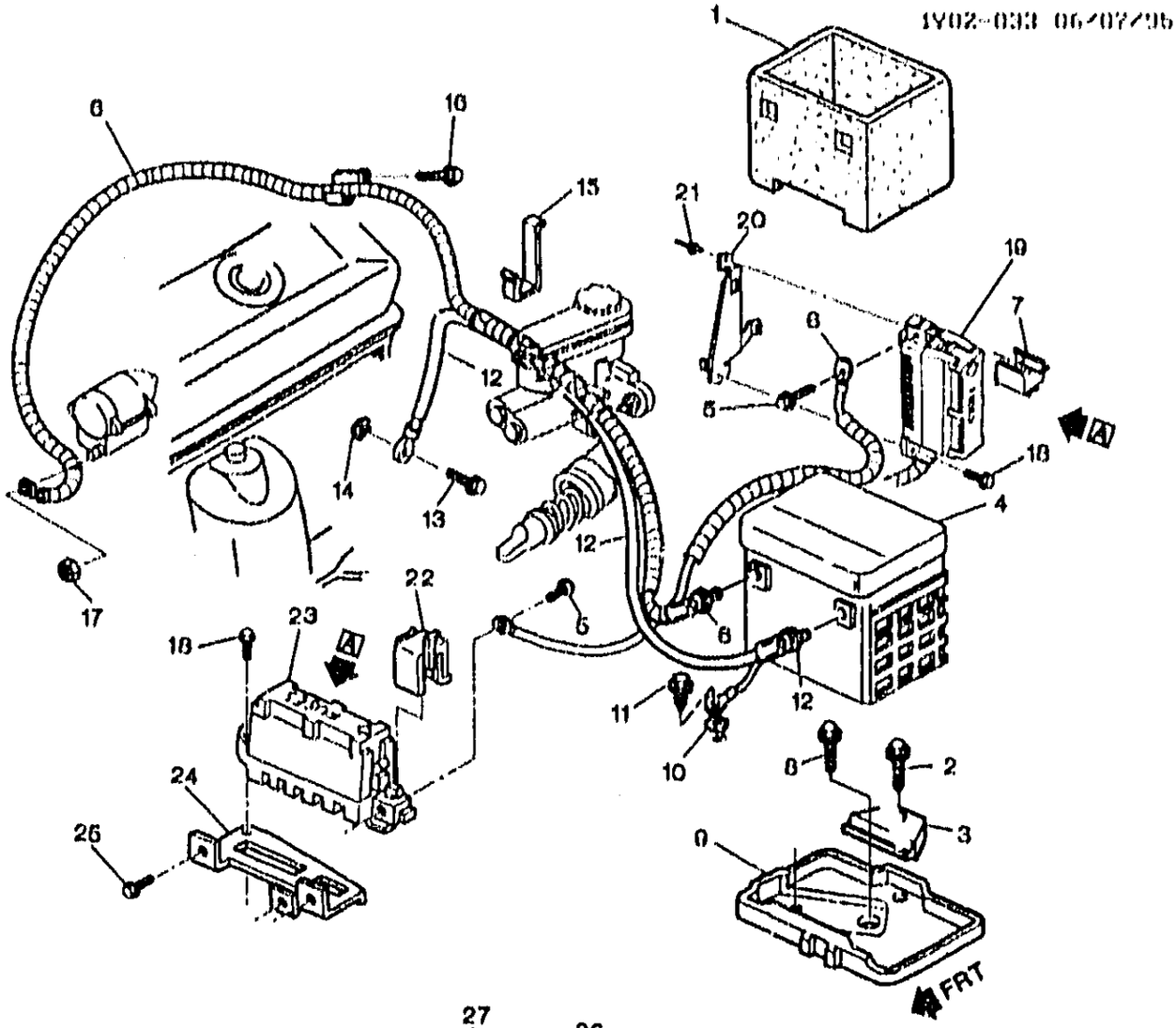

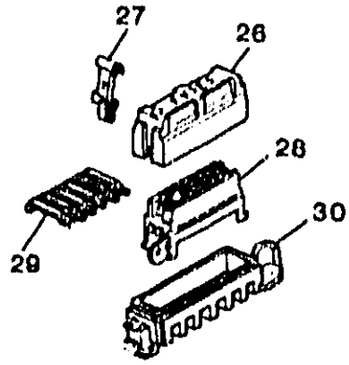

VIEW A

1Y02-033

1993-1996 Y BATTERY CABLES

1.	3-B20	2.333	INSULATOR, BAT	93-96 Y	1	22611064
2.		8.900	BOLT, HEX CONVA M8X1.25X55 TYPE B 9.8 POT (BAT HOLDN RET)	93-96	1	11508422
		8.921	RETAINER, PUSH-ON M8X1.25 THD ZOR (BAT TRAY)	93-96	1	10009923

© 2000 GENERAL MOTORS SERVICE PARTS OPERATIONS-CHEVROLET-14Y

							1Y02-033
3.	3-B20	2.335	RETAINER, BAT HOLDN	93-96	Y	1	14005061
4.		N.S.	BATTERY,				
5.		6.900	SCREW, M6X1X30, 11 THD, 12.5 OD, 4.8, 0047M, P-PT (BAT POS CBL)	93-96		1	11506120
6.	3-B20	2.342	CABLE, BAT POS (AC-DELCO #2SW36-3)	93-95	Y (LT5)	1	12106586
	3-B20	2.342	CABLE, BAT POS (66"LG) (AC-DELCO #2SX66-2G)	96	Y (LT4)	1	12157343
	3-B20	2.342	CABLE, BAT POS (W/O CONDUIT & CLIPS) (66"LG) (AC-DELCO #2SX66-2G)	93-96	Y (LT1)	1	12157343
7.	3-B21	2.343	COVER, BAT POS CBL & ENG WRG HARN TERM (RED)	93-96	Y	1	12092332
8.		6.977	SCREW, HWH TAP M6.3X1.81X20 ZOR (BAT TRAY)	93-96		2	11503615
		6.929	WASHER, TYPE A FLAT .214X.45X.005 ZP (BAT TRAY)	93-96		2	446161
9.	3-B20	2.333	TRAY, BAT	93-96	Y	1	14004574
10.		6.932	WASHER, EXT TOOTH LK ZN 1/4 (BAT NEG CBL GND) (AC-DELCO #121753)	93-96		1	121753
11.		6.900	BOLT, HFH M8X1.25X21MM, 17 OD, 10.9 (BAT NEG CBL GND)	93-96		1	12551177
12.	3-B20	2.341	CABLE, BAT NEG (37"LG) (W/O CLIPS & CONDUIT) (AC-DELCO #2SX37-1V)	93-95	Y (LT5)	1	12157286
	3-B20	2.341	CABLE, BAT NEG (W/O CLIPS & CONDUIT) (AC-DELCO #2XX37-1Y)	93-95	Y (LT1)	1	12157315
	3-B20	2.341	CABLE, BAT NEG (W/O CLIPS & CONDUIT) (AC-DELCO #2XX37-1Y)	96	Y	1	12157315
13.		6.900	BOLT, HEX, M8X1.25X16, FULL, 9.8, PS (BAT NEG CBL GND)	93-95	(LT5)	1	11509569
		6.900	BOLT, 1/2-13 X 1 CAD/ZC (BAT NEG CBL GND)	93-96	Y (LT1)	1	454998
14.		6.932	WASHER, EXT LK M8X15X1.52 ZC (BAT NEG CBL GND) (AC-DELCO #11501869)	93-95	Y (LT5)	1	11501869
		6.932	WASHER, EXT TTH LK .500 CZ (BAT NEG CBL GND)	93-96	(LT1)	1	135629
15.	3-B21	2.343	CLIP, BAT CBL	93-96	Y	1	14103384
16.		6.977	SCREW, HWH TAP M6.3X1.81X13 13 OD PZOR (BAT POS CBL BRKT)	93-96	Y	1	12338139
17.		6.915	NUT-HEX, M8X1.25X4.0, BRASS, PLAIN (BAT POS CBL) (AC-DELCO #11509480)	93-96		AR	1509480
18.		6.977	BOLT/SCREW ASM M4.2X1.41 #18 HEX HD GM71	93-96		AR	11515303
19.		N.S.	BLOCK, MAXI FUSE CENTER (CPS SEE VIEW A) (ALSO PART OF ENG HARNESS GROUP 2.525)				
20.	3-C20	2.483	BRACKET, ENG WRG HARN FUSE BLK (LOCATED BEHIND BATT)	93	Y	1	10165399

© 2000 GENERAL MOTORS SERVICE PARTS OPERATIONS-CHEVROLET-14Y

							1Y02-033
	3-C20	2.483	BRACKET, ENG WRG HARN FUSE BLK (LOCATED BEHIND BATT)	94-96	Y (LT5)	1	10166399
	3-C20	2.483	BRACKET, ENG WRG HARN FUSE BLK (LOCATED BEHIND BATT)	94-96	Y (LT1)	1	10262093
21.		N.S.	RIVET		Y	3	
22.	3-B21	2.343	COVER, BAT POS CBL TERM (RED)	93-96	Y	2	12092332
23.		N.S.	BLOCK, MAXI FUSE CENTER (CPS SEE VIEW A) (ALSO PART OF FWD LP HARNESS GROUP 2.480)				
24.	3-C20	2.483	BRACKET, FWD LP WRG HARN FUSE BLK (LOCATED ON WHL/HSE PNL)	93-96	Y	1	10202843
25.		0.077	SCREW, HWH TAP M4.2X1.41X10, 0.2-OD 6010PZOR BLK	93-96		AR	11609501
26.	3-C20	2.483	COVER, FUSE BLK	93-96	Y	2	12077530
27.	3-C20	2.483	CLIP, FUSE BLK CVR	93-96	Y	2	12077530
28.	3-C20	2.483	BLOCK, PWR DISTR-FUSE (BUS BAR ON RH SIDE) (2.530)	93-96	Y	1	12092231
29.	3-D2	2.530	LOCK, TERM-WRG SECD (USED W/MAXI FUSE BLK HOLDING 8 FUSES) (2.483)	93-96	Y	2	12077532
30.	3-C20	2.483	BLOCK, FUSE (2.480)	93-96	Y	2	12077534

RPO DEFINITIONS
LT1 – ENGINE-GAS, 8 CYL, 5.7L(5.7P),MFI,HO
LT4 – ENGINE GAS, 8 CYL, 5.7L, MFI, HIGH OUTPUT
LT5 – ENGINE,5.7L(5.7J),TPI

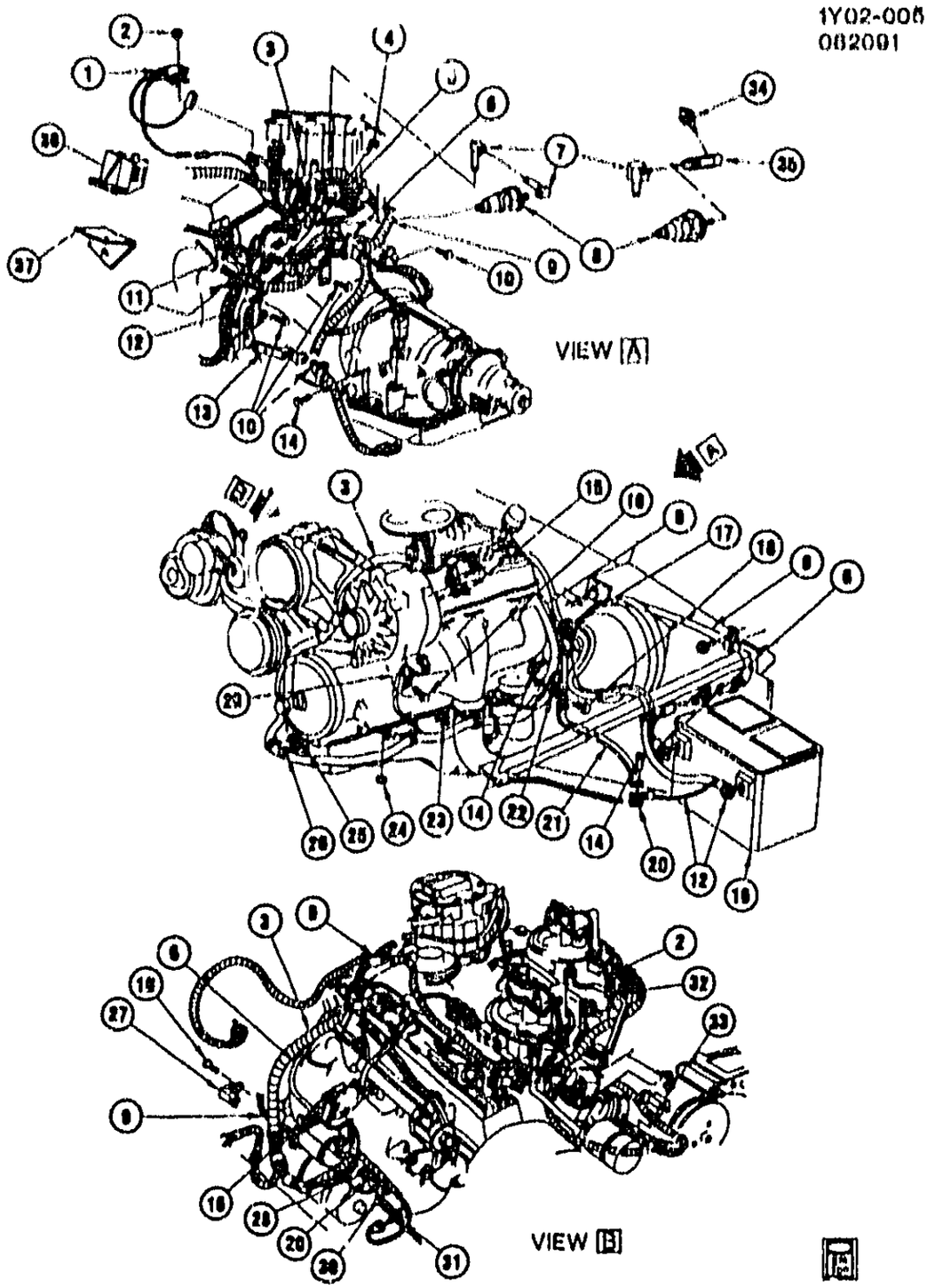

1Y02-005

1984-1987 Y WIRING HARNESS/ENGINE

1.	DISCON	FILTER, TACH	14093115
2.	8.915	NUT, HEX (5/16"-18)	
3.	DISCON	HARNESS, ENG (1984)	12029248
	DISCON	HARNESS, ENG (1985)	12029301
	DISCON	HARNESS, ENG (A.T./C60) (1986)	12046817
	DISCON	HARNESS, ENG (A.T./C68) (1986)	12046818

© 2000 GENERAL MOTORS SERVICE PARTS OPERATIONS-CHEVROLET-14Y

				1Y02-005
		DISCON	HARNESS, ENG (M.T./C00) (1980)	12040015
		DISCON	HARNESS, ENG (M.T./C00) (1980)	12040016
		DISCON	HARNESS, ECM (M.T./C00) (1987)	12067670
		DISCON	HARNESS, ECM (M.T./C00) (1987)	12067671
		DISCON	HARNESS, ENG (A.T./C00) (1987)	12067672
		DISCON	HARNESS, ENG (A.T./C00) (1987)	12067673
4.		6.977	SCREW, HEX TAP (M4.2X1.41X16)	11509374
5.		6.915	NUT, HEX (3/8-16)	
6.	3-B20	2.342	CABLE, BAT (POS) (55") (1984-85) (AC-DELCO #SOX55-1)	12157459
	3-B20	2.342	CABLE, BAT (POS) (55") (1986-87) (AC-DELCO #26W50-3SY)	12157332
7.		DISCON	FITTING, OIL PRESS SEN (TO MANIF) (1984)	14066510
		DISCON	FITTING, OIL PRESS SEN (TO SEN) (1984)	14066511
	3-M21	1.600	FITTING, OIL PRESS SEN (TO MANIF) (1986-87)	14076988
	3-M22	1.603	FITTING, OIL PRESS SEN (TO SEN) (1986-87)	14076987
8.	3-M21	1.600	SENSOR, ENG OIL PRESS (AC-DELCO #14078954)	14078954
9.		N.S.	HARNESS, ELEK CONT MDL WRG (A.T.) (SEE CATALOG GROUP 2.000 FOR SPECIFIC USAGE)	
		N.S.	HARNESS, ELEK CONT MDL WRG (M.T.) (SEE CATALOG GROUP 2.000 FOR SPECIFIC USAGE)	
10.		6.900	BOLT, HEX (3/8X16X1.375) 280M PZOR	9439900
11.		6.932	WASHER, EXT TOOTH LK (M10X17)	
12.	3-B20	2.341	CABLE, BAT (NEG) (AC-DELCO #2XX37-1Y)	12157315
13.	3-D11	2.559	BRACKET, ENG WRG HARN (TO FLY WHL HSG)	14073493
14.		6.913	SCREW, PAN HD C/R W/EXT LK WA (M4.8X1.5)	11506323
15.		6.917	NUT, HEX PREV TORQ (M6X1) 10 CAD (AC-DELCO #11503749)	11503749
16.		6.977	SCREW, HWH TAP (M4.2X1.41X16) PZOR	11509135
17.		DISCON	RETAINER, ENG WRG HARN	14066575
18.		6.900	BOLT, HEX HD (1/2X13X1)	454949
19.		N.S.	BATTERY	
20.		6.932	WASHER, EXT TOOTH LK (1/4) (AC-DELCO #121753)	121753
21.	3-B20	2.341	STRAP, ENG GRD (19)	6266600
22.		6.932	WASHER, EXT TOOTH LK (1/2)	135629
23.	3-D11	2.559	BRACKET, ECM WRG HARN (TO OIL PAN)	14062552
24.		6.917	NUT, HEX (1/4-20)	
25.		DISCON	BRACKET, ENG WRG HARN (TO CASE) (1984)	14057560
26.		6.900	BOLT (3/8X16X5/8)	
27.	3-D11	2.559	BRACKET, ENG WRG HARN (R/SI RR)	14062511
28.		6.915	NUT, HEX (M10X1.5)	11508189
29.	3-D11	2.559	BRACKET, ENG WRG HARN (ABOVE LT ENG MT)	14062509
30.		6.915	NUT, (M5X8, 5 THK, 9M PEOR)	11509203
31.	3-M21	1.600	SENSOR, TEMP (AC-DELCO #25036292)	25036292
32.		6.032	WASHER, EXT LK (M8.3X15)	
33.		N.S.	RETAINER, ENG WRG HARN	
34.	3-M21	1.600	SWITCH, OIL PRESS (AC-DELCO #D1818)	25036553
35.	3-M21	1.600	FITTING, OIL PRESS	14076988
36.	3-C20	2.483	BLOCK, ENG WRG HARN JUNC (1986-87)	10098794
37.		DISCON	BRACKET, ENG WRG HARN J/BLK (1986-87)	14093148

© 2000 GENERAL MOTORS SERVICE PARTS OPERATIONS-CHEVROLET-14Y

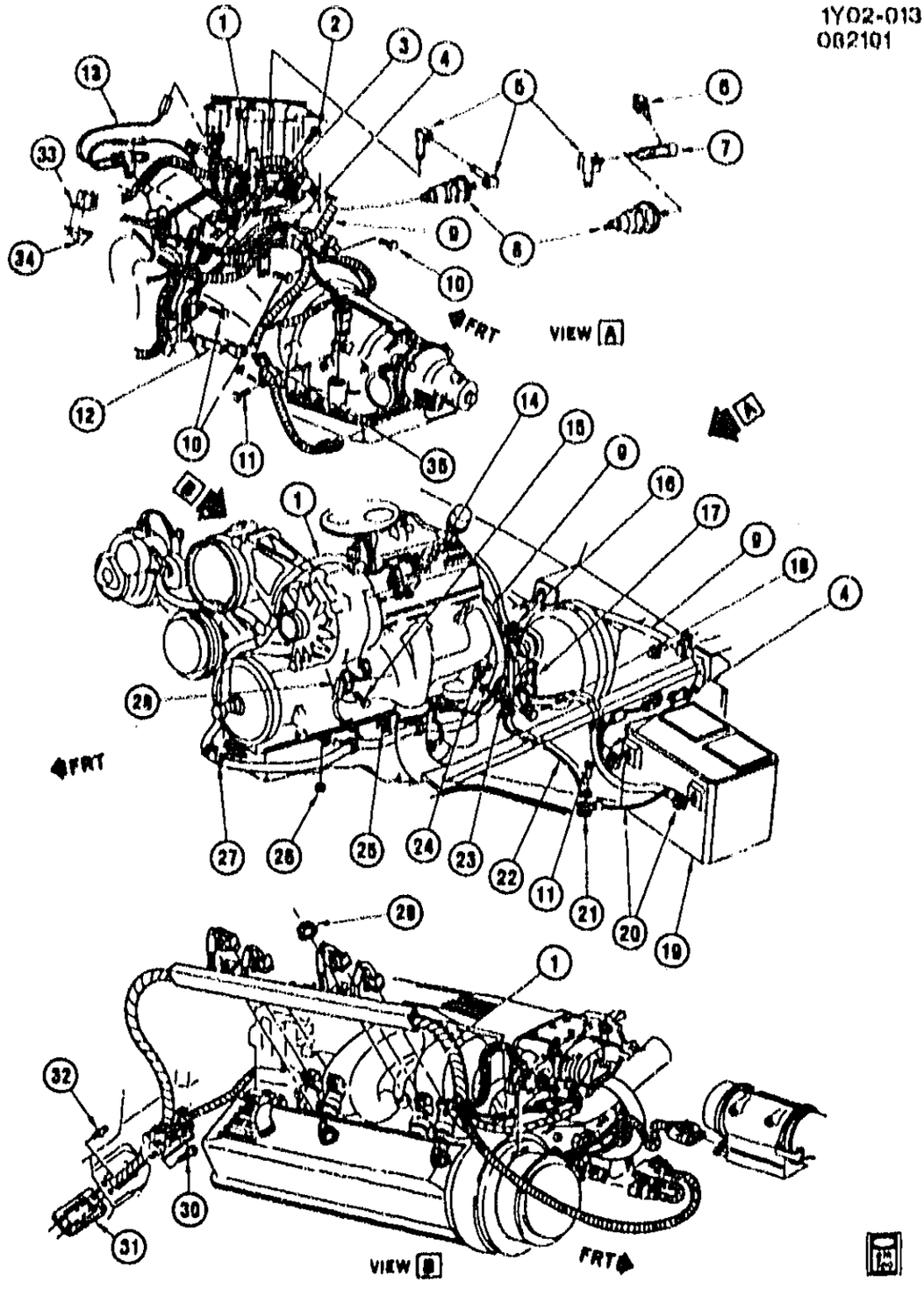

1Y02–013

1988 Y WIRING HARNESS/ENGINE

1.		N.S.	HARNESS, ENG (SEE CATALOG GROUP 2.000 FOR SPECIFIC USAGES)	
2.		8.977	SCREW, HEX W/FL WA (M4.2X1.41X16)	11509374
3.		8.977	NUT, HEX (3/8–16)	
4.	3–B20	2.342	CABLE, BAT (POS) (AC–DELCO #2SW56–3SY)	12157332
5.	3–M22	1.803	FITTING, ENG OIL PRESS GA SEN TO BLK	14078987
6.	3–M21	1.600	SWITCH, ENG OIL PRESS IND (AC–DELCO #D1835)	25036936

© 2000 GENERAL MOTORS SERVICE PARTS OPERATIONS–CHEVROLET–14Y

				1Y02-013
7.	3-M21	1.600	FITTING, ENG OIL PRESS GA SEN TO BLK FTG	14078988
8.	3-M21	1.600	SENSOR, ENG OIL PRESS GA (1 BLADE TERM) (AC-DELCO #14078954)	14078954
9.	3-C9	2.460	HARNESS, ELEK CONT MDL WRG (SEE CATALOG GROUP 2.000 FOR SPECIFIC USAGES)	
10.		8.900	BOLT, HEX (M3/8-16X1.375) PZOR	9439900
11.		8.913	SCREW, PAN HD C/R (M4.8X1.5)	11508323
12.	3-D11	2.559	BRACKET, ENG WRG HARN (L/SIDE RR)	14073493
13.		DISCON	FILTER, TACH SIG	14093116
14.		8.917	NUT, HEX PREV TORQ (M6X1) 10 CAD (AC-DELCO #11503749)	11503749
15.		8.977	SCREW, HWH TAP (M4.2X1.41X16) PZOR	11509135
16.		DISCON	RETAINER, ENG WRG HARN	14066575
17.	3-B21	2.343	CLIP, BAT CBL	14103384
18.		8.900	BOLT, HEX HD (M1/2-13X1) CAD OR ZC	454998
19.		N.S.	BATTERY	
20.	3-B20	2.341	CABLE, BAT (NEG) (AC-DELCO #2XX37-1Y)	12157316
21.		8.932	WASHER, LOCK-1/4 EX TOOTH ZN (AC-DELCO #121753)	121753
22.	3-B20	2.341	STRAP, ENG GRD (19")	6266600
23.		8.932	WASHER, EXT TTH LK .500 CZ	135629
24.		8.977	BOLT, SEMS HEX W/FL WA (M6.3X1.81X20)	12337828
25.	3-D11	2.559	BRACKET, ECM WRG HARN	14062552
26.		8.917	NUT, HEX (1/4-20)	
27.		8.900	BOLT, (3/8X16X5/8)	
28.	3-D11	2.559	BRACKET, ENG WRG HARN (ABOVE LH ENG MT)	14062599
29.		8.917	NUT, HFH (M6X1X6.5)	3530297
30.		8.977	SCREW, HWH (M4.2X1.41X20)	16516659
31.		DISCON	PLATE, ELEK BRK CONT WRG HARN CLIP TAP	14001012
32.		N.S.	RIVET, DOME HD TYPE	
33.	3-C20	2.463	BLOCK, ENG WRG HARN JUNC	10098794
34.		DISCON	BRACKET, ENG WRG HARN J/BLK	14093148
35.		DISCON	STUD, ENG WRG HARN CLIP (M6X1X25)	14087571
		DISCON	STUD, ENG WRG HARN CLIP (M6X1X12)	14087572

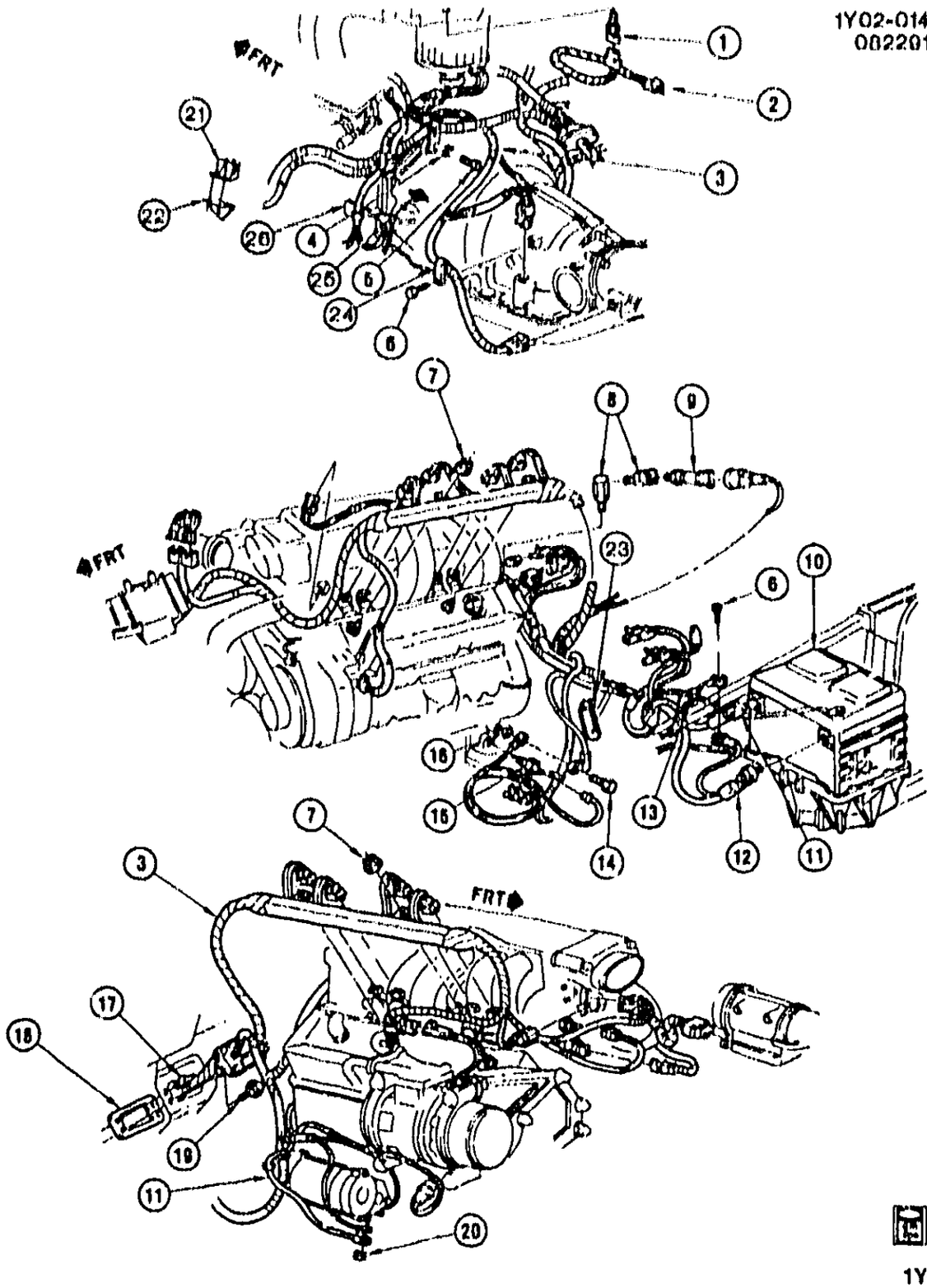

1989 Y WIRING HARNESS/ENGINE

1.	3-N4	3.682	SENSOR, MANIF TEMP (UNDER PLENUM) (1.160) (AC-DELCO #213-310)	12146312
2.	3-C9	2.480	HARNESS, INT AIR TEMP SEN WRG	12029463
3.	3-C26	2.525	HARNESS, ENG (M.T. A/C C60)	12090320
	3-C26	2.525	HARNESS, ENG (M.T. A/C C68)	12090321
	3-C26	2.525	HARNESS, ENG (A.T. A/C C60)	12090322

© 2000 GENERAL MOTORS SERVICE PARTS OPERATIONS - CHEVROLET - 14Y

				1Y02-014
	3-C26	2.525	HARNESS, ENG (A.T. A/C C68)	12090323
4.		6.932	WASHER, LK INTR TTH (M10X7) ZC	11504247
5.		6.900	BOLT, HEX (3/8-16X1 3/8) 280M PZOR	9439900
6.		6.913	SCREW, PAN HD C/R (M4.0X1.5)	11505323
7.		6.917	NUT, HFH (M6X1X6.5) ZOR	3530297
8.		DISCON	FITTING, F/PUMP SW & ENG OIL PRESS GA SEN	10096122
9.	3-M21	1.600	SENSOR, F/PUMP & ENG OIL PRESS GA (AC-DELCO #10201491)	10201491
10.		N.S.	BATTERY	
11.	3-B20	2.342	CABLE, BAT (POS) (56") (AC-DELCO #2SW56-3SY)	12157332
12.	3-B20	2.341	CABLE, BAT (NEG) (AC-DELCO #2XX37-1Y)	12157315
13.	3-B20	2.341	STRAP, ENG GRD (10")	6266000
14.		6.900	BOLT, HEX (1/2-13X1) CAD/ZC	454998
15.	3-M21	1.600	SENSOR, TEMP (AC-DELCO #25036292)	25036292
16.		6.932	WASHER, EXT TTH LK (.500) CZ	135629
17.		N.S.	RIVIT, DOME HD TYPE	
18.	3-D11	2.559	PLATE, ELEC CONT MDL WRG HARN RET	14090618
19.		6.977	SCREW, HWH (M4.2X1.41X20)	16516059
20.		6.915	NUT, HEX (M6X1.25X3.65) BRS PL (AC-DELCO #11509460)	11509460
21.	3-C20	2.463	BLOCK, ENG WRG HARN JUNC	10098794
22.		DISCON	BRACKET, ENG WRG HARN J/BLK	14093148
23.	3-D11	2.559	RETAINER, ENG WRG HARN	14104541
24.	3-D11	2.559	RETAINER, EMC WRG HARN CONN	12020833
25.		DISCON	STUD, ENG WRG HARN CLIP (M6X1X25)	14087671
		DISCON	STUD, ENG WRG HARN CLIP (M6X1X12)	14087672
26.	3-D11	2.559	BRACKET, ENG WRG HARN (L/SI RR)	14073493

© 2000 GENERAL MOTORS SERVICE PARTS OPERATIONS-CHEVROLET-14Y

MICROFICHE INDEX

GROUP 2.000

FICHE 3 OF 11

GROUP	DESCRIPTION	STARTING GRID LOCATION PARTS	ILLUSTRATIONS
--	GENERAL INFORMATION	1-A2	1-G2
--	ALPHABETICAL INDEX	1-B13	N.A.
2.000	CHASSIS WIRING - LAMPS	3-A2	3-F2
-	OUT OF FICHE CALLS	N.A.	3-M20

3-H1

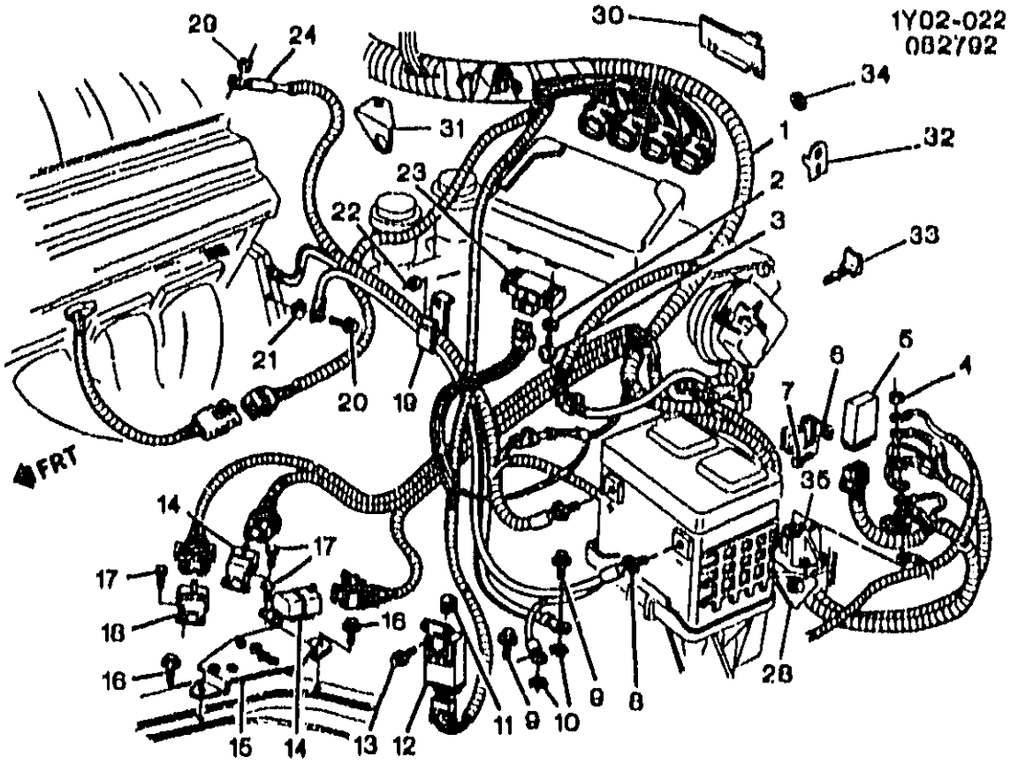

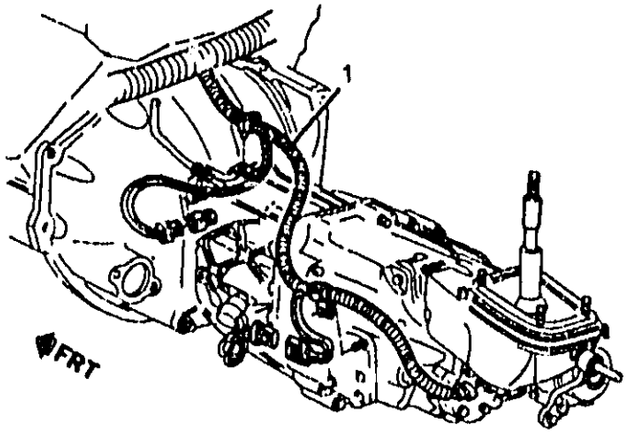

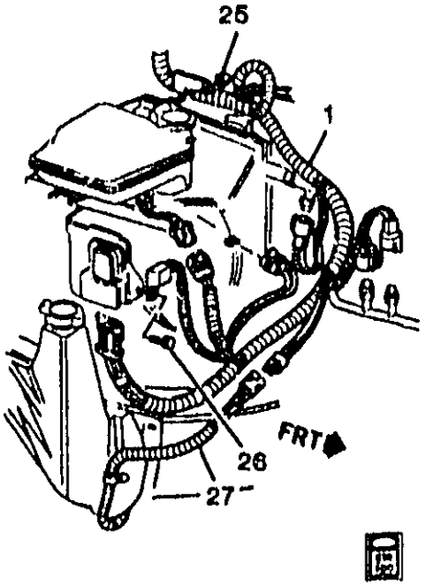

1Y02-022

1990 Y WIRING HARNESS/ENGINE (LT5)

1.	3-C26	2.525	HARNESS, ENG WRG	90	Y (LT5, C60, FE1, FE7) .	1	12090375
	3-C26	2.525	HARNESS, ENG WRG	90	Y (LT5, C68, FE1, FE7) .	1	12090376
2.		8.929	WASHER, TYPE A FLAT .214X.45X.065 ZF	90	.....	AR	446161
3.		8.977	SCREW, PAN HD C/R, M4.2X1.41X35, NOR (MDP SEN) .	90	.....	AR	11515142
4.		8.915	NUT, HEX 10-24X1/8 284M CAD/ZC	90	.....	AR	120361

© 2000 GENERAL MOTORS SERVICE PARTS OPERATIONS - CHEVROLET - 14Y

							1Y02-022
5.	3-M23	3.300	MODULE, SECD SEQ M/PORT F/INJN CONT (FRT) (AC-DELCO #10086284)	90	Y	1	10086284
6.		DISCON	BRACKET, SECD F/INJR CONT MDL	90	Y (FE1, FE7)	1	14104925
7.		8.977	BOLT, SCR HEX W/FLAT WA 12 DIA TYPE AB	90		AR	11509374
8.	3-B20	2.341	CABLE, BAT NEG (37"LG) (W/O CLIPS & CONDUIT) (AC-DELCO #2SX37-1V)	90	Y (LT5)	1	12157266
9.		8.900	BOLT, HFH M8X1.25X21MM, 17 OD, 10.9	90		AR	12551177
10.		8.932	WASHER, EXT TOOTH LK ZN 1/4 (AC-DELCO #121753)	90		AR	121753
11.		8.921	NUT, M4.2X1.4, 10.3X213.6.8.9 (AC-DELCO #15650655)	90		AR	15650655
12.	3-M23	3.300	MODULE, SECD SEQ M/PORT F/INJN CONT (RR) (AC-DELCO #10086284)	90	Y	1	10086284
13.		8.977	BOLT/SCREW ASM M4.2X1.41 #18 HEX HD GM71	90		AR	11515303
14.	3-N14	9.277	RELAY, BLO MOT (5-PIN OVAL SHAPE) (USE W/CONN 15306002) (1.055) (AC-DELCO #15-8240)	90	Y (C60)	1	14089936
15.	3-C20	2.483	BRACKET, MULTIUSE RLY (STEEL) (8.7"X3.5") (220.0MM)(88.5MM)	90	Y (LT5, C60)	1	14104778
16.		8.977	SCREW, HWH TAP M6.3X1.81X13 13 OD PZOR	90		AR	12338139
17.		8.900	BOLT, HEX M8X1X10 9.8 PL (14.370) (AC-DELCO #10092160)	90		AR	10092160
18.	3-N8	4.054	RELAY, M/TRNS 2ND & 3RD GR BLOCKOUT (5-PIN OVAL SHAPE) (USE W/CONN 15306002) (1.055) (AC-DELCO #15-8240)	90	Y (ML9)	1	14089936
19.	3-B21	2.343	CLIP, BAT CBL	90	Y	1	14103384
20.	3-D11	2.559	BOLT, ENG WRG HARN GND (M8X1.25X16, 14.8 THD) (8.900)	90	Y (LT5)	2	11509589
21.		8.932	WASHER, EXT LK M8X15X1.52 ZC (AC-DELCO #11501869)	90		AR	11501869
22.		8.917	NUT, M8X1.25X7.1, ZC 10	90		AR	11515746
23.	3-N4	3.682	SENSOR, MDP (AC-DELCO #16006834)	90	Y (LT5)	1	16006834
24.	3-B20	2.342	CABLE, BAT POS (AC-DELCO #2SX40-2)	90	Y (LT5)	1	15320758
25.		8.917	NUT, HFH, 5X0.8X4.85, 11.8 OD, (9), PEOR	90		AR	11509661
26.		8.977	BOLT, HWH, 4.2X2.5X20, 12.5-OD, AB PT, 6010M, BZ	90		AR	10272737
27.		DISCON	HARNESS, ENG WRG HARN EXTN (WSW PUMP JPR)	90	Y	1	12048806
28.		DISCON	BRACKET, ENG WRG HARN J/BLK	90	Y	1	14093146
29.	3-B21	2.343	NUT, BAT POS CBL (8.915) (AC-DELCO #11509480)	90	Y (LT5)	1	11509480

							1Y02-022
30.	3-D11	2.559	BRACKET, ENG WRG HARN (AT OXY & KNOCK SEN CABLES) (STEEL) (LWR LH SI OF BLK NEAR OIL PAN)	90	Y (LT5)	1	14104930
31.	3-D11	2.559	BRACKET, ENG WRG HARN SHLD	90	Y (LT5, C60, C68, FE1, FE7)	1	14104961
32.	3-D11	2.559	CLIP, ENG WRG HARN (1 HOLE) (OIL FILTER HSG)	90	Y (LT5)	1	14104937
33.	3-N23	13.090	RETAINER, BODY WRG HARN CONN (GRAY) (1" LONG) (PUSH-IN) (2.559)	90	Y	1	12020833
34.	3-D11	2.559	SPACER, ENG WRG HARN BR 1 (2.525)	90	Y (LT5)	1	14104942
35.	3-C20	2.463	BLOCK, ENG WRG HARN JUNC .	90	Y	1	10098794

RPO DEFINITIONS

C60 -- AIR CONDITIONER,FRONT,MANUAL CONTROLS
C68 -- AIR CONDITIONER,FRONT,AUTOMATIC,ELECTRONIC CONTROLS
FE1 -- SUSPENSION SYSTEM,SOFT RIDE
FE7 -- SUSPENSION SYSTEM,FRONT AND REAR,HEAVY DUTY(USED WITH PERFORMANCE HANDLING PACKAGE Z51)
LT5 -- ENGINE,5.7L(5.7J),TPI
ML9 -- TRANSMISSION,MANUAL 6-SPEED

© 2000 GENERAL MOTORS SERVICE PARTS OPERATIONS - CHEVROLET - 14Y

1Y02-019
101389

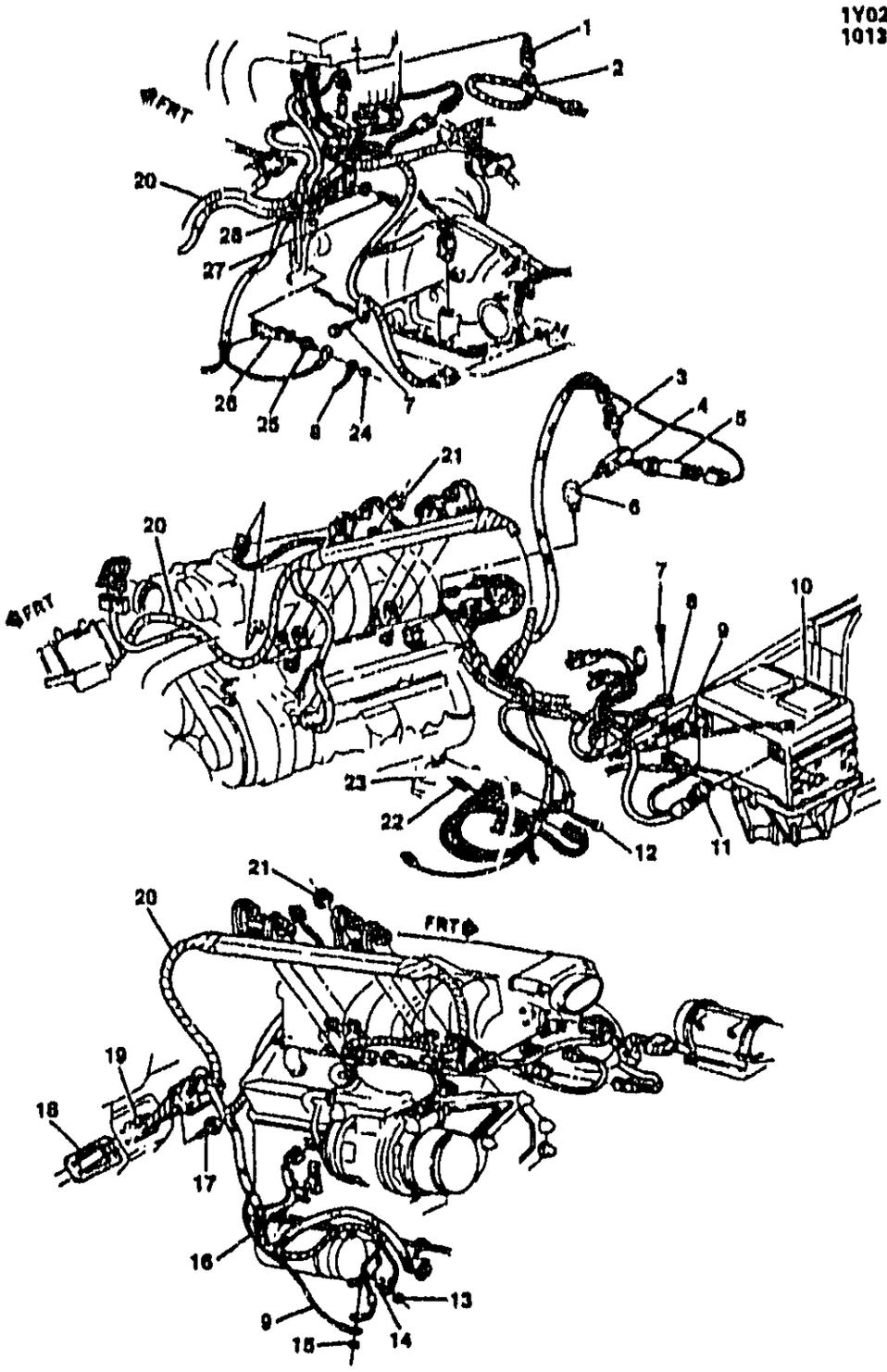

1Y02-019

1990-1991 Y WIRING HARNESS/ENGINE (L98)

1.	3-N4	3.382	SENSOR, MANIF TEMP (UNDER PLNM) (1.150) (AC-DELCO #213-310)	12146312
2.	3-C9	2.480	HARNESS, INT AIR TEMP SEN WRG	12029463
3.	3-M21	1.800	SWITCH, ENG OIL PRESS IND/OIL FLTR HSG (AC-DELCO #D1846)	25036935
4.	3-M21	1.800	FITTING, ENG OIL PRESS GA SEN TO BLK FTG	14078986
5.	3-M21	1.800	SENSOR, F/PUMP & ENG OIL PRESS GA (AC-DELCO #10201491)	10201491
6.	3-M22	1.803	FITTING, ENG OIL PRESS GA SEN TO BLK	14078987

© 2000 GENERAL MOTORS SERVICE PARTS OPERATIONS - CHEVROLET - 14Y

				1Y02-019
7.		0.913	SCREW, PAN HD C/R W/EXT LK (WA M4.8X1.5X10) ZOR	11505323
8.	3-B20	2.341	STRAP, ENG GRD (10 IN)	6266000
9.	3-B20	2.342	CABLE, BAT POS (1990) (1991 MD8) (AC-DELCO #2SW56-3SY)	12157332
	3-B20	2.342	CABLE, BAT POS (1991 ML9) (AC-DELCO #2SX55-2)	15320767
10.		N.S.	BATTERY	
11.	3-B20	2.341	CABLE, BAT NEG (AC-DELCO #2XX37-1Y)	12157315
12.		0.900	BOLT, 1/2-13 X 1 CAD/ZC (AR)	454998
13.		0.915	NUT, M5X.8, 5 THK, 9M, PEOR (AR)	11509203
14.		0.932	WASHER, EXT TOOTH LK ZN 1/4 (AR) (AC-DELCO #121753)	121753
15.		0.915	NUT-HEX, M8X1.25X4.0, BRASS, PLAIN (AR) (AC-DELCO #11509480)	11509480
16.		0.977	SCREW, HEX WA HD (M4.2X1.41X16) PZOR BLK	11509135
17.		0.977	SCREW, HWH (M4.2X1.41X20) 6172M	16516859
18.	3-D11	2.559	PLATE, ELEK CONT MOD WRG HARN RET	14090618
19.		N.S.	RIVET, DOME HD TYPE	
20.	3-C26	2.525	HARNESS, ENG WRG (M.T. MAN CONT) (1990)	12090377
	3-C26	2.525	HARNESS, ENG WRG (M.T. ELEC CONT) (1990)	12090378
	3-C26	2.525	HARNESS, ENG WRG (A.T. MAN CONT) (1990)	12090379
	3-C26	2.525	HARNESS, ENG WRG (A.T. ELEC CONT) (1990)	12090380
	3-C26	2.525	HARNESS, ENG WRG (A.T. MAN CONT) (1991)	12080865
	3-C26	2.525	HARNESS, ENG WRG (M.T. MAN CONT) (1991)	12080866
	3-C26	2.525	HARNESS, ENG WRG (A.T. ELEC CONT) (1991)	12080867
	3-C26	2.525	HARNESS, ENG WRG (M.T. ELEC CONT) (1991)	12080868
21.		0.917	NUT, HFH M6X1X6.5 ZOR 9 (AR)	3530297
22.	3-M21	1.600	SENSOR, ENG OIL CHG MON & TEMP GA (AC-DELCO #10096136)	10096136
23.		0.932	WASHER, EXT TTH LK .500 CZ (AR)	135629
24.		0.915	NUT, HEX (3/8-16) 301M ZN	9414034
25.	3-N8	4.085	STUD (3/8-16X0.78 BOTH ENDS) 260M POR	10085606
26.	3-D11	2.559	BRACKET, ENG WRG HARN (1991)	15664622
	3-D11	2.559	BRACKET, ENG WRG HARN (1991 ML9)	15664622
27.		0.900	BOLT, HEX 3/8-16X1.375 260M PZOR (AR)	9439900
28.		0.932	WASHER, LOCK INTER TOOTH M10X7 ZC (AR)	11504247

RPO DEFINITIONS
L98 - ENGINE, 5.7L, (5.7-8) 350 CID, V8, TPI

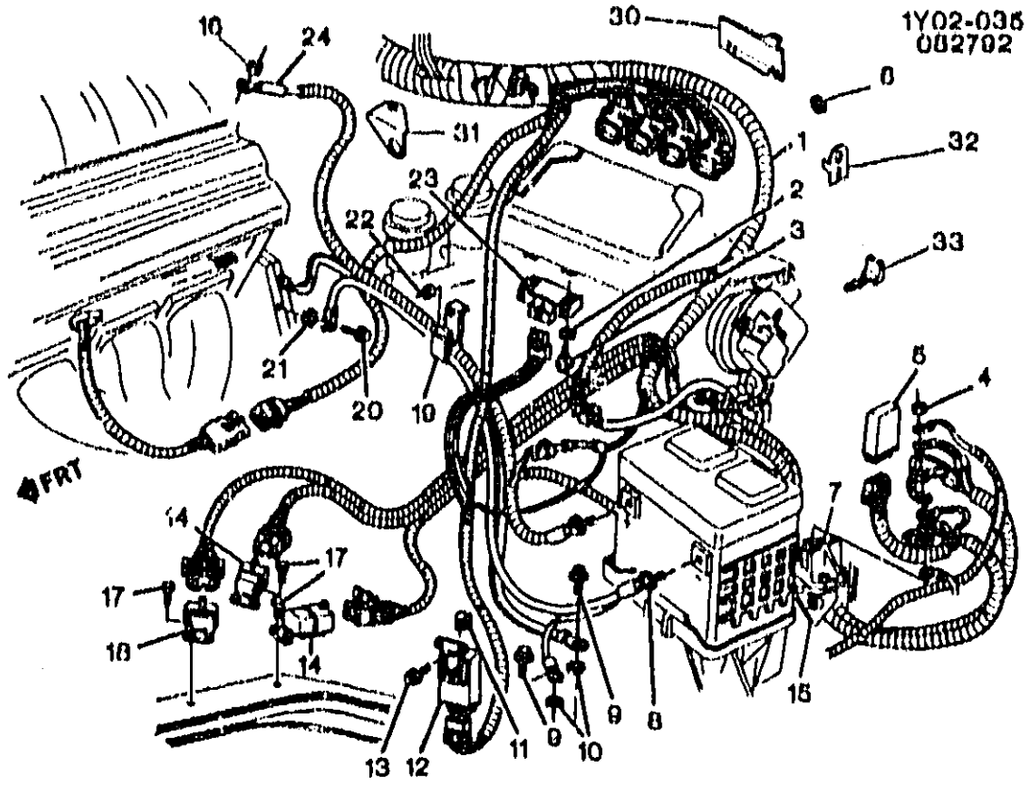

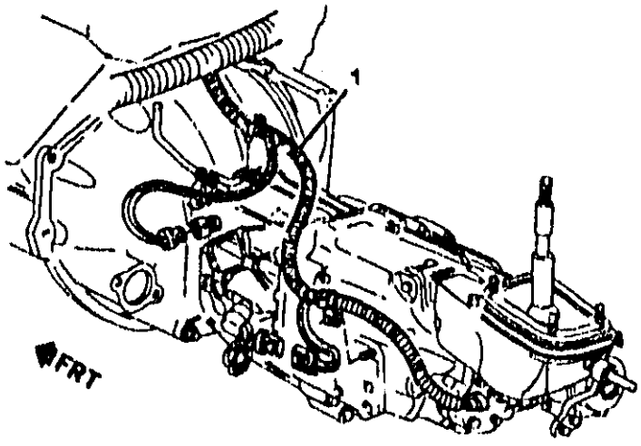

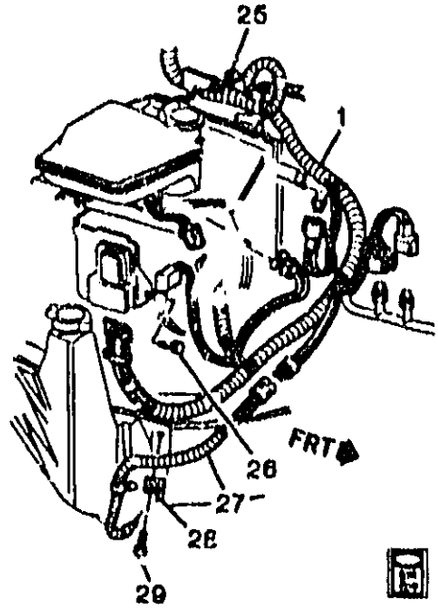

1Y02-035

1991 Y WIRING HARNESS/ENGINE (LT5)

1.	3-C26	2.525	HARNESS, ENG WRG	91	Y (LT5, C68, FE1, FE7) .	1	12060870
2.		8.929	WASHER, TYPE A FLAT .214X.45X.065 ZP	91	.....	AR	446161
3.		8.977	SCREW, PAN HD C/R, M4.2X1.41X35, NOR (MDP SEN) .	91	.....	AR	11515142
4.		8.915	NUT, HEX 10-24X1/8 284M CAD/ZC	91	.....	AR	.20361

© 2000 GENERAL MOTORS SERVICE PARTS OPERATIONS-CHEVROLET-14Y

							1Y02-035
5.	3-M23	3.300	MODULE, SECD SEQ M/PORT F/INJN CONT (RR) (AC-DELCO #10086284)	91	Y (LT5)	1	10086284
6.	3-D11	2.559	SPACER, ENG WRG HARN BRKT (2.525)	91	Y (LT5)	1	14104042
7.	3-C20	2.483	BLOCK, ENG WRG HARN JUNC	91	Y	1	10096794
8.	3-B20	2.341	CABLE, BAT NEG (37"LG) (W/O CLIPS & CONDUIT) (AC-DELCO #2SX37-1V)	91	Y (LT5)	1	12157286
9.		8.900	BOLT, HFH M8X1.25X21MM, 17 OD, 10.9	91		AR	12551177
10.		8.932	WASHER, EXT TOOTH LK ZN 1/4 (AC-DELCO #121753)	91		AR	121753
11.		8.921	NUT, M4.2X1.4, 19.3X213.6.8.9 (AC-DELCO #15650655)	91		AR	15650655
12.	3-M23	3.300	MODULE, SECD SEQ M/PORT F/INJN CONT (FRT) (AC-DELCO #10086284)	91	Y (LT5)	1	10086284
13.		8.977	BOLT/SCREW ASM M4.2X1.41 #18 HEX HD GM71	91		AR	11515303
14.	3-N14	9.277	RELAY, BLO MOT (5-PIN OVAL SHAPE) (USE W/CONN 15306002) (1.055) (AC-DELCO #15-8240)	91	Y (C60)	1	14089936
15.		DISCON	BRACKET, ENG WRG HARN J/BLK	91	Y	1	14093148
16.	3-B21	2.343	NUT, BAT POS CBL (8.915) (AC-DELCO #11509460)	91	Y (LT5)	1	11509460
17.		8.900	BOLT, HEX M8X1X10 9.8 PL (14.870) (AC-DELCO #10092160)	91		AR	10092160
18.	3-N8	4.054	RELAY, M/TRNS 2ND & 3RD GR BLOCKOUT (5-PIN OVAL SHAPE) (USE W/CONN 15306002) (1.055) (AC-DELCO #15-8240)	91	Y (ML9)	1	14089936
19.	3-B21	2.343	CLIP, BAT CBL	91	Y	1	1410[illegible]384
20.	3-D11	2.559	BOLT, ENG WRG HARN GND (M8X1.25X16, 14.8 THD) (8.900)	91	Y (LT5)	2	11509[illegible]89
21.		8.932	WASHER, EXT LK M8X15X1.52 ZC (AC-DELCO #11501869)	91		AR	115018[illegible]9
22.		8.917	NUT, M8X1.25/7.1, ZC 10	91		AR	11515748
23.	3-N4	3.602	SENSOR, MDP (AC-DELCO #16006834)	91	Y (LT5)	1	16006834
24.	3-B20	2.342	CABLE, BAT POS (AC-DELCO #2SX40-2)	91	Y (LT5)	1	15320758
25.		8.917	NUT, HFH, 5X0.8X4.85, 11.8 OD, (9), PEOR	91		AR	11509661
26.		8.977	BOLT, HWH, 4.2X2.5X20, 12.5-OD, AB PT, 6010M, BZ	91		AR	10272737
27.		DISCON	HARNESS, ENG WRG HARN EXTN (WSW PUMP JPR)	91	Y	1	12048808
28.		N.S.	BRACKET, ENG WRG HARN EXTN HARN				
29.		8.900	BOLT, HEX W/CON WA, M6X1X20	91		AR	11514623

© 2000 GENERAL MOTORS SERVICE PARTS OPERATIONS-CHEVROLET-14Y

							1Y02-035
30.	3-D11	2.559	BRACKET, ENG WRG HARN (AT OXY & KNOCK SEN CABLES) (STEEL) (LWR LH SI OF BLK NEAR OIL PAN)	01	Y (LT5)	1	14104938
31.	3-D11	2.559	BRACKET, ENG WRG HARN SHLD	01	Y (LT5, C60, C68, FE1, FE7)	1	14104961
32.	3-D11	2.559	CLIP, ENG WRG HARN (1 HOLE) (OIL FILTER HSG)	01	Y (LT5)	1	14104937
33.	3-N23	13.090	RETAINER, BODY WRG HARN CONN (GRAY) (1" LONG) (PUSH-IN) (2.559)	01	Y	1	12020833

RPO DEFINITIONS
C60 - AIR CONDITIONER,FRONT,MANUAL CONTROLS
C68 - AIR CONDITIONER,FRONT,AUTOMATIC,ELECTRONIC CONTROLS
FE1 - SUSPENSION SYSTEM,SOFT RIDE
FE7 - SUSPENSION SYSTEM,FRONT AND REAR,HEAVY DUTY(USED WITH PERFORMANCE HANDLING PACKAGE Z51)
LT5 - ENGINE,5.7L(5.7J),TPI
ML9 - TRANSMISSION,MANUAL 6-SPEED

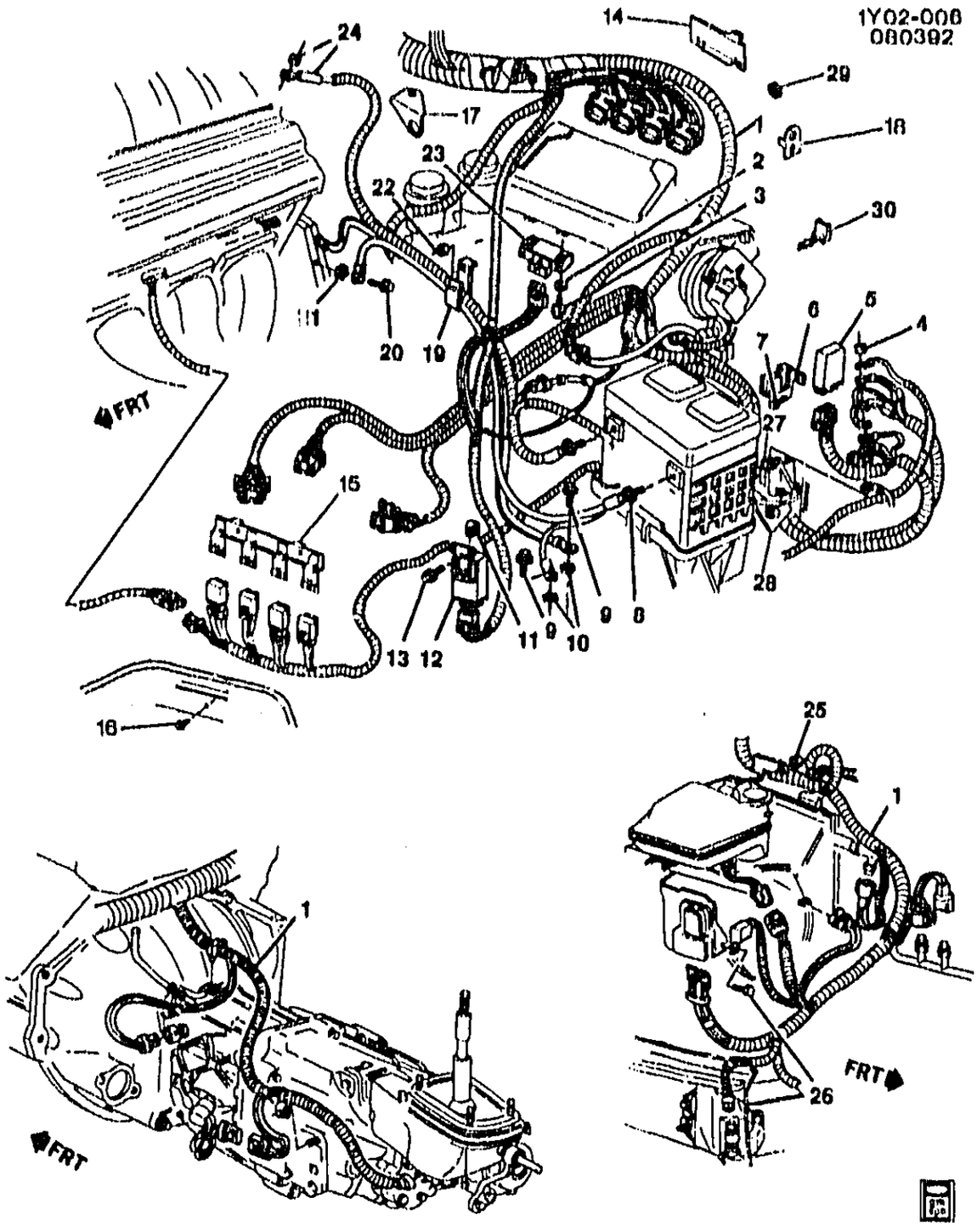

1Y02-006

1992 Y WIRING HARNESS/ENGINE (LT5)

1.	3-C26	2.525	HARNESS, ENG WRG	92	Y (LT5)	1	12117829
2.		8.929	WASHER, TYPE A FLAT .214X.45X.065 ZP	92	.....	AR	446161
3.		8.977	SCREW, PAN HD C/R, M4.2X1.41X35, NOR	92	.....	AR	11515142
4.		8.915	NUT, HEX 10-24X1/8 284M CAD/ZC	92	.....	AR	120361

© 2000 GENERAL MOTORS SERVICE PARTS OPERATIONS-CHEVROLET-14Y

							1Y02-006
5.	3-M23	3.300	MODULE, SECD SEQ M/PORT F/INJN CONT (FRT & RR) (AC-DELCO #10086204)	92	Y (LT5)	2	10086204
6.	3-D11	2.559	SPACER, ENG WRG HARN BRKT (2.525)	92	Y (LT5)	1	14104942
7.	3-N23	13.090	RETAINER, BODY WRG HARN CONN (GRAY) (1" LONG) (PUSH-IN) (2.559)	92	Y	1	12020833
8.	3-B20	2.341	CABLE, BAT NEG (37"LG) (W/O CLIPS & CONDUIT) (AC-DELCO #2SX37-1V)	92	Y (LT5)	1	12157266
9.		8.900	BOLT, HFH M8X1.25X21MM, 17 OD, 10.9	92	.....	AR	12561177
10.		8.932	WASHER, EXT TOOTH LK ZN 1/4 (AC-DELCO #121753)	92	.....	AR	121753
11.		8.921	NUT, M4.2X1.4, 19.3X013.6.8.9 (AC-DELCO #15650655)	92	.....	AR	15650655
12.	3-M23	3.300	MODULE, SECD SEQ M/PORT F/INJN CONT (FRT & RR) (AC-DELCO #10086204)	92	Y (LT5)	2	10086204
13.		8.977	BOLT/SCREW ASM M4.2X1.41 #18 HEX HD GM71	92	.....	AR	11515303
14.	3-D11	2.559	BRACKET, ENG WRG HARN (STEEL) (LWR LH SI OF BLK NEAR OIL PAN)	92	Y (LT5)	1	14104938
15.	3-C20	2.483	BRACKET, MULTIUSE RLY		Y (LT5)	1	10204735
16.		8.977	BOLT/SCREW ASM M4.2X1.41 #18 HEX HD GM71	92	.....	AR	11515303
17.	3-D11	2.559	BRACKET, ENG WRG HARN SHLD	92	Y (LT5)	1	14104961
18.	3-D11	2.559	CLIP, ENG WRG HARN (2 HOLES) (FRT CVR CYL CASE) ...	92	Y (LT5)	1	14104936
19.	3-B21	2.343	CLIP, BAT CBL	92	Y	1	14103384
20.		8.900	BOLT, HEX, M8X1.25X16, FULL, 9.8, PS	92	.....	AR	11509589
21.		8.932	WASHER, EXT LK M8X15X1.52 ZC (AC-DELCO #11501869)	92	.....	AR	11501869
22.		8.917	NUT, M8X1.25X7.1, ZC 10	92	.....	AR	11515748
23.	3-N4	3.682	SENSOR, MDP (AC-DELCO #16006834)	92	Y (LT5)	1	16006834
24.	3-B20	2.342	CABLE, BAT POS (AC-DELCO #2SX40--2)	92	Y (LT5)	1	15320758
25.		8.917	NUT, HFH, 5X0.8X4.85, 11.8 OD, (9), PEOR	92	.....	AR	11509661
26.		8.977	BOLT, HWH, 4.2X2.5X20, 12.5-OD, AB PT, 6010M, BZ	92	.....	AR	10272737
27.	3-C20	2.483	BLOCK, ENG WRG HARN JUNC .	92	Y	1	10098794
28.		DISCON	BRACKET, ENG WRG HARN J/BLK	92	Y	1	14093148
29.	3-D11	2.559	SPACER, ENG WRG HARN BRKT (2.525)	92	Y (LT5)	1	14104942
30.	3-N23	13.090	RETAINER, BODY WRG HARN CONN (GRAY) (1" LONG) (PUSH-IN) (2.559)	92	Y	1	12020833

RPO DEFINITIONS
LT5 -- ENGINE,5.7L(5.7J),TPI

© 2000 GENERAL MOTORS SERVICE PARTS OPERATIONS-CHEVROLET-14Y

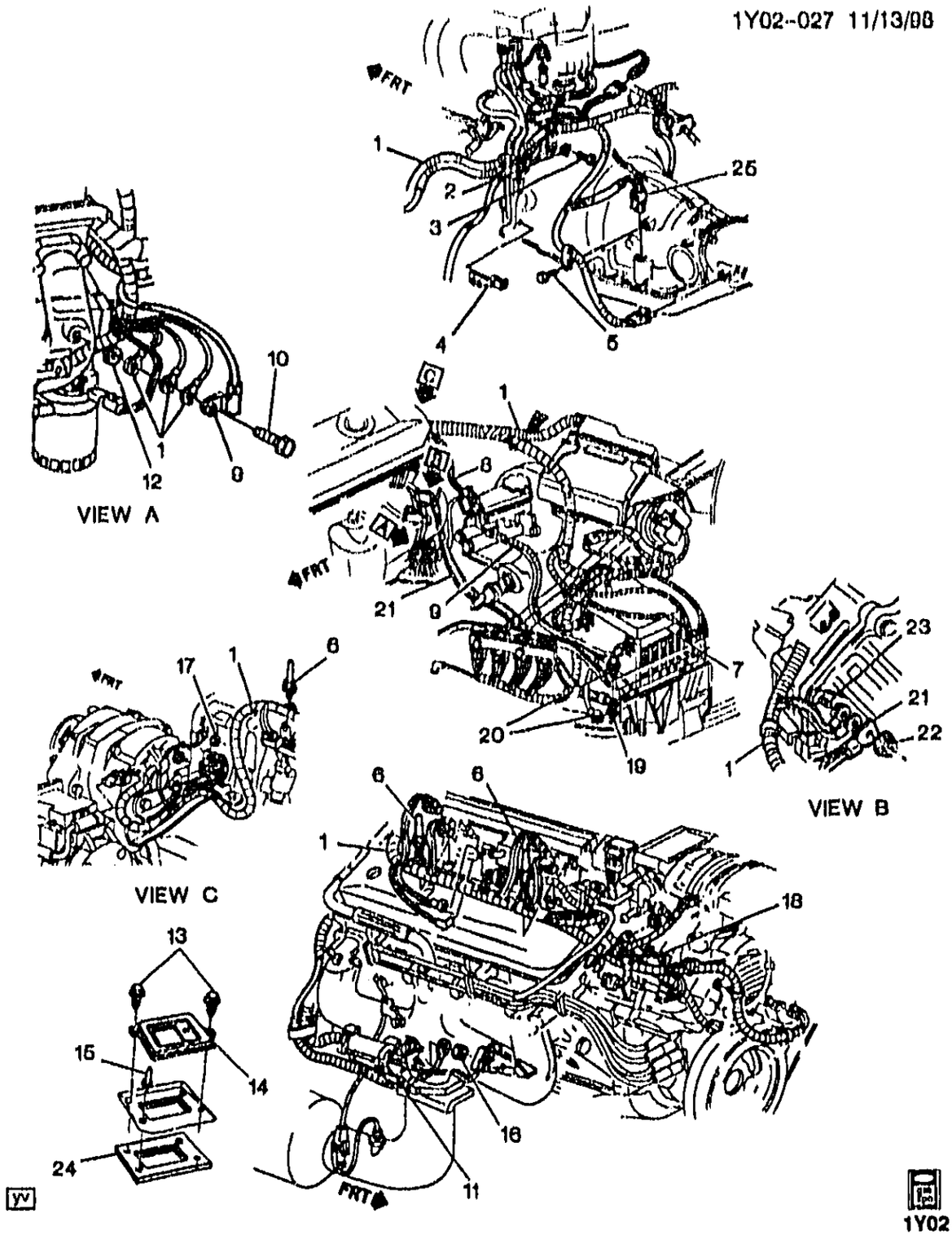

1Y02-027

1992-1996 Y WIRING HARNESS/ENGINE (LT1)

1.	3-C26	2.525	HARNESS, ENG WRG	92	Y (LT1, MD8, C60)	1	12125009
	3-C26	2.525	HARNESS, ENG WRG	92	Y (LT1, MD8, C68)	1	12125011
	3-C26	2.525	HARNESS, ENG WRG	93	Y (LT1, MD8, C60)	1	12154083
	3-C26	2.525	HARNESS, ENG WRG	93	Y (LT1, MD8, C68)	1	12154084
	3-C26	2.525	HARNESS, ENG WRG	94	Y (LT1, M30, C60) (EXC VE1)	1	12141754
	3-C26	2.525	HARNESS, ENG WRG	94	Y (LT1, M30, C68) (EXC VE1)	1	12141755

© 2000 GENERAL MOTORS SERVICE PARTS OPERATIONS-CHEVROLET-14Y

							1Y02--027
	3-C26	2.525	HARNESS, ENG WRG	95	Y (LT1, M30, C60) (EXC VE1)	1	12130371
	3-C26	2.525	HARNESS, ENG WRG	95	Y (LT1, M30, C60) (EXC VE1)	1	12130373
	3-C26	2.525	HARNESS, ENG WRG	96	Y (M30, C60) (EXC VE1)	1	12130462
	3-C26	2.525	HARNESS, ENG WRG	96	Y (M30, C60) (EXC VE1)	1	12130464
	3-C26	2.525	HARNESS, ENG WRG	94	Y (LT1, M30, C60, VE1) (EXPORT)	1	12141756
	3-C26	2.525	HARNESS, ENG WRG	95	Y (LT1, M30, C60, VE1) (EXPORT)	1	12130374
	3-C26	2.525	HARNESS, ENG WRG	96	Y (M30, C60, VE1) (EXPORT)	1	12130465
2.		8.932	WASHER, LOCK INTER TOOTH M10X7 ZC	92-96		AR	11504247
3.		8.900	BOLT, HFH 3/8-16X1.38 280M PZOR (TRANS)	92-96		AR	9439918
4.	3-D11	2.559	BRACKET, ENG WRG HARN	92-95	Y (LT1)	4	12553341
	3-D11	2.559	BRACKET, ENG WRG HARN (POS#RH-3, 6, 8, LH-6, 7)	96	Y	5	12553341
5.		8.913	SCREW, PAN HD C/R W/EXT LK WA M4.8X1.59X10 ZOR TAP	92-96		AR	11505323
6.	3-M24	3.330	STUD, F/INJN FUEL RL	92-95	Y (LT1)	4	10108672
	3-M24	3.330	STUD, F/INJN FUEL RL	96	Y (LT1, LT4)	4	10108672
7.		N.S.	BATTERY,				
8.	3-B20	2.342	CABLE, BAT POS (AC-DELCO #2CX67-2)	92	Y (LT1, ML9)	1	12157260
	3-B20	2.342	CABLE, BAT POS (W/O CONDUIT & CLIPS) (66"LG) (AC-DELCO #2SX66-2G)	93-96	Y (LT1)	1	12157343
9.	3-B20	2.341	CABLE, BAT NEG (W/O CLIPS & CONDUIT) (AC-DELCO #2XX37-1Y)	92-95	Y (LT1)	1	12157315
	3-B20	2.341	CABLE, BAT NEG (W/O CLIPS & CONDUIT) (AC-DELCO #2XX37-1Y)	96	Y	1	12157315
10.		8.900	BOLT, 1/2-13 X 1 CAD/ZC	92-96		AR	454998
11.	3-A10	2.041	STARTER, (AC-DELCO #10455709)	92-95	Y (LT1)	1	10455709
	3-A10	2.041	STARTER, (AC-DELCO #10455709)	96	Y	1	10455709
12.		8.932	WASHER, EXT TTH LK .500 CZ (BAT NEG CBL)	92-96		AR	135629
13.		8.977	SCREW, HWH, 9.2OD, 13.8 THD	92-96		AR	16516859
14.		N.S.	PLATE, ECM WRG HARN GROM BKG				
15.		N.S.	RIVET, ECM WRG HARN GROM RET				
16.		8.915	NUT-HEX, M8X1.25X4.0, BRASS, PLAIN (AC-DELCO #11509480)	92-96		AR	11509480
17.		8.917	NUT, HFH 6X1X7 SELF LK 14.2-OD (9) 7111M ALL MET PREV TORQ	92-96		AR	11516075
18.		8.900	BOLT, 3/8-16 5/8	92-96		AR	9428638
19.		8.932	WASHER, EXT TTH LK .500 CZ (BAT NEG CBL)	92-96		AR	135629
20.		8.977	SCREW, HEX W/FLAT WA	92-96		AR	12337028

© 2000 GENERAL MOTORS SERVICE PARTS OPERATIONS-CHEVROLET-14Y

							1Y02-027
21.	3-B20	2.341	STRAP, ENG GND	96	Y	1	6266600
	3-B20	2.341	STRAP, ENG GND (10")	02-05	Y (LT1)	1	6266000
22.		6.915	NUT, HEX .375-16X21/64 301M ZC	92-96	....	AR	9414034
23.	3-N8	4.085	STUD, TRANS	92	Y (MD8) (USE W/CTLTC CONV BRACE) (2ND DES)	1	10220063
	3-N8	4.085	STUD, TRANS	93	Y (MD8)	1	10220063
	3-N8	4.085	STUD, TRANS	04-05	Y (M30)	1	10220063
	3-N8	4.085	STUD, TRANS (T/W 1052080) (3/8-16X25/32 BOTH ENDS) (3.275)	92	Y (MD8) (USE W/O CTLTC CONV BRACE) (1ST DES)	1	10085606
24.	3-D11	2.559	PLATE, ECM WRG HARN GROM RET STUD (3.675)	92-96	Y	1	14090618
25.	3-N8	4.115	CONNECTOR, TCC WRG (BLACK) (5-WAY M)	92-93	Y (LT1, MD8)	1	12102612

RPO DEFINITIONS

C60 - AIR CONDITIONER,FRONT,MANUAL CONTROLS
C68 - AIR CONDITIONER,FRONT,AUTOMATIC,ELECTRONIC CONTROLS
LT1 - ENGINE-GAS, 8 CYL, 5.7L(5.7P),MFI,HO
LT4 - ENGINE GAS, 8 CYL, 5.7L, MFI, HIGH OUTPUT
MD8 - TRANSMISSION,AUTOMATIC 4-SPEED(THM700R4/4L60)
ML9 - TRANSMISSION,MANUAL 6-SPEED
M30 - TRANSMISSION,AUTOMATIC 4 SPEED,4L60E,ELECTRONIC
VE1 - PROVISION OPTIONS,JAPAN(EXPORT)

© 2000 GENERAL MOTORS SERVICE PARTS OPERATIONS-CHEVROLET-14Y

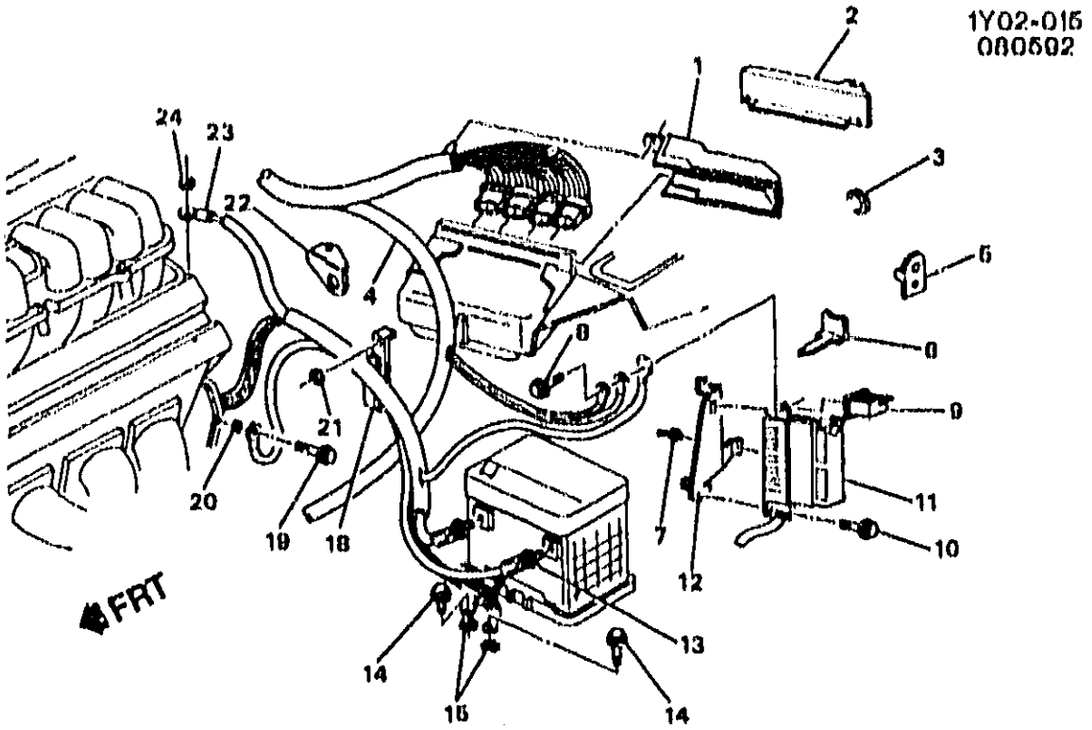

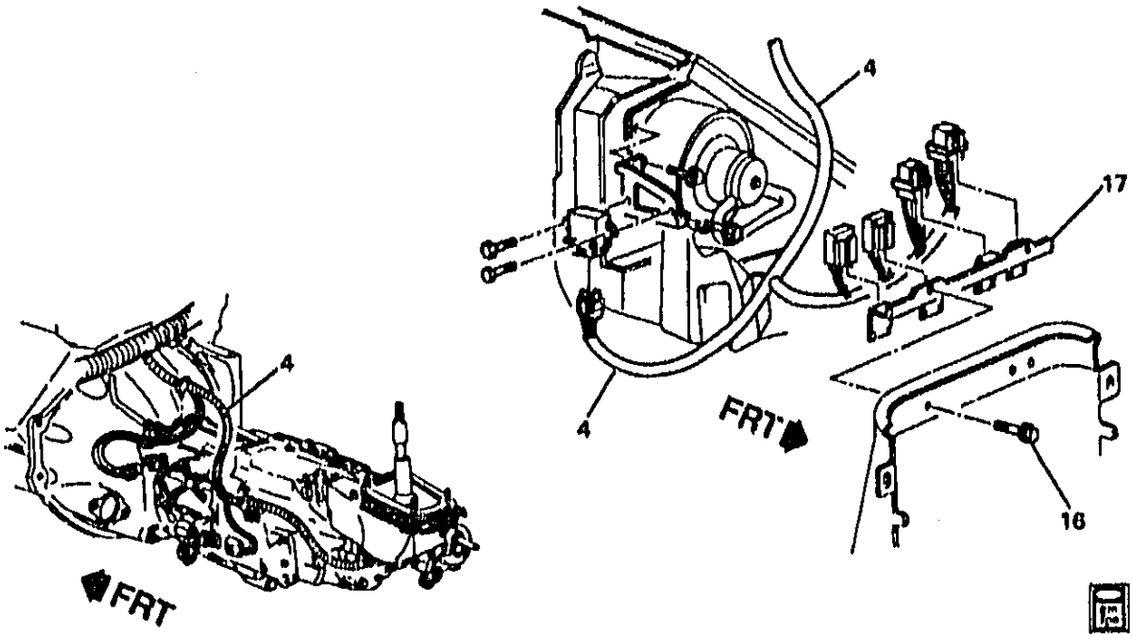

1Y02-015

1993–1995 Y WIRING HARNESS/ENGINE (LT5)

1.	3–D2	2.530	COVER, ENG WRG HARN ECM CONN	93 Y	1	12064802
	3–D2	2.530	COVER, ENG WRG HARN ECM CONN	94–95 Y (LT5)	1	12064802
2.	3–D11	2.559	BRACKET, ENG WRG HARN (STEEL) (LWR LH SI OF BLK NEAR OIL PAN)	93–95 Y (LT5)	1	14104938

© 2000 GENERAL MOTORS SERVICE PARTS OPERATIONS–CHEVROLET–14Y

							1Y02-015
3.	3-D11	2.559	SPACER, ENG WRG HARN BRKT (2.525)	93-95	Y (LT5)	1	14104942
4.	3-C26	2.525	HARNESS, ENG WRG	93-95	Y (LT5)	1	12141078
5.	3-D11	2.559	CLIP, ENG WRG HARN (1 HOLE) (OIL FILTER HSG)	93-95	Y (LT5)	1	14104937
	3-D11	2.559	CLIP, ENG WRG HARN (2 HOLES) (FRT CVR CYL CASE)	93-95	Y (LT5)	1	14104936
6.	3-N23	13.090	RETAINER, BODY WRG HARN CONN (GRAY) (1" LONG) (PUSH-IN) (2.559)	93-95	Y	1	12020033
7.		N.S.	RIVET, ENG WRG HARN FUSE BLK BRKT				
8.		8.900	SCREW, M6X1X30, 11 THD, 12.5 OD, 4.8, 6047M, P-PT (BAT POS CBL)	93-95		AR	11509120
9.	3-B21	2.343	COVER, BAT POS CBL TERM (RED)	93-95	Y	2	12092332
10.		8.977	BOLT, SCR HEX W/FLAT WA 12 DIA TYPE AB (ENG WRG HARN FUSE BLK)	93-95		AR	11509374
11.	3-C20	2.483	BLOCK, PWR DISTR-FUSE (BUS BAR ON RH SIDE) (2.530)	93-95	Y	1	12092231
12.	3-C20	2.483	BRACKET, ENG WRG HARN FUSE BLK (LOCATED BEHIND BATT) (LOCATED BEHIND BATTERY)	93	Y	1	10165313
	3-C20	2.483	BRACKET, ENG WRG HARN FUSE BLK (LOCATED BEHIND BATT) (LOCATED BEHIND BATTERY)	94-95	Y (LT5)	1	10165399
13.	3-B20	2.341	CABLE, BAT NEG (37"LG) (W/O CLIPS & CONDUIT) (AC-DELCO #2SX37-1V)	93-95	Y (LT5)	1	12157286
14.		8.900	BOLT, HFH M8X1.25X21MM, 17 OD, 10.9	93-95		AR	12551177
15.		8.932	WASHER, EXT TOOTH LK ZN 1/4 (AC-DELCO #121753)	93-95		AR	121753
16.		8.977	SCREW, HWH TAP M4.2X1.41X10, 9.2-OD 6010PZOR BLK (MULTIUSE RLY BRKT)	93-95		AR	11509501
17.	3-C20	2.483	BRACKET, MULTIUSE RLY (BLACK) (18.3", 465.0MM LONG) (PLASTIC)	93	Y	1	10240571
	3-C20	2.483	BRACKET, MULTIUSE RLY (5.2", 132 MM LG) (PLASTIC)	93-95	Y	1	10167109
	3-C20	2.483	BRACKET, MULTIUSE RLY	93-95	Y (LT5)	1	10204735
	3-C20	2.483	BRACKET, MULTIUSE RLY	94-95	Y	1	10161867
	3-C20	2.483	BRACKET, MULTIUSE RLY (RIGHT BRKT) (4.0", 102.0 MM LG) (PLASTIC)	93-95	Y	1	10172488
18.	3-B21	2.343	CLIP, BAT CBL	93-95	Y	1	14103364
19.		8.900	BOLT, HEX, M8X1.25X16, FULL, 9.8, PS	93-95		AR	11509589
20.		8.932	WASHER, EXT LK M8X15X1.52 ZC (AC-DELCO #11501869)	93-95		AR	11501869
21.		8.917	NUT, M8X1.25X7.1, ZC 10	93-95		AR	11515748
22.	3-D11	2.559	BRACKET, ENG WRG HARN SHLD	93-95	Y (LT5)	1	14104961

© 2000 GENERAL MOTORS SERVICE PARTS OPERATIONS-CHEVROLET-14Y

							1Y02-015
23.	3-B20	2.342	CABLE, BAT POS (AC-DELCO #2SW36-3)	03-06	Y (LT5)	1	12106506
24.	3-B21	2.343	NUT, BAT POS CBL (0.015) (AC-DELCO #11509480)	03-95	Y (LT5)	1	11509480

RPO DEFINITIONS
LT5 -- ENGINE,5.7L(5.7J),TPI

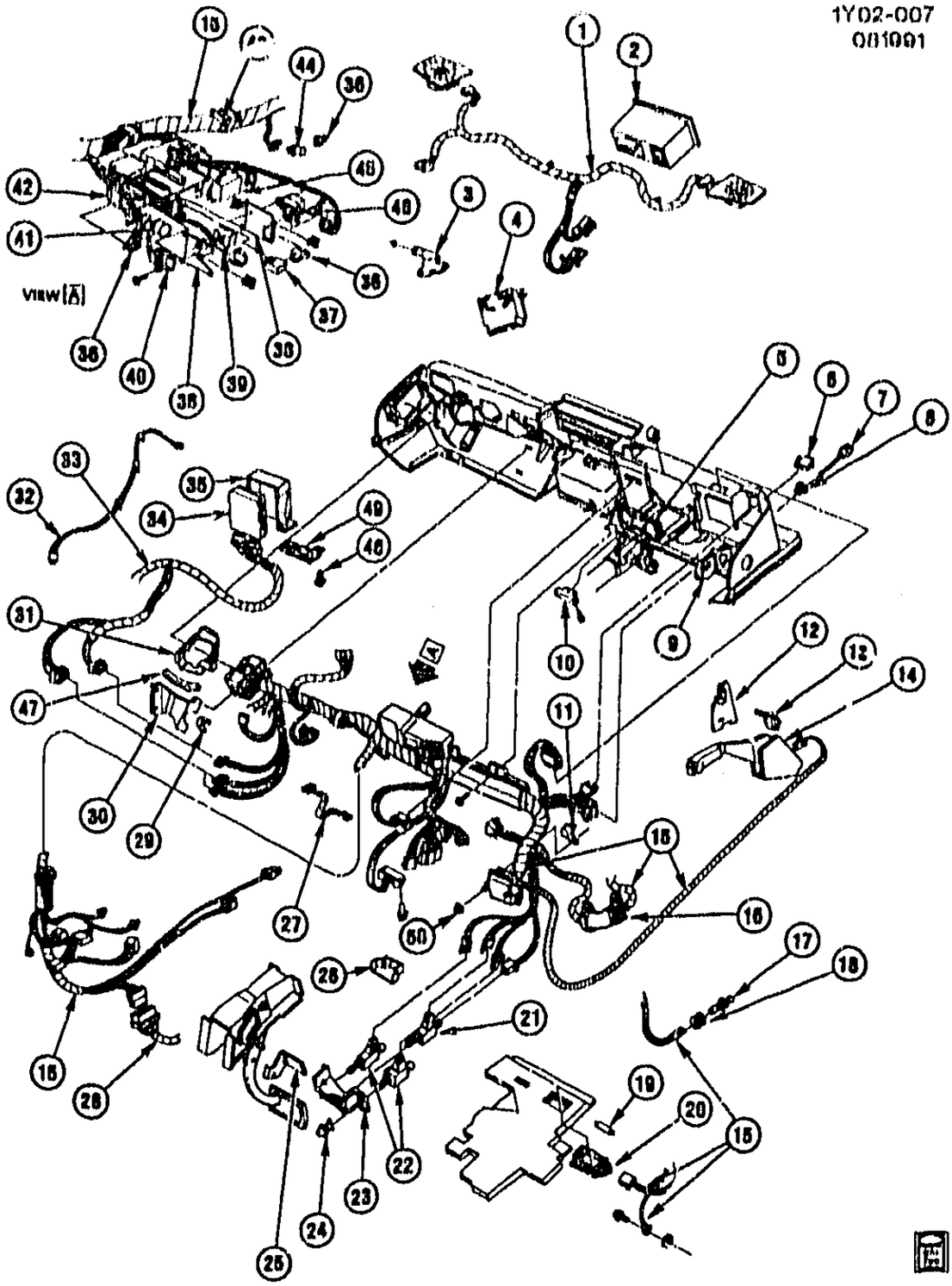

1984–1989 Y WIRING HARNESS/INSTRUMENT PANEL

1.		DISCON	HARNESS, RDO & FRT SPKRS	12016859
2.	3–N14	9.650	RECEIVER ASM, RADIO (SEE PARTS SECTION FOR ADDITIONAL USAGE)	
3.		DISCON	BRACKET, THEFT DETER MDL	10098473
4.	3–A21	2.195	MODULE, THEFT DETER	16158276
5.		DISCON	BRACKET, I/P WRG HARN (1984–86)	14062523

© 2000 GENERAL MOTORS SERVICE PARTS OPERATIONS–CHEVROLET–14Y

6.	3-C23	2.465	SWITCH, FOG LP	14066530
7.	3-C25	2.466	KNOB, W/ROD, HDLP SW	10098728
8.	3-C25	2.467	NUT, HDLP SW	3916710
9.	3-C23	2.465	SWITCH, HDLP (AC-DELCO #D1530A)	1995257
10.	3-C8	2.440	BRACKET, DIAGN CONN	14073479
11.	3-N13	9.275	SWITCH, INST CSTR PASS COMPT AIR TEMP	14073404
12.		DISCON	SHIELD, I/P WRG HARN TO PK BRK LVR (1984-86)	14066582
13.	3-N9	4.589	SWITCH, PK BRK IND (1984-88)	14047181
	3-N9	4.589	SWITCH, PK BRK IND (1989)	10136720
14.		DISCON	LEVER, PK BRK (1984-87)	14105127
	3-N9	4.591	LEVER, PK BRK (1988-89)	12529393
15.		N.S.	HARNESS, I/P (1984) (INCL 32, 40) (SEE PARTS SECTION FOR ADDITIONAL USAGE)	
		N.S.	HARNESS, I/P (1985-89) (INCL 32, 40) (SEE PARTS SECTION FOR ADDITIONAL USAGE)	
16.	3-D2	2.530	CONDUIT, SI DR ELEC WRG-LH	10098907
	3-D2	2.530	CONDUIT, SI DR ELEC WRG-RH	10098907
17.	3-N22	11.950	SWITCH, DR JAMB (AC-DELCO #D6030)	10045860
18.	3-N22	11.950	SEAL, DR JAMB SW	20057139
19.		8.991	BULB, 4CP (NO 563)	
20.	3-N22	11.927	LAMP, CTSY	10199743
21.	3-C8	2.447	SWITCH, S/LP (CR/CONT) (1984-86) (AC-DELCO #D850A)	25524846
	3-C8	2.447	SWITCH, S/LP (M.T. EXC CR/CONT) (1984-86) (AC-DELCO #D889)	25524844
	3-C8	2.447	SWITCH, S/LP (A.T. EXC CR/CONT) (1984-86) (AC-DELCO #D851A)	25524848
	3-C8	2.447	SWITCH, S/LP (A.T. EXC CR/CONT) (1987) (AC-DELCO #D853A)	25529861
	3-C8	2.447	SWITCH, S/LP (M.T. EXC CR/CONT) (1987) (AC-DELCO #D854A)	25529862
	3-C8	2.447	SWITCH, S/LP (CR/CONT 1987) (1988-89) (AC-DELCO #D852A)	25529860
22.	3-N7	3.885	VALVE, CR/CONT VAC & TRANS CONV REL (AC-DELCO #212-346)	1645516
	3-N7	3.883	SWITCH, CR/CONT VAC REL	14043256
23.	3-C8	2.447	BRACKET, S/LP SW	14053686
24.	3-N7	3.885	RETAINER, CR/CONT VAC REL VLV (1984-85)	1612303
	3-C8	2.447	RETAINER, S/LP SW (AC-DELCO #22534155)	22534155
25.		DISCON	ACTUATOR, S/LP SW	14047682
26.	3-C8	2.440	COVER, ENG FUNC DIAGN CONN	10021766
27.		N.S.	WIRE, ANTI-THEFT DR LK JPR (MAKE FROM 20 GAGE BULK WIRE & CONNECTORS 8905220, 8905222 & 8900524)	
28.		DISCON	HARNESS, FRT FLR CNSL WRG (1984-86) (SEE GROUP 2.000 "WIRING HARNESS/INSTRUMENT PANEL" FOR DETAIL ILLUSTRATED VIEW.)	12029153
		DISCON	HARNESS, FRT FLR CNSL WRG (1987-89)	12067418
29.		8.965	CONDUIT, ELECT (.350 I.D.)	8919354
30.		DISCON	SUPPORT, I/P CTR	14047475
31.	3-C20	2.463	BRACKET, FUSE PNL	14062568
32.		DISCON	HARNESS, VANITY MIR LP WRG (1984-85) (PART OF 15)	12028667
		N.S.	HARNESS, VANITY MIR (1986-88) (PART OF 15)	
33.		DISCON	HARNESS, ECM WRG (SEE PARTS SECTION FOR ADDITIONAL USAGE)	12028754
34.	3-M25	3.670	CONTROLLER, ECM (SEE PARTS SECTION FOR ADDITIONAL USAGE)	
	3-M25	3.670	EPROM, ECM (SEE PARTS SECTION FOR ADDITIONAL USAGE)	
35.		DISCON	BRACKET, ECM UPR (1984)	14062576
	3-N3	3.671	BRACKET, ECM UPR (1985-89)	14080604
		DISCON	COVER, ECM BRKT	14080605
36.	3-E5	2.892	CLIP, FLSHR	25534019
37.	3-E4	2.815	RELAY, HORN (AC-DELCO #D1776)	25523703

© 2000 GENERAL MOTORS SERVICE PARTS OPERATIONS-CHEVROLET-14Y

38.		N.S.	PARTITION (PART OF 42)	
39.	3-N26	13.095	RELAY, DR LK (1984-85) (AC-DELCO #D1707A)	22544050
40.		N.S.	HOLDER, FUSE (PART OF 15)	
41.	3-D15	2.575	FLASHER, HAZARD LP (AC-DELCO #SF552)	491391
42.		DISCON	BRACKET, MULTIUSE RLY (1984-85) (INCL 30)	14062512
		DISCON	HOUSING, I/P CONVENIENCE CTR (1986-89) (INCL 38)	14093116
43.	3-C23	2.465	SWITCH, HDLP (AC-DELCO #10098435)	10098435
44.	3-E5	2.892	FLASHER, T/SIG LP (AC-DELCO #SF323YB)	10041073
45.	3-A21	2.195	ALARM, ST BELT, IGN KEY & LPS (1984)	14062571
	3-A21	2.195	ALARM, ST BELT, IGN KEY & LPS (1985-89)	10037040
46.	3-A21	2.195	RELAY, THEFT DETER (1984-85)	1616422
	3-A21	2.195	RELAY, THEFT DETER (1986-89) (AC-DELCO #14093107)	14093107
47.	3-N13	9.260	SEAL, POLYURETHANE (M59.50X1.25X.75)	3999572
48.		8.977	SCREW, SEMS HEX W/FL WA (M6.3X1.81X20) PZOR	12337828
49.		DISCON	COVER, ELEK FUEL CONT MDL HSG (1985-89)	14060605
50.		8.915	NUT - M4 X 0.7 (NUT, I/P WRG HARN BHD CONN) (AR)	11505175

© 2000 GENERAL MOTORS SERVICE PARTS OPERATIONS-CHEVROLET-14Y

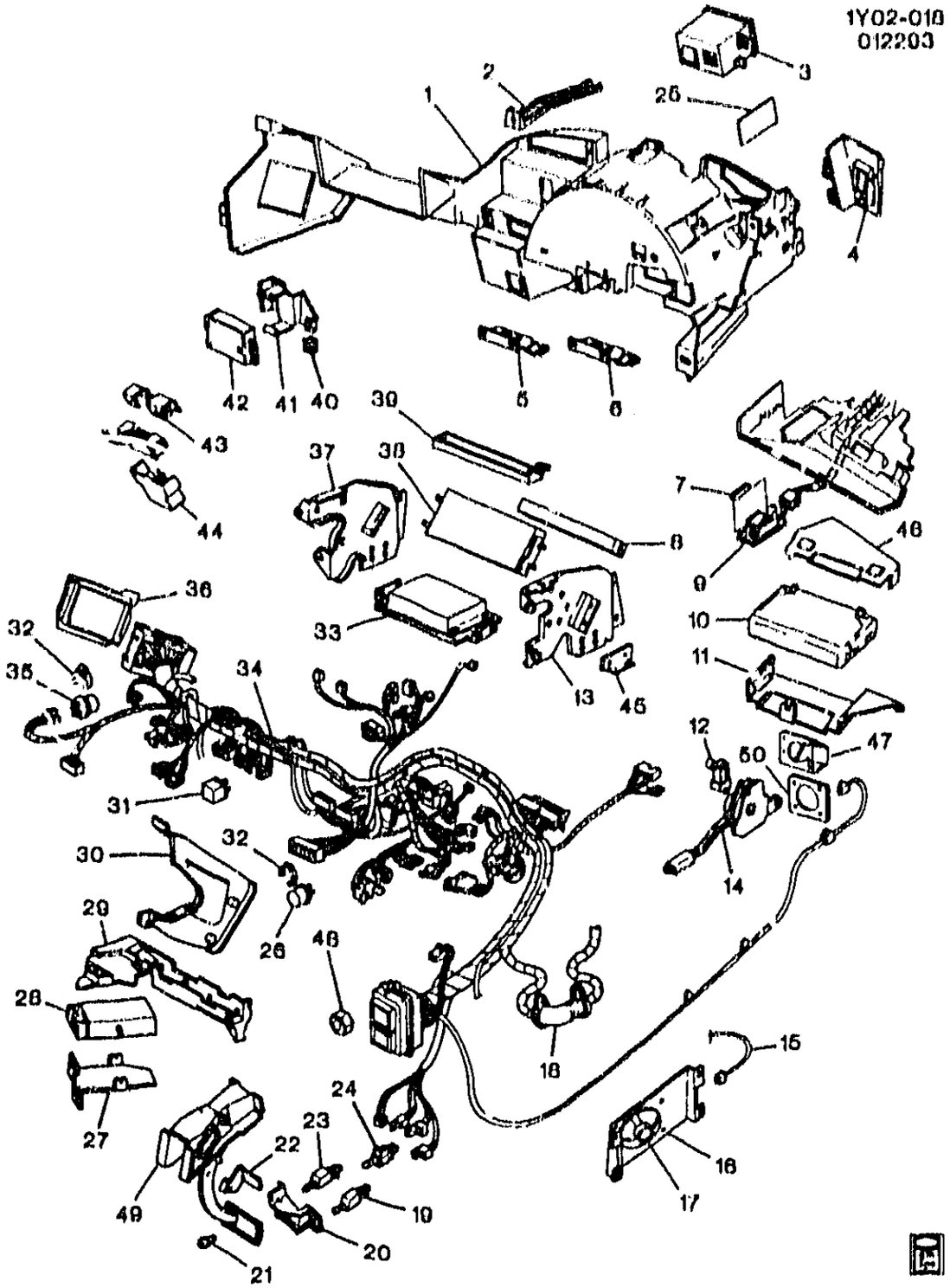

1990 Y WIRING HARNESS/INSTRUMENT PANEL

1.	3-N19	10.230	PANEL, INST (INCLS 5-6, 25) . . .	90 Y	1	10167108
2.	3-N19	10.230	BRACE, I/P UPR	90 Y	LH	10085003
3.		N.S.	CONTROL, AM/FM STEREO & CLK & T/PLYR RDO (SEE GROUP 9.000 "AUDIO SYSTEM" FOR DETAILED ILLUSTRATED VIEW) .	. . . . .		

© 2000 GENERAL MOTORS SERVICE PARTS OPERATIONS--CHEVROLET-14Y

							1Y02-010
4.	3-C23	2.485	SWITCH, HDLP & I/P LP DIMR & ACSRY (W/HSG) (CPS) (AC-DELCO #D1527C)	90	Y	1	10098487
	3-C23	2.485	LAMP, HDLP SW (FOG LP) (CARTRIDGE TYPE-CLEAR BULB W/ORANGE CAP)	90	Y	1	10159661
	3-C25	2.487	LAMP, FOG LP SW (2.485)	90	Y	1	12506368
5.	3-C20	2.483	BRACKET, MULTIUSE RLY (PART OF 1) (4.0", 102.0 MM LG) (PLASTIC)	90	Y	RH	10172488
6.	3-C20	2.483	BRACKET, MULTIUSE RLY (PART OF 1) (5.2", 132.0 MM LG) (PLASTIC)	90	Y	LH	10175642
7.		6.991	BULB, 12CP ID 561 (R/CMPT C/LP) (AC-DELCO #L561)	90	.....	AR	9433040
8.	3-N21	10.236	BRACE, I/P DRVR KNEE BOLS INR BRKT	90	Y	1	10259399
9.	3-N22	11.927	LAMP, CTSY (USED W/9433040 BULB)	90	Y	1	10199743
10.	3-M23	3.670	MODULE, ENG CONT (REMAN) (1227727 LABELED) (AC-DELCO #16198260)	90	Y (L98)	1	16198260
	3-M25	3.670	MODULE, ENG CONT (REMAN) (1228331 LABELED) (AC-DELCO #1228331)	90	Y (LT5, FE1, FE7)	1	1228331
	3-M25	3.670	EPROM, ECM (1875ASXB) (AC-DELCO #16137184)	90	Y07 (L98, MD8, GM1) ..	1	16137184
	3-M25	3.670	EPROM, ECM (4204ANHW) (AC-DELCO #16134293)	90	Y (L98, GU2)	1	16134293
	3-M25	3.670	EPROM, ECM (4208ANHT) (AC-DELCO #16134297)	90	Y (L98, G44)	1	16134297
	3-M25	3.670	EPROM, ECM (4303ANHU) (AC-DELCO #16134302)	90	Y (L98, GM1)	1	6134302
	3-M25	3.670	EPROM, ECM (7185ARFP) (AC-DELCO #16137184)	90	Y (L98, ML9)	1	16137184
	3-M25	3.670	EPROM, ECM (9718ANHX, 8555AUAH, 4168AYBK)	90	Y (LT5)	1	16163905
11.	3-N3	3.671	HOUSING, ECM	90	Y	1	10086259
12.	3-N9	4.589	SWITCH, PARK BRK IND	90	Y	1	10136720
13.		DISCON	BRACKET, I/P DRVR KNEE BOLS INR (10.230)	90	Y	LH	10175531
14.	3-N9	4.591	LEVER, PARK BRK	90	Y	1	12529393
15.		DISCON	HARNESS, RDO FRT SPKR WRG	90	Y (EXC UX0)	1	12073817
		DISCON	HARNESS, RDO FRT SPKR WRG	90	Y (UX0)	1	12090338
		DISCON	HARNESS, RDO FRT SPKR WRG	90	Y (UX0)	1	12090338
16.	3-N15	9.655	PLATE, RDO FRT SPKR MT	90	Y (UM6)	RH	10098450
	3-N15	9.655	PLATE, RDO FRT SPKR MT	90	Y (UM6)	LH	10098451
17.	3-N14	9.650	SPEAKER, RDO FRT (AC-DELCO #16033362)	90	Y (EXC UX0)	2	16033362
	3-N14	9.650	SPEAKER, RDO FRT (AC-DELCO #16166471)	90	Y07 (UX0)	RH	16166471
	3-N14	9.650	SPEAKER, RDO FRT (AC-DELCO #16166481)	90	Y07 (UX0)	LH	16166481
	3-N14	9.650	SPEAKER, RDO FRT (AC-DELCO #16166491)	90	Y67 (UX0)	RH	16166491
	3-N14	9.650	SPEAKER, RDO FRT (AC-DELCO #16166501)	90	Y67 (UX0)	LH	16166501
18.	3-D2	2.530	CONDUIT, S/D WRG	90	Y	2	10098907

© 2000 GENERAL MOTORS SERVICE PARTS OPERATIONS-CHEVROLET-14Y

							1Y02-010
19.	3-N7	3.885	VALVE, CRCONT VAC REL (ON CLU) (3.883)	90	Y (ML0, FE1, FE7)	1	14043250
20.	3-C8	2.447	BRACKET, S/LP SW	90	Y	1	10097689
21.	3-N7	3.885	RETAINER, CRCONT VAC REL VLV (3.887)	90	Y	1	10075405
22.		DISCON	ACTUATOR, S/LP SW (2.447)	90	Y	1	14047682
23.	3-N7	3.885	VALVE, CRCONT VAC REL (ON BRK) (W/SW) (AC-DELCO #212-346)	90	Y	1	1645516
24.	3-C8	2.447	SWITCH, S/LP (AC-DELCO #D862A)	90	Y	1	25529060
25.	3-N19	10.230	INSULATOR, I/P (PART OF 1) (9.260)	90	Y	1	3999572
26.	3-E5	2.692	FLASHER, T/SIG LP (YELLOW) (AC-DELCO #6F323YB)	90	Y	1	10041073
27.		DISCON	BRACKET, I/P WRG HARN	90	Y	1	10165378
28.		N.S.	RADIO, AM/FM STEREO (AVAILABLE ONLY THROUGH AC DELCO SERVICE CENTERS)				
		N.S.	RADIO, AM/FM STEREO & CLK (AVAILABLE ONLY THROUGH AC DELCO SERVICE CENTERS)				
		N.S.	RADIO, AM/FM STEREO & CLK & T/PLYR (AVAILABLE ONLY THROUGH AC DELCO SERVICE CENTERS)				
		N.S.	RADIO, AM/FM STEREO & CLK & T/PLYR & CD PLYR (AVAILABLE ONLY THROUGH AC DELCO SERVICE CENTERS)				
29.	3-C20	2.463	BRACKET, MULTIUSE RLY (BLACK) (18.3", 465.0MM LONG) (PLASTIC)	90	Y	1	10240571
30.		DISCON	BRACKET, I/P PASS KNEE BOLS OTR (10.235)	90	Y	RH	10085944
31.	3-A17	2.100	RELAY, STRTR (BLACK) (5-WAY) (9.277) (AC-DELCO #15-8426)	90	Y	1	14100455
	3-N7	3.900	RELAY, F/PMP (BLACK) (5-WAY) (9.277) (AC-DELCO #15-8426)	90	Y	1	14100455
	3-N14	9.277	RELAY, A/C CMPR (BLACK) (5-WAY) (AC-DELCO #15-8426)	90	Y	1	14100455
	3-N14	9.650	RELAY, RDO SPKR AMPF (BLACK) (5-WAY) (9.277) (AC-DELCO #15-8426)	90	Y (UU8, U1F)	1	14100455
32.	3-D15	2.575	CLIP, HAZARD LP FLSHR (2.692)	90	Y	2	25534019
33.	3-N23	14.865	MODULE, INFL RST RESV ENGY	90	Y	1	10094618
		DISCON	BRACKET, INFL RST CONT MDL (2 WELDED NUTS & 6 STUDS)	90	Y	1	10085936
34.		N.S.	HARNESS, I/P WRG				
35.	3-D15	2.575	FLASHER, HAZARD LP (1 1/2" DIA) (6 LP FLSHR) (AC-DELCO #SF552)	90	Y	1	491391
36.	3-C20	2.463	BRACKET, I/P WRG HARN FUSE BLK	90	Y	1	14062568
37.		DISCON	BRACKET, I/P PASS KNEE BOLS INR (10.230)	90	Y	RH	10175532
38.	3-D15	2.560	MODULE, BODY CONT (REMAN)	90	Y	1	16146688

© 2000 GENERAL MOTORS SERVICE PARTS OPERATIONS-CHEVROLET-14Y

							1Y02-016
39.	3-N16	9.743	CARRIER, INST (UPR) (10.230) ..	90	Y	1	10086247
40.		8.921	NUT, U TYPE, MULTI THD, PREV TORQ, M4.2X1.41TAP 8.1REACH, 0.65-3.00 PNLS 1065 PZOR (ST BELT & IGN KEY & LPS ALARM) (AC-DELCO #11513599)	90	.....	AR	11513599
41.	3-A21	2.195	BRACKET, ST BELT & IGN KEY & LPS ALARM	90	Y	1	10098454
42.	3-N16	9.765	ALARM, ST BELT & IGN KEY & LPS	90	Y	1	25518745
	3-C9	2.461	ALARM, ST BELT & IGN KEY & LPS (0.765)	90	Y	1	25518745
43.	3-C8	2.440	BRACKET, I/P WRG HARN ECM DATA LINK CONN (DIAG CONN) .	90	Y	1	14073479
44.	3-C8	2.440	COVER, I/P WRG HARN DATA LINK CONN	90	Y	1	10021766
45.	3-N26	14.665	BRACKET, INFL RST CONT MDL (4 HOLES, L-SHAPED, POSN #1)	90	Y	LH	10086086
	3-N26	14.665	BRACKET, INFL RST CONT MDL (4 HOLES, L-SHAPED, POSN #1)	90	Y	RH	10086177
46.	3-D2	2.530	COVER, ENG WRG HARN ECM CONN (2.525)	90	Y	1	10098903
47.	3-N3	3.671	BRACKET, ECM (INCL 50)	90	Y	1	10143544
48.		6.915	NUT - M4 X 0.7 (I/P WRG HARN BHD CONN)	90	.....	2	11505175
49.		N.S.	PEDAL, BRK (W/BRKT) (SEE GROUP 4.000 "BRAKE PEDAL & MASTER CYLINDER MOUNTING" FOR DETAILED ILLUSTRATED VIEW.)		.....		
50.	3-N10	4.805	SEAL, P/B BOOS (ECM BRKT TO BOOS) (PART OF 47) (4.910)	90	Y (L98)	1	14089147
	3-N10	4.805	SEAL, P/B BOOS (ECM BRKT TO FIRE WALL) (PART OF 47) (4.545)	90	Y	1	10097675

RPO DEFINITIONS
FE1 - SUSPENSION SYSTEM,SOFT RIDE
FE7 - SUSPENSION SYSTEM,FRONT AND REAR,HEAVY DUTY(USED WITH PERFORMANCE HANDLING PACKAGE Z51)
GM1 - AXLE,REAR,2.59 RATIO
GU2 - AXLE,REAR,2.73 RATIO
G44 - AXLE,REAR,3.07 RATIO
LT5 - ENGINE,5.7L(5.7J),TPI
L98 - ENGINE, 5.7L, (5.7-8) 350 CID, V8, TPI
MD8 - TRANSMISSION,AUTOMATIC 4-SPEED(THM700R4/4L60)
ML9 - TRANSMISSION,MANUAL 6-SPEED
UM6 - RADIO,AM/FM STEREO,CASSETTE,ETR,INCLUDES CLOCK
UU8 - RADIO,AM/FM STEREO,CASSETTE,ETR,DELCO/BOSE,DOLBY,INCLUDES CLOCK
UX0 - SPEAKER SYSTEM,SIX,DUAL FLOOR SILL,DUAL EXTENDED RANGE SAIL PANEL
U1F - RADIO,AM/FM STEREO,CASSETTE,C.D. PLAYER,ETR,BOSE,INCLUDES CLOCK

© 2000 GENERAL MOTORS SERVICE PARTS OPERATIONS-CHEVROLET-14Y

MICROFICHE INDEX

GROUP 2.000

FICHE 3 OF 11

GROUP	DESCRIPTION	STARTING GRID LOCATION PARTS	ILLUSTRATIONS
--	GENERAL INFORMATION	1-A2	1-G2
--	ALPHABETICAL INDEX	1-B13	N.A.
2.000	CHASSIS WIRING - LAMPS	3-A2	3-F2
--	OUT OF FICHE CALLS	N.A.	3-M20

3-11

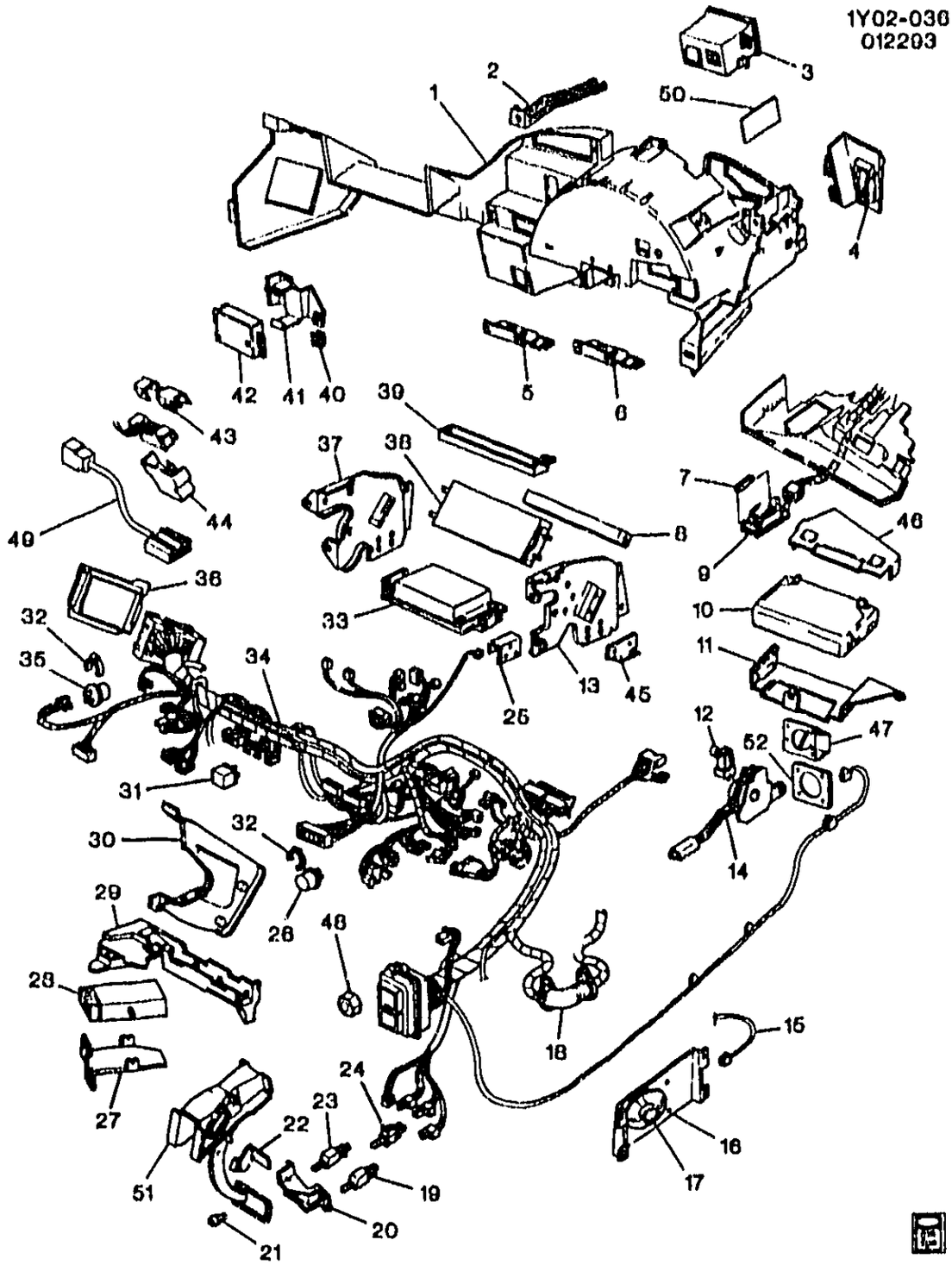

1Y02-036

1991 Y WIRING HARNESS/INSTRUMENT PANEL

1.	3-N19	10.230	PANEL, INST (INCLS 5-6, 50) . . .	91 Y	1	10167108
2.	3-N19	10.230	BRACE, I/P UPR	91 Y	LH	10085903
3.		N.S.	CONTROL, AM/FM STEREO & CLK & T/PLYR RDO (SEE GROUP 9.000 "AUDIO SYSTEM" FOR DETAILED ILLUSTRATED VIEW.) .	. . . . .		

© 2000 GENERAL MOTORS SERVICE PARTS OPERATIONS - CHEVROLET - 14Y

							1Y02-036
4.	3-C23	2.486	SWITCH, HDLP & I/P LP DIMR & ACSRY (W/HSG) (CPS) (AC-DELCO #D1587C)	91	Y	1	10098467
	3-C23	2.486	LAMP, HDLP SW (FOG LP) (CARTRIDGE TYPE-CLEAR BULB W/ORANGE CAP)	91	Y	1	10159561
	3-C25	2.487	LAMP, FOG LP SW (2.485)	91	Y	1	12506368
5.	3-C20	2.483	BRACKET, MULTIUSE RLY (PART OF 1) (4.0", 102.0 MM LG) (PLASTIC)	91	Y	1	10172488
6.	3-C20	2.483	BRACKET, MULTIUSE RLY (PART OF 1) (5.2", 132.0 MM LG) (PLASTIC)	91	Y	1	10175542
7.		6.991	BULB, 12CP ID 561 (R/CMPT C/LP) (AC-DELCO #L561)	91	.....	AR	9433040
8.	3-N21	10.235	BRACE, I/P DRVR KNEE BOLS INR BRKT	91	Y	1	10259399
9.	3-N22	11.927	LAMP, CTSY (USED W/9433040 BULB)	91	Y	1	10189743
10.	3-M25	3.670	MODULE, ENG CONT (REMAN) (1227727 LABELED) (AC-DELCO #16198260)	91	Y (L98)	1	16198260
	3-M25	3.670	MODULE, ENG CONT (REMAN) (1228331 LABELED) (AC-DELCO #1228331)	91	Y (LT5, FE1, FE7)	1	1228331
	3-M25	3.670	EPROM, ECM (0706ARYU, 9806AXCN) (AC-DELCO #16159798)	91	Y (L98, ML9)	1	16159798
	3-M25	3.670	EPROM, ECM (0710ARYW, 9814AXCP) (AC-DELCO #16159799)	91	Y (L98, G44)	1	16159799
	3-M25	3.670	EPROM, ECM (0714ARYX, 9819AXCR) (AC-DELCO #16159800)	91	Y (L98, GM1)	1	16159800
	3-M25	3.670	EPROM, ECM (0718ARYY, 9826AXCS) (AC-DELCO #16159802)	91	Y (L98, GU2)	1	16159802
	3-M25	3.670	EPROM, ECM (8992ARZR, 0277AXFK, 3417BFXB) (AC-DELCO #16193416)	91	Y (LT5)	1	16193416
11.	3-N3	3.671	HOUSING, ECM	91	Y	1	10086259
12.	3-N9	4.589	SWITCH, PARK BRK IND	91	Y	1	10136720
13.		DISCON	BRACKET, I/P DRVR KNEE BOLS INR	91	Y	1	10211797
14.	3-N9	4.591	LEVER, PARK BRK	91	Y	1	12529393
15.		DISCON	HARNESS, RDO FRT SPKR WRG	91	Y (EXC UX0)	1	12073817
		DISCON	HARNESS, RDO FRT SPKR WRG	91	Y (UX0)	1	12106518
16.	3-N15	9.655	PLATE, RDO FRT SPKR MT	91	Y (UM6)	RH	10098450
	3-N15	9.655	PLATE, RDO FRT SPKR MT	91	Y (UM6)	LH	10098451
17.	3-N14	9.350	SPEAKER, RDO FRT (AC-DELCO #16033662)	91	Y (EXC UX0)	2	16033662
	3-N14	9.650	SPEAKER, RDO FRT (AC-DELCO #16166471)	91	Y07 (UX0)	RH	16166471
	3-N14	9.650	SPEAKER, RDO FRT (AC-DELCO #16166481)	91	Y07 (UX0)	LH	16166481
	3-N14	9.650	SPEAKER, RDO FRT (AC-DELCO #16166491)	91	Y67 (UX0)	RH	16166491

							1Y02-036
	3-N14	9.650	SPEAKER, RDO FRT (AC-DELCO #16166501)	91	Y07 (UX0)	LH	16166501
18.	3-D2	2.530	CONDUIT, S/D WRG	91	Y	2	10098907
19.	3-N7	3.885	VALVE, CRCONT VAC REL (ON CLU) (3.883)	91	Y (ML9, FE1, FE7)	1	14043256
20.	3-C8	2.447	BRACKET, S/LP SW	91	Y	1	10097689
21.	3-N7	3.885	RETAINER, CRCONT VAC REL VLV (3.887)	91	Y	1	10078405
22.		N.S.	ACTUATOR, S/LP SW		.....		
23.	3-N7	3.885	VALVE, CRCONT VAC REL (ON BRK) (W/SW) (AC-DELCO #212-346)	91	Y	1	1645516
24.	3-C8	2.447	SWITCH, S/LP (AC-DELCO #D852A)	91	Y	1	25529660
25.		DISCON	BRACKET, INFL RST CONT MDL (HAS 4 HOLES) (J-SHAPED) (POSN #2)	91	Y	LH	10211797
26.	3-E5	2.692	FLASHER, T/SIG LP (YELLOW) (AC-DELCO #SF323YB)	91	Y	1	10041073
27.		DISCON	BRACKET, I/P WRG HARN	91	Y	1	10165378
28.		N.S.	RADIO, AM/FM STEREO (AVAILABLE ONLY THROUGH AC DELCO SERVIE CENTERS)		.....		
		N.S.	RADIO, AM/FM STEREO & CLK (AVAILABLE ONLY THROUGH AC DELCO SERVICE CENTERS)		.....		
		N.S.	RADIO, AM/FM STEREO & CLK & T/PLYR & CD PLYR (AVAILABLE ONLY THROUGH AC DELCO SERVICE CENTERS)		.....		
29.	3-C20	2.483	BRACKET, MULTIUSE RLY (BLACK) (18.3", 465.0MM LONG) (PLASTIC)	91	Y	1	10240571
30.		DISCON	BRACKET, I/P PASS KNEE BOLS OTR	91	Y	RH	10085944
31.	3-C25	2.510	RELAY, STRTR (BLACK) (5-WAY) (9.277) (AC-DELCO #15-8426)	91	Y	1	14100455
	3-N7	3.900	RELAY, F/PMP (BLACK) (5-WAY) (9.277) (AC-DELCO #15-8426)	91	Y	1	14100455
	3-N14	9.277	RELAY, A/C CMPR (BLACK) (5-WAY) (AC-DELCO #15-8426)	91	Y	1	14100455
	3-N14	9.650	RELAY, RDO SPKR AMPF (BLACK) (5-WAY) (9.277) (AC-DELCO #15-8426)	91	Y (UU8, U1F)	1	14100455
32.	3-D15	2.575	CLIP, HAZARD LP FLSHR (2.692)	91	Y	2	25534019
33.	3-N26	14.865	MODULE, INFL RST DIAGN ENGY RESV (REMAN) (DERM) (AC-DELCO #1228874)	91	Y	1	1228874
		DISCON	BRACKET, INFL RST CONT MDL (2 WELDED NUTS, 4 WELDED STUDS)	91	Y	1	10193723
34.	3-C9	2.480	HARNESS, I/P WRG	91	Y (MD8, C60) (EXC T61)	1	12116436
	3-C9	2.480	HARNESS, I/P WRG	91	Y (ML9, C60) (EXC T61)	1	12116438

© 2000 GENERAL MOTORS SERVICE PARTS OPERATIONS-CHEVROLET-14Y

							1Y02-035
	3-C9	2.480	HARNESS, I/P WRG (MAY REQ 12106563 WIRE IF JMPR PRESENT AT THE PWR SEAT FEED)	91	Y (MG8, C68) (EXC T61)	1	12116500
	3-C9	2.480	HARNESS, I/P WRG	91	Y (MLO, C68) (EXC T61)	1	12116502
35.	3-D15	2.575	FLASHER, HAZARD LP (1 1/2" DIA) (6 LP FLSHR) (AC-DELCO #SF552)	91	Y	1	491391
36.	3-C20	2.483	BRACKET, I/P WRG HARN FUSE BLK	91	Y	1	14062560
37.		DISCON	BRACKET, I/P PASS KNEE BOLS INR	91	Y	1	10175591
38.	3-D15	2.560	MODULE, BODY CONT (REMAN)	91	Y	1	16156502
39.	3-N18	9.743	CARRIER, INST (UPR) (10.230) ..	91	Y	1	10086247
40.		8.921	NUT, U TYPE, MULTI THD, PREV TORQ, M4.2X1.41TAP, 8.1REACH, 0.65-3.80 PNLS 1065 PZOR (ST BELT & IGN KEY & LPS ALARM) (AC-DELCO #11513599)	91	.....	AR	11513599
41.	3-A21	2.195	BRACKET, ST BELT & IGN KEY & LPS ALARM	91	Y	1	10098464
42.	3-N18	9.765	ALARM, ST BELT & IGN KEY & LPS	91	Y	1	25518745
	3-C9	2.461	ALARM, ST BELT & IGN KEY & LPS (9.765)	91	Y	1	25518745
43.	3-C8	2.440	BRACKET, I/P WRG HARN ECM DATA LINK CONN (DIAG CONN) .	91	Y	1	14073479
44.	3-C8	2.440	COVER, I/P WRG HARN DATA LINK CONN	91	Y	1	10021766
45.	3-N26	14.865	BRACKET, INFL RST CONT MDL (4 HOLES, L-SHAPED, POSN #1)	91	Y	RH	10086177
	3-N26	14.865	BRACKET, INFL RST CONT MDL (4 HOLES, L-SHAPED, POSN #1)	91	Y	LH	10086086
46.	3-D2	2.530	COVER, ENG WRG HARN ECM CONN (2.525)	91	Y (LT5)	1	10096903
	3-D2	2.530	COVER, ENG WRG HARN ECM CONN	91	Y (L98)	1	12064602
47.	3-N3	3.671	BRACKET, ECM (INCLS 52)	91	Y	1	10143544
48.		8.915	NUT - M4 X 0.7 (I/P WRG HARN BHD CONN)	91	.....	2	11505170
49.	3-C9	2.480	HARNESS, ENG PWR SW WRG (I/P TO VALET MODE SW) (USE W/4 PIN ENG PWR SW CONN) ..	91	Y (LT5)	1	12106549
50.	3-N19	10.230	INSULATOR, I/P (PART OF 1) (9.260)	91	Y	1	3999572
51.		N.S.	PEDAL, BRK (W/BRKT) (SEE GROUP 4.000 "BRAKE PEDAL & MASTER CYLINDER MOUNTING" FOR DETAIL ILLUSTRATED VIEW.)		.....		
52.	3-N10	4.805	SEAL, P/B BOOS (ECM BRKT TO BOOS) (PART OF 47) (4.910)	91	Y (L98)	1	14081147
	3-N10	4.805	SEAL, P/B BOOS (ECM BRKT TO FIRE WALL) (PART OF 47) (4.845)	91	Y	1	10097675

RPO DEFINITIONS
C60 - AIR CONDITIONER,FRONT,MANUAL CONTROLS

C60 – AIR CONDITIONER,FRONT,AUTOMATIC,ELECTRONIC CONTROLS
FE1 – SUSPENSION SYSTEM,SOFT RIDE
FE7 – SUSPENSION SYSTEM,FRONT AND REAR,HEAVY DUTY(USED WITH PERFORMANCE HANDLING PACKAGE Z51)
GM1 – AXLE,REAR,2.50 RATIO
GU2 – AXLE,REAR,2.73 RATIO
G44 – AXLE,REAR,3.07 RATIO
LT6 – ENGINE,5.7L(5.7J),TPI
L98 – ENGINE, 5.7L, (5.7–8) 350 CID, V8, TPI
MD0 – TRANSMISSION,AUTOMATIC 4–SPEED(THM700R4/4L60)
ML9 – TRANSMISSION,MANUAL 6–SPEED
T61 – LIGHTING,DAYTIME RUNNING
UM6 – RADIO,AM/FM STEREO,CASSETTE,ETR,INCLUDES CLOCK
UU9 – RADIO,AM/FM STEREO,CASSETTE,ETR,DELCO/BOSE,DOLBY,INCLUDES CLOCK
UX0 – SPEAKER SYSTEM,SIX,DUAL FLOOR SILL,DUAL EXTENDED RANGE SAIL PANEL
U1F – RADIO,AM/FM STEREO,CASSETTE,C.D. PLAYER,ETR BOSE,INCLUDES CLOCK

© 2000 GENERAL MOTORS SERVICE PARTS OPERATIONS–CHEVROLET–14Y

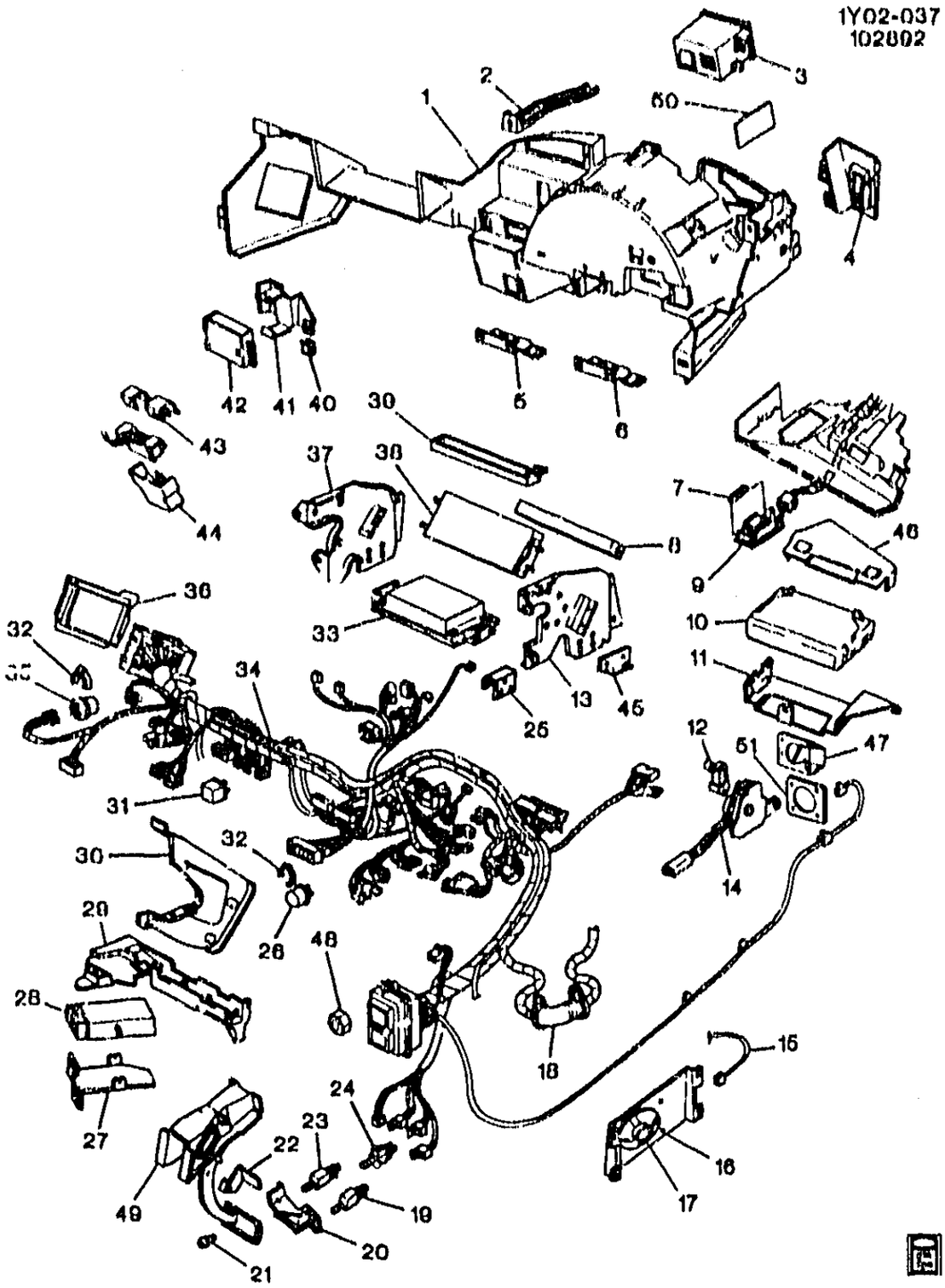

1Y02-037

1992 Y WIRING HARNESS/INSTRUMENT PANEL

1.	3-N19	10.230	PANEL, INST (INCLS 5-6, 50) . . .	92 Y	1	10167108
2.	3-N19	10.230	BRACE, I/P UPR	92 Y	LH	10085903
3.		N.S.	CONTROL, AM/FM STEREO & CLK & T/PLYR RDO (SEE GROUP 9.000 "AUDIO SYSTEM" FOR DETAIL ILLUSTRATED VIEW.)	. . . . .		

© 2000 GENERAL MOTORS SERVICE PARTS OPERATIONS - CHEVROLET - 14Y

							1Y02--037
4.	3-C23	2.486	SWITCH, HDLP & I/P LP DIMR & ACSRY & ELEK TRACT CONT (W/HSG) (CPS) (AC-DELCO #D1688C)	92	Y	1	10098500
	3-C23	2.486	LAMP, HDLP SW (FOG LP) (CARTRIDGE TYPE-CLEAR BULB W/ORANGE CAP)	92	Y	1	10159561
	3-C25	2.487	LAMP, FOG LP SW (2.486)	92	Y	1	2506368
5.	3-C20	2.483	BRACKET, MULTIUSE RLY (PART OF 1) (4.0", 102.0 MM LG) (PLASTIC)	92	Y	1	0172488
6.	3-C20	2.483	BRACKET, MULTIUSE RLY (PART OF 1) (5.2", 132 MM LG) (PLASTIC)	92	Y	1	10167109
7.		8.991	BULB, 12CP ID 561 (R/CMPT C/LP) (AC-DELCO #L561)	92		AR	9433040
		8.991	BULB, 6CP ID 562 (I/P C/LP) (AC-DELCO #L562)	92		AR	9427943
8.	3-N21	10.236	BRACE, I/P DRVR KNEE BOLS INR BRKT	92	Y	1	10259399
9.	3-N22	11.927	LAMP, CTSY (USED W/9433040 BULB)	92	Y	1	10199743
10.	3-M25	3.670	MODULE, ENG CONT (REMAN) (AC-DELCO #16159278)	92	Y (LT1)	1	16159278
	3-M25	3.670	MODULE, ENG CONT (REMAN) (16163993 LABELED) (AC-DELCO #16163993)	92	Y (LT5)	1	16163993
	3-M25	3.670	EPROM, ECM (1692AZUM, 3867BAFL) (AC-DELCO #16173866)	92	Y (LT1, ML9) (EXC NM8)	1	16173866
	3-M25	3.670	EPROM, ECM (1698AZUN, 3872BAFM) (AC-DELCO #16184669)	92	Y (LT1, G44) (EXC NM8)	1	16184669
	3-M25	3.670	EPROM, ECM (1702AZUP, 3876BAFN, 4779BDBK) (AC-DELCO #16184672)	92	Y (LT1, GM1) (EXC NM8)	1	16184672
	3-M25	3.670	EPROM, ECM (1707AZUR, 3880BAFP, 4782BDBL) (AC-DELCO #16184678)	92	Y (LT1, GU2) (EXC NM8)	1	16184678
	3-M25	3.670	EPROM, ECM (8018AYWM, 3863BAFK) (AC-DELCO #16184667)	92	Y67 (LT1, G44) (EXC NM8)	1	16184667
	3-M25	3.670	EPROM, ECM (8044AYWT, 2700AZZC, BPPA) (AC-DELCO #16219916)	92	Y (LT5) (EXC VD1, VE1)	1	16219916
	3-M25	3.670	EPROM, ECM (5912BATL) (AC-DELCO #16175910)	92	Y (LT5, VD1, VE1) (EXPORT)	1	16175910
	3-M25	3.670	EPROM, ECM (6869BAWS)	92	Y (LT1, NM8) (EXPORT)	1	16176868
11.	3-N3	3.671	HOUSING, ECM	92	Y	1	10086259
12.	3-N9	4.589	SWITCH, PARK BRK IND	92	Y	1	10136720
13.		DISCON	BRACKET, I/P DRVR KNEE BOLS INR	92	Y	1	10211797
14.	3-N9	4.591	LEVER, PARK BRK	92	Y	1	12529393
15.		DISCON	HARNESS, RDO FRT SPKR WRG	92	Y (EXC UX0)	1	12073817
		DISCON	HARNESS, RDO FRT SPKR WRG	92	Y (UX0)	1	12106518
16.	3-N15	9.655	PLATE, RDO FRT SPKR MT	92	Y (UM6)	RH	10098450
	3-N15	9.655	PLATE, RDO FRT SPKR MT	92	Y (UM6)	LH	10098451

© 2000 GENERAL MOTORS SERVICE PARTS OPERATIONS-CHEVROLET-14Y

							1Y02-037
17.	3-N14	9.650	SPEAKER, RDO FRT (AC-DELCO #16033662)	92	Y (EXC UX0)	2	16033662
	3-N14	9.650	SPEAKER, RDO FRT (AC-DELCO #16166471)	92	Y07 (UX0)	RH	16166471
	3-N14	9.650	SPEAKER, RDO FRT (AC-DELCO #16166481)	92	Y07 (UX0)	LH	16166481
	3-N14	9.650	SPEAKER, RDO FRT (AC-DELCO #16166491)	92	Y07 (UX0)	RH	16166491
	3-N14	9.650	SPEAKER, RDO FRT (AC-DELCO #16166501)	92	Y07 (UX0)	LH	16166501
18.	3-D2	2.530	CONDUIT, S/D WRG	92	Y	2	10098907
19.	3-N7	3.865	VALVE, CRCONT VAC REL (ON CLU) (3.883)	92	Y (ML9, FE1, FE7)	1	14043256
20.	3-C8	2.447	BRACKET, S/LP SW	92	Y (LT1, MD9)	1	10097689
	3-C8	2.447	BRACKET, S/LP SW	92	Y (ML9)	1	10097689
21.	[illegible]	3.865	RETAINER, CRCONT VAC REL VLV (3.887)	92	Y	1	10075405
22.		N.S.	ACTUATOR, S/LP SW		.....		
23.	3-N7	3.865	VALVE, CRCONT VAC REL (ON BRK) (W/SW) (AC-DELCO #212-346)	92	Y	1	1645516
24.	3-C8	2.447	SWITCH, S/LP (AC-DELCO #D852A)	92	Y	1	25529860
25.		DISCON	BRACKET, INFL RST CONT MDL (HAS 4 HOLES) (J-SHAPED) (POSN #2)	92	Y	LH	10211797
26.	3-E5	2.892	FLASHER T/SIG LP (YELLOW) (AC-DELCO #SF323YB)	92	Y	1	10041073
27.		DISCON	BRACKET, I/P WRG HARN	92	Y	1	10165378
28.		N.S.	RADIO, AM/FM STEREO & CLK (AVAILABLE ONLY THROUGH AC DELCO SERVICE CENTERS)		.....		
		N.S.	RADIO, AM/FM STEREO & CLK & T/PLYR & CD PLYR (AVAILABLE ONLY THROUGH AC DELCO SERVICE CENTERS)		.....		
		N.S.	CONTROL, AM/FM STEREO & CLK & T/PLYR RDO (SEE GROUP 9.000 "AUDIO SYSTEM" FOR DETAILED ILLUSTRATION)		.....		
		N.S.	CONTROL, AM/FM STEREO & CLK & T/PLYR & CD PLYR RDO (SEE GROUP 9.000 "AUDIO SYSTEM" FOR DETAILED ILLUSTRATION)		.....		
29.	3-C20	2.483	BRACKET, MULTIUSE RLY (BLACK) (18.3", 465.0MM LONG) (PLASTIC)	92	Y	1	10240571
30.		DISCON	BRACKET, I/P PASS KNEE BOLS OTR	92	Y	RH	10085944
31.	3-C25	2.510	RELAY, STRTR (BLACK) (5-WAY) (9.277) (AC-DELCO #15-8426)	92	Y	1	14100455
	3-N7	3.900	RELAY, F/PMP (BLACK) (5-WAY) (9.277) (AC-DELCO #15-8426)	92	Y	1	14100455
	3-N14	9.277	RELAY, A/C CMPR (5-PIN OVAL SHAPE) (USE W/CONN 15306002) (1.055) (AC-DELCO #15-8240)	92	Y	1	14089936

© 2000 GENERAL MOTORS SERVICE PARTS OPERATIONS-CHEVROLET-14Y

							1Y02-037
	3-N14	9.650	RELAY, RDO SPKR AMPF (BLACK) (5-WAY) (9.277) (AC-DELCO #15-8426)	92	Y (UU8, U1F)	1	14100455
32.	3-D15	2.575	CLIR HAZARD LP FLSHR (2.802)	92	Y	2	25534019
33.	3-N26	14.865	MODULE, INFL RST DIAGN ENGY RESV (REMAN) (DERM) (AC-DELCO #1228874) (USE ON PROD UNITS W/16081221 ON LABEL)	92	Y (1ST DES)	1	1228874
	3-N26	14.865	MODULE, INFL RST DIAGN ENGY RESV (REMAN) (AC-DELCO #16177277) (USE ON PROD UNITS W/16176561 ON LABEL)	92	Y (2ND DES)	1	16177277
		DISCON	BRACKET, INFL RST CONT MDL (2 WELDED NUTS, 4 WELDED STUDS)	92	Y	1	10193723
34.	3-C9	2.480	HARNESS, I/P WRG	92	Y (MD8, C60) (EXC T61)	1	12126006
	3-C9	2.480	HARNESS, I/P WRG	92	Y (ML9, C60) (EXC T61)	1	12126007
	3-C9	2.480	HARNESS, I/P WRG	92	Y (MD8, C68) (EXC T61)	1	12126013
	3-C9	2.480	HARNESS, I/P WRG	92	Y (ML9, C68) (EXC T61)	1	12126015
35.	3-D15	2.575	FLASHER, HAZARD LP (1 1/2" DIA) (6 LP FLSHR) (AC-DELCO #SF552)	92	Y	1	491391
36.	3-C20	2.483	BRACKET, I/P WRG HARN FUSE BLK	92	Y	1	14002568
37.		DISCON	BRACKET, I/P PASS KNEE BOLS INR	92	Y	1	10175591
38.	3-D15	2.560	MODULE, BODY CONT (REMAN)	92	Y	1	16193458
39.	3-N18	9.743	CARRIER, INST (UPR) (10.230) ..	92	Y	1	10086247
40.		8.921	NUT, U TYPE, MULTI THD, PREV TORQ, M4.2X1.41TAP, 8.1REACH, 0.65-3.80 PNLS 1065 PZOR (ST BELT & IGN KEY & LPS ALARM) (AC-DELCO #11513599)	92	.....	AR	11513599
41.	3-A21	2.195	BRACKET, ST BELT & IGN KEY & LPS ALARM	92	Y	1	10098454
42.	3-N18	9.765	ALARM, ST BELT & IGN KEY & LPS	92	Y	1	25518745
	3-C9	2.461	ALARM, ST BELT & IGN KEY & LPS (9.765)	92	Y	1	25518745
43.	3-C8	2.440	BRACKET, I/P WRG HARN ECM DATA LINK CONN (DIAG CONN) .	92	Y	1	14073479
44.	3-C8	2.440	COVER, I/P WRG HARN DATA LINK CONN	92	Y	1	10021766
45.	3-N26	14.865	BRACKET, INFL RST CONT MDL (4 HOLES, L-SHAPED, POSN #1)	92	Y	RH	10086177
	3-N26	14.865	BRACKET, INFL RST CONT MDL (4 HOLES, L-SHAPED, POSN #1)	92	Y	LH	10086086
46.	3-D2	2.530	COVER, ENG WRG HARN ECM CONN	92	Y	1	12064802
47.	3-N3	3.671	BRACKET, ECM (INCLS 51)	92	Y	1	10143544
48.		8.315	NUT - M4 X 0.7 (I/P WRG HARN BHD CONN)	92	.....	2	11505175

© 2000 GENERAL MOTORS SERVICE PARTS OPERATIONS-CHEVROLET-14Y

49.		N.S.	PEDAL, BRK (W/BRKT) (SEE GROUP 4.000 "BRAKE PEDAL & MASTER CYLINDER MOUNTING" FOR DETAILED ILLUSTRATED VIEW.)	.....			
50.	3-N19	10.230	INSULATOR, I/P (PART OF 1) (9.260)	92	Y	1	3999572
51.	3-N10	4.805	SEAL, P/B BOOS (ECM BRKT TO FIRE WALL) (PART OF 47) (4.845)	92	Y	1	10097675

RPO DEFINITIONS
C60 -- AIR CONDITIONER,FRONT,MANUAL CONTROLS
C68 -- AIR CONDITIONER,FRONT,AUTOMATIC,ELECTRONIC CONTROLS
FE1 -- SUSPENSION SYSTEM,SOFT RIDE
FE7 -- SUSPENSION SYSTEM,FRONT AND REAR,HEAVY DUTY(USED WITH PERFORMANCE HANDLING PACKAGE Z51)
GM1 -- AXLE,REAR,2.59 RATIO
GU2 -- AXLE,REAR,2.73 RATIO
G44 -- AXLE,REAR,3.07 RATIO
LT1 -- ENGINE-GAS, 8 CYL, 5.7L(5.7P),MFI,HO
LT5 -- ENGINE,5.7L(5.7J),TPI
MD8 -- TRANSMISSION,AUTOMATIC 4-SPEED(THM700R4/4L60)
MD9 -- TRANSMISSION,AUTOMATIC 3-SPEED(THM125C/3T40)
ML9 -- TRANSMISSION,MANUAL 6-SPEED
NM6 -- EMISSION SYSTEM,LEADED FUEL(EXPORT)
T61 -- LIGHTING,DAYTIME RUNNING
UM6 -- RADIO,AM/FM STEREO,CASSETTE,ETR,INCLUDES CLOCK
UU6 -- RADIO,AM/FM STEREO,CASSETTE,ETR,DELCO/BOSE,DOLBY,INCLUDES CLOCK
UX0 -- SPEAKER SYSTEM,SIX,DUAL FLOOR SILL,DUAL EXTENDED RANGE SAIL PANEL
U1F -- RADIO,AM/FM STEREO,CASSETTE,C.D. PLAYER,ETR,BOSE,INCLUDES CLOCK
VD1 -- PROVISION OPTIONS,EUROPE(EXPORT)
VE1 -- PROVISION OPTIONS,JAPAN(EXPORT)

© 2000 GENERAL MOTORS SERVICE PARTS OPERATIONS-CHEVROLET-14Y

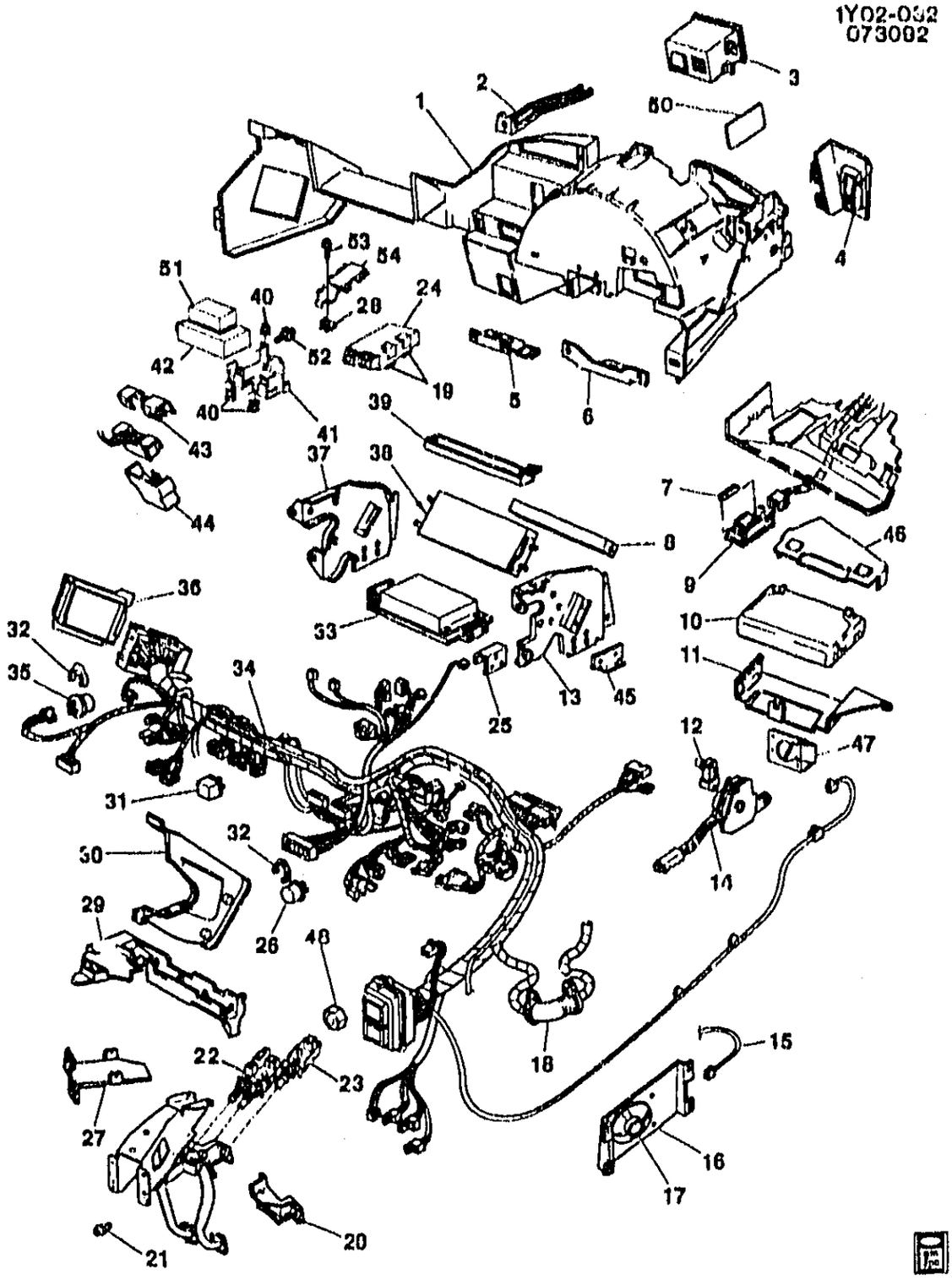

1Y02-032

1993-1996 Y WIRING HARNESS/INSTRUMENT PANEL

1.	3-N19	10.230	PANEL, INST (INCLS 5-6, 50) ...	93	Y	1	10167103
	3-N19	10.230	PANEL, INST (INCLS 5-6, 50) ...	94-96	Y	1	10285922
2.	3-N19	10.230	BRACE, I/P UPR	93-96	Y	LH	10085903

© 2000 GENERAL MOTORS SERVICE PARTS OPERATIONS-CHEVROLET-14Y

3.		N.S.	**CONTROL**, AM/FM STEREO & CLK & T/PLYR RDO (SEE GROUP 9.000 "AUDIO SYSTEM REAR" FOR DETAILED ILLUSTRATED VIEW.)				
		N.S.	**RADIO**, AM/FM STEREO & CLK & T/PLYR (SEE GROUP 9.000 "AUDIO SYSTEM REAR" FOR DETAILED ILLUSTRATED VIEW.)	93-95			
4.	3-C23	2.485	**SWITCH**, HDLP & I/P LP DIMR & ACSRY & ELEK TRACT CONT (W/HSG) (CPS) (AC-DELCO #D1588C)	93	Y	1	10098500
	3-C23	2.485	**SWITCH**, HDLP & I/P LP DIMR & ACSRY & ELEK TRACT CONT (W/HSG) (CPS)	94-96	Y	1	10210[illegible]58
	3-C23	2.485	**LAMP**, HDLP SW (FOG LP) (CARTRIDGE TYPE-CLEAR BULB W/ORANGE CAP)	93-96	Y	1	10[illegible]561
	3-C25	2.487	**LAMP**, FOG LP SW (2.485)	93-96	Y	1	12506368
5.	3-C20	2.483	**BRACKET**, MULTIUSE RLY (PART OF 1) (4.0", 102.0 MM LG) (PLASTIC)	93-96	Y		10172488
6.	3-C20	2.483	**BRACKET**, MULTIUSE RLY (PART OF 1) (5.2", 132 MM LG) (PLASTIC)	93-96	Y	1	10167109
7.		8.991	**BULB**, 12CP ID 561 (R/CMPT C/LP) (AC-DELCO #L561)	93-96		AR	9433040
		8.99[illegible]	**BULB**, 6CP ID 562 (I/P C/LP) (AC-DELCO #L562)	93-96		AR	9427043
8.	3-N2[illegible]	10.235	**BRACE**, I/P DRVR KNEE BOLS INR BRKT	93-96	Y	1	10259399
9.	3-N22	11.927	**LAMP**, CTSY (USED W/9433040 BULB)	93-96	Y	2	10199743
10.	3-M25	3.670	**MODULE**, ENG CONT (REMAN) (AC-DELCO #16159278)	93	Y (LT1)	1	16159278
	3-M25	3.670	**MODULE**, ENG CONT (REMAN) (16163993 LABELED) (AC-DELCO #16163993)	93	Y (LT5)	1	16163993
	3-M25	3.670	**MODULE**, ENG CONT (REMAN) (16196394 LABELED) (AC-DELCO #16196394)	94-95	Y (LT5)	1	16196394
	3-M25	3.670	**MODULE**, PWRT CONT (REMAN) (REPROGRAMABLE MODULE) (AC-DELCO #16181333)	94-95	Y (LT1)	1	16181333
	3-M25	3.670	**MODULE**, PWRT CONT (REMAN) (AC-DELCO #16214399)	96	Y	1	16214399
	3-M25	3.670	**EPROM**, ECM (AC-DELCO #12528772)	93-95	Y (LT5)	1	12[illegible]772
	3-M25	3.670	**EPROM**, ECM (1692AZUM, 3867BAFL) (AC-DELCO #16173866)	93	Y (LT1, ML9) (EXC NM8)	1	16173866
	3-M25	3.670	**EPROM**, ECM (1698AZUN, 3872BAFM) (AC-DELCO #16184669)	93	Y (LT1, G44) (EXC NM8)	1	16184669
	3-M25	3.670	**EPROM**, ECM (1702AZUP, 3876BAFN, 4779BDBK) (AC-DELCO #16184672)	93	Y (LT1, GM1) (EXC NM8)	1	16184672

© 2000 GENERAL MOTORS SERVICE PARTS OPERATIONS-CHEVROLET-14Y

							1Y02-032
	3-M25	3.670	EPROM, ECM (1707AZUR, 3000BAFR, 4782BDBL) (AC-DELCO #16184678)	93	Y (LT1, GU2) (EXC NM0)	1	16184678
	3-M25	3.670	EPROM, ECM (4776BDBJ) (AC-DELCO #16184669)	93	Y (LT1, G44) (EXC NM0)	1	16184669
	3-C4	2.383	MODULE, KNOCK SEN (8 PIN MDL PLUGS INTO PCM LIKE A PROM)	94-95	Y (LT1)	1	16177660
	3-C4	2.383	MODULE, KNOCK SEN (AC-DELCO #216-07)	96	Y (LT4)	1	16214681
	3-C4	2.383	MODULE, KNOCK SEN (PLUGS INTO PCM MDL) (AC-DELCO #216-06)	96	Y (LT1)	1	16214671
	3-M25	3.670	EPROM, ECM (6009BAWS)	93	Y (LT1, NM0) (EXPORT)	1	16176668
11.	3-N3	3.671	HOUSING, ECM	93	Y	1	10086259
	3-N3	3.671	HOUSING, ECM	94-95	Y (LT5)	1	10086259
	3-N3	3.671	BRACKET, PCM	94-95	Y (LT1)	1	10211331
	3-N3	3.671	BRACKET, PCM	96	Y	1	10211331
12.	3-N9	4.589	SWITCH, PARK BRK IND	93-96	Y	1	10136720
13.		DISCON	BRACKET, I/P DRVR KNEE BOLS INR (INCLS 25)	93	Y	1	10211797
	3-N21	10.235	BRACKET, I/P DRVR KNEE BOLS INR (INCLS 25)	94-96	Y	1	10250909
14.	3-N9	4.591	LEVER, PARK BRK	93-96	Y	1	12529393
15.	3-N17	9.656	HARNESS, RDO FRT SPKR WRG	93-96	Y07 (UY5)	1	12106566
	3-N17	9.656	HARNESS, RDO FRT SPKR WRG	93-96	Y (UX0)	1	12141864
	3-N17	9.656	HARNESS, RDO FRT SPKR WRG	93-96	Y67 (UY5)	1	12130343
16.	3-N15	9.655	PLATE, RDO FRT SPKR MT	93-96	Y (UM6)	RH	10098450
	3-N15	9.655	PLATE, RDO FRT SPKR MT	93-96	Y (UM6)	LH	10098451
17.	3-N14	9.650	SPEAKER, RDO FRT (AC-DELCO #16166471)	93-96	Y07 (UX0)	RH	16166471
	3-N14	9.650	SPEAKER, RDO FRT (AC-DELCO #16166481)	93-96	Y07 (UX0)	LH	16166481
	3-N14	9.650	SPEAKER, RDO FRT (AC-DELCO #16166491)	93-96	Y67 (UX0)	RH	16166491
	3-N14	9.650	SPEAKER, RDO FRT (AC-DELCO #16166501)	93-96	Y67 (UX0)	LH	16166501
	3-N14	9.650	SPEAKER, RDO FRT (AC-DELCO #16033662)	93-96	Y (UY5)	2	16033662
	3-N14	9.650	SPEAKER, RDO FRT (LESS CLOSURE) (AC-DELCO #16141716)	93-96	Y67 (UX0)	2	16141716
18.	3-D2	2.530	CONDUIT, S/D WRG	93-96	Y	2	10098907
19.		N.S.	INSULATOR, DAYTIME RUNNING LP CONT MDL		.....		
20.	3-C8	2.447	BRACKET, S/LP SW	93	Y (LT1, MD8)	1	10214036
	3-C8	2.447	BRACKET, S/LP SW	93-96	Y (ML9)	1	10214036
	3-C8	2.447	BRACKET, S/LP SW	94-96	Y (LT1, M30)	1	10214036
21.		N.S.	RETAINER, CRCONT VAC REL VLV		.....		
22.	3-N9	4.710	SWITCH, ELEK BRK CONT BRK PED (W/ S/LP SW) (AC-DELCO #10211657)	93-96	Y	1	10211657
	3-C8	2.447	SWITCH, ELEK BRK CONT BRK PED (W/ S/LP SW) (4.710) (AC-DELCO #10211657)	93-96	Y	1	10211657

© 2000 GENERAL MOTORS SERVICE PARTS OPERATIONS-CHEVROLET-14Y

							1Y02-032
23.	3-N7	3.085	VALVE, CRCONT AIR PRESS REG (STAMPED 6040) (AC-DELCO #14056040)	93-95	Y (LT5)	1	14056040
24.	3-C23	2.485	MODULE, HDLP AUTO CONT (LESS BRKT & BOLTS)	93-96	Y (T01) (EXPORT)	1	10098712
25.		N.S.	BRACKET, INFL RST CONT MDL (PART OF 13)		.....		
26.	3-E5	2.692	FLASHER, T/SIG LP (YELLOW) (AC-DELCO #SF323YB)	93-96	Y (EXC T90)	1	10041073
	3-E5	2.692	FLASHER, T/SIG LP (YELLOW) (2 LP FLSHR) (AC-DELCO #SF224)	93	Y (T90) (EXPORT)	1	10041074
	3-E5	2.692	FLASHER, T/SIG LP (AC-DELCO #9442495)	94-96	Y (T90) (EXPORT)	1	9442495
27.		DISCON	BRACKET, I/P WRG HARN	93	Y	1	10165370
	3-D11	2.550	BRACKET, I/P WRG HARN	94-95	Y	1	10251214
28.		8.021	NUT, U TYPE, MULTI THD, PREV TORQ, M4.2X1.41TAP, 8.1REACH, 0.65-3.80 PNLS 1065 PZOR (DAYTIME RUN LP CONT MDL BRKT) (AC-DELCO #11513599)	93-96	.....	AR	11513599
29.	3-C20	2.483	BRACKET, MULTIUSE RLY (BLACK) (18.3", 465.0MM LONG) (PLASTIC)	93	Y	1	10240571
	3-C20	2.483	BRACKET, MULTIUSE RLY	94-96	Y	1	10161867
30.		DISCON	BRACKET, I/P PASS KNEE BOLS OTR (10.235)	93	Y	1	10085944
	3-N21	10.235	BRACKET, I/P PASS KNEE BOLS OTR	94-96	Y	1	10251492
31.	3-C25	2.510	RELAY, STRTR (BLACK) (5-WAY) (9.277) (AC-DELCO #15-8426)	93-96	Y	1	14100455
	3-N7	3.900	RELAY, F/PMP (BLACK) (5-WAY) (9.277) (AC-DELCO #15-8426)	93-94	Y	1	14100455
	3-N7	3.900	RELAY, F/PMP (13.095) (AC-DELCO #D1703A)	94-95	Y (ML9)	1	12065125
	3-N7	3.900	RELAY, F/PMP (13.095) (AC-DELCO #D1703A)	95	Y (M30)	1	12065125
	3-N7	3.900	RELAY, F/PMP (2.815) (AC-DELCO #D1719A)	[illegible]	Y (LT1, ML9, C60, C68)	1	12135084
	3-N7	3.900	RELAY, F/PMP (2.815) (AC-DELCO #D1719A)	96	Y (M30, ML9, C60, C68)	1	12135084
	3-N14	9.277	RELAY, A/C CMPR (BLACK) (5-WAY M) (USED W/CONNECTOR 15306045) (AC-DELCO #15-8719)	93-94	Y (LT1, LT5)	1	12193601
	3-N14	9.277	RELAY, A/C CMPR (GRAY) (SPST 280 MINI) (4-WAY) (2.100) (AC-DELCO #12193603)	93-96	Y	1	12193603
	3-N14	9.650	RELAY, RDO SPKR AMPF (BLACK) (5-WAY) (9.277) (AC-DELCO #15-8426)	93-94	Y (UX0)	1	14100455
	3-C25	2.510	RELAY, I/P WRG HARN (BLACK) (5-WAY) (9.277) (AC-DELCO #15-8426)	93-96	Y (UX0)	1	14100455
32.	3-D15	2.575	CLIP, HAZARD LP FLSHR (2.692)	93-96	Y	1	25534019
33.	3-N26	14.865	MODULE, INFL RST DIAGN ENGY RESV (REMAN) (AC-DELCO #16177277)	93	Y	1	16177277

© 2000 GENERAL MOTORS SERVICE PARTS OPERATIONS-CHEVROLET-14Y

							1Y02-032
	3-N26	14.065	MODULE, INFL RST DIAGN ENGY RESV (REMAN)	94-96	Y (AK5)	1	16176550
		DISCON	BRACKET, INFL RST CONT MDL (10,236)	93	Y	1	10211797
	3-N26	14.065	BRACKET, INFL RST CONT MDL	94-96	Y (AK5)	LH	10086086
	3-N26	14.065	BRACKET, INFL RST CONT MDL	94-96	Y (AK5)	RH	10086177
	3-N26	14.065	BRACKET, INFL RST CONT MDL (4 HOLES, L-SHAPED, POSN #1)	93	Y	LH	10086086
	3-N26	14.065	BRACKET, INFL RST CONT MDL (4 HOLES, L-SHAPED, POSN #1)	93	Y	RH	10086177
34.	3-C9	2.480	HARNESS, I/P WRG	93	Y (MD8, C60) (EXC T90)	1	12141443
	3-C9	2.480	HARNESS, I/P WRG (ON VEH -DRL, SPLICE CAV D TO CAV E @ BLUE 8-WAY DRL MDL CONN.)	93	Y (ML9, C68) (EXC T90)	1	12141444
	3-C9	2.480	HARNESS, I/P WRG	93	Y (ML9, C60) (EXC T90)	1	12141445
	3-C9	2.480	HARNESS, I/P WRG (ON VEHS W/O DAYTIME RUNNING LPS SPLICE CAV D & E WIRES TOGETHER AT BLUE DRL MDL CONN.)	93	Y (MD8, C68) (EXC T90)	1	12141446
	3-C9	2.480	HARNESS, I/P WRG	94	Y (ML9, C60) (EXC T61, T72, T84, T85, T90)	1	12130324
	3-C9	2.480	HARNESS, I/P WRG	94	Y (ML9, C68) (EXC T61, T72, T84, T85, T90)	1	12130326
	3-C9	2.480	HARNESS, I/P WRG	94	Y (M30, C60) (EXC T61, T72, T84, T85, T90) (2ND DES)	1	12130491
	3-C9	2.480	HARNESS, I/P WRG	94	Y (M30, C60, T61) (EXC T72, T84, T85, T90)	1	12130492
	3-C9	2.480	HARNESS, I/P WRG	94	Y (M30, C68) (EXC T61, T72, T84, T85, T90)	1	12130493
	3-C9	2.480	HARNESS, I/P WRG	94	Y (M30, C68, T61) (EXC T72, T84, T85, T90)	1	12130494
	3-C9	2.480	HARNESS, I/P WRG (TAGGED 0322 OR 0323) (ON VEH W/DAYTIME RUNNING LGHTS, ADD 8-WAY BLUE CONN TO DAYTIME RUNNING LGHT, SPLICE CAV D & CAV E WIRES TOGETHER)	94	Y (M30, C68, T61) (EXC T72, T84, T85, T90) (1ST DES)	1	12141788
	3-C9	2.480	HARNESS, I/P WRG	94	Y (ML9, C60, T61) (EXC T72, T84, T85, T90)	1	12141789
	3-C9	2.480	HARNESS, I/P WRG	94	Y (ML9, C68, T61) (EXC T72, T84, T85, T90)	1	12141790
	3-C9	2.480	HARNESS, I/P WRG	94	Y (ML9, C68) (EXC T72, T84, T85, T90)	1	12163703
	3-C9	2.480	HARNESS, I/P WRG	95	Y (LT5, ML9, C68) (EXC T61)	1	12130326
	3-C9	2.480	HARNESS, I/P WRG	95	Y (LT1, M30, C60, T61) (EXC T72, T84, T85, T90)	1	12130389
	3-C9	2.480	HARNESS, I/P WRG (SPLICE CAV D & E WIRES @ BLUE DRL MDL CONN FOR VEH W/O DRL.)	95	Y (LT1, M30, C68, T61) (EXC T72, T84, T85, T90)	1	12130391
	3-C9	2.480	HARNESS, I/P WRG	95	Y (LT5, ML9, C68, T61) .	1	12141790

© 2000 GENERAL MOTORS SERVICE PARTS OPERATIONS-CHEVROLET-14Y

					1Y02-032	
3-C9	2.480	HARNESS, I/P WRG	95	Y (LT1, ML9, C60) (EXC T61, T72, T84, T85, T90)	1	12163700
3-C9	2.480	HARNESS, I/P WRG	95	Y (LT1, ML9, C60) (EXC T61, T72, T84, T85, T90)	1	12163702
3-C9	2.480	HARNESS, I/P WRG	95	Y (LT5, ML9, C60)	1	12163703
3-C9	2.480	HARNESS, I/P WRG (TAGGED 0320 OR 0321) (ON VEH W/O DRL, AT 8-WAY BLUE CONN TO DRL MDL SPLICE CAV D & CAV E LEADS TOGETHER.)	94	Y (M30, C60, T61) (EXC T72, T84, T85, T90) (1ST DES)	1	12141787
3-C9	2.480	HARNESS, I/P WRG (WHEN USE ON VEH W/O DAYTIME RUN LIGHTS, SPLICE CAV D&E TOGETHER @ BLUE 8-WAY DRL MOD CONN)	96	Y (M30, C60) (EXC T72, T84, T85, T90)	1	12130468
3-C9	2.480	HARNESS, I/P WRG (WHEN USE ON VEH W/O DAYTIME RUN LIGHTS, SPLICE CAV D&E TOGETHER @ BLUE 8-WAY DRL MOD CONN)	96	Y (M30, C60) (EXC T72, T84, T85, T90)	1	12130470
3-C9	2.480	HARNESS, I/P WRG (WHEN USE ON VEH W/O DAYTIME RUN LIGHTS, SPLICE CAV D&E TOGETHER @ BLUE 8-WAY DRL MOD CONN)	96	Y (ML9, C60) (EXC T72, T84, T85, T90)	1	12130472
3-C9	2.480	HARNESS, I/P WRG (WHEN USE ON VEH W/O DAYTIME RUN LIGHTS, SPLICE CAV D&E TOGETHER @ BLUE 8-WAY DRL MOD CONN)	96	Y (ML9, C60) (EXC T72, T84, T85, T90)	1	12130474
3-C9	2.480	HARNESS, I/P WRG	93	Y (ML9, C68, T90) (EXPORT)	1	12141441
3-C9	2.480	HARNESS, I/P WRG	93	Y (MD8, C68, T90) (EXPORT)	1	12141442
3-C9	2.480	HARNESS, I/P WRG	94	Y (M30, C68, T72, T84, T85, T90) (EXPORT) ...	1	12130495
3-C9	2.480	HARNESS, I/P WRG	94	Y (ML9, C68, T72, T84, T85, T90) (EXPORT) ...	1	12141792
3-C9	2.480	HARNESS, I/P WRG	95	Y (LT1, M30, C68, T72, T84, T85, T90) (EXC T61) (EXPORT)	1	12130396
3-C9	2.480	HARNESS, I/P WRG	95	Y (LT1, ML9, C60, T61) (EXC T72, T84, T85, T90) (EXPORT)	1	12163701
3-C9	2.480	HARNESS, I/P WRG	95	Y (LT1, ML9, C68, T61) (EXC T72, T84, T85, T90) (EXPORT)	1	12163703
3-C9	2.480	HARNESS, I/P WRG	95	Y (LT1, ML9, C68, T72, T84, T85, T90) (EXC T61) (EXPORT)	1	12163704
3-C9	2.480	HARNESS, I/P WRG	96	Y (M30, C68, T72, T84, T85, T90) (EXC T61) (EXPORT)	1	12130475
3-C9	2.480	HARNESS, I/P WRG	96	Y (LT4, ML9, C68, T72, T84, T85, T90) (EXC T61) (EXPORT)	1	12163715

© 2000 GENERAL MOTORS SERVICE PARTS OPERATIONS-CHEVROLET-14Y

							1Y02-C32
	3-C9	2.460	HARNESS, I/P WRG (TAGGED 0320)	94	Y (M30, C60, T72, T04, T05, T00) (1ST DES) (EXPORT)	1	12141791
35.	3-D15	2.575	FLASHER, HAZARD LP (1 1/2" DIA) (6 LP FLSHR) (AC-DELCO #SF552)	93-96	Y	1	491391
36.	3-C20	2.463	BRACKET, I/P WRG HARN FUSE BLK	93-96	Y	1	14062568
37.		DISCON	BRACKET, I/P PASS KNEE BOLS INR (10.235)	93	Y	1	10175591
	3-N21	10.235	BRACKET, I/P PASS KNEE BOLS INR	94-96	Y	1	10250910
38.	3-D15	2.560	MODULE, BODY CONT (REMAN)	93	Y	1	16193468
	3-D15	2.560	MODULE, BODY CONT (REMAN) (AC-DELCO #16212971)	94	Y	1	16212971
	3-D15	2.560	MODULE, BODY CONT (REMAN) (AC-DELCO #16223622)	95	Y	1	16223622
	3-D15	2.560	MODULE, BODY CONT	96	Y	1	16230561
39.	3-N18	9.743	CARRIER, INST (10.230)	93-96	Y (FE1, FE7)	1	10086247
40.		8.921	NUT, M4.2X1.4, 19.3X213.6.8.9 (R/CON DR LK RCVR BRKT) (AC-DELCO #15650655)	93-96		AR	15650655
41.	3-N21	10.465	BRACKET, R/CON DR LK RCVR	93	Y	1	10252241
	3-N21	10.465	BRACKET, R/CON DR LK RCVR	94-96	Y (EXC VD1, VE1)	1	10252241
42.	3-N21	10.465	RECEIVER, R/CON DR LK	93	Y	1	10261112
	3-N21	10.465	RECEIVER, R/CON DR LK	94-96	Y (EXC VD1, VE1)	1	10261112
43.	3-C8	2.440	BRACKET, I/P WRG HARN ECM DATA LINK CONN (DIAG CONN)	93-96	Y	1	14073479
44.	3-C8	2.440	COVER, I/P WRG HARN DATA LINK CONN	93	Y	1	10021766
45.	3-N26	14.865	BRACKET, INFL RST CONT MDL	94-96	Y (AK5)	LH	10086086
	3-N26	14.865	BRACKET, INFL RST CONT MDL (4 HOLES, L-SHAPED, POSN #1)	93	Y	LH	10086086
46.	3-D2	2.530	COVER, ENG WRG HARN ECM CONN	93	Y	1	12064802
	3-D2	2.530	COVER, ENG WRG HARN ECM CONN	94-95	Y (LT5)	1	12064802
47.	3-N3	3.671	BRACKET, ECM	93-96	Y	1	10143544
48.		6.915	NUT - M4 X 0.7 (I/P WRG HARN BHD CONN)	93-96		2	11505175
50.		N.S.	INSULATOR, I/P (PART OF 1)				
51.	3-N18	9.765	ALARM, ST BELT & IGN KEY & LPS	93-96	Y	1	25518745
	3-A21	2.195	ALARM, ST BELT & IGN KEY & LPS (9.765)	93-96	Y	1	25518745
52.		8.977	BOLT/SCREW ASM M4.2X1.41 #18 HEX HD GM71 (R/CON DR LK RCVR BRKT)	93-96		AR	11515303
53.		8.977	SCREW, HWH, 9.2OD, 13.8 THD (DAYTIME RUNNING LP CONT MDL BRKT)	93-96		AR	16516859
54.	3-C23	2.465	BRACKET, DAYTIME RUNNING LP CONT MDL	93-96	Y (T61) (EXPORT)	1	10177914

RPO DEFINITIONS
AK5 - RESTRAINT SYSTEM,FRONT SEAT,INFLATABLE,DRIVER AND PASSENGER
C60 - AIR CONDITIONER,FRONT,MANUAL CONTROLS
C68 - AIR CONDITIONER,FRONT,AUTOMATIC,ELECTRONIC CONTROLS

FE1 -- SUSPENSION SYSTEM,SOFT RIDE
FE7 -- SUSPENSION SYSTEM,FRONT AND REAR,HEAVY DUTY
GM1 -- AXLE,REAR,2.50 RATIO
GU2 -- AXLE,REAR,2.73 RATIO
G44 -- AXLE,REAR,3.07 RATIO
LT1 -- ENGINE-GAS, 8 CYL., 5.7L(5.7P),MFI,HO
LT4 -- ENGINE GAS, 8 CYL., 5.7L, MFI, HIGH OUTPUT
LT5 -- ENGINE,5.7L(5.7J),TPI
MD8 -- TRANSMISSION,AUTOMATIC 4-SPEED(THM700R4/4L60)
ML9 -- TRANSMISSION,MANUAL 6-SPEED
M30 -- TRANSMISSION,AUTOMATIC 4 SPEED,4L60E,ELECTRONIC
NM8 -- EMISSION SYSTEM,LEADED FUEL(EXPORT)
T61 -- LIGHTING,DAYTIME RUNNING
T72 -- HEADLAMPS,LH RULE OF THE ROAD(EXPORT)
T84 -- HEADLAMPS,RH RULE OF THE ROAD,RECTANGULAR(MARKED E)(EXPORT)
T85 -- HEADLAMPS,LH RULE OF THE ROAD,RECTANGULAR(MARKED E)(EXPORT)
T90 -- LAMP,SIGNALING AND MARKER(EXPORT)
UM6 -- RADIO,AM/FM STEREO,CASSETTE,ETR,INCLUDES CLOCK
UX0 -- SPEAKER SYSTEM,SIX,DUAL FLOOR SILL,DUAL EXTENDED RANGE SAIL PANEL
UY5 -- SPEAKER SYSTEM 4, DUAL FRT FLR SILL, DUAL EXT RANGE QTR MTD
VD1 -- PROVISION OPTIONS,EUROPE(EXPORT)
VE1 -- PROVISION OPTIONS,JAPAN(EXPORT)

© 2000 GENERAL MOTORS SERVICE PARTS OPERATIONS-CHEVROLET-14Y

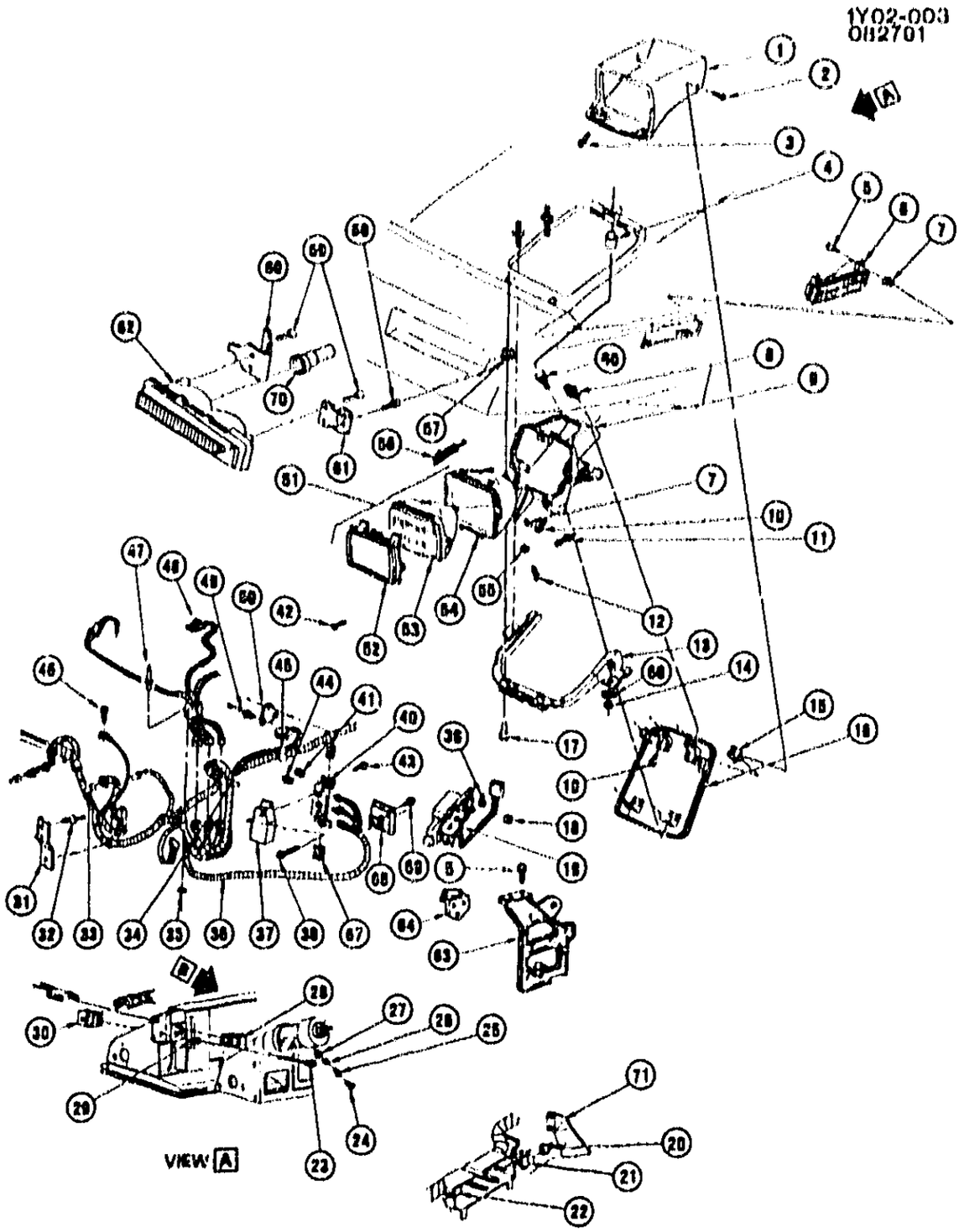

1Y02-003

1984–1989 Y LAMPS/FRONT

1.	3-D28	2.728	BEZEL, HDLP-LH	10074299
	3-D28	2.728	BEZEL, HDLP-RH	10074300
2.		8.977	SCREW (M6.3X1.81) (1984–86)	11504961
		8.977	SCREW (M4.2X1.41X20) (1987–89)	12338093
3.		8.977	SCREW (M4.2X1.41X20)	11508561
4.		N.S.	BUMPER, HDLP OPG HSG STOP (USE ITEM #65)	

© 2000 GENERAL MOTORS SERVICE PARTS OPERATIONS–CHEVROLET–14Y

5.		8.977	SCREW, HEX W/FL WA TAP (M4.2X1.41X16)	11509374
6.	3-D17	2.585	LAMP, COR AND SI MKR-RH (1984-87)	917086
	3-D17	2.585	LAMP, COR AND SI MKR-RH (1988-89)	16508614
	3-D17	2.585	LAMP, COR AND SI MKR-LH (1984-87)	917085
	3-D17	2.585	LAMP, COR AND SI MKR-LH (1988-89)	16508613
7.	3-D26	2.729	NUT, SPL ANC (NY) (SQ HOLE)	347347
8.		8.921	NUT, (M6X1) U SHAPE	12337917
9.	3-D25	2.725	HOUSING, HDLP-RH (INCLS 65)	16500352
	3-D25	2.725	HOUSING, HDLP-LH (INCLS 65)	16500351
10.		8.900	BOLT, HEX (M6X1X20)	10077321
11.	3-D26	2.737	ADJUSTER, HDLP (W/NUT)	557057
12.		N.S.	SCREW	
13.	3-E3	2.766	BRACKET, HDLP MTG-RH	16510406
	3-D26	2.726	BRACKET, HDLP MTG-LH	16510405
14.		8.917	NUT, HEX (M6X1)	11516075
15.		8.921	NUT, U SHAPE (M6.3X1.81) (1984-86)	12338151
		8.921	NUT, U TYPE (M4.2X1.41) (1987-89) (AC-DELCO #11513599)	11513599
16.	3-D26	2.726	DOOR, HDLP- RH	10137734
	3-D26	2.726	DOOR, HDLP- LH	10137733
17.		8.977	SCREW, HWH (M6.3X1.81X50)	11508027
18.		8.917	NUT, HEX (M8X1.25)	
19.	3-E2	2.760	ACTUATOR KIT, HDLP OPG DR (CONTAINS RH/LH ACTR, HSG, BRKT & CONT; BOTH SIDES MUST BE REPLACED WHEN USING KIT (KIT SERVICES VEHICLES W/3-WIRE ACTR HARN)) (AC-DELCO #16517068)	16517068
	3-E2	2.760	ACTUATOR, HDLP-RH (1988-89) (INCL HARNESS) (AC-DELCO #16510052)	16510052
	3-E2	2.760	ACTUATOR, HDLP-LH (1988-89) (INCL HARNESS) (AC-DELCO #16510051)	16510051
20.	3-E5	2.892	CLIP, T/SIG LP FLSHR	25534019
21.	3-E5	2.892	FLASHER, T/SIG LP (AC-DELCO #SF323YB)	10041073
22.	3-D15	2.575	FLASHER, HAZARD (AC-DELCO #SF552)	491391
23.	3-C25	2.486	KNOB, HDLP SW	10098728
24.		8.977	SCREW, OV HD C/S TAP (M3.5X1.27X22)	11503505
25.	3-D15	2.575	BUTTON, HAZARD WRG SW	12337876
26.	3-D15	2.575	SPRING, HAZARD WRG SW KNOB	12337888
27.	3-D15	2.575	KNOB, HAZARD WRG SW	12337964
28.	3-C23	2.485	SWITCH, FOG LP	14066536
29.	3-C25	2.487	NUT, HDLP SW	3916710
30.	3-C23	2.485	SWITCH, HDLP (AC-DELCO #D1530A)	1996257
31.		DISCON	BRACKET, WRG HARN-RH (1984-86)	14066532
	3-D11	2.559	BRACKET, WRG HARN-RH (1987-89)	14091208
		DISCON	BRACKET, WRG HARN-LH (1984-86)	14066531
	3-D11	2.559	BRACKET, WRG HARN-LH (1987-89)	14091207
32.	3-N23	12.601	RETAINER, PNL (.25 DIA)	480534
33.	3-D19	2.596	SOCKET, PK AND T/SIG LP (AC-DELCO #LS8)	12013813
		8.991	BULB, TRADE (2057) (AC-DELCO #L2057NA)	9438850
34.	3-D15	2.575	SOCKET, W/CBL SI MKR LP (AC-DELCO #7434)	6298886
		8.991	BULB (NO 194) (AC-DELCO #L194)	9421330
35.		8.929	WASHER, FL (.188X.438)	
36.		DISCON	HARNESS, LP WRG (1984)	12029218
		DISCON	HARNESS, LP WRG (1985)	12050645
		DISCON	HARNESS, LP WRG (1986)	12048809
		DISCON	HARNESS, LP WRG (1987)	12067732
	3-C9	2.480	HARNESS, LP WRG (1988-89)	12073487
37.		DISCON	COVER, HDLP ACTR RLY (1984-87)	14057579
38.		8.977	SCREW (M4.2X1.44X50)	11500078

© 2000 GENERAL MOTORS SERVICE PARTS OPERATIONS-CHEVROLET-14Y

39.		0.977	SCREW, HEX (M8X1.25X40)	
40.		DISCON	BRACKET, HDLP ACTR RLY	14057560
41.	3-D20	2.755	RELAY, HDLP ACTR ISOLATION (1984-88) (1.055) (AC-DELCO #15-2366)	10039961
42.	3-D20	2.731	BOLT, HDLP RET RING	5966249
43.		0.977	SCREW, HEX TAP W/WA (M4.2X1.41X16) POR	25512604
44.	3-D20	2.755	RELAY, HDLP ACTR (AC-DELCO #D1784)	10031016
45.	3-D19	2.596	SOCKET, W/CBL FRT COR (2.607) (AC-DELCO #LS53)	12003756
		0.991	BULB, 12V, 32 CP/TRADE #1156 (AR) (AC-DELCO #L1156)	9417966
46.		0.977	SCREW, HEX W/FLAT WA (AR)	12337626
47.		N.S.	RIVET, DOME (1/8X.38)	
48.	3-D27	2.727	CONNECTOR, HDLP (W/WRG)	16500999
49.		N.S.	RIVET	
50.		N.S.	BRACKET, FWD LP WRG HARN	
51.	3-D26	2.726	CAPSULE, HDLP (INCLS 52-55	5972650
52.	3-D20	2.731	RING, HDLP RET (PART OF 51)	5969466
53.	3-D27	2.727	SEALBEAM, HDLP (PART OF 51) (AC-DELCO #H6054)	5972696
54.	3-D26	2.726	RING, HDLP MT (PART OF 51)	5968095
55.		0.917	NUT, HEX (M6X1) (PART OF 51)	
56.	3-D20	2.737	SPRING, HDLP ADJ	549398
57.		0.921	NUT (.370 SQ HOLE.250 HD.025 SQ) NY	3907444
58.		0.900	SCREW, HEX (M6X1X25) 9.8 PZOR	20351035
59.		0.977	SCREW, SEMS HEX W/FL WA (M6.3X1.81X20)	12337620
60.	3-D18	2.587	SPRING, PK & T/SIG	14049172
61.	3-D18	2.587	HINGE, PK & T/SIG & FOG	14049171
62.	3-D17	2.585	LAMP, PK & T/SIG & FOG-RH	16500702
	3-D17	2.585	LAMP, PK & T/SIG & FOG-LH	16500701
	3-D27	2.727	BULB, W/SOCKET, FOG (HALOGEN) (AC-DELCO #L880)	9442876
	3-D19	2.596	SOCKET, PK & T/SIG LP (AC-DELCO #LS8)	12013613
63.	3-D11	2.559	BRACKET, WRG HARN-LH	14001207
	3-D11	2.559	BRACKET, WRG HARN-RH	14001208
64.		N.S.	BRACKET, WRG (USE ADJ NY STRAP GRP 0.965)	
65.	3-D26	2.726	STOP, HDLP OPG HSG (BOLT W/BPR) (PART OF 0)	16503177
66.		0.929	WASHER (M6.3X16.75X1.5) PHOS	11500322
67.		0.921	NUT (M4.2X1.41) (AC-DELCO #15650655)	15650655
68.	3-D28	2.755	MODULE, HDLP OPG DR ACTR CONT (1988-89)	16521297
69.		0.900	BOLT, SPL W/WA M6X1X20 9.8 PO R	10077321
70.	3-D18	2.586	NUT, FOG LP ADJ	16500692
71.		DISCON	SHIELD, I/P WRG HARN (1984-88)	14066582

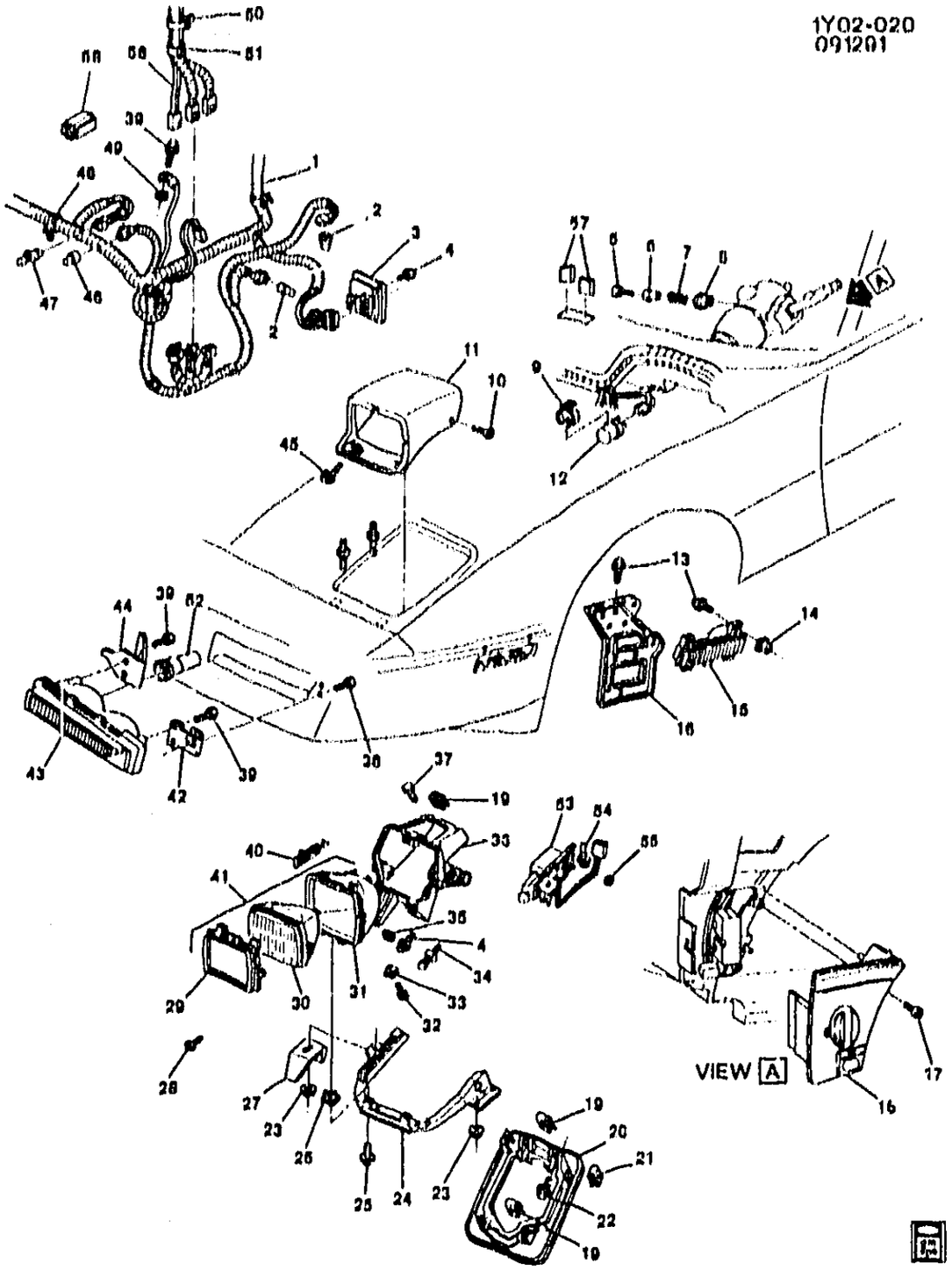

1990 Y LAMPS/FRONT

1.	3-C9	2.480	HARNESS, FWD LP WRG	12073776
2.		8.991	BULB, TRADE (NO 1156) (AC-DELCO #L1156)	9417866
3.	3-D28	2.755	MODULE, HDLP OPG DR ACTR CONT	16521297
4.		8.900	BOLT, HEX W/WA (M6X1X20) 9.8 POR	10077321
5.		8.977	SCREW, OVL HD C/S (3.5X1.27X22) (14.683)	11503505
6.	3-D18	2.575	BUTTON, HAZARD WRG SW	12337876

© 2000 GENERAL MOTORS SERVICE PARTS OPERATIONS - CHEVROLET-14Y

				1Y02-020
7.	3-D15	2.575	SPRING, HAZARD WRG SW KNOB	12337888
8.	3-D15	2.575	KNOB, HAZARD WRG SW	10096483
9.	3-E5	2.692	CLIP, HAZARD LP FLSHR	25534019
10.		8.909	SCREW, OVL HD TORX (M6X1X45) SST BLA	12338094
11.	3-D28	2.726	BEZEL, HDLP-RH	10074300
	3-D28	2.726	BEZEL, HDLP-LH	10074299
12.	3-E5	2.692	FLASHER, T/SIG LP (AC-DELCO #SF323YB)	10041073
13.		8.977	BOLT, HEX W/FL WA TAP (M4.2X1.41X16) NI ORG	11509374
14.	3-D28	2.729	NUT, SPL ANC (NY) (SQ HOLE)	347347
15.	3-D17	2.585	LAMP, FRT SI MKR & COR-RH	16508514
	3-D17	2.585	LAMP, FRT SI MKR & COR-LH	16508513
16.	3-D11	2.559	BRACKET, FWD LP WRG HARN-RH	14091206
	3-D11	2.559	BRACKET, FWD LP WRG HARN-LH	14091207
17.		8.977	SCREW, PAN HD W/FL WA (M4.2X1.41X20) NZ	11515324
18.	3-C23	2.485	SWITCH, HDLP & I/P LP DIMR & ACSRY (W/H) (AC-DELCO #D1527C)	10098487
19.		8.921	NUT, SPR U SHAPE (M6X1) PHOS	12337917
20.	3-D28	2.726	DOOR, HDLP OPG-RH	10137734
	3-D28	2.726	DOOR, HDLP OPG-LH	10137733
21.		8.921	NUT, U SHAPE PREV TORQ (M4.2X1) PZOR (AC-DELCO #11513590)	11513590
22.		8.900	SCREW, HEX W/CON WA (M6X1X20) 9.8 ORG BRI	11514623
23.		8.917	NUT, HEX W/CON WA (M6X1) PEOR	11516793
24.	3-D26	2.726	BRACKET, HDLP MT-RH	16510406
	3-D26	2.726	BRACKET, HDLP MT-LH	16510405
25.		8.977	SCREW, HEX W/FL WA (M6.3X1.81X40) 6010M PZOR	11508027
26.		8.921	NUT (.380 SQ HOLE.250 HD.625 SQ) NY	3907444
27.	3-N12	8.015	BRACKET, HOOD HGE-RH	14060286
	3-N12	8.015	BRACKET, HOOD HGE-LH	14060285
28.	3-D26	2.731	BOLT, HDLP RET RING	5986249
29.	3-D26	2.731	RING, HDLP RET (PART OF 41)	5969466
30.	3-D27	2.727	SEALBEAM, HDLP (RECT LPS) (PART OF 41) (AC-DELCO #H6054)	5972698
31.	3-D26	2.726	RING, HDLP MT (PART OF 41)	5968095
32.		N.S.	SCREW (PART OF 36)	
33.		N.S.	NUT, HEX (M6X1) (PART OF 36)	
34.	3-D28	2.737	ADJUSTER, HDLP (W/NUT)	557057
35.	3-D28	2.729	NUT, SPL ANC (NY) (SQ HOLE)	347347
36.	3-D25	2.725	HOUSING, HDLP-RH (INCLS 32-33)	16500352
	3-D25	2.725	HOUSING, HDLP-LH (INCL 32, 33)	16500351
37.	3-D26	2.726	STOP, HDLP OPG HSG (BOLT W/BPR)	16503177
38.		8.900	BOLT, HEX W/CON WA (M6X1X25) 9.8 PZOR	20351035
39.		8.977	SCREW, SEMS HEX W/FL WA (M6.3X1.81X20) 6010M PZOR	12337828
40.	3-D28	2.737	SPRING, FOG LP FRT	549538
41.	3-D25	2.725	CAPSULE, HDLP (ZR1) (INCLS 29-31)	5972850
42.	3-D18	2.587	HINGE, PK & T/SIG W/FOG LP	14049171
43.		N.S.	LAMP, PK (INCLS 52)	
	3-D19	2.596	SOCKET, PK & T/SIG LP (AC-DELCO #LS8)	12013813
	3-D27	2.727	BULB, W/SOCKET, FOG (HALOGEN) (AC-DELCO #L880)	9442876
44.	3-D18	2.587	SPRING, PK & T/SIG W/FOG LP	14049172
45.		8.977	SCREW, PAN HD TORX W/FL WA (M4.2X1.41X2) 303 BLA	11509561
46.		8.991	BULB, TRADE (NO 2057) PARK & DIR SIG (AC-DELCO #L2057NA)	9438850
47.	3-D27	2.727	BULB, W/SOCKET, FOG (HALOGEN) (AC-DELCO #L880)	9442876
48.		8.965	RETAINER, PLSTC ADJ STRAP	3816659
49.		8.932	WASHER, LK (1/4) EX TOOTH ZN (AC-DELCO #121753)	121753
50.		8.965	STRAP, ADJ TIE NY BI A (AC-DELCO #12337820)	12337820
51.		8.965	RETAINER, TIE PUSH IN	3816659

© 2000 GENERAL MOTORS SERVICE PARTS OPERATIONS-CHEVROLET-14Y

				1Y02-020
52.	3-D10	2.566	NUT, FOG LP ADJ (PART OF 43)	16500092
53.	3-E2	2.760	ACTUATOR, HDLP-RH (INCL HARNESS) (AC-DELCO #16510052)	16510052
	3-E2	2.760	ACTUATOR, HDLP-LH (INCL HARNESS) (AC-DELCO #16510051)	16510051
54.		6.977	SCREW, HEX (M8X1.25X40)	
55.		6.917	NUT, HEX (M8X1.25)	
56.	3-D27	2.727	CONNECTOR, HDLP (W/WIRE)	16500099
57.	3-C23	2.485	RELAY, FOG LP (AC-DELCO #16-8420)	14100455
58.	3-D27	2.727	CONNECTOR, HDLP (ZR1)	2065810

MICROFICHE INDEX

GROUP 2.000

FICHE 3 OF 11

GROUP	DESCRIPTION	STARTING GRID LOCATION PARTS	ILLUSTRATIONS
–	GENERAL INFORMATION	1–A2	1–G2
–	ALPHABETICAL INDEX	1–B13	N.A.
2.000	CHASSIS WIRING – LAMPS	3–A2	3–F2
–	OUT OF FICHE CALLS	N.A.	3–M20

3–J1

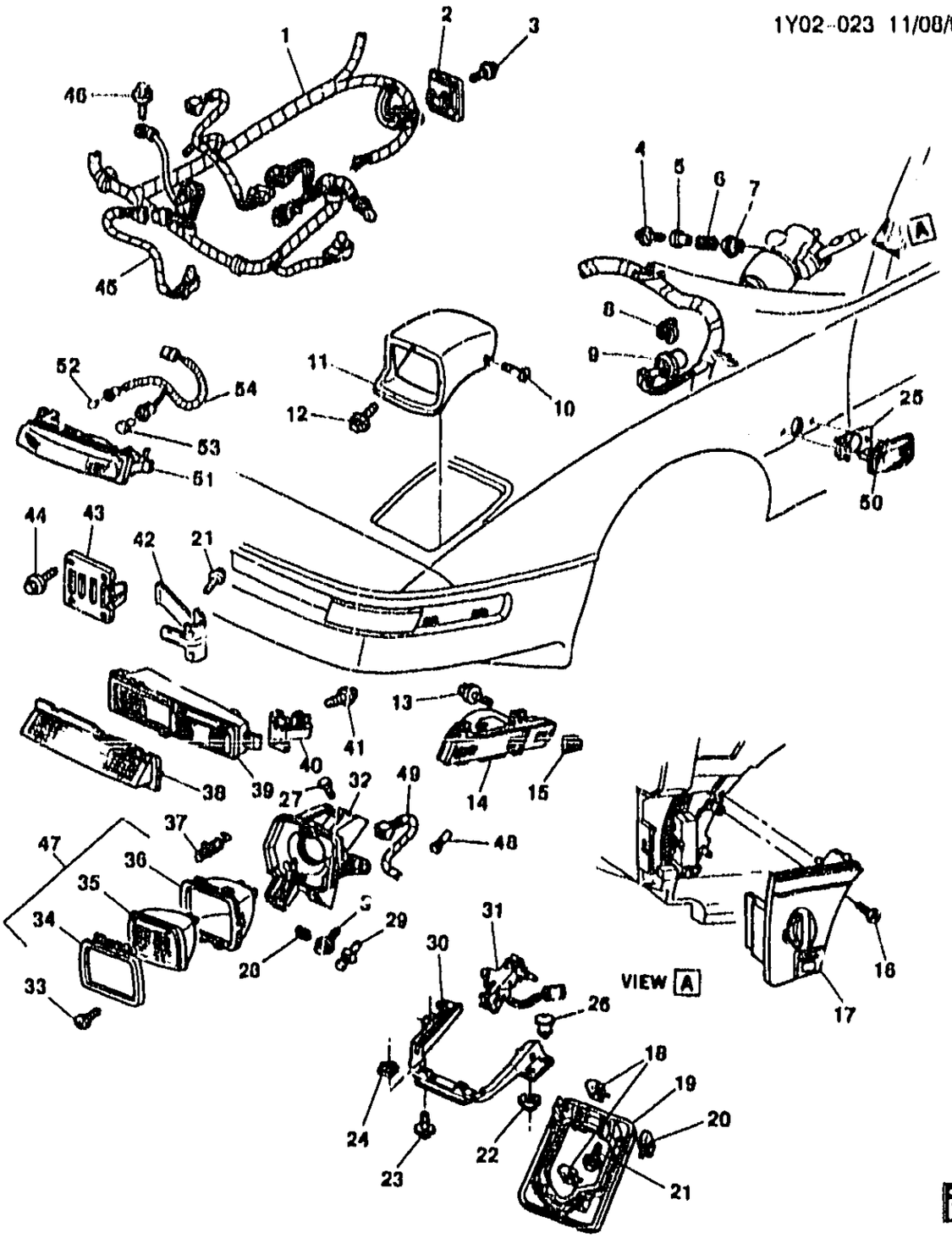

1991-1996 Y LAMPS/FRONT

1.	3-C9	2.480	HARNESS, FWD LP WRG	91	Y (L98) (EXC T61)	1	12080863
	3-C9	2.480	HARNESS, FWD LP WRG	91	Y (LT5, FE1, FE7) (EXC T61)	1	12080864
	3-C9	2.480	HARNESS, FWD LP WRG	92	Y (LT1) (EXC T61)	1	12090371
	3-C9	2.480	HARNESS, FWD LP WRG	92	Y (LT5) (EXC T61)	1	12090372
	3-C9	2.480	HARNESS, FWD LP WRG	93	Y (LT1) (EXC BAK, T61)	1	12106580
	3-C9	2.480	HARNESS, FWD LP WRG	93-94	Y (LT5) (EXC T61)	1	12106583

© 2000 GENERAL MOTORS SERVICE PARTS OPERATIONS-CHEVROLET-14Y

							1Y02-023
	3-C9	2.480	HARNESS, FWD LP WRG	93	Y (LT1, BAK) (EXC T61)	1	12141322
	3-C9	2.480	HARNESS, FWD LP WRG	94	Y (LT1) (EXC T72, T84, T85, T90)	1	12130480
	3-C9	2.480	HARNESS, FWD LP WRG	94	Y (LT5) (EXC T72, T84, T85, T90)	1	12154336
	3-C9	2.480	HARNESS, FWD LP WRG	95	Y (LT1) (EXC T72, T84, T85, T90)	1	12130484
	3-C9	2.480	HARNESS, FWD LP WRG	95	Y (LT5) (EXC T72, T84, T85, T90)	1	12130486
	3-C9	2.480	HARNESS, FWD LP WRG	96	Y (EXC T72, T84, T85, T90)	1	12163717
	3-C9	2.480	HARNESS, FWD LP WRG	91	Y (LD8, T61) (EXPORT) .	1	12090346
	3-C9	2.480	HARNESS, FWD LP WRG	91	Y (LT5, T61) (EXPORT) .	1	12090347
	3-C9	2.480	HARNESS, FWD LP WRG	92	Y (LT1, T61) (EXPORT) .	1	12090373
	3-C9	2.480	HARNESS, FWD LP WRG	92	Y (LT5, T61) (EXPORT) .	1	12090374
	3-C9	2.480	HARNESS, FWD LP WRG	93	Y (LT1, T61) (EXPORT) .	1	12106581
	3-C9	2.480	HARNESS, FWD LP WRG	93	Y (LT5, T61) (EXPORT) .	1	12106582
	3-C9	2.480	HARNESS, FWD LP WRG	94	Y (LT1, T72, T84, T85, T90) (EXPORT)	1	12130481
	3-C9	2.480	HARNESS, FWD LP WRG	94	Y (LT5, T72, T84, T85, T90) (EXPORT)	1	12154337
	3-C9	2.480	HARNESS, FWD LP WRG	95	Y (LT1, T72, T84, T85, T90) (EXPORT)	1	12130485
	3-C9	2.480	HARNESS, FWD LP WRG	96	Y (T72, T84, T85, T90) (EXPORT)	1	12163718
2.	3-D28	2.755	MODULE, HDLP OPG DR ACTR CONT	91-96	Y	1	16521297
3.		8.900	BOLT, HEX W/WA (M6X1X20) ...	91-96	.....	AR	10077321
4.		8.977	SCREW, OV HD C/S C/R TAP M3.5X1.27X22 PC (HZRD WRNG SW KNOB)	91-96	.....	1	11503505
5.	3-D15	2.575	PUSHBUTTON, HAZARD WRNG SW (PAINT TO MATCH)	91-93	Y	1	12337876
	3-D15	2.575	PUSHBUTTON, HAZARD WRNG SW (PAINT TO MATCH)	94-96	Y (EXC VD1, VE1)	1	12337876
	3-D15	2.575	PUSHBUTTON, HAZARD WRNG SW	94-96	Y (VD1, VE1) (EXPORT)	1	3529383
6.	3-D15	2.575	SPRING, HAZARD WRNG SW KNOB	91-93	Y	1	12337880
	3-D15	2.575	SPRING, HAZARD WRNG SW KNOB	94-96	Y (EXC VD1, VE1)	1	12337888
	3-D15	2.575	SPRING, HAZARD WRNG SW KNOB	94-96	Y (VD1, VE1) (EXPORT)	1	3529384
7.	3-D15	2.575	KNOB, HAZARD WRNG SW	91-93	Y	1	10098483
	3-D15	2.575	KNOB, HAZARD WRNG SW	94-96	Y (EXC VD1, VE1)	1	12337964
	3-D15	2.575	KNOB, HAZARD WRNG SW (BLACK)	94-96	Y (VD1, VE1) (EXPORT)	1	3542859
8.	3-D15	2.575	CLIP, HAZARD LP FLSHR (2.892)	91-96	Y	2	25534019
9.	3-E5	2.892	FLASHER, T/SIG LP (YELLOW) (AC-DELCO #SF323YB)	91-92	Y	1	10041073
	3-E5	2.892	FLASHER, T/SIG LP (YELLOW) (AC-DELCO #SF323YB)	93-96	Y (EXC T90)	1	10041073
	3-E5	2.892	FLASHER, T/SIG LP (YELLOW) (2 LP FLSHR) (AC-DELCO #SF224)	93	Y (T90) (EXPORT)	1	10041074
	3-E5	2.892	FLASHER, T/SIG LP (AC-DELCO #9442495)	94-96	Y (T90) (EXPORT)	1	9442495

							1Y02-023
10.		8.977	SCREW, OVAL CSK TRIM HD W/WA TYPE AB (4.2X1.4X20) (HDLP BZL) (POSN #1) (16.682) .	91-96	.....	4	12338093
11.	3-D20	2.728	BEZEL, HDLP	91-96	Y	LH	10074299
	3-D28	2.728	BEZEL, HDLP	91-96	Y	RH	10074300
12.		8.977	BOLT, HWH, 4.2X2.5X20, 12.5-OD, AB PT, 6010M, BZ (POSN #2)	91-96	.....	4	10272737
13.		8.977	BOLT/SCREW ASM M4.2X1.41 #18 HEX HD GM71 (FRT SI MKR & COR LP)	91-96	.....	4	11516303
14.	3-D17	2.565	LAMP, FRT SI MKR & COR	91-93	Y	LH	5975793
	3-D17	2.565	LAMP, FRT SI MKR & COR	91-93	Y	RH	5975794
	3-D17	2.565	LAMP, FRT SI MKR & COR	94-96	Y (EXC T90)	LH	5975793
	3-D15	2.575	LAMP, FRT SI MKR & COR (2.565)	94-96	Y (EXC T90)	LH	5975793
	3-D17	2.565	LAMP, FRT SI MKR & COR	94-96	Y (EXC T90)	RH	5975794
	3-D15	2.575	LAMP, FRT SI MKR & COR (2.565)	94-96	Y (EXC T90)	RH	5975794
	3-D25	2.714	SOCKET, RR LIC PLT LP (2.575) (AC-DELCO #LS13)	91-93	Y	2	12083007
	3-D25	2.714	SOCKET, RR LIC PLT LP (2.575) (AC-DELCO #LS13)	94-96	Y (EXC T90)	1	12083007
		8.991	BULB, TRADE #24 (AC-DELCO #L24)	91-96	.....	AR	9441837
	3-D15	2.575	SOCKET, FRT SI MKR LP (2.694) (AC-DELCO #LS53)	91-93	Y	2	12003758
	3-D15	2.575	SOCKET, FRT SI MKR LP (AC-DELCO #LS13)	93	Y	2	12083007
	3-D15	2.575	SOCKET, FRT SI MKR LP (2.694) (AC-DELCO #LS53)	94-96	Y (EXC T90)	2	12003758
	3-D15	2.575	SOCKET, FRT SI MKR LP (AC-DELCO #LS13)	94	Y (EXC T90)	2	12083007
	3-D15	2.575	SOCKET, FRT SI MKR LP (AC-DELCO #LS13)	95-96	Y (EXC T72, T84, T85, T90)	2	12083007
		8.991	BULB, 12V, 32 CP/TRADE #1156 (AC-DELCO #L1156)	91-96	.....	AR	9417866
		N.S.	FILLER, FRT SI MKR LP OPG ...	91-93	.....		
	3-D25	2.714	SOCKET, RR LIC PLT LP (AC-DELCO #LS9)	94	Y (T90) (EXPORT)	1	8913527
	3-D25	2.714	SOCKET, RR LIC PLT LP (W/LEADS) (2.596) (AC-DELCO #LS44)	94-96	Y (T90) (EXPORT)	1	12141388
	3-D15	2.575	SOCKET, FRT SI MKR LP (W/LEADS) (2.596) (AC-DELCO #LS44)	94-96	Y (T72, T84, T85, T90) (EXPORT)	1	12141388
	3-D15	2.575	FILLER, FRT SI MKR LP OPG ...	94-96	Y (T90) (EXPORT)	LH	5976775
	3-D15	2.575	FILLER, FRT SI MKR LP OPG ...	94-96	Y (T90) (EXPORT)	RH	5976776
15.	3-D18	2.587	NUT, FRT SI MKR & COR LP (12.609)	91	Y	8	20451121
	3-D18	2.587	NUT, FRT SI MKR & COR LP (UPLEVEL) (1.267)	92-96	Y	4	347347
16.		8.977	SCREW, HWH TAP, M4.2X1.4X16, 8.9 OD, 6010M, NO (HDLP & I/P LP DIMR & ACSRY & ELEC TRCT CONT SW)	91-96	.....	2	11516055
17.	3-C23	2.485	SWITCH, HDLP & I/P LP DIMR & ACSRY (W/HSG) (CPS) (AC-DELCO #D1527C)	91	Y	1	10098487

© 2000 GENERAL MOTORS SERVICE PARTS OPERATIONS - CHEVROLET - 14Y

						1Y/	·023
	3-C23	2.465	SWITCH, HDLP & I/P LP DIMR & ACSRY & ELEK TRACT CONT (W/HSG) (CPS) (AC-DELCO #D1588C)	92-93	Y	1	10098500
	3-C23	2.465	SWITCH, HDLP & I/P LP DIMR & ACSRY & ELEK TRACT CONT (W/HSG) (CPS)	94-96	Y	1	10210758
	3-C23	2.465	LAMP, HDLP SW (FOG LP) (CARTRIDGE TYPE-CLEAR BULB W/ORANGE CAP)	91-96	Y	1	10159561
	3-C25	2.467	LAMP, FOG LP SW (2.465)	91-96	Y	1	12506368
18.		8.921	NUT, (SPRING, TYPE C, U-SHAPED, MULTI THD) (M6X1, 1060 PEOR) (HDLP OPG HSG) (TO DR ASM)	91-96		4	12337917
		8.921	NUT, (SPRING, TYPE C, U-SHAPED, MULTI THD) (M6X1, 1060 PEOR) (HDLP OPG DR) (TO HDLP ASM)	91-96		4	12337917
		8.917	NUT, HEX W/CON WA, 24 OD, M6X1X5.6, 9M, PZOR (HDLP TO HD INR PNL)	91-96		8	11514275
19.	3-D28	2.728	DOOR, HDLP OPG	91-96	Y	LH	10137733
	3-D28	2.728	DOOR, HDLP OPG	91-96	Y	RH	10137734
20.		8.921	NUT, U TYPE, MULTI THD, PREV TORQ, M4.2X1.41TAP, 9.1REACH, 0.65-3.80 PNLS 1065 PZOR (HDLP BZL) (TO INBOARD/OUTBOARD SIDES OF DOOR) (AC-DELCO #11513599)	91-96		4	11513599
21.		8.900	BOLT, HEX W/CON WA, M6X1X20 (HDLP OPG DR)	91-96		8	11514623
22.		8.917	NUT, HEX W/CON WA M6X1X5.5 (9) 7111M 16-OD	91-96		AR	11516793
23.		8.977	SCREW ASM, HEX W/FL WA, M6.3X1.81X40, 17 17 OD, AB PT, 6010M, PZOR	91-96		4	11509027
24.		8.921	NUT, .380 SQ HOLE.250 HD.625 SQ NYLON (HDLP)	91-96		4	3907444
25.	3-D18	2.567	SPACER, FRT T/SIG LP	94-96	Y (T90) (EXPORT)	2	10234093
26.	3-D26	2.726	BUMPER, HDLP OPG HSG STOP (8.075)	91-93	Y	2	16502047
	3-D26	2.726	BUMPER, HDLP OPG HSG STOP (8.075)	94-96	Y (EXC T72, T84, T85)	2	16502047
27.	3-D26	2.726	STOP, HDLP OPG HSG (W/BPR) (2.775)	91-93	Y	2	16503177
	3-D26	2.726	STOP, HDLP OPG HSG (W/BPR) (2.775)	94-96	Y (EXC T72, T84, T85)	2	16503177
	[illegible] D26	2.726	STOP, HDLP OPG HSG (W/BPR) (2.775)	94-96	Y (T72, T84, T85) (EXPORT)	2	16503177
28.	3-D26	2.726	NUT, HDLP HSG (UPLEVEL) (1.267)	91-93	Y	2	347347
	3-D26	2.726	NUT, HDLP HSG (UPLEVEL) (1.267)	94-96	Y (EXC T72, T84, T85)	2	347347
29.	3-D28	2.737	ADJUSTER, HDLP (W/NUT)	91-93	Y	4	557057
30.	3-D26	2.726	BRACKET, HDLP MT PNL (2.765)	91-96	Y	LH	16510405
	3-D26	2.726	BRACKET, HDLP MT PNL (DRILL HOLE AT INDENTATION AS REQ) (2.765)	91-96	Y	RH	16510406

						1Y02-023	
31.	3-E2	2.760	ACTUATOR, HDLP (INCLS 49) (INCLS JMPR WIRE) (AC-DELCO #16516133)	91-96	Y	LH	16516133
	3-E2	2.760	ACTUATOR, HDLP (INCLS 49) (INCL ACTUATOR & HDLP JMPR HARN, ALSO ORDER CONN 2965810) (AC-DELCO #16516134)	91-96	Y	RH	16516134
32.	3-D25	2.725	HOUSING, HDLP (W/BEARING ASM)	91-96	Y	LH	16500351
	3-D25	2.725	HOUSING, HDLP (W/BEARING ASM)	91-93	Y	RH	16500352
	3-D25	2.725	HOUSING, HDLP	94-96	Y (EXC T72, T84, T85) .	RH	16500352
	3-E3	2.765	BEARING, HDLP OPG HSG ((PART OF HOUSING ASM))	91-96	Y	2	16500350
33.	3-D26	2.731	BOLT, HDLP RET RING (2.736) ..	91-96	Y	8	5966249
	3-D26	2.726	BOLT, HDLP (2.760)	94-95	Y (EXC T72, T84, T85) .	2	16510068
34.	3-D26	2.731	RING, HDLP RET	91-96	Y	2	5969466
35.	3-D27	2.727	BULB, HDLP (AC-DELCO #H6054)	91-93	Y	2	5972698
	3-D27	2.727	BULB, HDLP (AC-DELCO #H6054)	94-96	Y (EXC T72 T84, T85) .	2	5972698
	3-D27	2.727	BULB, HDLP (W/O MTG RING) ..	94-96	Y (T85) (EXPORT)	2	16501107
	3-D27	2.727	BULB, HDLP	94-96	Y (T72) (EXPORT)	1	16522424
36.	3-D26	2.726	RING, HDLP MT	91-96	Y	2	5968095
37.	3-D26	2.737	SPRING, HDLP ADJ	91-96	Y	4	549398
38.	3-D18	2.569	LENS, FRT PARK & T/SIG & FOG LP (PART OF 39)	91-93	Y	LH	16514377
	3-D18	2.569	LENS, FRT PARK & T/SIG & FOG LP (PART OF 39)	91-93	Y	RH	16514378
	3-D18	2.569	LENS, FRT PARK & T/SIG & FOG LP (PART OF 39)	94-96	Y (EXC T90)	LH	16514377
	3-D18	2.569	LENS, FRT PARK & T/SIG & FOG LP (PART OF 39)	94-96	Y (EXC T90)	1	16514378
39.	3-D17	2.565	LAMP, FRT PARK & T/SIG & FOG (INCLS 38)	91-93	Y	LH	5976667
	3-D17	2.565	LAMP, FRT PARK & T/SIG & FOG (INCLS 38)	91-93	Y	RH	5976668
	3-D17	2.565	LAMP, FRT PARK & T/SIG & FOG (INCLS 38)	94-96	Y (EXC T90)	LH	5976667
	3-D17	2.535	LAMP, FRT PARK & T/SIG & FOG (INCLS 38)	94-96	Y (EXC T90)	RH	5976668
		6.991	BULB, W/SOC, TRADE #896 (FRT FOG LP) (AC-DELCO #L896)	91-96	.....	2	9442032
	3-D19	2.596	SOCKET, PARK & T/SIG LP (USE A & G WIRE CLIP THE THIRD WIRE (3 CAVITY) (AC-DELCO #LS8)	91-94	Y	AR	12013813
	3-D19	2.596	SOCKET, PARK & T/SIG LP (USE A & G WIRE CLIP THE THIRD WIRE (3 CAVITY) (AC-DELCO #LS8)	95-96	Y (EXC T90)	AR	12013813
		6.991	BULB, TRADE # 2057NA-PARK & DIR SIG (AC-DELCO #L2057NA)	91-96	.....	2	9438850
40.	3-D18	2.587	HINGE, FRT PARK & T/SIG & FOG LP	91-96	Y	2	10153676

							1Y02-023
41.		8.977	BOLT-HFH, M4.2X1.4X13, 11.6THD, 8.5OD, GM6010-M, POR, TAP (FRT PARK & T/SIG & FOG LP HGE) (AC-DELCO #11508256)	91-96		8	11508256
42.	3-D18	2.587	SPRING, FRT PARK & T/SIG & FOG LP	91-96	Y	2	10153677
43.	3-D18	2.587	BRACKET, FRT T/SIG & FOG LP (2.585)	91-96	Y	2	10153658
44.	3-N12	7.874	BOLT, FRT T/SIG & FOG LP BRKT (M6.3X1.01X20)	91-96	Y	6	10172330
45.	3-D27	2.727	WIRE, FRT FOG LP	91-96	Y	2	12090370
46.		8.977	SCREW, HEX W/FLAT WA	91-96		AR	12337828
47.	3-D27	2.727	BULB, HDLP (AC-DELCO #H6054)	91-93	Y	2	5972698
	3-D27	2.727	BULB, HDLP (AC-DELCO #H6054)	94-96	Y (EXC T72, T84, T85)	2	5972698
	3-D27	2.727	BULB, HDLP (W/O MTG RING)	94-96	Y (T85) (EXPORT)	2	16501107
	3-D27	2.727	BULB, HDLP	94-96	Y (T72) (EXPORT)	1	16522424
48.	3-E2	2.760	BOLT, HDLP OPG DR ACTR	91-93	Y	4	16510068
	3-E2	2.760	BOLT, HDLP OPG DR ACTR	94-96	Y (T72, T84, T85) (EXPORT)	6	16510068
49.		N.S.	JUMPER HARNESS (PART OF 31)				
	3-D2	2.530	CONNECTOR, INLINE-TO FWD LP HARN (PART OF 31) (3-WAY F, W/O LEADS)	91-96	Y	1	2965810
50.	3-D17	2.585	LAMP, FRT T/SIG (MOUNTED TO HOOD) (2.880)	94-96	Y (T90) (EXPORT)	2	5977622
51.	3-D17	2.585	LAMP, PARK & T/SIG	94-96	Y (T90) (EXPORT)	LH	5976931
	3-D17	2.585	LAMP, PARK & T/SIG	94-96	Y (T90) (EXPORT)	RH	5976932
52.		8.991	BULB (TRADE #W/EW) (E.C.E.) (PART & T/SIG LP) (T90 EXPORT) (AC-DELCO #W3W)	94-96		2	9442445
53.		8.991	BULB, TRADE #PY21W (T/SIG) (AC-DELCO #PY21W)	94-96		2	9442494
54.	3-C9	2.460	HARNESS, FWD LP WRG HARN EXTN	94-96	Y (T72, T84, T85, T90) (EXPORT)	2	12130344

RPO DEFINITIONS

BAK - DIAGNOSTIC SYSTEM OBD 2 EMISSION REQUIREMENTS
FE1 - SUSPENSION SYSTEM,SOFT RIDE
FE7 - SUSPENSION SYSTEM,FRONT AND REAR,HEAVY DUTY(USED WITH PERFORMANCE HANDLING PACKAGE Z51)
LT1 - ENGINE-GAS, 8 CYL, 5.7L(5.7P),MFI,HO
LT5 - ENGINE,5.7L(5.7J),TPI
L98 - ENGINE, 5.7L, (5.7-8) 350 CID, V8, TPI
T61 - LIGHTING,DAYTIME RUNNING
T72 - HEADLAMPS,LH RULE OF THE ROAD(EXPORT)
T84 - HEADLAMPS,RH RULE OF THE ROAD,RECTANGULAR(MARKED E)(EXPORT)
T85 - HEADLAMPS,LH RULE OF THE ROAD,RECTANGULAR(MARKED E)(EXPORT)
T90 - LAMP,SIGNALING AND MARKER(EXPORT)
VD1 - PROVISION OPTIONS,EUROPE(EXPORT)
VE1 - PROVISION OPTIONS,JAPAN(EXPORT)

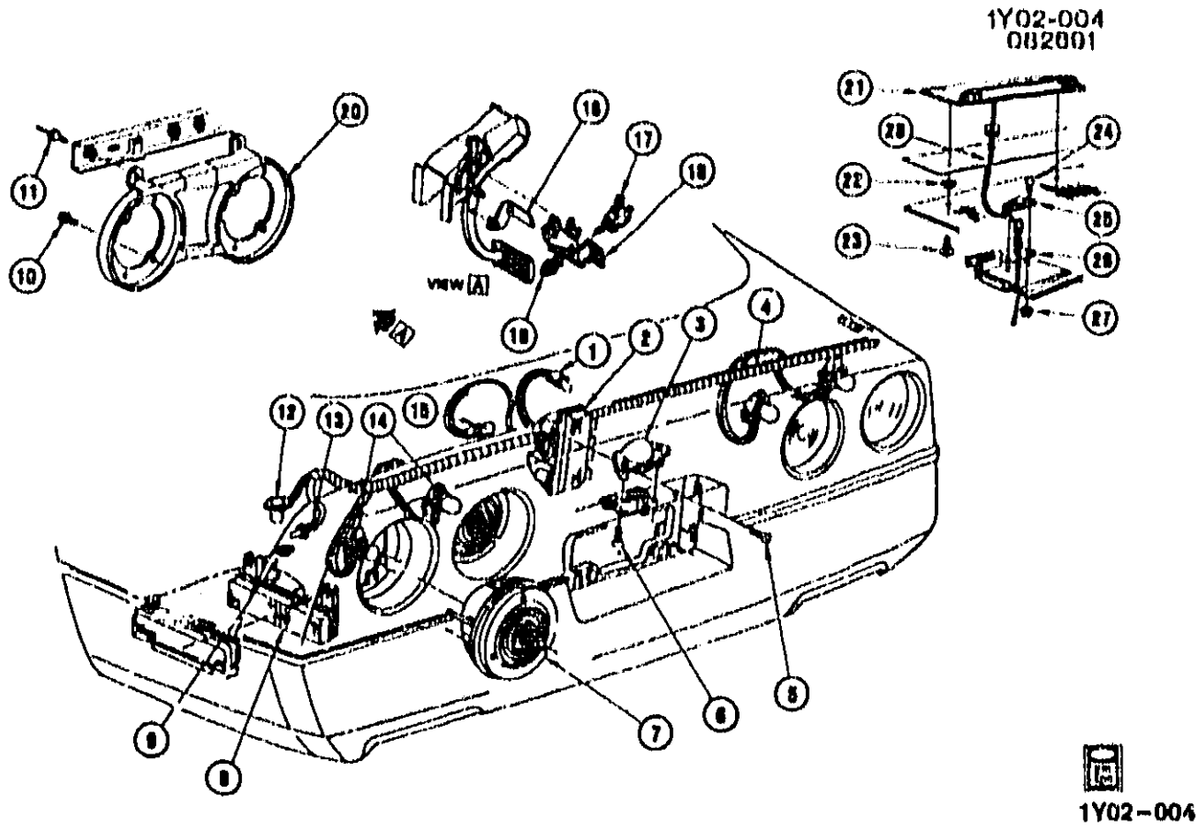

1984-1989 Y LAMPS/REAR
1990 Y LAMPS/REAR (EXC ZR1)

1.		8.991	BULB, RR LIC LP (NO 194) (AC-DELCO #L194)	9421330
2.	3-D23	2.697	LAMP, B/U-RH	917890
	3-D23	2.697	LAMP, B/U-LH	917880
3.	3-D24	2.700	LAMP, LIC (1984-87)	16519986
	3-D24	2.700	LAMP, LIC (1988-90)	16509351
4.		DISCON	HARNESS, BODY WRG (1984 UM6, UM7, UL5) (SEE PARTS SECTION FOR ADDITIONAL USAGE)	12036117
5.		8.977	SCREW, HEX W/FL WA TAP (M4.2X1.41X16) 9010 M NI ORG	11509374
6.	3-D25	2.708	BOLT, RR LIC LP	14091215
7.	3-D20	2.679	LAMP, RR COMB	915787
8.	3-D15	2.575	LAMP, RR SI MKR-RH (1984-87)	917902
	3-D15	2.575	LAMP, RR SI MKR & SI B/U-RH (1988-90)	16508518
	3-D15	2.575	LAMP, RR SI MKR-LH (1984-87)	917901
	3-D15	2.575	LAMP, RR SI MKR & SI B/U-LH (1988-90)	16508517
9.		8.921	NUT, STAMPED (M5)	
10.		8.977	BOLT, HEX W/FL WA (M6.3X1.81X20) 6010M PZOR	12337828
11.		N.S.	RIVET	
12.	3-D15	2.575	SOCKET, W/CABLE AUX RR SIDE MKR LP (2.697) (AC-DELCO #LS53)	12003758
		8.991	BULB, CORNERING LAMP (1D1156) (AC-DELCO #L1156)	9417866
13.	3-D15	2.575	SOCKET, W/CBL SI MKR LP (1984-87) (AC-DELCO #7434)	6298886
	3-D15	2.575	SOCKET, W/CBL SI MKR LP (1988-90) (AC-DELCO #LS13)	12083007
		8.991	BULB, TRADE #24 (AR) (AC-DELCO #L24)	9441837
14.	3-D22	2.694	SOCKET, W/CABLE, TAIL, STOP, DIR SIG (AC-DELCO #LS7)	12003759
		8.991	BULB, TAIL, STOP, DIR SIG (2.057) (AC-DELCO #L2057)	9438648
15.	3-D23	2.697	SOCKET, W/CABLE, B/U LP (AC-DELCO #LS50)	12027133
		8.991	BULB, B/U (1D1156) (AC-DELCO #L1156)	9417836
16.		DISCON	ACTUATOR, S/LP SW	14047682

© 2000 GENERAL MOTORS SERVICE PARTS OPERATIONS-CHEVROLET-14Y

				1Y02-004
17.	3-C8	2.447	SWITCH, S/LP (1984-86 K34) (SEE PARTS SECTION FOR ADDITIONAL USAGE) (AC-DELCO #D850A)	25524046
	3-C8	2.447	SWITCH, S/LP (1987-90 K34) (SEE PARTS SECTION FOR ADDITIONAL USAGE) (AC-DELCO #D852A)	25529860
18.	3-C8	2.447	BRACKET, S/LP SW (1984-89)	14053666
	3-C8	2.447	BRACKET, S/LP SW (1990)	10097699
19.	3-C8	2.447	RETAINER, STOP LP SW (AC-DELCO #22534155)	22534155
20.	3-D20	2.662	PLATE, TAIL LP MT-RH	14078684
	3-D20	2.662	PLATE, TAIL LP MT-LH	14078683
21.	3-D20	2.670	LAMP, H/MTD STOP	916411
		8.991	BULB, HALOGEN, 12V, 8 WATTS, .03 AMPS, 11CPTRADE NO.891, LGTH-25 MM (AR) (AC-DELCO #L891)	9441724
22.		N.S.	SPACER, HIGH MT S/LP	
23.		8.913	SCREW, PAN W/CON WA TORX (M6X1X16) SST BLK OX	11509429
24.		8.903	BOLT, RD HD SQ NK (M6X1X20) PZOR	11508347
25.	3-D19	2.660	RETAINER, HIGH MTD STOP LP	14103391
26.	3-D19	2.660	SEAL, HIGH MTD STOP LP	14103392
27.		DISCON	NUT, W/CON & SEAL WA (6X1X5.7) PEOR	11509040
28.	3-D22	2.694	WIRE, STOP LP (1990)	12090335

RPO DEFINITIONS
ZR1 - PACKAGE,SPECIAL PERFORMANCE COUPE(1YY07 + ZR1 == 1YZ07)

© 2000 GENERAL MOTORS SERVICE PARTS OPERATIONS-CHEVROLET-14Y

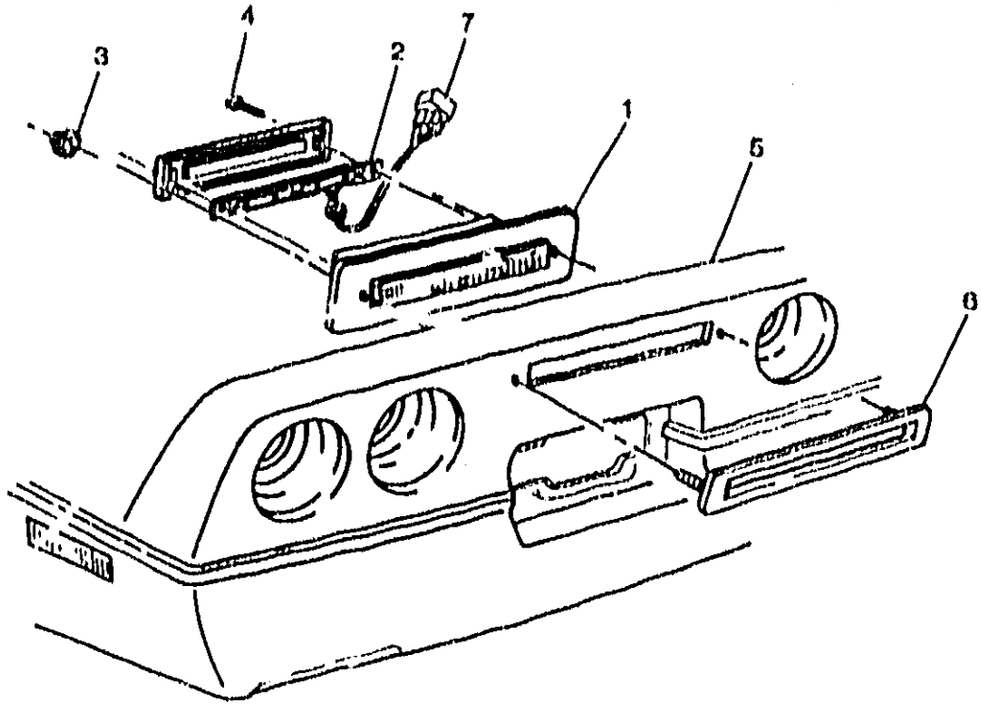

1Y02-011

1986-1990 Y LAMPS/REAR LAMP/HIGH MOUNT STOP(Y67)

1.	3-D20	2.679	LAMP, HIGH MTD STOP (1986-88)	5974609
	3-D20	2.679	LAMP, HIGH MTD STOP (1989-90)	5975377
		6.991	BULB, NO 891 (1986-88) (AC-DELCO #L891)	9441724
		6.991	BULB, NO 1156 (1989-90) (AC-DELCO #L1156)	9417866
	3-D23	2.697	SOCKET, HIGH MTD STOP (1989-90) (AC-DELCO #LS53)	12003758
2.		N.S.	BACKPLATE (NOT SERVICED - PART OF HIGH MT STOP LP ASM)	
3.		6.915	NUT, HFH W/NYLON INSERT (M6X1) THD 9 PEO	11516075
4.		6.977	SCREW, PN HD C/R TAP (6-18X1.00) CHR BRI	9422166
5.	3-N10	7.831	FASCIA, RR BPR (STOP LAMP OPENING IS, "ON LINED PIERCED"	14030202
6.	3-D21	2.681	BEZEL, HIGH MTD STOP LP (PAINT TO MATCH)	10213702
7.		6.065	CONNECTOR, WEATHER RESISTANT 2 WAY (TYPE 7 FEMALE) (AC-DELCO #PT107)	12085485

© 2000 GENERAL MOTORS SERVICE PARTS OPERATIONS-CHEVROLET-14Y

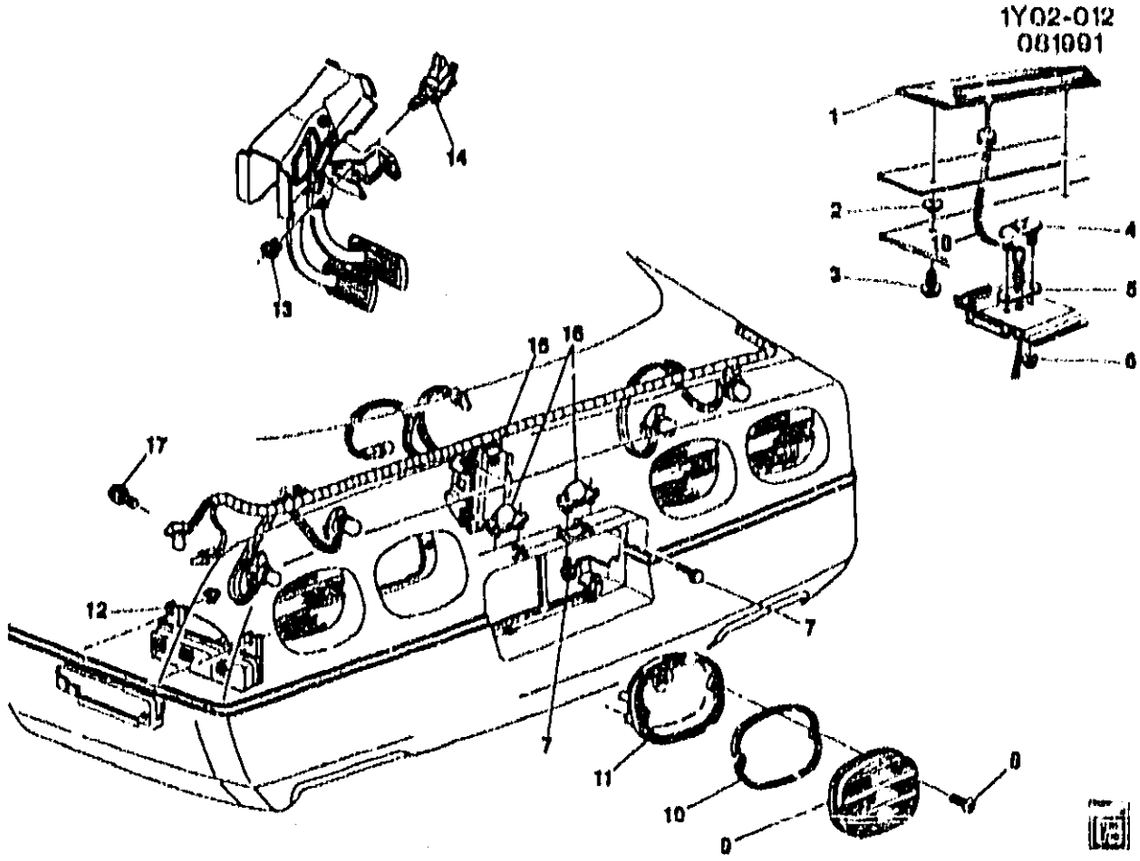

1Y02-012

1990 Y LAMPS/REAR (ZR1)

1.	3-D20	2.679	LAMP, HIGH MT STOP (Y07 (FOR Y67 USAGE SEE GROUP 2.000 "LAMP/HIGH MOUNT STOP" FOR DETAIL ILLUSTRATED VIEW))	918411
		8.991	BULB, HALOGEN, 12V, 8 WATTS, .63 AMPS, 11CP TRADE NO.891, LGTH-25 MM (Y07) (AR) (AC-DELCO #L891)	9441724
2.		N.S.	SPACER, HIGH MT S/LP (Y07)	
3.		8.913	SCREW, PAN W/CON WA, TORX, 6X1X16, FULL THD, 12.5 OD, HDR PT, 303 SS, BLK OX (Y07) (AR)	11509429
4.	3-D19	2.660	RETAINER, HIGH MT S/LP (Y07)	14103391
5.	3-D19	2.660	SEAL, HIGH MT S/LP (Y07)	14103392
6.		8.917	NUT, HEX W/CON WA M6X1X5.5, 24-OD 9 PEOR (AR)	11508388
7.	3-D25	2.708	BOLT, RR LIC PLT LP	14091215
8.	3-D20	2.662	BOLT, T/LP	12438116
9.	3-D21	2.682	LENS, T/LP	16509625
10.	3-D19	2.660	SEAL, T/LP	16510216
11.	3-D21	2.680	HOUSING, T/LP	16509624
12.	3-D15	2.575	LAMP, RR SI MKR & SI B/U-RH	16508518
	3-D15	2.575	LAMP, RR SI MKR & SI B/U-LH	16508517
	3-D15	2.575	SOCKET, RR COR LP (AC-DELCO #LS53)	12003758
		8.991	BULB, 12V, 32 CP/TRADE #1156 (AR) (AC-DELCO #L1156)	9417866
	3-D15	2.575	SOCKET, RR SI MKR LP (AC-DELCO #LS13)	12083007
		8.991	BULB, TRADE #24 (AR) (AC-DELCO #L24)	9441837
13.	3-C6	2.447	RETAINER, S/LP SW (AC-DELCO #22534155)	22534155
14.	3-C8	2.447	SWITCH, S/LP	
		4.710	SWITCH, ELEK BRK CONT BRK PED (W/ S/LP SW)	
15.	3-D23	2.697	LAMP, B/U (RH)	5975070
	3-D23	2.697	LAMP, B/U (LH)	5975069
	3-D23	2.697	SOCKET, B/U LP (AC-DELCO #LS50)	12027133

© 2000 GENERAL MOTORS SERVICE PARTS OPERATIONS-CHEVROLET-14Y

				1Y02-012
		8.991	BULB, 12V, 32 CP/TRADE #1156 (AR) (AC-DELCO #L1156)	9417666
16.	3-D24	2.700	LAMP, RR LIC PLT	16509361
	3-D25	2.714	SOCKET, RR LIC PLT LP (AC-DELCO #LS13)	12083007
		8.991	BULB, TRADE #24 (AR) (AC-DELCO #L24)	9441637
17.		8.977	SCREW, HEX W/FLAT WA (AR)	12337028
18.	3-D22	2.694	WIRE, S/LP (Y07)	12090336

RPO DEFINITIONS
ZR1 - PACKAGE,SPECIAL PERFORMANCE COUPE(1YY07 + ZR1 *** 1YZ07)

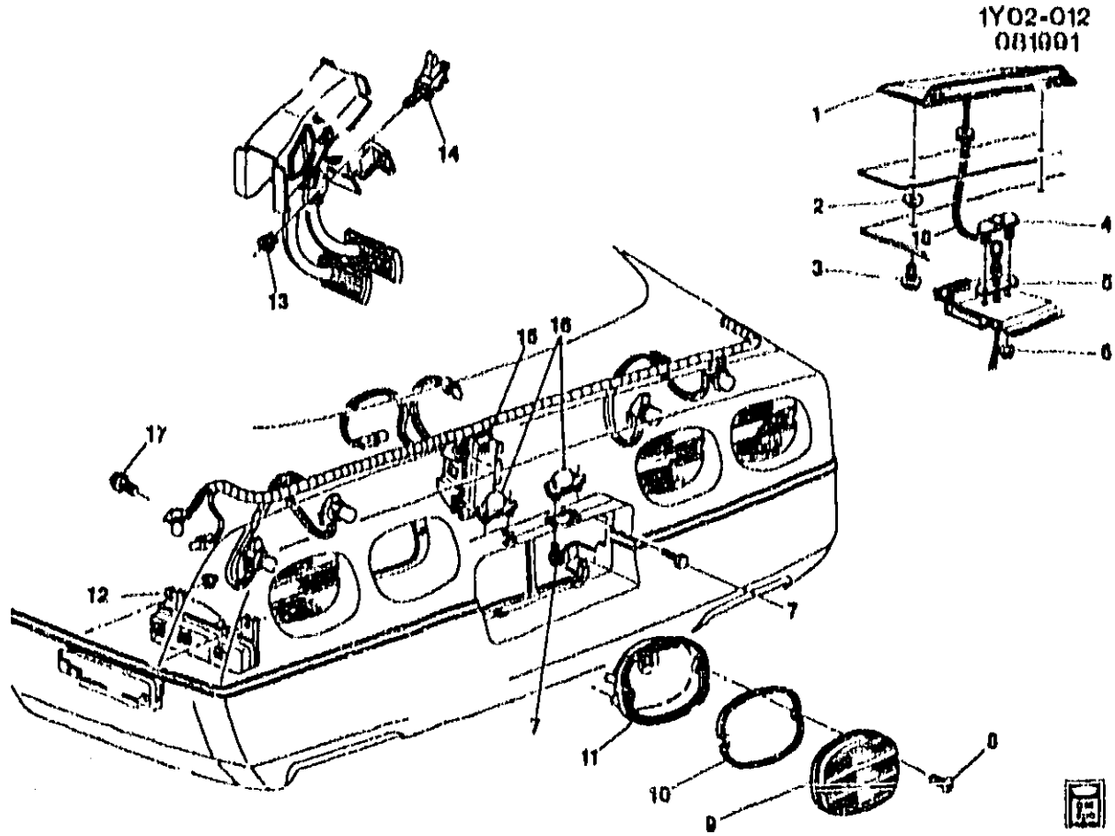

1Y02-0121

1991-1995 Y LAMPS/REAR (ZR1)

1.	3-D20	2.679	LAMP, HIGH MT STOP	91-93	Y (ZR1)	1	918411
	3-D20	2.679	LAMP, HIGH MT STOP	94-95	Y (ZR1) (EXC T90)	1	918411
		8.991	BULB, HALOGEN, 12V, 8 WATTS, .63 AMPS, 11CPTRADE NO.891, LGTH-25 MM (AC-DELCO #L891)	91-95	.....	AR	9441724
2.		N.S.	SPACER, HIGH MT S/LP		.....		
3.		8.913	SCREW, PAN W/CON WA, TORX, 6X1X16, FULL THD, 12.5 OD, HDR PT, 303 SS, BLK OX	91-95	.....	AR	11509429
4.	3-D19	2.660	RETAINER, HIGH MT S/LP (2.662)	91-93	Y (ZR1)	1	14103391
	3-D19	2.660	RETAINER, HIGH MT S/LP (2.662)	94-95	Y (ZR1) (EXC T90)	1	14103391
5.	3-D19	2.660	SEAL, HIGH MT S/LP	91-93	Y (ZR1)	1	14103392
	3-D19	2.660	SEAL, HIGH MT S/LP	94-95	Y (ZR1) (EXC T90)	1	14103392
6.		8.917	NUT, HEX W/CON WA M6X1X5.5, 24-OD 9 PEOR (8.915)	91-95	.....	AR	11508388
7.	3-D25	2.708	BOLT, RR LIC PLT LP	91-95	Y	2	14091215
8.	3-D20	2.662	BOLT, T/LP (2.737)	91-93	Y	4	12338116
	3-D20	2.662	BOLT, T/LP (2.737)	94-95	Y (EXC T90)	4	12338116
9.	3-D21	2.682	LENS, T/LP	91-93	Y	4	16509625
	3-D21	2.682	LENS, T/LP	94-95	Y (EXC T90)	4	16509625
10.	3-D19	2.660	SEAL, T/LP (2.684)	91-93	Y	4	16510216
	3-D19	2.660	SEAL, T/LP (2.684)	94-95	Y (EXC T90)	4	16510216
11.	3-D21	2.680	HOUSING, T/LP	91-93	Y	4	16509624
	3-D21	2.680	HOUSING, T/LP	94-95	Y (EXC T90)	4	16509624

© 2000 GENERAL MOTORS SERVICE PARTS OPERATIONS-CHEVROLET-14Y

12.	3-D15	2.575	LAMP, RR SI MKR & SI B/U	91-93	Y	LH	16514357
	3-D15	2.575	LAMP, RR SI MKR & SI B/U	91-93	Y	RH	16514356
	3-D15	2.575	LAMP, RR SI MKR & SI B/U	94-95	Y (EXC T90)	LH	16514357
	3-D23	2.697	LAMP, RR SI MKR & SI B/U (2.575)	94-95	Y (EXC T90)	LH	16514357
	3-D15	2.575	LAMP, RR SI MKR & SI B/U	94-95	Y (EXC T90)	RH	16514356
	3-D23	2.697	LAMP, RR SI MKR & SI B/U (2.575)	94-95	Y (EXC T90)	RH	16514356
	3-D15	2.575	SOCKET, RR COR LP (2.694) (AC-DELCO #LS53)	91-95	Y	2	12003756
		8.991	BULB, 12V, 32 CP/TRADE #1156 (AC-DELCO #L1156)	91-95		AR	9417866
	3-D15	2.575	SOCKET, RR SI MKR LP (AC-DELCO #LS13)	91-94	Y	2	12083007
	3-D15	2.575	SOCKET, RR SI MKR LP (AC-DELCO #LS13)	95	Y (EXC T90)	2	12083007
		8.991	BULB, TRADE #24 (AC-DELCO #L24)	91-95		AR	9441837
13.		N.S.	RETAINER, S/LP SW				
14.	3-C8	2.447	SWITCH, S/LP (AC-DELCO #D852A)	91-92	Y	1	25529860
	3-N9	4.710	SWITCH, ELEK BRK CONT BRK PED (W/ S/LP SW) (AC-DELCO #10211657)	93-95	Y	1	10211657
	3-C8	2.447	SWITCH, ELEK BRK CONT BRK PED (W/ S/LP SW) (4.710) (AC-DELCO #10211657)	93-95	Y	1	10211657
15.	3-D23	2.697	LAMP, B/U	91-93	Y	LH	5975069
	3-D23	2.697	LAMP, B/U	91-93	Y	RH	5975070
	3-D23	2.697	LAMP, B/U	94-95	Y (EXC T90)	LH	5975069
	3-D23	2.697	LAMP, B/U	94-95	Y (EXC T90)	RH	5975070
	3-D23	2.697	SOCKET, B/U LP (2 CAVITY) (AC-DELCO #LS50)	91-93	Y	2	12027133
	3-D23	2.697	SOCKET, B/U LP (2 CAVITY) (AC-DELCO #LS50)	94-95	Y (EXC T90)	2	12027133
		8.991	BULB, 12V, 32 CP/TRADE #1156 (AC-DELCO #L1156)	91-95		AR	9417866
	3-D23	2.697	LAMP, B/U	94-95	Y (T90) (EXPORT)	2	5976821
	3-D23	2.697	SOCKET, B/U LP (2.535) (AC-DELCO #LS39)	94-95	Y (T90) (EXPORT)	2	12141301
16.	3-D24	2.700	LAMP, RR LIC PLT	91-93	Y	3	16509351
	3-D24	2.700	LAMP, RR LIC PLT	94-95	Y (EXC T90)	AR	16509351
	3-D25	2.714	SOCKET, RR LIC PLT LP (2.575) (AC-DELCO #LS13)	91-93	Y	2	12083007
	3-D25	2.714	SOCKET, RR LIC PLT LP (2.575) (AC-DELCO #LS13)	94-95	Y (EXC T90)	1	12083007
		8.991	BULB, TRADE #24 (AC-DELCO #L24)	91-95		AR	9441837
	3-D24	2.700	LAMP, RR LIC PLT	94-95	Y (T90) (EXPORT)	2	16519986
	3-D25	2.714	SOCKET, RR LIC PLT LP (AC-DELCO #LS9)	94	Y (T90) (EXPORT)	1	8918527
	3-D25	2.714	SOCKET, RR LIC PLT LP (W/LEADS) (2.596) (AC-DELCO #LS44)	94-95	Y (T90) (EXPORT)	1	12141388
17.		8.977	SCREW, HEX W/FLAT WA	91-95		AR	12337828
18.	3-D22	2.694	WIRE, S/LP	91-95	Y07 (ZR1)	1	12090335

RPO DEFINITIONS

T90 – LAMP,SIGNALING AND MARKER(EXPORT)

© 2000 GENERAL MOTORS SERVICE PARTS OPERATIONS-CHEVROLET-14Y

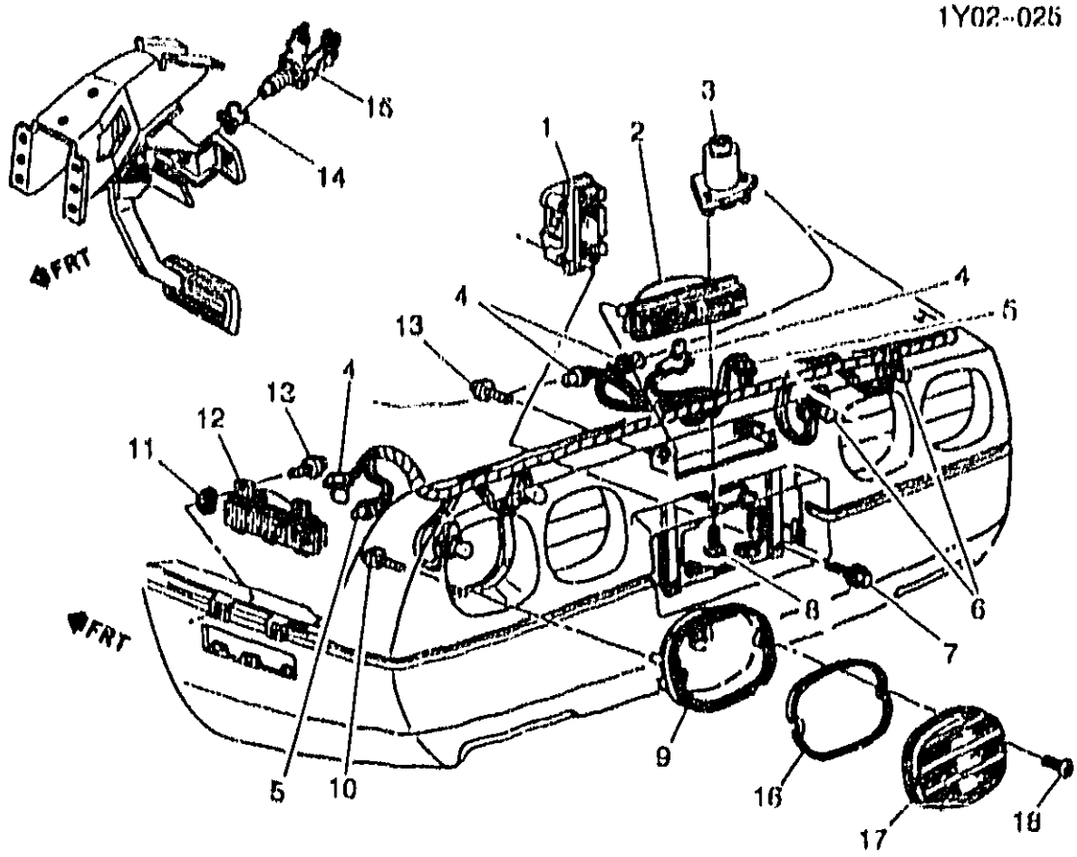

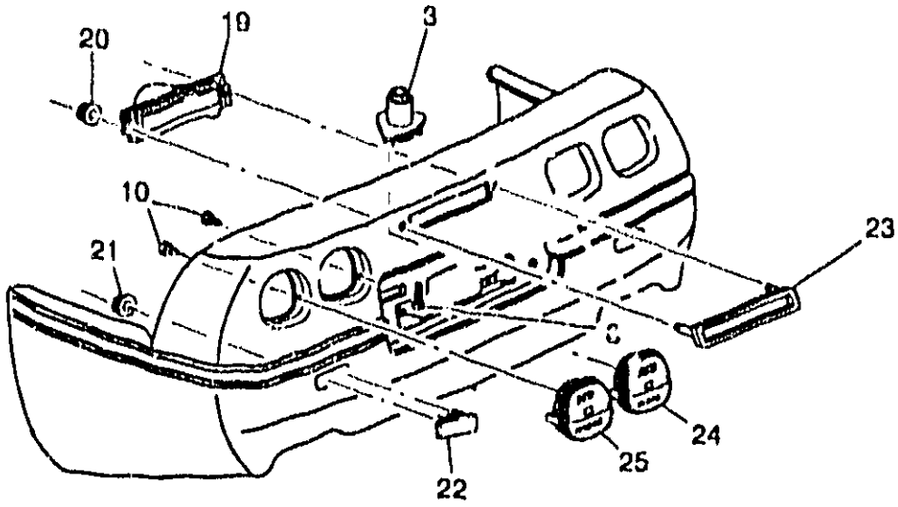

EXPORT

1Y02-025

1991-1995 Y LAMPS/REAR (EXC ZR1)
1996 Y LAMPS/REAR

1.	3-D23	2.697	LAMP, B/U	91-93	Y	LH	5975069
	3-D23	2.697	LAMP, B/U	91-93	Y	RH	5975070
	3-D23	2.697	LAMP, B/U	94-96	Y (EXC T90)	LH	5975069
	3-D23	2.697	LAMP, B/U	94-96	Y (EXC T90)	RH	5975070
	3-D23	2.697	SOCKET, B/U LP (2 CAVITY) (AC-DELCO #LS50)	91-93	Y	2	12027133
	3-D23	2.697	SOCKET, B/U LP (2 CAVITY) (AC-DELCO #LS50)	94-96	Y (EXC T90)	2	12027133

© 2000 GENERAL MOTORS SERVICE PARTS OPERATIONS-CHEVROLET-14Y

							1Y02-026
	3-D23	2.697	LAMP, B/U	94-96	Y (T90) (EXPORT)	2	5976021
	3-D23	2.697	SOCKET, B/U LP (2.636) (AC-DELCO #LS30)	94-96	Y (T90) (EXPORT)	2	12141301
2.	3-D20	2.679	LAMP, HIGH MT STOP	91-93	Y (EXC ZR1)	1	5975799
	3-D20	2.679	LAMP, HIGH MT STOP	94-95	Y (EXC T90, ZR1)	1	5975799
	3-D20	2.679	LAMP, HIGH MT STOP	96	Y (EXC T90)	1	5975799
	3-D22	2.694	SOCKET, S/LP (SPLICE WIRES AS REQ) (AC-DELCO #LS7)	91-93	Y	4	12003759
	3-D22	2.694	SOCKET, S/LP (SPLICE WIRES AS REQ) (AC-DELCO #LS7)	94-96	Y (EXC T90)	4	12003759
	3-D22	2.694	SOCKET, HIGH MT S/LP (AC-DELCO #LS53)	91-94	Y	2	12003760
	3-D22	2.694	SOCKET, HIGH MT S/LP (SPLICE WIRES AS REQ) (AC-DELCO #LS7)	93	Y	4	12003759
	3-D22	2.694	SOCKET, HIGH MT STOP LP (AC-DELCO #LS53)	95	Y (EXC T90, ZR1)	1	12003760
	3-D22	2.694	SOCKET, HIGH MT STOP LP (AC-DELCO #LS53)	96	Y (EXC T90)	1	12003760
	3-D22	2.694	SOCKET, STOP & T/LP (AC-DELCO #LS53)	93	Y	4	12003760
	3-D22	2.694	SOCKET, STOP & T/LP (SPLICE WIRES AS REQ) (AC-DELCO #LS7)	91-92	Y (EXC T90)	4	12003759
	3-D22	2.694	SOCKET, S/LP (AC-DELCO #LS53)	94	Y (T90) (EXPORT)	2	12003760
	3-D22	2.694	SOCKET, S/LP (2.636) (AC-DELCO #LS30)	94-96	Y (T90) (EXPORT)	2	12141301
	3-D22	2.694	SOCKET, STOP & T/LP (USE A & G WIRE CLIP THE THIRD WIRE (3 CAVITY) (2.596) (AC-DELCO #LS8)	94-96	Y (T90) (EXPORT)	AR	12013813
	3-D22	2.694	SOCKET, STOP & T/LP (AC-DELCO #LS40)	94-96	Y67 (T90) (EXPORT)	2	12141302
3.	3-D24	2.700	LAMP, RR LIC PLT	91-93	Y	3	16509351
	3-D24	2.700	LAMP, RR LIC PLT	94-96	Y (EXC T90)	AR	16509351
	3-D25	2.714	SOCKET, RR LIC PLT LP (2.575) (AC-DELCO #LS13)	91-93	Y	2	12083007
	3-D25	2.714	SOCKET, RR LIC PLT LP (2.575) (AC-DELCO #LS13)	94-96	Y (EXC T90)	1	12083007
	3-D24	2.700	LAMP, RR LIC PLT	94-96	Y (T90) (EXPORT)	2	16519986
	3-D25	2.714	SOCKET, RR LIC PLT LP (AC-DELCO #LS9)	91	Y (T90) (EXPORT)	1	6918527
	3-D25	2.714	SOCKET, RR LIC PLT LP (W/LEADS) (2.596) (AC-DELCO #LS44)	94-96	Y (T90) (EXPORT)	1	12141380
4.		8.991	BULB, 12V, 32 CP/TRADE #1156 (AC-DELCO #L1156)	91-96		AR	9417866
5.		8.991	BULB, TRADE #24 (AC-DELCO #L24)	91-96		AR	9441837
6.		8.991	BULB, 12/14V 32-2 C.P. (T/LP) (AC-DELCO #L2057)	91-96		AR	9438848
	3-D22	2.694	SOCKET, S/LP (SPLICE WIRES AS REQ) (AC-DELCO #LS7)	91-93	Y	4	12003759
	3-D22	2.694	SOCKET, S/LP (SPLICE WIRES AS REQ) (AC-DELCO #LS7)	94-96	Y (EXC T90)	4	12003759
	3-D22	2.694	SOCKET, T/LP (SPLICE WIRES AS REQ) (AC-DELCO #LS7)	91-93	Y	4	12003759

© 2000 GENERAL MOTORS SERVICE PARTS OPERATIONS-CHEVROLET-14Y

	3-D22	2.694	SOCKET, T/LP (SPLICE WIRES AS REQ) (AC-DELCO #LS7)	94-96	Y (EXC T90)	4	12003759
7.		8.977	BOLT/SCREW ASM M4.2X1.41 #10 HEX HD GM71	91-96		AR	11515303
8.	3-D25	2.700	BOLT, RR LIC PLT LP	91-96	Y	2	14091215
9.	3-D21	2.600	HOUSING, T/LP	91-93	Y	4	16509624
	3-D21	2.600	HOUSING, T/LP	94-96	Y (EXC T90)	4	16509624
10.		8.977	SCREW, HEX W/FLAT WA (T/LP)	91-96		8	12337028
11.		8.921	NUT, ANCHOR THD SIZE 8-16 NYLON	91-96		AR	1377030
12.	3-D15	2.575	LAMP, RR SI MKR & SI B/U	91-93	Y	LH	16514357
	3-D15	2.575	LAMP, RR SI MKR & SI B/U	91-93	Y	RH	16514358
	3-D15	2.575	LAMP, RR SI MKR & SI B/U	94-96	Y (EXC T90)	LH	16514357
	3-D23	2.697	LAMP, RR SI MKR & SI B/U (2.575)	94-96	Y (EXC T90)	LH	16514357
	3-D15	2.575	LAMP, RR SI MKR & SI B/U	94-96	Y (EXC T90)	RH	16514358
	3-D23	2.697	LAMP, RR SI MKR & SI B/U (2.575)	94-96	Y (EXC T90)	RH	16514358
	3-D15	2.575	SOCKET, RR COR LP (2.694) (AC-DELCO #LS63)	91-96	Y	2	12003758
	3-D15	2.575	SOCKET, RR SI MKR LP (AC-DELCO #LS13)	91-94	Y	2	12003007
	3-D15	2.575	SOCKET, RR SI MKR LP (AC-DELCO #LS13)	95-96	Y (EXC T90)	2	12003007
13.		8.977	BOLT, SCR HEX W/FLAT WA 12 DIA TYPE AB	91-96		AR	11509374
14.	3-C8	2.447	RETAINER, S/LP SW (STEEL) (AC-DELCO #22534155)	91-92	Y	1	22534155
15.	3-C8	2.447	SWITCH, S/LP (AC-DELCO #D862A)	91-92	Y	1	25529860
	3-N9	4.710	SWITCH, ELEK BRK CONT BRK PED (W/ S/LP SW) (AC-DELCO #10211657)	93-96	Y	1	10211657
	3-C8	2.447	SWITCH, ELEK BRK CONT BRK PED (W/ S/LP SW) (4.710) (AC-DELCO #10211657)	93-96	Y	1	10211657
16.	3-D19	2.660	SEAL, T/LP (2.684)	91-93	Y	4	16510216
	3-D19	2.660	SEAL, T/LP (2.684)	94-96	Y (EXC T90)	4	16510216
17.		N.S.	LAMP, TAIL (CPS)	91-93	Y	4	5975060
		N.S.	LAMP, TAIL (EXC T90) (CPS)	94-96	Y	4	5975060
	3-D21	2.682	LENS, T/LP	91-93	Y	4	16509625
	3-D21	2.682	LENS, T/LP	94-96	Y (EXC T90)	4	16509625
18.	3-D20	2.662	BOLT, T/LP (2.737)	91-93	Y	4	12338116
	3-D20	2.662	BOLT, T/LP (2.737)	94-96	Y (EXC T90)	4	12338116
19.	3-D20	2.679	LAMP, RR FOG	94-96	Y (T90) (EXPORT)	1	5976869
20.		8.921	NUT, HEX STAMPED THD FORMING FOR 5MM STUD, STL, PZOR, 15 OD, 6.1 THK, PZOR (RR FOG LP BZL)	91-96		2	11513575
21.		8.921	NUT, STAMPED FITS 6.3 STUD-TYPE B SELF THD STL PC (R/END FASCIA REFL)	91-96		4	11502553
22.	3-D21	2.689	REFLECTOR, R/END FASCIA	94-96	Y (T90) (EXPORT)	2	5976351
23.	3-D21	2.681	BEZEL, RR FOG LP (PAINT TO MATCH)	94-96	Y (T90) (EXPORT)	1	10212080
24.	3-D23	2.697	LAMP, B/U	91-93	Y	LH	5975069
	3-D23	2.697	LAMP, B/U	91-93	Y	RH	5975070
	3-D23	2.697	LAMP, B/U	94-96	Y (EXC T90)	LH	5975069

© 2000 GENERAL MOTORS SERVICE PARTS OPERATIONS-CHEVROLET-14Y

							1Y02-026	
	3-D23	2.697	LAMP B/U	94-96	Y (EXC T90)	RH	5975070
	3-D23	2.697	LAMP B/U	94-96	Y (T90) (EXPORT)	2	5976021
25.		N.S.	LAMP TAIL (CPS)	91-93	Y	4	5975060
	3-D20	2.679	LAMP TAIL (W/T90) (CPS)	94-96	Y	4	5976022

RPO DEFINITIONS
T90 -- LAMP,SIGNALING AND MARKER(EXPORT)
ZR1 -- PACKAGE,SPECIAL PERFORMANCE COUPE(1YY07 + ZR1 == 1YZ07)

© 2000 GENERAL MOTORS SERVICE PARTS OPERATIONS-CHEVROLET-14Y

1Y02-024
061100

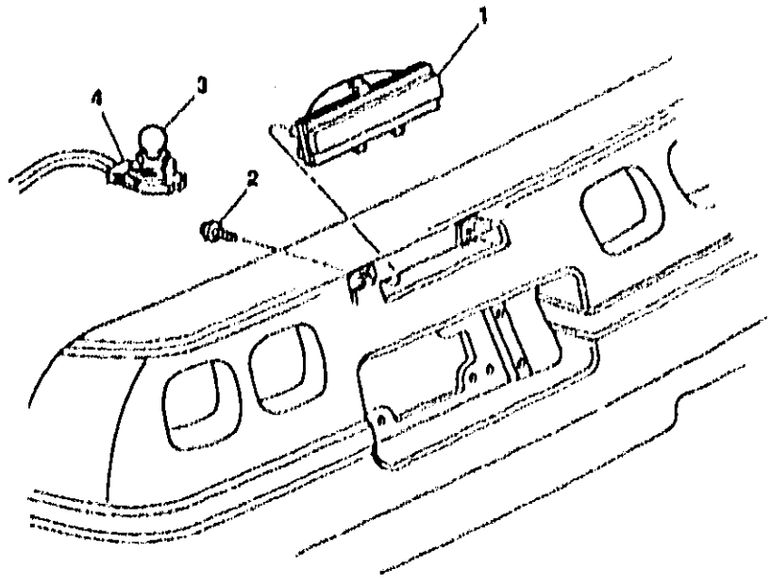

1Y02-024

1991-1996 Y67 LAMPS/REAR (LAMP/HIGH MOUNT STOP)

1.	3-D20	2.679	LAMP, HIGH MT STOP	91-93	Y (EXC ZR1)	1	5975799
	3-D20	2.679	LAMP, HIGH MT STOP	94-95	Y (EXC T90, ZR1)	1	5975799
	3-D20	2.679	LAMP, HIGH MT STOP	96	Y (EXC T90)	1	5975799
2.		6.977	SCREW, PN HD C/R TAP 8-18X1.00 CB	91-96	.....	2	9422166
3.		6.991	BULB, 12V, 32 CP/TRADE #1156 (AC-DELCO #L1156)	91-96	.....	AR	9417066
4.		DISCON	HARNESS, BODY RR WRG	91-92	Y67	1	12073839
	3-N23	13.090	HARNESS, BODY RR WRG	93	Y (EXC T90)	1	12130377
	3-N23	13.090	HARNESS, BODY RR WRG	94-96	Y67 (EXC T90)	1	12130356
	3-N23	13.090	HARNESS, BODY RR WRG	93	Y67 (T90) (EXPORT) ...	1	12130380
	3-N23	13.090	HARNESS, BODY RR WRG	94-96	Y67 (T90) (EXPORT) ...	1	12130336

RPO DEFINITIONS
T90 - LAMP,SIGNALING AND MARKER(EXPORT)
ZR1 - PACKAGE,SPECIAL PERFORMANCE COUPE(1YY07 + ZR1 == 1YZ07)

© 2000 GENERAL MOTORS SERVICE PARTS OPERATIONS-CHEVROLET-14Y

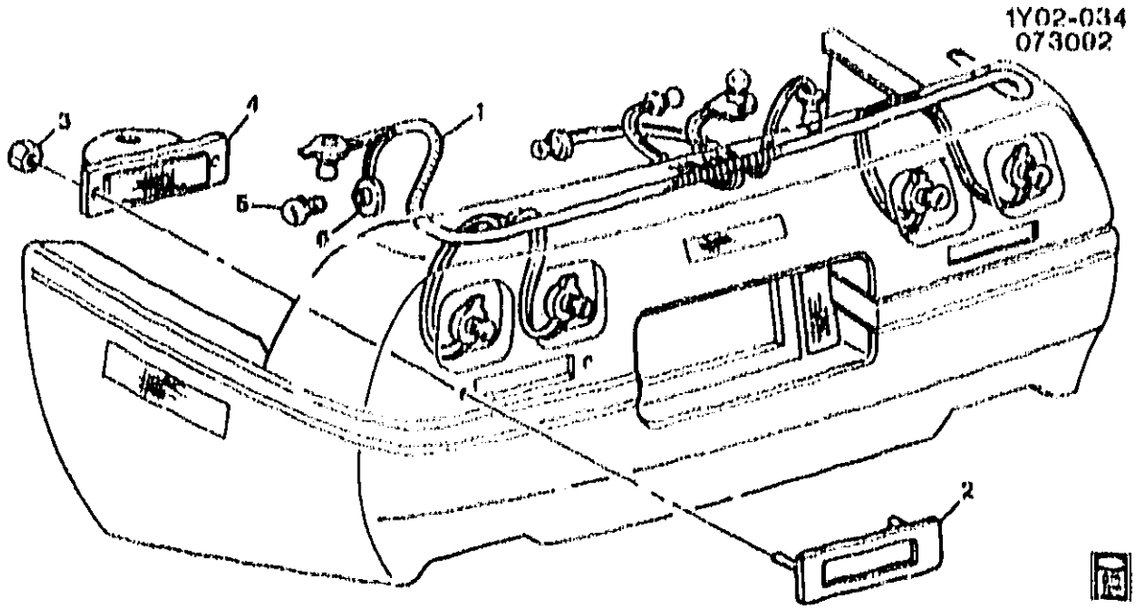

1Y02–034

1993 Y LAMPS/REAR (T90)

1.		DISCON	HARNESS, BODY RR WRG	93	Y07 (T90) (EXPORT) ...	1	12130379
	3–N23	13.090	HARNESS, BODY RR WRG	93	Y67 (T90) (EXPORT) ...	1	12130380
2.	3–E5	2.660	BEZEL, RR T/SIG LP (PAINT TO MATCH) (2.661)	93	Y (T90) (EXPORT)	1	10213702
3.		6.921	NUT, MET STAMPED 5 MM ID ...	93	.....	AR	11501793
4.	3–D21	2.662	LAMP, RR T/SIG (2.660)	93	Y (T90) (EXPORT)	2	5976712
5.		6.991	BULB, 12V, 32 CP/TRADE #1156 (AC–DELCO #L1156)	93	.....	AR	9417866
6.		N.S.	SOCKET, STOP & T/LP		.....		

RPO DEFINITIONS
T90 – LAMP,SIGNALING AND MARKER(EXPORT)

© 2000 GENERAL MOTORS SERVICE PARTS OPERATIONS – CHEVROLET – 14Y

MICROFICHE INDEX

GROUP 2.000

FICHE 3 OF 11

GROUP	DESCRIPTION	STARTING GRID LOCATION PARTS	ILLUSTRATIONS
–	GENERAL INFORMATION	1–A2	1–G2
–	ALPHABETICAL INDEX	1–B13	N.A.
2.000	CHASSIS WIRING – LAMPS	3–A2	3–F2
–	OUT OF FICHE CALLS	N.A.	3–M20

3–K1

MICROFICHE INDEX

GROUP 2.000

FICHE 3 OF 11

GROUP	DESCRIPTION	STARTING GRID LOCATION PARTS	ILLUSTRATIONS
–	GENERAL INFORMATION	1–A2	1–G2
–	ALPHABETICAL INDEX	1–B13	N.A.
2.000	CHASSIS WIRING – LAMPS	3–A2	3–F2
–	OUT OF FICHE CALLS	N.A.	3–M20

3–L1

MICROFICHE INDEX

GROUP 2.000

FICHE 3 OF 11

GROUP	DESCRIPTION	STARTING GRID LOCATION PARTS	ILLUSTRATIONS
–	GENERAL INFORMATION	1–A2	1–G2
–	ALPHABETICAL INDEX	1–B13	N.A.
2.000	CHASSIS WIRING – LAMPS	3–A2	3–F2
–	OUT OF FICHE CALLS	N.A.	3–M20

3–M1

1.800 CONNECTOR – ELBOW – FITTING – RING – SENSOR – SWITCH, Engine Oil Pressure/Temperature

90–91	Y 5.7–8 (L98)	14078987	1	7.52	ELBOW, ENG OIL PRESS GA SEN (TO BLK (105 DEG W/HEX BODY) (01.803)
90–91	Y 5.7–8 (L98)	14078968	1	9.45	ELBOW, ENG OIL PRESS GA SEN (TO BLK) (01.803)
92–96	Y 5.7P (LT1)	14078988	1	9.46	ELBOW, ENG OIL PRESS GA SEN (TO BLK) (01.803) (USED W/1052080, SEALER)
96	Y 5.7–5 (LT4)	14078988	1	9.46	ELBOW, ENG OIL PRESS GA SEN (TO BLK) (01.803) (USED W/1052080, SEALER)
84	Y (2ND DES)	14078988	1	9.46	ELBOW, OIL PRESS GA SEN TO BLK FTG (DOUBLE OUTLET W/HEX BODY) (01.803)
92–96	Y 5.7P (LT1)	10137636	1	8.11	FITTING, ENG OIL PRESS GA SEN
96	Y 5.7–5 (LT4)	10137636	1	8.11	FITTING, ENG OIL PRESS GA SEN
90–95	Y 5.7J (LT5)	10122195	1	10.25	FITTING, ENG OIL TEMP SEN
89	Y FEDERAL EMIS (NA5), (5.7–8)	10096122	2	DISCON	FITTING, F/PMP & ENG OIL PRESS IND SW (01.803)
85–88	Y	14078988	1	9.45	FITTING, OIL PRESS GA SEN TO BLK FTG (01.803)
90–95	Y 5.7J (LT5)	00274843	1	3.70	RING, ENG OIL TEMP CONT VLV RET (08.934)
84	Y 1ST DES	14073454	1	53.40	SENSOR, ENG OIL PRESS GA (3 BLADE TERM, 1/8–27 THD) (AC–DELCO #14073454)
84	Y 2ND DES	14078954	1	33.65	SENSOR, ENG OIL PRESS GA (1 BLADE TERM, 1/8–27 THD) (AC–DELCO #14078954)
85–88	Y	14078954	1	33.65	SENSOR, ENG OIL PRESS GA (1 BLADE TERM, 1/8–27 THD) (AC–DELCO #14078954)
90–95	Y 5.7J (LT5)	12555492	1	32.91	SENSOR, ENG OIL PRESS GA (3 TERMINALS:A, C, D) (AC–DELCO #D1808A)
90–91	Y 5.7–8 (L98)	10096136	1	26.04	SENSOR, ENG OIL T/GA (CHG MON & TEMP GA) (3 BLADE TERM, 1/4–18 THD) (AC–DELCO #10096136)
90–91	Y 5.7J (LT5)	10096136	1	26.04	SENSOR, ENG OIL T/GA (3 BLADE TERM, 1/4–18 THD) (AC–DELCO #10096136)
92–95	Y 5.7J (LT5)	10096181	1	20.00	SENSOR, ENG OIL T/GA (3 BLADE TERM) (W/IND SW) (03.682) (AC–DELCO #213–815)
92–96	Y 5.7P (LT1)	10096136	1	26.04	SENSOR, ENG OIL T/GA & OIL CHANGE IND (AC–DELCO #10096136)
96	Y 5.7–5 (LT4)	10096136	1	26.04	SENSOR, ENG OIL T/GA & OIL CHANGE IND (AC–DELCO #10096136)
84–88	Y	25036292	1	28.97	SENSOR, ENG OIL TEMP (1 BLADE TERM, 1/4–18 THD) (AC–DELCO #25036292)
89	Y 5.7–8	25036292	1	28.97	SENSOR, ENG OIL TEMP (AC–DELCO #25036292)
89	Y 5.7–8 (L98)	10201491	1	32.12	SENSOR, F/PMP SW & ENG OIL PRESS GA (3 BLADE TERM, 1/8–27 THD) (AC–DELCO #10201491)

© 2000 GENERAL MOTORS SERVICE PARTS OPERATIONS

1.800 CONNECTOR – ELBOW – FITTING – RING – SENSOR – SWITCH, Engine Oil Pressure/Temperature(Con't)

90	Y 5.7–8	10201491	1	32.12	SENSOR, F/PMP SW & ENG OIL PRESS GA (3 BLADE TERM, 1/8–27 THD) (AC–DELCO #10201491)
90–91	Y 5.7–8 (L08)	10201491	1	32.12	SENSOR, F/PMP SW & ENG OIL PRESS GA (1/8–27 THD SIZE) (3 BLADE TERM) (AC–DELCO #10201491)
92–96	Y 5.7P (LT1)	10201491	1	32.12	SENSOR, F/PMP SW & ENG OIL PRESS GA (1/8–27 THD SIZE) (3 BLADE TERM) (AC–DELCO #10201491)
96	Y 5.7–6 (LT4)	10201491	1	32.12	SENSOR, F/PMP SW & ENG OIL PRESS GA (1/8–27 THD SIZE) (3 BLADE TERM) (AC–DELCO #10201491)
90–91	Y 5.7–8 (L08)	25036935	1	16.32	SWITCH, ENG OIL PRESS IND (OIL FLTR HSG) (1 BLADE TERM, 1/8–27 THD) (AC–DELCO #D1846)
90–92	Y 5.7J (LT5)	25036935	1	16.32	SWITCH, ENG OIL PRESS IND (OIL FLTR HSG (1 BLADE TERM, 1/8–27 THD)) (AC–DELCO #D1846)
92–96	Y 5.7P (LT1)	25036935	1	16.32	SWITCH, ENG OIL PRESS IND (OIL FLTR HSG (1 BLADE TERM, 1/8–27 THD)) (AC–DELCO #D1846)
93–95	Y 5.7J (LT5)	25036935	1	16.32	SWITCH, ENG OIL PRESS IND (AC–DELCO #D1846)
96	Y 5.7–6 (LT4)	25036935	1	16.32	SWITCH, ENG OIL PRESS IND (OIL FLTR HSG (1 BLADE TERM, 1/8–27 THD)) (AC–DELCO #D1846)
85–87	Y	25036553	2	12.65	SWITCH, OIL PRESS (2 BLADE TERM, 1/8–27 THD) (AC–DELCO #D1818)
88	Y	25036936	1	14.59	SWITCH, OIL PRESS IND (2 BLADE TERM, 1/8–27 THD) (AC–DELCO #D1835)

1.803 FITTING, Engine Oil Pressure Gage

84	Y	14047169	2	9.20	FITTING, OIL PRESS GA
84	Y (1ST DES)	14066510	1	DISCON	FITTING, OIL PRESS GA SEN (1/8–27 NPT 1 EXT 1 INT AT 90 DEG M42 X 25) (SINGLE OUTLET W/SQUARE BODY)
84	Y (1ST DES)	14066511	1	DISCON	FITTING, OIL PRESS GA SEN (1/8–27 1 INT, 1 EXT AT 90 DEG M23 X 21) (90 DEG W/SQUARE BODY)
84	Y (2ND DES)	14078987	1	7.52	FITTING, OIL PRESS GA SEN TO BLK (105 DEG W/HEX BODY)
85–88	Y	14078987	1	7.52	FITTING, OIL PRESS GA SEN TO BLK (105 DEG W/HEX BODY)

3.275 BOLT – STUD, Intake & Exhaust Manifold

92–93	Y 5.7P (LT1)	09440073	2	2.25	BOLT, EXH MANIF (HFH 3/8–16X2.00 280M POR 6174M) (08.900)
92–95	Y 5.7J (LT5)	10065580	2	.54	BOLT, EXH MANIF (HFH M8X1.25X37) (02.277)
92–95	Y 5.7J (LT5)	10187720	2	23.40	BOLT, EXH MANIF
94–96	Y 5.7P (LT1)	12552096	1	*.86	BOLT, EXH MANIF (3/8–16 X 2 1/8) (01.079)
95	Y 5.7P (LT1)	09440073	2	2.25	BOLT, EXH MANIF (HFH 3/8–16X2.00 280M POR 6174M) (08.900)

© 2000 GENERAL MOTORS SERVICE PARTS OPERATIONS

3.275 BOLT – STUD, Intake & Exhaust Manifold(Con't)

96	Y 5.7–5 (LT4)	12552096	1	*.66	BOLT, EXH MANIF (3/8–16 X 2 1/8) (01.070)
85–90	Y	14082425	1	.42	BOLT, INL MANIF PLNM EXTN (4X.7X13)
84	Y	14067336	9	DISCON	BOLT, INT MANIF (3/8–16X1.00 280M)
90–91	Y 5.7–8 (L98)	10108061	4	DISCON	BOLT, INT MANIF (PAN HD TORX MACH, 3/8–16X1.375, 280M, PE) (03.265)
85–88	Y	14081014	7	1.00	BOLT, INT MANIF PLNM (M8X1.25X30)
91	Y 5.7–8 (L98)	14082425	1	.42	BOLT, INT MANIF PLNM EXTN (4X.7X13)
85–88	Y	14081014	4	1.00	BOLT, INT MANIF TUBE (M8X1.25X30)
85–88	Y	14081015	2	1.90	BOLT, INT MANIF TUBE (M8X1.25X34.5)
85–88	Y	14081016	2	*1.55	BOLT, INT MANIF TUBE (M8X1.25X39.5)
85–88	Y	14081017	4	*1.85	BOLT, INT MANIF TUBE (TORX HEAD 8X1.25X54)
89–91	Y 5.7–8 (L98)	14081014	AR	1.00	BOLT, PLNM AIR INT TUBE (M8X1.25X30)
89–91	Y 5.7–8 (L98)	14081015	2	1.90	BOLT, PLNM AIR INT TUBE (M8X1.25X34.5)
89–91	Y 5.7–8 (L98)	14081016	2	*1.55	BOLT, PLNM AIR INT TUBE (M8X1.25X39.5)
89–91	Y 5.7–8 (L98)	14081017	4	*1.85	BOLT, PLNM AIR INT TUBE (TORX HEAD 8X1.25X54)
91	Y 5.7–8 (L98), 6–SPD M/TRANS (ML9)	10085606	1	1.65	STUD, CLU HSG (3/8–16X25/32 BOTH ENDS)
84–85	Y	03932448	1	7.45	STUD, EXH MANIF (NO.3 HOLE LH)
84–87	Y	14057002	3	3.95	STUD, EXH MANIF (#1–4 RH, #2 LH)
88–91	Y 5.7–8 (L98)	12550726	3	*1.48	STUD, EXH MANIF (#3–4 RH & #2 LH)
88–91	Y 5.7–8 (L98)	14057002	3	3.95	STUD, EXH MANIF (#1–4 RH, #2 LH) (3/8 X 16 X 2.08)
90–91	Y 5.7J (LT5)	10122181	2	5.50	STUD, EXH MANIF
92–95	Y 5.7J (LT5)	10187719	2	23.40	STUD, EXH MANIF
92–96	Y 5.7P (LT1)	12550726	3	*1.48	STUD, EXH MANIF
92–93	Y 5.7P (LT1)	14057002	3	3.95	STUD, EXH MANIF (#1–4 RH, #2 LH) (3/8 X 16 X 2.08)
96	Y 5.7–5 (LT4)	12550726	3	*1.48	STUD, EXH MANIF
84–87	Y (5.7–8)	12550726	3	*1.48	STUD, EXH MANIF #1–4 RH & #2 LH
92–96	Y 5.7P (LT1)	10106420	3	1.45	STUD, INT MANIF (3/8X16X1 3/8)
96	Y 5.7–5 (LT4)	10106420	3	1.45	STUD, INT MANIF (3/8X16X1 3/8)
84	Y	12552858	1	*1.30	STUD, INT MANIF #1 RH (01.153)
89–91	Y 5.7–8 (L98)	14091678	1	2.25	STUD, INT MANIF PLENUM (M8X1.25X30)
86–88	Y	14091678	1	2.25	STUD, INT MANIF PLNM (M8 X 1.25 X 30)
85	Y	14084304	1	DISCON	STUD, INT MANIF PLNM #2 LH

3.300 BRACKET – CONNECTOR – INJECTOR – INJECTOR KIT – MODULE – STUD – SWITCH, Fuel Injection

90–95	Y 5.7J (LT5)	10086284	2	165.40	MODULE, SECD SEQ M/PORT F/INJN CONT (FRT & RR) (AC–DELCO #10086284)
85–88	Y	14084318	1	63.59	SWITCH, COLD START F/INJR (2 BLADE TERM, 3/8–18 THD) (03.329) (AC–DELCO #212–312)

© 2000 GENERAL MOTORS SERVICE PARTS OPERATIONS

3.330 BOLT – CONNECTION KIT – COVER – FASTENER KIT – FITTING KIT – PIPE KIT – RAIL & TUBES KIT – RAIL KIT – REGULATOR – REGULATOR KIT – RETAINER – STUD – TUBE – TUBE KIT – VALVE KIT, Fuel Injection

86–87	Y	14081021	2	*1.26	BOLT, F/INJ RAIL FRT (08.013)
88–91	Y 5.7–8 (L98)	14081021	2	*1.26	BOLT, F/INJ RAIL FRT (TORX HD 8X1.25X20) (08.013)
90–95	Y 5.7J (LT5)	11516186	4	*.70	BOLT, F/INJN FUEL RL (M8X1.25X16 17.8.9.8PZOR) (08.000)
92–94	Y 5.7P (LT1)	10108668	4	.73	BOLT, F/INJN FUEL RL (HFH, M8X1.25X35, 28 THD, 14 OD, 9.8;USE T/W 12345382 ADHES)
93–96	Y 5.7P (LT1)	11514667	4	.40	BOLT, F/INJN FUEL RL (6X1X35) (9.8 PEOR) (08.900)
96	Y 5.7–5 (LT4)	11514667	4	.40	BOLT, F/INJN FUEL RL (6X1X35) (9.8 PEOR) (08.900)
92–93	Y 5.7P (LT1)	10224936	LH	29.85	COVER, F/INJN FUEL RL
92–93	Y 5.7P (LT1)	10224936	RH	29.85	COVER, F/INJN FUEL RL
94–96	Y 5.7P (LT1)	10208794	LH	30.60	COVER, F/INJN FUEL RL
94–96	Y 5.7P (LT1)	10208795	RH	30.60	COVER, F/INJN FUEL RL
96	Y 5.7–5 (LT4)	12552431	LH	66.67	COVER, F/INJN FUEL RL
96	Y 5.7–5 (LT4)	12552432	RH	66.67	COVER, F/INJN FUEL RL
85	Y 5.7–8 (L98)	17110856	1	DISCON	PIPE KIT, COLD START F/INJR (03.329)
86–88	Y 5.7–8 (L98)	17112061	1	105.47	PIPE KIT, COLD START F/INJR (03.329) (AC–DELCO #17112061)
88	Y	17113230	RH	311.16	RAIL KIT, M/PORT F/INJN FUEL (AC–DELCO #17113230)
89–91	Y 5.7–8 (L98)	17113230	RH	311.16	RAIL KIT, M/PORT F/INJN FUEL (AC–DELCO #17113230)
89–91	Y 5.7–8 (L98)	17113232	LH	107.74	RAIL KIT, M/PORT F/INJN FUEL (AC–DELCO #17113232)
90–92	Y 5.7J (LT5)	17112218	LH	445.68	RAIL KIT, M/PORT F/INJN FUEL (AC–DELCO #17112218)
90–92	Y 5.7J (LT5)	17112219	RH	445.68	RAIL KIT, M/PORT F/INJN FUEL (AC–DELCO #17112219)
92–93	Y 5.7P (LT1)	17112635	LH	154.08	RAIL KIT, M/PORT F/INJN FUEL (AC–DELCO #17112635)
92–93	Y 5.7P (LT1)	17113241	RH	105.61	RAIL KIT, M/PORT F/INJN FUEL (AC–DELCO #17113241)
93–95	Y 5.7J (LT5)	17113024	LH	445.68	RAIL KIT, M/PORT F/INJN FUEL (AC–DELCO #17113024)
93–95	Y 5.7J (LT5)	17113025	RH	454.59	RAIL KIT, M/PORT F/INJN FUEL (AC–DELCO #17113025)
94–96	Y 5.7P (LT1)	17113249	LH	329.46	RAIL KIT, M/PORT F/INJN FUEL
94–96	Y 5.7P (LT1)	17113250	RH	329.46	RAIL KIT, M/PORT F/INJN FUEL
96	Y 5.7–5 (LT4)	17113249	LH	329.46	RAIL KIT, M/PORT F/INJN FUEL
96	Y 5.7–5 (LT4)	17113250	RH	329.46	RAIL KIT, M/PORT F/INJN FUEL
92–95	Y 5.7P (LT1)	10108672	4	1.53	STUD, F/INJN FUEL RL
96	Y 5.7P (LT1), 5.7–5 (LT4)	10108672	4	1.53	STUD, F/INJN FUEL RL
94–96	Y 5.7P (LT1)	17113088	1	26.52	TUBE, F/INJN FUEL RL C/OVR
96	Y 5.7–5 (LT4)	17113080	1	26.52	TUBE, F/INJN FUEL RL C/OVR
92	Y 5.7P (LT1)	10105322	1	2.04	TUBE, FUEL PRESS REG VAC
93	Y 5.7P (LT1), 4–SPD A/TRANS (MD8)	10105322	1	2.04	TUBE, FUEL PRESS REG VAC
93	Y 5.7P (LT1), 6–SPD M/TRANS (ML9)	10105322	1	2.04	TUBE, FUEL PRESS REG VAC
94–96	Y 5.7P (LT1)	10216953	1	2.35	TUBE, FUEL PRESS REG VAC
96	Y 5.7–5 (LT4)	10216953	1	2.35	TUBE, FUEL PRESS REG VAC

© 2000 GENERAL MOTORS SERVICE PARTS OPERATIONS

3.670 CONNECTOR – COVER – EPROM – FILTER – MODULE – RELAY – SCREW – SOLENOID – SWITCH – VALVE, Emission Control System

Note: SEE GROUP 3.671 FOR ATTACHING PARTS.

84	Y M/TRNS, CALIF	01225428	1	58.73	EPROM, ECM (CODE 3070CDF, 9842DBP) (AC–DELCO #1225428)
84	Y M/TRNS, FED	01225429	1	58.34	EPROM, ECM (CODE 3061CDK, 9846DBR) (AC–DELCO #1225429)
84	Y A/TRNS, CLSD LOOP	01226466	1	58.73	EPROM, ECM (CODE 3235CCC, 3940CDR) (AC–DELCO #1226466)
85	Y (5.7–8) A/TRNS (MD8), FED	01227805	1	58.73	EPROM, ECM (CODE 3200HLH) (AC–DELCO #1227805)
85	Y (5.7–8) M/TRNS (MK2), FED	01227806	1	58.73	EPROM, ECM (CODE 3266HLP) (AC–DELCO #1227806)
85	Y M/TRNS (MK2), FED	16042430	1	19.87	EPROM, ECM (16042431 STAMPED) (CALPAK) (AC–DELCO #16042430)
85	Y A/TRNS (MD8)	16042437	1	19.87	EPROM, ECM (16042438 STAMPED) (CALPAK) (AC–DELCO #16042437)
85	Y M/TRNS (MK2)	16042437	1	19.87	EPROM, ECM (16042438 STAMPED) (CALPAK) (AC–DELCO #16042437)
85	Y M/TRNS (MH5), FED	16052307	1	58.73	EPROM, ECM (CODE 9573FTW, 2308HLS) (AC–DELCO #16052307)
86	Y07 (5.7–8) A/TRNS (MD8) 2.59R (GM1), KB2, FED	01227942	1	58.73	EPROM, ECM (CODE 9355BUC, 9555BUC, 1724BUC) (AC–DELCO #1227942)
86	Y07 M/TRNS (MK2) 3.07R (G44), KB2, (EXC VD1 EXPORT)	01227943	1	58.73	EPROM, ECM (CODE 9348BUB, 1726BUB) (AC–DELCO #1227943)
86	Y07 (5.7–8) M/TRNS (MH5) 3.07R, KB2, FED	01227943	1	58.73	EPROM, ECM (CODE 9398BUM) (AC–DELCO #1227943)
86	Y07 (5.7–8) A/TRNS (MD8) 3.07R (G44) (EXC EXPORT NM8, VE1)	01227944	1	58.73	EPROM, ECM (CODE 1728BUA, 9340BUA) (AC–DELCO #1227944)
86	Y07 (5.7–8) A/TRNS (MD8) 2.59R (GM1), 2.73R (GU2), FED (EXC KB2)	01228107	1	58.73	EPROM, ECM (CODE 1732AANK) (AC–DELCO #1228107)
86	Y07 (5.7–8) A/TRNS (MD8) 3.07R, FED (NA5) (EXC KB2, NM8, VE1 EXPORT)	01228109	1	58.73	EPROM, ECM (CODE 4045AANL, 8840ALZ, 1736AANM) (AC–DELCO #1228109)
86	Y07 (5.7–8) M/TRNS (MK2) 3.07R, FED	01228473	1	58.73	EPROM, ECM (CODE 8848AMA, 1734AARL, 1010AARL) (AC–DELCO #1228473)
86	Y07 (5.7–8) M/TRNS (MH5), 3.07R (G44) (EXC KB2)	16063919	1	58.73	EPROM, ECM (CODE 3921AARK, 8934AML) (AC–DELCO #16063919)
86	Y67 MD8, 2.73R (GU2), 3.07R (G44) (EXC KB2, EXPORT)	01228109	1	58.73	EPROM, ECM (CODE 2770AANM, 0504AMH, 1736AANM) (AC–DELCO #1228109)
86	Y67 M/TRNS (MK2), 3.07R (G44) (EXC KB2, EXPORT)	01228473	1	58.73	EPROM, ECM (CODE 0499AMJ, 1734AARL, 1010AARL) (AC–DELCO #1228473)
87	Y07 M/TRNS (MK2), 3.07R (G44), FED (EXC VD1 EXPORT)	16070312	1	58.73	EPROM, ECM (CODE 0315ABTB, 9539HCY) (AC–DELCO #16070312)
87	Y07 M/TRNS (MH5), 3.07R (G44), FED	16070318	1	58.73	EPROM, ECM (CODE 0321ABTC, 4423HCZ) (AC–DELCO #16070318)
87	Y07 A/TRNS (MD8), 2.59R (GM1), FED	16070729	1	58.73	EPROM, ECM (CODE 4427HDA, 0731ABTD) (AC–DELCO #16070729)
87	Y07 A/TRNS (MD8), 3.07R (G44), FED (EXC VB4, VD1, VE1, VT7 EXPORT)	16070733	1	58.73	EPROM, ECM (CODE 0735ABTF, 4431HDB) (AC–DELCO #16070733)
87	Y67 M/TRNS (MK2), 3.07R (G44), FED (EXC VD1 EXPORT)	16070323	1	58.73	EPROM, ECM (CODE 0326ABTJ, 4439HDD) (AC–DELCO #16070323)
87	Y67 M/TRNS (MH5), 3.07R (G44), FED	16070333	1	58.73	EPROM, ECM (CODE 0336ABTH, 4435HDC) (AC–DELCO #16070333)

© 2000 GENERAL MOTORS SERVICE PARTS OPERATIONS

3.670 CONNECTOR – COVER – EPROM – FILTER – MODULE – RELAY – SCREW – SOLENOID – SWITCH – VALVE, Emission Control System(Con't)

87	Y67 A/TRNS (MD8), 2.73R (GU2), FED	16070737	1	58.73	EPROM, ECM (CODE 0739ABTK, 4443HDF) (AC–DELCO #16070737)
87	Y67 (5.7–8) A/TRNS (MD8), 3.07R (G44), FED (EXC VB4, VD1, VE1, VT7 EXPORT)	16071823	1	58.73	EPROM, ECM (CODE 1826ADJR) (AC–DELCO #16071823)
88	Y07 (5.7–8) M/TRNS (MK2), 3.07R (G44), FED (EXK20 EXPORT)	16074756	1	58.73	EPROM, ECM (CODE 4757ABTP) (AC–DELCO #16074756)
88	Y07 (5.7–8) M/TRNS (MH5), 3.07R (G44), FED	16074762	1	58.73	EPROM, ECM (CODE 4763ABTR) (AC–DELCO #16074762)
88	Y07 (5.7–8) A/TRNS (MD8), 2.59R (GM1), FED	16074766	1	58.73	EPROM, ECM (CODE 4767ABTS) (AC–DELCO #16074766)
88	Y07 (5.7–8) A/TRNS (MD8), 3.07R (G44), FED (EXC K20 EXPORT)	16074772	1	58.73	EPROM, ECM (CODE 4773ABTT) (AC–DELCO #16074772)
88	Y67 (5.7–8) M/TRNS (MH5), 3.07R (G44), FED	16074800	1	58.73	EPROM, ECM (CODE 4802ABTU) (AC–DELCO #16074800)
88	Y67 (5.7–8) M/TRNS (MK2), 3.07R (G44), FED (EXC K20 EXPORT)	16074805	1	58.73	EPROM, ECM (CODE 4806ABTW) (AC–DELCO #16074805)
88	Y67 (5.7–8) A/TRNS (MD8), 2.73R (GU2), 3.07R (G44), FED (EXC K20 EXPORT)	16079967	1	58.73	EPROM, ECM (CODE 9968ACKY) (AC– DELCO #16079967)
89	Y (5.7–8) M/TRNS (ML9), 3.54R (GH0), 3.33R (GT7), FED (NA5), NN5	16133472	1	58.73	EPROM, ECM (3499APYP, 9314ANYL) (02.560) (AC–DELCO #16133472)
89	Y (5.7–8) A/TRNS (MD8), 2.59R (GM1), STEREO (UM6/UU9)	16134197	1	58.73	EPROM, ECM (3536APZA, 1374APKD, 4198ARAR) (02.560) (AC–DELCO #16134197)
89	Y07 (5.7–8) A/TRNS (MD8), 3.07R (G44), FED (NA5), NN5	16134193	1	58.73	EPROM, ECM (3533APYZ, 1304APKC, 4194ARAP) (02.560) (AC–DELCO #16134193)
89	Y07 (5.7–8) A/TRNS (MD8), 2.59R (GM1) (EXC RDO)	16141874	1	58.73	EPROM, ECM (1875ASXB) (02.560) (AC–DELCO #16141874)
89	Y67 (5.7–8) A/TRNS (MD8), 2.73R (GU2), 3.07R (G44), FED (NA5), NN5	16134203	1	58.73	EPROM, ECM (3539APZB, 1379APKF, 4204ARAS) (T/W 1227165) (02.560) (AC–DELCO #16134203)
90	Y 5.7–8 (L98), 2.73R (GU2)	16134293	1	75.83	EPROM, ECM (4294ANHW) (AC–DELCO #16134293)
90	Y 5.7–8 (L98), 3.07R (G44)	16134297	1	75.07	EPROM, ECM (4298ANHT) (AC–DELCO #16134297)
90	Y 5.7–8 (L98), 2.59R (GM1)	16134302	1	75.07	EPROM, ECM (4303ANHU) (AC–DELCO #16134302)
90	Y 5.7–8 (L98), 6–SPD M/TRANS (ML9)	16137184	1	75.07	EPROM, ECM (7185ARFP) (AC–DELCO #16137184)
90	Y 5.7J (LT5)	16163905	1	45.65	EPROM, ECM (9716ANHX, 8555AUAH, 4168AYBK)
90	Y07 5.7–8 (L98), 4–SPD A/TRANS (MD8), 2.59R (GM1)	16137184	1	75.07	EPROM, ECM (1875ASXB) (AC–DELCO #16137184)
91	Y 5.7–8 (L98), 6–SPD M/TRANS (ML9)	16159798	1	75.07	EPROM, ECM (0706ARYU, 9806AXCN) (AC–DELCO #16159798)
91	Y 5.7–8 (L98), 3.07R (G44)	16159799	1	75.07	EPROM, ECM (0710ARYW, 9814AXCP) (AC–DELCO #16159799)
91	Y 5.7–8 (L98), 2.59R (GM1)	16159800	1	75.07	EPROM, ECM (0714ARYX, 9819AXCR) (AC–DELCO #16159800)
91	Y 5.7–8 (L98), 2.73R (GU2)	16159802	1	75.07	EPROM, ECM (0718ARYY, 9826AXCS) (AC–DELCO #16159802)
91	Y 5.7J (LT5)	16193416	1	75.07	EPROM, ECM (8992ARZR, 0277AXFK, 3417BFXB) (AC–DELCO #16193416)
92–93	Y 5.7P (LT1), 6–SPD M/TRANS (ML9), (EXC LEADED FUEL EMIS EXPORT (NM8)	16173866	1	75.07	EPROM, ECM (1692AZUM, 3867BAFL) (AC–DELCO #16173866)

© 2000 GENERAL MOTORS SERVICE PARTS OPERATIONS

3.670 CONNECTOR – COVER – EPROM – FILTER – MODULE – RELAY – SCREW – SOLENOID – SWITCH – VALVE, Emission Control System(Con't)

92–93	Y 5.7P (LT1), 3.07R (G44), (EXC LEADED FUEL EMIS EXPORT (NM8)	16184669	1	75.07	EPROM, ECM (1698AZUN, 3872BAFM) (AC–DELCO #16184669)
92–93	Y 5.7P (LT1), 2.59R (GM1), (EXC LEADED FUEL EMIS EXPORT (NM8)	16184672	1	75.07	EPROM, ECM (1702AZUP, 3876BAFN, 4779BDBK) (AC–DELCO #16184672)
92–93	Y 5.7P (LT1), 2.73R (GU2), (EXC LEADED FUEL EMIS EXPORT (NM8)	16184676	1	75.07	EPROM, ECM (1707AZUR, 3880BAFP, 4782BDBL) (AC–DELCO #16184676)
92	Y 5.7J (LT5), (EXC EUROPEAN PROVISIONS (VD1) (EXPORT), VE1 (EXPORT)	16219916	1	75.07	EPROM, ECM (8044AYWT, 2700AZZC, BPPA) (AC–DELCO #16219916)
92	Y67 5.7P (LT1), 3.07R (G44), (EXC LEADED FUEL EMIS EXPORT (NM8)	16184667	1	75.07	EPROM, ECM (8010AYWM, 3869BAFK) (AC–DELCO #16184667)
93–95	Y 5.7J (LT5)	12528772	1	74.33	EPROM, ECM (AC–DELCO #12528772)
93	Y 5.7P (LT1), 3.07R (G44), (EXC LEADED FUEL EMIS EXPORT (NM8)	16184669	1	75.07	EPROM, ECM (4776BDBJ) (AC–DELCO #16184669)
93–95	Y 5.7J (LT5)	16160359	1	71.64	MODULE, EGR VLV REG SOL VLV SIG MODIFIER (AC–DELCO #216–31)
84	Y A/TRNS, FED, CALIF	01226026	1	160.66	MODULE, ENG CONT (REMAN) (1226026 LABELED) (AC–DELCO #1226026)
84	Y M/TRNS (MK2)	01226430	1	DISCON	MODULE, ENG CONT (REMAN) (1226430 LABELED)
85	Y	01226070	1	157.49	MODULE, ENG CONT (REMAN) (1226070 LABELED) (AC–DELCO #1226070)
86–89	Y 5.7–8 (L98)	16198259	1	210.70	MODULE, ENG CONT (REMAN) (1227165 LABELED) (AC–DELCO #16198259)
90–91	Y 5.7J (LT5), SOFT RIDE SUSP (FE1), HVY DUTY SUSP (FE7)	01228331	1	184.38	MODULE, ENG CONT (REMAN) (1228331 LABELED) (AC–DELCO #1228331)
90	Y 5.7–8 (L98)	16198260	1	210.70	MODULE, ENG CONT (REMAN) (1227727 LABELED) (AC–DELCO #16198260)
91	Y 5.7–8 (L98)	16198260	1	210.70	MODULE, ENG CONT (REMAN) (1227727 LABELED) (AC–DELCO #16198260)
92–93	Y 5.7P (LT1)	16159278	1	215.96	MODULE, ENG CONT (REMAN) (AC–DELCO #16159278)
92–93	Y 5.7J (LT5)	16163993	1	210.70	MODULE, ENG CONT (REMAN) (16163993 LABELED) (AC–DELCO #16163993)
94–95	Y 5.7J (LT5)	16196394	1	206.55	MODULE, ENG CONT (REMAN) (16196394 LABELED) (AC–DELCO #16196394)
94–95	Y 5.7P (LT1)	16181333	1	210.70	MODULE, PWRT CONT (REMAN) (REPROGRAMABLE MODULE) (AC–DELCO #16181333)
96	Y	16214399	1	215.96	MODULE, PWRT CONT (REMAN) (AC–DELCO #16214399)
84	Y	01997125	1	22.36	SOLENOID, EGR VAC REG VLV (AC–DELCO #214–333)
85	Y	01997111	1	22.71	SOLENOID, EGR VAC REG VLV (AC–DELCO #214–331)

© 2001 GENERAL MOTORS SERVICE PARTS OPERATIONS

3.670 CONNECTOR – COVER – EPROM – FILTER – MODULE – RELAY – SCREW – SOLENOID – SWITCH – VALVE, Emission Control System(Con't)

86–88	Y	01997195	1	24.29	SOLENOID, EGR VAC REG VLV (AC–DELCO #214–340)
89–91	Y 5.7–8 (L98)	01997195	1	24.29	SOLENOID, EGR VAC REG VLV (AC–DELCO #214–340)
92–96	Y 5.7P (LT1)	01997223	1	23.13	SOLENOID, EGR VAC REG VLV (AC–DELCO #214–396)
85	Y	14087416	1	11.46	SWITCH, EGR TEMP IND (W/WIRE LEAD, INTERN THD M10X1.0X6G) (AC–DELCO #212–337)
86–89	Y	14087416	1	10.98	SWITCH, EGR TEMP IND (AC–DELCO #212–336)
84	Y A/TRNS, CLSD LOOP	17073963	1	DISCON	VALVE, AIR INJ CONT (STAMPED 17073963)
84	Y M/TRNS	17074435	1	DISCON	VALVE, AIR INJ CONT (STAMPED 17074435)
86–90	Y	22062561	1	20.64	VALVE, CTLTC CONV SECD AIR INJN CHK (AC–DELCO #214–423)
91	Y 5.7–8 (L98)	22062561	1	20.64	VALVE, CTLTC CONV SECD AIR INJN CHK (AC–DELCO #214–423)
84	Y A/TRNS, FED	17113422	1	71.73	VALVE, EGR (PROD 17083813)) (AC–DELCO #214–5501)
85	Y FEDERAL EMIS (NA5), (A/TRNS)	17113406	1	70.30	VALVE, EGR (PROD 17085815) (AC–DELCO #214–5591)
85	Y FEDERAL EMIS (NA5), (M/TRNS)	17113459	1	70.30	VALVE, EGR (PROD 17085817) (AC–DELCO #214–5538)
86–88	Y	17113456	1	70.30	VALVE, EGR (PROD #17086078) (AC–DELCO #214–5535)
86–89	Y 5.7–8 (L98)	17113456	1	70.30	VALVE, EGR (PROD #17086078, 17086062, 17086061) (AC–DELCO #214–5535)
89	Y 5.7–8 (L98)	17113456	1	70.30	VALVE, EGR (PROD #17086078) (AC–DELCO #214–5535)
90–91	Y 5.7–8 (L98)	17113456	1	70.30	VALVE, EGR (PROD #17090106) (AC–DELCO #214–5535)
92–95	Y 5.7P (LT1), 6–SPD M/TRANS (ML9), (EXC LEADED FUEL EMIS EXPORT (NM8)	17113381	1	71.73	VALVE, EGR (PROD 17092160) (FOR EXPORT REPL EGR VLV W/ EGR VLV CVR & VAC CAP) (AC–DELCO #214–5083)
92–93	Y 5.7P (LT1), 4–SPD A/TRANS (MD8)	17113382	1	71.73	VALVE, EGR (PROD 17092172) (FOR EXPORT REPL EGR W/ EGR CVR & VAC CAP) (AC–DELCO #214–5084)
93–95	Y 5.7J (LT5)	17113280	1	190.58	VALVE, EGR (W/O GSKT) (AC–DELCO #214–5008)
94–96	Y 5.7P (LT1), 4–SPD A/TRANS (M30), (EXC LEADED FUEL EMIS EXPORT (NM8)	17113382	1	71.73	VALVE, EGR (PROD 17092172) (FOR EXPORT REPL EGR W/ EGR CVR & VAC CAP) (AC–DELCO #214–5084)
94–95	Y 5.7P (LT1)	10235337	1	4.02	VALVE, SECD AIR INJN BL (AC–DELCO #214–614)
96	Y 5.7P (LT1), 5.7–5 (LT4)	01997201	1	25.09	VALVE, SECD AIR INJN BL SOL (2 PORT VAC, 2 BLADE TERM) (03.130) (AC–DELCO #214–565)
88–89	Y	17088106	1	317.02	VALVE, SECD AIR INJN BYPASS (AC–DELCO #214–117)
90–91	Y 5.7–8 (L98)	17088106	1	317.02	VALVE, SECD AIR INJN BYPASS (AC–DELCO #214–117)
90–91	Y 5.7J (LT5)	17089059	1	158.19	VALVE, SECD AIR INJN BYPASS (AC–DELCO #214–119)
92–93	Y 5.7P (LT1)	17092085	1	155.08	VALVE, SECD AIR INJN BYPASS (AC–DELCO #214–124)

© 2000 GENERAL MOTORS SERVICE PARTS OPERATIONS

MICROFICHE INDEX

GROUP 2.000

FICHE 3 OF 11

GROUP	DESCRIPTION	STARTING GRID LOCATION PARTS	ILLUSTRATIONS
–	GENERAL INFORMATION	1–A2	1–G2
–	ALPHABETICAL INDEX	1–B13	N.A.
2.000	CHASSIS WIRING – LAMPS	3–A2	3–F2
–	OUT OF FICHE CALLS	N.A.	3–M20

3–N1

3.670 CONNECTOR – COVER – EPROM – FILTER – MODULE – RELAY – SCREW – SOLENOID – SWITCH – VALVE, Emission Control System(Con't)

92–95	Y 5.7J (LT5)	17092132	1	158.19	VALVE, SECD AIR INJN BYPASS (AC–DELCO #214–125)
84–85	Y	22050642	1	26.46	VALVE, SECD AIR INJN CHK (AC–DELCO #214–422)
85–87	Y	22040212	1	21.48	VALVE, SECD AIR INJN CHK (AC–DELCO #214–419)
88–91	Y 5.7–8 (L98)	12562568	2	17.10	VALVE, SECD AIR INJN CHK (AC–DELCO #214–098)
90–95	Y 5.7J (LT5)	22040212	4	21.48	VALVE, SECD AIR INJN CHK (AC–DELCO #214–419)
92–95	Y 5.7P (LT1)	22040212	2	21.48	VALVE, SECD AIR INJN CHK (AC–DELCO #214–419)
96	Y 5.7P (LT1), 5.7–5 (LT4)	22040212	2	21.48	VALVE, SECD AIR INJN CHK (AC–DELCO #214–419)
85–86	Y	17085740	1	215.55	VALVE, SECD AIR INJN SW (VALVE, AIR INJ CONT) (AC–DELCO #214–78)
85–86	Y FED	17085741	1	71.30	VALVE, SECD AIR INJN SW (VALVE, AIR INJ SW) (AC–DELCO #214–79)
87	Y	17087221	1	211.34	VALVE, SECD AIR INJN SW (AC–DELCO #214–107)
87	Y (EXC NM8 EXPORT)	17087222	1	185.27	VALVE, SECD AIR INJN SW (AC–DELCO #214–108)
92–95	Y 5.7J (LT5)	17092132	1	158.19	VALVE, SECD AIR INJN SW (AC–DELCO #214–125)
	*EXPORT***************EXPORT***************EXPORT***************EXPORT***************EXPORT*				
84	Y NM5 (EXPORT, CANADA)	01226642	1	58.73	EPROM, ECM (CODE 4044CFB, 8577CFB) (AC–DELCO #1226642)
85	Y A/TRNS (MD8), NM5 (EXPORT)	01227177	1	58.73	EPROM, ECM (CODE 4515CUN) (AC–DELCO #1227177)
85	Y NM8 (EXPORT)	01227734	1	DISCON	EPROM, ECM (CODE 2433CUN, 9567FTU, 2303HLR)
86	Y (5.7–8), A/TRNS, 3.07R, VD1 (EXP) (EXC KB2)	16063909	1	58.73	EPROM, ECM (CODE 3921AARK, 8947AMN) (AC–DELCO #16063909)
86	Y07 (5.7–8) A/TRNS (MD8) 3.07R, NM5 (EXPORT, CANADA) (EXC KB2, NM8, VE1 EXPORT)	01228109	1	58.73	EPROM, ECM (CODE 4045AANL, 8840ALZ, 1736AANM) (AC–DELCO #1228109)
86	Y07 (5.7–8) M/TRNS (MK2) 3.07R, NM5 (EXPORT, CANADA) (EXC KB2, VD1 EXPORT)	01228473	1	58.73	EPROM, ECM (CODE 8848AMA, 1734AARL, 1010AARL) (AC–DELCO #1228473)
86	Y07 A/TRNS (MD8), 3.07R (G44), KB2, VB4, VT7	16059638	1	57.58	EPROM, ECM (CODE 9642BUF) (AC–DELCO #16059638)
86	Y07 A/TRNS (MD8), 3.07R (G44), KB2, VE1	16059644	1	58.73	EPROM, ECM (CODE 9647BUH) (AC–DELCO #16059644)
86	Y07 M/TRNS (MK2), 3.07R, KB2, VD1 (EXPORT)	16059672	1	58.73	EPROM, ECM (CODE 9676BUP) (AC–DELCO #16059672)
86	Y07 A/TRNS (MD8), 3.07R (G44), VB4, VT7 (EXC KB2)	16064047	1	58.73	EPROM, ECM (CODE 4048AANN, 8867AMD) (AC–DELCO #16064047)
86	Y07 (5.7–8) A/TRNS (MD8) 3.07R (G44) (VE1, EXPORT) (EXC KB2)	16064050	1	58.73	EPROM, ECM (CODE 4051AANP, 8873AMF) (AC–DELCO #16064050)
87	Y M/TRNS (MK2), 3.07R (G44), VD1 (EXPORT)	16070328	1	58.73	EPROM, ECM (CODE 0331ABTM, 4461HDK) (AC–DELCO #16070328)
87	Y A/TRNS (MD8), 3.07R (G44), EXPORT (VB4, VT7)	16070741	1	58.73	EPROM, ECM (CODE 0743ABTL, 4457HDJ) (AC–DELCO #16070741)
87	Y A/TRNS (MD8), 3.07R (G44) VD1, VE1 (EXPORT)	16070745	1	57.58	EPROM, ECM (CODE 0747ABTN, 4469HDM) (AC–DELCO #16070745)
87	Y07 M/TRNS (MK2), 3.07R (G44), NM5 (EXPORT, CANADA) (EXC VD1 EXPORT)	16070312	1	58.73	EPROM, ECM (CODE 0315ABTB, 9559HCY) (AC–DELCO #16070312)

© 2000 GENERAL MOTORS SERVICE PARTS OPERATIONS

3.670 CONNECTOR – COVER – EPROM – FILTER – MODULE – RELAY – SCREW – SOLENOID – SWITCH – VALVE, Emission Control System(Con't)

87	Y07 A/TRNS (MD8), 3.07R (G44), NM5 (EXPORT, CANADA) (EXC VB4, VD1, VE1, VT7 EXPORT)	16070733	1	58.73	EPROM, ECM (CODE 0736ABTF, 4431HDD) (AC–DELCO #16070733) .
87	Y07 M/TRNS (MK2), 3.07R (G44), NM5 (EXPORT, CANADA (EXC VD1 EXPORT)	16070323	1	58.73	EPROM, ECM (CODE 0326ABTJ, 4439HDD) (AC–DELCO #16070323) .
87	Y07 A/TRNS (MD8), 2.73R (GU2), NM5 (EXPORT, CANADA)	16070737	1	58.73	EPROM, ECM (CODE 0739ABTK, 4443HDF) (AC–DELCO #16070737) .
87	Y07 (5.7–8) A/TRNS (MD8), 3.07R (G44), NM5 (EXPORT, CANADA) (VB4, VD1, VE1, VT7 EXPORT)	16071823	1	58.73	EPROM, ECM (CODE 1825ADJR) (AC–DELCO #16071823) .....
88	Y (5.7–8) M/TRNS (MK2), 3.07R (G44) W/K20 (EXPORT)	16074820	1	58.73	EPROM, ECM (CODE 4822ABTZ) (AC–DELCO #16074820) .....
88	Y (5.7–8) A/TRNS (MD8), 3.07R (G44), K20 (EXPORT)	16074825	1	58.73	EPROM, ECM (CODE 4826ABUA) (AC–DELCO #16074825) .....
92	Y 5.7J (LT5), EUROPEAN PROVISIONS (VD1) (EXPORT), VE1 (EXPORT)	16175910	1	75.07	EPROM, ECM (5912BATL) (AC–DELCO #16175910) .....
92–93	Y 5.7P (LT1), LEADED FUEL EMIS EXPORT (NM8)	16176868	1	45.65	EPROM, ECM (6869BAWS) .....
84	Y NM5 (EXPORT, CANADA)	01226430	1	DISCON	MODULE, ENG CONT (REMAN) (1226430 LABELED) .....
84	Y A/TRNS, NM8 (EXPORT)	17073307	1	DISCON	VALVE, AIR INJ CONT (STAMPED 17073307) .....
84	Y NM8 (EXPORT)	17113422	1	71.73	VALVE, EGR (PROD 17083813)) (AC–DELCO #214–5501) .....
85	Y LEADED FUEL EMIS EXPORT (NM8), (A/TRNS, EXPORT)	17113406	1	70.30	VALVE, EGR (PROD 17085819) (AC–DELCO #214–5591) .....

3.671 ADAPTER – BOLT – BOLT KIT – BRACKET – CLAMP – CLIP – COVER – FILTER – GASKET – GROMMET – HOUSING – NUT – PLATE – RETAINER – SPACER – STUD, Emission Control System

84–93	Y	12337892	2	*1.13	BOLT, ECM BRKT (M5X.8X16 THD) (SPECIAL) (AC–DELCO #12337892) .
93–95	Y 5.7J (LT5)	12337892	4	*1.13	BOLT, ECM BRKT (M5X.8X16 THD) (SPECIAL) (AC–DELCO #12337892) .
92–94	Y 5.7P (LT1)	09441894	2	2.85	BOLT, EGR VLV (TO BE USED W/WASHER 11501869) (HFH, 5/16–18X1.00, 280M, PC, .65 OD) (08.900) ....
85–87	Y	14082472	1	DISCON	BRACKET, AIR INJ CONT VLV .....
85	Y FED	14082477	1	DISCON	BRACKET, AIR INJ SW VLV .....
86–87	Y (EXC NM8 EXPORT)	14082477	1	DISCON	BRACKET, AIR INJ SW VLV .....
90–91	Y (5.7J)	10086315	1	31.11	BRACKET, ECM .....
92–96	Y	10143544	1	31.11	BRACKET, ECM .....
90–91	Y (5.7–8)	10143544	1	31.11	BRACKET, ECM W/SEAL .....
84	Y	14057006	1	DISCON	BRACKET, EGR SOL .....
85	Y	14087565	1	DISCON	BRACKET, EGR SOL .....
85	Y	14087418	1	DISCON	BRACKET, EGR TEMP SW WIRE .....
85–89	Y	14080604	1	11.68	BRACKET, ELEK FUEL CONT MDL ....
84	Y	14062575	1	DISCON	BRACKET, ELEK FUEL CONT MDL LWR .....
84	Y	14062576	1	DISCON	BRACKET, ELEK FUEL CONT MDL UPR .....
94–95	5.7P (LT1)	10211331	1	8.72	BRACKET, PCM .....
96	Y	10211331	1	8.72	BRACKET, PCM .....
90–91	Y 5.7J (LT5), SOFT RIDE SUSP (FE1), HVY DUTY SUSP (FE7)	14104859	1	7.29	BRACKET, SECD AIR INJN BYPASS VLV . ...

© 2000 GENERAL MOTORS SERVICE PARTS OPERATIONS

3.671 ADAPTER – BOLT – BOLT KIT – BRACKET – CLAMP – CLIP – COVER – FILTER – GASKET – GROMMET – HOUSING – NUT – PLATE – RETAINER – SPACER – STUD, Emission Control System(Con't)

94	Y 5.7P (LT1)	12129073	1	.45	BRACKET, SECD AIR INJN PUMP RLY (BLACK) (04.720) (AC–DELCO #12129073)
96	Y	12129073	1	.45	BRACKET, SECD AIR INJN PUMP RLY (BLACK) (04.720) (AC–DELCO #12129073)
84–88	Y	01985870	1	1.68	CLIP, FILTER RET
89–91	Y 5.7–8 (L98)	01985870	1	1.68	CLIP, FILTER RET
96	Y 5.7–5 (LT4), LEADED FUEL EMIS EXPORT (NM8)	10054880	1	6.22	COVER, EGR VLV OPG
85–89	Y	14080605	1	DISCON	COVER, ELEK FUEL CONT MDL HSG
90–92	Y 5.7J (LT5)	01977796	1	.18	FILTER, EGR VAC REG SOL VLV (AC–DELCO #219–14)
92–96	Y 5.7P (LT1)	01977880	1	*.39	FILTER, EGR VAC REG SOL VLV (03.140) (AC–DELCO #219–15)
93–95	Y 5.7J (LT5)	10159525	1	2.47	FILTER, EGR VAC REG SOL VLV (03.670) (AC–DELCO #219–16)
90–91	Y SOFT RIDE SUSP (FE1), H.D .SUSP (FE7)	10086259	1	11.27	HOUSING, ECM
92–93	Y	10086259	1	11.27	HOUSING, ECM
94–95	Y 5.7J (LT5)	10086259	1	11.27	HOUSING, ECM
92–96	Y 5.7P (LT1)	09442958	1	*1.00	NUT, EGR VAC REG VLV SOL (3/8–16 PC, 286M) (HEX, FLANGE) (08.917)
94–96	Y 5.7P (LT1)	14080362	2	*1.65	STUD, EGR VLV (5/16 X 18 X 1 43/64) (01.428)
96	Y 5.7–5 (LT4)	14080362	2	*1.65	STUD, EGR VLV (5/16 X 18 X 1 43/64) (01.428)
	*EXPORT**********EXPORT**********EXPORT**********EXPORT**********EXPORT*				
94–96	Y 5.7P (LT1), LEADED FUEL EMIS EXPORT (NM8)	10054880	1	6.22	COVER, EGR VLV OPG

3.682 BOLT – BRACKET – BUFFER – CLAMP – CONNECTOR – COVER – MODULE – PLUG – RELAY – RETAINER – SEAL – SENSOR – SPACER, Computer Control Sensors

90–95	Y 5.7J (LT5)	11514491	2	4.75	BOLT, MAP SEN (TO BRKT) (5X.8X30, 28.4 THD, 5.9 OD, T25 TORX DR. 9.8 STL) (08.907)
90–95	Y 5.7J (LT5)	10192577	2	1.30	BOLT, MAP SEN BRKT (TO PLENUM) (M6X1.0X13.0) (METRIC TORX HD) (08.913)
92	Y 5.7J (LT5)	11516061	1	*1.10	BOLT, OXY SEN BRKT (M6X1X12, FL HD) (08.900)
90–95	Y 5.7J (LT5)	10192577	4	1.30	BOLT, SECD PORT THROT VLV BRKT (M6X1.0X13.0) (METRIC TORX HD) (08.913)
90–95	Y 5.7J (LT5)	10067781	1	8.68	BRACKET, MAP SEN
90–91	Y 5.7–8 (L98)	10096141	1	4.44	BRACKET, MAP SEN
85	Y	14080660	1	DISCON	BRACKET, MASS AIR FLOW SEN BURNOFF MDL
88–89	Y 5.7–8	14104140	1	1.88	BRACKET, MASS AIRFLOW SEN RLY (01.055)
93–95	Y 5.7J (LT5)	10168622	1	26.01	BRACKET, MDP SEN (03.671)
89	Y	14062552	1	1.12	BRACKET, OXY SEN CONN RET (02.559)
90–91	Y 5.7–8 (L98)	14062552	1	1.12	BRACKET, OXY SEN CONN RET (02.559)
90–92	Y 5.7J (LT5)	14104941	1	12.90	BRACKET, OXY SEN CONN RET

© 2000 GENERAL MOTORS SERVICE PARTS OPERATIONS

3.682 BOLT – BRACKET – BUFFER – CLAMP – CONNECTOR – COVER – MODULE – PLUG – RELAY – RETAINER – SEAL – SENSOR – SPACER, Computer Control Sensors(Con't)

92–96	Y 5.7P (LT1)	10165388	1	2.50	BRACKET, OXY SEN CONN RET (02.559)
93–95	Y 5.7J (LT5)	10228129	1	7.75	BRACKET, OXY SEN CONN RET
96	Y 5.7–5 (LT4)	10165388	1	2.50	BRACKET, OXY SEN CONN RET (02.559)
93–95	Y 5.7J (LT5)	10168670	1	31.60	CLAMP, MDP SEN (01.750)
90–95	Y 5.7J (LT5)	10090513	1	15.44	COVER, MAP SEN (AC–DELCO #10090513)
95	Y 5.7–8 (L98)	14080620	1	882.82	MODULE, MASS AIRFLOW SEN (AC–DELCO #216–62)
92–96	Y 5.7P (LT1)	03738198	1	.71	PLUG, MAP SEN HOLE (08.153)
96	Y 5.7–5 (LT4)	03738198	1	.71	PLUG, MAP SEN HOLE (08.153)
84–90	Y	12338069	1	*3.67	RETAINER, VEH SPD SEN (4338) (AC–DELCO #12338069)
86–96	Y	12146312	1	9.10	SENSOR, ENG COOL TEMP (UND PLENUM) (USED FOR CLUSTERS W/OIL GAGE & LGT COMB) (2–WAY M) (AC–DELCO #213–310)
90–91	Y 5.7J (LT5)	25176706	2	104.75	SENSOR, EXH OXY (STAMPED 10096129) (AC–DELCO #213–632) (RETAIL SENSOR)
92	Y 5.7J (LT5), (1ST DES)	25176706	2	104.75	SENSOR, EXH OXY (W/HARN THAT IS 350MM LG) (STAMPED 10096129) (AC–DELCO #213–632) (RETAIL SENSOR)
92	Y 5.7J (LT5), (2ND DES)	25176709	2	117.30	SENSOR, EXH OXY (W/HARNESS THAT IS 240MM LG) (STAMPED 10137641) (AC–DELCO #213–633)
93–95	Y 5.7J (LT5)	25176709	2	117.30	SENSOR, HTD OXY (STAMPED 10137641) (AC–DELCO #213–633)
94	Y 5.7P (LT1), (EXC LEADED FUEL EMIS EXPORT (NM8)	25312184	3	62.81	SENSOR, HTD OXY (AC–DELCO #AFS75) (OEM SENSOR)
95	Y 5.7P (LT1), (EXC LEADED FUEL EMIS EXPORT (NM8), EUROPEAN PROVISIONS (VD1) (EXPORT), VE1 (EXPORT)	25312184	3	62.81	SENSOR, HTD OXY (AC–DELCO #AFS75) (OEM SENSOR)
96	Y 5.7–5 (LT4)	25312184	4	62.81	SENSOR, HTD OXY (2–PRE CONVERTER, 2–POST CONVERTER) (AC–DELCO #AFS75) (OEM SENSOR)
96	Y 5.7P (LT1), (EXC LEADED FUEL EMIS EXPORT (NM8)	25312184	4	62.81	SENSOR, HTD OXY (2–PRE CONVERTER, 2–POST CONVERTER) (AC–DELCO #AFS75) (OEM SENSOR)
90–95	Y 5.7J (LT5)	25036751	1	33.33	SENSOR, INT AIR TEMP (2 BLADE TERM, 3/8–18 THD) (STAMPED AC12V) (AC–DELCO #213–190)
92–95	Y 5.7P (LT1)	12160244	1	14.61	SENSOR, INT AIR TEMP (AC–DELCO #213–243)
96	Y	12160244	1	14.61	SENSOR, INT AIR TEMP (AC–DELCO #213–243)
85–90	Y	12146312	1	9.10	SENSOR, MANIF AIR TEMP (AT INT MANIF) (2 BLADE TERM, 3/8–18 THD) (USED FOR CLUSTERS W/OIL GAGE & LIGHT COMB) (AC–DELCO #213–310)

© 2000 GENERAL MOTORS SERVICE PARTS OPERATIONS

3.682 BOLT – BRACKET – BUFFER – CLAMP – CONNECTOR – COVER – MODULE – PLUG – RELAY – RETAINER – SEAL – SENSOR – SPACER, Computer Control Sensors(Con't)

05	Y (1ST DES)	25036751	1	33.33	SENSOR, MANIF AIR TEMP (2 BLADE TERM, 3/8–18 THD) (STAMPED AC12V) (HOLES IN PROBE & MATES W/SQUARE SLOTTED CONN) (AC–DELCO #213–190)
91	Y 5.7–8 (L98)	12146312	1	9.10	SENSOR, MANIF AIR TEMP (AT INT MANIF) (USED FOR CLUSTER W/OIL GAGE & LIGHT COMB) (2–WAY M) (AC–DELCO #213–310)
04	Y	16137039	1	65.40	SENSOR, MAP (1 PORT, 3 BLADE TERM, 2 BOLT HOLES) (AC–DELCO #213–185)
90	Y	16137039	1	65.40	SENSOR, MAP (1 PORT, 3 TERM, 2 BOLT HOLES) (AC–DELCO #213–185)
01	Y 5.7–8 (L98)	16137039	1	65.40	SENSOR, MAP (1 PORT, 3 TERM, 2 BOLT HOLES) (AC–DELCO #213–185)
91–95	Y 5.7J (LT5)	16137039	1	65.40	SENSOR, MAP (1 PORT, 3 TERM, 2 BOLT HOLES) (AC–DELCO #213–185)
92–95	Y 5.7P (LT1)	16137039	1	65.40	SENSOR, MAP (1 PORT, 3 TERM, 2 BOLT HOLES) (AC–DELCO #213–185)
96	Y	16137039	1	65.40	SENSOR, MAP (AC–DELCO #213–185)
85	Y	14081243	1	540.26	SENSOR, MASS AIRFLOW (AC–DELCO #213–162)
86–87	Y	14094712	1	507.44	SENSOR, MASS AIRFLOW (AC–DELCO #213–163)
88	Y	10055877	1	397.22	SENSOR, MASS AIRFLOW (AC–DELCO #213–161)
89	Y 5.7–8 (L98)	10055877	1	397.22	SENSOR, MASS AIRFLOW (AC–DELCO #213–161)
94–95	Y 5.7P (LT1)	25008308	1	367.42	SENSOR, MASS AIRFLOW (INCLS SNSR & 2 CLMPS) (AC–DELCO #213–252)
94	Y 5.7P (LT1)	25099215	1	579.98	SENSOR, MASS AIRFLOW (W/INT AIR TEMP SEN) (W/DUCT) (AC–DELCO #213–238)
96	Y	25008308	1	367.42	SENSOR, MASS AIRFLOW (INCLS SNSR & 2 CLMPS) (AC–DELCO #213–252)
90–95	Y 5.7J (LT5)	16006834	1	61.77	SENSOR, MDP (AC–DELCO #16006834)
84–87	Y	25162693	1	51.12	SENSOR, OXY (1 WIRE) (AC–DELCO #AFS20) (OEM SENSOR)
87	Y (EXC LEADED FUEL EMIS EXPORT (NM8)	25166816	2	51.55	SENSOR, OXY (1 WIRE) (AC–DELCO #AFS21) (OEM SENSOR)
88–91	Y 5.7–8 (L98)	25166816	2	51.55	SENSOR, OXY (PURPLE WIRE) (18 X 1.5) (TYPE #21 MATES W/12015791) (AC–DELCO #AFS21) (OEM SENSOR)
92–93	Y 5.7P (LT1), (EXC LEADED FUEL EMIS EXPORT (NM8)	25166816	2	51.55	SENSOR, OXY (PURPLE WIRE) (18 X 1.5) (TYPE #21 MATES W/12015791) (AC–DELCO #AFS21) (OEM SENSOR)

© 2000 GENERAL MOTORS SERVICE PARTS OPERATIONS

3.682 BOLT – BRACKET – BUFFER – CLAMP – CONNECTOR – COVER – MODULE – PLUG – RELAY – RETAINER – SEAL – SENSOR – SPACER, Computer Control Sensors(Con't)

84–90	Y D9A	25007224	1	99.55	SENSOR, VEH SPD (TRANS MTD) (USED W/AXLE RATIO 2.59, 2.73) (AC–DELCO #213–210)
84–90	Y D9B	25007308	1	99.96	SENSOR, VEH SPD (TRANS MTD) (USED W/AXLE RATIO 3.07, 3.33, 3.45) (AC–DELCO #213–223)
91–93	Y (D8I)	10456089	1	36.09	SENSOR, VEH SPD (W/ O–RING) (04.329) (AC–DELCO #213–199)
91–93	Y (D8K)	10456091	1	32.70	SENSOR, VEH SPD (NATURAL COLOR) (PART NO STAMPED ON HSG) (04.329) (AC–DELCO #213–199)
91–93	Y (D8L)	10456092	1	32.70	SENSOR, VEH SPD (BLACK COLOR) (PART NO STAMPED ON HSG) (04.329) (AC–DELCO #213–200)
94–96	Y 6–SPD M/TRANS (ML9)	10456089	1	36.09	SENSOR, VEH SPD (W/ O–RING) (04.329) (AC–DELCO #213–199)
	*EXPORT***************EXPORT***************EXPORT***************EXPORT***************EXPORT*				
95	Y 5.7P (LT1), EUROPEAN PROVISIONS (VD1) (EXPORT), VE1 (EXPORT)	25312184	2	62.81	SENSOR, HTD OXY (AC–DELCO #AFS75) (OEM SENSOR)

3.833 SWITCH, Cruise Control Selector

84–88	Y M/TRNS	14043256	1	9.84	SWITCH, CRUISE CONT VAC REL

3.885 BOOT – BRACKET – CHAIN – CONNECTOR – INSULATOR – RETAINER – SCREW – SERVO – SHIELD – SLEEVE - VALVE – WASHER, Cruise Control

93–96	Y 6–SPD M/TRANS (ML9)	10194431	1	*.94	RETAINER, CRCONT SW
84–92	Y	10075405	1	.34	RETAINER, CRCONT VAC REL VLV (03.887)
84–87	Y	01612303	1	1.45	RETAINER, VAC REL VLV
92–96	Y	10192285	1	1.02	SHIELD, ACCEL CONT & CRCONT SERVO CBL ADJR
91–95	Y 5.7J (LT5)	14056648	1	2.73	VALVE, CRCONT AIR PRESS REG (STAMPED 6648) (AC–DELCO #14056648)
84–92	Y	01645516	1	13.74	VALVE, CRCONT VAC REL (ON BRK) (W/SW) (AC–DELCO #212–346)
89–92	Y 6–SPD M/TRANS (ML9), SOFT RIDE SUSP (FE1), HVY DUTY SUSP (FE7)	14043256	1	9.84	VALVE, CRCONT VAC REL (ON CLU) (03.883)
85–92	Y	14091256	1	*.60	WASHER, CRCONT SERVO (03.880)

3.900 CONNECTOR – MODULE – PUMP – RELAY, Fuel Pump

90–95	Y 5.7J (LT5)	25028725	1	1056.70	MODULE, F/PMP (SENDER HARNESS [illegible]GGED YPE) (03.107) (AC–DELCO #25028725)
84	Y 5.7–8 (L83)	25168719	1	66.16	PUMP, FUEL (STRAINER NOT INCLUDED) (AC–DELCO #EP386)
85–87	Y 5.7–8 (L98)	25116163	1	112.13	PUMP, FUEL (AC–DELCO #EP241)
88–89	Y 5.7–8 (L98)	25163463	1	138.92	PUMP, FUEL (AC–DELCO #EP375)
90–91	Y 5.7–8 (L98)	25163463	1	138.92	PUMP, FUEL (AC–DELCO #EP375)
92–95	Y 5.7P (LT1)	25163464	1	139.73	PUMP, FUEL (AC–DELCO #EP376)
96	Y	25163464	1	139.73	PUMP, FUEL (AC–DELCO #EP376)
84–87	Y	14078915	1	14.70	RELAY, F/PMP (03.140) (AC–DELCO #212–307)

© 2000 GENERAL MOTORS SERVICE PARTS OPERATIONS

3.900 CONNECTOR – MODULE – PUMP – RELAY, Fuel Pump(Con't)

88–89	Y 5.7–8 (L98)	14089936	1	16.26	RELAY, F/PMP (USE W/CONN 15306002) (01.055) (AC–DELCO #15–8240)
90–94	Y	14100455	1	16.26	RELAY, F/PMP (BLACK) (5–WAY) (09.277) (AC–DELCO #15–8426)
94–95	Y 6–SPD M/TRANS (ML9)	12065125	1	16.73	RELAY, F/PMP (13.095) (AC–DELCO #D1703A)
95	Y 4–SPD A/TRANS (M30)	12065125	1	16.73	RELAY, F/PMP (13.095) (AC–DELCO #D1703A)
95	Y 5.7P (LT1), 6–SPD M/TRANS (ML9), A/C MAN CONT (C60), A/C AUTO ELEC CONT (C68)	12135084	1	9.55	RELAY, F/PMP (02.815) (AC–DELCO #D1719A)
96	Y 4–SPD A/TRANS (M30), 6–SPD M/TRANS (ML9), A/C MAN CONT (C60), A/C AUTO ELEC CONT (C68)	12135084	1	9.55	RELAY, F/PMP (02.815) (AC–DELCO #D1719A)

4.054 BUSHING – CONNECTOR – RELAY – RETAINER – ROD – SOLENOID – SWITCH, Safety Starting Switch Or Speed Sensing [6–SPEED MANUAL]

90–96	Y 6–SPD M/TRANS (ML9)	14006979	1	.99	BUSHING, CLU PED POSN SW ROD
90–92	Y 6–SPD M/TRANS (ML9)	14089936	1	16.26	RELAY, M/TRNS 2ND & 3RD GR BLOCKOUT (5–PIN OVAL SHAPE) (USE W/CONN 15306002) (01.055) (AC–DELCO #15–8240)
96	Y 6–SPD M/TRANS (ML9), (EXC VE1 (EXPORT)	12193603	2	20.30	RELAY, M/TRNS 2ND & 3RD GR BLOCKOUT (GRAY) (SPST 280 MINI) (4–WAY) (02.100) (AC–DELCO #12193603)
84–96	Y	03989067	1	*.94	RETAINER, CLU PED POSN SW ROD (03.425)
89–95	Y	14080260	1	6.85	ROD, CLU PED POSN SW
96	Y 6–SPD M/TRANS (ML9)	14080260	1	6.85	ROD, CLU PED POSN SW
89–96	Y 6–SPD M/TRANS (ML9)	10045822	1	30.87	SWITCH, CLU PED POSN (AC–DELCO #D2213A)

4.085 STUD, Transmission Mount and Support [AUTOMATIC]

88–89	Y A/TRNS (MD8)	14091545	1	1.65	STUD, TRANS (3/8–16X0.76 BOTH ENDS) (03.275)
90–91	Y 4–SPD A/TRANS (MD8)	10085606	1	1.65	STUD, TRANS (T/W 1052080) (3/8–16X25/32 BOTH ENDS) (03.275)
92	Y 4–SPD A/TRANS (MD8), (USE W/O CTLTC CONV BRACE) (1ST DES)	10085606	1	1.65	STUD, TRANS (T/W 1052080) (3/8–16X25/32 BOTH ENDS) (03.275)
92	Y 4–SPD A/TRANS (MD8), (USE W/CTLTC CONV BRACE) (2ND DES)	10220063	1	1.25	STUD, TRANS
93	Y 4–SPD A/TRANS (MD8)	10220063	1	1.25	STUD, TRANS
94–96	Y 4–SPD A/TRANS (M30)	10220063	1	1.25	STUD, TRANS

4.115 BOLT – BUSHING – CONNECTOR – CONVERTER – SEAL – SWITCH, Transmission Converter [AUTOMATIC]

94–96	Y 4–SPD A/TRANS (M30)	20616587	3	*1.82	BOLT, STAT SHF (M6X1X19.0) (11.561) (AC–DELCO #20616587)
84–91	Y	01261968	AR	*1.82	BOLT, TRANS T/CV (TO FLYWHEEL) (M10X1.5X15 12.5 THD) (AC–DELCO #1261968)
92–93	Y 4–SPD A/TRANS (MD8)	01261968	3	*1.82	BOLT, TRANS T/CV (M10X1.5X15 12.5 THD) (AC–DELCO #1261968)

© 2000 GENERAL MOTORS SERVICE PARTS OPERATIONS

4.115 BOLT – BUSHING – CONNECTOR – CONVERTER – SEAL – SWITCH, Transmission Convertor [AUTOMATIC](Con't)

94–96	Y 4–SPD A/TRANS (M30)	01261968	3	*1.82	BOLT, TRANS T/CV (M10X1.5X15 12.5 THD) (AC–DELCO #1261968)
84–93	Y 4–SPD A/TRANS (MD8)	08634383	1	11.02	CONNECTOR, A/TRN WRG (W/SEAL CONVR CLU) (ELECTRICAL) (3–WAY) (AC–DELCO #8634383)
92	Y 4–SPD A/TRANS (MD8)	08682294	1	4.60	CONNECTOR, A/TRN WRG (5 TERM, W/SEAL) (AC–DELCO #8682294)
96	Y 4–SPD A/TRANS (M30)	12162202	1	.77	CONNECTOR, SOL–TC PWM VLV (BLUE) (2–WAY F) (W/O LEADS)
92–93	Y 5.7P (LT1), 4–SPD A/TRANS (MD8)	12102612	1	42.12	CONNECTOR, TCC WRG (BLACK) (5–WAY M)
84–90	Y	10054241	1	*1.82	SEAL, O–RING, ELEC CONN (61.338) (AC–DELCO #10054241)

4.589 CONNECTOR – SWITCH, Parking Brake Indicator

84–87	Y	14047181	1	2.35	SWITCH, PARK BRK IND
88–96	Y	10136720	1	2.09	SWITCH, PARK BRK IND

4.591 ACTUATOR KIT – BOLT – LEVER, Parking Brake Apply

84–87	Y	14105127	1	DISCON	LEVER, PARK BRK (GRAPHITE)
88–96	Y	12529393	1	67.58	LEVER, PARK BRK

4.710 BRACKET – CONNECTOR – SENSOR – SWITCH, Electronic Brake Control

Note: AT TIMES THE BRAKE SENSOR IS SERVICED ONLY AS PART OF THE REAR WHEEL HUB ASSEMBLY LOCATED IN GROUP 5.806

86	Y	14093145	1	DISCON	BRACKET, ELEC BRK CONT LATL ACCEL SWITCH
86–88	Y	14091268	2	DISCON	BRACKET, FRT LWR WHL SPD SEN MT (POSN #2)
86–88	Y	14091237	2	DISCON	BRACKET, FRT UPR WHL SPD SEN MT (POSN #5)
86–87	Y	14091235	LH	DISCON	BRACKET, FRT WHL KNU SPD SEN MT
86–87	Y	14091236	RH	DISCON	BRACKET, FRT WHL KNU SPD SEN MT
86–87	Y	14091257	LH	DISCON	BRACKET, RR WHL KNU SPD SEN MT
86–87	Y	14091258	RH	DISCON	BRACKET, RR WHL KNU SPD SEN MT
86–91	Y	14091259	2	.75	BRACKET, WHL SPD SEN (POSN #4)
88–91	Y	10052288	2	.77	BRACKET, WHL SPD SEN (RR WHL TO TOP OF KNUCKLE) (POSN #3)
88–91	Y	10052289	2	.77	BRACKET, WHL SPD SEN (RR WHL TO SIDE OF KNUCKLE) (POSN #1)
89	Y	10087787	LH	.85	BRACKET, WHL SPD SEN
89	Y	10087788	RH	.85	BRACKET, WHL SPD SEN
90–91	Y SOFT RIDE SUSP (FE1), HVY DUTY SUSP (FE7)	10087787	LH	.85	BRACKET, WHL SPD SEN
90–91	Y SOFT RIDE SUSP (FE1), HVY DUTY SUSP (FE7)	10087788	RH	.85	BRACKET, WHL SPD SEN
91–96	Y	10158005	2	.90	BRACKET, WHL SPD SEN (POSN #5)
92–96	Y	10052288	2	.77	BRACKET, WHL SPD SEN (POSN #1)
92–96	Y	10052289	2	.77	BRACKET, WHL SPD SEN (POSN #2)
92–96	Y	10087787	LH	.85	BRACKET, WHL SPD SEN (POSN #3)
92–96	Y	10087788	RH	.85	BRACKET, WHL SPD SEN (POSN #4)
92–96	Y	14091259	2	.75	BRACKET, WHL SPD SEN (POSN #6)
96	Y CHASSIS, REALTIME DAMPING (F45)	10260107	LH	.73	BRACKET, WHL SPD SEN (POSN #7)
96	Y CHASSIS, REALTIME DAMPING (F45)	10260108	RH	.73	BRACKET, WHL SPD SEN (POSN #8)
89–90	Y	10087789	LH	DISCON	BRACKET, WHL SPD SEN FRT (POSN #9)

© 2000 GENERAL MOTORS SERVICE PARTS OPERATIONS

4.710 BRACKET – CONNECTOR – SENSOR – SWITCH, Electronic Brake Control(Con't)

89–90	Y	10087763	RH	DISCON	BRACKET, WHL SPD SEN FRT (POSN #9)
89–90	Y	14104969	LH	3.47	BRACKET, WHL SPD SEN FRT (POSN #8)
89–90	Y	14104970	RH	3.26	BRACKET, WHL SPD SEN FRT (POSN #8)
93–96	Y	10211657	1	24.54	SWITCH, ELEK BRK CONT BRK PED (W/ S/LP SW) (AC–DELCO #10211657)
86–89	Y	14093144	1	137.33	SWITCH, ELEK BRK CONT LATL ACCLRTN (AC–DELCO #14093144)

4.805 GASKET – SEAL, Hydraulic Power Brake Booster

89–91	Y 5.7–8 (L98)	14089147	1	3.98	SEAL, P/B BOOS (ECM BRKT TO BOOS) (04.910)
90–96	Y	10097675	1	2.91	SEAL, P/B BOOS (ECM BRKT TO FIRE WALL) (04.845)
92–94	Y 5.7J (LT5)	10132872	1	2.91	SEAL, P/B BOOS (04.868) (USED TO SERVICE BOOSTER 10242104)
92–94	Y 5.7P (LT1)	14089147	1	3.98	SEAL, P/B BOOS (ECM BRKT TO BOOS) (04.910)
95–96	Y	10132872	1	2.91	SEAL, P/B BOOS (04.868)

6.606 BOLT – BRACE – BRACKET, Steering Pump Mounting

92–95	Y 5.7P (LT1)	12550052	1	77.01	BRACKET, GEN & A/C CMPR & P/S PUMP (02.277)
93	Y 5.7J (LT5)	12550052	1	77.01	BRACKET, GEN & A/C CMPR & P/S PUMP (02.277)
96	Y	12550052	1	77.01	BRACKET, GEN & A/C CMPR & P/S PUMP (02.277)
84–90	Y	14087559	1	43.35	BRACKET, GEN & P/S PUMP (02.277)
88–89	Y	26006632	1	DISCON	BRACKET, P/S FLUID COOLER
90–95	Y 5.7J (LT5)	10067475	1	65.41	BRACKET, P/S PUMP
92–95	Y 5.7P (LT1)	10105358	1	2.50	BRACKET, P/S PUMP FRT
96	Y 5.7P (LT1), 5.7–5 (LT4)	10105358	1	2.50	BRACKET, P/S PUMP FRT
85–91	Y 5.7–8 (L98)	10077534	1	13.08	BRACKET, P/S PUMP RR

7.831 BAR – BRACKET – COVER – EXTENSION – FASCIA – NUT – REINFORCEMENT – RETAINER – RIVET – SPACER – STIFFENER, Bumper/Fascia Face

84–90	Y	14030201	1	399.00	FASCIA, FRT BPR
91–96	Y	10285543	1	420.00	FASCIA, FRT BPR (PAINT TO MATCH)
90–95	Y SPECIAL PERFORMANCE PKG (ZR1)	10153675	1	832.00	FASCIA, R/END
91–93	Y (EXC SPECIAL PERFORMANCE PKG (ZR1)	10135972	1	750.60	FASCIA, R/END
94–95	Y (EXC SIG & MKR LP (T90) (EXPORT), SPECIAL PERFORMANCE PKG (ZR1)	10135972	1	750.60	FASCIA, R/END
96	Y	10135972	1	750.60	FASCIA, R/END
84–88	Y (EXC EXPORT)	14030202	1	858.90	FASCIA, RR BPR (ON 86–90 Y67, NEED TO CUT OUT OPENING FOR HI–MOUNT STOP LAMP)
89	Y	14030202	1	858.90	FASCIA, RR BPR (ON 86–90 Y67, NEED TO CUT OUT OPENING FOR HI–MOUNT STOP LAMP
90	Y (EXC SPL PERF PKG ZR1)	14030202	1	858.90	FASCIA, RR BPR (ON 86–90 Y67, NEED TO CUT OUT OPENING FOR HI–MOUNT STOP LAMP

© 2000 GENERAL MOTORS SERVICE PARTS OPERATIONS

7.831 BAR – BRACKET – COVER – EXTENSION – FASCIA – NUT – REINFORCEMENT – RETAINER – RIVET – SPACER – STIFFENER, Bumper/Fascia Face(Con't)

84–96	Y	10149203	LH	60.10	REINFORCEMENT, FRT BPR FASCIA (OTR)
84–96	Y	10149204	RH	61.10	REINFORCEMENT, FRT BPR FASCIA (OTR)
84–88	Y	14049010	1	91.80	REINFORCEMENT, FRT BPR FASCIA (CTR)
84–90	Y	10135949	LH	20.60	REINFORCEMENT, FRT BPR FASCIA CTR
84–90	Y	10135950	RH	20.60	REINFORCEMENT, FRT BPR FASCIA CTR
91–96	Y	10149201	1	26.00	REINFORCEMENT, FRT BPR FASCIA CTR
89–96	Y	10132965	1	3.60	REINFORCEMENT, R/END FASCIA LWR CTR
90	Y SPECIAL PERFORMANCE PKG (ZR1)	14104202	2	4.90	REINFORCEMENT, R/END FASCIA SI LWR (OTR)
91–96	Y	14104202	2	4.90	REINFORCEMENT, R/END FASCIA SI LWR (OTR)
84–89	Y	14069614	1	9.70	REINFORCEMENT, RR BPR FASCIA (UPR)
84–88	Y	14069615	LH	6.90	REINFORCEMENT, RR BPR FASCIA (LWR)
84–89	Y	14069616	RH	6.90	REINFORCEMENT, RR BPR FASCIA (LWR)
89–90	Y (EXC SPL PERF PKG ZR1)	14069615	LH	6.90	REINFORCEMENT, RR BPR FASCIA (LWR)
90	Y (EXC SPL PERF PKG ZR1)	14069614	1	9.70	REINFORCEMENT, RR BPR FASCIA (UPR)
90	Y (EXC SPL PERF PKG ZR1)	14069616	RH	6.90	REINFORCEMENT, RR BPR FASCIA (LWR)
84–88	Y	10149282	2	9.50	RETAINER, FRT BPR FASCIA (OTR)
84–90	Y	14046637	1	16.30	RETAINER, FRT BPR FASCIA (CTR)
89–90	Y	10149282	2	9.50	RETAINER, FRT BPR FASCIA
91–96	Y	10146498	1	22.10	RETAINER, FRT BPR FASCIA (22.4" LONG) (STRAIGHT)
91–96	Y	10149202	2	3.60	RETAINER, FRT BPR FASCIA (AIR DEFLECTOR) (17.8" LONG) (CURVED)
84–86	Y	05973400	AR	*.70	RETAINER, PUSH IN RR BPR FASCIA (SNAP–IN PIN LOCK) (22.5MM LONG) (01.269)
84–96	Y	14100248	2	9.80	RETAINER, R/END FASCIA SI CTR (M62X22 W/2 STUDS)
90	Y	10149275	LH	9.40	RETAINER, R/END FASCIA SI CTR
90	Y	10149276	RH	9.40	RETAINER, R/END FASCIA SI CTR
91–93	Y (EXC SPECIAL PERFORMANCE PKG (ZR1)	10149213	LH	9.40	RETAINER, R/END FASCIA SI CTR
91–93	Y (EXC SPECIAL PERFORMANCE PKG (ZR1)	10149214	RH	9.40	RETAINER, R/END FASCIA SI CTR
91–95	Y SPECIAL PERFORMANCE PKG (ZR1)	10149275	LH	9.40	RETAINER, R/END FASCIA SI CTR
91–95	Y SPECIAL PERFORMANCE PKG (ZR1)	10149276	RH	9.40	RETAINER, R/END FASCIA SI CTR
94–95	Y (EXC SIG & MKR LP (T90) (EXPORT), SPECIAL PERFORMANCE PKG (ZR1)	10149213	LH	9.40	RETAINER, R/END FASCIA SI CTR
94–95	Y (EXC SIG & MKR LP (T90) (EXPORT), SPECIAL PERFORMANCE PKG (ZR1)	10149214	RH	9.40	RETAINER, R/END FASCIA SI CTR

© 2000 GENERAL MOTORS SERVICE PARTS OPERATIONS

7.831 BAR – BRACKET – COVER – EXTENSION – FASCIA – NUT – REINFORCEMENT – RETAINER – RIVET – SPACER – STIFFENER, Bumper/Fascia Face(Con't)

96	Y (EXC SIG & MKR LP (T90) (EXPORT)	10149213	LH	9.40	RETAINER, R/END FASCIA SI CTR
96	Y (EXC SIG & MKR LP (T90) (EXPORT)	10149214	RH	9.40	RETAINER, R/END FASCIA SI CTR
90–95	Y (EXC SPECIAL PERFORMANCE PKG (ZR1)	14046629	1	27.00	RETAINER, R/END FASCIA UPR CTR
90–95	Y SPECIAL PERFORMANCE PKG (ZR1)	14104190	1	14.10	RETAINER, R/END FASCIA UPR CTR
96	Y	14046629	1	27.00	RETAINER, R/END FASCIA UPR CTR
84–89	Y	10272907	LH	18.60	RETAINER, R/END FASCIA UPR OTR (4 STUDS)
84–89	Y	10272908	RH	18.60	RETAINER, R/END FASCIA UPR OTR (4 STUDS)
90–95	Y (EXC SPECIAL PERFORMANCE PKG (ZR1)	10272907	LH	18.60	RETAINER, R/END FASCIA UPR OTR (4 STUDS)
90–95	Y (EXC SPECIAL PERFORMANCE PKG (ZR1)	10272908	RH	18.60	RETAINER, R/END FASCIA UPR OTR (4 STUDS)
90–95	Y SPECIAL PERFORMANCE PKG (ZR1)	14104193	LH	10.20	RETAINER, R/END FASCIA UPR OTR
90–95	Y SPECIAL PERFORMANCE PKG (ZR1)	14104194	RH	10.20	RETAINER, R/END FASCIA UPR OTR
96	Y	10272907	LH	18.60	RETAINER, R/END FASCIA UPR OTR (4 STUDS)
96	Y	10272908	RH	18.60	RETAINER, R/END FASCIA UPR OTR (4 STUDS)
84–89	Y	14046629	1	27.00	RETAINER, RR BPR FASCIA (CTR)
84–89	Y	14046704	2	11.80	RETAINER, RR BPR FASCIA (LWR)
	*EXPORT*********EXPORT*********EXPORT*********EXPORT*********EXPORT*				
94	Y SIG & MKR LP (T90) (EXPORT), (EXC SPECIAL PERFORMANCE PKG (ZR1)	10204700	1	789.20	FASCIA, R/END
95	Y SIG & MKR LP (T90) (EXPORT), (EXC SPECIAL PERFORMANCE PKG (ZR1)	10261523	1	832.00	FASCIA, R/END
96	Y SIG & MKR LP (T90) (EXPORT)	10261323	1	832.00	FASCIA, R/END
84–88	Y EXPORT	14049139	1	DISCON	FASCIA, RR BPR
94–96	Y SIG & MKR LP (T90) (EXPORT)	10149275	LH	9.40	RETAINER, R/END FASCIA SI CTR
94–96	Y SIG & MKR LP (T90) (EXPORT)	10149276	RH	9.40	RETAINER, R/END FASCIA SI CTR

7.874 BOLT – NUT, Bumper/Fascia Mounting

91–96	Y	10172330	4	.50	BOLT, FRT BPR FASCIA CTR REINF (M6.3X1.81X20)
91–93	Y	10172330	12	.50	BOLT, FRT BPR FASCIA ENGY ABS (M6.3X1.81X20)
91–96	Y	10172330	6	.50	BOLT, FRT T/SIG & FOG LP BRKT (M6.3X1.81X20)

8.015 BOLT – BRACKET – BRACKET KIT – HINGE – RETAINER – ROD – STRUT – STUD, Hood Panel

84–88	Y	14060285	LH	4.91	BRACKET, HOOD HGE
84–88	Y	14060286	RH	4.91	BRACKET, HOOD HGE
89–91	Y SOFT RIDE SUSP (FE1), HVY DUTY SUSP (FE7)	14060285	LH	4.91	BRACKET, HOOD HGE
89–91	Y SOFT RIDE SUSP (FE1), HVY DUTY SUSP (FE7)	14060286	RH	4.91	BRACKET, HOOD HGE
84–86	Y07	14084499	1	16.03	BRACKET, HOOD HOLD OPEN SUPT
88	Y	10278270	LH	9.55	BRACKET, HOOD OPEN ASST ROD (UPR)

© 2000 GENERAL MOTORS SERVICE PARTS OPERATIONS

8.015 BOLT – BRACKET – BRACKET KIT – HINGE – RETAINER – ROD – STRUT – STUD, Hood Panel(Con't)

88	Y	10278271	LH	8.30	BRACKET, HOOD OPEN ASST ROD (LWR)
89–91	Y SOFT RIDE SUSP (FE1), HVY DUTY SUSP (FE7)	10278270	LH	9.55	BRACKET, HOOD OPEN ASST ROD (UPR)
89–90	Y SOFT RIDE SUSP (FE1), HVY SUSP (FE7)	10278271	LH	8.30	BRACKET, HOOD OPEN ASST ROD (LWR)
91	Y (EXC SOFT RIDE SUSP (FE1), HVY DUTY SUSP (FE7)	10278271	LH	8.30	BRACKET, HOOD OPEN ASST ROD (LWR)
85–87	Y	12523296	1	95.50	BRACKET, HOOD STRUT (BODY SI) (USED T/W GAS STRUT PROP ROD)
91–92	Y SOFT RIDE SUSP (FE1), HVY DUTY SUSP (FE7)	10278270	LH	9.55	BRACKET, HOOD STRUT
91–96	Y	10278271	LH	8.30	BRACKET, HOOD STRUT (POSN #2)
93	Y	10278270	LH	9.55	BRACKET, HOOD STRUT
94–96	Y	10278270	LH	9.55	BRACKET, HOOD STRUT (POSN #1)

9.171 BRACE – BRACKET – PIN, A/C Compressor Mounting

85–87	Y	14084340	1	33.53	BRACKET, A/C CMPR
88–91	Y 5.7–8 (L98)	10105236	1	49.02	BRACKET, A/C CMPR
84	Y	14055137	1	39.62	BRACKET, CMPR
92–95	Y 5.7P (LT1)	12550052	1	77.01	BRACKET, GEN & A/C CMPR & P/S PUMP (02.277)
93	Y 5.7J (LT5)	12550052	1	77.01	BRACKET, GEN & A/C CMPR & P/S PUMP (02.277)
96	Y	12550052	1	77.01	BRACKET, GEN & A/C CMPR & P/S PUMP (02.277)

9.260 SEAL, Air Outlet

84–91	Y	039995[illegible]	AR	4.98	SEAL, POLYURETHANE (59.50X1.25X.75)

9.275 ASPIRATOR – BRACKET – CONNECTOR – DUCT – GRILLE – HOSE – KNOB – MODULE – MUFFLER – PROGRAMMER – SENSOR – SOLENOID – SPRING – SWITCH, A/C Electric Control

85–88	Y A/C AUTO ELEC CONT (C68)	14086765	1	DISCON	BRACKET, HTR & A/C PROGMR
90–96	Y	10086302	1	3.25	BRACKET, HTR & A/C PROGMR
85–88	Y A/C (C68)	14083707	3	DISCON	BRACKET, PROG BRKT (TO FIREWALL)
92–93	Y 5.7P (LT1)	22599559	1	48.08	SENSOR, A/C REFRIG PRESS (W/THREE TERMINALS) (MATES W/CONNECTOR 12102748) (AC–DELCO #15–72104)
94–95	Y 5.7P (LT1)	22601618	1	41.10	SENSOR, A/C REFRIG PRESS (MATES W/CONN. 12102748) (AC–DELCO #15–20310)
96	Y	22601618	1	41.10	SENSOR, A/C REFRIG PRESS (MATES W/CONN. 12102748) (AC–DELCO #15–20310)
86–89	Y A/C (C68)	16041001	1	23.88	SENSOR, I/S AIR TEMP
90–96	Y A/C AUTO ELEC CONT (C68)	16[illegible]9011	1	32.48	SENSOR, I/S AIR TEMP (AC–DELCO #15–71650)
89	Y	16123101	1	29.78	SENSOR, SUN LOAD TEMP (09.260) (AC–DELCO #15–71638)
90	Y A/C AUTO ELEC CONT (C68)	16123101	1	29.78	SENSOR, SUN LOAD TEMP (09.260) (AC–DELCO #15–71638)
91–96	Y A/C AUTO ELEC CONT (C68)	16137801	1	35.20	SENSOR, SUN LOAD TEMP (INCLUDES COVER) (AC–DELCO #15–71850)
85–93	Y	14078970	1	34.44	SWITCH, A/C CMPR ENG COOL TEMP (2 TERM) (AC–DELCO #15–2351)

© 2000 GENERAL MOTORS SERVICE PARTS OPERATIONS

9.275 ASPIRATOR – BRACKET – CONNECTOR – DUCT – GRILLE – HOSE – KNOB – MODULE – MUFFLER – PROGRAMMER – SENSOR – SOLENOID – SPRING – SWITCH, A/C Electric Control(Con't)

94–95	Y 5.7J (LT5)	10223909	1	17.64	SWITCH, A/C CMPR ENG COOL TEMP (AC–DELCO #15–2878)
84	Y	03041336	1	34.44	SWITCH, A/C CYCLING & FAN CONT A/C REFRIG PRESS (W/O RING) (AC–DELCO #15–2151)
92–93	Y	52461142	1	35.26	SWITCH, A/C CYCLING & FAN CONT A/C REFRIG PRESS (AC–DELCO #15–5427)
94–96	Y	52468323	1	34.44	SWITCH, A/C CYCLING & FAN CONT A/C REFRIG PRESS (AC–DELCO #15–5705)
84–89	Y	16022463	1	12.80	SWITCH, HTR & A/C CONT BLO (BLOWER) (AC–DELCO #15–71226)
90–96	Y A/C MAN CONT (C60)	16064921	1	59.50	SWITCH, HTR & A/C CONT BLO (AC–DELCO #15–71587)
84–88	Y	16018267	1	12.80	SWITCH, HTR & A/C CONT SEL (SEL ROTARY) (AC–DELCO #15–71152)
89	Y A/C MAN CONT (C60)	16018267	1	12.80	SWITCH, HTR & A/C CONT SEL (SEL ROTARY) (AC–DELCO #15–71152)
84–89	Y	14073404	1	19.20	SWITCH, INST CSTR PASS COMPT AIR TEMP

9.277 BRACKET – CONNECTOR – RELAY, A/C Electrical

90–91	Y 5.7–8 (L98), A/C MAN CONT (C60)	14104140	1	1.88	BRACKET, BLO MOT RLY (STEEL) (3.0"X2.0") (76.7MMX51.0MM)) (01.055)
86–87	Y	14091291	1	DISCON	BRACKET, BLO MTR RLY
88–89	Y	14104533	10	DISCON	BRACKET, BLO MTR RLY
84–85	Y	14062595	1	DISCON	BRACKET, MOD WIRING HARN
90–91	Y	14100455	1	16.26	RELAY, A/C CMPR (BLACK) (5–WAY) (AC–DELCO #15–8426)
92	Y	14089936	1	16.26	RELAY, A/C CMPR (5–PIN OVAL SHAPE) (USE W/CONN 15306002) (01.055) (AC–DELCO #15–8240)
93–94	Y 5.7P (LT1), 5.7J (LT5)	12193601	1	23.44	RELAY, A/C CMPR (BLACK) (5–WAY M) (USED W/CONNECTOR 15306045) (AC–DELCO #15–8719)
93–96	Y	12193603	1	20.30	RELAY, A/C CMPR (GRAY) (SPST 280 MINI) (4–WAY) (02.100) (AC–DELCO #12193603)
84–87	Y	10019535	1	23.44	RELAY, BLO MOT (HIGH BLOWER) (AC–DELCO #15–8206)
88–92	Y A/C MAN CONT (C60)	14089936	1	16.26	RELAY, BLO MOT (5–PIN OVAL SHAPE) (USE W/CONN 15306002) (01.055) (AC–DELCO #15–8240)
93–95	Y 5.7P (LT1), A/C MAN CONT (C60)	12193601	1	23.44	RELAY, BLO MOT (BLACK) (5–WAY M) (USED W/CONNECTOR 15306045) (AC–DELCO #15–8719)
96	Y A/C MAN CONT (C60), (EXC VE1 (EXPORT)	12193601	1	23.44	RELAY, BLO MOT (BLACK) (5–WAY M) (USED W/CONNECTOR 15306045) (AC–DELCO #15–8719)

9.650 AMPLIFIER – CONNECTOR – CONTROL – ESCUTCHEON – GRILLE – MICROPHONE – RADIO – RECEIVER – RELAY – SPEAKER, Radio Receiver

Note: 1998 & GREATER RADIO ASSEMBLIES ARE SERVICED ONLY THROUGH AC DELCO SERVICE CENTERS. ACCESSORY RADIOS ARE AVAILABLE IN CATALOG GROUP 21.480.

84–89	Y (EXC UQ4 BOSE)	14047517	LH	19.00	GRILLE, RDO FRT SPKR

© 2000 GENERAL MOTORS SERVICE PARTS OPERATIONS

9.650 AMPLIFIER – CONNECTOR – CONTROL – ESCUTCHEON – GRILLE – MICROPHONE – RADIO – RECEIVER – RELAY – SPEAKER, Radio Receiver(Con't)

84–89	Y (EXC UQ4 BOSE)	14047518	RH		19.00	GRILLE, RDO FRT SPKR
84–89	Y UQ4 (BOSE) (EXC RDO)	14081837	LH		19.00	GRILLE, RDO FRT SPKR
84–89	Y UQ4 (BOSE) (EXC RDO)	14081838	RH		19.00	GRILLE, RDO FRT SPKR
84	Y STEREO (UU8)	16021351	1			RECEIVER, RDO
84	Y STEREO (UM6) (EXC UK1, UL2 EXPORT)	16029091	1	DISCON		RECEIVER, RDO
85–88	Y STEREO (UU8)	16060393	1	DISCON		RECEIVER, RDO (WHEN USED ON 88 VEHICLES, MUST ALSO USE HARNESS 16129051.)
89	Y STEREO (UU8)	16060393	1	DISCON		RECEIVER, RDO
84–89	Y BOSE SPKR SYS (UQ4)	14078902	1		16.26	RELAY, RDO SPKR AMPF (01.055) (AC–DELCO #15–8218)
90–92	Y CASSETTE STEREO (UU8), CASSETTE/CD PLAYER (U1F)	14100455	1		16.26	RELAY, RDO SPKR AMPF (BLACK) (5–WAY) (09.277) (AC–DELCO #15–8426)
93–04	Y 6 SPKR SYS (UX0)	14100455	1		16.26	RELAY, RDO SPKR AMPF (BLACK) (5–WAY) (09.277) (AC–DELCO #15–8426)
84–87	Y STEREO	16033662	2		27.68	SPEAKER, RDO FRT (AC–DELCO #16033662)
88–89	Y (EXC BOSE SPKR SYS (UQ4)	16033662	2		27.68	SPEAKER, RDO FRT (AC–DELCO #16033662)
90–92	Y (EXC 6 SPKR SYS (UX0)	16033662	2		27.68	SPEAKER, RDO FRT (AC–DELCO #16033662)
90	Y07 6 SPKR SYS (UX0)	16141716	LH		45.40	SPEAKER, RDO FRT (LESS CLOSURE) (AC–DELCO #16141716)
90–96	Y07 6 SPKR SYS (UX0)	16166471	RH		377.25	SPEAKER, RDO FRT (AC–DELCO #16166471)
90–96	Y07 6 SPKR SYS (UX0)	16166481	LH		365.27	SPEAKER, RDO FRT (AC–DELCO #16166481)
90–96	Y67 6 SPKR SYS (UX0)	16166491	RH		365.27	SPEAKER, RDO FRT (AC–DELCO #16166491)
90–96	Y67 6 SPKR SYS (UX0)	16166501	LH		365.27	SPEAKER, RDO FRT (AC–DELCO #16166501)
93–96	Y 4 SPKR SYS (UY5)	16033662	2		27.68	SPEAKER, RDO FRT (AC–DELCO #16033662)
93–96	Y67 6 SPKR SYS (UX0)	16141716	2		45.40	SPEAKER, RDO FRT (LESS CLOSURE) (AC–DELCO #16141716)
	*EXPORT**********EXPORT**********EXPORT**********EXPORT**********EXPORT*					
84–86	Y UK1 (EXPORT), STEREO (UM6)	16027300	1		763.42	RECEIVER, RDO (AC–DELCO #16027300)

9.655 BRACKET – GRILLE – PLATE, Radio Speaker

90	Y (22I)	10172449	LH	DISCON	GRILLE, RDO FRT SPKR (09.650) (VEH W/L98 & BEFORE VIN 116467 OR W/LT5 & BEFORE VIN 800158 MUST USE SILL PLATE 10172439, VEH W/SAME VINS & LATER DO NOT REQ PLATE)
90	Y (22I)	10172450	RH	DISCON	GRILLE, RDO FRT SPKR (09.650) (VEH W/L98 & BEFORE VIN 116467 OR W/LT5 & BEFORE VIN 800158 MUST USE SILL PLATE 10172440, VEH W/SAME VINS & LATER DO NOT REQ PLATE)

© 2000 GENERAL MOTORS SERVICE PARTS OPERATIONS

9.655 BRACKET – GRILLE – PLATE, Radio Speaker(Con't)

90	Y (60I)	10172451	LH	35.00	GRILLE, RDO FRT SPKR (09.650) (VEH W/L98 & BEFORE VIN 116467 OR W/LT5 & BEFORE VIN 800158 MUST USE SILL PLATE 10172441, VEH W/SAME VINS & LATER DO NOT REQ PLATE)
90	Y (60I)	10172452	RH	DISCON	GRILLE, RDO FRT SPKR (09.650) (VEH W/L98 & BEFORE VIN 116467 OR W/LT5 & BEFORE VIN 800158 MUST USE SILL PLATE 10172442, VEH W/SAME VINS & LATER DO NOT REQ PLATE)
90	Y (73I)	10172453	LH	DISCON	GRILLE, RDO FRT SPKR (09.650) (VEH W/L98 & BEFORE VIN 116467 OR W/LT5 & BEFORE VIN 800158 MUST USE SILL PLATE 10172443, VEH W/SAME VINS & LATER DO NOT REQ PLATE)
90	Y (73I)	10172454	RH	DISCON	GRILLE, RDO FRT SPKR (09.650)
90	Y (90I)	10172455	LH	DISCON	GRILLE, RDO FRT SPKR (09.650) (VEH W/L98 & BEFORE VIN 116467 OR W/LT5 & BEFORE VIN 800158 MUST USE SILL PLATE 10172445, VEH W/SAME VINS & LATER DO NOT REQ PLATE)
90	Y (90I)	10172456	RH	DISCON	GRILLE, RDO FRT SPKR (09.650) (VEH W/L98 & BEFORE VIN 116467 OR W/LT5 & BEFORE VIN 800158 MUST USE SILL PLATE 10172446, VEH W/SAME VINS & LATER DO NOT REQ PLATE)
90	Y (19I)	10220615	LH	29.75	GRILLE, RDO FRT SPKR (09.650) (VEH W/L98 & BEFORE VIN 116467 OR W/LT5 & BEFORE VIN 800158 MUST USE SILL PLATE 10172437, VEH W/SAME VINS & LATER DO NOT REQ PLATE)
90	Y (19I)	10220616	RH	29.75	GRILLE, RDO FRT SPKR (09.650) (VEH W/L98 & BEFORE VIN 116467 OR W/LT5 & BEFORE VIN 800158 MUST USE SILL PLATE 10172438, VEH W/SAME VINS & LATER DO NOT REQ PLATE)
91	Y (22I)	10172449	LH	DISCON	GRILLE, RDO FRT SPKR (BLUE) (09.650)
91	Y (22I)	10172450	RH	DISCON	GRILLE, RDO FRT SPKR (BLUE) (09.650)
91	Y (60I)	10172451	LH	35.00	GRILLE, RDO FRT SPKR (COGNAC) (09.650)
91	Y (60I)	10172452	RH	DISCON	GRILLE, RDO FRT SPKR (COGNAC) (09.650)
91–92	Y (73I)	10172453	LH	DISCON	GRILLE, RDO FRT SPKR (RED) (09.650)
91–92	Y (73I)	10172454	RH	DISCON	GRILLE, RDO FRT SPKR (RED) (09.650)
91	Y (90I)	10172455	LH	DISCON	GRILLE, RDO FRT SPKR (GRAYSMOKE) (09.650)
91	Y (90I)	10172456	RH	DISCON	GRILLE, RDO FRT SPKR (GRAYSMOKE) (09.650)
91–93	Y (19I)	10220615	LH	29.75	GRILLE, RDO FRT SPKR (BLACK) (09.650)

9.655 BRACKET – GRILLE – PLATE, Radio Speaker(Con't)

91–93	Y (19I)	10220616	RH	29.75	GRILLE, RDO FRT SPKR (BLACK) (09.650)
92–93	Y (10I)	10220615	LH	29.75	GRILLE, RDO FRT SPKR (BLACK) (09.650)
92–93	Y (10I)	10220616	RH	29.75	GRILLE, RDO FRT SPKR (BLACK) (09.650)
92–93	Y (64I)	10220617	LH	DISCON	GRILLE, RDO FRT SPKR (BEIGE) (09.650)
92–93	Y (64I)	10220618	RH	29.75	GRILLE, RDO FRT SPKR (BEIGE) (09.650)
92–93	Y (14I)	10220619	LH	21.05	GRILLE, RDO FRT SPKR (GRAY) (09.650)
92–93	Y (14I)	10220620	RH	20.65	GRILLE, RDO FRT SPKR (GRAY) (09.650)
93	Y (79I)	10220623	LH	21.22	GRILLE, RDO FRT SPKR (RED) (09.650) (AC–DELCO #10220623)
93	Y (79I)	10220624	RH	22.00	GRILLE, RDO FRT SPKR (RED) (09.650)
93	Y (70I)	10220625	LH	28.20	GRILLE, RDO FRT SPKR (RED) (09.650)
93	Y (70I)	10220626	RH	28.20	GRILLE, RDO FRT SPKR (RED) (09.650)
94–96	Y (19I)	10238587	LH	31.50	GRILLE, RDO FRT SPKR (BLACK) (09.650)
94–96	Y (19I)	10238588	RH	31.50	GRILLE, RDO FRT SPKR (BLACK) (09.650)
94–96	Y (64I)	10238589	LH	DISCON	GRILLE, RDO FRT SPKR (BEIGE) (09.650)
94–96	Y (64I)	10238590	RH	31.50	GRILLE, RDO FRT SPKR (BEIGE) (09.650)
94–96	Y (14I)	10238591	LH	31.50	GRILLE, RDO FRT SPKR (GRAY) (09.650)
94–96	Y (14I)	10238592	RH	31.50	GRILLE, RDO FRT SPKR (GRAY) (09.650)
94–96	Y (70I)	10238593	LH	31.50	GRILLE, RDO FRT SPKR (RED) (09.650)
94–96	Y (70I)	10238594	RH	DISCON	GRILLE, RDO FRT SPKR (RED) (09.650)
90–96	Y STEREO CASSETTE (UM6)	10098450	RH	5.55	PLATE, RDO FRT SPKR MT
90–96	Y STEREO CASSETTE (UM6)	10098451	LH	5.55	PLATE, RDO FRT SPKR MT
90–96	Y CASSETTE STEREO (UU8), CASSETTE/CD PLAYER (U1F)	10146468	2	5.55	PLATE, RDO SPKR NA (GOLD SERIES)
90–96	Y STEREO CASSETTE (UM6)	14057530	2	8.20	PLATE, RDO SPKR NA (09.665)

9.656 CONNECTOR – HARNESS – SEAL – TAPE – WIRE, Radio and Speaker

84–87	Y STEREO (UM6, UM7)	12016859	1	DISCON	HARNESS, FRT & RR SPKR
88–89	Y (EXC UQ4 BOSE)	12016859	1	DISCON	HARNESS, FRT & RR SPKR
96	Y	12163007	1	23.60	HARNESS, RDO FRT S/D SPKR WRG (AC–DELCO #12163007)
84	Y UQ4 (BOSE)	12016893	1	DISCON	HARNESS, RDO FRT SPKR WRG
85–86	Y UQ4 (BOSE)	12048805	1	DISCON	HARNESS, RDO FRT SPKR WRG
87	Y STEREO (UU8)	12048805	1	DISCON	HARNESS, RDO FRT SPKR WRG
88	Y UQ4 BOSE	12048805	1	DISCON	HARNESS, RDO FRT SPKR WRG
89	Y UQ4 (BOSE)	12080604	1	DISCON	HARNESS, RDO FRT SPKR WRG
90–92	Y (EXC 6 SPKR SYS (UX0)	12073817	1	DISCON	HARNESS, RDO FRT SPKR WRG
90	Y 6 SPKR SYS (UX0)	12090338	1	DISCON	HARNESS, RDO FRT SPKR WRG
91–92	Y 6 SPKR SYS (UX0)	12106518	1	DISCON	HARNESS, RDO FRT SPKR WRG
93–96	Y 6 SPKR SYS (UX0)	12141864	1	121.80	HARNESS, RDO FRT SPKR WRG
93–96	Y07 4 SPKR SYS (UY5)	12106566	1	113.68	HARNESS, RDO FRT SPKR WRG

© 2000 GENERAL MOTORS SERVICE PARTS OPERATIONS

9.656 CONNECTOR – HARNESS – SEAL – TAPE – WIRE, Radio and Speaker(Con't)

93–96	Y67 4 SPKR SYS (UY5)	12130343	1	82.22	HARNESS, RDO FRT SPKR WRG
94–95	Y 4–SPD A/TRANS (M30), A/C MAN CONT (C60), A/C AUTO ELEC CONT (C68)	12143758	1	47.15	HARNESS, RDO SPKR AMPF WRG (AC–DELCO #12143758)
84–85	Y C.B.	16021760	1	DISCON	HARNESS, W/RELAY, C.B.

9.743 BEZEL – CARRIER – CASE – PLATE – SCREW, Instrument Cluster

Note: FOR 1985–1991 USAGE REFER TO INSTRUMENT CLUSTER CHART GRP 9.735

90–91	Y FOR MOD APPL & POA SEE INST CSTR CHT	25084950	1	49.02	BEZEL, INST CSTR (AC–DELCO #25084950)
92	Y 5.7J (LT5), ELEK GA CSTR (U52), (EXC MODIFICATION–NOISE CONTROL (B4H) (EXPORT)	25084950	1	49.02	BEZEL, INST CSTR (AC–DELCO #25084950)
92–93	Y 5.7P (LT1), ELEK GA CSTR (U52)	25084950	1	49.02	BEZEL, INST CSTR (AC–DELCO #25084950)
93	Y 5.7J (LT5), ELEK GA CSTR (U52)	25084950	1	49.02	BEZEL, INST CSTR (AC–DELCO #25084950)
95–96	Y 5.7P (LT1), ELEK GA CSTR (U52), (EXC SPEEDO (U19) (EXPORT)	25084950	1	49.02	BEZEL, INST CSTR (AC–DELCO #25084950)
96	Y 5.7–5 (LT4), ELEK GA CSTR (U52)	25084950	1	49.02	BEZEL, INST CSTR (AC–DELCO #25084950)
90–92	Y	10086247	1	14.50	CARRIER, INST (UPR) (10.230)
93–96	Y SOFT RIDE SUSP (FE1), HVY DUTY SUSP (FE7)	10086247	1	14.50	CARRIER, INST (10.230)
84–85	Y	25083758	1	78.04	CASE, CSTR CNSL (**VPI 1–877–846–8243)
86–89	Y FOR MOD APPL & POA SEE INST CSTR CHT	25083758	1	78.04	CASE, CSTR (**VPI 1–877–846–8243)
90–91	Y	25088424	1	15.00	CASE, DRVR INFO DISPLAY (AC–DELCO #25088424)
84–85	Y	14017529	1	DISCON	PLATE, CSTR TR
86–89	Y	14078656	1	86.50	PLATE, CSTR TR
90–96	Y	10253257	1	36.00	PLATE, I/P CSTR TR

9.765 ALARM – BOARD – BOLT – BRACKET – CONNECTOR – HOUSING – LAMP – PLUG – TELLTALE – WASHER, Instrument Cluster Warning

Note: FOR 1985–1991 USAGE REFER TO INSTRUMENT CLUSTER CHART GRP 9.735

84	Y	14062571	1	42.33	ALARM, ST BELT & IGN KEY & LPS (02.195)
85–89	Y	10037040	1	54.57	ALARM, ST BELT & IGN KEY & LPS (02.195)
90–96	Y	25518745	1	55.34	ALARM, ST BELT & IGN KEY & LPS
90–92	Y	10098454	1	4.64	BRACKET, ST BELT & IGN KEY & LPS ALARM (02.195)
94–96	Y	12506368	1	3.11	LAMP, TRACT CONT ACTIVE IND (02.485)
84	Y	11508221	AR	22.58	LAMP, W/SOCKET, INSTR CSTR (HALOGEN) (#882) (08.991) (AC–DELCO #L882)
	*EXPORT***************EXPORT***************EXPORT***************EXPORT***************EXPORT*				
84–85	Y VE1 (EXPORT)	14073461	1	DISCON	ALARM, CTLCT CONV TEMP
93–96	Y EUROPEAN PROVISIONS (VD1) (EXPORT), VE1 (EXPORT)	10098454	1	4.64	BRACKET, ST BELT & IGN KEY & LPS ALARM (02.195)

© 2000 GENERAL MOTORS SERVICE PARTS OPERATIONS

10.230 BRACE – BRACKET – INSULATOR – NUT – PANEL – PLATE – REINFORCEMENT – RETAINER – SHIM – SUPPORT, Instrument Panel

84–89	Y	14046640	1	DISCON	BRACE, I/P LWR
84–89	Y	14047477	2	DISCON	BRACE, I/P LWR
89–92	Y	10085906	LH	DISCON	BRACE, I/P LWR
89–92	Y	10085906	RH	DISCON	BRACE, I/P LWR
84–89	Y	14060213	LH	DISCON	BRACE, I/P REINF
84–89	Y	14060214	RH	DISCON	BRACE, I/P REINF
84–85	Y	14046644	LH	DISCON	BRACE, I/P UPR
84–89	Y	14049198	RH	DISCON	BRACE, I/P UPR
86–89	Y	14078645	LH	DISCON	BRACE, I/P UPR
90–96	Y	10085903	LH	3.60	BRACE, I/P UPR
84–94	Y	14104971	1	2.70	BRACKET, I/P INSL
84–85	Y	14046650	1	DISCON	BRACKET, I/P REINF
86–89	Y	14078646	1	DISCON	BRACKET, I/P REINF
89–96	Y	10085902	1	3.60	BRACKET, I/P REINF
84–89	Y	14047445	LH	DISCON	BRACKET, I/P UPR
84–89	Y	14047446	RH	DISCON	BRACKET, I/P UPR
90–96	Y	10086013	LH	12.90	BRACKET, I/P UPR
90–93	Y	10137756	RH	DISCON	BRACKET, I/P UPR
94–96	Y	10251278	LH	3.60	BRACKET, I/P UPR T/PNL
84–89	Y	10125970	LH	32.50	INSULATOR, I/P (TRIM AS REQ)
84–89	Y	14051132	RH	67.20	INSULATOR, I/P
86–89	Y	10045697	1	DISCON	INSULATOR, I/P (WRG HARN FUSE)
90–96	Y	03999572	1	4.98	INSULATOR, I/P (09.260)
94–96	Y	10077470	1	3.21	INSULATOR, I/P (12.810)
90–93	Y	10006210	RH	29.60	PANEL, I/P LWR TR (PAINT TO MATCH)
90	Y 6–SPD M/TRANS (ML9), (73I)	10132978	LH	100.50	PANEL, I/P LWR TR (FLAME RED)
90	Y 6–SPD M/TRANS (ML9), (90I)	10132979	LH	100.50	PANEL, I/P LWR TR (MED GRAYSMOKE)
90	Y 4–SPD A/TRANS (MD8), (73I)	10132983	LH	100.50	PANEL, I/P LWR TR (FLAME RED)
90	Y 4–SPD A/TRANS (MD8), (90I)	10132984	LH	100.50	PANEL, I/P LWR TR (MED GRAY SMOKE)
90	Y 6–SPD M/TRANS (ML9), (19I)	10193746	1	133.30	PANEL, I/P LWR TR (BLACK)
90	Y 6–SPD M/TRANS (ML9), (22I)	10193747	1	133.30	PANEL, I/P LWR TR (BLUE)
90	Y 6–SPD M/TRANS (ML9), (60I)	10193748	1	133.30	PANEL, I/P LWR TR (COGNAC)
90	Y 3–SPD A/TRANS (MD9), (22I)	10193753	1	133.30	PANEL, I/P LWR TR (BLUE)
90	Y 3–SPD A/TRANS (MD9), 6–SPD M/TRANS (ML9), (60I)	12523669	1	DISCON	PANEL, I/P LWR TR (10.252)
90	Y 3–SPD A/TRANS (MD9), 6–SPD M/TRANS (ML9), (90I)	12523671	1	DISCON	PANEL, I/P LWR TR (GRAY) (10.252)
90–91	Y 4–SPD A/TRANS (MD8), (19I)	12523674	1	DISCON	PANEL, I/P LWR TR (CUT HOLES FOR LAP DUCTS AS REQ) (BLACK)
90–91	Y 6–SPD M/TRANS (ML9), (19I)	12523674	1	DISCON	PANEL, I/P LWR TR (BLACK)
91	Y 6–SPD M/TRANS (ML9), (73I)	10132978	LH	100.50	PANEL, I/P LWR TR (HAS HOLES FOR LAP DUCTS) (RED)
91	Y 6–SPD M/TRANS (ML9), (90I)	10132979	LH	100.50	PANEL, I/P LWR TR (HAS HOLES FOR LAP DUCTS) (GRAY)
91	Y 4–SPD A/TRANS (MD8), (73I)	10132983	LH	100.50	PANEL, I/P LWR TR (HAS HOLES FOR LAP DUCTS) (RED)
91	Y 4–SPD A/TRANS (MD8), (90I)	10132984	LH	100.50	PANEL, I/P LWR TR (HAS HOLES FOR LAP DUCTS) (GRAY)
91	Y 6–SPD M/TRANS (ML9), (19I)	10193746	1	133.30	PANEL, I/P LWR TR (CUT HOLES FOR LAP DUCTS AS REQ) (BLACK)
91	Y 6–SPD M/TRANS (ML9), (22I)	10193747	1	133.30	PANEL, I/P LWR TR (CUT HOLES FOR LAP DUCTS AS REQ) (BLUE)
91	Y 6–SPD M/TRANS (ML9), (60I)	10193748	1	133.30	PANEL, I/P LWR TR (CUT HOLES FOR LAP DUCTS AS REQ) (COGNAC)

© 2000 GENERAL MOTORS SERVICE PARTS OPERATIONS

10.230 BRACE – BRACKET – INSULATOR – NUT – PANEL – PLATE – REINFORCEMENT – RETAINER – SHIM – SUPPORT, Instrument Panel(Con't)

91	Y 4–SPD A/TRANS (MD8), (22I) ...	10193753	1	133.30	PANEL, I/P LWR TR (CUT HOLES FOR LAP DUCTS AS REQ) (BLUE) .....
91	Y 4–SPD A/TRANS (MD8), 6–SPD M/TRANS (ML9), (60I)	12523669	1	DISCON	PANEL, I/P LWR TR (CUT HOLES FOR LAP DUCTS AS REQ. D) (MED COGNAC) (10.252) .....
91	Y 4–SPD A/TRANS (MD8), 6–SPD M/TRANS (ML9), (73I)	12523670	1	DISCON	PANEL, I/P LWR TR (CUT HOLES FOR LAP DUCTS AS REQ) (RED) (10.252) .
91	Y 4–SPD A/TRANS (MD8), 6–SPD M/TRANS (ML9), (90I)	12523671	1	DISCON	PANEL, I/P LWR TR (CUT HOLES FOR LAP DUCTS AS REQ) (GRAY) (10.252) .....
92–93	Y 6–SPD M/TRANS (ML9), (10I), (19I)	10193746	LH	133.30	PANEL, I/P LWR TR (BLACK) .....
92	Y (73I)	12523670	LH	DISCON	PANEL, I/P LWR TR (RED) (10.252) ....
92–93	Y (64I)	12523672	LH	DISCON	PANEL, I/P LWR TR (BEIGE) .....
92–93	Y 4–SPD A/TRANS (MD8), (14I) ...	12523673	LH	DISCON	PANEL, I/P LWR TR (GRAY) .....
92–93	Y 4–SPD A/TRANS (MD8), (10I), (19I)	12523674	LH	DISCON	PANEL, I/P LWR TR (BLACK) .....
92–93	Y 6–SPD M/TRANS (ML9), (10I), (19I)	12523674	1	DISCON	PANEL, I/P LWR TR (BLACK) .....
93	Y 4–SPD A/TRANS (MD8), 6–SPD M/TRANS (ML9), (79I)	12523675	LH	DISCON	PANEL, I/P LWR TR (RED) .....
93	Y 4–SPD A/TRANS (MD8), 6–SPD M/TRANS (ML9), (70I)	12523676	LH	DISCON	PANEL, I/P LWR TR (RED) .....
94	Y (64I)	10256832	RH	126.80	PANEL, I/P LWR TR (BEIGE) (MAY NEED TO ENLARGE 7MM HOLE & 10X7.6MM SLOT AT RH RR OF PNL TO OBTAIN PROPER FIT) .....
94	Y (70I)	10256834	RH	126.80	PANEL, I/P LWR TR (RED) (MAY NEED TO ENLARGE 7MM HOLE & 10X7.6MM SLOT AT RH RR OF PNL TO OBTAIN PROPER FIT) .....
94	Y (14I)	10256836	RH	126.80	PANEL, I/P LWR TR (GRAY) (MAY NEED TO ENLARGE 7MM HOLE & 10X7.6MM SLOT AT RH RR OF PNL TO OBTAIN PROPER FIT) .....
94	Y (19I)	10256838	RH	126.80	PANEL, I/P LWR TR (BLACK) (MAY NEED TO ENLARGE 7MM HOLE & 10X7.6MM SLOT AT RH RR OF PNL TO OBTAIN PROPER FIT) .....
94–96	Y (14I)	10268023	LH	133.30	PANEL, I/P LWR TR (GRAY) .....
94–96	Y (19I)	10268024	LH	126.90	PANEL, I/P LWR TR (BLACK) .....
94–96	Y (64I)	10268025	LH	133.30	PANEL, I/P LWR TR (BEIGE) .....
94–96	Y (70I)	10268026	LH	133.30	PANEL, I/P LWR TR (RED) .....
95–96	Y (64I)	10256832	RH	126.80	PANEL, I/P LWR TR (BEIGE) .....
95–96	Y (70I)	10256834	RH	126.80	PANEL, I/P LWR TR (RED) .....
95–96	Y (14I)	10256836	RH	126.80	PANEL, I/P LWR TR (GRAY) .....
95–96	Y (19I)	10256838	RH	126.80	PANEL, I/P LWR TR (BLACK) .....
84–85	Y	14046643	1	DISCON	PANEL, INST .....
86–89	Y	10064350	1	DISCON	PANEL, INST .....
90–91	Y	10167108	1	175.50	PANEL, INST .....
92–93	Y	10167108	1	175.50	PANEL, INST .....
94–96	Y	10285922	1	166.90	PANEL, INST .....
84–92	Y 4–SPD A/TRANS (MD8), (1ST DES)	14046622	1	DISCON	PLATE, I/P LWR BRKT STUD (1ST DESIGN HAS TWO 20MM STUDS) ...
84–88	Y M/TRNS	14046742	1	DISCON	PLATE, I/P LWR BRKT STUD .....
89–92	Y 6–SPD M/TRANS (ML9)	14104930	1	DISCON	PLATE, I/P LWR BRKT STUD .....
92	Y 4–SPD A/TRANS (MD8), (2ND DES)	10215425	1	13.80	PLATE, I/P LWR BRKT STUD (2ND DESIGN HAS NO STUDS) .....

© 2000 GENERAL MOTORS SERVICE PARTS OPERATIONS

10.230 BRACE – BRACKET – INSULATOR – NUT – PANEL – PLATE – REINFORCEMENT – RETAINER – SHIM – SUPPORT, Instrument Panel(Con't)

93	Y 4-SPD A/TRANS (MD8)	10215425	1	13.80	PLATE, I/P LWR BRKT STUD
94-96	Y 4-SPD A/TRANS (M30)	10215425	1	13.80	PLATE, I/P LWR BRKT STUD
84-89	Y	14092605	1	DISCON	REINFORCEMENT, I/P CTR
90-96	Y	10086173	1	9.30	REINFORCEMENT, I/P CTR LWR SUPT
84-89	Y	14047475	RH	DISCON	SUPPORT, I/P CTR
89-96	Y	10086085	1	12.90	SUPPORT, I/P CTR LWR
89-93	Y	10175530	1	25.60	SUPPORT, I/P LWR T/PNL

10.235 ABSORBER – BOLSTER – BOLT – BRACE – BRACKET – CARPET – CLIP – INSULATOR – PAD – REINFORCEMENT – SEAL, Instrument Panel Pad

90-94	Y	10259399	1	7.70	BRACE, I/P DRVR KNEE BOLS INR BRKT
95-96	Y	10259399	1	7.70	BRACE, I/P DRVR KNEE BOLS INR BRKT
90-93	Y	10251817	1	8.70	BRACKET, I/P DRVR KNEE BOLS CTR
94-96	Y	10251817	1	8.70	BRACKET, I/P DRVR KNEE BOLS CTR
89-90	Y	10175531	LH	DISCON	BRACKET, I/P DRVR KNEE BOLS INR (10.230)
91-93	Y	10211797	1	DISCON	BRACKET, I/P DRVR KNEE BOLS INR
94-96	Y	10250909	1	19.30	BRACKET, I/P DRVR KNEE BOLS INR
90-92	Y	10085943	LH	27.90	BRACKET, I/P DRVR KNEE BOLS OTR (10.230)
93-96	Y	10085943	1	27.90	BRACKET, I/P DRVR KNEE BOLS OTR (10.230)
86-89	Y	14078662	2	DISCON	BRACKET, I/P LWR TR PAD (10.230)
89-90	Y	10175532	RH	DISCON	BRACKET, I/P PASS KNEE BOLS INR (10.230)
91-93	Y	10175591	1	DISCON	BRACKET, I/P PASS KNEE BOLS INR
94-96	Y	10250910	1	19.30	BRACKET, I/P PASS KNEE BOLS INR
90-92	Y	10085944	RH	DISCON	BRACKET, I/P PASS KNEE BOLS OTR
93	Y	10085944	1	DISCON	BRACKET, I/P PASS KNEE BOLS OTR
94-96	Y	10251492	1	27.90	BRACKET, I/P PASS KNEE BOLS OTR

10.485 ACTUATOR – ANTENNA – BRACKET – CONNECTOR – ESCUTCHEON – NUT – PLATE – RECEIVER – RETAINER – RIVET – SWITCH – TRANSMITTER, Door Electric and Vacuum Locks

84-93	Y	22049754	2	3.92	BRACKET, FRT S/D LK ACTR (AC-DELCO #22049754)
93	Y	10252241	1	6.63	BRACKET, R/CON DR LK RCVR
94-96	Y (EXC EUROPEAN PROVISIONS (VD1) (EXPORT), VE1 (EXPORT)	10252241	1	6.63	BRACKET, R/CON DR LK RCVR
93	Y	10261112	1	251.94	RECEIVER, R/CON DR LK
94-96	Y (EXC EUROPEAN PROVISIONS (VD1) (EXPORT), VE1 (EXPORT)	10261112	1	251.94	RECEIVER, R/CON DR LK
84-85	Y	20344292	RH	5.51	SWITCH, DR LK (MOD ON TR PAD) (AC-DELCO #D6075)
84-85	Y	20344293	LH	5.51	SWITCH, DR LK (MOD ON TR PAD) (AC-DELCO #D6076)
86-89	Y	10092804	2	5.20	SWITCH, DR LK
90	Y	10098462	2	4.59	SWITCH, DR LK (10.777)
91-96	Y	10161853	2	6.68	SWITCH, DR LK (10.500)
87-96	Y	10074163	RH	17.03	SWITCH, THEFT DTRNT DR LK (W/WIRE LEAD) (02.195)
87-96	Y	10074164	LH	17.03	SWITCH, THEFT DTRNT DR LK (W/WIRE LEAD)

© 2000 GENERAL MOTORS SERVICE PARTS OPERATIONS

10.485 ACTUATOR – ANTENNA – BRACKET – CONNECTOR – ESCUTCHEON – NUT – PLATE – RECEIVER – RETAINER – RIVET – SWITCH – TRANSMITTER, Door Electric and Vacuum Locks(Con't)

84–86	Y	14047191	LH	18.26	SWITCH, W/WIRE, SI DR ANTI–THEFT (B&S 592702)
84–86	Y	14047192	RH	18.26	SWITCH, W/WIRE, SI DR ANTI–THEFT (B&S 592703)

10.527 HANDLE, Door Outside Handle

88	Y 35 ANNIV (ZO1)	10123041	LH	DISCON	HANDLE, FRT DR O/S (WHITE)
88	Y 35 ANNIV (ZO1)	10123042	RH	DISCON	HANDLE, FRT DR O/S (WHITE)
84–96	Y	14075358	RH	39.27	HANDLE, FRT S/D O/S (LESS LOCK) (B&S 593094)
84–96	Y	14075359	LH	39.27	HANDLE, FRT S/D O/S (LESS LOCK) (B&S 593095)

10.550 CYLINDER KIT – GASKET, Door Outside Lock

84–90	Y	12522046	2	8.52	CYLINDER KIT, FRT S/D LK (UNCODED) (CONSISTS OF:UNIT SHUTTER, LK CYL, CASE, E–RING, RETAINER, 2 SPRINGS)
91–96	Y	12520461	2	10.51	CYLINDER KIT, FRT S/D LK (UNCODED)

11.927 CONNECTOR – LAMP – RETAINER – SOCKET, Courtesy/Dome/Reading Lamp

84–92	Y	10199743	1	10.35	LAMP, CTSY (USED W/9433040 BULB)
92–96	Y	10199743	2	10.35	LAMP, CTSY (USED W/9433040 BULB)
84–85	Y	00918255	LH	DISCON	LAMP, DM & RDG (IN DR) (14.691)
84–85	Y	00918256	RH	DISCON	LAMP, DM & RDG (IN DR) (14.691)
86–89	Y	05974773	LH	DISCON	LAMP, DM & RDG (IN DR) (14.691)
86–89	Y	05974774	RH	DISCON	LAMP, DM & RDG (IN DR) (14.691)
90–96	Y	10213747	LH	30.10	LAMP, DM & RDG
90–96	Y	10213748	RH	44.60	LAMP, DM & RDG

11.950 CONNECTOR – RETAINER – SEAL – SWITCH, Courtesy Lamp and Door Ajar

84–96	Y	14087682	2	.63	RETAINER, DR AJAR IND SW
84–89	Y	20057139	2	[illegible].09	SEAL, DR JAMB SW
84	Y	14062556	2	8.72	SWITCH, DR AJAR IND
85–87	Y	10045802	2	14.44	SWITCH, DR AJAR IND (AC–DELCO #D6036)
88–96	Y	10098478	2	7.34	SWITCH, DR AJAR IND (AC–DELCO #D6055)
84–89	Y	10045860	2	12.20	SWITCH, DR JAMB (AC–DELCO #D6039)

12.243 CONNECTOR – RELAY – RETAINER – SOLENOID – SWITCH, Rear Hatch Window

84–90	Y	25523703	1	12.20	RELAY, R/CMPT LID REL (02.815) (AC–DELCO #D1776)
90–96	Y07	14100455	1	16.26	RELAY, R/CMPT LID REL (BLACK) (5–WAY) (09.277) (AC–DELCO #15–8426)
84–85	Y	14062518	2	15.45	SWITCH, LID LOCK REL
86–87	Y	14093168	2	11.59	SWITCH, R/CMPT LID REL (AC–DELCO #14093168)
88–89	Y	14104196	2	27.80	SWITCH, R/CMPT LID REL
90–96	Y	01620478	1	2.24	SWITCH, R/CMPT LID REL (CTR CONSOLE) (AC–DELCO #D7048)

© 2000 GENERAL MOTORS SERVICE PARTS OPERATIONS

12.243 CONNECTOR – RELAY – RETAINER – SOLENOID – SWITCH, Rear Hatch Window(Con't)

90–92	Y	10090458	1	26.27	SWITCH, R/CMPT LID REL (DR JAMB)
93	Y07	10090458	1	26.27	SWITCH, R/CMPT LID REL
94–96	Y07	10210771	1	30.36	SWITCH, R/CMPT LID REL (AC–DELCO #D7015A)
94–96	Y07	10283365	1	6.32	SWITCH, R/COMPT L/WDO AJAR IND (PLUNGER DIA 12MM) (AC–DELCO #D6065)

12.801 RETAINER, Cowl Ledge

84	Y	00480534	AR	*.84	RETAINER, PNL HOLE (DIA. 250, THK. .03–.30) (11.419)

13.090 BRACKET – CLIP – HARNESS – MODULE – RETAINER – STRAP – TAPE – WIRE, Body Wiring

86–89	Y67	14100354	1	DISCON	BRACKET, BODY WRG HARN
84–90	Y	14066514	2	DISCON	BRACKET, DR ELEC WRG LWR RR
84–96	Y	14073415	2	.70	BRACKET, P/W DR WRG HARN
89	Y07 STEREO (UU8)	12085454	1	DISCON	HARNESS, BODY FRT WRG
89	Y67 STEREO (UM6)	12080872	1	DISCON	HARNESS, BODY FRT WRG
89	Y67 STEREO (UU8)	12080873	1	DISCON	HARNESS, BODY FRT WRG
90	Y STEREO (UU8)	12101407	1	DISCON	HARNESS, BODY FRT WRG
90	Y STEREO (UM6)	12101408	1	DISCON	HARNESS, BODY FRT WRG
90	Y67 STEREO (UM6)	12073787	1	DISCON	HARNESS, BODY FRT WRG
90	Y67 STEREO (UU8, U1F)	12073783	1	DISCON	HARNESS, BODY FRT WRG
91	Y07 STEREO CASSETTE (UM6)	12112419	1	DISCON	HARNESS, BODY FRT WRG
91	Y07 CASSETTE STEREO (UU8), CASSETTE/CD PLAYER (U1F)	12112460	1	DISCON	HARNESS, BODY FRT WRG
91	Y67 STEREO CASSETTE (UM6)	12090311	1	DISCON	HARNESS, BODY FRT WRG
91	Y67 CASSETTE STEREO (UU8), CASSETTE/CD PLAYER (U1F)	12090312	1	DISCON	HARNESS, BODY FRT WRG
92	Y07 CASSETTE STEREO (UU8), CASSETTE/CD PLAYER (U1F)	12125811	1	DISCON	HARNESS, BODY FRT WRG
92	Y07 STEREO CASSETTE (UM6)	12125812	1	DISCON	HARNESS, BODY FRT WRG
92	Y67 STEREO CASSETTE (UM6)	12106537	1	DISCON	HARNESS, BODY FRT WRG
92	Y67 CASSETTE STEREO (UU8), CASSETTE/CD PLAYER (U1F)	12106538	1	DISCON	HARNESS, BODY FRT WRG
93	Y07	12141786	1	780.00	HARNESS, BODY FRT WRG
93	Y67	12130341	1	244.62	HARNESS, BODY FRT WRG
94	Y07 SIG & MKR LP (T90) (EXPORT)	12141786	1	780.00	HARNESS, BODY FRT WRG
94	Y07 (EXC SIG & MKR LP (T90) (EXPORT)	12141796	1	244.62	HARNESS, BODY FRT WRG
94	Y67 (EXC SIG & MKR LP (T90) (EXPORT)	12130355	1	361.50	HARNESS, BODY FRT WRG
95	Y07 (EXC SIG & MKR LP (T90) (EXPORT), SPECIAL PERFORMANCE PKG (ZR1)	12130403	1	244.62	HARNESS, BODY FRT WRG
95	Y07 SPECIAL PERFORMANCE PKG (ZR1)	12141796	1	244.62	HARNESS, BODY FRT WRG
95	Y67 (EXC SIG & MKR LP (T90) (EXPORT)	12130478	1	244.62	HARNESS, BODY FRT WRG
96	Y07 (EXC SIG & MKR LP (T90) (EXPORT)	12130458	1	361.50	HARNESS, BODY FRT WRG
96	Y67 (EXC SIG & MKR LP (T90) (EXPORT)	12130433	1	244.62	HARNESS, BODY FRT WRG
86–88	Y67 (EXC EXPORT T89, T90)	12073839	1	DISCON	HARNESS, BODY RR WRG (WHEN SERVICING 1986–87 VEH, MUST ALSO USE (4) CONN 8918527)

© 2000 GENERAL MOTORS SERVICE PARTS OPERATIONS

13.090 BRACKET – CLIP – HARNESS – MODULE – RETAINER – STRAP – TAPE – WIRE, Body Wiring(Con't)

87–88	Y07 (EXC TAIL & S/LP (T89) (EXPORT), SIG & MKR LP (T90) (EXPORT)	12067493	1	DISCON	HARNESS, BODY RR WRG (WHEN USED ON 1987 MODELS MUST USE 4 OF 8918527 SOCKETS)
87	Y67 STEREO (UM6, UM7) (EXC T89, T90 EXPORT)	12080872	1	DISCON	HARNESS, BODY RR WRG (MAY NEED TO USE CONN 12126015 & 12085482)
88	Y67 (EXC RDO, EXPORT T89, T90)	12080872	1	DISCON	HARNESS, BODY RR WRG (MAY NEED TO USE CONN 12126015 & 12085482)
88	Y67 STEREO (UM6) (EXC EXPORT T89, T90)	12080872	1	DISCON	HARNESS, BODY RR WRG (MAY NEED TO USE CONN 12126015 & 12085482)
89–90	Y07	12067493	1	DISCON	HARNESS, BODY RR WRG
89–92	Y67	12073830	1	DISCON	HARNESS, BODY RR WRG
91–92	Y07 SPECIAL PERFORMANCE PKG (ZR1)	12067493	1	DISCON	HARNESS, BODY RR WRG
91–92	Y07 (EXC SPECIAL PERFORMANCE PKG (ZR1)	12090341	1	DISCON	HARNESS, BODY RR WRG
93	Y (EXC SIG & MKR LP (T90) (EXPORT)	12130377	1	527.80	HARNESS, BODY RR WRG
94–95	Y07 (EXC SIG & MKR LP (T90) (EXPORT), SPECIAL PERFORMANCE PKG (ZR1)	12130357	1	244.62	HARNESS, BODY RR WRG
94–95	Y07 SPECIAL PERFORMANCE PKG (ZR1), (EXC SIG & MKR LP (T90) (EXPORT)	12130377	1	527.80	HARNESS, BODY RR WRG
94–96	Y67 (EXC SIG & MKR LP (T90) (EXPORT)	12130356	1	527.80	HARNESS, BODY RR WRG
96	Y07 (EXC SIG & MKR LP (T90) (EXPORT)	12130357	1	244.62	HARNESS, BODY RR WRG
84	Y STEREO (UU8)	12036116	1	DISCON	HARNESS, BODY WRG
84	Y STEREO (UM6, UM7), RDO UL5 (EXC EXPORT)	12036117	1	DISCON	HARNESS, BODY WRG
85	Y STEREO (UU8)	12049881	1	DISCON	HARNESS, BODY WRG
86	Y STEREO (UM6, UM7 (EXC EXPORT)	12048813	1	DISCON	HARNESS, BODY WRG
86	Y07 STEREO (UU8)	12048812	1	DISCON	HARNESS, BODY WRG
86	Y67 (EXC STEREO UU8)	12055600	1	DISCON	HARNESS, BODY WRG
86	Y67 STEREO (UU8)	12055601	1	DISCON	HARNESS, BODY WRG
87–88	Y07 STEREO (UU8)	12073831	1	DISCON	HARNESS, BODY WRG
87	Y07 STEREO (UM6, UM7) (EXC EXPORT T89, T90)	12085453	1	DISCON	HARNESS, BODY WRG
87–88	Y67 STEREO (UU8)	12073830	1	DISCON	HARNESS, BODY WRG
88	Y STEREO (UM6) (EXC EXPORT T89, T90)	12085453	1	DISCON	HARNESS, BODY WRG
89	Y07 STEREO (UM6)	12085453	1	DISCON	HARNESS, BODY WRG
84–90	Y AQ9	14079490	2	DISCON	HARNESS, CUSH WRG
91	Y RECL FRT BKT ST (AQ9)	12506477	1	DISCON	HARNESS, D/SEAT ADJR WRG
91	Y RECL FRT BKT ST (AQ9)	14079481	2	DISCON	HARNESS, D/SEAT ADJR WRG
92–93	Y RECL FRT BKT ST (AQ9)	12520129	1	52.27	HARNESS, D/SEAT ADJR WRG
86	Y	12055829	LH	DISCON	HARNESS, ELEC DR WRG
86	Y	12055831	RH	DISCON	HARNESS, ELEC DR WRG
94–96	Y RECL FRT BKT ST (AQ9)	12141781	1	477.00	HARNESS, P/SEAT ADJR & LUMBAR CONT WRG (INCLUDES RELAY CTR)
84–91	Y RECL FRT BKT ST (AQ9)	14079481	2	DISCON	HARNESS, P/SEAT ADJR & RECL WRG
91	Y RECL FRT BKT ST (AQ9)	12506477	1	DISCON	HARNESS, P/SEAT ADJR WRG
92–93	Y RECL FRT BKT ST (AQ9)	12520129	1	52.27	HARNESS, P/SEAT ADJR WRG
84–85	Y (EXC ELEC DR LK AU3)	12016810	RH	DISCON	HARNESS, PWR WDO DR WRG

© 2000 GENERAL MOTORS SERVICE PARTS OPERATIONS

13.090 BRACKET – CLIP – HARNESS – MODULE – RETAINER – STRAP – TAPE – WIRE, Body Wiring(Con't)

84–85	Y (EXC ELEC DR LK AU3)	12016011	LH	DISCON	HARNESS, PWR WDO DR WRG .....
84–85	Y ELEC DR LK (AU3)	12020821	LH	DISCON	HARNESS, PWR WDO DR WRG .....
84–85	Y ELEC DR LK (AU3)	12020822	RH	DISCON	HARNESS, PWR WDO DR WRG .....
86–87	Y	12060840	LH	DISCON	HARNESS, PWR WDO DR WRG .....
86–87	Y	12060841	RH	DISCON	HARNESS, PWR WDO DR WRG .....
93	Y67	12106561	1	34.26	HARNESS, R/CON DR LK RCVR ANT WRG .....
94–96	Y67 (EXC EUROPEAN PROVISIONS (VD1) (EXPORT), VE1 (EXPORT) ..	12106561	1	34.26	HARNESS, R/CON DR LK RCVR ANT WRG .....
88–96	Y	12073639	1	25.27	HARNESS, WSW & WSWA WRG .....
84–87	Y	12016892	1	DISCON	HARNESS, WSW MTR AND WSWA PUMP WRG .....
84–91	Y	12088520	1	22.29	MODULE, BODY WRG [illegible] 10) (IF USE IN PLC OF [illegible] 4–WAY CONN, MUS[illegible] [illegible]R 1–12116930 SINGLE [illegible] [illegible]AY CONN) .....
91–92	Y07 STEREO CASSETTE (UM6), CASSETTE STEREO (UU8), CASSETTE/CD PLAYER (U1F)	12088520	1	22.29	MODULE, BODY WRG HARN (3 DIODE ARRAY) (02.510) .....
93	Y07	12088520	1	22.29	MODULE, BODY WRG HARN (3 DIODE ARRAY) (02.510) .....
94	Y	12088520	1	22.29	MODULE, BODY WRG HARN (3 DIODE ARRAY) (02.510) .....
84–96	Y	14073416	1	1.94	RETAINER, BODY WRG HARN .....
93–96	Y67	11515174	1	*1.50	RETAINER, BODY WRG HARN (4 1/4"X7 1/2") (TRIM AS REQ'D) (15.492) .....
89–96	Y	12020833	1	*.73	RETAINER, BODY WRG HARN CONN (GRAY) (1" LONG) (PUSH–IN) (02.559) .....
94	Y	20664092	2	*.40	RETAINER, F/TOP WRG HARN STRP (BLACK) (PUSH–IN) (01.276) .....
95–96	Y RECL FRT BKT ST (AQ9)	20664092	1	*.40	RETAINER, F/TOP WRG HARN STRP (BLACK) (PUSH–IN) (01.276) .....
94–95	Y RECL FRT BKT ST (AQ9)	11515174	1	*1.50	RETAINER, P/SEAT LUMBAR CONT WRG HARN (4 1/4"X7 1/2") (TRIM AS REQ'D) (15.492) .....
88–89	Y07	03816659	1	*.87	STRAP, BODY FRT WRG HARN (08.965) .....
94–96	Y RECL FRT BKT ST (AQ9), IL3	10250231	1	6.32	STRAP, ST INFLR FEED WRG HARN (DRVR SEAT) .....
91–92	Y	12090348	1	DISCON	WIRE, CONV TOP .....
93	Y67	12106597	LH	DISCON	WIRE, CONV TOP .....
94–96	Y67	12130363	LH	59.12	WIRE, CONV TOP .....
91	Y	12106563	1	DISCON	WIRE, PWR ST DIODE JPR .....
90–92	Y67	12080875	1	DISCON	WIRE, R/CMPT LID LID REL .....
89	Y67	12080874	1	DISCON	WIRE, R/COMPT LID LK REL .....
	*EXPORT***************EXPORT***************EXPORT***************EXPORT***************EXPORT*				
94	Y67 SIG & MKR LP (T90) (EXPORT)	12130341	1	244.62	HARNESS, BODY FRT WRG .....
95	Y07 SIG & MKR LP (T90) (EXPORT)	12130402	1	244.62	HARNESS, BODY FRT WRG .....
95	Y67 SIG & MKR LP (T90) (EXPORT)	12130477	1	244.62	HARNESS, BODY FRT WRG .....
96	Y07 SIG & MKR LP (T90) (EXPORT)	12130457	1	244.62	HARNESS, BODY FRT WRG .....
96	Y67 SIG & MKR LP (T90) (EXPORT)	12130455	1	244.62	HARNESS, BODY FRT WRG .....
87–88	Y07 T89, T90 (EXPORT)	12055823	1	137.03	HARNESS, BODY RR WRG .....
93	Y07 SIG & MKR LP (T90) (EXPORT)	12130379	1	DISCON	HARNESS, BODY RR WRG .....
93	Y67 SIG & MKR LP (T90) (EXPORT)	12130380	1	526.79	HARNESS, BODY RR WRG .....
94–96	Y07 SIG & MKR LP (T90) (EXPORT)	12130335	1	526.79	HARNESS, BODY RR WRG .....

© 2000 GENERAL MOTORS SERVICE PARTS OPERATIONS

13.090 BRACKET – CLIP – HARNESS – MODULE – RETAINER – STRAP – TAPE – WIRE, Body Wiring(Con't)

94–96	Y67 SIG & MKR LP (T00) (EXPORT)	12130336	1	527.80	HARNESS, BODY RR WRG .....
84–85	Y VB4, VD1, VE1, VT7 (EXPORT) ...	12043419	1	DISCON	HARNESS, BODY WRG .....
86	Y EXPORT (VB4, VD1, VE1, VT7) ...	12040814	1	DISCON	HARNESS, BODY WRG .....
87–88	Y07 T80, T90 (EXPORT)	12060376	1	DISCON	HARNESS, BODY WRG .....
94–96	Y RH RULE OF ROAD HDLP (T84) (EXPORT), LH RULE OF ROAD HDLP (T85) (EXPORT), SIG & MKR LP (T00) (EXPORT)	11515174	2	*1.50	RETAINER, BODY RR WRG HARN (4 1/4"X7 1/2") (TRIM AS REQ'D) (16.402) .....

13.095 BREAKER – CONNECTOR – RELAY, Body Wiring

85–90	Y ELEC R/CON HTD MIR (DL8)	14103366	1	4.04	BREAKER, R/WDO DEFG CIRC (12.5V) (30 AMP) (AC–DELCO #14103366) ..
91–92	Y ELEC R/CON HTD MIR (DL8)	14103366	1	4.04	BREAKER, R/WDO DEFG CIRC (12.5V) (30 AMP) (AC–DELCO #14103366) ..
94	Y RECL FRT BKT ST (AQ9)	12065125	1	16.73	RELAY, BODY WRG HARN (AC–DELCO #D1703A) .....
90–94	Y	14100455	1	16.26	RELAY, C/LP (BLACK) (5–WAY) (09.277) (AC–DELCO #15–8426) ...
94–95	Y	12065125	1	16.73	RELAY, C/LP (AC–DELCO #D1703A) ..
95	Y 5.7P (LT1), 6–SPD M/TRANS (ML9), A/C MAN CONT (C60), A/C AUTO ELEC CONT (C68)	12135084	1	9.55	RELAY, C/LP (02.815) (AC–DELCO #D1719A) .....
96	Y	12135084	1	9.55	RELAY, C/LP (02.815) (AC–DELCO #D1719A) .....
84–85	Y ELEC S/D LK (AU3)	22544850	1	18.97	RELAY, DR LK (AC–DELCO #D1707A) .
86–90	Y	22570060	1	16.26	RELAY, F/TOP RR LAT REL ACTR (POWER) (1 BOLT HOLE) (04.720) (AC–DELCO #15–8736) .....
86–96	Y67	12167112	1	51.50	RELAY, F/TOP RR LAT REL ACTR (POWER) (RELAY & CONN W/LEADS) (09.277) (AC–DELCO #15–8264) .....
86–96	Y67	22570060	1	16.26	RELAY, F/TOP RR LAT REL ACTR (POWER) (MATES W/CONNECTOR 12101862) (04.720) (AC–DELCO #15–8736) .....
87	Y	12167112	1	51.50	RELAY, F/TOP RR LAT REL ACTR (POWER) (1 BOLT HOLE) (W/CONN & LEADS) (09.277) (AC–DELCO #15–8264) .....

14.483 SWITCH, Folding Top

89–96	Y67	01626530	1	2.81	SWITCH, F/TOP STOW COMPT LID REL (BUTTON IN GLOVE BOX) (12.243) .....

14.865 BOLT – BRACKET – CLIP – COIL – COIL KIT – CONNECTOR – HARNESS – INSULATOR – MODULE – NUT – RESISTOR – RETAINER – SENSOR – SWITCH KIT – WASHER, Inflatable Restraint System

91	Y	11507066	AR	1.00	BOLT, F/END INFL RST DISCRM SEN (8 X 1.25 X 16) (08.900) (TORQ S25.0+/–3.0 NM) . .....
92	Y	11507066	2	1.00	BOLT, F/END INFL RST DISCRM SEN (8 X 1.25 X 16) (08.900) .....
91–94	Y	10714276	2	.30	BOLT, F/END INFL RST DISCRM SEN BRKT (4.2X1.41X16MM HEX WSR HD 12.50 DIA TAPPING) (08.977) .....
94–96	Y	11508948	2	.46	BOLT, I/P INFL RST MDL TR CVR HGE (08.900) .....

© 2000 GENERAL MOTORS SERVICE PARTS OPERATIONS

14.865 BOLT – BRACKET – CLIP – COIL – COIL KIT – CONNECTOR – HARNESS – INSULATOR – MODULE – NUT – RESISTOR – RETAINER – SENSOR – SWITCH KIT – WASHER, Inflatable Restraint System(Con't)

01	Y	11507066	AR	1.00	BOLT, INFL RST ARMING SEN (8 X 1.25 X 16) (08.900) (TORQ S25.0+/–3.0 NM)
00–05	Y	11514623	2	*.96	BOLT, INFL RST CONT MDL BRKT LWR (M6X1X20) (HEX W/CON WA) (08.900)
00–05	Y	11514623	2	*.96	BOLT, INFL RST CONT MDL BRKT UPR (M6X1X20) (HEX W/CON WA) (08.900)
00–03	Y	12337892	4	*1.13	BOLT, INFL RST DIAGN ENGY RESV MDL (M5X.8X16 THD) (SPECIAL) (03.671) (AC–DELCO #12337892)
00–01	Y	12506006	2	DISCON	BOLT, STRG WHL INFL RST MDL
06	Y	10192677	4	1.30	BOLT, STRG WHL INFL RST MDL (M6X1.0X13.0) (METRIC TORX HD) (08.913)
91–93	Y	14062552	1	1.12	BRACKET, F/END INFL RST DISCRM SEN (02.559)
94–96	Y F/SEAT INFL RST SYS (AK5)	10161063	1	10.00	BRACKET, F/END INFL RST DISCRM SEN
94–96	Y F/SEAT INFL RST SYS (AK5)	14062552	1	1.12	BRACKET, F/END INFL RST DISCRM SEN (02.559)
90	Y	10086036	1	DISCON	BRACKET, INFL RST CONT MDL (2 WELDED NUTS & 6 STUDS)
90–03	Y	10086086	LH	1.50	BRACKET, INFL RST CONT MDL (4 HOLES, L–SHAPED, POSN #1)
90–93	Y	10086177	RH	1.50	BRACKET, INFL RST CONT MDL (4 HOLES, L–SHAPED POSN #1)
91–93	Y	10193723	1	DISCON	BRACKET, INFL RST CONT MDL (2 WELDED NUTS, 4 WELDED STUDS)
93	Y	10211797	1	DISCON	BRACKET, INFL RST CONT MDL (10.235)
94–96	Y F/SEAT INFL RST SYS (AK5)	10086086	LH	1.50	BRACKET, INFL RST CONT MDL
94–96	Y F/SEAT INFL RST SYS (AK5)	[illegible]6177	RH	1.50	BRACKET, INFL RST CONT MDL
91–93	Y 4–SPD A/TRANS (MD8), 6–SPD M/TRANS (ML9)	26013[illegible]54	1	177.00	COIL KIT, STRG WHL INFL RST MDL
94–96	Y 4–SPD A/TRANS (M30)	26041005	1	144.00	COIL KIT, STRG WHL INFL RST MDL
89	Y 6–SPD M/TRANS (ML9), ACTIVE SUSP (Z5Z)	26013920	1	214.00	COIL, STRG WHL INFL RST MDL
90	Y	26013920	1	214.[illegible]	COIL, STRG WHL INFL RST MDL
91–92	Y	12106550	1	DISCON	HARNESS, INFL RST WRG (ELEMENT)
96	Y	12163006	1	102.00	HARNESS, INFL RST WRG
94–96	Y RECL FRT BKT ST (AQ9), IL3	10250232	1	25.22	HARNESS, INFLR AIR WRG (PASS SEAT)
94	Y 4–SPD A/TRANS (M30), A/C MAN CONT (C60), A/C AUTO ELEC CONT (C68)	12143[illegible]7	1	141.00	HARNESS, INFLR AIR WRG
95	Y 5.7P (LT1), 4–SPD A/TRANS (M30), 6–SPD M/TRANS (ML9), A/C MAN CONT (C60), A/C AUTO ELEC CONT (C68)	12143757	1	141.00	HARNESS, INFLR AIR WRG
95–96	Y	140645.8	1	1.45	INSULATOR, INFL RST CONT MDL (09.665)
91–96	Y	03999572	3	4.98	INSULATOR, INFL RST DIAGN ENGY RESV MDL (09.260)
94–96	Y F/SEAT INFL RST SYS (AK5)	10252293	1	625.00	MODULE, I/P INFL RST

© 2000 GENERAL MOTORS SERVICE PARTS OPERATIONS

14.865 BOLT – BRACKET – CLIP – COIL – COIL KIT – CONNECTOR – HARNESS – INSULATOR – MODULE – NUT – RESISTOR – RETAINER – SENSOR – SWITCH KIT – WASHER, Inflatable Restraint System(Con't)

91	Y	01228874	1	418.35	MODULE, INFL RST DIAGN ENGY RESV (REMAN) (DERM) (AC–DELCO #1228874)
92	Y (1ST DES)	01228874	1	418.35	MODULE, INFL RST DIAGN ENGY RESV (REMAN) (DERM) (USE ON PROD UNITS W/16081221 ON LABEL) (AC–DELCO #1228874)
92	Y (2ND DES)	16177277	1	293.13	MODULE, INFL RST DIAGN ENGY RESV (REMAN) (USE ON PROD UNITS W/16176561 ON LABEL) (AC–DELCO #16177277)
93	Y	16177277	1	293.13	MODULE, INFL RST DIAGN ENGY RESV (REMAN) (AC–DELCO #16177277)
94–96	Y F/SEAT INFL RST SYS (AK5)	16176558	1	322.00	MODULE, INFL RST DIAGN ENGY RESV (REMAN)
90	Y	10094618	1	625.00	MODULE, INFL RST RESV ENGY
90	Y	10158008	1	625.00	MODULE, STRG WHL INFL RST (IF REPLC 1990, COIL 26013854 MUST REPLC EXISTING COIL & MUST ALSO REPLC WHEEL USING 10201320) (PROBE CONN IN OWN BOX)
91–93	Y	10158008	1	625.00	MODULE, STRG WHL INFL RST (PROBE CONN IN OWN BOX)
94–96	Y F/SEAT INFL RST SYS (AK5)	16752392	1	625.00	MODULE, STRG WHL INFL RST
90	Y	10094613	2	72.25	SENSOR, F/END INFL RST DISCRM
91–93	Y	10177901	1	72.25	SENSOR, F/END INFL RST DISCRM
94–96	Y F/SEAT INFL RST SYS (AK5)	10177901	1	72.25	SENSOR, F/END INFL RST DISCRM
91–93	Y	10177902	1	72.25	SENSOR, INFL RST ARMING
94–96	Y F/SEAT INFL RST SYS (AK5)	10143543	1	72.25	SENSOR, INFL RST ARMING
91–96	Y	26011609	1	7.15	WASHER, STRG WHL INFL RST MDL COIL
	*EXPORT***************EXPORT***************EXPORT***************EXPORT***************EXPORT*				
94–96	Y 6–SPD M/TRANS (ML9), EUROPEAN PROVISIONS (VD1) (EXPORT), VE1 (EXPORT)	26041005	1	144.00	COIL KIT, STRG WHL INFL RST MDL

© 2000 GENERAL MOTORS SERVICE PARTS OPERATIONS

MICROFICHE INDEX

GROUP 3.000

FICHE 4 OF 11

GROUP	DESCRIPTION	STARTING GRID LOCATION PARTS	ILLUSTRATIONS
–	GENERAL INFORMATION	1–A2	1–G2
–	ALPHABETICAL INDEX	1–B13	N.A.
3.000	FUEL TANK – INTAKE MANIFOLD – FUEL INJECTION – THROTTLE BODY – AIR CLEANER – ACCELERATOR	4–A2	4–E2
3.000	EXHAUST & EMISSIONS SYSTEMS – CARBURETOR – CRUISE – FUEL FILTER & PUMP	4–C2	4–H2
–	OUT OF FICHE CALLS	N.A.	4–M9

4–A1

CHEVROLET
CHASSIS GROUP 3.000

FUEL – EXHAUST – CARBURETION

ALPHABETICAL INDEX

A

ACTUATOR, Air Cleaner Controls 3.415 4–B11
ACTUATOR, Multi Port Fuel Injection Idle Air 3.338 4–B7
ADJUSTER, Accelerator Pedal Lever ... 3.454 4–B13
ATTACHMENT KIT, Multi Port Fuel Injection Throttle Body 3.336 4–B6

B

BEARING, Multi Port Fuel Injection Idle Air 3.338 4–B7
BODY KIT, Fuel Injection Air Meter 3.335 4–A28
BODY, Fuel Injection Air Meter 3.335 4–A28
BOLT KIT, Multi Port Fuel Injection Fuel Rail 3.331 4–A26
BOLT, Air Cleaner Controls 3.415 4–B11
BOLT, Air Cleaner Intake 3.410 4–B10
BOLT, Engine Fuel Intake Manifold 3.265 4–A18
BOLT, Engine Vacuum Pump 3.280 4–A21
BOLT, Fuel Injection Air Meter 3.335 4–A28
BOLT, Fuel Injection 3.330 4–A24
BOLT, Fuel Injector 3.305 4–A23
BOLT, Fuel Line 3.162 4–A15
BOLT, Fuel or Air Meter 3.314 4–A24
BOLT, Fuel Tank Meter 3.107 4–A8
BOLT, Fuel Tank Mounting Strap 3.023 4–A8
BOLT, Intake & Exhaust Manifold 3.275 4–A20
BOLT, Multi Port Fuel Injection Idle Air .. 3.338 4–B7
BOLT, Multi Port Fuel Injection Throttle Body 3.336 4–B6
BOLT, Throttle Control Lever 3.463 4–B14
BRACE, Accelerator Pedal Lever 3.454 4–B13
BRACKET, Accelerator Pedal Lever 3.454 4–B13
BRACKET, Air Cleaner Controls 3.415 4–B11
BRACKET, Early Fuel Evaporation Control 3.140 4–A13
BRACKET, Early Fuel Evaporation 3.145 4–A14
BRACKET, Engine Vacuum Pump 3.280 4–A21
BRACKET, Fuel Injection 3.300 4–A22
BRACKET, Fuel Tank Evaporator Control (Engine End) 3.130 4–A12
BRACKET, Multi Port Fuel Injection Idle Air 3.338 4–B7
BRACKET, Multi Port Fuel Injection Throttle Position 3.339 4–B8
BREATHER, Air Cleaner Intake 3.410 4–B10
BUSHING, Multi Port Fuel Injection Idle Air 3.338 4–B7

C

CABLE, Accelerator Control 3.430 4–B12
CABLE, Fuel Tank 3.022 4–A8
CANISTER, Fuel Tank Evaporator Control (Engine End) 3.130 4–A12
CAP, Fuel Tank Filler 3.028 4–A8
CAP, Intake Manifold Vacuum 3.278 4–A21
CLAMP, Air Cleaner Air Intake 3.417 4–B11
CLAMP, Early Fuel Evaporation 3.145 4–A14
CLAMP, Fuel Line 3.162 4–A15
CLAMP, Throttle Body Coolant Supply .. 3.337 4–B7
CLEANER, Air Intake 3.402 4–B10
CLIP, Accelerator Control 3.425 4–B12
CLIP, Early Fuel Evaporation 3.145 4–A14
CLIP, Engine Vacuum Pump 3.280 4–A21
CLIP, Fuel Line 3.162 4–A15
CONNECTION KIT, Fuel Injection 3.330 4–A24
CONNECTOR, Accelerator Pedal Lever 3.454 4–B13
CONNECTOR, Air Cleaner and Silencer 3.407 4–B10
CONNECTOR, Early Fuel Evaporation Control 3.140 4–A13
CONNECTOR, Early Fuel Evaporation . 3.145 4–A14
CONNECTOR, Engine Vacuum Pump .. 3.280 4–A21
CONNECTOR, Fuel Injection 3.300 4–A22
CONNECTOR, Fuel Line 3.163 4–A15
CONNECTOR, Fuel Tank Filler 3.003 4–A8
CONNECTOR, Fuel Tank Meter 3.107 4–A8
CONNECTOR, Multi Port Fuel Injection Idle Air 3.338 4–B7
CONNECTOR, Multi Port Fuel Injection Throttle Position 3.339 4–B8
CONNECTOR, Turbocharger/Supercharger Coolant 3.373 4–B9
COVER KIT, Throttle Body Coolant Supply 3.337 4–B7
COVER, Accelerator Pedal Lever 3.454 4–B13
COVER, Air Cleaner Intake 3.410 4–B10

COVER, Early Fuel Evaporation Control 3.140 4–A13
COVER, Fuel Injection 3.330 4–A24
COVER, Multi Port Fuel Injection Idle Air 3.338 4–B7

D

DAMPENER, Fuel Tank Meter 3.107 4–A8
DUCT, Air Cleaner Air Intake 3.417 4–B11
DUCT, Air Cleaner and Silencer 3.407 4–B10

E

ELBOW, Air Cleaner Air Intake 3.417 4–B11
ELEMENT, Air Cleaner Intake 3.410 4–B10
EMBLEM, Engine Fuel Intake Manifold . 3.265 4–A18
EXTENSION, Engine Fuel Intake Manifold 3.265 4–A18

F

FASTENER KIT, Fuel Injection 3.330 4–A24
FASTENER, Multi Port Fuel Injection Throttle Body 3.336 4–B6
FITTING KIT, Fuel Injection 3.330 4–A24
FITTING, Fuel Line 3.163 4–A15
FITTING, Intake Manifold Vacuum 3.278 4–A21

G

GASKET KIT, Manifold to Cylinder Head 3.270 4–A19
GASKET KIT, Multi Port Fuel Injection Throttle Body 3.336 4–B6
GASKET, Fuel Gage to Tank 3.112 4–A12
GASKET, Fuel Injector 3.305 4–A23
GASKET, Fuel Line 3.163 4–A15
GASKET, Fuel Tank Filler Neck 3.008 4–A8
GASKET, Intake to Exhaust Manifold ... 3.272 4–A20
GASKET, Manifold to Cylinder Head ... 3.270 4–A19
GASKET, Multi Port Fuel Injection Throttle Body 3.336 4–B6
GUARD, Engine Fuel Intake Manifold .. 3.265 4–A18

H

HARNESS, Early Fuel Evaporation 3.145 4–A14
HORN, Fuel Injection Air Meter 3.335 4–A28
HOSE, Early Fuel Evaporation 3.145 4–A14
HOSE, Engine Vacuum Pump 3.280 4–A21
HOSE, Fuel Line 3.163 4–A15
HOSE, Fuel Tank Filler 3.003 4–A8
HOSE, Multi Port Fuel Injection Idle Air . 3.338 4–B7
HOSE, Throttle Body Coolant Supply .. 3.337 4–B7
HOSE, Turbocharger/Supercharger Coolant 3.373 4–B9
HOUSING KIT, Multi Port Fuel Injection Idle Air 3.338 4–B7
HOUSING, Fuel Injector 3.305 4–A23
HOUSING, Fuel Tank Filler 3.003 4–A8

I

INJECTOR KIT, Fuel Injection 3.300 4–A22
INJECTOR, Fuel Injection 3.300 4–A22
INSULATOR, Fuel Line 3.163 4–A15
INSULATOR, Fuel Tank 3.022 4–A8

L

LEVER, Multi Port Fuel Injection Idle Air 3.338 4–B7
LINK, Multi Port Fuel Injection Idle Air .. 3.338 4–B7

M

MANIFOLD, Engine Fuel Intake Manifold 3.265 4–A18
MODULE, Fuel Injection 3.300 4–A22
MODULE, Fuel Tank Meter 3.107 4–A8
MODULE, Multi Port Fuel Injection Throttle Position 3.339 4–B8

N

NUT, Accelerator Linkage 3.469 4–B14
NUT, Air Cleaner and Silencer 3.403 4–B10
NUT, Air Cleaner Controls 3.415 4–B11
NUT, Engine Vacuum Pump 3.280 4–A21
NUT, Fuel Tank Evaporator Control (Engine End) 3.130 4–A12
NUT, Multi Port Fuel Injection Idle Air ... 3.338 4–B7

P

PAD, Fuel Tank Meter 3.107 4–A8
PEDAL, Accelerator Pedal 3.451 4–B13
PIN, Air Cleaner Air Intake 3.417 4–B11
PIPE KIT, Fuel Injection 3.330 4–A24
PIPE KIT, Fuel Line 3.163 4–A15
PIPE, Early Fuel Evaporation 3.145 4–A14
PIPE, Engine Fuel Intake Manifold 3.265 4–A18
PIPE, Fuel Line 3.163 4–A15
PIPE, Turbocharger/Supercharger Coolant 3.373 4–B9
PLATE, Accelerator Pedal Lever 3.454 4–B13
PLATE, Accelerator Pedal Mounting ... 3.452 4–B13
PLENUM, Engine Fuel Intake Manifold . 3.265 4–A18
PLUG, Engine Fuel Intake Manifold 3.265 4–A18

PLUG, Fuel Injector 3.305 4–A23
PUMP, Engine Vacuum Pump 3.280 4–A21

R

RAIL & TUBES KIT, Fuel Injection 3.330 4–A24
RAIL KIT, Fuel Injection 3.330 4–A24
REGULATOR KIT, Fuel Injection 3.330 4–A24
REGULATOR, Fuel Injection 3.330 4–A24
RESONATOR, Air Cleaner Air Intake ... 3.417 4–B11
RETAINER KIT, Fuel Injector Metering .. 3.332 4–A27
RETAINER, Accelerator Control 3.425 4–B12
RETAINER, Air Cleaner Air Intake 3.417 4–B11
RETAINER, Air Cleaner and Silencer ... 3.407 4–B10
RETAINER, Air Cleaner Controls 3.415 4–B11
RETAINER, Air Cleaner Intake 3.410 4–B10
RETAINER, Engine Fuel Intake Manifold 3.265 4–A18
RETAINER, Evaporation Emission System (Fuel Tank End) 3.120 4–A12
RETAINER, Fuel Injection 3.330 4–A24
RETAINER, Fuel Line 3.162 4–A15
RETAINER, Multi Port Fuel Injection Idle Air 3.338 4–B7
RIVET, Accelerator Control 3.430 4–B12

S

SCREW, Air Cleaner Air Intake 3.417 4–B11
SCREW, Air Cleaner and Silencer 3.403 4–B10
SEAL KIT, Fuel Line 3.163 4–A15
SEAL KIT, Multi Port Fuel Injection Fuel Rail 3.331 4–A26
SEAL, Air Cleaner Air Intake 3.417 4–B11
SEAL, Air Cleaner and Silencer 3.403 4–B10
SEAL, Air Cleaner Controls 3.415 4–B11
SEAL, Air Cleaner Intake 3.410 4–B10
SEAL, Fuel Injector 3.304 4–A23
SEAL, Fuel Line 3.163 4–A15
SEAL, Multi Port Fuel Injection Fuel Rail 3.331 4–A26
SEAL, Multi Port Fuel Injection Idle Air .. 3.338 4–B7
SEAT, Fuel Tank 3.015 4–A8
SENDER, Fuel Tank Meter 3.107 4–A8
SENSOR KIT, Multi Port Fuel Injection Throttle Position 3.339 4–B8
SENSOR, Multi Port Fuel Injection Throttle Position 3.339 4–B8
SHAFT, Multi Port Fuel Injection Idle Air 3.338 4–B7
SHIELD, Accelerator Linkage 3.469 4–B14
SHIELD, Early Fuel Evaporation 3.145 4–A14
SHIELD, Engine Fuel Intake Manifold .. 3.265 4–A18
SHIELD, Evaporation Emission System (Fuel Tank End) 3.120 4–A12
SHIELD, Fuel Line 3.163 4–A15
SHIELD, Fuel Tank Evaporator Control (Engine End) 3.130 4–A12
SOLENOID, Early Fuel Evaporation Control 3.140 4–A13
SPACER, Evaporation Emission System (Fuel Tank End) 3.120 4–A12
SPACER, Fuel Line 3.163 4–A15
STOVE, Air Cleaner Air Intake 3.417 4–B11
STRAINER, Fuel Tank Gage 3.110 4–A12
STRAP, Fuel Tank 3.022 4–A8
STUD, Fuel Injection 3.300 4–A22
STUD, Fuel Injection 3.330 4–A24
STUD, Intake & Exhaust Manifold 3.275 4–A20
SUPPORT, Accelerator Pedal Lever 3.454 4–B13
SWITCH, Early Fuel Evaporation Control 3.140 4–A13
SWITCH, Fuel Injection 3.300 4–A22

T

TANK, Fuel 3.001 4–A8
TANK, Multi Port Fuel Injection Idle Air . 3.338 4–B7
THROTTLE, Fuel Injection Air Meter ... 3.335 4–A28
TUBE KIT, Fuel Injection 3.330 4–A24
TUBE, Air Cleaner Air Intake 3.417 4–B11
TUBE, Early Fuel Evaporation 3.145 4–A14
TUBE, Engine Fuel Intake Manifold 3.265 4–A18
TUBE, Fuel Injection 3.330 4–A24

V

VALVE KIT, Fuel Injection 3.330 4–A24
VALVE KIT, Multi Port Fuel Injection Idle Air 3.338 4–B7
VALVE, Air Cleaner Controls 3.415 4–B11
VALVE, Fuel Injection Air Meter 3.335 4–A28
VALVE, Fuel Tank Evaporator Control (Engine End) 3.130 4–A12
VALVE, Multi Port Fuel Injection Idle Air . 3.338 4–B7

W

WASHER, Accelerator Pedal Lever 3.454 4–B13
WASHER, Accelerator Pedal Mounting . 3.452 4–B13
WASHER, Engine Vacuum Pump 3.280 4–A21
WASHER, Fuel Tank Gage 3.110 4–A12
WASHER, Instrument Panel Fuel Gage . 3.108 4–A12
WASHER, Multi Port Fuel Injection Idle Air 3.338 4–B7

CHART INDEX

GROUP 3 GRID

ILLUS INDEX (GRP 3) 4–A7
FUEL TANK METER 4–A10
THROTTLE BODY 4–B2

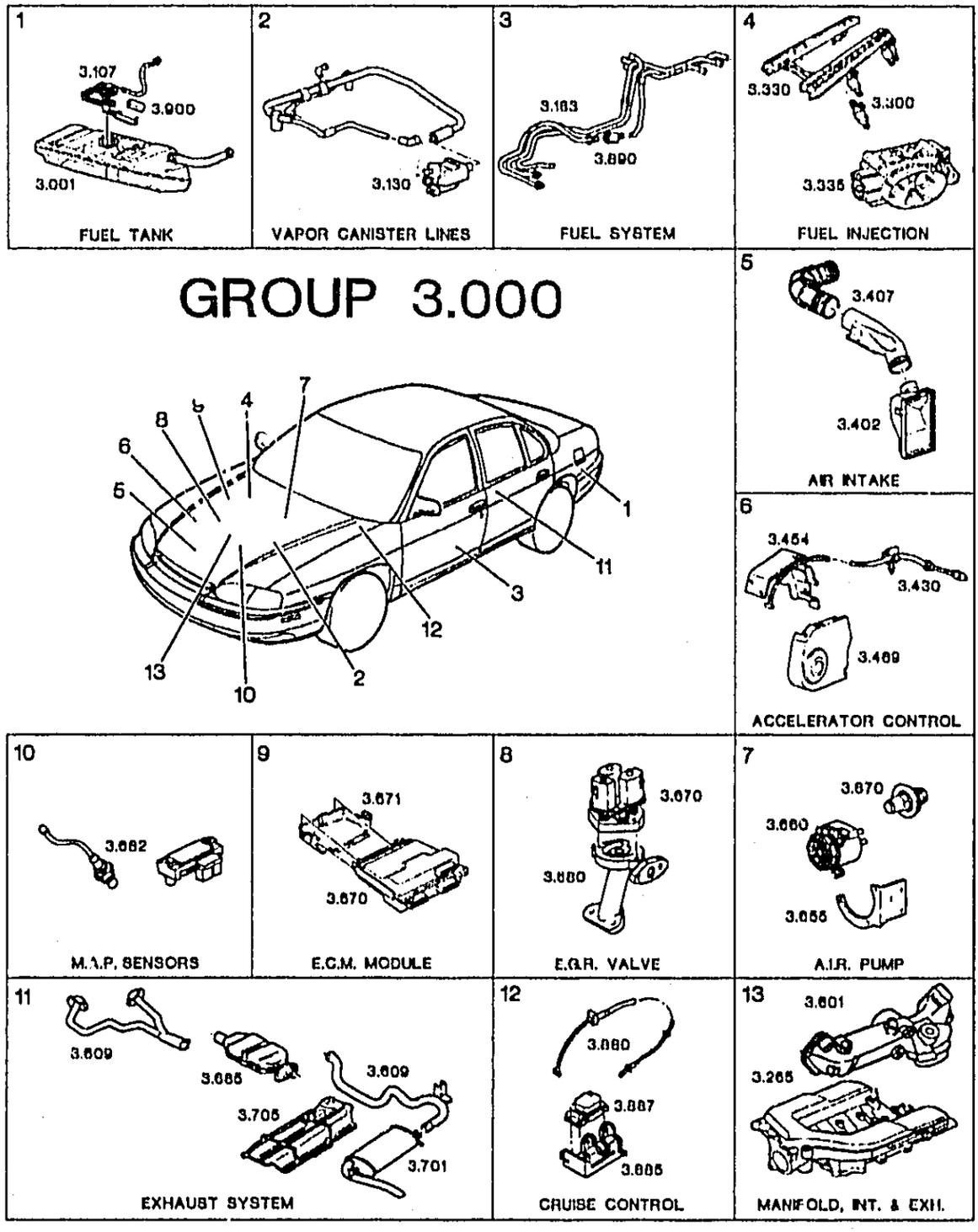

© 2000 GENERAL MOTORS SERVICE PARTS OPERATIONS–CHEVROLET–14Y

3.001 TANK, Fuel

NOTE: FOR 1984–1991 USAGE REFER TO FUEL TANK & METER CHART GRP 3.107

84–96	Y	14048936	1	531.50	TANK, FUEL	4–E4,16

3.003 CONNECTOR – HOSE – HOUSING, Fuel Tank Filler

84–96	Y	3849610	1	.93	CONNECTOR, F/TNK FIL PIPE HSG DRN HOSE	4–E4,5
84–96	Y	14050036	1	10.00	HOSE, F/TNK FIL PIPE HSG DRN	4–E4,17
84–96	Y	14076115	1	10.56	HOUSING, F/TNK FIL PIPE (03.008)	4–E4,6

3.008 GASKET, Fuel Tank Filler Neck

84–96	Y	10140598	1	2.45	GASKET, F/TNK LNR	

3.015 SEAT, Fuel Tank

84–96	Y	14047511	LH	4.49	SEAT, F/TNK	4–E4,19
84–96	Y	14047512	RH	4.40	SEAT, F/TNK	4–E4,19

3.022 CABLE – INSULATOR – STRAP, Fuel Tank

84–96	Y	14076111	2	21.88	CABLE, F/TNK	4–E4,18
86–96	Y67	10241792	2	49.47	INSULATOR, F/TNK	4–E6,34
84–96	Y	14048959	2	9.08	STRAP, F/TNK	4–E4,8

3.023 BOLT, Fuel Tank Mounting Strap

84–96	Y	14060161	2	*.86	BOLT, F/TNK STRP (M8X1.25X15 POR)	4–E4,22

3.028 CAP, Fuel Tank Filler

84–92	Y	22525300	1	5.78	CAP, F/TNK FIL (W/O HANDLE) (GASOLINE) (AC–DELCO #GT172) (STANDARD)	4–E4,7
93–96	Y	22581522	1	5.26	CAP, F/TNK FIL (AC–DELCO #GT200) (STANDARD)	4–E19,22
93	Y	22591476	1	5.26	CAP, F/TNK FIL (W/HANDLE) (GASOLINE) (AC–DELCO #GT195) (STANDARD)	4–E19,22

3.107 BOLT – CONNECTOR – DAMPENER – MODULE – PAD – SENDER, Fuel Tank Meter

NOTE: FOR 1984–1991 USAGE REFER TO FUEL TANK & METER CHART GRP 3.107

84–96	Y	14044556	9	3.35	BOLT, FUEL SDR (W/LOCK WA) (M6 – 1.0 X 18.0) (INCLS SEAL)	4–E4,13
93–96	Y	12084203	1	4.74	CONNECTOR, SDR–FUEL	
85–88	Y	25094266	1	20.91	DAMPENER, FUEL PULSE (AC–DELCO #FP27)	4–E8,16
89–91	Y (5.7–8)	25094266	1	20.91	DAMPENER, FUEL PULSE (AC–DELCO #FP27)	4–E8,16
92–95	Y 5.7P (LT1)	25094266	1	20.91	DAMPENER, FUEL PULSE (SNDR HARN TAGGED YPF, YPG) (AC–DELCO #FP27)	4–E8,16
96	Y	25094266	1	20.91	DAMPENER, FUEL PULSE (SNDR HARN TAGGED YPF, YPG) (AC–DELCO #FP27)	4–E8,16
90–95	Y 5.7J (LT5)	25028725	1	1056.70	MODULE, F/TNK F/PMP (SENDER HARNESS TAGGED YPE) (AC–DELCO #25028725)	4–E10,26
86–88	Y	25004553	AR	10.10	PAD, FUEL SDR (AC–DELCO #25004553)	4–E8,16

© 2000 GENERAL MOTORS SERVICE PARTS OPERATIONS–CHEVROLET–14Y

3.107 BOLT – CONNECTOR – DAMPENER – MODULE – PAD – SENDER, Fuel Tank Meter (Con't)

89–91	Y 5.7–8 (L98)	25004553	AR	10.10	PAD, FUEL SDR (AC–DELCO #25004553)	4–E8,16
92–95	Y 5.7P (LT1), (EXC LEADED FUEL EMIS EXPORT (NM8) .	25004553	AR	10.10	PAD, FUEL SDR (SNDR HARN TAGGED YPF–56) (AC–DELCO #25004553)	4–E8,16
96	Y (EXC LEADED FUEL EMIS EXPORT (NM8)	25004553	1	10.10	PAD, FUEL SDR (AC–DELCO #25004553)	4–E8,16
84	Y CLSD LOOP	25003533	1	499.90	SENDER, FUEL (TANK UNIT) (AC–DELCO #25003533)	4–E4,14
85	Y (EXC LEADED FUEL EMIS EXPORT (NM8)	25091444	1	659.53	SENDER, FUEL (TANK UNIT) (AC–DELCO #25091444)	
86	Y (EXC LEADED FUEL EMIS EXPORT (NM8)	25092241	1	571.86	SENDER, FUEL (AC–DELCO #25092241)	
87	Y (EXC LEADED FUEL EMIS EXPORT (NM8)	25091444	1	659.53	SENDER, FUEL (TANK UNIT) (AC–DELCO #25091444)	
88	Y 5.7–8 (L98)	25093414	1	584.97	SENDER, FUEL (AC–DELCO #25093414)	4–E8,16
89–91	Y 5.7–8 (L98)	25027510	1	490.73	SENDER, FUEL (SENDER HARNESS TAGGED YPD) (AC–DELCO #25027510)	4–E8,16
92–95	Y 5.7P (LT1), (EXC LEADED FUEL EMIS EXPORT (NM8) .	25027510	1	490.73	SENDER, FUEL (SENDER HARNESS TAGGED YPF–56) (AC–DELCO #25027510)	4–E8,16
96	Y (EXC LEADED FUEL EMIS EXPORT (NM8)	25027510	1	490.73	SENDER, FUEL (AC–DELCO #25027510)	4–E8,16
96	Y LEADED FUEL EMIS EXPORT (NM8)	25028968	1	357.28	SENDER, FUEL (AC–DELCO #25028968)	4–E22,29
	*EXPORT**********EXPORT**********EXPORT**********EXPORT**********EXPORT*					
85	Y LEADED FUEL EMIS EXPORT (NM8)	25091495	1	571.86	SENDER, FUEL (AC–DELCO #25091495)	
87	Y LEADED FUEL EMIS EXPORT (NM8)	25091495	1	571.86	SENDER, FUEL (AC–DELCO #25091495)	
92–95	Y 5.7P (LT1), LEADED FUEL EMIS EXPORT (NM8)	25028968	1	357.28	SENDER, FUEL (SNDR HARN TAGGED YPG) (AC–DELCO #25028968)	4–E22,29

© 2000 GENERAL MOTORS SERVICE PARTS OPERATIONS–CHEVROLET–14Y

1984 --- FUEL TANK METER ASSEMBLIES
(UNLEADED)

USAGE	3.107 METER	METER OUTLETS	GROUND WIRE COLOR	3.001 FUEL TANK	APPROX. CAPACITY (LITERS)
Y W/CLSD LOOP	25003533	3	BLACK	14048936	95

1984 --- FUEL TANK METER ASSEMBLIES
(LEADED)

Y W/NM8(EXPORT)	DISCON	2	BLACK	14048936	66

1985 --- FUEL TANK METER ASSEMBLIES
(UNLEADED)

USAGE	3.107 METER	METER OUTLETS	GROUND WIRE COLOR	3.001 FUEL TANK	APPROX. CAPACITY (LITERS)
Y(EXC NM8 EXPORT)	25091444	3	BLACK	14048936	76

1985 --- FUEL TANK METER ASSEMBLIES
(LEADED)

Y W/NM8(EXPORT)	25091495	2	BLACK	14048936	66

1986 --- FUEL TANK METER ASSEMBLIES
(UNLEADED)

USAGE	3.107 METER	METER OUTLETS	GROUND WIRE COLOR	3.001 FUEL TANK	APPROX. CAPACITY (LITERS)
Y W/CLSD LOOP	25092241	3	BLACK	14048936	76

1986 --- FUEL TANK METER ASSEMBLIES
(LEADED)

Y W/NM8(EXPORT)	DISCON	2	BLACK	14048936	66

© 2000 GENERAL MOTORS SERVICE PARTS OPERATIONS–CHEVROLET–14Y

1987 --- FUEL TANK METER ASSEMBLIES
(UNLEADED)

USAGE	3.107 METER	METER OUTLETS	GROUND WIRE COLOR	3.001 FUEL TANK	APPROX. CAPACITY (LITERS)
Y(EXC NM8 EXPORT)	25091444	3	BLACK	14048936	76

1987 --- FUEL TANK METER ASSEMBLIES
(LEADED)

Y W/NM8(EXPORT)	25091495	2	BLACK	14048936	66

1988 --- FUEL TANK METER ASSEMBLIES
(UNLEADED)

USAGE	3.107 METER	METER OUTLETS	GROUND WIRE COLOR	3.001 FUEL TANK	APPROX. CAPACITY (LITERS)
Y(5.7-8)	25093414	3	BLACK	14048936	76

1989 --- FUEL TANK METER ASSEMBLIES
(UNLEADED)

USAGE	3.107 METER	METER OUTLETS	GROUND WIRE COLOR	3.001 FUEL TANK	APPROX. CAPACITY (LITERS)
Y(5.7-8)	25027510	3	BLACK	14048936	76

1990 --- FUEL TANK METER ASSEMBLIES
(UNLEADED)

USAGE	3.107 METER	METER OUTLETS	GROUND WIRE COLOR	3.001 FUEL TANK	APPROX. CAPACITY (LITERS)
Y(5.7-8)	25027510	3	BLACK	14048936	76
Y(5.7J)	25028725	4	BLACK	14048936	76

1991 --- FUEL TANK METER ASSEMBLIES
(UNLEADED)

USAGE	3.107 METER	METER OUTLETS	GROUND WIRE COLOR	3.001 FUEL TANK	APPROX. CAPACITY (LITERS)
Y(5.7-8)	25027510	3	BLACK	14048936	76
Y(5.7J)	25028725	4	BLACK	14048936	76

© 2000 GENERAL MOTORS SERVICE PARTS OPERATIONS-CHEVROLET-14Y

3.108 WASHER, Instrument Panel Fuel Gage

84–85	Y ANALOG CLUSTERS	6455751	AR	*.74	WASHER, SPEEDO–TACH–GA (AC–DELCO #6455751)	

3.110 STRAINER – WASHER, Fuel Tank Gage

84	Y 5.7–8 (L83)	25055455	1	8.17	STRAINER, FUEL (AC–DELCO #TS1)	4–E4,14
85–88	Y 5.7–8 (L98)	25055455	1	8.17	STRAINER, FUEL (AC–DELCO #TS1)	4–E4,14
89–91	Y 5.7–8 (L95)	25121216	1	30.29	STRAINER, FUEL SDR FUEL (IN TANK) (AC–DELCO #TS17) .	4–E8,16
92–96	Y	25121216	1	30.29	STRAINER, FUEL SDR FUEL (IN TANK) (AC–DELCO #TS17) ..	4–E8,16
88–90	Y	14016675	3	1.10	WASHER, FUEL FLTR SHLD (01.240)	

3.112 GASKET, Fuel Gage to Tank

84–96	Y	25091503	1	11.10	GASKET, FUEL SDR (AC–DELCO #G1)	4–E4,15

3.120 RETAINER – SHIELD – SPACER, Evaporation Emission System (Fuel Tank End)

91–95	Y	20635065	1	.66	RETAINER, EVAP EMIS CNSTR SPH SHLD (PUSH IN) (X–MAS TREE FITS 8MM HOLE 24.5 LONG 25.5 HEAD OD) (24.5 LONG 25.5 HEAD) (PUSH–IN X–MAS TREE, FITS 8MM HOLE) (02.765)	4–E15,49
96	Y 5.7P (LT1), 5.7–5 (LT4)	20635065	2	.66	RETAINER, EVAP EMIS CNSTR SPH SHLD (PUSH IN) (24.5 LONG 25.5 HEAD) (PUSH–IN X–MAS TREE, FITS 8MM HOLE) (02.765)	4–E15,49
86–88	Y07	14093109	1	DISCON	SHIELD, BRK & FUEL VPR PIPE .	
86–92	Y67	14100346	1	DISCON	SPACER, BRK & EVAP EMIS PIPE (FRT)	

3.130 BRACKET – CANISTER – NUT – SHIELD – VALVE, Fuel Tank Evaporator Control (Engine End)

91–95	Y	10234809	1	15.05	BRACKET, EVAP EMIS CNSTR ..	4–E12,8
96	Y 5.7P (LT1), 5.7–5 (LT4)	10234809	1	15.05	BRACKET, EVAP EMIS CNSTR ..	4–E12,8
90–95	Y 5.7J (LT5)	10174301	1	8.16	BRACKET, EVAP EMIS CNSTR PURGE SOL VLV	1–H20,552
91	Y	10137634	1	4.13	BRACKET, EVAP EMIS CNSTR PURGE SOL VLV (03.145)	1–H20,552
92–95	Y 5.7P (LT1)	10137656	1	4.13	BRACKET, EVAP EMIS CNSTR PURGE SOL VLV	4–E22,64
96	Y 5.7P (LT1), 4–SPD A/TRANS (M30)	12551612	1	3.11	BRACKET, EVAP EMIS CNSTR PURGE SOL VLV	4–E22,64
96	Y 5.7–5 (LT4), 6–SPD M/TRANS (ML9)	12551612	1	3.11	BRACKET, EVAP EMIS CNSTR PURGE SOL VLV	4–E22,64
84–90	Y	10105270	1	40.04	BRACKET, FUEL VPR CNSTR ...	4–J13,58
84	Y	17087180	1	56.98	CANISTER, EVAP EMIS (AC–DELCO #215–59)	4–J13,60
85–90	Y	17113150	1	72.87	CANISTER, EVAP EMIS (AC–DELCO #215–155)	4–J20,34
91–95	Y	17090139	1	47.88	CANISTER, EVAP EMIS (AC–DELCO #215–75)	4–E12,7
96	Y	17113065	1	61.51	CANISTER, EVAP EMIS (AC–DELCO #215–127)	4–E22,53

© 2000 GENERAL MOTORS SERVICE PARTS OPERATIONS–CHEVROLET–14Y

3.130 BRACKET – CANISTER – NUT – SHIELD – VALVE, Fuel Tank Evaporator Control (Engine End) (Con't)

89–90	Y	12337995	2	*.46	NUT, BOOS TO BRK PED BRKT @ DA (00.334) (AC–DELCO #12337995)	
92–96	Y 5.7P (LT1)	9442958	1	*1.00	NUT, EVAP EMIS CNSTR PURGE SOL VLV (3/8–16 PC, 286M) (HEX, FLANGE) (08.917)	1–J17,504
96	Y 5.7–5 (LT4)	9442958	1	*1.00	NUT, EVAP EMIS CNSTR PURGE SOL VLV (3/8–16 PC, 286M) (HEX, FLANGE) (08.917)	1–J17,504
91–95	Y	10105360	1	12.90	SHIELD, EVAP EMIS CNSTR SPH (03.120)	4–E12,9
96	Y 5.7P (LT1), 5.7–5 (LT4)	10105360	1	12.90	SHIELD, EVAP EMIS CNSTR SPH (03.120)	4–E12,9
84	Y	1997629	1	25.59	VALVE, EVAP EMIS CNSTR PURGE SOL (03.140) (AC–DELCO #214–383)	
85	Y	1997101	1	25.37	VALVE, EVAP EMIS CNSTR PURGE SOL (03.140) (AC–DELCO #214–370)	4–J20,42
87	Y	1997101	1	25.37	VALVE, EVAP EMIS CNSTR PURGE SOL (03.140) (AC–DELCO #214–370)	4–J20,42
88–90	Y	1997181	1	26.10	VALVE, EVAP EMIS CNSTR PURGE SOL (03.140) (AC–DELCO #214–375)	1–H20,552
90	Y 5.7J (LT5)	1997201	1	25.89	VALVE, EVAP EMIS CNSTR PURGE SOL (AC–DELCO #214–565)	4–E22,37
91–96	Y	1997201	1	25.89	VALVE, EVAP EMIS CNSTR PURGE SOL (2 PORT VAC, 2 BLADE TERM) (AC–DELCO #214–565)	4–E22,37
85–87	Y	17087240	1	27.70	VALVE, EVAP EMIS PRESS CONT (AC–DELCO #214–548)	4–J20,31
88–90	Y	17087240	1	27.70	VALVE, EVAP EMIS PRESS CONT (AC–DELCO #214–548)	4–J20,31
91	Y	10105329	1	63.77	VALVE, EVAP EMIS PRESS CONT (W/CONN & CLAMPS) (AC–DELCO #214–531)	4–E12,2
91	Y	17091140	1	32.27	VALVE, EVAP EMIS PRESS CONT (W/O CONN & CLAMPS) (AC–DELCO #214–558)	4–E12,4
92–96	Y	10105386	1	53.77	VALVE, EVAP EMIS PRESS CONT (PKG, W/CONN & CLAMPS) (AC–DELCO #214–532)	4–E22,55
92–95	Y	17091151	1	27.23	VALVE, EVAP EMIS PRESS CONT (W/O CONN & CLAMPS) (AC–DELCO #214–559)	4–E19,2
96	Y 5.7P (LT1), 5.7–5 (LT4)	17091151	1	27.23	VALVE, EVAP EMIS PRESS CONT (AC–DELCO #214–559)	4–E19,2

3.140 BRACKET – CONNECTOR – COVER – SOLENOID – SWITCH, Early Fuel Evaporation Control

96	Y 5.7P (LT1), 4–SPD A/TRANS (M30)	12551614	1	.87	BRACKET, EVAP EMIS CNSTR PURGE VAC DIAGN SW	1–J17,554
96	Y 5.7–5 (LT4), 6–SPD M/TRANS (ML9)	12551614	1	.87	BRACKET, EVAP EMIS CNSTR PURGE VAC DIAGN SW	1–J17,554
87–91	Y	12101853	AR	19.29	CONNECTOR, SOL–EVAP EMIS CNSTR PURGE VLV (2–WAY M, W/LEADS, USED T/W 15300591) (02.535) (AC–DELCO #PT245)	

© 2000 GENERAL MOTORS SERVICE PARTS OPERATIONS–CHEVROLET–14Y

3.140 BRACKET – CONNECTOR – COVER – SOLENOID – SWITCH, Early Fuel Evaporation Control (Con't)

91–93	Y	12101858	1	18.13	CONNECTOR, SOL–EVAP EMIS CNSTR PURGE VLV (RED) (2–WAY F) (W/LEADS) (02.535) (AC–DELCO #PT250)	
94	Y 5.7J (LT5)	12101858	1	18.13	CONNECTOR, SOL–EVAP EMIS CNSTR PURGE VLV (RED) (2–WAY F) (W/LEADS) (02.535) (AC–DELCO #PT250)	
84–90	Y	14066503	1	DISCON	COVER, FUEL VPR CNSTR PURGE SOL	
86	Y	1997153	1	23.42	SOLENOID, FUEL VPR CNSTR PURGE (AC–DELCO #1997153)	4–J20,42
96	Y 5.7P (LT1)	12555084	1	13.52	SWITCH, EVAP EMIS CNSTR PURGE VAC (SWITCH W/2 CONNECTIONS W/VENT HOLE)	1–J17,505
96	Y 5.7–5 (LT4)	12555084	1	13.52	SWITCH, EVAP EMIS CNSTR PURGE VAC (SWITCH W/2 CONNECTIONS W/VENT HOLE)	1–J17,505

3.145 BRACKET – CLAMP – CLIP – CONNECTOR – HARNESS – HOSE – PIPE – SHIELD – TUBE, Early Fuel Evaporation

86–89	Y67	14092701	1	7.75	BRACKET, BRK & FUEL VPR PIPE	10–E11,44
87	Y07 1BL (PERF HDLG PKG Z51), B2B (SPORT HDLG PKG Z52)	14092701	1	7.75	BRACKET, BRK & FUEL VPR PIPE	10–E11,44
88–89	Y07 PERF HDLG PKG (Z51), SPORT HDLG PKG (Z52)	14092701	1	7.75	BRACKET, BRK & FUEL VPR PIPE	10–E11,44
90–91	Y	14092701	1	7.75	BRACKET, FUEL VPR PIPE	10–E11,44
86–90	Y	1622744	1	.47	CLAMP, FUEL VPR INTER HOSE	
91–96	Y	10105389	4	2.86	CLIP, EVAP EMIS CNSTR PURGE HOSE	4–E15,14
85–86	Y	1986936	1	DISCON	CLIP, HOSE RETAINING VPR CNSTR	
96	Y 5.7P (LT1), 5.7–5 (LT4)	12555830	1	.75	CONNECTOR, EVAP EMIS CNSTR PURGE HOSE (90 DEG ELBOW)	
91–95	Y	10046084	1	.77	CONNECTOR, EVAP EMIS HOSE (03.130)	4–E12,6
96	Y 5.7P (LT1), 5.7–5 (LT4)	10046084	1	.77	CONNECTOR, EVAP EMIS HOSE (03.130)	4–E12,6
84–96	Y	474793	1	13.42	CONNECTOR, EVAP EMIS INTER HOSE (THREADS MUST BE SEALED W/THREAD SEALANT 12346004.) (03.680)	4–E4,31
85–86	Y	10496984	1	DISCON	CONNECTOR, TEE	
87	Y	10046010	1	DISCON	HARNESS, FUEL VPR CNSTR	
88–89	Y	10055891	1	23.36	HARNESS, FUEL VPR CNSTR	4–K5,28
90	Y (5.7–8)	10055891	1	23.36	HARNESS, FUEL VPR CNSTR	4–K5,28
90	Y (5.7J) SOFT RIDE SUSP (FE1), H .D .SUSP (FE7)	14104815	1	33.66	HARNESS, FUEL VPR CNSTR	4–K9,39
91–95	Y	10105300	1	43.35	HOSE, EVAP EMIS CNSTR PURGE	4–E12,1
96	Y 5.7P (LT1), 5.7–5 (LT4)	12552593	1	32.39	HOSE, EVAP EMIS CNSTR PURGE	4–E22,56
92–95	Y 5.7P (LT1)	10105299	1	3.67	HOSE, EVAP EMIS CNSTR PURGE SOL VLV	
96	Y 5.7P (LT1), 4–SPD A/TRANS (M30)	12551611	1	3.16	PIPE, EVAP EMIS CNSTR PURGE SOL VLV	1–J17,555
96	Y 5.7–5 (LT4), 6–SPD M/TRANS (ML9)	12551611	1	3.16	PIPE, EVAP EMIS CNSTR PURGE SOL VLV	1–J17,555
86–96	Y	14104690	1	18.26	SHIELD, BRK & EVAP EMIS PIPE	6–E16,15
88–90	Y 5.7–8	10055892	1	5.41	TUBE, EVAP EMIS CNSTR PURGE	4–K5,27

© 2000 GENERAL MOTORS SERVICE PARTS OPERATIONS–CHEVROLET–14Y

3.145 BRACKET – CLAMP – CLIP – CONNECTOR – HARNESS – HOSE – PIPE – SHIELD – TUBE, Early Fuel Evaporation (Con't)

96	Y 5.7P (LT1), 4–SPD A/TRANS (M30)	12551608	1	3.25	TUBE, EVAP EMIS CNSTR PURGE .	
96	Y 5.7–5 (LT4), 6–SPD M/TRANS (ML9)	12551608	1	3.25	TUBE, EVAP EMIS CNSTR PURGE .	
87	Y	10046011	1	DISCON	TUBE, FUEL VPR CNSTR	

3.162 BOLT – CLAMP – CLIP – RETAINER, Fuel Line

91–95	Y 5.7J (LT5)	1 514168	12	1.82	BOLT, FUEL FEED & RTN FRT PIPE (M8X1.25X25) (08.913) (AC–DELCO #11514168)	
96	Y	1648216	1	*1.82	CLAMP, FUEL FEED & RTN HOSE (BLACK) (1/4 X 5/8, .320 WIDE BAND, WORM GEAR HEX SLOT SCREW) (08.948) (AC–DELCO #1648216)	
89–91	Y 5.7–8 (L98)	15664822	AR	1.05	CLIP, FUEL FEED & RTN FRT PIPE (01.166)	4–E12,50
88–96	Y	10052168	AR	1.65	CLIP, FUEL FEED & RTN PIPE ...	4–E8,8
88–96	Y	10052169	2	1.45	CLIP, FUEL FEED & RTN RR PIPE	4–E8,14
92–96	Y	10052168	4	1.65	CLIP, FUEL FEED & RTN RR PIPE	4–E8,8
84–87	Y	14050043	3	DISCON	CLIP, FUEL FEED FRT PIPE	
90–93	Y 5.7J (LT5)	10158064	1	4.15	CLIP, FUEL FEED PIPE	4–E15,50
84	Y	14076130	1	1.12	CLIP, FUEL FEED RR PIPE (RETAINS 2 PIPES) (04.686) ...	
84–87	Y	343442	2	1.10	CLIP, FUEL RTN FRT PIPE (2 TUBE SI BY SI)	4–E4,34
91	Y	10098178	3	DISCON	CLIP, FUEL VPR & FRT BRK PIPE (04.686)	
84	Y	2399078	1	1.30	CLIP, FUEL VPR PIPE (CLSD TYPE) (04.866)	
84–87	Y	14050054	1	1.10	CLIP, FUEL VPR PIPE	4–J13,107
88–90	Y	14050054	1	1.10	CLIP, FUEL VPR PIPE (HOLDS LRG TUBE)	4–J13,107
84–87	Y	14050058	1	4.49	RETAINER, FUEL & RR & RTN VPR PIPE	4–E4,32
84–95	Y	14050046	1	2.04	RETAINER, FUEL RR PIPE	4–E4,9
96	Y	14050046	2	2.04	RETAINER, FUEL RR PIPE	4–E4,9
88–90	Y	14050058	1	4.49	RETAINER, FUEL VPR PIPE	4–E4,32

3.163 CONNECTOR – FITTING – GASKET – HOSE – INSULATOR – PIPE – PIPE KIT – SEAL – SEAL KIT – SHIELD – SPACER, Fuel Line

NOTE: FOR 1984 USAGE REFER TO ELECTRONIC FUEL INJECTION CHART GRP 3.725

92	Y 5.7J (LT5)	14062223	1	.88	CONNECTOR, FUEL REG HOSE (ELBOW) (5.6X3.6 ID, RUBBER, PL) (03.680)	
94–95	Y 5.7J (LT5)	14062223	1	.88	CONNECTOR, FUEL REG HOSE (ELBOW) (5.6X3.6 ID, RUBBER, PL) (03.680)	
92–96	Y	10052179	1	4.52	FITTING, FUEL FEED PIPE	4–E8,32
85–86	Y	14076165	1	DISCON	FITTING, FUEL RTN PIPE (14 X 1.5 THD)	
88–89	Y	10052179	1	4.52	FITTING, FUEL RTN PIPE	4–E8,32
90–91	Y SOFT RIDE SUSP (FE1), HVY DUTY SUSP (FE7)	10052179	1	4.52	FITTING, FUEL RTN PIPE	4–E8,32
90–95	Y 5.7J (LT5)	14104675	1	.99	GASKET, FUEL FEED PIPE	4–E10,2
90–95	Y 5.7J (LT5)	10110987	1	5.46	HOSE, CARB FUEL FEED	1–H25,603
84	Y	14060103	1	DISCON	HOSE, FUEL FEED FRT	
84	Y	14060104	1	DISCON	HOSE, FUEL RTN FRT	

3.163 CONNECTOR – FITTING – GASKET – HOSE – INSULATOR – PIPE – PIPE KIT – SEAL – SEAL KIT – SHIELD – SPACER, Fuel Line (Con't)

87	Y	10080721	1	DISCON	HOSE, FUEL RTN FRT	
87	Y	10068682	1	DISCON	HOSE, FUEL RTN RR	
92–96	Y	10157933	1	2.60	INSULATOR, FUEL FEED & RTN FRT PIPE (RUBBER)	4–E19,27
92–93	Y 5.7P (LT1)	10218527	1	8.62	INSULATOR, FUEL FEED & RTN FRT PIPE (W/STUDS BOTH ENDS) (POS #2)	4–E22,65
86–87	Y67	14105123	1	DISCON	INSULATOR, FUEL FEED & RTN RR PIPE	
88–91	Y	14105123	1	DISCON	INSULATOR, FUEL FEED & RTN RR PIPE	
91–96	Y	3999572	1	4.98	INSULATOR, FUEL FEED & RTN RR PIPE (09.260) (POS #4)	4–E15,51
92–96	Y	10157933	1	2.60	INSULATOR, FUEL FEED & RTN RR PIPE (POSN #1, 2, 3) (RUBBER)	4–E19,27
92–93	Y 5.7P (LT1)	17112641	1	65.90	PIPE KIT, F/INJN FUEL FEED (03.330)	4–F5,10
90–95	Y 5.7J (LT5)	17112221	1	291.11	PIPE KIT, F/INJN FUEL FEED & RTN (03.330) (AC–DELCO #17112221)	4–F2,4
89–91	Y 5.7–8 (L98)	17113253	1	40.62	PIPE KIT, F/INJN FUEL RTN (AC–DELCO #17113253)	
92	Y 5.7P (LT1)	17112642	1	65.90	PIPE KIT, F/INJN FUEL RTN (03.330)	4–F5,9
93	Y 5.7P (LT1), 4–SPD A/TRANS (MD8)	17112642	1	65.90	PIPE KIT, F/INJN FUEL RTN (03.330)	4–F5,9
93	Y 5.7P (LT1), 6–SPD M/TRANS (ML9)	17112642	1	65.90	PIPE KIT, F/INJN FUEL RTN (03.330)	4–F5,9
94–96	Y 5.7P (LT1)	17091861	1	20.40	PIPE KIT, F/INJN FUEL RTN	4–F8,13
96	Y 5.7–5 (LT4)	17091861	1	20.40	PIPE KIT, F/INJN FUEL RTN	4–F8,13
85–86	Y07	14076162	1	DISCON	PIPE, FUEL FEED FRT	
86–87	Y67	14092693	1	DISCON	PIPE, FUEL FEED FRT	
87	Y07 (EXC 1BL PERF HDLG PKG Z51, B2B SPORT HDLG PKG Z52)	14076162	1	DISCON	PIPE, FUEL FEED FRT	
87	Y07 1BL (PERF HDLG PKG Z51), B2B (SPORT HDLG PKG Z52)	14092693	1	DISCON	PIPE, FUEL FEED FRT	
88	Y07 PERF HDLG PKG (Z51), SPORT HDLG PKG (Z52)	10052171	1	34.43	PIPE, FUEL FEED FRT	4–E8,39
88	Y07 (EXC PERF HDLG PKG Z51, SPORT HDLG PKG Z52)	10052175	1	DISCON	PIPE, FUEL FEED FRT	
88	Y67	10052171	1	34.43	PIPE, FUEL FEED FRT	4–E8,39
89–91	Y (5.7–8)	10052171	1	34.43	PIPE, FUEL FEED FRT	4–E8,39
90–91	Y 5.7J (LT5), SOFT RIDE SUSP (FE1), HVY DUTY SUSP (FE7)	10098155	1	89.76	PIPE, FUEL FEED FRT	4–E10,3
92–95	Y 5.7J (LT5)	10157975	1	85.68	PIPE, FUEL FEED FRT	4–E19,40
92–93	Y 5.7P (LT1)	10205073	1	104.04	PIPE, FUEL FEED FRT (W/DAMPENER)	4–E22,4
94	Y 5.7P (LT1)	10273115	1	47.18	PIPE, FUEL FEED FRT (W/DAMPENER)	4–E22,4
95	Y 5.7P (LT1)	10273115	1	47.18	PIPE, FUEL FEED FRT (W/DAMPENER)	4–E22,4
96	Y	10273115	1	47.18	PIPE, FUEL FEED FRT (W/DAMPENER)	4–E22,4
85–86	Y07	14076164	1	104.04	PIPE, FUEL FEED RR	

3.163 CONNECTOR – FITTING – GASKET – HOSE – INSULATOR – PIPE – PIPE KIT – SEAL – SEAL KIT – SHIELD – SPACER, Fuel Line (Con't)

87	Y07 (EXC 1BL PERF HDLG PKG Z51, B2B SPORT HDLG PKG Z52)	14076164	1	104.04	PIPE, FUEL FEED RR	
88	Y07 PERF HDLG PKG (Z51), SPORT HDLG PKG (Z52) ...	10052173	1	42.59	PIPE, FUEL FEED RR	4–E8,34
88	Y07 (EXC PERF HDLG PKG Z51, SPORT HDLG PKG Z52)	10052177	1	DISCON	PIPE, FUEL FEED RR	
88	Y67	10052173	1	42.59	PIPE, FUEL FEED RR	4–E8,34
89	Y	10052173	1	42.59	PIPE, FUEL FEED RR	4–E8,34
90–91	Y SOFT RIDE SUSP (FE1), HVY DUTY SUSP (FE7)	10052173	1	42.59	PIPE, FUEL FEED RR	4–E8,34
92–96	Y	10158027	1	60.44	PIPE, FUEL FEED RR	4–E19,11
85–86	Y07	14076161	1	DISCON	PIPE, FUEL RTN FRT	
86	Y67	14092694	1	DISCON	PIPE, FUEL RTN FRT	
87	Y07 1BL (PERF HDLG PKG Z51), B2B (SPORT HDLG PKG Z52)	10068689	1	DISCON	PIPE, FUEL RTN FRT	
87	Y07 (EXC 1BL PERF HDLG PKG Z51, B2B SPORT HDLG PKG Z52)	14076161	1	DISCON	PIPE, FUEL RTN FRT	
87	Y67	10068689	1	DISCON	PIPE, FUEL RTN FRT	
88	Y07 PERF HDLG PKG (Z51), SPORT HDLG PKG (Z52) ...	10052172	1	DISCON	PIPE, FUEL RTN FRT	
88	Y07 (EXC PERF HDLG PKG Z51, SPORT HDLG PKG Z52)	10052176	1	DISCON	PIPE, FUEL RTN FRT	
88	Y67	10052172	1	DISCON	PIPE, FUEL RTN FRT	
89–91	Y 5.7–8 (L98)	10052172	1	DISCON	PIPE, FUEL RTN FRT	
90–91	Y 5.7J (LT5), SOFT RIDE SUSP (FE1), HVY DUTY SUSP (FE7)	10098156	1	89.76	PIPE, FUEL RTN FRT	4–E10,4
92–95	Y 5.7J (LT5)	10157976	1	85.68	PIPE, FUEL RTN FRT	4–E19,47
92–93	Y 5.7P (LT1)	10273116	1	53.04	PIPE, FUEL RTN FRT	4–E22,1
94–95	Y 5.7P (LT1)	10273116	1	53.04	PIPE, FUEL RTN FRT	4–E22,1
96	Y	10273116	1	53.04	PIPE, FUEL RTN FRT	4–E22,1
85	Y	14076163	1	DISCON	PIPE, FUEL RTN RR	
85–86	Y07	14076163	1	DISCON	PIPE, FUEL RTN RR	
86–87	Y67	14092696	1	DISCON	PIPE, FUEL RTN RR	
87	Y07 1BL (PERF HDLG PKG Z51), B2B (SPORT HDLG PKG Z52)	14092696	1	DISCON	PIPE, FUEL RTN RR	
88	Y07 PERF HDLG PKG (Z51), SPORT HDLG PKG (Z52) ...	10052174	1	41.75	PIPE, FUEL RTN RR	4–E8,32
88	Y07 (EXC PERF HDLG PKG Z51, SPORT HDLG PKG Z52)	10052178	1	DISCON	PIPE, FUEL RTN RR	
88	Y67	10052174	1	41.75	PIPE, FUEL RTN RR	4–E8,32
89	Y	10052174	1	41.75	PIPE, FUEL RTN RR	4–E8,32
90	Y (5.7–8)	10052174	1	41.75	PIPE, FUEL RTN RR	4–E8,32
91	Y SOFT RIDE SUSP (FE1), HVY DUTY SUSP (FE7)	10052174	1	41.75	PIPE, FUEL RTN RR	4–E8,32
92–96	Y	10158028	1	60.44	PIPE, FUEL RTN RR	4–E19,26
85–88	Y	17111696	1	20.24	SEAL KIT, (O RING) (AC–DELCO #217–440)	
89–91	Y 5.7–8 (L98)	17111696	1	20.24	SEAL KIT, (O RING) (AC–DELCO #217–440)	

© 2000 GENERAL MOTORS SERVICE PARTS OPERATIONS–CHEVROLET–14Y

3.163 CONNECTOR – FITTING – GASKET – HOSE – INSULATOR – PIPE – PIPE KIT – SEAL – SEAL KIT – SHIELD – SPACER, Fuel Line (Con't)

90–95	Y 5.7J (LT5)	17112224	1	7.38	SEAL KIT, F/INJN FUEL FEED & RTN PIPE (AC–DELCO #217–443)	4–F2,10
92–93	Y 5.7P (LT1)	17112989	1	18.14	SEAL KIT, F/INJN FUEL FEED & RTN PIPE (03.331) (AC–DELCO #217–460)	4–F5,4
88	Y07 (EXC PERFORMANCE HANDLING PKG (Z51), SPORT HANDLING PKG (Z52)	22514722	1	*.49	SEAL, FUEL FEED FRT PIPE (O RING) (AC–DELCO #217–452) .	4–E8,32
90–91	Y 5.7–8 (L98)	22514722	AR	*.49	SEAL, FUEL FEED FRT PIPE (O RING) (AC–DELCO #217–452) .	4–E8,32
90–91	Y 5.7J (LT5), SOFT RIDE SUSP (FE1), HVY DUTY SUSP (FE7)	22514722	AR	*.49	SEAL, FUEL FEED FRT PIPE (O RING) (AC–DELCO #217–452) .	4–E8,32
92–96	Y	22514722	1	*.49	SEAL, FUEL FEED FRT PIPE (O RING) (AC–DELCO #217–452) .	4–E8,32
85–87	Y	22514722	AR	*.49	SEAL, FUEL FEED PIPE (O RING) (AC–DELCO #217–452)	4–E8,32
90–91	Y SOFT RIDE SUSP (FE1), HVY DUTY SUSP (FE7)	22514722	AR	*.49	SEAL, FUEL FEED RR PIPE (O RING) (AC–DELCO #217–452) .	4–E8,32
92–96	Y	22514722	1	*.49	SEAL, FUEL FEED RR PIPE (O RING) (AC–DELCO #217–452) .	4–E8,32
90–91	Y 5.7–8 (L98)	22514722	AR	*.49	SEAL, FUEL RTN FRT PIPE (O RING) (AC–DELCO #217–452) .	4–E8,32
90–91	Y 5.7J (LT5), SOFT RIDE SUSP (FE1), HVY DUTY SUSP (FE7)	22514722	AR	*.49	SEAL, FUEL RTN FRT PIPE (O RING) (AC–DELCO #217–452) .	4–E8,32
92–96	Y	22514722	1	*.49	SEAL, FUEL RTN FRT PIPE (O RING) (AC–DELCO #217–452) .	4–E8,32
85–86	Y07	22516256	AR	*.47	SEAL, FUEL RTN PIPE (O RING) (AC–DELCO #22516256)	
87	Y07 (EXC 1BL PERF HDLG PKG Z51, B2B SPORT HDLG PKG Z52)	22516256	1	*.47	SEAL, FUEL RTN PIPE (O RING) (AC–DELCO #22516256)	
92–96	Y	22514722	1	*.49	SEAL, FUEL RTN PIPE (O RING) (AC–DELCO #217–452)	4–E8,32
90–91	Y SOFT RIDE SUSP (FE1), HVY DUTY SUSP (FE7)	22514722	AR	*.49	SEAL, FUEL RTN RR PIPE (O RING) (AC–DELCO #217–452)	4–E8,32
92	Y	22514722	1	*.49	SEAL, FUEL RTN RR PIPE (O RING) (AC–DELCO #217–452)	4–E8,32
89–91	Y	14104629	1	DISCON	SHIELD, FUEL FLTR	
88–91	Y	10052187	AR	DISCON	SPACER, FUEL PIPE CLIP	

3.265 BOLT – EMBLEM – EXTENSION – GUARD – MANIFOLD – PIPE – PLENUM – PLUG – RETAINER – SHIELD – TUBE, Engine Fuel Intake Manifold

NOTE: EXHAUST MANIFOLD IN GROUP 3.601.

92–96	Y 5.7P (LT1)	11514149	4	1.82	BOLT, INT MANIF OIL SPH SHLD (M6 X 1 X 12) (HFH, 9.8 PE, 12.8 OD DR) (08.900) (AC–DELCO #11514149)	1–J17,528
96	Y 5.7–5 (LT4)	11514149	4	1.82	BOLT, INT MANIF OIL SPH SHLD (M6 X 1 X 12) (HFH, 9.8 PE, 12.8 OD DR) (08.900) (AC–DELCO #11514149)	1–J17,528
90–95	Y 5.7J (LT5)	11514168	12	1.82	BOLT, INT MANIF PLNM (M8X1.25X25) (08.913) (AC–DELCO #11514168)	1–H20,502
90–95	Y 5.7J (LT5)	10174309	1	84.00	EMBLEM, ENG	1–H10,201

© 2000 GENERAL MOTORS SERVICE PARTS OPERATIONS–CHEVROLET–14Y

3.265 BOLT – EMBLEM – EXTENSION – GUARD – MANIFOLD – PIPE – PLENUM – PLUG – RETAINER – SHIELD – TUBE, Engine Fuel Intake Manifold (Con't)

92–96	Y 5.7P (LT1)	10108673	2	8.85	EMBLEM, ENG	
85–88	Y	10108425	1	19.70	EXTENSION, INT MANIF PLNM	4–F26,14
89–90	Y (5.7–8)	10108425	1	19.70	EXTENSION, INT MANIF PLNM	4–F26,14
91	Y 5.7–8 (L98)	10108425	1	19.70	EXTENSION, INT MANIF PLNM	4–F26,14
84	Y	14037628	1	DISCON	GUARD, MANIF OIL SPLASH	
84	Y A/TRNS	14057016	1	DISCON	MANIFOLD, INT	
84	Y M/TRNS, FED & CALIF	14085703	1	DISCON	MANIFOLD, INT	
85	Y	14081004	1	DISCON	MANIFOLD, INT	
86	Y	14087098	1	DISCON	MANIFOLD, INT	
87–88	Y	10108517	1	430.30	MANIFOLD, INT	1–H2,96
89–91	Y 5.7–8 (L98)	10066012	1	515.10	MANIFOLD, INT	1–H2,96
92	Y 5.7P (LT1)	12518284	1	403.00	MANIFOLD, INT	4–G4,1
93	Y 5.7P (LT1), 6–SPD M/TRANS (ML9)	12518284	1	403.00	MANIFOLD, INT	4–G4,1
93	Y 5.7P (LT1), 4–SPD A/TRANS (MD8)	12518284	1	403.00	MANIFOLD, INT	4–G4,1
94–96	Y 5.7P (LT1)	12552137	1	274.80	MANIFOLD, INT	4–G6,1
96	Y 5.7–5 (LT4), 6–SPD M/TRANS (ML9)	12550630	1	274.80	MANIFOLD, INT	4–G8,1
90–91	Y 5.7–8 (L98)	10108460	1	DISCON	PIPE, INT MANIF VPR	
85–88	Y (5.7–8)	10108443	1	DISCON	PLENUM, INT MANIF	
89	Y FEDERAL EMIS (NA5), (5.7–8)	10108468	1	163.70	PLENUM, INT MANIF	4–F26,1
90–91	Y 5.7–8 (L98)	10077151	1	163.70	PLENUM, INT MANIF	4–F26,1
90–92	Y 5.7J (LT5)	10090512	1	655.50	PLENUM, INT MANIF (W/O FITTINGS, HOSES, ETC.)	4–G2,1
93–95	Y 5.7J (LT5)	12522045	1	1722.10	PLENUM, INT MANIF	4–G2,1
96	Y 5.7–5 (LT4)	144011	1	.41	PLUG, EGR VLV INT MANIF HOLE (1/4–18X.44 AM STD PIPE THD, STL, CZ (USED W/SEALER) (08.971)	1–J17,512
89–90	Y (5.7–8)	14090911	1	.86	PLUG, INL MANIF HOLE (08.971)	
93–96	Y 5.7P (LT1)	444595	1	1.70	PLUG, INT MANIF CORE HOLE (04.510)	1–J17,558
96	Y 5.7–5 (LT4)	444595	1	1.70	PLUG, INT MANIF CORE HOLE (04.510)	1–J17,558
93–95	Y 5.7J (LT5)	10067516	1	78.80	PLUG, PLNM AIR BL LWR FRT	
93–95	Y 5.7J (LT5)	10199064	1	13.60	RETAINER, PLNM LWR FRT AIR BL PLUG	
85–91	Y 5.7–8 (L98)	14087401	1	10.20	SHIELD, INT MANIF OIL SPH	1–H2,66
92–96	Y 5.7P (LT1)	10128305	1	10.56	SHIELD, INT MANIF OIL SPH	4–G4,17
96	Y 5.7–5 (LT4)	10128305	1	10.56	SHIELD, INT MANIF OIL SPH	4–G4,17
85–88	Y	14081007	LH	DISCON	TUBE, INT MANIF	
85–91	Y 5.7–8 (L98)	14081008	RH	DISCON	TUBE, INT MANIF	
89–91	Y 5.7–8 (L98), FEDERAL EMIS (NA5)	10108469	LH	166.00	TUBE, INT MANIF (DULL)	4–F26,11
	*EXPORT**********EXPORT**********EXPORT**********EXPORT**********EXPORT*					
84	Y M/TRNS, NM8 (EXPORT)	14057016	1	DISCON	MANIFOLD, INT	

3.270 GASKET – GASKET KIT, Manifold to Cylinder Head

84	Y (5.7–8)	10174977	1	30.86	GASKET KIT, INT MANIF	1–G11,70
85	Y (5.7–8)	10159564	1	28.56	GASKET KIT, INT MANIF	1–G14,76
86	Y CAST IRON CYL HD (KB2)	10174956	1	56.87	GASKET KIT, INT MANIF	
86	Y ALUM HD	12506770	1	33.66	GASKET KIT, INT MANIF	
87–88	Y	12506770	1	33.66	GASKET KIT, INT MANIF	
89–90	Y 5.7–8	10148096	1	33.66	GASKET KIT, INT MANIF	
91	Y 5.7–8 (L98)	12525814	1	27.80	GASKET KIT, INT MANIF (FOA)	4–F26,10

© 2000 GENERAL MOTORS SERVICE PARTS OPERATIONS–CHEVROLET–14Y

3.270 GASKET – GASKET KIT, Manifold to Cylinder Head (Con't)

92–96	Y 5.7P (LT1)	12524653	1	24.53	GASKET KIT, INT MANIF	4–G4,15
96	Y 5.7–5 (LT4)	12528884	2	22.34	GASKET KIT, INT MANIF	4–G8,18
85–89	Y (5.7–8)	12508751	1	11.27	GASKET KIT, INT MANIF PLNM	4–F26,10
85–90	Y (5.7–8)	10174951	1	12.24	GASKET KIT, INT MANIF TUBE	4–F26,12
84–87	Y	10088110	4	9.74	GASKET, EXH MANIF (FRT & RR) (03.602)	1–H2,42
84–87	Y	10088112	2	9.74	GASKET, EXH MANIF (CTR) (03.602)	1–H2,36

3.272 GASKET, Intake to Exhaust Manifold

88–91	Y 5.7–8 (L98)	10088110	4	9.74	GASKET, EXH MANIF (FRT & RR) (03.602)	
88–91	Y 5.7–8 (L98)	10088112	2	9.74	GASKET, EXH MANIF (CTR) (03.602)	
90–95	Y 5.7J (LT5)	10187776	2	11.27	GASKET, EXH MANIF (03.270)	1–H20,540
92–95	Y 5.7P (LT1)	12552470	2	14.18	GASKET, EXH MANIF (03.270)	1–J17,516
96	Y	12552470	2	14.18	GASKET, EXH MANIF (03.270)	1–J17,516

3.275 BOLT – STUD, Intake & Exhaust Manifold

92–93	Y 5.7P (LT1)	9440073	2	2.25	BOLT, EXH MANIF (HFH 3/8–16X2.00 280M POR 6174M) (08.900)	1–I18,521
92–95	Y 5.7J (LT5)	10065580	2	.54	BOLT, EXH MANIF (HFH M8X1.25X37) (02.277)	
92–95	Y 5.7J (LT5)	10187720	2	23.40	BOLT, EXH MANIF	
94–96	Y 5.7P (LT1)	12552096	1	*.86	BOLT, EXH MANIF (3/8–16 X 2 1/8) (01.079)	1–J17,521
95	Y 5.7P (LT1)	9440073	2	2.25	BOLT, EXH MANIF (HFH 3/8–16X2.00 280M POR 6174M) (08.900)	1–I18,521
96	Y 5.7–5 (LT4)	12552096	1	*.86	BOLT, EXH MANIF (3/8–16 X 2 1/8) (01.079)	1–J17,521
85–90	Y	14082425	1	.42	BOLT, INL MANIF PLNM EXTN (4X.7X13)	4–F26,15
84	Y	14067336	9	DISCON	BOLT, INT MANIF (3/8–16X1.00 280M)	
90–91	Y 5.7–8 (L98)	10108661	4	DISCON	BOLT, INT MANIF (PAN HD TORX MACH, 3/8–16X1.375, 280M, PE) (03.265)	
85–88	Y	14081014	7	1.00	BOLT, INT MANIF PLNM (M8X1.25X30)	4–F26,21
91	Y 5.7–8 (L98)	14082425	1	.42	BOLT, INT MANIF PLNM EXTN (4X.7X13)	4–F26,15
85–88	Y	14081014	4	1.00	BOLT, INT MANIF TUBE (M8X1.25X30)	4–F26,21
85–88	Y	14081015	2	1.90	BOLT, INT MANIF TUBE (M8X1.25X34.5)	4–F26,19
85–88	Y	14081016	2	*1.55	BOLT, INT MANIF TUBE (M8X1.25X39.5)	
85–88	Y	14081017	4	*1.85	BOLT, INT MANIF TUBE (TORX HEAD 8X1.25X54)	4–F26,20
89–91	Y 5.7–8 (L98)	14081014	AR	1.00	BOLT, PLNM AIR INT TUBE (M8X1.25X30)	4–F26,21
89–91	Y 5.7–8 (L98)	14081015	2	1.90	BOLT, PLNM AIR INT TUBE (M8X1.25X34.5)	4–F26,19
89–91	Y 5.7–8 (L98)	14081016	2	*1.55	BOLT, PLNM AIR INT TUBE (M8X1.25X39.5)	
89–91	Y 5.7–8 (L98)	14081017	4	*1.85	BOLT, PLNM AIR INT TUBE (TORX HEAD 8X1.25X54)	4–F26,20

© 2000 GENERAL MOTORS SERVICE PARTS OPERATIONS – CHEVROLET – 14Y

3.275 BOLT – STUD, Intake & Exhaust Manifold (Con't)

91	Y 5.7–8 (L98), 6–SPD M/TRANS (ML9)	10085606	1	1.65	STUD, CLU HSG (3/8–16X25/32 BOTH ENDS)	
84–85	Y	3932448	1	7.45	STUD, EXH MANIF (NO.3 HOLE LH)	1–G14,60
84–87	Y	14057002	3	3.95	STUD, EXH MANIF (#1–4 RH, #2 LH)	3–F17,4
88–91	Y 5.7–8 (L98)	12550726	3	*1.48	STUD, EXH MANIF (#3–4 RH & #2 LH)	1–J17,522
88–91	Y 5.7–8 (L98)	14057002	3	3.95	STUD, EXH MANIF (#1–4 RH, #2 LH) (3/8 X 16 X 2.08)	3–F17,4
90–91	Y 5.7J (LT5)	10122161	2	5.50	STUD, EXH MANIF	
92–95	Y 5.7J (LT5)	10187719	2	23.40	STUD, EXH MANIF	
92–96	Y 5.7P (LT1)	12550726	3	*1.48	STUD, EXH MANIF	1–J17,522
92–93	Y 5.7P (LT1)	14057002	3	3.95	STUD, EXH MANIF (#1–4 RH, #2 LH) (3/8 X 16 X 2.08)	3–F17,4
96	Y 5.7–5 (LT4)	12550726	3	*1.48	STUD, EXH MANIF	1–J17,522
84–87	Y (5.7–8)	12550726	3	*1.48	STUD, EXH MANIF #1–4 RH & #2 LH	1–J17,522
92–96	Y 5.7P (LT1)	10106420	3	1.45	STUD, INT MANIF (3/8X16X1 3/8)	4–G8,26
96	Y 5.7–5 (LT4)	10106420	3	1.45	STUD, INT MANIF (3/8X16X1 3/8)	4–G8,26
84	Y	12552858	1	*1.30	STUD, INT MANIF #1 RH (01.153)	8–I24,10
89–91	Y 5.7–8 (L98)	14091678	1	2.25	STUD, INT MANIF PLENUM (M8X1.25X30)	1–H2,12
86–88	Y	14091678	1	2.25	STUD, INT MANIF PLNM (M8 X 1.25 X 30)	1–H2,12
85	Y	14084304	1	DISCON	STUD, INT MANIF PLNM #2 LH	

3.278 CAP – FITTING, Intake Manifold Vacuum

84	Y	489106	AR	.90	CAP, VAC FITT (.156 ID .320 OD RUBBER)	
84	Y	3989020	AR	3.25	FITTING, INL MANIF VAC	
85–88	Y	14082470	2	3.20	FITTING, INT MANIF VAC (IN PLENUM)	4–F26,22
89–91	Y 5.7–8 (L98)	14082470	2	3.20	FITTING, INT MANIF VAC (IN PLENUM)	4–F26,22
92–96	Y 5.7P (LT1)	14082470	3	3.20	FITTING, INT MANIF VAC (IN PLENUM)	4–F26,22
96	Y 5.7–5 (LT4)	14082470	3	3.20	FITTING, INT MANIF VAC (IN PLENUM)	4–F26,22
	*EXPORT*********EXPORT*********EXPORT*********EXPORT*********EXPORT*					
94–96	Y 5.7P (LT1), LEADED FUEL EMIS EXPORT (NM8)	3928101	1	1.27	CAP, VAC PORT (CAP, FITS TUBE OD 5/32, LTH .56, THK.07) (08.963)	
96	Y 5.7–5 (LT4), LEADED FUEL EMIS EXPORT (NM8)	3928101	1	1.27	CAP, VAC PORT (CAP, FITS TUBE OD 5/32, LTH .56, THK.07) (08.963)	

3.280 BOLT – BRACKET – CLIP – CONNECTOR – HOSE – NUT – PUMP – WASHER, Engine Vacuum Pump

91–95	Y 5.7J (LT5)	11514253	1	2.10	BOLT, VAC INTERFACE CLIP (M4.7X8–7.3 THD 9.8 PE) (08.913)	
90	Y (5.7J) SOFT RIDE SUSP (FE1), H .D .SUSP (FE7)	10098476	1	DISCON	BRACKET, VAC PUMP	
91	Y 5.7J (LT5), SOFT RIDE SUSP (FE1), HVY DUTY SUSP (FE7)	10098485	1	5.10	BRACKET, VAC PUMP	4–H25,17
92–95	Y 5.7J (LT5)	10098485	1	5.10	BRACKET, VAC PUMP	4–H25,17
90–95	Y 5.7J (LT5)	10090505	1	14.10	CLIP, VAC SCE HARN	4–H23,27

© 2000 GENERAL MOTORS SERVICE PARTS OPERATIONS–CHEVROLET–14Y

3.280 BOLT – BRACKET – CLIP – CONNECTOR – HOSE – NUT – PUMP – WASHER, Engine Vacuum Pump (Con't)

94–96	Y	12102747	1	21.07	CONNECTOR, MOT–VAC PUMP (BLACK) (2–WAY F) (W/LEADS) (03.670) (AC–DELCO #PT374)	
91	Y 5.7J (LT5), SOFT RIDE SUSP (FE1), HVY DUTY SUSP (FE7)	12102747	1	21.07	CONNECTOR, SW–VAC PUMP (BLACK) (2–WAY F) (W/LEADS) (03.670) (AC–DELCO #PT374)	
92	Y 5.7J (LT5)	12102747	1	21.07	CONNECTOR, SW–VAC PUMP (BLACK) (2- WAY F) (W/LEADS) (03.670) (AC–DELCO #PT374)	
90	Y (5.7J)	10098477	1	3.88	HOSE, VAC PUMP	4–H25,20
91	Y 5.7J (LT5), SOFT RIDE SUSP (FE1), HVY DUTY SUSP (FE7)	10098477	1	3.88	HOSE, VAC PUMP	4–H25,20
92–95	Y 5.7J (LT5)	10098477	1	3.88	HOSE, VAC PUMP	4–H25,20
90–95	Y 5.7J (LT5)	11503749	2	*.31	NUT, SECD PORT THROT VAC ACTR RSVR (PREV TORQ (STYLE–1) (M6X1, 5.9, 510M (10), CA) (NUT–HEX LOCK, PREV TORQ) (08.917) (AC–DELCO #11503749)	1–H25,637
90	Y (5.7J)	10098474	1	209.71	PUMP, VAC (AC–DELCO #215–118)	
91–95	Y 5.7J (LT5)	10098493	1	201.96	PUMP, VAC	4–H25,19
92–95	Y 5.7J (LT5)	11500322	2	*.34	WASHER, SECD PORT THROT VAC ACTR RSVR (M6.3X16.75X1.5 PH) (08.929)	1–H25,636

3.300 BRACKET – CONNECTOR – INJECTOR – INJECTOR KIT – MODULE – STUD – SWITCH, Fuel Injection

90	Y (5.7J) SOFT RIDE SUSP (FE1), H .D .SUSP (FE7) ...	14104925	1	DISCON	BRACKET, SECD F/INJR CONT MDL	
90	Y 5.7J (LT5)	12117271	2	57.63	CONNECTOR, SECD F/INJR CONT MDL (8–WAY F, W/LEADS, WHITE) (02.535) (AC–DELCO #PT444)	
93–95	Y 5.7J (LT5)	17109953	8	90.94	INJECTOR KIT, FUEL INJN SECD (W/CLIP) (SECONDARY) (AC–DELCO #217–281)	4–F2,6
85–88	Y 6.5P (L49), (2ND DES)	10108481	8	84.11	INJECTOR KIT, M/PORT FUEL (LUCAS) (ID BY CAV ON SI OF INJR) SEE 1ST DES 17110870 FOR 1985.17111418 FOR 1986 & 17111961 FOR 1987–1988 ID BY RP OR BY 5235041) (AC–DELCO #217–231)	
85	Y (1ST DES)	17110870	8	151.96	INJECTOR KIT, M/PORT FUEL (BOSCH) (ID BY RP LOGO ON SI OF INJR OR BY 5235041 ON SI OF INJR) (AC–DELCO #217–282)	
86	Y (1ST DES)	17111418	8	121.38	INJECTOR KIT, M/PORT FUEL (INJECTOR KIT, FUEL (BOSCH) (ID BY RP LOGO ON SI OF INJRS)) (AC–DELCO #217–285)	
87–88	Y 1ST DES	17111961	8	143.77	INJECTOR KIT, M/PORT FUEL (BOSCH) (ID BY RP LOGO ON SI OF INJRS) (AC–DELCO #217–289)	
89	Y 5.7–8 (L98)	17112285	8	125.07	INJECTOR KIT, M/PORT FUEL (AC–DELCO #217–292)	

© 2000 GENERAL MOTORS SERVICE PARTS OPERATIONS–CHEVROLET–14Y

3.300 BRACKET – CONNECTOR – INJECTOR – INJECTOR KIT – MODULE – STUD – SWITCH, Fuel Injection (Con't)

90–92	Y 5.7J (LT5)	17069647	8	125.07	INJECTOR KIT, M/PORT FUEL (PRIM W/CLIP) (AC–DELCO #217–256)	4–F2,5
90–92	Y 5.7J (LT5)	17069648	8	104.69	INJECTOR KIT, M/PORT FUEL (SECD) (W/CLIP) (AC–DELCO #217–257)	4–F2,6
90–91	Y 5.7–8 (L98)	17112285	8	125.07	INJECTOR KIT, M/PORT FUEL (STAMPED 17086544) (AC–DELCO #217–292)	
93–95	Y 5.7J (LT5)	17109952	8	96.23	INJECTOR KIT, M/PORT FUEL (PRIM W/CLIP) (AC–DELCO #217–280)	4–F2,5
96	Y 5.7–5 (LT4), 6–SPD M/TRANS (ML9)	17124251	8	106.79	INJECTOR KIT, M/PORT FUEL (AC–DELCO #217–314)	4–F8,4
92	Y 5.7P (LT1)	17105094	8	112.12	INJECTOR, M/PORT FUEL (AC–DELCO #217–272)	4–F5,13
93	Y 5.7P (LT1), 4–SPD A/TRANS (MD8)	17105094	8	112.12	INJECTOR, M/PORT FUEL (AC–DELCO #217–272)	4–F5,13
93	Y 5.7P (LT1), 6–SPD M/TRANS (ML9)	17105094	8	112.12	INJECTOR, M/PORT FUEL (AC–DELCO #217–272)	4–F5,13
94–96	Y 5.7P (LT1)	17124248	8	112.12	INJECTOR, M/PORT FUEL (AC–DELCO #217–313)	4–F8,4
90–95	Y 5.7J (LT5)	10086284	2	165.40	MODULE, SECD SEQ M/PORT F/INJN CONT (FRT & RR) (AC–DELCO #10086284)	3–H10,12
94–95	Y	10108672	4	1.53	STUD, F/INJR (*27, 33) (03.330) .	
85–88	Y	14084318	1	63.59	SWITCH, COLD START F/INJR (2 BLADE TERM, 3/8–18 THD) (03.329) (AC–DELCO #212–312)	4–J20,57

3.304 SEAL, Fuel Injector

90–95	Y 5.7J (LT5)	10067600	8	19.07	SEAL, F/INJR (O RING) (HOUSING) (03.305)	4–F2,8

3.305 BOLT – GASKET – HOUSING – PLUG, Fuel Injector

90–95	Y 5.7J (LT5)	3522444	2	.63	BOLT, F/INJR HSG (8X1.25X55, 22 THD, 18 OD, 9.8, PZOR, MACH) (01.840)	1–H25,604
90–95	Y 5.7J (LT5)	11509516	16	*.56	BOLT, F/INJR HSG (8X1.25X70) (08.900)	1–H25,604
90–92	Y 5.7J (LT5)	10067600	4	19.07	GASKET, F/INJR HSG	
90–92	Y 5.7J (LT5)	10110912	2	27.03	GASKET, F/INJR HSG (TO CYL HEAD)	
90–95	Y 5.7J (LT5)	10168664	2	44.64	GASKET, F/INJR HSG (TO PLENUM)	1–H25,605
93–95	Y 5.7J (LT5)	10225120	1	19.75	GASKET, F/INJR HSG (TO CYL HD)	1–H25,610
90	Y 5.7J (LT5)	10159505	LH	709.00	HOUSING, F/INJR	1–H25,606
90	Y 5.7J (LT5)	10159506	RH	709.00	HOUSING, F/INJR	1–H25,606
91–92	Y 5.7J (LT5), (1ST DES)	10159505	LH	709.00	HOUSING, F/INJR (1ST DES FOR 91, FOR 2ND DES SEE 12507649, 1ST DES ID BY INJR HOLE PLUGS, 2ND DES W/O INJR HOLE PLUGS)	1–H25,606
91–92	Y 5.7J (LT5), (1ST DES)	10159506	RH	709.00	HOUSING, F/INJR (1ST DES FOR 91, FOR 2ND DES SEE 12507650, 1ST DES ID BY INJR HOLE PLUGS, 2ND DES W/O INJR HOLE PLUGS)	1–H25,606

© 2000 GENERAL MOTORS SERVICE PARTS OPERATIONS–CHEVROLET–14Y

3.305 BOLT – GASKET – HOUSING – PLUG, Fuel Injector (Con't)

91–92	Y 5.7J (LT5), (2ND DES)	12507649	LH	716.04	HOUSING, F/INJR (2ND DES FOR 91, FOR 1ST DES SEE 10169505, 1ST DES ID BY INJR HOLE PLUGS, 2ND DES W/O INJR HOLE PLUGS)	1–H25,606
91–92	Y 5.7J (LT5), (2ND DES)	12507650	RH	716.04	HOUSING, F/INJR (2ND DES FOR 91, FOR 1ST DES SEE 10169506, 1ST DES ID BY INJR HOLE PLUGS, 2ND DES W/O INJR HOLE PLUGS)	1–H25,606
92	Y 5.7J (LT5)	10163541	LH		HOUSING, F/INJR	1–H25,606
92	Y 5.7J (LT5)	10163542	RH		HOUSING, F/INJR	1–H25,606
93–95	Y 5.7J (LT5)	12522327	LH	784.00	HOUSING, F/INJR	1–H25,606
93–95	Y 5.7J (LT5)	12522328	RH	738.48	HOUSING, F/INJR	1–H25,606
90–91	Y 5.7J (LT5), (1ST DES)	10135844	2	5.00	PLUG, F/INJR HOLE (1ST DES FOR 91, NO COMPARABLE 2ND DES) (1.78 ODX.215 IDX.17 THK) ...	
90–91	Y 5.7J (LT5), (1ST DES)	10135845	1	5.00	PLUG, F/INJR HOLE (1ST DEGN FOR 1991, NO COMPARABLE 2ND DEGN) (1.78 ODX.17 THK) .	
92–95	Y 5.7J (LT5)	10135844	2	5.00	PLUG, F/INJR HOLE (1.78 ODX.215 IDX.17 THK)	
92–93	Y 5.7J (LT5), (1ST DES)	10135845	1	5.00	PLUG, F/INJR HOLE (1.78 ODX.17 THK)	

3.314 BOLT, Fuel or Air Meter

90–95	Y 5.7J (LT5)	10110934	4	3.01	BOLT, THROT BODY ACTR (BUTN HD 6 LOBED SOC) (M5X0.8X22) (03.407)	1–H20,556

3.330 BOLT – CONNECTION KIT – COVER – FASTENER KIT – FITTING KIT – PIPE KIT – RAIL & TUBES KIT – RAIL KIT – REGULATOR – REGULATOR KIT – RETAINER – STUD – TUBE – TUBE KIT – VALVE KIT, Fuel Injection

86–87	Y	14081021	2	*1.25	BOLT, F/INJ RAIL FRT (08.913) ..	1–H2,130
88–91	Y 5.7–8 (L98)	14081021	2	*1.25	BOLT, F/INJ RAIL FRT (TORX HD 8X1.25X20) (08.913)	1–H2,130
90–95	Y 5.7J (LT5)	11516186	4	*.70	BOLT, F/INJN FUEL RL (M8X1.25X16 17.6.9.8PZOR) (08.900)	1–H25,602
92–94	Y 5.7P (LT1)	10108668	4	.73	BOLT, F/INJN FUEL RL (HFH, M8X1.25X35, 28 THD, 14 OD, 9.8;USE T/W 12345382 ADHES) .	1–I18,551
93–96	Y 5.7P (LT1)	11514667	4	.40	BOLT, F/INJN FUEL RL (6X1X35) (9.8 PEOR) (08.900)	1–J17,551
96	Y 5.7–5 (LT4)	11514667	4	.40	BOLT, F/INJN FUEL RL (6X1X35) (9.8 PEOR) (08.900)	1–J17,551
85–88	Y	17110854	1	28.76	CONNECTION KIT, FUEL PRESS (AC–DELCO #17110854)	
92–93	Y 5.7P (LT1)	10224935	LH	29.85	COVER, F/INJN FUEL RL	1–I23,259
92–93	Y 5.7P (LT1)	10224936	RH	29.85	COVER, F/INJN FUEL RL	1–I23,259
94–96	Y 5.7P (LT1)	10208794	LH	30.60	COVER, F/INJN FUEL RL	1–I23,259
94–96	Y 5.7P (LT1)	10208795	RH	30.60	COVER, F/INJN FUEL RL	1–I23,259
96	Y 5.7–5 (LT4)	12552431	LH	66.67	COVER, F/INJN FUEL RL	
96	Y 5.7–5 (LT4)	12552432	RH	66.67	COVER, F/INJN FUEL RL	
92–93	Y 5.7P (LT1)	17112640	1	25.07	FASTENER KIT, F/INJN FUEL RL (AC–DELCO #17112640)	4–F5,8

© 2000 GENERAL MOTORS SERVICE PARTS OPERATIONS–CHEVROLET–14Y

3.330 BOLT – CONNECTION KIT – COVER – FASTENER KIT – FITTING KIT – PIPE KIT – RAIL & TUBES KIT – RAIL KIT – REGULATOR – REGULATOR KIT – RETAINER – STUD – TUBE – TUBE KIT – VALVE KIT, Fuel Injection (Con't)

85–88	Y	17112073	1	19.28	FITTING KIT, COLD START VLV (THREADS TO FUEL RAIL) (AC–DELCO #17112073)	
85	Y 5.7–8 (L98)	17110858	1	DISCON	PIPE KIT, COLD START F/INJR (03.329)	
85–88	Y 5.7–8 (L98)	17112061	1	105.47	PIPE KIT, COLD START F/INJR (03.329) (AC–DELCO #17112061)	4–J17,36
85–87	Y	17113228	RH	328.01	RAIL & TUBES KIT, FUEL (AC–DELCO #17113228)	
88	Y	17113230	RH	311.16	RAIL KIT, M/PORT F/INJN FUEL (AC–DELCO #17113230)	
89–91	Y 5.7–8 (L98)	17113230	RH	311.16	RAIL KIT, M/PORT F/INJN FUEL (AC–DELCO #17113230)	
89–91	Y 5.7–8 (L98)	17113232	LH	187.74	RAIL KIT, M/PORT F/INJN FUEL (AC–DELCO #17113232)	
90–92	Y 5.7J (LT5)	17112218	LH	445.68	RAIL KIT, M/PORT F/INJN FUEL (AC–DELCO #17112218)	4–F2,1
90–92	Y 5.7J (LT5)	17112219	RH	445.68	RAIL KIT, M/PORT F/INJN FUEL (AC–DELCO #17112219)	4–F2,2
92–93	Y 5.7P (LT1)	17112635	LH	154.08	RAIL KIT, M/PORT F/INJN FUEL (AC–DELCO #17112635)	4–F5,11
92–93	Y 5.7P (LT1)	17113241	RH	155.61	RAIL KIT, M/PORT F/INJN FUEL (AC–DELCO #17113241)	4–F5,12
93–95	Y 5.7J (LT5)	17113024	LH	445.68	RAIL KIT, M/PORT F/INJN FUEL (AC–DELCO #17113024)	4–F2,1
93–95	Y 5.7J (LT5)	17113025	RH	454.59	RAIL KIT, M/PORT F/INJN FUEL (AC–DELCO #17113025)	4–F2,2
94–96	Y 5.7P (LT1)	17113249	LH	329.46	RAIL KIT, M/PORT F/INJN FUEL	4–F8,2
94–96	Y 5.7P (LT1)	17113250	RH	329.46	RAIL KIT, M/PORT F/INJN FUEL	4–F8,1
96	Y 5.7–5 (LT4)	17113249	LH	329.46	RAIL KIT, M/PORT F/INJN FUEL	4–F8,2
96	Y 5.7–5 (LT4)	17113250	RH	329.46	RAIL KIT, M/PORT F/INJN FUEL	4–F8,1
86–88	Y	17112281	1	149.80	REGULATOR KIT, FUEL PRESS (AC–DELCO #217–380)	
89	Y 5.7–8 (L98)	17112281	1	149.80	REGULATOR KIT, FUEL PRESS (AC–DELCO #217–380)	
90–92	Y 5.7J (LT5)	17112220	1	176.15	REGULATOR KIT, FUEL PRESS (AC–DELCO #217–378)	4–F2,3
90–91	Y 5.7–8 (L98)	17112281	1	149.80	REGULATOR KIT, FUEL PRESS (AC–DELCO #217–380)	
93–95	Y 5.7J (LT5)	17069632	1	181.44	REGULATOR KIT, FUEL PRESS (AC–DELCO #217–357)	4–F2,3
85	Y	17110868	1	102.00	REGULATOR KIT, PRESS (AC–DELCO #217–371)	
92	Y 5.7P (LT1)	17107010	1	109.67	REGULATOR, FUEL PRESS (REQUIRES O RING SEAL 17075384) (AC–DELCO #217–366)	4–F5,2
93	Y 5.7P (LT1), 6–SPD M/TRANS (ML9)	17107010	1	109.67	REGULATOR, FUEL PRESS (REQUIRES O RING SEAL 17075384) (AC–DELCO #217–366)	4–F5,2
93	Y 5.7P (LT1), 4–SPD A/TRANS (MD8)	17107010	1	109.67	REGULATOR, FUEL PRESS (REQUIRES O RING SEAL 17075384) (AC–DELCO #217–366)	4–F5,2

© 2000 GENERAL MOTORS SERVICE PARTS OPERATIONS–CHEVROLET–14Y

3.330 BOLT – CONNECTION KIT – COVER – FASTENER KIT – FITTING KIT – PIPE KIT – RAIL & TUBES KIT – RAIL KIT – REGULATOR – REGULATOR KIT – RETAINER – STUD – TUBE – TUBE KIT – VALVE KIT, Fuel Injection (Con't)

94–95	Y 5.7P (LT1)	17107010	1	109.67	REGULATOR, FUEL PRESS (REQUIRES O RING SEAL 17075384) (AC–DELCO #217–366)	4–F5,2
96	Y 5.7–5 (LT4), 6–SPD M/TRANS (ML9)	17091410	1	59.59	REGULATOR, FUEL PRESS (AC–DELCO #217–364)	4–F8,3
96	Y 5.7P (LT1), 4–SPD A/TRANS (M30)	17091410	1	59.59	REGULATOR, FUEL PRESS (AC–DELCO #217–364)	4–F8,3
94	Y 5.7P (LT1)	17122259	1	10.49	RETAINER, FUEL PRESS REG (W/SPCR) (AC–DELCO #17122259)	4–F8,8
95–96	Y 5.7P (LT1)	17122259	1	10.49	RETAINER, FUEL PRESS REG (W/SPCR) (AC–DELCO #17122259)	4–F8,8
96	Y 5.7–5 (LT4)	17122259	1	10.49	RETAINER, FUEL PRESS REG (W/SPCR) (AC–DELCO #17122259)	4–F8,8
89–90	Y	20664092	AR	*.40	RETAINER, SECD F/INJ CONT MDL BRKT (01.276)	
92–95	Y 5.7P (LT1)	10108672	4	1.53	STUD, F/INJN FUEL RL	3–H12,6
96	Y 5.7P (LT1), 5.7–5 (LT4)	10108672	4	1.53	STUD, F/INJN FUEL RL	3–H12,6
85–88	Y	17113252	1	50.10	TUBE KIT, C/OVR (AC–DELCO #17113252)	
92	Y 5.7P (LT1)	17112639	1	150.10	TUBE KIT, F/INJN FUEL RL C/OVR	4–F5,1
93	Y 5.7P (LT1), 4–SPD A/TRANS (MD8)	17112639	1	150.10	TUBE KIT, F/INJN FUEL RL C/OVR	4–F5,1
93	Y 5.7P (LT1), 6–SPD M/TRANS (ML9)	17112639	1	150.10	TUBE KIT, F/INJN FUEL RL C/OVR	4–F5,1
94–96	Y 5.7P (LT1)	17113088	1	26.52	TUBE, F/INJN FUEL RL C/OVR	4–F8,12
96	Y 5.7–5 (LT4)	17113088	1	26.52	TUBE, F/INJN FUEL RL C/OVR	4–F8,12
92	Y 5.7P (LT1)	10105322	1	2.04	TUBE, FUEL PRESS REG VAC	1–I18,543
93	Y 5.7P (LT1), 4–SPD A/TRANS (MD8)	10105322	1	2.04	TUBE, FUEL PRESS REG VAC	1–I18,543
93	Y 5.7P (LT1), 6–SPD M/TRANS (ML9)	10105322	1	2.04	TUBE, FUEL PRESS REG VAC	1–I18,543
94–96	Y 5.7P (LT1)	10216953	1	2.35	TUBE, FUEL PRESS REG VAC	1–J17,543
96	Y 5.7–5 (LT4)	10216953	1	2.35	TUBE, FUEL PRESS REG VAC	1–J17,543
89–91	Y 5.7–8 (L98)	17110854	1	28.76	VALVE KIT, FUEL PRESS SERV (AC–DELCO #17110854)	
92–93	Y 5.7P (LT1)	17112759	1	25.60	VALVE KIT, FUEL PRESS SERV (AC–DELCO #217–388)	4–F5,3
94–96	Y 5.7P (LT1)	17112556	1	25.30	VALVE KIT, FUEL PRESS SERV (AC–DELCO #217–384)	4–F8,5
96	Y 5.7–5 (LT4)	17112556	1	25.30	VALVE KIT, FUEL PRESS SERV (AC–DELCO #217–384)	4–F8,5

3.331 BOLT KIT – SEAL – SEAL KIT, Multi Port Fuel Injection Fuel Rail

85–88	Y (5.7–8)	17110873	1	16.75	BOLT KIT, F/INJN FUEL RL (03.330) (AC–DELCO #17110873)	
89–91	Y 5.7–8 (L98), FEDERAL EMIS (NA5)	17110873	1	16.75	BOLT KIT, F/INJN FUEL RL (03.330) (AC–DELCO #17110873)	
90–95	Y 5.7J (LT5)	17112223	1	157.16	BOLT KIT, F/INJN FUEL RL (03.330) (AC–DELCO #17112223)	4–F2,9
92	Y 5.7P (LT1)	17112638	1	13.04	BOLT KIT, F/INJN FUEL RL (03.330) (AC–DELCO #17112638)	4–F5,7
93	Y 5.7P (LT1), 4–SPD A/TRANS (MD8)	17112638	1	13.04	BOLT KIT, F/INJN FUEL RL (03.330) (AC–DELCO #17112638)	4–F5,7

© 2000 GENERAL MOTORS SERVICE PARTS OPERATIONS–CHEVROLET–14Y

3.331 BOLT KIT – SEAL – SEAL KIT, Multi Port Fuel Injection Fuel Rail (Con't)

93	Y 5.7P (LT1), 6–SPD M/TRANS (ML9)	17112638	1	13.04	BOLT KIT, F/INJN FUEL RL (03.330) (AC–DELCO #17112638)	4–F5,7
94–96	Y 5.7P (LT1)	17089152	1	7.73	BOLT KIT, F/INJN FUEL RL (03.330) (AC–DELCO #17089152)	4–F8,9
96	Y 5.7–5 (LT4)	17089152	1	7.73	BOLT KIT, F/INJN FUEL RL (03.330) (AC–DELCO #17089152)	4–F8,9
94–96	Y 5.7P (LT1)	17113086	1	6.87	SEAL KIT, F/INJN FUEL RL (FUEL RAIL) (AC–DELCO #217–449)	4–F8,10
96	Y 5.7–5 (LT4)	17113086	1	6.87	SEAL KIT, F/INJN FUEL RL (FUEL RAIL) (AC–DELCO #217–449)	4–F8,10
85–88	Y	17112222	2	19.33	SEAL KIT, F/INJR (O RING) (AC–DELCO #217–455)	4–F2,7
89	Y 5.7–8 (L98)	17112222	2	19.33	SEAL KIT, F/INJR (O RING) (AC–DELCO #217–455)	4–F2,7
89–91	Y 5.7–8 (L98)	17112222	2	19.33	SEAL KIT, F/INJR (O RING) (15 X 3.6MM, 7.8 HOLE) (CONTAINS 12–05235032 SEALS) (AC–DELCO #217–455)	4–F2,7
90–92	Y 5.7J (LT5)	17112222	2	19.33	SEAL KIT, F/INJR (O RING) (15 X 3.6MM, 7.8 HOLE) (CONTAINS 12–05235032 SEALS) (AC–DELCO #217–455)	4–F2,7
92	Y 5.7P (LT1)	17112222	2	19.33	SEAL KIT, F/INJR (O RING) (15 X 3.6MM, 7.8 HOLE) (CONTAINS 12–05235032 SEALS) (AC–DELCO #217–455)	4–F2,7
93	Y 5.7P (LT1), 6–SPD M/TRANS (ML9)	17112222	2	19.33	SEAL KIT, F/INJR (O RING) (15 X 3.6MM, 7.8 HOLE) (CONTAINS 12–05235032 SEALS) (AC–DELCO #217–455)	4–F2,7
93–95	Y 5.7J (LT5)	17112981	1	17.78	SEAL KIT, F/INJR (O RING) (MAY CONTAIN 12 BLK, OR 6 BLK/ 6 BRN O–RINGS IN KIT) (AC–DELCO #17112981)	4–F2,7
94–96	Y 5.7P (LT1)	17112981	1	17.78	SEAL KIT, F/INJR (O RING) (MAY CONTAIN 12 BLK, OR 6 BLK/ 6 BRN O–RINGS IN KIT) (AC–DELCO #17112981)	4–F2,7
96	Y 5.7–5 (LT4)	17112981	1	17.78	SEAL KIT, F/INJR (O RING) (MAY CONTAIN 12 BLK, OR 6 BLK/ 6 BRN O–RINGS IN KIT) (AC–DELCO #17112981)	4–F2,7
85–88	Y 5.7–8 (L98)	17111954	1	14.36	SEAL, COLD START F/INJR PIPE (O RING) (03.329) (AC–DELCO #17111954)	4–J17,38

3.332 RETAINER KIT, Fuel Injector Metering

85–88	Y	17111267	1	4.81	RETAINER KIT, F/INJR (AC–DELCO #17111267)	
89–91	Y 5.7–8 (L98)	17111267	1	4.81	RETAINER KIT, F/INJR (CONTAINS 5 PCS) (AC–DELCO #17111267)	
90–95	Y 5.7J (LT5)	17111800	8	5.67	RETAINER KIT, F/INJR (AC–DELCO #17111800)	4–F2,8
92–96	Y 5.7P (LT1)	17112633	1	25.99	RETAINER KIT, F/INJR (AC–DELCO #17112633)	4–F5,6
94–96	Y 5.7P (LT1)	17113089	1	21.18	RETAINER KIT, F/INJR (W/BRKT)	4–F8,11
96	Y 5.7–5 (LT4)	17112633	1	25.99	RETAINER KIT, F/INJR (AC–DELCO #17112633)	4–F5,6
96	Y 5.7–5 (LT4)	17113089	1	21.18	RETAINER KIT, F/INJR (W/BRKT)	4–F8,11

3.335 BODY – BODY KIT – BOLT – HORN – THROTTLE – VALVE, Fuel Injection Air Motor

NOTE: FOR 1985–1991 USAGE REFER TO THROTTLE BODY CHART GPP 3.335

85–86	Y FOR MDL APPL & POA SEE THROT BODY CHT	17110843	1	404.98	BODY KIT, THROTTLE (AC–DELCO #17110843)	4–F13,1
87–88	Y FOR MDL APPL & POA SEE THROT BODY CHT	17110849	1	404.98	BODY KIT, THROTTLE (AC–DELCO #17110849)	4–F13,1
89	Y FOR MDL APPL & POA SEE THROT BODY CHT	17112126	1	381.81	BODY KIT, THROTTLE (AC–DELCO #17112126)	4–F13,1
92–95	Y 5.7J (LT5)	17088018	1		BODY, THROT	
92–93	Y 5.7P (LT1)	17092076	1	638.05	BODY, THROT (AC–DELCO #17092076)	
94	Y 5.7P (LT1)	17094051	1	565.00	BODY, THROT	4–F22,1
95	Y 5.7P (LT1)	17095239	1	480.26	BODY, THROT (AC–DELCO #17095239)	4–F22,1
96	Y 5.7P (LT1), 4–SPD A/TRANS (M30)	17096245	1	423.52	BODY, THROT (03.725) (AC–DELCO #17096245)	4–F22,1
96	Y 5.7–5 (LT4), 6–SPD M/TRANS (ML9)	17096246	1	423.52	BODY, THROT (03.725) (AC–DELCO #17096246)	4–F24,1
85	Y (5.7–8)	17085049	1		BODY, THROTTLE	
86	Y (5.7–8)	17086049	1		BODY, THROTTLE	
87–88	Y (5.7–8)	17086051	1		BODY, THROTTLE	1–G19,118
90–95	Y 5.7J (LT5)	11508805	1	*.41	BOLT, SOL (TO CYL CASE) (HFH M6X1X16 9.8 PDR 14 OD 14MM THD) (08.900)	1–H25,634
90	Y 5.7J (LT5)	10140623	1	450.84	HORN, THROT BODY AIR (03.407) .	4–G2,6
91–95	Y 5.7J (LT5)	12509722	1	520.20	HORN, THROT BODY AIR	4–G2,6
89	Y 5.7–8 (L98), ((5.7–8) FED)	17089023	1		THROTTLE BODY ASM	
90–91	Y 5.7J (LT5)	17088018	1		THROTTLE BODY ASM	
90–95	Y 5.7J (LT5)	1997222	1	28.60	VALVE, INT MANIF RUNNER C/VLV ACTR SOL (AC–DELCO #1997222)	1–H25,632

MICROFICHE INDEX

GROUP 3.000

FICHE 4 OF 11

GROUP	DESCRIPTION	STARTING GRID LOCATION PARTS	ILLUSTRATIONS
–	GENERAL INFORMATION	1–A2	1–G2
–	ALPHABETICAL INDEX	1–B13	N.A.
3.000	FUEL TANK – INTAKE MANIFOLD – FUEL INJECTION – THROTTLE BODY – AIR CLEANER – ACCELERATOR	4–A2	4–E2
3.000	EXHAUST & EMISSIONS SYSTEMS – CARBURETOR – CRUISE – FUEL FILTER & PUMP	4–C2	4–H2
–	OUT OF FICHE CALLS	N.A.	4–M9

4–B1

1985 THROTTLE BODY ASSEMBLIES

PRODUCTION NUMBER	DIV.	USAGE	COLUMN
17085049	1	Y(5.7-8)	1

GROUP	DESCRIPTION	QTY	1	2	3	4	5
3.335	THROTTLE BODY ASM(PRODUCTION)	1	17085049	—	—	—	—
3.336	GASKET KIT	1	17113115	—	—	—	—
3.335	THROTTLE BODY KIT(SERVICE)	1	17110843	—	—	—	—
3.337	COVER KIT,CLEAN AIR	1	17110846	—	—	—	—
3.337	COVER KIT,COOLANT IDLE AIR CONTROL VLV	1	17110847	—	—	—	—
3.336	FASTENER ASSORTMENT KIT	1	17110848	—	—	—	—
3.339	SENSOR KIT,THROTTLE POSITION	1	17111606	—	—	—	—
3.338	VALVE KIT,IDLE AIR CONTROL	1	25527077	—	—	—	—

ADDITIONAL ATTACHING PARTS

DIV.	GROUP	MODEL USAGE	NOUN NAME & DESCRIPTION	QTY	PART
1	8.866	Y(5.7-8)	NIPPLE, HTR HOSE INL	01	22532158
1	3.336	Y(5.7-8)	GASKET,THROT BODY	01	10105379
1	3.337	Y	HOSE,THROT BODY HTR	01	10108509

1986 THROTTLE BODY ASSEMBLIES

PRODUCTION NUMBER	DIV.	USAGE	COLUMN
17086049	1	Y(5.7-8)	1

GROUP	DESCRIPTION	QTY	1	2	3	4	5
3.335	THROTTLE BODY ASM(PRODUCTION)	1	17086049	—	—	—	—
3.336	GASKET KIT	1	17113115	—	—	—	—
3.335	THROTTLE BODY KIT(SERVICE)	1	17110843	—	—	—	—
3.337	COVER KIT,CLEAN AIR	1	17110846	—	—	—	—
3.337	COVER KIT,COOLANT IDLE AIR CONTROL VLV	1	17110847	—	—	—	—
3.336	FASTENER ASSORTMENT KIT	1	17110848	—	—	—	—
3.339	SENSOR KIT,THROTTLE POSITION	1	17111606	—	—	—	—
3.338	VALVE KIT,IDLE AIR CONTROL	1	25527077	—	—	—	—

ADDITIONAL ATTACHING PARTS

DIV.	GROUP	MODEL USAGE	NOUN NAME & DESCRIPTION	QTY	PART
1	8.866	Y(5.7-8)	NIPPLE, HTR HOSE INL	01	22532158
1	3.336	Y(5.7-8)	GASKET,THROT BODY	01	10105379
1	3.337	Y	HOSE,THROT BODY HTR	01	10108509

© 2000 GENERAL MOTORS SERVICE PARTS OPERATIONS-CHEVROLET-14Y

1987 THROTTLE BODY ASSEMBLIES

PRODUCTION NUMBER	DIV.	USAGE	COLUMN
17086051	1	Y(5.7-8)	1

GROUP	DESCRIPTION	QTY	1	2	3	4	5
3.335	THROTTLE BODY ASM(PRODUCTION)	1	17086051	—	—	—	—
3.336	GASKET KIT	1	17113115	—	—	—	—
3.335	THROTTLE BODY KIT(SERVICE)	1	17110849	—	—	—	—
3.337	COVER KIT,CLEAN AIR	1	17110846	—	—	—	—
3.337	COVER KIT,COOLANT IDLE AIR CONTROL VLV	1	17110847	—	—	—	—
3.336	FASTENER ASSORTMENT KIT	1	17110848	—	—	—	—
3.339	SENSOR KIT,THROTTLE POSITION	1	17111606	—	—	—	—
3.338	VALVE KIT,IDLE AIR CONTROL	1	25527077	—	—	—	—

ADDITIONAL ATTACHING PARTS

DIV.	GROUP	MODEL USAGE	NOUN NAME & DESCRIPTION	QTY	PART
1	8.866	Y(5.7-8)	NIPPLE, HTR HOSE INL	01	22532158
1	3.336	Y(5.7-8)	GASKET,THROT BODY	01	10105379
1	3.337	Y	HOSE,THROT BODY HTR	01	10108509

1988 THROTTLE BODY ASSEMBLIES

PRODUCTION NUMBER	DIV.	USAGE	COLUMN
17086051	1	Y(5.7-8)	1

GROUP	DESCRIPTION	QTY	1	2	3	4	5
3.335	THROTTLE BODY ASM(PRODUCTION)	1	17086051	—	—	—	—
3.336	GASKET KIT	1	17113115	—	—	—	—
3.335	THROTTLE BODY KIT(SERVICE)	1	17110849	—	—	—	—
3.337	COVER KIT,CLEAN AIR	1	17110846	—	—	—	—
3.337	COVER KIT,COOLANT IDLE AIR CONTROL VLV	1	17110847	—	—	—	—
3.336	FASTENER ASSORTMENT KIT	1	17110848	—	—	—	—
3.339	SENSOR KIT,THROTTLE POSITION	1	17111606	—	—	—	—
3.338	VALVE KIT,IDLE AIR CONTROL	1	25527077	—	—	—	—

ADDITIONAL ATTACHING PARTS

DIV.	GROUP	MODEL USAGE	NOUN NAME & DESCRIPTION	QTY	PART
1	8.866	Y(5.7-8)	VALVE, HTR WAT FLOW CONT	01	22532158
1	3.336	Y(5.7-8)	GASKET,THROT BODY	01	10105379
1	3.337	Y	HOSE,THROT BODY HTR	01	10108509

1989 THROTTLE BODY ASSEMBLIES

PRODUCTION NUMBER	DIV.	USAGE	COLUMN
17089023	1	Y(5.7-8)W/FED	1

GROUP	DESCRIPTION	QTY	1	2	3	4	5
3.335	THROTTLE BODY ASM(PRODUCTION)	1	17089023	—	—	—	—
3.336	GASKET KIT	1	17113115	—	—	—	—
3.335	THROTTLE BODY KIT(SERVICE)	1	17112126	—	—	—	—
3.337	COVER KIT,CLEAN AIR	1	17112134	—	—	—	—
3.337	COVER KIT,COOLANT IDLE AIR CONTROL VLV	1	17112127	—	—	—	—
3.336	FASTENER ASSORTMENT KIT	1	17110848	—	—	—	—
3.339	SENSOR KIT,THROTTLE POSITION	1	17111606	—	—	—	—
3.338	VALVE KIT,IDLE AIR CONTROL	1	17112193	—	—	—	—

ADDITIONAL ATTACHING PARTS

DIV.	GROUP	MODEL USAGE	NOUN NAME & DESCRIPTION	QTY	PART
1	8.866	Y(5.7-8)	VALVE,HTR WAT FLOW CONT	01	22532150
1	3.336	Y(5.7-8)W/FED	GASKET,THROT BODY	01	10105351
1	3.335	Y(5.7-8)	GASKET,THROTTLE BODY	01	10105351
1	3.337	Y(5.7-8)	HOSE,THROT BODY HTR	01	10108509

1990 THROTTLE BODY ASSEMBLIES

PRODUCTION NUMBER	DIV.	USAGE	COLUMN
17088018	1	Y(5.7J)	1
17090154	1	Y(5.7-8)	2

GROUP	DESCRIPTION	QTY	1	2	3	4	5
3.335	THROTTLE BODY ASM(PRODUCTION)	1	17088018	17112385	—	—	—
3.336	GASKET KIT	1	17112267	17113115	—	—	—
3.335	THROTTLE BODY KIT(SERVICE)	1	17112264	17112385	—	—	—
3.337	COVER KIT,CLEAN AIR	1	—	17112134	—	—	—
3.337	COVER KIT,COOLANT	1	17112265	—	—	—	—
3.337	COVER KIT,COOLANT IDLE AIR CONTROL VLV	1	—	17112127	—	—	—
3.336	FASTENER ASSORTMENT KIT	1	17112266	17112369	—	—	—
3.339	SENSOR KIT,THROTTLE POSITION	1	17112720	17112368	—	—	—
3.338	VALVE KIT,IDLE AIR CONTROL	1	—	17112193	—	—	—
3.338	VALVE KIT,IDLE AIR CONTROL,W/MOTOR	1	17112350	—	—	—	—

ADDITIONAL ATTACHING PARTS

DIV.	GROUP	MODEL USAGE	NOUN NAME & DESCRIPTION	QTY	PART
1	3.336	Y(5.7J)	BOLT,THROT BODY TO PLENUM	02	11514493
1	3.336	Y(5.7-8)W/FED	GASKET,THROT BODY	01	10105351
1	3.335	Y(5.7J)	GASKET,THROTTLE BODY(INTAKE)	01	10067759
1	3.335	Y(5.7J)	GASKET,THROTTLE BODY(PLENUM)	01	10067760
1	3.337	Y(5.7-8)	HOSE,THROT BODY HTR	01	10108509

© 2000 GENERAL MOTORS SERVICE PARTS OPERATIONS-CHEVROLET-14Y

1991 THROTTLE BODY ASSEMBLIES

PRODUCTION NUMBER	DIV.	USAGE	COLUMN
17088018	1	Y(5.7J)	1
17090154	1	Y(5.7-B)	2

GROUP	DESCRIPTION	QTY	1	2	3	4	5
3.335	THROTTLE BODY ASM(PRODUCTION)	1	17088018	17112385	—	—	—
3.336	GASKET KIT	1	17112267	17113115	—	—	—
3.335	THROTTLE BODY KIT(SERVICE)	1	17112264	17112385	—	—	—
3.337	COVER KIT,CLEAN AIR	1	—	17112134	—	—	—
3.337	COVER KIT,COOLANT	1	17112265	—	—	—	—
3.337	COVER KIT,COOLANT IDLE AIR CONTROL VLV	1	—	17112127	—	—	—
3.336	FASTENER ASSORTMENT KIT	1	17112266	17112369	—	—	—
3.339	SENSOR KIT,THROTTLE POSITION	1	17112720	17112368	—	—	—
3.338	VALVE KIT,IDLE AIR CONTROL	1	—	17112193	—	—	—
3.338	VALVE KIT,IDLE AIR CONTROL,W/MOTOR	1	17112350	—	—	—	—

ADDITIONAL ATTACHING PARTS

DIV.	GROUP	MODEL USAGE	NOUN NAME & DESCRIPTION	QTY	PART
1	3.336	Y(5.7J)	BOLT,THROT BODY TO PLENUM	02	11514493
1	3.336	Y(5.7-B)W/FED	GASKET,THROT BODY	01	10105351
1	3.335	Y(5.7J)	GASKET,THROTTLE BODY(INTAKE)	01	10067759
1	3.335	Y(5.7J)	GASKET,THROTTLE BODY(PLENUM)	01	10168680

© 2000 GENERAL MOTORS SERVICE PARTS OPERATIONS-CHEVROLET-14Y

3.336 ATTACHMENT KIT – BOLT – FASTENER – GASKET – GASKET KIT, Multi Port Fuel Injection Throttle Body

NOTE: FOR 1985–1991 USAGE REFER TO THROTTLE BODY CHARTS GRP 3.335

92–95	Y 5.7J (LT5)	17112266	1	37.07	ATTACHMENT KIT, THROT BODY (AC–DELCO #17112266)	4–F16,6
92–93	Y 5.7P (LT1)	17112832	1	20.77	ATTACHMENT KIT, THROT BODY (AC–DELCO #17112832)	4–F18,5
94–95	Y 5.7P (LT1)	17113076	1	11.83	ATTACHMENT KIT, THROT BODY .	4–F22,5
96	Y	17113098	1	20.36	ATTACHMENT KIT, THROT BODY (AC–DELCO #17113098)	4–F22,5
90–95	Y 5.7J (LT5)	11514493	2	12.75	BOLT, THROT BODY (TO PLENUM) (M8X1.25X35)	1–H20,562
91–95	Y 5.7J (LT5)	11514556	3	4.55	BOLT, THROT BODY (TO PLENUM) (M8X1.25X70, 38 THD, 9.8, PE) (08.913)	1–H20,562
92–96	Y 5.7P (LT1)	11508083	4	*1.10	BOLT, THROT BODY (HFH M8X1.25X65 9.8 POR 17.6 OD) (08.900)	4–G4,4
96	Y 5.7–5 (LT4)	11508083	4	*1.10	BOLT, THROT BODY (HFH M8X1.25X65 9.8 POR 17.6 OD) (08.900)	4–G4,4
85–89	Y FOR MDL APPL & POA SEE THROT BODY CHT	17110848	1	18.36	FASTENER ASSORT KIT (AC–DELCO #17110848)	4–F13,7
90–91	Y FOR MDL APPL & POA SEE THROT BODY CHT	17112266	1	37.07	FASTENER ASSORT KIT (AC–DELCO #17112266)	4–F16,6
89–91	Y FOR MDL APPL & POA SEE THROT BODY CHT	17112133	1	DISCON	GASKET KIT	
85–88	Y FOR MDL APPL & POA SEE THROT BODY CHT	17113115	1	18.58	GASKET KIT, THROT BODY (NO LONGER CONTAINS FLANGE GASKET–MUST ORDER SEPARATELY) (AC–DELCO #40–709)	4–F13,2
89–91	Y FOR MDL APPL & POA SEE THROT BODY CHT	17113115	1	18.58	GASKET KIT, THROT BODY (FLANGE GASKET IS NOT INCLUDED IN KIT) (AC–DELCO #40–709)	4–F13,2
90–91	Y FOR MDL APPL & POA SEE THROT BODY CHT	17112267	1	12.40	GASKET KIT, THROT BODY (AC–DELCO #40–738)	4–F16,2
92–95	Y 5.7J (LT5)	17112267	1	12.40	GASKET KIT, THROT BODY (AC–DELCO #40–738)	4–F16,2
92	Y 5.7P (LT1)	17112833	1	33.76	GASKET KIT, THROT BODY (AC–DELCO #40–742)	4–F18,2
93	Y 5.7P (LT1), 4–SPD A/TRANS (MD8), 6–SPD M/TRANS (ML9)	17112833	1	33.76	GASKET KIT, THROT BODY (AC–DELCO #40–742)	4–F18,2
94–95	Y 5.7P (LT1)	17113074	1	8.28	GASKET KIT, THROT BODY (AC–DELCO #40–743)	4–F22,2
95–96	Y 5.7P (LT1)	17113178	1	18.73	GASKET KIT, THROT BODY (AC–DELCO #40–744)	4–F22,2
96	Y 5.7–5 (LT4)	17113178	1	18.73	GASKET KIT, THROT BODY (AC–DELCO #40–744)	4–F22,2
85–88	Y (5.7–8)	10105379	1	2.67	GASKET, THROT BODY (AC–DELCO #40–718)	4–F13,1
89–91	Y 5.7–8 (L98)	10100351	1	*3.43	GASKET, THROT BODY (AC–DELCO #40–717)	4–F13,1
90–95	Y 5.7J (LT5)	10067759	1	2.24	GASKET, THROT BODY (BETWEEN THROTTLE BODY & HORN) (03.335)	4–F16,3
90–95	Y 5.7J (LT5)	10168680	1	21.06	GASKET, THROT BODY (BETWEEN PLENUM & THROTTLE BODY)	4–F16,2

© 2000 GENERAL MOTORS SERVICE PARTS OPERATIONS–CHEVROLET–14Y

3.336 ATTACHMENT KIT – BOLT – FASTENER – GASKET – GASKET KIT, Multi Port Fuel Injection Throttle Body (Con't)

92–96	Y 5.7P (LT1)	10105379	1	2.67	GASKET, THROT BODY (AC–DELCO #40–718)	4–F13,1
96	Y 5.7–5 (LT4)	10105379	1	2.67	GASKET, THROT BODY (AC–DELCO #40–718)	4–F13,1

3.337 CLAMP – COVER KIT – HOSE, Throttle Body Coolant Supply

NOTE: FOR 1985–1991 USAGE REFER TO THROTTLE BODY CHART GRP 3.335

92–94	Y 5.7P (LT1)	10115739	2	1.50	CLAMP, THROT BODY HT INL HOSE (20MM) (STAMPED "20") (200N FORCE) (08.948)	4–G4,6
92	Y 5.7P (LT1)	25665982	1	1.99	CLAMP, THROT BODY HT INL HOSE (08.948)	4–G4,6
96	Y 5.7P (LT1)	22527587	AR	1.75	CLAMP, THROT BODY HT INL HOSE (20.0 X 12.4) (WORM GEAR, 1/2–13/16) (08.948) ...	1–J12,324
96	Y 5.7–5 (LT4)	22527587	AR	1.75	CLAMP, THROT BODY HT INL HOSE (20.0 X 12.4) (WORM GEAR, 1/2–13/16) (08.948) ...	1–J12,324
85–88	Y FOR MDL APPL & POA SEE THROT BODY CHT	17110846	1	84.07	COVER KIT, CLEAN AIR (AC–DELCO #17110846)	4–F13,3
89–91	Y FOR MDL APPL & POA SEE THROT BODY CHT	17112134	1	36.56	COVER KIT, CLEAN AIR (AC–DELCO #17112134)	4–F13,3
90–91	Y FOR MDL APPL & POA SEE THROT BODY CHT	17112265	1	60.55	COVER KIT, COOLANT (AC–DELCO #17112265)	4–F16,4
85–88	Y FOR MDL APPL & POA SEE THROT BODY CHT	17110847	1	84.07	COVER KIT, COOLANT IDLE AIR CONTROL VLV (AC–DELCO #17110847)	4–F13,4
89–91	Y FOR MDL APPL & POA SEE THROT BODY CHT	17112127	1	36.07	COVER KIT, COOLANT IDLE AIR CONTROL VLV (AC–DELCO #17112127)	4–F13,4
92–96	Y 5.7P (LT1)	17112831	1	24.97	COVER KIT, THROT BODY (AC–DELCO #17112831)	4–F18,3
96	Y 5.7–5 (LT4), 6–SPD M/TRANS (ML9)	17113211	1	23.79	COVER KIT, THROT BODY ("GRAND SPORT" ON TOP OF CVR) (AC–DELCO #17113211)	4–F24,3
92–95	Y 5.7J (LT5)	17112265	1	60.55	COVER KIT, THROT BODY HT (W/GSKT) (AC–DELCO #17112265)	4–F16,4
85–88	Y	10108509	1	5.76	HOSE, THROT BODY HTR	4–F26,18
89	Y (5.7–8)	10108509	1	5.76	HOSE, THROT BODY HTR	4–F26,18
92–94	Y 5.7P (LT1)	10108618	1	7.14	HOSE, THROT BODY HTR INL (03.726)	4–G4,7
95–96	Y 5.7P (LT1)	12553625	1	1.84	HOSE, THROT BODY HTR INL ...	4–G8,25
96	Y 5.7–5 (LT4)	12553625	1	1.84	HOSE, THROT BODY HTR INL ...	4–G8,25

3.338 ACTUATOR – BEARING – BOLT – BRACKET – BUSHING – CONNECTOR – COVER – HOSE – HOUSING KIT – LEVER – LINK – NUT – RETAINER – SEAL – SHAFT – TANK – VALVE – VALVE KIT – WASHER, Multi Port Fuel Injection Idle Air

NOTE: FOR 1985–1991 USAGE REFER TO THROTTLE BODY CHART GRP 3.335

90–95	Y 5.7J (LT5)	1996743	2	42.84	ACTUATOR, INT MANIF RUNNER C/VLV (03.314)	1–H25,629
90–95	Y 5.7J (LT5)	10122114	8	67.83	BEARING, INT MANIF RUNNER C/VLV SHF (03.302)	1–H25,620
90–95	Y 5.7J (LT5)	11514887	16	2.14	BOLT, INT MANIF RUNNER C/VLV (M3X0.5X5) (03.302)	1–H25,616
90–95	Y 5.7J (LT5)	10146242	1	10.46	BRACKET, INT MANIF RUNNER C/VLV ACTR (03.415)	1–H25,615

© 2000 GENERAL MOTORS SERVICE PARTS OPERATIONS–CHEVROLET–14Y

3.338 ACTUATOR – BEARING – BOLT – BRACKET – BUSHING – CONNECTOR – COVER – HOSE – HOUSING KIT – LEVER – LINK – NUT – RETAINER – SEAL – SHAFT – TANK – VALVE – VALVE KIT – WASHER, Multi Port Fuel Injection Idle Air (Con't)

90–95	Y 5.7J (LT5)	10067572	2	1.45	BUSHING, INT MANIF RUNNER C/VLV ACTR LVR (01.240)	
96	Y	12126487	1	37.29	CONNECTOR, MOT–IDLE AIR C/VLV (4–WAY F) (W/LEADS) (02.383) (AC–DELCO #PT757)	
90–95	Y 5.7J (LT5)	10110925	2	27.00	COVER, INT MANIF RUNNER C/VLV LNKG (03.415)	4–G2,3
90–92	Y 5.7J (LT5)	10146221	1	15.91	HOSE, INT MANIF RUNNER C/VLV ACTR VAC (03.415)	1–H25,638
93–95	Y 5.7J (LT5)	10168624	1	60.44	HOSE, INT MANIF RUNNER C/VLV ACTR VAC (03.415)	1–H25,638
92–93	Y 5.7P (LT1)	17112675	1	36.96	HOUSING KIT, IDLE AIR C/VLV (W/GSKT) (03.337) (AC–DELCO #17112675)	4–F18,4
94	Y 5.7P (LT1)	17113075	1	110.83	HOUSING KIT, IDLE AIR C/VLV (W/GSKT) (AC–DELCO #17113075)	4–F22,4
95–96	Y 5.7P (LT1)	17113187	1	59.30	HOUSING KIT, IDLE AIR C/VLV (W/GSKT) (AC–DELCO #17113187)	4–F22,4
96	Y 5.7–5 (LT4)	17113187	1	59.30	HOUSING KIT, IDLE AIR C/VLV (W/GSKT) (AC–DELCO #17113187)	4–F22,4
90–95	Y 5.7J (LT5)	10122108	8	5.05	LEVER, INT MANIF RUNNER C/VLV (03.415)	1–H25,621
90–95	Y 5.7J (LT5)	10122102	2	104.04	LEVER, INT MANIF RUNNER C/VLV ACTR (03.415)	1–H25,624
90–95	Y 5.7J (LT5)	10122105	2	19.07	LINK, INT MANIF RUNNER C/VLV (03.415)	1–H25,626
90–95	Y 5.7J (LT5)	10122113	8	6.30	NUT, INT MANIF RUNNER C/VLV LVR (M4X0.7–6H) (03.415)	1–H25,623
92–93	Y 5.7J (LT5)	11514252	4	*.81	NUT, SECD FUEL INJ AIR CONT ACTR (M5X0.8) (08.917)	
90–95	Y 5.7J (LT5)	10228856	2	.70	RETAINER, INT MANIF RUNNER C/VLV ACTR LVR (PUSH ON) (03.415)	1–H25,625
90–95	Y 5.7J (LT5)	10135892	8	10.05	SEAL, INT MANIF RUNNER C/VLV SHF (03.335)	1–H25,619
90–95	Y 5.7J (LT5)	10122112	8	87.48	SHAFT, INT MANIF RUNNER C/VLV (03.302)	1–H25,618
90–95	Y 5.7J (LT5)	10067563	1	14.02	TANK, INT MANIF RUNNER C/VLV ACTR VAC (03.682)	1–H25,635
85–88	Y FOR MDL APPL & POA SEE THROT BODY CHT	25527077	1	60.04	VALVE KIT, IDLE AIR CONTROL (AC–DELCO #217–437)	4–F13,6
90–95	Y 5.7J (LT5)	10135872	8	9.59	VALVE, INT MANIF RUNNER CONT (03.302)	1–H25,617
92–95	Y 5.7P (LT1)	17101908	1	21.09	VALVE, INT MANIF RUNNER CONT (AC–DELCO #17101908)	4–F18,64
90–95	Y 5.7J (LT5)	10135893	8	1.95	WASHER, INT MANIF RUNNER C/VLV LVR (03.314)	1–H25,622

3.339 BRACKET – CONNECTOR – MODULE – SENSOR – SENSOR KIT, Multi Port Fuel Injection Throttle Position

NOTE: FOR 1985–1991 USAGE REFER TO THROTTLE BODY CHART GRP 3.335

92–94	Y	10143541	1	3.26	BRACKET, THROT POSN SEN INTERFACE MDL	8–J21,51

© 2000 GENERAL MOTORS SERVICE PARTS OPERATIONS–CHEVROLET–14Y

3.339 BRACKET – CONNECTOR – MODULE – SENSOR – SENSOR KIT, Multi Port Fuel Injection Throttle Position (Con't)

95	Y 5.7J (LT5)	10143541	1	3.26	BRACKET, THROT POSN SEN INTERFACE MDL	8–J21,51
92–93	Y 5.7P (LT1), 4–SPD A/TRANS (MD8), 6–SPD M/TRANS (ML9), A/C MAN CONT (C60), A/C AUTO ELEC CONT (C68)	12126443	1	141.23	CONNECTOR, MDL–THROT POSN SEN INTERFACE (W/LEADS) (03.887) (AC–DELCO #12126443)	
90–95	Y 5.7J (LT5)	12116257	1	20.83	CONNECTOR, SEN–THROT POSN (3–WAY M, W/LEADS) (IF FEMALE CONN IS REQ'D USE 12101923) (AC–DELCO #PT430)	
91	Y	12101923	1	23.58	CONNECTOR, SEN–THROT POSN (3–WAY F) (W/LEADS) (IF MALE CONN IS REQ'D USE 12116257) (08.965) (AC–DELCO #PT195)	
91	Y	12116257	1	20.83	CONNECTOR, SEN–THROT POSN (3–WAY M, W/LEADS) (IF FEMALE CONN IS REQ'D USE 12101923) (AC–DELCO #PT430)	
92–95	Y 5.7J (LT5)	12101923	1	23.58	CONNECTOR, SEN–THROT POSN (3–WAY F) (W/LEADS) (IF MALE CONN IS REQ'D USE 12116257) (08.965) (AC–DELCO #PT195)	
93	Y	12101855	1	19.95	CONNECTOR, SEN–THROT POSN (2–WAY F) (W/LEADS) (W/SEAL) (02.535) (AC–DELCO #PT247)	
93–96	Y	12102748	1	23.24	CONNECTOR, SEN–THROT POSN (BLACK) (3–WAY F) (W/LEADS) (02.535) (AC–DELCO #PT375)	
92–94	Y	10177912	1	48.72	MODULE, THROT POSN SEN INTERFACE	
95	Y 5.7J (LT5)	10177912	1	48.72	MODULE, THROT POSN SEN INTERFACE	
90–91	Y FOR MDL APPL & POA SEE THROT BODY CHT	17112368	1	61.20	SENSOR KIT, THROT POSN (AC–DELCO #213–908)	4–F13,5
90–91	Y FOR MDL APPL & POA SEE THROT BODY CHT	17112720	1	71.36	SENSOR KIT, THROT POSN (AC–DELCO #213–792)	4–F16,5
92–93	Y 5.7P (LT1)	17106682	1	61.89	SENSOR KIT, THROT POSN (AC–DELCO #213–896)	4–F18,6
92–95	Y 5.7J (LT5)	17112720	1	71.36	SENSOR KIT, THROT POSN (AC–DELCO #213–792)	4–F16,5
94–95	Y 5.7P (LT1)	17113077	1	67.56	SENSOR KIT, THROT POSN (AC–DELCO #213–911)	4–F22,6
85–89	Y FOR MDL APPL & POA SEE THROT BODY CHT	17111606	1	56.24	SENSOR, THROT BODY THROT POSN (AC–DELCO #213–905) .	4–F13,5
96	Y	17106680	1	41.82	SENSOR, THROT BODY THROT POSN (AC–DELCO #213–894) .	4–F24,12

3.373 CONNECTOR – HOSE – PIPE, Turbocharger/Supercharger Coolant

90–95	Y 5.7J (LT5)	10153518	2	2.14	CONNECTOR, PLNM COOL AIR BL (LH/RH) (.43X1.7 LG)	1–H20,516
90–95	Y 5.7J (LT5)	10153526	1	42.84	CONNECTOR, PLNM COOL AIR BL (TEE)	1–H20,568
90–95	Y 5.7J (LT5)	10174347	1	42.84	CONNECTOR, PURGE RTN (TO PLNM)	1–H20,517
90–95	Y 5.7J (LT5)	10153524	1	56.61	HOSE, PLNM COOL AIR BL	1–H20,567
94–95	Y 5.7J (LT5)	10225109	RH	5.56	HOSE, PLNM COOL AIR BL (FRT)	1–H20,567
90–95	Y 5.7J (LT5)	10187790	RH	31.11	PIPE, COOL AIR BL	1–H20,569

© 2000 GENERAL MOTORS SERVICE PARTS OPERATIONS–CHEVROLET–14Y

3.402 CLEANER, Air Intake

84	Y	25041409	1	1224.63	CLEANER, AIR	1–G11,11

3.403 NUT – SCREW – SEAL, Air Cleaner and Silencer

84–85	Y	14055160	2	DISCON	NUT, W/INSERT, A/CL RET	
85–89	Y	14081888	2	3.95	SCREW, A/CL COVER	4–J17,1
84	Y	10019632	2	4.69	SEAL, A/CL	1–G11,4

3.407 CONNECTOR – DUCT – RETAINER, Air Cleaner and Silencer

90–95	Y 5.7J (LT5)	10067708	2	4.90	CONNECTOR, THROT BODY (TO CAM CVR) (1/2" DIA)	1–H20,559
90–91	Y 5.7J (LT5)	10067704	1	4.08	CONNECTOR, THROT BODY EXT (3/16" DIA)	
95	Y 5.7P (LT1)	25160841	1	386.00	DUCT, A/CL OTLT	4–G8,23
96	Y	25160841	1	386.00	DUCT, A/CL OTLT	4–G8,23
90–95	Y 5.7J (LT5)	10110935	4	1.55	RETAINER, A/CL OTLT DUCT ADAP BOLT	4–G2,6

3.410 BOLT – BREATHER – COVER – ELEMENT – RETAINER – SEAL, Air Cleaner Intake

NOTE: SEE GROUP 2.270 FOR TUNE–UP PARTS CHART

90–93	Y	12550915	2	4.40	BOLT, A/CL HSG CVR (OUTBOARD POSITIONS) (63MM LONG)	4–G2,10
90–96	Y	14104835	1	4.40	BOLT, A/CL HSG CVR (CTR POSITION) (48MM LG) (03.403)	4–G2,10
94–96	Y	12550915	2	4.40	BOLT, A/CL HSG CVR (OUTBOARD POSITIONS) (63MM LONG)	4–G2,10
84	Y 5.7–8 (L83)	25042206	1	N.L.	BREATHER, A/CL (AC–DELCO #FB93)	
84	Y	25041410	1	DISCON	COVER, A/CL	
85–89	Y (5.7–8)	14081889	1	30.50	COVER, A/CL	4–J17,2
90	Y 5.7–8 (L98)	12552873	1	34.00	COVER, A/CL HSG	4–G2,9
90–95	Y 5.7J (LT5)	12552873	1	34.00	COVER, A/CL HSG	4–G2,9
91	Y 5.7–8 (L98), (EXC MODIFICATION–NOISE CONTROL (B4H) (EXPORT)	12552873	1	34.00	COVER, A/CL HSG	4–G2,9
92–93	Y 5.7P (LT1)	10186111	1	80.00	COVER, A/CL HSG	4–G4,9
94–96	Y 5.7P (LT1), (EXC MODIFICATION–NOISE CONTROL (B4H) (EXPORT)	12552873	1	34.00	COVER, A/CL HSG	4–G2,9
96	Y 5.7–5 (LT4)	12552873	1	34.00	COVER, A/CL HSG	4–G2,9
84	Y 5.7–8 (L83)	25042383	1	N.L.	ELEMENT, A/CL (AC–DELCO #A862C)	
85–89	Y 5.7–8 (L98)	25042562	1	N.L.	ELEMENT, A/CL (AC–DELCO #A917C)	4–J17,3
90–91	Y 5.7–8 (L98)	25096933	1	N.L.	ELEMENT, A/CL (A1097C) (AC–DELCO #A1097C)	4–G2,8
90–95	Y 5.7J (LT5)	25096933	1	N.L.	ELEMENT, A/CL (A1097C) (AC–DELCO #A1097C)	4–G2,8
92–96	Y 5.7P (LT1)	25096933	1	N.L.	ELEMENT, A/CL (A1097C) (AC–DELCO #A1097C)	4–G2,8
96	Y 5.7–5 (LT4)	25096933	1	N.L.	ELEMENT, A/CL (A1097C) (AC–DELCO #A1097C)	4–G2,8
84	Y	22530004	1	*1.90	RETAINER, (U–SHAPED) (01.745)	
92–93	Y 5.7P (LT1), 5.7J (LT5), (EXC MODIFICATION–NOISE CONTROL (B4H) (EXPORT)	10198767	1	4.30	SEAL, A/CL HOOD	8–F18,72
94–95	Y 5.7P (LT1), 5.7J (LT5)	10198767	1	4.30	SEAL, A/CL HOOD	8–F18,72
96	Y 5.7P (LT1), 5.7–5 (LT4)	10198767	1	4.30	SEAL, A/CL HOOD	8–F18,72

© 2000 GENERAL MOTORS SERVICE PARTS OPERATIONS–CHEVROLET–14Y

3.410 BOLT – BREATHER – COVER – ELEMENT – RETAINER – SEAL, Air Cleaner Intake (Con't)

*EXPORT****************EXPORT****************EXPORT****************EXPORT****************EXPORT*

91	Y 5.7–8 (L98), MODIFICATION–NOISE CONTROL (B4H) (EXPORT)	10186111	1	80.00	COVER, A/CL HSG	4–G4,9
94–95	Y 5.7P (LT1), MODIFICATION–NOISE CONTROL (B4H) (EXPORT)	10186111	1	80.00	COVER, A/CL HSG	4–G4,9
96	Y 5.7P (LT1), 5.7–5 (LT4), MODIFICATION–NOISE CONTROL (B4H) (EXPORT)	10186111	1	80.00	COVER, A/CL HSG	4–G4,9

3.415 ACTUATOR – BOLT – BRACKET – NUT – RETAINER – SEAL – VALVE, Air Cleaner Controls

84	Y 5.7–8	8994333	2	24.08	ACTUATOR, HTD INT AIR VLV VAC (AC–DELCO #219–31)	
90–95	Y 5.7J (LT5)	11514253	4	2.10	BOLT, SECD FUEL INJN AIR CONT VLV LNKG CVR (M4.7X8–7.3 THD 9.8 PE) (08.913)	1–H25,631
86	Y	14087643	1	DISCON	BRACKET, MASS AIR FLOW SEN RLY (04.060)	
87	Y	10067918	1	DISCON	BRACKET, MASS AIR FLOW SEN RLY	
91–92	Y 5.7J (LT5)	11514252	4	*.81	NUT, VAC ACTR (TO INLT CONT BRKT) (M5X0.8) (08.917)	
90–95	Y 5.7J (LT5)	10067631	2	.73	RETAINER, SECD PORT THROT VLV PIN	
85–89	Y (5.7–8)	14081880	1	1.00	SEAL, MASS AIR FLOW SEN	4–F26,5
84	Y	8997787	1	29.21	VALVE, A/CL TEMP VAC (AC–DELCO #213–118)	

3.417 CLAMP – DUCT – ELBOW – PIN – RESONATOR – RETAINER – SCREW – SEAL – STOVE – TUBE, Air Cleaner Air Intake

90–91	Y 5.7–8 (L98)	14104556	1	6.45	CLAMP, INTER INT AIR DUCT ...	4–F26,7
90–95	Y 5.7J (LT5)	14104556	2	6.45	CLAMP, INTER INT AIR DUCT ...	4–F26,7
92–94	Y 5.7P (LT1)	14104556	1	6.45	CLAMP, INTER INT AIR DUCT ...	4–F26,7
85–91	Y 5.7–8 (L98)	10146826	1	4.85	CLAMP, RR INT AIR DUCT (3.31 TO 4.25)	4–F26,9
85–89	Y (5.7–8)	14084404	1	50.25	DUCT, A/CL FRT AIR METER INT .	4–J17,4
90–91	Y 5.7–8 (L98)	12553505	1	56.75	DUCT, FRT INT AIR (WHEN USING IN PLACE OF 14104555;MUST BLOCK OFF HOSE CONN.) ...	4–G2,7
90–95	Y 5.7J (LT5)	12553505	1	56.75	DUCT, FRT INT AIR (WHEN USING IN PLACE OF 14104555, MUST BLOCK OFF HOSE CONN.) ...	4–G2,7
92–96	Y 5.7P (LT1)	12553505	1	56.75	DUCT, FRT INT AIR (WHEN USING IN PLACE OF 14104555, MUST BLOCK OFF HOSE CONN.) ...	4–G2,7
96	Y 5.7–5 (LT4)	12553505	1	56.75	DUCT, FRT INT AIR	4–G2,7
90–91	Y 5.7–8 (L98)	10108444	1	44.00	DUCT, INTER INT AIR	4–F26,8
90–95	Y 5.7J (LT5)	14104557	1	26.25	DUCT, INTER INT AIR	4–G2,12
92	Y 5.7P (LT1)	25099598	1	155.00	DUCT, INTER INT AIR (MAY REQUIRE CLAMP 14104556) ..	4–G4,13
93	Y 5.7P (LT1), DIAGNOSTIC SYSTEM (BAK)	25099264	1	36.98	DUCT, INTER INT AIR	4–G4,13
93	Y 5.7P (LT1)	25099598	1	155.00	DUCT, INTER INT AIR	4–G4,13
94	Y 5.7P (LT1)	25099264	1	36.98	DUCT, INTER INT AIR	4–G4,13
85–89	Y (5.7–8)	14081891	1	7.65	DUCT, RR AIR INT	4–F26,8

© 2000 GENERAL MOTORS SERVICE PARTS OPERATIONS–CHEVROLET–14Y

3.417 CLAMP – DUCT – ELBOW – PIN – RESONATOR – RETAINER – SCREW – SEAL – STOVE – TUBE, Air Cleaner Air Intake (Con't)

93	Y 5.7P (LT1), DIAGNOSTIC SYSTEM (BAK)	25099266	1	49.47	DUCT, RR INT AIR	
94	Y 5.7P (LT1)	25099266	1	49.47	DUCT, RR INT AIR	
95	Y 5.7P (LT1)	25147192	1	49.75	DUCT, RR INT AIR (03.407)	4–G8,6
96	Y	25147192	1	49.75	DUCT, RR INT AIR (03.407)	4–G8,6
84	Y	1249066	1	DISCON	ELBOW, ENG AIR HT STOVE TUB UPR	
85–89	Y (5.7–8)	14081885	2	3.40	PIN, A/CL FRT AIR INT DUCT RET	4–J17,4
92–93	Y 5.7P (LT1)	10205088	1	72.50	RESONATOR, A/CL	4–G4,8
85–89	Y (5.7–8)	14081886	2	8.35	RETAINER, A/CL FRT AIR INT DUCT	4–J17,4
85–89	Y (5.7–8)	14084405	2	4.05	SCREW, FRT AIR INT DUCT	4–J17,5
84–85	Y	14046756	2	20.35	SEAL, FRT AIR INT DUCT	4–J13,6
84	Y 5.7–8 (L83)	14055131	2	13.35	STOVE, ENG AIR HT INR	1–H2,41
85–91	Y 5.7–8 (L98)	14055131	2	13.35	STOVE, ENG AIR HT INR	1–H2,41
84	Y	14055129	LH	DISCON	STOVE, ENG AIR HT OTR	
84	Y	14057092	1	DISCON	TUBE, ENG AIR HT STOVE	
	*EXPORT**********EXPORT**********EXPORT**********EXPORT**********EXPORT*					
91	Y 5.7–8 (L98), MODIFICATION–NOISE CONTROL (B4H) (EXPORT)	10205088	1	72.50	RESONATOR, A/CL	4–G4,8
94–95	Y 5.7P (LT1), MODIFICATION–NOISE CONTROL (B4H) (EXPORT)	10205088	1	72.50	RESONATOR, A/CL	4–G4,8
96	Y 5.7P (LT1), 5.7–5 (LT4), MODIFICATION–NOISE CONTROL (B4H) (EXPORT)	10205088	1	72.50	RESONATOR, A/CL	4–G4,8

3.425 CLIP – RETAINER, Accelerator Control

89	Y	10135856	2	4.39	CLIP, ACCEL CONT CBL	4–G13,1
90–91	Y 5.7J (LT5)	10135856	2	4.39	CLIP, ACCEL CONT CBL	4–G13,1
92–95	Y 5.7P (LT1)	10054847	2	.58	CLIP, ACCEL CONT CBL	4–G14,20
92	Y 5.7J (LT5)	10192228	2	3.11	CLIP, ACCEL CONT CBL	4–G17,9
93–95	Y 5.7J (LT5)	10168625	2	5.48	CLIP, ACCEL CONT CBL	4–G17,9
96	Y	10054847	2	.58	CLIP, ACCEL CONT CBL	4–G14,20
84–88	Y	15567924	AR	*.68	RETAINER, ACCEL CONT CBL (5/32 CBL SPR STL PHOS) (08.821)	4–G11,4
87	Y	10046046	1	.95	RETAINER, ACCEL CONT CBL (02.251)	

3.430 CABLE – RIVET, Accelerator Control

84	Y	10181371	1	53.04	CABLE, ACCEL CONT	4–G11,7
85–88	Y	10181278	1	20.35	CABLE, ACCEL CONT	4–G12,4
89–91	Y 5.7–8 (L98)	10085261	1	12.80	CABLE, ACCEL CONT	4–G12,4
92–95	Y 5.7J (LT5)	10163845	1	43.61	CABLE, ACCEL CONT (TBI TO THROT ADJR)	4–G17,1
92–93	Y 5.7P (LT1), 6–SPD M/TRANS (ML9)	10163846	1	48.45	CABLE, ACCEL CONT	4–G14,1
94	Y 5.7P (LT1), (2ND DES)	10241099	1	15.61	CABLE, ACCEL CONT (PED TO THROT RELAXER) (2 PC.DES; CRCONT CBL IS SEPARATE; SEE GROUP 3.880)	4–G19,2

© 2000 GENERAL MOTORS SERVICE PARTS OPERATIONS–CHEVROLET–14Y

3.430 CABLE – RIVET, Accelerator Control (Con't)

94	Y 5.7J (LT5), (2ND DES)	10241101	1	14.75	CABLE, ACCEL CONT (PED TO THROT ADJR) (HAS SEPARATE ACCEL CONT CBL & CRCONT SERVO CBL, USE 10241102 IN GRP 3.880 FOR CRCONT SERVO CBL)	4–G17,2
94–95	Y 5.7P (LT1)	12553402	1	36.98	CABLE, ACCEL CONT (THROT RELAXER TO THROT BODY) ..	4–G14,1
95	Y 5.7P (LT1)	10241099	1	15.61	CABLE, ACCEL CONT (PED TO THROT RELAXER)	4–G19,2
95	Y 5.7J (LT5)	10241101	1	14.75	CABLE, ACCEL CONT (PED TO THROT ADJR)	4–G17,2
96	Y 5.7P (LT1), 5.7–5 (LT4)	10241099	1	15.61	CABLE, ACCEL CONT (PED TO THROT RELAXER)	4–G19,2
96	Y 5.7P (LT1), 5.7–5 (LT4)	10241760	1	22.29	CABLE, ACCEL CONT (THROT RELAXER TO THROT BODY) ..	4–G19,1
92	Y 5.7P (LT1), 4–SPD A/TRANS (MD8)	10163848	1	104.04	CABLE, ACCEL CONT & A/TRNS T/V	4–G14,1
93	Y 5.7P (LT1), 4–SPD A/TRANS (MD8)	10215862	1	104.04	CABLE, ACCEL CONT & A/TRNS T/V	4–G14,1
90–91	Y (5.7J)	10150042	1	21.42	CABLE, ACCEL CONT & CRCONT SERVO	
92–93	Y 5.7J (LT5)	10174495	1	36.72	CABLE, ACCEL CONT & CRCONT SERVO	4–G17,2
92–93	Y 5.7P (LT1)	10215860	1	52.28	CABLE, ACCEL CONT & CRCONT SERVO	4–G14,5
94	Y 5.7J (LT5), (1ST DES)	10174495	1	36.72	CABLE, ACCEL CONT & CRCONT SERVO (HAS 1 PC SIAMESE CBL FOR BOTH ACCEL CONT CBL & CRCONT SERVO CBL)	4–G17,2
94	Y 5.7P (LT1), (1ST DES)	10217789	1	36.98	CABLE, ACCEL CONT & CRCONT SERVO (1 PC SIAMESE DES) .	4–G14,5
90–92	Y	2495701	AR	*.96	RIVET, ACCEL CONT CBL PLT (114X.00X2.062PL) (TYPE "P" BLIND) (08.967)	

3.451 PEDAL, Accelerator Pedal

84–88	Y	10126447	1	22.08	PEDAL, ACCEL	4–G11,12
89–91	Y	10066476	1	21.65	PEDAL, ACCEL	4–G12,9
92–96	Y	12551528	1	22.08	PEDAL, ACCEL	4–G14,8

3.452 PLATE – WASHER, Accelerator Pedal Mounting

86–91	Y	14105108	1	7.37	PLATE, ACCEL PED BRG (03.602) .	
84–85	Y	3771494	1	.45	WASHER, ACCEL PED LVR (07.833)	4–G11,13

3.454 ADJUSTER – BRACE – BRACKET – CONNECTOR – COVER – PLATE – SUPPORT – WASHER, Accelerator Pedal Lever

92–96	Y	12557971	1	506.94	ADJUSTER, ACCEL CONT & CRCONT SERVO CBL	4–G14,16
92–95	Y 5.7J (LT5)	10177907	1	8.72	BRACE, ACCEL CONT & CRCONT SERVO CBL ADJR BRKT	4–G17,12
92–95	Y 5.7P (LT1)	12553404	1	7.75	BRACE, ACCEL CONT & CRCONT SERVO CBL ADJR BRKT	4–G14,14
96	Y	12553404	1	7.75	BRACE, ACCEL CONT & CRCONT SERVO CBL ADJR BRKT	4–G14,14
92–95	Y 5.7J (LT5)	10143548	1	11.68	BRACKET, ACCEL CONT & CRCONT SERVO CBL ADJR (UPR)	4–G17,14

© 2000 GENERAL MOTORS SERVICE PARTS OPERATIONS–CHEVROLET–14Y

3.454 ADJUSTER – BRACE – BRACKET – CONNECTOR – COVER – PLATE – SUPPORT – WASHER, Accelerator Pedal Lever (Con't)

92–95	Y 5.7J (LT5)	10177905	1	20.25	BRACKET, ACCEL CONT & CRCONT SERVO CBL ADJR (LWR)	4–G17,13
92–93	Y 5.7P (LT1)	10212361	1	11.68	BRACKET, ACCEL CONT & CRCONT SERVO CBL ADJR	4–G14,15
94–95	Y 5.7P (LT1)	12553403	1	8.16	BRACKET, ACCEL CONT & CRCONT SERVO CBL ADJR	4–G14,15
96	Y	12553403	1	8.16	BRACKET, ACCEL CONT & CRCONT SERVO CBL ADJR	4–G14,15
85–88	Y	14084305	1	11.68	BRACKET, ACCEL CONT CBL	4–G12,11
89–91	Y 5.7–8 (L98)	10077566	1	3.47	BRACKET, ACCEL CONT CBL	4–G12,11
92	Y 5.7P (LT1)	10226089	1	5.15	BRACKET, ACCEL CONT CBL	4–G14,19
93	Y 5.7P (LT1), 4–SPD A/TRANS (MD8)	10226089	1	5.15	BRACKET, ACCEL CONT CBL	4–G14,19
94–96	Y 5.7P (LT1), 4–SPD A/TRANS (M30)	10192221	1	4.79	BRACKET, ACCEL CONT CBL	4–G14,19
96	Y 5.7–5 (LT4), 6–SPD M/TRANS (ML9)	10192221	1	4.79	BRACKET, ACCEL CONT CBL	4–G14,19
92–96	Y	12101855	1	19.95	CONNECTOR, MOT–THROT ACTR (2–WAY F) (W/LEADS) (W/SEAL) (02.535) (AC–DELCO #PT247)	4–G19,12
92–95	Y 5.7J (LT5)	10209540	1	10.86	COVER, ACCEL CONT & CRCONT SERVO CBL ADJR	
92–95	Y 5.7P (LT1)	10211305	1	10.86	COVER, ACCEL CONT & CRCONT SERVO CBL ADJR	4–G14,17
96	Y 5.7P (LT1), 5.7–5 (LT4)	10211305	1	10.86	COVER, ACCEL CONT & CRCONT SERVO CBL ADJR	4–G14,17
84–96	Y	14053659	1	1.58	PLATE, ACCEL CONT CBL	4–G11,10
84	Y	14038659	LH	DISCON	SUPPORT, ACCEL CONT CBL	
88–92	Y	3771494	2	.45	WASHER, ACCEL PED LVR SUPT (07.833)	4–G12,8

3.463 BOLT, Throttle Control Lever

91	Y 5.7–8 (L98)	11514149	AR	1.82	BOLT, ACCEL CONT CBL BRKT (M6 X 1 X 12) (HFH, 9.8 PE, 12.8 OD DR) (08.900) (AC–DELCO #11514149)	1–J17,516
92–96	Y 5.7P (LT1)	11514149	3	1.82	BOLT, ACCEL CONT CBL BRKT (M6 X 1 X 12) (HFH, 9.8 PE, 12.8 OD DR) (08.900) (AC–DELCO #11514149)	1–J17,516
96	Y 5.7–5 (LT4)	11514149	3	1.82	BOLT, ACCEL CONT CBL BRKT (M6 X 1 X 12) (HFH, 9.8 PE, 12.8 OD DR) (08.900) (AC–DELCO #11514149)	1–J17,516

3.469 NUT – SHIELD, Accelerator Linkage

90–95	Y 5.7J (LT5)	16512106	2	.31	NUT, ACCEL CONT CBL SPH SHLD (4 X 0.7 THD X 4.85MM) (02.679)	4–G17,11
92–96	Y	10192285	1	1.02	SHIELD, ACCEL CONT & CRCONT SERVO CBL ADJR (03.885)	4–G14,11
90–95	Y 5.7J (LT5)	10150018	1	11.83	SHIELD, ACCEL CONT CBL SPH	4–G13,9

© 2000 GENERAL MOTORS SERVICE PARTS OPERATIONS–CHEVROLET–14Y

MICROFICHE INDEX

GROUP 3.000

FICHE 4 OF 11

GROUP	DESCRIPTION	STARTING GRID LOCATION PARTS	ILLUSTRATIONS
–	GENERAL INFORMATION	1–A2	1–G2
–	ALPHABETICAL INDEX	1–B13	N.A.
3.000	FUEL TANK – INTAKE MANIFOLD – FUEL INJECTION – THROTTLE BODY – AIR CLEANER – ACCELERATOR	4–A2	4–E2
3.000	EXHAUST & EMISSIONS SYSTEMS – CARBURETOR – CRUISE – FUEL FILTER & PUMP	4–C2	4–H2
–	OUT OF FICHE CALLS	N.A.	4–M9

4–C1

CHEVROLET
CHASSIS GROUP 3.000

FUEL – EXHAUST – CARBURETION

ALPHABETICAL INDEX

A

ADAPTER, Emission Control System ... 3.671 4–C19
ADAPTER, Emission System 3.680 4–C24
ADAPTER, Exhaust Pipe 3.609 4–C7
ADJUSTER, Cruise Control 3.880 4–D14

B

BEARING, Air Injection Reactor Pump and Multi–Function Air Compressor . 3.665 4–C11
BODY KIT, Throttle Body/Carburetor ... 3.729 4–D13
BOLT KIT, Emission Control System ... 3.671 4–C19
BOLT, Air Injection Reactor Pump and Multi–Function Air Compressor 3.655 4–C10
BOLT, Computer Control Sensors 3.682 4–C26
BOLT, Emission Control System 3.671 4–C19
BOLT, Emission System 3.675 4–C21
BOLT, Emission System 3.680 4–C24
BOLT, Engine Fuel Filter 3.890 4–D17
BOLT, Exhaust Manifold 3.602 4–C7
BOLT, Exhaust Pipe 3.613 4–C8
BOLT, Exhaust Pipe 3.616 4–C9
BOLT, Fuel Pump 3.901 4–D18
BOLT, Throttle Body/Carburetor 3.726 4–D13
BOOT, Cruise Control 3.885 4–D15
BRACE, Air Injection Reactor Pump and Multi–Function Air Compressor 3.655 4–C10
BRACE, Catalytic Converter 3.690 4–D4
BRACKET, Air Injection Reactor Pump and Multi–Function Air Compressor . 3.655 4–C10
BRACKET, Catalytic Converter 3.686 4–D4
BRACKET, Catalytic Converter 3.690 4–D4
BRACKET, Computer Control Sensors . 3.682 4–C26
BRACKET, Cruise Control 3.880 4–D14
BRACKET, Cruise Control 3.885 4–D15
BRACKET, Emission Control System ... 3.671 4–C19
BRACKET, Engine Fuel Filter 3.890 4–D17
BRACKET, Exhaust Muffler/Resonator .. 3.704 4–D9
BRACKET, Exhaust Pipe 3.616 4–C9
BRACKET, Fuel Pump 3.901 4–D18
BUFFER, Computer Control Sensors .. 3.682 4–C26

C

CABLE, Cruise Control 3.880 4–D14
CHAIN, Cruise Control 3.885 4–D15
CLAMP, Catalytic Converter 3.690 4–D4
CLAMP, Computer Control Sensors 3.682 4–C26
CLAMP, Emission Control System 3.671 4–C19
CLAMP, Emission System 3.675 4–C21
CLAMP, Emission System 3.680 4–C24
CLAMP, Exhaust Pipe 3.616 4–C9
CLAMP, Exhaust System Attaching 3.708 4–D9
CLIP, Emission Control System 3.671 4–C19
CONNECTOR, Air Injection Reactor Pump and Multi–Function Air Compressor 3.660 4–C11
CONNECTOR, Carburetor Accelerator Pump 3.836 4–D14
CONNECTOR, Catalytic Converter 3.686 4–D4
CONNECTOR, Computer Control Sensors 3.682 4–C26
CONNECTOR, Cruise Control Vacuum . 3.886 4–D16
CONNECTOR, Cruise Control 3.885 4–D15
CONNECTOR, Cruise Control 3.887 4–D17
CONNECTOR, Emission Control System 3.670 4–C11
CONNECTOR, Emission System 3.680 4–C24
CONNECTOR, Fuel Pump 3.900 4–D18
CONTROL KIT, Throttle Body/Carburetor 3.820 4–D13
CONVERTER, Catalytic Converter 3.685 4–D3
CONVERTER, Exhaust Pipe 3.609 4–C7
COVER KIT, Throttle Body/Carburetor .. 3.726 4–D13
COVER, Computer Control Sensors ... 3.682 4–C26
COVER, Cruise Control 3.880 4–D14
COVER, Emission Control System 3.670 4–C11
COVER, Emission Control System 3.671 4–C19
COVER, Fuel Pump 3.901 4–D18

D

DUCT, Emission System 3.675 4–C21

E

EPROM, Emission Control System 3.670 4-C11

F

FILTER, Emission Control System 3.670 4-C11
FILTER, Emission Control System 3.671 4-C19
FILTER, Engine Fuel Filter 3.890 4-D17
FUEL INJECTOR KIT, Throttle Body/Carburetor 3.774 4-D13
FUEL, Throttle Body/Carburetor 3.734 4-D13

G

GASKET KIT, TBI/Carburetor 3.724 4-D10
GASKET, Air Injection Reactor Pump and Multi-Function Air Compressor 3.665 4-C11
GASKET, Emission Control System 3.671 4-C19
GASKET, Emission System 3.675 4-C21
GASKET, Emission System 3.680 4-C24
GASKET, Exhaust Pipe 3.611 4-C8
GASKET, Fuel Pump Mounting 3.904 4-D19
GASKET, TBI/Carburetor 3.724 4-D10
GASKET, Throttle Body/Carburetor 3.726 4-D13
GROMMET, Emission Control System .. 3.671 4-C19

H

HANGER, Exhaust Muffler/Resonator .. 3.704 4-D9
HANGER, Exhaust Pipe 3.616 4-C9
HARNESS, Catalytic Converter 3.686 4-D4
HARNESS, Emission System 3.675 4-C21
HOSE, Cruise Control Vacuum 3.886 4-D16
HOSE, Emission System 3.675 4-C21
HOUSING, Emission Control System .. 3.671 4-C19

I

INJECTOR KIT, Throttle Body/Carburetor 3.774 4-D13
INSULATOR, Catalytic Converter 3.686 4-D4
INSULATOR, Catalytic Converter 3.690 4-D4
INSULATOR, Cruise Control 3.880 4-D14
INSULATOR, Cruise Control 3.885 4-D15
INSULATOR, Exhaust Muffler/Resonator 3.704 4-D9
INSULATOR, Fuel Pump Mounting 3.904 4-D19

M

MANIFOLD, Engine Exhaust Manifold .. 3.601 4-C7
MODULE, Catalytic Converter 3.686 4-D4
MODULE, Computer Control Sensors .. 3.682 4-C26
MODULE, Cruise Control 3.887 4-D17
MODULE, Emission Control System ... 3.670 4-C11
MODULE, Fuel Pump 3.900 4-D18
MUFFLER, Engine Exhaust 3.701 4-D5

N

NUT, Catalytic Converter 3.686 4-D4
NUT, Emission Control System 3.671 4-C19
NUT, Exhaust Pipe 3.613 4-C8
NUT, Fuel Pump 3.901 4-D18

P

PIPE, Emission System 3.675 4-C21
PIPE, Exhaust Pipe 3.609 4-C7
PLATE, Emission Control System 3.671 4-C19
PLATE, Exhaust Pipe 3.616 4-C9
PLUG, Computer Control Sensors 3.682 4-C26
PLUG, Exhaust Gas Recirculation Valve 3.672 4-C21
PROTECTOR, Cruise Control 3.887 4-D17
PULLEY, Air Injection Reactor Pump and Multi-Function Air Compressor 3.650 4-C10
PUMP, Air Injection Reactor Pump and Multi-Function Air Compressor 3.660 4-C11
PUMP, Fuel Pump 3.900 4-D18

R

REINFORCEMENT, Exhaust Muffler/Resonator 3.704 4-D9
RELAY, Computer Control Sensors 3.682 4-C26
RELAY, Cruise Control 3.887 4-D17
RELAY, Emission Control System 3.670 4-C11
RELAY, Fuel Pump 3.900 4-D18
RESONATOR, Exhaust 3.702 4-D8
RETAINER, Computer Control Sensors . 3.682 4-C26
RETAINER, Cruise Control 3.880 4-D14
RETAINER, Cruise Control 3.885 4-D15
RETAINER, Emission Control System .. 3.671 4-C19

S

SCREW, Cruise Control 3.885 4-D15
SCREW, Emission Control System 3.670 4-C11
SEAL, Computer Control Sensors 3.682 4-C26
SEAL, Exhaust Pipe 3.611 4-C8
SENSOR KIT, Throttle Body Throttle Position 3.764 4-D13
SENSOR, Catalytic Converter 3.686 4-D4
SENSOR, Computer Control Sensors .. 3.682 4-C26
SENSOR, Fuel Pump Pressure 3.910 4-D19
SERVO, Cruise Control 3.885 4-D15
SHIELD, Catalytic Converter 3.690 4-D4

SHIELD, Cruise Control 3.885 4–D15
SHIELD, Emission System 3.675 4–C21
SHIELD, Engine Fuel Filter 3.890 4–D17
SHIELD, Exhaust Manifold 3.602 4–C7
SHIELD, Exhaust Pipe 3.616 4–C9
SILENCER, Exhaust Gas Recirculation Valve 3.672 4–C21
SLEEVE, Cruise Control 3.885 4–D15
SLEEVE, Emission System 3.675 4–C21
SOLENOID, Emission Control System .. 3.670 4–C11
SPACER, Air Injection Reactor Pump and Multi–Function Air Compressor 3.650 4–C10
SPACER, Computer Control Sensors .. 3.662 4–C26
SPACER, Emission Control System 3.671 4–C19
SPACER, Exhaust Manifold Bolt 3.604 4–C7
STUD, Air Injection Reactor Pump and Multi–Function Air Compressor 3.655 4–C10
STUD, Catalytic Converter 3.690 4–D4
STUD, Emission Control System 3.671 4–C19
STUD, Emission System 3.675 4–C21
STUD, Exhaust Pipe 3.613 4–C8
STUD, Fuel Pump 3.901 4–D18
STUD, TBI/Carburetor 3.724 4–D10
SUPPORT, Emission System 3.675 4–C21
SWITCH, Cruise Control Selector 3.883 4–D15
SWITCH, Cruise Control 3.887 4–D17
SWITCH, Emission Control System 3.670 4–C11
SWITCH, Fuel Pump Pressure 3.910 4–D19

T

THROTTLE BODY, Throttle Body Injection 3.725 4–D10
THROTTLE, Throttle Body Injection 3.725 4–D10

V

VALVE KIT, Throttle Body/Carburetor ... 3.820 4–D13
VALVE, Cruise Control Vacuum 3.886 4–D16
VALVE, Cruise Control 3.885 4–D15
VALVE, Emission Control System 3.670 4–C11

W

WASHER, Air Injection Reactor Pump and Multi–Function Air Compressor . 3.650 4–C10
WASHER, Cruise Control 3.885 4–D15

CHART INDEX

GROUP 3 GRID

CARB. EFI 4-D11
CARBURETIONCARB.EFI 4-D12

3.601 MANIFOLD, Engine Exhaust Manifold

84–85	Y	10046139	RH	DISCON	MANIFOLD, EXH	
84–85	Y	10046140	LH	DISCON	MANIFOLD, EXH	
86–91	Y 5.7–8 (L98)	14087511	LH	439.89	MANIFOLD, EXH	4–J20,24
86	Y	14087512	RH	439.89	MANIFOLD, EXH	4–J20,24
87–91	Y 5.7–8 (L98)	10055734	RH	439.89	MANIFOLD, EXH	4–J26,24
90–92	Y 5.7J (LT5)	25127591	LH	DISCON	MANIFOLD, EXH (W/CTLTC CONV)	
90–92	Y 5.7J (LT5)	25143612	RH	696.66	MANIFOLD, EXH (WHEN USING ON 1990–1992 MDLS REFER TO CHEV SERV BULLETIN 776106 DTD 2–97 FOR ADDITIONAL INFORMATION.USE T/W 25129503 CTLC CONV)	4–K24,14
92–95	Y 5.7P (LT1)	12554232	2	123.78	MANIFOLD, EXH (W/H/SHLD) (WHEN USED IN PLC OF 12554231 (1992–95), MUST USE GSKT 15713154)	1–J17,520
93–95	Y 5.7J (LT5)	25129492	LH	1110.98	MANIFOLD, EXH	4–K24,14
93–95	Y 5.7J (LT5)	25143612	RH	696.66	MANIFOLD, EXH	4–K24,14
96	Y 5.7P (LT1)	12554232	2	123.78	MANIFOLD, EXH (W/H/SHLD)	1–J17,520
96	Y 5.7–5 (LT4)	12554232	2	123.78	MANIFOLD, EXH (W/H/SHLD)	1–J17,520

3.602 BOLT – SHIELD, Exhaust Manifold

92–96	Y 5.7P (LT1)	10228350	3	.36	BOLT, EXH MANIF H/SHLD (M6X12)	1–J17,524
96	Y 5.7–5 (LT4)	10228350	3	.36	BOLT, EXH MANIF H/SHLD (M6X12)	1–J17,524
90–91	Y 5.7J (LT5)	10128251	LH	47.06	SHIELD, EXH MANIF INR HT	4–K9,9
90–92	Y 5.7J (LT5)	10128252	RH	35.04	SHIELD, EXH MANIF INR HT	4–K9,9
92–96	Y 5.7P (LT1)	10128311	2	9.41	SHIELD, EXH MANIF INR HT	1–J17,519
93–95	Y 5.7J (LT5)	25035039	RH	94.12	SHIELD, EXH MANIF INR HT	4–K24,15
93–95	Y 5.7J (LT5)	25129498	LH	94.12	SHIELD, EXH MANIF INR HT	4–K24,15
96	Y 5.7–5 (LT4)	10128311	2	9.41	SHIELD, EXH MANIF INR HT	1–J17,519
84	Y 5.7–8 (L83)	14055130	2	DISCON	SHIELD, EXH MANIF OTR HT	
85–91	Y 5.7–8 (L98)	14055130	2	DISCON	SHIELD, EXH MANIF OTR HT	
90–91	Y 5.7J (LT5)	10128253	LH	35.04	SHIELD, EXH MANIF OTR HT	4–K9,8
90–92	Y 5.7J (LT5)	10128254	RH	DISCON	SHIELD, EXH MANIF OTR HT	
92–96	Y 5.7P (LT1)	10128312	2	9.41	SHIELD, EXH MANIF OTR HT	1–J17,523
92–95	Y 5.7J (LT5)	25129500	LH	94.12	SHIELD, EXH MANIF OTR HT	4–K24,16
93–95	Y 5.7J (LT5)	25034884	RH	47.06	SHIELD, EXH MANIF OTR HT (FRT)	4–K24,16
93–95	Y 5.7J (LT5)	25034993	RH	66.75	SHIELD, EXH MANIF OTR HT (RR)	4–K24,16
96	Y 5.7–5 (LT4)	10128312	2	9.41	SHIELD, EXH MANIF OTR HT	1–J17,523

3.604 SPACER, Exhaust Manifold Bolt

90–95	Y 5.7J (LT5)	10110994	14	1.64	SPACER, EXH MANIF BOLT (9.8ID, 15.6 OD, 19THK, 6047M, 1035STL)	4–K24,32
92–95	Y 5.7J (LT5)	3983422	2	2.20	SPACER, EXH MANIF BOLT (.42X.68" STL) (06.606)	4–K24,32

3.609 ADAPTER – CONVERTER – PIPE, Exhaust Pipe

NOTE: DEVICES LISTED IN THIS GROUP ARE CERTIFIED TO MEET CALIFORNIA AND FLORIDA NOISE REGULATIONS WHEN USED ON VEHICLES FOR WHICH THEY ARE LISTED.

90–91	Y 5.7J (LT5), SOFT RIDE SUSP (FE1), HVY DUTY SUSP (FE7)	10147972	1	69.31	ADAPTER, EXH PIPE	4–K24,19
92–94	Y 5.7P (LT1), (EXC LEADED FUEL EMIS EXPORT (NM:	25129000	LH	716.83	CONVERTER, W/UP 3WAY CTLTC (W/EXH MANIF PIPE) (STAMPED XJ, JL) (03.685)	4–K27,3

© 2000 GENERAL MOTORS SERVICE PARTS OPERATIONS–CHEVROLET–14Y

3.609 ADAPTER – CONVERTER – PIPE, Exhaust Pipe (Con't)

92–93	Y 5.7P (LT1), (EXC LEADED FUEL EMIS EXPORT (NM8) .	25145454	RH	610.51	CONVERTER, W/UP 3WAY CTLTC (W/EXH MANIF PIPE) (USE T/W 8990353 IF REPLC 25129001 OR 25145522) (STAMPED XK, SR) (03.685)	4–K27,3
94–95	Y 5.7P (LT1), (EXC LEADED FUEL EMIS EXPORT (NM8) .	25153070	RH	631.34	CONVERTER, W/UP 3WAY CTLTC (W/EXH MANIF PIPE) (STAMPED XK, SR) (03.685)	4–L2,32
95	Y 5.7P (LT1), (EXC LEADED FUEL EMIS EXPORT (NM8) .	25153077	LH	716.83	CONVERTER, W/UP 3WAY CTLTC (W/EXH MANIF PIPE) (STAMPED XJ, JL) (03.685)	4–L2,3
96	Y 5.7P (LT1), 5.7–5 (LT4), (EXC LEADED FUEL EMIS EXPORT (NM8), EXH TEMP ALARM (UD6) (EXPORT) ...	25153070	RH	631.34	CONVERTER, W/UP 3WAY CTLTC (W/EXH MANIF PIPE) (STAMPED XK, SR) (03.685)	4–L2,32
96	Y 5.7P (LT1), 5.7–5 (LT4), (EXC LEADED FUEL EMIS EXPORT (NM8), EXH TEMP ALARM (UD6) (EXPORT) ...	25153077	LH	716.83	CONVERTER, W/UP 3WAY CTLTC (W/EXH MANIF PIPE) (STAMPED XJ, JL) (03.685)	4–L2,3
86–88	Y	10094806	1	160.61	PIPE, EXH (INTER)	4–K22,3
89–90	Y (5.7–8)	10094806	1	160.61	PIPE, EXH (INTER)	4–K22,3
91	Y 5.7–8 (L98)	10143517	1	143.22	PIPE, EXH	4–K22,3
86	Y CALIF	10097685	1	612.71	PIPE, EXH C/OVR (W/FRT CONVERTERS)	4–K22,10
86–87	Y FED	10097685	1	612.71	PIPE, EXH C/OVR (W/FRT CONVERTERS)	4–K22,10
88	Y	10097685	1	612.71	PIPE, EXH C/OVR (W/FRT CONVERTERS)	4–K22,10
89–91	Y (5.7–8)	10097685	1	612.71	PIPE, EXH C/OVR (W/FRT CONVERTERS)	4–K22,10
84	Y (EXC VE1 EXPORT)	14060154	1	DISCON	PIPE, EXH C/OVR RR	
85	Y (EXC EXPORT)	14087616	1	102.04	PIPE, EXH C/OVR RR	4–K20,17
84–85	Y	14076186	1	DISCON	PIPE, EXH MANIF	
	*EXPORT****************EXPORT****************EXPORT****************EXPORT****************EXPORT*					
96	Y 5.7P (LT1), 5.7–5 (LT4), EXH TEMP ALARM (UD6) (EXPORT), (EXC LEADED FUEL EMIS EXPORT (NM8) .	25162780	RH	552.41	CONVERTER, W/UP 3WAY CTLTC (W/EXH MANIF PIPE) (03.685) .	4–L2,32
85	Y VB4, VD1, VT7 (EXPORT) ..	14060154	1	DISCON	PIPE, EXH C/OVR RR	
86–87	Y NM5 (EXPORT, CANADA) ..	14093134	1	DISCON	PIPE, EXH FRT C/OVR	

3.611 GASKET – SEAL, Exhaust Pipe

90–91	Y 5.7J (LT5), SOFT RIDE SUSP (FE1), HVY DUTY SUSP (FE7)	10147973	1	11.66	GASKET, EXH PIPE	4–K24,20
96	Y	15713154	2	8.62	SEAL, EXH MANIF PIPE	4–L2,23

3.613 BOLT – NUT – STUD, Exhaust Pipe

84	Y	411405	AR	*1.90	BOLT, EXH (3/8–16X1 3/4 SHL HT HEX) (08.900)	
92–95	Y 5.7P (LT1)	11516072	6	*1.30	NUT, EXH C/OVR PIPE (M10X1.5) (HEX PRVL TORQ) (08.917) ...	4–K20,22
96	Y	10255857	6	*1.75	NUT, EXH C/OVR PIPE (M10X1.5 FLANGED HEX HEAD) (08.917)	
96	Y	10255857	6	*1.75	NUT, EXH MANIF PIPE (M10X1.5 FLANGED HEX HEAD) (08.917)	
84–88	Y	14057005	6	6.15	STUD, EXH PIPE (M10X1.5X57) ..	4–K20,23
89–91	Y 5.7–8 (L98)	14057005	6	6.15	STUD, EXH PIPE (M10X1.5X57) ..	4–K20,23
92–93	Y 5.7P (LT1)	14057005	6	6.15	STUD, EXH PIPE (M10X1.5X57) ..	4–K20,23

© 2000 GENERAL MOTORS SERVICE PARTS OPERATIONS–CHEVROLET–14Y

3.613 BOLT – NUT – STUD, Exhaust Pipe (Con't)

94–96	Y 5.7P (LT1)	10220453	6	*1.55	STUD, EXH PIPE	1–J17,525
96	Y 5.7–5 (LT4)	10220453	6	*1.55	STUD, EXH PIPE	1–J17,525

3.616 BOLT – BRACKET – CLAMP – HANGER – PLATE – SHIELD, Exhaust Pipe

85–91	Y	10081649	2	4.15	BOLT, EXH PIPE HNGR	4–K22,28
86–95	Y	14060290	AR	.50	BRACKET, EXH C/OVR PIPE H/SHLD (15.300)	4–K24,26
96	Y	14060290	RH	.50	BRACKET, EXH C/OVR PIPE H/SHLD (15.300)	4–K24,26
89–91	Y 5.7–8 (L98), (EXC 8.50 DIAMETER R/GR (G87)	14091271	1	1.53	BRACKET, EXH PIPE HNGR	4–K22,30
85	Y A/TRNS (MD8) (EXC EXPORT)	14091271	1	1.53	BRACKET, INTER PIPE HNGR	4–K22,30
86–88	Y (EXC G87)	14091271	1	1.53	BRACKET, INTER PIPE HNGR	4–K22,30
84	Y	14047735	1	DISCON	CLAMP, RR C/OVR PIPE (ATT TO HNGR)	
85	Y (1ST DES)	14047735	1	DISCON	CLAMP, RR C/OVR PIPE (ATT TO HNGR) (HNGR BOLTS TO CLAMP ONLY)	
90	Y 5.7J (LT5)	10143504	1	DISCON	HANGER, EXH PIPE FRT	
91	Y 5.7J (LT5)	10157948	1	24.09	HANGER, EXH PIPE FRT	4–K24,22
92–96	Y	10157948	1	24.09	HANGER, EXH PIPE FRT	4–K24,22
90–91	Y 5.7J (LT5)	10157949	LH	8.54	HANGER, EXH PIPE RR	4–K24,11
90–91	Y 5.7J (LT5)	10258672	RH	8.03	HANGER, EXH PIPE RR	4–K24,11
92–95	Y	10157949	LH	8.54	HANGER, EXH PIPE RR	4–K24,11
92–95	Y	10258672	RH	8.03	HANGER, EXH PIPE RR	4–K24,11
96	Y	10258672	RH	8.03	HANGER, EXH PIPE RR	4–K24,11
96	Y	10258673	LH	8.03	HANGER, EXH PIPE RR	4–L2,6
84	Y	14047734	1	DISCON	HANGER, FRT C/OVR PIPE	
85	Y (1ST DES)	14047734	1	DISCON	HANGER, FRT C/OVR PIPE (HNGR BOLTS TO CLAMP ONLY)	
85	Y (2ND DES)	14076192	1	DISCON	HANGER, FRT C/OVR PIPE (HNGR BOLTS TO BOTH CLAMP & HT SHLD)	
86–88	Y	10165305	1	21.12	HANGER, FRT C/OVR PIPE	4–K22,23
89–91	Y (5.7–8)	10165305	1	21.12	HANGER, FRT C/OVR PIPE	4–K22,23
85	Y FED (EXC VE1 EXPORT)	10081648	1	7.26	HANGER, RR C/OVR PIPE FRT (ATT TO BRKT)	4–K22,29
86–88	Y	10081648	1	7.26	HANGER, RR C/OVR PIPE FRT (ATT TO BRKT)	4–K22,29
89–91	Y (5.7–8)	10081648	1	7.26	HANGER, RR C/OVR PIPE FRT (ATT TO BRKT)	4–K22,29
84	Y A/TRNS (EXC EXPORT)	14105108	1	7.37	PLATE, FRT C/OVR PIPE RR HT (03.602)	4–K20,1
85	Y A/TRNS, FED	14105108	1	7.37	PLATE, FRT C/OVR PIPE RR HT (03.602)	4–K20,1
89–91	Y 5.7–8 (L98)	10097696	LH	DISCON	SHIELD, EXH PIPE HT (ATT TO FLR PNL)	
90–95	Y 5.7J (LT5)	10157938	RH	9.87	SHIELD, EXH PIPE HT	4–K24,23
90–95	Y 5.7J (LT5)	14104711	LH	9.87	SHIELD, EXH PIPE HT	4–K24,23
92–95	Y 5.7P (LT1)	14091100	RH	10.49	SHIELD, EXH PIPE HT	4–K22,40
94–95	Y 5.7P (LT1)	10248662	LH	3.84	SHIELD, EXH PIPE HT	4–L2,31
96	Y	10248662	LH	3.84	SHIELD, EXH PIPE HT	4–L2,31
96	Y	14091100	RH	10.49	SHIELD, EXH PIPE HT	4–K22,40
86–88	Y	10097696	LH	DISCON	SHIELD, FRT C/OVR PIPE HT (ATT TO FLR PNL)	
86–88	Y	14091100	RH	10.49	SHIELD, FRT C/OVR PIPE HT (ATT TO FLR PNL)	4–K22,40

© 2000 GENERAL MOTORS SERVICE PARTS OPERATIONS–CHEVROLET–14Y

3.616 BOLT – BRACKET – CLAMP – HANGER – PLATE – SHIELD, Exhaust Pipe (Con't)

89–91	Y (5.7–8)	14091100	RH	10.49	SHIELD, FRT C/OVR PIPE HT (ATT TO FLR PNL)	4–K22,40
84	Y M/TRNS (EXC EXPORT)	14076194	1	DISCON	SHIELD, FRT C/OVR PIPE RR HT (03.641)	
85	Y M/TRNS	14076194	1	DISCON	SHIELD, FRT C/OVR PIPE RR HT (03.641)	

3.650 PULLEY – SPACER – WASHER, Air Injection Reactor Pump and Multi–Function Air Compressor

85	Y	14084370	1	DISCON	PULLEY, AIR INJ PUMP (STAMPED ASC)	
86	Y	14087521	1	16.12	PULLEY, AIR INJ PUMP (STAMPED CBS)	4–J20,49
87–90	Y	14101167	1	12.65	PULLEY, AIR INJ PUMP (STAMPED UY)	4–J26,49
91	Y 5.7–8 (L98)	14101167	1	12.65	PULLEY, AIR INJ PUMP (STAMPED UY)	4–J26,49
87–90	Y	14101168	1	15.20	SPACER, AIR INJ PUMP PULLEY	4–J26,48
91	Y 5.7–8 (L98)	14101168	1	15.20	SPACER, AIR INJ PUMP PULLEY	4–J26,48
85	Y	14084387	1	DISCON	WASHER, AIR INJ PUMP PULLEY	
86	Y	14087522	1	DISCON	WASHER, AIR INJ PUMP PULLEY	

3.655 BOLT – BRACE – BRACKET – STUD, Air Injection Reactor Pump and Multi–Function Air Compressor

85	Y	14084398	1	DISCON	BOLT, AIR INJ PUMP (HFH 10X1.5X105 M9.8 PZOR 33.5 THD LENGTH)	
85	Y	14084400	1	2.80	BOLT, AIR INJ PUMP BRKT (HFH 3/8–16X2.50, 1.12 THD, 280M, .75 OD)	4–J20,48
85–86	Y	14082455	3	1.05	BOLT, AIR INJ PUMP PULLEY (6.000X1.00X25.00 PO)	4–J20,52
87–90	Y	14101169	3	1.00	BOLT, AIR INJ PUMP PULLEY (HFH M8X1.25X26.5, 21.8 THD, 18 OD)	4–J26,52
91	Y 5.7–8 (L98)	14101169	3	1.00	BOLT, AIR INJ PUMP PULLEY (HFH M8X1.25X26.5, 21.8 THD, 18 OD)	4–J26,52
84	Y	14063754	1	DISCON	BOLT, PUMP (3/8–16X4.62)	
90–95	Y 5.7J (LT5)	10132913	3	.68	BOLT, SECD AIR INJN PUMP (10.252)	4–H6,20
92	Y 5.7P (LT1)	10132913	3	.68	BOLT, SECD AIR INJN PUMP (10.252)	4–H6,20
93	Y 5.7P (LT1), 6–SPD M/TRANS (ML9)	10132913	3	.68	BOLT, SECD AIR INJN PUMP (10.252)	4–H6,20
92–93	Y 5.7P (LT1)	10077321	AR	*.45	BOLT, SECD AIR INJN PUMP BRKT (M6X1X20) (08.900)	
86–90	Y	10105298	1	8.57	BRACE, AIR INJ PUMP	4–J20,45
91	Y 5.7–8 (L98)	10105298	1	8.57	BRACE, AIR INJ PUMP	4–J20,45
88–90	Y	10105234	1	10.85	BRACE, AIR INJ PUMP BRKT	
91	Y 5.7–8 (L98)	10105234	1	10.85	BRACE, AIR INJ PUMP BRKT	
85	Y	14084368	1	DISCON	BRACKET, AIR INJ PUMP	
86–90	Y	14087520	1	18.87	BRACKET, AIR INJ PUMP	4–J20,44
91	Y 5.7–8 (L98)	14087520	1	18.87	BRACKET, AIR INJ PUMP	4–J20,44
84	Y	14063756	1	9.23	BRACKET, PUMP SUPT	4–J13,67
90–95	Y 5.7J (LT5)	14104700	1	20.66	BRACKET, SECD AIR INJN PUMP	4–H6,21
92	Y 5.7P (LT1)	14104700	1	20.66	BRACKET, SECD AIR INJN PUMP	4–H6,21
93	Y 5.7P (LT1), 6–SPD M/TRANS (ML9)	14104700	1	20.66	BRACKET, SECD AIR INJN PUMP	4–H6,21
94–96	Y 5.7P (LT1)	12552706	1	9.64	BRACKET, SECD AIR INJN PUMP	4–H15,22

© 2000 GENERAL MOTORS SERVICE PARTS OPERATIONS–CHEVROLET–14Y

3.655 BOLT – BRACE – BRACKET – STUD, Air Injection Reactor Pump and Multi–Function Air Compressor (Con't)

96	Y 5.7–5 (LT4)	12552796	1	9.64	BRACKET, SECD AIR INJN PUMP	4–H15,22
85–90	Y	14085701	1	23.25	STUD, AIR INJ PUMP BRKT (3/8–16X1.75/3/8–16X.88 300M)	4–J20,43
91	Y 5.7–8 (L98)	14085701	1	23.25	STUD, AIR INJ PUMP BRKT (3/8–16X1.75/3/8–16X.88 300M)	4–J20,43

3.660 CONNECTOR – PUMP, Air Injection Reactor Pump and Multi–Function Air Compressor

96	Y	12117025	1	21.82	CONNECTOR, MOT–SECD AIR INJN PUMP (BLACK) (3–WAY F) (W/LEADS) (02.383) (AC–DELCO #PT420)	
84	Y	7846380	1	281.81	PUMP, SECD AIR INJN ((STAMPED JL)) (AC–DELCO #215–325)	4–J13,71
85	Y	7846432	1	231.13	PUMP, SECD AIR INJN (STAMPED JM) (AC–DELCO #215–326)	4–J20,46
86	Y	7834915	1	281.81	PUMP, SECD AIR INJN (AC–DELCO #215–149)	4–J20,46
87–91	Y 5.7–8 (L98)	7849157	1	276.27	PUMP, SECD AIR INJN (STAMPED NP) (AC–DELCO #215–329)	4–J26,55
90–95	Y 5.7J (LT5)	10090521	1	276.28	PUMP, SECD AIR INJN (INCLUDES RELAY) (AC–DELCO #215–90)	4–H6,19
92–93	Y 5.7P (LT1)	10090521	1	276.28	PUMP, SECD AIR INJN (INCLUDES RELAY) (AC–DELCO #215–90)	4–H6,19
94–96	Y 5.7P (LT1)	24505066	1	178.28	PUMP, SECD AIR INJN (AC–DELCO #215–345)	4–H15,18
96	Y 5.7–5 (LT4)	24505066	1	178.28	PUMP, SECD AIR INJN (AC–DELCO #215–345)	4–H15,18

3.665 BEARING – GASKET, Air Injection Reactor Pump and Multi–Function Air Compressor

84–86	Y	900529	1	19.69	BEARING, PUMP FRT ROTOR (AC–DELCO #Z99503)	
84–88	Y	14015367	1	*.85	GASKET, AIR INJ CONT VLV & ADAP (03.671)	4–J13,75

3.670 CONNECTOR – COVER – EPROM – FILTER – MODULE – RELAY – SCREW – SOLENOID – SWITCH – VALVE, Emission Control System

NOTE: SEE GROUP 3.671 FOR ATTACHING PARTS.

92–93	Y	12101855	1	19.95	CONNECTOR, AIR INJN C/VLV CONT MDL (2–WAY F) (W/LEADS) (W/SEAL) (02.535) (AC–DELCO #PT247)	
93	Y	12102491	1	28.96	CONNECTOR, AIR INJN C/VLV CONT MDL (4–WAY F) (W/LEADS) (01.055) (AC–DELCO #PT282)	
94	Y 5.7J (LT5)	12101855	1	19.95	CONNECTOR, AIR INJN C/VLV CONT MDL (2–WAY F) (W/LEADS) (W/SEAL) (02.535) (AC–DELCO #PT247)	
94	Y 5.7J (LT5)	12102491	1	28.96	CONNECTOR, AIR INJN C/VLV CONT MDL (4–WAY F) (W/LEADS) (01.055) (AC–DELCO #PT282)	
92	Y 5.7P (LT1), 5.7J (LT5)	12101763	1	16.97	CONNECTOR, MDL–ENG CONT (1–WAY F) (W/LEADS) (02.535) (AC–DELCO #PT170)	

© 2000 GENERAL MOTORS SERVICE PARTS OPERATIONS–CHEVROLET–14Y

3.670 CONNECTOR – COVER – EPROM – FILTER – MODULE – RELAY – SCREW – SOLENOID – SWITCH – VALVE, Emission Control System (Con't)

93	Y 5.7P (LT1), 6–SPD M/TRANS (ML9), DIAGNOSTIC SYSTEM (BAK), A/C MAN CONT (C60)	12129025	4	5.66	CONNECTOR, MDL–PWRT (32–WAY F) (TYPICALLY USES 12084912 TERM)	4–I25,2
94–95	Y 5.7P (LT1)	12129025	4	5.66	CONNECTOR, MDL–PWRT (32–WAY F) (TYPICALLY USES 12084912 TERM)	4–I25,2
96	Y	12129025	4	5.66	CONNECTOR, MDL–PWRT (32–WAY F) (TYPICALLY USES 12084912 TERM)	4–I25,2
95–96	Y	1530 1045	2	20.78	CONNECTOR, RLY–SECD AIR INJN PUMP (TWO 12GA AND THREE 14GA WIRES) (08.855) (AC–DELCO #PT1205)	
96	Y	153 15675	2		CONNECTOR, RLY–SECD AIR INJN PUMP (5–WAY F) (W/LEADS & RELAY) (08.855) (AC–DELCO #PT1016)	
93–94	Y	12102747	1	21.07	CONNECTOR, SOL–EGR PWM VLV (BLACK) (2–WAY F) (W/LEADS) (AC–DELCO #PT374)	4–J2,13
91	Y 5.7–8 (L98)	12085485	1	16.11	CONNECTOR, SOL–EGR VLV (2–WAY M) (W/LEADS) (02.535) (AC–DELCO #PT107)	
92–96	Y	12102747	1	21.07	CONNECTOR, SOL–EGR VLV (BLACK) (2–WAY F) (W/LEADS) (AC–DELCO #PT374)	4–J2,13
93–95	Y	12126477	1	46.24	CONNECTOR, SOL–EGR VLV (5–WAY F) (W/LEADS) (AC–DELCO #PT747)	
90	Y 5.7J (LT5)	12101855	1	19.95	CONNECTOR, SOL–SECD AIR INJN BYPASS VLV (2–WAY F, W/LEADS) (02.535) (AC–DELCO #PT247)	
90	Y 5.7J (LT5)	12102491	1	28.96	CONNECTOR, SOL–SECD AIR INJN BYPASS VLV (4–WAY F, W/LEADS) (01.055) (AC–DELCO #PT282)	
92	Y	12101855	1	19.95	CONNECTOR, SOL–SECD AIR INJN BYPASS VLV (2–WAY F) (W/LEADS) (W/SEAL) (02.535) (AC–DELCO #PT247)	
92–93	Y	12101857	1	18.70	CONNECTOR, SOL–SECD AIR INJN BYPASS VLV (WHITE) (2–WAY F, W/LEADS) (02.535) (AC–DELCO #PT249)	
92	Y	12102491	1	28.96	CONNECTOR, SOL–SECD AIR INJN BYPASS VLV (4–WAY F) (W/LEADS) (01.055) (AC–DELCO #PT282)	
93–95	Y 5.7J (LT5)	12101857	1	18.70	CONNECTOR, SOL–SECD AIR INJN BYPASS VLV (WHITE) (2–WAY F, W/LEADS) (02.535) (AC–DELCO #PT249)	
93–94	Y 5.7J (LT5)	12101858	1	18.13	CONNECTOR, SOL–SECD AIR INJN BYPASS VLV (RED) (2–WAY F) (W/LEADS) (02.535) (AC–DELCO #PT250)	

© 2000 GENERAL MOTORS SERVICE PARTS OPERATIONS–CHEVROLET–14Y

3.670 CONNECTOR – COVER – EPROM – FILTER – MODULE – RELAY – SCREW – SOLENOID – SWITCH – VALVE, Emission Control System (Con't)

88–90	Y 5.7–8 (L98)	17082198	1	7.04	COVER, SECD AIR INJN BYPASS VLV (AC–DELCO #17082198) .	4–H4,4
91	Y 5.7–8 (L98)	17082198	1	7.04	COVER, SECD AIR INJN BYPASS VLV (AC–DELCO #17082198) .	4–H4,4
84	Y M/TRNS, CALIF	1225428	1	58.73	EPROM, ECM (CODE 3679CDF, 9842DBP) (AC–DELCO #1225428)	
84	Y M/TRNS, FED	1225429	1	59.34	EPROM, ECM (CODE 3661CDK, 9846DBR) (AC–DELCO #1225429)	
84	Y A/TRNS, CLSD LOOP	1226466	1	58.73	EPROM, ECM (CODE 3235CCC, 3940CDR) (AC–DELCO #1226466)	
85	Y (5.7–8) A/TRNS (MD8), FED	1227805	1	58.73	EPROM, ECM (CODE 3200HLH) (AC–DELCO #1227805)	4–J17,20
85	Y (5.7–8) M/TRNS (MK2), FED	1227806	1	58.73	EPROM, ECM (CODE 3266HLP) (AC–DELCO #1227806)	
85	Y M/TRNS (MK2), FED	16042430	1	19.87	EPROM, ECM (16042431 STAMPED) (CALPAK) (AC–DELCO #16042430)	
85	Y A/TRNS (MD8)	16042437	1	19.87	EPROM, ECM (16042438 STAMPED) (CALPAK) (AC–DELCO #16042437)	
85	Y M/TRNS (MK2)	16042437	1	19.87	EPROM, ECM (16042438 STAMPED) (CALPAK) (AC–DELCO #16042437)	
85	Y M/TRNS (MH5), FED	16052307	1	58.73	EPROM, ECM (CODE 9573FTW, 2308HLS) (AC–DELCO #16052307)	
86	Y07 (5.7–8) A/TRNS (MD8) 2.59R (GM1), KB2, FED	1227942	1	58.73	EPROM, ECM (CODE 9355BUC, 9555BUC, 1724BUC) (AC–DELCO #1227942)	
86	Y07 M/TRNS (MK2) 3.07R (G44), KB2, (EXC VD1 EXPORT)	1227943	1	58.73	EPROM, ECM (CODE 9348BUB, 1726BUB) (AC–DELCO #1227943)	
86	Y07 (5.7–8) M/TRNS (MH5) 3.07R, KB2, FED	1227943	1	58.73	EPROM, ECM (CODE 9398BUM) (AC–DELCO #1227943)	
86	Y07 (5.7–8) A/TRNS (MD8) 3.07R (G44) (EXC EXPORT NM8, VE1)	1227944	1	58.73	EPROM, ECM (CODE 1728BUA, 9340BUA) (AC–DELCO #1227944)	
86	Y07 (5.7–8) A/TRNS (MD8) 2.59R (GM1), 2.73R (GU2), FED (EXC KB2)	1228107	1	58.73	EPROM, ECM (CODE 1732AANK) (AC–DELCO #1228107)	
86	Y07 (5.7–8) A/TRNS (MD8) 3.07R, FED (NA5) (EXC KB2, NM8, VE1 EXPORT)	1228109	1	58.73	EPROM, ECM (CODE 4045AANL, 8840ALZ, 1736AANM) (AC–DELCO #1228109)	
86	Y07 (5.7–8) M/TRNS (MK2) 3.07R, FED	1228473	1	58.73	EPROM, ECM (CODE 8848AMA, 1734AARL, 1010AARL) (AC–DELCO #1228473)	
86	Y07 (5.7–8) M/TRNS (MH5), 3.07R (G44) (EXC KB2)	16063919	1	58.73	EPROM, ECM (CODE 3921AARK, 8934AML) (AC–DELCO #16063919)	
86	Y67 MD8, 2.73R (GU2), 3.07R (G44) (EXC KB2, EXPORT) .	1228109	1	58.73	EPROM, ECM (CODE 2770AANM, 0504AMH, 1736AANM) (AC–DELCO #1228109)	
86	Y67 M/TRNS (MK2), 3.07R (G44) (EXC KB2, EXPORT) .	1228473	1	58.73	EPROM, ECM (CODE 0499AMJ, 1734AARL, 1010AARL) (AC–DELCO #1228473)	

3.670 CONNECTOR – COVER – EPROM – FILTER – MODULE – RELAY – SCREW – SOLENOID – SWITCH – VALVE, Emission Control System (Con't)

87	Y07 M/TRNS (MK2), 3.07R (C14), FED (EXC VD1 EXPORT)	16070312	1	58.73	EPROM, ECM (CODE 0315ABTB, 9539HCY) (AC–DELCO #16070312)	
87	Y07 M/TRNS (MH5), 3.07R (G44), FED	16070318	1	58.73	EPROM, ECM (CODE 0321ABTC, 4423HCZ) (AC–DELCO #16070318)	
87	Y07 A/TRNS (MD8), 2.59R (GM1), FED	16070729	1	58.73	EPROM, ECM (CODE 4427HDA, 0731ABTD) (AC–DELCO #16070729)	
87	Y07 A/TRNS (MD8), 3.07R (G44), FED (EXC VB4, VD1, VE1, VT7 EXPORT)	16070733	1	58.73	EPROM, ECM (CODE 0735ABTF, 4431HDB) (AC–DELCO #16070733)	
87	Y67 M/TRNS (MK2), 3.07R (G44), FED (EXC VD1 EXPORT)	16070323	1	58.73	EPROM, ECM (CODE 0326ABTJ, 4439HDD) (AC–DELCO #16070323)	
87	Y67 M/TRNS (MH5), 3.07R (G44), FED	16070333	1	58.73	EPROM, ECM (CODE 0336ABTH, 4435HDC) (AC–DELCO #16070333)	
87	Y67 A/TRNS (MD8), 2.73R (GU2), FED	16070737	1	58.73	EPROM, ECM (CODE 0739ABTK, 4443HDF) (AC–DELCO #16070737)	
87	Y67 (5.7–8) A/TRNS (MD8), 3.07R (G44), FED (EXC VB4, VD1, VE1, VT7 EXPORT) ...	16071823	1	58.73	EPROM, ECM (CODE 1825ADJR) (AC–DELCO #16071823)	
88	Y07 (5.7–8) M/TRNS (MK2), 3.07R (G44), FED (EXK20 EXPORT)	16074756	1	58.73	EPROM, ECM (CODE 4757ABTP) (AC–DELCO #16074756)	
88	Y07 (5.7–8) M/TRNS (MH5), 3.07R (G44), FED	16074762	1	58.73	EPROM, ECM (CODE 4763ABTR) (AC–DELCO #16074762)	
88	Y07 (5.7–8) A/TRNS (MD8), 2.59R (GM1), FED	16074766	1	58.73	EPROM, ECM (CODE 4767ABTS) (AC–DELCO #16074766)	
88	Y07 (5.7–8) A/TRNS (MD8), 3.07R (G44), FED (EXC K20 EXPORT)	16074772	1	58.73	EPROM, ECM (CODE 4773ABTT) (AC–DELCO #16074772)	
88	Y67 (5.7–8) M/TRNS (MH5), 3.07R (G44), FED	16074800	1	58.73	EPROM, ECM (CODE 4802ABTU) (AC–DELCO #16074800)	
88	Y67 (5.7–8) M/TRNS (MK2), 3.07R (G44), FED (EXC K20 EXPORT)	16074805	1	58.73	EPROM, ECM (CODE 4806ABTW) (AC–DELCO #16074805)	
88	Y67 (5.7–8) A/TRNS (MD8), 2.73R (GU2), 3.07R (G44), FED (EXC K20 EXPORT) ...	16079967	1	58.73	EPROM, ECM (CODE 9968ACKY) (AC–DELCO #16079967)	
89	Y (5.7–8) M/TRNS (ML9), 3.54R (GH0), 3.33R (GT7), FED (NA5), NN5	16133472	1	58.73	EPROM, ECM (3499APYP, 9314ANYL) (02.560) (AC–DELCO #16133472)	
89	Y (5.7–8) A/TRNS (MD8), 2.59R (GM1), STEREO (UM6/UU8)	16134197	1	58.73	EPROM, ECM (3536APZA, 1374APKD, 4198ARAR) (02.560) (AC–DELCO #16134197)	
89	Y07 (5.7–8) A/TRNS (MD8), 3.07R (G44), FED (NA5), NN5	16134193	1	58.73	EPROM, ECM (3533APYZ, 1304APKC, 4194ARAP) (02.560) (AC–DELCO #16134193)	
89	Y07 (5.7–8) A/TRNS (MD8), 2.59R (GM1) (EXC RDO) ...	16141874	1	58.73	EPROM, ECM (1875ASXB) (02.560) (AC–DELCO #16141874)	
89	Y67 (5.7–8) A/TRNS (MD8), 2.73R (GU2), 3.07R (G44), FED (NA5), NN5	16134203	1	58.73	EPROM, ECM (3539APZB, 1379APKF, 4204ARAS) (T/W 1227165) (02.560) (AC–DELCO #16134203)	
90	Y 5.7–8 (L98), 2.73R (GU2) .	16134293	1	75.83	EPROM, ECM (4294ANHW) (AC–DELCO #16134293)	3–H21,10

3.670 CONNECTOR – COVER – EPROM – FILTER – MODULE – RELAY – SCREW – SOLENOID – SWITCH – VALVE, Emission Control System (Con't)

90	Y 5.7–8 (L98), 3.07R (G44) ..	16134297	1	75.07	EPROM, ECM (4208ANHT) (AC–DELCO #16134297)	4–K17,14
90	Y 5.7–8 (L98), 2.59R (GM1) .	16134302	1	75.07	EPROM, ECM (4303ANHU) (AC–DELCO #16134302)	3–H21,10
90	Y 5.7–8 (L98), 6–SPD M/TRANS (ML9)	16137184	1	75.07	EPROM, ECM (7185ARFP) (AC–DELCO #16137184)	3–H21,10
90	Y 5.7J (LT5)	16163905	1	45.65	EPROM, ECM (9718ANHX, 8555AUAH, 4168AYBK)	4–K12,11
90	Y07 5.7–8 (L98), 4–SPD A/TRANS (MD8), 2.59R (GM1)	16137184	1	75.07	EPROM, ECM (1875ASXB) (AC–DELCO #16137184)	3–H21,10
91	Y 5.7–8 (L98), 6–SPD M/TRANS (ML9)	16159798	1	75.07	EPROM, ECM (0708ARYU, 9806AXCN) (AC–DELCO #16159798)	4–K17,14
91	Y 5.7–8 (L98), 3.07R (G44) ..	16159799	1	75.07	EPROM, ECM (0710ARYW, 9814AXCP) (AC–DELCO #16159799)	3–I2,10
91	Y 5.7–8 (L98), 2.59R (GM1) .	16159800	1	75.07	EPROM, ECM (0714ARYX, 9819AXCR) (AC–DELCO #16159800)	3–I2,10
91	Y 5.7–8 (L98), 2.73R (GU2) .	16159802	1	75.07	EPROM, ECM (0718ARYY, 9826AXCS) (AC–DELCO #16159802)	3–I2,10
91	Y 5.7J (LT5)	16193416	1	75.07	EPROM, ECM (8992ARZR, 0277AXFK, 3417BFXB) (AC–DELCO #16193416)	4–K12,11
92–93	Y 5.7P (LT1), 6–SPD M/TRANS (ML9), (EXC LEADED FUEL EMIS EXPORT (NM8)	16173866	1	75.07	EPROM, ECM (1692AZUM, 3867BAFL) (AC–DELCO #16173866)	4–I19,14
92–93	Y 5.7P (LT1), 3.07R (G44), (EXC LEADED FUEL EMIS EXPORT (NM8)	16184669	1	75.07	EPROM, ECM (1698AZUN, 3872BAFM) (AC–DELCO #16184669)	4–I19,14
92–93	Y 5.7P (LT1), 2.59R (GM1), (EXC LEADED FUEL EMIS EXPORT (NM8)	16184672	1	75.07	EPROM, ECM (1702AZUP, 3876BAFN, 4779BDBK) (AC–DELCO #16184672)	4–I19,14
92–93	Y 5.7P (LT1), 2.73R (GU2), (EXC LEADED FUEL EMIS EXPORT (NM8)	16184678	1	75.07	EPROM, ECM (1707AZUR, 3880BAFP, 4782BDBL) (AC–DELCO #16184678)	4–I19,14
92	Y 5.7J (LT5), (EXC EUROPEAN PROVISIONS (VD1) (EXPORT), VE1 (EXPORT)	16219916	1	75.07	EPROM, ECM (8044AYWT, 2700AZZC, BPPA) (AC–DELCO #16219916)	4–I22,20
92	Y67 5.7P (LT1), 3.07R (G44), (EXC LEADED FUEL EMIS EXPORT (NM8)	16184667	1	75.07	EPROM, ECM (8018AYWM, 3863BAFK) (AC–DELCO #16184667)	4–I1[illegible],14
93–95	Y 5.7J (LT5)	12528772	1	74.33	EPROM, ECM (AC–DELCO #12528772)	4–I22,20
93	Y 5.7P (LT1), 3.07R (G44), (EXC LEADED FUEL EMIS EXPORT (NM8)	16184669	1	75.07	EPROM, ECM (4776BDBJ) (AC–DELCO #16184669)	4–I19,14
84–88	Y	1977880	1	*.39	FILTER, EGR CONT VLV RLY SOL (03.140) (AC–DELCO #219–15)	
89–91	Y 5.7–8 (L98)	1977880	1	*.39	FILTER, EGR VAC REG (03.140) (AC–DELCO #219–15)	
93–95	Y 5.7J (LT5)	16160359	1	71.64	MODULE, EGR VLV REG SOL VLV SIG MODIFIER (AC–DELCO #216–31)	4–J5,16

3.670 CONNECTOR – COVER – EPROM – FILTER – MODULE – RELAY – SCREW – SOLENOID – SWITCH – VALVE, Emission Control System (Con't)

84	Y A/TRNS, FED, CALIF	1226026	1	160.66	MODULE, ENG CONT (REMAN) (1226026 LABELED) (AC–DELCO #1226026)	4–J13,23
84	Y M/TRNS (MK2)	1226430	1	DISCON	MODULE, ENG CONT (REMAN) (1226430 LABELED)	
85	Y	1226870	1	157.49	MODULE, ENG CONT (REMAN) (1226870 LABELED) (AC–DELCO #1226870)	4–J17,20
86–89	Y 5.7–8 (L98)	16198259	1	210.70	MODULE, ENG CONT (REMAN) (1227105 LABELED) (AC–DELCO #16198259)	4–J17,20
90–91	Y 5.7J (LT5), SOFT RIDE SUSP (FE1), HVY DUTY SUSP (FE7)	1228331	1	184.38	MODULE, ENG CONT (REMAN) (1228331 LABELED) (AC–DELCO #1228331)	4–K12,11
90	Y 5.7–8 (L98)	16198260	1	210.70	MODULE, ENG CONT (REMAN) (1227727 LABELED) (AC–DELCO #16198260)	4–K17,14
91	Y 5.7–8 (L98)	16198260	1	210.70	MODULE, ENG CONT (REMAN) (1227727 LABELED) (AC–DELCO #16198260)	4–K17,14
92–93	Y 5.7P (LT1)	16159278	1	215.96	MODULE, ENG CONT (REMAN) (AC–DELCO #16159278)	4–I19,4
92–93	Y 5.7J (LT5)	16163993	1	210.70	MODULE, ENG CONT (REMAN) (16163993 LABELED) (AC–DELCO #16163993)	4–I22,4
94–95	Y 5.7J (LT5)	16196394	1	206.55	MODULE, ENG CONT (REMAN) (16196394 LABELED) (AC–DELCO #16196394)	4–I22,4
94–95	Y 5.7P (LT1)	16181333	1	210.70	MODULE, PWRT CONT (REMAN) (REPROGRAMABLE MODULE) (AC–DELCO #16181333)	4–I25,3
96	Y	16214399	1	215.96	MODULE, PWRT CONT (REMAN) (AC–DELCO #16214399)	4–I25,3
94–96	Y	12193603	1	20.30	RELAY, SECD AIR INJN PUMP (GRAY) (SPST 280 MINI) (4–WAY) (02.100) (AC–DELCO #12193603)	
88–90	Y M/TRNS	10105235	1	DISCON	SCREW, AIR INJ PUMP	
91	Y 5.7–8 (L98), (M/TRNS)	10105235	1	DISCON	SCREW, AIR INJ PUMP	
84	Y	1997125	1	22.36	SOLENOID, EGR VAC REG VLV (AC–DELCO #214–333)	4–J13,82
85	Y	1997111	1	22.71	SOLENOID, EGR VAC REG VLV (AC–DELCO #214–331)	4–J17,34
86–88	Y	1997195	1	24.29	SOLENOID, EGR VAC REG VLV (AC–DELCO #214–340)	4–J17,34
89–91	Y 5.7–8 (L98)	1997195	1	24.29	SOLENOID, EGR VAC REG VLV (AC–DELCO #214–340)	4–J17,34
92–96	Y 5.7P (LT1)	1997223	1	23.13	SOLENOID, EGR VAC REG VLV (AC–DELCO #214–396)	4–J2,1
85	Y	14087416	1	11.46	SWITCH, EGR TEMP IND (W/WIRE LEAD, INTERN THD M10X1.0X6G) (AC–DELCO #212–337)	4–J20,1
86–89	Y	14087415	1	10.98	SWITCH, EGR TEMP IND (AC–DELCO #212–336)	4–J20,1
84	Y A/TRNS, CLSD LOOP	17073963	1	DISCON	VALVE, AIR INJ CONT (STAMPED 17073963)	
84	Y M/TRNS	17074435	1	DISCON	VALVE, AIR INJ CONT (STAMPED 17074435)	

© 2000 GENERAL MOTORS SERVICE PARTS OPERATIONS–CHEVROLET–14Y

3.670 CONNECTOR – COVER – EPROM – FILTER – MODULE – RELAY – SCREW – SOLENOID – SWITCH – VALVE, Emission Control System (Con't)

86–90	Y	22062561	1	20.64	VALVE, CTLTC CONV SECD AIR INJN CHK (AC–DELCO #214–423)	4–J20,75
91	Y 5.7–8 (L98)	22062561	1	20.64	VALVE, CTLTC CONV SECD AIR INJN CHK (AC–DELCO #214–423)	4–J20,75
84	Y A/TRNS, FED	17113422	1	71.73	VALVE, EGR (PROD 17083813)) (AC–DELCO #214–5501)	1–G11,69
85	Y FEDERAL EMIS (NA5), (A/TRNS)	17113406	1	70.30	VALVE, EGR (PROD 17086815) (AC–DELCO #214–5591)	4–J20,82
85	Y FEDERAL EMIS (NA5), (M/TRNS)	17113459	1	70.30	VALVE, EGR (PROD 17086817) (AC–DELCO #214–5536)	4–J20,82
86–88	Y	17113456	1	70.30	VALVE, EGR (PROD #17086078) (AC–DELCO #214–5535)	4–J20,82
86–89	Y 5.7–8 (L98)	17113456	1	70.30	VALVE, EGR (PROD #17086078, 17086062, 17086061) (AC–DELCO #214–5535)	4–J20,82
89	Y 5.7–8 (L98)	17113456	1	70.30	VALVE, EGR (PROD #17086078) (AC–DELCO #214–5535)	4–J20,82
90–91	Y 5.7–8 (L98)	17113456	1	70.30	VALVE, EGR (PROD #17090106) (AC–DELCO #214–5535)	4–J20,82
92–95	Y 5.7P (LT1), 6–SPD M/TRANS (ML9), (EXC LEADED FUEL EMIS EXPORT (NM8)	17113381	1	71.73	VALVE, EGR (PROD 17092160) (FOR EXPORT REPL EGR VLV W/ EGR VLV CVR & VAC CAP) (AC–DELCO #214–5083)	4–J2,3
92–93	Y 5.7P (LT1), 4–SPD A/TRANS (MD8)	17113382	1	71.73	VALVE, EGR (PROD 17092172) (FOR EXPORT REPL EGR W/ EGR CVR & VAC CAP) (AC–DELCO #214–5084)	4–J2,3
93–95	Y 5.7J (LT5)	17113280	1	190.58	VALVE, EGR (W/O GSKT) (AC–DELCO #214–5008)	4–J5,10
94–96	Y 5.7P (LT1), 4–SPD A/TRANS (M30), (EXC LEADED FUEL EMIS EXPORT (NM8)	17113382	1	71.73	VALVE, EGR (PROD 17092172) (FOR EXPORT REPL EGR W/ EGR CVR & VAC CAP) (AC–DELCO #214–5084)	4–J2,3
94–95	Y 5.7P (LT1)	10235337	1	4.02	VALVE, SECD AIR INJN BL (AC–DELCO #214–614)	4–H15,5
96	Y 5.7P (LT1), 5.7–5 (LT4)	1997201	1	25.69	VALVE, SECD AIR INJN BL SOL (2 PORT VAC, 2 BLADE TERM) (03.130) (AC–DELCO #214–565)	4–H17,28
86–89	Y	17088106	1	317.02	VALVE, SECD AIR INJN BYPASS (AC–DELCO #214–117)	4–H4,1
90–91	Y 5.7–8 (L98)	17088106	1	317.02	VALVE, SECD AIR INJN BYPASS (AC–DELCO #214–117)	4–H4,1
90–91	Y 5.7J (LT5)	17089059	1	158.19	VALVE, SECD AIR INJN BYPASS (AC–DELCO #214–119)	4–H6,9
92–93	Y 5.7P (LT1)	17092085	1	155.08	VALVE, SECD AIR INJN BYPASS (AC–DELCO #214–124)	4–H9,16
92–95	Y 5.7J (LT5)	17092132	1	158.19	VALVE, SECD AIR INJN BYPASS (AC–DELCO #214–125)	4–H12,9
84–85	Y	22050642	1	26.46	VALVE, SECD AIR INJN CHK (AC–DELCO #214–422)	4–J13,61
85–87	Y	22048212	1	21.48	VALVE, SECD AIR INJN CHK (AC–DELCO #214–419)	4–H6,3
88–91	Y 5.7–8 (L98)	12562568	2	17.10	VALVE, SECD AIR INJN CHK (AC–DELCO #214–998)	4–K5,58
90–95	Y 5.7J (LT5)	22048212	4	21.48	VALVE, SECD AIR INJN CHK (AC–DELCO #214–419)	4–H6,3

© 2000 GENERAL MOTORS SERVICE PARTS OPERATIONS–CHEVROLET–14Y

3.670 CONNECTOR – COVER – EPROM – FILTER – MODULE – RELAY – SCREW – SOLENOID – SWITCH – VALVE, Emission Control System (Con't)

92–95	Y 5.7P (LT1)	22048212	2	21.48	VALVE, SECD AIR INJN CHK (AC–DELCO #214–419)	4–H6,3
96	Y 5.7P (LT1), 5.7–5 (LT4)	22048212	2	21.48	VALVE, SECD AIR INJN CHK (AC–DELCO #214–419)	4–H6,3
85–86	Y	17085740	1	215.55	VALVE, SECD AIR INJN SW (VALVE, AIR INJ CONT) (AC–DELCO #214–78)	4–J20,71
85–86	Y FED	17085741	1	71.30	VALVE, SECD AIR INJN SW (VALVE, AIR INJ SW) (AC–DELCO #214–79)	4–J20,64
87	Y	17087221	1	211.34	VALVE, SECD AIR INJN SW (AC–DELCO #214–107)	4–J26,69
87	Y (EXC NM8 EXPORT)	17087222	1	185.27	VALVE, SECD AIR INJN SW (AC–DELCO #214–108)	4–J26,66
92–95	Y 5.7J (LT5)	17092132	1	150.10	VALVE, SECD AIR INJN SW (AC–DELCO #214–125)	4–H12,9
	*EXPORT****************EXPORT****************EXPORT****************EXPORT****************EXPORT*					
84	Y NM6 (EXPORT, CANADA)	1226642	1	58.73	EPROM, ECM (CODE 4044CFB, 8577CFB) (AC–DELCO #1226642)	
85	Y A/TRNS (MD8), NM8 (EXPORT)	1227177	1	58.73	EPROM, ECM (CODE 4515CUN) (AC–DELCO #1227177)	
85	Y NM8 (EXPORT)	1227734	1	DISCON	EPROM, ECM (CODE 2433CUN, 9567FTU, 2303HLR)	
86	Y (5.7–8) MK2, 3.07R, VD1 (EXP) (EXC KB2)	16063909	1	58.73	EPROM, ECM (CODE 3921AARK, 8947AMN) (AC–DELCO #16063909)	
86	Y07 (5.7–8) A/TRNS (MD8) 3.07R, NM6 (EXPORT, CANADA) (EXC KB2, NM8, VE1 EXPORT)	1228109	1	58.73	EPROM, ECM (CODE 4045AANL, 8840ALZ, 1736AANM) (AC–DELCO #1228109)	
86	Y07 (5.7–8) M/TRNS (MK2) 3.07R, NM6 (EXPORT, CANADA) (EXC KB2, VD1 EXPORT)	1228473	1	58.73	EPROM, ECM (CODE 8848AMA, 1734AARL, 1010AARL) (AC–DELCO #1228473)	
86	Y07 A/TRNS (MD8), 3.07R (G44), KB2, VB4, VT7	16059638	1	57.58	EPROM, ECM (CODE 9642BUF) (AC–DELCO #16059638)	
86	Y07 A/TRNS (MD8), 3.07R (G44), KB2, VE1	16059644	1	58.73	EPROM, ECM (CODE 9647BUH) (AC–DELCO #16059644)	
86	Y07 M/TRNS (MK2), 3.07R, KB2, VD1 (EXPORT)	16059672	1	58.73	EPROM, ECM (CODE 9676BUP) (AC–DELCO #16059672)	
86	Y07 A/TRNS (MD8), 3.07R (G44), VB4, VT7 (EXC KB2)	16064047	1	58.73	EPROM, ECM (CODE 4048AANN, 8867AMD) (AC–DELCO #16064047)	
86	Y07 (5.7–8) A/TRNS (MD8) 3.07R (G44) (VE1, EXPORT) (EXC KB2)	16064050	1	58.73	EPROM, ECM (CODE 4051AANP, 8873AMF) (AC–DELCO #16064050)	
87	Y M/TRNS (MK2), 3.07R (G44), VD1 (EXPORT)	16070328	1	58.73	EPROM, ECM (CODE 0331ABTM, 4461HDK) (AC–DELCO #16070328)	
87	Y A/TRNS (MD8), 3.07R (G44), EXPORT (VB4, VT7)	16070741	1	58.73	EPROM, ECM (CODE 0743ABTL, 4457HDJ) (AC–DELCO #16070741)	
87	Y A/TRNS (MD8), 3.07R (G44), VD1, VE1 (EXPORT)	16070745	1	57.58	EPROM, ECM (CODE 0747ABTN, 4465HDM) (AC–DELCO #16070745)	
87	Y07 M/TRNS (MK2), 3.07R (G44), NM6 (EXPORT, CANADA) (EXC VD1 EXPORT)	16070312	1	58.73	EPROM, ECM (CODE 0315ABTB, 9539HCY) (AC–DELCO #16070312)	

© 2000 GENERAL MOTORS SERVICE PARTS OPERATIONS–CHEVROLET–14Y

3.670 CONNECTOR – COVER – EPROM – FILTER – MODULE – RELAY – SCREW – SOLENOID – SWITCH – VALVE, Emission Control System (Con't)

87	Y07 A/TRNS (MD8), 3.07R (G44), NM5 (EXPORT, CANADA) (EXC VB4, VD1, VE1, VT7 EXPORT)	16070733	1	58.73	EPROM, ECM (CODE 0735ABTF, 4431HDB) (AC–DELCO #16070733)	
87	Y87 M/TRNS (MK2), 3.07R (G44), NM5 (EXPORT, CANADA (EXC VD1 EXPORT)	16070323	1	58.73	EPROM, ECM (CODE 0326ABTJ, 4439HDD) (AC–DELCO #16070323)	
87	Y87 A/TRNS (MD8), 2.73R (GU2), NM5 (EXPORT, CANADA)	16070737	1	58.73	EPROM, ECM (CODE 0739ABTK, 4443HDF) (AC–DELCO #16070737)	
87	Y87 (5.7–8) A/TRNS (MD8), 3.07R (G44), NM5 (EXPORT, CANADA) (VB4, VD1, VE1, VT7 EXPORT)	16071823	1	58.73	EPROM, ECM (CODE 1825ADJR) (AC– DELCO #16071823)	
88	Y (5.7–8) M/TRNS (MK2), 3.07R (G44) W/K20 (EXPORT)	16074820	1	58.73	EPROM, ECM (CODE 4822ABTZ) (AC–DELCO #16074820)	
88	Y (5.7–8) A/TRNS (MD8), 3.07R (G44), K20 (EXPORT)	16074825	1	58.73	EPROM, ECM (CODE 4826ABUA) (AC–DELCO #16074825)	
92	Y 5.7J (LT5), EUROPEAN PROVISIONS (VD1) (EXPORT), VE1 (EXPORT) ..	16175910	1	75.07	EPROM, ECM (5912BATL) (AC–DELCO #16175910)	4–I22,20
92–93	Y 5.7P (LT1), LEADED FUEL EMIS EXPORT (NM8)	16176868	1	45.66	EPROM, ECM (6869BAWS)	4–I19,14
84	Y NM5 (EXPORT, CANADA) ..	1226430	1	DISCON	MODULE, ENG CONT (REMAN) (1226430 LABELED)	
84	Y A/TRNS, NM8 (EXPORT) ..	17073307	1	DISCON	VALVE, AIR INJ CONT (STAMPED 17073307)	
84	Y NM8 (EXPORT)	17113422	1	71.73	VALVE, EGR (PROD 17083813)) (AC–DELCO #214–5501)	1–G11,69
85	Y LEADED FUEL EMIS EXPORT (NM8), (A/TRNS, EXPORT)	17113406	1	70.30	VALVE, EGR (PROD 17085810) (AC–DELCO #214–5591)	4–J20,82

3.671 ADAPTER – BOLT – BOLT KIT – BRACKET – CLAMP – CLIP – COVER – FILTER – GASKET – GROMMET – HOUSING – NUT – PLATE – RETAINER – SPACER – STUD, Emission Control System

84	Y	14063752	1	DISCON	ADAPTER, AIR INJ CONT VLV ...	
85–87	Y	14084381	1	21.80	ADAPTER, AIR INJ CONT VLV HOSE	4–J20,54
93–96	Y	16210984	1	6.00	BOLT KIT, PCM HSG CVR (W/OVERSIZED SELF TAPPING SCREWS)	
84–93	Y	12337892	2	*1.13	BOLT, ECM BRKT (M5X.8X16 THD) (SPECIAL) (AC–DELCO #12337892)	4–I19,5
93–95	Y 5.7J (LT5)	12337892	4	*1.13	BOLT, ECM BRKT (M5X.8X16 THD) (SPECIAL) (AC–DELCO #12337892)	4–I19,5
92–94	Y 5.7P (LT1)	9441894	2	2.85	BOLT, EGR VLV (TO BE USED W/WASHER 11501869) (HFH, 5/16–18X1.00, 280M, PC, .65 OD) (08.900)	1–I18,508
85–87	Y	14082472	1	DISCON	BRACKET, AIR INJ CONT VLV ...	
85	Y FED	14082477	1	DISCON	BRACKET, AIR INJ SW VLV	
86–87	Y (EXC NM8 EXPORT)	14082477	1	DISCON	BRACKET, AIR INJ SW VLV	
90–91	Y (5.7J)	10086315	1	31.11	BRACKET, ECM	4–K12,18
92–96	Y	10143544	1	31.11	BRACKET, ECM	4–I19,10

© 2000 GENERAL MOTORS SERVICE PARTS OPERATIONS–CHEVROLET–14Y

3.671 ADAPTER – BOLT – BOLT KIT – BRACKET – CLAMP – CLIP – COVER – FILTER – GASKET – GROMMET – HOUSING – NUT – PLATE – RETAINER – SPACER – STUD, Emission Control System (Con't)

90–91	Y (5.7–8)	10143544	1	31.11	BRACKET, ECM W/SEAL	–I19,10
84	Y	14057006	1	DISCON	BRACKET, EGR SOL	
85	Y	14007585	1	DISCON	BRACKET, EGR SOL	
85	Y	14087410	1	DISCON	BRACKET, EGR TEMP SW WIRE	
85–89	Y	14080604	1	11.68	BRACKET, ELEK FUEL CONT MDL	4–J17,21
84	Y	14062575	1	DISCON	BRACKET, ELEK FUEL CONT MDL LWR	
84	Y	14062576	1	DISCON	BRACKET, ELEK FUEL CONT MDL UPR	
94–95	Y 5.7P (LT1)	10211331	1	8.72	BRACKET, PCM	4–I25,10
96	Y	10211331	1	8.72	BRACKET PCM	4–I25,10
90–91	Y 5.7J (LT6), SOFT RIDE SUSP (FE1), HVY DUTY SUSP (FE7)	14104859	1	7.29	BRACKET, SECD AIR INJN BYPASS VLV	4–H6,30
94	Y 5.7P (LT1)	12129073	1	.45	BRACKET, SECD AIR INJN PUMP RLY (BLACK) (04.720) (AC–DELCO #12129073)	
96	Y	12129073	1	.45	BRACKET, SECD AIR INJN PUMP RLY (BLACK) (04.720) (AC–DELCO #12129073)	
90–92	Y 5.7J (LT6)	1985060	1	*1.00	CLAMP, EGR VAC REG SOL VLV FLTR	
92–96	Y 5.7P (LT1)	1985870	1	1.68	CLAMP, EGR VAC REG SOL VLV FLTR	4–J2,14
84–88	Y	1985870	1	1.68	CLIP, FILTER RET	4–J2,14
89–91	Y 5.7–8 (L98)	1985870	1	1.68	CLIP, FILTER RET	4–J2,14
96	Y 5.7–5 (LT4), LEADED FUEL EMIS EXPORT (NM8)	10054860	1	6.22	COVER, EGR VLV CPG	1–J17,509
85–89	Y	14080605	1	DISCON	COVER, ELEK FUEL CONT MDL HSG	
90–92	Y 5.7J (LT6)	1977796	1	.18	FILTER, EGR VAC REG SOL VLV (AC–DELCO #219–14)	1–H25,633
92–96	Y 5.7P (LT1)	1977880	1	*.39	FILTER, EGR VAC REG SOL VLV (03.140) (AC–DELCO #219–15)	4–J2,15
93–95	Y 5.7J (LT5)	10159525	1	2.47	FILTER, EGR VAC REG SOL VLV (03.670) (AC–DELCO #219–16)	1–H25,633
84	Y	14015367	1	*.85	GASKET, AIR INJ DVTR VLV FL	
90–96	Y	14104640	1	1.68	GROMMET, ECM BRKT (03.660)	4–I19,8
90–91	Y SOFT RIDE SUSP (FE1), H.D. SUSP (FE7)	10086259	1	11.27	HOUSING, ECM	4–I19,13
92–93	Y	10086259	1	11.27	HOUSING, ECM	4–I19,13
94–95	Y 5.7J (LT5)	10086259	1	11.27	HOUSING, ECM	4–I19,13
92–96	Y 5.7P (LT1)	9442958	1	*1.00	NUT, EGR VAC REG VLV SOL (3/8–16 PC, 286M) (HEX, FLANGE) (08.917)	1–I18,504
84	Y CLSD LOOP	14057585	1	DISCON	PLATE, MANIF ABS PRESS SEN BRKT STUD	
85–89	Y 5.7–8 (L98)	10027015	1	.53	RETAINER, ECM (PUSH–ON) (OVERALL LENGTH 1.25") (AC–DELCO #10027015)	4–J13,17
90–92	Y 5.7J (LT6)	14104641	2	1.84	RETAINER, ECM BRKT (PUSH IN)	4–K17,13
84–85	Y	14066567	1	DISCON	RETAINER, ELEK CONT MDL WRG	
90–96	Y	14104639	1	5.61	SPACER, ECM HSG	4–I19,6
94–96	Y 5.7P (LT1)	14080362	2	*1.65	STUD, EGR VLV (5/16 X 18 X 1 43/64) (01.428)	1–J17,508
96	Y 5.7–5 (LT4)	14080362	2	*1.65	STUD, EGR VLV (5/16 X 18 X 1 43/64) (01.428)	1–J17,508

© 2000 GENERAL MOTORS SERVICE PARTS OPERATIONS–CHEVROLET–14Y

3.671 ADAPTER – BOLT – BOLT KIT – BRACKET – CLAMP – CLIP – COVER – FILTER – GASKET – GROMMET – HOUSING – NUT – PLATE – RETAINER – SPACER – STUD, Emission Control System (Con't)

*EXPORT****************EXPORT****************EXPORT****************EXPORT****************EXPORT*

94–96	Y 5.7P (LT1), LEADED FUEL EMIS EXPORT (NM8)	10054880	1	6.22	COVER, EGR VLV OPG	1–J17,509

3.672 PLUG – SILENCER, Exhaust Gas Recirculation Valve

85	Y	14006159	2	.88	PLUG, AIR INJ CHK VLV (11/16) (07.243)	
88–91	Y 5.7–8 (L98)	10055829	1	17.20	SILENCER, AIR INJ CONT VLV ..	4–H4,6
85–87	Y 5.7L	14082474	1	13.23	SILENCER, SECD AIR INJN BYPASS VLV (AC–DELCO #219–156)	4–J20,55

3.675 BOLT – CLAMP – DUCT – GASKET – HARNESS – HOSE – PIPE – SHIELD – SLEEVE – STUD – SUPPORT, Emission System

94	Y 5.7P (LT1)	10222097	1	2.00	BOLT, EGR VLV PIPE	
92–93	Y 5.7P (LT1)	10019739	2	1.10	CLAMP, SECD AIR INJN BYPASS VLV HOSE (01.762)	4–H9,15
92–95	Y 5.7J (LT5)	10019739	1	1.10	CLAMP, SECD AIR INJN BYPASS VLV HOSE (01.762)	4–H9,15
92–93	Y 5.7P (LT1)	10019739	1	1.10	CLAMP, SECD AIR INJN PUMP HOSE (31.5 TO 36MM) (01.762) .	4–H9,15
90–95	Y 5.7J (LT5)	14104698	1	12.80	DUCT, SECD AIR INJN PUMP ...	4–H6,26
92–93	Y 5.7P (LT1)	14104698	1	12.80	DUCT, SECD AIR INJN PUMP ...	4–H6,26
87–88	Y	10055726	2	1.94	GASKET, EGR VLV PIPE	4–H9,7
92–95	Y 5.7P (LT1)	10055726	2	1.94	GASKET, SECD AIR INJN CHK VLV PIPE	4–H9,7
96	Y 5.7P (LT1), 5.7–5 (LT4)	10055726	1	1.94	GASKET, SECD AIR INJN CHK VLV PIPE	4–H9,7
84	Y M/TRNS	14067357	1	DISCON	HARNESS, AIR INJN CONT VLV VAC	
85	Y	14082463	1	8.77	HARNESS, AIR INJN CONT VLV VAC	4–J17,44
86–87	Y (EXC NM8 EXPORT)	14082463	1	8.77	HARNESS, AIR INJN CONT VLV VAC	4–J17,44
96	Y 5.7P (LT1), 5.7–5 (LT4)	12552798	1	6.65	HARNESS, DCLR VLV VAC	4–H17,25
84	Y	14057089	1	DISCON	HARNESS, EGR VALVE VAC	
85	Y	14082441	1	8.47	HARNESS, EGR VLV VAC	4–J17,37
86	Y	14067573	1	DISCON	HARNESS, EGR VLV VAC	
87	Y	10046113	1	11.99	HARNESS, EGR VLV VAC	4–J24,18
88	Y	10055893	1	11.99	HARNESS, EGR VLV VAC	4–K2,18
89–90	Y 5.7–8	10055893	1	11.99	HARNESS, EGR VLV VAC	4–K2,18
91	Y 5.7–8 (L98)	10105375	1	11.99	HARNESS, EGR VLV VAC	1–H2,92
92–93	Y 5.7P (LT1)	10105325	1	11.77	HARNESS, EGR VLV VAC	4–H9,21
94–96	Y 5.7P (LT1)	10105323	1	6.32	HARNESS, EGR VLV VAC	4–H15,24
88–91	Y 5.7–8 (L98)	14082433	1	3.77	HARNESS, EMIS CONT VAC (RR) .	4–K2,28
84	Y	14057046	1	3.98	HOSE, AIR INJN CONT VLV	4–J13,88
84	Y	14063751	1	DISCON	HOSE, AIR INJN CONT VLV DVTR (HOSE TO VLV)	
85–87	Y (EXC NM8 EXPORT)	14082471	1	3.11	HOSE, AIR INJN CONT VLV DVTR (45 DEG ANGLE)	4–J20,72
85–87	Y (EXC NM8 EXPORT)	14082473	1	3.11	HOSE, AIR INJN CONT VLV DVTR (90 DEG ANGLE)	4–J20,65
85	Y	14084382	1	11.02	HOSE, AIR INJN CONT VLV DVTR .	4–J20,51
85–87	Y	14082475	1	3.01	HOSE, AIR INJN CONT VLV SIL ..	4–J20,56
88–91	Y (5.7–8)	10105320	1	DISCON	HOSE, AIR INJN CONT VLV SIL ..	
85–87	Y	14085800	2	3.37	HOSE, AIR INJN ENG CHK VLV ..	4–J20,68

© 2000 GENERAL MOTORS SERVICE PARTS OPERATIONS–CHEVROLET–14Y

3.675 BOLT – CLAMP – DUCT – GASKET – HARNESS – HOSE – PIPE – SHIELD – SLEEVE – STUD – SUPPORT, Emission System (Con't)

88–91	Y (5.7–8)	10105316	1	0.06	HOSE, AIR INJN ENG CHK VLV (TEE TO AIR CONT VLV)	4–H4,15
88–91	Y (5.7–8)	10105317	RH	0.06	HOSE, AIR INJN ENG CHK VLV	4–H4,17
88–91	Y (5.7–8)	10105318	LH	0.06	HOSE, AIR INJN ENG CHK VLV (TEE TO LH PIPE)	4–H4,11
89–91	Y (5.7–8)	10105321	1	DISCON	HOSE, AIR INJN ENG CHK VLV	
90–91	Y (5.7J) SOFT RIDE SUSP (FE1), H.D. SUSP (FE7)	14104704	1	14.03	HOSE, AIR INJN ENG CHK VLV	4–H6,13
90	Y (5.7J)	14104845	RH	14.38	HOSE, AIR INJN ENG CHK VLV	4–H6,17
86–87	Y	14092379	1	DISCON	HOSE, AIR INJN PUMP	
88–91	Y (5.7–8)	10105319	1	DISCON	HOSE, CTLCT CONV AIR INJN CHK VLV	
84–87	Y	14047784	1	3.06	HOSE, CTLTC CONV AIR INJN CHK VLV	4–J26,72
84	Y M/TRNS	14067356	1	DISCON	HOSE, DCLR VLV VAC (FROM T.B.I.)	
84	Y	14057083	1	DISCON	HOSE, MANIF DIFF PRESS SEN (TO T.B.I.)	
90–95	Y 5.7J (LT5)	10106118	1	9.28	HOSE, MAP SEN VAC	1–H20,508
90–91	Y 5.7J (LT5), SOFT RIDE SUSP (FE1), HVY DUTY SUSP (FE7)	10105366	1	DISCON	HOSE, SECD AIR INJN BYPASS VLV	
92–93	Y 5.7P (LT1)	10108556	1	11.02	HOSE, SECD AIR INJN BYPASS VLV (INJN CHK VLV, 173.5MM LGTH)	4–H9,14
92–93	Y 5.7P (LT1)	10108567	1	11.02	HOSE, SECD AIR INJN BYPASS VLV (INJN CONT VLV, 736.3MM LGTH)	4–H9,22
92–95	Y 5.7J (LT5)	10108567	1	11.02	HOSE, SECD AIR INJN BYPASS VLV (INJN CONT VLV, 736.3MM LGTH)	4–H9,22
96	Y 5.7P (LT1), 5.7–5 (LT4)	12552797	1	11.02	HOSE, SECD AIR INJN BYPASS VLV	4–H17,15
90–92	Y 5.7J (LT5)	9438381	1	1.10	HOSE, SECD AIR INJN BYPASS VLV VAC (BULK 5/32 X 25 FT) (08.962)	
94–95	Y 5.7P (LT1)	12551242	1	11.86	HOSE, SECD AIR INJN BYPASS VLV VAC (840MM)	4–H15,15
94–95	Y 5.7P (LT1)	12551244	1	7.40	HOSE, SECD AIR INJN BYPASS VLV VAC (192MM)	4–H15,25
91	Y 5.7J (LT5)	10174329	1	25.76	HOSE, SECD AIR INJN CHK VLV (RH)	
92–95	Y 5.7J (LT5)	10105399	1	11.02	HOSE, SECD AIR INJN CHK VLV (RH) (ATCHS TO 10105398 A.I.R VLV HOSE ASM LOC NEXT TO LFT FRT WHLHSE BELOW CLU MSTR CYL)	4–H12,17
92–95	Y 5.7P (LT1)	10103554	LH	11.02	HOSE, SECD AIR INJN CHK VLV	4–H9,10
92–95	Y 5.7P (LT1)	10108557	RH	11.02	HOSE, SECD AIR INJN CHK VLV	4–H9,13
92–95	Y 5.7J (LT5)	10186105	1	25.76	HOSE, SECD AIR INJN CHK VLV (ATTACHES TO A.I.R. VLV LOCATED NEXT TO LEFT FRT WHLHS & BELOW CLU MSTR CYL.)	4–H12,13
96	Y 5.7P (LT1), 5.7–5 (LT4)	10108554	LH	11.02	HOSE, SECD AIR INJN CHK VLV	4–H9,10
96	Y 5.7P (LT1), 5.7–5 (LT4)	10108557	RH	11.02	HOSE, SECD AIR INJN CHK VLV	4–H9,13
94–95	Y 5.7P (LT1)	10186185	1	5.46	HOSE, SECD AIR INJN PUMP	4–H15,21
96	Y 5.7P (LT1), 5.7–5 (LT4)	10186185	1	5.46	HOSE, SECD AIR INJN PUMP	4–H15,21

© 2000 GENERAL MOTORS SERVICE PARTS OPERATIONS–CHEVROLET–14Y

3.675 BOLT – CLAMP – DUCT – GASKET – HARNESS – HOSE – PIPE – SHIELD – SLEEVE – STUD – SUPPORT, Emission System (Con't)

88–90	Y	10055827	1	27.36	PIPE, AIR INJ CONT VLV (AC–DELCO #219–69)	4–H4,5
84	Y	14055190	1	DISCON	PIPE, AIR INJN CONT (CHK VLV TO CHK VLV)	
84	Y CLSD LOOP	14060642	1	DISCON	PIPE, AIR INJN CONT VLV VAC	4–J13,87
84	Y (1ST DES)	14060070	1	DISCON	PIPE, CTLTC CONV AIR INJN (CONV TO CHK VLV) (THREADED FITTINGS ON BOTH ENDS)	
84	Y	14060156	1	DISCON	PIPE, CTLTC CONV AIR INJN CHK VLV (TO AIR VLV)	
86–87	Y (EXC NM8 EXPORT)	14062469	1	DISCON	PIPE, CTLTC CONV AIR INJN CHK VLV TO PUMP	
86–90	Y	10097662	1	26.69	PIPE, CTLTC CONV SECD AIR INJN (VLV TO CONV) (AC–DELCO #219–77)	4–J20,77
91	Y 5.7–8 (L98)	10097662	1	26.69	PIPE, CTLTC CONV SECD AIR INJN (VLV TO CONV) (AC–DELCO #219–77)	4–J20,77
86	Y	14092320	1	40.55	PIPE, EGR	4–J20,69
87–88	Y	10055726	1	62.22	PIPE, EGR VLV	4–J26,1
89	Y 5.7–8	10055726	1	62.22	PIPE, EGR VLV	4–J26,1
90–91	Y 5.7–8 (L98)	10108433	1	62.22	PIPE, EGR VLV	4–K5,1
93–95	Y 5.7J (LT5)	10168641	1	105.06	PIPE, EGR VLV	4–J5,6
93–95	Y 5.7J (LT5)	10168691	1	597.72	PIPE, EGR VLV ADAP	4–J5,3
91	Y 5.7–8 (L98)	10055827	1	27.36	PIPE, SECD AIR INJN BYPASS VLV (AC–DELCO #219–69)	4–H4,5
88–89	Y	10055834	1	7.24	PIPE, SECD AIR INJN CHK VLV (AC–DELCO #219–70)	4–H4,9
90–91	Y 5.7–8 (L98)	10055834	1	7.24	PIPE, SECD AIR INJN CHK VLV (AC–DELCO #219–70)	4–H4,9
90	Y 5.7J (LT5)	14104844	1	DISCON	PIPE, SECD AIR INJN CHK VLV	
90–95	Y 5.7J (LT5)	14104873	LH	13.04	PIPE, SECD AIR INJN CHK VLV (AC–DELCO #219–140)	4–H6,15
90–95	Y 5.7J (LT5)	14104887	RH	97.88	PIPE, SECD AIR INJN CHK VLV (AC–DELCO #219–141)	4–H6,4
90–91	Y 5.7J (LT5)	14104923	1	78.85	PIPE, SECD AIR INJN CHK VLV (SIDE) (AC–DELCO #219–142)	4–H6,1[illegible]
91–95	Y 5.7J (LT5)	10174328	RH	37.01	PIPE, SECD AIR INJN CHK VLV (CROSSUNDER) (AC–DELCO #219–83)	4–H6,2[illegible]
92–95	Y 5.7P (LT1)	10108553	RH	51.67	PIPE, SECD AIR INJN CHK VLV (INCLUDES HEAT SHIELD) (AC–DELCO #10108553)	4–H9,1
92	Y 5.7P (LT1)	10108555	LH	12.44	PIPE, SECD AIR INJN CHK VLV	4–H9,8
93–96	Y 5.7P (LT1)	10221302	LH	11.79	PIPE, SECD AIR INJN CHK VLV (AC–DELCO #10221302)	4–H9,8
96	Y 5.7P (LT1), 5.7–5 (LT4)	10108553	RH	51.67	PIPE, SECD AIR INJN CHK VLV (INCLUDES HEAT SHIELD) (AC–DELCO #10108553)	4–H9,1
96	Y 5.7–5 (LT4)	10221302	LH	11.79	PIPE, SECD AIR INJN CHK VLV (AC–DELCO #10221302)	4–H9,8
86	Y ALUM HD	14087579	1	12.09	SHIELD, EGR PIPE	4–J20,89
86	Y CAST IRON HD	14101107	1	20.09	SHIELD, EGR PIPE	4–J20,89
87–88	Y	10055729	1	13.46	SHIELD, EGR PIPE (120X290MM W/20MM HOLE)	4–J26,1
87–88	Y	10055730	1	9.64	SHIELD, EGR PIPE (100X120MM W/NO HOLE)	4–J26,1
92–96	Y 5.7P (LT1)	10186167	1	3.83	SHIELD, EGR VLV PIPE HT	4–H9,3

© 2000 GENERAL MOTORS SERVICE PARTS OPERATIONS - CHEVROLET - 14Y

3.675 BOLT – CLAMP – DUCT – GASKET – HARNESS – HOSE – PIPE – SHIELD – SLEEVE – STUD – SUPPORT, Emission System (Con't)

96	Y 5.7–8 (LT4)	10166157	1	3.03	SHIELD, EGR VLV PIPE HT	4–H9,3
89	Y 5.7–8	10055729	1	13.46	SLEEVE, EGR VLV PIPE (120X200MM W/20MM HOLE)	4–J26,1
89–91	Y 5.7–8 (L98)	10055730	1	9.64	SLEEVE, EGR VLV PIPE (100X120MM W/NO HOLE)	4–J26,1
90–91	Y 5.7–8 (L98)	10055729	1	13.46	SLEEVE, EGR VLV PIPE (120X200MM W/20MM HOLE)	4–J26,1
93	5.7P (LT1)	960362	2	*1.66	STUD, SECD AIR INJN BYPASS VLV PIPE (5/16 X 18 X 1 43/64) (01.420)	
91–95	Y 5.7J (LT5)	10105366	1	5.36	SUPPORT, SECD AIR INJN PIPE	4–H6,5
	EXPORT	*EXPORT*		*EXPORT*	*EXPORT*	*EXPORT*
86–87	Y NM8 (EXPORT)	14086722	1	DISCON	HARNESS, AIR INJN CONT VLV VAC	
85	Y NM8, VB4, VD1, VT7 (EXPORT)	14085723	1	13.92	HOSE, AIR INJN CONT VLV DVTR	
86	Y VB4, VD1, VT7 (EXPORT)	14085723	1	13.92	HOSE, AIR INJN CONT VLV DVTR	
87	Y NM8 (EXPORT)	14085723	1	13.92	HOSE, AIR INJN CONT VLV DVTR	
84	Y NM4 (EXPORT CANADA)	14060641	1	DISCON	PIPE, [illegible] INJN CONT VLV VAC	

3.680 ADAPTER – BOLT – CLAMP – CONNECTOR – GASKET, Emission System

93–95	Y 5.7J (LT5)	10168634	1	347.97	ADAPTER, EGR VLV (AC–DELCO #210–170)	4–J5,4
86–88	Y	14081021	AR	*1.25	BOLT, EGR TUBE (08.913)	4–J20,90
89–91	Y 5.7–8 (L98)	14081021	AR	*1.25	BOLT, EGR TUBE (TORX HD 8X1.25X20) (08.913)	4–J20,90
92–95	Y 5.7P (LT1)	9442052	3	*1.25	BOLT, SECD AIR INJN CHK VLV PIPE (3/8–16X3/4) (08.900)	
86–90	Y	140[illegible]	1	2.45	CLAMP, CTLTC CONV AIR INJN CK VLV RR (CONV INLET PIPE)	4–J20,80
91	Y 5.7–8 (L[illegible])	14093102	1	2.45	CLAMP, CTLTC CONV AIR INJN CK VLV RR (CONV INLET PIPE)	4–J20,80
84–90	Y	14034744	1	2.45	CLAMP, CTLTC CONV AIR INJN PIPE (AT CONV)	4–J5,7
84	Y	14091221	2	3.15	CLAMP, CTLTC CONV AIR INJN PIPE (EXH UPR)	4–J13,47
84	Y	14091222	2	3.15	CLAMP, CTLTC CONV AIR INJN PIPE (EXH LWR)	4–J13,48
85	Y FED	14091221	1	3.15	CLAMP, CTLTC CONV AIR INJN PIPE (EXH UPR)	4–J13,47
85–87	Y (EXC NM8 EXPORT)	14091222	2	3.15	CLAMP, CTLTC CONV AIR INJN PIPE (EXH LWR)	4–J13,48
86–87	Y (EXC NM8 EXPORT)	14091221	1	3.15	CLAMP, CTLTC CONV AIR INJN PIPE (EXH UPR)	4–J13,47
88	Y	14091221	1	3.15	CLAMP, CTLTC CONV AIR INJN PIPE (EXH UPR)	4–J13,47
88	Y	14091222	2	3.15	CLAMP, CTLTC CONV AIR INJN PIPE (EXH LWR)	4–J13,48
89–91	Y (5.7–8)	14091221	1	3.15	CLAMP, CTLTC CONV AIR INJN PIPE (EXH UPR)	4–J13,47
89–91	Y (5.7–8)	14091222	2	3.15	CLAMP, CTLTC CONV AIR INJN PIPE (EXH LWR)	4–J13,48
91	Y 5.7–8 (L98)	14034744	1	2.45	CLAMP, CTLTC CONV AIR INJN PIPE (AT CONV)	4–J5,7
86	Y	14007580	1	3.02	CLAMP, EGR PIPE (25MM ID)	4–J20,91
93–95	Y 5.7J (LT5)	14034744	1	2.45	CLAMP, EGR VLV PIPE (AT RH EXH MANIF)	4–J5,7

© 2000 GENERAL MOTORS SERVICE PARTS OPERATIONS–CHEVROLET–14Y

3.680 ADAPTER – BOLT – CLAMP – CONNECTOR – GASKET, Emission System (Con't)

92–95	Y 5.7P (LT1)	12338017	1	*3.50	CLAMP, SECD AIR INJN PUMP DUCT (28.6–66.2 DIA WORM GEAR) (08.048) (AC–DELCO #12338017)	
92–96	Y 5.7J (LT5)	12338017	1	*3.50	CLAMP, SECD AIR INJN PUMP DUCT (28.6–66.2 DIA WORM GEAR) (08.048) (AC–DELCO #12338017)	
88–90	Y	10046154	1	3.07	CONNECTOR, AIR INJ ENG CHK VLV	4–H4,16
91	Y 5.7–8 (L98)	10046154	1	3.07	CONNECTOR, AIR INJ ENG CHK VLV	4–H4,16
90–91	Y (5.7J) H .D .SUSP (FE7), SOFT RIDE SUSP (FE1)	14104681	1	13.47	CONNECTOR, AIR INJ ENG CHK VLV HOSE (TEE)	4–H6,13
90–91	Y (5.7J) H .D .SUSP (FE7), SOFT RIDE SUSP (FE1)	14104922	1	13.47	CONNECTOR, AIR INJ ENG CHK VLV HOSE	4–K9,17
88–91	Y 5.7–8 (L98)	10046119	1	DISCON	CONNECTOR, EGR VLV VAC HARN (03.675)	
92–93	Y 5.7P (LT1)	12550629	1	1.52	CONNECTOR, EMIS CONT VAC HARN	1–I18,512
92–96	Y 5.7P (LT1)	14082470	1	3.20	CONNECTOR, EMIS CONT VAC HARN (03.278) (1 PORT HOSE CONN 4.5 OD, SAE 1113, PZOR)	1–I18,512
91–94	Y 5.7J (LT5)	14082223	1	.88	CONNECTOR, MAP SEN VAC HOSE (ELBOW) (5.6X3.6 ID, RUBBER, PL)	
90–91	Y 5.7J (LT5), SOFT RIDE SUSP (FE1), HVY DUTY SUSP (FE7)	10105382	1	13.47	CONNECTOR, SECD AIR INJN CHK VLV HOSE (HOSE 50 DEG RAD, 6259M PL)	
90–91	Y 5.7J (LT5), SOFT RIDE SUSP (FE1), HVY DUTY SUSP (FE7)	14088584	1	1.78	CONNECTOR, SECD AIR INJN CHK VLV HOSE (VAC, 94–LONG NYLON BLACK) (24.3X[illegible]X18.5) (TEE) (03.675)	4–H6,13
92–93	Y 5.7P (LT1)	10108508	1	2.92	CONNECTOR, SECD AIR INJN CHK VLV HOSE (AC–DELCO #10108508)	4–H9,11
92–95	Y 5.7J (LT5)	10186106	1	13.52	CONNECTOR, SECD AIR INJN CHK VLV HOSE	4–H12,14
92–95	Y 5.7J (LT5)	14088584	1	1.78	CONNECTOR, SECD AIR INJN CHK VLV HOSE (VAC, 94–LONG NYLON BLACK) (24.3X18.5X18.5) (TEE) (03.675)	4–H6,13
94–96	Y 5.7P (LT1)	10105352	1	1.78	CONNECTOR, SECD AIR INJN CHK VLV HOSE	4–H15,11
96	Y 5.7–5 (LT4)	10105352	1	1.78	CONNECTOR, SECD AIR INJN CHK VLV HOSE	4–H15,11
90–95	Y 5.7J (LT5)	14104888	RH	2.69	CONNECTOR, SECD AIR INJN CHK VLV PIPE (AC–DELCO #14104888)	4–H6,1
96	Y 5.7P (LT1), 5.7–5 (LT4)	24504030	1	.90	CONNECTOR, SECD AIR INJN PUMP HOSE (TO BLEED SOL) (5/8 X 5/8 X 3/16)	4–H17,5
84	Y (5.7–8)	12554530	AR	*.45	GASKET, E .G .R. VLV (03.671) (AC–DELCO #219–20)	4–J13,26
85–87	Y	14088262	1	2.06	GASKET, EGR VLV (AC–DELCO #14088262)	4–J20,81
88–91	Y 5.7–8 (L98)	10077547	1	*.88	GASKET, EGR VLV (AC–DELCO #10077547)	4–K5,64
92–96	Y 5.7P (LT1)	12337972	1	*.31	GASKET, EGR VLV (AC–DELCO #219–21)	4–J2,6

© 2000 GENERAL MOTORS SERVICE PARTS OPERATIONS–CHEVROLET–14Y

3.680 ADAPTER – BOLT – CLAMP – CONNECTOR – GASKET, Emission System (Con't)

93–95	Y 5.7J (LT5)	3522442	1	3.10	GASKET, EGR VLV (AC–DELCO #210–175)	4–J5,9
96	Y 5.7–5 (LT4)	12337072	1	*.31	GASKET, EGR VLV (AC–DELCO #210–21)	4–J2,6
89–91	Y 5.7–8 (L98)	10056726	2	1.04	GASKET, EGR VLV PIPE (03.675)	
93–95	Y 5.7J (LT5)	10187784	1	.97	GASKET, EGR VLV PIPE	4–J5,1
88–90	Y	14015367	2	*.85	GASKET, SECD AIR INJN BYPASS VLV PIPE (03.671)	4–H4,7
91	Y 5.7–8 (L98)	14015367	2	*.85	GASKET, SECD AIR INJN BYPASS VLV PIPE (03.671)	4–H4,7

3.682 BOLT – BRACKET – BUFFER – CLAMP – CONNECTOR – COVER – MODULE – PLUG – RELAY – RETAINER – SEAL – SENSOR – SPACER, Computer Control Sensors

90–95	Y 5.7J (LT5)	11514491	2	4.75	BOLT, MAP SEN (TO BRKT) (5X.8X30, 28.4 THD, 5.9 OD, T25 TORX DR, 9.8 STL) (08.007)	4–J5,12
90–95	Y 5.7J (LT5)	10192577	2	1.30	BOLT, MAP SEN BRKT (TO PLENUM) (M6X1.0X13.0) (METRIC TORX HD) (08.913)	4–J7,2
92	Y 5.7J (LT5)	11516061	1	*1.10	BOLT, OXY SEN BRKT (M6X1X12, FL HD) (08.900)	
90–95	Y 5.7J (LT5)	10192577	4	1.30	BOLT, SECD PORT THROT VLV BRKT (M6X1.0X13.0) (METRIC TORX HD) (08.913)	4–J7,2
90–95	Y 5.7J (LT5)	10067761	1	8.68	BRACKET, MAP SEN	4–J7,1
90–91	Y 5.7–8 (L98)	10096141	1	4.44	BRACKET, MAP SEN	
88	Y	14080660	1	DISCON	BRACKET, MASS AIR FLOW SEN BURNOFF MDL	
88–89	Y 5.7–8	14104140	1	1.08	BRACKET, MASS AIRFLOW SEN RLY (01.055)	4–K2,17
93–95	Y 5.7J (LT5)	10188622	1	26.01	BRACKET, MDP SEN (03.671)	4–J5,13
89	Y	14062552	1	1.12	BRACKET, OXY SEN CONN RET (02.559)	
90–91	Y 5.7–8 (L98)	14062552	1	1.12	BRACKET, OXY SEN CONN RET (02.559)	
90–92	Y 5.7J (LT5)	14104941	1	12.90	BRACKET, OXY SEN CONN RET	
92–96	Y 5.7P (LT1)	10165388	1	2.50	BRACKET, OXY SEN CONN RET (02.559)	1–J17,530
93–95	Y 5.7J (LT5)	10225129	1	7.75	BRACKET, OXY SEN CONN RET	
96	Y 5.7–5 (LT4)	10165388	1	2.50	BRACKET, OXY SEN CONN RET (02.559)	1–J17,530
93–95	Y 5.7J (LT5)	10188670	1	31.60	CLAMP, MDP SEN (01.750)	4–J5,15
93–96	Y	12102741	2	26.08	CONNECTOR, INLINE–TO OXY SEN (FRT) (4–WAY F) (W/LEADS, IN A ROW) (04.651) (AC–DELCO #PT368)	4–J11,11
90	Y (5.7–8)	10105294	1	.83	CONNECTOR, MAP SEN	4–K17,42
92–95	Y 5.7J (LT5)	12085507	AR	22.57	CONNECTOR, SEN–BARO PRESS (3–WAY, W/LEADS) (02.535) (AC–DELCO #PT128)	
94–95	Y	12101899	1	17.95	CONNECTOR, SEN–ENG COOL TEMP (BLACK) (2–WAY F) (W/LEADS) (02.383) (AC–DELCO #PT169)	
90	Y	12085[illegible]4	1	21.23	CONNECTOR, SEN–INT AIR TEMP (2–WAY M, W/LEADS) (02.535) (AC–DELCO #PT134)	

© 2000 GENERAL MOTORS SERVICE PARTS OPERATIONS–CHEVROLET–14Y

3.682 BOLT – BRACKET – BUFFER – CLAMP – CONNECTOR – COVER – MODULE – PLUG – RELAY – RETAINER – SEAL – SENSOR – SPACER, Computer Control Sensors (Con't)

90	Y	12102620	1	19.55	CONNECTOR, SEN–INT AIR TEMP (FEM METRI–PACK, PULL TO ST, GRAY, 2–WAY F) (AC–DELCO #PT307)	
91	Y 5.7–8 (L98)	12085524	1	21.23	CONNECTOR, SEN–INT AIR TEMP (BLACK) (2–WAY M) (W/LEADS) (02.535) (AC–DELCO #PT134)	
91–92	Y 5.7J (LT5)	12102620	1	19.55	CONNECTOR, SEN–INT AIR TEMP (METRI–PACK, PULL TO ST (GRAY)) (GRAY) (2–WAY F) (W/LEADS) (AC–DELCO #PT307)	
92	Y 5.7P (LT1)	12102620	1	19.55	CONNECTOR, SEN–INT AIR TEMP (METRI–PACK, PULL TO ST (GRAY)) (GRAY) (2–WAY F) (W/LEADS) (AC–DELCO #PT307)	
93–96	Y	12126460	1	29.97	CONNECTOR, SEN–INT AIR TEMP (W/LEADS)	
84–96	Y	12085502	1	27.21	CONNECTOR, SEN–MAP (3–WAY M, W/LEADS) (AC–DELCO #PT123)	4–J9,4
93–96	Y	12085495	1	26.46	CONNECTOR, SEN–MASS AIRFLOW (BLACK) (3–WAY F) (W/LEADS) (02.535) (AC–DELCO #PT117)	
90–95	Y 5.7J (LT5)	12085484	AR	26.00	CONNECTOR, SEN–OXY (W/LEADS) (02.535) (AC–DELCO #PT106)	
90	Y 5.7–8 (L98)	12117365	1	9.33	CONNECTOR, SEN–OXY (TYPE 7 FEM, W/LEADS) (AC–DELCO #PT517)	
91	Y 5.7–8 (L98)	12085498	AR	20.62	CONNECTOR, SEN–VEH SPD (2–WAY F) (W/LEADS) (02.530) (AC–DELCO #PT120)	4–I19,16
92–96	Y	12085498	AR	20.62	CONNECTOR, SEN–VEH SPD (2–WAY F) (W/LEADS) (02.530) (AC–DELCO #PT120)	4–I19,16
90–95	Y 5.7J (LT5)	10090513	1	15.44	COVER, MAP SEN (AC–DELCO #10090513)	4–K12,42
85	Y 5.7–8 (L98)	14080620	1	882.82	MODULE, MASS AIRFLOW SEN (AC–DELCO #216–52)	4–J17,24
92–96	Y 5.7P (LT1)	3738198	1	.71	PLUG, MAP SEN HOLE (08.153)	4–J11,5
96	Y 5.7–5 (LT4)	J738198	1	.7	PLUG, MAP SEN HOLE (08.153)	4–J11,5
86	Y	10067925	1	8.55	RELAY, MASS AIRFLOW SEN (AC–DELCO #212–300)	4–J17,52
86	Y	10094701	1	13.86	RELAY, MASS AIRFLOW SEN (03.140) (AC–DELCO #212–305)	
87–89	Y	14089936	1	16.26	RELAY, MASS AIRFLOW SEN (USE W/CONN 15306002) (01.055) (AC–DELCO #15–8240)	
87–89	Y 5.7–8	14089936	1	16.26	RELAY, MASS AIRFLOW SEN BURNOFF (01.055) (AC–DELCO #15–8240)	
84–90	Y	12338069	1	*3.67	RETAINER, VEH SPD SEN (4338) (AC–DELCO #12338069)	4–J13,39
92–95	Y 5.7P (LT1)	1635948	1	1.48	SEAL, MAP SEN (03.270)	4–J9,3
96	Y	1635948	1	1.48	SEAL, MAP SEN (03.270)	4–J9,3

© 2000 GENERAL MOTORS SERVICE PARTS OPERATIONS–CHEVROLET–14Y

3.682 BOLT – BRACKET – BUFFER – CLAMP – CONNECTOR – COVER – MODULE – PLUG – RELAY – RETAINER – SEAL – SENSOR – SPACER, Computer Control Sensors (Con't)

86–96	Y	12146312	1	9.10	SENSOR, ENG COOL TEMP (UND PLENUM) (USED FOR CLUSTERS W/OIL GAGE & LGT COMB) (2–WAY M) (AC–DELCO #213–310)	4–J17,16
90–91	Y 5.7J (LT5)	25176708	2	104.75	SENSOR, EXH OXY (STAMPED 10096129) (AC–DELCO #213–632) (RETAIL SENSOR)	4–J7,19
92	Y 5.7J (LT5), (1ST DES)	25176708	2	104.75	SENSOR, EXH OXY (W/HARN THAT IS 350MM LG) (STAMPED 10096129) (AC–DELCO #213–632) (RETAIL SENSOR)	4–J7,19
92	Y 5.7J (LT5), (2ND DES)	25176709	2	117.30	SENSOR, EXH OXY (W/HARNESS THAT IS 240MM LG) (STAMPED 10137041) (AC–DELCO #213–633)	4–J7,19
93–95	Y 5.7J (LT5)	25176709	2	117.30	SENSOR, HTD OXY (STAMPED 10137041) (AC–DELCO #213–633)	4–J7,19
94	Y 5.7P (LT1), (EXC LEADED FUEL EMIS EXPORT (NM8) .	25312184	3	62.61	SENSOR, HTD OXY (AC–DELCO #AFS75) (OEM SENSOR)	4–J9,8
95	Y 5.7P (LT1), (EXC LEADED FUEL EMIS EXPORT (NM8), EUROPEAN PROVISIONS (VD1) (EXPORT), VE1 (EXPORT)	25312184	3	62.61	SENSOR, HTD OXY (AC–DELCO #AFS75) (OEM SENSOR)	4–J9,8
96	Y 5.7–5 (LT4)	25312184	4	62.61	SENSOR, HTD OXY (2–PRE CONVERTER, 2–POST CONVERTER) (AC–DELCO #AFS75) (OEM SENSOR)	4–J9,8
96	Y 5.7P (LT1), (EXC LEADED FUEL EMIS EXPORT (NM8) .	25312184	4	62.61	SENSOR, HTD OXY (2–PRE CONVERTER, 2–POST CONVERTER) (AC–DELCO #AFS75) (OEM SENSOR)	4–J9,8
90–95	Y 5.7J (LT5)	25036751	1	33.33	SENSOR, INT AIR TEMP (2 BLADE TERM, 3/8–18 THD) (STAMPED AC12V) (AC–DELCO #213–190)	4–J17,16
92–95	Y 5.7P (LT1)	12160244	1	14.61	SENSOR, INT AIR TEMP (AC–DELCO #213–243)	4–G8,7
96	Y	12160244	1	14.61	SENSOR, INT AIR TEMP (AC–DELCO #213–243)	4–G8,7
85–90	Y	12146312	1	9.10	SENSOR, MANIF AIR TEMP (AT INT MANIF) (2 BLADE TERM, 3/8–18 THD) (USED FOR CLUSTERS W/OIL GAGE & LIGHT COMB) (AC–DELCO #213–310)	4–J17,16
85	Y (1ST DES)	25036751	1	33.33	SENSOR, MANIF AIR TEMP (2 BLADE TERM, 3/8–18 THD) (STAMPED AC12V) (HOLES IN PROBE & MATES W/SQUARE SLOTTED CONN) (AC–DELCO #213–190)	4–J17,16
91	Y 5.7–4 (L98)	12146312	1	9.10	SENSOR, MANIF AIR TEMP (AT INT MANIF) (USED FOR CLUSTER W/OIL GAGE & LIGHT COMB) (2–WAY M) (AC–DELCO #213–310)	4–J17,16

© 2000 GENERAL MOTORS SERVICE PARTS OPERATIONS–CHEVROLET–14Y

MICROFICHE INDEX

GROUP 3.000

FICHE 4 OF 11

GROUP	DESCRIPTION	STARTING GRID LOCATION PARTS	ILLUSTRATIONS
–	GENERAL INFORMATION	1–A2	1–G2
–	ALPHABETICAL INDEX	1–B13	N.A.
3.000	FUEL TANK – INTAKE MANIFOLD – FUEL INJECTION – THROTTLE BODY – AIR CLEANER – ACCELERATOR	4–A2	4–E2
3.000	EXHAUST & EMISSIONS SYSTEMS – CARBURETOR – CRUISE – FUEL FILTER & PUMP	4–C2	4–H2
–	OUT OF FICHE CALLS	N.A.	4–M9

4–D1

3.682 BOLT – BRACKET – BUFFER – CLAMP – CONNECTOR – COVER – MODULE – PLUG – RELAY – RETAINER – SEAL – SENSOR – SPACER, Computer Control Sensors(Con't)

84	Y	16137039	1	65.40	SENSOR, MAP (1 PORT, 3 BLADE TERM, 2 BOLT HOLES) (AC–DELCO #213–185)	4–J7,3
90	Y	16137039	1	65.40	SENSOR, MAP (1 PORT, 3 TERM, 2 BOLT HOLES) (AC–DELCO #213–185)	4–J7,3
91	Y 5.7–8 (L98)	16137039	1	65.40	SENSOR, MAP (1 PORT, 3 TERM, 2 BOLT HOLES) (AC–DELCO #213–185)	4–J7,3
91–95	Y 5.7J (LT5)	16137039	1	65.40	SENSOR, MAP (1 PORT, 3 TERM, 2 BOLT HOLES) (AC–DELCO #213–185)	4–J7,3
92–95	Y 5.7P (LT1)	16137039	1	65.40	SENSOR, MAP (1 PORT, 3 TERM, 2 BOLT HOLES) (AC–DELCO #213–185)	4–J7,3
96	Y	16137039	1	65.40	SENSOR, MAP (AC–DELCO #213–185)	4–J7,3
85	Y	14081243	1	540.26	SENSOR, MASS AIRFLOW (AC–DELCO #213–162)	4–J17,8
86–87	Y	14094712	1	507.44	SENSOR, MASS AIRFLOW (AC–DELCO #213–163)	4–J17,8
88	Y	10055877	1	397.22	SENSOR, MASS AIRFLOW (AC–DELCO #213–161)	4–K2,38
89	Y 5.7–8 (L98)	10055877	1	397.22	SENSOR, MASS AIRFLOW (AC–DELCO #213–161)	4–K2,38
94–95	Y 5.7P (LT1)	25008308	1	367.42	SENSOR, MASS AIRFLOW (INCLS SNSR & 2 CLMPS) (AC–DELCO #213–252)	4–G8,9
94	Y 5.7P (LT1)	25099215	1	579.98	SENSOR, MASS AIRFLOW (W/INT AIR TEMP SEN) (W/DUCT) (AC–DELCO #213–238)	4–G6,23
96	Y	25008308	1	367.42	SENSOR, MASS AIRFLOW (INCLS SNSR & 2 CLMPS) (AC–DELCO #213–252)	4–G8,9
90–95	Y 5.7J (LT5)	16006834	1	61.77	SENSOR, MDP (AC–DELCO #16006834)	4–I22,16
84–87	Y	25162693	1	51.12	SENSOR, OXY (1 WIRE) (AC–DELCO #AFS20) (OEM SENSOR)	4–J13,41
87	Y (EXC LEADED FUEL EMIS EXPORT (NM8)	25166816	2	51.55	SENSOR, OXY (1 WIRE) (AC–DELCO #AFS21) (OEM SENSOR)	4–J9,8
88–91	Y 5.7–8 (L98)	25166816	2	51.55	SENSOR, OXY (PURPLE WIRE) (18 X 1.5) (TYPE #21 MATES W/12015791) (AC–DELCO #AFS21) (OEM SENSOR)	4–J9,8
92–93	Y 5.7P (LT1), (EXC LEADED FUEL EMIS EXPORT (NM8)	25166816	2	51.55	SENSOR, OXY (PURPLE WIRE) (18 X 1.5) (TYPE #21 MATES W/12015791) (AC–DELCO #AFS21) (OEM SENSOR)	4–J9,8
84–90	Y D9A	25007224	1	99.55	SENSOR, VEH SPD (TRANS MTD) (USED W/AXLE RATIO 2.59, 2.73) (AC–DELCO #213–210)	4–J26,21
84–90	Y D9B	25007308	1	98.96	SENSOR, VEH SPD (TRANS MTD) (USED W/AXLE RATIO 3.07, 3.33, 3.45) (AC–DELCO #213–223)	4–J13,40
91–93	Y (D8I)	10456089	1	36.09	SENSOR, VEH SPD (W/ O–RING) (04.329) (AC–DELCO #213–198)	4–I19,17

© 2000 GENERAL MOTORS SERVICE PARTS OPERATIONS–CHEVROLET–14Y

3.682 BOLT – BRACKET – BUFFER – CLAMP – CONNECTOR – COVER – MODULE – PLUG – RELAY – RETAINER – SEAL – SENSOR – SPACER, Computer Control Sensors(Con't)

91–93	Y (D8K)	10456091	1	32.70	SENSOR, VEH SPD (NATURAL COLOR) (PART NO STAMPED ON HSG) (04.329) (AC–DELCO #213–199)	4–I19,17
91–93	Y (D8L)	10456092	1	32.70	SENSOR, VEH SPD (BLACK COLOR) (PART NO STAMPED ON HSG) (04.329) (AC–DELCO #213–200)	4–I19,17
94–96	Y 6–SPD M/TRANS (ML9) ...	10456089	1	36.09	SENSOR, VEH SPD (W/ O–RING) (04.329) (AC–DELCO #213–198)	4–I19,17
84–90	Y	14053672	1	DISCON	SPACER, VEH SPEED SEN	
	*EXPORT**********EXPORT**********EXPORT**********EXPORT**********EXPORT*					
84–87	Y 120 ALARM (EXPORT)	14086650	1	DISCON	BUFFER, SPD SEN	
95	Y 5.7P (LT1), EUROPEAN PROVISIONS (VD1) (EXPORT), VE1 (EXPORT) ..	253121 4	2	62.81	SENSOR, HTD OXY (AC–DELCO #AFS75) (OEM SENSOR)	4–J9,8

3.685 CONVERTER, Catalytic Converter

84	Y (EXC EXPORT)	25056722	1	616.00	CONVERTER, CTLLC (USE W/14091220 INJECTOR PIPE) .	4–K20,18
85	Y	25056723	1	DISCON	CONVERTER, CTLTC (MONOLITHIC)	
86	Y (EXC VB4, VT7, NM8 EXPORT)	25056993	1	416.51	CONVERTER, CTLTC (RR)	4–K22,5
87–88	Y	25056993	1	416.51	CONVERTER, CTLTC (RR)	4–K22,5
89–91	Y (5.7–8)	25056993	1	416.51	CONVERTER, CTLTC (RR)	4–K22,5
92–94	Y 5.7P (LT1), (EXC LEADED FUEL EMIS EXPORT (NM8) .	25129000	LH	716.83	CONVERTER, W/UP 3WAY CTLTC (W/EXH MANIF PIPE) (STAMPED XJ, JL)	4–K27,3
92–93	Y 5.7P (LT1), (EXC LEADED FUEL EMIS EXPORT (NM8) .	25145454	RH	610.51	CONVERTER, W/UP 3WAY CTLTC (W/EXH MANIF PIPE) (USE T/W 8990353 IF REPLC 25129001 OR 25145522) (STAMPED XK, SR)	4–K27,3
94–95	Y 5.7P (LT1), (EXC LEADED FUEL EMIS EXPORT (NM8) .	25153070	RH	631.34	CONVERTER, W/UP 3WAY CTLTC (W/EXH MANIF PIPE) (STAMPED XK, SR)	4–L2,32
95	Y 5.7P (LT1), (EXC LEADED FUEL EMIS EXPORT (NM8) .	25153077	LH	716.83	CONVERTER, W/UP 3WAY CTLTC (W/EXH MANIF PIPE) (STAMPED XJ, JL)	4–L2,3
96	Y 5.7P (LT1), 5.7–5 (LT4), (EXC LEADED FUEL EMIS EXPORT (NM8), EXH TEMP ALARM (UD6) (EXPORT) ...	25153070	RH	631.34	CONVERTER, W/UP 3WAY CTLTC (W/EXH MANIF PIPE) (STAMPED XK, SR)	4–L2,32
96	Y 5.7P (LT1), 5.7–5 (LT4), (EXC LEADED FUEL EMIS EXPORT (NM8), EXH TEMP ALARM (UD6) (EXPORT) ...	25153077	LH	716.83	CONVERTER, W/UP 3WAY CTLTC (W/EXH MANIF PIPE) (STAMPED XJ, JL)	4–L2,3
90–92	Y 5.7J (LT5)	25129503	RH	972.21	CONVERTER, 3WAY CTLTC (USE T/W 25143612 EXH MAN FOR 1990–92 USAGES)	4–K24,14
92–95	Y 5.7J (LT5)	25129502	LH	972.21	CONVERTER, 3WAY CTLTC	4–K24,14
93–95	Y 5.7J (LT5)	25129503	RH	972.21	CONVERTER, 3WAY CTLTC	4–K24,14
	*EXPORT**********EXPORT**********EXPORT**********EXPORT**********EXPORT*					
96	Y 5.7P (LT1), 5.7–5 (LT4), EXH TEMP ALARM (UD6) (EXPORT), (EXC LEADED FUEL EMIS EXPORT (NM8) .	25162780	RH	552.41	CONVERTER, W/UP 3WAY CTLTC (W/EXH MANIF PIPE)	4–L2,32

© 2000 GENERAL MOTORS SERVICE PARTS OPERATIONS–CHEVROLET–14Y

3.686 BRACKET – CONNECTOR – HARNESS – INSULATOR – MODULE – NUT – SENSOR, Catalytic Converter

96	Y	12085209	1	20.00	CONNECTOR, ALARM–CTLTC CONV TEMP (BLUE) (8–WAY M) (02.535)	
94	Y 5.7P (LT1)	12116958	1	20.24	CONNECTOR, INLINE–TO CTLTC CONV TEMP SEN (GRAY) (2–WAY F) (W/LEADS) (02.535) (AC–DELCO #PT419)	4–J11,10
96	Y	12101875	1	32.61	CONNECTOR, INLINE–TO CTLTC CONV TEMP SEN (BLUE) (8–WAY F) (W/LEADS) (02.535) (AC–DELCO #PT266)	4–J11,10
	*EXPORT**********EXPORT**********EXPORT**********EXPORT**********EXPORT*					
94–96	Y EXH TEMP ALARM (UD6) (EXPORT)	10219073	1	33.30	BRACKET, CTLTC CONV TEMP ALARM MDL	9–F8,93
96	Y 4–SPD A/TRANS (M30), A/C AUTO ELEC CONT (C68), VE1 (EXPORT)	12116958	2	20.24	CONNECTOR, INLINE–TO CTLTC CONV TEMP SEN (GRAY) (2–WAY F) (W/LEADS) (02.535) (AC–DELCO #PT419)	4–J11,10
84–85	Y ALARM UD5, UD6 (EXPORT)	14066528	1	DISCON	HARNESS, CTLTC CONV TEMP & SPD ALERT ALARM WRG	
95	Y 5.7P (LT1), 4–SPD A/TRANS (M30), A/C AUTO ELEC CONT (C68), VE1 (EXPORT)	12163008	1	163.20	HARNESS, CTLTC CONV TEMP ALARM AMPF	4–J11,13
96	Y 4–SPD A/TRANS (M30), A/C AUTO ELEC CONT (C68), VE1 (EXPORT)	12163008	1	163.20	HARNESS, CTLTC CONV TEMP ALARM AMPF	4–J11,13
94–96	Y EXH TEMP ALARM (UD6) (EXPORT)	3999572	2	4.98	INSULATOR, CTLTC CONV TEMP ALARM MDL (09.260)	
94–96	Y EXH TEMP ALARM (UD6) (EXPORT)	10219872	1	437.00	MODULE, CTLTC CONV TEMP ALARM	9–F8,90
94–95	Y 5.7P (LT1), EXH TEMP ALARM (UD6) (EXPORT)	10226458	RH	12.10	NUT, CTLTC CONV TEMP ALARM SEN	
84–85	Y UD6 (EXPORT)	14066526	1	DISCON	SENSOR, CTLTC CONV TEMP ALARM	

3.690 BRACE – BRACKET – CLAMP – INSULATOR – SHIELD – STUD, Catalytic Converter

92–93	Y 5.7P (LT1), 4–SPD A/TRANS (MD8)	10219503	LH	9.77	BRACE, CTLTC CONV	4–K27,20
92–93	Y 5.7P (LT1), 4–SPD A/TRANS (MD8)	10219504	RH	9.77	BRACE, CTLTC CONV	4–K27,20
92–95	Y 5.7P (LT1), 6–SPD M/TRANS (ML9)	10219505	LH	9.77	BRACE, CTLTC CONV	4–K27,20
92–95	Y 5.7P (LT1), 6–SPD M/TRANS (ML9)	10219506	RH	9.77	BRACE, CTLTC CONV	4–K27,20
94–96	Y 5.7P (LT1), 4–SPD A/TRANS (M30)	10219503	LH	9.77	BRACE, CTLTC CONV	4–K27,20
94–96	Y 5.7P (LT1), 4–SPD A/TRANS (M30)	10219504	RH	9.77	BRACE, CTLTC CONV	4–K27,20
96	Y 5.7–5 (LT4), 6–SPD M/TRANS (ML9)	10219505	LH	9.77	BRACE, CTLTC CONV	4–K27,20
96	Y 5.7–5 (LT4), 6–SPD M/TRANS (ML9)	10219506	RH	9.77	BRACE, CTLTC CONV	4–K27,20
84	Y (EXC VB4, VD1, VT7 EXPORT)	14047738	2	DISCON	BRACKET, CTLTC CONV HT SHLD	
85	Y FED	14047738	2	DISCON	BRACKET, CTLTC CONV HT SHLD	
84	Y	793928	AR	14.75	CLAMP, (SADDLE TYPE) (FITS 69.85MM/2.75" PIPE) (03.616)	

© 2000 GENERAL MOTORS SERVICE PARTS OPERATIONS–CHEVROLET–14Y

3.690 BRACE – BRACKET – CLAMP – INSULATOR – SHIELD – STUD, Catalytic Converter (Con't)

92–95	Y 5.7P (LT1), 6–SPD M/TRANS (ML9)	10219845	LH	1.89	INSULATOR, CTLTC CONV BR ..	4–L2,24
92–95	Y 5.7P (LT1), 6–SPD M/TRANS (ML9)	10219846	RH	1.89	INSULATOR, CTLTC CONV BR ..	4–L2,30
96	Y 5.7–5 (LT4), 6–SPD M/TRANS (ML9)	10219845	LH	1.89	INSULATOR, CTLTC CONV BR ..	4–L2,24
96	Y 5.7–5 (LT4), 6–SPD M/TRANS (ML9)	10219846	RH	1.89	INSULATOR, CTLTC CONV BR ..	4–L2,30
84	Y (EXC VB4, VD1, VT7 EXPORT)	14047737	1	DISCON	SHIELD, CTLTC CONV HT	
85	Y FED	14047737	1	DISCON	SHIELD, CTLTC CONV HT	
86–87	Y (EXC NM6 EXPORT)	14093168	1	DISCON	SHIELD, CTLTC CONV HT	
90–95	Y 5.7J (LT5)	10105244	RH	12.84	SHIELD, CTLTC CONV HT	4–K24,10
90–95	Y 5.7J (LT5)	10105365	LH	14.07	SHIELD, CTLTC CONV HT	4–K24,10
92–95	Y 5.7P (LT1)	10219507	LH	1.90	STUD, CTLTC CONV BR	4–K27,21
96	Y 5.7P (LT1), 5.7–5 (LT4)	10219507	LH	1.90	STUD, CTLTC CONV BR	4–K27,21
90–95	Y 5.7J (LT5)	10044847	1	1.90	STUD, CTLTC CONV H/SHLD (M6X1.0X29.7) (01.428)	4–K24,18
	*EXPORT****************EXPORT****************EXPORT****************EXPORT****************EXPORT*					
84–85	Y UD2, UD4, UD6 (EXPORT) .	14057552	1	DISCON	BRACKET, CTLTC CONV TEMP & SPD ALERT ALARM	
86–87	Y NM6 (EXPORT, CANADA) (EXC NM6 EXPORT)	14087665	1	DISCON	CLAMP, CTLTC CONV HT SHLD .	

3.701 MUFFLER, Engine Exhaust

NOTE: DEVICES LISTED IN THIS GROUP ARE CERTIFIED TO MEET CALIFORNIA AND FLORIDA NOISE REGULATIONS WHEN USED ON VEHICLES FOR WHICH THEY ARE LISTED.

90	Y 5.7J (LT5), SOFT RIDE SUSP (FE1), HVY DUTY SUSP (FE7)	12511524	LH	259.84	MUFFLER, EXH (W/TAIL PIPE) ..	4–K24,2
90	Y 5.7J (LT5), SOFT RIDE SUSP (FE1), HVY DUTY SUSP (FE7)	12511525	RH	259.84	MUFFLER, EXH (W/TAIL PIPE) ..	4–K24,2
91	Y 5.7J (LT5), SOFT RIDE SUSP (FE1), HVY DUTY SUSP (FE7)	10097673	1	DISCON	MUFFLER, EXH (W/EXH PIPE & TAIL PIPE) (W/RESO) (COMPL)	
91	Y 5.7J (LT5), SOFT RIDE SUSP (FE1), HVY DUTY SUSP (FE7)	12506537	LH	228.13	MUFFLER, EXH (W/TAIL PIPE) ..	4–K24,2
91	Y 5.7J (LT5), SOFT RIDE SUSP (FE1), HVY DUTY SUSP (FE7)	12506538	RH	228.13	MUFFLER, EXH (W/TAIL PIPE) ..	4–K24,2
91	Y07 5.7–8 (L98), 2.59R (GM1), (EXC MODIFICATION–NOISE CONTROL (B4H) (EXPORT)	10097665	LH	160.61	MUFFLER, EXH (W/TAIL PIPE) ..	4–K22,1
91	Y07 5.7–8 (L98), 2.59R (GM1), (EXC MODIFICATION–NOISE CONTROL (B4H) (EXPORT)	10097666	RH	160.61	MUFFLER, EXH (W/TAIL PIPE) ..	4–K22,1
91	Y07 5.7–8 (L98), 3.45R (GM3), 3.07R (G44), (EXC MODIFICATION–NOISE CONTROL (B4H) (EXPORT)	10097667	LH	160.61	MUFFLER, EXH (W/TAIL PIPE) ..	
91	Y07 5.7–8 (L98), 3.45R (GM3), 3.07R (G44), (EXC MODIFICATION–NOISE CONTROL (B4H) (EXPORT)	10097668	RH	160.61	MUFFLER, EXH (W/TAIL PIPE) ..	

3.701 MUFFLER, Engine Exhaust (Con't)

91	Y07 5.7–8 (L98), (EXC MODIFICATION–NOISE CONTROL (B4H) (EXPORT)	10097665	LH	160.61	MUFFLER, EXH (W/TAIL PIPE) ..	4–K22,1
91	Y07 5.7–8 (L98), (EXC MODIFICATION–NOISE CONTROL (B4H) (EXPORT)	10097666	RH	160.61	MUFFLER, EXH (W/TAIL PIPE) ..	4–K22,1
92	Y 5.7J (LT5)	10165323	1	1383.10	MUFFLER, EXH (W/EXH PIPE & TAIL PIPE) (W/RESO) (COMPL)	4–K24,37
92–95	Y 5.7P (LT1), (EXC MODIFICATION–NOISE CONTROL (B4H) (EXPORT)	10255646	1	957.53	MUFFLER, EXH (W/EXH PIPE & TAIL PIPE)	4–K27,19
92–95	Y 5.7J (LT5)	12528808	LH	304.85	MUFFLER, EXH (W/TAIL PIPE) ..	4–K24,2
92–95	Y 5.7P (LT1), (EXC MODIFICATION–NOISE CONTROL (B4H) (EXPORT)	12528808	LH	304.85	MUFFLER, EXH (W/TAIL PIPE) ..	4–K24,2
92–95	Y 5.7J (LT5)	12528809	RH	304.85	MUFFLER, EXH (W/TAIL PIPE) ..	4–K24,2
92–95	Y 5.7P (LT1), (EXC MODIFICATION–NOISE CONTROL (B4H) (EXPORT)	12528809	RH	304.85	MUFFLER, EXH (W/TAIL PIPE) ..	4–K24,2
93–95	Y 5.7J (LT5)	10157909	1	1383.10	MUFFLER, EXH (W/EXH PIPE & TAIL PIPE)	4–K24,37
94–95	Y 5.7P (LT1), MODIFICATION–NOISE CONTROL (B4H) (EXPORT), EUROPEAN PROVISIONS (VD1) (EXPORT)	10239292	1	1383.10	MUFFLER, EXH (W/EXH PIPE & TAIL PIPE)	4–L2,19
96	Y 5.7P (LT1), (EXC MODIFICATION–NOISE CONTROL (B4H) (EXPORT)	10224237	1	1017.89	MUFFLER, EXH (W/EXH PIPE & TAIL PIPE)	4–L2,19
96	Y 5.7–5 (LT4), (EXC MODIFICATION–NOISE CONTROL (B4H) (EXPORT)	10254060	1	862.55	MUFFLER, EXH (W/EXH PIPE & TAIL PIPE)	4–L2,19
96	Y 5.7P (LT1), (EXC MODIFICATION–NOISE CONTROL (B4H) (EXPORT)	12528808	LH	304.85	MUFFLER, EXH (W/TAIL PIPE) ..	4–K24,2
96	Y 5.7–5 (LT4), (EXC MODIFICATION–NOISE CONTROL (B4H) (EXPORT)	12528808	LH	304.85	MUFFLER, EXH (W/TAIL PIPE) ..	4–K24,2
96	Y 5.7P (LT1), (EXC MODIFICATION–NOISE CONTROL (B4H) (EXPORT)	12528809	RH	304.85	MUFFLER, EXH (W/TAIL PIPE) ..	4–K24,2
96	Y 5.7–5 (LT4), (EXC MODIFICATION–NOISE CONTROL (B4H) (EXPORT)	12528809	RH	304.85	MUFFLER, EXH (W/TAIL PIPE) ..	4–K24,2
84	Y (EXC EXPORT)	14060155	LH	DISCON	MUFFLER, W/TAIL PIPE	
84	Y (EXC EXPORT)	14060156	RH	232.22	MUFFLER, W/TAIL PIPE	4–K20,8
85	Y FED (EXC VE1 EXPORT) ..	14093135	LH	160.61	MUFFLER, W/TAIL PIPE	4–K20,16
85	Y FED (EXC VE1 EXPORT) ..	14093136	RH	160.61	MUFFLER, W/TAIL PIPE	4–K20,8
86	Y (EXC EXPORT)	14105111	LH	160.61	MUFFLER, W/TAIL PIPE	
86	Y (EXC EXPORT)	14105112	RH	160.61	MUFFLER, W/TAIL PIPE	
87–88	Y07 2.59R (GM1)	14093135	LH	160.61	MUFFLER, W/TAIL PIPE	4–K20,16
87–88	Y07 2.59R (GM1)	14093136	RH	160.61	MUFFLER, W/TAIL PIPE	4–K20,8
87	Y07 3.07R G44 (EXC EXPORT)	14105111	LH	160.61	MUFFLER, W/TAIL PIPE	
87	Y07 3.07R G44 (EXC EXPORT)	14105112	RH	160.61	MUFFLER, W/TAIL PIPE	
87	Y67 FED (EXC VD1, VE1 EXPORT)	14093135	LH	160.61	MUFFLER, W/TAIL PIPE	4–K20,16
87	Y67 FED (EXC VD1, VE1 EXPORT)	14093136	RH	160.61	MUFFLER, W/TAIL PIPE	4–K20,8

© 2000 GENERAL MOTORS SERVICE PARTS OPERATIONS–CHEVROLET–14Y

3.701 MUFFLER, Engine Exhaust (Con't)

88	Y07 3.07R (G44) (EXC EXPORT N10)	14105111	LH	160.61	MUFFLER, W/TAIL PIPE	
88	Y07 3.07R (G44) (EXC EXPORT N10)	14105112	RH	160.61	MUFFLER, W/TAIL PIPE	
88	Y67 (EXC EXPORT N10)	14093135	LH	160.61	MUFFLER, W/TAIL PIPE	4–K20,16
88	Y67 (EXC EXPORT N10)	14093136	RH	160.61	MUFFLER, W/TAIL PIPE	4–K20,6
89	Y CALLOWAY CONVERSION (Z5G)	10201710	LH	242.45	MUFFLER, W/TAIL PIPE	
89	Y CALLOWAY CONVERSION (Z5G)	10201711	RH	242.45	MUFFLER, W/TAIL PIPE	
89–90	Y07 (5.7–8) 2.59R (GM1) ...	10201708	LH	242.45	MUFFLER, W/TAIL PIPE	4–K22,1
89–90	Y07 (5.7–8) 2.59R (GM1) ...	10201709	RH	242.45	MUFFLER, W/TAIL PIPE	4–K22,1
89	Y07 (5.7–8) 3.33R (GT7), 3.07R (G44), 3.45R (GM3), 3.54R (GH0)	10201710	LH	242.45	MUFFLER, W/TAIL PIPE	
89	Y07 (5.7–8) 3.33R (GT7), 3.07R (G44), 3.45R (GM3), 3.54R (GH0)	10201711	RH	242.45	MUFFLER, W/TAIL PIPE	
89–90	Y67 (5.7–8)	10201708	LH	242.45	MUFFLER, W/TAIL PIPE	4–K22,1
89–90	Y67 (5.7–8)	10201709	RH	242.45	MUFFLER, W/TAIL PIPE	4–K22,1
90	Y07 CALLOWAY CONVERSION (Z5G)	10201710	LH	242.45	MUFFLER, W/TAIL PIPE	
90	Y07 (5.7–8) 3.33R (GT7), 3.07R (G44), 3.45R (GM3) ..	10201710	LH	242.45	MUFFLER, W/TAIL PIPE	
90	Y07 CALLOWAY CONVERSION (Z5G)	10201711	RH	242.45	MUFFLER, W/TAIL PIPE	
90	Y07 (5.7–8) 3.33R (GT7), 3.07R (G44), 3.45R (GM3) ..	10201711	RH	242.45	MUFFLER, W/TAIL PIPE	
90	Y67 (5.7–8) CALLOWAY CONVERSION (Z5G)	10201710	LH	242.45	MUFFLER, W/TAIL PIPE	
90	Y67 (5.7–8) CALLOWAY CONVERSION (Z5G)	10201711	RH	242.45	MUFFLER, W/TAIL PIPE	
	EXPORT	*EXPORT*		*EXPORT*	*EXPORT*	*EXPORT*
91	Y 5.7–8 (L98), MODIFICATION–NOISE CONTROL (B4H) (EXPORT)	10165329	LH	228.13	MUFFLER, EXH (W/TAIL PIPE) ..	
91	Y 5.7–8 (L98), MODIFICATION–NOISE CONTROL (B4H) (EXPORT)	10165330	RH	228.13	MUFFLER, EXH (W/TAIL PIPE) ..	
92–93	Y 5.7P (LT1), MODIFICATION–NOISE CONTROL (B4H) (EXPORT)	10157960	1	1383.10	MUFFLER, EXH (W/EXH PIPE & TAIL PIPE)	4–K27,19
92–93	Y 5.7P (LT1), MODIFICATION–NOISE CONTROL (B4H) (EXPORT)	12512732	RH	304.85	MUFFLER, EXH (W/TAIL PIPE) ..	4–K27,18
92–93	Y 5.7P (LT1), MODIFICATION–NOISE CONTROL (B4H) (EXPORT)	12512733	LH	228.13	MUFFLER, EXH (W/TAIL PIPE) ..	4–K27,18
94–95	Y 5.7P (LT1), MODIFICATION–NOISE CONTROL (B4H) (EXPORT), VE1 (EXPORT)	10239291	1	1383.10	MUFFLER, EXH (W/EXH PIPE & TAIL PIPE)	4–L2,19
94–95	Y 5.7P (LT1), MODIFICATION–NOISE CONTROL (B4H) (EXPORT), EUROPEAN PROVISIONS (VD1) (EXPORT)	12512732	RH	304.85	MUFFLER, EXH (W/TAIL PIPE) ..	4–K27,18

© 2000 GENERAL MOTORS SERVICE PARTS OPERATIONS–CHEVROLET–14Y

3.701 MUFFLER, Engine Exhaust (Con't)

94–95	Y 5.7P (LT1), MODIFICATION–NOISE CONTROL (B4H) (EXPORT), EUROPEAN PROVISIONS (VD1) (EXPORT)	12512733	LH	228.13	MUFFLER, EXH (W/TAIL PIPE) ..	4–K27,18
94–95	Y 5.7P (LT1), MODIFICATION–NOISE CONTROL (B4H) (EXPORT), VE1 (EXPORT)	12512736	RH	304.85	MUFFLER, EXH (W/TAIL PIPE) ..	4–L2,18
94–95	Y 5.7P (LT1), MODIFICATION–NOISE CONTROL (B4H) (EXPORT), VE1 (EXPORT)	12512737	LH	304.85	MUFFLER, EXH (W/TAIL PIPE) ..	4–L2,18
96	Y MODIFICATION–NOISE CONTROL (B4H) (EXPORT), VE1 (EXPORT)	10220610	1	1017.89	MUFFLER, EXH (W/EXH PIPE & TAIL PIPE)	4–L2,19
96	Y MODIFICATION–NOISE CONTROL (B4H) (EXPORT), EUROPEAN PROVISIONS (VD1) (EXPORT)	10221011	1	1017.89	MUFFLER, EXH (W/EXH PIPE & TAIL PIPE)	4–L2,19
96	Y MODIFICATION–NOISE CONTROL (B4H) (EXPORT), VE1 (EXPORT)	12528813	LH	304.85	MUFFLER, EXH (W/TAIL PIPE) ..	4–L2,18
96	Y MODIFICATION–NOISE CONTROL (B4H) (EXPORT), EUROPEAN PROVISIONS (VD1) (EXPORT)	12528813	LH	304.85	MUFFLER, EXH (W/TAIL PIPE) ..	4–L2,18
96	Y MODIFICATION–NOISE CONTROL (B4H) (EXPORT), EUROPEAN PROVISIONS (VD1) (EXPORT)	12528814	RH	304.85	MUFFLER, EXH (W/TAIL PIPE) ..	4–L2,18
96	Y MODIFICATION–NOISE CONTROL (B4H) (EXPORT), VE1 (EXPORT)	12528814	RH	304.85	MUFFLER, EXH (W/TAIL PIPE) ..	4–L2,18
84	Y EXPORT	14050025	LH	DISCON	MUFFLER, W/TAIL PIPE	
84	Y EXPORT	14050026	RH	DISCON	MUFFLER, W/TAIL PIPE	
85–86	Y NM8 (EXPORT)	14091275	LH	DISCON	MUFFLER, W/TAIL PIPE	
85–86	Y NM8 (EXPORT)	14091276	RH	DISCON	MUFFLER, W/TAIL PIPE	
87	Y 3.07 (G44) (EXPORT)	14091275	LH	DISCON	MUFFLER, W/TAIL PIPE	
87	Y 3.07 (G44) (EXPORT)	14091276	RH	DISCON	MUFFLER, W/TAIL PIPE	
87	Y NM5 (EXPORT, CANADA) (EXC VD1, VE1 EXPORT) ...	14093135	LH	160.61	MUFFLER, W/TAIL PIPE	4–K20,16
87	Y67 NM5 (EXPORT, CANADA) (EXC EXPORT VD1, VE1) ...	14093136	RH	160.61	MUFFLER, W/TAIL PIPE	4–K20,8
88	Y EXPORT (N10)	14091275	LH	DISCON	MUFFLER, W/TAIL PIPE	
88	Y EXPORT (N10)	14091276	RH	DISCON	MUFFLER, W/TAIL PIPE	

3.702 RESONATOR, Exhaust

90	Y 5.7J (LT5), SOFT RIDE SUSP (FE1), HVY DUTY SUSP (FE7)	10147974	1	1053.69	RESONATOR, EXH (W/EXH MANIF PIPE)	4–K24,1
91	Y 5.7J (LT5), SOFT RIDE SUSP (FE1), HVY DUTY SUSP (FE7)	12506866	1	1012 77	RESONATOR, EXH (W/EXH MANIF PIPE)	4–K24,1
92–95	Y 5.7J (LT5)	12518753	1	473.65	RESONATOR, EXH (W/EXH PIPE) .	4–K24,1
92–95	Y 5.7P (LT1), (EXC MODIFICATION–NOISE CONTROL (B4H) (EXPORT)	12523238	1	614.82	RESONATOR, EXH (W/EXH PIPE) (INCLS FRT/RR PIPES)	4–K27,1

3.702 RESONATOR, Exhaust (Con't)

96	Y 5.7P (LT1), (EXC MODIFICATION–NOISE CONTROL (B4H) (EXPORT)	12526607	1	822.49	RESONATOR, EXH (W/EXH PIPE) .	4–L2,1
96	Y 5.7–5 (LT4), (EXC MODIFICATION–NOISE CONTROL (B4H) (EXPORT)	12528610	1	936.05	RESONATOR, EXH (W/EXH PIPE) .	4–L2,1
	*EXPORT**********EXPORT**********EXPORT**********EXPORT**********EXPORT*					
84	Y EXPORT VB4, VT7	14048998	1	DISCON	RESONATOR, EXH	
84	Y EXPORT VD1 (EXC SWITZERLAND, SWEDEN) .	14048998	1	DISCON	RESONATOR, EXH	
84	Y VD1 EXPORT, SWITZERLAND, SWEDEN ..	25056719	1	DISCON	RESONATOR, EXH	
85	Y NM8 (EXPORT)	25056719	1	DISCON	RESONATOR, EXH	
86	Y VB4, VD1, VT7 (EXPORT) ..	25057691	1	DISCON	RESONATOR, EXH	
87	Y NM8 (EXPORT)	25057691	1	DISCON	RESONATOR, EXH	
92–93	Y 5.7P (LT1), MODIFICATION–NOISE CONTROL (B4H) (EXPORT)	12512734	1	DISCON	RESONATOR, EXH (W/EXH PIPE) .	
92–96	Y 5.7P (LT1), LEADED FUEL EMIS EXPORT (NM8)	25144747	LH	1053.69	RESONATOR, EXH (W/EXH MANIF PIPE)	4–L2,3
92–96	Y 5.7P (LT1), LEADED FUEL EMIS EXPORT (NM8)	25144748	RH	1053.69	RESONATOR, EXH (W/EXH MANIF PIPE)	4–L2,32
94–95	Y 5.7P (LT1), MODIFICATION–NOISE CONTROL (B4H) (EXPORT), VE1 (EXPORT)	12512735	1	449.10	RESONATOR, EXH (W/EXH PIPE) .	4–L2,1
96	Y MODIFICATION–NOISE CONTROL (B4H) (EXPORT), EUROPEAN PROVISIONS (VD1) (EXPORT)	12528612	1	930.93	RESONATOR, EXH (W/EXH PIPE) .	4–L2,1
96	Y MODIFICATION–NOISE CONTROL (B4H) (EXPORT), VE1 (EXPORT)	12528615	1	1009.70	RESONATOR, EXH (W/EXH PIPE) .	4–L2,1
96	Y 5.7–5 (LT4), LEADED FUEL EMIS EXPORT (NM8)	25144747	LH	1053.69	RESONATOR, EXH (W/EXH MANIF PIPE)	4–L2,3
96	Y 5.7–5 (LT4), LEADED FUEL EMIS EXPORT (NM8)	25144748	RH	1053.69	RESONATOR, EXH (W/EXH MANIF PIPE)	4–L2,32

3.704 BRACKET – HANGER – INSULATOR – REINFORCEMENT, Exhaust Muffler/Resonator

84–96	Y	14087698	2	2.20	BRACKET, EXH MUFF HNGR ...	4–K20,10
89–96	Y	10081611	2	7.57	HANGER, EXH MUFF	4–K22,33
84–88	Y	14060148	2	7.57	HANGER, MUFF	4–K20,11
89–95	Y	10158003	1	4.55	INSULATOR, EXH MUFF HNGR .	4–K22,32
96	Y	10158003	2	4.55	INSULATOR, EXH MUFF HNGR .	4–K22,32
84–88	Y	14076189	2	4.91	INSULATOR, MUFF HNGR	4–K20,9
89–95	Y	10080797	2	3.48	REINFORCEMENT, EXH MUFF HNGR	4–K22,24
96	Y	10259167	2	3.48	REINFORCEMENT, EXH MUFF HNGR	4–L2,7

3.708 CLAMP, Exhaust System Attaching

84	Y	793928	AR	14.75	CLAMP, (SADDLE TYPE) (FITS 69.85MM/2.75" PIPE) (03.616) .	
84–89	Y	3634389	AR	3.53	CLAMP, (SADDLE TYPE) (FITS 63.50MM/2.50" PIPE)	4–K20,15
84–87	Y	15595206	AR	7.98	CLAMP, (SADDLE TYPE) (FITS 60.32MM/2.375" PIPE)	

© 2000 GENERAL MOTORS SERVICE PARTS OPERATIONS–CHEVROLET–14Y

3.708 CLAMP, Exhaust System Attaching (Con't)

85–88	Y	14087655	2	7.52	CLAMP, (SADDLE TYPE) (FITS 57.15MM/2.25" PIPE)	4–K22,2
89–90	Y (5.7–8)	14087655	2	7.52	CLAMP, (SADDLE TYPE) (FITS 57.15MM/2.25" PIPE)	4–K22,2
85	Y (2ND DES)	10052279	1	8.44	CLAMP, EXH MANIF PIPE HNGR (HNGR BOLTS TO COTH CLMP & HT SHLD)	4–K22,9
86–89	Y	10052279	1	8.44	CLAMP, EXH MANIF PIPE HNGR	4–K22,9
90–91	Y (5.7–8)	10052279	1	8.44	CLAMP, EXH MANIF PIPE HNGR	4–K22,9
90–95	Y 5.7J (LT5)	14104713	2	10.89	CLAMP, EXH PIPE (M10X1.5)	4–K24,9
90–91	Y 5.7–8 (L98)	15529483	1	10.84	CLAMP, EXH PIPE (76.20MM/16.9) (111.6MM LONG)	4–K22,2
84–90	Y	15973623	AR	5.17	CLAMP, U BOLT (FITS 50.80MM/2" PIPE	4–K20,15
84	Y	2378615	AR	DISCON	CLAMP, U–BOLT (1 3/4 IN)	

3.724 GASKET – GASKET KIT – STUD, TBI/Carburetor

NOTE: FOR 1984 USAGE REFER TO ELECTRONIC FUEL INJECTION CHART GRP 3.725

84	Y FOR MDL APPL SEE THROT BODY INJ CHT	17079729	1	40.09	GASKET KIT (AC–DELCO #40–653)
84	Y FOR MDL APPL SEE THROT BODY INJ CHT	17079670	1	19.36	GASKET KIT, TBI (03.774) (AC–DELCO #219–319)
84	Y	12552858	1	*1.30	STUD, THROT BODY INJ (.375–16 X 1.823) (01.153)

3.725 THROTTLE – THROTTLE BODY, Throttle Body Injection

NOTE: FOR 1984 USAGE REFER TO ELECTRONIC FUEL INJECTION CHART GRP 3.725

84	Y (5.7–8) A/TRNS	17083055	1		THROTTLE BODY INJECTION
84	Y (5.7–8) M/TRNS, NM8 (EXPORT)	17083055	1		THROTTLE BODY INJECTION
84	Y (5.7–8) FED (NA5), CALIF (NB2)	17083058	1		THROTTLE BODY INJECTION
84	Y (5.7–8) M/TRANS, FED, CALIF	17083059	1		THROTTLE BODY INJECTION
84	Y (5.7–8)	17082052	1		THROTTLE BODY INJECTION, (REAR)
84	Y (5.7–8)	17082053	1		THROTTLE BODY INJECTION, (FRONT)
84	Y 4–SPD A/TRANS (MD8), (FOR MDL APPL SEE THROT BODY INJ CHT)	17079853	1	1599.62	THROTTLE BODY, COMPLETE (AC–DELCO #22–3804)
84	Y 5.7–8 (L83), 4–SPD M/TRANS (MK2), (FOR MDL APPL SEE THROT BODY INJ CHT)	17110601	1	1599.62	THROTTLE BODY, COMPLETE (AC–DELCO #22–3806)
84	Y FOR MDL APPL SEE THROT BODY INJ CHT	17079738	1	DISCON	THROTTLE BODY, FRT SLAVE
84	Y FOR MDL APPL SEE THROT BODY INJ CHT	17079736	1	1172.76	THROTTLE BODY, RR MASTER (AC–DELCO #21–3231)

© 2000 GENERAL MOTORS SERVICE PARTS OPERATIONS–CHEVROLET–14Y

ELECTRONIC FUEL INJECTION

SERVICE PACKAGE COMPONENTS

PARTS LISTED IN THE COMPONENT PACKAGES ON THESE PAGES MAY NOT BE INCLUDED IN ALL KITS. (SOME CARBURETORS DO NOT REQUIRE ALL PARTS LISTED)

FUEL INJECTOR PKG

FUEL INJECTOR
GASKET-FUEL METER COVER
GASKET-FUEL METER OUTLET
O RING-FUEL INJECTOR
SEAL-PRESSURE REGULATOR
WASHER-FUEL INJECTOR

FUEL INLET/OUTLET NUT PKG

GASKET-FUEL INLET NUT
GASKET-FUEL OUTLET NUT
NUT-FUEL INLET
NUT-FUEL OUTLET
POWER BRAKE FITTING

FUEL METER ASM PKG

FUEL METER ASM (SERVICE)
GASKET-FUEL INLET NUT
GASKET-FUEL OUTLET NUT
GASKET-THR BODY TO FUEL MET BODY
SCREW ASM-THR BODY ATTACHING

GASKET SET PKG

GASKET-AIR CLEANER
GASKET-FUEL INLET NUT
GASKET-FUEL METER COVER
GASKET-FUEL METER OUTLET
GASKET-FUEL OUTLET NUT
GASKET-THR BODY TO FUEL MET BODY
GASKET/INSULATOR-FLANGE
O RING-FUEL INJECTOR
SEAL-PRESSURE REGULATOR
WASHER-FUEL INJECTOR

IDLE SPEED SPEED CONTROL ASM PKG

CONNECTOR-PACKARD ELEC
IDLE SPEED CONTROL ASM
SCREW-ASM ATTACHING

REPLACEMENT TBI PKG

GASKET-AIR CLEANER
GASKET/INSULATOR-FLANGE
TBI ASM

SCREW ASSORTMENT PKG

LEVER-THR POSITION SENSOR
SCREW-THROTTLE STOP
SCREW-TPS LEVER ATTACHING
SCREW ASM-FUEL METER (LONG)
SCREW ASM-FUEL METER (SHORT)
SCREW ASM-THR BODY ATTACHING
SPRING-THROTTLE STOP SCREW

THROTTLE BODY ASM PKG

POWER BRAKE FITTING
RETAINER-THR POSIT SENSOR SCREW
SCREW ASM-THR BODY ATTACHING
THROTTLE BODY ASM (SERVICE)

THROTTLE POSITION SENSOR PKG

LEVER-THR POSITION SENSOR
RETAINER-THR POSIT SENSOR SCREW
SCREW-LEV ATTACHING
SCREW ASM-SENSOR ATTACHING
SENSOR-THROTTLE POSITION

© 2000 GENERAL MOTORS SERVICE PARTS OPERATIONS-CHEVROLET-14Y

1984 ELECTRONIC FUEL INJECTION (EFI)
(THROTTLE BODY INJECTED)

FOLLOW PROCEDURE OUTLINED BELOW TO DETERMINE CARBURETOR AND/OR PART NUMBER.

1. DETERMINE VEHICLE MODEL, CHECK VIN DIVISIONAL CODE.
2. DETERMINE ENGINE AND CARBURETOR TYPE.
3. PART NUMBER CAN BE DETERMINED BY CROSS REFERENCING CORRESPONDING COLUMN NUMBER WITH SAME COLUMN NUMBER ON CHARTS.

PRODUCTION	DIV.	VIN CODE	USAGE	COL. NO.
17083055	1	Y	(5.7-8)W/A.I.(COMPLETE UNIT)	1
17083055	1	Y	(5.7-8)W/M.I.,NMB(EXPORT)(COMPLETE UNIT)	1
17083058	1	Y	(5.7-8)W/FED,CALIF(COMPLETE UNIT)(SEE NOTE)	2
17083059	1	Y	(5.7-8)W/M.I.,FED,CALIF(COMPLETE UNIT)	3
17082053	1	Y	(5.7-8)(FRONT INJECTOR UNIT)(SEE NOTE)	4
17082052	1	Y	(5.7-8)(REAR INJECTOR UNIT)(SEE NOTE)	5

17082052 NOTE: REAR (MASTER) UNIT FOR 2X1 PROD ASM 17083058 & 17083055
17082053 NOTE: FRONT (SLAVE) UNIT FOR 2X1 PROD ASM 17083058 & 17083055
17083055 NOTE: THROTTLE BODY INJ ASMS SERV SEP SEE 17082052 & 17082053 FOR DETAILS
17083058 NOTE: THROTTLE BODY INJ ASMS SERV SEP SEE 17082052 & 17082053 FOR DETAILS

GROUP	DESCRIPTION	QTY	1	2	3	4	5
3.725	THROTTLE BODY INJECTION(COMPLETE)	1	17083055	17083058	17083059	17082053	17082052
3.724	GASKET KIT	1	—	—	—	17079729	17079729
3.725	THROTTLE BODY INJ(PRODUCTION)(FRT)	1	—	—	—	17082053	—
3.725	THROTTLE BODY INJ(PRODUCTION)(RR)	1	—	—	—	—	17082052
3.725	THROTTLE,BODY INJ (COMPLETE)(SERVICE)	1	17079853	17110601	17110601	—	—
3.725	THROTTLE,BODY INJ FRT (SERVICE)	1	—	—	—	17079738	—
3.725	THROTTLE,BODY INJ RR (SERVICE)	1	—	—	—	—	17079736
3.734	ACCUMLATOR KIT,PRESSURE FRT	1	—	—	—	—	—
3.729	BODY KIT,THROTTLE FRT	1	—	—	—	—	—
3.820	CONTROL KIT,IDLE AIR VALVE	1	—	—	—	17078832	17078832
3.726	COVER KIT,MANIFOLD INLET	1	17079728	17079728	17079728	—	—
3.724	FASTENER ASSORT KIT	1	—	—	—	—	—
3.724	FASTENER KIT,MANIFOLD CVR ATTACH	1	—	—	—	—	—
3.774	FILTER & GASKET KIT,FUEL METER	1	—	—	—	17079670	17079670
3.774	FUEL INJECTOR KIT	1	—	—	—	—	17078827
3.774	FUEL INJECTOR KIT,FRT	1	—	—	—	17078846	—
3.774	FUEL INJECTOR KIT,REMAN	1	—	—	—	17111547	17111548
3.724	FUEL INLET & OUTLET KIT,FRT (NUT & WASHER)	1	—	—	—	—	—
3.724	FUEL INLET & OUTLET KIT,RR (NUT & WASHER)	1	—	—	—	—	—
3.734	FUEL METER BODY KIT,FRT	1	—	—	—	17078842	—
3.734	FUEL METER BODY KIT,RR	1	—	—	—	—	17078833
3.734	FUEL METER KIT,FRT (ONE INJ.& PRESSURE REG. INCL)	1	—	—	—	—	—
3.734	FUEL METER KIT,RR(ONE INJ.& PRESSURE REG. INCL)	1	—	—	—	—	—
3.734	REGULATOR KIT,PRESSURE RR	1	—	—	—	—	—
3.724	SCREW KIT,THROTTLE SYNCRONIZING	1	—	—	—	—	—
3.764	SENSOR KIT,THROTTLE POSITION	1	17111262	17111262	17111262	—	—
3.729	THROTTLE BODY,W/ROD KIT RR	1	—	—	—	—	—
3.163	TUBE KIT,FUEL	1	17073087	17073087	17073087	—	—

ADDITIONAL ATTACHING PARTS

DIV.	GROUP	MODEL USAGE	NOUN NAME & DESCRIPTION	QTY	PART
1	3.726	Y(5.7-8)	GASKET,INT MANIF CVR	01	10140668
1	3.726	Y(5.7-8)	STUD,THROT BODY INJ(5/16-18 BOTH ENDS)	AR	—

3.726 BOLT – COVER KIT – GASKET, Throttle Body/Carburetor

NOTE: FOR 1984 USAGE REFER TO ELECTRONIC FUEL INJECTION CHART GRP 3.725

93–95	Y	11514492	2	1.55	BOLT, TBI ADAP (M5X.8X16 HRD PT 4.8 T25, PE FULL THD) (M5X.8X16 THD PT 4.8 T25) (08.913)	1–H20,560
84	Y FOR MDL APPL SEE THROT BODY INJ CHT	17079726	1	DISCON	COVER KIT, MANIFOLD INLET ..	
84	Y (5.7–8)	10140668	1	17.14	GASKET, TBI (INL MANIF CVR) ..	1–G11,19

3 729 BODY KIT, Throttle Body/Carburetor

NOTE: FOR 1984 USAGE REFER TO ELECTRONIC FUEL INJECTION CHART GRP 3.725

90–95	Y 5.7J (LT5), (FOR MDL APPL AND POA SEE THROT BODY CHT)	17112264	1	1541.61	BODY KIT, THROT (03.336) (AC–DELCO #17112264)	4–K12,35
90–91	Y 5.7–8 (L98), (FOR MDL APPL & POA SEE THROT BODY CHT)	17112385	1	466.05	BODY KIT, THROT (03.336) (AC–DELCO #17112385)	
92–93	Y 5.7P (LT1)	17092076	1	636.05	BODY KIT, THROT (03.336) (AC–DELCO #17092076)	4–F18,1

3.734 FUEL, Throttle Body/Carburetor

NOTE: FOR 1984 USAGE REFER TO ELECTRONIC FUEL INJECTION CHART GRP 3.725

84	Y FOR MDL APPL SEE THROT BODY INJ CHT	17078042	1	166.88	FUEL METER BODY KIT (AC–DELCO #17078042)	

3.764 SENSOR KIT, Throttle Body Throttle Position

NOTE: FOR 1984 USAGE REFER TO ELECTRONIC FUEL INJECTION CHART GRP 3.725

84	Y FOR MDL APPL SEE THROT BODY INJ CHT	17111262	1	83.88	SENSOR KIT, THROTTLE POSITION (AC–DELCO #213–902)	

3.774 FUEL INJECTOR KIT – INJECTOR KIT, Throttle Body/Carburetor

NOTE: FOR 1984 USAGE REFER TO ELECTRONIC FUEL INJECTION CHART GRP 3.725

84	Y FOR MDL APPL SEE THROT BODY INJ CHT	17078846	1	161.82	FUEL INJECTOR KIT, FRT, REMAN (AC–DELCO #217–329)	
84	Y FOR MDL APPL SEE THROT BODY INJ CHT	17078827	1	161.82	INJECTOR KIT, THROT BODY FUEL (REMAN) (RR) (AC–DELCO #217–328)	
84	Y FOR MDL APPL SEE THROT BODY INJ CHT	17078846	1	161.82	INJECTOR KIT, THROT BODY FUEL (FRT) (AC–DELCO #217–329)	

3.820 CONTROL KIT – VALVE KIT, Throttle Body/Carburetor

NOTE: FOR 1984 USAGE REFER TO ELECTRONIC FUEL INJECTION CHART GRP 3.725

84	Y FOR MDL APPL SEE THROT BODY INJ CHT	17078832	1	126.56	CONTROL KIT, IDLE AIR VALVE (AC–DELCO #217–406)	
89–91	Y FOR MDL APPL & POA SEE THROT BODY CHT	17112193	1	90.45	VALVE KIT, IDLE AIR CONT (THHOT BODY) (03.338) (AC–DELCO #217–415)	4–F18,7
90–91	Y 5.7J (LT5), (FOR MDL APPL & POA SEE THROT BODY CHT)	17112350	1	90.45	VALVE KIT, IDLE AIR CONT (THROT BODY) (W/SEAL) (03.338) (AC–DELCO #217–419)	4–F20,3
92	Y 5.7P (LT1)	17112193	1	90.45	VALVE KIT, IDLE AIR CONT (THROT BODY) (03.338) (AC–DELCO #217–415)	4–F18,7
92–95	Y 5.7J (LT5)	17112350	1	90.45	VALVE KIT, IDLE AIR CONT (THROT BODY) (W/SEAL) (03.338) (AC–DELCO #217–419)	4–F20,3

© 2000 GENERAL MOTORS SERVICE PARTS OPERATIONS–CHEVROLET–14Y

3.820 CONTROL KIT – VALVE KIT, Throttle Body/Carburetor (Con't)

93	Y 5.7P (LT1), 4–SPD A/TRANS (MD8)	17112193	1	90.45	VALVE KIT, IDLE AIR CONT (THROT BODY) (03.338) (AC–DELCO #217–415)	4–F18,7
93	Y 5.7P (LT1), 6–SPD M/TRANS (ML9)	17112193	1	90.45	VALVE KIT, IDLE AIR CONT (THROT BODY) (03.338) (AC–DELCO #217–415)	4–F18,7
94	Y 5.7P (LT1)	17113099	1	90.45	VALVE KIT, IDLE AIR CONT (THROT BODY) (03.338) (AC–DELCO #217–429)	4–F22,7
95–96	Y 5.7P (LT1)	17113188	1	90.45	VALVE KIT, IDLE AIR CONT (THROT BODY) (03.338) (AC–DELCO #217–433)	4–F24,6
96	Y 5.7–5 (LT4)	17113188	1	90.45	VALVE KIT, IDLE AIR CONT (THROT BODY) (03.338) (AC–DELCO #217–433)	4–F24,6

3.838 CONNECTOR, Carburetor Accelerator Pump

84	Y	12085506	AR	32.35	CONNECTOR, VLV–IDLE AIR CONT (4–WAY M, W/LEADS) (02.535) (AC–DELCO #PT127)	
86–89	Y	12085506	AR	32.35	CONNECTOR, VLV–IDLE AIR CONT (4–WAY M, W/LEADS) (02.535) (AC–DELCO #PT127)	
90–91	Y 5.7–8 (L98)	12085506	AR	32.35	CONNECTOR, VLV–IDLE AIR CONT (4–WAY M) (W/LEADS) (02.535) (AC–DELCO #PT127)	
90–92	Y 5.7J (LT5)	12126487	1	37.29	CONNECTOR, VLV–IDLE AIR CONT (4–WAY F) (W/LEADS) (02.383) (AC–DELCO #PT757)	
92–93	Y 5.7P (LT1)	12085506	AR	32.35	CONNECTOR, VLV–IDLE AIR CONT (4–WAY M) (W/LEADS) (02.535) (AC–DELCO #PT127)	

3.880 ADJUSTER – BRACKET – CABLE – COVER – INSULATOR – RETAINER, Cruise Control

92–96	Y	12557971	1	506.94	ADJUSTER, ACCEL CONT & CRCONT SERVO CBL (03.454)	4–I2,27
92–95	Y 5.7J (LT5)	10143548	1	11.68	BRACKET, ACCEL CONT & CRCONT SERVO CBL ADJR (UPR) (03.454)	4–I5,31
92–95	Y 5.7J (LT5)	10177905	1	20.25	BRACKET, ACCEL CONT & CRCONT SERVO CBL ADJR (LWR) (03.454)	
92–93	Y 5.7P (LT1)	10212361	1	11.68	BRACKET, ACCEL CONT & CRCONT SERVO CBL ADJR (03.454)	4–I2,26
94–95	Y 5.7P (LT1)	12553403	1	8.16	BRACKET, ACCEL CONT & CRCONT SERVO CBL ADJR (03.454)	4–I10,26
96	Y	12553403	1	8.16	BRACKET, ACCEL CONT & CRCONT SERVO CBL ADJR (03.454)	4–I10,26
84	Y	14038658	1	DISCON	BRACKET, CRUISE CONT SERVO CBL	
89–91	Y (5.7J)	14104899	1	DISCON	BRACKET, CRUISE CONT SERVO CBL	
90–91	Y (5.7J)	10150042	1	21.42	CABLE, ACCEL CONT & CRUISE CONT SERVO (03.430)	4–H23,14

3.880 ADJUSTER – BRACKET – CABLE – COVER – INSULATOR – RETAINER, Cruise Control (Con't)

94	Y 5.7P (LT1), (2ND DES)	10241100	1	29.07	CABLE, CRCONT SERVO (2 PC DES, ACCEL CABLE IS SEPARATE, SEE GROUP 3.430) .	4–I10,14
94	Y 5.7J (LT5), (2ND DES)	10241102	1	29.07	CABLE, CRCONT SERVO (THROTTLE ADJ TO CRCONT SERVO) (HAS SEPARATE ACCEL CONT CBL & CRCONT SERVO CBL. USE 10241101 IN GRP. 3.430 FOR ACCEL CONT CBL.)	4–I13,14
95	Y 5.7P (LT1)	10241100	1	29.07	CABLE, CRCONT SERVO	4–I10,14
95	Y 5.7J (LT5)	10241102	1	29.07	CABLE, CRCONT SERVO (THROTTLE ADJ TO CRCONT SERVO)	4–I13,14
96	Y 5.7P (LT1), 5.7–5 (LT4)	10241100	1	29.07	CABLE, CRCONT SERVO	4–I10,14
84	Y	14091225	1	24.74	CABLE, CRUISE CONT	
84	Y	14056630	1	DISCON	CABLE, CRUISE CONT SERVO ..	
85–88	Y	14091230	1	28.56	CABLE, CRUISE CONT SERVO ..	4–H21,13
89	Y (5.7–8)	10085262	1	DISCON	CABLE, CRUISE CONT SERVO ..	
90–91	Y (5.7–8)	10208716	1	62.73	CABLE, CRUISE CONT SERVO (AC–DELCO #10208716)	4–H21,13
92–95	Y 5.7J (LT5)	10209540	1	10.86	COVER, ACCEL CONT & CRCONT SERVO CBL ADJR (03.454) ...	4–I5,29
92–95	Y 5.7P (LT1)	10211305	1	10.86	COVER, ACCEL CONT & CRCONT SERVO CBL ADJR (03.454) ...	4–I2,28
96	Y 5.7P (LT1), 5.7–5 (LT4)	10211305	1	10.86	COVER, ACCEL CONT & CRCONT SERVO CBL ADJR (03.454) ...	4–I2,28
92–96	Y	14091274	3	.48	INSULATOR, CRCONT SERVO (03.885)	4–H25,9
84–96	Y	15567924	AR	*.68	RETAINER, CRCONT SERVO CBL (5/32 CBL SPR STL PHOS) (08.821)	4–H25,26

3.883 SWITCH, Cruise Control Selector

84–88	Y M/TRNS	14043256	1	9.84	SWITCH, CRUISE CONT VAC REL .	4–H21,4

3.885 BOOT – BRACKET – CHAIN – CONNECTOR – INSULATOR – RETAINER – SCREW – SERVO – SHIELD – SLEEVE – VALVE – WASHER, Cruise Control

84–88	Y	25031301	1	11.53	BOOT, CRUISE CONT SERVO (AC–DELCO #25031301)	4–H19,11
89	Y (5.7–8)	25031301	1	11.53	BOOT, CRUISE CONT SERVO (AC–DELCO #25031301)	4–H19,11
90–96	Y	10098900	1	13.67	BRACKET, CRCONT SERVO	4–H21,9
84	Y	14053644	1	DISCON	BRACKET, CRUISE CONT SERVO .	
85–88	Y	10067906	1	11.53	BRACKET, CRUISE CONT SERVO .	4–H21,9
89	Y (5.7–8)	10067906	1	11.53	BRACKET, CRUISE CONT SERVO .	4–H21,9
84–88	Y	25031314	1	23.19	CHAIN, W/COUPLING, CRUISE CONT BALL (AC–DELCO #25031314)	4–H19,11
89	Y (5.7–8)	25031314	1	23.19	CHAIN, W/COUPLING, CRUISE CONT BALL (AC–DELCO #25031314)	4–H19,11
91–96	Y	12102625	1	38.25	CONNECTOR, SERVO–CRCONT (5–WAY F) (W/LEADS)	
92–95	Y 5.7J (LT5)	12126443	1	141.23	CONNECTOR, SERVO–CRCONT (W/LEADS) (03.887) (AC–DELCO #12126443)	

© 2000 GENERAL MOTORS SERVICE PARTS OPERATIONS–CHEVROLET–14Y

3.885 BOOT – BRACKET – CHAIN – CONNECTOR – INSULATOR – RETAINER – SCREW – SERVO – SHIELD – SLEEVE – VALVE – WASHER, Cruise Control (Con't)

85–91	Y	14091274	3	.48	INSULATOR, CRUISE CONT SERVO	4–H21,22
93–96	Y 6–SPD M/TRANS (ML9)	10194431	1	*.04	RETAINER, CRCONT SW	4–I16,5
84–92	Y	10076405	1	.34	RETAINER, CRCONT VAC REL VLV (03.887)	4–H21,5
84–87	Y	1612303	1	1.45	RETAINER, VAC REL VLV	4–J13,32
85	Y	11505504	3	*.65	SCREW, CRUISE CONT SERVO (4.2XX1.41X20) (08.977)	
90–96	Y	25074627	1	264.02	SERVO, CRCONT (AC–DELCO #25074627)	4–H21,12
84	Y	25074659	1	251.07	SERVO, CRUISE CONT (AC–DELCO #25074659)	4–H19,11
85	Y (EXC U18 EXPORT)	25074628	1	301.54	SERVO, CRUISE CONT (AC–DELCO #25074628)	4–H21,12
86–88	Y	25074628	1	301.54	SERVO, CRUISE CONT (AC–DELCO #25074628)	4–H21,12
89	Y (5.7–8)	25074628	1	301.54	SERVO, CRUISE CONT (AC–DELCO #25074628)	4–H21,12
92–96	Y	10192205	1	1.02	SHIELD, ACCEL CONT & CRCONT SERVO CBL ADJR	4–I2,23
85–90	Y	14091273	3	1.30	SLEEVE, CRCONT SERVO INSL	4–H21,23
91–95	Y 5.7J (LT5)	14056648	1	2.73	VALVE, CRCONT AIR PRESS REG (STAMPED 6648) (AC–DELCO #14056648)	4–H23,29
84–92	Y	1645516	1	13.74	VALVE, CRCONT VAC REL (ON BRK) (W/SW) (AC–DELCO #212–346)	4–H19,4
89–92	Y 6–SPD M/TRANS (ML9), SOFT RIDE SUSP (FE1), HVY DUTY SUSP (FE7)	14043256	1	9.84	VALVE, CRCONT VAC REL (ON CLU) (03.883)	4–H25,6
85–92	Y	14091256	1	*.60	WASHER, CRCONT SERVO (03.880)	4–H21,21
	*EXPORT*********EXPORT*********EXPORT*********EXPORT*********EXPORT*					
85	Y U18 (EXPORT)	25074659	1	251.07	SERVO, CRUISE CONT (AC–DELCO #25074659)	4–H19,11

3.886 CONNECTOR – HOSE – VALVE, Cruise Control Vacuum

91	Y 5.7J (LT5)	14062217	2	*1.02	CONNECTOR, CRCONT SERVO HOSE (90 DEGREE ELBOW) (3.6X4.0 ID, PLASTIC) (08.963)	
90–95	Y 5.7J (LT5)	10067705	1	5.50	CONNECTOR, CRCONT VAC HOSE (1/4" DIA) (01.020)	1–H20,566
90–95	Y 5.7J (LT5)	10110989	1	13.11	HOSE, CRCONT VAC (TO PLENUM)	4–H23,22
91	Y	10174377	1	DISCON	HOSE, CRCONT VAC	
85–96	Y	14091289	1	10.40	HOSE, CRCONT VAC REL SW	4–H21,7
84	Y	14056665	1	DISCON	HOSE, VAC REL SW	
92–95	Y 5.7P (LT1)	10135692	1	6.42	VALVE, HTR & A/C CONT & CRCONT VAC CHK (09.280) (AC–DELCO #15–5421)	
96	Y	10135692	1	6.42	VALVE, HTR & A/C CONT & CRCONT VAC CHK (09.280) (AC–DELCO #15–5421)	

© 2000 GENERAL MOTORS SERVICE PARTS OPERATIONS–CHEVROLET–14Y

3.887 CONNECTOR – MODULE – PROTECTOR – RELAY – SWITCH, Cruise Control

NOTE: FOR 1990–1991 USAGE REFER TO STEERING COLUMN CHART GRP 6.610

93–96	Y	12167157	1	64.95	CONNECTOR, CRCONT HARN (12–WAY P/C EDGEBD) (W/LEADS) (AC–DELCO #PT821)	
93–96	Y	12117350	1	33.74	CONNECTOR, INLINE–TO CRCONT SW HARN (4–WAY EDGE) (AC–DELCO #PT491)	
92–96	Y	12020014	1	*1.33	CONNECTOR, RLY–CRCONT (BLACK) (3–WAY F) (09.647) (AC–DELCO #12020014)	
92–96	Y	12102630	1	21.35	CONNECTOR, RLY–CRCONT (METRI–PACK) (GRAY) (3–WAY F, W/LEADS) (09.647) (AC–DELCO #PT335)	
93–94	Y	12102625	1	38.26	CONNECTOR, SW–CRCONT (5–WAY F) (W/LEADS) (03.885)	
93	Y	12117350	1	33.74	CONNECTOR, SW–CRCONT (4–WAY EDGE) (AC–DELCO #PT491)	
90–93	Y	12085532	1	17.46	CONNECTOR, SW–CRCONT REL (2–WAY F) (W/LEADS) (02.535) (AC–DELCO #PT142)	
90–93	Y	12102626	1	13.00	CONNECTOR, SW–CRCONT REL (2–WAY F, W/LEADS) (AC–DELCO #PT313)	
93–96	Y	12085458	1	20.99	CONNECTOR, SW–CRCONT REL (2–WAY F) (W/LEADS) (02.535) (AC–DELCO #PT110)	
93–95	Y	12125631	1	18.43	CONNECTOR, SW–CRCONT REL (W/LEADS) (02.485) (AC–DELCO #PT543)	
90–92	Y	25140992	1	190.23	MODULE, CRCONT (AC–DELCO #25140992)	4–H25,1
93–96	Y	25140723	1	203.21	MODULE, CRCONT (AC–DELCO #25140723)	4–I10,20
84–86	Y	7828271	1	2.50	PROTECTOR, CRUISE CONT WIRE	
92–96	Y	22535475	1	8.80	RELAY, CRCONT CUTOFF (09.647) (AC–DELCO #22535475)	9–F8,53
93–96	Y 6–SPD M/TRANS (ML9)	10194403	1	9.45	SWITCH, CRCONT REL (AC–DELCO #10194403)	4–I13,5

3.890 BOLT – BRACKET – FILTER – SHIELD, Engine Fuel Filter

NOTE: SEE GROUP 2.270 FOR TUNE–UP PARTS CHART

87	Y	14067335	2	DISCON	BOLT, FUEL RTN FLTR (01.062)	
84–91	Y	14050042	1	4.64	BRACKET, FUEL FLTR	4–E15,42
92–96	Y	10158024	1	4.64	BRACKET, FUEL FLTR	4–E22,59
87	Y	10068683	1	DISCON	BRACKET, FUEL RTN FLTR	
84	Y 5.7–8 (L83)	25055066	1	N.L.	FILTER, FUEL (AC–DELCO #GF482)	4–E4,25
86–91	Y 5.7–8 (L98)	25055052	1	N.L.	FILTER, FUEL (THREADED FTGS ON BOTH ENDS, W/O PROTECTIVE COATING) (AC–DELCO #GF481)	4–E22,61
90–95	Y 5.7J (LT5)	25055052	1	N.L.	FILTER, FUEL (THREADED FTGS ON BOTH ENDS, W/O PROTECTIVE COATING) (AC–DELCO #GF481)	4–E22,61

© 2000 GENERAL MOTORS SERVICE PARTS OPERATIONS–CHEVROLET–14Y

3.890 BOLT – BRACKET – FILTER – SHIELD, Engine Fuel Filter (Con't)

92–96	Y 5.7P (LT1)	25055052	1	N.L.	FILTER, FUEL (THREADED FTGS ON BOTH ENDS, W/O PROTECTIVE COATING) (AC–DELCO #GF481)	4–E22,01
96	Y 5.7–5 (LT4)	25055052	1	N.L.	FILTER, FUEL (THREADED FTGS ON BOTH ENDS, W/O PROTECTIVE COATING) (AC–DELCO #GF481)	4–E22,01
87	Y	854566	1	N.L.	FILTER, W/GASKET, FUEL RTN (AC–DELCO #GF62)	
86–88	Y	14092697	1	DISCON	SHIELD, FUEL FLTR	

3.900 CONNECTOR – MODULE – PUMP – RELAY, Fuel Pump

87–90	Y	15306002	AR	41.69	CONNECTOR, RLY–F/PMP (5–WAY F, M/P MXD, W/LEADS) (08.055) (AC–DELCO #PT1115)	
90–95	Y 5.7J (LT5)	25028725	1	1056.70	MODULE, F/TNK F/PMP (SENDER HARNESS TAGGED YPE) (03.107) (AC–DELCO #25028725)	4–E19,29
84	Y 5.7–8 (L83)	25168719	1	68.16	PUMP, FUEL (STRAINER NOT INCLUDED) (AC–DELCO #EP386)	4–E4,14
85–87	Y 5.7–8 (L98)	25116163	1	112.13	PUMP, FUEL (AC–DELCO #EP241)	4–E6,15
88–89	Y 5.7–8 (L98)	25163463	1	138.92	PUMP, FUEL (AC–DELCO #EP375)	4–E12,29
90–91	Y 5.7–8 (L98)	25163463	1	138.92	PUMP, FUEL (AC–DELCO #EP375)	4–E12,29
92–95	Y 5.7P (LT1)	25163464	1	139.73	PUMP, FUEL (AC–DELCO #EP376)	4–E22,33
96	Y	25163464	1	139.73	PUMP, FUEL (AC–DELCO #EP376)	4–E22,33
84–87	Y	14078915	1	14.70	RELAY, F/PMP (03.140) (AC–DELCO #212–307)	4–J13,9
88–89	Y 5.7–8 (L98)	14089936	1	16.26	RELAY, F/PMP (USE W/CONN 15306002) (01.055) (AC–DELCO #15–8240)	
90–94	Y	14100455	1	16.26	RELAY, F/PMP (BLACK) (5–WAY) (09.277) (AC–DELCO #15–8426)	4–K12,8
94–95	Y 6–SPD M/TRANS (ML9)	12065125	1	16.73	RELAY, F/PMP (13.095) (AC–DELCO #D1703A)	3–I12,31
95	Y 4–SPD A/TRANS (M30)	12065125	1	16.73	RELAY, F/PMP (13.095) (AC–DELCO #D1703A)	3–I12,31
95	Y 5.7P (LT1), 6–SPD M/TRANS (ML9), A/C MAN CONT (C60), A/C AUTO ELEC CONT (C68)	12135084	1	9.55	RELAY, F/PMP (02.815) (AC–DELCO #D1719A)	3–I12,31
96	Y 4–SPD A/TRANS (M30), 6–SPD M/TRANS (ML9), A/C MAN CONT (C60), A/C AUTO ELEC CONT (C68)	12135084	1	9.55	RELAY, F/PMP (02.815) (AC–DELCO #D1719A)	3–I12,31

3.901 BOLT – BRACKET – COVER – NUT – STUD, Fuel Pump

92–95	Y 5.7J (LT5)	10172330	1	.50	BOLT, VAC PUMP BRKT (M6.3X1.81X20) (07.874)	4–H25,18
84–88	Y	14087644	1	DISCON	BRACKET, FUEL PUMP RLY	
89	Y (5.7–8)	14087644	1	DISCON	BRACKET, FUEL PUMP RLY	
89–91	Y 5.7–8 (L98)	14094069	1	4.08	COVER, F/PMP OPG	1–G23,96
84–88	Y	14094069	1	4.08	COVER, FUEL PUMP OPG	1–G23,96
84–88	Y	12338025	2	*1.83	NUT, FUEL PUMP RELAY (02.383)	4–J13,11
89	Y (5.7–8)	12338025	2	*1.83	NUT, FUEL PUMP RELAY (02.383)	4–J13,11

3.901 BOLT – BRACKET – COVER – NUT – STUD, Fuel Pump (Con't)

89–91	Y 5.7–8 (L98)	10105227	1	DISCON	STUD, F/PMP OPG CVR	
84–88	Y	10105227	1	DISCON	STUD, FUEL PUMP OPG CVR (3/8–10X5/16–18)	

3.904 GASKET – INSULATOR, Fuel Pump Mounting

84–88	Y	12560223	1	*4.00	GASKET, FUEL PUMP OPG CVR .	1–G23,108
89–91	Y 5.7–8 (L98)	12560223	1	*4.00	GASKET, F/PMP OPG CVR	1–G23,108
93–96	Y 5.7P (LT1)	25004553	1	10.10	INSULATOR, F/PMP UPR (03.107) (AC–DELCO #25004553)	

3.910 SENSOR – SWITCH, Fuel Pump Pressure

89	Y 5.7–8 (L98)	10201491	1	32.12	SENSOR, F/PMP SW & ENG OIL PRESS GA (3 BLADE TERM, 1/8–27 THD) (01.800) (AC–DELCO #10201491)	
90	Y 5.7–8	10201491	1	32.12	SENSOR, F/PMP SW & ENG OIL PRESS GA (3 BLADE TERM, 1/8–27 THD) (01.800) (AC–DELCO #10201491)	
84	Y	25036553	1	12.65	SWITCH, FUEL PUMP (2 BLADE TERM, 1/8–27 THD) (01.800) (AC–DELCO #D1818)	4–J13,98

© 2000 GENERAL MOTORS SERVICE PARTS OPERATIONS - CHEVROLET - 14Y

MICROFICHE INDEX

GROUP 3.000

FICHE 4 OF 11

GROUP	DESCRIPTION	STARTING GRID LOCATION PARTS	ILLUSTRATIONS
–	GENERAL INFORMATION	1–A2	1–G2
–	ALPHABETICAL INDEX	1–B13	N.A.
3.000	FUEL TANK – INTAKE MANIFOLD – FUEL INJECTION – THROTTLE BODY – AIR CLEANER – ACCELERATOR	4–A2	4–E2
3.000	EXHAUST & EMISSIONS SYSTEMS – CARBURETOR – CRUISE – FUEL FILTER & PUMP	4–C2	4–H2
–	OUT OF FICHE CALLS	N.A.	4–M9

4–E1

CHEVROLET
CHASSIS GROUP 3.000

ILLUSTRATION INDEX

	TITLE	GRID
1984	Y FUEL SUPPLY SYSTEM (L83)	4-E4
1985-1987	Y FUEL SUPPLY SYSTEM (L98)	4-E6
1988-1990	Y FUEL SUPPLY SYSTEM (L98)	4-E8
1990	Y FUEL SUPPLY SYSTEM (LT5)	4-E10
1991	Y FUEL SUPPLY SYSTEM (L98)	4-E12
1991	Y FUEL SUPPLY SYSTEM (LT5)	4-E15
1992-1995	Y FUEL SUPPLY SYSTEM (LT5)	4-E19
1992-1996	Y FUEL SUPPLY SYSTEM (LT1)	4-E22
1996	Y FUEL SUPPLY SYSTEM (LT4)	4-E22
1985-1991	Y FUEL INJECTOR RAIL MPFI (MODELS F8A,R810)(L98)	4-E27
1990-1995	Y FUEL INJECTOR RAIL MPFI (MODEL R830) (5.7J)(LT5)	4-F2
1992-1993	Y FUEL INJECTOR RAIL MPFI (MODELS R815)(LT1)(5.7P)	4-F5
1994-1996	Y FUEL INJECTOR RAIL MPFI (MODEL R816)(LT1/5.7P)	4-F8
1996	Y FUEL INJECTOR RAIL MPFI (MODEL R816)(LT4/5.7.5)	4-F8
1984	Y THROTTLE BODY INJECTION/CFI-5.7L V8 (MODEL 400)(L83)	4-F11
1985-1991	Y THROTTLE BODY/MPFI (MODELS T2A,B210)(L98/5.7-8)	4-F13
1990-1991	Y THROTTLE BODY/MPFI (MODEL B310)(LT5)	4-F16
1992-1993	Y THROTTLE BODY/MPFI (MODEL B210)(5.7P)(LT1)	4-F18
1992-1995	Y THROTTLE BODY/MPFI (MODEL B310)(5.7J)(LT5)	4-F20
1994-1996	Y THROTTLE BODY/MPFI (MODEL B210)(5.7P/LT1)	4-F22
1996	Y THROTTLE BODY/MPFI (MODEL B210)(LT4/5.7-5)	4-F24
1985-1991	Y AIR INTAKE SYSTEM-V8(L98)	4-F26
1990-1995	Y AIR INTAKE SYSTEM V8(LT5)	4-G2
1992-1993	Y AIR INTAKE SYSTEM-V8(LT1)	4-G4
1994	Y AIR INTAKE SYSTEM-V8(LT1)	4-G6
1995-1996	Y AIR INTAKE SYSTEM-V8(LT1)	4-G8
1996	Y AIR INTAKE SYSTEM-V8(LT4)	4-G8
1984	Y ACCELERATOR CONTROL-V8(L83)	4-G11
1985-1991	Y ACCELERATOR CONTROL-V8(L98)	4-G12
1990-1991	Y ACCELERATOR CONTROL-V8(LT5)	4-G13
1992-1993	Y ACCELERATOR CONTROL-V8(LT1)	4-G14
1994	Y ACCELERATOR CONTROL-V8(LT1)(1ST DES)	4-G14
1992-1995	Y ACCELERATOR CONTROL-V8(LT5)	4-G17
1994	Y ACCELERATOR CONTROL-V8(LT1)(2ND DES)	4-G19
1995-1996	Y ACCELERATOR CONTROL-V8(LT1)	4-G19
1996	Y ACCELERATOR CONTROL-V8(LT4)	4-G19

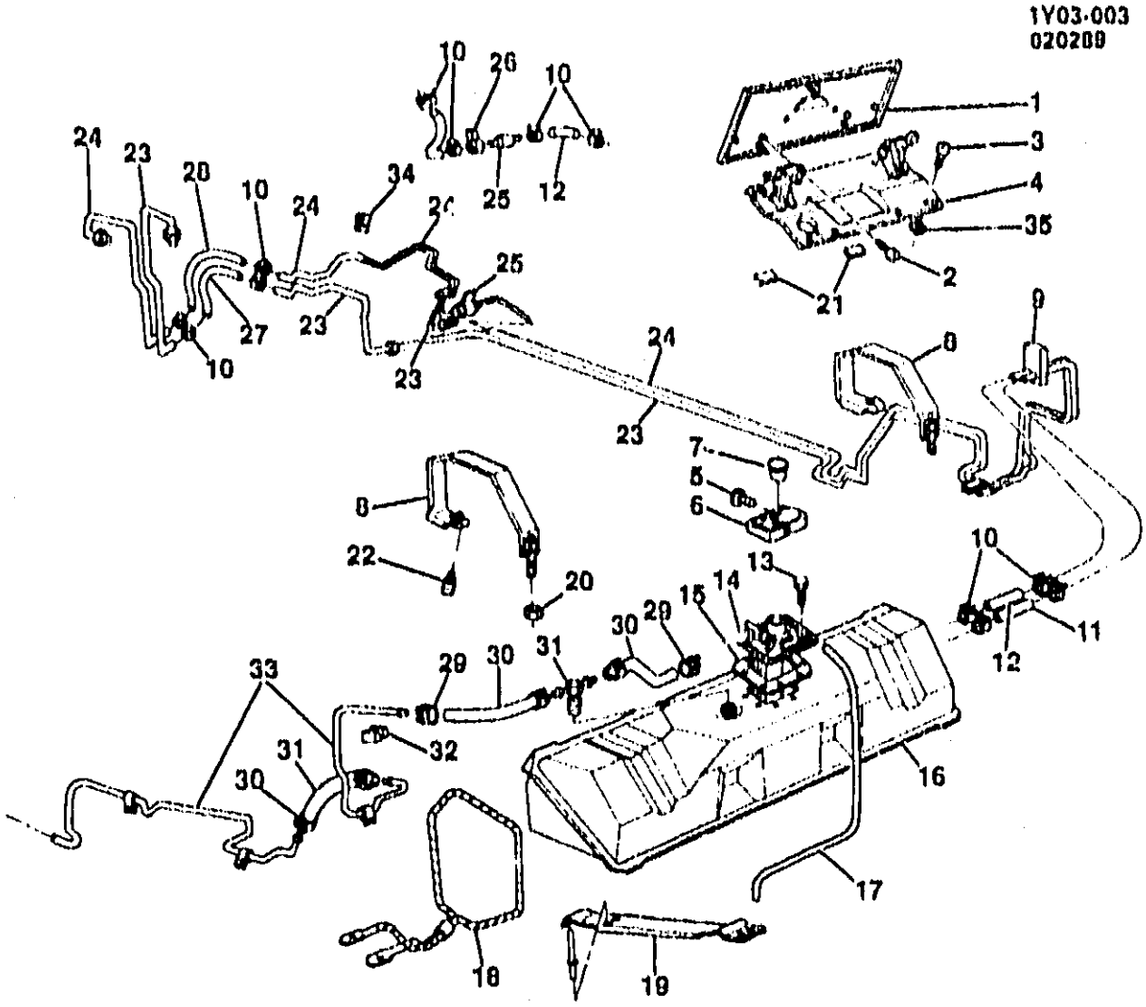

1Y03-003

1984 Y FUEL SUPPLY SYSTEM (L03)

1.	4-N25	12.945	DOOR, F/TNK FIL (Y07)	14047485
	4-N25	12.945	DOOR, F/TNK FIL (Y67)	10107910
2.		8.913	SCREW, PAN HD TORX W/FL WA (M6X0.8X8) SST	11508910
3.		8.977	SCREW, OV HD C/S TORX (M4.2X1.41X16) SST	11504660
4.	4-N25	12.945	BEZEL, F/TNK FIL DR	10279992
5.	4-A8	3.003	CONNECTOR, F/TNK FIL PIPE HSG DRV HOSE	3849610
6.	4-A8	3.003	HOUSING, F/TNK FIL PIPE	14076115
7.	4-A8	3.028	CAP, F/TNK FIL (AC-DELCO #GT172)	22525300
8.	4-A8	3.022	STRAP, F/TNK	14048959
9.	4-A15	3.162	RETAINER, F/RR PIPE	14050046
10.		8.948	CLAMP, WORM TYPE (1/2 TO 1)	15664822
11.		8.962	HOSE, F/RTN (5/16) (CUT AS REQUIRED)	9439550
12.		8.962	HOSE, F/FEED (3/8) (CUT AS REQUIRED)	9439238
13.	4-A8	3.107	BOLT, FUEL SDR (W/LOCK WA) (M6-1.0X18.0	14044556
14.	4-A8	3.107	SENDER, F/TNK (AC-DELCO #25003533)	25003533
	4-D18	3.900	PUMP, FUEL (AC-DELCO #EP386)	25168719
	4-A12	3.110	STRAINER, FUEL (IN TANK) (AC-DELCO #TS1)	25055455
15.	4-A12	3.112	GASKET, FUEL SDR (AC-DELCO #G1)	25091503
16.	4-A8	3.001	TANK, FUEL	14048936
17.	4-A8	3.003	HOSE, F/TNK FIL NK DRN	14050036

© 2000 GENERAL MOTORS SERVICE PARTS OPERATIONS - CHEVROLET - 14Y

				1Y03-003
18.	4-A8	3.022	CABLE, F/TNK	14076111
19.	4-A8	3.015	SEAT, F/TNK-LH	14047511
	4-A8	3.015	SEAT, F/TNK-RH	14047512
20.		8.917	NUT, HEX (M10X1.5)	10256057
21.	4-N25	12.945	SEAL, F/TNK FIL DR BZL NUT (CUT AS REQUIRED)	14064578
22.	4-A8	3.023	BOLT, F/TNK STRAP	14060161
23.		8.964	TUBING, F/RTN (5/16) (CUT AS REQUIRED)	12541500
24.		8.964	TUBING, F/FEED (3/8 ODX25) (CUT AS REQUIRED)	3750950
25.	4-D17	3.890	FILTER, FUEL (IN LINE) (AC-DELCO #GF402)	25055066
26.	4-D17	3.890	BRACKET, F/FLTR	14050042
27.		DISCON	HOSE, F/RTN FRT	14060104
28.		DISCON	HOSE, F/FEED FRT	14060103
29.		8.948	CLAMP, WORM (1/4 TO 5/8) SST (AC-DELCO #1648216)	1648216
30.		8.962	HOSE, F/VPR (1/4) (CUT AS REQUIRED)	9438257
31.	4-A14	3.135	CONNECTOR, EVAP EMIS INTER HOSE	474793
32.	4-A15	3.162	RETAINER, F/VPR PIPE	14050058
33.		8.964	TUBING, STL (1/4) (3.350) (CUT AS REQUIRED)	12546430
34.	4-A15	3.162	CLIP, F/RTN FRT PIPE	343442
35.		8.921	NUT, U SHAPE (M4.2X1.41X.065) (ZOR) (AC-DELCO #15650655)	15650655

RPO DEFINITIONS
L83 - ENGINE, 5.7L (5.7-8), V8,(CFI-CROSSFIRE)(TBI)

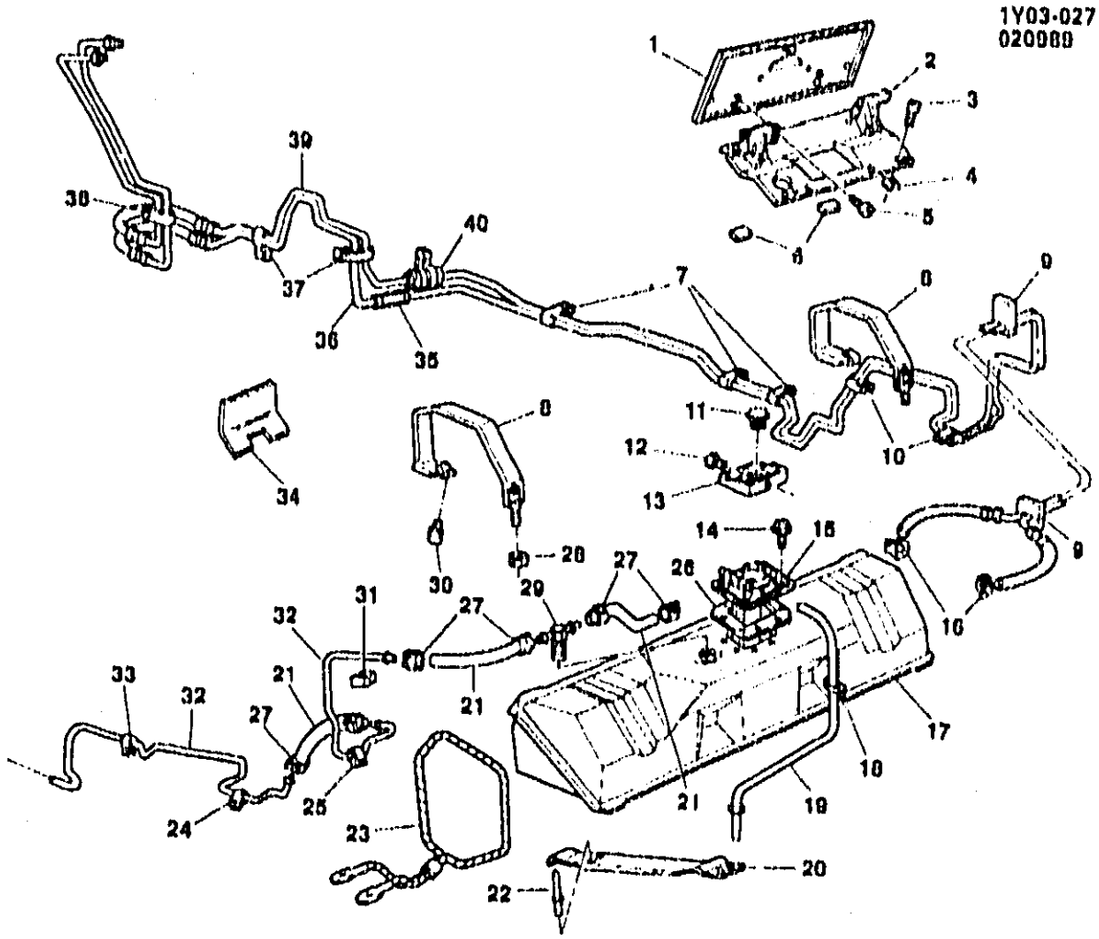

1Y03-027

1985-1987 Y FUEL SUPPLY SYSTEM (L98)

1.	4-N25	12.945	DOOR, F/TNK FIL (Y07)	14047485
	4-N25	12.945	DOOR, F/TNK FIL (Y67)	10107910
2.	4-N25	12.945	BEZEL, F/TNK FIL DR (W/Y67)	10125967
3.		8.977	SCREW, OV HD C/S TORX (M4.2X1.41X16) SST	11504660
4.		8.921	NUT, U SHAPE (M4.2X1.41X.065) ZOR (AC-DELCO #15650655)	15650655
5.		8.913	SCREW, PAN HD TORX W/FL WA (M5X.8X8) SST	11508910
6.	4-N25	12.945	SEAL, F/TNK FIL DR BEZEL NUT (9.665)	14064578
7.		DISCON	CLIP, F/FEED FRT PIPE	14050043
8.	4-A8	3.022	STRAP, F/TNK	14048959
9.	4-A15	3.162	RETAINER, F/RR PIPE	14050046
10.		N.S.	CLIP, F/FEED & RTN PIPE	
11.	4-A8	3.028	CAP, F/TNK FIL (AC-DELCO #GT172)	22525300
12.	4-A8	3.003	CONNECTOR, F/TNK FIL PIPE HSG DRN HOSE	3849610
13.	4-A8	3.003	HOUSING, F/TNK FIL PIPE	14076115
14.	4-A8	3.107	BOLT, FUEL SDR (W/LOCK WA	14044556
15.	4-D18	3.900	PUMP, F/ELEC (EP155) (AC-DELCO #EP241)	25116163
	4-A12	3.110	STRAINER, FUEL SDR (AC-DELCO #TS1)	25055455
16.		8.948	CLAMP, WORM TYPE (.31 TO .75) ZN CHR (1.166)	15620999
17.	4-A8	3.001	TANK, FUEL	14048936
18.		8.965	RETAINER, ADJ STRAP PLSTC	3816659
19.	4-A8	3.003	HOSE, F/TNK FIL PIPE DRN	14050036

© 2000 GENERAL MOTORS SERVICE PARTS OPERATIONS - CHEVROLET - 14Y

				1Y03-027
20.	4-A8	3.015	SEAT, F/TNK-LH	14047511
	4-A8	3.015	SEAT, F/TNK-RH	14047512
21.		8.962	HOSE, F/VPR (1/4) (CUT AS REQUIRED)	9438257
22.		8.967	RIVET, F/TNK SUPT	9428047
23.	4-A8	3.022	CABLE, F/TNK	14076111
24.		8.950	CLIP, CLSD W/LOC (.250X.340) STL	478601
25.		8.950	CLAMP, CLSD LOOP CUSH (M6.3 TUBE)	2044779
26.	4-A12	3.112	GASKET, FUEL SDR (AC-DELCO #G1)	25091503
27.		8.948	CLAMP, WORM GR (.250X.625) SST (AC-DELCO #1640216)	1640216
28.		8.915	NUT, HEX (M10X1.5X11, 21) 9 ZOR	10255057
29.	4-A14	3.145	CONNECTOR, EVAP EMIS INTER HOSE (THREADS MUST BE COVERED W/TEFLON TAPE	474793
30.	4-A8	3.023	BOLT, F/TNK STRAP	14060161
31.	4-A15	3.162	RETAINER, F/VPR PIPE	14050050
32.		8.964	TUBING, STL (1/4) (3.350) (CUT AS REQUIRED)	12548430
33.		DISCON	CLIP, RR BRK C/OVR PIPE	14084006
34.	4-A8	3.022	INSULATOR, F/TNK (Y67)	10241792
35.		DISCON	FITTING, FUEL RTN PIPE	14076165
36.		DISCON	PIPE, F/RTN FRT	14076161
37.	4-A15	3.162	CLIP, F/RTN FRT PIPE	343442
38.		8.950	CLIP, CLSD STL TYPE 5 TANG	25527423
39.		DISCON	PIPE, F/FEED FRT	14076162
		DISCON	PIPE, F/FEED FRT (Y67)	14092693
40.	4-D17	3.890	FILTER, FUEL (TYPE GF481) (AC-DELCO #GF481)	25055052

RPO DEFINITIONS
L98 - ENGINE, 5.7L, (5.7-8) 350 CID, V8, TPI

© 2000 GENERAL MOTORS SERVICE PARTS OPERATIONS-CHEVROLET-14Y

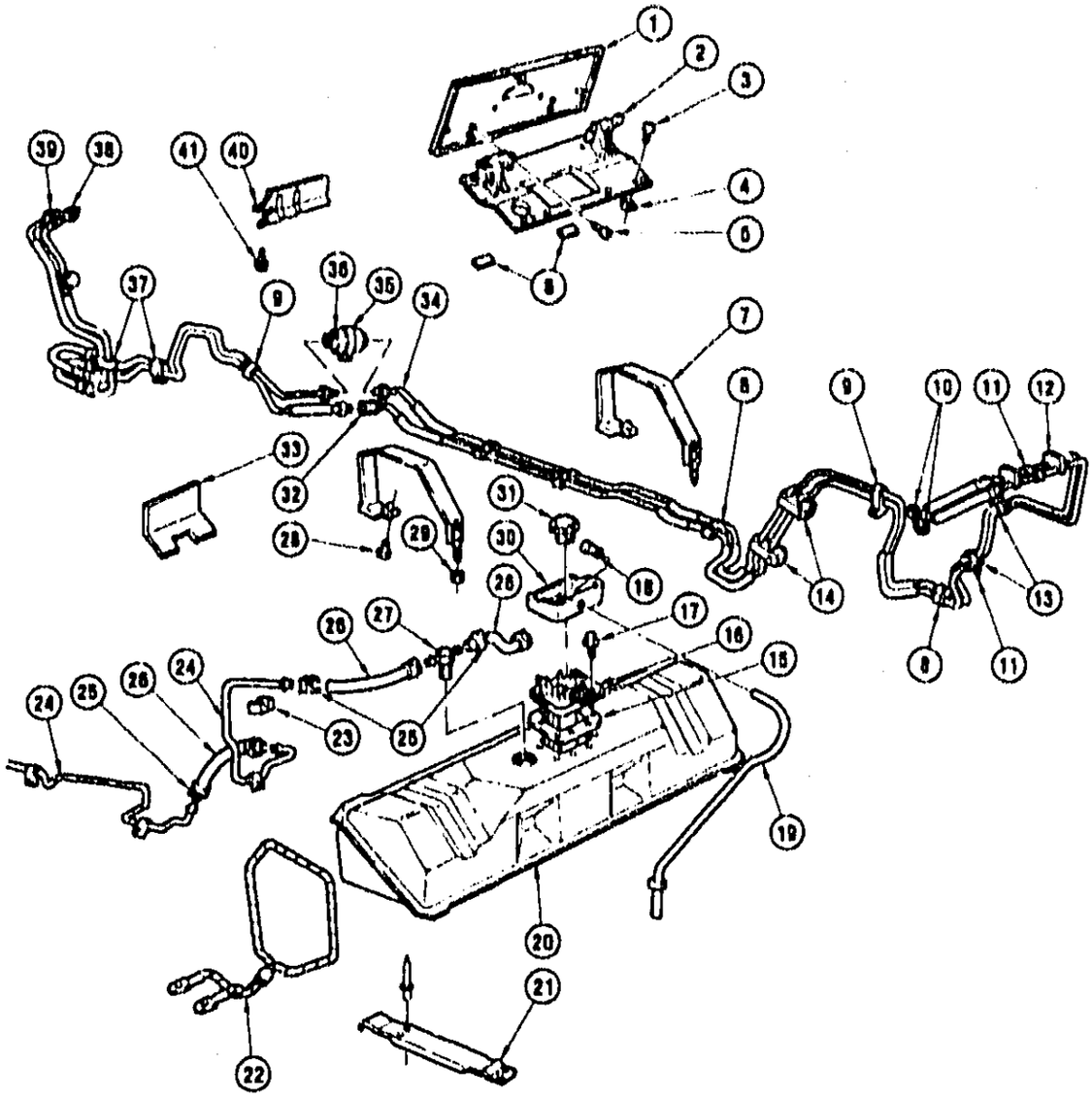

1Y03-021

1988-1990 Y FUEL SUPPLY SYSTEM (L98)

1.	4-N25	12.945	DOOR, F/TNK FIL (Y07)	14047485
	4-N25	12.945	DOOR, F/TNK FIL (Y67)	10107910
2.	4-N25	12.945	BEZEL, F/TNK FIL DR (Y07)	10279992
	4-N25	12.945	BEZEL, F/TNK FIL DR (Y67)	10125967
3.		8.977	SCREW, OVL HD C/S TORX (M4.2X1.41X16) SST BLK OX	11504660
4.		8.921	NUT, U SHAPE (M4.2X1.41) (AC-DELCO #15650655)	15650655
5.		8.913	SCREW, PAN HD TORX W/FL WA (M5X.8X8) SST BLK	11508910
6.	4-N25	12.945	SEAL, F/TNK FIL DR BEZEL NUT (9.665)	14064578
7.	4-A8	3.022	STRAP, F/TANK	14046959
8.	4-A15	3.162	CLIP, F/FEED & RTN PIPE	10052168
9.		DISCON	SPACER, F/PIPE CLIP	10052187
10.		8.948	CLAMP, WORM GR (.25X.625) SST BLK (AC-DELCO #1648216)	1648216
11.		8.965	RETAINER, PLASTIC 7 ADJ STRAP	3816659

© 2000 GENERAL MOTORS SERVICE PARTS OPERATIONS - CHEVROLET - 14Y

				1Y03-021
12.	4-A15	3.162	RETAINER, F/RR PIPE	14050046
13.		DISCON	INSULATOR, FUEL FEED & RTN RR PIPE	14105123
14.	4-A15	3.162	CLIP, F/FEED & RTN PIPE	10052169
15.	4-A12	3.112	GASKET, FUEL SDR (AC-DELCO #G1)	25091503
16.		N.S.	SENDER ASM (CPS)	
	4-A8	3.107	SENDER, FUEL (1988) (AC-DELCO #25093414)	25093414
	4-A8	3.107	SENDER, FUEL (1989-90) (AC-DELCO #25027510)	25027510
	4-D18	3.900	PUMP, ELEC FUEL (IN TANK) (1988-89) (AC-DELCO #EP375)	25163463
	4-D18	3.900	PUMP, ELEC FUEL (EP265) (1990) (AC-DELCO #EP375)	25163463
	4-A12	3.112	GASKET, F/LEVEL SDR (1989-90) (AC-DELCO #G1)	25091503
	4-A12	3.110	STRAINER, FUEL (IN TANK) (1988) (AC-DELCO #TS1)	25055455
	4-A12	3.110	STRAINER, FUEL (1989-90) (AC-DELCO #TS17)	25121216
	4-A8	3.107	DAMPENER, FUEL PULSE (1989-90) (AC-DELCO #FP27)	25094266
	4-A8	3.107	PAD, FUEL SDR (AC-DELCO #25004553)	25004553
17.	4-A8	3.107	BOLT, FUEL SDRW/LOCK WA	14044556
18.	4-A8	3.003	CONNECTOR F/TANK FIL PIPE HSG DRN HOSE	3849610
19.	4-A8	3.003	HOSE, F/TANK FIL PIPE DRN	14050036
20.	4-A8	3.001	TANK, FUEL	14048936
21.	4-A8	3.015	SEAT, F/TANK-LH	14047511
	4-A8	3.015	SEAT, F/TANK-RH	14047512
22.	4-A8	3.022	CABLE, F/TANK	14076111
23.	4-A15	3.162	RETAINER, F/VPR PIPE (1988-90)	14050058
24.		8.964	TUBING, BRK (1/4" X 16 FT ROLL (AR)	12548430
25.		8.948	CLAMP, WORM GR HEX SLOT SCREW (.25X.625) SST BLK (AC-DELCO #1648216)	1648216
26.		8.962	HOSE (1/4)	9438257
27.	4-A14	3.145	CONNECTOR, EVAP EMIS INTER HOSE (THREADS MUST BE COVERED W/TEFLON TAPE	474793
28.	4-A8	3.023	BOLT, F/TANK STRAP	14060161
29.		8.915	NUT, HFH (M10X1.5) 9 ZOR	10255857
30.	4-A8	3.003	HOUSING, F/TNK FIL PIPE	14076115
31.	4-A8	3.028	CAP, W/O HANDLE F/TANK (AC-DELCO #GT172)	22525300
32.	4-A15	3.163	PIPE, F/RTN RR (CPS)	10052174
		N.S.	NUT, FUEL RTN PIPE	
	4-A15	3.163	SEAL, F/FEED PIPE & RTN PIPE O RING (AC DELCO #217-452)	22514722
	4-A15	3.163	FITTING, FUEL RTN PIPE	10052179
33.	4-A8	3.022	INSULATOR, F/TANK	10241792
34.	4-A15	3.163	PIPE, F/FEED RR (CPS)	10052173
		N.S.	NUT, FUEL RTN PIPE	
	4-A15	3.163	SEAL, F/FEED PIPE & RTN PIPE O RING (AC-DELCO #217-452)	22514722
35.	4-D17	3.890	BRACKET, F/FILTER	14050042
36.	4-D17	3.890	FILTER, FUEL (TYPE GF481) (AC-DELCO #GF481)	25055052
37.	4-A15	3.162	CLIP, F/FEED & RTN PIPE FRT	10052168
38.		DISCON	PIPE, F/RTN FRT (CPS)	10052172
	4-A15	3.163	SEAL, F/FEED PIPE & RTN PIPE O RING (AC-DELCO #217-452)	22514722
39.	4-A15	3.163	PIPE, F/FEED FRT (CPS)	10052171
	4-A15	3.163	SEAL, F/FEED PIPE & RTN PIPE O RING (AC-DELCO #217-452)	22514722
40.		DISCON	SHIELD, F/FLTR (1989-90)	14104629
41.		8.977	BOLT, HEX W/WA (M6X1X20) 9.8 POR	11514623

RPO DEFINITIONS
L98 – ENGINE, 5.7L, (5.7-8) 350 CID, V8, TPI

1Y03-022
060800

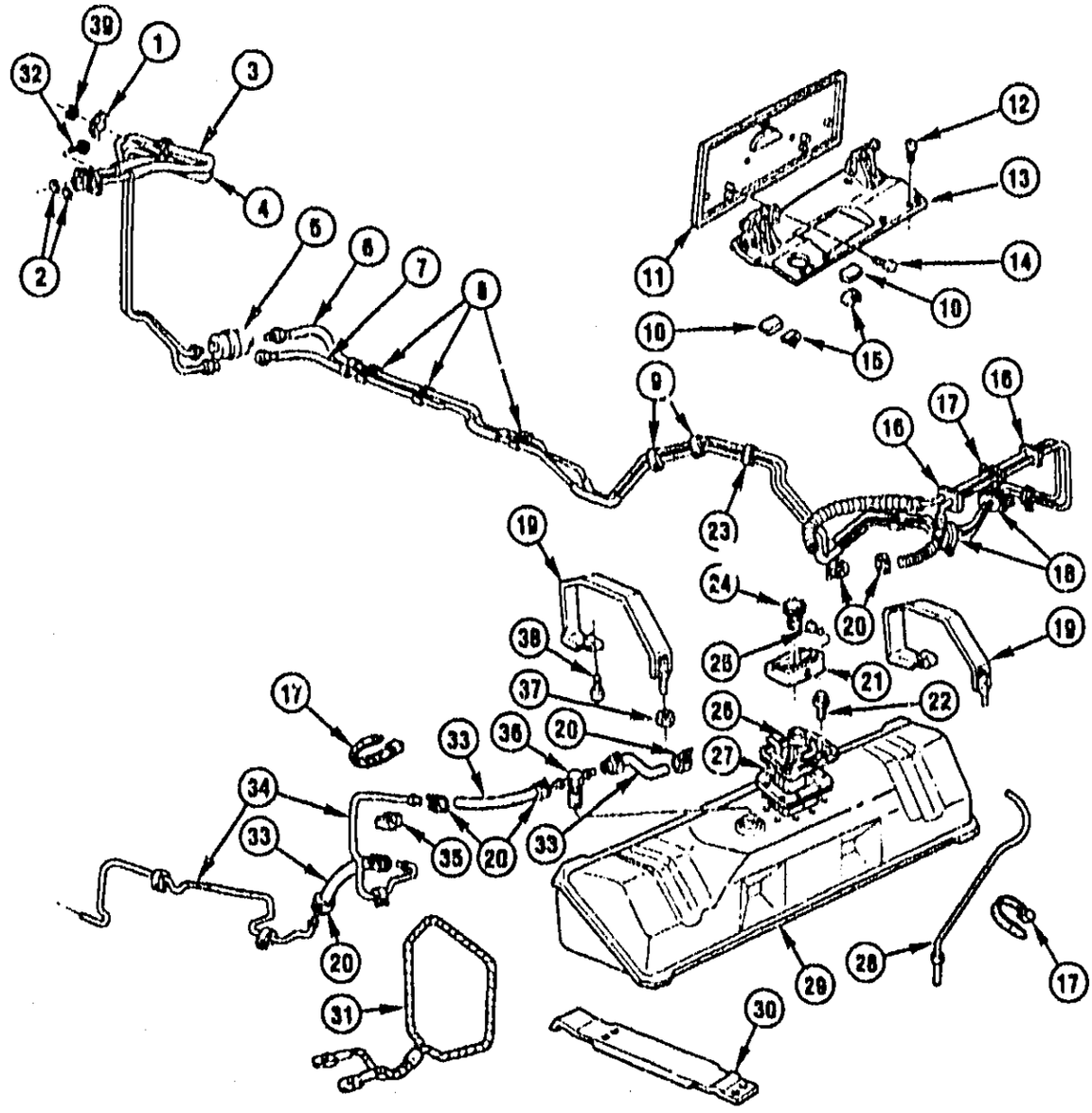

1Y03-022

1990 Y FUEL SUPPLY SYSTEM (LT5)

1.	4-A15	3.162	CLIP, FEED & RTN PIPE FRT	10052168
2.	4-A15	3.163	GASKET, FEED & RTN PIPE	14104675
3.	4-A15	3.163	PIPE, FEED FRT (W/FE7)	10098155
	4-A15	3.163	SEAL, FEED & RTN PIPE (O RING) (AC-DELCO #217-452)	22514722
4.	4-A15	3.163	PIPE, RTN FRT	10098156
5.	4-D17	3.890	FILTER, FUEL (TYPE GF481) (AC-DELCO #GF481)	25055052
6.	4-A15	3.163	PIPE, FEED RR (CMPTS SERV) (SEE GROUP 3.000 "FUEL SUPPLY SYSTEM" FOR DETAIL ILLUSTRATED VIEW)	
7.	4-A15	3.163	PIPE, RTN RR (CMPTS SERV) (SEE GROUP 3.000 "FUEL SUPPLY SYSTEM" FOR DETAIL ILLUSTRATED VIEW)	

© 2000 GENERAL MOTORS SERVICE PARTS OPERATIONS-CHEVROLET-14Y

				1Y03-022
8.	4-A15	3.162	CLIP, FEED & RTN PIPE (POSN #1)	10052168
9.	4-A15	3.162	CLIP, FEED & RTN PIPE (POSN #2)	10052169
10.	4-N25	12.945	SEAL, TK FIL DR BZL NUT (9.665) (CUT AS REQD)	14064578
11.	4-N25	12.945	DOOR, TK FIL (CPE)	14047485
	4-N25	12.945	DOOR, TK FIL (CONV)	10107910
12.		8.977	SCREW, OV HD C/S TORX (M4.2X1.41X16) SST BL OX	11504660
13.	4-N25	12.945	BEZEL, TK FIL DR (W/UNLEADED FUEL LABEL) (CPE)	10279992
	4-N25	12.945	BEZEL, TK FIL DR (W/UNLEADED FUEL LABEL) (CONV)	10125967
	4-N25	12.945	BUMPER, F/TNK FIL DR	12521930
14.		8.913	SCREW, PAN HD TORX W/FL WA (M5X.8X8) SST BLA	11508910
15.		8.921	NUT, U SHAPE (M4.2X1.41) ZOR (AC-DELCO #15650655)	15650655
16.	4-A15	3.162	RETAINER, PIPE RR	14050045
17.		8.965	RETAINER, PLSTC ADJ STRAP	3816659
18.		DISCON	INSULATOR, FUEL FEED & RTN RR PIPE	14105123
19.	4-A8	3.022	STRAP, TANK	14048959
20.		8.040	CLAMP, WORM GR (.250X.625X.320) SST BLA (AC-DELCO #1648216)	1648216
21.	4-A8	3.003	HOUSING, F/TNK FIL PIPE	14076115
22.	4-A8	3.107	BOLT, FUEL SDRW (LOCK WA)	14044556
23.		DISCON	SPACER, PIPE CLIP	10052187
24.	4-A8	3.028	CAP, TK FIL (AC-DELCO #GT172)	22525500
25.	4-A8	3.003	CONNECTOR F/TNK FIL PIPE HSGDRN HOSE	3849610
26.	4-A8	3.107	MODULE, F/TNK F/PMP (3.900) (AC-DELCO #25028725)	25028725
	4-A12	3.112	GASKET, LVL SENDER (AC-DELCO #G1)	25091503
27.	4-A12	3.112	GASKET, FUEL SDR (AC-DELCO #G1)	25091503
28.	4-A8	3.003	HOSE, TK FIL PIPE DRN	14050036
29.	4-A8	3.001	TANK, FUEL	14048936
30.	4-A8	3.015	SEAT, F/TANK-LH	14047511
	4-A8	3.015	SEAT, F/TANK-RH	14047512
31.	4-A8	3.022	CABLE, TANK	14070111
32.		8.913	BOLT, M8X1.25X25, TORX, 14 OD, 9.8, ALOR (AR) (AC-DELCO #11514168)	11514168
33.		8.962	HOSE, VPR (1/4) (BULK) (CUT AS REQD)	9438257
34.		8.964	TUBING, VPR (1/4 O.D.) (BULK) (CUT AS REQD)	12548430
35.	4-A15	3.162	RETAINER, VPR PIPE	14050058
36.	4-A14	3.145	CONNECTOR, EVAP EMIS INTER HOSE (THREADSMUST BE COVEREDW/TEFLON TAPE	474793
37.		8.915	NUT, HFH (M10X1.5) 9 ZOR	10255857
38.	4-A8	3.023	BOLT, F/TNK STRAP	14060161
39.		8.917	NUT, HFH W/NY INS (M6X1) 9 PEOR	11510075

RPO DEFINITIONS
LT5 – ENGINE,5.7L(5.7J),TPI

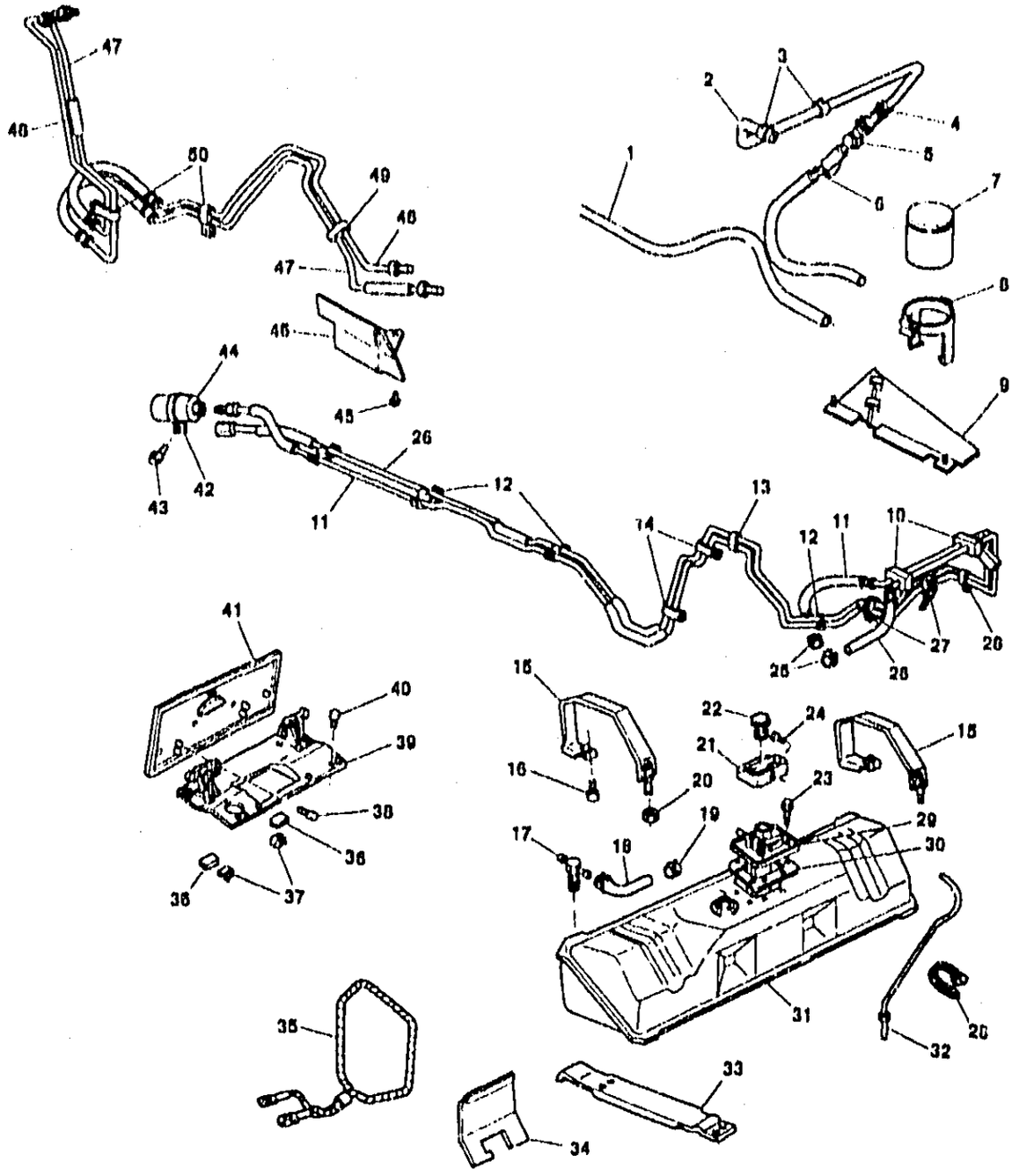

1Y03-029

1991 Y FUEL SUPPLY SYSTEM (L98)

1.	4-A14	3.145	HOSE, EVAP EMIS CNSTR PURGE	10105300
2.	4-A12	3.130	VALVE, EVAP EMIS PRESS CONT (INCLS 3-6) (AC-DELCO #214-531)	10105329
3.		8.948	CLAMP, WORM TYPE (.30 TO .87 DIA) SS (PART OF 2)	15620999
4.	4-A12	3.130	VALVE, EVAP EMIS PRESS CONT (PART OF 2) (AC-DELCO #214-558)	17091140
5.	4-A12	3.130	VALVE, EVAP EMIS PRESS CONT (PART OF 2) (AC-DELCO #214-558)	17091140

© 2000 GENERAL MOTORS SERVICE PARTS OPERATIONS - CHEVROLET - 14Y

				1Y03-020
6.	4-A14	3.145	CONNECTOR, EVAP EMIS HOSE (PART OF 2)	10046084
7.	4-A12	3.130	CANISTER, EVAP EMIS (AC-DELCO #215-75)	17090139
8.	4-A12	3.130	BRACKET, EVAP EMIS CNSTR	10234600
9.	4-A12	3.130	SHIELD, EVAP EMIS CNSTR SPH	10105360
10.	4-A15	3.162	RETAINER, FUEL RR PIPE	14050046
11.	4-A15	3.163	PIPE, FUEL FEED RR (CPS)	10052173
	4-A15	3.163	SEAL, FUEL FEED PIPE (O-RING) (AC-DELCO #217-452)	22514722
12.	4-A15	3.162	CLIP, FUEL FEED & RTN PIPE FRT	10052168
13.		DISCON	SPACER, FUEL PIPE CLIP	10052187
14.	4-A15	3.162	CLIP, FUEL FEED & RTN PIPE	10052169
15.	4-A8	3.022	STRAP, FUEL TANK	14048959
16.	4-A8	3.023	BOLT, FUEL TANK STRAP	14060161
17.	4-A14	3.145	CONNECTOR, EVAP EMIS INTER HOSE (THREADS MUST BE COVERED W/TEFLON TAPE	474793
18.		8.062	HOSE, 13MMX25' ROLL (AR)	9438257
19.		8.040	CLAMP, WORM TYPE (.30 TO .87 DIA) SS	15620999
20.		8.015	NUT, HEH, 10X1.5 6H THD, 21.3 OD, 9.8 THK 13 HEX DR, GRD 8, ZF (AR)	10255857
21.	4-A8	3.003	HOUSING, F/TNK FIL PIPE	14076115
22.	4-A8	3.028	CAP, W/O HANDLE FUEL TANK (AC-DELCO #GT172)	22525300
23.	4-A8	3.107	BOLT, FUEL SDR (LOCK WA	14044556
24.	4-A8	3.003	CONNECTOR, F/TNK FIL PIPE HSG DRN HOSE	3849610
25.		8.948	CLAMP, 1/4X5/8, .320 WIDE BAND, WORM GEAR HEX (AR) (AC-DELCO #1648216)	1648216
26.	4-A15	3.163	PIPE, FUEL RTN RR (CPS)	10052174
	4-A15	3.163	SEAL, FUEL FEED PIPE (O-RING) (AC-DELCO #217-452)	22514722
27.		DISCON	INSULATOR, FUEL FEED & RTN RR PIPE	14105123
28.		8.065	STRAP-TIE-7"ADJ (W/ROSEBUD FOR .25 DIA HOLE .031-.14 TH) (AR)	3816659
29.	4-A8	3.107	SENDER, FUEL (L98) (AC-DELCO #25027510)	25027510
	4-D18	3.900	PUMP, FUEL (EP265) (L98) (AC-DELCO #EP375)	25163463
30.	4-A12	3.112	GASKET, FUEL LEVEL SDR (AC-DELCO #G1)	25091503
31.	4-A8	3.001	TANK, FUEL	14048936
32.	4-A8	3.003	HOSE, FUEL TANK FIL PIPE DRAIN	14050036
33.	4-A8	3.015	SEAT, FUEL TANK-LH	14047511
34.	4-A8	3.022	INSULATOR, FUEL TANK	10241792
35.	4-A8	3.022	CABLE, FUEL TANK	14076111
36.	4-N25	12.945	SEAL, F/TNK FIL DR BZL NUT (CUT AS REQ)	14064578
37.		8.921	NUT, U SHAPE (M4.2X1.41) ZOR (AC-DELCO #15050655)	15650655
38.		8.913	SCREW, PAN HD TORX W/FL WA M5X.8X8 SS BLK (AR)	11508910
39.	4-N25	12.945	BEZEL, F/TNK FIL DR (W/UNLEADED FUEL LABEL) (Y07)	10279992
	4-N25	12.945	BEZEL, F/TNK FIL DR (W/UNLEADED FUEL LABEL) (Y67)	10125967
40.		8.977	SCREW, OV HD C/S TORX M4.2X1.41X16 SS BL OX (AR)	11504660
41.	4-N25	12.945	DOOR, F/TNK FIL	10107910
	4-N25	12.945	DOOR, F/TNK FIL	14047485
42.	4-D17	3.890	BRACKET, FUEL FLTR	14050042
43.		8.900	BOLT, HEX W/CON WA, M6X1X20 (AR)	11514623
44.	4-D17	3.890	FILTER, FUEL (TYPE GF481) (AC-DELCO #GF481)	25055052
45.		8.900	BOLT, HEX W/CON WA, M6X1X20 (AR)	11514623
46.		DISCON	SHIELD, FUEL FLTR	14104629
47.		DISCON	PIPE, FUEL RTN FRT (CPS)	10052172
	4-A15	3.163	SEAL, FUEL FEED PIPE & RTN PIPE (O-RING) (AC-DELCO #217-452)	22514722
48.	4-A15	3.163	PIPE, FUEL FEED FRT (CPS)	10052171
	4-A15	3.163	SEAL, FUEL FEED PIPE & RTN PIPE (O-RING) (AC-DELCO #217-452)	22514722

				1Y03-029
49.		DISCON	SPACER, FUEL PIPE CLIP	10052187
50.	4-A16	3.162	CLIP, FUEL FEED & RTN FRT PIPE	15664022

RPO DEFINITIONS
L98 – ENGINE, 5.7L, (5.7-8) 350 CID, V8, TPI

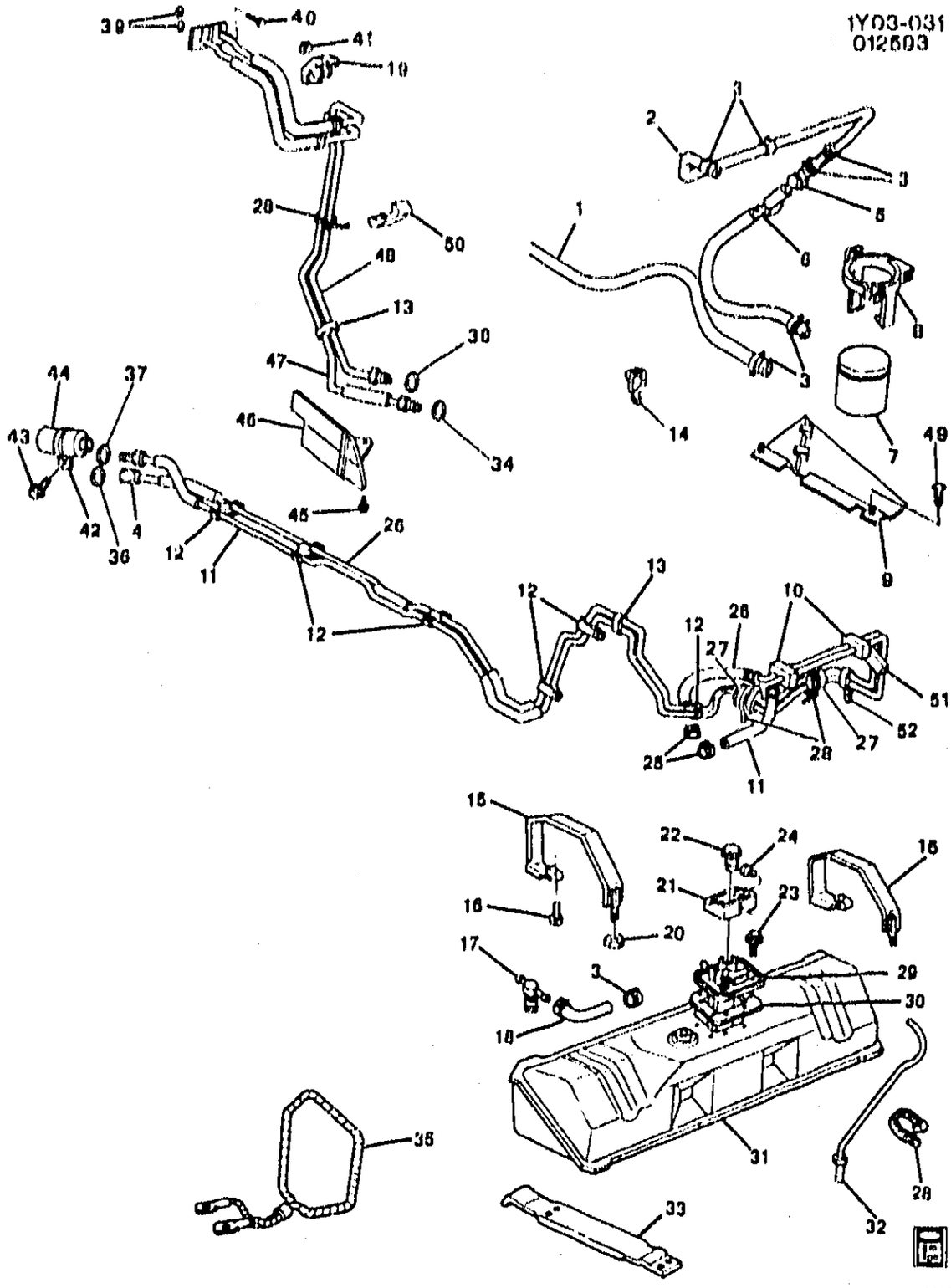

1991 Y FUEL SUPPLY SYSTEM (LT5)

1.	4-A14	3.145	HOSE, EVAP EMIS CLTR PURGE (INCLS 3, 14)	91 Y	1	10105300
2.	4-A12	3.130	VALVE, EVAP EMIS PRESS CONT (W/CONN & CLAMPS) (INCLS 3, 5-6) (AC-DELCO #214-531)	91 Y	1	10105320

© 2000 GENERAL MOTORS SERVICE PARTS OPERATIONS-CHEVROLET-14Y

								1Y03-031
3.		8.948	CLAMP (EVAP EMIS RR HOSE) (PART OF 1-2)	91			2	15620999
4.	4-A15	3.163	FITTING, FUEL RTN PIPE (PART OF 26)	91	Y		1	10052179
5.	4-A12	3.130	VALVE, EVAP EMIS PRESS CONT (W/O CONN & CLAMPS) (PART OF 2) (AC-DELCO #214-558)	91	Y		1	17091140
6.	4-A14	3.145	CONNECTOR, EVAP EMIS HOSE (PART OF 2) (3.130)	91	Y		1	10046084
7.	4-A12	3.130	CANISTER, EVAP EMIS (AC-DELCO #215-75)	91	Y		1	17090130
8.	4-A12	3.130	BRACKET, EVAP EMIS CNSTR	91	Y		1	10234609
9.	4-A12	3.130	SHIELD, EVAP EMIS CNSTR SPH (INCLS 49) (3.120)	91	Y		1	10105360
10.	4-A15	3.162	RETAINER, FUEL RR PIPE	91	Y		1	14050046
11.	4-A15	3.163	PIPE, FUEL FEED RR (INCLS 37)	91	Y (FE1, FE7)		1	10052173
12.	4-A15	3.162	CLIP, FUEL FEED & RTN RR PIPE	91	Y		2	10052169
13.		DISCON	SPACER, FUEL PIPE CLIP	91	Y		AR	10052187
14.	4-A14	3.145	CLIP, EVAP EMIS CNSTR PURGE HOSE (PART OF 1)	91	Y		4	10105389
15.	4-A8	3.022	STRAP, F/TNK	91	Y		2	14048959
16.	4-A8	3.023	BOLT, F/TNK STRP (M8X1.25X15 POR)	91	Y		2	14060161
17.	4-A14	3.145	CONNECTOR, EVAP EMIS INTER HOSE (THREADS MUST BE SEALED W/THREAD SEALANT 12346004.) (3.660)	91	Y		1	474793
18.		8.962	HOSE, 13MMX25' ROLL (EVAP EMIS RR)	91			1	9436257
19.	4-A15	3.162	CLIP, FUEL FEED & RTN PIPE	91	Y		AR	10052166
20.		8.915	NUT, HFH, 10X1.5 6H THD, 21.3 OD, 9.8 THK 13 HEX DR, GRD 9, ZF (F/TNK STRP) (8.917)	91			2	10255857
21.	4-A8	3.003	HOUSING, F/TNK FIL PIPE (3.008)	91	Y		1	14076115
22.	4-A8	3.028	CAP, F/TNK FIL (W/O HANDLE) (GASOLINE) (AC-DELCO #GT172)	91	Y		1	22525300
23.	4-A8	3.107	BOLT, FUEL SDR (W/LOCK WA) (M6 - 1.0 X 18.0) (INCLS SEAL)	91	Y		9	14044556
24.	4-A8	3.003	CONNECTOR, F/TNK FIL PIPE HSG DRN HOSE	91	Y		1	3849610
25.		8.948	CLAMP, 1/4X5/8, .320 WIDE BAND, WORM GEAR HEX (EVAP EMIS RR HOSE) (AC-DELCO #1648216)	91			AR	1648216
26.	4-A15	3.163	PIPE, FUEL RTN RR (INCLS 4, 36)	91	Y (FE1, FE7)		1	10052174
27.		DISCON	INSULATOR, FUEL FEED & RTN RR PIPE (POSN #1) (CUT AS REQD)	91	Y		2	14105123
28.		8.965	STRAP, ADJ TIE 3/4X9/32X255MM (FUEL FEED & RTN PIPE) (AC-DELCO #12337820)	91			AR	12337820
29.	4-A8	3.107	MODULE, F/TNK F/PMP (SENDER HARNESS TAGGED YPE) (AC-DELCO #25028725)	91	Y (LT5)		1	25028725

	4-D16	3.900	MODULE, F/TNK F/PMP (SENDER HARNESS TAGGED YPE) (3.107) (AC-DELCO #25020725)	91	Y (LT5)	1	25020725
30	4-A12	3.112	GASKET, FUEL SDR (AC-DELCO #G1)	91	Y	1	25091503
31.	4-A8	3.001	TANK, FUEL (CPS)	91	Y	1	14040936
		N.S.	GASKET, F/TNK LNR				
32.	4-A8	3.003	HOSE, F/TNK FIL PIPE HSG DRN	91	Y	1	14060036
33.	4-A8	3.015	SEAT, F/TNK	91	Y	RH	14047512
	4-A8	3.015	SEAT, F/TNK	91	Y	LH	14047511
34.	4-A15	3.163	SEAL, FUEL RTN FRT PIPE (O RING) (PART OF 47) (AC-DELCO #217-452)	91	Y (LT5, FE1, FE7)	AR	22514722
35.	4-A8	3.022	CABLE, F/TNK	91	Y	2	14076111
36.	4-A15	3.163	SEAL, FUEL RTN RR PIPE (O RING) (PART OF 26) (AC-DELCO #217-452)	91	Y (FE1, FE7)	AR	22514722
37.	4-A15	3.163	SEAL, FUEL FEED RR PIPE (O RING) (PART OF 11) (AC-DELCO #217-452)	91	Y (FE1, FE7)	AR	22514722
38.	4-A15	3.163	SEAL, FUEL FEED FRT PIPE (O RING) (PART OF 48) (AC-DELCO #217-452)	91	Y (LT5, FE1, FE7)	AR	22514722
39.	4-A15	3.163	GASKET, FUEL FEED PIPE	91	Y (LT5)	1	14104675
40.		8.913	BOLT, M8X1.25X25, TORX, 14 OD, 9.8, ALOR (FUEL FEED & RNT FRT) (AC-DELCO #11514168)	91		3	11514168
41.		8.917	NUT, HFH 6X1X7 SELF LK 14.2-OD (9) 7111M ALL MET PREV TORQ (FUEL FEED & FRT HOSE CLIP)	91		1	11516075
42.	4-D17	3.890	BRACKET, FUEL FLTR	91	Y	1	14050042
43.		8.977	SCREW, HEX W/FLAT WA (FUEL FLTR)	91		1	12337828
44.	4-D17	3.890	FILTER, FUEL (THREADED FTGS ON BOTH ENDS, W/O PROTECTIVE COATING) (AC-DELCO #GF481)	91	Y (LT5)	1	25055052
45.		8.900	BOLT, HEX W/CON WA, M6X1X20	91		AR	11514623
46.		DISCON	SHIELD, FUEL FLTR	91	Y	1	14104629
47.	4-A15	3.163	PIPE, FUEL RTN FRT (INCLS 34)	91	Y (LT5, FE1, FE7)	1	10098156
48.	4-A15	3.163	PIPE, FUEL FEED FRT (INCLS 38)	91	Y (LT5, FE1, FE7)	1	10098155
49.	4-A12	3.120	RETAINER, EVAP EMIS CNSTR SPH SHLD (PUSH IN) (X-MAS TREE FITS 8MM HOLE 24.5 LONG 25.5 HEAD OD) (PART OF 9) (24.5 LONG 25.5 HEAD) (PUSH-IN X-MAS TREE, FITS 8MM HOLE) (2.765)	91	Y	1	20635005
50.	4-A15	3.162	CLIP, FUEL FEED PIPE	91	Y (LT5)	1	10158064

© 2000 GENERAL MOTORS SERVICE PARTS OPERATIONS-CHEVROLET-14Y

								1Y03-031
51.	4-A15	3.103	INSULATOR, FUEL FEED & RTN RR PIPE (POSN #4) (CUT AS REQD) (9.260)	01	Y		1	3999872
52.		6.965	STRAP ADJ TIE 3/4X9/32X255MM (AC-DELCO #12337020)	01	.....		AR	12337020

RPO DEFINITIONS

FE1 - SUSPENSION SYSTEM,SOFT RIDE
FE7 - SUSPENSION SYSTEM,FRONT AND REAR,HEAVY DUTY(USED WITH PERFORMANCE HANDLING PACKAGE Z51)
LT5 - ENGINE,5.7L(5.7J),TPI

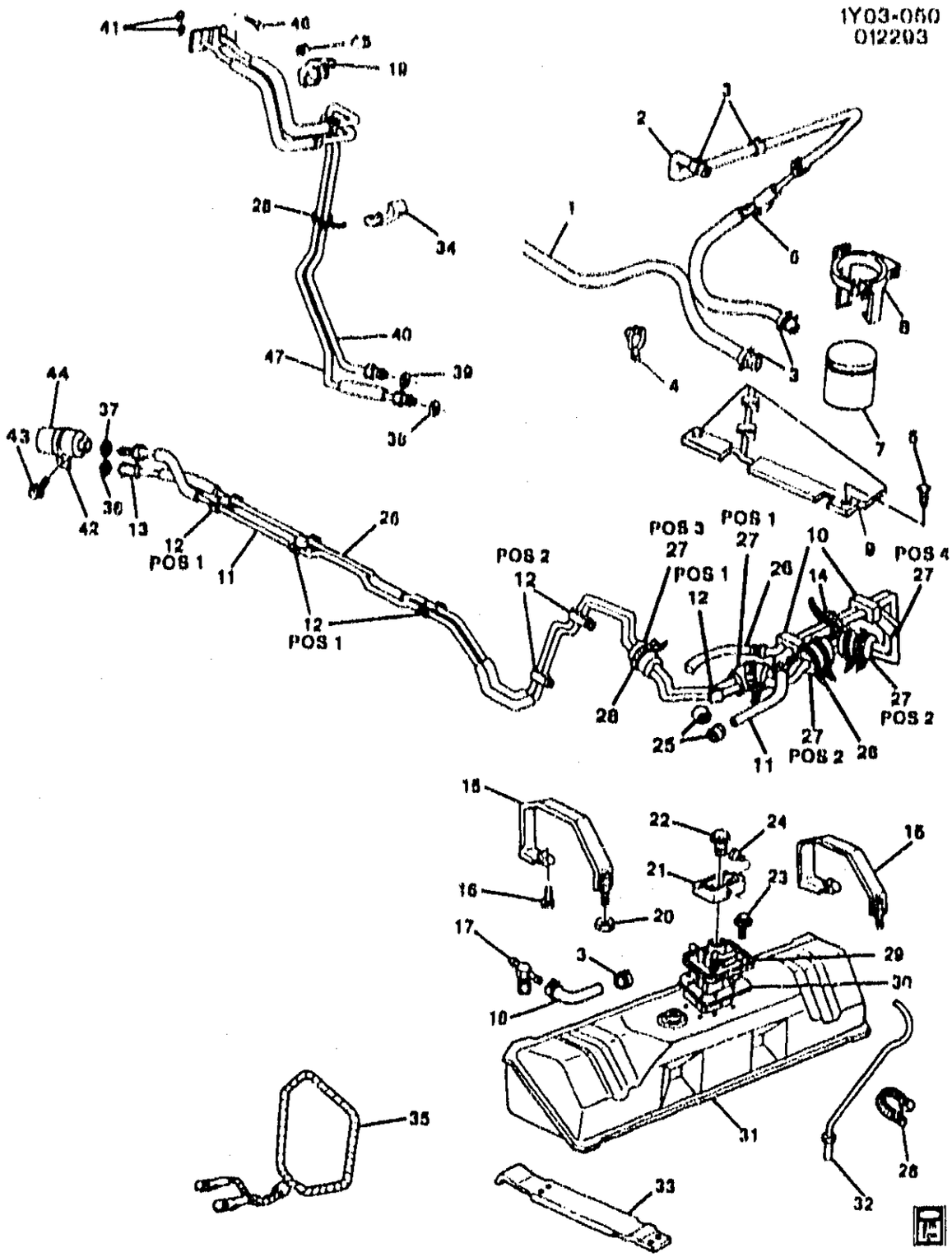

1992–1995 Y FUEL SUPPLY SYSTEM (LT5)

1.	4–A14	3.145	HOSE, EVAP EMIS CNSTR PURGE (INCLS 3, 4)	92–95	Y	1	10105300
2.	4–A12	3.130	VALVE, EVAP EMIS PRESS CONT (W/O CONN & CLAMPS) (INCLS 3, 6) (AC–DELCO #214–559)	92–95	Y	1	17091151

© 2000 GENERAL MOTORS SERVICE PARTS OPERATIONS–CHEVROLET–14Y

							1Y03--050
3.		8.948	CLAMP (PART OF 1, 2)	92-95	.....	AR	15620999
4.	4-A14	3.145	CLIP, EVAP EMIS CNSTR PURGE HOSE (PART OF 1)	92-95	Y	4	10105389
5.	4-A12	3.120	RETAINER, EVAP EMIS CNSTR SPH SHLD (PUSH IN) (X-MAS TREE FITS 8MM HOLE 24.6 LONG 25.5 HEAD OD) (PART OF 9) (24.6 LONG 25.6 HEAD) (PUSH-IN X-MAS TREE, FITS 8MM HOLE) (2.765)	92-95	Y	1	20635065
6.	4-A14	3.145	CONNECTOR, EVAP EMIS HOSE (PART OF 2) (3.130)	92-95	Y	1	10046084
7.	4-A12	3.130	CANISTER, EVAP EMIS (AC-DELCO #215-75)	92-95	Y	1	17090139
8.	4-A12	3.130	BRACKET, EVAP EMIS CNSTR ..	92-95	Y	1	10234809
9.	4-A12	3.130	SHIELD, EVAP EMIS CNSTR SPH (INCLS 5) (3.120)	92-95	Y	1	10105360
10.	4-A15	3.162	RETAINER, FUEL RR PIPE	92-95	Y	1	14050046
11.	4-A15	3.163	PIPE, FUEL FEED RR (INCLS 37)	92-95	Y	1	10158027
12.	4-A15	3.162	CLIP, FUEL FEED & RTN RR PIPE	92-95	Y	6	10052169
13.	4-A15	3.163	FITTING, FUEL FEED PIPE (PART OF 26)	92-95	Y	1	10052179
14.		8.965	STRAP, ADJ TIE, 5.00MM WIDE, 345MM WORK-ING LGTH, BLK NYL (FUEL FEED & RTN HOSE) (8.950)	92-95	.....	1	11501907
15.	4-A8	3.022	STRAP, F/TNK	92-95	Y	2	14046959
16.	4-A8	3.023	BOLT, F/TNK STRP (M8X1.25X16 PDR)	92-95	Y	2	14060161
17.	4-A14	3.145	CONNECTOR, EVAP EMIS INTER HOSE (THREADS MUST BE SEALED W/THREAD SEALANT 12346004.) (3.680)	92-95	Y	1	474793
18.		8.962	HOSE, 13MMX25' ROLL	92-95	.....	AR	9436257
19.	4-A15	3.162	CLIP, FUEL FEED & RTN PIPE ...	92-95	Y	AR	10052168
20.		8.915	NUT, HFH, 10X1.5 6H THD, 21.3 OD, 9.6 THK 13 HEX DR, GRD 9, ZF (8.917)	92-95	.....	AR	10255057
21.	4-A8	3.003	HOUSING, F/TNK FIL PIPE (3.008)	92-95	Y	1	14076115
22.	4-A8	3.028	CAP, F/TNK FIL (AC-DELCO #GT200)	93-95	Y	1	22581522
	4-A8	3.028	CAP, F/TNK FIL (W/HANDLE) (GASOLINE) (AC-DELCO #GT195)	93	Y	1	22591476
	4-A8	3.028	CAP, F/TNK FIL (W/O HANDLE) (GASOLINE) (AC-DELCO #GT172)	92	Y	1	22525300
23.	4-A8	3.107	BOLT, FUEL SDR (W/LOCK WA) (M6 - 1.0 X 18.0) (INCLS SEAL) .	92-95	Y	9	14044556
24.	4-A8	3.003	CONNECTOR, F/TNK FIL PIPE HSG DRN HOSE	92-95	Y	1	3849610
25.		8.948	CLAMP, 1/4X5/8, .320 WIDE BAND, WORM GEAR HEX (FUEL FEED & RTN HOSE) (AC-DELCO #1648216)	92-95	.....	3	1648216
26.	4-A15	3.163	PIPE, FUEL RTN RR (INCLS 13, 36)	92-95	Y	1	10158028

							1Y03-050
27.	4-A15	3.163	INSULATOR, FUEL FEED & RTN RR PIPE (CUT AS REQUIRED) (9.260) (POS #4)	92-95	Y	1	3999572
	4-A15	3.163	INSULATOR, FUEL FEED & RTN RR PIPE (POSN #1, 2, 3) (CUT AS REQUIRED) (RUBBER)	92-95	Y	1	10157933
28.		8.965	STRAP, ADJ TIE 3/4X0/32X255MM (FUEL FEED & RTN RR PIPE) (AC-DELCO #12337820)	92-95		6	12337820
29.	4-A8	3.107	MODULE, F/TNK F/PMP (SENDER HARNESS TAGGED YPE) (AC-DELCO #25028725)	92-95	Y (LT5)	1	25028725
	4-D16	3.900	MODULE, F/TNK F/PMP (SENDER HARNESS TAGGED YPE) (3.107) (AC-DELCO #25028725)	92-95	Y (LT5)	1	25028725
30.	4-A12	3.112	GASKET, FUEL SDR (AC-DELCO #G1)	92-95	Y	1	25091503
31.	4-A8	3.001	TANK, FUEL (CPS)	92-95	Y	1	14048936
		N.S.	GASKET, F/TNK LNR				
32.	4-A8	3.003	HOSE, F/TNK FIL PIPE HSG DRN	92-95	Y	1	14050036
33.	4-A8	3.015	SEAT, F/TNK	92-95	Y	RH	14047512
	4-A8	3.015	SEAT, F/TNK	92-95	Y	LH	14047511
34.	4-A15	3.162	CLIP, FUEL FEED PIPE	93	Y (LT5)	1	10158064
35.	4-A8	3.022	CABLE, F/TNK	92-95	Y	2	14076111
36.	4-A15	3.163	SEAL, FUEL RTN PIPE (O RING) (PART OF 20) (AC-DELCO #217-452)	92-95	Y	*	22514722
37.	4-A15	3.163	SEAL, FUEL FEED RR PIPE (O RING) (PART OF 11) (AC-DELCO #217-452)	92-95	Y	1	22514722
38.	4-A15	3.163	SEAL, FUEL RT' RT PIPE (O RING) (PART OF 47) (AC-DELCO #217-452)	92-95	Y	1	22514722
39.	4-A15	3.163	SEAL, FUEL FEED FRT PIPE (O RING) (PART OF 40) (AC-DELCO #217-452)	92-95	Y	1	22514722
40.	4-A15	3.163	PIPE, FUEL FEED FRT (INCLS 39)	92-95	Y (LT5)	1	10157975
41.	4-A15	3.163	GASKET, FUEL FEED PIPE	92-95	Y (LT5)	1	14104675
42.	4-D17	3.890	BRACKET, FUEL FLTR	92-95	Y	1	10158024
43.		8.900	BOLT, HEX W/CON WA, M6X1X20	92-95		AR	11514623
44.	4-D17	3.890	FILTER, FUEL (THREADED FTGS ON BOTH ENDS, W/O PROTECTIVE COATING) (AC-DELCO #GF481)	92-95	Y (LT5)	1	25055062
45.		8.917	NUT, HFH 6X1X7 SELF LK 14.2-OD (9) 7111M ALL MET PREV TORQ	92-95		AR	11516075
46.		8.913	BOLT, M8X1.25X25, TORX, 14 OD, 9.8, ALOR (AC-DELCO #11514168)	92-95		AR	11514168
47.	4-A15	3.163	PIPE, FUEL RTN FRT (INCLS 38)	92-95	Y (LT5)	1	10157970

RPO DEFINITIONS
LT5 - ENGINE,5.7L(5.7J),TPI

© 2000 GENERAL MOTORS SERVICE PARTS OPERATIONS - CHEVROLET - 14Y

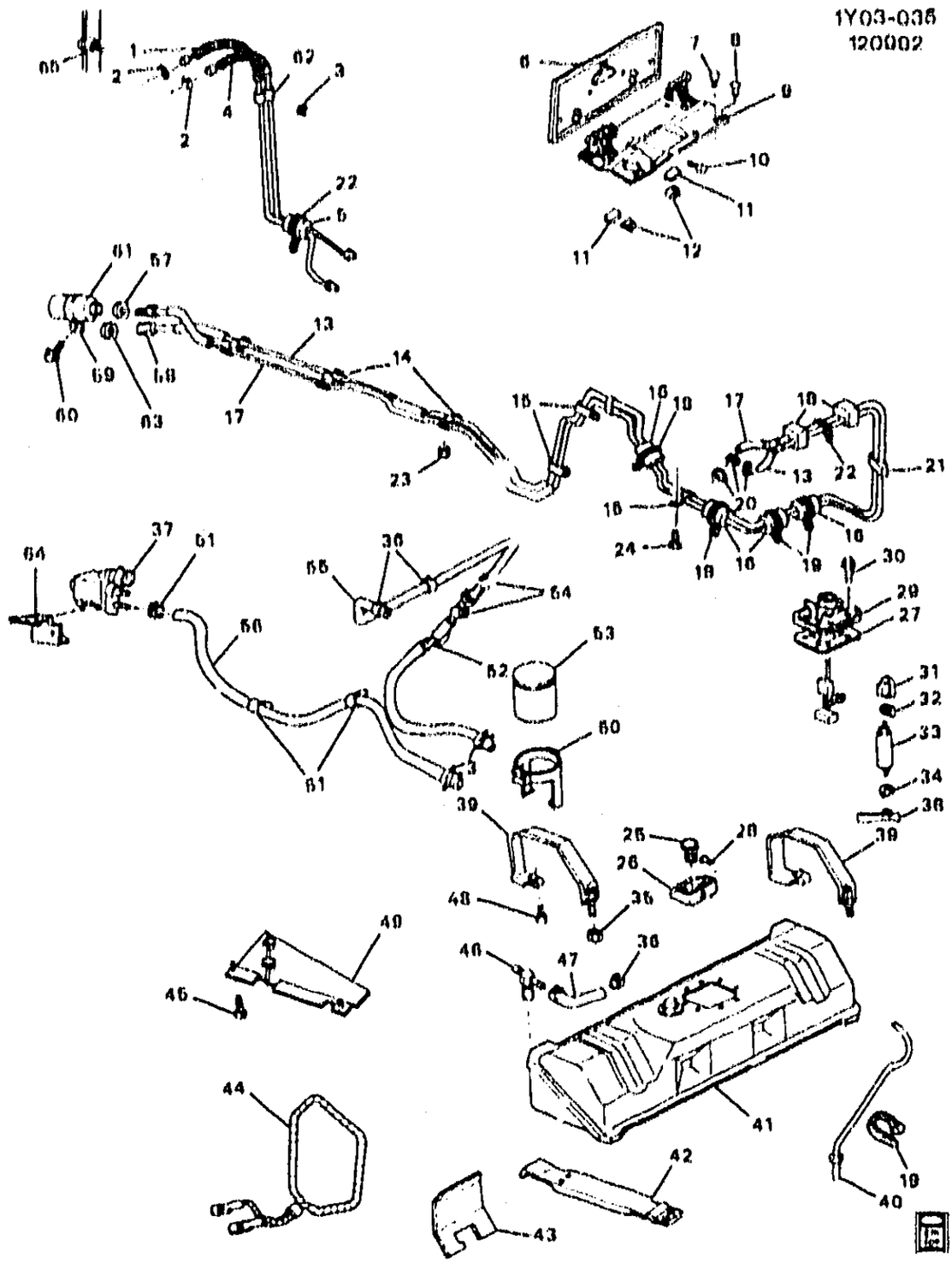

1992–1996 Y FUEL SUPPLY SYSTEM (LT1)
1996 Y FUEL SUPPLY SYSTEM (LT4)

1.	4–A15	3.163	PIPE, FUEL RTN FRT (INCLS 2)	92–95	Y (LT1)	1	10273116
	4–A15	3.163	PIPE, FUEL RTN FRT (INCLS 2)	96	Y	1	10273116
2.	4–A15	3.163	SEAL, FUEL FEED FRT PIPE (O RING) (PART OF 4) (AC–DELCO #217–452)	92–96	Y	1	22514722

© 2000 GENERAL MOTORS SERVICE PARTS OPERATIONS – CHEVROLET – 14Y

							1Y03-035
	4-A15	3.163	SEAL, FUEL RTN FRT PIPE (O RING) (PART OF 1) (AC-DELCO #217-452)	92-96	Y	1	22514722
3.		8.917	NUT, HEH M8X1X8.5 ZOR 9	92-96		AR	3530297
4.	4-A15	3.163	PIPE, FUEL FEED FRT (INCLS 2) (W/DAMPENER)	92-93	Y (LT1)	1	10205073
	4-A15	3.163	PIPE, FUEL FEED FRT (INCLS 2) (W/DAMPENER)	94-95	Y (LT1)	1	10273115
	4-A15	3.163	PIPE, FUEL FEED FRT (INCLS 2) (W/DAMPENER)	96	Y	1	10273115
5.	4-A15	3.163	INSULATOR, FUEL FEED & RTN FRT PIPE (RUBBER)	92-96	Y	1	10157933
6.	4-N25	12.945	DOOR, F/TNK FIL	92-96	Y07	1	14047485
	4-N25	12.945	DOOR, F/TNK FIL	92-96	Y67	1	10107910
7.		8.977	SCREW, OV HD C/S TORX M4.2X1.41X18 SS BL OX	92-96		AR	11504660
8.	4-N25	12.945	BUMPER, F/TNK FIL DR (FRT)	92-96	Y	2	12521930
	4-N25	12.945	BUMPER, F/TNK FIL DR (RR)	92-96	Y	4	10280811
9.	4-N25	12.945	BEZEL, F/TNK FIL DR (W/UNLEADED FUEL LABEL)	92-93	Y07	1	10279992
	4-N25	12.945	BEZEL, F/TNK FIL DR (W/UNLEADED FUEL LABEL)	92-93	Y67	1	10125967
	4-N25	12.945	BEZEL, F/TNK FIL DR (W/UNLEADED FUEL LABEL)	94	Y07 (EXC NM8)	1	10279992
	4-N25	12.945	BEZEL, F/TNK FIL DR (W/UNLEADED FUEL LABEL)	94	Y67 (EXC NM8)	1	10125967
	4-N25	12.945	BEZEL, F/TNK FIL DR (W/UNLEADED FUEL LABEL)	95	Y07 (LT1) (EXC NM8)	1	10125967
	4-N25	12.945	BEZEL, F/TNK FIL DR (W/UNLEADED FUEL LABEL)	95-96	Y07 (LT1) (EXC NM8)	1	10279992
	4-N25	12.945	BEZEL, F/TNK FIL DR (W/UNLEADED FUEL LABEL)	96	Y07 (LT4)	1	10279994
	4-N25	12.945	BEZEL, F/TNK FIL DR (W/UNLEADED FUEL LABEL)	96	Y67 (LT4)	1	10271452
	4-N25	12.945	HINGE KIT, F/TNK FIL DR	92	Y	1	10146466
10.		8.913	SCREW, PAN HD TORX W/FL WA M5X.8X8 SS BLK	92-96		AR	11508910
11.	4-N25	12.945	SEAL, F/TNK FIL DR BZL NUT (9.665)	92-96	Y	AR	14064578
12.		8.921	NUT, M4.2X1.4, 19.3X213.6.8.9 (AC-DELCO #15650655)	92-96		AR	15650655
13.	4-A15	3.163	PIPE, FUEL RTN RR (INCLS 58, 63)	92-96	Y	1	10158026
14.	4-A15	3.162	CLIP, FUEL FEED & RTN RR PIPE	92-96	Y	4	10052168
15.	4-A15	3.162	CLIP, FUEL FEED & RTN RR PIPE	92-96	Y	2	10052169
16.	4-A15	3.163	INSULATOR, FUEL FEED & RTN RR PIPE (RUBBER)	92-96	Y	1	10157933
17.	4-A15	3.163	PIPE, FUEL FEED RR (INCLS 57)	92-96	Y	1	10158027
18.	4-A15	3.162	RETAINER, FUEL RR PIPE	92-96	Y	2	14050046
19.		8.965	STRAP-TIE-7"ADJ (W/ROSEBUD FOR .25 DIA HOLE .031-.14 TH)	92-96		AR	3816659
20.		8.948	CLAMP, 1/4X5/8, .320 WIDE BAND, WORM GEAR HEX (AC-DELCO #1646216)	92-96		AR	1646216
21.	4-A15	3.163	INSULATOR, FUEL FEED & RTN RR PIPE (9.260)	92-96	Y	1	3999572

							1Y03-035
22.		0.065	STRAP, ADJ TIE 3/4X9/32X265MM (AC-DELCO #12337820)	92-96		AR	12337820
23.		0.917	NUT, HFH 6X1X7 SELF LK 14.2-OD (9) 7111M ALL MET PREV TORQ	92-96		AR	11510075
24.		0.977	BOLT-HEX W/FLAT WA, M6.3X1.0X30, 17 OD, 6010M, PO, TAP-AB PT	92-96		AR	11505332
25.	4-A8	3.020	CAP, F/TNK FIL (AC-DELCO #GT200)	93-96	Y	1	22501522
	4-A8	3.020	CAP, F/TNK FIL (W/HANDLE) (GASOLINE) (AC-DELCO #GT195)	93	Y	1	22591476
	4-A8	3.020	CAP, F/TNK FIL (W/O HANDLE) (GASOLINE) (AC-DELCO #GT172)	92	Y	1	22525300
26.	4-A8	3.003	HOUSING, F/TNK FIL PIPE (3.008)	92-96	Y	1	14076115
27.	4-A12	3.112	GASKET, FUEL SDR (AC-DELCO #G1)	92-96	Y	1	25091503
28.	4-A8	3.003	CONNECTOR, F/TNK FIL PIPE HSG DRN HOSE	92-96	Y	1	3940610
29.	4-A8	3.107	SENDER, FUEL (AC-DELCO #25027510)	96	Y (EXC NM8)	1	25027510
	4-A8	3.107	SENDER, FUEL (AC-DELCO #25028968)	96	Y (NM8)	1	25028968
	4-A8	3.107	SENDER, FUEL (SENDER HARNESS TAGGED YPF-56) (AC-DELCO #25027510)	92-95	Y (LT1) (EXC NM8)	1	25027510
	4-A8	3.107	SENDER, FUEL (SNDR HARN TAGGED YPG) (AC-DELCO #25028968)	92-95	Y (LT1, NM8) (EXPORT)	1	25028968
30.	4-A8	3.107	BOLT, FUEL SDR (W/LOCK WA) (M6 - 1.0 X 16.0) (INCLS SEAL)	92-96	Y	9	14044556
31.	4-A8	3.107	DAMPENER, FUEL PULSE (SNDR HARN TAGGED YPF, YPG) (AC-DELCO #FP27)	92-95	Y (LT1)	1	25094266
	4-A8	3.107	DAMPENER, FUEL PULSE (SNDR HARN TAGGED YPF, YPG) (AC-DELCO #FP27)	96	Y	1	25094266
32.	4-A8	3.107	PAD, FUEL SDR (AC-DELCO #25004553)	96	Y (EXC NM8)	1	25004553
	4-A8	3.107	PAD, FUEL SDR (SNDR HARN TAGGED YPF-56) (AC-DELCO #25004553)	92-95	Y (LT1) (EXC NM8)	AR	25004553
33.	4-D18	3.900	PUMP, FUEL (AC-DELCO #EP376)	92-95	Y (LT1)	1	25163464
	4-D18	3.900	PUMP, FUEL (AC-DELCO #EP376)	96	Y	1	25163464
34.		N.S.	ISOLATOR, FUEL PUMP (PART OF #38)				
35.		8.915	NUT, HFH, 10X1.5 6H THD, 21.3 OD, 9.8 THK 13 HEX DR, GRD 9, ZF (8.917)	92-96		AR	10255857
36.		8.948	CLAMP (PART OF 55, 56)	92-96		AR	15620999

							1Y03-035
37.	4-A12	3.130	VALVE, EVAP EMIS CNSTR PURGE SOL (2 PORT VAC, 2 BLADE TERM) (AC-DELCO #214-565)	92-96	Y	1	1997201
38.	4-A12	3.110	STRAINER, FUEL SDR FUEL (IN TANK) (AC-DELCO #TS17)	92-96	Y	1	25121216
39.	4-A8	3.022	STRAP, F/TNK	92-96	Y	2	14048959
40.	4-A8	3.003	HOSE, F/TNK FIL PIPE HSG DRN	92-96	Y	1	14050036
41.	4-A8	3.001	TANK, FUEL (CPS)	92-96	Y	1	14048936
	4-A12	3.112	GASKET, FUEL SDR (AC-DELCO #G1)	92-96	Y	1	25091503
42.	4-A8	3.015	SEAT, F/TNK	92-96	Y	LH	14047511
	4-A8	3.015	SEAT, F/TNK	92-96	Y	RH	14047512
43.	4-A8	3.022	INSULATOR, F/TNK	92-96	Y07	2	10241792
44.	4-A8	3.022	CABLE, F/TNK	92-96	Y	2	14076111
45.	4-A12	3.120	RETAINER, EVAP EMIS CNSTR SPH SHLD (PUSH IN) (PART OF 49) (24.5 LONG 25.5 HEAD) (PUSH-IN X-MAS TREE, FITS 8MM HOLE) (2.765)	96	Y (LT1, LT4)	2	20635065
	4-A12	3.120	RETAINER, EVAP EMIS CNSTR SPH SHLD (PUSH IN) (X-MAS TREE FITS 8MM HOLE 24.5 LONG 25.5 HEAD OD) (PART OF 49) (24.5 LONG 25.5 HEAD) (PUSH-IN X-MAS TREE, FITS 8MM HOLE) (2.765)	92-95	Y	1	20635065
46.	4-A14	3.145	CONNECTOR, EVAP EMIS INTER HOSE (THREADS MUST BE SEALED W/THREAD SEALANT 12346004.) (3.680)	92-96	Y	1	474793
47.		8.962	HOSE, 13MMX25' ROLL	92-96		AR	9436257
48.	4-A8	3.023	BOLT, F/TNK STRP (M8X1.25X15 POR)	92-96	Y	2	14060161
49.	4-A12	3.130	SHIELD, EVAP EMIS CNSTR SPH (INCLS 45) (3.120)	92-95	Y	1	10105360
	4-A12	3.130	SHIELD, EVAP EMIS CNSTR SPH (INCLS 45) (3.120)	96	Y (LT1, LT4)	1	10105360
50.	4-A12	3.130	BRACKET, EVAP EMIS CNSTR	92-95	Y	1	10234809
	4-A12	3.130	BRACKET, EVAP EMIS CNSTR	96	Y (LT1, LT4)	1	10234809
51.	4-A14	3.145	CLIP, EVAP EMIS CNSTR PURGE HOSE (PART OF 56)	92-96	Y	4	10105389
52.	4-A14	3.145	CONNECTOR, EVAP EMIS HOSE (PART OF 55) (3.130)	92-95	Y	1	10046084
	4-A14	3.145	CONNECTOR, EVAP EMIS HOSE (PART OF 55) (3.130)	96	Y (LT1, LT4)	1	10046084
53.	4-A12	3.130	CANISTER, EVAP EMIS (AC-DELCO #215-75)	92-95	Y	1	17090139
	4-A12	3.130	CANISTER, EVAP EMIS (AC-DELCO #215-127)	96	Y	1	17113065
54.	4-A12	3.130	VALVE, EVAP EMIS PRESS CONT (PART OF 55) (AC-DELCO #214-559)	92-96	Y	1	17091151
55.	4-A12	3.130	VALVE, EVAP EMIS PRESS CONT (INCLS 36, 52, 54) (PKG, W/CONN & CLAMPS) (AC-DELCO #214-532)	92-96	Y	1	10105386
56.	4-A14	3.145	HOSE, EVAP EMIS CNSTR PURGE (INCLS 36, 51)	92-95	Y	1	10105300

							1Y03-035
	4-A14	3.145	HOSE, EVAP EMIS CNSTR PURGE (INCLS 30, 61)	96	Y (LT1, LT4)	1	12552593
57.	4-A15	3.163	SEAL, FUEL FEED RR PIPE (O RING) (PART OF 17) (AC-DELCO #217-452)	92-96	Y	1	22514722
58.	4-A15	3.163	FITTING, FUEL FEED PIPE (PART OF 13)	92-96	Y	1	10052179
59.	4-D17	3.090	BRACKET, FUEL FLTR	92-96	Y	1	10158024
60.		3.000	BOLT, HEX W/CON WA, M6X1X20	92-96		AR	11514623
61.	4-D17	3.090	FILTER, FUEL (THREADED FTGS ON BOTH ENDS, W/O PROTECTIVE COATING) (AC-DELCO #GF481)	92-96	Y (LT1)	1	25055052
	4-D17	3.090	FILTER, FUEL (THREADED FTGS ON BOTH ENDS, W/O PROTECTIVE COATING) (AC-DELCO #GF481)	96	Y (LT4)	1	25055052
62.		3.050	CLIP, CLSD STEEL 7/16 X 5/16 ZC TYP1 NAT (3.060)	92-93		AR	25526629
	4-A15	3.162	CLIP, FUEL FEED & RTN PIPE	94-96	Y	AR	10052168
63.	4-A15	3.163	SEAL, FUEL RTN PIPE (O RING) (PART OF 13) (AC-DELCO #217-452)	92-96	Y	1	22514722
64.	4-A12	3.130	BRACKET, EVAP EMIS CNSTR PURGE SOL VLV	92-95	Y (LT1)	1	10137656
	4-A12	3.130	BRACKET, EVAP EMIS CNSTR PURGE SOL VLV	96	Y (LT1, M30)	1	12551612
	4-A12	3.130	BRACKET, EVAP EMIS CNSTR PURGE SOL VLV	96	Y (LT4, ML9)	1	12551612
65.	4-A15	3.163	INSULATOR, FUEL FEED & RTN FRT PIPE	92-93	Y	1	10218527

RPO DEFINITIONS

LT1 -- ENGINE-GAS, 8 CYL, 5.7L(5.7P),MFI,HO
LT4 -- ENGINE GAS, 8 CYL, 5.7L, MFI, HIGH OUTPUT
ML9 -- TRANSMISSION,MANUAL 6-SPEED
M30 -- TRANSMISSION,AUTOMATIC 4 SPEED,4L60E,ELECTRONIC
NM8 -- EMISSION SYSTEM,LEADED FUEL(EXPORT)

GM03-141
070600

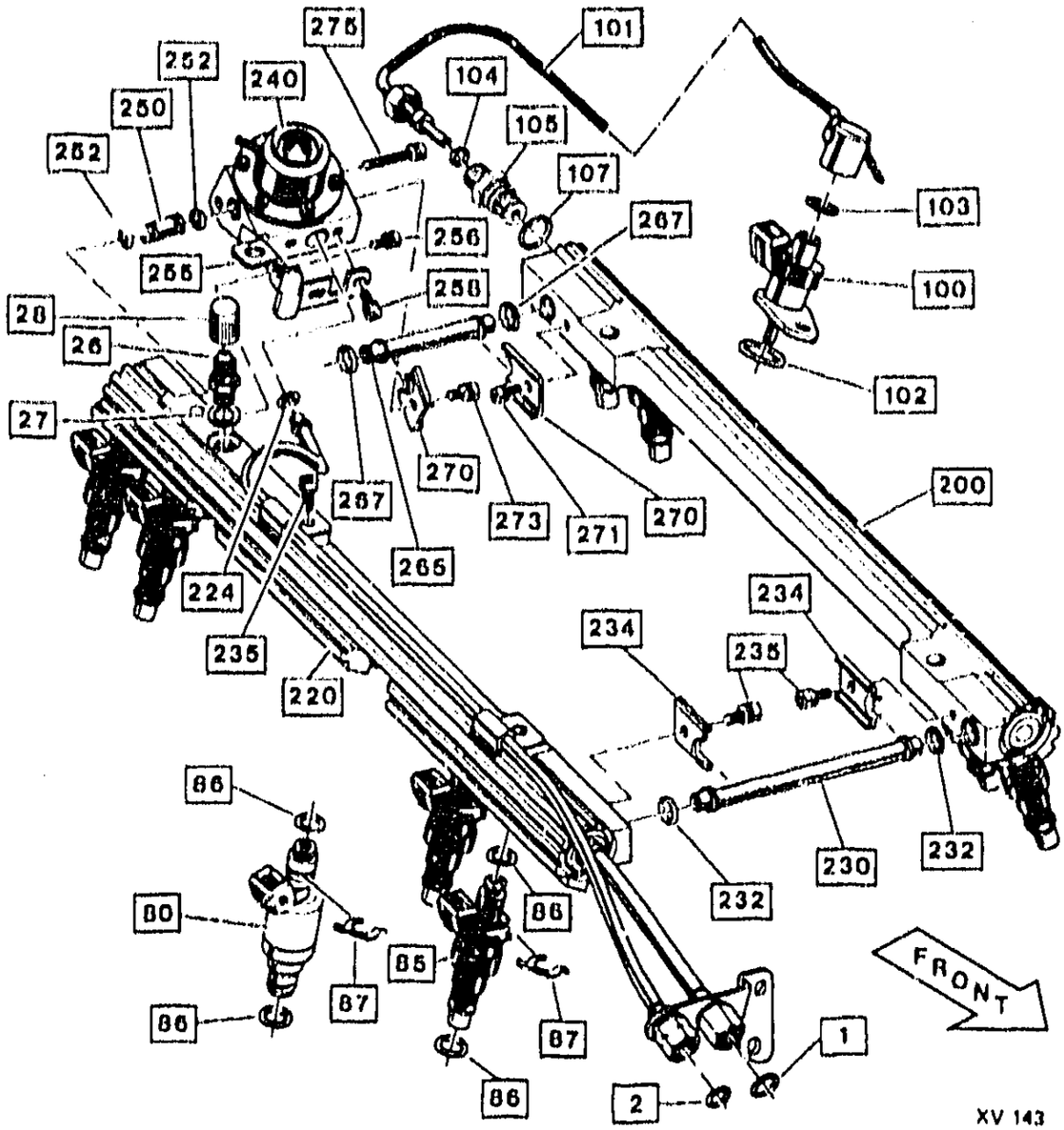

GM03-141

1985-1991 Y FUEL INJECTOR RAIL MPFI (MODELS F8A,R810)(L98)

1.	4-A15	3.163	SEAL, FUEL FEED PIPE O-RING (AC-DELCO #217-452) .....
2.	4-A15	3.163	SEAL, FUEL RTN PIPE O-RING (AC-DELCO #22516256) .....
26.		N.S.	CONNECTION, FUEL PRESSURE (*1) .....
27.		N.S.	SEAL, FUEL PRESS CONN ASM (*1, 7, 8, 9, 12) .....
28.		N.S.	CAP, FUEL PRESSURE CONN ASM (*1) .....
80.		N.S.	INJECTOR ASM, FUEL (*2) .....
85.		N.S.	INJECTOR ASM, FUEL (*2) .....
86.	4-A26	3.331	SEAL KIT, FUEL INJECTOR (*2, 3, 14) (AC-DELCO #217-455) ....
87.	4-A27	3.332	CLIP KIT, INJECTOR RETAINER (*2, 4) (AC-DELCO #17111800) ...
100.		N.S.	VALVE, COLD START (1985-88) (*5) .....
101.		N.S.	TUBE & BODY ASM, COLD START VLV (1985-88) (*6) .....
102.		N.S.	O-RING SEAL, VLV (1985-88) (*5, 6, 7, 8, 9, 10, 11, 12) .....

© 2000 GENERAL MOTORS SERVICE PARTS OPERATIONS-CHEVROLET-14Y

103.		N.S.	O-RING SEAL, BODY (1986-88) (*3, 5, 6, 7, 8, 9, 10, 11, 12) .....
104.		N.S.	O-RING SEAL, TUBE (1986-88) (*3, 5, 6, 7, 8, 9, 10, 11, 12) .....
106.	4-A24	3.330	FITTING KIT, COLD START VLV (INCL #107) (1986-88) (AC-DELCO #17112073) .....
107.		3.329	O-RING KIT, COLD START VLV (PART OF #106) (1986-88) (AC-DELCO #17111964) .....
200.		N.S.	FUEL RAIL & PLUG ASM-LH (*7) .....
220.		N.S.	FUEL RAIL & TUBES ASM-RH (*8) .....
224.		N.S.	SEAL, FUEL OUTLET TUBE O-RING (*3, 7, 8, 9, 11, 12) .....
230.		N.S.	TUBE, FRONT CROSSOVER (*12) .....
232.		N.S.	SEAL, FRT C/OVR TUBE O-RING (*3, 7, 8, 9, 11, 12) .....
234.		N.S.	RETAINER, CROSSOVER TUBE (*12) .....
235.		N.S.	SCREW ASM, RETAINER ATCH (*13) .....
240.		N.S.	PRESSURE REGULATOR & BASE ASM (*9) .....
250.		N.S.	CONNECTOR, BASE TO RAIL (*12) .....
252.		N.S.	SEAL, O-RING CONNECTOR (*3, 7, 8, 9, 11, 12) .....
255.		N.S.	BRACKET, PRESS REG AND BASE ASM (*12) .....
256.		N.S.	SCREW ASM, BRACKET TO RAIL ATCH .....
260.		N.S.	SCREW ASM, BRACKET TO BASE ATCH .....
265.		N.S.	TUBE, REAR CROSSOVER (*12) .....
267.		N.S.	SEAL, O-RING CROSSOVER TUBE (*3, 7, 8, 9, 11, 12) .....
270.		N.S.	RETAINER, REAR CROSSOVER TUBE (*12) .....
271.		N.S.	SCREW ASM, RETAINER TO LH RAIL (*13) .....
273.		N.S.	SCREW ASM, RATAINER TO BASE (*13) .....
275.		N.S.	SCREW ASM, BASE TO RH RAIL (*13) .....

NOTE 1: GROUP 3.330 CONNECTION KIT, FUEL PRESS (INCL #26,27,28)
NOTE 2: GROUP 3.300 INJECTOR KIT, FUEL (INCL #85,86,87)
NOTE 3: GROUP 3.331 O-RING KIT, INJ (INCL #103,104,224,232,252,267)
NOTE 4: GROUP 3.302 CLIP KIT, INJ RET (INCLS #87 QTY OF 5)
NOTE 5: GROUP 3.329 VALVE KIT, COLD START (INCL #100,102,103,104)
NOTE 6: GROUP 3.329 TUBE KIT, COLD START VLV (INCL #101,102,103,104)
NOTE 7: GROUP 3.330 RAIL KIT, FUEL-LH (INCL #27,102,103,104,200,224,232,252,267)
NOTE 8: GROUP 3.330 RAIL KIT, FUEL-RH (INCL #27,102,103,104,220,224,232,252,267)
NOTE 9: GROUP 3.330 REGULATOR KIT, PRESS (INCL #27,102,103,104,224,232,240,252,267)
NOTE 10: GROUP 3.329 O-RING KIT, COLD START VLV (INCL #102,103,104)
NOTE 11: GROUP 3.163 O-RING KIT, FUEL RAIL (INCL #102,103,104,224,232,252,267)
NOTE 12: GROUP 3.330 TUBE KIT, C/OVR (1985-88) #17112037 (1989-91) #17112091 (INCL 103,104,224,230,232,234,250,252,255,265,267,270.
NOTE 13: GROUP 3.330 SCREW KIT, FUEL RAIL #17110873 (INCL #235,271,273,275)
NOTE 14: GROUP 3.163 SEAL KIT,(O-RING)(INCL #103,104,224,232,252,267)

RPO DEFINITIONS

L98 - ENGINE, 5.7L, (5.7-8) 350 CID, V8, TPI

© 2000 GENERAL MOTORS SERVICE PARTS OPERATIONS-CHEVROLET-14Y

MICROFICHE INDEX

GROUP 3.000

FICHE 4 OF 11

GROUP	DESCRIPTION	STARTING GRID LOCATION PARTS	ILLUSTRATIONS
–	GENERAL INFORMATION	1–A2	1–G2
–	ALPHABETICAL INDEX	1–B13	N.A.
3.000	FUEL TANK – INTAKE MANIFOLD – FUEL INJECTION – THROTTLE BODY – AIR CLEANER – ACCELERATOR	4–A2	4–E2
3.000	EXHAUST & EMISSIONS SYSTEMS – CARBURETOR – CRUISE – FUEL FILTER & PUMP	4–C2	4–H2
–	OUT OF FICHE CALLS	N.A.	4–M9

4–F1

GM03-215
051090

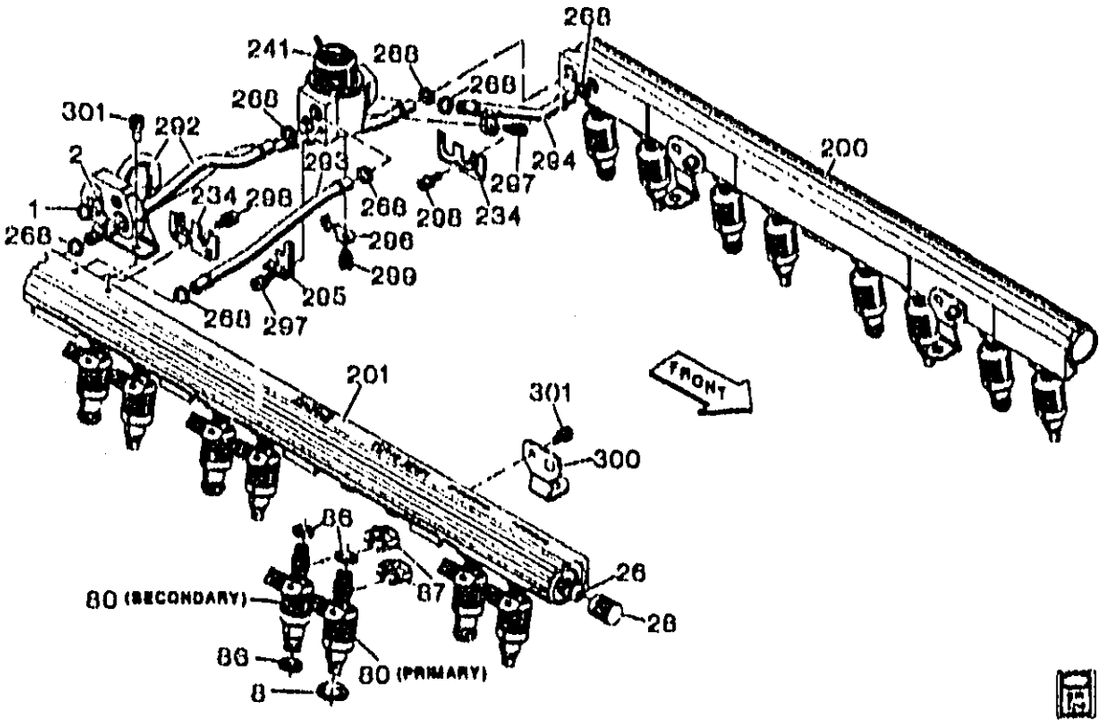

GM03-215

1990-1995 Y FUEL INJECTOR RAIL MPFI (MODEL R830) (5.7J)(LT5)

1.	4-A15	3.163	GASKET, FUEL FEED PIPE	90-95	Y (LT5)	1	14104675
2.	4-A15	3.163	GASKET, FUEL FEED PIPE (RETURN LINE)	90-95	Y (LT5)	1	14104675
8.	4-A23	3.304	SEAL, F/INJR (O RING) (HOUSING) (3.305)	90-95	Y (LT5)	8	10067600
26.		N.S.	FUEL PRESSURE CONNECTION ASSEMBLY (*KIT2)		.....		
28.		N.S.	CAP, FUEL PRESSURE CONNECTION (*KIT2)		.....		
80.		N.S.	FUEL INJECTOR ASSEMBLY (*KIT5, KIT6)		.....		
86.		N.S.	SEAL, F/INJR (O RING) (*KIT5, KIT6, KIT7)		.....		
87.	4-A27	3.332	RETAINER KIT, F/INJR (*KIT5, KIT6, KIT8) (AC-DELCO #17111800)	90-95	Y (LT5)	8	17111800
200.		N.S.	FUEL RAIL & PLUG ASM-LH (*KIT1)		.....		
201.		N.S.	FUEL RAIL & PLUG ASM-RH (*KIT2)		.....		
234.		N.S.	RETAINER, CROSSOVER TUBE (*KIT9)		.....		
241.		N.S.	PRESSURE REGULATOR ASM (*KIT3)		.....		
268.		N.S.	SEAL, O-RING (*KIT1, KIT2, KIT3, KIT4, KIT10		.....		
292.		N.S.	FUEL INLET & OUTLET TUBE ASM (*KIT4)		.....		
293.		N.S.	TUBE, FUEL RETURN-RH (*KIT4)		.....		

© 2000 GENERAL MOTORS SERVICE PARTS OPERATIONS-CHEVROLET-14Y

294.		N.S.	TUBE, FUEL RETURN-LH (*KIT4)				
295.		N.S.	RETAINER, REGULATOR TUBE (*KIT9)				
296.		N.S.	RETAINER, FUEL INLET TUBE (*KIT9)				
297.		N.S.	SCREW ASM, FUEL RETURN TUBE RETAINER ATTACHING (*KIT9)				
298.		N.S.	SCREW ASM, CROSSOVER TUBE RETAINER ATTACHING (*KIT9)				
299.		N.S.	SCREW ASM, FUEL INLET TUBE RETAINER ATTACHING (*KIT9)				
300.		N.S.	BRACKET, RAIL MOUNTING (*KIT1, KIT2, KIT9)				
301.		N.S.	SCREW ASM, BRACKET ATTACHING (*KIT1, KIT2, KIT9)				

SERVICE KITS

1.	4-A24	3.330	RAIL KIT, FUEL LH-INCL #200, 268, 300, 301 (AC-DELCO #17112218)	90-92	Y (LT5)	1	17112218
	4-A24	3.330	RAIL KIT, FUEL LH-INCL #200, 268, 300, 301 (AC-DELCO #17113024)	93-95	Y (LT5)	1	17113024
2.	4-A24	3.330	RAIL KIT, FUEL RH-INCL #26, 28, 201, 268, 300, 301 (AC-DELCO #17112219)	90-92	Y (LT5)	1	17112219
	4-A24	3.330	RAIL KIT, FUEL RH-INCL #26, 28, 201, 268, 300, 301 (AC-DELCO #17113025)	93-95	Y (LT5)	1	17113025
3.	4-A24	3.330	REGULATOR KIT, FUEL PRESS (INCL #241, 268) (AC-DELCO #217-378)	90-92	Y (LT5)	1	17112220
	4-A24	3.330	REGULATOR KIT, FUEL PRESS (INCL #241, 268) (AC-DELCO #217-357)	93-95	Y (LT5)	1	17069332
4.	4-A15	3.163	PIPE KIT, F/INJN FUEL FEED & RTN (INCL #268, 292, 293, 294) (3.330) (AC-DELCO #17112221)	90-95	Y (LT5)	1	17112221
5.	4-A22	3.300	INJECTOR KIT, M/PORT FUEL (INCL #80, 86, 87) (AC-DELCO #217-256)	90-92	Y (LT5)	8	17069647
	4-A22	3.300	INJECTOR KIT, M/PORT FUEL (INCL #80, 86, 87) (AC-DELCO #217-280)	93-95	Y (LT5)	8	17109952
6.	4-A22	3.300	INJECTOR KIT, M/PORT FUEL (SECONDARY) (INCL #80, 86, 87) (W/CLIP) (AC-DELCO #217-257)	90-92	Y (LT5)	8	17069648
	4-A22	3.300	INJECTOR KIT, M/PORT FUEL (SECONDARY) (INCL #80, 86, 87) (AC-DELCO #217-281)	93-95	Y (LT5)	8	17109953
7.	4-A26	3.331	SEAL KIT, F/INJR (O RING) (INCL 12 OF #86) (15 X 3.6MM, 7.8 HOLE) (CONTAINS 12-05235032 SEALS) (AC-DELCO #217-455)	90-92	Y (LT5)	2	17112222

© 2000 GENERAL MOTORS SERVICE PARTS OPERATIONS-CHEVROLET-14Y

	4-A26	3.331	SEAL KIT, F/INJR (O RING) (INCL 12 OF #86) (MAY CONTAIN 12 BLK, OR 6 BLK/ 6 BRN O-RINGS IN KIT) (AC-DELCO #17112981)	93-95	Y (LT5)	1	17112981
8.	4-A27	3.332	RETAINER KIT, F/INJR (INCL 8 OF #87) (AC-DELCO #17111800)	90-95	Y (LT5)	8	17111800
9.	4-A26	3.331	BOLT KIT, F/INJN FUEL RL (INCL #234, 295, 296, 297, 298, 299, 300, 301) (3.330) (AC-DELCO #17112223)	90-95	Y (LT5)	1	17112223
10.	4-A15	3.163	SEAL KIT, F/INJN FUEL FEED & RTN PIPE (INCL #268) (AC-DELCO #217-443)	90-95	Y (LT5)	1	17112224

RPO DEFINITIONS
LT5 - ENGINE,5.7L(5.7J),TPI

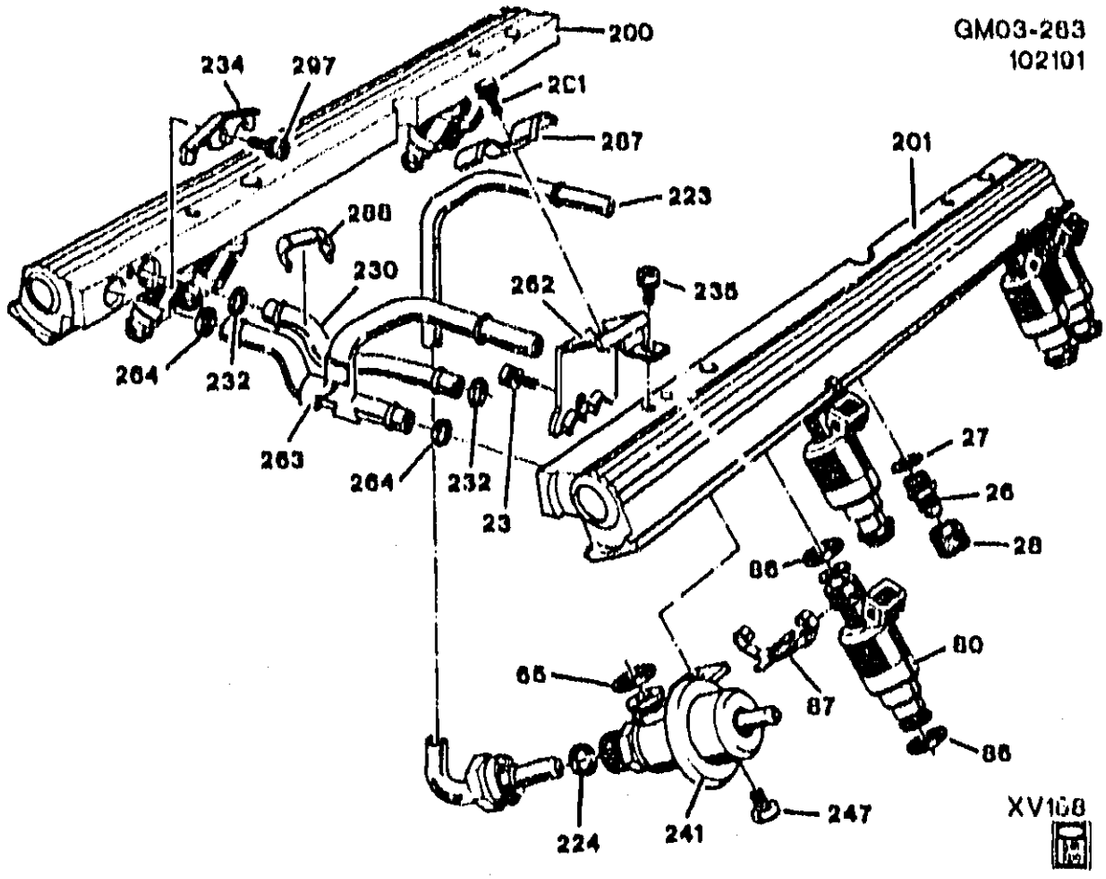

GM03-263

1992-1993 Y FUEL INJECTOR RAIL MPFI (MODELS R815)(LT1)(5.7P)

23.	N.S.	**SCREW**, INLET/OUTLET FUEL TUBE BRACKET ATTACHING (*KIT8)	
26.	N.S.	**CONNECTION**, FUEL PRESSURE (*KIT3)	
27.	N.S.	**SEAL**, FUEL PRESS CONN ASM (*KIT3)	
28.	N.S.	**CAP**, FUEL PRESSURE CONN ASM (*KIT3)	
65.	N.S.	**O RING**, FUEL INLET FITTING (*KIT2, KIT4, KIT9, KIT10, KIT11, KIT12)	
80.	N.S.	**INJECTOR ASM**, FUEL (*KIT13)	
86.	N.S.	**SEAL**, FUEL INJR (*KIT5, KIT13)	
87.	N.S.	**CLIP**, INJR RET (*KIT6, KIT13)	
200.	N.S.	**RAIL**, F/INJR FUEL (*KIT11)	
201.	N.S.	**RAIL**, F/INJR FUEL (*KIT12)	
223.	N.S.	**TUBE**, OUTLET (*KIT9)	
224.	N.S.	**SEAL**, FUEL OUTLET TUBE O-RING (*KIT1, KIT4, KIT10, KIT11, KIT12)	
230.	N.S.	**TUBE**, FUEL CROSSOVER (*KIT1)	
232.	N.S.	**SEAL**, FRT C/OVR TUBE O-RING (*KIT1, KIT4, KIT10, KIT12)	
234.	N.S.	**RETAINER**, C/OVR TUBE (*KIT8)	

© 2000 GENERAL MOTORS SERVICE PARTS OPERATIONS-CHEVROLET-14Y

235.		N.S.	SCREW, INLET TUBE ATCH (*KIT7, KIT8)	
241.		N.S.	REGULATOR, FUEL PRESS (*KIT2)	
247.		N.S.	SCREW, REG ATCH (*KIT2, KIT7, KIT8)	
262.		N.S.	BRACKET, TUBES RET (*KIT8)	
263.		N.S.	TUBE, INLET (*KIT10)	
264.		N.S.	SEAL, INLET TUBE (O RING) (*KIT10, KIT11)	
287.		N.S.	RETAINER, FUEL RETURN TUBE (*KIT8)	
288.		N.S	CLIP, RETURN TUBE (*KIT8)	
291.		N.S.	SCREW, RETURN TUBE RET ATCH (*KIT7, KIT8)	
297.		N.S.	SCREW, TUBE RET ATCH (*KIT7, KIT8)	

SERVICE KITS

1.	4-A24	3.330	TUBE KIT, F/INJN FUEL RL C/OVR (INCL #224, 230, 232)	92	Y (LT1)	1	17112639
	4-A24	3.330	TUBE KIT, F/INJN FUEL RL C/OVR (INCL #224, 230, 232)	93	Y (LT1, MD8)	1	17112639
	4-A24	3.330	TUBE KIT, F/INJN FUEL RL C/OVR (INCL #224, 230, 232)	93	Y (LT1, ML9)	1	17112639
2.	4-A24	3.330	REGULATOR, FUEL PRESS (REQUIRES O RING SEAL 17075384) (INCL #65, 241, 247) (AC-DELCO #217-366)	92	Y (LT1)	1	17107010
	4-A24	3.330	REGULATOR, FUEL PRESS (REQUIRES O RING SEAL 17075384) (INCL #65, 241, 247) (AC-DELCO #217-366)	93	Y (LT1, MD8)	1	17107010
	4-A24	3.330	REGULATOR, FUEL PRESS (REQUIRES O RING SEAL 17075384) (INCL #65, 241, 247) (AC-DELCO #217-366)	93	Y (LT1, ML9)	1	17107010
3.	4-A24	3.330	VALVE KIT, FUEL PRESS SERV (INCL #26, 27, 28) (AC-DELCO #217-388)	92-93	Y (LT1)	1	17112759
4.	4-A15	3.163	SEAL KIT, F/INJN FUEL FEED & RTN PIPE (INCL #65, 224, 232) (3.331) (AC-DELCO #217-460)	92-93	Y (LT1)	1	17112989
5.	4-A26	3.331	SEAL KIT, F/INJR (O RING) (INCL 12 OF #86) (15 X 3.6MM, 7.8 HOLE) (CONTAINS 12-05235032 SEALS) (AC-DELCO #217-455)	92	Y (LT1)	2	17112222
	4-A26	3.331	SEAL KIT, F/INJR (O RING) (INCL 12 OF #86) (15 X 3.6MM, 7.8 HOLE) (CONTAINS 12-05235032 SEALS) (AC-DELCO #217-455)	93	Y (LT1, ML9)	2	17112222
6.	4-A27	3.332	RETAINER KIT, F/INJR (INCL 8 OF #87) (AC-DELCO #17112633)	92-93	Y (LT1)	1	17112633
7.	4-A26	3.331	BOLT KIT, F/INJN FUEL RL (INCL 235, 247, 291, 297) (3.330) (AC-DELCO #17112638)	92	Y (LT1)	1	17112638

© 2000 GENERAL MOTORS SERVICE PARTS OPERATIONS-CHEVROLET-14Y

	4–A26	3.331	BOLT KIT, F/INJN FUEL RL (INCL 235, 247, 291, 297) (3.330) (AC–DELCO #17112638)	93	Y (LT1, MD8)	1	17112638
	4–A26	3.331	BOLT KIT, F/INJN FUEL RL (INCL 235, 247, 291, 297) (3.330) (AC–DELCO #17112638)	93	Y (LT1, ML9)	1	17112638
8.	4–A24	3.330	FASTENER KIT, F/INJN FUEL RL (INCL #234, 235, 247, 262, 287, 288, 291, 297) (AC–DELCO #17112640)	92–93	Y (LT1)	1	17112640
9.	4–A15	3.163	PIPE KIT, F/INJN FUEL RTN (INCL #65, 223) (3.330)	92	Y (LT1)	1	17112642
	4–A15	3.163	PIPE KIT, F/INJN FUEL RTN (INCL #65, 223) (3.330)	93	Y (LT1, MD8)	1	17112642
	4–A15	3.163	PIPE KIT, F/INJN FUEL RTN (INCL #65, 223) (3.330)	93	Y (LT1, ML9)	1	17112642
10.	4–A15	3.163	PIPE KIT, F/INJN FUEL FEED (INCL #65, 224, 232, 263, 264) (3.330)	92–93	Y (LT1)	1	17112641
11.	4–A24	3.330	RAIL KIT, M/PORT F/INJN FUEL (INCL #65, 200, 224, 232, 264) (AC–DELCO #17112635)	92–93	Y (LT1)	LH	17112635
12.	4–A24	3.330	RAIL KIT, M/PORT F/INJN FUEL (INCL #65, 201, 224, 232, 264) (AC–DELCO #17113241)	92–93	Y (LT1)	RH	17113241
13.	4–A22	3.300	INJECTOR, M/PORT FUEL (INCL #80, 86, 87) (AC–DELCO #217–272)	92	Y (LT1)	8	17105094
	4–A22	3.300	INJECTOR, M/PORT FUEL (INCL #80, 86, 87) (AC–DELCO #217–272)	93	Y (LT1, MD8)	8	17105094
	4–A22	3.300	INJECTOR, M/PORT FUEL (INCL #80, 86, 87) (AC–DELCO #217–272)	93	Y (LT1, ML9)	8	17105094

RPO DEFINITIONS
LT1 – ENGINE–GAS, 8 CYL, 5.7L(5.7P),MFI,HO
MD8 – TRANSMISSION,AUTOMATIC 4–SPEED(THM700R4/4L60)
ML9 – TRANSMISSION,MANUAL 6–SPEED

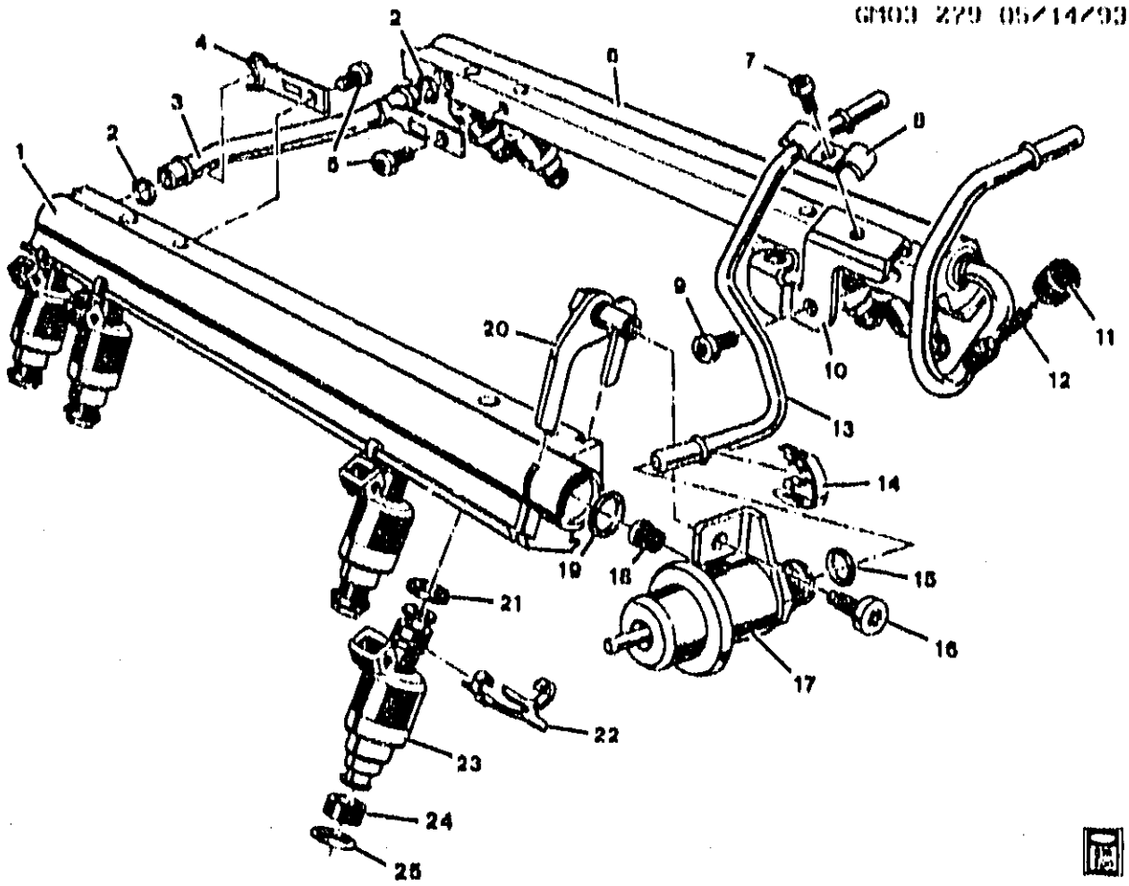

GM03-279

1994-1996 Y FUEL INJECTOR RAIL MPFI (MODEL R816)(LT1/5.7P)
1996 Y FUEL INJECTOR RAIL MPFI (MODEL R816)(LT4/5.7.5)

1.	N.S.	**RAIL**, FUEL (LEFT SIDE) (*KIT2) .	.....
2.	N.S.	**SEAL**, O-RING-CROSSOVER TUBE (*KIT10)	.....
3.	N.S.	**TUBE**, FUEL CROSSOVER (*KIT12)	.....
4.	N.S.	**RETAINER**, CROSSOVER TUBE (*KIT12)	.....
5.	N.S.	**SCREW**, CROSSOVER TUBE RETAINER ATTACHING (*KIT12) .	.....
6.	N.S.	**RAIL**, FUEL (RIGHT SIDE) (*KIT1)	.....
7.	N.S.	**SCREW**, INLET/OUTLET FUEL TUBE RETAINER ATTACHING (*KIT11)	.....
8.	N.S.	**RETAINER**, INLET/OUTLET FUEL TUBE (*KIT11)	.....
9.	N.S.	**SCREW**, INLET/OUTLET FUEL TUBE BRACKET ATTACHING (*KIT11)	.....
10.	N.S.	**BRACKET**, INLET/OUTLET FUEL TUBE (*KIT11)	.....
11.	N.S.	**CAP**, FUEL PRESSURE CONNECTION (*KIT5)	.....
12.	N.S.	**VALVE**, FUEL PRESSURE CONNECTION (*KIT5)	.....
13.	N.S.	**TUBE**, FUEL OUTLET (*KIT13) ..	.....

© 2000 GENERAL MOTORS SERVICE PARTS OPERATIONS-CHEVROLET-14Y

14.	N.S.	CLIP, FUEL OUTLET TUBE RETAINER (*KIT11)	
15.	N.S.	SEAL, O-RING FUEL OUTLET TUBE (*KIT10)	
16.	N.S.	SCREW, PRESSURE REGULATOR ATTACHING (*KIT9)	
17.	N.S.	REGULATOR, FUEL PRESSURE (*KIT3)	
18.	N.S.	SCREEN, FILTER (*KIT3)	
19.	N.S.	SEAL, O-RING-FUEL INLET FITTING (*KIT10)	
20.	N.S.	RETAINER, W/SPACER ASM (*KIT8)	
21.	N.S.	SEAL, O-RING-UPPER INJECTOR (*KIT6)	
22.	N.S.	CLIP, INJECTOR RETAINER (*KIT4, KIT7)	
23.	N.S.	INJECTOR, FUEL (*KIT4)	
24.	N.S.	SEAL, O-RING (BACKUP) (*KIT6)	
25.	N.S.	SEAL, O-RING (LOWER INJECTOR) (*KIT6)	

SERVICE KITS

1.	4-A24	3.330	RAIL KIT, M/PORT F/INJN FUEL (INCL # 6)	94-96	Y (LT1)	RH	17113250
	4-A24	3.330	RAIL KIT, M/PORT F/INJN FUEL (INCL # 6)	96	Y (LT4)	RH	17113250
2.	4-A24	3.330	RAIL KIT, M/PORT F/INJN FUEL (INCL # 1)	94-96	Y (LT1)	LH	17113249
	4-A24	3.330	RAIL KIT, M/PORT F/INJN FUEL (INCL # 1)	96	Y (LT4)	LH	17113249
3.	4-A24	3.330	REGULATOR, FUEL PRESS (INCL # 17, 18) (AC-DELCO #217-364)	96	Y (LT1, M30)	1	17091410
	4-A24	3.330	REGULATOR, FUEL PRESS (INCL # 17, 18) (AC-DELCO #217-364)	96	Y (LT4, ML9)	1	17091410
	4-A24	3.330	REGULATOR, FUEL PRESS (REQUIRES O RING SEAL 17075384) (INCL # 17, 18) (AC-DELCO #217-366)	94-95	Y (LT1)	1	17107010
4.	4-A22	3.300	INJECTOR, M/PORT FUEL (INCL # 22, 23) (AC-DELCO #217-313)	94-96	Y (LT1)	1	17124248
	4-A22	3.300	INJECTOR KIT, M/PORT FUEL (INCL # 22, 23) (AC-DELCO #217-314)	96	Y (LT4)	1	17124251
5.	4-A24	3.330	VALVE KIT, FUEL PRESS SERV (INCL # 11, 12) (AC-DELCO #217-384)	94-96	Y (LT1)	1	17112556
	4-A24	3.330	VALVE KIT, FUEL PRESS SERV (INCL # 11, 12) (AC-DELCO #217-384)	96	Y (LT4)	1	17112556
6.	4-A28	3.331	SEAL KIT, F/INJR (O RING) (INCL # 21, 24, 25) (MAY CONTAIN 12 BLK, OR 6 BLK/ 6 BRN O-RINGS IN KIT) (AC-DELCO #17112981)	94-96	Y (LT1)	1	17112981

© 2000 GENERAL MOTORS SERVICE PARTS OPERATIONS-CHEVROLET-14Y

	4-A26	3.331	SEAL KIT, F/INJR (O RING) (INCL # 21, 24, 25) (MAY CONTAIN 12 BLK, OR 6 BLK/ 6 BRN O-RINGS IN KIT) (AC-DELCO #17112981)	96	Y (LT4)	1	17112981
7.	4-A27	3.332	RETAINER KIT, F/INJR (INCL # 22) (AC-DELCO #17112633) ...	94-96	Y (LT1)	1	17112633
	4-A27	3.332	RETAINER KIT, F/INJR (INCL # 22) (AC-DELCO #17112633) ...	96	Y (LT4)	1	17112633
8.	4-A24	3.330	RETAINER, FUEL PRESS REG (INCL # 20) (W/SPCR) (AC-DELCO #17122259)	94-96	Y (LT1)	1	17122259
	4-A24	3.330	RETAINER, FUEL PRESS REG (INCL # 20) (W/SPCR) (AC-DELCO #17122259)	96	Y (LT4)	1	17122259
9.	4-A26	3.331	BOLT KIT, F/INJN FUEL RL (INCL # 16) (3.330) (AC-DELCO #17089152)	94-96	Y (LT1)	1	17089152
	4-A26	3.331	BOLT KIT, F/INJN FUEL RL (INCL # 16) (3.330) (AC-DELCO #17089152)	96	Y (LT4)	1	17089152
10.	4-A26	3.331	SEAL KIT, F/INJR (O RING) (INCL # 2, 15, 19) (AC-DELCO #217-449)	94-96	Y (LT1)	1	17113086
	4-A26	3.331	SEAL KIT, F/INJR (O RING) (INCL # 2, 15, 19) (MAY CONTAIN 12 BLK, OR 6 BLK/ 6 BRN O-RINGS IN KIT) (AC-DELCO #17112981)	96	Y (LT4)	1	17112981
11.	4-A27	3.332	RETAINER KIT, F/INJR (INCL # 7, 8, 9, 10, 14)	94-96	Y (LT1)	1	17113089
	4-A27	3.332	RETAINER KIT, F/INJR (INCL # 7, 8, 9, 10, 14)	96	Y (LT4)	1	17113089
12.	4-A24	3.330	TUBE, F/INJN FUEL RL C/OVR (INCL # 3, 4, 5)	94-96	Y (LT1)	1	17113088
	4-A24	3.330	TUBE, F/INJN FUEL RL C/OVR (INCL # 3, 4, 5)	96	Y (LT4)	1	17113088
13.	4-A15	3.163	PIPE KIT, F/INJN FUEL RTN (INCL #13)	94-96	Y (LT1)	1	17091861
	4-A15	3.163	PIPE KIT, F/INJN FUEL RTN (INCL #13)	96	Y (LT4)	1	17091861

RPO DEFINITIONS
LT1 – ENGINE-GAS, 8 CYL, 5.7L(5.7P),MFI,HO
LT4 – ENGINE GAS, 8 CYL, 5.7L, MFI, HIGH OUTPUT
ML9 – TRANSMISSION,MANUAL 6-SPEED
M30 – TRANSMISSION,AUTOMATIC 4 SPEED,4L60E,ELECTRONIC

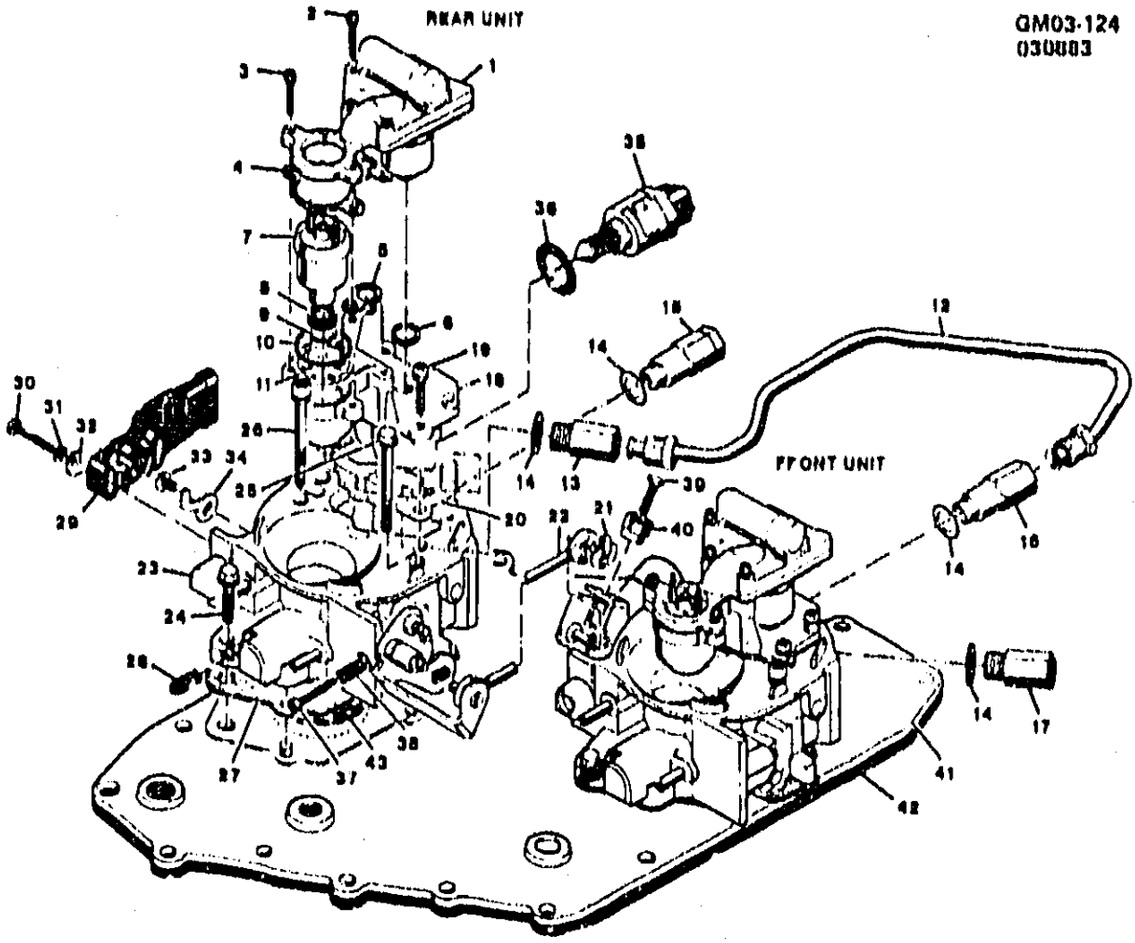

GM03-124

1984 Y THROTTLE BODY INJECTION/CFI-5.7L V8 (MODEL 400)(L83)

NOTE: ALL SERVICE PARTS ARE COMMON BETWEEN THE FRONT & REAR TBI UNITS EXCEPT THOSE INDICATED FRONT(FRT) OR REAR(RR) REAR UNIT EXPLODED VIEW IS TYPICAL ILLUSTRATION

1.	N.S.	**METER ASM**, FUEL (INCL FUEL NUTS) (FRT) (*13) .....
	N.S.	**METER ASM** FUEL (INCL FUEL NUTS) (RR) (*14) .....
	N.S.	**COVER & PRESSURE REGULATOR**, FUEL METER (RR) (*18) .....
	N.S.	**COVER & ACCUMULATOR**, FUEL METER (FRT) (*17) .....
2.	N.S.	**SCREW ASM**, FUEL METER (LONG) (*9) .....
3.	N.S.	**SCREW ASM**, FUEL METER (SHORT) (*9) .....
4.	N.S.	**GASKET**, FUEL METER COVER (*4, 5, 15, 16, 17, 18, 19, 20) .....
5.	N.S.	**GASKET**, FUEL METER OUTLET (*4, 5, 15, 16, 17, 18, 19, 20) .....
6.	N.S.	**SEAL**, PRESS REG DUST (RR) (*4, 5, 15, 16) .....
7.	N.S.	**INJECTOR**, FUEL (FRT) (*19) .....
	N.S.	**INJECTOR**, FUEL (RR) (*20) .....
8.	N.S.	**FILTER**, FUEL INJECTOR (*5, 15, 16) .....
9.	N.S.	**SEAL**, INJECTOR "O" RING-SMALL (*4, 5, 15, 16, 19, 20) .....
10.	N.S.	**SEAL**, INJECTOR "O" RING-LARGE (*4, 5, 15, 16, 19, 20) .....
11.	N.S.	**WASHER**, FUEL INJECTOR BACK UP (*4, 5, 15, 16, 19, 20) .....
12.	N.S.	**TUBE ASM**, FUEL (*7) .....
13.	N.S.	**NUT**, FUEL INLET (RR) (*22) .....
14.	N.S.	**GASKET**, FUEL NUT (2 REQ) (*4, 5, 15, 16, 21, 22) .....
15.	N.S.	**NUT**, FUEL RETURN (RR) (*22) .....
16.	N.S.	**NUT**, FUEL RETURN (FRT) (*21) .....

© 2000 GENERAL MOTORS SERVICE PARTS OPERATIONS-CHEVROLET-14Y

17.		N.S.	NUT, FUEL INLET (FRT) (*21)
18.		N.S.	BODY ASM, FUEL METER (FRT) (*15)
		N.S.	BODY ASM, FUEL METER (RR) (*16)
19.		N.S.	SCREW ASM, BODY ATTACH (3 REQ) (*9)
20.		N.S.	GASKET, FUEL METER BODY (*4, 13, 14)
21.		N.S.	CLIP, THROTTLE ROD RET (FRT) (*2, 3, 4, 6, 8, 9, 23, 24)
22.		N.S.	ROD, W/BEARING, THROTTLE (*24)
23.		N.S.	BODY ASM, THROTTLE (FRT) (*1, 2, 23)
		N.S.	BODY & ROD ASM, THROTTLE BODY (RR) (*1, 3, 24)
24.		N.S.	BOLT, TBI ATTACH-SHORT (*10)
25.		N.S.	BOLT, TBI ATTACH-LONG (*10)
26.		N.S.	STUD, TBI & AIR CLEANER ATTACH (*10)
27.		N.S.	GASKET, TBI MOUNTING (*2, 3, 4)
28.		N.S.	CAP, TUBE (*4)
29.		N.S.	SENSOR, THROTTLE POSITION (TPS) (RR) (*11)
30.		N.S.	SCREW, TPS ATTACH (2) (RR) (*9, 11)
31.		N.S.	WASHER, TPS SCREW (2) (RR) (*9, 11)
32.		N.S.	RETAINER, TPS (2) (RR) (*9, 11)
33.		N.S.	SCREW, TPS LEVER ATTACH (RR)
34.		N.S.	LEVER, TPS (RR)
35.		N.S.	CONTROL ASM, IDLE AIR (IAC) (*12)
36.		N.S.	GASKET, IAC ASM (*4, 12)
37.		N.S.	SCREW, THROTTLE STOP (*9)
38.		N.S.	SPRING, THROTTLE STOP SCREW (*9)
39.		N.S.	SCREW, THROTTLE SYNCHRONIZING (FRT) (*2, 3, 4, 6, 8, 9, 23, 24)
40.		N.S.	COLLER, THROTTLE SYNCH SCREW (FRT) (NOT REQ)
41.		N.S.	COVER, MANIF (*1)
42.	4-D13	3.726	GASKET, INLET MANIFOLD COVER (*6, 25)
43.		N.S.	TUBE, THROTTLE BORE (SWIRL PLATE) (*6)

NOTE 1: GROUP 3.725 THROTTLE BODY INJECTION (COMPLETE SERVICE)
NOTE 2: GROUP 3.725 THROTTLE BODY INJECTION-FRONT
NOTE 3: GROUP 3.725 THROTTLE BODY INJECTION-REAR
NOTE 4: GROUP 3.724 GASKET KIT
NOTE 5: GROUP 3.724 FILTER KIT, FUEL INJECTOR NOZZLE
NOTE 6: GROUP 3.726 COVER KIT, MANIFOLD INLET
NOTE 7: GROUP 3.163 TUBE KIT, FUEL
NOTE 8: GROUP 3.724 SCREW KIT, THROTTLE SYNCHRONIZING
NOTE 9: GROUP 3.724 FASTENER ASSORTMENT KIT
NOTE 10: GROUP 3.724 FASTENER KIT, MANIFOLD COVER ATTACHING
NOTE 11: GROUP 3.440 SENSOR KIT, THROTTLE POSITION
NOTE 12: GROUP 3.820 CONTROL KIT, IDLE AIR VALVE
NOTE 13: GROUP 3.734 FUEL METER KIT
NOTE 14: GROUP 3.734 FUEL METER KIT
NOTE 15: GROUP 3.734 FUEL METER BODY KIT
NOTE 16: GROUP 3.734 FUEL METER BODY KIT
NOTE 17: GROUP 3.734 ACCUMULATOR KIT, PRESSURE FRONT
NOTE 18: GROUP 3.734 REGULATOR KIT, PRESSURE REAR
NOTE 19: GROUP 3.774 FUEL INJECTOR KIT
NOTE 20: GROUP 3.774 FUEL INJECTOR KIT
NOTE 21: GROUP 3.724 FUEL INLET & OUTLET KIT-FRONT
NOTE 22: GROUP 3.724 FUEL INLET & OUTLET KIT-REAR
NOTE 23: GROUP 3.729 BODY KIT, THROTTLE-FRONT
NOTE 24: GROUP 3.729 THROTTLE BODY, W/ROD ASM-REAR
NOTE 25: GROUP 3.270 GASKET KIT, INT MANIF

RPO DEFINITIONS
L83 - ENGINE, 5.7L (5.7-8), V8,(CFI-CROSSFIRE)(TBI)

© 2000 GENERAL MOTORS SERVICE PARTS OPERATIONS-CHEVROLET-14Y

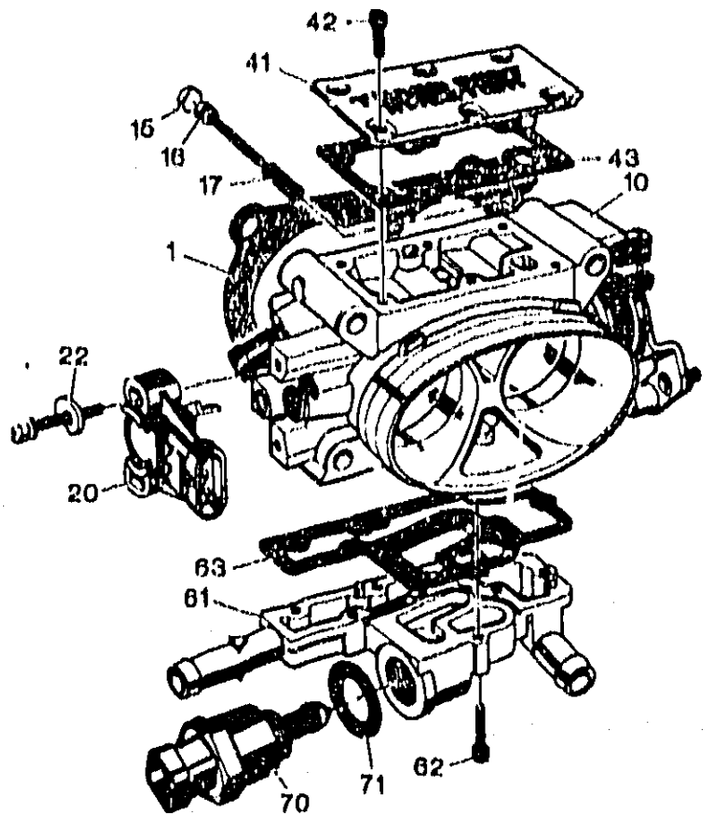

1985-1991 Y THROTTLE BODY/MPFI (MODELS T2A,B210)(L98/5.7-8)

1.	4-B6	3.336	GASKET, THROT BODY (AC-DELCO #40-718)	85-88	Y (5.7-8)	1	10105379
	4-B6	3.336	GASKET, THROT BODY (AC-DELCO #40-717)	89-91	Y (L98)	1	10105351
10.		N.S.	THROTTLE BODY ASM (*KIT1)				
15.		N.S.	PLUG, IDLE STOP SCREW (*KIT1)				
16.		N.S.	SCREW ASM, IDLE STOP (*KIT1)				
17.		N.S.	SPRING, IDLE STOP SCREW ASM (*KIT1)				
20.		N.S.	SENSOR, THROTTLE POSITION (TPS) (*KIT5)				
21.		N.S.	SCREW ASM, TPS ATCH (*KIT5, KIT7)				
22.		N.S.	RETAINER, TPS ATCH SCREW (*KIT5, KIT7)				
41.		N.S.	COVER, CLEAN AIR (*KIT3)				
42.		N.S.	SCREW ASM, CLEAN AIR COVER ATCH (*KIT7)				
43.		N.S.	GASKET, CLEAN AIR COVER (*KIT1, KIT2, KIT3, KIT4)				
61.		N.S.	IACV, COOLANT COVER ASM (*KIT4)				
62.		N.S.	SCREW ASM, IACV COVER ASM TO THROT BODY (*KIT7)				
63.		N.S.	GASKET, IACV COOLANT COVER TO THROT BODY (*KIT1, KIT2, KIT3, KIT4)				

© 2000 GENERAL MOTORS SERVICE PARTS OPERATIONS - CHEVROLET - 14Y

70.		N.S.	VALVE ASM, IDLE AIR CONT (IAC) (*KIT6)	.....	
71.		N.S.	GASKET, IAC VALVE ASM (*KIT1 KIT2, KIT3, KIT4, KIT6)	.....	

SERVICE KITS

1.	4-A28	3.335	BODY KIT, (1985-88) -INCL #10, 15, 16, 17, 43, 63, 71. (AC-DELCO #17110843)	.....	17110843
	4-A28	3.335	BODY KIT, (1987-88) -INCL #10, 15, 16, 17, 43, 63, 71. (AC-DELCO #17110849)	.....	17110849
	4-A28	3.335	BODY KIT, (1989) -INCL #10, 15, 16, 17, 43, 63, 71. (AC-DELCO #17112126)	.....	17112126
	4-A29	3.335	BODY KIT, (1990-91) -INCL #10, 15, 16, 17, 43, 63, 71. (AC-DELCO #17112365)	.....	17112365
2.	4-B6	3.336	GASKET KIT, (1985-88) -INCL #43, 63, 71. (FLANGE GASKET IS NOT INCLUDED IN KIT) (AC-DELCO #40-709)	.....	17113115
	4-B6	3.336	GASKET KIT, (1989-91) -INCL #43, 63, 71. (FLANGE GASKET IS NOT INCLUDED IN KIT) (AC-DELCO #40-709)	.....	17113115
3.	4-B7	3.337	COVER KIT, CLEAN AIR (1985-88) -INCL #41, 43, 63, 71. (AC-DELCO #17110846)	.....	17110846
	4-B7	3.337	COVER KIT, CLEAN AIR (1989-91) -INCL #41, 43, 63, 71. (AC-DELCO #17112134)	.....	17112134
4.	4-B7	3.337	COVER KIT, COOLANT IDLE AIR (1985-88) -INCL #43, 61, 63, 71. (AC-DELCO #17110847)	.....	17110847
	4-B7	3.337	COVER KIT, COOLANT IDLE AIR (1989-91) -INCL #43, 61, 63, 71. (AC-DELCO #17112127)	.....	17112127
5.	4-B8	3.339	SENSOR KIT, THROTTLE POSITION (1985-89) -INCL #20, 21, 22. (AC-DELCO #213-905)	.....	17111606
	4-B8	3.339	SENSOR KIT, THROTTLE POSITION (1990-91) -INCL #20, 21, 22. (AC-DELCO #213-908)	.....	17112368
6.	4-B7	3.338	VALVE KIT, IDLE AIR CONTROL (1985-88) -INCL #70, 71. (USE W/ 12085506) (AC-DELCO #217-437)	.....	25527077
	4-B7	3.338	VALVE KIT, IDLE AIR CONTROL (1989-91) -INCL #70, 71. (AC-DELCO #217-415)	.....	17112193

© 2000 GENERAL MOTORS SERVICE PARTS OPERATIONS-CHEVROLET-14Y

7.	4-B6	3.336	FASTENER ASSORT KIT, (1985-00) -INCL. #21, 22, 42, 62. (AC-DELCO #17110848) ...	.....	17110848
	4-B6	3.336	FASTENER ASSORT KIT, (1990-01) -INCL. #21, 22, 42, 62. (AC-DELCO #17112369) ...	....	17112369

RPO DEFINITIONS
L08 -- ENGINE, 5.7L, (5.7-8) 350 CID, V8, TPI

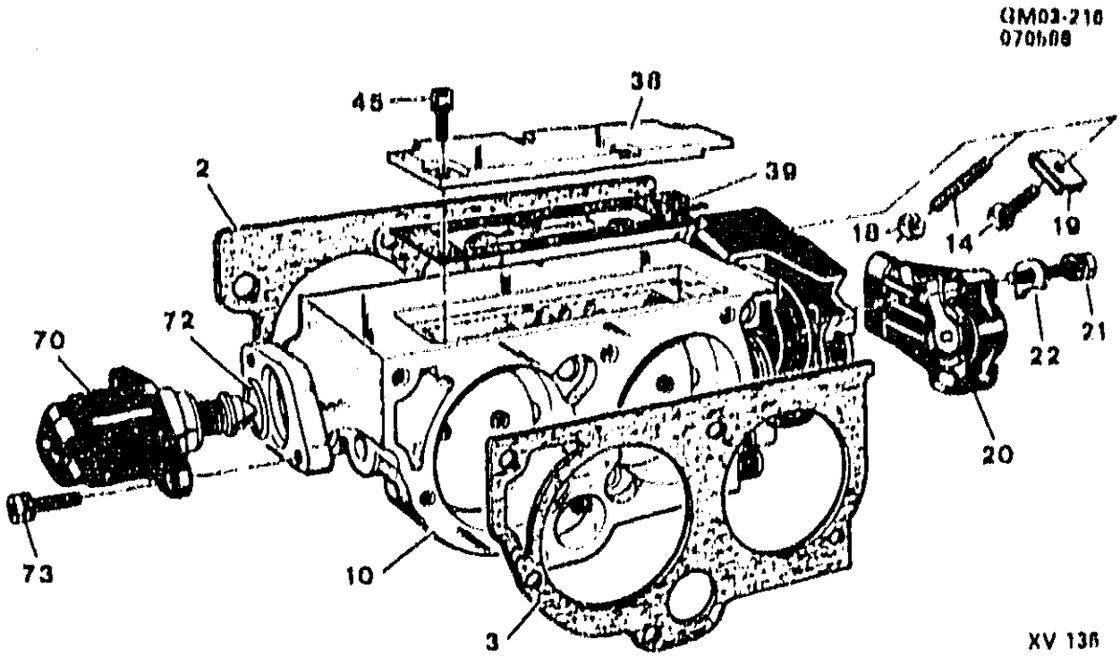

GM03-216

1990-1991 Y THROTTLE BODY/MPFI (MODEL B310)(LT5)

2.	4-B6	3.336	GASKET, THROTTLE BODY (PLENUM) (*KIT1, KIT2, KIT4)	10168660
3.	4-B6	3.336	GASKET, THROTTLE BODY (INTAKE) (*KIT1, KIT2, KIT4)	10067750
10.		N.S.	THROTTLE BODY ASSEMBLY (*KIT1)	
14.		N.S.	SCREW, IDLE STOP (*KIT1, KIT6)	
18.		N.S.	NUT, IDLE STOP (*KIT1, KIT6)	
19.		N.S.	CLIP, IDLE STOP SCREW (*KIT1, KIT6)	
20.		N.S.	SENSOR, THROTTLE POSITION (TPS) (*KIT1, KIT6)	
21.		N.S.	SCREW ASM, TPS ATTACHING (*KIT1, KIT6)	
22.		N.S.	RETAINER, TPS ATTACHING SCREW (*KIT1, KIT6)	
38.		N.S.	PLATE, COOLANT COVER (*KIT1, KIT4)	
39.		N.S.	GASKET, COOLANT COVER (*KIT1, KIT2, KIT4)	
45.		N.S.	SCREW ASM, COOLANT COVER ATTACHING (*KIT1, KIT6)	
70.		N.S.	VALVE ASM, IDLE AIR CONTROL (IAC) (*KIT1, KIT3)	
72.		N.S.	O-RING, IDLE AIR CONTROL VALVE (*KIT1, KIT2, KIT4)	
73.		N.S.	SCREW ASM, IDLE AIR CONTROL VALVE ATTACHING (*KIT1, KIT6)	

SERVICE KITS

1.	4-A28	3.335	BODY KIT, INCL #2, 3, 10, 14, 18, 19, 20, 21, 22, 38, 39, 45, 70, 72, 73 (AC-DELCO #17112264)	17112264
2.	4-B6	3.336	GASKET KIT, INCL #2, 3, 39, 72 (AC-DELCO #40-738)	17112267
3.	4-B7	3.338	VALVE KIT, IDLE AIR CONTROL-INCL #70 (AC-DELCO #217-419)	17112350
4.	4-B7	3.337	COVER KIT, COOLANT-INCL #2, 3, 38, 39, 72 (AC-DELCO #17112265)	17112265
5.	4-B8	3.339	SENSOR KIT, THROTTLE POSITION-INCL #20 (AC-DELCO #213-792)	17112720
6.	4-B6	3.336	FASTENER ASSORT KIT, INCL #14, 18, 19, 21, 22, 45, 73 (AC-DELCO #17112266)	17112266

© 2000 GENERAL MOTORS SERVICE PARTS OPERATIONS-CHEVROLET-14Y

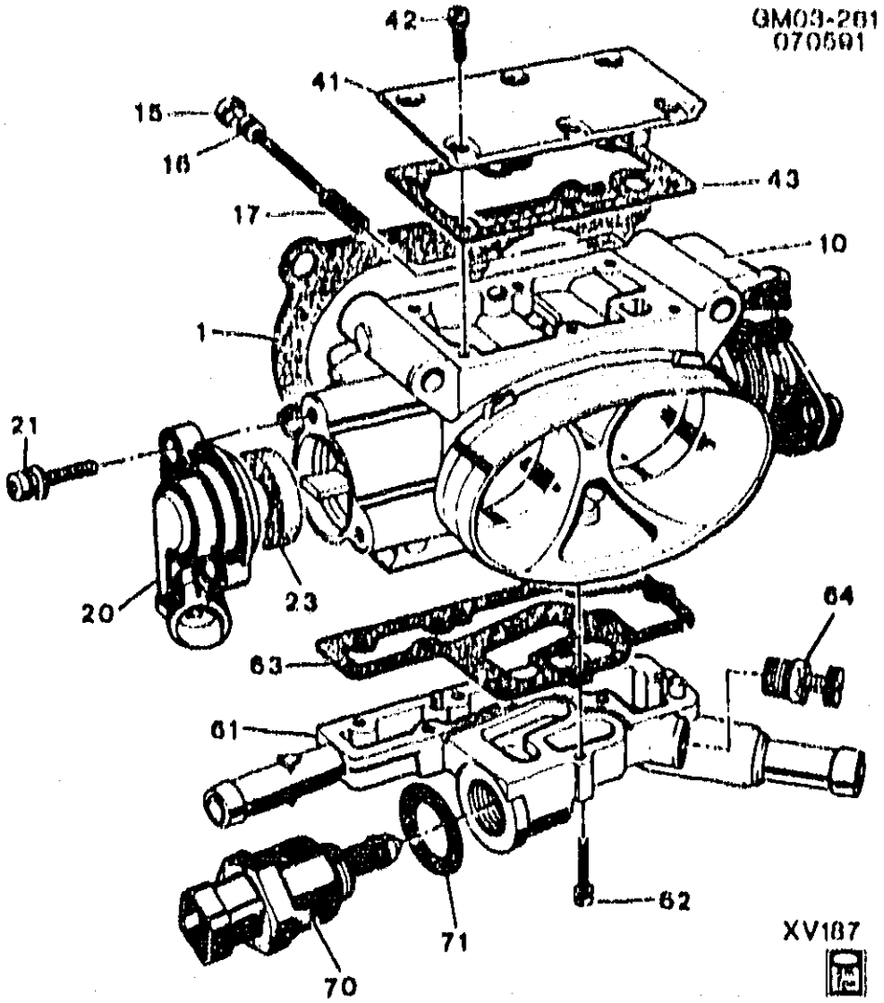

GM03-261

1992-1993 Y THROTTLE BODY/MPFI (MODEL B210)(5.7P)(LT1)

1.	N.S.	**GASKET**, FLANGE (THROT BODY TO MNFLD) (*KIT1, KIT2, KIT3, KIT4)	
10.	N.S.	**THROTTLE BODY ASM** (*KIT1)	
15.	N.S.	**PLUG**, IDLE STOP SCREW (*KIT1)	
16.	N.S.	**SCREW**, IDLE STOP (*KIT1)	
17.	N.S.	**SPRING**, IDLE STOP SCREW ASM (*KIT1)	
20.	N.S.	**SENSOR**, THROTTLE POSITION (TPS) (*KIT1, KIT6)	
21.	N.S.	**SCREW**, TPS ATCH (*KIT1, KIT5, KIT6)	
23.	N.S.	**SEAL**, STATIC (*KIT1)	
41.	N.S.	**COVER**, CLEAN AIR (*KIT1, KIT3)	
42.	N.S.	**SCREW**, CLEAN AIR COVER ATCH (*KIT1, KIT5)	
43.	N.S.	**GASKET**, CLEAN AIR COVER (*KIT1, KIT2, KIT3, KIT4)	
61.	N.S.	**COVER**, IACV COOLANT (*KIT1, KIT3, KIT4)	

62.		N.S.	SCREW, IACV COVER ASM TO THROT BODY (*KIT1, KIT6)				
63.		N.S.	GASKET, IACV COOLANT COVER TO THROT BODY (*KIT1, KIT2, KIT3, KIT4)				
64.	4-B7	3.338	VALVE, INT MANIF RUNNER CONT (*KIT1) (AC-DELCO #17101908)	92-93	Y (LT1)	1	17101908
70.		N.S.	VALVE, IDLE AIR CONT (IACV) (*KIT1, KIT7)				
71.		N.S.	GASKET, IACV (*KIT1, KIT2, KIT3, KIT4, KIT7)				

SERVICE KITS

1.	4-D13	3.729	BODY KIT, THROT (INCL #1-71) (3.336) (AC-DELCO #17092076)	92-93	Y (LT1)	1	17092076
2.	4-B6	3.336	GASKET KIT, THROT BODY (INCL #1, 43, 63, 71) (AC-DELCO #40-742)	92	Y (LT1)	1	17112633
	4-B6	3.336	GASKET KIT, THROT BODY (INCL #1, 43, 63, 71) (AC-DELCO #40-742)	93	Y (LT1, MD8, ML9)	1	17112633
3.	4-B7	3.337	COVER KIT, THROT BODY (INCL #1, 41, 43, 61, 63, 71) (AC-DELCO #17112631)	92-93	Y (LT1)	1	17112631
4.	4-B7	3.338	HOUSING KIT, IDLE AIR C/VLV (W/GSKT) (INCL #1, 43, 61, 63, 71) (3.337) (AC-DELCO #17112675)	92-93	Y (LT1)	1	17112675
5.	4-B6	3.336	ATTACHMENT KIT, THROT BODY (INCL #21, 42, 62) (AC-DELCO #17112632)	92-93	Y (LT1)	1	17112632
6.	4-B8	3.339	SENSOR KIT, THROT POSN (INCL #20, 21) (AC-DELCO #213-896)	92-93	Y (LT1)	1	17106682
7.	4-D13	3.820	VALVE KIT, IDLE AIR CONT (THROT BODY) (INCL #70, 71) (3.338) (AC-DELCO #217-415)	92	Y (LT1)	1	17112193
	4-D13	3.820	VALVE KIT, IDLE AIR CONT (THROT BODY) (INCL #70, 71) (3.338) (AC-DELCO #217-415)	93	Y (LT1, MD8)	1	17112193
	4-D13	3.820	VALVE KIT, IDLE AIR CONT (THROT BODY) (INCL #70, 71) (3.338) (AC-DELCO #217-415)	93	Y (LT1, ML9)	1	17112193

RPO DEFINITIONS

LT1 - ENGINE-GAS, 8 CYL, 5.7L(5.7P),MFI,HO
MD8 - TRANSMISSION,AUTOMATIC 4-SPEED(THM700R4/4L60)
ML9 - TRANSMISSION,MANUAL 6-SPEED

© 2000 GENERAL MOTORS SERVICE PARTS OPERATIONS - CHEVROLET - 14Y

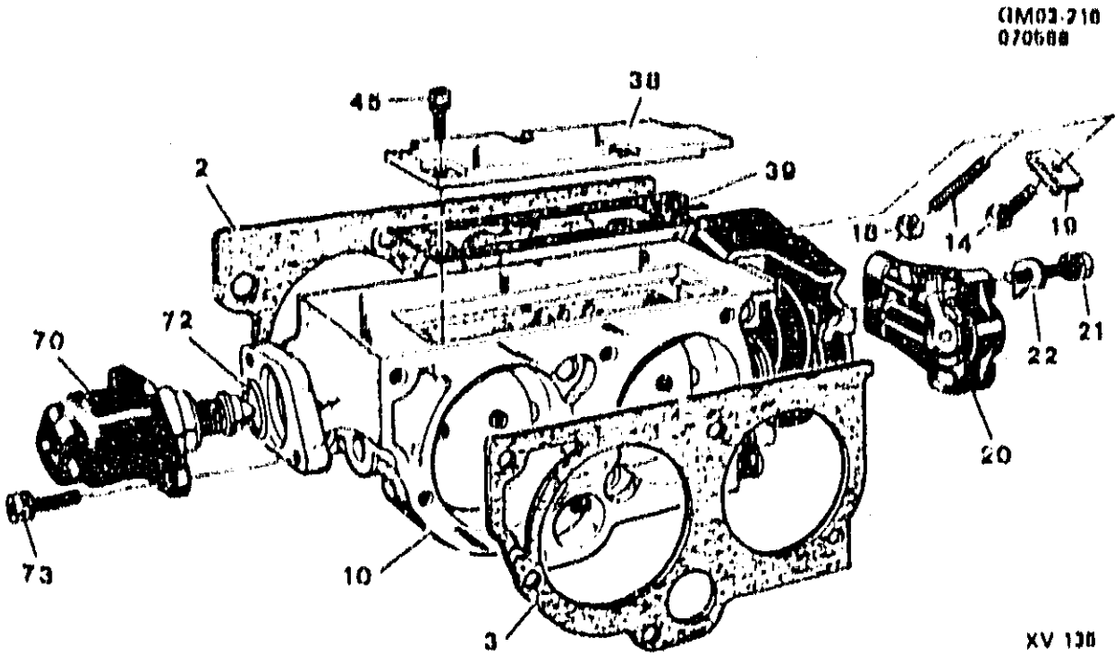

GM03-2161

1992-1995 Y THROTTLE BODY/MPFI (MODEL B310)(5.7J)(LT5)

2.	4-B6	3.336	**GASKET**, THROT BODY (PLENUM) (*KIT1, KIT2, KIT4)	92-95	Y	1	10168660
3.	4-B6	3.336	**GASKET**, THROT BODY (INTAKE) (*KIT1, KIT2, KIT4) (3.335)	92-95	Y	1	10067759
10.		N.S.	**THROTTLE BODY ASSEMBLY** (*KIT1)				
14.		N.S.	**SCREW**, IDLE STOP (*KIT1, KIT6)				
18.		N.S.	**NUT**, IDLE STOP (*KIT1, KIT6)				
19.		N.S.	**CLIP**, IDLE STOP SCREW (*KIT1, KIT6)				
20.		N.S.	**SENSOR**, THROTTLE POSITION (TPS) (*KIT1, KIT6)				
21.		N.S.	**SCREW ASM**, TPS ATTACHING (*KIT1, KIT6)				
22.		N.S.	**RETAINER**, TPS ATTACHING SCREW (*KIT1, KIT6)				
38.		N.S.	**PLATE**, COOLANT COVER (*KIT1, KIT4)				
39.		N.S.	**GASKET**, COOLANT COVER (*KIT1, KIT2, KIT4)				
45.		N.S.	**SCREW ASM**, COOLANT COVER ATTACHING (*KIT1, KIT6)				
70.		N.S.	**VALVE ASM**, IDLE AIR CONTROL (IAC) (*KIT1, KIT3)				
72.		N.S.	**O-RING**, IDLE AIR CONTROL VALVE (*KIT1, KIT2, KIT4)				
73.		N.S.	**SCREW ASM**, IDLE AIR CONTROL VALVE ATTACHING (*KIT1, KIT6)				

© 2000 GENERAL MOTORS SERVICE PARTS OPERATIONS - CHEVROLET - 14Y

SERVICE KITS

1.	4-D13	3.720	BODY KIT, THROT (INCL #2, 3, 10, 14, 18, 19, 20, 21, 22, 36, 39, 45, 70, 72, 73) (3.336) (AC-DELCO #17112204)	92-95	Y (LT5) (FOR MDL APPL AND POA SEE THROT BODY CHT) ...	1	17112204
2.	4-B6	3.336	GASKET KIT, THROT BODY (INCL #2, 3, 39, 72) (AC-DELCO #40-738)	92-95	Y (LT5)	1	17112267
3.	4-D13	3.820	VALVE KIT, IDLE AIR CONT (THROT BODY) (INCL #70) (W/SEAL) (3.336) (AC-DELCO #217-419)	92-95	Y (LT5)	1	.12350
4.	4-B7	3.337	COVER KIT, THROT BODY HT (W/GSKT) (COOLANT) (INCL #2, 3, 36, 39, 72) (AC-DELCO #17112205)	92-95	Y (LT5)	1	17112265
5.	4-B8	3.339	SENSOR KIT, THROT POSN (INCL #20) (AC-DELCO #213-792)	92-95	Y (LT5)	1	17112720
6.	4-B6	3.336	ATTACHMENT KIT, THROT BODY (INCL #14, 18, 19, 21, 22, 45, 73) (AC-DELCO #17112266)	92-95	Y (LT5)	1	17112266

RPO DEFINITIONS
LT5 - ENGINE,5.7L(5.7J),TPI

GM03-275 05/05/93

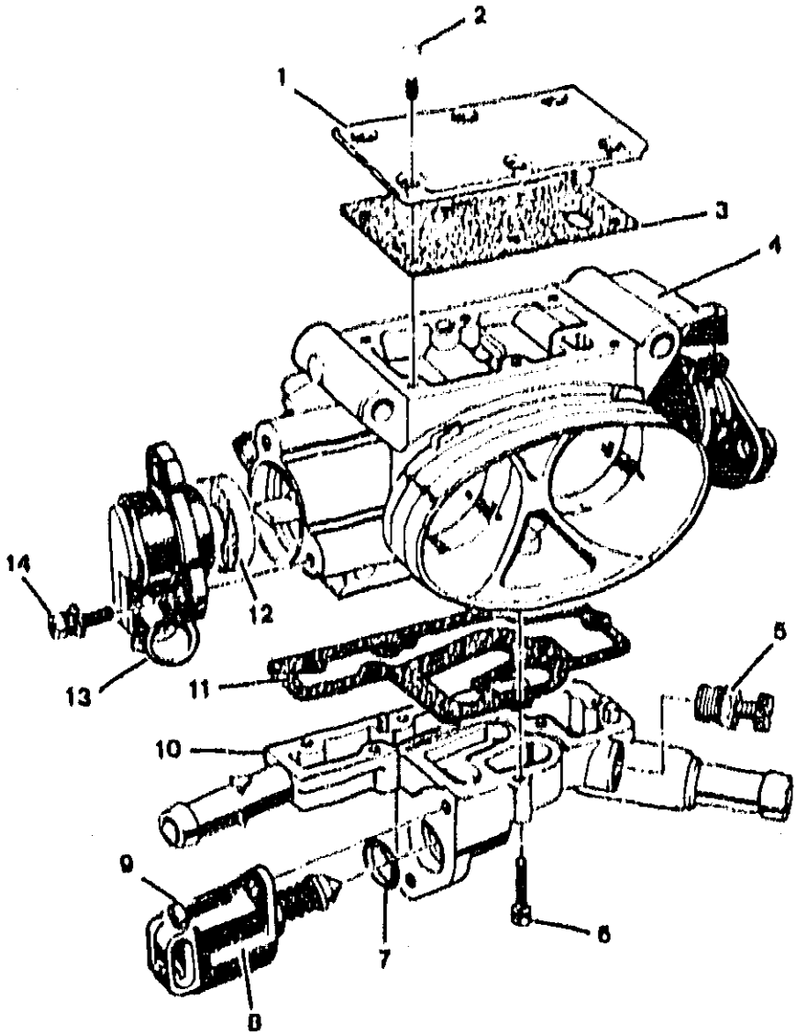

GM03-275

1994-1996 Y THROTTLE BODY/MPFI (MODEL B210)(5.7P/LT1)

1.	N.S.	**COVER**, CLEAN AIR (*KIT1, KIT3)	
2.	N.S.	**SCREW**, CLEAN AIRCOVER ATTACHING (*KIT1, KIT5)	
3.	N.S.	**GASKET**, CLEAN AIRCOVER (*KIT1, KIT2, KIT3)	
4.	N.S.	**THROTTLE**, BODY ASM (*KIT1)	
5.	N.S.	**VALVE ASM**, AIR VENT (*KIT1, KIT8)	
6.	N.S.	**SCREW**, IACV/COOLANT COVER ATTACHING (*KIT1, KIT5)	
7.	N.S.	**SEAL**, O RING IAC VALVE ASM (*KIT1, KIT7)	
8.	N.S.	**VALVE**, IDLE AIR CONTROL (IAC) (*KIT1, KIT7)	
9.	N.S.	**SCREW**, IAC VALVE ATTACHING (*KIT1, KIT5)	
10.	N.S.	**COVER**, IACV/COOLANT (*KIT1, KIT4)	

© 2000 GENERAL MOTORS SERVICE PARTS OPERATIONS - CHEVROLET - 14Y

11.		N.S.	GASKET, IACV/COOLANT COVER TO THROTTLE BODY (*KIT1, KIT2, KIT4)				
12.		N.S.	SEAL, STATIC (*KIT1)				
13.		N.S.	SENSOR, THROTTLE POSITION (TP) (*KIT1, KIT6)				
14.		N.S.	SCREW, TP SENSOR ATTACHING (*KIT1, KIT6)				

SERVICE KITS

1.	4-A26	3.336	BODY, THROT (INCL #1-14)	94	Y (LT1)	1	17094051
	4-A26	3.336	BODY, THROT (INCL #1-14) (AC-DELCO #17095239)	95	Y (LT1)	1	17095239
	4-A26	3.336	BODY, THROT (INCL #1-14) (3.726) (AC-DELCO #17096246)	96	Y (LT1, M30)	1	17096246
2.	4-B6	3.336	GASKET KIT, THROT BODY (INCL #3, 11) (AC-DELCO #40-743)	94-95	Y (LT1)	1	17113074
	4-B6	3.336	GASKET KIT, THROT BODY (INCL #3, 11) (AC-DELCO #40-74 .)	95-96	Y (LT1)	1	17113178
3.	4-B7	3.337	COVER KIT, THROT BODY (INCL #1, 3) (AC-DELCO #17112031)	94-96	Y (LT1)	1	17112031
4.	4-B7	3.338	HOUSING KIT, IDLE AIR C/VLV (W/GSKT) (INCL #10, 11) (AC-DELCO #17113075)	94	Y (LT1)	1	17113075
	4-B7	3.338	HOUSING KIT, IDLE AIR C/VLV (W/GSKT) (INCL #10, 11) (AC-DELCO #17113187)	95-96	Y (LT1)	1	17113187
5.	4-B6	3.336	ATTACHMENT KIT, THROT BODY (INCL #2, 6, 9, 14)	94-95	Y (LT1)	1	17113076
	4-B6	3.336	ATTACHMENT KIT, THROT BODY (INCL #2, 6, 9, 14) (AC-DELCO #17113098)	96	Y	1	17113098
6.	4-B8	3.339	SENSOR KIT, THROT POSN (INCL #13) (AC-DELCO #213-911)	94-95	Y (LT1)	1	17113077
	4-C26	3.682	SENSOR, THROT BODY THROT POSN (INCL #13) (3.339) (AC-DELCO #213-894)	96	Y (LT1)	1	17106680
7.	4-D13	3.820	VALVE KIT, IDLE AIR CONT (THROT BODY) (INCL #7, 8) (3.338) (AC-DELCO #217-429)	94	Y (LT1)	1	17113099
	4-D13	3.820	VALVE KIT, IDLE AIR CONT (THROT BODY) (INCL #7, 8) (3.338) (AC-DELCO #217-433)	95-96	Y (LT1)	1	17113188
8.	4-B7	3.338	VALVE, INT MANIF RUNNER CONT (INCL #5) (AC-DELCO #17101908)	94-95	Y (LT1)	1	17101908
	4-D13	3.820	VALVE KIT, IDLE AIR CONT (THROT BODY) (INCL #5) (3.338) (AC-DELCO #217-433)	96	Y (LT1)	1	17113188

RPO DEFINITIONS
LT1 - ENGINE-GAS, 8 CYL, 5.7L(5.7P),MFI,HO
M30 - TRANSMISSION,AUTOMATIC 4 SPEED,4L60E,ELECTRONIC

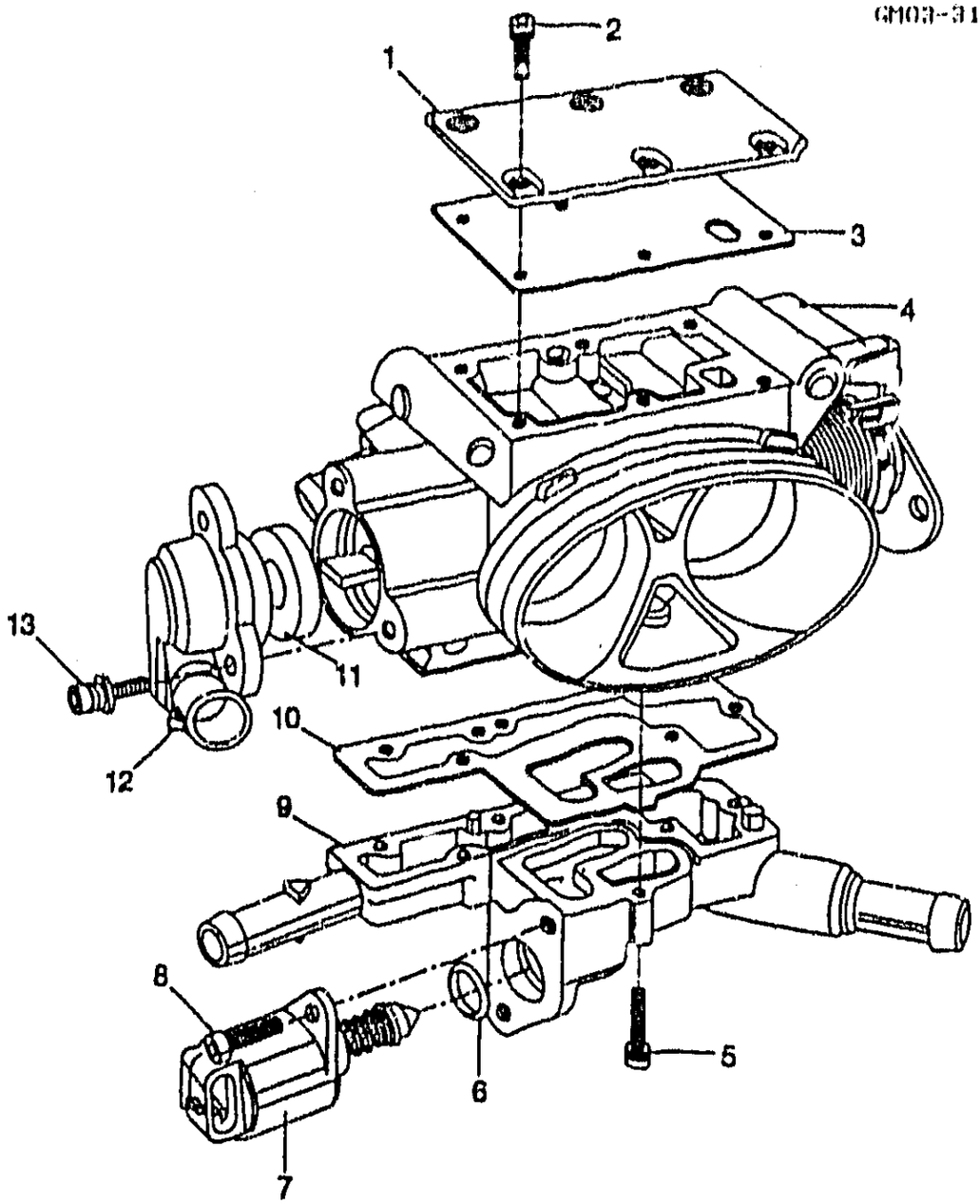

GM03-314

1996 Y THROTTLE BODY/MPFI (MODEL B21J)(LT4/5.7-5)

1.	N.S.	COVER, CLEAN AIR (*KIT1, KIT3)	.....
2.	N.S.	BOLT, CLEAN AIRCOVER ATTACHING (*KIT1, KIT5)	.....
3.	N.S.	GASKET, CLEAN AIR COVER (*KIT1, KIT2, KIT3)	.....
4.	N.S.	BODY, THROTTLE (*KIT1)	.....
5.	N.S.	BOLT, IACV/COOLANT COVER ATTACHING (*KIT1, KIT5)	.....
6.	N.S.	SEAL, IACV/ VALVE (O-RING) (*KIT1, KIT6)	.....
7.	N.S.	VALVE, IDLE AIR CONTROL (IAC) (*KIT1, KIT6)	.....

© 2000 GENERAL MOTORS SERVICE PARTS OPERATIONS-CHEVROLET-14Y

8.		N.S.	BOLT, IAC VALVE ATTACHING (*KIT1, KIT5)				
9.		N.S.	COVER, IACV ,COOLANT (*KIT1, KIT4)				
10.		N.S.	GASKET, IACV/COOLANTCOVER TO THROTTLE BODY (*KIT1, KIT2, KIT4)				
11.		N.S.	SEAL, STATIC (*KIT1, KIT2)				
12.	4-B8	3.339	SENSOR, THROT BODY THROT POSN (*KIT1) (AC-DELCO #213-894)	96	Y	1	17106680
13.		N.S.	BOLT, TP SENSOR ATTACHED (*KIT1, KIT5)				

SERVICE KITS

1.	4-A28	3.335	BODY, THROT (INCL # 1, 2, 3, 4, 5, 6, 7, 8, 9, 10, 11, 12, 13) (3.720) (AC-DELCO #17096246)	96	Y (LT4, ML9)	1	17096246
2.	4-B6	3.3[illegible]	GASKET KIT, THROT BODY (INCL # 3, 10, 11) (AC-DELCO #[illegible]-744)	96	Y (LT4)	1	17113170
3.	4-B7	3.337	COVER KIT, THROT BODY (INCL # 1, 3) ("GRAND SPORT" ON TOP OF CVR) (AC-DELCO #17113211)	96	Y (LT4, ML9)	1	17113211
4.	4-B7	3.336	HOUSING KIT, IDL[illegible] C/VLV (W/GSKT) (INCL # 9, [illegible]) (AC-DELCO #17113187)	96	Y (LT4)	1	17113187
5.	4-B6	3.336	ATTACHMENT KIT, THROT BODY (INCL # 2, 5, 8, 13) (AC-DELCO #17113098)	96	Y	1	17113098
6.	4-D13	3.620	VALVE KIT, IDLE AIR CONT (THROT BODY) (INCL # 6, 7) (3.336) (AC-DELCO #217-433)	96	Y (LT4)	1	17113188

RPO DEFINITIONS
LT4 – ENGINE GAS, 8 CYL, 5.7L, MFI, HIGH OUTPUT
ML9 – TRANSMISSION,MANUAL 6-SPEED

© 2000 GENERAL MOTORS SERVICE PARTS OPERATIONS-CHEVROLET-14Y

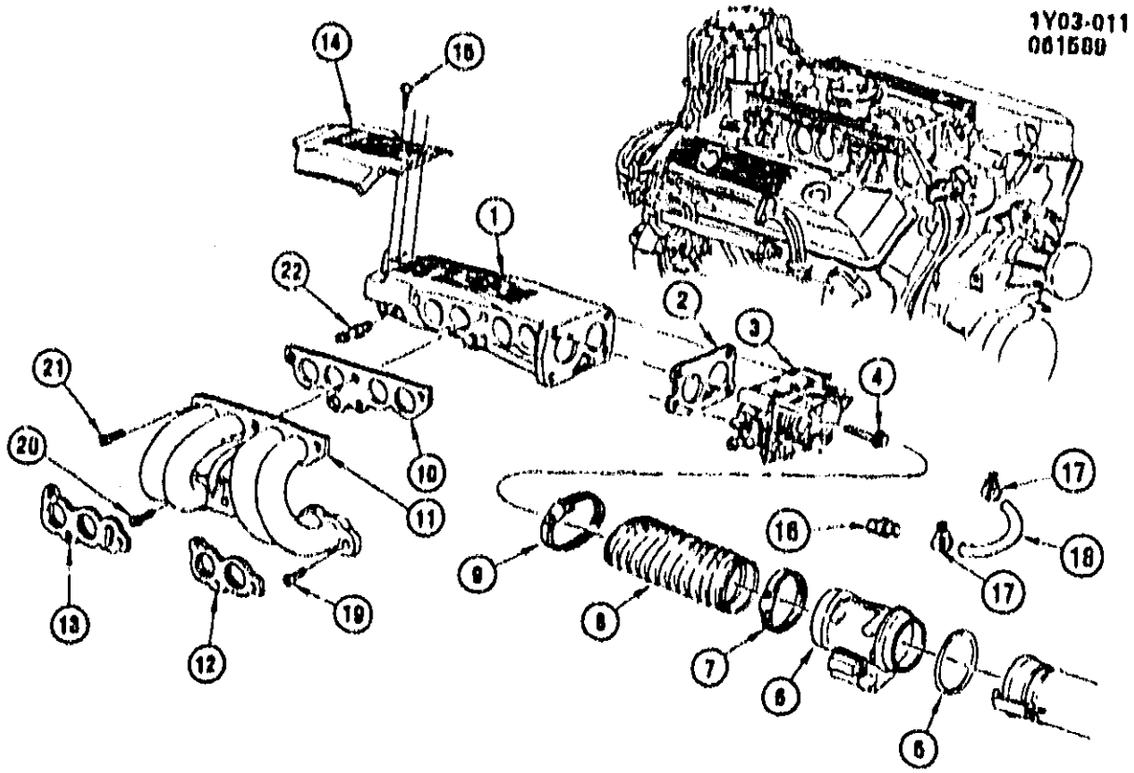

1Y03-011

1985-1991 Y AIR INTAKE SYSTEM-V8(L98)

NOTE: GASKET KIT,(14089151) CONSISTS OF ITEMS 2,10,12,13.

1.		DISCON	PLENUM, INL MANIF (1985-88)	10108443
	4-A18	3.265	PLENUM, INL MANIF (1989)	10108468
	4-A18	3.265	PLENUM, INL MANIF (1990-91)	10077151
2.	4-B6	3.336	GASKET, THROT BODY (1985-88) (AC-DELCO #40-718)	10105379
	4-B6	3.336	GASKET, THROT BODY (1989-91) (AC-DELCO #40-717)	10105351
3.		N.S.	BODY, THROT (SERVICED BY COMPONENTS) (SEE GROUP 3.000 "THROTTLE BODY/MPFI (MODELS T2A, B210) " FOR DETAIL ILLUSTRATED VIEW.)	
4.		8.900	BOLT, HFH (M8X1.25X70) 9.8 POR (1985-86)	11509966
		8.900	BOLT, HEX FLG HD (M8X1.25X70 10.9 17.6 OD 6174M (AR)	11509516
5.	4-B11	3.415	SEAL, MASS AIR FLOW SEN (1985-89)	14081880
6.	4-C26	3.682	SENSOR, MASS AIR FLOW (1985) (AC-DELCO #213-162)	14081243
	4-C26	3.682	SENSOR, MASS AIR FLOW (1986-87) (AC-DELCO #213-163)	14094712
	4-C26	3.682	SENSOR, MASS AIR FLOW (1988-89) (AC-DELCO #213-161)	10055877
7.		8.948	CLAMP, WORM GR (65.1 TO 89.9) SST BLA OX (1985-89)	14081883
	4-B11	3.417	CLAMP, INTER AIR INT DUCT (1990-91)	14104556
8.	4-B11	3.417	DUCT, AIR INT RR (1985-89)	14081891
	4-B11	3.417	DUCT, AIR INT INTER (1990-91)	10108444
9.	4-B11	3.417	CLAMP, AIR INT DUCT RR (1985-86)	10146826
	4-B11	3.417	CLAMP, RR INT AIR DUCT (UPC/FNA: CLAMP, RR AIR INT DUCT)	10146826
	4-B11	3.417	CLAMP, RR INT AIR DUCT (UPC/FNA: CLAMP, RR AIR INT DUCT)	10146826
10.	4-A19	3.270	GASKET KIT, INT MANIF PLNM (1985-89)	12508751
		N.S.	GASKET KIT, INT MANIF PLNM (1990) (USE 10148096) (3.270)	
	4-A19	3.270	GASKET KIT, INT MANIF (FOA (1991))	12525814
11.		DISCON	TUBE, INL MANIF-LH (1985-88)	14081007
	4-A18	3.265	TUBE, INT MANIF (1989-91) LH	10108469
		DISCON	TUBE, INT MANIF (1985-91) RH	14081008

© 2000 GENERAL MOTORS SERVICE PARTS OPERATIONS-CHEVROLET-14Y

				1Y03-011
12.	4-A19	3.270	GASKET KIT, INT MANIF TUBE FRT	10174951
13.	4-A19	3.270	GASKET KIT, INT MANIF TUBE RR	10174951
14.	4-A18	3.265	EXTENSION, INL MANIF PLNM	10100425
15.	4-A20	3.275	BOLT, INL MANIF PLNM EXTN	14081125
16.	4-N23	0.066	VALVE, HTR WAT FLOW CONT (AC-DELCO #15-6372)	22532158
17.		0.940	CLAMP, WORM GR (15.7 TO 31.8) SST (AC-DELCO #12337801)	12337801
18.	4-B7	3.337	HOSE, T.B. HTR	10100509
19.	4-A20	3.275	BOLT, INL MANIF TUBE (M8X1.25X34.5)	14081015
20.	4-A20	3.275	BOLT, INL MANIF TUBE (M8X1.25X64.4)	14081017
21.	4-A20	3.275	BOLT, INL MANIF TUBE (M8X1.25X30)	14081014
22.	4-A21	3.278	FITTING, INL MANIF VAC (IN PLNM)	14082470

RPO DEFINITIONS
L08 -- ENGINE, 5.7L, (5.7-8) 350 CID, V8, TPI

MICROFICHE INDEX

GROUP 3.000

FICHE 4 OF 11

GROUP	DESCRIPTION	STARTING GRID LOCATION PARTS	ILLUSTRATIONS
–	GENERAL INFORMATION	1–A2	1–G2
–	ALPHABETICAL INDEX	1–B13	N.A.
3.000	FUEL TANK – INTAKE MANIFOLD – FUEL INJECTION – THROTTLE BODY – AIR CLEANER – ACCELERATOR	4–A2	4–E2
3.000	EXHAUST & EMISSIONS SYSTEMS – CARBURETOR – CRUISE – FUEL FILTER & PUMP	4–C2	4–H2
–	OUT OF FICHE CALLS	N.A.	4–M9

4–G1

1Y03-026
021380

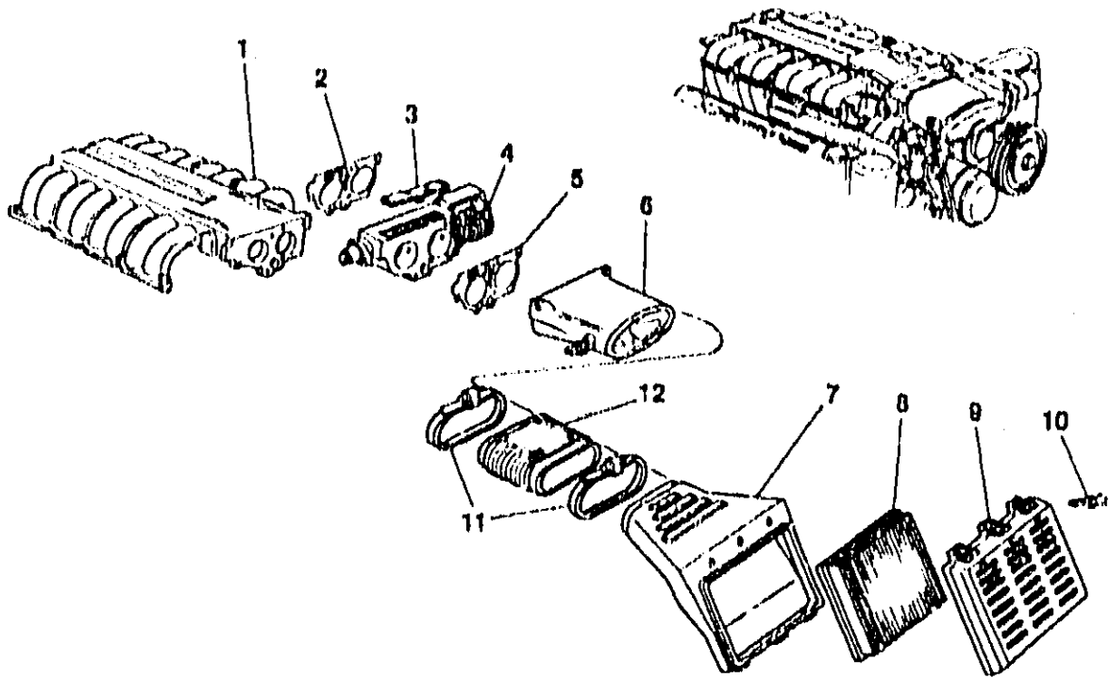

1Y03-026

1990-1995 Y AIR INTAKE SYSTEM V8(LT5)

1.	4-A18	3.265	PLENUM, INT MANIF (W/O FITTINGS, HOSES, ETC.)	90-92	Y (LT5)	1	10090512
	4-A18	3.265	PLENUM, INT MANIF	93-95	Y (LT5)	1	12522045
2.	4-B6	3.336	GASKET, THROT BODY (PLENEM)	90-95	Y	1	10168680
3.	4-B7	3.338	COVER, INT MANIF RUNNER C/VLV LNKG (3.415)	90-95	Y (LT5)	2	10110925
4.		N.S.	BODY, THROT (SEE GROUP 3.000 "THROTTLE BODY/MPFI (MODEL B310) " FOR DETAIL ILLUSTRATED VIEW.)		.....		
5.	4-B6	3.336	GASKET, THROT BODY (INTAKE) (3.335)	90-95	Y	1	10067759
6.	4-A28	3.335	HORN, THROT BODY AIR (CPS) (3.407)	90	Y (LT5)	1	10140623
	4-A28	3.335	HORN, THROT BODY AIR (CPS) .	91-95	Y (LT5)	1	12509722
	4-B10	3.407	RETAINER, A/CL OTLT DUCT ADAP BOLT	90-95	Y (LT5)	4	10110935
7.	4-B11	3.417	DUCT, FRT INT AIR (WHEN USING IN PLACE OF 14104555, MUST BLOCK OFF HOSE CONN.)	90-95	Y (LT5)	1	12553505
8.	4-B10	3.410	ELEMENT, A/CL (A1097C) (AC-DELCO #A1097C)	90-95	Y (LT5)	1	25096933
9.	4-B10	3.410	COVER, A/CL HSG	90-95	Y (LT5)	1	12552873
10.	4-B10	3.410	BOLT, A/CL HSG CVR (CTR POSITION) (48MM LG) (3.403) ...	90-95	Y	1	14104835
	4-B10	3.410	BOLT, A/CL HSG CVR (OUTBOARD POSITIONS) (63MM LONG)	90-95	Y	2	12550915

© 2000 GENERAL MOTORS SERVICE PARTS OPERATIONS-CHEVROLET-14Y

							1Y03-026
11.	4-B11	3.417	CLAMP, INTER INT AIR DUCT ...	90-95	Y (LT6)	2	14104556
12.	4-B11	3.417	DUCT, INTER INT AIR	90-95	Y (LT6)	1	14104557

RPO DEFINITIONS
LT6 – ENGINE,5.7L(5.7J),TPI

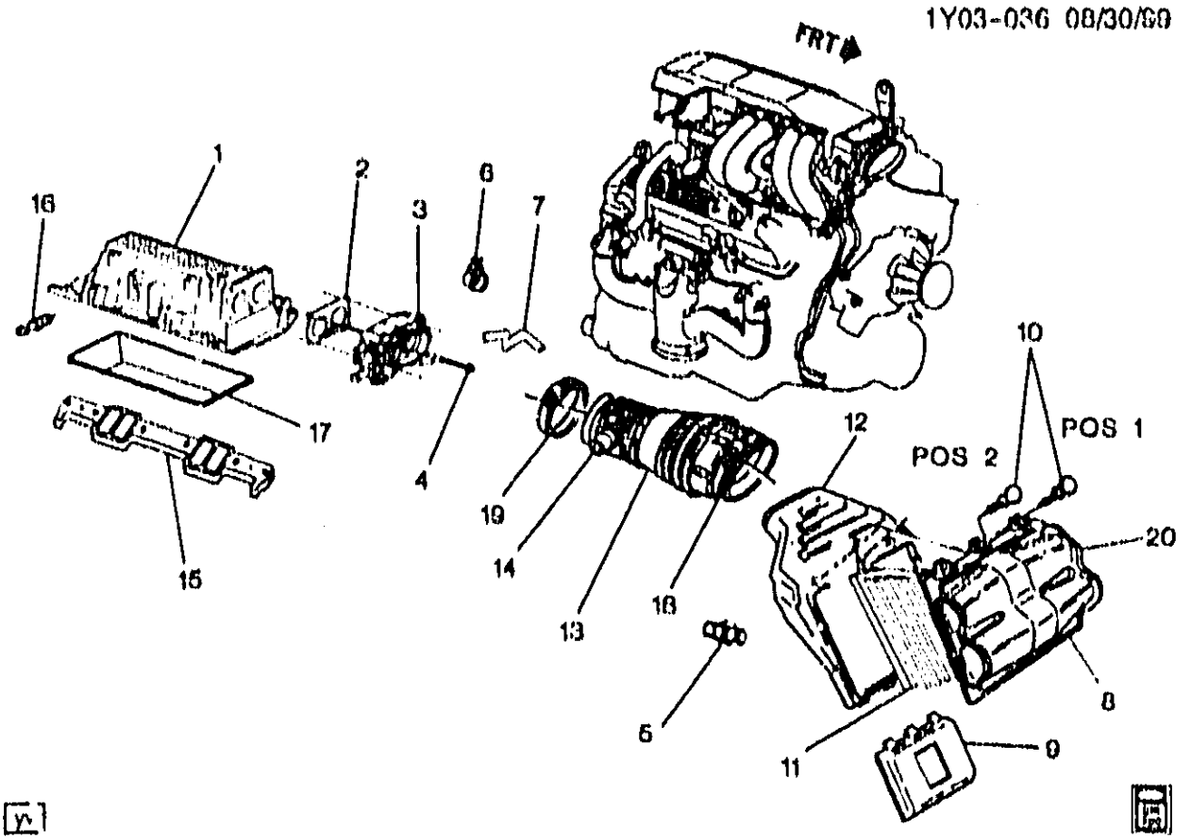

1Y03-036

1992-1993 Y AIR INTAKE SYSTEM-V8(LT1)

1.	4-A18	3.265	MANIFOLD, INT (INCLS 17)	92	Y (LT1)	1	12518284
	4-A18	3.265	MANIFOLD, INT (INCLS 17)	93	Y (LT1, MD8)	1	12518284
	4-A18	3.265	MANIFOLD, INT (INCLS 17)	93	Y (LT1, ML9)	1	12518284
2.	4-B6	3.336	GASKET, THROT BODY (AC-DELCO #40-718)	92-93	Y (LT1)	1	10105379
3.		N.S.	INJECTOR, M/PORT FUEL (SEE GROUP 3.000 "THROTTLE BODY/MPFI" FOR DETAIL ILLUSTRATED VIEW)		.....		
4.	4-B6	3.336	BOLT, THROT BODY (HFH M8X1.25X65 9.8 POR 17.6 OD) (8.900)	92-93	Y (LT1)	4	11508083
5.	4-N23	8.866	VALVE, HTR WAT FLOW CONT (W/O HOSE) (AC-DELCO #15-5423)	92-93	Y (LT1)	1	10157988
	4-N25	9.795	VALVE, HTR WAT FLOW CONT (W/O HOSE) (8.866) (AC-DELCO #15-5423)	92-93	Y (LT1)	1	10157988
6.	4-B7	3.337	CLAMP, THROT BODY HT INL HOSE (20MM) (STAMPED "20") (200N FORCE) (8.948)	92-93	Y (LT1)	2	10115739
	4-B7	3.337	CLAMP, THROT BODY HT INL HOSE (8.948)	92	Y (LT1)	1	25665982
7.	4-B7	3.337	HOSE, THROT BODY HTR INL (3.726)	92-93	Y (LT1)	1	10108618
8.	4-B11	3.417	RESONATOR, A/CL (CPS) (INCLS 9, 20)	92-93	Y (LT1)	1	10205088
		N.S.	RIVET, A/CL RESO		.....		
9.	4-B10	3.410	COVER, A/CL HSG (PART OF 8) .	92-93	Y (LT1)	1	10186111

© 2000 GENERAL MOTORS SERVICE PARTS OPERATIONS-CHEVROLET-14Y

							1Y03-036
10.	4-B10	3.410	BOLT, A/CL HSG CVR (CTR POSITION) (48MM LG) (3.403) ...	92-93	Y	1	14104035
	4-B10	3.410	BOLT, A/CL HSG CVR (OUTBOARD POSITIONS) (63MM LONG)	92-93	Y	2	12560916
11.	4-B10	3.410	ELEMENT, A/CL (A1097C) (AC-DELCO #A1097C)	92-93	Y (LT1)	1	25090333
12.	4-B11	3.417	DUCT, FRT INT AIR (WHEN USING IN PLACE OF 14104556, MUST BLOCK OFF HOSE CONN.)	92-93	Y (LT1)	1	12553505
13.	4-B11	3.417	DUCT, INTER INT AIR (INCLS 14, 18, 19)	93	Y (LT1, BAK)	1	23099264
	4-B11	3.417	DUCT, INTER INT AIR (INCLS 14, 18, 19)	93	Y (LT1)	1	25099598
	4-B11	3.417	DUCT, INTER INT AIR (MAY REQUIRE CLAMP 14104556) (INCLS 14, 18, 19)	92	Y (LT1)	1	25099598
14.	4-C26	3.662	SENSOR, INT AIR TEMP (PART OF 13) (AC-DELCO #213-243) .	92-93	Y (LT1)	1	12160244
15.	4-A19	3.270	GASKET KIT, INT MANIF	92-93	Y (LT1)	1	12524653
16.	4-A21	3.278	FITTING, INT MANIF VAC (IN PLENUM)	92-93	Y (LT1)	3	14082470
17.	4-A18	3.265	SHIELD, INT MANIF OIL SPH (PART OF 1)	92-93	Y (LT1)	1	10128305
18.	4-B11	3.417	CLAMP, INTER INT AIR DUCT (FRT) (PART OF 13)	92-93	Y (LT1)	1	14104556
19.		N.S.	CLAMP, RR INT AIR DUCT (PART OF 13)		....		
20.		N.S.	RESONATOR, A/CL (PART OF 8)		.....		

RPO DEFINITIONS
BAK – DIAGNOSTIC SYSTEM OBD 2 EMISSION REQUIREMENTS
LT1 – ENGINE-GAS, 8 CYL, 5.7L(5.7P),MFI,HO
MD8 – TRANSMISSION,AUTOMATIC 4-SPEED(THM700R4/4L60)
ML9 – TRANSMISSION,MANUAL 6-SPEED

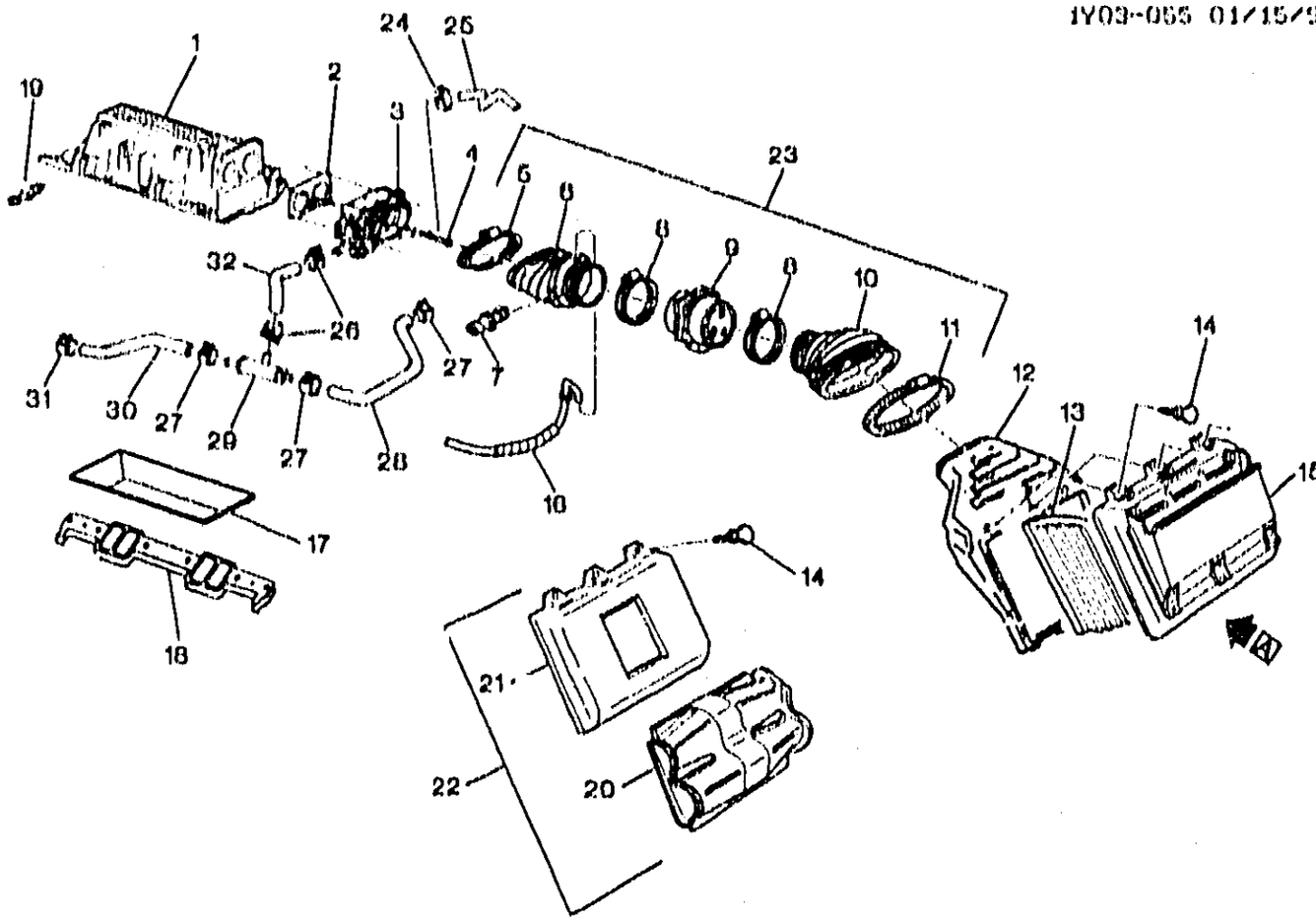

VIEW A
EXPORT

1Y03-055

1994 Y AIR INTAKE SYSTEM-V8(LT1)

1.	4-A18	3.265	MANIFOLD, INT	94 Y (LT1)	1	12552137
2.	4-B6	3.336	GASKET, THROT BODY (AC-DELCO #40-718)	94 Y (LT1)	1	10105379
3.		N.S.	INJECTOR, M/PORT FUEL (SEE GROUP 3.000 "THROTTLE BODY/MPFI" FOR DETAILED ILLUSTRATED VIEW.)	.....		
4.		8.900	BOLT, HFH M8X1.25X65 9.8 POR (THROT BODY)	94	AR	11508083
5.		N.S.	CLAMP, DUCT TO TBI (PART OF 23)	.....		
6.		N.S.	DUCT, RR INT AIR (PART OF 23) .	.....		
7.	4-C26	3.682	SENSOR, INT AIR TEMP (AC-DELCO #213-243)	94 Y (LT1)	1	12160244
8.		N.S.	CLAMP, MASS AIR FLOW SENSOR TO DUCT (PART OF 23)	.....		
9.	4-C26	3.682	SENSOR, MASS AIRFLOW (INCLS SNSR & 2 CLMPS) (AC-DELCO #213-252)	94 Y (LT1)	1	25008308
10.		N.S.	DUCT, MASS AIR FLOW SENSOR TO FRT DUCT (PART OF 23)	.....		
11.		N.S.	CLAMP, INTERMEDIATE DUCT TO FRT DUCT (PART OF 23)	.....		

© 2000 GENERAL MOTORS SERVICE PARTS OPERATIONS - CHEVROLET - 14Y

						1Y03-055
12.	4-B11	3.417	DUCT, FRT INT AIR (WHEN USING IN PLACE OF 14104555, MUST BLOCK OFF HOSE CONN.)	94	Y (LT1)	1 12553505
13.	4-B10	3.410	ELEMENT, A/CL (A1007C) (AC-DELCO #A1007C)	94	Y (LT1)	1 25096933
14.	4-B10	3.410	BOLT, A/CL HSG CVR (CTR POSITION) (40MM LG) (3.403)	94	Y	1 14104035
	4-B10	3.410	BOLT, A/CL HSG CVR (OUTBOARD POSITIONS) (63MM LONG)	94	Y	2 12550915
15.	4-B10	3.410	COVER, A/CL HSG	94	Y (LT1) (EXC B4H)	1 12552073
16.		N.S.	HARNESS, DISTR VAC			
17.	4-A18	3.265	SHIELD, INT MANIF OIL SPH	94	Y (LT1)	1 10120305
18.	4-A19	3.270	GASKET KIT, INT MANIF	94	Y (LT1)	1 12524653
19.	4-A21	3.278	FITTING, INT MANIF VAC (IN PLENUM)	94	Y (LT1)	3 14002470
20.		N.S.	RESONATOR, A/CL (PART OF 22)			
21.	4-B10	3.410	COVER, A/CL HSG (PART OF 22)	94	Y (LT1, B4H) (EXPORT)	1 10186111
22.	4-B11	3.417	RESONATOR, A/CL (INCLS 20, 21)	94	Y (LT1, B4H) (EXPORT)	1 10205088
23.	4-C26	3.602	SENSOR, MASS AIRFLOW (W/INT AIR TEMP SEN) (W/DUCT) (INCLS ITEM 5 THRU 11) (AC-DELCO #213-238)	94	Y (LT1)	1 25099215
24.		8.948	CLAMP, SPR (18.4MM TO 21.6MM) NOMINAL SIZE 20MM, STAMPED "20" (THROT BODY HT INL HOSE)	94		1 10115739
25.	4-B7	3.337	HOSE, THROT BODY HTR INL (3.726)	94	Y (LT1)	1 10108618
26.		8.948	CLAMP, 12 WIDE, 23 NOM DIA, 1.4 THK, SAE 1075 STL, BLACK (HTR OTLT HOSE)	94		2 25665982
27.		8.948	CLAMP, SPR (25-29MM) (HTR OTLT HOSE)	94		3 10108255
28.	4-N22	8.846	HOSE, HTR OTLT	94	Y	1 10157916
29.	4-N22	8.846	FITTING, HTR OTLT HOSE	94	Y (LT1)	1 10157918
30.	4-N22	8.846	HOSE, HTR OTLT	94	Y	1 10157915
31.		8.948	CLAMP, 28.6-86.2 DIA WORM GEAR (HTR OTLT HOSE) (AC-DELCO #12338017)	94		1 12338017
32.	4-N22	8.846	HOSE, HTR OTLT	94	Y	1 10157917

RPO DEFINITIONS
B4H – MODIFICATION–NOISE CONTROL, EXPORT
LT1 – ENGINE–GAS, 8 CYL, 5.7L(5.7P),MFI,HO

© 2000 GENERAL MOTORS SERVICE PARTS OPERATIONS–CHEVROLET–14Y

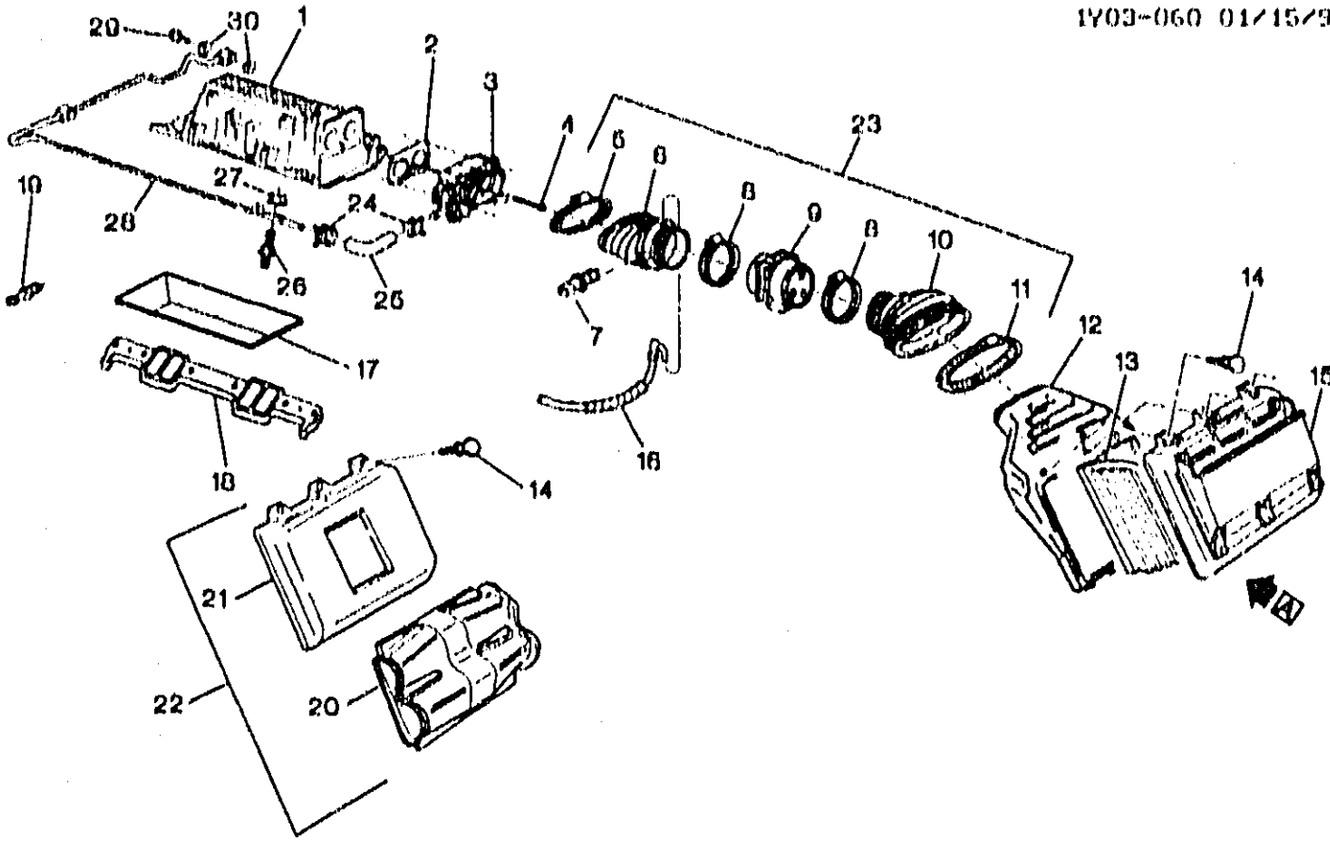

VIEW A
EXPORT

1Y03-060

1995-1996 Y AIR INTAKE SYSTEM-V8(LT1)
1996 Y AIR INTAKE SYSTEM-V8(LT4)

1.	4-A18	3.265	MANIFOLD, INT	95-96	Y (LT1)	1	12552137
	4-A18	3.265	MANIFOLD, INT	96	Y (LT4, MI9)	1	12550630
2.	4-B6	3.336	GASKET, THROT BODY (AC-DELCO #40-718)	95-96	Y (LT1)	1	10105379
	4-B6	3.336	GASKET, THROT BODY (AC-DELCO #40-718)	96	Y (LT4)	1	10105379
3.		N.S.	INJECTOR, M/PORT FUEL (SEE GROUP 3.000 "THROTTLE BODY/MPFI" FOR DETAILED ILLUSTRATED VIEW.)				
4.		8.900	BOLT, HFH M6X1.25X65 9.8 POR (THROT BODY)	95-96		AR	11508J83
5.		N.S.	CLAMP, DUCT TO TBI (PART OF 23)				
6.	4-B11	3.417	DUCT, RR INT AIR (PART OF 23) (3.407)	95	Y (LT1)	1	25147192
	4-B11	3.417	DUCT, RR INT AIR (PART OF 23) (3.407)	96	Y	1	25147192
7.	4-C26	3.682	SENSOR, INT AIR TEMP (PART OF 23) (AC-DELCO #213-243)	95	Y (LT1)	1	12160244
	4-C26	3.682	SENSOR, INT AIR TEMP (PART OF 23) (AC-DELCO #213-243)	96	Y	1	12160244
8.		N.S.	CLAMP, MASS AIR FLOW SENSOR TO DUCT (PART OF 23)				

© 2000 GENERAL MOTORS SERVICE PARTS OPERATIONS-CHEVROLET-14Y

						1Y03-060	
9.	4-C26	3.682	SENSOR, MASS AIRFLOW (INCLS SNSR & 2 CLMPS) (AC-DELCO #213-252)	95	Y (LT1)	1	25008308
	4-C26	3.682	SENSOR, MASS AIRFLOW (INCLS SNSR & 2 CLMPS) (AC-DELCO #213-252)	96	Y	1	25008308
10.		N.S.	DUCT, MASS AIR FLOW SENSOR TO FRT DUCT (PART OF 23)		.....		
11.		N.S.	CLAMP, INTERMEDIATE DUCT TO FRT DUCT (PART OF 23)		.....		
12.	4-B11	3.417	DUCT, FRT INT AIR (WHEN USING IN PLACE OF 14104565, MUST BLOCK OFF HOSE CONN.)	95-96	Y (LT1)	1	12553505
	4-B11	3.417	DUCT, FRT INT AIR	96	Y (LT4)	1	12553505
13.	4-B10	3.410	ELEMENT, A/CL (A1097C) (AC-DELCO #A1097C)	95-96	Y (LT1)	1	25006933
	4-B10	3.410	ELEMENT, A/CL (A1097C) (AC-DELCO #A1097C)	96	Y (LT4)	1	25006933
14.	4-B10	3.410	BOLT, A/CL HSG CVR (CTR POSITION) (48MM LG) (3.403) ...	95-96	Y	1	14104838
	4-B10	3.410	BOLT, A/CL HSG CVR (OUTBOARD POSITIONS) (63MM LONG)	95-96	Y	2	12550915
15.	4-B10	3.410	COVER, A/CL HSG	95-96	Y (LT1) (EXC B4H)	1	12552073
	4-B10	3.410	COVER, A/CL HSG	96	Y (LT4)	1	12552073
16.	4-M20	2.420	HARNESS, DISTR VAC (INCLS CK VLVS)	95	Y (LT1)	1	12554393
	4-M20	2.420	HARNESS, DISTR VAC	96	Y (LT1, LT4)	1	12556174
17.	4-A18	3.265	SHIELD, INT MANIF OIL SPH	95-96	Y (LT1)	1	10128305
	4-A18	3.265	SHIELD, INT MANIF OIL SPH	96	Y (LT4)	1	10128305
18.	4-A19	3.270	GASKET KIT, INT MANIF	95-96	Y (LT1)	1	12524653
	4-A19	3.270	GASKET KIT, INT MANIF	96	Y (LT4)	2	12528884
19.	4-A21	3.278	FITTING, INT MANIF VAC (IN PLENUM)	95-96	Y (LT1)	3	14082470
	4-A21	3.278	FITTING, INT MANIF VAC (IN PLENUM)	96	Y (LT4)	3	14082470
20.		N.S.	RESONATOR, A/CL (PART OF 22)		.....		
21.	4-B10	3.410	COVER, A/CL HSG (PART OF 22)	95	Y (LT1, B4H) (EXPORT)	1	10186111
	4-B10	3.410	COVER, A/CL HSG (PART OF 22)	96	Y (LT1, LT4, B4H) (EXPORT)	1	10186111
22.	4-B11	3.417	RESONATOR, A/CL (INCLS 20, 21)	95	Y (LT1, B4H) (EXPORT)	1	10205088
	4-B11	3.417	RESONATOR, A/CL (INCLS 20, 21)	96	Y (LT1, LT4, B4H) (EXPORT)	1	10205088
23.	4-B10	3.407	DUCT, A/CL OTLT (INCLS 5-11) .	95	Y (LT1)	1	25160841
	4-B10	3.407	DUCT, A/CL OTLT (INCLS 5-11) .	96	Y	1	25160841
24.		8.948	CLAMP, WORM GEAR, 1/2-13/16 (THROT BODY HT INL HOSE)	95-96	.....	2	22527587
25.	4-B7	3.337	HOSE, THROT BODY HTR INL ...	95-96	Y (LT1)	1	12553625
	4-B7	3.337	HOSE, THROT BODY HTR INL ...	96	Y (LT4)	1	12553625
26.	4-A20	3.275	STUD, INT MANIF (3/8X16X1 3/8)	95-96	Y (LT1)	3	10106420
	4-A20	3.275	STUD, INT MANIF (3/8X16X1 3/8)	96	Y (LT4)	3	10106420
27.		8.917	NUT (ENG COOL AIR BL PIPE) ..	95-96	.....	1	9442958

© 2000 GENERAL MOTORS SERVICE PARTS OPERATIONS-CHEVROLET-14Y

							1Y03-060
28.	4-M11	1.097	PIPE, ENG COOL AIR BL (INCLS 29, 30) (INCLUDES BOLTS & SEALS)	95-96	Y (LT1)	1	12556260
	4-M11	1.097	PIPE, ENG COOL AIR BL (INCLS 29, 30) (INCLUDES BOLTS & SEALS)	96	Y (LT4, ML0)	1	12556260
29.	4-M11	1.097	BOLT, ENG COOL AIR BL PIPE (PART OF 28)	95-96	Y (LT1)	2	12552974
	4-M11	1.097	BOLT, ENG COOL AIR BL PIPE (PART OF 28)	96	Y (LT4)	2	12552974
30.	4-M11	1.097	SEAL, ENG COOL AIR BL PIPE (O RING) (PART OF 28)	95-96	Y (LT1)	4	10108669
	4-M11	1.097	SEAL, ENG COOL AIR BL PIPE (O RING) (PART OF 28)	96	Y (LT4)	4	10108669

RPO DEFINITIONS
B4H – MODIFICATION–NOISE CONTROL, EXPORT
LT1 – ENGINE–GAS, 8 CYL, 5.7L(5.7P),MFI,HO
LT4 – ENGINE GAS, 8 CYL, 5.7L, MFI, HIGH OUTPUT
ML0 – TRANSMISSION,MANUAL 6-SPEED

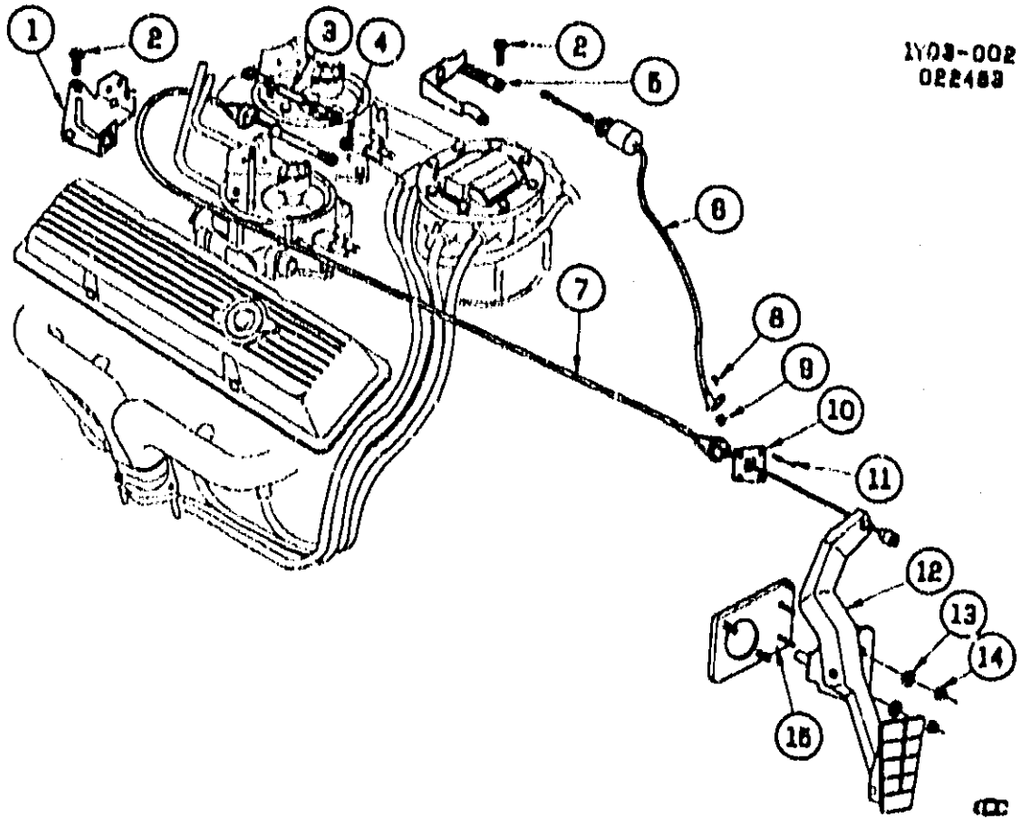

1Y03-002

1984 Y ACCELERATOR CONTROL-V8(L83)

1.		DISCON	SUPPORT, ACCEL CONT CBL	14038659
2.		8.900	BOLT, HEX FLG HD (5/16"-18 X 7/8")	
3.	4-B14	3.463	ROD KIT, THROTTLE, W/BEARING	
4.	4-B12	3.425	RETAINER, 5/32" CABLE (8.821)	15567921
5.		DISCON	BRACKET, TRANS T.V. CONT CBL	14038660
6.	4-N16	4.050	CABLE, TRANS T.V. CONT	25515601
7.	4-B12	3.430	CABLE, ACCEL CONT	10181371
8.		8.900	BOLT, HEX W/CON WA (M 6 X 1 X 20)	11509024
9.	4-N16	4.050	SEAL, TRANS T.V. CONT CBL MULTI-LIP	25518260
10.	4-B13	3.454	PLATE, ACCEL CONT CBL	14053659
11.		N.S.	RIVET	
12.	4-B13	3.451	PEDAL, ACCEL	10126447
13.	4-B13	3.452	WASHER, ACCEL PED LVR (7.833)	3771494
14.		8.915	NUT, HEX FLG (M 6 X 1 X 6.5)	3530297
15.	4-N21	6.758	PLATE, STRG COL LWR SUPT STUD	14104186

RPO DEFINITIONS
L83 - ENGINE, 5.7L (5.7-8), V8,(CFI-CROSSFIRE)(TBI)

© 2000 GENERAL MOTORS SERVICE PARTS OPERATIONS-CHEVROLET-14Y

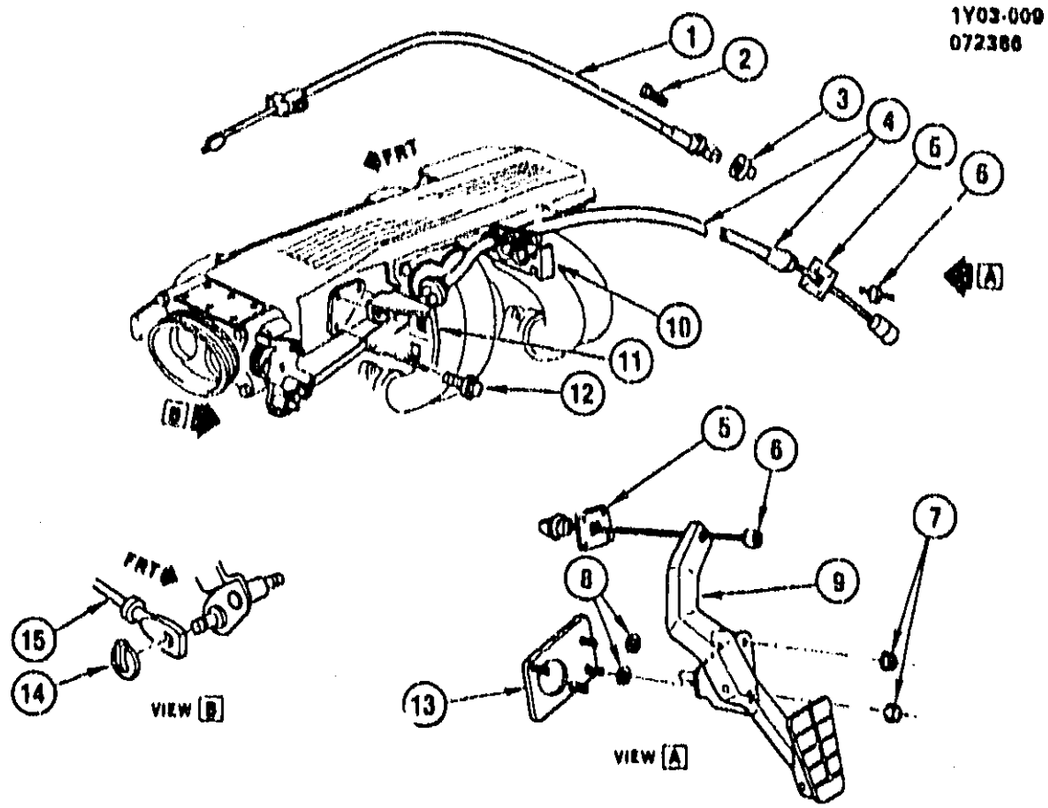

1Y03-009

1985-1991 Y ACCELERATOR CONTROL-V8(L98)

1.	4-N16	4.050	CABLE, TRANS THROT VLV (1985-88)	25521263
	4-N16	4.050	CABLE, TRANS THROT VLV (1989-91)	10163879
		DISCON	CABLE, OVERDRIVE THROTTLE VALVE (1985)	25521264
2.		8.900	BOLT, HEX W/CON WA (M6X1X20) 9.8 PZOR	11509024
3.	4-N16	4.050	SEAL, TRANS THROT VLV CBL MULTI LIP	25518260
4.	4-B12	3.430	CABLE, ACCEL CONT (1985-88)	10181278
	4-B12	3.430	CABLE, ACCEL CONT (1989-91)	10085261
5.	4-B13	3.454	PLATE, ACCEL CONT CBL	14053659
6.		N.S.	RIVET, SPECIAL	
7.		8.900	NUT, HFH (M6X1) 9 ZOR	3530297
8.	4-B13	3.454	WASHER, ACCEL PED LVR SUPT (7.833) (1985-90)	3771494
9.	4-B13	3.451	PEDAL, ACCEL (1985-88)	10126447
	4-B13	3.451	PEDAL, ACCEL (1989-91)	10060476
10.	4-M16	2.251	CLIP, ACCEL CONT CBL	8917256
11.	4-B13	3.454	BRACKET, ACCEL CONT CBL (1985-88)	14084305
	4-B13	3.454	BRACKET, ACCEL CONT CBL (1989-91)	10077566
12.		8.900	BOLT, HEX FLG HD (M6X1X12) 9.8 POR (AC-DELCO #11514149)	11514149
13.	4-N21	6.758	PLATE, STRG COL LWR SUPT STUD	14104186
14.	4-B12	3.425	RETAINER, CABLE (5/32) PHOS (8.821)	15567924
15.	4-B12	3.430	CABLE, ACCEL CONT (1985-88)	10181278
	4-B12	3.430	CABLE, ACCEL CONT (1989-91)	10085261

RPO DEFINITIONS
L98 – ENGINE, 5.7L, (5.7-8) 350 CID, V8, TPI

© 2000 GENERAL MOTORS SERVICE PARTS OPERATIONS-CHEVROLET-14Y

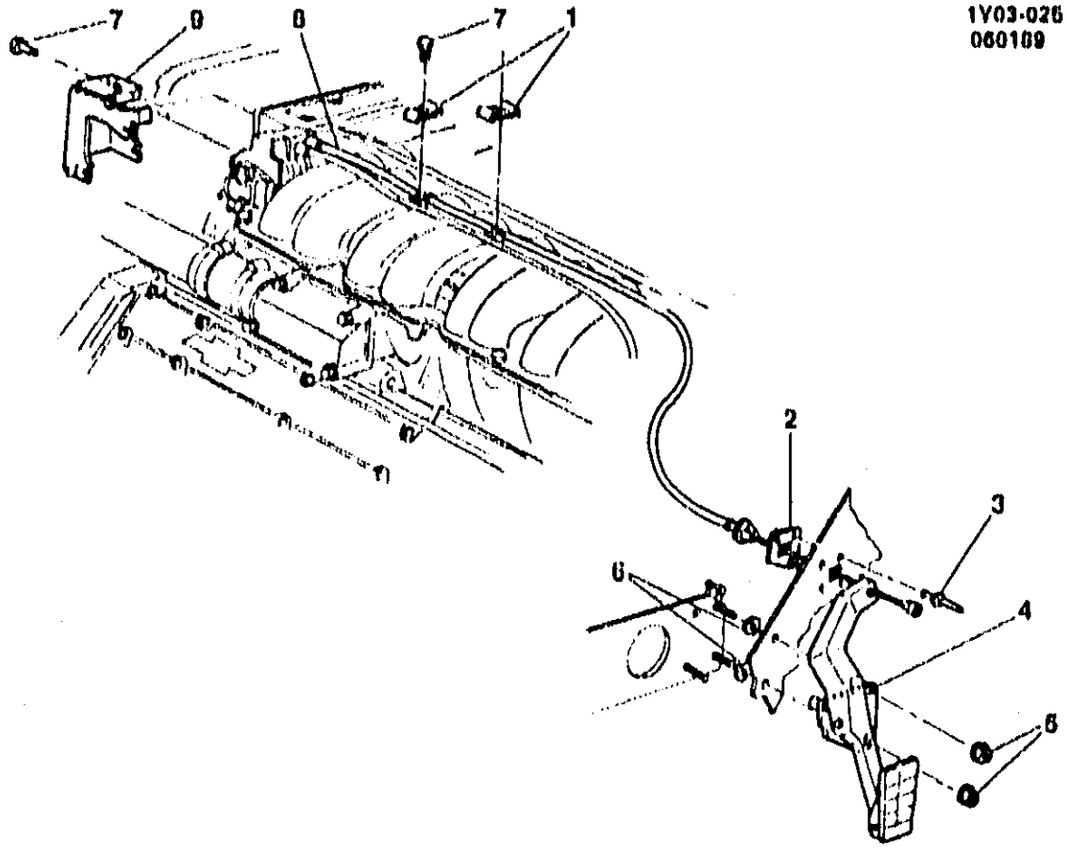

1Y03-026

1990-1991 Y ACCELERATOR CONTROL-V8(LT5)

1.	4-B12	3.425	CLIP, ACCEL CONT CBL	10135856
2.	4-B13	3.454	PLATE, ACCEL CONT CBL	14053659
3.		N.S.	RIVET, TYPE P BLIND	
4.	4-B13	3.451	PEDAL	10066476
5.		8.917	NUT, HFH M6X1X6.5 ZOR 9 (AR)	3530297
6.	4-B13	3.452	WASHER, PED LVR SUPT (7.833)	3771494
7.		8.977	SCREW, PAN 6 LOB TAP M4.2X1.4X8 PHOR (AR)	11514501
8.	4-D14	3.880	CABLE, ACCEL CONT & CR/CONT SERVO (3.430)	10150042
9.	4-B14	3.469	SHIELD, ACCEL CONT CBL SPH	10150018

RPO DEFINITIONS
LT5 - ENGINE,5.7L(5.7J),TPI

© 2000 GENERAL MOTORS SERVICE PARTS OPERATIONS-CHEVROLET-14Y

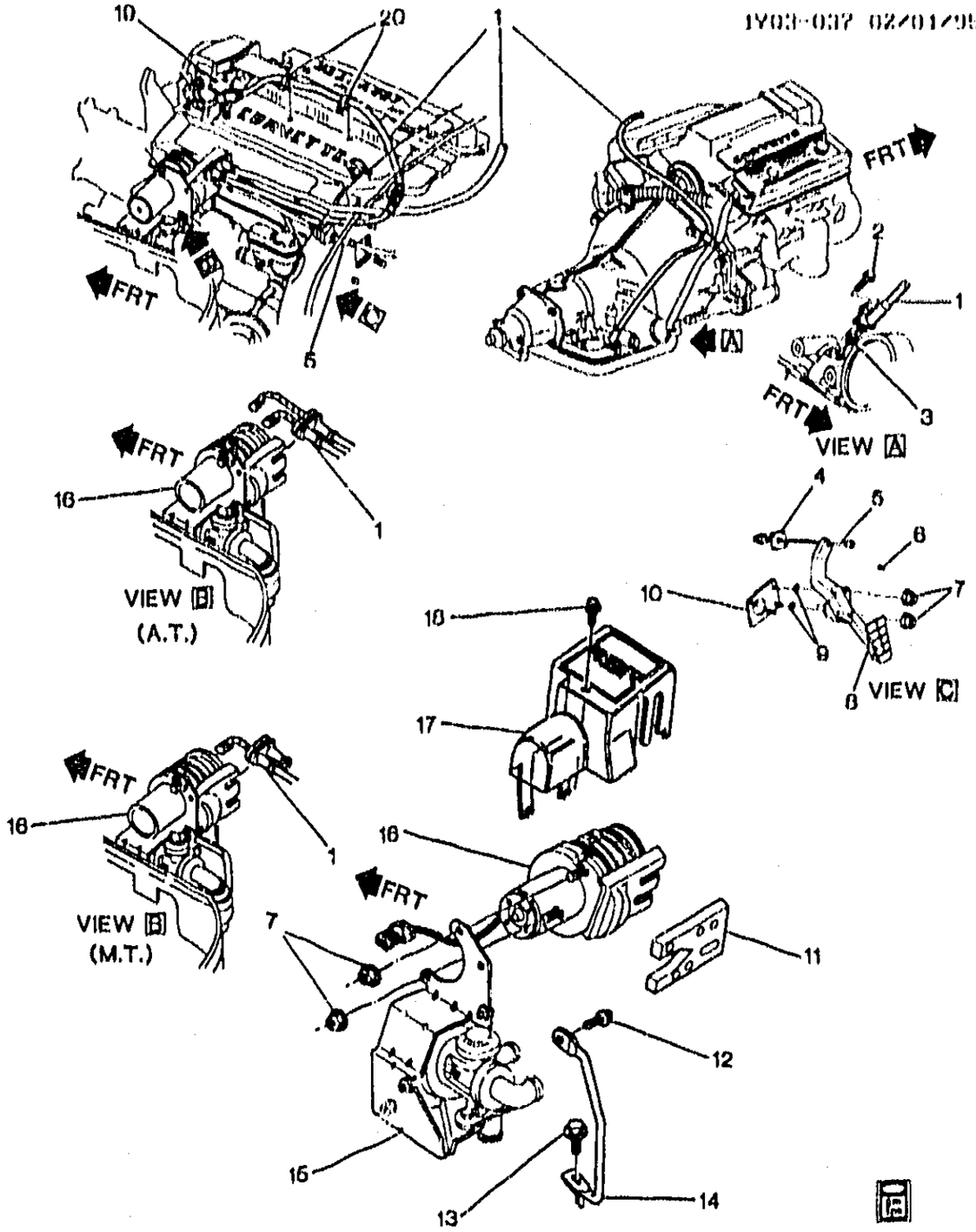

1Y03-037

1992-1993 Y ACCELERATOR CONTROL-V8(LT1)
1994 Y ACCELERATOR CONTROL-V8(LT1)(1ST DES)

1.	4-B12	3.430	CABLE, ACCEL CONT	92-93	Y (LT1, ML9)	1	10163846
	4-B12	3.430	CABLE, ACCEL CONT (THROT RELAXER TO THROT BODY)	94	Y (LT1)	1	12553402
	4-B12	3.430	CABLE, ACCEL CONT & A/TRNS T/V	92	Y (LT1, MD8)	1	10163848
	4-N16	4.050	CABLE, ACCEL CONT & A/TRNS T/V (3.430)	92	Y (LT1, MD8)	1	10163848

	4-B12	3.430	CABLE, ACCEL CONT & A/TRNS T/V	93	Y (LT1, MD8)	1	10215062
	4-N16	4.050	CABLE, ACCEL CONT & A/TRNS T/V (3.430)	93	Y (LT1, MD8)	1	10215062
2.		6.900	BOLT, HEX W/CON WA, M6X1X20, FULL THD, PZOR, 12.5 OD, 9.8	92-94		AR	11509024
3.	4-N16	4.050	SEAL, A/TRNS T/V CBL (FREE OF ASBESTOS) (21.20MM DIA)	92-93	Y	1	25510260
4.	4-B13	3.454	PLATE, ACCEL CONT CBL	92-94	Y	1	14053659
5.	4-B12	3.430	CABLE, ACCEL CONT & CRCONT SERVO	92-93	Y (LT1)	1	10215060
	4-B12	3.430	CABLE, ACCEL CONT & CRCONT SERVO (1 PC SIAMESE DES)	94	Y (LT1) (1ST DES)	1	10217769
6.		N.S.	RIVET, ACCEL CONT CBL PLT				
7.		6.917	NUT, HFH M6X1X6.5 ZOR 9	92-94		AR	3530297
8.	4-B13	3.451	PEDAL, ACCEL	92-94	Y	1	12551520
9.		6.917	NUT, HFH, M6X1.25, 17.9 OD, 738 THK, 13MM HEX, 10, ZF (6.915) (AC-DELCO #11514596)	92-94		AR	11514596
10.	4-N21	6.758	PLATE, STRG COL DA CVR STUD	92-94	Y	1	14104186
11.	4-D15	3.885	SHIELD, ACCEL CONT & CRCONT SERVO CBL ADJR	92-94	Y	1	10192285
	4-B14	3.469	SHIELD, ACCEL CONT & CRCONT SERVO CBL ADJR (3.885)	92-94	Y	1	10192285
12.		6.900	BOLT, HEX W/WA (M6X1X20)	92-94		AR	10077321
13.		6.900	BOLT, HEX W/CON WA	92-94		AR	11508269
14.	4-B13	3.454	BRACE, ACCEL CONT & CRCONT SERVO CBL ADJR BRKT	92-94	Y (LT1)	1	12553404
15.	4-B13	3.454	BRACKET, ACCEL CONT & CRCONT SERVO CBL ADJR	92-93	Y (LT1)	1	10212361
	4-D14	3.880	BRACKET, ACCEL CONT & CRCONT SERVO CBL ADJR (3.454)	92-93	Y (LT1)	1	10212361
	4-B13	3.454	BRACKET, ACCEL CONT & CRCONT SERVO CBL ADJR	94	Y (LT1)	1	12553403
	4-D14	3.880	BRACKET, ACCEL CONT & CRCONT SERVO CBL ADJR (3.454)	94	Y (LT1)	1	12553403
16.	4-B13	3.454	ADJUSTER, ACCEL CONT & CRCONT SERVO CBL	92-94	Y	1	12557971
	4-D14	3.880	ADJUSTER, ACCEL CONT & CRCONT SERVO CBL (3.454)	92-94	Y	1	12557971
17.	4-B13	3.454	COVER, ACCEL CONT & CRCONT SERVO CBL ADJR	92-94	Y (LT1)	1	10211305
18.		6.977	SCREW, HEX W/FLAT WA	92-94		AR	12337828
19.	4-B13	3.454	BRACKET, ACCEL CONT CBL	92	Y (LT1)	1	10226089
	4-B13	3.454	BRACKET, ACCEL CONT CBL	93	Y (LT1, MD8)	1	10226089
	4-B13	3.454	BRACKET, ACCEL CONT CBL	94	Y (LT1, M30)	1	10192221
20.	4-B12	3.425	CLIP, ACCEL CONT CBL	92-94	Y (LT1)	2	10054847

RPO DEFINITIONS
LT1 – ENGINE-GAS, 8 CYL, 5.7L(5.7P),MFI,HO
MD8 – TRANSMISSION,AUTOMATIC 4-SPEED(THM700R4/4L60)
ML9 – TRANSMISSION,MANUAL 6-SPEED

© 2000 GENERAL MOTORS SERVICE PARTS OPERATIONS-CHEVROLET-14Y

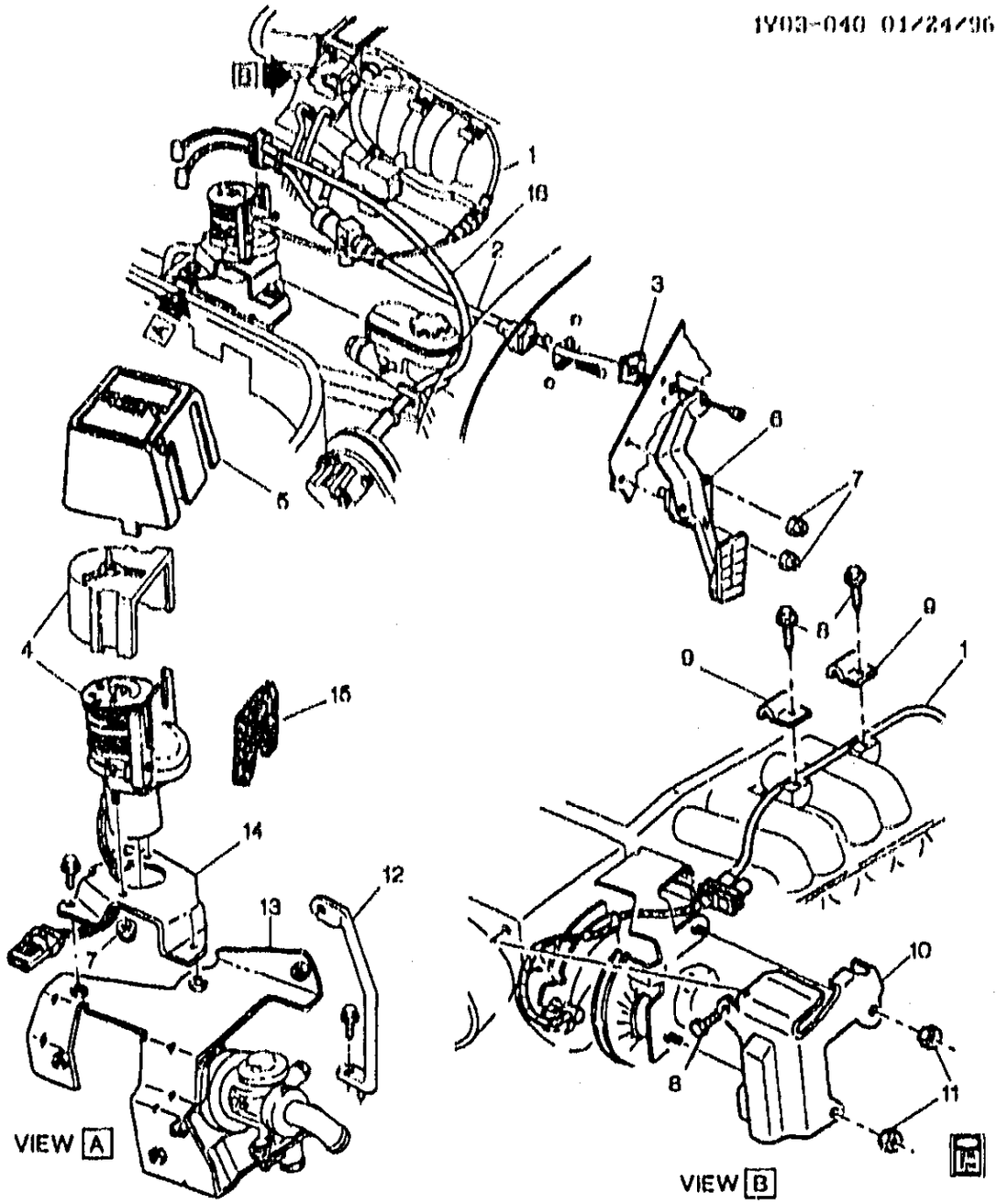

1Y03-040

1992-1995 Y ACCELERATOR CONTROL--V8(LT5)

1.	4-B12	3.430	CABLE, ACCEL CONT (TBI TO THROT ADJR)	92-95	Y	1	10163845
2.	4-B12	3.430	CABLE, ACCEL CONT & CRCONT SERVO	92-93	Y (LT5)	1	10174495
	4-B12	3.430	CABLE, ACCEL CONT & CRCONT SERVO (HAS 1 PC SIAMESE CBL FOR BOTH ACCEL CONT CBL & CRCONT SERVO CBL)	94	Y (LT5) (1ST DES)	1	10174495

© 2000 GENERAL MOTORS SERVICE PARTS OPERATIONS-CHEVROLET-14Y

							1Y03-040
	4-B12	3.430	CABLE, ACCEL CONT (PEDAL TO THROT ADJR) (HAS SEPARATE ACCEL CONT CBL & CRCONT SERVO CBL) (USE 10241102 FOR CRCONT SERVO CBL)	94	Y (2ND DES)	1	10241101
	4-B12	3.430	CABLE, ACCEL CONT (PEDAL TO THROT ADJR)	95	Y	1	10241101
3.	4-B13	3.454	PLATE, ACCEL CONT CBL	92-95	Y	1	14053659
4.	4-D14	3.880	ADJUSTER, ACCEL CONT & CRCONT SERVO CBL (3.454)	92-95	Y	1	12557971
5.	4-D14	3.880	COVER, ACCEL CONT & CRCONT SERVO CBL ADJR (3.454)	92-95	Y (LT5)	1	10209540
6.	4-B13	3.451	PEDAL, ACCEL	92-95	Y	1	12551520
7.		8.917	NUT, HEX M6X1X6.5 ZOR 9	92-95		AR	3530297
8.		8.977	SCREW, PAN 6 LOB TAP M4.2X1.4X8 PHOR	92-95		AR	11514501
9.	4-B12	3.425	CLIP, ACCEL CONT CBL	92	Y (LT5)	2	10192220
	4-B12	3.425	CLIP, ACCEL CONT CBL	93-95	Y (LT5)	2	10168625
10.	4-B14	3.469	SHIELD, ACCEL CONT CBL SPH	92-95	Y (LT5)	1	10150018
11.	4-B14	3.469	NUT, ACCEL CONT CBL SPH SHLD (4 X 0.7 THD X 4.85MM) (2.679)	92-95	Y (LT5)	2	16512106
12.	4-B13	3.454	BRACE, ACCEL CONT & CRCONT SERVO CBL ADJR BRKT	92-95	Y (LT5)	1	10177907
13.	4-B13	3.454	BRACKET, ACCEL CONT & CRCONT SERVO CBL ADJR (LWR)	92-95	Y (LT5)	1	10177905
14.	4-B13	3.45*	BRACKET, ACCEL CONT & CRCONT SERVO CBL ADJR (UPR)	92-95	Y (LT5)	1	10143546
15.	4-D15	3.885	SHIELD, ACCEL CONT & CRCONT SERVO CBL ADJR	92-95	Y	1	10192285
	4-B14	3.469	SHIELD, ACCEL CONT & CRCONT SERVO CBL ADJR (3.885)	92-95	Y	1	10192285
16.	4-B12	3.430	CABLE, ACCEL CONT & CRCONT SERVO	92-93	Y (LT5)	1	10174495
	4-B12	3.430	CABLE, ACCEL CONT & CRCONT SERVO (HAS 1 PC SIAMESE CBL FOR BOTH ACCEL CONT CBL & CRCONT SERVO CBL)	94	Y (LT5) (1ST DES)	1	10174495
	4-D14	3.880	CABLE, CRCONT SERVO (THROTTLE ADJ TO CRCONT SERVO) (HAS SEPARATE ACCEL CONT CBL & CRCONT SERVO CBL. USE 10241101 IN GRP. 3.430 FOR ACCEL CONT CBL.)	94	Y (LT5) (2ND DES)	1	10241102
	4-D14	3.880	CABLE, CRCONT SERVO (THROTTLE ADJ TO CRCONT SERVO)	95	Y (LT5)	1	10241102

RPO DEFINITIONS
LT5 – ENGINE,5.7L(5.7J),TPI

© 2000 GENERAL MOTORS SERVICE PARTS OPERATIONS–CHEVROLET–14.

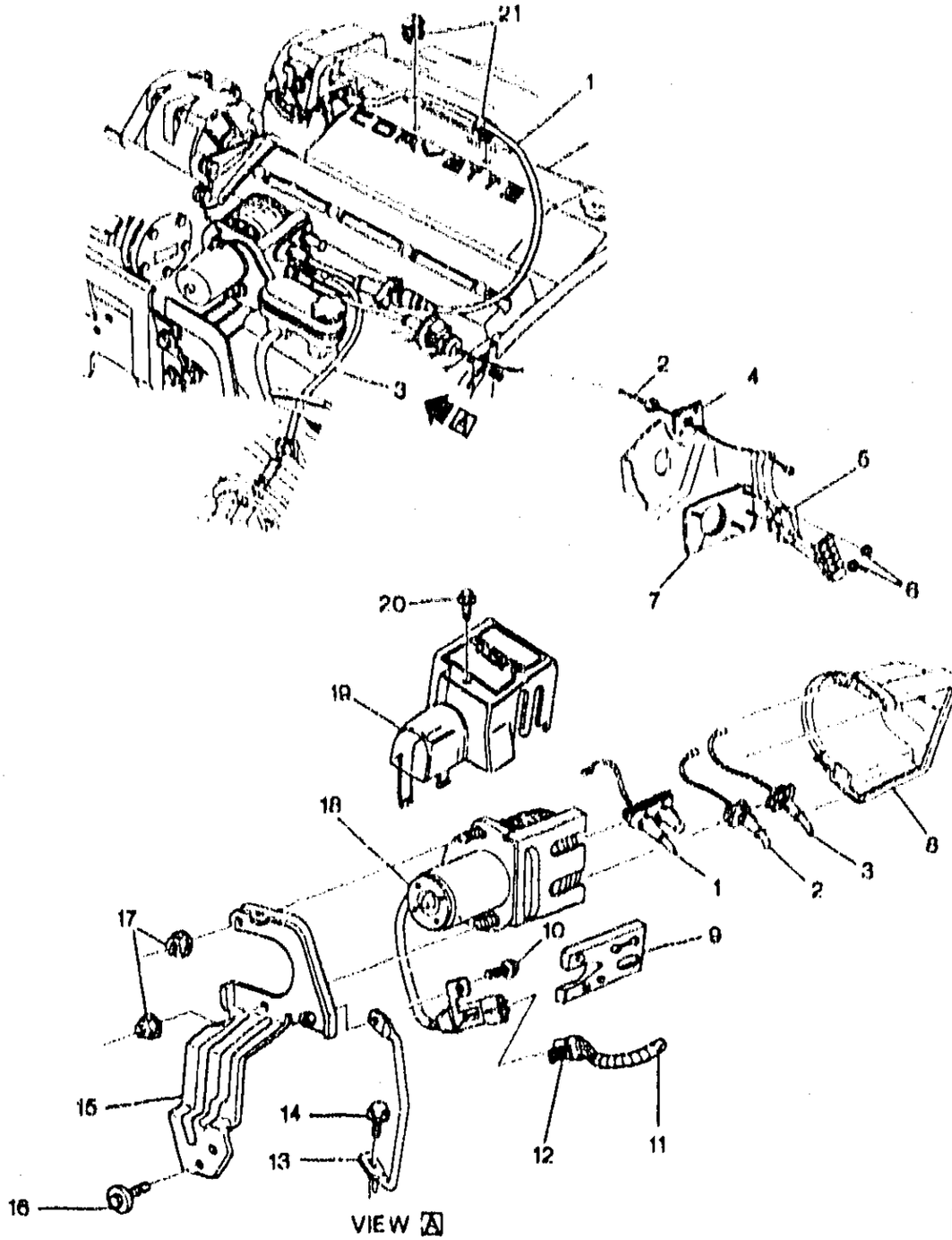

1Y03-030

1994 Y ACCELERATOR CONTROL -V8(LT1)(2ND DES)
1995-1996 Y ACCELERATOR CONTROL-V8(LT1)
1996 Y ACCELERATOR CONTROL-V8(LT4)

1.	4-B12	3.430	CABLE, ACCEL CONT (THROTTLE RELAXER TO THROTTLE BODY)	94-95 Y	1	12553402
	4-B12	3.430	CABLE, ACCEL CONT (THROTTLE RELAXER TO THROTTLE BODY)	96 Y	1	10241760

© 2000 GENERAL MOTORS SERVICE PARTS OPERATIONS-CHEVROLET-14Y

							1Y03-030
2.	4-B12	3.430	CABLE, ACCEL CONT (PEDAL TO THROTTLE RELAXER)	94-96	Y	1	10241099
3.	4-D14	3.880	CABLE, CRCONT SERVO (2 PC DES, ACCEL CABLE IS SEPARATE, SEE GROUP 3.430)	94	Y (LT1) (2ND DES)	1	10241100
	4-D14	3.880	CABLE, CRCONT SERVO	95	Y (LT1)	1	10241100
	4-D14	3.880	CABLE, CRCONT SERVO	96	Y (LT1, LT4)	1	10241100
4.	4-B13	3.454	PLATE, ACCEL CONT CBL	94	Y	1	14053659
	4-B13	3.454	PLATE, ACCEL CONT CBL	95-96	Y	1	14053659
5.	4-B13	3.451	PEDAL, ACCEL	94-96	Y	1	12551520
6.		0.917	NUT, HEX M6X1X6.5 ZOR 9 (ACCEL PED LVR SUPT)	94-96		AR	3530297
7.	4-N21	6.756	PLATE, STRG COL DA CVR STUD	96	Y	1	14104106
	4-N21	6.756	PLATE, STRG COL DA CVR STUD	94-96	Y	1	14104106
8.		N.S.	SHIELD, ACCEL CONT & CRCONT SERVO CBL ADJ (PART OF 19)				
9.	4-D15	3.885	SHIELD, ACCEL CONT & CRCONT SERVO CBL ADJR	94-96	Y	1	10192285
	4-B14	3.460	SHIELD, ACCEL CONT & CRCONT SERVO CBL ADJR (3.885)	94-96	Y	1	10192285
10.		0.077	BOLT, FLWH M4.2X1.41X25 PZOR TAP 17 CLD (ACCEL CONT & CRCONT SERVO CBL ADJR BRKT BR)	94-96		AR	11508233
11.	4-N18	4.720	HARNESS, ELEK BRK CONT & ELEC TRACT CONT WRG	94	Y (FX3)	1	12130313
	4-N18	4.720	HARNESS, ELEK BRK CONT & ELEC TRACT CONT WRG	94	Y (EXC FX3)	1	12130314
	4-N18	4.720	HARNESS, ELEK BRK CONT & ELEC TRACT CONT WRG	95	Y (LT1)	1	12130367
	4-N18	4.720	HARNESS, ELEK BRK CONT & ELEC TRACT CONT WRG	96	Y (F45)	1	12130459
	4-N18	4.720	HARNESS, ELEK BRK CONT & ELEC TRACT CONT WRG	96	Y (EXC F45)	1	12130496
12.	4-B13	3.454	CONNECTOR, MOT-THROT ACTR (2-WAY F) (W/LEADS) (W/SEAL) (2.535) (AC-DELCO #PT247)	94	Y	1	12101855
	4-B13	3.454	CONNECTOR, MOT-THROT ACTR (2-WAY F) (W/LEADS) (W/SEAL) (2.535) (AC-DELCO #PT247)	95-96	Y	1	12101855
13	4-B13	3.454	BRACE, ACCEL CONT & CRCONT SERVO CBL ADJR BRKT	94-95	Y (LT1)	1	12553404
	4-B13	3.454	BRACE, ACCEL CONT & CRCONT SERVO CBL ADJR BRKT	96	Y	1	12553404
14.		0.900	BOLT, HEX W/CON WA (U/B FRT S/RL UPR BR)	94-96		AR	11508269
15.	4-B13	3.454	BRACKET, ACCEL CONT & CRCONT SERVO CBL ADJR	94-95	Y (LT1)	1	12553403
	4-B13	3.454	BRACKET, ACCEL CONT & CRCONT SERVO CBL ADJR	96	Y	1	12553403

© 2000 GENERAL MOTORS SERVICE PARTS OPERATIONS - CHEVROLET - 14Y

							1Y03-030
16.		0.900	BOLT, HEX W/WA (M6X1X20) (ACCEL CONT & CRCONT SERVO CBL ADJR BRKT)	94-96		AR	10077321
17.		0.917	NUT, HEX M6X1X0.5 ZOR 9 (ACCEL CONT & CRCONT SERVO CBL ADJR)	94-96		AR	3630297
18.	4-B13	3.464	ADJUSTER, ACCEL CONT & CRCONT SERVO CBL	94-96	Y	1	12557971
	4-D14	3.000	ADJUSTER, ACCEL CONT & CRCONT SERVO CBL (3.464)	94-96	Y	1	12557971
19.	4-B13	3.464	COVER, ACCEL CONT & CRCONT SERVO CBL ADJR (INCLS 8)	94-95	Y (LT1)	1	10211305
	4-D14	3.000	COVER, ACCEL CONT & CRCONT SERVO CBL ADJR (INCLS 8) (3.464)	94-95	Y (LT1)	1	10211305
	4-B13	3.464	COVER, ACCEL CONT & CRCONT SERVO CBL ADJR (INCLS 8)	96	Y (LT1, LT4)	1	10211305
	4-D14	3.000	COVER, ACCEL CONT & CRCONT SERVO CBL ADJR (INCLS 8) (3.464)	96	Y (LT1, LT4)	1	10211305
20.		0.977	SCREW, HEX W/FLAT WA (ACCEL CONT & CRCONT SERVO CBL ADJR CVR)	94-96		AR	12337826
21.	4-B12	3.425	CLIP, ACCEL CONT CBL	94-95	Y (LT1)	2	10054047
	4-B12	3.425	CLIP, ACCEL CONT CBL	96	Y	2	10054047

RPO DEFINITIONS
FX3 -- RIDE AND HANDLING,ELECTRONIC CONTROLLED
F46 -- CHASSIS CONTINUOUS VALVE REAL TIME DAMPING
LT1 -- ENGINE--GAS, 8 CYL, 5.7L(5.7P),MFI,HO
LT4 -- ENGINE GAS, 8 CYL, 5.7L, MFI, HIGH OUTPUT

MICROFICHE INDEX

GROUP 3.000

FICHE 4 OF 11

GROUP	DESCRIPTION	STARTING GRID LOCATION PARTS	ILLUSTRATIONS
–	GENERAL INFORMATION	1–A2	1–G2
–	ALPHABETICAL INDEX	1–B13	N.A.
3.000	FUEL TANK – INTAKE MANIFOLD – FUEL INJECTION – THROTTLE BODY – AIR CLEANER – ACCELERATOR	4–A2	4–E2
3.000	EXHAUST & EMISSIONS SYSTEMS – CARBURETOR – CRUISE – FUEL FILTER & PUMP	4–C2	4–H2
–	OUT OF FICHE CALLS	N.A.	4–M9

4–H1

ILLUSTRATION INDEX

	TITLE	GRID
1990–1991	Y A.I.R. PUMP & RELATED PARTS (L98,	4–H4
1990–1991	Y A.I.R. PUMP & RELATED PARTS (LT5)	4–H6
1992–1993	Y A.I.R. PUMP & RELATED PARTS (LT1)	4–H9
1992–1995	Y A.I.R. PUMP & RELATED PARTS (LT5)	4–H12
1994–1995	Y A.I.R. PUMP & RELATED PARTS (LT1)	4–H15
1996	Y A.I.R. PUMP & RELATED PARTS	4–H17
1984	Y CRUISE CONTROL–V8(L83)	4–H19
1985–1991	Y CRUISE CONTROL–V8(L98)	4–H21
1990	Y CRUISE CONTROL–V8(LT5)	4–H23
1991	Y CRUISE CONTROL–V8(LT5)	4–H25
1992	Y CRUISE CONTROL–V8(LT1,ML9)	4–I2
1992	Y CRUISE CONTROL–V8(LT5)	4–I5
1992	Y CRUISE CONTROL–V8(LT1,MD8)	4–I8
1993	Y CRUISE CONTROL–V8(LT1,MD8)	4–I10
1994–1996	Y CRUISE CONTROL–V8(LT1,M30)	4–I10
1993–1995	Y CRUISE CONTROL–V8(LT5)	4–I13
1993–1996	Y CRUISE CONTROL–V8(LT1,ML9)	4–I16
1996	Y CRUISE CONTROL–V8(LT4,ML9)	4–I16
1992–1993	Y E.C.M. MODULE & RELATED PARTS (LT1)	4–I19
1992–1995	Y E.C.M. MODULE & RELATED PARTS (LT5)	4–I22
1994–1996	Y P.C.M. MODULE & WIRING HARNESS (LT1)	4–I25
1996	Y P.C.M. MODULE & WIRING HARNESS (LT4)	4–I25
1992–1996	Y E.G.R. VALVE & RELATED PARTS (LT1)	4–J2
1993–1995	Y E.G.R. VALVE & RELATED PARTS (LT5)	4–J5
1990–1995	Y M.A.P. & OXYGEN SENSORS (LT5)	4–J7
1992–1995	Y M.A.P. & OXYGEN SENSORS (LT1)	4–J9
1996	Y M.A.P. & OXYGEN SENSORS	4–J11
1984	Y EMISSION CONTROLS–V8(L83)	4–J13
1985–1986	Y EMISSION CONTROLS PART 1–V8(L98)	4–J17
1985–1986	Y EMISSION CONTROLS PART 2–V8(L98)	4–J20
1987	Y EMISSION CONTROLS PART 1–V8(L98)	4–J24
1987	Y EMISSION CONTROLS PART 2–V8(L98)	4–J26
1988–1989	Y EMISSION CONTROLS PART 1–V8(L98)	4–K2
1988–1991	Y EMISSION CONTROLS PART 2–V8(L98)	4–K5
1990	Y EMISSION CONTROLS PART 2–V8(LT5)	4–K9
1990–1991	Y EMISSION CONTROLS–V8(LT5)	4–K12
1990–1991	Y EMISSION CONTROLS PART 1–V8(L98)	4–K17
1984	Y EXHAUST SYSTEM–V8(L83)	4–K20
1985	Y EXHAUST SYSTEM–V8(L98)	4–K20
1986–1991	Y EXHAUST SYSTEM–V8(L98)	4–K22
1990–1995	Y EXHAUST SYSTEM–V8(LT5)	4–K24
1992–1993	Y EXHAUST SYSTEM–V8(LT1)	4–K27
1994–1995	Y EXHAUST SYSTEM–V8(LT1)	4–L2
1996	Y EXHAUST SYSTEM–V8(LT1,LT4)	4–L2

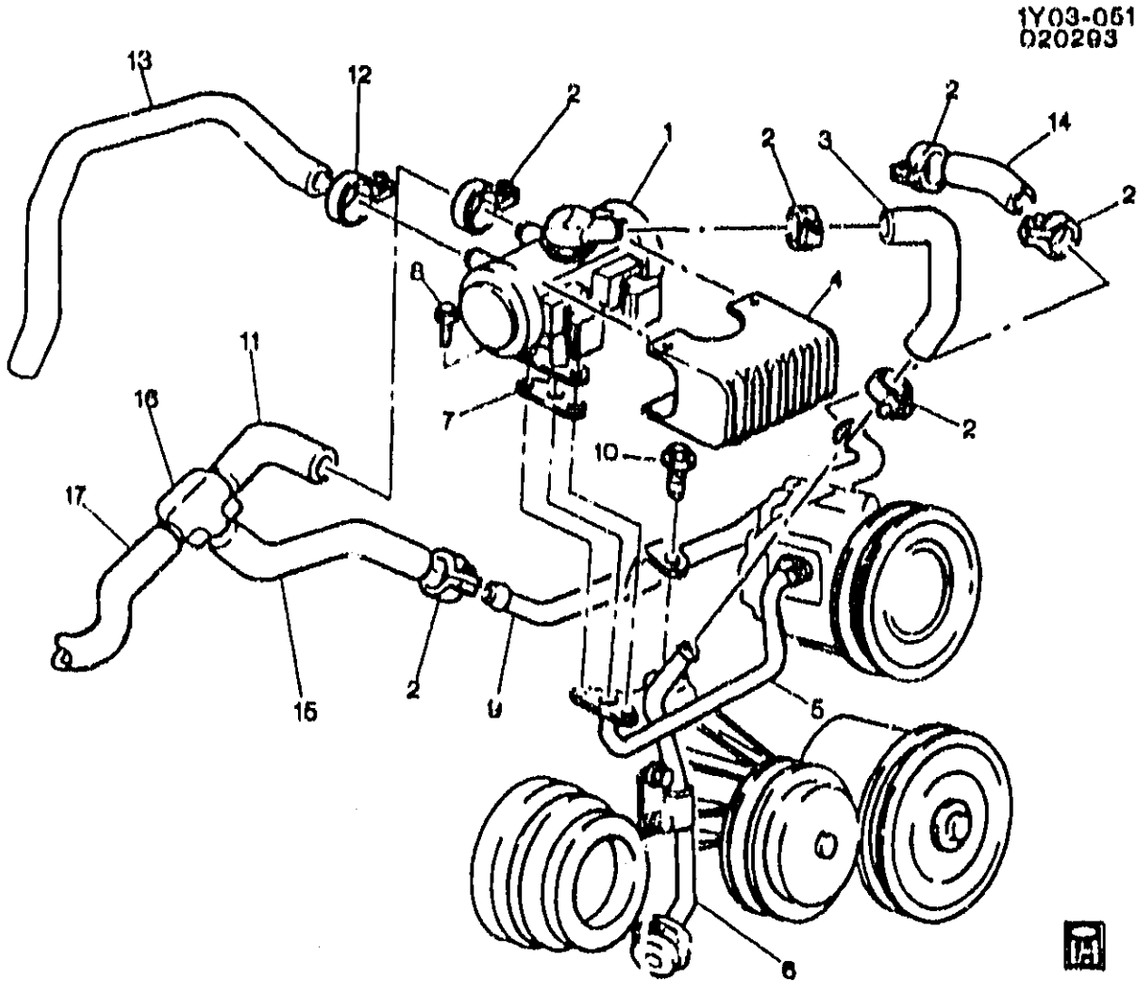

1Y03-051

1990-1991 Y A.I.R. PUMP & RELATED PARTS (L98)

1.	4-C11	3.670	VALVE, SECD AIR INJN BYPASS (AC-DELCO #214-117)	90-91	Y (L98)	1	17088106
2.		8.948	CLAMP, WORM TYPE (11/16"TO 1 5/16") (SECD AIR INJN BYPASS VLV SIL HOSE)	90-91	.....	AR	1470030
3.		DISCON	HOSE, SECD AIR INJN BYPASS VLV SIL	90-91	Y	1	10105320
4.	4-C11	3.670	COVER, SECD AIR INJN BYPASS VLV (AC-DELCO #17032198) ...	90-91	Y (L98)	1	17082198
5.	4-C21	3.675	PIPE, AIR INJ CONT VLV (AC-DELCO #219-69)	90-91	Y	1	10055827
6.	4-C21	3.672	SILENCER, SECD AIR INJN BYPASS VLV	90-91	Y	1	10055829
7.	4-C24	3.680	GASKET, SECD AIR INJN BYPASS VLV PIPE (3.671)	90-91	Y	2	14015367
8.		8.900	BOLT, HFH M8X1.25X21MM, 17 OD, 10.9	90-91	.....	AR	12551177
9.	4-C21	3.675	PIPE, SECD AIR INJN CHK VLV (AC-DELCO #219-70)	90-91	Y	1	10055834
10.		8.900	BOLT, HEX, 3/8-16X3/4, 9/16 THD, 300M, PX (SECD AIR INJN CHK VLV PIPE)	90-91	.....	AR	9442052
11.	4-C21	3.675	HOSE, SECD AIR INJN CHK VLV .	90-91	Y	1	10105318

© 2000 GENERAL MOTORS SERVICE PARTS OPERATIONS - CHEVROLET - 14Y

							1Y03-051	
12.		0.040	CLAMP WORM GEAR (SECD AIR INJN PUMP RR ADJ BRKT ADJ) (AC-DELCO #12337891) ..	90-91	.....	AR	12337891
13.		DISCON	HOSE, CTLTC CONV SECD AIR INJN CHK VLV	90-91	Y	1	10105319
14.		DISCON	HOSE, SECD AIR INJN CHK VLV .	90-91	Y	1	10105321
15.	4-C21	3.675	HOSE, AIR INJN ENG CHK VLV ..	90-91	Y	1	10105316
16.	4-C24	3.680	CONNECTOR, SECD AIR INJN CHK VLV	90-91	Y	1	10046154
17.	4-C21	3.675	HOSE, AIR INJN ENG CHK VLV ..	90-91	Y	1	10105317

RPO DEFINITIONS
L98 – ENGINE, 5.7L, (5.7-8) 350 CID, V8, TPI

1Y03-052
012703

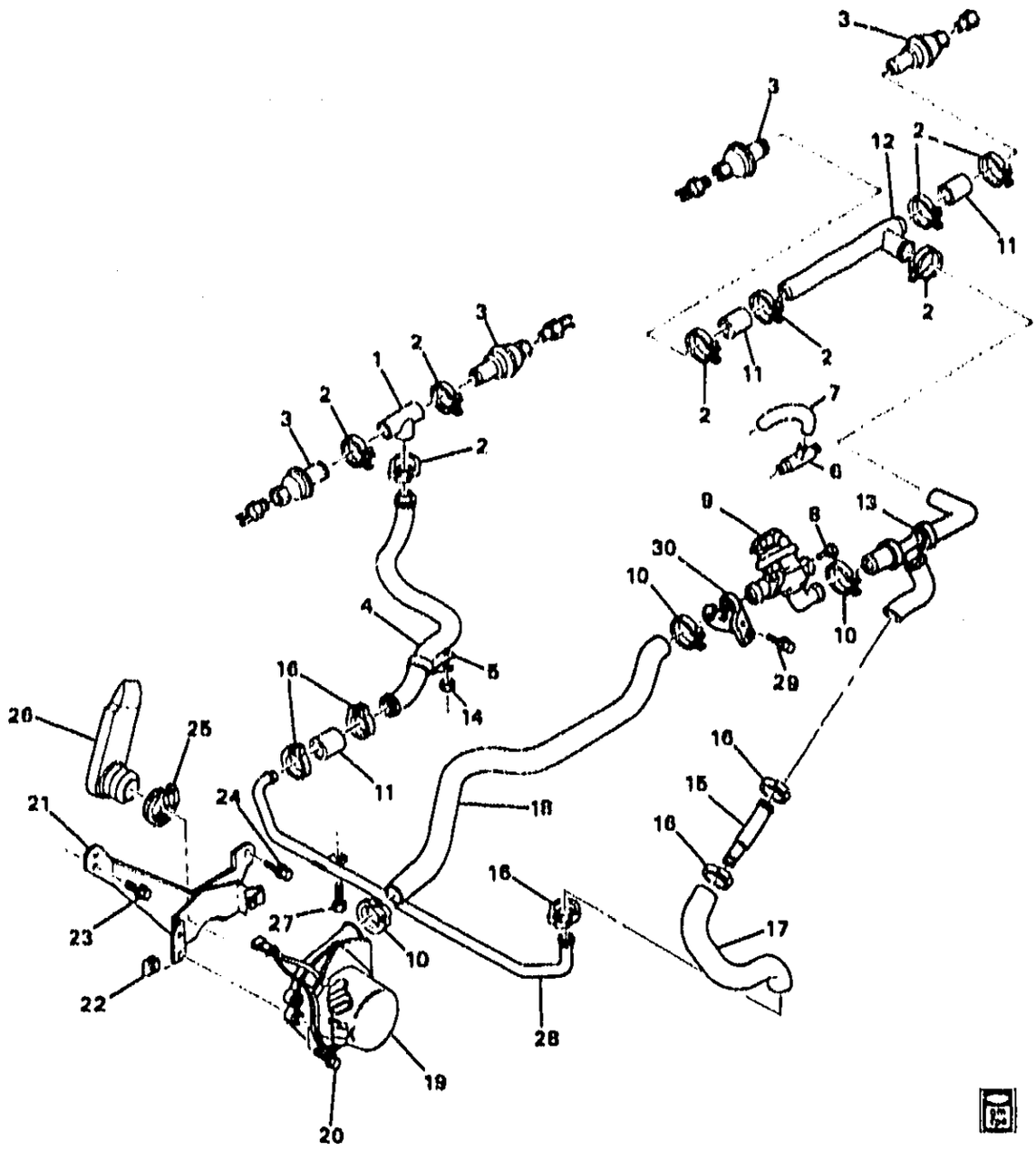

1Y03-052

1990-1991 Y A.I.R. PUMP & RELATED PARTS (LT5)

1.	4-C24	3.680	CONNECTOR, SECD AIR INJN CHK VLV PIPE (AC-DELCO #14104888)	90-91	Y (LT5)	RH	14104888
2.		3.948	CLAMP, WORM TYPE (11/16"TO 1 5/16") (AIR INJN PIPE CONN) ..	90-91	.....	AR	1470030
3.	4-C11	3.670	VALVE, SECD AIR INJN CHK (AC-DELCO #214-419)	90-91	Y (LT5)	4	22048212
4.	4-C21	3.675	PIPE, SECD AIR INJN CHK VLV (AC-DELCO #219-141)	90-91	Y (LT5)	RH	14104887
5.	4-C21	3.675	SUPPORT, SECD AIR INJN PIPE .	90-91	Y	1	10105388

© 2000 GENERAL MOTORS SERVICE PARTS OPERATIONS-CHEVROLET-14Y

							1Y03-052
6.		8.903	TEE, HOSE (NYL M6.3 X M6.3 X M6.3) (SECD AIR INJN BYPASS) .	90-91	.....	AR	14004877
7.		8.962	HOSE, BULK 5/32X25FT (SECD AIR INJN BYPASS)	90-91	.....	AR	9438381
8.		8.900	BOLT, HFH M8X1.25X21MM, 17 OD, 10.9 (SECD AIR INJN BYPASS VLV)	90-91	.....	AR	12561177
9.	4-C11	3.670	VALVE, SECD AIR INJN BYPASS (5.7J) (AC-DELCO #214-110) ..	90-91	Y	1	17089050
10.	4-M12	1.166	CLAMP SECD AIR INJN CHK VLV HOSE (31.5 TO 38MM) (1.762)	90-91	Y (LT5)	1	10019739
11.		N.S.	CONNECTOR, SECD AIR INJN CHK VLV PIPE (AT PIPE)		.....		
12.	4-C21	3.675	PIPE, AIR INJ ENG CHK VLV (SIDE) (AC-DELCO #219-142) .	90-91	Y	1	14104920
13.		N.S.	HOSE, AIR INJN ENG CK VLV (SERVICED BY COMPONENTS ..		.....		
	4-C21	3.675	HOSE, AIR INJN ENG CK VLV ...	90-91	Y	1	14104704
	4-C24	3.680	CONNECTOR, SECD AIR INJN CHK VLV HOSE (24.3X18.5X18.5) (TEE) (3.675)	90-91	Y	1	14088584
	4-C24	3.680	CONNECTOR, SECD AIR INJN CHK VLV HOSE		Y	1	14104881
14.		8.917	NUT, HFH, M8X1.25, 17.9 OD, 738 THK, 13MM HEX, 10, ZF (3.915) (AC-DELCO #11514596)	90-91	.....	AR	11514596
15.	4-C21	3.675	PIPE, SECD AIR INJN CHK VLV (AC-DELCO #219-140)	90-91	Y (LT5)	LH	14104873
16.		8.948	CLAMP (SECD AIR INJN CHK VLV HOSE)	90-91	.....	AR	15620999
17.	4-C21	3.675	HOSE, SECD AIR INJN CHK VLV .	90-91	Y	1	14104843
18.		DISCON	HOSE, SECD AIR INJN BYPASS VLV	90-91	Y (LT5, FE1, FE7)	1	10105366
19.	4-C11	3.660	PUMP SECD AIR INJN (INCLUDES RELAY) (AC-DELCO #215-90)	90-91	Y (LT5)	1	10090521
20.	4-C10	3.655	BOLT, SECD AIR INJN PUMP (10.252)	90-91	Y (LT5)	3	10132913
21.	4-C10	3.655	BRACKET, SECD AIR INJN PUMP (INCLS 22)	90-91	Y (LT5)	1	14104700
22.		8.921	NUT, U-SHAPE WIDE RANGE MULTI-THRD M5X 0.8 POR (AIR INJN PUMP BRKT) (PART OF 21)	90-91	.....	3	11504393
23.		8.900	SCREW (HORN) (8.977) (AC-DELCO #11514532)	90-91	.....	AR	11514532
24.		8.900	BOLT, HEX W/WA (M6X1X20) (SECD AIR INJN PUMP)	90-91	.....	AR	10077321
25.		8.948	CLAMP, 28.6-86.2 DIA WORM GEAR (SECD AIR INJN PUMP) (AC-DELCO #12338017)	90-91	.....	AR	12338017
26.	4-C21	3.675	DUCT, SECD AIR INJN PUMP ...	90-91	Y (LT5)	1	14104698
27.		8.900	BOLT, M6X1X12, 10 THD, 11.6 OD, 9.8 GM500-M, POR, MACH (SECD AIR INJN CHK VLV PIPE) (AC-DELCO #11514149)	90-91	.....	AR	11514149
28.		DISCON	PIPE, SECD AIR INJN CHK VLV ..	90	Y (LT5)	1	14104844

© 2000 GENERAL MOTORS SERVICE PARTS OPERATIONS-CHEVROLET-14Y

								1Y03-052
	4-C21	3.075	PIPE, SECD AIR INJN CHK VLV (CROSSUNDER) (AC-DELCO #219-83)	91	Y (LT5)	RH		10174320
29.		8.900	BOLT, HEX W/WA (M6X1X20) (SECD AIR INJN PUMP BRKT) ...	90-91	Y	AR		10077321
30.	4-C19	3.071	BRACKET, SECD AIR INJN BYPASS VLV	90-91	Y (LT5, FE1, FE7)	1		14104059

RPO DEFINITIONS
FE1 - SUSPENSION SYSTEM,SOFT RIDE
FE7 - SUSPENSION SYSTEM,FRONT AND REAR,HEAVY DUTY(USED WITH PERFORMANCE HANDLING PACKAGE Z51)
LT5 -- ENGINE,5.7L(5.7J),TPI

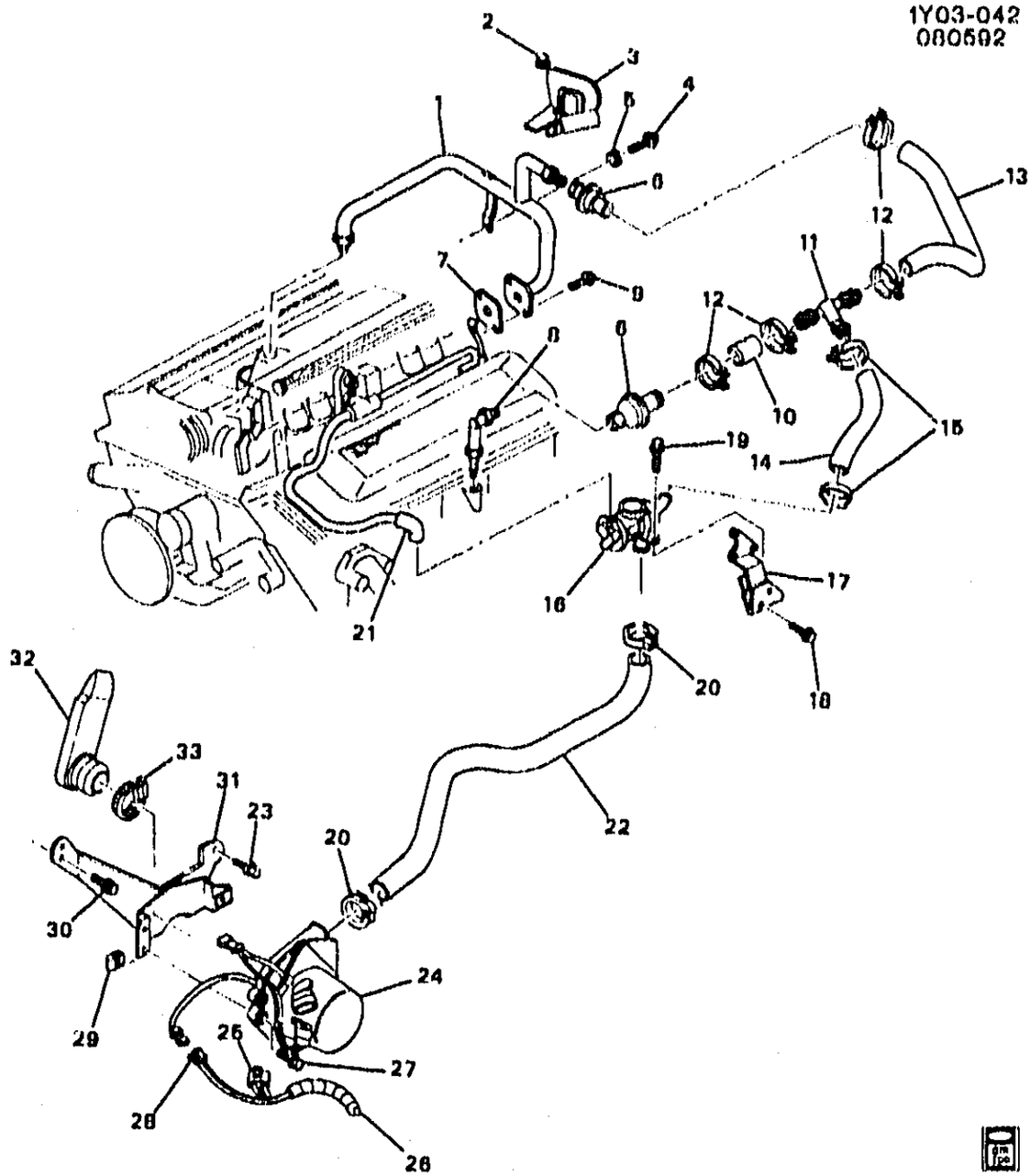

1Y03-042

1992-1993 Y A.I.R. PUMP & RELATED PARTS (LT1)

1.	4-C21	3.675	PIPE, SECD AIR INJN CHK VLV (INCLUDES HEAT SHIELD) (AC-DELCO #10108553)	92-93	Y (LT1)	RH	10108553
2.		8.917	NUT (EGR VLV PIPE H/SHLD) ...	92-93	.....	1	14057004
3.	4-C21	3.675	SHIELD, EGR VLV PIPE HT	92-93	Y (LT1)	1	10186157
4.		8.900	BOLT, HEX, 3/8-16X3/4, 9/16 THD, 300M, PX (SECD AIR INJN CHK VLV PIPE)	92-93	.....	AR	9442052
5.		8.932	WASHER, EXT LK M8X15X1.52 ZC (SECD AIR INJN CHK VLV PIPE) (AC-DELCO #11501869) .	92-93	.....	AR	11501869
6.	4-C11	3.670	VALVE, SECD AIR INJN CHK (AC-DELCO #214-419)	92-93	Y (LT1)	2	22048212

© 2000 GENERAL MOTORS SERVICE PARTS OPERATIONS-CHEVROLET-14Y

							1Y03-042
7.	4-C21	3.675	GASKET, SECD AIR INJN CHK VLV PIPE	92-93	Y (LT1)	2	10055726
8.	4-C21	3.675	PIPE, SECD AIR INJN CHK VLV	92	Y (LT1)	LH	10108555
	4-C21	3.675	PIPE, SECD AIR INJN CHK VLV (AC-DELCO #10221302)	93	Y (LT1)	LH	10221302
9.		8.900	BOLT, HFH, 5/16-18X1.00, 200M, PC, .65-OD (SECD AIR INJN CHK VLV PIPE)	92-93		AR	9441894
10.	4-C21	3.675	HOSE, SECD AIR INJN CHK VLV	92-93	Y (LT1)	LH	10108554
11.	4-C24	3.680	CONNECTOR, SECD AIR INJN CHK VLV HOSE (AC-DELCO #10108508)	92-93	Y (LT1)	1	10108508
12.		8.948	CLAMP (SECD AIR INJN CHK VLV HOSE)	92-93		AR	15620999
13.	4-C21	3.675	HOSE, SECD AIR INJN CHK VLV	92-93	Y (LT1)	RH	10108557
14.	4-C21	3.675	HOSE, SECD AIR INJN BYPASS VLV (INJN CHK VLV, 173.5MM LGTH)	92-93	Y (LT1)	1	10108556
15.	4-C21	3.675	CLAMP, SECD AIR INJN BYPASS VLV HOSE (1.762)	92-93	Y (LT1)	2	10019739
16.	4-C11	3.670	VALVE, SECD AIR INJN BYPASS (AC-DELCO #214-124)	92-93	Y (LT1)	1	17092085
17.	4-B13	3.454	BRACKET, ACCEL CONT & CRCONT SERVO CBL ADJR	92-93	Y (LT1)	1	10212361
18.		8.900	BOLT, HEX W/WA (M6X1X20) (ACCEL CONT & CRCONT)	92-93		AR	10077321
19.		8.900	BOLT, HFH M8X1.25X21MM, 17 OD, 10.9 (SECD AIR INJN BYPASS VLV)	92-93		AR	12551177
20.		8.948	CLAMP, 28.6-86.2 DIA WORM GEAR (SECD AIR INJN PUMP HOSE) (AC-DELCO #12338017)	92-93		AR	12338017
21.	4-C21	3.675	HARNESS, EGR VLV VAC	92-93	Y (LT1)	1	10105325
22.	4-C21	3.675	HOSE, SECD AIR INJN BYPASS VLV (INJN CONT VLV, 738.3MM LGTH)	92-93	Y (LT1)	1	10108567
23.		8.900	BOLT, HEX W/WA (M6X1X20) (SECD AIR INJN PUMP)	92-93		AR	10077321
24.	4-C11	3.660	PUMP, SECD AIR INJN (INCLUDES RELAY) (AC-DELCO #215-90)	92-93	Y (LT1)	1	10090521
25.		N.S.	CONNECTOR, AIR PUMP (PART OF 26)				
26.	4-M21	2.480	HARNESS, FWD LP WRG (INCLS 25, 28)	92	Y (LT1) (EXC T61)	1	12090371
	4-M21	2.480	HARNESS, FWD LP WRG (INCLS 25, 28)	93	Y (LT1) (EXC BAK, T61)	1	12106580
	4-M21	2.480	HARNESS, FWD LP WRG (INCLS 25, 28)	93	Y (LT1, BAK) (EXC T61)	1	12141822
	4-M21	2.480	HARNESS, FWD LP WRG (INCLS 25, 28)	92	Y (LT1, T61) (EXPORT)	1	12090373
	4-M21	2.480	HARNESS, FWD LP WRG (INCLS 25, 28)	93	Y (LT1, T61) (EXPORT)	1	12106581
27.	4-C10	3.655	BOLT, SECD AIR INJN PUMP (10.252)	92	Y (LT1)	3	10132913
	4-C10	3.655	BOLT, SECD AIR INJN PUMP (10.252)	93	Y (LT1, ML9)	3	10132913
28.		N.S.	CONNECTOR, AIR PUMP SOL (PART OF 26)				

© 2000 GENERAL MOTORS SERVICE PARTS OPERATIONS-CHEVROLET-14Y

							1Y03-042
29.		0.021	NUT, U-SHAPE WIDE RANGE MULTI-THRD M6X 0.0 PDR (AIR INJN PUMP BRKT) (PART OF 31)	92-93	.....	AR	11504693
30.		0.900	SCREW (HORN) (0.977) (AC-DELCO #11514532)	92-93	.....	AR	11514532
31.	4-C10	3.655	BRACKET, SECD AIR INJN PUMP (INCLS 29)	92	Y (LT1)	1	14104700
	4-C10	3.655	BRACKET, SECD AIR INJN PUMP (INCLS 29)	93	Y (LT1, ML9)	1	14104700
32.	4-C21	3.675	DUCT, SECD AIR INJN PUMP ...	92-93	Y (LT1)	1	14104698
33.		0.948	CLAMP, 28.0-66.2 DIA WORM GEAR (SECD AIR INJN PUMP) (AC-DELCO #12338017)	92-93	.....	AR	12338017

RPO DEFINITIONS
BAK - DIAGNOSTIC SYSTEM OBD 2 EMISSION REQUIREMENTS
LT1 - ENGINE--GAS, 8 CYL, 5.7L(5.7P),MFI,HO
ML9 - TRANSMISSION,MANUAL 6-SPEED
TG1 - LIGHTING,DAYTIME RUNNING

© 2000 GENERAL MOTORS SERVICE PARTS OPERATIONS-CHEVROLET-14Y

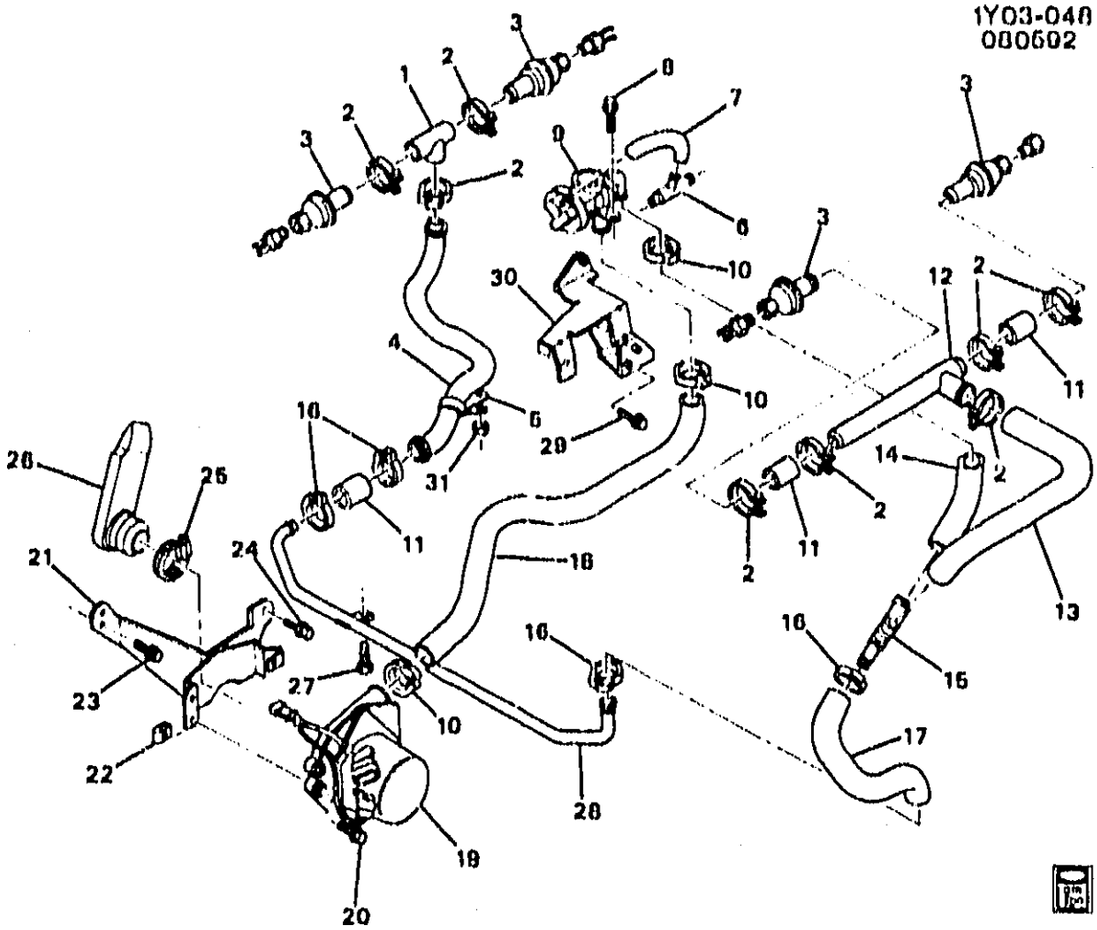

1Y03-048

1992-1995 Y A.I.R. PUMP & RELATED PARTS (LT5)

1.	4-C24	3.680	**CONNECTOR**, SECD AIR INJN CHK VLV PIPE (AC-DELCO #14104888)	92-95	Y (LT5)	RH	14104888
2.		8.948	**CLAMP**, WORM TYPE (11/16"TO 1 5/16") (AIR INJN PIPE CONN)	92-95		AR	1470030
3.	4-C11	3.670	**VALVE**, SECD AIR INJN CHK (AC-DELCO #214-419)	92-95	Y (LT5)	4	22048212
4.	4-C21	3.675	**PIPE**, SECD AIR INJN CHK VLV (AC-DELCO #219-141)	92-95	Y (LT5)	RH	14104807
5.	4-C21	3.675	**SUPPORT**, SECD AIR INJN PIPE	92-95	Y (LT5)	1	10105388
6.		8.963	**TEE**, HOSE (NYL M6.3 X M6.3 X M6.3) (SECD AIR INJN BYPASS)	92-95		AR	14004877
7.		8.962	**HOSE**, BULK 5/32X25FT (SECD AIR INJN BYPASS)	92-95		AR	9438381
8.		8.900	**BOLT**, HFH M8X1.25X21MM, 17 OD, 10.9 (SECD AIR INJN BYPASS VLV)	92-95		AR	12551177
9.	4-C11	3.670	**VALVE**, SECD AIR INJN BYPASS (AC-DELCO #214-125)	92-95	Y (LT5)	1	17092132
10.	4-M12	1.166	**CLAMP**, SECD AIR INJN CHK VLV HOSE (31.5 TO 36MM) (1.762)	92-95	Y (LT5)	1	10019739
11.		N.S.	**CONNECTOR**, SECD AIR INJN CHK VLV PIPE (AT PIPE)				

© 2000 GENERAL MOTORS SERVICE PARTS OPERATIONS-CHEVROLET-14Y

							1Y03-040
12.	4-C21	3.675	PIPE, SECD AIR INJN CHK VLV (AC-DELCO #219-140)	92-95	Y (LT5)	LH	14104873
13.	4-C21	3.675	HOSE, SECD AIR INJN CHK VLV (ATTACHES TO A.I.R. VLV LOCATED NEXT TO LEFT FRT WHLHS & BELOW CLU MSTR CYL.)	92-95	Y (LT5)	1	10186105
14.	4-C24	3.680	CONNECTOR, SECD AIR INJN CHK VLV HOSE	92-95	Y	1	10186106
15.	4-C24	3.680	CONNECTOR, SECD AIR INJN CHK VLV HOSE (VAC, 94-LONG NYLON BLACK) (24.3X18.5X18.5) (TEE) (3.675)	92-95	Y (LT5)	1	14088504
16.		8.948	CLAMP (SECD AIR INJN CHK VLV HOSE)	92-95	.....	AR	15620999
17.	4-C21	3.675	HOSE, SECD AIR INJN CHK VLV (RH) (ATCHS TO 10105398 A.I.R VLV HOSE ASM LOC NEXT TO LFT FRT WHLHSE BELOW CLU MSTR CYL)	92-95	Y (LT5)	1	10105399
18.	4-C21	3.675	HOSE, SECD AIR INJN BYPASS VLV (INJN CONT VLV, 738.3MM LGTH)	92-95	Y (LT5)	1	10108567
19.	4-C11	3.660	PUMP, SECD AIR INJN (INCLUDES RELAY) (AC-DELCO #215-90)	92-95	Y (LT5)	1	10090521
20.	4-C10	3.655	BOLT, SECD AIR INJN PUMP (10.252)	92-95	Y (LT5)	3	10132913
21.	4-C10	3.655	BRACKET, SECD AIR INJN PUMP (INCLS 22)	92-95	Y (LT5)	1	14104700
22.		8.921	NUT, U-SHAPE WIDE RANGE MULTI-THRD M5X 0.8 POR (AIR INJN PUMP BRKT) (PART OF 21)	92-95	.....	AR	11504693
23.		8.900	SCREW (HORN) (8.977) (AC-DELCO #11514532)	92-95	.....	AR	11514532
24.		8.900	BOLT, HEX W/WA (M6X1X20) (SECD AIR INJN PUMP)	92-95	.....	AR	10077321
25.		8.948	CLAMP, 28.6-88.2 DIA WORM GEAR (SECD AIR INJN PUMP) (AC-DELCO #12338017)	92-95	.....	AR	12338017
26.	4-C21	3.675	DUCT, SECD AIR INJN PUMP ...	92-95	Y (LT5)	1	14104698
27.		8.900	BOLT, M6X1X12, 10 THD, 11.6 OD, 9.8 GM500-M, POR, MACH (SECD AIR INJN CHK VLV PIPE) (AC-DELCO #11514149)	92-95	.....	AR	11514149
28.	4-C21	3.675	PIPE, SECD AIR INJN CHK VLV (CROSSUNDER) (AC-DELCO #219-83)	92-95	Y (LT5)	RH	10174328
29.		8.900	BOLT, HEX W/WA (M6X1X20) (SECD AIR INJN PUMP BRKT) ...	92-95	Y	AR	10077321
30.	4-B13	3.484	BRACKET, ACCEL CONT & CRCONT SERVO CBL ADJR (LWR)	92-95	Y (LT5)	1	10177905
31.		8.917	NUT, HFH, M8X1.25, 17.9 OD, 738 THK, 13MM HEX, 10, ZF (CTLTC CONV H/SHLD) (8.915) (AC-DELCO #11514596)	92-95	.....	AR	11514596

© 2000 GENERAL MOTORS SERVICE PARTS OPERATIONS - CHEVROLET - 14Y

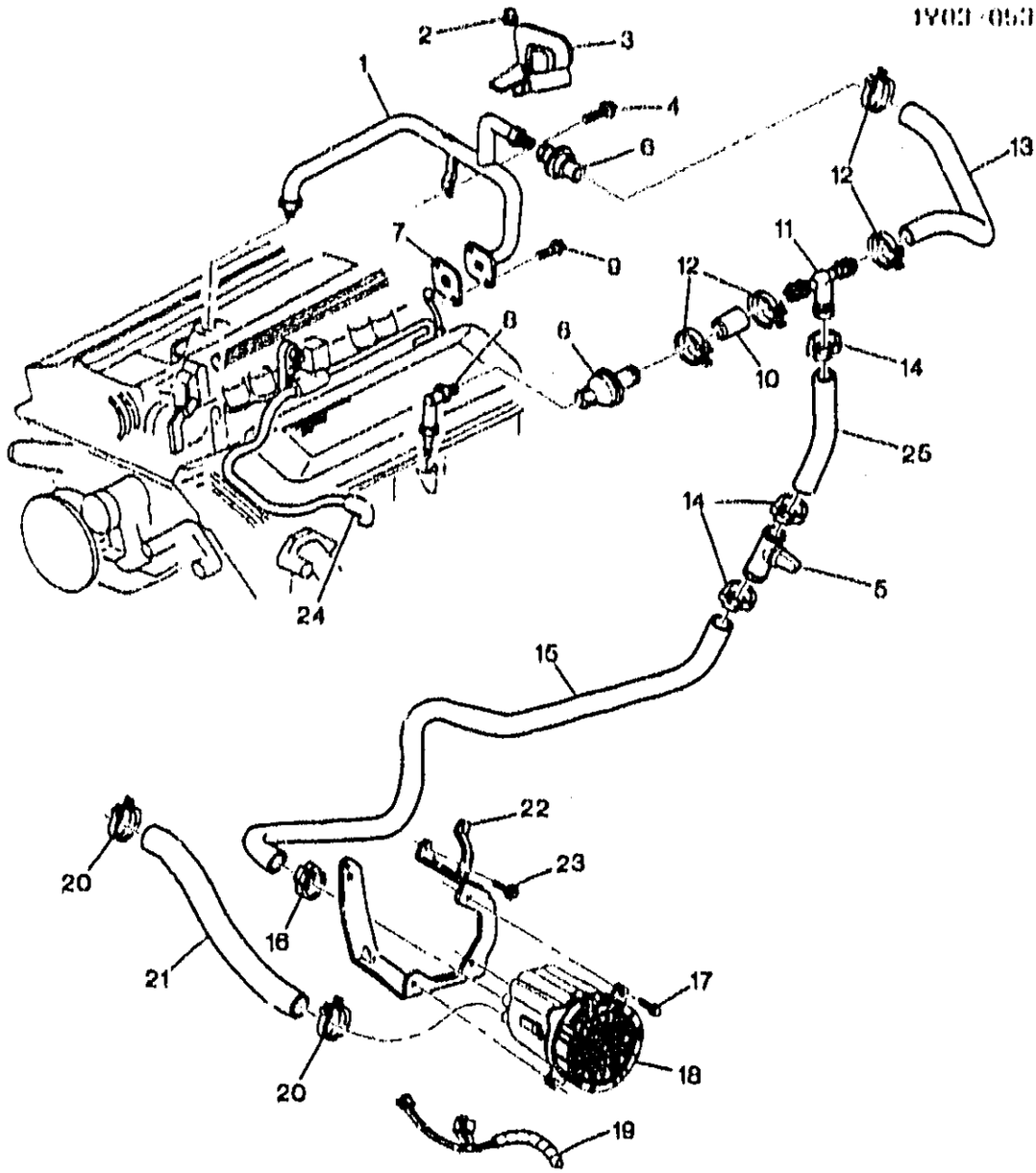

1Y03-053

1994-1995 Y A.I.R. PUMP & RELATED PARTS (LT1)

1.	4-C21	3.675	PIPE, SECD AIR INJN CHK VLV (INCLUDES HEAT SHIELD) (AC-DELCO #10108553)	94-95	Y (LT1)	RH	10 08553
2.		6.917	NUT (EGR VLV PIPE H/SHLD) ...	94-95	.....	AR	14057004
3.	4-C21	3.675	SHIELD, EGR VLV PIPE HT	94-95	Y (LT1)	1	10180157
4.		6.900	BOLT, HFH 3/8-16X3/4 PZOR 7114M	94-95	.....	AR	9442963
5.	4-C11	3.670	VALVE, SECD AIR INJN BL (AC-DELCO #214-614)	94-95	Y (LT1)	1	10235337
6.	4-C11	3.670	VALVE, SECD AIR INJN CHK (AC-DELCO #214-419)	94-95	Y (LT1)	2	22048212
7.	4-C21	3.675	GASKET, SECD AIR INJN CHK VLV PIPE	94-95	Y (LT1)	2	10055726
8.	4-C21	3.675	PIPE, SECD AIR INJN CHK VLV (AC-DELCO #10221302)	94-95	Y (LT1)	LH	10221302

© 2000 GENERAL MOTORS SERVICE PARTS OPERATIONS-CHEVROLET-14Y

							1Y01-052
9.		6.000	BOLT, HFH, 5/16-18X1.00, 280M, PC, .65-OD	94-95		AR	9441894
		6.932	WASHER, EXT LK M8X15X1.52 ZC (AC-DELCO #11501869)	94-95		AR	11501869
10.	4-C21	3.675	HOSE, SECD AIR INJN CHK VLV	94-95	Y (LT1)	LH	10106554
11.	4-C24	3.680	CONNECTOR, SECD AIR INJN CHK VLV HOSE	94-95	Y (LT1)	1	10105352
12.		6.948	CLAMP (SECD AIR INJN CHK VLV HOSE)	94-95		4	15620999
13.	4-C21	3.675	HOSE, SECD AIR INJN CHK VLV	94-95	Y (LT1)	RH	10106557
14.		6.948	CLAMP (SECD AIR INJN PUMP HOSE)	94-95		1	15620999
15.	4-C21	3.675	HOSE, SECD AIR INJN BYPASS VLV VAC (840MM)	94-95	Y	1	12551242
16.		6.948	CLAMP 28.6-66.2 DIA WORM GEAR (SECD AIR INJN PUMP HOSE) (AC-DELCO #12338017)	94-95		1	12338017
17.		6.900	BOLT, HEX W/WA, M6X1X40, 9.8, POR, 24 OD, ACPNT (SECD AIR INJN PUMP)	94-95		AR	11513677
18.	4-C11	3.630	PUMP, SECD AIR INJN (AC-DELCO #215-345)	94-95	Y (LT1)	1	24505066
19.	4-M21	2.480	HARNESS, FWD LP WRG	94	Y (LT1) (EXC T72, T84, T85, T90)	1	12130480
	4-M21	2.480	HARNESS, FWD LP WRG	95	Y (LT1) (EXC T72, T84, T85, T90)	1	12130484
	4-M21	2.480	HARNESS, FWD LP WRG	94	Y (LT1, T72, T84, T85, T90) (EXPORT)	1	12130481
	4-M21	2.480	HARNESS, FWD LP WRG	95	Y (LT1, T72, T84, T85, T90) (EXPORT)	1	12130485
20.		6.948	CLAMP (SECD AIR INJN PUMP DUCT)	94-95		AR	15620999
21.	4-C21	3.675	HOSE, SECD AIR INJN PUMP	94-95	Y (LT1)	1	10106165
22.	4-C10	3.655	BRACKET, SECD AIR INJN PUMP	94-95	Y (LT1)	1	12552796
23.		6.900	BOLT, HEX W/CON WA, M6X1X20 (SECD AIR INJN PUMP BRKT)	94-95		AR	11514623
24.	4-C21	3.675	HARNESS, EGR VLV VAC	94-95	Y (LT1)	1	10105323
25.	4-C21	3.675	HOSE, SECD AIR INJN BYPASS VLV VAC (192MM)	94-95	Y	1	12551244

RPO DEFINITIONS

LT1 -- ENGINE-GAS, 8 CYL, 5.7L(5.7P),MFI,HO
T72 - HEADLAMPS,LH RULE OF THE ROAD(EXPORT)
T84 - HEADLAMPS,RH RULE OF THE ROAD,RECTANGULAR(MARKED E)(EXPORT)
T85 - HEADLAMPS,LH RULE OF THE ROAD,RECTANGULAR(MARKED E)(EXPORT)
T90 - LAMP,SIGNALING AND MARKER(EXPORT)

© 2000 GENERAL MOTORS SERVICE PARTS OPERATIONS-CHEVROLET--14Y

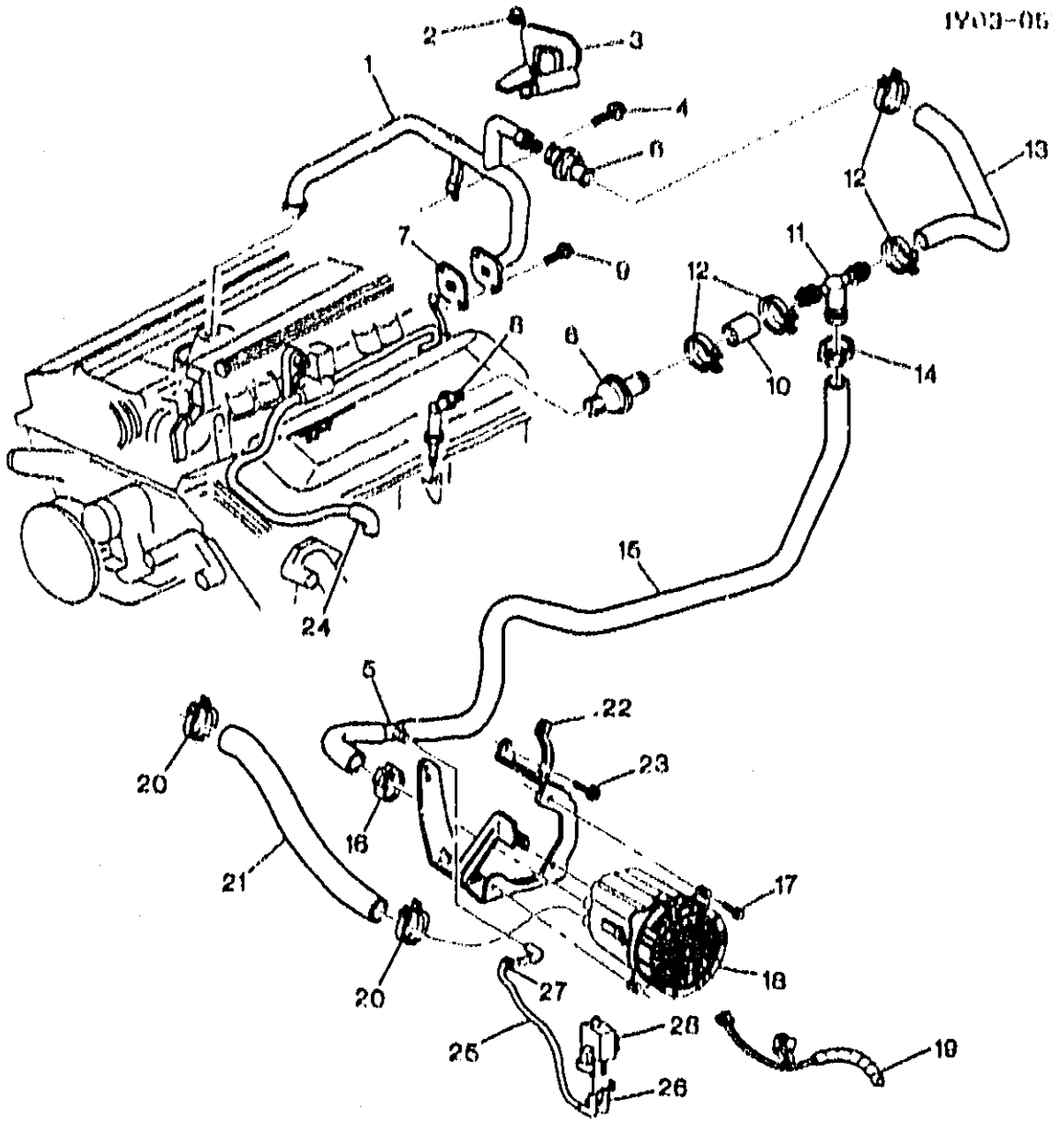

1Y03-057

1996 Y A.I.R. PUMP & RELATED PARTS

1.	4-C21	3.675	PIPE, SECD AIR INJN CHK VLV (INCLUDES HEAT SHIELD) (AC-DELCO #10108553)	96	Y (LT1, LT4)	RH	10108553
2.		8.917	NUT (EGR VLV PIPE H/SHLD) ...	96	.....	AR	14057004
3.	4-C21	3.675	SHIELD, EGR VLV PIPE HT	96	Y (LT1)	1	10186157
	4-C21	3.675	SHIELD, EGR VLV PIPE HT	96	Y (LT4)	1	10186157
4.		8.900	BOLT, HFH 3/8-16X3/4 PZOR 7114M	96	.....	AR	9442963
5.	4-C24	3.680	CONNECTOR, SECD AIR INJN PUMP HOSE (TO BLEED SOL) (PART OF 15) (5/8 X 5/8 X 3/16) ..	96	Y (LT1, LT4)	1	24504030
6.	4-C11	3.670	VALVE, SECD AIR INJN CHK (AC-DELCO #214-419)	96	Y (LT1, LT4)	2	22048212
7.	4-C21	3.675	GASKET, SECD AIR INJN CHK VLV PIPE	96	Y (LT1, LT4)	1	10055726
8.	4-C21	3.675	PIPE, SECD AIR INJN CHK VLV (AC-DELCO #10221302)	96	Y (LT1)	LH	10221302

© 2000 GENERAL MOTORS SERVICE PARTS OPERATIONS-CHEVROLET-14Y

							1Y03--057
	4-C21	3.675	PIPE, SECD AIR INJN CHK VLV (AC-DELCO #10221302)	96	Y (LT4)	LH	10221302
9.		8.900	BOLT, HFH, 5/16-18X1.00, 280M, PC, .05-OD	96	.....	AR	9441894
		8.932	WASHER, EXT LK M8X15X1.52 ZC (AC-DELCO #11501069)	96	.....	AR	11501069
10.	4-C21	3.675	HOSE, SECD AIR INJN CHK VLV .	96	Y (LT1, LT4)	LH	10106554
11.	4-C24	3.680	CONNECTOR, SECD AIR INJN CHK VLV HOSE	96	Y (LT1)	1	10106352
	4-C24	3.680	CONNECTOR, SECD AIR INJN CHK VLV HOSE	96	Y (LT4)	1	10106352
12.		8.948	CLAMP (SECD AIR INJN CHK VLV HOSE)	96	.....	4	15620999
13.	4-C21	3.675	HOSE, SECD AIR INJN CHK VLV .	96	Y (LT1, LT4)	RH	10106557
14.		8.948	CLAMP (SECD AIR INJN PUMP HOSE)	96	.....	1	15620999
15.	4-C21	3.675	HOSE, SECD AIR INJN BYPASS VLV (INCLS 6)	96	Y (LT1, LT4)	1	12552797
16.		8.948	CLAMP, 28.6-66.2 DIA WORM GEAR (SECD AIR INJN PUMP HOSE) (AC-DELCO #12338017)	96	.....	1	12338017
17.		8.900	BOLT, HEX W/WA, M6X1X40, 9.8, POR, 24 OD, ACPNT (SECD AIR INJN PUMP)	96	.....	AR	11513677
18.	4-C11	3.660	PUMP, SECD AIR INJN (AC-DELCO #215-346)	96	Y (LT1)	1	24505066
	4-C11	3.660	PUMP, SECD AIR INJN (AC-DELCO #215-346)	96	Y (LT4)	1	24505066
19.	4-M21	2.480	HARNESS, FWD LP WRG	96	Y (EXC T72, T84, T85, T90)	1	12163717
	4-M21	2.480	HARNESS, FWD LP WRG	96	Y (T72, T84, T85, T90) (EXPORT)	1	12163718
20.		8.948	CLAMP (SECD AIR INJN PUMP DUCT)	96	.....	AR	15620999
21.	4-C21	3.675	HOSE, SECD AIR INJN PUMP ...	96	Y (LT1, LT4)	1	10186185
22.	4-C10	3.655	BRACKET, SECD AIR INJN PUMP	96	Y (LT1)	1	12552796
	4-C10	3.655	BRACKET, SECD AIR INJN PUMP	96	Y (LT4)	1	12552796
23.		8.900	BOLT, HEX W/CON WA, M6X1X20 (SECD AIR INJN PUMP BRKT)	96	.....	AR	11514623
24.	4-C21	3.675	HARNESS, EGR VLV VAC	96	Y (LT1)	1	10105323
25.	4-C21	3.675	HARNESS, DCLR VLV VAC (INCLS 26, 27)	96	Y (LT1, LT4)	1	12552798
26.		N.S.	VALVE, DCLR VLV VAC HARN CK (PART OF 25)		.....		
27.		N.S.	VENT, DCLR VLV VAC HARN HYDROPHOBIC (PART OF 25) ...		.....		
28.	4-C11	3.670	VALVE, SECD AIR INJN BL SOL (2 PORT VAC, 2 BLADE TERM) (3.130) (AC-DELCO #214-565)	96	Y (LT1, LT4)	1	1997201

RPO DEFINITIONS

LT1 - ENGINE-GAS, 8 CYL, 5.7L(5.7P),MFI,HO
LT4 - ENGINE GAS, 8 CYL, 5.7L, MFI, HIGH OUTPUT
T72 - HEADLAMPS,LH RULE OF THE ROAD(EXPORT)
T84 - HEADLAMPS,RH RULE OF THE ROAD,RECTANGULAR(MARKED E)(EXPORT)
T85 - HEADLAMPS,LH RULE OF THE ROAD,RECTANGULAR(MARKED E)(EXPORT)
T90 - LAMP,SIGNALING AND MARKER(EXPORT)

© 2000 GENERAL MOTORS SERVICE PARTS OPERATIONS-CHEVROLET-14Y

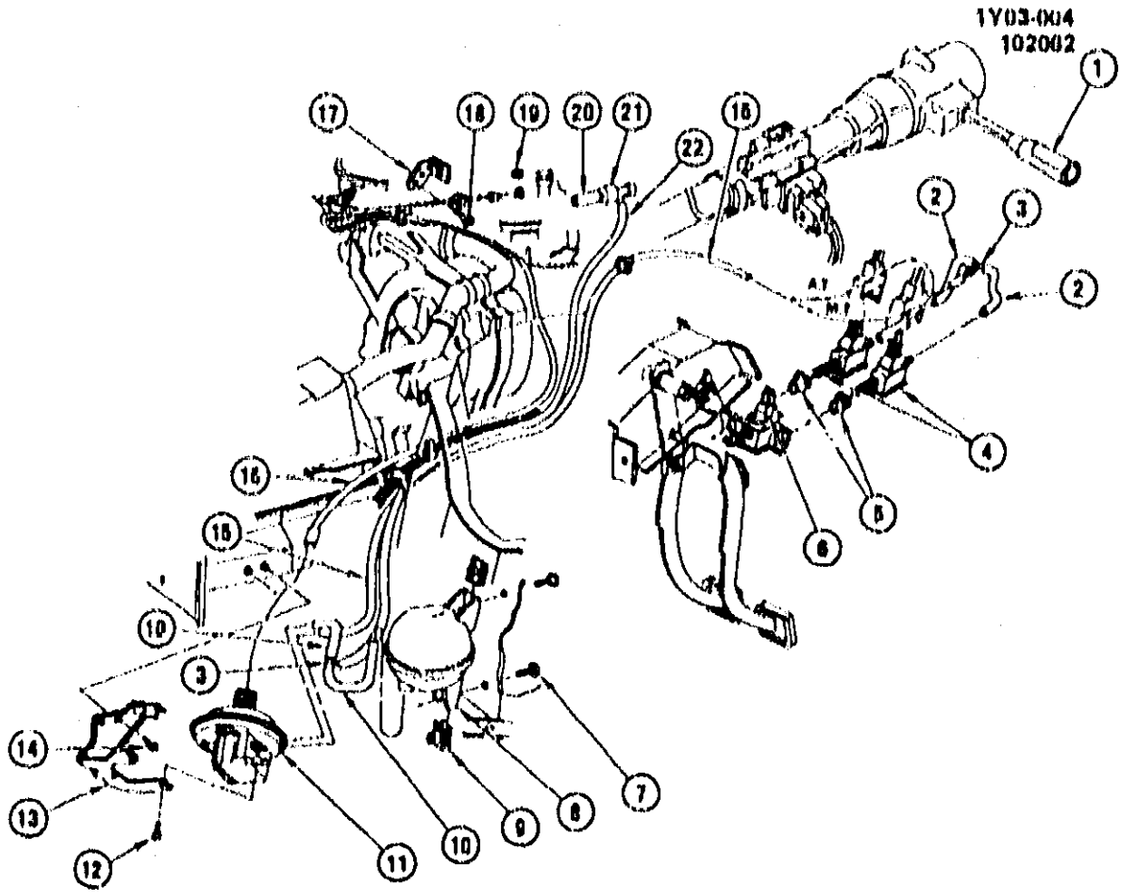

1Y -004

1984 Y CRUISE CONTROL–V8(L83)

1.	4–N15	2.897	LEVER, W/ACTR KNOB MULTI–FUNCTION (*2) (AC–DELCO #25111318)	25111318
2.		8.962	HOSE, VAC (7/32" ID X 125MM) (*1)	
3.		8.963	TEE, HOSE (NYL M6.3 X M6.3 X M6.3) (AR)	14004877
4.	4–D15	3.885	VALVE, CRUISE VAC & TRANS CONV REL (AC–DELCO #212–346)	1645516
5.	4–D15	3.885	RETAINER, CRUISE CONT VAC REL VLV	
6.	4–M20	2.447	SWITCH, STOP LP (W/K34) (AC–DELCO #D860A)	25524845
	4–M20	2.447	SWITCH, STOP LP (EXC. K34) (AC–DELCO #D869)	25524844
7.		8.977	SCREW, HEX WA HD (M6.3 X 1.81 X 20)	
8.	4–N25	9.281	TANK, A.C. & CRUISE CONT VAC (AC–DELCO #15–72234)	14056624
9.		8.921	NUT, "U" SPR TYPE P (M6.3 X 1.81)	
10.		8.962	HOSE, VAC (5/32" ID X 90MM) (*1)	
11.	4–D15	3.885	SERVO, CRUISE CONT (AC–DELCO #25074659)	25074659
	4–D15	3.885	BOOT, CRUISE CONT SERVO (AC–DELCO #25031301)	25031301
	4–D15	3.885	C[illegible]N, C/CONT BALL–W/CPLG (AC–DELCO #25031314)	25031314
12.		8.977	SCREW, HEX WA HD (M4.2 X 1.41 X 13)	
13.		DISCON	BRACKET, CRUISE CONT SERVO	14053644
14.		8.900	BOLT, HEX W/CON WA (M6 X 1 X 25)	
15.		DISCON	HOSE, CRUISE CONT VAC REL	14056665
16.		DISCON	CABLE, CRUISE CONT SERVO	14056630
17.		DISCON	BRACKET, CRUISE CONT SERVO CBL	14038658
18.		8.977	SCREW, HEX WA HD TAP (M6.3 X 1.81 X 13)	
19.	4–B12	3.425	RETAINER, 5/32" CABLE (8.821)	15567924
20.		8.962	HOSE, VAC (7/32" ID X 40MM) (*1)	

© 2000 GENERAL MOTORS SERVICE PARTS OPERATIONS–CHEVROLET–14Y

21.	4-N24	0.260	VALVE, HTR, A.C., & CRUISE CONT SOURCE CHK (3.005) (AC-DELCO #14056640)	14056640
22.		0.002	HOSE, VAC (5/32" ID X 1675MM) (*1)	

NOTE 1: CUT TO LENGTH FROM BULK HOSE.
NOTE 2: SEE CATALOG GROUP: 2.007, FOR SPECIFIC USAGE.

RPO DEFINITIONS
L03 -- ENGINE, 5.7L (5.7-8), V8,(CFI-CROSSFIRE)(TBI)

© 2000 GENERAL MOTORS SERVICE PARTS OPERATIONS-CHEVROLET-14Y

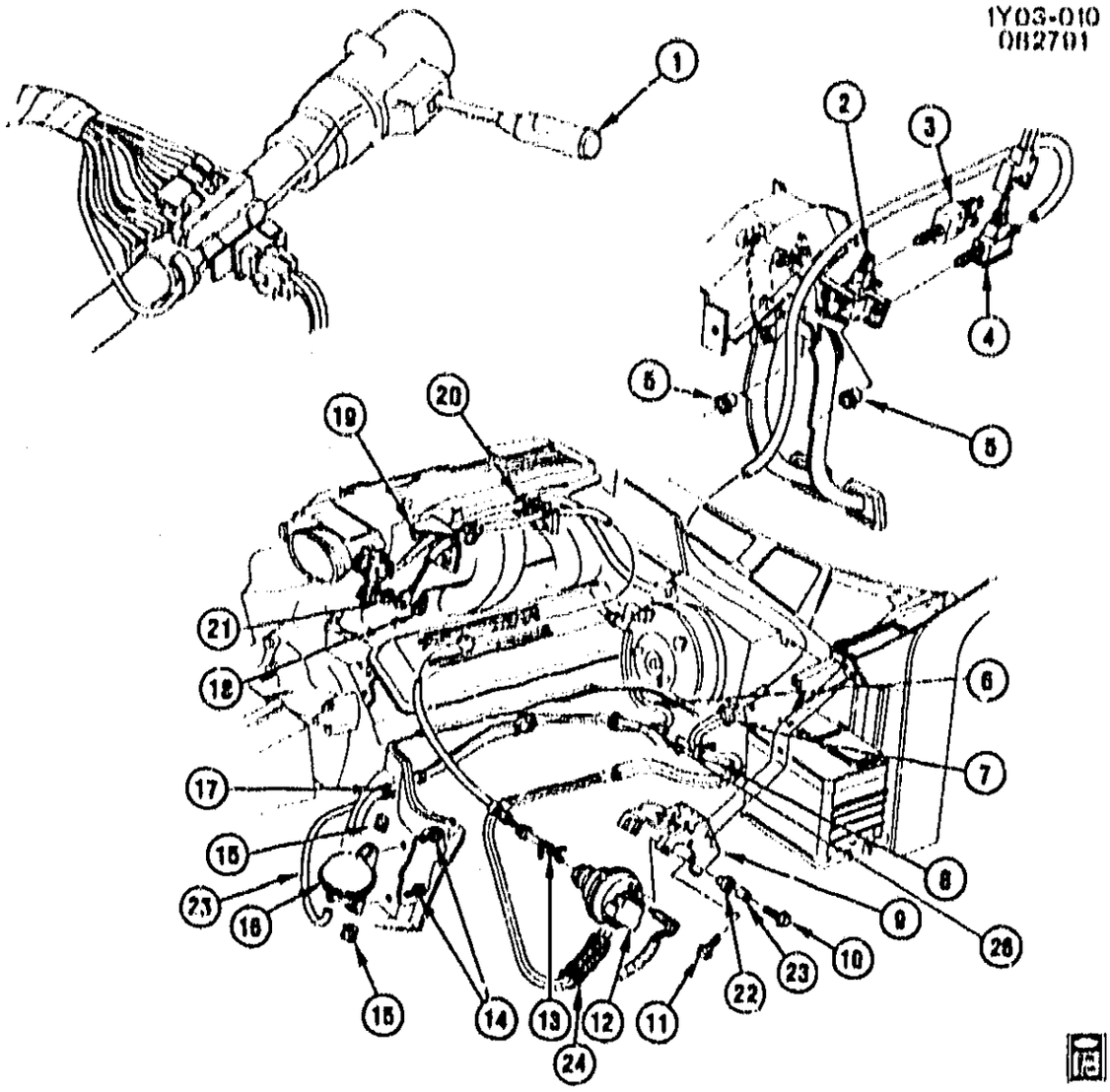

1985-1991 Y CRUISE CONTROL-V8(L98)

1.	4-N15	2.897	LEVER, W/ACTR T/SIG & D/SW (1985-89) (AC-DELCO #25111318)	25111318
		N.S.	LEVER, W/ACTR T/SIG & HDLP D/SW (1990)	
	4-N15	2.897	LEVER, T/SIG & HDLP D/SW & CRCONT ACTR (1991) (AC-DELCO #25140558)	25140558
2.	4-M20	2.447	SWITCH, STOP LP (1985-86) (AC-DELCO #D850A)	25524845
	4-M20	2.447	SWITCH, STOP LP (1987-91) (AC-DELCO #D852A)	25529860
3.	4-D15	3.885	VALVE, VAC REL (1985-89) (AC-DELCO #212-346)	1645516
	4-D15	3.885	VALVE, VAC REL (1990-91) (AC-DELCO #212-346)	1645516
4.	4-D15	3.883	SWITCH, CONT VAC REL (W/M.T.)	14043256
5.	4-D15	3.885	RETAINER, VAC REL VLV	10075405
6.		DISCON	HOSE, CRCONT VAC (1991)	10174377
7.	4-D16	3.886	HOSE, VAC REL SW	14091289
8.		8.962	HOSE, BULK 5/32X25FT (AR)	
9.	4-D15	3.885	BRACKET, SERVO (1985-89)	10067906
	4-D15	3.885	BRACKET, SERVO (1990-91)	10098905
10.		8.977	SCREW, HEX HD W/FL WA (M4.2X1.41X20) 6010M AL	11514270
11.	4-N21	7.039	BOLT, FRT C/MBRHFH (M10X1.5X21.5) 10.9 POR	14069669
12.	4-D15	3.885	SERVO, CONT VAC (1985-88) (AC-DELCO #25074628)	25074628
	4-D15	3.885	SERVO, CONT VAC (1989) (AC-DELCO #25074628)	25074628

© 2000 GENERAL MOTORS SERVICE PARTS OPERATIONS-CHEVROLET-14Y

				1Y03-010
	4-D15	3.005	SERVO, CONT VAC (1990-91) (AC-DELCO #25074027)	25074027
13.	4-D14	3.080	CABLE, SERVO (1985-88)	14091230
		DISCON	CABLE, SERVO (1989)	10085262
	4-D14	3.080	CABLE, CRUISE CONT SERVO (1990-91) (AC-DELCO #10208716)	10208716
14.		0.977	SCREW, HEX W/FL WA (M6.3X1.81X20)	12337020
15.		0.921	NUT, U SHAPE (M6.3X1.81) PZOR	11509602
16.	4-N25	0.261	TANK, A.C. VAC (AC-DELCO #15-72234)	14056024
17.		0.965	RETAINER, PLSTC ADJ STRAP	3016059
18.	4-B12	3.425	RETAINER, 5/32 CABLE SPR STL PHOS (0.021)	15507024
19.	4-B13	3.454	BRACKET, ACCEL CONT CBL (1985-88)	14004305
	4-B13	3.454	BRACKET, ACCEL CONT CBL (1989-91)	10077566
20.	4-M16	2.251	CLIP, ACCEL CONT CBL	0917256
21.	4-D15	3.005	WASHER, SERVO CBL	14091256
22.	4-D15	3.005	INSULATOR, SERVO	14091274
23.	4-D15	3.005	SLEEVE, SERVO INSL	14091273
24.		0.965	CONDUIT, ELEC (.75 ID)	0910356
25.		0.962	HOSE, VPR (5/32) (CUT AS REQD)	9438361

RPO DEFINITIONS
L98 -- ENGINE, 5.7L, (5.7-6) 350 CID, V8, TPI

© 2000 GENERAL MOTORS SERVICE PARTS OPERATIONS - CHEVROLET - 14Y

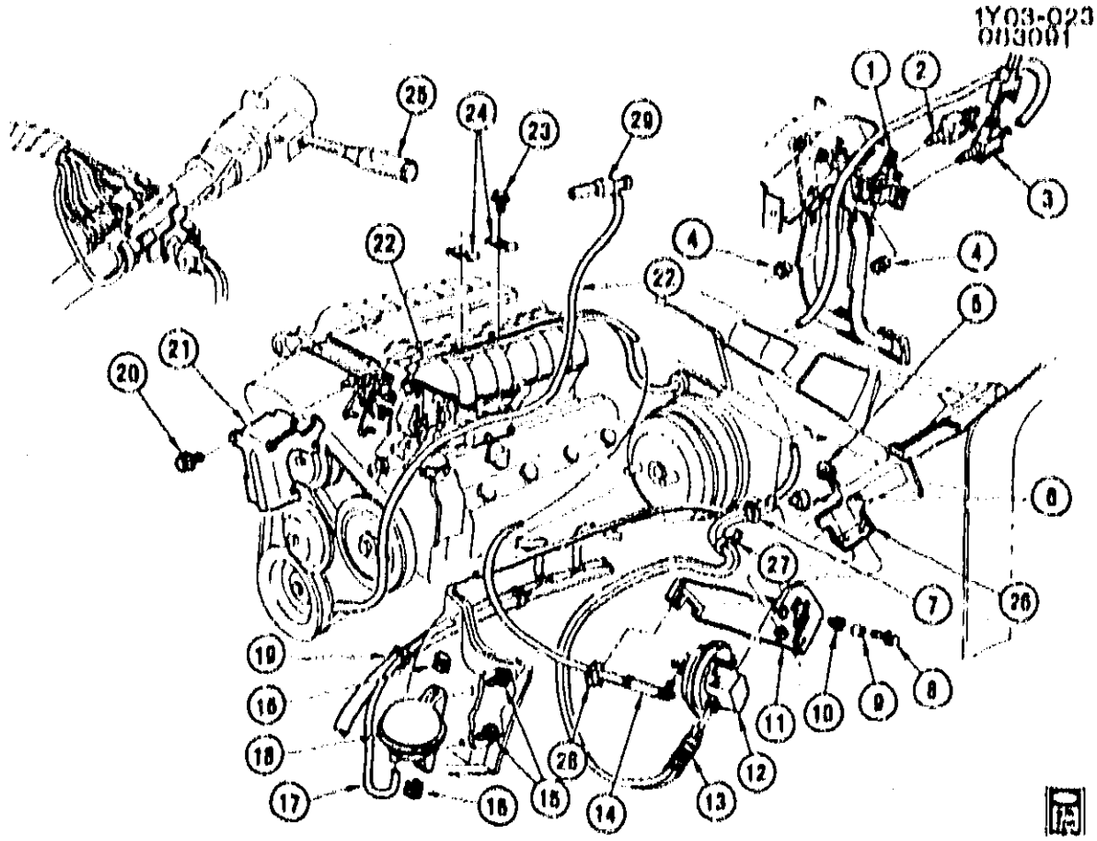

1Y03-023

1990 Y CRUISE CONTROL-V8(LT5)

1.	4-M20	2.447	SWITCH, STOP LP (AC-DELCO #D652A)	25529800
2.	4-D15	3.885	VALVE, CRUISE CONT VAC REL (AC-DELCO #212-346)	1645516
3.	4-D15	3.883	SWITCH, CR/CONT VAC REL	14043256
4.	4-D15	3.885	RETAINER, CR/CONT VAC REL VLV	10075405
5.		8.900	BOLT, HEX (M8X1.25X16) 9.8 PHOS	11509589
6.		N.S.	FILTER, CR/CONT VAC HOSE	
7.	4-D16	3.886	HOSE, VAC REL SW	14091289
8.		8.977	SCREW, HFH (M4.2X1.41X20) ALB	11514270
9.	4-D15	3.885	SLEEVE, CR/CONT SERVO INSL	14091273
10.	4-D15	3.885	INSULATOR, CR/CONT SERVO	14091274
11.	4-D15	3.885	BRACKET, CR/CONT SERVO	10098905
12.	4-D15	3.885	SERVO, CR/CONT (AC-DELCO #25074627)	25074627
13.		8.965	CONDUIT, ELEC (3/4) (CUT AS REQ)	8919356
14.	4-D14	3.880	CABLE, ACCEL CONT & CR/CONT SERVO	10150042
15.		8.977	SCREW, HWH TAP (M6.3X1.81X20) PZOR	12337828
16.		8.921	NUT, U SHAPE TYPE P (M6.3X1.81) PEOR	11514290
17.		8.962	HOSE, VPR (5/32) (CUT AS REQD)	9602857
18.	4-N25	9.281	TANK, A/C VAC (AC-DELCO #15-72234)	14056624
19.		8.965	RETAINER, PLSTC ADJ STRAP	3816659
20.		8.977	SCREW, PAN 6 LOB TAP (M4.2X1.4X8) PEOR	11514501
21.	4-B14	3.469	SHIELD, ACCEL CONT CBL SPH	10150018
22.	4-D16	3.886	HOSE, CR/CONT VAC (TO PLENUM)	10110989
23.		8.977	BOLT, PAN HD (M3X.5X10) TRI LOBE 6010M PEOR	11514501
24.	4-B12	3.425	CLIP, ACCEL CONT CBL	10135856
25.	4-N15	2.897	LEVER, T/SIG & HDLP D/SW & CRCONT ACTR (AC-DELCO #25140558)	25140558
26.		DISCON	BRACKET, VAC PUMP	10098476

© 2000 GENERAL MOTORS SERVICE PARTS OPERATIONS-CHEVROLET-14Y

27.	4-A21	3.200	CLIP, VAC INTERFACE HOSE	10090505
28.		DISCON	BRACKET, CR/CONT SERVO CBL	14104899
29.	4-D15	3.085	VALVE, CR/CONT VAC HOSE CHK (AC-DELCO #14050048)	14050048

RPO DEFINITIONS
LT5 - ENGINE,5.7L(5.7J),TPI

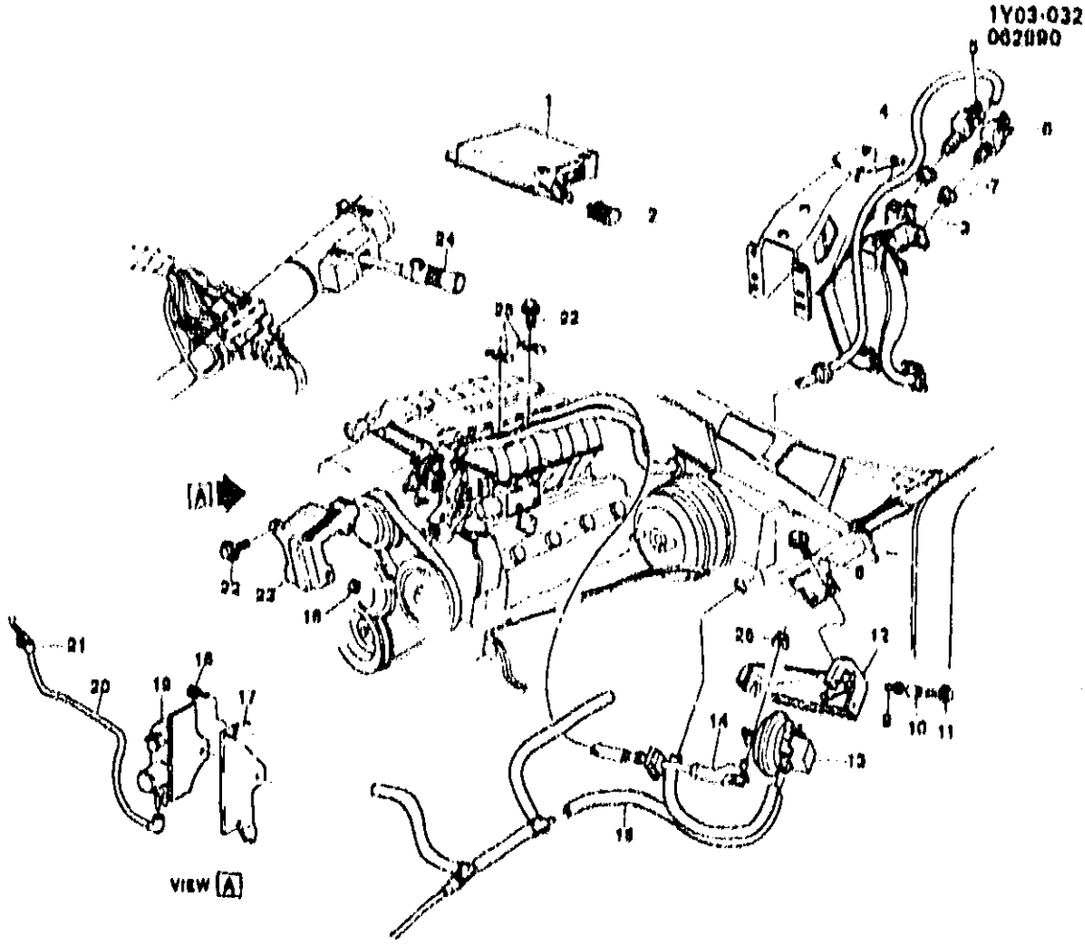

1Y03-032

1991 Y CRUISE CONTROL - V8(LT5)

1.	4-D17	3.887	MODULE, CRCONT (AC-DELCO #25140992)	25140992
2.		8.921	NUT, U-TYPE, 4.2X1.41, DIM A-15, DIM B-14 DIM C-8.65, 1050, PZOR (AR)	12338121
3.	4-M20	2.447	SWITCH, S/LP (AC-DELCO #D852A)	25529860
4.	4-D16	3.886	HOSE, CRCONT VAC REL SW	14091289
5.	4-D15	3.885	VALVE, CRCONT VAC REL (AC-DELCO #212-348)	1646516
6.	4-D15	3.885	VALVE, CRCONT VAC REL (1991 FE1, FE7) (1992 FE1, FE7, ML9))	14043256
7.	4-D15	3.885	RETAINER, CRCONT VAC REL VLV	10075405
8.		8.900	BOLT, HEX, M8X1.25X16, FULL, 8.8, PS (AR)	11509589
9.	4-D14	3.880	INSULATOR, CRCONT SERVO	14091274
10.	4-D15	3.885	SLEEVE, CRCONT SERVO INSL	14091273
11.		8.977	SCREW, HEX HD W/FL WA, M4.2X1.41X20, ALBO (AR)	11514270
12.	4-D15	3.885	BRACKET, CRCONT SERVO	10098905
13.	4-D15	3.885	SERVO, CRCONT (AC-DELCO #25074627)	25074627
14.	4-D14	3.880	CABLE, ACCEL CONT & CR/CONT SERVO (1991)	10150042
15.		8.962	HOSE, BULK 5/32X25FT (AR)	9438381
16.	4-B14	3.469	NUT, ACCEL CONT CBL SPH SHLD	16512106
17.	4-A21	3.280	BRACKET, VAC PUMP	10098485
18.	4-D18	3.901	BOLT, VAC PUMP BRKT	10172330
19.	4-A21	3.280	PUMP, VAC	10098493
20.	4-A21	3.280	HOSE, VAC PUMP	10098477
21.		8.950	CLIP, CLOSED #6 3/8 DIA 3/8 BOLT ZC (AR)	125698
22.		8.977	SCREW, PAN 6 LOB TAP M4.2X1.4X8 PHOR (AR)	11514501

© 2000 GENERAL MOTORS SERVICE PARTS OPERATIONS - CHEVROLET - 14Y

23.	4-B14	3.469	SHIELD, ACCEL CONT CBL SPH	10150018
24.	4-N15	2.897	LEVER, T/SIG & HDLP D/SW & CRCONT ACTR (AC-DELCO #25140558)	25140558
25.	4-B12	3.425	CLIP, ACCEL CONT CBL	10135856
26.	4-D14	3.880	RETAINER, CRCONT SERVO CBL	15567924

RPO DEFINITIONS
LT5 - ENGINE,[illegible]

© 2000 GENERAL MOTORS SERVICE PARTS OPERATIONS - CHEVROLET - 14Y

MICROFICHE INDEX

GROUP 3.000

FICHE 4 OF 11

GROUP	DESCRIPTION	STARTING GRID LOCATION PARTS	ILLUSTRATIONS
–	GENERAL INFORMATION	1–A2	1–G2
–	ALPHABETICAL INDEX	1–B13	N.A.
3.000	FUEL TANK – INTAKE MANIFOLD – FUEL INJECTION – THROTTLE BODY – AIR CLEANER – ACCELERATOR	4–A2	4–E2
3.000	EXHAUST & EMISSIONS SYSTEMS – CARBURETOR – CRUISE – FUEL FILTER & PUMP	4–C2	4–H2
–	OUT OF FICHE CALLS	N.A.	4–M9

4–11

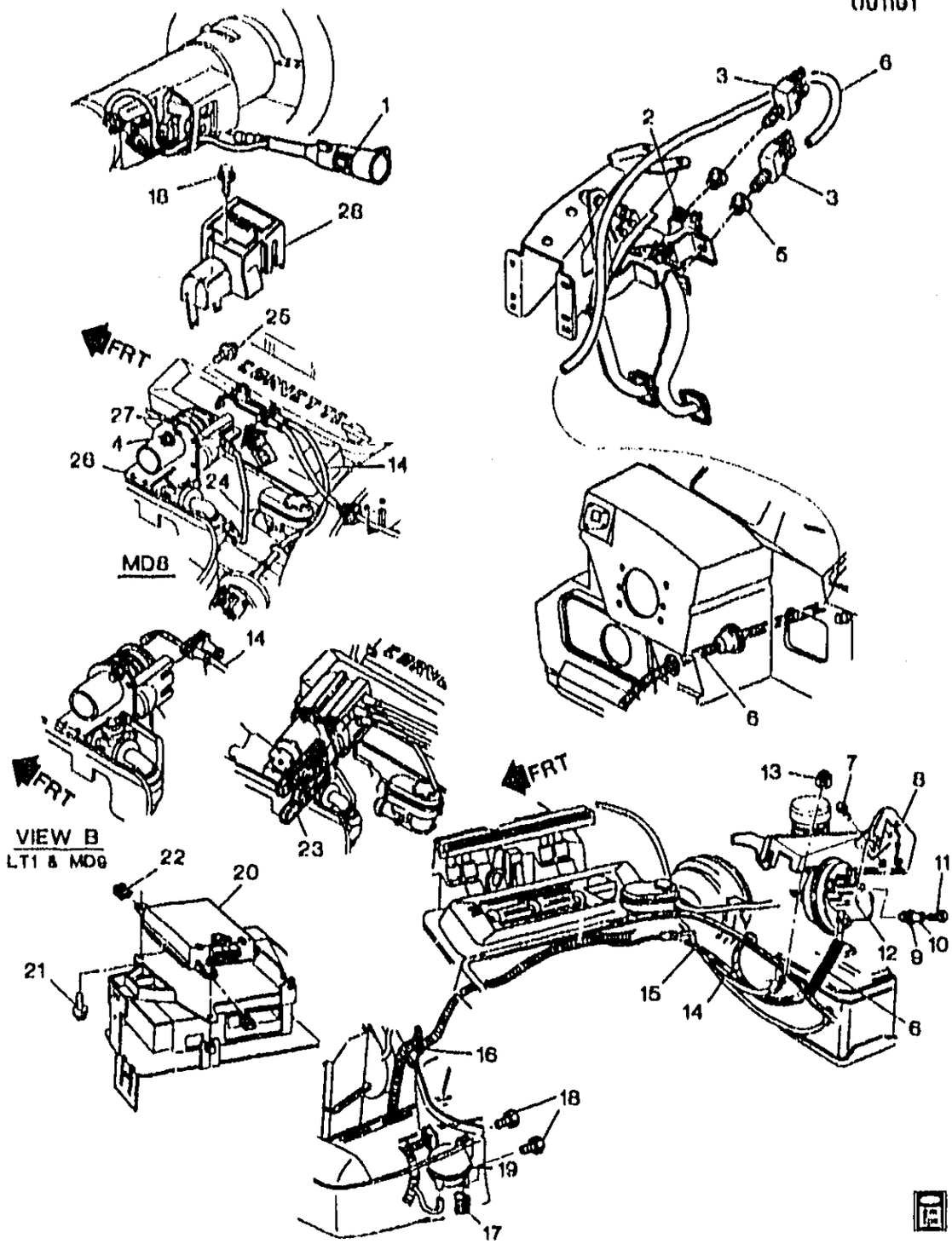

1Y03-038

1992 Y CRUISE CONTROL-V8(LT1,ML9)

1.	4-N15	2.897	LEVER, T/SIG & HDLP D/SW & CRCONT ACTR (AC-DELCO #25140558)	92 Y	1	25140558
2.	4-M20	2.447	SWITCH, S/LP (AC-DELCO #D852A)	92 Y	1	25529860

© 2000 GENERAL MOTORS SERVICE PARTS OPERATIONS-CHEVROLET-14Y

							1Y03-036
3.	4-D16	3.885	VALVE, CRCONT VAC REL (ON CLU) (3.883)	92	Y (ML9, FE1, FE7)	1	14043256
4.		8.917	NUT, HFH M6X1X8.5 ZOR 9	92		AR	3530297
5.	4-D15	3.885	RETAINER, CRCONT VAC REL VLV (3.887)	92	Y	1	10075405
6.	4-D16	3.886	HOSE, CRCONT VAC REL SW	92	Y	1	14091289
7.		8.900	BOLT, HEX HD M8-1.25X16 PH 9.8	92		AR	11500315
8.	4-D15	3.885	BRACKET, CRCONT SERVO	92	Y	1	10096905
9.	4-D14	3.880	INSULATOR, CRCONT SERVO (3.885)	92	Y	3	14091274
10.	4-D15	3.885	SLEEVE, CRCONT SERVO INSL	92	Y	3	14091273
11.		8.977	SCREW, HEX HD W/FL WA, M4.2X1.41X20, ALBO	92		AR	11514270
12.	4-D15	3.885	SERVO, CRCONT (AC-DELCO #25074627)	92	Y	1	25074627
13.	4-D14	3.880	RETAINER, CRCONT SERVO CBL (5/32 CBL SPR STL PHOS) (8.821)	92	Y	AR	15567924
14.	4-B12	3.430	CABLE, ACCEL CONT & CRCONT SERVO	92	Y (L1)	1	10215860
15.		8.962	HOSE, BULK 5/32X25FT	92		AR	9430361
16.		8.965	STRAP-TIE-7"ADJ (W/ROSEBUD FOR .25 DIA HOLE .031-.14 TH)	92		AR	3816659
17.		8.921	NUT, U-TYPE, 6.3X1.81, 13.5 REACH, 25.8X 16.5, 0.65-3.8 PNL RNG, PZOR	92		AR	11509582
18.		8.977	SCREW, HEX W/FLAT WA	92		AR	12337828
19.	4-N25	9.261	TANK, HTR & A/C CONT VAC (AC-DELCO #15-72234)	92	Y	1	14056624
20.	4-D17	3.887	MODULE, CRCONT (AC-DELCO #25140992)	92	Y	1	25140992
21.		8.977	BOLT/SCREW ASM M4.2X1.41 #18 HEX HD GM71	92		AR	11515303
22.		8.921	NUT, U-TYPE, 4.2X1.41, DIM A-15, DIM B-14 DIM C-8.65, 1050, PZOR	92		AR	12338121
23.	4-D15	3.885	SHIELD, ACCEL CONT & CRCONT SERVO CBL ADJR	92	Y	1	10192285
	4-B14	3.469	SHIELD, ACCEL CONT & CRCONT SERVO CBL ADJR (3.885)	92	Y	1	10192285
24.	4-B13	3.454	BRACE, ACCEL CONT & CRCONT SERVO CBL ADJR BRKT	92	Y (LT1)	1	12553404
25.		8.900	BOLT, HEX W/WA (M6X1X20)	92		AR	10077321
26.	4-D14	3.880	BRACKET, ACCEL CONT & CRCONT SERVO CBL ADJR (3.454)	92	Y (LT1)	1	10212361
27.	4-D14	3.880	ADJUSTER, ACCEL CONT & CRCONT SERVO CBL (3.454)	92	Y	1	12557971
28.	4-D14	3.880	COVER, ACCEL CONT & CRCONT SERVO CBL ADJR (3.454)	92	Y (LT1)	1	10211305

RPO DEFINITIONS
FE1 - SUSPENSION SYSTEM,SOFT RIDE

© 2000 GENERAL MOTORS SERVICE PARTS OPERATIONS - CHEVROLET - 14Y

FE7 – SUSPENSION SYSTEM,FRONT AND REAR,HEAVY DUTY(USED WITH PERFORMANCE HANDLING PACKAGE Z51)
LT1 – ENGINE–GAS, 8 CYL, 5.7L(5.7P),MFI,HO
ML9 – TRANSMISSION,MANUAL 6–SPEED

© 2000 GENERAL MOTORS SERVICE PARTS OPERATIONS–CHEVROLET–14Y

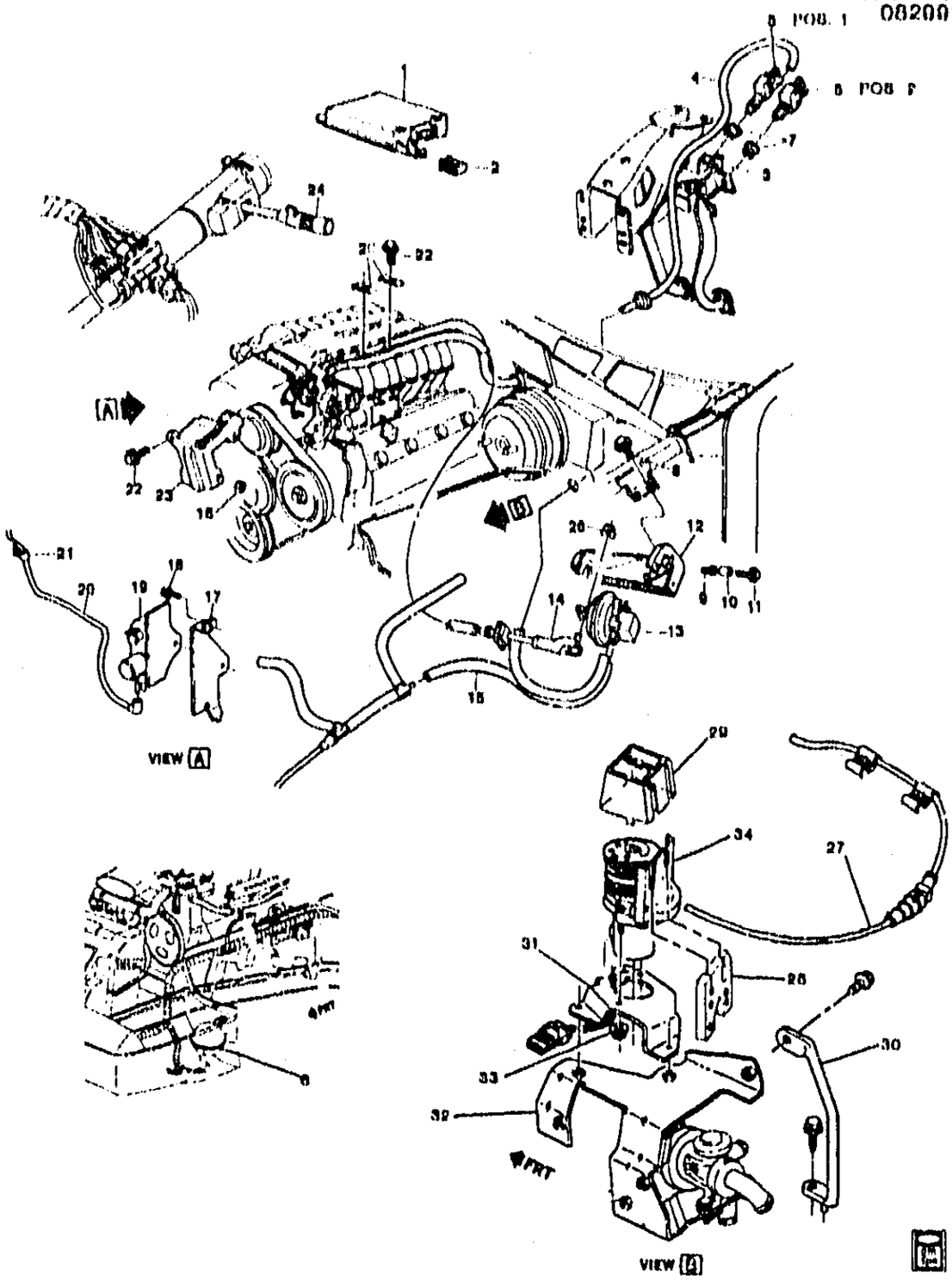

1Y03-041

1992 Y CRUISE CONTROL-V8(LT5)

1.	4-D17	3.887	MODULE, CRCONT (AC-DELCO #25140992)	92 Y	1	25140992
2.		8.921	NUT, U-TYPE, 4.2X1.41, DIM A-15, DIM B-14 DIM C-8.65, 1050, PZOR	92	AR	12338121

© 2000 GENERAL MOTORS SERVICE PARTS OPERATIONS-CHEVROLET-14Y

							1Y03-041
3.	4-M20	2.447	SWITCH, S/LP (AC-DELCO #D852A)	92	Y	1	25529660
4.	4-D16	3.886	HOSE, CRCONT VAC REL SW	92	Y	1	14091289
5.	4-D15	3.885	VALVE, CRCONT VAC REL (ON BRK) (W/SW) (AC-DELCO #212-340)	92	Y	1	1645516
	4-D15	3.885	VALVE, CRCONT VAC REL (ON CLU) (3.883)	92	Y (ML9, FE1, FE7)	1	14043256
6.	4-N25	9.281	TANK, HTR & A/C CONT VAC (AC-DELCO #15-72234)	92	Y	1	14056624
7.	4-D15	3.885	RETAINER, CRCONT VAC REL VLV (3.887)	92	Y	1	10076405
8.		8.900	BOLT, HEX, M8X1.25X16, FULL, 9.8, PS	92		AR	11509569
9.	4-D14	3.880	INSULATOR, CRCONT SERVO (3.885)	92	Y	3	14091274
10.	4-D15	3.885	SLEEVE, CRCONT SERVO INSL	92	Y	3	14091273
11.		8.977	SCREW, HEX HD W/FL WA, M4.2X1.41X20, ALBO	92		AR	11514270
12.	4-D15	3.885	BRACKET, CRCONT SERVO	92	Y	1	10098906
13.	4-D15	3.885	SERVO, CRCONT (AC-DELCO #25074627)	92	Y	1	25074627
14.	4-B12	3.430	CABLE, ACCEL CONT (TBI TO THROT ADJR)	92	Y (LT5)	1	10163845
	4-B12	3.430	CABLE, ACCEL CONT & CRCONT SERVO	92	Y (LT5)	1	10172495
15.		8.962	HOSE, BULK 5/32X25FT	92		AR	9438381
16.	4-B14	3.469	NUT, ACCEL CONT CBL SPH SHLD (4 X 0.7 THD X 4.85MM) (2.679)	92	Y (LT5)	2	16512106
17.	4-A21	3.280	BRACKET, VAC PUMP	92	Y (LT5)	1	10098485
18.	4-D18	3.901	BOLT, VAC PUMP BRKT (M6.3X1.81X20) (7.874)	92	Y (LT5)	1	10172330
19.	4-A21	3.280	PUMP, VAC	92	Y (LT5)	1	10098493
20.	4-A21	3.280	HOSE, VAC PUMP	92	Y (LT5)	1	10098477
21.		8.950	CLIP, CLSD STEEL 7/16 X 5/16 ZC TYP1 NAT (3.880)	92		AR	25526629
22.		8.977	SCREW, PAN 6 LOB TAP M4.2X1.4X8 PHOR	92		AR	11514501
23.	4-B14	3.469	SHIELD, ACCEL CONT CBL SPH	92	Y (LT5)	1	10150018
24.	4-N15	2.897	LEVER, T/SIG & HDLP D/SW & CRCONT ACTR (AC-DELCO #25140558)	92	Y	1	25140558
25.	4-B12	3.425	CLIP, ACCEL CONT CBL	92	Y (LT5)	2	10192228
26.	4-D14	3.880	RETAINER, CRCONT SERVO CBL (5/32 CBL SPR STL PHOS) (8.821)	92	Y	AR	15567924
27.	4-B12	3.430	CABLE, ACCEL CONT (TBI TO THROT ADJR)	92	Y (LT5)	1	10163845
28.	4-D15	3.885	SHIELD, ACCEL CONT & CRCONT SERVO CBL ADJR	92	Y	1	10192285
	4-B14	3.469	SHIELD, ACCEL CONT & CRCONT SERVO CBL ADJR (3.885)	92	Y	1	10192285
29.	4-D14	3.880	COVER, ACCEL CONT & CRCONT SERVO CBL ADJR (3.454)	92	Y (LT5)	1	10209540

© 2000 GENERAL MOTORS SERVICE PARTS OPERATIONS-CHEVROLET-14Y

							1Y03-041
30.	4-B13	3.454	BRACE, ACCEL CONT & CRCONT SERVO CBL ADJR BRKT	92	Y (LT5)	1	10177907
31.	4-D14	3.880	BRACKET, ACCEL CONT & CRCONT SERVO CBL ADJR (UPR) (3.454)	92	Y (LT5)	1	10143548
32.	4-B13	3.454	BRACKET, ACCEL CONT & CRCONT SERVO CBL ADJR (LWR)	92	Y (LT5)	1	10177905
33.		0.917	NUT, HEX M6X1X6.5 ZOR 9	92	.....	AR	3530297
34.	4-D14	3.880	ADJUSTER, ACCEL CONT & CRCONT SERVO CBL (3.454) ...	92	Y	1	12557971

RPO DEFINITIONS

FE1 – SUSPENSION SYSTEM,SOFT RIDE
FE7 – SUSPENSION SYSTEM,FRONT AND REAR,HEAVY DUTY(USED WITH PERFORMANCE HANDLING PACKAGE Z51)
LT5 – ENGINE,5.7L(5.7J),TPI
ML9 – TRANSMISSION,MANUAL 6-SPEED

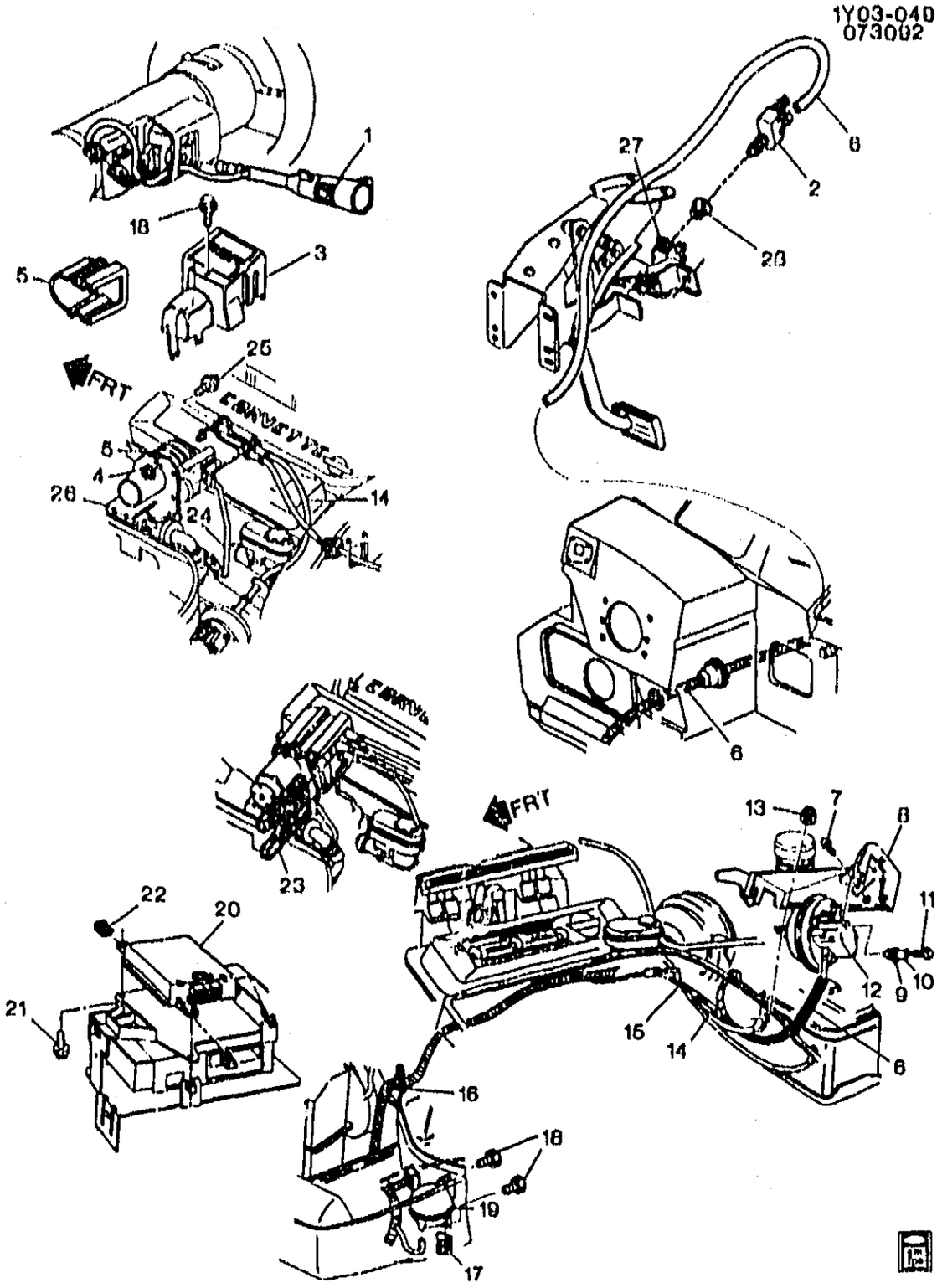

1Y03-049

1992 Y CRUISE CONTROL–V8(LT1,MD8)

1.	4–N15	2.897	LEVER, T/SIG & HDLP D/SW & CRCONT ACTR (AC–DELCO #25140558)	92 Y	1	25140558
2.	4–D15	3.885	VALVE, CRCONT VAC REL (ON BRK) (W/SW) (AC–DELCO #212–346)	92 Y	1	1645516

							1Y03-049
3.	4-D14	3.880	COVER, ACCEL CONT & CRCONT SERVO CBL ADJR (3.454)	92	Y (LT1)	1	10211305
4.		0.917	NUT, HFH M6X1X6.5 ZOR 9	92		AR	3530297
5.	4-D14	3.880	ADJUSTER, ACCEL CONT & CRCONT SERVO CBL (3.454)	92	Y	1	12557971
6.	4-D16	3.886	HOSE, CRCONT VAC REL SW	92	Y	1	14091289
7.		0.900	BOLT, HEX HD M8-1.25X16 PH 9.8	92		AR	11500815
8.	4-D15	3.885	BRACKET, CRCONT SERVO	92	Y	1	10098905
9.	4-D14	3.880	INSULATOR, CRCONT SERVO (3.885)	92	Y	3	14091274
10.	4-D15	3.885	SLEEVE, CRCONT SERVO INSL	92	Y	3	14091273
11.		0.977	SCREW, HEX HD W/FL WA, M4.2X1.41X20, ALBO	92		AR	11514270
12.	4-D15	3.885	SERVO, CRCONT (AC-DELCO #25074627)	92	Y	1	25074627
13.	4-D14	3.880	RETAINER, CRCONT SERVO CBL (5/32 CBL SPR STL PHOS) (8.821)	92	Y	AR	15567924
14.	4-B12	3.430	CABLE, ACCEL CONT & CRCONT SERVO	92	Y (LT1)	1	10215860
15.		0.962	HOSE, BULK 5/32X25FT	92		AR	9438381
16.		0.965	STRAP-TIE-7"ADJ (W/ROSEBUD FOR .25 DIA HOLE .031-.14 TH)	92		AR	3816659
17.		0.921	NUT, U-TYPE, 6.3X1.81, 13.5 REACH, 25.8X 16.5, 0.65-3.8 PNL RNG, PZOR	92		AR	11509562
18.		0.977	SCREW, HEX W/FLAT WA	92		AR	12337828
19.	4-N25	9.281	TANK, HTR & A/C CONT VAC (AC-DELCO #15-72234)	92	Y	1	14056624
20.	4-D17	3.887	MODULE, CRCONT (AC-DELCO #25140992)	92	Y	1	25140992
21.		0.977	BOLT/SCREW ASM M4.2X1.41 #18 HEX HD GM71	92		AR	11515303
22.		0.921	NUT, U-TYPE, 4.2X1.41, DIM A-15, DIM B-14 DIM C-8.65, 1050, PZOR	92		AR	12338121
23.	4-D15	3.885	SHIELD, ACCEL CONT & CRCONT SERVO CBL ADJR	92	Y	1	10192285
	4-B14	3.469	SHIELD, ACCEL CONT & CRCONT SERVO CBL ADJR (3.885)	92	Y	1	10192285
24.	4-B13	3.454	BRACE, ACCEL CONT & CRCONT SERVO CBL ADJR BRKT	92	Y (LT1)	1	12553404
25.		0.900	BOLT, HEX W/WA (M6X1X20)	92		AR	10077321
26.	4-D14	3.880	BRACKET, ACCEL CONT & CRCONT SERVO CBL ADJR (3.454)	92	Y (LT1)	1	10212361
27.	4-M20	2.447	SWITCH, S/LP (AC-DELCO #D852A)	92	Y	1	25529860
28.	4-D15	3.885	RETAINER, CRCONT VAC REL VLV (3.887)	92	Y	1	10075405

RPO DEFINITIONS
LT1 - ENGINE-GAS, 8 CYL, 5.7L(5.7P),MFI,HO
MD8 - TRANSMISSION,AUTOMATIC 4-SPEED(THM700R4/4L60)

© 2000 GENERAL MOTORS SERVICE PARTS OPERATIONS-CHEVROLET-14Y

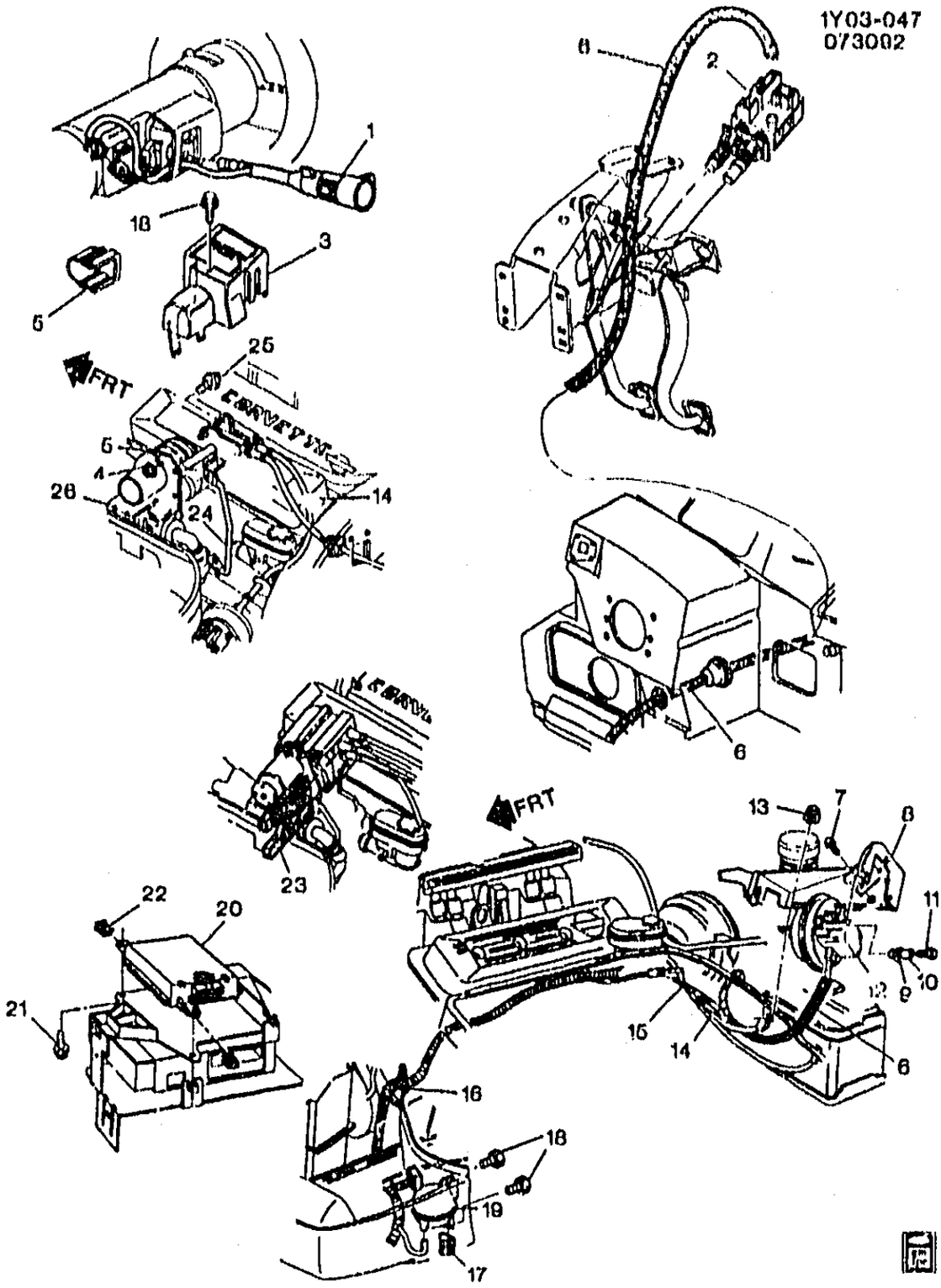

1Y03-047

1993 Y CRUISE CONTROL-V8(LT1,MD8)
1994-1996 Y CRUISE CONTROL-V8(LT1,M30)

1.	4-N15	2.897	LEVER, T/SIG & HDLP D/SW & CRCONT ACTR (AC-DELCO #25140558)	93 Y	1	25140558

© 2000 GENERAL MOTORS SERVICE PARTS OPERATIONS-CHEVROLET-14Y

							1Y03-047
	4-N15	2.097	LEVER, T/SIG & HDLP D/SW & CRCONT ACTR (AC-DELCO #25140540)	94-96	Y	1	25140540
2.	4-N17	4.710	SWITCH, ELEK BRK CONT BRK PED (W/ S/LP SW) (AC-DELCO #10211657)	93-96	Y	1	10211657
	4-M20	2.447	SWITCH, ELEK BRK CONT BRK PED (W/ S/LP SW) (4.710) (AC-DELCO #10211657)	93-96	Y	1	10211657
3.	4-D14	3.880	COVER, ACCEL CONT & CRCONT SERVO CBL ADJR (3.454)	93-95	Y (LT1)	1	10211305
	4-D14	3.880	COVER, ACCEL CONT & CRCONT SERVO CBL ADJR (3.454)	96	Y (LT1, LT4)	1	10211305
4.		8.917	NUT, HEX M6X1X6.5 ZOR 9	93-96		AR	3530297
5.	4-D14	3.880	ADJUSTER, ACCEL CONT & CRCONT SERVO CBL (3.454)	93-96	Y	1	12557971
6.	4-D16	3.886	HOSE, CRCONT VAC REL SW	93-96	Y	1	14091269
7.		8.900	BOLT, HEX HD M8-1.25X16 PH 9.8	93-96		AR	11500815
8.	4-D15	3.885	BRACKET, CRCONT SERVO	93-96	Y	1	10098905
9.	4-D14	3.880	INSULATOR, CRCONT SERVO (3.885)	93-96	Y	3	14091274
10.	4-D15	3.885	SLEEVE, CRCONT SERVO INSL	93-96	Y	3	14091273
11.		8.977	SCREW, HEX HD W/FL WA, M4.2X1.41X20, ALBO	93-96		AR	11514270
12.	4-D15	3.885	SERVO, CRCONT (AC-DELCO #25074627)	93-96	Y	1	25074627
13.	4-D14	3.880	RETAINER, CRCONT SERVO CBL (5/32 CBL SPR STL PHOS) (8.821)	93-96	Y	AR	15567924
14.	4-B12	3.430	CABLE, ACCEL CONT & CRCONT SERVO	93	Y (LT1)	1	10215860
	4-B12	3.430	CABLE, ACCEL CONT & CRCONT SERVO (1 PC SIAMESE DES)	94	Y (LT1) (1ST DES)	1	10217789
	4-D14	3.880	CABLE, CRCONT SERVO (2 PC DES, ACCEL CABLE IS SEPARATE, SEE GROUP 3.430)	94	Y (LT1) (2ND DES)	1	10241100
	4-D14	3.880	CABLE, CRCONT SERVO	95	Y (LT1)	1	10241100
	4-D14	3.880	CABLE, CRCONT SERVO	96	Y (LT1, LT4)	1	10241100
15.		8.962	HOSE, BULK 5/32X25FT	93-96		AR	9438381
16.		8.965	STRAP-TIE-7"ADJ (W/ROSEBUD FOR .25 DIA HOLE .031-.14 TH)	93-96		AR	3816659
17.		8.921	NUT, U-TYPE, 6.3X1.81, 13.5 REACH, 25.8X 16.5, 0.65-3.8 PNL RNG, PZOR	93-96		AR	11509582
18.		8.977	SCREW, HEX W/FLAT WA	93-96		AR	12337826
19.	4-N25	9.281	TANK, HTR & A/C CONT VAC (AC-DELCO #15-72234)	93-96	Y	1	14056624
20.	4-D17	3.887	MODULE, CRCONT (AC-DELCO #25140723)	93-96	Y	1	25140723
21.		8.977	BOLT/SCREW ASM M4.2X1.41 #18 HEX HD GM71	93-96		AR	11515303

							1Y03-047
22.		8.921	NUT, U-TYPE, 4.2X1.41, DIM A-15, DIM B-14 DIM C-8.66, 1050, PZOR	93-96		AR	12338121
23.	4-D15	3.885	SHIELD, ACCEL CONT & CRCONT SERVO CBL ADJR	93-96	Y	1	10192285
	4-B14	3.469	SHIELD, ACCEL CONT & CRCONT SERVO CBL ADJR (3.885)	93-96	Y	1	10192285
24.	4-B13	3.454	BRACE, ACCEL CONT & CRCONT SERVO CBL ADJR BRKT	93-95	Y (LT1)	1	12553404
	4-B13	3.454	BRACE, ACCEL CONT & CRCONT SERVO CBL ADJR BRKT	96	Y	1	12553404
25.		8.900	BOLT, HEX W/WA (M6X1X20)	93-96		AR	10077321
26.	4-D14	3.880	BRACKET, ACCEL CONT & CRCONT SERVO CBL ADJR (3.454)	93	Y (LT1)	1	10212361
	4-D14	3.880	BRACKET, ACCEL CONT & CRCONT SERVO CBL ADJR (3.454)	94-95	Y (LT1)	1	12553403
	4-D14	3.880	BRACKET, ACCEL CONT & CRCONT SERVO CBL ADJR (3.454)	96	Y	1	12553403

RPO DEFINITIONS
LT1 – ENGINE-GAS, 8 CYL, 5.7L(5.7P),MFI,HO
LT4 – ENGINE GAS, 8 CYL, 5.7L, MFI, HIGH OUTPUT
MD8 – TRANSMISSION,AUTOMATIC 4-SPEED(THM700R4/4L60)
M30 – TRANSMISSION,AUTOMATIC 4 SPEED,4L60E,ELECTRONIC

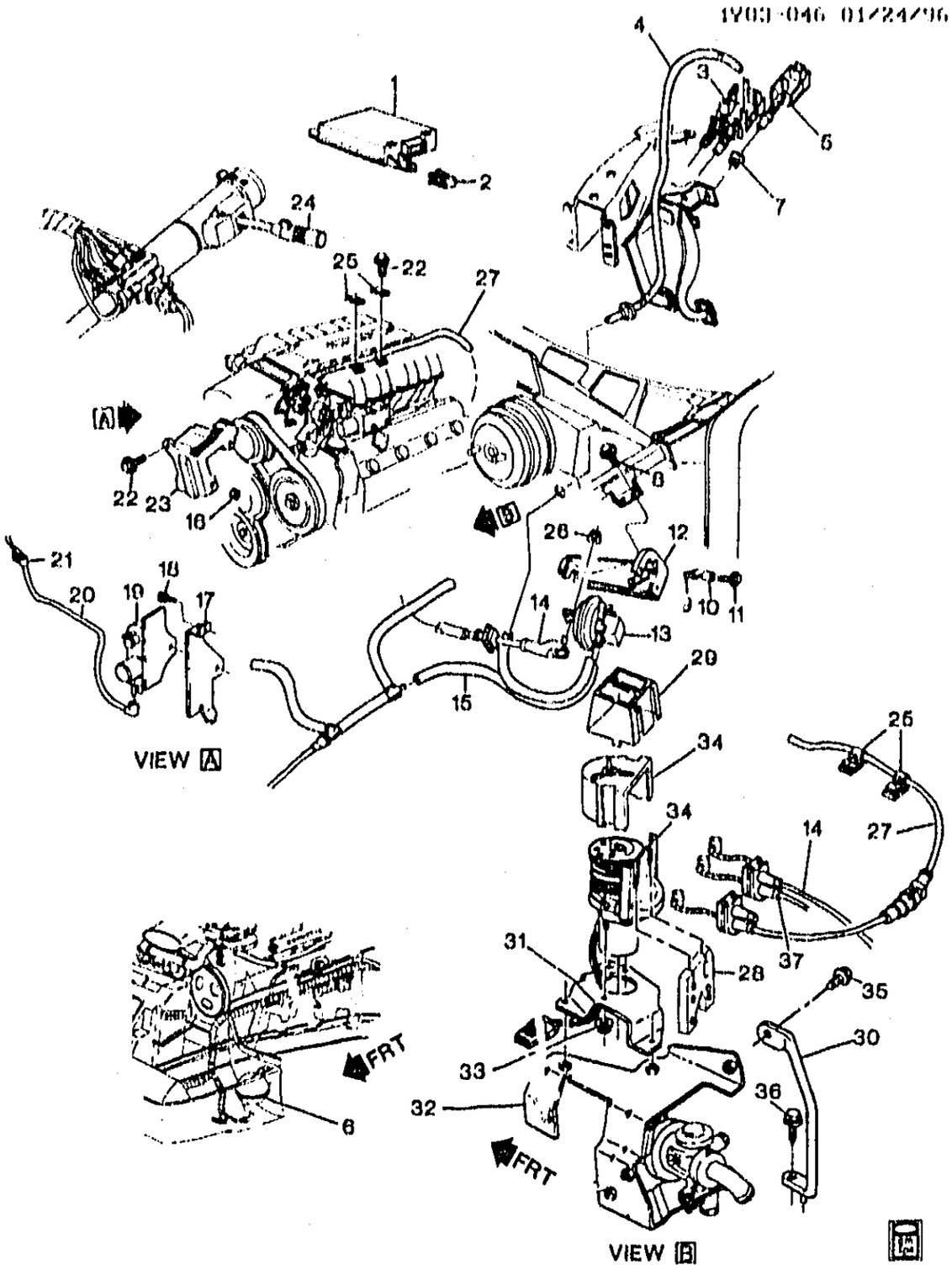

1Y03-046

1993-1995 Y CRUISE CONTROL-V8(LT5)

1.	4-D17	3.887	MODULE, CRCONT (AC-DELCO #25140723)	93-95 Y	1	25140723
2.		8.921	NUT, U-TYPE, 4.2X1.41, DIM A-15, DIM B-14 DIM C-8.65, 1050, PZOR	93-95	AR	12338121

© 2000 GENERAL MOTORS SERVICE PARTS OPERATIONS-CHEVROLET-14Y

							1Y03-040
3.	4-N17	4.710	SWITCH, ELEK BRK CONT BRK PED (W/ S/LP SW) (AC-DELCO #10211657)	93-95	Y	1	10211657
	4-M20	2.447	SWITCH, ELEK BRK CONT BRK PED (W/ S/LP SW) (4.710) (AC-DELCO #10211657)	93-95	Y	1	10211657
4.	4-D16	3.886	HOSE, CRCONT VAC REL SW	93-95	Y	1	14091269
5.	4-D17	3.887	SWITCH, CRCONT REL (INCLS 7) (AC-DELCO #10194403)	93-95	Y (MLO)	1	10194403
6.	4-N25	9.281	TANK, HTR & A/C CONT VAC (AC-DELCO #15-72234)	93-95	Y	1	14056624
7.		N.S.	RETAINER, CRCONT VAC REL VLV (PART OF 6)				
8.		8.900	BOLT, HEX, M8X1.25X16, FULL, 8.8, PS	93-95		AR	11509589
9.	4-D14	3.880	INSULATOR, CRCONT SERVO (3.885)	93-95	Y	3	14091274
10.	4-D15	3.885	SLEEVE, CRCONT SERVO INSL	93-95	Y	3	14091273
11.		8.977	SCREW, HEX HD W/FL WA, M4.2X1.41X20, ALBO	93-95		AR	11514270
12.	4-D15	3.885	BRACKET, CRCONT SERVO	93-95	Y	1	10098005
13.	4-D15	3.885	SERVO, CRCONT (AC-DELCO #25074627)	93-95	Y	1	25074627
14.	4-B12	3.430	CABLE, ACCEL CONT & CRCONT SERVO	93	Y (LT5)	1	10174495
	4-B12	3.430	CABLE, ACCEL CONT & CRCONT SERVO (HAS 1 PC SIAMESE CBL FOR BOTH ACCEL CONT CBL & CRCONT SERVO CBL)	94	Y (LT5) (1ST DES)	1	10174495
	4-D14	3.880	CABLE, CRCONT SERVO (THROTTLE ADJ TO CRCONT SERVO) (HAS SEPARATE ACCEL CONT CBL & CRCONT SERVO CBL. USE 10241101 IN GRP. 3.430 FOR ACCEL CONT CBL.)	94	Y (LT5) (2ND DES)	1	10241102
	4-D14	3.880	CABLE, CRCONT SERVO (THROTTLE ADJ TO CRCONT SERVO)	95	Y (LT5)	1	10241102
15.		8.962	HOSE, BLK 5/32X25FT	93-95		AR	9438381
16.	4-B14	3.469	NUT, ACCEL CONT CBL SPH SHLD (4 X 0.7 THD X 4.85MM) (2.679)	93-95	Y (LT5)	2	16512106
17.	4-A21	3.280	BRACKET, VAC PUMP	93-95	Y (LT5)	1	10098485
18.	4-D18	3.901	BOLT, VAC PUMP BRKT (M6.3X1.81X20) (7.874)	93-95	Y (LT5)	1	10172330
19.	4-A21	3.280	PUMP, VAC	93-95	Y (LT5)	1	10098493
20.	4-A21	3.280	HOSE, VAC PUMP	93-95	Y (LT5)	1	10098477
21.		8.950	CLIP, CLSD STEEL 7/16 X 5/16 ZC TYP1 NAT (3.880)	93-95		AR	25526629
22.		8.977	SCREW, PAN 6 LOB TAP M4.2X1.4X8 PHOR	93-95		AR	11514501
23.	4-B14	3.469	SHIELD, ACCEL CONT CBL SPH	93-95	Y (LT5)	1	10150018
24.	4-N15	2.897	LEVER, T/SIG & HDLP D/SW & CRCONT ACTR (AC-DELCO #25140558)	93	Y	1	25140558
	4-N15	2.897	LEVER, T/SIG & HDLP D/SW & CRCONT ACTR (AC-DELCO #25140540)	94-95	Y	1	25140540

© 2000 GENERAL MOTORS SERVICE PARTS OPERATIONS-CHEVROLET-14Y

							1Y03-046
25.	4-B12	3.425	CLIP, ACCEL CONT CBL	93-95	Y (LT5)	2	10166625
26.	4-D14	3.880	RETAINER, CRCONT SERVO CBL (5/32 CBL SPR STL PHOS) (0.021)	93-95	Y	AR	16567924
27.	4-B12	3.430	CABLE, ACCEL CONT (TBI TO THROTTLE ADJ)	93-95	Y	1	10163045
28.	4-D15	3.865	SHIELD, ACCEL CONT & CRCONT SERVO CBL ADJR	93-95	Y	1	10192285
	4-B14	3.469	SHIELD, ACCEL CONT & CRCONT SERVO CBL ADJR (3.865)	93-95	Y	1	10192285
29.	4-D14	3.880	COVER, ACCEL CONT & CRCONT SERVO CBL ADJR (3.454)	93-95	Y (LT5)	1	10209540
30.	4-B13	3.454	BRACE, ACCEL CONT & CRCONT SERVO CBL ADJR BRKT	93-95	Y (LT5)	1	10177907
31.	4-D14	3.880	BRACKET, ACCEL CONT & CRCONT SERVO CBL ADJR (UPR) (3.454)	93-95	Y (LT5)	1	10143548
32.	4-B13	3.454	BRACKET, ACCEL CONT & CRCONT SERVO CBL ADJR (LWR)	93-95	Y (LT5)	1	10177905
33.		8.917	NUT, HEH M6X1X6.5 ZOR 9	93-95	.....	AR	3530297
34.	4-D14	3.880	ADJUSTER, ACCEL CONT & CRCONT SERVO CBL (3.454) ...	93-95	Y	1	12557971
35.		8.900	BOLT, HEX W/WA (M6X1X20) (ACCEL CONT & CRCONT SERVO CBL ADJR BRKT)	93-95	.....	AR	10077321
36.		8.900	BOLT, HFH M8X1.25X16 (U/B FRT S/RL UPR BR)	93-95	.....	AR	11513703
37.	4-B12	3.430	CABLE, ACCEL CONT & CRCONT SERVO	93	Y (LT5)	1	10174495
	4-B12	3.430	CABLE, ACCEL CONT & CRCONT SERVO (HAS 1 PC SIAMESE CBL FOR BOTH ACCEL CONT CBL & CRCONT SERVO CBL)	94	Y (LT5) (1ST DES)	1	10174495
	4-B12	3.430	CABLE, ACCEL CONT (PEDAL TO THROTTLE ADJ) (HAS SEPRATE ACCEL CONT CBL & CRCONT SERVO CBL. USE 10241101 IN GRP 3.880 FOR CRCONT SERVO CBL))	94	Y (2ND DES)	1	10241101
	4-B12	3.430	CABLE, ACCEL CONT (PEDAL TO THROTTLE ADJ)	95	Y	1	10241101

RPO DEFINITIONS
LT5 – ENGINE,5.7L(5.7J),TPI
ML9 – TRANSMISSION,MANUAL 6-SPEED

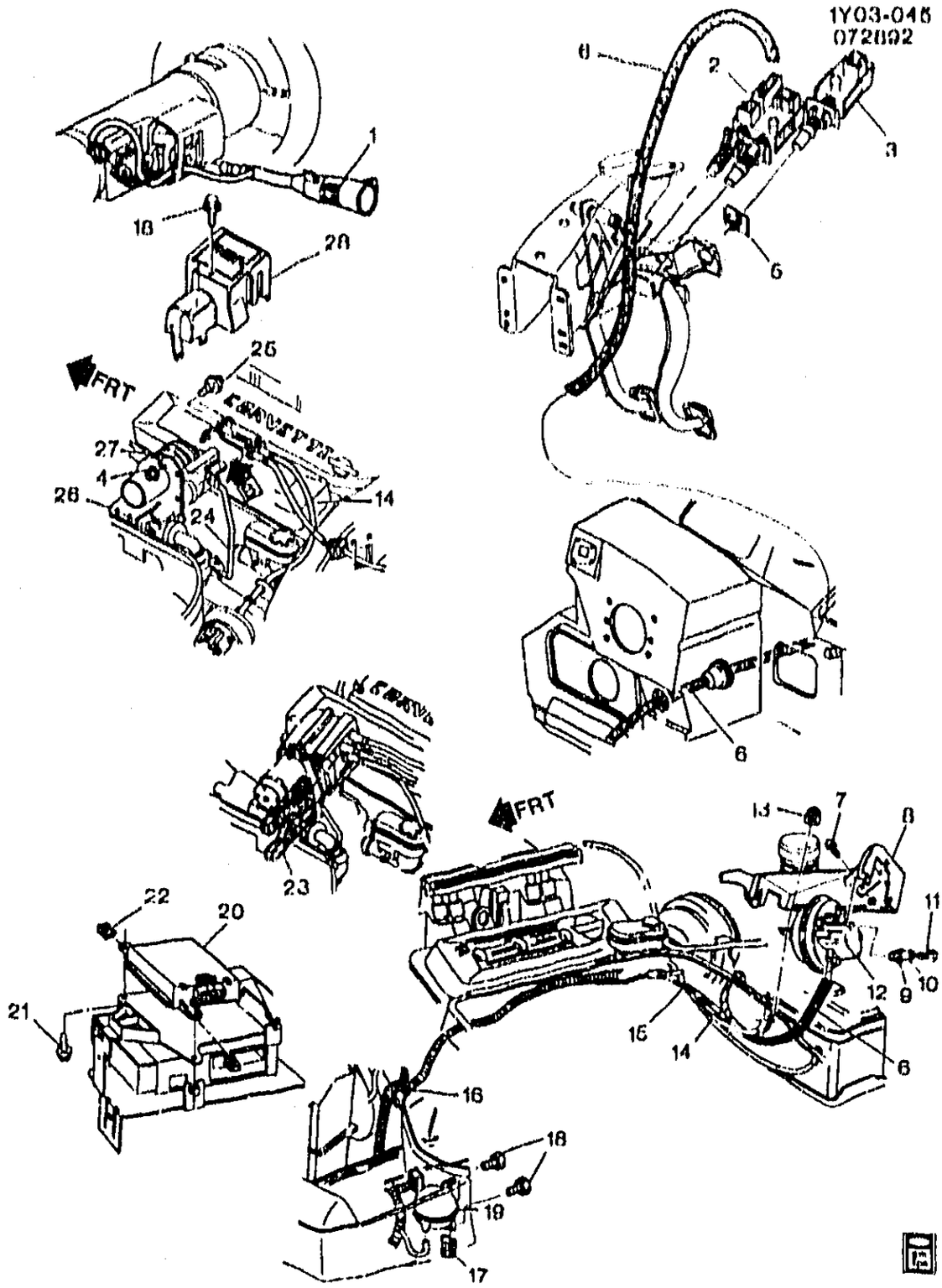

1Y03-045

1993-1996 Y CRUISE CONTROL-V8(LT1,ML9)
1996 Y CRUISE CONTROL-V8(LT4,ML9)

1.	4-N15	2.897	LEVER, T/SIG & HDLP D/SW & CRCONT ACTR (AC-DELCO #25140558)	93 Y	1	25140558

© 2000 GENERAL MOTORS SERVICE PARTS OPERATIONS - CHEVROLET - 14Y

							1Y03-045
	4-N15	2.897	LEVER, T/SIG & HDLP D/SW & CRCONT ACTR (AC-DELCO #25140540)	94-96	Y	1	25140540
2.	4-N17	4.710	SWITCH, ELEK BRK CONT BRK PED (W/ S/LP SW) (AC-DELCO #10211657)	93-96	Y	1	10211657
	4-M20	2.447	SWITCH, ELEK BRK CONT BRK PED (W/ S/LP SW) (4.710) (AC-DELCO #10211657)	93-96	Y	1	10211657
3.	4-D17	3.887	SWITCH, CRCONT REL (INCLS 5) (AC-DELCO #10194403)	93-96	Y (ML9)	1	10194403
4.		8.917	NUT, HEH M6X1X6.5 ZOR 9	93-96		AR	3530297
5.	4-D15	3.885	RETAINER, CRCONT SW (ALSO PART OF #3)	93-96	Y (ML9)	1	10194431
6.	4-D16	3.886	HOSE, CRCONT VAC REL SW	93-96	Y	1	14091269
7.		8.900	BOLT, HEX, M8X1.25X16, FULL, 9.8, PS	93-96		AR	11509589
8.	4-D15	3.885	BRACKET, CRCONT SERVO	93-96	Y	1	10098905
9.	4-D14	3.880	INSULATOR, CRCONT SERVO (3.885)	93-96	Y	3	14091274
10.	4-D15	3.885	SLEEVE, CRCONT SERVO INSL	93-96	Y	3	14091273
11.		8.977	SCREW, HEX HD W/FL WA, M4.2X1.41X20, ALBO	93-96		AR	11514270
12.	4-D15	3.885	SERVO, CRCONT (AC-DELCO #25074627)	93-96	Y	1	25074627
13.	4-D14	3.880	RETAINER, CRCONT SERVO CBL (5/32 CBL SPR STL PHOS) (8.821)	93-96	Y	AR	15567924
14.	4-B12	3.430	CABLE, ACCEL CONT & CRCONT SERVO	93	Y (LT1)	1	10215860
	4-B12	3.430	CABLE, ACCEL CONT & CRCONT SERVO (1 PC SIAMESE DES)	94	Y (LT1) (1ST DES)	1	10217789
	4-D14	3.880	CABLE, CRCONT SERVO (2 PC DES, ACCEL CABLE IS SEPARATE, SEE GROUP 3.430)	94	Y (LT1) (2ND DES)	1	10241100
	4-D14	3.880	CABLE, CRCONT SERVO	95	Y (LT1)	1	10241100
	4-D14	3.880	CABLE, CRCONT SERVO	96	Y (LT1, LT4)	1	10241100
15.		8.962	HOSE, BULK 5/32X25FT	93-96		AR	9438361
16.		8.965	STRAP-TIE-7"ADJ (W/ROSEBUD FOR .25 DIA HOLE .031-.14 TH)	93-96		AR	3816659
17.		8.921	NUT, U-TYPE, 6.3X1.81, 13.5 REACH, 25.8X 16.5, 0.65-3.8 PNL RNG, PZOR	93-96		AR	11509582
18.		8.977	SCREW, HEX W/FLAT WA	93-93		AR	12337828
19.	4-N25	9.281	TANK, HTR & A/C CONT VAC (AC-DELCO #15-72234)	93-96	Y	1	14056624
20.	4-D17	3.887	MODULE, CRCONT (AC-DELCO #25140723)	93-96	Y	1	25140723
21.		8.977	BOLT/SCREW ASM M4.2X1.41 #18 HEX HD GM71	93-96		AR	11515303
22.		8.921	NUT, U-TYPE, 4.2X1.41, DIM A-15, DIM B-14 DIM C-8.65, 1050, PZOR	93-96		AR	12338121
23.	4-D15	3.885	SHIELD, ACCEL CONT & CRCONT SERVO CBL ADJR	93-96	Y	1	10192285

							1Y03-045
	4-B14	3.469	**SHIELD**, ACCEL CONT & CRCONT SERVO CBL ADJR (3.885)	93-96	Y	1	10192205
24.	4-B13	3.454	**BRACE**, ACCEL CONT & CRCONT SERVO CBL ADJR BRKT	93-95	Y (LT1)	1	12553404
	4-B13	3.454	**BRACE**, ACCEL CONT & CRCONT SERVO CBL ADJR BRKT	96	Y	1	12553404
25.		0.903	**BOLT**, HEX W/WA (M6X1X20)	93-96		AR	10077321
26.	4-D14	3.880	**BRACKET**, ACCEL CONT & CRCONT SERVO CBL ADJR (3.464)	93	Y (LT1)	1	10212361
	4-D14	3.880	**BRACKET**, ACCEL CONT & CRCONT SERVO CBL ADJR (3.464)	94-95	Y (LT1)	1	12553403
	4-D14	3.880	**BRACKET**, ACCEL CONT & CRCONT SERVO CBL ADJR (3.464)	96	Y	1	12553403
27.	4-D14	3.880	**ADJUSTER**, ACCEL CONT & CRCONT SERVO CBL (3.464)	93-96	Y	1	12557971
28.	4-D14	3.880	**COVER**, ACCEL CONT & CRCONT SERVO CBL ADJR (3.464)	93-95	Y (LT1)	1	10211305
	4-D14	3.880	**COVER**, ACCEL CONT & CRCONT SERVO CBL ADJR (3.464)	96	Y (LT1, LT4)	1	10211305

RPO DEFINITIONS
LT1 -- ENGINE--GAS, 8 CYL, 5.7L(5.7P),MFI,HO
LT4 -- ENGINE GAS, 8 CYL, 5.7L, MFI, HIGH OUTPUT
ML9 -- TRANSMISSION,MANUAL 6--SPEED

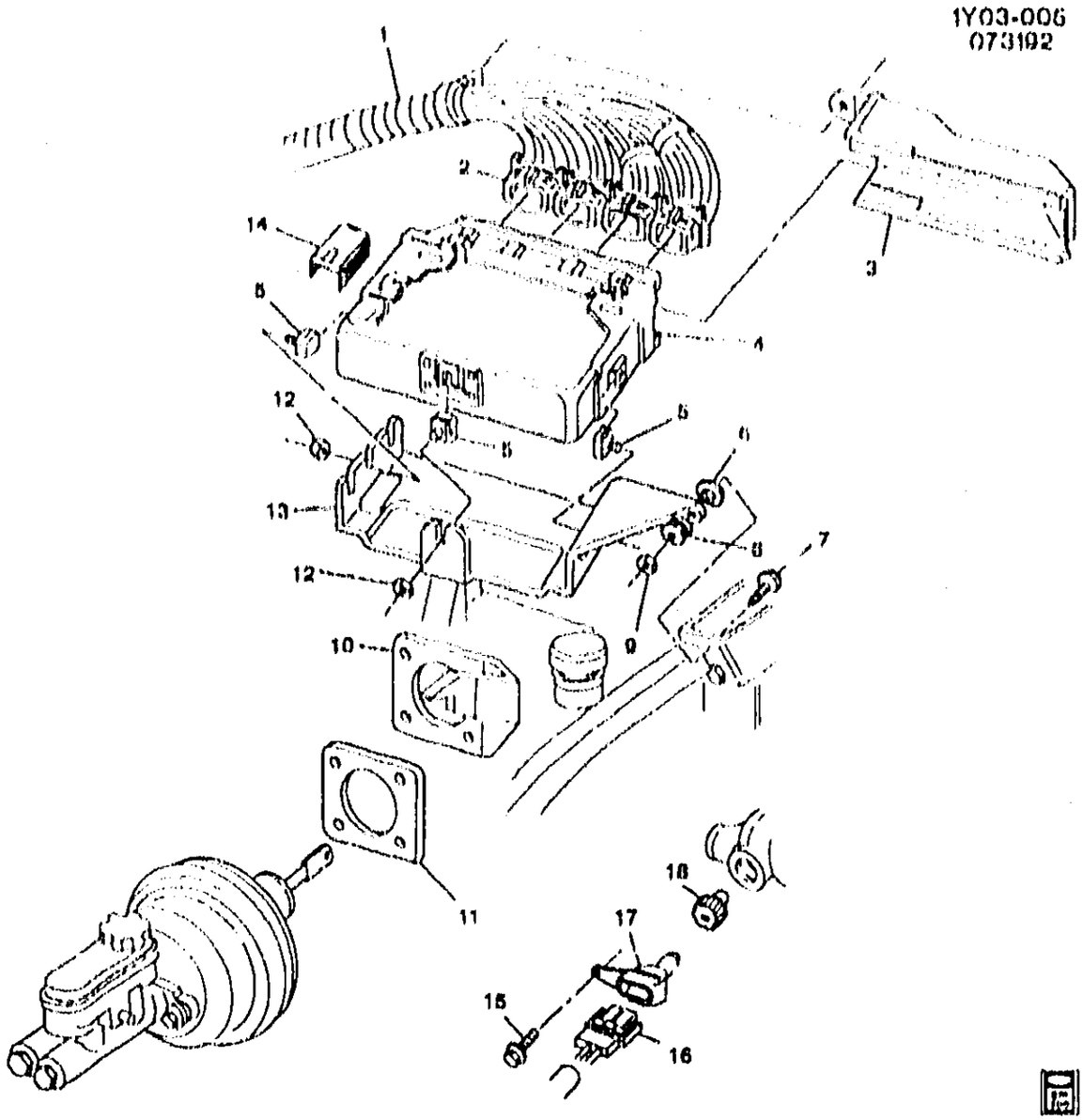

1Y03-005

1992-1993 Y E.C.M. MODULE & RELATED PARTS (LT1)

1.	4-N4	2.525	HARNESS, ENG WRG (INCLS 2, 16)	92	Y (LT1, MD8, C60)	1	12125009
	4-N4	2.525	HARNESS, ENG WRG (INCLS 2, 16)	92	Y (LT1, ML9, C60)	1	12125010
	4-N4	2.525	HARNESS, ENG WRG (INCLS 2, 16)	92	Y (LT1, MD8, C68)	1	12125011
	4-N4	2.525	HARNESS, ENG WRG (INCLS 2, 16)	92	Y (LT1, ML9, C68)	1	12125012
	4-N4	2.525	HARNESS, ENG WRG (INCLS 2, 16)	93	Y (LT1, ML9, C60)	1	12154081
	4-N4	2.525	HARNESS, ENG WRG (INCLS 2, 16)	93	Y (LT1, ML9, C68)	1	12154082
	4-N4	2.525	HARNESS, ENG WRG (INCLS 2, 16)	93	Y (LT1, MD8, C60)	1	1215[illegible]083
	4-N4	2.525	HARNESS, ENG WRG (INCLS 2, 16)	93	Y (LT1, MD8, C68)	1	12[illegible]4084

© 2000 GENERAL MOTORS SERVICE PARTS OPERATIONS-CHEVROLET-14Y

2.		N.S.	CONNECTOR, MDL-ENG CONT (PART OF 1)				
3.	4-N6	2.530	COVER, ENG WRG HARN ECM CONN	92-93	Y	1	12064002
4.	4-C11	3.670	MODULE, ENG CONT (REMAN) (AC-DELCO #16159278)	92-93	Y (LT1)	1	16159278
5.	4-C19	3.671	BOLT, ECM BRKT (M6X.8X16 THD) (SPECIAL) (AC-DELCO #12337892)	92	Y	2	12337892
6.	4-C19	3.671	SPACER, ECM HSG	92-93	Y	1	14104639
7.		8.900	BOLT, HEX M8X1.25X36 10.9 PZOR (ECM HSG) (0.206)	92-93		AR	24572579
8.	4-C19	3.671	GROMMET, ECM BRKT (3.680)	92-93	Y	1	14104640
9.		8.916	NUT, HEX W/CON WA M8X1.25X9.6 19-OD 9 ZP (ECM HSG) (0.917)	92-93		AR	11506117
10.	4-C19	3.671	BRACKET, ECM (INCLS 11)	92-93	Y	1	10143544
11.	4-N21	4.805	SEAL, P/B BOOS (PART OF 10) (4.846)	92-93	Y	1	10097675
12.		8.917	NUT, HEX FLG M6X0.8 GRD 9 ZP (ECM BRKT)	92-93		AR	11514252
13.	4-C19	3.671	HOUSING, ECM	92-93	Y	1	10086259
14.	4-C11	3.670	EPROM, ECM (1692AZUM, 3867BAFL) (AC-DELCO #16173866)	92-93	Y (LT1, ML9) (EXC NM8)	1	16173866
	4-C11	3.670	EPROM, ECM (1698AZUN, 3872BAFM) (AC-DELCO #16184669)	92-93	Y (LT1, G44) (EXC NM8)	1	16184669
	4-C11	3.670	EPROM, ECM (1702AZUR, 3876BAFN, 4779BDBK) (AC-DELCO #16184672)	92-93	Y (LT1, GM1) (EXC NM8)	1	16184672
	4-C11	3.670	EPROM, ECM (1707AZUR, 3880BAFP, 4782BDBL) (AC-DELCO #16184678)	92-93	Y (LT1, GU2) (EXC NM8)	1	16184678
	4-C11	3.670	EPROM, ECM (4776BDBJ) (AC-DELCO #16184669)	93	Y (LT1, G44) (EXC NM8)	1	16184669
	4-C11	3.670	EPROM, ECM (8018AYWM, 3863BAFK) (AC-DELCO #16184667)	92	Y67 (LT1, G44) (EXC NM8)	1	16184667
	4-C11	3.670	EPROM, ECM (6869BAWS)	92-93	Y (LT1, NM8) (EXPORT)	1	16176868
15.		4.329	BOLT, VEH SPD SEN (M6X1X15) (8.900) (AC-DELCO #8639743)	92-93	Y	1	8639743
16.	4-C26	3.682	CONNECTOR, SEN-VEH SPD (PART OF 1) (2-WAY F) (W/LEADS) (2.530) (AC-DELCO #PT120)	92-93	Y	AR	12085490
17.	4-C26	3.682	SENSOR, VEH SPD (W/ O-RING) (4.329) (AC-DELCO #213-198)	92-93	Y (D8I)	1	10456089
	4-C26	3.682	SENSOR, VEH SPD (BLACK COLOR) (PART NO STAMPED ON HSG) (4.329) (AC-DELCO #213-200)	92-93	Y (D8L)	1	10456092
	4-C26	3.682	SENSOR, VEH SPD (NATURAL COLOR) (PART NO STAMPED ON HSG) (4.329) (AC-DELCO #213-199)	92-93	Y (D8K)	1	10456091

								1Y03--005
10.	4-N17	4.337	GEAR, SPEEDO DRVN (PURPLE) (43 TEETH) (AC-DELCO #25513050)	92-93	Y (D4L)	1	25513050
	4-N17	4.337	GEAR, SPEEDO DRVN (WHITE) (36 TEETH)	92	Y (D7B)	1	25513043
	4-N17	4.337	GEAR, SPEEDO DRVN (BLUE) (38 TEETH) (AC-DELCO #25513045)	92	Y (D7C)	1	25513045
	4-N16 4-N17	4.337	GEAR, SPEEDO DRVN (GREEN) (42 TEETH) (AC-DELCO #25513049)	92-93	Y (D3X)	1	25513049
	4-N17	4.337	GEAR, SPEEDO DRVN (ORANGE) (35 TEETH) (AC-DELCO #25513042)	93	Y (D7A)	1	25513042
	4-N17	4.337	GEAR, SPEEDO DRVN (RED) (37 TEETH) (AC-DELCO #25513044)	93	Y (D3W)	1	25513044

RPO DEFINITIONS

C60 -- AIR CONDITIONER,FRONT,MANUAL CONTROLS
C68 -- AIR CONDITIONER,FRONT,AUTOMATIC,ELECTRONIC CONTROLS
D3W -- GEAR--SPEEDO DRIVEN (25513044)
D3X -- GEAR--SPEEDOMETER DRIVEN (25513049)
D4L -- GEAR--SPEEDOMETER DRIVEN (25513050)
D7A -- GEAR--SPEEDOMETER DRIVEN (25513042)
D7B -- GEAR--SPEEDOMETER DRIVEN (25513043)
D7C -- GEAR--SPEEDO DRIVEN (25513045)
D8I -- SENSOR--VEH SPD (10456089)
D8K -- SENSOR--VEH SPD (10456091)
D8L -- SENSOR--VEH SPD (10456092)
GM1 -- AXLE,REAR,2.59 RATIO
GU2 -- AXLE,REAR,2.73 RATIO
G44 -- AXLE,REAR,3.07 RATIO
LT1 -- ENGINE--GAS, 8 CYL, 5.7L(5.7P),MFI,HO
MD8 -- TRANSMISSION,AUTOMATIC 4--SPEED(THM700R4/4L60)
ML9 -- TRANSMISSION,MANUAL 6--SPEED
NM6 -- EMISSION SYSTEM,LEADED FUEL(EXPORT)

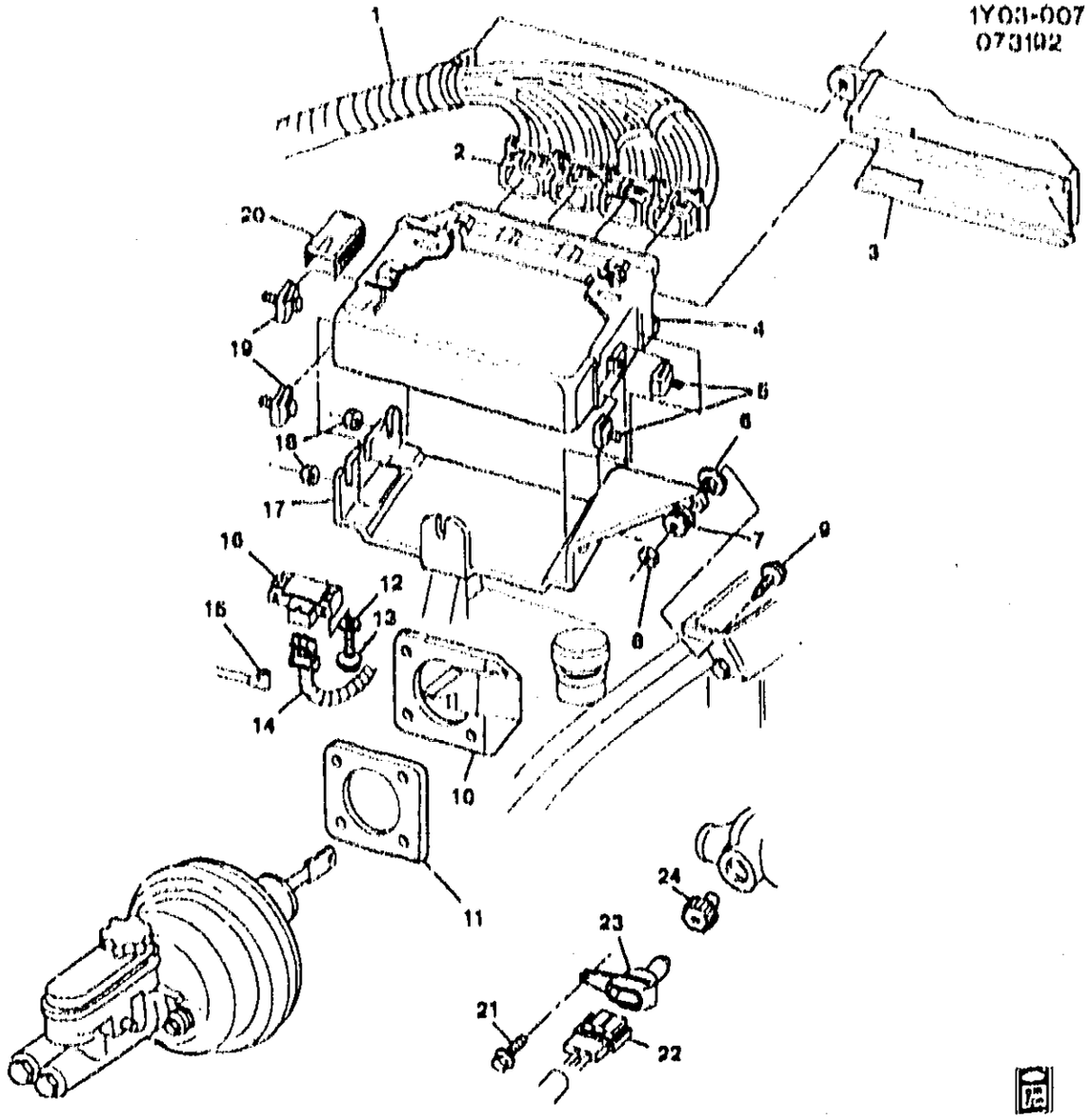

1Y03-007

1992-1995 Y E.C.M. MODULE & RELATED PARTS (LT5)

1.	4-N4	2.525	HARNESS, ENG WRG (INCLS 2, 14)	92	Y (LT5)	1	12117829
	4-N4	2.525	HARNESS, ENG WRG (INCLS 2, 14)	93-95	Y (LT5)	1	12141078
2.		N.S.	CONNECTOR, MDL-ENG CONT (PART OF 1)				
3.	4-N6	2.530	COVER, ENG WRG HARN ECM CONN	92-93	Y	1	12064802
	4-N6	2.530	COVER, ENG WRG HARN ECM CONN	94-95	Y (LT5)	1	12064802
4.	4-C11	3.670	MODULE, ENG CONT (REMAN) (16163993 LABELED) (AC-DELCO #16163993)	92-93	Y (LT5)	1	16163993
	4-C11	3.670	MODULE, ENG CONT (REMAN) (16196394 LABELED) (AC-DELCO #16196394)	94-95	Y (LT5)	1	16196394
5.		N.S.	RETAINER, EMC BRKT				

© 2000 GENERAL MOTORS SERVICE PARTS OPERATIONS-CHEVROLET-14Y

							1Y03-007
6.	4-C19	3.671	SPACER, ECM HSG	92-95	Y	1	14104639
7.	4-C19	3.671	GROMMET, ECM BRKT (3.000)	92-95	Y	1	14104640
8.		8.915	NUT, HEX W/CON WA, M8X1.25, 7.32 THK, 9, ZF (ECM HSG)	92-95		AR	11514519
9.		8.900	BOLT, HEH M8X1.25X35 10.9 PZOR (ECM HSG) (0.200)	92-95		AR	24572579
10.	4-C19	3.671	BRACKET, ECM (INCLS 11)	92-95	Y	1	10143544
11.	4-N21	4.805	SEAL, P/B BOOS (PART OF 10) (4.845)	92-95	Y	1	10097675
12.		8.929	WASHER, TYPE A FLAT .214X.45X.065 ZP (MDP SEN)	92-95		AR	446161
13.		8.977	SCREW, PAN HD C/R, M4.2X1.41X35, NOR (MDP SEN)	92-95		AR	11515142
14.		N.S.	CONNECTOR, MDP SENSOR (PART OF 1)				
15.		N.S.	HOSE, MDP SEN VAC				
16.	4-C26	3.682	SENSOR, MDP (AC-DELCO #16006834)	92-95	Y (LT5)	1	16006834
17.	4-C19	3.671	HOUSING, ECM	92-93	Y	1	10086259
	4-C19	3.671	HOUSING, ECM	94-95	Y (LT5)	1	10086259
18.		8.917	NUT, HEX FLG M6X0.8 GRD 9 ZP (ECM BRKT)	92-95		AR	11514252
19.	4-C19	3.671	BOLT, ECM BRKT (M6X.8X16 THD) (SPECIAL) (AC-DELCO #12337692)	92-93	Y	2	12337692
	4-C19	3.671	BOLT, ECM BRKT (M6X.8X16 THD) (SPECIAL) (AC-DELCO #12337692)	93-95	Y (LT5)	4	12337692
20.	4-C11	3.670	EPROM, ECM (AC-DELCO #12528772)	93-95	Y (LT5)	1	12528772
	4-C11	3.670	EPROM, ECM (8044AYWT, 2700AZZC, BPPA) (AC-DELCO #16219916)	92	Y (LT5) (EXC VD1, VE1)	1	16219916
	4-C11	3.670	EPROM, ECM (5912BATL) (AC-DELCO #16175910)	92	Y (LT5, VD1, VE1) (EXPORT)	1	16175910
21.		4.329	BOLT, VEH SPD SEN (M6X1X15) (8.900) (AC-DELCO #8639743)	92-93	Y	1	8639743
		4.329	BOLT, VEH SPD SEN (M6X1X15) (8.900) (AC-DELCO #8639743)	94-95	Y (ML9)	1	8639743
		4.329	BOLT, VEH SPD SEN	94-95	Y (M30)	1	8855314
22.	4-C26	3.682	CONNECTOR, SEN-VEH SPD -WAY F) (W/LEADS) (2.530) -DELCO #PT120)	92-95	Y	1	12085498
23.	4-C26	3.682	SENSOR, VEH SPD (W/ O-RING) (4.329) (AC-DELCO #213-198)	92-93	Y (D8I)	1	10456089
	4-C26	3.682	SENSOR, VEH SPD (W/ O-RING) (4.329) (AC-DELCO #213-198)	94-95	Y (ML9)	1	10456089
	4-C26	3.682	SENSOR, VEH SPD (BLACK COLOR) (PART NO STAMPED ON HSG) (4.329) (AC-DELCO #213-200)	92-93	Y (D8L)	1	10456092
	4-C26	3.682	SENSOR, VEH SPD (NATURAL COLOR) (PART NO STAMPED ON HSG) (4.329) (AC-DELCO #213-199)	92-93	Y (D8K)	1	10456091

								1Y03-007
24.	4-N17	4.337	GEAR, SPEEDO DRVN (PURPLE) (43 TEETH) (AC-DELCO #25513050)	92-93	Y (D4L)	1	25513050
	4-N17	4.337	GEAR, SPEEDO DRVN (WHITE) (36 TEETH)	92	Y (D7B)	1	25513043
	4-N17	4.337	GEAR, SPEEDO DRVN (BLUE) (38 TEETH) (AC-DELCO #25513045)	92	Y (D7C)	1	25513045
	4-N16 4-N17	4.337	GEAR, SPEEDO DRVN (GREEN) (42 TEETH) (AC-DELCO #25513049)	92-93	Y (D3X)	1	25513049
	4-N17	4.337	GEAR, SPEEDO DRVN (ORANGE) (35 TEETH) (AC-DELCO #25513042)	93	Y (D7A)	1	25513042
	4-N17	4.337	GEAR, SPEEDO DRVN (RED) (37 TEETH) (AC-DELCO #25513044)	93	Y (D3W)	1	25513044
	4-N16	4.337	GEAR, SPEEDO DRVN (BLACK) (40 TEETH) (AC-DELCO #25513047)	94	Y (LT1, ML9)	1	25513047
	4-N16 4-N17	4.337	GEAR, SPEEDO DRVN (GREEN) (42 TEETH) (AC-DELCO #25513049)	94-95	Y (ML9)	1	25513049

RPO DEFINITIONS

D3W -- GEAR-SPEEDO DRIVEN (25513044)
D3X -- GEAR-SPEEDOMETER DRIVEN (25513049)
D4L -- GEAR-SPEEDOMETER DRIVEN (25513050)
D7A -- GEAR-SPEEDOMETER DRIVEN (25513042)
D7B -- GEAR-SPEEDOMETER DRIVEN (25513043)
D7C -- GEAR-SPEEDO DRIVEN (25513045)
D8I -- SENSOR-VEH SPD (10456089)
D8K -- SENSOR-VEH SPD (10456091)
D8L -- SENSOR-VEH SPD (10456092)
LT1 -- ENGINE-GAS, 8 CYL, 5.7L(5.7P),MFI,HO
LT5 -- ENGINE,5.7L(5.7J),TPI
ML9 -- TRANSMISSION,MANUAL 6-SPEED
M30 -- TRANSMISSION,AUTOMATIC 4 SPEED,4L60E,ELECTRONIC
VD1 -- PROVISION OPTIONS,EUROPE(EXPORT)
VE1 -- PROVISION OPTIONS,JAPAN(EXPORT)

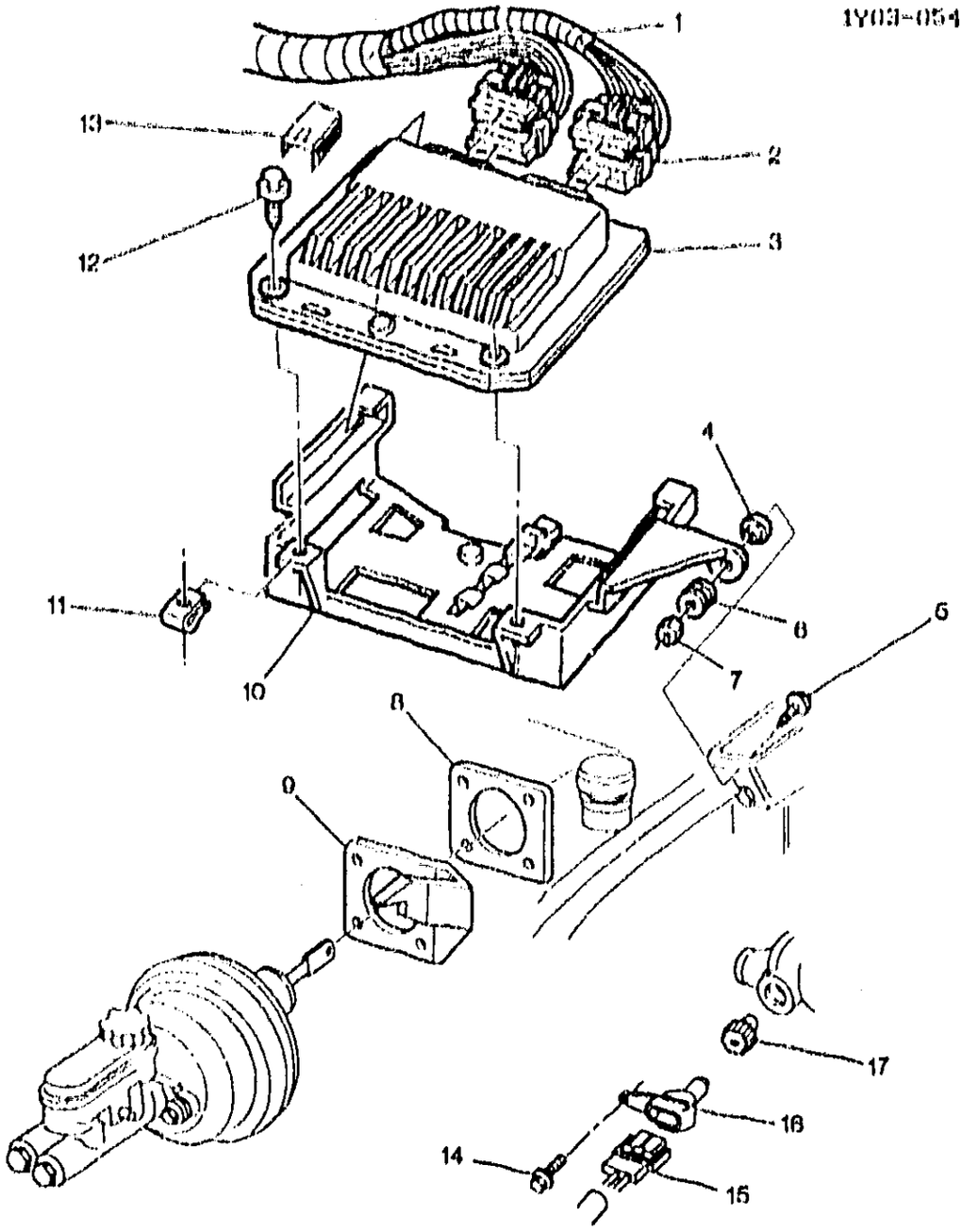

1Y03-054

1994-1996 Y P.C.M. MODULE & WIRING HARNESS (LT1)
1996 Y P.C.M. MODULE & WIRING HARNESS (LT4)

1.	4-N4	2.525	HARNESS, ENG WRG (INCLS 2, 15)	94 Y (LT1, ML9, C60) (EXC VE1)	1	12141752
	4-N4	2.525	HARNESS, ENG WRG (INCLS 2, 15)	94 Y (LT1, ML9, C68) (EXC VE1)	1	12141753
	4-N4	2.525	HARNESS, ENG WRG (INCLS 2, 15)	94 Y (LT1, M30, C60) (EXC VE1)	1	12141754
	4-N4	2.525	HARNESS, ENG WRG (INCLS 2, 15)	94 Y (LT1, M30, C68) (EXC VE1)	1	12141755
	4-N4	2.525	HARNESS, ENG WRG (INCLS 2, 15)	95 Y (LT1, ML9, C60) (EXC VE1)	1	12130370
	4-N4	2.525	HARNESS, ENG WRG (INCLS 2, 15)	95 Y (LT1, M30, C60) (EXC VE1)	1	12130371

© 2000 GENERAL MOTORS SERVICE PARTS OPERATIONS - CHEVROLET - 14Y

	4-N4	2.525	HARNESS, ENG WRG (INCLS 2, 15)	95	Y (LT1, ML9, C68) (EXC VE1)	1	12130372
	4-N4	2.525	HARNESS, ENG WRG (INCLS 2, 15)	95	Y (LT1, M30, C68) (EXC VE1)	1	12130373
	4-N4	2.525	HARNESS, ENG WRG (INCLS 2, 15)	96	Y (ML9, C68) (EXC VE1)	1	12130461
	4-N4	2.525	HARNESS, ENG WRG (INCLS 2, 15)	96	Y (M30, C68) (EXC VE1)	1	12130462
	4-N4	2.525	HARNESS, ENG WRG (INCLS 2, 15)	96	Y (ML9, C68) (EXC VE1)	1	12130463
	4-N4	2.525	HARNESS, ENG WRG (INCLS 2, 15)	96	Y (M30, C68) (EXC VE1)	1	12130464
	4-N4	2.525	HARNESS, ENG WRG (INCLS 2, 15)	94	Y (LT1, M30, C68, VE1) (EXPORT)	1	12141756
	4-N4	2.525	HARNESS, ENG WRG (INCLS 2, 15)	94	Y (LT1, ML9, C68, VE1) (EXPORT)	1	12141757
	4-N4	2.525	HARNESS, ENG WRG (INCLS 2, 15)	95	Y (LT1, M30, C68, VE1) (EXPORT)	1	12130374
	4-N4	2.525	HARNESS, ENG WRG (INCLS 2, 15)	95	Y (LT1, ML9, C68, VE1) (EXPORT)	1	12130375
	4-N4	2.525	HARNESS, ENG WRG (INCLS 2, 15)	96	Y (M30, C68, VE1) (EXPORT)	1	12130465
2.	4-C11	3.670	CONNECTOR, MDL-PWRT (PART OF 1) (32-WAY F) (TYPICALLY USES 12084012 TERM)	94-95	Y (LT1)	4	12129025
	4-C11	3.670	CONNECTOR, MDL-PWRT (PART OF 1) (32-WAY F) (TYPICALLY USES 12084012 TERM)	96	Y	4	12129025
3.	4-C11	3.670	MODULE, PWRT CONT (REMAN) (REPROGRAMABLE MODULE) (AC-DELCO #16181333)	94-95	Y (LT1)	1	16181333
	4-C11	3.670	MODULE, PWRT CONT (REMAN) (AC-DELCO #16214399)	96	Y	1	16214399
4.	4-C19	3.671	SPACER, ECM HSG	94-96	Y	1	14104639
5.		6.900	BOLT, HFH M8X1.25X35 10.9 PZOR (ECM HSG) (0.206)	94-96		AR	24572579
6.	4-C19	3.671	GROMMET, ECM BRKT (3.680)	94-96	Y	1	14104640
7.		6.915	NUT, HEX W/CON WA, M8X1.25, 7.32 THK, 9, ZF (ECM HSG)	94-96		AR	11514519
8.	4-N21	4.805	SEAL, P/B BOOS (PART OF 9) (4.845)	94-96	Y	1	10097675
9.	4-C19	3.671	BRACKET, ECM (INCLS 8)	94-96	Y	1	10143544
10.	4-C19	3.671	BRACKET, PCM	94-95	Y (LT1)	1	10211331
	4-C19	3.671	BRACKET, PCM	96	Y	1	10211331
11.		6.921	NUT, U TYPE, MULTI THD, PREV TORQ, M4.2X1.41TAP, 8.1REACH, 0.65-3.80 PNLS 1065 PZOR (PCM BRKT) (AC-DELCO #11513599)	94-96		AR	11513599
12.		6.900	BOLT, HWH, 4.2X1.41X30, 9.2 OD, 27 GRIP, 6010M, B PT, POR (PCM BRKT)	94-96		AR	11509541
13.	4-M18	2.383	MODULE, KNOCK SEN (8 PIN MDL PLUGS INTO PCM LIKE A PROM)	94-95	Y (LT1)	1	16177690
	4-M18	2.383	MODULE, KNOCK SEN (AC-DELCO #216-67)	96	Y (LT4)	1	16214681

© 2000 GENERAL MOTORS SERVICE PARTS OPERATIONS-CHEVROLET-14Y

							1Y03-054
	4-M18	2.303	MODULE, KNOCK SEN (PLUGS INTO PCM MDL) (AC-DELCO #210-66)	96	Y (LT1)	1	10214071
14.		4.320	BOLT, VEH SPD SEN (M6X1X16) (8.900) (AC-DELCO #8630743)	94-96	Y (ML9)	1	8630743
		4.320	BOLT, VEH SPD SEN	94-96	Y (M30)	1	8655314
15.	4-C26	3.682	CONNECTOR, SEN-VEH SPD (PART OF 1) (2-WAY F) (W/LEADS) (2.530) (AC-DELCO #PT120)	94-96	Y	AR	12085490
16.	4-N17	4.320	SENSOR, VEH SPD (AC-DELCO #213-194)	94-96	Y (M30)	1	8073209
	4-N16	4.320	SENSOR, VEH SPD (W/ O-RING) (AC-DELCO #213-198)	94-96	Y (ML9)	1	10456089
	4-C26	3.682	SENSOR, VEH SPD (W/ O-RING) (4.320) (AC-DELCO #213-198)	94-96	Y (ML9)	1	10456089
17.	4-N16	4.337	GEAR, SPEEDO DRVN (BLACK) (40 TEETH) (AC -DELCO #25513047)	94	Y (LT1, ML9)	1	25513047
	4-N16 4-N17	4.337	GEAR, SPEEDO DRVN (GREEN) (42 TEETH) (AC-DELCO #25513049)	94-96	Y (ML9)	1	25513049

RPO DEFINITIONS

C60 - AIR CONDITIONER,FRONT,MANUAL CONTROLS
C68 - AIR CONDITIONER,FRONT,AUTOMATIC,ELECTRONIC CONTROLS
LT1 - ENGINE-GAS, 8 CYL, 5.7L(5.7P),MFI,HO
LT4 - ENGINE GAS, 8 CYL, 5.7L, MFI, HIGH OUTPUT
ML9 - TRANSMISSION,MANUAL 6-SPEED
M30 - TRANSMISSION,AUTOMATIC 4 SPEED,4L60E,ELECTRONIC
VE1 - PROVISION OPTIONS,JAPAN(EXPORT)

MICROFICHE INDEX

GROUP 3.000

FICHE 4 OF 11

GROUP	DESCRIPTION	STARTING GRID LOCATION PARTS	ILLUSTRATIONS
--	GENERAL INFORMATION	1-A2	1-G2
--	ALPHABETICAL INDEX	1-B13	N.A.
3.000	FUEL TANK - INTAKE MANIFOLD - FUEL INJECTION - THROTTLE BODY - AIR CLEANER - ACCELERATOR	4-A2	4-E2
3.000	EXHAUST & EMISSIONS SYSTEMS - CARBURETOR - CRUISE - FUEL FILTER & PUMP	4-C2	4-H2
--	OUT OF FICHE CALLS	N.A.	4-M9

4-J1

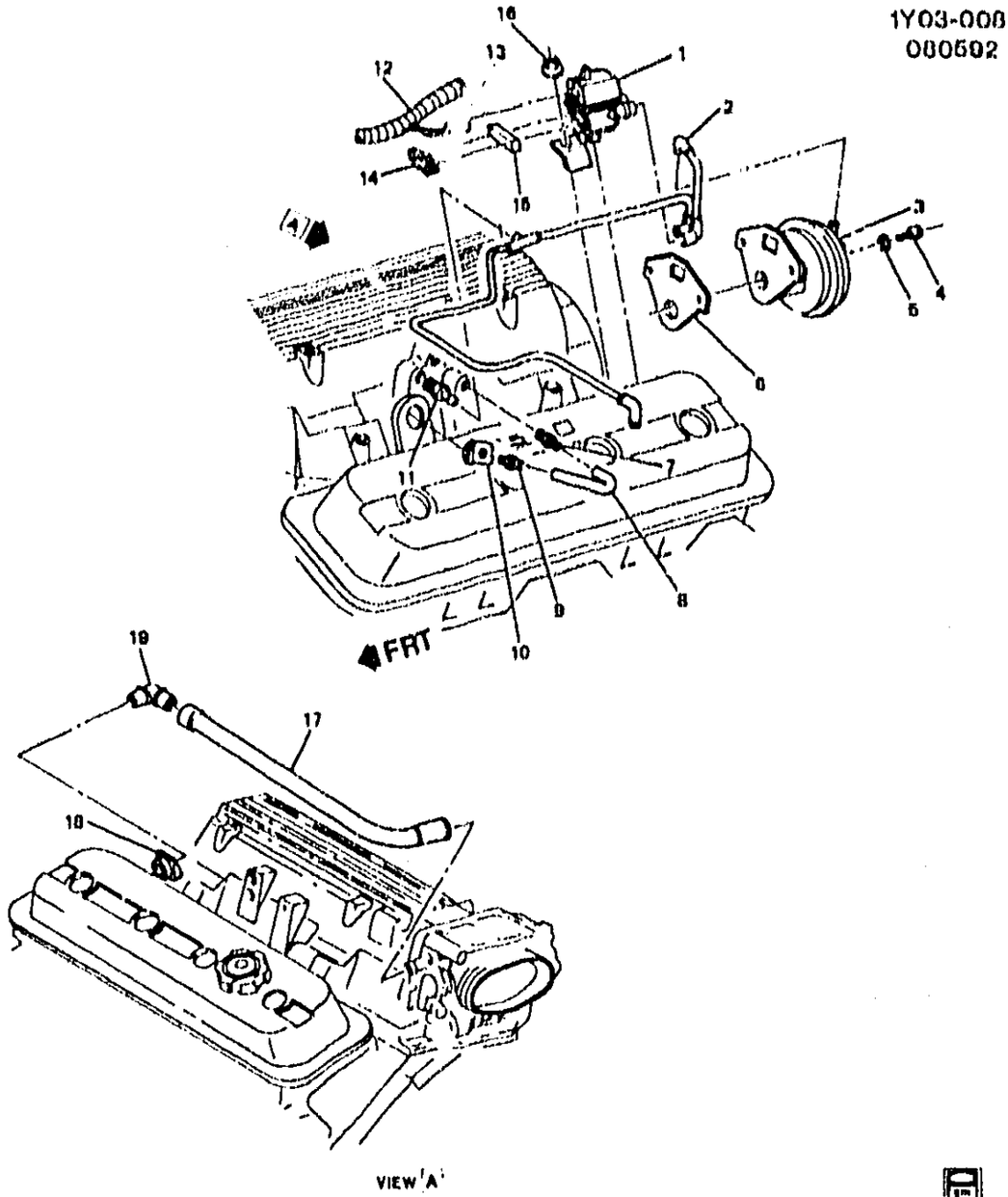

1Y03-008

1992–1996 Y E.G.R. VALVE & RELATED PARTS (LT1)

1.	4–C11	3.670	SOLENOID, EGR VAC REG VLV (INCLS 14, 15) (AC–DELCO #214–396)	92–96	Y (LT1)	1	1997223
2.	4–C21	3.675	HARNESS, EGR VLV VAC	92–93	Y (LT1)	1	10105325
	4–C21	3.675	HARNESS, EGR VLV VAC	94–96	Y (LT1)	1	10105323
3.	4–C11	3.670	VALVE, EGR (PROD 17092160) (FOR EXPORT REPL EGR VLV W/ EGR VLV CVR & VAC CAP) (AC–DELCO #214–5083)	92–95	Y (LT1, ML9) (EXC NM8)	1	17113381

© 2000 GENERAL MOTORS SERVICE PARTS OPERATIONS–CHEVROLET–14Y

						1Y03-008	
	4-C11	3.670	VALVE, EGR (PROD 17092172) (FOR EXPORT REPL EGR W/ EGR CVR & VAC CAP) (AC-DELCO #214-5084)	92-93	Y (LT1, MD8)	1	17113382
	4-C11	3.670	VALVE, EGR (PROD 17092172) (FOR EXPORT REPL EGR W/ EGR CVR & VAC CAP) (AC-DELCO #214-5084)	94-96	Y (LT1, M30) (EXC NM8)	1	17113382
4.		8.900	BOLT, HEH, 5/16-18X1.00, 280M, PC, .85-OD (EGR VLV) ...	92-96	.....	2	9441894
5.		8.932	WASHER, EXT LK M8X16X1.52 ZC (EGR VLV) (AC-DELCO #11501869)	92-96	.....	AR	11501869
6.	4-C24	3.680	GASKET, EGR VLV (AC-DELCO #219-21)	92-96	Y (LT1)	1	12337972
7.	4-M12	1.745	CONNECTOR, PCV VLV HOSE (1/4-18 NPTF W/3/8 NIPPLE) ...	92-96	Y (LT1)	1	336018
8.	4-M13	1.762	HOSE, PCV VLV	92-95	Y (LT1)	1	10128361
	4-M13	1.762	HOSE, PCV VLV	96	Y (LT1)	1	12551389
9.	4-M12	1.745	VALVE, PCV (CV895C, 1 VACUUM PORT) (AC-DELCO #CV895C)	92-96	Y (LT1)	1	25095452
10.	4-M12	1.745	GROMMET, PCV VLV (1.762)	92-93	Y (LT1)	1	10207699
	4-M12	1.745	GROMMET, PCV VLV (1.762)	94-96	Y (LT1)	1	10240678
11.	4-A21	3.278	FITTING, INT MANIF VAC (IN PLENUM)	92-96	Y (LT1)	3	14082470
12.	4-N4	2.525	HARNESS, ENG WRG (INCLS 13)	92	Y (LT1, MD8, C60)	1	12125009
	4-N4	2.525	HARNESS, ENG WRG (INCLS 13)	92	Y (LT1, ML9, C60)	1	12125010
	4-N4	2.525	HARNESS, ENG WRG (INCLS 13)	92	Y (LT1, MD8, C68)	1	12125011
	4-N4	2.525	HARNESS, ENG WRG (INCLS 13)	92	Y (LT1, ML9, C68)	1	12125012
	4-N4	2.525	HARNESS, ENG WRG (INCLS 13)	93	Y (LT1, ML9, C60)	1	12154081
	4-N4	2.525	HARNESS, ENG WRG (INCLS 13)	93	Y (LT1, ML9, C68)	1	12154082
	4-N4	2.525	HARNESS, ENG WRG (INCLS 13)	93	Y (LT1, MD8, C60)	1	12154083
	4-N4	2.525	HARNESS, ENG WRG (INCLS 13)	93	Y (LT1, MD8, C68)	1	12154084
	4-N4	2.525	HARNESS, ENG WRG (INCLS 13)	94	Y (LT1, ML9, C60) (EXC VE1)	1	12141752
	4-N4	2.525	HARNESS, ENG WRG (INCLS 13)	94	Y (LT1, ML9, C68) (EXC VE1)	1	12141753
	4-N4	2.525	HARNESS, ENG WRG (INCLS 13)	94	Y (LT1, M30, C60) (EXC VE1)	1	12141754
	4-N4	2.525	HARNESS, ENG WRG (INCLS 13)	94	Y (LT1, M30, C68) (EXC VE1)	1	12141755
	4-N4	2.525	HARNESS, ENG WRG (INCLS 13)	95	Y (LT1, ML9, C60) (EXC VE1)	1	12130370
	4-N4	2.525	HARNESS, ENG WRG (INCLS 13)	95	Y (LT1, M30, C60) (EXC VE1)	1	12130371
	4-N4	2.525	HARNESS, ENG WRG (INCLS 13)	95	Y (LT1, ML9, C68) (EXC VE1)	1	12130372
	4-N4	2.525	HARNESS, ENG WRG (INCLS 13)	95	Y (LT1, M30, C68) (EXC VE1)	1	12130373

© 2000 GENERAL MOTORS SERVICE PARTS OPERATIONS-CHEVROLET-14Y

	4-N4	2.525	HARNESS, ENG WRG (INCLS 13)	96	Y (ML9, C60) (EXC VE1)	1	12130461
	4-N4	2.525	HARNESS, ENG WRG (INCLS 13)	96	Y (M30, C60) (EXC VE1)	1	12130462
	4-N4	2.525	HARNESS, ENG WRG (INCLS 13)	96	Y (ML9, C68) (EXC VE1)	1	12130463
	4-N4	2.525	HARNESS, ENG WRG (INCLS 13)	96	Y (M30, C68) (EXC VE1)	1	12130464
	4-N4	2.525	HARNESS, ENG WRG (INCLS 13)	94	Y (LT1, M30, C68, VE1) (EXPORT)	1	12141756
	4-N4	2.525	HARNESS, ENG WRG (INCLS 13)	94	Y (LT1, ML9, C68, VE1) (EXPORT)	1	12141757
	4-N4	2.525	HARNESS, ENG WRG (INCLS 13)	95	Y (LT1, M30, C68, VE1) (EXPORT)	1	12130374
	4-N4	2.525	HARNESS, ENG WRG (INCLS 13)	95	Y (LT1, ML9, C68, VE1) (EXPORT)	1	12130375
	4-N4	2.525	HARNESS, ENG WRG (INCLS 13)	96	Y (M30, C68, VE1) (EXPORT)	1	12130465
13.	4-C11	3.670	CONNECTOR, SOL-EGR VLV (PART OF 12) (BLACK) (2-WAY F) (W/LEADS) (AC-DELCO #PT374)				12102747
14.	4-C19	3.671	CLAMP, EGR VAC REG SOL VLV FLTR (PART OF 1)	92-96	Y (LT1)	1	1985870
15.	4-C19	3.671	FILTER, EGR VAC REG SOL VLV (PART OF 1) (3.140) (AC-DELCO #219-15)	92-96	Y (LT1)	1	1977880
16.		6.917	NUT, HFH 5/16-18X.20 286M PC .67-OD (EGR SOL)	92-96		AR	1359867
17.	4-M13	1.762	HOSE, PCV (INCLS 19)	92	Y (LT1)	1	10128365
	4-M13	1.762	TUBE, PCV (INCLS 19)	93-96	Y (LT1)	1	12550624
18.	4-M12	1.745	GROMMET, PCV VLV (1.762)	92-93	Y (LT1)	1	10207699
	4-M12	1.745	GROMMET, PCV VLV (1.762)	94-96	Y (LT1)	1	10240678
19.	4-M13	1.762	CONNECTOR, PCV HOSE (PART OF 17 FOR 93-96)	92-96	Y (LT1)	1	12550625

RPO DEFINITIONS

C60 -- AIR CONDITIONER,FRONT,MANUAL CONTROLS
C68 -- AIR CONDITIONER,FRONT,AUTOMATIC,ELECTRONIC CONTROLS
LT1 -- ENGINE-GAS, 8 CYL, 5.7L(5.7P),MFI,HO
MD8 -- TRANSMISSION,AUTOMATIC 4-SPEED(THM700R4/4L60)
ML9 -- TRANSMISSION,MANUAL 6-SPEED
M30 -- TRANSMISSION,AUTOMATIC 4 SPEED,4L60E,ELECTRONIC
NM8 -- EMISSION SYSTEM,LEADED FUEL(EXPORT)
VE1 -- PROVISION OPTIONS,JAPAN(EXPORT)

© 2000 GENERAL MOTORS SERVICE PARTS OPERATIONS - CHEVROLET - 14Y

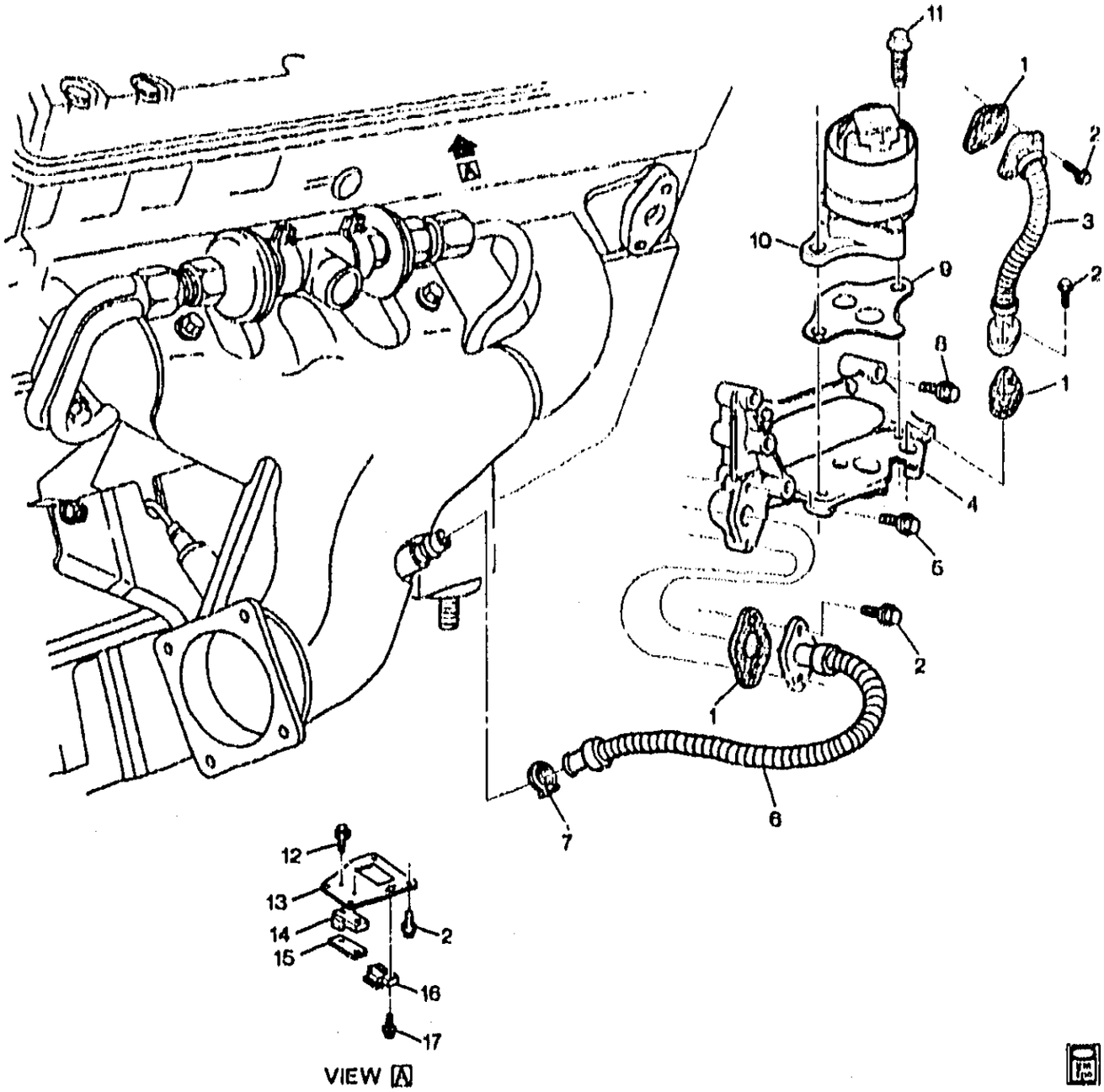

1Y03-056

1993-1995 Y E.G.R. VALVE & RELATED PARTS (LT5)

1.	4-C24	3.680	GASKET, EGR VLV PIPE	93-95	Y (LT5)	1	10187784
2.		8.900	BOLT, HEX FLNG HD (6X1X20) (PE 9.8)	93-95		AR	11514150
3.	4-C21	3.675	PIPE, EGR VLV ADAP	93-95	Y (LT5)	1	10168691
4.	4-C24	3.680	ADAPTER, EGR VLV (AC-DELCO #219-170)	93-95	Y (LT5)	1	10168634
5.		8.900	BOLT, HEX FLG HD (M8X1.25X70 10.9 17.6 OD 6174M	93-95		AR	11509516
6.	4-C21	3.675	PIPE, EGR VLV	93-95	Y (LT5)	1	10168641
7.	4-C24	3.680	CLAMP, EGR VLV PIPE (AT RH EXH MANIF)	93-95	Y (LT5)	1	14034744

© 2000 GENERAL MOTORS SERVICE PARTS OPERATIONS - CHEVROLET - 14Y

							1Y03-056
8.		8.900	BOLT, HEH, 8X1.25X60, 27THD, 17.6OD, 9.8PEOR	93-95		AR	11509666
9.	4-C24	3.680	GASKET, EGR VLV (AC-DELCO #210-175)	93-95	Y (LT5)	1	3522442
10.	4-C11	3.670	VALVE, EGR (W/O GSKT) (AC-DELCO #214-5000)	93-95	Y (LT5)	1	17113280
11.		8.900	BOLT, M8X1.25X25 9.8	93-95		AR	11500476
12.	4-C26	3.682	BOLT, MAP SEN (TO BRKT) (5X.8X30, 28.4 THD, 5.9 OD, T25 TORX DR. 9.8 STL) (8.907)	93-95	Y (LT5)	2	11514491
13.	4-C26	3.682	BRACKET, MDP SEN (3.071)	93-95	Y (LT5)	1	10168622
14.	4-C26	3.682	SENSOR, MDP (AC-DELCO #16006834)	93-95	Y (LT5)	1	16006834
15.	4-C26	3.682	CLAMP, MDP SEN (1.750)	93-95	Y (LT5)	1	10168670
16.	4-C11	3.670	MODULE, EGR VLV REG SOL VLV SIG MODIFIER (AC-DELCO #216-31)	93-95	Y (LT5)	1	16160359
17.		N.S.	BOLT, EGR VLV SIG MOD				

RPO DEFINITIONS
LT5 – ENGINE,5.7L(5.7J),TPI

© 2000 GENERAL MOTORS SERVICE PARTS OPERATIONS - CHEVROLET - 14Y

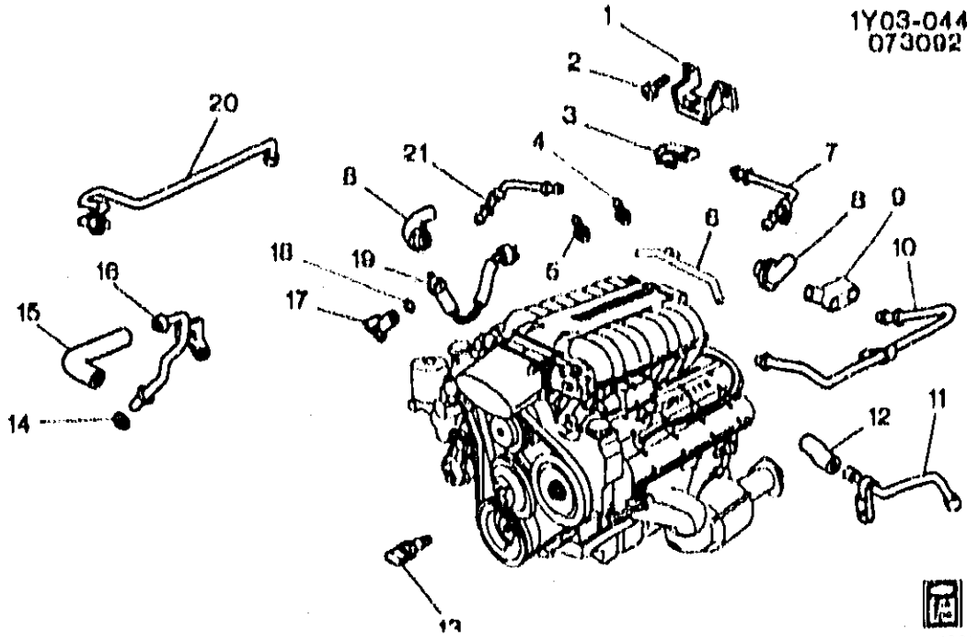

1990–1995 Y M.A.P. & OXYGEN SENSORS (LT5)

1.	4–C26	3.682	BRACKET, MAP SEN	90–95	Y (LT5)	1	10067781
2.	4–C26	3.682	BOLT, MAP SEN BRKT (M6X1.0X13.0) (METRIC TORX HD) (8.913)	90–95			10192577
3.	4–C26	3.682	SENSOR, MAP (1 PORT, 3 TERM, 2 BOLT HOLES) (AC–DELCO #213-185)	90	Y	1	16137039
	4–C26	3.682	SENSOR, MAP (1 PORT, 3 TERM, 2 BOLT HOLES) (AC–DELCO #213–185)	91–95	Y (LT5)	1	16137039
4.	4–M12	1.745	VALVE, PCV (CV913C) (AC–DELCO #CV913C)	90–95	Y (LT5)	RH	25098197
5.	4–M12	1.745	VALVE, PCV (P.C.V. CV746CB) (AC–DELCO #CV769C)	90–95	Y (LT5)	LH	6487532
6.	4–M13	1.762	HOSE, PCV	90–91	Y (L98)	1	10055872
	4–M13	1.762	HOSE, PCV (1.745)	90–95	Y (LT5)	1	10122196
7.	4–M13	1.762	PIPE, PCV VLV (INJ HSG TO PCV VLV) (1.745)	90–95	Y (LT5)	LH	10146298
8.	4–M12	1.745	GROMMET, PCV VLV	90–91	Y (L98, NA5)	1	10088198
	4–M12	1.745	GROMMET, PCV VLV (15/32I.D. X 25/32O.D)	90–95	Y (LT5)	2	14078872
9.	4–M12	1.745	CONNECTOR, PCV VLV (1.762)	90–95	Y (LT5)	1	10153503
10.	4–M13	1.762	PIPE, PCV VLV (PCV VLV PLENUM)	90–95	Y	1	10153501
11.	4–M13	1.762	TUBE, PCV	90–95	Y (LT5)	LH	10135804
12.	4–M13	1.762	HOSE, PCV TUBE	90–95	Y (LT5)	RH	10110950
	4–M13	1.762	HOSE, PCV TUBE	90–95	Y (LT5)	1	10135802
13.	4–M14	1.800	SENSOR, ENG OIL PRESS GA (3 TERMINALS:A, C, D) (AC–DELCO #D1808A)	90–95	Y (LT5)	1	12555492
14.	4–M12	1.745	SEAL, PCV TUBE	90–95	Y (LT5)	RH	10110955
15.	4–M13	1.762	HOSE, PCV TUBE	90–95	Y (LT5)	RH	10110950
16.	4–M13	1.762	TUBE, PCV	90–95	Y (LT5)	RH	10135857
17.	4–M18	2.383	SENSOR, CR/SHF POSN (AC–DELCO #213–153)	90–95	Y (LT5)	1	10457661

© 2000 GENERAL MOTORS SERVICE PARTS OPERATIONS–CHEVROLET–14Y

							1Y03-044
18.	4-M18	2.383	SENSOR, CR/SHF POSN (AC-DELCO #213-183)	90-95	Y (LT5)	1	10457661
	4-M18	2.383	SEAL, CR/SHF POSN SEN (O RING) (2.170) (AC-DELCO #1989866)	90-94	Y (LT5)	1	1989866
19.	4-C26	3.682	SENSOR, EXH OXY (STAMPED 10096129) (AC-DELCO #213-632)	90-91	Y (LT5)	2	25176708
	4-C26	3.682	SENSOR, EXH OXY (W/HARN THAT IS 350MM LG) (STAMPED 10096129) (AC-DELCO #213-632)	92	Y (LT5) (1ST DES)	2	25176708
	4-C26	3.682	SENSOR, EXH OXY (W/HARNESS THAT IS 240MM LG) (STAMPED 10137641) (AC-DELCO #213-633)	92	Y (LT5) (2ND DES)	2	25176709
	4-C26	3.682	SENSOR, HTD OXY (STAMPED 10137641) (AC-DELCO #213-633)	93-95	Y (LT5)	2	25176709
20.		N.S.	PIPE, PCV VLV		.....		
21.	4-M13	1.762	PIPE, PCV VLV (INJ HSG TO PCV VLV) (1.746)	90-95	Y (LT5)	RH	10146296

RPO DEFINITIONS
LT5 – ENGINE,5.7L(5.7J),TPI
L98 – ENGINE, 5.7L, (5.7-8) 350 CID, V8, TPI
NA5 – EMISSION SYSTEM,FEDERAL REQUIREMENTS

© 2000 GENERAL MOTORS SERVICE PARTS OPERATIONS-CHEVROLET-14Y

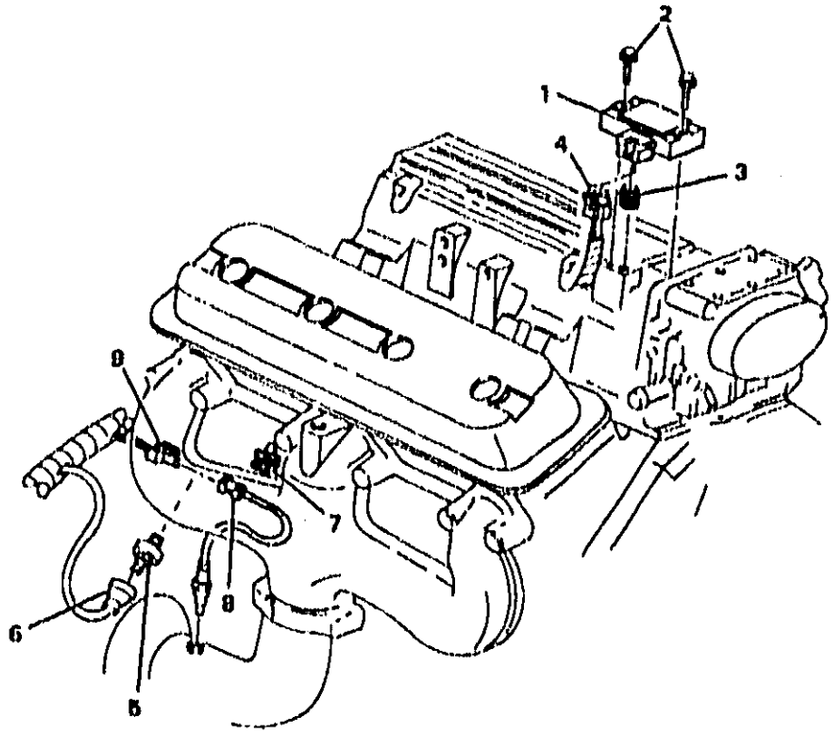

1Y03-043

1992-1995 Y M.A.P. & OXYGEN SENSORS (LT1)

1.	4-C26	3.682	SENSOR, MAP (1 PORT, 3 TERM, 2 BOLT HOLES) (AC-DELCO #213-185)	92-95	Y (LT1)	1	16137039
2.		0.900	BOLT, HWH M5X.8X25 4.8 PEOR FULL THD (MAP SEN)	92-95		2	11508858
3.	4-C26	3.682	SEAL, MAP SEN (3.270) (3.270)	92-95	Y	1	1635948
4.	4-C26	3.682	CONNECTOR, SEN-MAP (3-WAY M, W/LEADS) (AC-DELCO #PT123)	92-95	Y	1	12085502
5.	4-M18	2.383	SENSOR, KNOCK (AC-DELCO #213-96)	92-95	Y (LT1)	2	10456126
	4-M18	2.383	SENSOR, KNOCK (AC-DELCO #213-325)	93-95	Y	1	10456287
6.	4-M18	2.383	CONNECTOR, SEN-KNOCK (1-WAY M, W/LEADS, HIGH TEMP) (1.150) (AC-DELCO #PT727)	92-95	Y	1	12126456
7.	4-N12	2.559	RETAINER, ENG WRG HARN	92-95	Y (LT1)	1	14104541
8.	4-C26	3.682	SENSOR, HTD OXY (AC-DELCO #AFS75)	94	Y (LT1) (EXC NM8)	3	25312184
	4-C26	3.682	SENSOR, HTD OXY (AC-DELCO #AFS75)	95	Y (LT1) (EXC NM8, VD1, VE1)	3	25312184
	4-C26	3.682	SENSOR, OXY (PURPLE WIRE) (18 X 1.5) (TYPE #21 MATES W/12015791) (AC-DELCO #AFS21)	92-93	Y (LT1) (EXC NM8)	2	25166816

							1Y03-043
	4-C26	3.602	SENSOR, HTD OXY (AC-DELCO #AFS76)	05	Y (LT1, VD1, VE1) (EXPORT)	2	25312104
9.		8.965	CONNECTOR, WEATHER RESISTANT (TYPE 7 FEM) (EXH OXY SEN) (3.602) (AC-DELCO #PT517)	92-95	.....	AR	12117365

RPO DEFINITIONS

LT1 ENGINE--GAS, 8 CYL, 5.7L(5.7P),MFI,HO
NM8 – EMISSION SYSTEM,LEADED FUEL(EXPORT)
VD1 – PROVISION OPTIONS,EUROPE(EXPORT)
VE1 – PROVISION OPTIONS,JAPAN(EXPORT)

© 2000 GENERAL MOTORS SERVICE PARTS OPERATIONS-CHEVROLET-14

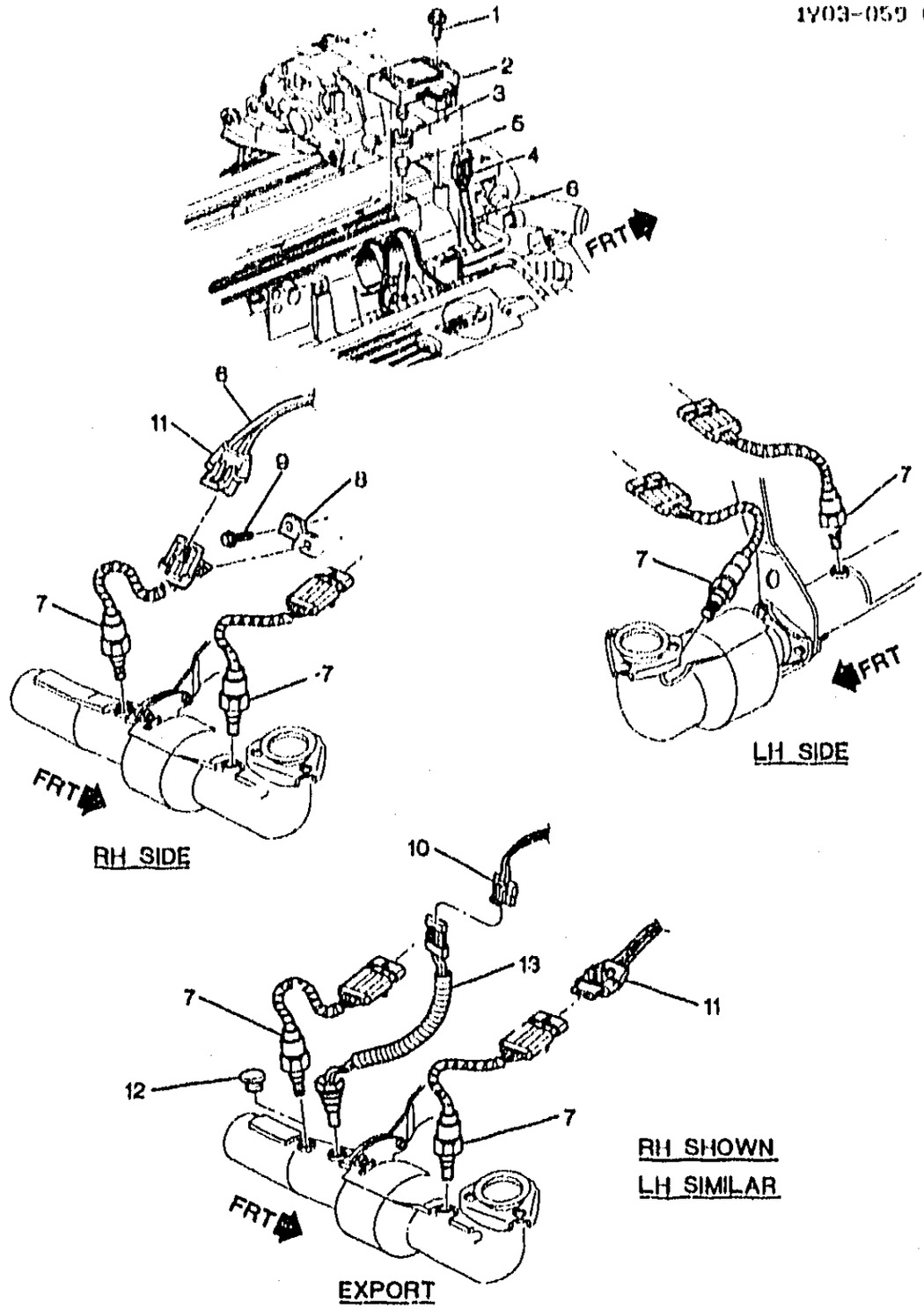

1Y03-059

1996 Y M.A.P. & OXYGEN SENSORS

1.		8.900	BOLT, HWH M5X.8X25 4.8 PEOR FULL THD (MAP SEN)	96	2	11508858
2.	4-C26	3.682	SENSOR, MAP (AC-DELCO #213-185)	96 Y	1	16137039
3.	4-C26	3.682	SEAL, MAP SEN (3.270)	96 Y	1	1635948

© 2000 GENERAL MOTORS SERVICE PARTS OPERATIONS-CHEVROLET-14Y

4.	4-C26	3.682	CONNECTOR, SEN-MAP (3-WAY M, W/LEADS) (AC-DELCO #PT123)	96	Y	1	12085502
5.	4-C26	3.682	PLUG, MAP SEN HOLE (8.163) ..	96	Y (LT1)	1	3730198
	4-C26	3.682	PLUG, MAP SEN HOLE (8.163) ..	96	Y (LT4)	1	3730198
6.	4-N4	2.525	HARNESS, ENG WRG	96	Y (ML9, C60) (EXC VE1)	1	12130461
	4-N4	2.525	HARNESS, ENG WRG	96	Y (M30, C60) (EXC VE1)	1	12130462
	4-N4	2.525	HARNESS, ENG WRG	96	Y (ML9, C68) (EXC VE1)	1	12130463
	4-N4	2.525	HARNESS, ENG WRG	96	Y (M30, C68) (EXC VE1)	1	12130464
	4-N4	2.525	HARNESS, ENG WRG	96	Y (M30, C68, VE1) (EXPORT)	1	12130465
7.	4-C26	3.682	SENSOR, HTD OXY (2-PRE CONVERTER, 2-POST CONVERTER) (AC-DELCO #AFS75)	96	Y (LT1) (EXC NM8)	4	25312184
	4-C26	3.682	SENSOR, HTD OXY (2-PRE CONVERTER, 2-POST CONVERTER) (AC-DELCO #AFS75)	96	Y (LT4)	4	25312184
8.	4-N12	2.559	BRACKET, ENG WRG HARN (POS#RH-3, 6, 8, LH-6, 7)	96	Y	6	12553341
9.		8.900	BOLT (ENG WRG HARN BRKT) ..	96	.....	1	9440073
10.	4-D4	3.686	CONNECTOR, INLINE-TO CTLTC CONV TEMP SEN (BLUE) (8-WAY F) (W/LEADS) (2.536) (AC-DELCO #PT266)	96	Y	1	12101875
	4-D4	3.686	CONNECTOR, INLINE-TO CTLTC CONV TEMP SEN (GRAY) (2-WAY F) (W/LEADS) (2.535) (AC-DELCO #PT419)	96	Y (M30, C68, VE1) (EXPORT)	2	12116908
11.	4-C26	3.682	CONNECTOR, INLINE-TO OXY SEN (FRT) (4-WAY F) (W/LEADS, IN A ROW) (4.651) (AC-DELCO #PT368)	96	Y	2	12102741
12.		8.971	PLUG-EXT, M18X1.5X10 TAPPERED 1:16, 9 OD, 22 OAL, SAE 1010/1012 (EXPORT)	96	.....	1	25509274
13.	4-D4	3.686	HARNESS, CTLTC CONV TEMP ALARM AMPF	96	Y (M30, C68, VE1) (EXPORT)	1	12163003

RPO DEFINITIONS

C60 – AIR CONDITIONER,FRONT,MANUAL CONTROLS
C68 – AIR CONDITIONER,FRONT,AUTOMATIC,ELECTRONIC CONTROLS
LT1 – ENGINE-GAS, 8 CYL, 5.7L(5.7P),MFI,HO
LT4 – ENGINE GAS, 8 CYL, 5.7L, MFI, HIGH OUTPUT
ML9 – TRANSMISSION,MANUAL 6-SPEED
M30 – TRANSMISSION,AUTOMATIC 4 SPEED,4L60E,ELECTRONIC
NM8 – EMISSION SYSTEM,LEADED FUEL(EXPORT)
VE1 – PROVISION OPTIONS,JAPAN(EXPORT)

© 2000 GENERAL MOTORS SERVICE PARTS OPERATIONS-CHEVROLET-14Y

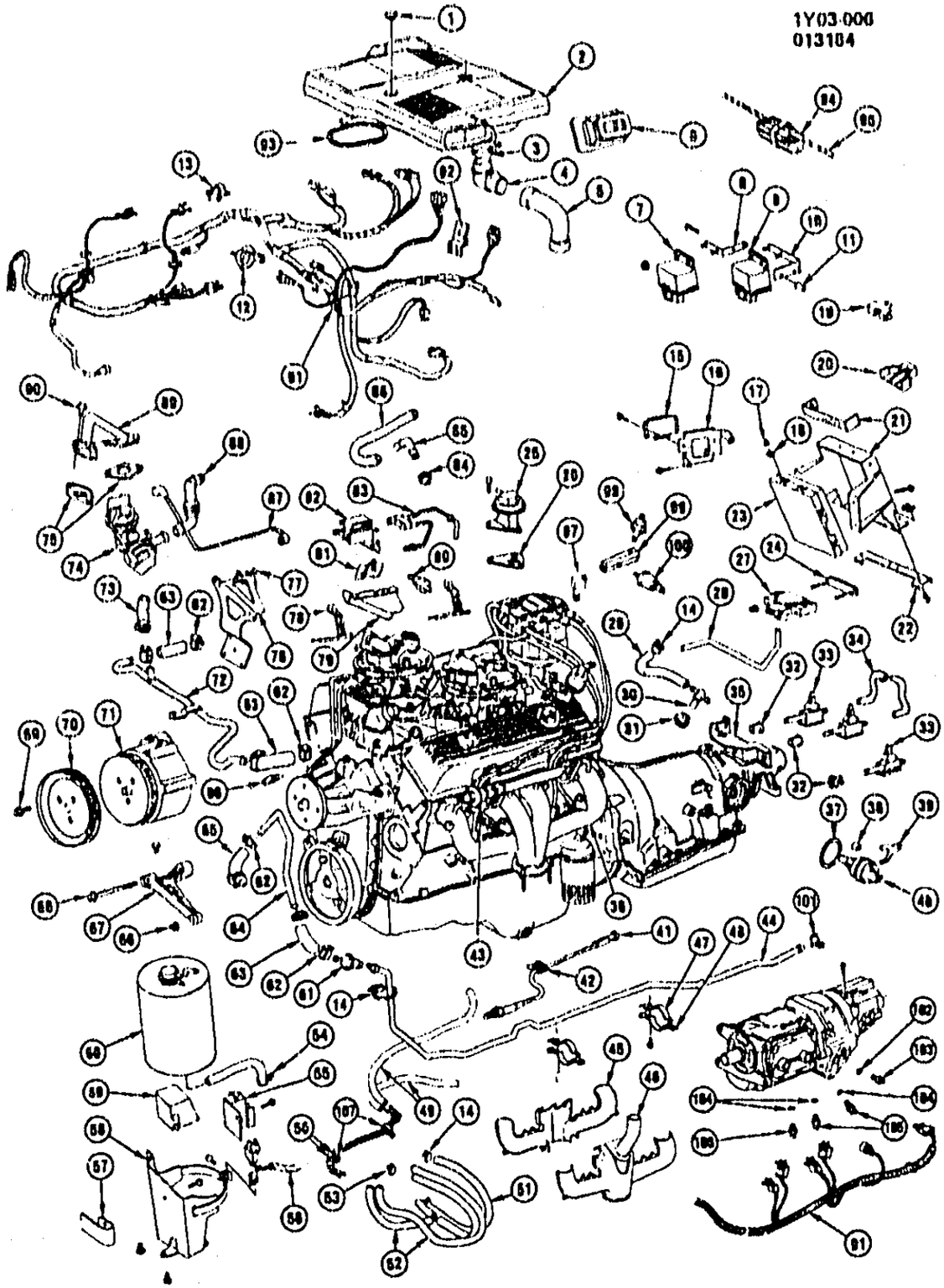

1Y03–006

1984 Y EMISSION CONTROLS–V8(L83)

1.		DISCON	NUT, W/INSERT, A/CL	14055160
2.	4–B10	3.402	CLEANER, AIR	25041409
3.		N.S.	CLAMP, ELBOW TO A/CL	

© 2000 GENERAL MOTORS SERVICE PARTS OPERATIONS–CHEVROLET–14Y

4.		DISCON	ELBOW, HT STOVE TUBE UPR	1240066
5.		DISCON	TUBE, HEAT STOVE	14057092
6.	4-B11	3.417	SEAL, AIR INT DUCT FRT	14046756
7.		4.115	RELAY, TRANS O/D OVERRIDE SW (3.140) (M.T.) (AC-DELCO #212-307)	14070915
8.		DISCON	BRACKET, O/D SW RLY	14087643
9.	4-D10	3.000	RELAY, FUEL PUMP (3.140) (AC-DELCO #212-307)	14070915
10.		DISCON	BRACKET, FUEL PUMP RLY	14087644
11.	4-D10	3.001	NUT, FUEL PUMP RLY (2.383)	12338025
12.		DISCON	PLATE, CONT MDL WRG HARN GROM RET	14064542
13.		DISCON	RETAINER, CONT MDL WRG	14066567
14.	4-M12	1.166	CLAMP, WORM TYPE (.56"TO 1.06"DIA)	22518665
15.	4-M18	2.383	MODULE, ELEC SPARK CONT (AC-DELCO #216-45)	16126761
16.		DISCON	BRACKET, SPARK CONT MDL	14087642
17.	4-C19	3.671	RETAINER, ECM (PUSH-ON) (AC-DELCO #10027015)	10027015
18.	4-N25	9.667	BOLT, U NUT & STUD (M5X.8X10) (3.671) (AC-DELCO #12337692)	12337692
19.	4-M20	2.440	BRACKET, DIAGN CONN	14073479
20.	4-M20	2.440	COVER, DIAG CONN	10021766
21.		DISCON	BRACKET, FUEL CONT MDL UPR	14062576
22.		DISCON	BRACKET, FUEL CONT MDL LWR	14062575
23.	4-C11	3.670	MODULE, ENG CONT (W/A.T.) (AC-DELCO #1226026)	1226026
		DISCON	MODULE, ENG CONT (W/M.T.)	1226430
	4-C11	3.670	EPROM, ECM (SEE CAT)	
24.		DISCON	PLATE, PRESS SEN BRKT STUD	14057585
25.	4-C11	3.670	VALVE, EGR (SEE CAT)	
26.	4-C24	3.680	GASKET, EGR VALVE (AC-DELCO #219-20)	12554530
27.	4-C26	3.682	SENSOR, M.A.P. (AC-DELCO #213-185)	16137039
28.		DISCON	HOSE, M.A.P. SENSOR	14057083
29.		DISCON	HOSE, C/CASE VENT (A.T.)	14045839
		N.S.	HOSE, C/CASE VENT (M.T.) /SERV BY;	
	4-M12	1.745	TEE, HOSE	14023108
	4-M12	1.166	CLAMP, WORM TYPE (.56"TO 1.06"DIA)	22518665
		8.962	HOSE (3/8")	
30.	4-M12	1.745	VALVE, C/CASE VENT (AC-DELCO #CV853C)	25040026
31.	4-M12	1.745	GROMMET, C/CASE VENT-LH	3989349
32.	4-D15	3.885	RETAINER, VAC REL SW	1612303
33.	4-D15	3.885	VALVE, CRUISE VAC & TRANS CONV REL (AC-DELCO #212-346)	1645516
34.		N.S.	HOSE, VAC REL SW/SERV BY;	
		8.963	TEE, HOSE (3@ M6.3)	
		8.962	HOSE (7/32")	
35.	4-M20	2.447	BRACKET, STOP LP SW	14053686
36.		DISCON	MANIFOLD, EXH-LH (INCL AIR PIPES)	10046139
		DISCON	MANIFOLD, EXH-RH (INCL AIR PIPES)	10046140
37.	4-N16 4-N17	4.338	SEAL, SPEEDO SENSOR (AC-DELCO #15552872)	15552872
38.		DISCON	SPACER, SPEEDO SENSOR	14053672
39.	4-C26	3.682	RETAINER, SPEEDO SEN (AC-DELCO #12338069)	12338069
40.	4-C26	3.682	SENSOR, VEH SPEED (AC-DELCO #213-223)	25007308
41.	4-C26	3.682	SENSOR, EXHAUST OXYGEN (AC-DELCO #AFS20)	25162693
42.	4-N12	2.559	RETAINER, SENSOR WIRE (2.559)	8917236
43.	4-C11	3.670	VALVE, AIR INJ ENG CHECK (AC-DELCO #214-422)	22050642
44.		DISCON	PIPE, CTLTC CONV AIR INJ	14091220
45.	4-B11	3.417	STOVE, ENG AIR HEAT INR	14055131
46.		DISCON	STOVE, ENG AIR HTR OTR-LH	14055129
		DISCON	SHIELD, EXH MANIF HT-RH	14055130
47.	4-C24	3.680	CLAMP, CONV AIR INJ PIPE UPR (2.50")	14091221
48.	4-C24	3.680	CLAMP, CONV AIR INJ PIPE LWR (2.50")	14091222

© 2000 GENERAL MOTORS SERVICE PARTS OPERATIONS-CHEVROLET-14Y

49.		0.062	HOSE (1/4")	
50.		0.064	PIPE, VAPOR (1/4")	
51.		0.062	HOSE (5/16")	
52.		N.S.	HOSE ASM, VPR PURGE/SERV BY;	
		0.063	TEE, HOSE (3@ M6.3)	
		0.062	HOSE (5/32") (1/4")	
53.		0.940	CLAMP, WORM (.25"-.63")	
54.		0.050	CLIP, HOSE	797023
55.	4-A13	3.140	SOLENOID, CNSTR PURGE (AC-DELCO #214-383)	1997629
56.	4-M21	2.480	HARNESS, FWD LP (SEE CAT)	
57.	4-N14	2.587	HINGE, PARK, SIG & FOG LP	14040171
58.	4-A12	3.130	BRACKET, VAPOR CNSTR	10105270
59.		DISCON	COVER, PURGE SOLENOID	14066503
60.	4-A12	3.130	CANISTER, FUEL VAPOR (AC-DELCO #215-59)	17007180
61.	4-C11	3.670	VALVE, CONV AIR INJ CHK (AC-DELCO #214-422)	22050642
62.		0.940	CLAMP, WORM GEAR (.62 TO 1.25)	
63.		0.962	HOSE (5/8")	
64.		DISCON	PIPE, AIR INJ CTLTC CONV CHK VLV	14060158
65.		N.S.	HOSE, CTLTC CONV AIR INJ CHK VLV	
66.		0.917	NUT, HEX FLG (3/8"-16)	
67.	4-C10	3.655	BRACKET, AIR INJ PUMP SUPT	14063756
68.		DISCON	BOLT, AIR INJ PUMP (3/8"-16 X 4.62)	14063754
69.		0.900	BOLT, HFH (M6 X 1 X 13)	
70.		DISCON	PULLEY, AIR INJ PUMP	14063753
71.	4-C11	3.660	PUMP, AIR INJECTION (AC-DELCO #215-325)	7045380
72.		DISCON	PIPE, AIR INJ CONT VLV DVTR	14055198
73.		DISCON	HOSE, AIR INJ CONT VLV DVTR	14063751
74.		DISCON	VALVE, AIR INJ CONT (A.T.)	17073963
		DISCON	VALVE, AIR INJ CONT (M.T.)	17074435
75.	4-C11	3.665	GASKET, DVTR VLV ELBOW	14015367
76.		DISCON	BRACKET, GENERATOR	14063758
77.		0.900	BOLT, INJ PUMP FRT BRACE (M10X1.5X25)	12337993
78.		DISCON	BRACKET, CONT MDL HARN	14066570
79.	4-M18	2.383	SHIELD, SPARK KNOCK SEN	10096158
80.	4-M18	2.383	SENSOR, SPARK CONT KNOCK (AC-DELCO #213-32[illegible])	10456287
81.		DISCON	BRACKET, EGR SOLENOID	14057006
82.	4-C11	3.670	SOLENOID, EGR CONT VLV RLY (AC-DELCO #214-333)	1997125
83.		DISCON	HARNESS, EGR VACUUM	14057089
84.	4-M12	1.745	GROMMET, C/CASE VENT-RH	3009348
85.	4-M13	1.762	CONNECTOR, VENT HOSE (A/CL TO CVR)	366846
86.	4-M13	1.762	HOSE, C/CASE VENT TUBE	14057007
87.	4-C21	3.675	PIPE, AIR INJ CONT VLV VAC	14060642
88.	4-C21	3.675	HOSE, AIR INJ CONT VLV	14057048
89.		DISCON	ADAPTER, AIR INJ CONT VLV	14063752
90.	4-C19	3.671	BOLT, ADAP (M8 X 1.25 X 6)	
91.		DISCON	HARNESS, CONT MDL WRG (A.T.) (1ST DES)	12028754
		DISCON	HARNESS, CONT MDL WRG (A.T.) (2ND DES)	12029217
		DISCON	HARNESS, CONT MDL WRG (M.T.) (1ST DES)	12029199
		DISCON	HARNESS, CONT MDL WRG (M.T.) (2ND DES)	12029216
92.		DISCON	RETAINER, ENG WRG HARNESS	14066575
93.	4-B10	3.403	SEAL, AIR CLEANER	10019632
94.		DISCON	MODULE, COLD START	12020423
95.	4-M21	2.480	HARNESS, INST PNL (SEE CAT)	
96.	4-C26	3.682	SENSOR, COOLANT TEMP (AC-DELCO #213-52)	10045847
97.		DISCON	FITTING, OIL PRESS GA SW (1ST DES)	14066511
	4-M15	1.803	FITTING, OIL PRESS GA SW (2ND DES)	14078987
98.	4-D19	3.910	SWITCH, F/PUMP (OIL PRESS) (1.800) (AC-DELCO #D1818)	25036553

© 2000 GENERAL MOTORS SERVICE PARTS OPERATIONS-CHEVROLET-14Y

				1Y03-006
99.		DISCON	FITTING, OIL PRESS GA SEN (1ST DES)	14066510
	4-M14	1.000	FITTING, OIL PRESS GA SEN (2ND DES)	14070000
100.	4-M14	1.000	SENSOR, OIL PRESS GA (AC-DELCO #14070054)	14070054
101.	4-C24	3.000	CLAMP, CONV AIR INJ PIPE	14034744
102.	4-N16	4.115	SEAL, "O" RING, SEL ELEC CONN (4.330) (M.T.) (AC-DELCO #10054241)	10054241
103.	4-N15	4.461	CONNECTOR, O/D SOL ELEC (4.265) (M.T.) (AC-DELCO #24206373)	24206373
104.	4-N15	4.400	GASKET, O/D O/RIDE SW (M.T.) (AC-DELCO #14081180)	14081180
105.	4-N15	4.400	SWITCH, O/D O/RIDE (1-2) (M.T.) (AC-DELCO #14057629)	14057629
106.	4-N15	4.400	SWITCH, O/D O/RIDE (3-4) (M.T.) (AC-DELCO #14057628)	14057628
107.	4-A15	3.162	CLIP, FUEL VPR PIPE	14050054

RPO DEFINITIONS
L83 -- ENGINE, 5.7L (5.7-8), V6,(CFI-CROSSFIRE)(TBI)

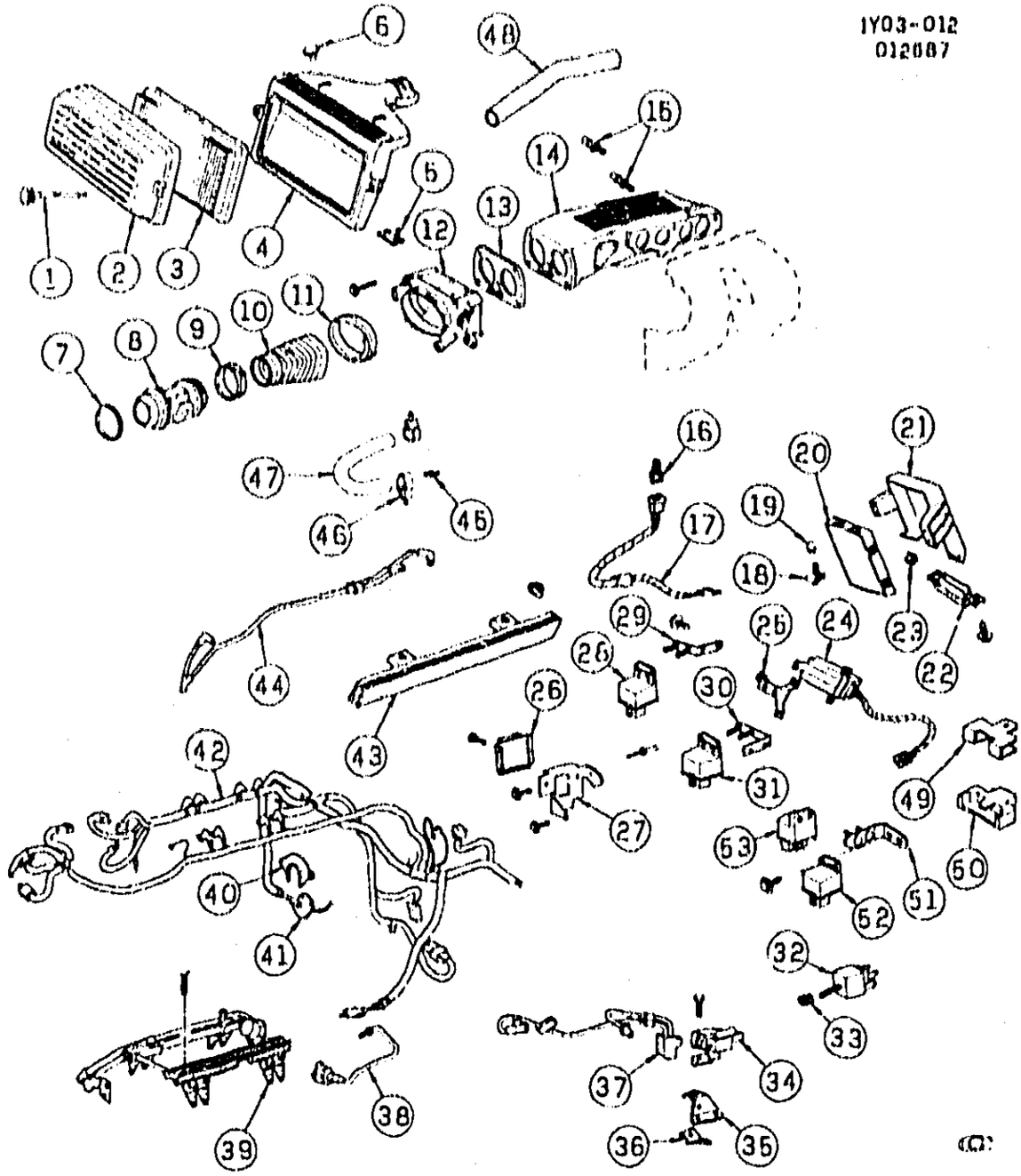

1Y03-012

1985-1986 Y EMISSION CONTROLS PART 1-V8(L98)

1.	4-B10	3.403	SCREW, AIR CLEANER COVER	14081880
2.	4-B10	3.410	COVER, AIR CLEANER	14081869
3.	4-B10	3.410	ELEMENT, AIR CLEANER (AC-DELCO #A917C)	25042562
4.	4-B11	3.417	DUCT, A/CL FRT AIR METER INT	14084404
	4-B11	3.417	PIN, A/CL FRT AIR INT DUCT RET	14081885
	4-B11	3.417	RETAINER, A/CL FRT AIR INT DUCT	14081886
5.	4-B11	3.417	SCREW, FRT AIR INT DUCT	14084405
6.	4-N23	9.262	RETAINER, FRT AIR INT DUCT	14090619
7.	4-B11	3.415	SEAL, MASS AIR FLOW SEN O RING	14081880
8.	4-C26	3.682	SENSOR, MASS AIR FLOW (1985) (AC-DELCO #213-162)	14081243

© 2000 GENERAL MOTORS SERVICE PARTS OPERATIONS - CHEVROLET - 14Y

	4-C26	3.682	SENSOR, MASS AIR FLOW (1986) (AC-DELCO #213-103)	14094712
9.		0.946	CLAMP, WORM (2.56-3.50)	14081803
10.	4-B11	3.417	DUCT, AIR INT REAR	14081891
11.	4-B11	3.417	CLAMP, RR INT AIR DUCT (UPC/FNA: CLAMP, RR AIR INT DUCT)	10146026
12.	4-A28	3.335	BODY, THROTTLE (SEE CAT)	
13.	4-D6	3.336	GASKET, THROT BODY (AC-DELCO #40-710)	10105379
14.		DISCON	PLENUM, INT MANIF	10108443
15.	4-A21	3.278	FITTING, INT MANIF VAC/IN PLENUM	14082470
16.	4-C26	3.682	SENSOR, MANIF AIR TEMP (1ST DES-1985) (HOLES IN PROBE & MATES W/SQUARE CONN) (AC-DELCO #213-190)	25036751
	4-C26	3.682	SENSOR, MANIF AIR TEMP (2ND DES-1985) (1986) (SOLID PROBE & MATES W/UMBRELLA CONN) (1.150) (AC-DELCO #213-310)	12146312
17.	4-M21	2.400	HARNESS, INT AIR TEMP SEN WRG	12029463
18.	4-N25	9.667	BOLT, U NUT & STUD (M5X.8X16) (3.671) (AC-DELCO #12337092)	12337092
19.	4-C19	3.671	RETAINER, ENG CONT MDL (PUSH-ON) (AC-DELCO #10027015)	10027015
20.	4-C11	3.670	MODULE, ENG CONT (1985) (AC-DELCO #1226870)	1226870
	4-C11	3.670	MODULE, ENG CONT (REMAN) ((1986)) (AC-DELCO #16198259)	16198259
	4-C11	3.670	EPROM, ECM (SEE CAT) (1985) (AC-DELCO #1227805)	1227805
	4-C11	3.670	EPROM, ECM (SEE CAT) (1986) (AC-DELCO #1228109)	
21.	4-C19	3.671	BRACKET, CONT MDL	14080604
22.		DISCON	COVER, CONT MDL HSG	14080605
23.	4-N14	2.729	NUT, SPL ANC (NYLON) (SQUARE HOLE)	347347
24.	4-C26	3.682	MODULE, MASS AIR FLOW SEN BURNOFF (1985) (AC-DELCO #216-52)	14080620
25.		DISCON	BRACKET, MASS AIR FLOW SEN BURNOFF MDL (1985)	14080660
26.	4-M18	2.383	MODULE, ELEC SPARK CONT (AC-DELCO #216-45)	16126761
27.		DISCON	BRACKET, ELEK SPARK CONT MDL	14087642
28.	4-N15	4.480	RELAY, M/TRANS O/D SW (OVERRIDE) (3.140) (AC-DELCO #212-307)	14078915
29.		DISCON	BRACKET, TRANS O/D SW RLY	14087643
30.		DISCON	BRACKET, FUEL PUMP RLY	14087644
31.	4-D18	3.900	RELAY, FUEL PUMP (3.140) (AC-DELCO #212-307)	14078915
32.	4-D15	3.885	VALVE, CRUISE VAC & TRANS CONV REL (AC-DELCO #212-346)	1645615
33.	4-D15	3.885	RETAINER, VAC REL VLV	1612305
34.	4-C11	3.670	SOLENOID, EGR CONT VLV RLY (1985) (AC-DELCO #214-331)	1997111
	4-C11	3.670	SOLENOID, EGR CONT VLV RLY (1986) (AC-DELCO #214-340)	1997195
	4-C19	3.671	FILTER, EGR CONT VLV RLY SOL (3.140) (AC-DELCO #219-15)	1977880
	4-C19	3.671	CLIP, FILTER RETAINING	1985070
35.		DISCON	BRACKET, EGR SOLENOID (1985)	14087565
36.		DISCON	BRACKET, ENG WRG HARN (RR MANIF BY DISTR)	14062600
37.	4-C21	3.675	HARNESS, EGR VLV VAC (1985)	14082441
		DISCON	HARNESS, EGR VLV VAC (1986)	14087573
38.		N.S.	VALVE ASM, COLD START INJ/SERV BY;	
		DISCON	PIPE KIT, COLD START F/INJR (1985)	17110858
		DISCON	PIPE KIT, COLD START F/INJR (1986)	17110860
	4-A24	3.330	PIPE KIT, COLD START F/INJR (AC-DELCO #17112061)	17112061
	4-A26	3.331	SEAL, COLD STRTR F/INJR PIPE (O-RING) (AC-DELCO #17111954)	17111954
39.		N.S.	RAIL ASM, FUEL INJ (SERV BY CMPTS-SEE ILLUST 3.000 GRP)	
40.		DISCON	RETAINER, CONT MDL WRG (1985)	14066567
41.		DISCON	PLATE, CONT MDL WRG HARN GROM RET (1985)	14064542
	4-N12	2.559	PLATE, CONT MDL WRG HARN RET (1986)	14090618
42.		DISCON	HARNESS, CONT MDL (A.T.) (1985)	12048732
		DISCON	HARNESS, CONT MDL (M.T.) (1985)	12048733
		DISCON	HARNESS, ENG (A.T., A.C./C60) (1986)	12048817

© 2000 GENERAL MOTORS SERVICE PARTS OPERATIONS-CHEVROLET-14Y

		DISCON	HARNESS, ENG (A.T., A.C./C60) (1986)	12040810
		DISCON	HARNESS, ENG (M.T., A.C./C60) (1986)	12040815
		DISCON	HARNESS, ENG (M.T., A.C./C60) (1986)	12040816
43.		DISCON	COVER, CONT MDL WRG HARN-LH (1986)	14080635
		DISCON	COVER, CONT MDL WRG HARN-RH (1986)	14080636
44.	4-C21	3.675	HARNESS, AIR INJ CONT VLV VAC	14082463
45.	4-N23	8.866	VALVE, HTR WAT FLOW CONT (AC-DELCO #15-5372)	22532158
46.		8.940	CLAMP, WORM GEAR (.62 TO 1.25) (AC-DELCO #12337091)	12337091
47.	4-B7	3.337	HOSE, THROT BODY HTR	10108509
48.	4-N22	8.846	HOSE, HTR INLET	14081340
49.	4-M20	2.440	BRACKET, I/P WRG HARN DIAG CONN	14073479
50.	4-M20	2.440	COVER, I/P HARN DIAG CONN	10021766
51.		DISCON	BRACKET, MASS AIR FLOW SEN RLY (4.060) (1986)	14087643
52.	4-C26	3.692	RELAY, MASS AIR FLOW SENSOR POWER (1986) (AC-DELCO #212-300)	10067925
53.	4-C26	3.692	RELAY, MASS AIR FLOW SENSOR DE-OXIDIZE (1986) (AC-DELCO #212-300)	10067926

RPO DEFINITIONS
L98 - ENGINE, 5.7L, (5.7-8) 350 CID, V8, TPI

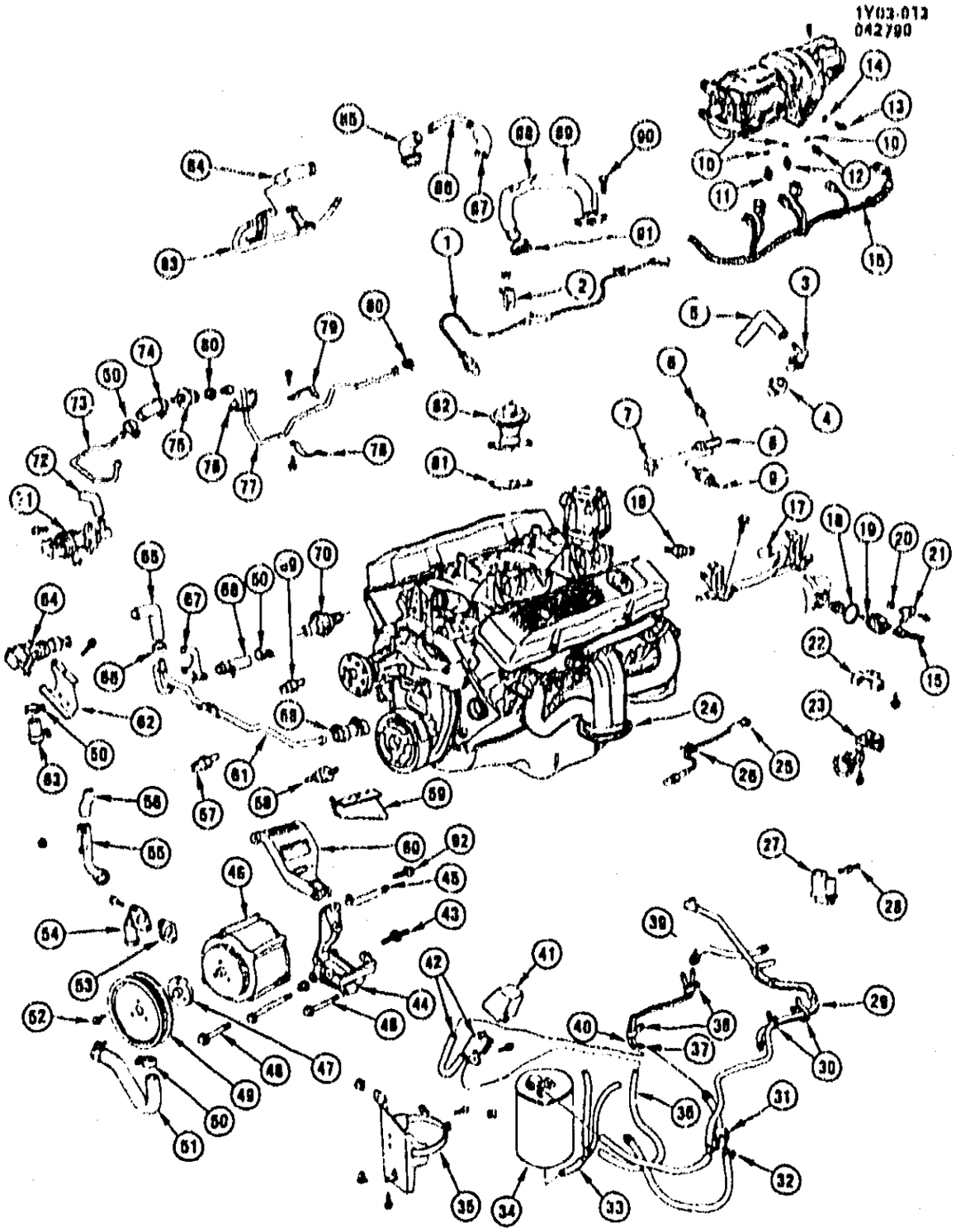

1Y03-013

1985-1986 Y EMISSION CONTROLS PART 2-V8(L98)

1.	4-C11	3.670	SWITCH, EGR TEMP (1985) (AC-DELCO #212-337)	14087416
	4-C11	3.670	SWITCH, EGR TEMP (1986) (AC-DELCO #212-336)	14087415
2.		DISCON	BRACKET, EGR TEMP SW WIRE (1985)	14087418
3.	4-M12	1.745	VALVE, C/CASE VENT (CV774C) (AC-DELCO #CV774C)	6487779
4.	4-M12	1.745	GROMMET, C/CASE VENT (3/4" ID X 1 1/8" OD)	3989349
5.	4-M13	1.762	HOSE, C/CASE VENT VLV	14082442

© 2000 GENERAL MOTORS SERVICE PARTS OPERATIONS--CHEVROLET-14Y

6.	4-M14	1.000	SWITCH, OIL PRESS (AC-DELCO #D1810)	25036553
7.	4-M16	1.003	FITTING, OIL PRESS GA SEN	14070987
8.	4-M14	1.000	FITTING, OIL PRESS GA SEN (DBL OTLT/HEX BODY)	14070980
9.	4-M14	1.000	SENSOR, OIL PRESS GA (AC-DELCO #14070964)	14070964
10.	4-N16	4.480	GASKET, 1ST & 2ND O/D O/RIDE SW (M.T.) (AC-DELCO #14081180)	14081180
11.	4-N16	4.480	SWITCH, REV & 4TH O/D O/RIDE (M.T.) (AC-DELCO #14057620)	14057620
12.	4-N16	4.480	SWITCH, 1ST & 2ND O/D O/RIDE (M.T.) (AC-DELCO #14057620)	14057620
13.	4-N16	4.461	CONNECTOR, O/D SOL ELEC (4.205) (1 BLADE TERM) (M.T.) (AC-DELCO #24205373)	24205373
14.	4-N16	4.115	SEAL, O-RING, ELEC CONN (4.336) (AC-DELCO #10054241)	10054241
15.		N.S.	HARNESS, CONT MDL (1985) (SEE PART I #42)	
		N.S.	HARNESS, ENG/ECM (1986) (SEE PART I #42)	
16.		N.S.	FITTING, C/CASE VENT HOSE	
17.		DISCON	PIPE, C/CASE VENT VLV (1985)	14086634
		DISCON	PIPE, C/CASE VENT VLV (1986)	14087570
18.	4-N16 4-N17	4.330	SEAL, SPEEDO SENSOR (A.T.) (AC-DELCO #15552072)	15552072
19.	4-C26	3.682	SENSOR, VEH SPD (TRANS MTD) (A.T.) (SEE CHART) (AC-DELCO #213-223)	25007308
20.		DISCON	SPACER, VEH SPD SEN (A.T.)	14053072
21.	4-C26	3.682	RETAINER, VEH SPD SEN (A.T.) (AC-DELCO #12338069)	12338069
22.	4-M20	2.440	BRACKET, DIAGN CONN	14073470
23.	4-M20	2.440	COVER, DIAG CONN	10021766
24.		DISCON	MANIFOLD, EXH-LH (INCL AIR PIPES) (1985)	10046139
		DISCON	MANIFOLD, EXH-RH (INCL AIR PIPES) (1985)	10046140
	4-C7	3.601	MANIFOLD, EXH-LH (INCL AIR PIPES) (1986)	14087511
	4-C7	3.601	MANIFOLD, EXH-RH (INCL AIR PIPES) (1986)	14087512
	4-R11	3.417	STOVE, ENG AIR HT INR-LH	14055131
		DISCON	SHIELD, EXH MANIF HT OTR-LH	14055130
25.	4-C26	3.682	SENSOR, EXHAUST OXYGEN (AC-DELCO #AFS20)	25162693
26.	4-N12	2.559	RETAINER, EXH OXY SEN WIRE (2.559)	6917236
27.	4-M10	1.055	RELAY, ENG COOL FAN (AC-DELCO #16-8333)	10038311
28.	4-M10	1.055	RETAINER, FAN RLY (PUSH-IN) (1.276)	20664092
29.		N.S.	HOSE ASM, CNSTR PURGE SOL/SERV BY;	
		8.963	TEE, HOSE (3 @ 3/16")	
		8.963	CONNECTOR, STRGT (3/16")	
		8.962	HOSE (5/32") (1/4")	
30.		8.965	RETAINER, PLASTIC 7" ADJ STRAP	3816659
31.	4-A12	3.130	VALVE, VPR CNSTR CONT (AC-DELCO #214-548)	17087240
32.	4-M12	1.166	CLAMP, WORM TYPE (.56"TO 1.06"DIA)	22518665
33.		N.S.	HOSE ASM, CNSTR PURGE	
	4-M12	1.745	TEE, CNSTR PURGE (4.931)	14023108
		8.962	HOSE (3/8")	
34.	4-A12	3.130	CANISTER, FUEL VAPOR (1985 (AC-DELCO #215-155)	17113150
	4-A12	3.130	CANISTER, FUEL VAPOR (1986 (AC-DELCO #215-155)	17113150
35.	4-A12	3.130	BRACKET, VPR CNSTR	10105270
36.		8.962	HOSE, CNSTR PURGE SOL (1/4")	
37.		8.964	PIPE, FUEL VPR FRT (1/4")	
38.	4-A15	3.162	CLIP, FUEL VPR PIPE	14050054
39.		8.962	HOSE, VPR PIPE (1/4")	
40.		8.964	PIPE, VPR FRT VAC (1/4")	
41.		DISCON	COVER, VPR CNSTR PURGE SOL	14066503
42.	4-A12	3.130	VALVE, EVAP EMIS CNSTR PURGE SOL (INCLS CLIP, HOSE) (1985) (AC-DELCO #214-370)	1997101
	4-A13	3.140	SOLENOID, CNSTR PURGE (INCL CLIP, HOSE & CONN) (1986) (AC-DELCO #1997153)	1997153

© 2000 GENERAL MOTORS SERVICE PARTS OPERATIONS-CHEVROLET-14Y

		DISCON	CLIP, CNSTR HOSE RET	1986936
		DISCON	CONNECTOR, TEE	10496004
		8.962	HOSE (1/4")	
43.	4-C10	3.655	STUD, PUMP BRKT (3/8"-16 X 1.75/3/8"-16 X .88)	14085701
44.		DISCON	BRACKET, AIR INJ PUMP (1985)	14084368
	4-C10	3.655	BRACKET, AIR INJ PUMP (1986)	14087620
45.	4-C10	3.655	BRACE, AIR INJ PUMP	10105290
46.	4-C11	3.660	PUMP, AIR INJECTION (1985) (AC-DELCO #215-326)	7046432
	4-C11	3.660	PUMP, AIR INJECTION (1986) (AC-DELCO #215-149)	7034916
		DISCON	FAN, INJ PUMP FILTER	7035231
47.		DISCON	WASHER, INJ PUMP PULLEY (1985)	14084367
		DISCON	WASHER, INJ PUMP PULLEY (1986)	14087522
48.	4-C10	3.655	BOLT, PUMP-HFH (3/8"-16 X 2.5) (1985)	14084400
		8.900	BOLT, PUMP-HFH (3/8"-16 X 2.5) (1986)	9440072
49.		DISCON	PULLEY, AIR INJ PUMP (1985)	14084370
	4-C10	3.650	PULLEY, AIR INJ PUMP (1986)	14087521
50.		8.946	CLAMP, WORM GEAR (.62 TO 1.25)	
51.	4-C21	3.675	HOSE, CONT VLV DVTR (1985)	14084362
		DISCON	HOSE, AIR INJ PUMP (1986-87)	14092370
52.	4-C10	3.655	BOLT, INJ PUMP PULLEY	14082455
53.	4-C11	3.665	GASKET, CONT VLV & ADAP (3.671)	14016367
54.	4-C19	3.671	ADAPTER, CONT VLV HOSE	14084361
55.	4-C21	3.672	SILENCER, CONT VALVE (AC-DELCO #219-150)	14082474
56.	4-C21	3.675	HOSE, CONT VLV SILENCER	14082475
57.	4-A22	3.300	SWITCH, COLD START F/INJR (AC-DELCO #212-312)	14084318
58.	4-M18	2.383	SENSOR, ESC KNOCK (DR-562 STAMPED) (AC-DELCO #213-325)	10456287
	4-M18	2.383	SENSOR, ESC KNOCK (DR-562 STAMPED) (1990-91) (AC-DELCO #213-92)	10456549
59.	4-M18	2.383	SHIELD, SPARK CONT KNOCK SENSOR	10096158
60.	4-M17	2.277	BRACKET, GENERATOR (1985)	14084384
	4-M17	2.277	BRACKET, GENERATOR (1986)	14087519
61.		DISCON	PIPE, AIR INJ ENG CHK VLV	14100852
62.		DISCON	BRACKET, AIR INJ SW VLV	14082477
63.		8.962	HOSE, VLV TO PIPE (5/8")	12322342
64.	4-C11	3.670	VALVE, AIR INJ SW (AC-DELCO #214-79)	17085741
65.	4-C21	3.675	HOSE, CONT VLV DVTR (90 DEG ANGLE)	14082473
66.		N.S.	CLAMP, AIR INJ CONT VLV	
67.		DISCON	BRACKET, AIR INJ CONT VLV	14082472
68.	4-C21	3.675	HOSE, AIR INJ ENG CHK VLV (2)	14085800
69.	4-C26	3.682	SENSOR, CLNT TEMP (1.150) (AC-DELCO #213-310)	12146312
70.	4-C11	3.670	VALVE, AIR INJ ENG CHK (2) (AC-DELCO #214-419)	22048212
71.	4-C11	3.670	VALVE, AIR INJ CONT (AC-DELCO #214-78)	17085740
72.	4-C21	3.675	HOSE, CONT VLV DVTR (45 DEG ANGLE)	14082471
73.		DISCON	PIPE, CTLTC CONV AIR INJ CHK VLV TO PUMP	14082469
74.	4-C21	3.675	HOSE, CONV AIR INJ CHK VLV	
75.	4-C11	3.670	VALVE, CTLTC CONV CHK (1985) (AC-DELCO #214-422)	22050642
	4-C11	3.670	VALVE, CTLTC CONV CHK (1986) (AC-DELCO #214-423)	22062561
76.		8.948	CLAMP, WORM (.31-.75)	
77.		DISCON	PIPE, CONV AIR INJ (1985)	14091220
	4-C21	3.675	PIPE, CONV AIR INJ (1986) (AC-DELCO #219-77)	10097662
78.	4-C24	3.680	CLAMP, CTLTC CONV AIR INJ PIPE (EXH LWR)	14091222
79.	4-C24	3.680	CLAMP, CTLTC CONV AIR INJ PIPE (EXH UPR)	14091221
80.	4-C24	3.680	CLAMP, CTLTC CONV AIR INJ CHK VLV RR	14093102
81.	4-C24	3.680	GASKET, EGR VALVE (AC-DELCO #14088262)	14088262
82.	4-C11	3.670	VALVE, EGR (PROD 17085815) W/A .T/FED (NA5) (1985) (AC-DELCO #214-5591)	17113406

	4-C11	3.670	VALVE, EGR (PROD 17085819) W/A .T., NM8 (EXPORT) (1985) (AC-DELCO #214-5591)	17113406
	4-C11	3.670	VALVE, EGR (PROD 17085817) (AC-DELCO #214-5538)	17113459
	4-C11	3.670	VALVE, EGR (1986-ALL) (AC-DELCO #214-5535)	17113456
83.		DISCON	PIPE, C/CASE VENT-RH (1985)	14082449
		DISCON	PIPE, C/CASE VENT-RH (1986)	14087569
84.		8.962	HOSE, C/CASE VENT (1/2")	
85.	4-M12	1.745	GROMMET, C/CASE VENT TUBE	14082445
86.	4-M13	1.762	TUBE, C/CASE VENT	14087567
87.	4-M13	1.762	CONNECTOR, C/CASE VENT TUBE	14082446
88.	4-C21	3.675	PIPE, EGR (1986)	14092329
89.	4-C21	3.675	SHIELD, EGR PIPE (W/CAST IRON HD) (1986)	14101107
	4-C21	3.675	SHIELD, EGR PIPE (W/ALUM HD) (1986)	14087579
90.	4-C24	3.680	BOLT, EGR TUBE (1986)	14081021
91.	4-C24	3.680	CLAMP, EGR PIPE (25MM ID) (1986)	14087580
92.		8.900	BOLT, HFH (M8X1.25X20) 10.9 POR	12551177

RPO DEFINITIONS
L98 -- ENGINE, 5.7L, (5.7-8) 350 CID, V8, TPI

© 2000 GENERAL MOTORS SERVICE PARTS OPERATIONS - CHEVROLET-14Y

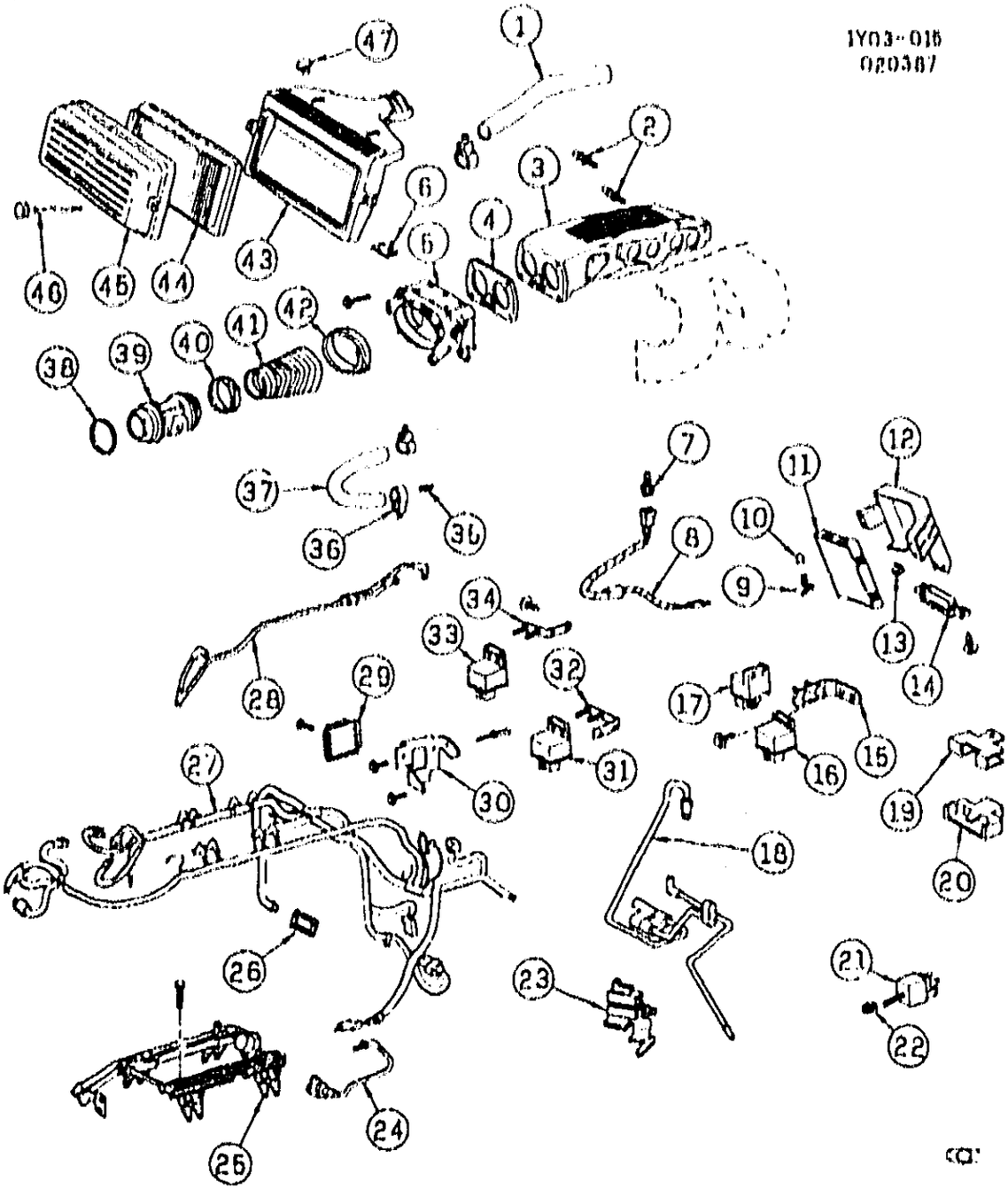

1987 Y EMISSION CONTROLS PART 1-V8(L98)

1.	4-N22	8.846	HOSE, HTR INL	14081348
2.	4-A21	3.278	FITTING, INT MANIF VAC (IN PLNM)	14082470
3.		DISCON	PLENUM, INT MANIF	10108443
4.	4-B6	3.336	GASKET, THROT BODY (AC-DELCO #40-718)	10105379
5.	4-A28	3.335	BODY, THROT (SEE CAT)	
6.	4-[illegible]	3.417	SCREW, AIR INT DUCT FRT	14084405
7.	4-C28	3.682	SENSOR, MANIF AIR TEMP (1.150) (AC-DELCO #213-310)	12146312
8.	4-M[illegible]1	2.460	HARNESS, INT AIR TEMP SEN WRG	12029463
9.	4-N25	9.667	BOLT, U NUT & STUD (M5X.8X16) (3.671) (AC-DELCO #12337892)	12337892
10.	4-C19	3.671	RETAINER, ENG CONT MDL (PUSH-ON) (AC-DELCO #10027015)	10027015

© 2000 GENERAL MOTORS SERVICE PARTS OPERATIONS-CHEVROLET-14Y

11.	4-C11	3.670	MODULE, ENG CONT (REMAN) (AC-DELCO #16190259)	16190259
	4-C11	3.670	EPROM, ECM (SEE CAT) (AC-DELCO #16070323)	
12.	4-C19	3.671	BRACKET, FUEL CONT MDL	14080604
13.	4-N14	2.729	NUT, SPL ANC (NYLON) (SQUARE HOLE)	347347
14.		DISCON	COVER, CONT MDL HSG	14080605
15.		DISCON	BRACKET, MASS AIR FLOW SEN RLY	10067918
16.	4-M10	1.055	RELAY, MASS AIR FLOW SEN (1.055) (AC-DELCO #15-9240)	14089936
17.	4-M10	1.055	RELAY, MASS AIR FLOW SEN (BURNOFF) (1.055) (AC-DELCO #15-9240)	14089936
18.	4-C21	3.675	HARNESS, EGR VLV VAC	10046113
19.	4-M20	2.440	BRACKET, I/P WRG HARN DIAG CONN	14073477
20.	4-M20	2.440	COVER, I/P HARN DIAG CONN	10021766
21.	4-D15	3.885	VALVE, CRUISE VAC & TRANS CONV REL (AC-DELCO #212-346)	1045516
22.	4-D15	3.885	RETAINER, VAC REL VLV	10076405
23.	4-C11	3.670	SOLENOID, EGR CONT VLV RLY (CMPTS SERV) (AC-DELCO #214-340)	1997195
	4-C19	3.671	FILTER, EGR CONT VLV RLY SOL (3.140) (AC-DELCO #219-15)	1977880
	4-C19	3.671	CLIP, FLTR RET	1985870
24.		N.S.	VALVE ASM, COLD START (SERV BY)	
		DISCON	PIPE KIT, COLD START F/INJR	17110860
	4-A24	3.330	PIPE KIT, COLD START F/INJR (AC-DELCO #17112061)	17112061
	4-A26	3.331	SEAL, COLD STRTR F/INJR PIPE (O-RING) (AC-DELCO #17111954)	17111954
25.		N.S.	RAIL ASM, F/INJ (SEE GROUP 3.000 "FUEL INJECTOR RAIL MPFI (MODELS F8A, R810) " FOR DETAIL ILLUSTRATED VIEW.)	
26.	4-N12	2.559	PLATE, CONT MDL WRG HARN RET	14090618
27.		DISCON	HARNESS, ENG/ECM (M.T. C60)	12067670
		DISCON	HARNESS, ENG/ECM (M.T. C68)	12067671
		DISCON	HARNESS, ENG/ECM (A.T. C60)	12067672
28.	4-C21	3.675	HARNESS, AIR INJ CONT VLV VAC	14082463
29.	4-M18	2.383	MODULE, ELEK SPARK CONT (AC-DELCO #216-47)	16126261
30.		DISCON	BRACKET, MASS AIR FLOW SEN RLY	10067918
31.	4-D18	3.900	RELAY, F/PUMP (3.140) (AC-DELCO #212-307)	14078915
32.		DISCON	BRACKET, F/PUMP RLY	14087644
33.	4-N15	4.480	RELAY, M.T. O/D OVERRIDE SW (3.140) (AC-DELCO #212-307)	14078915
34.		DISCON	BRACKET, TRANS O/D SW RLY	14087643
35.	4-N23	8.866	VALVE, HTR WAT FLOW CONT (AC-DELCO #15-5372)	22532158
36.		8.948	CLAMP, WORM GR (16.7 TO 31.8) SST (AC-DELCO #12337891)	12337891
37.	4-B7	3.337	HOSE, THROT BODY HTR	10108509
38.	4-B11	3.415	SEAL, MASS AIR FLOW SEN	14081880
39.	4-C26	3.682	SENSOR, MASS AIR FLOW (AC-DELCO #213-163)	14094712
40.		8.948	CLAMP, WORM GR (65.1 TO 89.9) SST	14081883
41.	4-B11	3.417	DUCT, AIR INT RR	14081891
42.	4-B11	3.417	CLAMP, RR INT AIR DUCT (UPC/FNA: CLAMP, RR AIR INT DUCT)	10146826
43.	4-B11	3.417	DUCT, A/CLNR FRT AIR MTR INT (CMPTS SERV)	14084404
	4-B11	3.417	PIN, A/CLNR FRT AIR INT DUCT RET	14081885
	4-B11	3.417	RETAINER, A/CLNR FRT AIR INT DUCT	14081886
44.	4-B10	3.410	ELEMENT, A/CLNR (A917C) (AC-DELCO #A917C)	25042562
45.	4-B10	3.410	COVER, A/CLNR	14081889
46.	4-B10	3.403	SCREW, A/CLNR CVR	14081888
47.	4-N23	9.262	RETAINER, FRT AIR INT DUCT	14090619

RPO DEFINITIONS

L98 – ENGINE, 5.7L, (5.7-8) 350 CID, V8, TPI

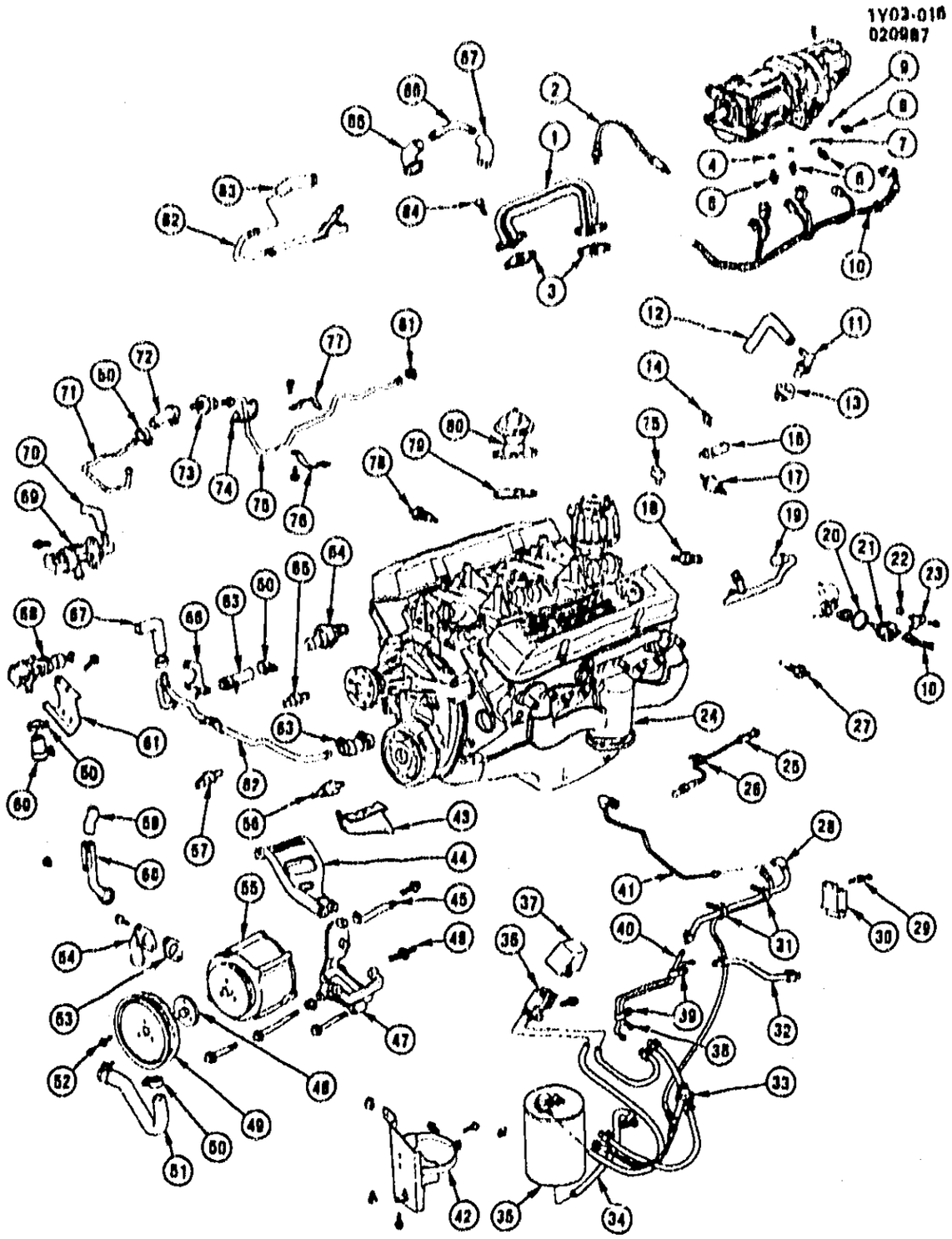

1Y03-016

1987 Y EMISSION CONTROLS PART 2-V8(L98)

1.	4-C21	3.675	PIPE, EGR VLV	10055728
	4-C21	3.675	SHIELD, EGR PIPE (120X290MM W/20MM HOLE)	10055729
	4-C21	3.675	SHIELD, EGR PIPE (100X120MM W/NO HOLE)	10055730
2	4-C11	3.670	SWITCH, EGR VLV TEMP IND (AC-DELCO #212-336)	14087415
3.	4-C21	3.675	GASKET, EGR VLV PIPE	10055726

© 2000 GENERAL MOTORS SERVICE PARTS OPERATIONS-CHEVROLET-14Y

4.	4-N15	4.400	GASKET, 1ST & 2ND O/D OVERIDE SW (M.T.) (AC-DELCO #14081180)	14081180
5.	4-N15	4.400	SWITCH, O/D OVERIDE REV (M.T.) (AC-DELCO #14057528)	14057528
6.	4-N15	4.400	SWITCH, 1ST & 2ND O/D OVERIDE (M.T.) (AC-DELCO #14057529)	14057529
7.	4-N15	4.400	GASKET, 1ST & 2ND O/D OVERIDE SW (M.T.) (AC-DELCO #14081180)	14081180
8.	4-N15	4.461	CONNECTOR, O/D SOL ELEC (1 BLADE TERM) (M.T.) (AC-DELCO #24205373)	24205373
9.	4-N16	4.115	SEAL, O RING ELEC CONN (4.205) (AC-DELCO #10054241)	10054241
10.		N.S.	HARNESS, ENG/ECM (SEE CAT)	
11.	4-M12	1.745	VALVE, CR/CASE VENT (CV774C) (AC-DELCO #CV774C)	6487779
12.	4-M13	1.762	HOSE, CR/CASE VENT VLV	14082442
13.	4-M12	1.745	GROMMET, CR/CASE VENT-LH (3/4 IDX1 1/8 OD SQ)	3989349
14.	4-M14	1.800	SWITCH, OIL PRESS (AC-DELCO #D1810)	25036553
15.	4-M15	1.803	FITTING, ENG OIL PRESS GA SEN TO BLK	14078987
16.	4-M14	1.800	FITTING, ENG OIL PRESS GA SEN TO BLK FTG	14078988
17.	4-M14	1.800	SENSOR, OIL PRESS GA (1 BLADE TERM) (AC-DELCO #14078954)	14078954
18.	4-M13	1.762	CONNECTOR, CR/CASE VENT HOSE	14082446
19.		DISCON	PIPE, CR/CASE VENT VLV	10046142
20.	4-N16 4-N17	4.338	SEAL, SPEEDO SEN (A.T.) (AC-DELCO #15552872)	15552872
21.	4-C26	3.662	SENSOR, VEH SPD (TRANS MTD) (SEE CAT) (AC-DELCO #213-210)	25007224
22.		DISCON	SPACER, VEH SPD SEN	14053672
23.		N.S.	RETAINER, VEH SPD SEN (A.T.)	
24.	4-C7	3.601	MANIFOLD, EXH-LH (CMPTS SERV)	14087511
	4-C7	3.601	MANIFOLD, EXH-RH (CMPTS SERV)	10055734
	4-B11	3.417	STOVE, ENG AIR HT INR	14055131
		DISCON	SHIELD, EXH MANIF HT OTR	14055130
25.	4-C26	3.662	SENSOR, EXH OXYGEN (AC-DELCO #AFS20)	25162693
26.	4-N12	2.559	RETAINER, EXH OXYGEN SEN WIRE (2.559)	8917236
27.	4-M14	1.800	SENSOR, TEMP (AC-DELCO #25036292)	25036292
28.		DISCON	HARNESS, FUEL VPR CNSTR	10046010
29.	4-M10	1.055	RETAINER, ENG COOL FAN RLY (1.276)	20664092
30.	4-M10	1.055	RELAY, ENG COOL FAN (AC-DELCO #16-8333)	10038311
31.		8.965	RETAINER, PLSTC (7 ADJ STRAP)	3816659
32.		8.962	HOSE, VPR PIPE TO TK PIPE (5/32 ID)	9438381
33.	4-A12	3.130	VALVE, VPR CNSTR CONT (AC-DELCO #214-548)	17087240
34.		N.S.	HARNESS ASM, CNSTR PURGE	
	4-M12	1.745	TEE, CNSTR PURGE (4.931)	14023108
		8.962	HOSE, CNSTR PURGE (3/8) (AC-DELCO #9438373)	9438373
35.	4-A12	3.130	CANISTER, FUEL VPR (AC-DELCO #215-155)	17113150
36.	4-A12	3.130	VALVE, EVAP EMIS CNSTR PURGE SOL (COMPONENTS SERVICED) (AC-DELCO #214-370)	1997101
		DISCON	CLIP, HOSE RET SOL	1986936
		8.962	HOSE, CNSTR SOL (1/4)	9438257
37.		DISCON	COVER, VPR CNSTR PURGE SOL	14066503
38.		8.964	TUBING, VPR FRT (5/16 OD)	12541500
39.	4-A15	3.162	CLIP, FUEL VPR PIPE	14050054
40.		8.964	TUBING, VPR FRT (1/4 OD)	12548430
41.		DISCON	TUBE, FUEL VPR CNSTR	10046011
42.	4-A12	3.130	BRACKET, FUEL VPR CNSTR	10105270
43.	4-M18	2.383	SHIELD, SPARK CONT KNOCK SEN	10096158
44.	4-M17	2.277	BRACKET, GEN	14087519
45.	4-C10	3.655	BRACE, AIR INJ PUMP	10105298
46.	4-C10	3.655	STUD, PUMP BRKT (3/8X16X1.75/3/8X16X.88 300MM)	14085701

© 2000 GENERAL MOTORS SERVICE PARTS OPERATIONS-CHEVROLET-14Y

47.	4-C10	3.655	BRACKET, AIR INJ PUMP	14007[illegible]
48.	4-C10	3.650	SPACER, INJ PUMP PUL	14101160
49.	4-C10	3.650	PULLEY, AIR INJ PUMP	14101167
50.		8.948	CLAMP, WORM GR (.62 TO 1.25) SST (AC-DELCO #12337001)	12337001
51.		DISCON	HOSE, AIR INJ PUMP	14002370
52.	4-C10	3.655	BOLT, INJ PUMP PUL	14101160
53.	4-C11	3.665	GASKET, CONT VLV & ADAP (3.671)	14015307
54.	4-C10	3.671	ADAPTER, CONT VLV HOSE	14004301
55.	4-C11	3.660	PUMP, AIR INJ (CMPTS SERV) (AC-DELCO #215-320)	7049157
		DISCON	FAN, AIR INJ PUMP FLTR	7035231
56.	4-M10	2.363	SENSOR, KNOCK (ESC) (AC-DELCO #213-324)	10456200
57.	4-A22	3.300	SWITCH, COLD START F/INJR (AC-DELCO #212-312)	14004310
58.	4-C21	3.672	SILENCER, AIR INJ CONT VLV (AC-DELCO #210-160)	14002474
59.	4-C21	3.675	HOSE, AIR INJ CONT VLV SIL	14002475
60.		8.962	HOSE, CONT VLV TO PIPE (5/8)	12322342
61.		DISCON	BRACKET, AIR INJ SW VLV	14002477
62.		DISCON	PIPE, AIR INJ ENG CHK VLV	14100852
63.	4-C21	3.675	HOSE, AIR INJ ENG CHK VLV	14005800
64.	4-C11	3.670	VALVE, AIR INJ ENG CHK (2) (AC-DELCO #214-410)	22048212
65.	4-C26	3.662	SENSOR, CLNT TEMP (ECM FUNC) (1.150) (AC-DELCO #213-310)	12146312
66.		DISCON	BRACKET, AIR INJ CONT VLV	14002472
67.	4-C21	3.675	HOSE, CONT VLV DVTR (90 DEG ANGLE)	14002473
68.	4-C11	3.670	VALVE, AIR INJ SW (AC-DELCO #214-108)	17007222
69.	4-C11	3.670	VALVE, AIR INJ CONT (AC-DELCO #214-107)	17007221
70.	4-C21	3.675	HOSE, CONT VLV DVTR (45 DEG ANGLE)	14002471
71.		DISCON	PIPE, CONV AIR INJ CHK VLV TO PUMP	14002469
72.	4-C21	3.675	HOSE, CONV AIR INJ CHK VLV	14047784
73.	4-C11	3.670	VALVE, CONV AIR INJ CHK (AC-DELCO #214-423)	22062561
74.		8.948	CLAMP, WORM GR (.31 TO .75 DIA) ZN/CHR (1.166)	15620999
75.	4-C21	3.675	PIPE, CONV AIR INJ (VLV TO CONV) (AC-DELCO #219-77)	10097662
76.	4-C24	3.680	CLAMP, CONV AIR INJ PIPE (EXH LWR)	14091222
77.	4-C24	3.680	CLAMP, CONV AIR INJ PIPE (EXH UPR)	14091221
78.	4-M11	1.150	SENSOR, ENG COOL TEMP GA (AC-DELCO #25036135)	25036135
79.	4-C24	3.680	GASKET, EGR VLV (AC-DELCO #14088262)	14088262
80.	4-C11	3.670	VALVE, EGR (AC-DELCO #214-5535)	17113456
81.	4-C24	3.680	CLAMP, CONV AIR INJ CHK VLV RR	14093102
82.		DISCON	PIPE, CR/CASE VENT	14087569
83.		8.962	HOSE, CR/CASE VENT (1/2)	9438382
84.	4-C24	3.680	BOLT, EGR TUBE	14081021
85.	4-M12	1.745	GROMMET, CR/CASE VENT TUBE	14082445
86.	4-M13	1.762	TUBE, CR/CASE VENT	14087567
87.	4-M13	1.762	CONNECTOR, CR/CASE VENT TUBE	14082446

RPO DEFINITIONS
L98 – ENGINE, 5.7L, (5.7-8) 350 CID, V8, TPI

© 2000 GENERAL MOTORS SERVICE PARTS OPERATIONS-CHEVROLET-14Y

MICROFICHE INDEX

GROUP 3.000

FICHE 4 OF 11

GROUP	DESCRIPTION	STARTING GRID LOCATION PARTS	ILLUSTRATIONS
--	GENERAL INFORMATION	1-A2	1-G2
--	ALPHABETICAL INDEX	1-B13	N.A.
3.000	FUEL TANK - INTAKE MANIFOLD - FUEL INJECTION - THROTTLE BODY - AIR CLEANER - ACCELERATOR	4-A2	4-E2
3.000	EXHAUST & EMISSIONS SYSTEMS - CARBURETOR - CRUISE - FUEL FILTER & PUMP	4-C2	4-H2
--	OUT OF FICHE CALLS	N.A.	4-M9

4-K1

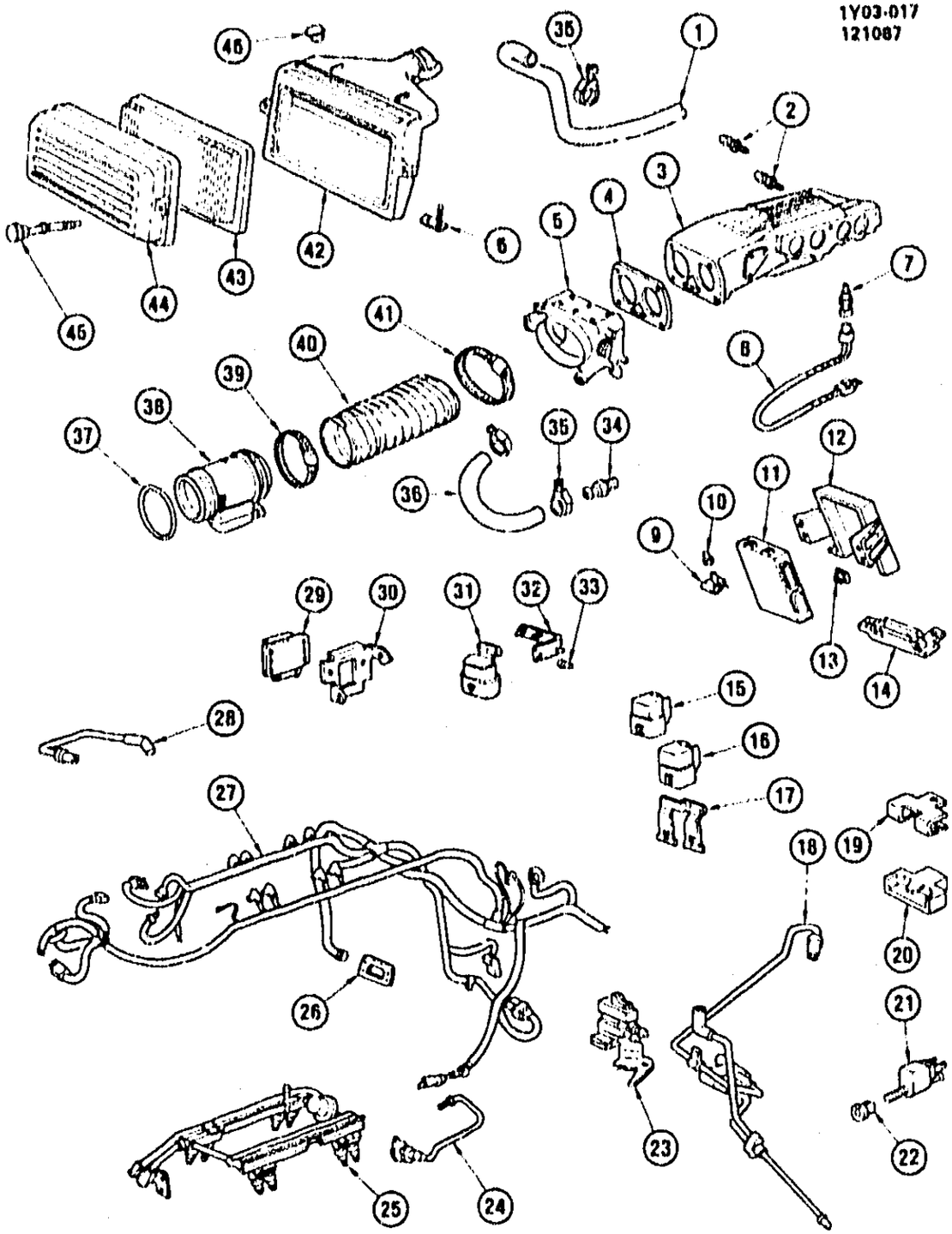

1Y03-017

1988-1989 Y EMISSION CONTROLS PART 1-V8(L98)

1.	4-N22	8.846	HOSE, HTR INL	10108510
2.	4-A21	3.278	FITTING, INT MANIF VAC (IN PLNM)	14082470
3.		DISCON	PLENUM, INT MANIF (1988)	10108443
	4-A18	3.265	PLENUM, INL MANIF (1989)	10108468
4.	4-B6	3 336	GASKET, THROT BODY (1988) (AC-DELCO #40-718)	10105379
	4-B6	3.336	GASKET, THROT BODY (1989) (AC-DELCO #40-717)	10105351

© 2000 GENERAL MOTORS SERVICE PARTS OPERATIONS-CHEVROLET-14Y

5.	4-A28	3.335	BODY, THROT (SEE CAT) (SEE GROUP 3.000 "THROTTLE BODY/MPFI (MODELS T2A, B210) " FOR DETAIL ILLUSTRATED VIEW.)	
6.	4-B11	3.417	SCREW, AIR INT DUCT FRT	14084405
7.	4-C26	3.682	SENSOR, MANIF TEMP (1.160) (AC-DELCO #213-310)	12146312
8.	4-M21	2.480	HARNESS, INT AIR TEMP SEN WRG	12029463
9.	4-N25	9.667	BOLT, U NUT & STUD (M6X 8X10) (3.671) (AC-DELCO #12337892)	12337892
10.	4-C19	3.671	RETAINER, ENG CONT MDL (PUSH ON) (AC-DELCO #10027015)	10027015
11.	4-C11	3.670	MODULE, ENG CONT (REMAN) (AC-DELCO #16198250)	16198259
	4-C11	3.670	EPROM, ECM (SEE CAT) (AC-DELCO #16074772)	
12.	4-C19	3.671	BRACKET, ELEK FUEL CONT MDL	14080604
13.	4-N14	2.729	NUT, SPL ANC (NYLON) (SQUARE HOLE)	347347
14.		DISCON	COVER, ELEK FUEL CONT MDL HSG	14080605
15.	4-M10	1.055	RELAY, MASS AIR FLOW SEN (POWER) (1.055) (AC-DELCO #15-8240)	14089936
16.	4-M10	1.055	RELAY, ENG COOL FAN (AC-DELCO #15-8240)	14089936
17.	4-C26	3.682	BRACKET, MASS AIR FLOW SEN RLY (1.055)	14104140
18.	4-C21	3.675	HARNESS, EGR VLV VAC	10055893
19.	4-M20	2.440	BRACKET, I/P WRG HARN ECM DATA LINK CONN (DIAG CONN)	14073479
20.	4-M20	2.440	COVER, I/P HARN DIAG CONN	10021766
21.	4-D15	3.885	VALVE, CR/CONT VAC REL (AC-DELCO #212-346)	1645516
22.	4-D15	3.885	RETAINER, CR/CONT VAC REL VLV	10075405
23.	4-C11	3.670	SOLENOID, EGR CONT VLV RLY (CMPTS SERV) (AC-DELCO #214-340)	1997195
	4-C19	3.671	FILTER, EGR CONT VLV RLY SOL (3.140) (AC-DELCO #219-15)	1977880
	4-C19	3.671	CLIP, FLTR RET	1985870
24.		3.329	VALVE ASM, COLD START INJ (SEE GROUP 3.000 "FUEL INJECTOR RAIL MPFI (MODELS F8A, R810) " FOR DETAIL ILLUSTRATED VIEW)	
		DISCON	PIPE KIT, COLD START F/INJR	17110860
	4-A24	3.330	PIPE KIT, COLD START F/INJR (AC-DELCO #17112061)	17112061
	4-A26	3.331	SEAL, COLD STRTR F/INJR PIPE (O-RING) (AC-DELCO #17111954)	17111954
25.		N.S.	RAIL ASM, F/INJ (SEE GROUP 3.000 "FUEL INJECTOR RAIL MPFI (MODELS F8A, R810) " FOR DETAIL ILLUSTRATED VIEW.)	
26.	4-N12	2.559	PLATE, ELEK CONT MDL WRG HARN RET	14090618
27.		DISCON	HARNESS, ENG/ECM WRG (1988 W/M.T. W/C60)	12080840
	4-N4	2.525	HARNESS, ENG/ECM WRG (1989 W/M.T. W/C60)	12090320
		DISCON	HARNESS, ENG/ECM WRG (1988 W/M.T. W/C68)	12080841
	4-N4	2.525	HARNESS, ENG/ECM WRG (1989 W/M.T. W/C68)	12090321
		DISCON	HARNESS, ENG/ECM WRG (1988 W/A.T. W/C60)	12055808
	4-N4	2.525	HARNESS, ENG/ECM WRG (1989 W/A.T. W/C60)	12090322
		DISCON	HARNESS, ENG/ECM WRG (1988 W/A.T. W/C68)	12055809
	4-N4	2.525	HARNESS, ENG/ECM WRG (1989 W/A.T. W/C68)	12090323
28.	4-C21	3.675	HARNESS, EXH EMIS CONT VAC RR	14082433
29.	4-M18	2.383	MODULE, ELEK SPARK CONT (AC-DELCO #216-47)	16128261
30.		DISCON	BRACKET, ELEK SPARK CONT MDL	14087642
31.	4-M10	1.055	RELAY, F/PUMP (1.055) (AC-DELCO #15-8240)	14089936
32.		DISCON	BRACKET, F/PUMP RLY (4.060)	14087644
33.	4-D18	3.901	NUT, F/PUMP RLY (2.383)	12338025
34.	4-N23	8.866	VALVE, HTR WAT FLOW CONT (AC-DELCO #15-5372)	22532158
35.		8.948	CLAMP, WORM GR (15.7 TO 31.8) SST (AC-DELCO #12337891)	12337891
36.	4-B7	3.337	HOSE, THROT BODY HTR	10109509
37.	4-B11	3.415	SEAL, MASS AIR FLOW SEN	14081880
38.	4-C26	3.682	SENSOR, MASS AIR FLOW (AC-DELCO #213-161)	10055877
39.		8.948	CLAMP, WORM GR (65.1 TO 89.9) SST	14081883
40.	4-B11	3.417	DUCT, AIR INT RR	14081891

© 2000 GENERAL MOTORS SERVICE PARTS OPERATIONS - CHEVROLET - 14Y

				1Y03-017
41.	4-B11	3.417	CLAMP, RR INT AIR DUCT (UPC/FNA: CLAMP, RR AIR INT DUCT)	10146826
42.	4-B11	3.417	DUCT, A/CLNR FRT AIR MTR INT (CMPTS SERV)	14084404
	4-B11	3.417	PIN, A/CLNR FRT AIR INT DUCT RET	14081885
	4-B11	3.417	RETAINER, A/CLNR FRT AIR INT DUCT	14081886
43.	4-B10	3.410	ELEMENT, A/CLNR (A917C) (AC-DELCO #A917C)	25042562
44.	4-B10	3.410	COVER, A/CLNR	14081889
45.	4-B10	3.403	SCREW, A/CLNR CVR	14081888
46.	4-N23	9.262	RETAINER, FRT AIR INT DUCT	14090619

RPO DEFINITIONS
L98 - ENGINE, 5.7L, (5.7-8) 350 CID, V8, TPI

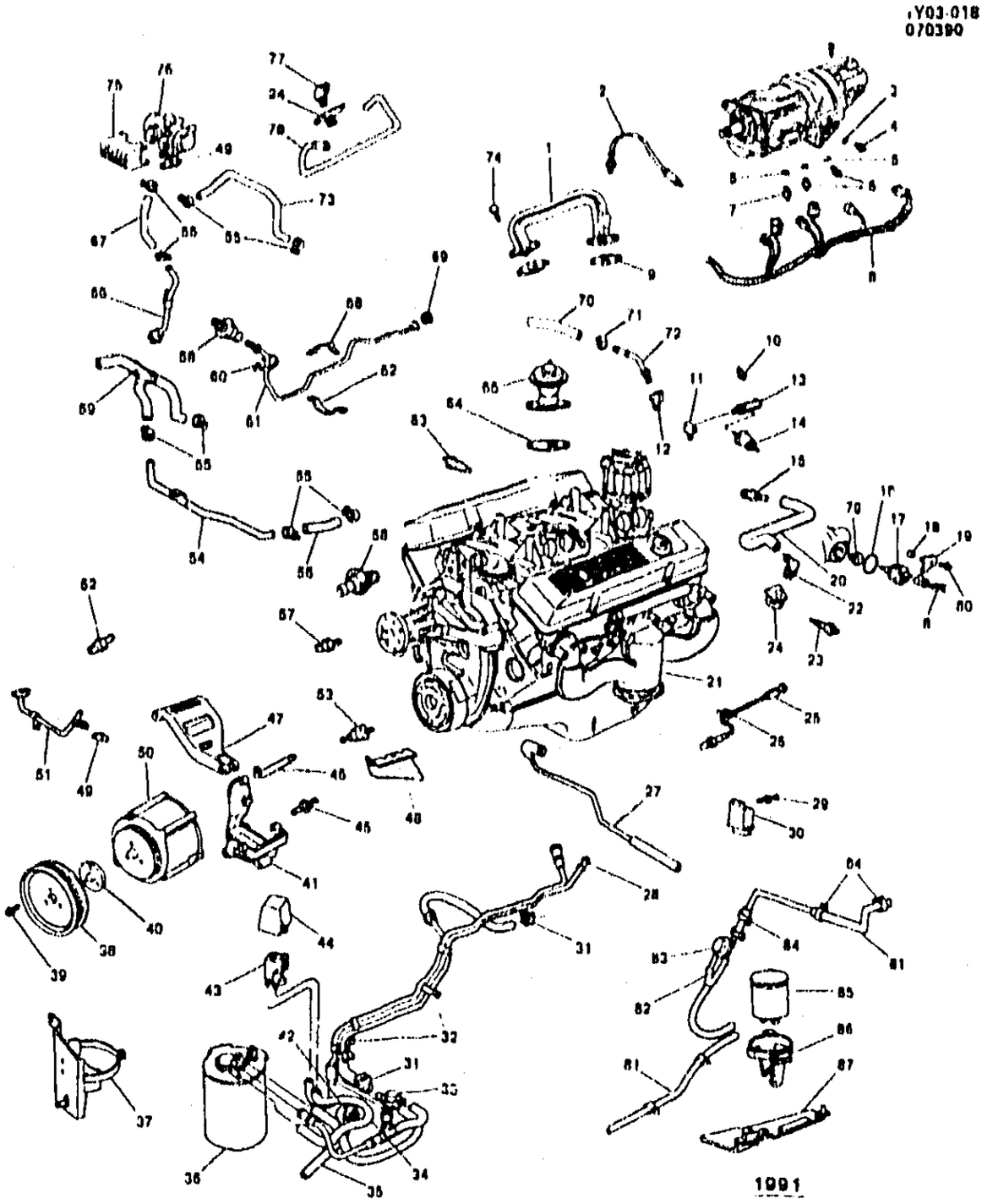

1Y03-018

1988-1991 Y EMISSION CONTROLS PART 2-V8(L98)

1.	4-C21	3.675	PIPE, EGR VLV (1988-89)	10055728
	4-C21	3.675	PIPE, EGR VLV (1990-91)	10108433
	4-C21	3.675	SHIELD, EGR PIPE (120X290MM - 20MM HOLE) (1988)	10055729
	4-C21	3.675	SHIELD, EGR PIPE (100X120MM - NO HOLE) (1989-91)	10055730
2.	4-C11	3.670	SWITCH, EGR VLV TEMP IND (1988-89) (AC-DELCO #212-336)	14087415
3.	4-N16	4.115	SEAL, O RING ELEC CONN (AC-DELCO #10054241)	10054241
4.	4-N15	4.461	CONNECTOR, 1 BLADE TERM (1988) (AC-DELCO #24205373)	24205373

© 2000 GENERAL MOTORS SERVICE PARTS OPERATIONS-CHEVROLET-14Y

5.	4-N13	4.430	GASKET, 1ST & 2ND O/D OVERIDE SW (1988 M.T.) (AC-DELCO #14081180)	14081180
6.	4-N15	4.480	SWITCH, 1ST & 2ND O/D OVERIDE (1988 M.T.) (AC-DELCO #14057529)	14057529
7.	4-N15	4.480	SWITCH, O/D OVERRIDE REV (1988 M.T.) (AC-DELCO #14057528)	14057528
8.		N.S.	HARNESS, ENG/ECM (SEE CAT)	
9.	4-C21	3.675	GASKET, EGR VLV PIPE	10056726
10.	4-M14	1.800	SWITCH, ENG O/PRESS IND (1988-89) (AC-DELCO #D1835)	25036936
	4-M14	1.800	SWITCH, ENG O/PRESS IND (1991) (AC-DELCO #D1846)	25036935
11.	4-M15	1.803	FITTING, ENG O/PRESS GA SEN TO BLK	14078987
12.		DISCON	ELBOW, INV FLD TUBE (45 DEG) (5/16)	116341
13.	4-M14	1.800	FITTING, ENG O/PRESS GA SEN TO BLK FTG	14078938
14.	4-M14	1.800	SENSOR, ENG O/PRESS GA (1 BLADE TERM) (1988) (AC-DELCO #14078954)	14078954
	4-M14	1.800	SENSOR, F/PUMP & ENG O/PRESS GA (1989) (AC-DELCO #10201491)	10201491
	4-M14	1.800	SENSOR, F/PUMP & ENG OIL PRESS GA (1991) (AC-DELCO #10201491)	10201491
15.	4-M13	1.762	FITTING, CR/CASE VENT HOSE	14087402
16.	4-N16 4-N17	4.338	SEAL, SPEEDO SEN (AC-DELCO #15552072)	15552072
17.	4-C26	3.682	SENSOR, VEH SPD (TRANS MTD) (AC-DELCO #213-210)	25007224
18.		DISCON	SPACER, VEH SPD SEN	14053672
19.	4-C26	3.682	RETAINER, VEH SPD SEN (AC-DELCO #12338069)	12338069
20.	4-M13	1.762	HOSE, CR/CASE VENT VLV TO PCV VLV	14088538
21.	4-C7	3.601	MANIFOLD, EXH-LH	14087511
	4-C7	3.601	MANIFOLD, EXH-RH	10055734
22.	4-M12	1.745	VALVE, CR/CASE VENT (CV774C) (1988) (AC-DELCO #CV774C)	6487779
	4-M12	1.745	VALVE, CR/CASE VENT (CV789C) (1989-91) (AC-DELCO #CV789C)	8995204
23.	4-M14	1.800	SENSOR, TEMP (1988-89) (AC-DELCO #25036292)	25036292
	4-M14	1.800	SENSOR, ENG OIL CHG MON & TEMP GA (1990-91) (AC-DELCO #10096136)	10096136
24.	4-M12	1.745	GROMMET, CR/CASE VENT (3/4 IDX1 1/8 OD SQ) -LH (1988)	3989349
	4-M12	1.745	GROMMET, CR/CASE VENT VLV (1989-91)	10098198
25.	4-C26	3.682	SENSOR, EXH OXYGEN (AC-DELCO #AFS21)	25166816
26.	4-N12	2.559	RETAINER, EXH OXYGEN SEN WIRE	6917236
27.	4-A14	3.145	TUBE, F/VPR CNSTR	10055892
28.	4-A14	3.145	HARNESS, F/VPR CNSTR	10055891
29.	4-M10	1.055	RETAINER, ENG COOL FAN RLY PUSH IN	20664092
30.	4-M10	1.055	RELAY, ENG COOL FAN (AC-DELCO #15-8240)	14089936
31.		8.948	CLAMP, WORM GR HEX SL SCR (.250 TO .625) SST BLA (AC-DELCO #1648216)	1648216
32.	4-A15	3.162	CLIP, F/VPR PIPE	14050054
33.	4-A12	3.130	VALVE, F/VPR CNSTR CONT (AC-DELCO #214-548)	17087240
34.		8.962	HOSE (1/4) (CUT AS REQUIRED)	9438257
35.		8.962	HOSE (3/8) (CUT AS REQUIRED) (AC-DELCO #9438373)	9438373
36.	4-A12	3.130	CANISTER, F/VPR (1988-90) (AC-DELCO #215-155)	17113150
	4-A12	3.130	CANISTER, F/VPR (1991) (AC-DELCO #215-75)	17090139
37.	4-A12	3.130	BRACKET, F/VPR CNSTR	10105270
38.	4-C10	3.655	BOLT, AIR INJ PUMP PUL	14101169
39.	4-C10	3.650	PULLEY, AIR INJ PUMP	14101167
40.	4-C10	3.650	SPACER, AIR INJ PUMP PUL	14101168
41.	4-C10	3.655	BRACKET, AIR INJ PUMP	14087520
42.		8.950	CLAMP, LOOP CUSH (1/2) STL	797923
43.	4-A12	3.130	VALVE, EVAP EMIS CNSTR PURGE SOL (1988-90) (AC-DELCO #214-375)	1997181

© 2000 GENERAL MOTORS SERVICE PARTS OPERATIONS-CHEVROLET-14Y

44.		DISCON	COVER, F/VPR CNSTR PURGE SOL	14066503
45.	4-C10	3.655	STUD, INJ PUMP BRKT (3/8-16X1.75/3/8-16X.88) 300M	14085701
46.	4-C10	3.655	BRACE, AIR INJ PUMP	10105298
47.	4-M17	2.277	BRACKET, GEN	14087519
48.	4-M18	2.383	SHIELD, ESC KNOCK SEN	10096158
49.	4-C11	3.665	GASKET, AIR INJ CONT VLV PIPE	14015367
50.	4-C11	3.660	PUMP, AIR INJ (CPS) (AC-DELCO #215-320)	7849157
		DISCON	FAN, AIR INJ PUMP FLTR	7835231
51	4-C21	3.675	PIPE, AIR INJ CONT VLV (AC-DELCO #219-69)	10055827
52.	4-A22	3.300	SWITCH, COLD START F/INJR (1988) (AC-DELCO #212-312)	14084318
53	4-M18	2.383	SENSOR, ESC KNOCK (AC-DELCO #213-92)	10456549
54.	4-C21	3.675	PIPE, AIR INJ ENG CHK VLV (AC-DELCO #219-70)	10055834
55.		8.948	CLAMP, WORM GR (11/16 TO 1 5/16)	1470030
56.		8.962	HOSE (5/8) (CUT AS REQUIRED)	12322342
57.	4-C26	3.682	SENSOR, CLNT TEMP ECM (AT INT MANIF) (AC-DELCO #213-310)	12146312
58.	4-C11	3.670	VALVE, AIR INJ ENG CHK (AC-DELCO #214-990)	12562568
59.		N.S.	HOSE, AIR INJ ENG CHK VLV (CPS)	
	4-C24	3.680	CONNECTOR, AIR INJ ENG CHK VLV	10046154
	4-C21	3.675	HOSE, AIR INJ ENG CHK VLV (TEE TO AIR CONT VLV)	10105316
	4-C21	3.675	HOSE, AIR INJ ENG CHK VLV-RH	10105317
	4-C21	3.675	HOSE, AIR INJ ENG CHK VLV (TEE TO PIPE) -LH	10105318
		8.948	CLAMP, WORM GR (15.7 TO 31.8) SST (AC-DELCO #12337891)	12337891
60.		8.948	CLAMP (AR)	15620999
61.	4-C21	3.675	PIPE, CTLTC CONV AIR INJ (VLV TO CONV) (AC-DELCO #219-77)	10097662
62.	4-C24	3.680	CLAMP, CTLTC CONV AIR INJ PIPE (EXH LWR)	14091222
63.	4-M11	1.150	SENSOR, ENG COOL TEMP GA (1988-90) (AC-DELCO #25036135)	25036135
	4-M14	1.800	SENSOR, ENG OIL T/GA (1991) (AC-DELCO #10096136)	10096136
64.	4-C24	3.680	GASKET, EGR VLV (AC-DELCO #10077547)	10077547
65.	4-C11	3.670	VALVE, EGR (AC-DELCO #214-5535)	17113456
66.	4-C21	3.672	SILENCER, AIR INJ CONT VLV	10055829
67.		DISCON	HOSE, AIR INJ CONT VLV SIL	10105320
68.	4-C24	3.680	CLAMP, CTLTC CONV AIR INJ PIPE (EXH UPR)	14091221
69.	4-C24	3.680	CLAMP, CTLTC CONV AIR INJ PIPE (AT CONV)	14034744
70.		8.962	HOSE (7.9MMX3050MM) (AC-DELCO #12339996)	12339996
71.		8.948	CLAMP, WORM GR (1/2 TO 13/16) SST	22527587
72.		8.964	TUBING (5/16 OD)	12541500
73.		DISCON	HOSE, CTLTC CONV AIR INJ CHK VLV	10105319
74.	4-C24	3.680	BOLT, EGR TUBE	14081021
75.	4-C11	3.670	COVER, SECD AIR INJN BYPASS VLV (AC-DELCO #17082198)	17082198
76.	4-C11	3.670	VALVE, AIR INJ CONT (AC-DELCO #214-117)	17088106
77.	4-M13	1.762	CONNECTOR, CR/CASE VENT HOSE	10055873
78.	4-M13	1.762	HOSE, CR/CASE VENT (SEE CHART AT END OF GROUP 4.000 FOR USAGE)	10055872
79.	4-N17	4.337	GEAR, SPEEDO DRIVEN (SEE CHART AT END OF GROUP 4.000 FOR USAGE) (AC-DELCO #25513045)	25513045
80.		8.900	SCREW, HWH (M6X1X25) 9.8 PZOR	11508128
81.	4-A14	3.145	HOSE, F/VPR CNSTR PURGE (1991) (PART OF 83)	10105300
82.	4-A14	3.145	CONNECTOR, F/VPR HOSE (PART OF 83)	10046084
83.	4-A12	3.130	VALVE, F/VPR PRESS CONT (CPS) (AC-DELCO #214-531)	10105329
	4-A12	3.130	VALVE, F/VPR PRESS CONT (AC-DELCO #214-558)	17091140
84.		8.948	CLAMP, WORM TYPE (.30 TO .87 DIA) SST (PART OF 83)	15620999
85.	4-A12	3.130	CANISTER, F/VPR (1991) (AC-DELCO #215-75)	17090139
86.	4-A12	3.130	BRACKET, F/VPR CNSTR (1991)	10234809
87.	4-A12	3.130	SHIELD, EVAP EMIS CNSTR SPH (1991)	10105360

© 2000 GENERAL MOTORS SERVICE PARTS OPERATIONS - CHEVROLET-14Y

1Y03-020
060400

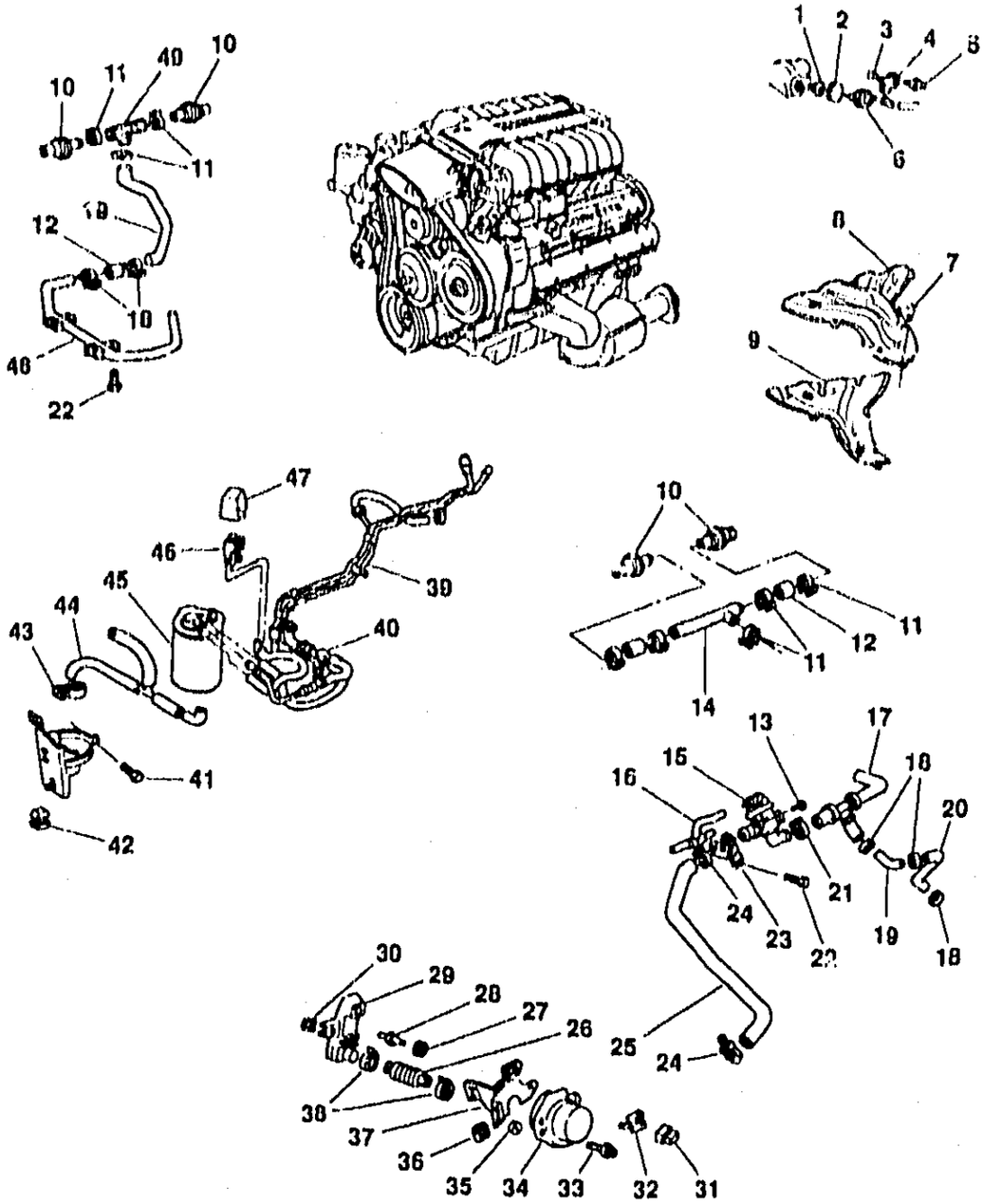

1Y03-020

1990 Y EMISSION CONTROLS PART 2-V8(LT5)

1.	4-N17	4.337	**GEAR**, SPEEDO DRIVEN (SEE CHART IN GROUP 4.000 FOR USAGE)	25513043
2.	4-N16 4-N17	4.338	**SEAL**, SPEEDO SEN (AC-DELCO #15552872)	15552872
3.		DISCON	**SPACER**, VEH SPD SEN	14053672
4.	4-C26	3.682	**RETAINER**, VEH SPD SEN (4338) (AC-DELCO #12338069)	12338069
5.		8.900	**SCREW**, HWH MACH (M6X1X25) 9.8 PZOR	11508128
6.	4-C26	3.682	**SENSOR**, VEH SPD (TRANS MTD) (W/D9A) (AC-DELCO #213-210)	25007224

© 2000 GENERAL MOTORS SERVICE PARTS OPERATIONS-CHEVROLET-14Y

	4-C26	3.602	SENSOR, VEH SPD (TRANS MTD) (W/D9B) (AC-DELCO #213-223)	25007308
7.		8.977	BOLT, HWH TAP (M10X10X.50) PZOR (AC-DELCO #9440166)	9440166
8.	4-C7	3.602	SHIELD, EXH MANIF HT OTR-LH	10120253
		DISCON	SHIELD, EXH MANIF HT OTR-RH	10120254
9.	4-C7	3.602	SHIELD, EXH MANIF HT INR-LH	10120251
	4-C7	3.602	SHIELD, EXH MANIF HT INR-RH	10120252
10.	4-C11	3.670	VALVE, AIR INJ ENG CHK (AC-DELCO #214-419)	22048212
11.		8.948	CLAMP, WORM TYPE (11/16 TO 1 5/16)	1470030
12.	4-C24	3.680	CONNECTOR, AIR INJ ENG CHK VLV PIPE (AC-DELCO #14104888)	14104888
13.		8.900	BOLT, HFH (M8X1.25X20) 10.9 POR	12581177
14.	4-C21	3.675	PIPE, AIR INJ ENG CHK VLV-LH (A -DELCO #219-140)	14104873
15.	4-C11	3.670	VALVE, AIR INJ CONT (AC-DELCO #214-119)	17089059
16.		8.963	TEE, HOSE (M6.3XM6.3XM6.3) NY	14004877
		8.962	HOSE (5/32) (CUT AS REQUIRED)	9602057
17.		N.S.	HOSE, AIR INJ ENG CHK VLV (CMPTS SERV)	
	4-C24	3.680	CONNECTOR, AIR INJ CONT VLV HOSE (TEE)	14104881
	4-C21	3.675	HOSE, AIR INJ ENG CHK VLV	14104704
	4-C24	3.680	CONNECTOR, AIR INJ ENG CHK VLV HOSE (W/PE7)	14104022
18.		8.948	CLAMP, WORM TYPE (.30 TO .87 DIA) SST	15620969
19.	4-C21	3.675	PIPE, AIR INJ ENG CHK VLV-RH (AC-DELCO #219-141)	14104887
	4-C21	3.675	PIPE, AIR INJ ENG CHK VLV-LH (AC-DELCO #219-142)	14104923
20.	4-C21	3.675	HOSE, AIR INJ ENG CHK VLV	14104845
21.		8.948	CLAMP, WORM GR (28.6 TO 76.2 DIA) SST BLA (AC-DELCO #12338017)	12338017
22.		8.900	BOLT, HFH (M6X1X13) 9.8 PEOR (AC-DELCO #11514149)	11514149
23.	4-C19	3.671	BRACKET, AIR INJ CONT VLV	14104859
24.	4-C21	3.675	CLAMP, AIR INJ ENG CHK VLV HOSE (1.762)	10019739
25.		DISCON	HOSE, AIR INJ CONT VLV	10105366
26.		N.S.	HOSE, INT DUCT TO DIVERT VLV (PART OF 29)	
27.	4-N22	8.016	WASHER, HOOD HGE (13 MM ID)	14078623
28.		N.S.	STUD, HFH (M8X1.25X39/M6X1X19) 9.8 POR	
29.	4-C21	3.675	DUCT, AIR INJ PUMP (INCL 26)	14104698
30.		8.915	NUT, HEX (M6X1X5.5) 9 PEOR	11507095
31.	4-M10	1.055	RELAY, MASS AIR FLOW SEN PWR (1.055) (AC-DELCO #15-8240)	14089936
32.		N.S.	BRACKET, AIR INJ PUMP RLY	
33.	4-C10	3.655	BOLT, INJ PUMP (10.150)	10132913
34.	4-C11	3.660	PUMP, AIR INJ (AC-DELCO #215-90)	10090521
35.		8.929	WASHER (M6.3X16.75X1.5) PHOS	11500322
36.		8.921	NUT, U SHAPE (M5X0.8) POR	11504693
37.	4-C10	3.655	BRACKET, AIR INJ PUMP	14104700
38.		8.948	CLAMP, WORM GR (28.6X76.2 DIA) SST BLA (AC-DELCO #12338017)	12338017
39.	4-A14	3.145	HARNESS, F/VPR CNSTR	14104815
40.	4-A12	3.130	VALVE, F/VPR CNSTR CONT (AC-DELCO #214-548)	17087240
41.		8.977	SCREW, SEMS HEX W/FL WA (M6.3X1.81X20) PZOR	12337828
42.		8.921	NUT, NY (.380 SQ HOLE.250 HD.625 SQ)	3907444
43.		8.950	CLAMP, STL LOOP CUSH (1/2)	797923
44.		8.962	HOSE (3/8) (CUT AS REQUIRED) (AC-DELCO #9438373)	9438373
45.	4-A12	3.130	CANISTER, F/VPR (AC-DELCO #215-155)	17113150
46.	4-A12	3.130	VALVE, EVAP EMIS CNSTR PURGE SOL (AC-DELCO #214-375)	1997181
47.		DISCON	COVER, F/VPR CNSTR PURGE SOL	14066503
48.		DISCON	PIPE, AIR INJ ENG CHK VLV (FRT)	14104844
49.	4-C24	3.680	CONNECTOR, AIR INJ ENG CHK VLV PIPE-RH (AC-DELCO #14104888)	14104888

© 2000 GENERAL MOTORS SERVICE PARTS OPERATIONS-CHEVROLET-14Y

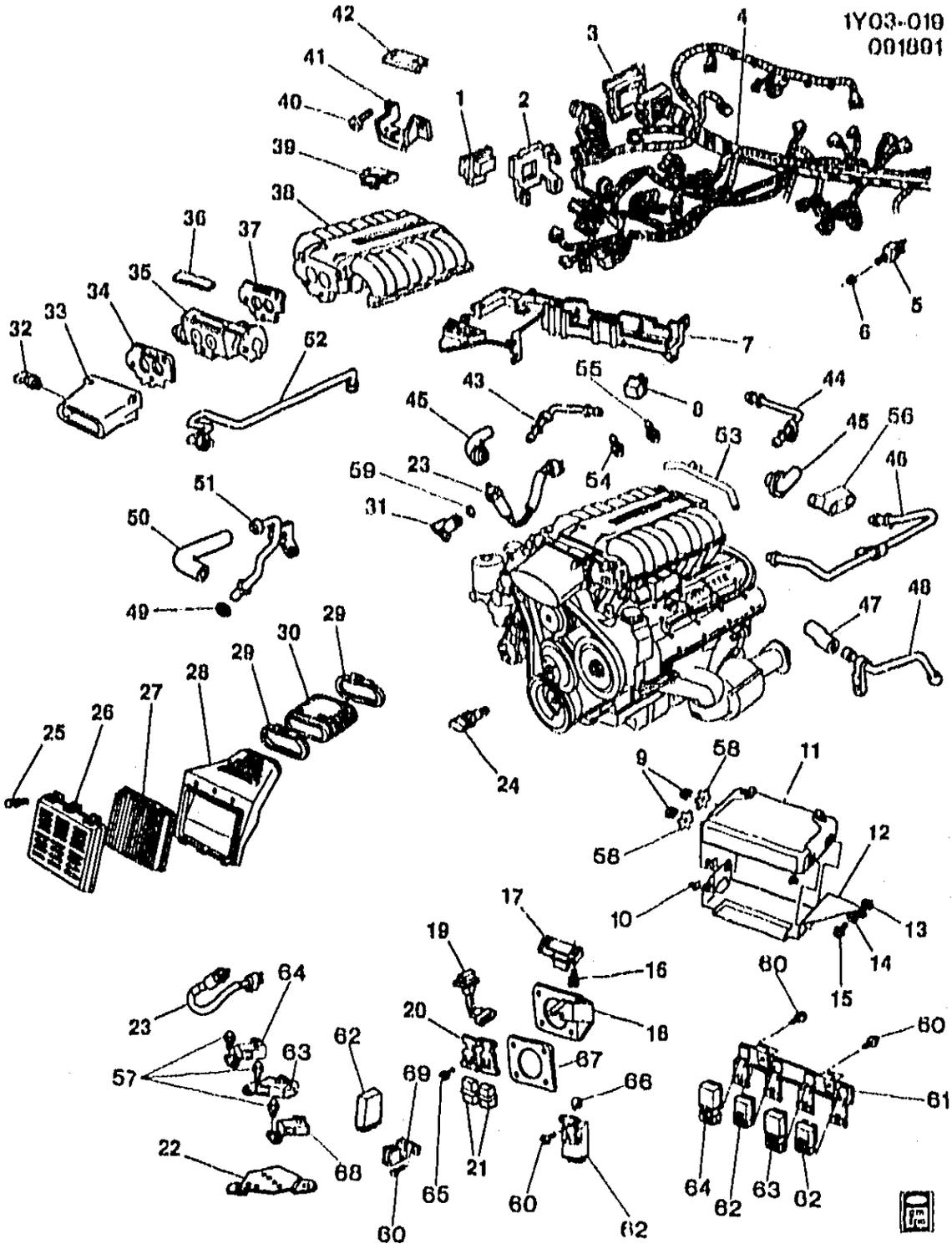

1990-1991 Y EMISSION CONTROLS-V8(LT5)

1.	4-M18	2.383	MODULE, ELEC SPARK CONT (AC-DELCO #D1931A)	90	Y (LT5)	1 16080211
2.		DISCON	BRACKET, ELEC SPARK CONT MDL	90	Y (FE1, FE7)	1 14087642
3.	4-N3	2.483	BRACKET, I/P WRG HARN FUSE BLK	90-91	Y	1 14062568
4.	4-N4	2.525	HARNESS, ENG WRG	90	Y (LT5, C60, FE1, FE7) .	1 12090375

© 2000 GENERAL MOTORS SERVICE PARTS OPERATIONS-CHEVROLET-14Y

	4-N4	2.525	HARNESS, ENG WRG	90	Y (LT5, C60, FE1, FE7) .	1	12000370
	4-N4	2.525	HARNESS, ENG WRG	91	Y (LT5, C60, FE1, FE7) .	1	12000070
5.	4-D15	3.885	VALVE, CRCONT VAC REL (ON BRK) (W/SW) (AC-DELCO #212-346)	90-91	Y	1	1645516
	4-D15	3.885	VALVE, CRCONT VAC REL (ON CLU) (3.883)	90-91	Y (ML9, FE1, FE7)	1	14043256
6.	4-D15	3.885	RETAINER, CRCONT VAC REL VLV (3.887)	90-91	Y	1	10075405
7.	4-N3	2.483	BRACKET, MULTIUSE RLY (BLACK) (18.3", 465.0MM LONG) (PLASTIC)	90-91	Y	1	10240571
8.	4-D18	3.000	RELAY, F/PMP (BLACK) (5-WAY) (9.277) (AC-DELCO #15-8426)	90-91	Y	1	14100455
9.		8.917	NUT, HEX FLG M5X0.8 GRD 9 ZP (ECM BRKT)	90-91	.....	2	11514252
10.	4-C19	3.671	BOLT, ECM BRKT (M5X.8X16 THD) (SPECIAL) (AC-DELCO #12337892)	90-91	Y	2	12337892
11.	4-C11	3.670	MODULE, ENG CONT (REMAN) (1228331 LABELED) (AC-DELCO #1228331)	90-91	Y (LT5, FE1, FE7)	1	1228331
	4-C11	3.670	EPROM, ECM (8992ARZR, 0277AXFK, 3417BFXB) (AC-DELCO #16193416)	91	Y (LT5)	1	16193416
	4-C11	3.670	EPROM, ECM (9718ANHX, 8555AUAH, 4168AYBK)	90	Y (LT5)	1	16163905
12.	4-C19	3.671	HOUSING, ECM	90-91	Y (FE1, FE7)	1	10086259
13.	4-C19	3.671	SPACER, ECM HSG	90-91	Y	1	14104639
14.	4-C19	3.671	GROMMET, ECM BRKT (3.680) ..	90-91	Y	1	14104640
15.		8.900	BOLT, HFH M8X1.25X35 10.9 PZOR (ECM HSG) (0.206)	90-91	.....	1	24572579
16.		8.977	SCREW, PAN HD C/R, M4.2X1.41X35, NOR (MDP SEN) .	90-91	.....	2	11515142
17.	4-C26	3.682	SENSOR, MDP (AC-DELCO #16006834)	90-91	Y (LT5)	1	16006834
18.	4-C19	3.671	BRACKET, ECM (INCL 67)	90-91	Y (LT5)	1	10086315
19.	4-M18	2.383	SENSOR, CM/SHF POSN (AC-DELCO #213-141) (IF USE IN PLC OF 10096172 MUST ALSO USE 10199080 SHLD)	90-91	Y (LT5)	1	10137658
20.	4-M10	1.055	BRACKET, FAN CONT RLY (STEEL) (3.0"X2.0") (76.7MMX51.0MM))	90-91	Y	1	14104140
21.	4-M10	1.055	RELAY, FAN CONT (5-PIN OVAL SHAPE) (USE W/CONN 15306002) (AC-DELCO #15-8240)	90-91	Y	2	14089936
22.	4-N3	2.483	BRACKET, MULTIUSE RLY (STEEL) (8.7"X3.5") (220.0MMX88.5MM))	90-91	Y (LT5, C60)	1	14104778
23.	4-C26	3.682	SENSOR, EXH OXY (M18 X 1.5 THD, WITH WIRE LEAD)) (AC-DELCO #213-632)	90-91	Y (LT5)	2	25176708
24.	4-M14	1.800	SENSOR, ENG OIL PRESS GA (3 TERMINALS:A, C, D) (AC-DELCO #D1808A)	90-91	Y (LT5)	1	12555492
25.	4-B10	3.410	BOLT, A/CL HSG CVR (CTR POSITION) (48MM LG) (3.403) ...	90-91	Y	1	14104835

© 2000 GENERAL MOTORS SERVICE PARTS OPERATIONS-CHEVROLET-14Y

	4-B10	3.410	BOLT, A/CL HSG CVR (OUTBOARD POSITIONS) (63MM LONG)	90-91	Y	2	12550015
26.	4-B10	3.410	COVER, A/CL HSG	90-91	Y (LT5)	1	12552073
27.	4-B10	3.410	ELEMENT, A/CL (A1097C) (AC-DELCO #A1097C)	90-91	Y (LT5, L08)	1	25096033
28.	4-B11	3.417	DUCT, FRT INT AIR	90-91	Y (LT5, L08)	1	12553505
29.	4-B11	3.417	CLAMP, INTER INT AIR DUCT	90-91	Y (LT5)	2	14104556
30.	4-B11	3.417	DUCT, INTER INT AIR	90-91	Y (LT5)	1	14104557
31.	4-M10	2.383	SENSOR, CR/SHF POSN (AC-DELCO #213-153)	90-91	Y (LT5)	1	10457661
32.	4-C26	3.682	SENSOR, INT AIR TEMP (2 BLADE TERM, 3/8-18 THD) (STAMPED AC12V) (AC-DELCO #213-190)	90-91	Y (LT5)	1	25036751
33.	4-A20	3.335	HORN, THROT BODY AIR (3.407)	90	Y (LT5)	1	10140623
	4-A20	3.335	HORN, THROT BODY AIR	91	Y (LT5)	1	12509722
34.	4-B6	3.336	GASKET, THROT BODY (INTAKE) (3.335)	90-91	Y (LT5)	1	10067759
35.	4-D13	3.729	BODY KIT, THROT (SEE GROUP 3.000 "THROTTLE BODY/MPFI (MODEL B310) " FOR DETAIL ILLUSTRATED VIEW.) (3.336) (AC-DELCO #17112264)	90-91	Y (LT5) (FOR MDL APPL AND POA SEE THROT BODY CHT)	1	17112264
36.	4-B7	3.336	COVER, INT MANIF RUNNER C/VLV LNKG (3.415)	90-91	Y (LT5)	2	10110925
37.	4-B6	3.336	GASKET, THROT BODY (PLENUM)	90-91	Y (LT5)	1	10168660
38.	4-A16	3.265	PLENUM, INT MANIF (SEE GROUP 3.000 "AIR INTAKE SYSTEM" FOR DETAIL ILLUSTRATED VIEW.) (W/O FITTINGS, HOSES, ETC.)	90-91	Y (LT5)	1	10090512
39.	4-C26	3.682	SENSOR, MAP (1 PORT, 3 TERM, 2 BOLT HOLES) (AC-DELCO #213-185)	90	Y	1	16137039
	4-C26	3.682	SENSOR, MAP (1 PORT, 3 TERM, 2 BOLT HOLES) (AC-DELCO #213-185)	91	Y (LT5)	1	16137039
40.	4-C26	3.682	BOLT, MAP SEN BRKT (TO PLENUM) (M6X1.0X13.0) (METRIC TORX HD) (8.913)	90-91	Y (LT5)	2	10192577
41.	4-C26	3.682	BRACKET, MAP SEN	90-91	Y (LT5)	1	10067781
42.	4-C26	3.682	COVER, MAP SEN (AC-DELCO #10090513)	90-91	Y (LT5)	1	10090513
43.	4-M13	1.762	PIPE, PCV VLV (INJ HSG TO PCV VLV) (1.745)	90-91	Y (LT5)	RH	10146296
44.	4-M13	1.762	PIPE, PCV VLV (INJ HSG TO PCV VLV) (1.745)	90-91	Y (LT5)	LH	10146298
45.	4-M12	1.745	GROMMET, PCV VLV (15/32I.D. X 25/32O.D)	90-91	Y (LT5)	2	14078872
46.	4-M13	1.762	PIPE, PCV VLV (PCV VALVE PLENUM))	90-91	Y (LT5)	1	10153501
47.	4-M13	1.762	HOSE, PCV TUBE	90-91	Y (LT5)	RH	10110950
	4-M13	1.762	HOSE, PCV TUBE	90-91	Y (LT5)	1	10135802
48.	4-M13	1.762	TUBE, PCV	90-91	Y (LT5)	LH	10135804
	4-M13	1.762	TUBE, PCV	90-91	Y (LT5)	RH	10135857
49.	4-M12	1.745	SEAL, PCV TUBE	90-91	Y (LT5)	RH	10110955

© 2000 GENERAL MOTORS SERVICE PARTS OPERATIONS-CHEVROLET-14Y

						1Y03-019	
50.	4-M13	1.762	HOSE, PCV TUBE	90-91	Y (LT5)	RH	10110050
	4-M13	1.762	HOSE, PCV TUBE	90-91	Y (LT5)	1	10135002
51.	4-M13	1.762	TUBE, PCV	90-91	Y (LT5)	LH	10135004
	4-M13	1.762	TUBE, PCV	90-91	Y (LT5)	RH	10135057
52.	4-M13	1.762	PIPE, PCV VLV	90-91	Y (LT5)	1	10153501
53.	4-M13	1.762	HOSE, PCV (1.745)	90-91	Y (LT5)	1	10122196
54.	4-M12	1.745	VALVE, PCV (P.C.V. CV746CB) (AC-DELCO #CV769C)	90-91	Y (LT5)	1	6467532
55.	4-M12	1.745	VALVE, PCV (CV913C) (AC-DELCO #CV913C)	90-91	Y (LT5)	1	25008197
56.	4-M12	1.745	CONNECTOR, PCV VLV (1.762)	90-91	Y (LT5)	1	10153503
57.		0.977	SCREW, HWH TAP M6.3X1.81X13 13 OD PZOR (M/TRNS 2ND & 3RD GR BLOCKOUT RLY, MULTIUSE RLY BRKT)	90-91		6	12338139
58.		0.932	WASHER, EXT LK M8X15X1.52 ZC (ECM BRKT) (AC-DELCO #11501869)	90-91		2	11501869
59.	4-M16	2.383	SEAL, CR/SHF POSN SEN (O RING) (2.170) (AC-DELCO #1989866)	90-91	Y (LT5)	1	1989866
60.		0.977	BOLT/SCREW ASM M4.2X1.41 #18 HEX HD GM71 (MULTIUSE BRACKET, SECD F/INJR CONT MDL)	90-91		4	11515303
61.	4-N3	2.483	BRACKET, MULTIUSE RLY (7.4", 188.0 MM LG) (STEEL)	90-91	Y (LT5)	1	10165350
62.	4-A22	3.300	MODULE, SECD SEQ M/PORT F/INJN CONT (FRT & RR) (AC-DELCO #10086284)	90-91	Y (LT5)	2	10086284
63.	4-N24	9.277	RELAY, A/C CMPR (BLACK) (5-WAY) (AC-DELCO #15-8426)	90-91	Y	1	14100455
64.	4-N15	4.054	RELAY, M/TRNS 2ND & 3RD GR BLOCKOUT (5-PIN OVAL SHAPE) (USE W/CONN 15306002) (1.055) (AC-DELCO #15-8240)	90-91	Y (ML9)	1	14065936
65.		0.900	BOLT, M6X1X12, 10 THD, 11.6 OD, 9.8 GM500-M, POR, MACH (ENG COOL FAN RLY) (AC-DELCO #11514149)	90-91		2	11514149
66.		0.921	NUT, M4.2X1.4, 19.3X213.6.8.9 (SECD F/INJR CONT MDL) (AC-DELCO #15650655)	90-91		1	15650655
67.	4-N21	4.805	SEAL, P/B BOOS (ECM BRKT TO FIRE WALL) (ALSO PART OF 18) (4.845)	90-91	Y	1	10097675
68.	4-N24	9.277	RELAY, BLO MOT (5-PIN OVAL SHAPE) (USE W/CONN 15306002) (1.055) (AC-DELCO #15-8240)	90-91	Y (C60)	1	14089936
69.		DISCON	BRACKET, SECD F/INJR CONT MDL	90	Y (FE1, FE7)	1	14104925

RPO DEFINITIONS

C60 – AIR CONDITIONER,FRONT,MANUAL CONTROLS

C68 – AIR CONDITIONER,FRONT,AUTOMATIC,ELECTRONIC CONTROLS

© 2000 GENERAL MOTORS SERVICE PARTS OPERATIONS - CHEVROLET - 14Y

FE1 -- SUSPENSION SYSTEM,SOFT RIDE
FE7 -- SUSPENSION SYSTEM,FRONT AND REAR,HEAVY DUTY(USED WITH PERFORMANCE HANDLING PACKAGE Z51)
LT6 -- ENGINE,5.7L(5.7J),TPI
L00 -- ENGINE, 5.7L, (5.7--8) 350 CID, V8, TPI
ML0 -- TRANSMISSION,MANUAL 6--SPEED

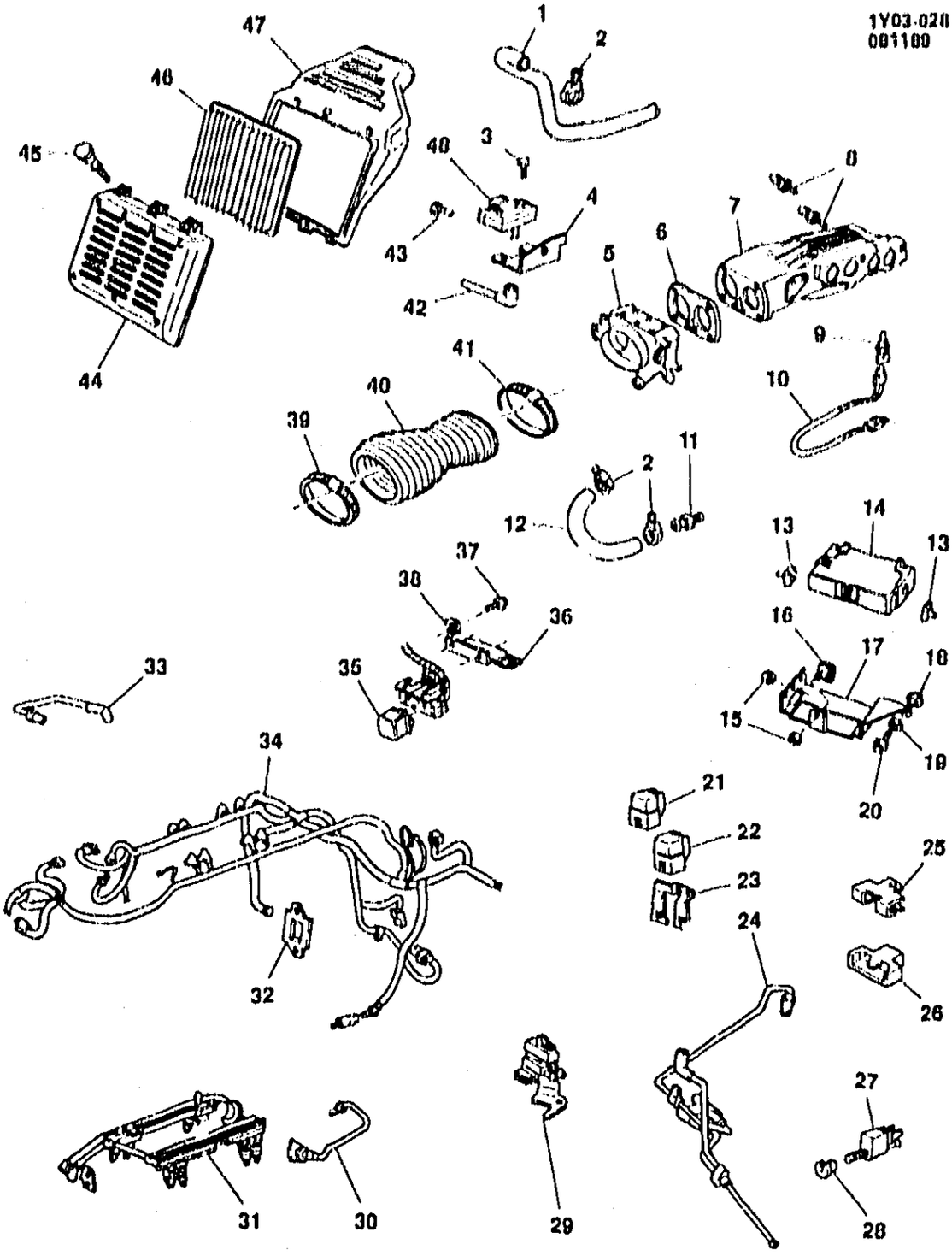

1Y03-028

1990-1991 Y EMISSION CONTROLS PART 1-V8(L98)

1.	4-N22	8.846	HOSE, HTR INL	10108510
2.		8.948	CLAMP, WORM GR (15.7 TO 31.8) SST (AC-DELCO #12337891)	12337891
3.		8.977	SCREW, HEX W/FL WA (M4.2X1.41X30) PEOR	11515153
4.	4-C26	3.682	BRACKET, MAP SEN	
5.	4-A20	3.335	BODY, (SEE CAT) (SEE GROUP 3.000 "THROTTLE BODY/MPFI (MODELS T2A, B210) " FOR DETAIL ILLUSTRATED VIEW.)	
6.	4-B6	3.336	GASKET, THROT BODY (AC-DELCO #40-717)	10105351

© 2000 GENERAL MOTORS SERVICE PARTS OPERATIONS-CHEVROLET-14Y

7.	4-A10	3.265	PLENUM, INT MANIF	10077151
8.	4-A21	3.270	FITTING, INT MANIF VAC (IN PLNM)	14082470
9.	4-C26	3.682	SENSOR, MANIF TEMP (UND PLNM) (AC-DELCO #213-310)	12146312
10.	4-M21	2.400	HARNESS, INT AIR TEMP SEN WRG	12029463
11.	4-N23	8.866	VALVE, HTR WAT FLOW CONT (AC-DELCO #15-5372)	22532158
12.	4-B7	3.337	HOSE, THROT BODY HTR	10108509
13.	4-C19	3.671	RETAINER, ECM BRKT PUSH IN	14104641
14.	4-C11	3.670	MODULE, ENG CONT (REMAN) ((SEE PARTS SECTION FOR ADDITIONAL USAGE)) (1990) (AC-DELCO #16198260)	16198260
	4-C11	3.670	MODULE, ENG CONT (REMAN) ((SEE PARTS SECTION FOR ADDITIONAL USAGE)) (1991) (AC-DELCO #16198260)	16198260
	4-C11	3.670	EPROM, ECM (1990) (AC-DELCO #16134297)	16134297
	4-C11	3.670	EPROM, ECM (1991) (AC-DELCO #16159798)	16159798
15.		8.017	NUT, HEX FLG (M5X0.8) 9 ZN	11514252
16.	4-N26	14.865	BOLT, U NUT & STUD (M5X.8X10) (AC-DELCO #12337892)	12337892
17.	4-C19	3.671	HOUSING, ECM (FE7)	10086259
18.	4-C19	3.671	SPACER, ECM HSG	14104639
19.	4-C19	3.671	GROMMET, ECM BRKT	14104640
20.	4-N26	14.865	BOLT, U NUT & STUD (M5X.8X10) (AC-DELCO #12337892)	12337892
21.	4-M10	1.055	RELAY, MASS AIR FLOW SEN (PWR) (AC-DELCO #15-8240)	14089935
22.	4-M10	1.055	RELAY, ENG COOL FAN (AC-DELCO #15-8240)	14089936
23.	4-N24	9.277	BRACKET, BLO MTR RLY	14104140
24.	4-C21	3.675	HARNESS, EGR VLV VAC	10055893
25	4-M20	2.440	BRACKET, I/P WRG HARN DIAG CONN	14073479
26.	4-M20	2.440	COVER, I/P HARN DIAG CONN	10021766
27.	4-D15	3.865	VALVE, CR/CONT VAC REL (AC-DELCO #212-340)	1645516
28.	4-D15	3.865	RETAINER, CR/CONT VAC REL VLV	10075405
29.	4-C11	3.670	SOLENOID, EGR CONT VLV RLY (AC-DELCO #214-340)	1997195
30.		3.329	VALVE, COLD START INJ (SEE GROUP 3.000 "FUEL INJECTOR RAIL MPFI (MODELS F8A, R810) " FOR DETAIL ILLUSTRATED VIEW)	
		DISCON	PIPE KIT, COLD START F/INJR	17110860
	4-A24	3.330	PIPE KIT, COLD START F/INJR (AC-DELCO #17112061)	17112061
	4-A26	3.331	SEAL, COLD STRTR F/INJR PIPE (O-RING) (AC-DELCO #17111954)	17111954
31.		N.S.	RAIL, FUEL INJ (SEE GROUP 3.000 "FUEL INJECTOR RAIL MPFI (MODELS F8A, R810) " FOR DETAIL ILLUSTRATED VIEW.)	
32.	4-N12	2.559	PLATE, ENG WRG HARN GROM BKG	10086254
33.	4-C21	3.675	HARNESS, EXH EMIS CONT VAC RR	14082433
34.	4-N4	2.525	HARNESS, ENG WRG (1990 M.T. & C60)	12090377
	4-N4	2.525	HARNESS, ENG WRG (1990 M.T. & C68)	12090378
	4-N4	2.525	HARNESS, ENG WRG (1990 A.T. & C60)	12090379
	4-N4	2.525	HARNESS, ENG WRG (1990 A.T. & C68)	12090380
	4-N4	2.525	HARNESS, ENG WRG (1991 M.T. & C60)	12080866
	4-N4	2.525	HARNESS, ENG WRG (1991 M.T. & C68)	12080868
	4-N4	2.525	HARNESS, ENG WRG (1991 A.T. & C60)	12080865
	4-N4	2.525	HARNESS, ENG WRG (1991 A.T. & C68)	12080867
35.	4-D18	3.900	RELAY, F/PUMP (AC-DELCO #15-8426)	14100455
36.	4-N3	2.483	BRACKET, MULTIUSE RLY	10172488
37.		8.977	BOLT, HEX W/WA (M4.2X1.41X18) NZ	11518303
38.		8.921	NUT, U TYPE (M4.2X1.41) 1050 PZOR	12338121
39.	4-B11	3.417	CLAMP, AIR INT DUCT INTER	14104556
40.	4-B11	3.417	DUCT, AIR INT INTER	10108444
41.	4-B11	3.417	CLAMP, RR INT AIR DUCT (UPC/FNA: CLAMP, RR AIR INT DUCT)	10146826
42.	4-C26	3.682	CONNECTOR, MAP SEN	10105294
43.		8.900	BOLT, HFH (M6X1X13) 9.8 PEOR (AC-DELCO #11514149)	11514149
44.	4-B10	3.410	COVER, A/CLNR	12552873

© 2000 GENERAL MOTORS SERVICE PARTS OPERATIONS-CHEVROLET-14Y

				1Y03-020
45.	4-B10	3.410	BOLT, A/CL HSG CVR (68.0MM LG) (OUTBOARD POSITIONS)	12550015
	4-B10	3.410	BOLT, A/CL HSG CVR (48.0MM LG) (CENTER POSITION)	14104036
46.	4-B10	3.410	ELEMENT, A/CL (AC-DELCO #A1097C)	25096033
47.	4-B11	3.417	DUCT, AIR INT FRT	12553505
48.	4-C26	3.602	SENSOR, MAP (AC-DELCO #213-186)	16157039

RPO DEFINITIONS
L96 - ENGINE, 5.7L, (5.7-8) 350 CID, V8, TPI

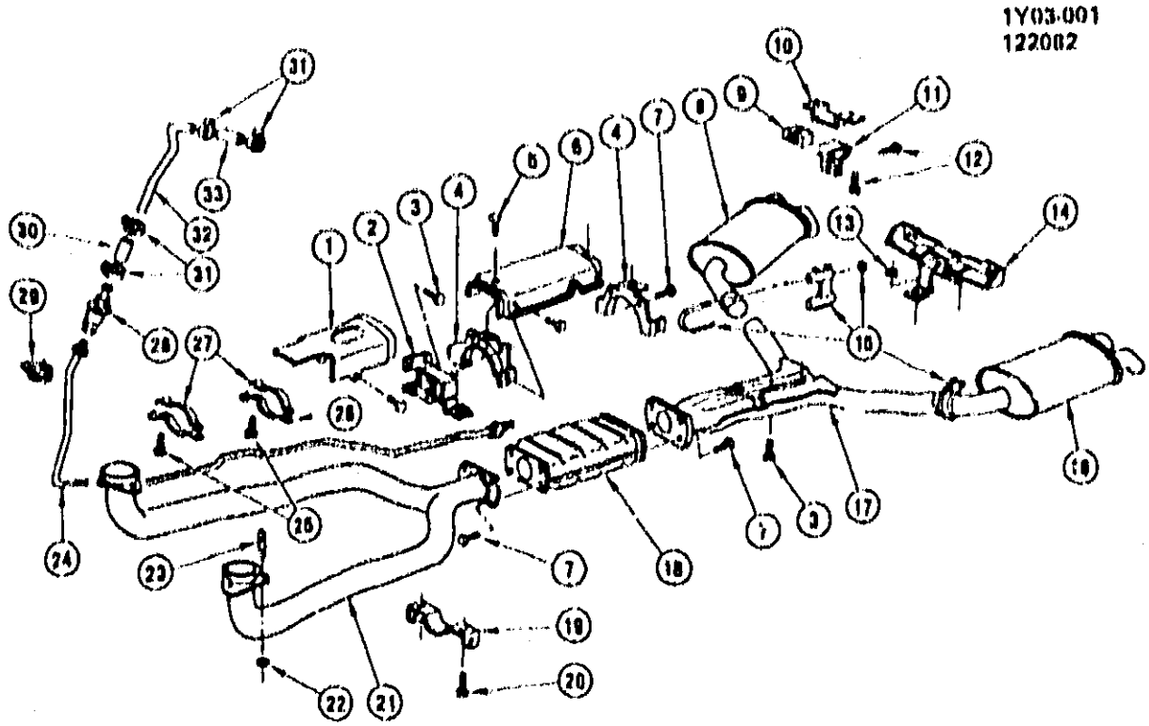

1Y03-001

1984 Y EXHAUST SYSTEM-V8(L83)
1985 Y EXHAUST SYSTEM-V8(L98)

1.	4-C9	3.616	PLATE, FRT C/OVR PIPE RR HT (A/TRNS)	14105109
		DISCON	SHIELD, EXH C/OVR FRT PIPE RR HT (M.T.)	14076194
2.		DISCON	HANGER, C/OVR FRT PIPE	14047734
3.	4-C9	3.616	BOLT, EXH PIPE HNGR (1984)	
		6.900	BOLT, EXH PIPE HNGR (1985)	
4.		DISCON	BRACKET, CTLTC CONV H/SHLD	14047738
5.		6.977	SCREW, HWH TAP (M6.3X1.81X13)	
6.		DISCON	SHIELD, CTLC CONV HT (A.T.)	14047737
7.		6.900	BOLT, HWH (M10-1.5X25)	
8.	4-D5	3.701	MUFFLER, W/TAIL PIPE-RH (1984)	14060156
	4-D5	3.701	MUFFLER, W/TAIL PIPE-RH (1985)	14093136
9.	4-D9	3.704	INSULATOR, MUFF & TAIL PIPE HNGR (1984)	14076189
	4-D9	3.704	INSULATOR, MUFF HNGR (1985)	14076189
10.	4-D9	3.704	BRACKET, MUFF & TAIL PIPE HNGR	14087698
11.	4-D9	3.704	HANGER, MUFF	14060148
12.		6.900	BOLT, HEX LG FLG (M10X1.5X25)	
13.		6.915	NUT, HFH (M8X1.25X7.5)	
14.		N.S.	HANGER, TAIL PIPE (W/CALIF)	
15.	4-D9	3.708	CLAMP, SADDLE TYPE (FITS 63.50MM/2.50" PIPE)	3634389
	4-D9	3.708	CLAMP, U BOLT (FITS 50.80MM/2" PIPE)	15973623
16.		DISCON	MUFFLER, W/TAIL PIPE-LH (1984)	14060155
	4-D5	3.701	MUFFLER, W/TAIL PIPE-LH (1985)	14093135
17.		DISCON	PIPE, EXH C/OVR RR (1984)	14060154
	4-C7	3.609	PIPE, EXH C/OVR RR (1985) (1985 1ST DESIGN USED WITH INTEGRAL WELDED HEAT SHIELDS.)	14087616
	4-C7	3.609	PIPE, EXH C/OVR RR (1985) (1985 2ND DESIGN USED WITHOUT INTEGRAL WELDED HEAT SHIELDS.)	14087616
18.	4-D3	3.685	CONVERTER, CTLTC	25056722
19.		DISCON	CLAMP, EXH C/OVR FRT PIPE HNGR (77.0 MM)	14047735

© 2000 GENERAL MOTORS SERVICE PARTS OPERATIONS-CHEVROLET-14Y

20.		0.900	BOLT, HEX FLG HD (M10X1.5X30)	
21.		DISCON	PIPE, EXH MANIF	14076186
22.	4-C6	3.613	NUT, EXH C/OVR PIPE	11516072
23.	4-C6	3.613	STUD, EXH PIPE	14057006
24.		DISCON	PIPE, CTLTC CONV AIR INJ	14091220
25.		0.977	SCREW, HEX WA HD TAP (M6.3 X 1.81 X 20)	
26.	4-C24	3.680	CLAMP, CTLTC CONV AIR INJ PIPE-LWR (2.50")	14091222
27.	4-C24	3.680	CLAMP, CTLTC CONV AIR INJ PIPE-UPR (2.50")	14091221
28.	4-C11	3.670	VALVE, CTLTC CONV AIR INJ CHK (AC-DELCO #214-422)	22050642
29.	4-M12	1.166	CLAMP, WORM TYPE (.56"TO 1.06"DIA)	22518665
30.		0.962	HOSE, FUEL OIL EVAP (5/8 X 25)	
31.		0.948	CLAMP, WORM TYPE (.62 TO 1.25)	
32.		DISCON	PIPE, AIR INJ CTLTC CONV CHK VLV	14060156
33.		N.S.	HOSE, CTLTC CONV AIR INJ CHK VLV	

RPO DEFINITIONS
L03 - ENGINE, 5.7L (5.7-8), V8,(CFI-CROSSFIRE)(TBI)
L98 - ENGINE, 5.7L, (5.7-8) 350 CID, V8, TPI

© 2000 GENERAL MOTORS SERVICE PARTS OPERATIONS--CHEVROLET-14Y

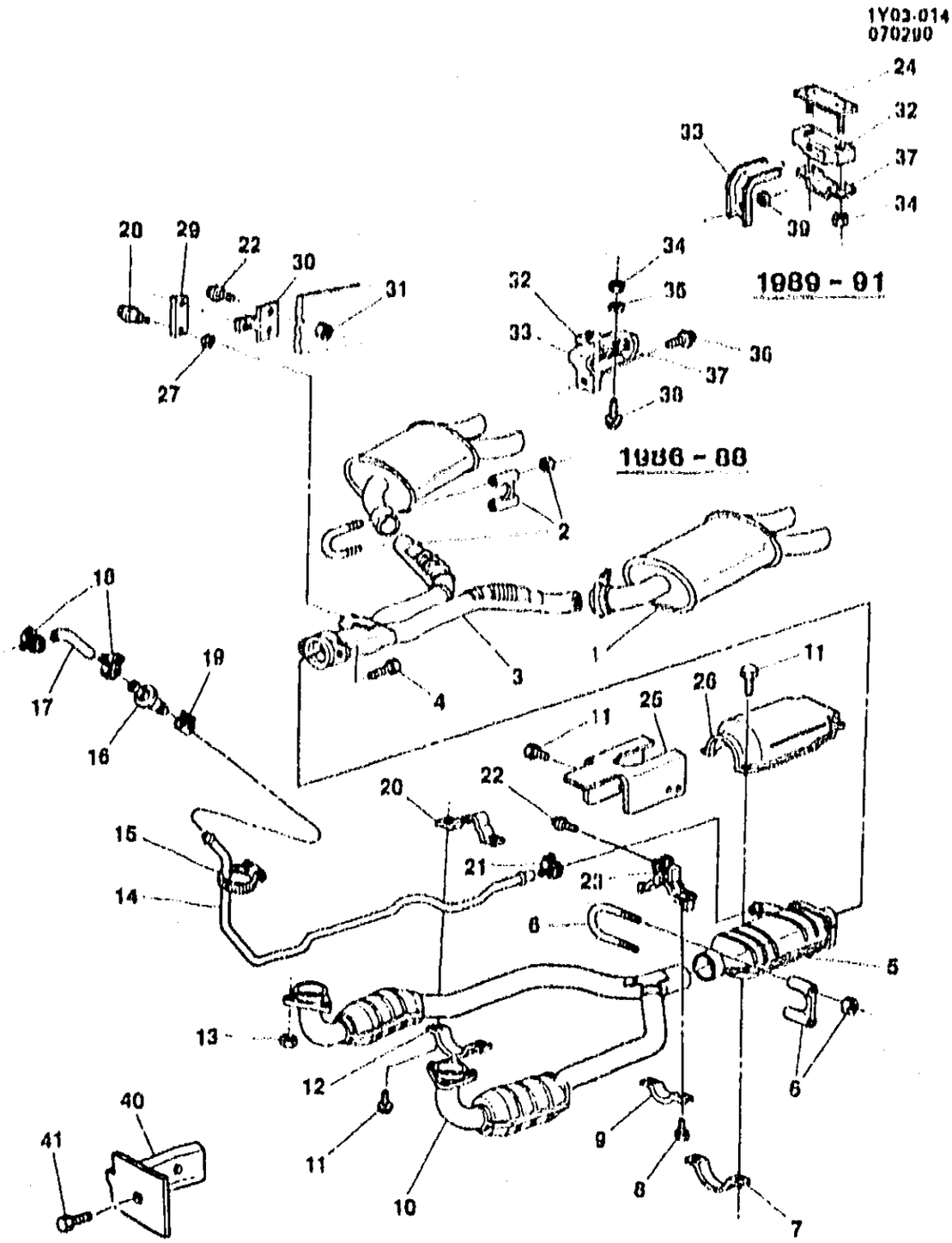

1Y03-014

1986–1991 Y EXHAUST SYSTEM–V8(L98)

1.	4–D5	3.701	MUFFLER, W/TAIL PIPE–RH (1989–90) (SEE PARTS SECTION FOR ADDITIONAL USAGE)	10201709
	4–D5	3.701	MUFFLER, W/TAIL PIPE–RH (1991) (SEE PARTS SECTION FOR ADDITIONAL USAGE)	10097666
	4–D5	3.701	MUFFLER, W/TAIL PIPE–LH (1989–90) (SEE PARTS SECTION FOR ADDITIONAL USAGE)	10201708

© 2000 GENERAL MOTORS SERVICE PARTS OPERATIONS–CHEVROLET–14Y

	4-D5	3.701	MUFFLER, W/TAIL PIPE - LH (1991) (SEE PARTS SECTION FOR ADDITIONAL USAGE.)	10097665
2.	4-D9	3.708	CLAMP, SADDLE TYPE (67.15MM/2.25)	14087655
	4-D9	3.708	CLAMP, SADDLE TYPE (1990-91) (76.2MM/3.00)	15520403
3.	4-C7	3.609	PIPE, EXH (INTER) (1986-90)	10094006
	4-C7	3.609	PIPE, EXH (1991)	10143517
		8.917	NUT, HEX (M8X1.25) TORQ PREV 10	11515740
4.		8.900	BOLT, HFH (M10X1.5X50) 9.8 PZOR	11515770
5.	4-D3	3.685	CONVERTER, CTLTC RR	25056993
6.	4-D9	3.708	CLAMP, SADDLE TYPE (67.15MM/2.25) (1986-90)	14087655
	4-D9	3.708	CLAMP, SADDLE TYPE (76.20MM/3.00) (1990-91) (FRT EXH PIPE)	15520403
7.		DISCON	CLAMP, CTLTC CONV HT SHLD (1986-87)	14087665
8.		8.900	BOLT, HFH M10X1.5X30 10.9 FL BLK 21.5 OD 26MM THD POINTED (AR)	12337993
9.	4-D9	3.708	CLAMP, EXH MANIF PIPE HNGR	10052279
10.	4-C7	3.609	PIPE, W/FRT CONV C/OVR	10097665
11.		8.977	SCREW, HEX W/FL WA (M6.3X1.81X20) 6010M PZOR	12337020
12.	4-C24	3.680	CLAMP, CTLTC CONV AIR INJ PIPE (LWR)	14091222
13.	4-C8	3.613	NUT, EXH C/OVR PIPE	11516072
14.	4-C21	3.675	PIPE, CTLTC CONV AIR INJ (VLV TO CONV) (AC-DELCO #219-77)	10097662
15.		8.948	CLAMP, (.31 TO .75 DIA) ZN CHR (1.160)	15620999
16.	4-C11	3.670	VALVE, CTLTC CONV AIR INJ CHK (AC-DELCO #214-423)	22062561
17.	4-C21	3.675	HOSE, AIR INJ CHK VLV (1986-87)	14047704
		DISCON	HOSE, AIR INJ CHK VLV (1988-91)	10105319
18.		8.948	CLAMP, WORM GR (15.7 TO 31.8) SST (AC-DELCO #12337891)	12337891
19.	4-C24	3.680	CLAMP, CTLTC CONV AIR INJ CK VLV RR (CONV INLET PIPE)	14093102
20.	4-C24	3.680	CLAMP, CTLTC CONV AIR INJ PIPE (UPR)	14091221
21.	4-C24	3.680	CLAMP, CTLTC CONV AIR INJ PIPE (AT CONV)	14034744
22.		8.900	BOLT, HFH (M8X1.25X20) 10.9 POR	12551177
23.	4-C9	3.616	HANGER, FRT C/OVR PIPE	10165305
24.	4-D9	3.704	REINFORCEMENT, MUFF (1989-91)	10080797
25.	4-C9	3.616	PLATE, MANIF PIPE HT	14105108
26.		DISCON	SHIELD, CTLTC CONV HT (1986-1987)	14093188
27.		8.929	WASHER, FL (M10X20) STL CU	10000925
28.	4-C9	3.616	BOLT, INTER PIPE HNGR	10081649
29.	4-C9	3.616	HANGER, C/OVR RR PIPE	10081648
30.	4-C9	3.616	BRACKET, INTER PIPE HNGR	14091271
31.		8.917	NUT, HFH, M8X1.25, 17.9 OD, 738 THK, 13MM HEX, 10, ZF (AR) (AC-DELCO #11514596)	11514596
32.	4-D9	3.704	INSULATOR, MUFF HNGR (1986-88)	14076189
	4-D9	3.704	INSULATOR, MUFF HNGR (1989-91)	10158003
33.	4-D9	3.704	HANGER, MUFF (1986-88)	14060148
	4-D9	3.704	HANGER, MUFF (1989-91)	10081611
34.		8.917	NUT, HEX TORQ PREV (M8X1.25) 10 CAD	11515748
35.		8.929	WASHER, FL (.344X.688) STL ZP	120393
36.		8.900	BOLT, HFH (M10X1.5X25) 9.8 PZOR (2.277)	12337993
37.	4-D9	3.704	BRACKET, MUFF RR HNGR	14087698
38.		8.900	BOLT, HFH (M8X1.25X45) 9.8 SST	10067660
39.		8.917	NUT, HNGR BRKT (M10X1.5)	10255857
40.	4-C9	3.616	SHIELD, FRT C/OVR PIPE HT-RH (ATCH TO FLR PNL)	14091100
		DISCON	SHIELD, FRT C/OVR PIPE HT-LH (ATCH TO FLR PNL)	10097696
41.		8.977	SCREW, HWH TAP (M4.2X1.41X16) PZOR	11509135

RPO DEFINITIONS
L98 - ENGINE, 5.7L, (5.7-8) 350 CID, V8, TPI

© 2000 GENERAL MOTORS SERVICE PARTS OPERATIONS-CHEVROLET-14Y

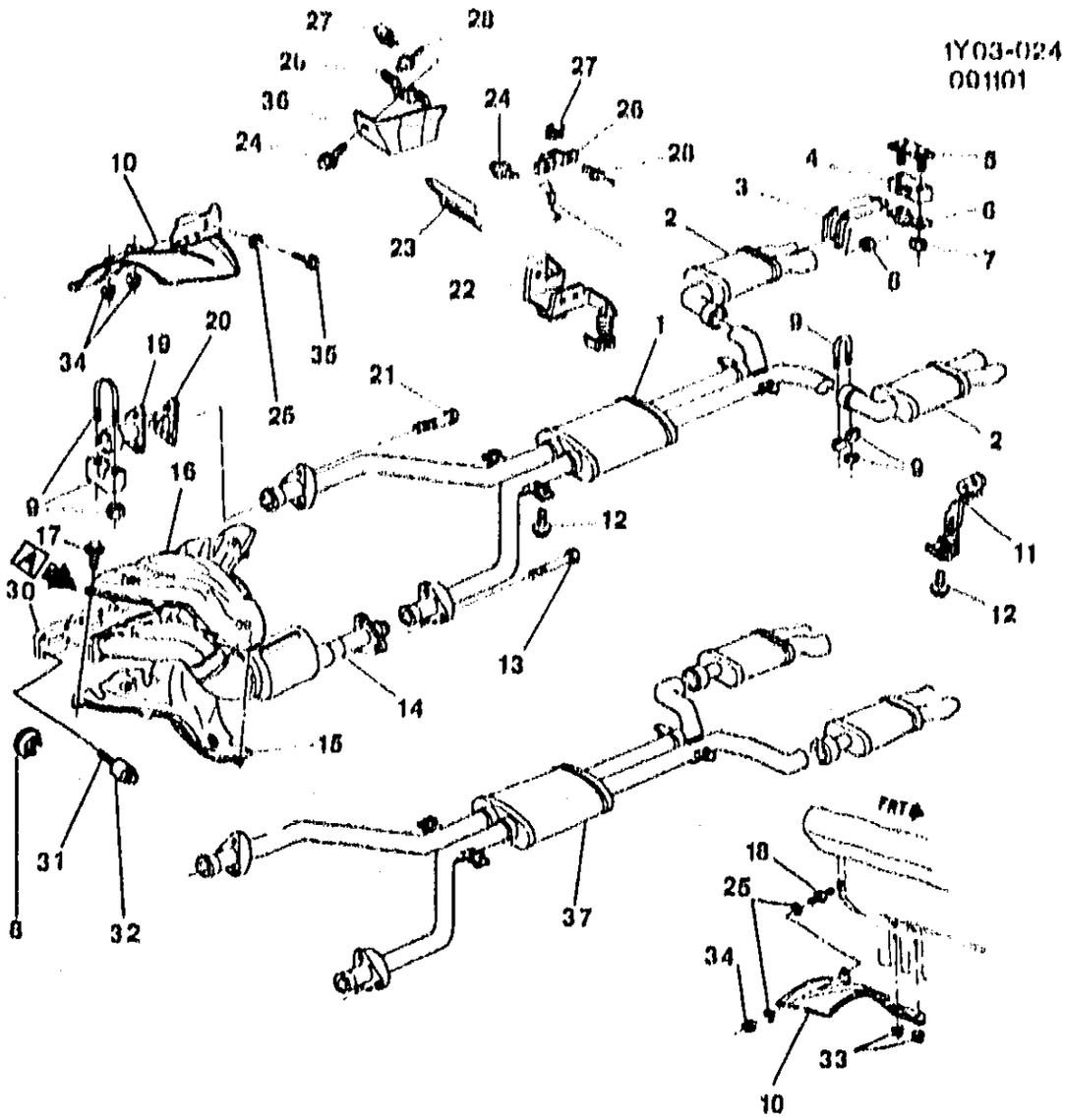

1Y03-024

1990-1995 Y EXHAUST SYSTEM-V8(LT5)

1.	4-D8	3.702	RESONATOR, EXH (W/EXH MANIF PIPE)	90	Y (LT5, FE1, FE7)	1	10147974
	4-D8	3.702	RESONATOR, EXH (W/EXH MANIF PIPE)	91	Y (LT5, FE1, FE7)	1	12506866
	4-D8	3.702	RESONATOR, EXH (W/EXH PIPE)	92-95	Y (LT5)	1	12518753
2.	4-D5	3.701	MUFFLER, EXH (W/TAIL PIPE) ..	90	Y (LT5, FE1, FE7)	LH	12511524
	4-D5	3.701	MUFFLER, EXH (W/TAIL PIPE) ..	90	Y (LT5, FE1, FE7)	RH	12511525
	4-D5	3.701	MUFFLER, EXH (W/TAIL PIPE) ..	91	Y (LT5, FE1, FE7)	LH	12506867
	4-D5	3.701	MUFFLER, EXH (W/TAIL PIPE) ..	91	Y (LT5, FE1, FE7)	RH	12506868
	4-D5	3.701	MUFFLER, EXH (W/TAIL PIPE) ..	92-95	Y (LT5)	LH	12528808
	4-D5	3.701	MUFFLER, EXH (W/TAIL PIPE) ..	92-95	Y (LT5)	RH	12528809
3.	4-D9	3.704	HANGER, EXH MUFF	90-95	Y	2	10081611
4.	4-D9	3.704	INSULATOR, EXH MUFF HNGR .	90-95	Y	1	10158003
5.	4-D9	3.704	REINFORCEMENT, EXH MUFF HNGR	90-95	Y	2	10080797

© 2000 GENERAL MOTORS SERVICE PARTS OPERATIONS-CHEVROLET-14Y

							1Y03-624
6.	4-D9	3.704	BRACKET, EXH MUFF HNGR	90-95	Y	2	14087698
7.		8.017	NUT, M8X1.25X7.1, ZC 10	90-95		AR	11515740
8.		8.015	NUT, HEX, 10X1.5 6H THD, 21.3 OD, 9.8 THK 13 HEX DR, GRD 9, ZF (8.017)	90-95		AR	10258867
9.	4-D9	3.708	CLAMP, EXH PIPE (M10X1.5)	90-95			14104713
10.	4-D4	3.690	SHIELD, CTLTC CONV HT	90-95	Y (LT5)	RH	10105244
	4-D4	3.690	SHIELD, CTLTC CONV HT	90-95	Y (LT5)	LH	10105365
11.	4-C9	3.616	HANGER, EXH PIPE RR	90-91	Y (LT5)	LH	10157949
	4-C9	3.616	HANGER, EXH PIPE RR	90-91	Y (LT5)	RH	10258672
	4-C9	3.616	HANGER, EXH PIPE RR	92-95	Y	LH	10157949
	4-C9	3.616	HANGER, EXH PIPE RR	92-95	Y	RH	10258672
12.		8.900	BOLT, HEX, M8X1.25X16, FULL, 9.8, PS	90-95		AR	11509589
13.		8.900	BOLT, HEX M10X1.5X50 9.8 PZOR	90-95		AR	11515770
14.	4-C7	3.601	MANIFOLD, EXH	93-95	Y (LT5)	LH	25129492
	4-C7	3.601	MANIFOLD, EXH	93-95	Y (LT5)	RH	25143612
		DISCON	MANIFOLD, EXH (W/CTLTC CONV)	90-92	Y (LT5)	LH	25127591
	4-C7	3.601	MANIFOLD, EXH (WHEN USING ON 1990-1992 MDLS REFER TO CHEV SERV BULLETIN 770106 DTD 2-97 FOR ADDITIONAL INFORMATION.USE T/W 25129503 CTLTC CONV)	90-92	Y (LT5)	RH	25143612
		N.S.	CONVERTER, 3WAY CTLTC (PART OF MANIFOLD)	90-92			
	4-D3	3.685	CONVERTER, 3WAY CTLTC	93-95	Y (LT5)	LH	25129502
	4-D3	3.685	CONVERTER, 3WAY CTLTC	93-95	Y (LT5)	RH	25129503
		8.900	BOLT, M10X1.5X20, 18 THD, 20.8 OD, 9.8 (CTLTC CONV)	90-95		8	11516283
15.	4-C7	3.602	SHIELD, EXH MANIF INR HT	90-91	Y (LT5)	LH	10128251
	4-C7	3.602	SHIELD, EXH MANIF INR HT	90-92	Y (LT5)	RH	10128252
	4-C7	3.602	SHIELD, EXH MANIF INR HT	93-95	Y (LT5)	RH	25035039
	4-C7	3.602	SHIELD, EXH MANIF INR HT	93-95	Y (LT5)	LH	25129498
16.	4-C7	3.602	SHIELD, EXH MANIF OTR HT	90-91	Y (LT5)	LH	10128253
		DISCON	SHIELD, EXH MANIF OTR HT	90-92	Y (LT5)	RH	10128254
	4-C7	3.602	SHIELD, EXH MANIF OTR HT	92-95	Y (LT5)	LH	25129500
	4-C7	3.602	SHIELD, EXH MANIF OTR HT (FRT)	93-95	Y (LT5)	RH	25034984
	4-C7	3.602	SHIELD, EXH MANIF OTR HT (RR)	93-95	Y (LT5)	RH	25034993
17.		8.977	BOLT, HWH TAP 10-16X.50 PZOR (AC-DELCO #9440166)	90-95		AR	9440166
18.	4-D4	3.690	STUD, CTLTC CONV H/SHLD (M6X1.0X29.7) (1.428)	90-95	Y (LT5)	1	10044847
19.	4-C7	3.609	ADAPTER, EXH PIPE (ALSO PART OF #1) (ADAPTER & GASKET NOT REQUIRED TO SERVICE 92-95)	90-91	Y (LT5, FE1, FE7)	1	10147972
20.	4-C8	3.611	GASKET, EXH PIPE (ALSO PART OF #1) (GASKET & ADAPTER NOT REQUIRED TO SERVICE 92-95)	90-91	Y (LT5, FE1, FE7)	1	10147973
21.		8.900	BOLT	90-95		AR	11509265
22.		DISCON	HANGER, EXH PIPE FRT	90	Y (LT5)	1	10143504
	4-C9	3.616	HANGER, EXH PIPE FRT	91	Y (LT5)	1	10157948

							1Y03-024
	4-C9	3.616	HANGER, EXH PIPE FRT	92-95	Y	1	10157940
23.	4-C9	3.616	SHIELD, EXH PIPE HT	90-95	Y (LT5)	RH	10157938
	4-C9	3.616	SHIELD, EXH PIPE HT	90-95	Y (LT5)	LH	14104711
24.		8.977	SCREW, HWH TAP M4.2X1.41X16 9.2-OD DRILPT BLK PZOR	90-95	.....	AR	11509135
25.		8.920	WASHER, M6.3X16.76X1.6 PH ..	90-95	.....	AR	11500322
26.	4-C9	3.616	BRACKET, EXH C/OVR PIPE H/SHLD (16.300)	90-95	Y	AR	14060290
27.		8.921	NUT, U TYPE, MULTI THD, PREV TORQ, M4.2X1.41TAP, 8.1REACH, 0.65-3.00 PNLS 1065 PZOR (AC-DELCO #11513699)	90-95	.....	AR	11513699
28.		8.913	SCREW, METRIC PAN HD 6-LOBED SOCKET TAP (6.3X1.8X13) (8.977)	90-95	.....	AR	11515272
30.	4-A20	3.272	GASKET, EXH MANIF (3.270)	90-95	Y (LT5)	2	10157776
31.		8.900	BOLT, HFH, M8X1.25X45, 22 THD, 9.8, SST	90-95	.....	AR	10067660
32.	4-C7	3.604	SPACER, EXH MANIF BOLT (.42X.68" STL) (8.606)	92-95	Y (LT5)	2	3003422
	4-C7	3.604	SPACER, EXH MANIF BOLT (9.8ID, 15.0 OD, 19THK, 6047M, 1035STL)	90-95	Y (LT5)	14	10110994
33.		8.917	NUT, HFH, M8X1.25, 17.9 OD, 730 THK, 13MM HEX, 10, ZF (POS #1) (8.915) (AC-DELCO #11514596)	90-95	.....	AR	11514596
34.		8.917	NUT, HFH M8X1X8.5 ZOR 9 (POS #2)	90-95	.....	AR	3530297
35.		8.977	BOLT, SCR HEX W/FLAT WA 12 DIA TYPE AB	90-95	.....	AR	11509374
36.	4-C9	3.616	SHIELD, EXH PIPE HT	90-95	Y (LT5)	RH	10157938
	4-C9	3.616	SHIELD, EXH PIPE HT	90-95	Y (LT5)	LH	14104711
37.	4-D5	3.701	MUFFLER, EXH (W/EXH PIPE & TAIL PIPE) (W/RESO) (COMPLETE SYSTEM)	93-95	Y (LT5)	1	10157909
		DISCON	MUFFLER, EXH (W/EXH PIPE & TAIL PIPE) (W/RESO) (COMPL) (W/RESO) (COMPLETE SYSTEM) (3.701)	91	Y (LT5, FE1, FE7)	1	10097673
	4-D5	3.701	MUFFLER, EXH (W/EXH PIPE & TAIL PIPE) (W/RESO) (COMPL) (W/RESO) (COMPLETE SYSTEM)	92	Y (LT5)	1	10165323

RPO DEFINITIONS

FE1 – SUSPENSION SYSTEM,SOFT RIDE

FE7 – SUSPENSION SYSTEM,FRONT AND REAR,HEAVY DUTY(USED WITH PERFORMANCE HANDLING PACKAGE Z51)

LT5 – ENGINE,5.7L(5.7J),TPI

© 2000 GENERAL MOTORS SERVICE PARTS OPERATIONS-CHEVROLET-14Y

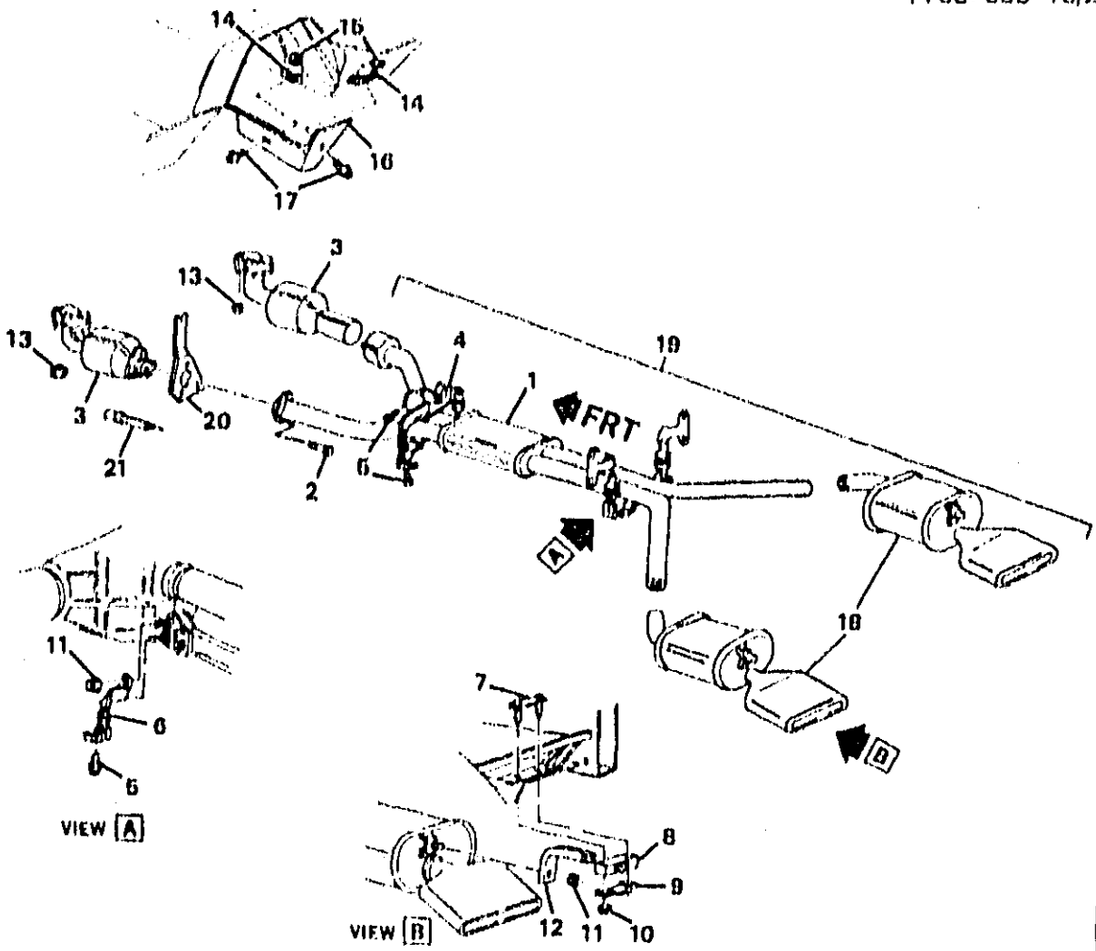

1Y03-039

1992-1993 Y EXHAUST SYSTEM-V8(LT1)

1.	4-D8	3.702	RESONATOR, EXH (W/EXH PIPE) (INCLS FRT/RR PIPES) (PART OF 19)	92-93	Y (LT1) (EXC B4H)	1	12523238
		DISCON	RESONATOR, EXH (W/EXH PIPE) (PART OF 19)	92-93	Y (LT1, B4H) (EXPORT)	1	12512734
2.		8.900	BOLT	92-93	.....	AR	11509265
3.	4-D3	3.685	CONVERTER, W/UP 3WAY CTLTC (W/EXH MANIF PIPE) (STAMPED XJ, JL)	92-93	Y (LT1) (EXC NM8)	LH	25129000
	4-C7	3.609	CONVERTER, W/UP 3WAY CTLTC (W/EXH MANIF PIPE) (STAMPED XJ, JL) (3.685)	92-93	Y (LT1) (EXC NM8)	LH	25129000
	4-D3	3.685	CONVERTER, W/UP 3WAY CTLTC (W/EXH MANIF PIPE) (USE T/W 8990353 IF REPLC 25129001 OR 25145522) (STAMPED XK, SR)	92-93	Y (LT1) (EXC NM8)	RH	25145454
	4-C7	3.609	CONVERTER, W/UP 3WAY CTLTC (W/EXH MANIF PIPE) (USE T/W 8990353 IF REPLC 25129001 OR 25145522) (STAMPED XK, SR) (3.685)	92-93	Y (LT1) (EXC NM8)	RH	25145454
4.	4-C9	3.616	HANGER, EXH PIPE FRT	92-93	Y	1	10157948

© 2000 GENERAL MOTORS SERVICE PARTS OPERATIONS-CHEVROLET-14Y

							1Y03-039
5.		8.900	BOLT, HEX HD M8-1.25X16 PH 9.0	92-93		AR	11500815
6.	4-C9	3.616	HANGER, EXH PIPE RR	92-93	Y	LH	10157949
	4-C9	3.616	HANGER, EXH PIPE RR	92-93	Y	RH	10258672
7.	4-D9	3.704	REINFORCEMENT, EXH MUFF HNGR	92-93	Y	2	10080797
8.	4-D9	3.704	INSULATOR, EXH MUFF HNGR	92-93	Y	1	10158003
9.	4-D9	3.704	BRACKET, EXH MUFF HNGR	92-93	Y	2	14087698
10.		8.917	NUT, M8X1.25X7.1, ZC 10	92-93		AR	115.5748
11.		8.915	NUT, HFH, 10X1.5 6H THD, 21.3 OD, 9.8 THK 13 HEX DR, GRD 8, ZF (8.917)	92-93		AR	10255857
12.	4-D9	3.704	HANGER, EXH MUFF	92-93	Y	2	10081611
13.	4-C9	3.613	NUT, EXH C/OVR PIPE (M10X1.5) (HEX PRVL TORQ) (8.917)	92-93	Y (LT1)	6	11516072
14.	4-C9	3.616	BRACKET, EXH C/OVR PIPE H/SHLD (15.300)	92-93	Y	AR	14060290
15.		8.921	NUT, U TYPE, MULTI THD, PREV TORQ, M4.2X1.41TAP, 8.1REACH, 0.65-3.80 PNLS 1065 PZOR (AC-DELCO #11513599)	92-93		AR	11513599
16.	4-C9	3.616	SHIELD, EXH PIPE HT	92-93	Y (LT1)	RH	14091100
17.		8.977	SCREW, HWH TAP M4.2X1.41X16 9.2-OD DRILPT BLK PZOR	92-93		AR	11509135
18.	4-D5	3.701	MUFFLER, EXH (W/TAIL PIPE) (PART OF 19)	92-93	Y (LT1) (EXC B4H)	LH	12528808
	4-D5	3.701	MUFFLER, EXH (W/TAIL PIPE) (PART OF 19)	92-93	Y (LT1) (EXC B4H)	RH	12528809
	4-D5	3.701	MUFFLER, EXH (W/TAIL PIPE) (PART OF 19)	92-93	Y (LT1, B4H) (EXPORT)	RH	12512732
	4-D5	3.701	MUFFLER, EXH (W/TAIL PIPE) (PART OF 19)	92-93	Y (LT1, B4H) (EXPORT)	LH	12512733
19.	4-D5	3.701	MUFFLER, EXH (W/EXH PIPE & TAIL PIPE) (INCLS 1, 18)	92-93	Y (LT1) (EXC B4H)	1	10255648
	4-D5	3.701	MUFFLER, EXH (W/EXH PIPE & TAIL PIPE) (INCLS 1, 18)	92-93	Y (LT1, B4H) (EXPORT)	1	10157960
20.	4-D4	3.690	BRACE, CTLTC CONV	92-93	Y (LT1, MD8)	LH	10219503
	4-D4	3.690	BRACE, CTLTC CONV	92-93	Y (LT1, MD8)	RH	10219504
	4-D4	3.690	BRACE, CTLTC CONV	92-93	Y (LT1, ML9)	LH	10219505
	4-D4	3.690	BRACE, CTLTC CONV	92-93	Y (LT1, ML9)	RH	10219506
21.	4-D4	3.690	STUD, CTLTC CONV BR	92-93	Y (LT1)	LH	10219507

RPO DEFINITIONS
B4H - MODIFICATION-NOISE CONTROL, EXPORT
LT1 - ENGINE-GAS, 8 CYL, 5.7L(5.7P),MFI,HO
MD8 - TRANSMISSION,AUTOMATIC 4-SPEED(THM700R4/4L60)
ML9 - TRANSMISSION,MANUAL 6-SPEED
NM8 - EMISSION SYSTEM,LEADED FUEL(EXPORT)

© 2000 GENERAL MOTORS SERVICE PARTS OPERATIONS-CHEVROLET-14Y

MICROFICHE INDEX

GROUP 3.000

FICHE 4 OF 11

GROUP	DESCRIPTION	STARTING GRID LOCATION PARTS	ILLUSTRATIONS
--	GENERAL INFORMATION	1-A2	1-G2
--	ALPHABETICAL INDEX	1-B13	N.A.
3.000	FUEL TANK - INTAKE MANIFOLD - FUEL INJECTION - THROTTLE BODY - AIR CLEANER - ACCELERATOR	4-A2	4-E2
3.000	EXHAUST & EMISSIONS SYSTEMS - CARBURETOR - CRUISE - FUEL FILTER & PUMP	4-C2	4-H2
--	OUT OF FICHE CALLS	N.A.	4-M9

4-L1

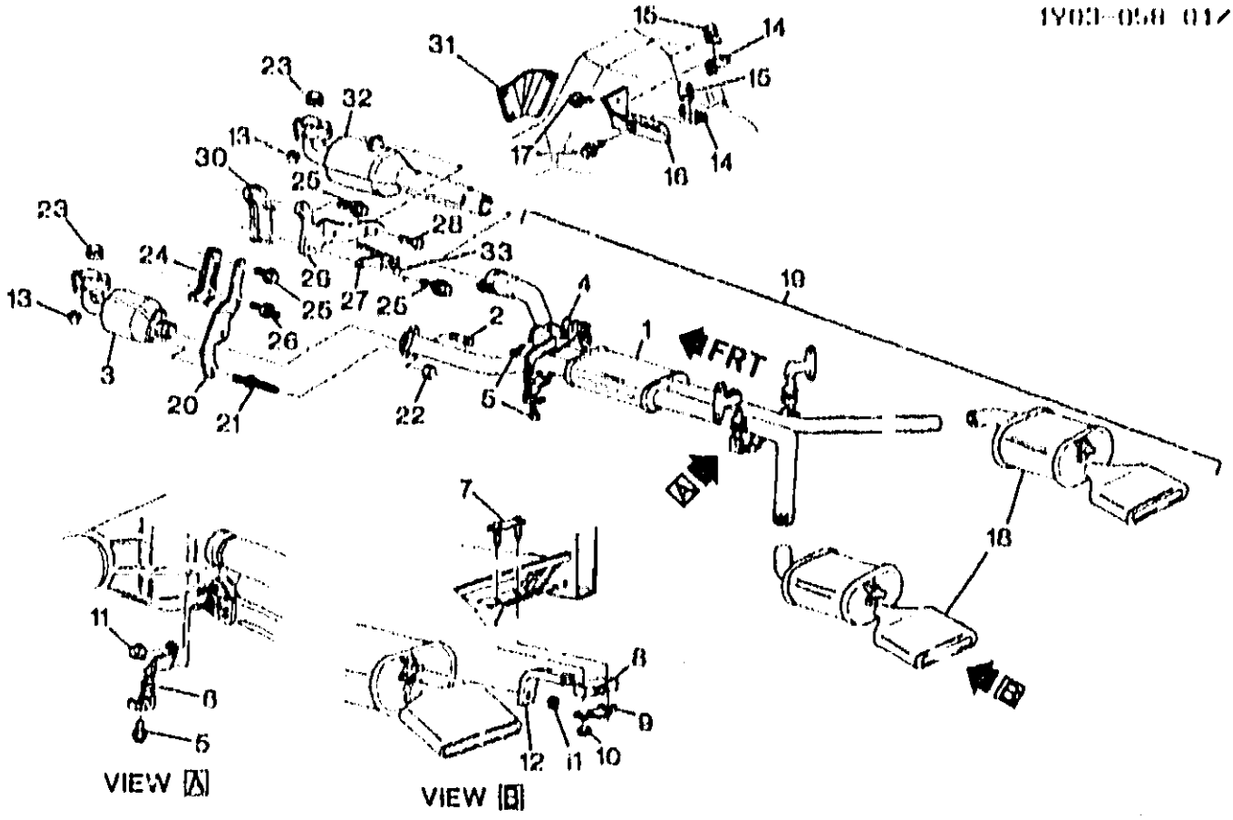

1Y03-058

1994-1995 Y EXHAUST SYSTEM-V8(LT1)
1996 Y EXHAUST SYSTEM-V8(LT1,LT4)

1.	4-D8	3.702	RESONATOR, EXH (W/EXH PIPE)	96	Y (LT1) (EXC B4H)	1	12528807
	4-D8	3.702	RESONATOR, EXH (W/EXH PIPE)	96	Y (LT4) (EXC B4H)	1	12528810
	4-D8	3.702	RESONATOR, EXH (W/EXH PIPE) (INCLS FRT/RR PIPES)	94-95	Y (LT1) (EXC B4H)	1	12523238
	4-D8	3.702	RESONATOR, EXH (W/EXH PIPE)	94-95	Y (LT1, B4H, VE1) (EXPORT)	1	12512735
	4-D8	3.702	RESONATOR, EXH (W/EXH PIPE)	96	Y (B4H, VD1) (EXPORT)	1	12528812
	4-D8	3.702	RESONATOR, EXH (W/EXH PIPE)	96	Y (B4H, VE1) (EXPORT)	1	12528815
2.		8.900	BOLT	94-96	.....	AR	11509265
3.	4-D3	3.685	CONVERTER, W/UP 3WAY CTLTC (W/EXH MANIF PIPE) (STAMPED XJ, JL)	94	Y (LT1) (EXC NM8)	LH	25129000
	4-C7	3.609	CONVERTER, W/UP 3WAY CTLTC (W/EXH MANIF PIPE) (STAMPED XJ, JL) (3.685)	94	Y (LT1) (EXC NM8)	LH	25129000
	4-D3	3.685	CONVERTER, W/UP 3WAY CTLTC (W/EXH MANIF PIPE) (STAMPED XJ, JL)	95	Y (LT1) (EXC NM8)	LH	25153077
	4-C7	3.609	CONVERTER, W/UP 3WAY CTLTC (W/EXH MANIF PIPE) (STAMPED XJ, JL) (3.685)	95	Y (LT1) (EXC NM3)	LH	25153077
	4-D3	3.685	CONVERTER, W/UP 3WAY CTLTC (W/EXH MANIF PIPE) (STAMPED XJ, JL)	96	Y (LT1, LT4) (EXC NM8, UD6)	LH	25153077

© 2000 GENERAL MOTORS SERVICE PARTS OPERATIONS-CHEVROLET-14Y

							1Y03-050
	4-C7	3.609	CONVERTER, W/UP 3WAY CTLTC (W/EXH MANIF PIPE) (STAMPED XJ, JL) (3.686)	96	Y (LT1, LT4) (EXC NM8, UD6)	LH	25153077
	4-D8	3.702	RESONATOR, EXH (W/EXH MANIF PIPE)	94-96	Y (LT1, NM8) (EXPORT)	LH	25144747
	4-D8	3.702	RESONATOR, EXH (W/EXH MANIF PIPE)	96	Y (LT4, NM8) (EXPORT)	LH	25144747
4.	4-C9	3.616	HANGER, EXH PIPE FRT	94-96	Y	1	10157948
5.		8.903	BOLT, HEH M8X1.25X21MM, 17 OD, 10.9	94-96	.....	AR	12551177
6.	4-C9	3.616	HANGER, EXH PIPE RR	94-95	Y	LH	10157949
	4-C9	3.616	HANGER, EXH PIPE RR	94-96	Y	RH	10258672
	4-C9	3.616	HANGER, EXH PIPE RR	96	Y	LH	10258673
7.	4-D9	3.704	REINFORCEMENT, EXH MUFF HNGR	94-95	Y	2	10080797
	4-D9	3.704	REINFORCEMENT, EXH MUFF HNGR	96	Y	2	10259167
8.	4-D9	3.704	INSULATOR, EXH MUFF HNGR .	94-96	Y	1	10158003
9.	4-D9	3.704	BRACKET, EXH MUFF HNGR ...	94-96	Y	2	14087698
10.		8.917	NUT, HEX FLG PREVAILING TORQ (M12X1.75X14) (ZO 10) ...	94-96	.....	AR	11515744
11.		8.915	NUT, HFH, 10X1.5 6H THD, 21.3 OD, 9.8 THK 13 HEX DR, GRD 9, ZF (8.917)	94-96	.....	AR	10255857
12.	4-D9	3.704	HANGER, EXH MUFF	94-96	Y	2	10081611
13.		8.915	NUT, HFH, 10X1.5 6H THD, 21.3 OD, 9.8 THK 13 HEX DR, GRD 9, ZF (EXH C/OVR PIPE) (8.917) ...	94-96	.....	AR	10255857
14.	4-C9	3.616	BRACKET, EXH C/OVR PIPE H/SHLD (15.300)	94-96	Y	AR	14060290
15.		8.921	NUT, U TYPE, MULTI THD, PREV TORQ, M4.2X1.41TAP, 8.1REACH, 0.65-3.80 PNLS 1065 PZOR (AC-DELCO #11513599)	94-96	.....	AR	11513599
16.	4-C9	3.616	SHIELD, EXH PIPE HT	94-95	Y (LT1)	RH	14091100
	4-C9	3.616	SHIELD, EXH PIPE HT	96	Y	RH	14091100
17.		8.977	SCREW, HWH TAP M4.2X1.41X16 9.2-OD DRILPT BLK PZOR	94-96	.....	AR	11509135
18.	4-D5	3.701	MUFFLER, EXH (W/TAIL PIPE) ..	94-96	Y (LT1) (EXC B4H)	LH	12528808
	4-D5	3.701	MUFFLER, EXH (W/TAIL PIPE) ..	96	Y (LT4) (EXC B4H)	LH	12528808
	4-D5	3.701	MUFFLER, EXH (W/TAIL PIPE) ..	94-96	Y (LT1) (EXC B4H)	RH	12528809
	4-D5	3.701	MUFFLER, EXH (W/TAIL PIPE) ..	96	Y (LT4) (EXC B4H)	RH	12528809
	4-D5	3.701	MUFFLER, EXH (W/TAIL PIPE) ..	94-95	Y (LT1, B4H, VD1) (EXPORT)	RH	12512732
	4-D5	3.701	MUFFLER, EXH (W/TAIL PIPE) ..	94-95	Y (LT1, B4H, VD1) (EXPORT)	LH	12512733
	4-D5	3.701	MUFFLER, EXH (W/TAIL PIPE) ..	94-95	Y (LT1, B4H, VE1) (EXPORT)	RH	12512736
	4-D5	3.701	MUFFLER, EXH (W/TAIL PIPE) ..	94-95	Y (LT1, B4H, VE1) (EXPORT)	LH	12512737
	4-D5	3.701	MUFFLER, EXH (W/TAIL PIPE) ..	96	Y (B4H, VD1) (EXPORT)	LH	12528813
	4-D5	3.701	MUFFLER, EXH (W/TAIL PIPE) ..	96	Y (B4H, VE1) (EXPORT)	LH	12528813
	4-D5	3.701	MUFFLER, EXH (W/TAIL PIPE) ..	96	Y (B4H, VD1) (EXPORT)	RH	12528814
	4-D5	3.701	MUFFLER, EXH (W/TAIL PIPE) ..	96	Y (B4H, VE1) (EXPORT)	RH	12528814
19.	4-D5	3.701	MUFFLER, EXH (W/EXH PIPE & TAIL PIPE) (INCL 1, 18)	94-95	Y (LT1) (EXC B4H)	1	10255648
	4-D5	3.701	MUFFLER, EXH (W/EXH PIPE & TAIL PIPE) (INCL 1, 18)	94-95	Y (LT1, B4H, VD1)	1	10239292

© 2000 GENERAL MOTORS SERVICE PARTS OPERATIONS-CHEVROLET-14Y

							1Y03-050
	4-D5	3.701	MUFFLER, EXH (W/EXH PIPE & TAIL PIPE) (INCL 1, 18)	96	Y (LT1) (EXC B4H)	1	10224237
	4-D5	3.701	MUFFLER, EXH (W/EXH PIPE & TAIL PIPE) (INCL 1, 18)	96	Y (LT4) (EXC B4H)	1	10254060
	4-D5	3.701	MUFFLER, EXH (W/EXH PIPE & TAIL PIPE) (INCL 1, 18)	94-95	Y (LT1, B4H, VE1) (EXPORT)	1	10230291
	4-D5	3.701	MUFFLER, EXH (W/EXH PIPE & TAIL PIPE) (INCL 1, 18)	96	Y (B4H, VE1) (EXPORT)	1	10220610
	4-D5	3.701	MUFFLER, EXH (W/EXH PIPE & TAIL PIPE) (INCL 1, 18)	96	Y (B4H, VD1) (EXPORT)	1	10221011
20.	4-D4	3.690	BRACE, CTLTC CONV	94-95	Y (LT1, ML9)	LH	10219505
	4-D4	3.690	BRACE, CTLTC CONV	94-96	Y (LT1, M30)	LH	10219503
	4-D4	3.690	BRACE, CTLTC CONV	96	Y (LT4, ML9)	LH	10219505
21.	4-D4	3.690	STUD, CTLTC CONV BR	94-95	Y (LT1)	LH	10219507
	4-D4	3.690	STUD, CTLTC CONV BR	96	Y (LT1, LT4)	LH	10219507
22.		8.915	NUT (CTLTC CONV BR)	94-96	.....	AR	11514603
23.	4-C8	3.611	SEAL, EXH MANIF PIPE (NOT USED 1994-95)	96	Y	2	15713154
24.	4-D4	3.690	INSULATOR, CTLTC CONV BR ..	94-95	Y (LT1, ML9)	LH	10219845
	4-D4	3.690	INSULATOR, CTLTC CONV BR ..	96	Y (LT4, ML9)	LH	10219845
25.		8.900	BOLT, HFH 3/8-16X1.38 280M PZOR	94-96	(M30)	AR	9439918
		8.900	BOLT	94-96	(ML9)	AR	9440073
26.	4-N16	4.085	STUD, TRANS	94-96	Y (M30)	1	10220063
	4-M10	0.683	STUD, FLYWHL HSG (3.655)	96	Y (LT4, ML9)	1	14085701
	4-M10	0.683	STUD, FLYWHL HSG (3/8-16X1.75/3/8-16X.88 300M) (3.655)	94-95	Y (LT1, ML9)	1	14085701
27.		N.S.	CLIP, ENG WIRING HARN (PART OF #33)		.....		
28.		8.900	BOLT, HFH M10X1.5X30 10.9 FL BLK 21.5 OD 26MM THD POINTED (CTLTC CONV BR)	94-96	.....	AR	12337993
29.	4-D4	3.690	BRACE, CTLTC CONV	94-95	Y (LT1, ML9)	RH	10219506
	4-D4	3.690	BRACE, CTLTC CONV	94-96	Y (LT1, M30)	RH	10219504
	4-D4	3.690	BRACE, CTLTC CONV	96	Y (LT4, ML9)	RH	10219506
30.	4-D4	3.690	INSULATOR, CTLTC CONV BR ..	94-95	Y (LT1, ML9)	RH	10219846
	4-D4	3.690	INSULATOR, CTLTC CONV BR ..	96	Y (LT4, ML9)	RH	10219846
31.	4-C9	3.616	SHIELD, EXH PIPE HT	94-95	Y (LT1)	LH	10248662
	4-C9	3.616	SHIELD, EXH PIPE HT	96	Y	LH	10248662
32.	4-D3	3.685	CONVERTER, W/UP 3WAY CTLTC (W/EXH MANIF PIPE) (STAMPED XK, SR)	94-95	Y (LT1) (EXC NM8)	RH	25153070
	4-C7	3.609	CONVERTER, W/UP 3WAY CTLTC (W/EXH MANIF PIPE) (STAMPED XK, SR) (3.685)	94-95	Y (LT1) (EXC NM8)	RH	25153070
	4-D3	3.685	CONVERTER, W/UP 3WAY CTLTC (W/EXH MANIF PIPE) (STAMPED XK, SR)	96	Y (LT1, LT4) (EXC NM8, UD6)	RH	25153070
	4-C7	3.609	CONVERTER, W/UP 3WAY CTLTC (W/EXH MANIF PIPE) (STAMPED XK, SR) (3.685)	96	Y (LT1, LT4) (EXC NM8, UD6)	RH	25153070
	4-D3	3.685	CONVERTER, W/UP 3WAY CTLTC (W/EXH MANIF PIPE)	96	Y (LT1, LT4, UD6) (EXC NM8) (EXPORT)	RH	25162780
	4-C7	3.609	CONVERTER, W/UP 3WAY CTLTC (W/EXH MANIF PIPE) (3.685)	96	Y (LT1, LT4, UD6) (EXC NM8) (EXPORT)	RH	25162780

							1Y03-058
	4-D8	3.702	RESONATOR, EXH (W/EXH MANIF PIPE)	94-96	Y (LT1, NM8) (EXPORT)	RH	25144740
	4-D8	3.702	RESONATOR, EXH (W/EXH MANIF PIPE)	96	Y (LT4, NM8) (EXPORT)	RH	25144740
33.	4-N4	2.525	HARNESS, ENG WRG	94	Y (LT1, ML9, C60) (EXC VE1)	1	12141752
	4-N4	2.525	HARNESS, ENG WRG	94	Y (LT1, ML9, C68) (EXC VE1)	1	12141753
	4-N4	2.525	HARNESS, ENG WRG	94	Y (LT1, M30, C60) (EXC VE1)	1	12141754
	4-N4	2.525	HARNESS, ENG WRG	94	Y (LT1, M30, C68) (EXC VE1)	1	12141755
	4-N4	2.525	HARNESS, ENG WRG	95	Y (LT1, ML9, C60) (EXC VE1)	1	12130370
	4-N4	2.525	HARNESS, ENG WRG	95	Y (LT1, M30, C60) (EXC VE1)	1	12130371
	4-N4	2.525	HARNESS, ENG WRG	95	Y (LT1, ML9, C68) (EXC VE1)	1	12130372
	4-N4	2.525	HARNESS, ENG WRG	95	Y (LT1, M30, C68) (EXC VE1)	1	12130373
	4-N4	2.525	HARNESS, ENG WRG	96	Y (ML9, C60) (EXC VE1)	1	12130461
	4-N4	2.525	HARNESS, ENG WRG	96	Y (M30, C60) (EXC VE1)	1	12130462
	4-N4	2.525	HARNESS, ENG WRG	96	Y (ML9, C68) (EXC VE1)	1	12130463
	4-N4	2.525	HARNESS, ENG WRG	96	Y (M30, C68) (EXC VE1)	1	12130464
	4-N4	2.525	HARNESS, ENG WRG	94	Y (LT1, M30, C68, VE1) (EXPORT)	1	12141756
	4-N4	2.525	HARNESS, ENG WRG	94	Y (LT1, ML9, C68, VE1) (EXPORT)	1	12141757
	4-N4	2.525	HARNESS, ENG WRG	95	Y (LT1, M30, C68, VE1) (EXPORT)	1	12130374
	4-N4	2.525	HARNESS, ENG WRG	95	Y (LT1, ML9, C68, VE1) (EXPORT)	1	12130375
	4-N4	2.525	HARNESS, ENG WRG	96	Y (M30, C68, VE1) (EXPORT)	1	12130465

RPO DEFINITIONS

B4H – MODIFICATION–NOISE CONTROL, EXPORT
C60 – AIR CONDITIONER,FRONT,MANUAL CONTROLS
C68 – AIR CONDITIONER,FRONT,AUTOMATIC,ELECTRONIC CONTROLS
LT1 – ENGINE–GAS, 8 CYL, 5.7L(5.7P),MFI,HO
LT4 – ENGINE GAS, 8 CYL, 5.7L, MFI, HIGH OUTPUT
ML9 – TRANSMISSION,MANUAL 6–SPEED
M30 – TRANSMISSION,AUTOMATIC 4 SPEED,4L60E,ELECTRONIC
NM8 – EMISSION SYSTEM,LEADED FUEL(EXPORT)
UD6 – ALARM,EXHAUST TEMPERATURE(EXPORT)
VD1 – PROVISION OPTIONS,EUROPE(EXPORT)
VE1 – PROVISION OPTIONS,JAPAN(EXPORT)

MICROFICHE INDEX

GROUP 3.000

FICHE 4 OF 11

GROUP	DESCRIPTION	STARTING GRID LOCATION PARTS	ILLUSTRATIONS
--	GENERAL INFORMATION	1–A2	1–G2
--	ALPHABETICAL INDEX	1–B13	N.A.
3.000	FUEL TANK – INTAKE MANIFOLD – FUEL INJECTION – THROTTLE BODY – AIR CLEANER – ACCELERATOR	4–A2	4–E2
3.000	EXHAUST & EMISSIONS SYSTEMS – CARBURETOR – CRUISE – FUEL FILTER & PUMP	4–C2	4–H2
--	OUT OF FICHE CALLS	N.A.	4–M9

4–M1

0.683 BOLT – HOUSING – PIN – STUD – WASHER, Engine Clutch Housing [8–CYLINDER]

90	Y 5.7J (LT5), 6–SPD M/TRANS (ML0), FEDERAL EMIS (NA5)	10142011	1	14.35	STUD, CLU HSG (03.275)
90–91	Y M/TRNS	10085606	1	1.65	STUD, FLYWHL HSG (T/W 1052080) (3/8–16X25/32 BOTH ENDS) (03.275)
92–95	Y 5.7P (LT1), 6–SPD M/TRANS (ML0)	14085701	1	23.25	STUD, FLYWHL HSG (3/8–16X1.75/3/8–16X.88 300M) (03.655)
96	Y 5.7 5 (LT4), 6–SPD M/TRANS (ML0)	14085701	1	23.25	STUD, FLYWHL HSG (03.655)

1.055 BOLT – BOLT KIT – BRACKET – BRACKET KIT – CONNECTOR – FAN – FAN KIT – MOTOR KIT – NUT – RELAY – RETAINER – SWITCH, Engine Air Cooling (Electrical)

Note: FOR ADDITIONAL INFORMATION, SEE ELECTRIC COOLING MOTOR AND FAN APPLICATION CHARTS IN THE REFERENCE CATALOG (CODE 88R).

88–89	Y 5.7–8) M/TRNS	14104140	1	1.88	BRACKET, FAN CONT RLY (M.T. O/D SW RELAY)
90–94	Y	14104140	1	1.88	BRACKET, FAN CONT RLY (STEEL) (3.0"X2.0") (76.7MMX51.0MM))
84	Y	14078902	1	16.26	RELAY, FAN CONT (AC–DELCO #15–8218)
85–87	Y	10038311	1	16.26	RELAY, FAN CONT (AC–DELCO #15–8333)
88–94	Y	14089936	2	16.26	RELAY, FAN CONT (5–PIN OVAL SHAPE) (USE W/CONN 15306002) (AC–DELCO #15–8240)
95–96	Y	12193601	1	23.44	RELAY, FAN CONT (BLACK) (5–WAY M) (USED W/CONNECTOR 15306045) (09.277) (AC–DELCO #15–8719)
95–96	Y	12193603	2	20.30	RELAY, FAN CONT (GRAY) (SPST 280 MINI) (4–WAY) (02.100) (AC–DELCO #12193603)
86	Y B4P (2ND DES)	10074160	1	DISCON	RETAINER, ELEC CLG FAN (SPR CLIP RETAINING FAN BLADE) (NO COMPARABLE 1ST DES)
85	Y HVY DUTY CLG (V08)	10074160	1	DISCON	RETAINER, ENG COOL FAN MOT LEAD
87–89	Y B4P	10074160	1	DISCON	RETAINER, ENG COOL FAN MOT LEAD
84–88	Y	20664092	AR	*.40	RETAINER, ENG COOL FAN RLY (PUSH–IN) (01.276)
95–96	Y	12129271	3	.73	RETAINER, FAN CONT RLY (ATCHS TO RELAY CONN)
84	Y	03040674	1	22.44	SWITCH, FAN CONT (1 BUTTON TERM, 3/8–18 THD) (TEMP STMP 108C) (AC–DELCO #15–5403)
85	Y	14043276	1	10.51	SWITCH, FAN CONT (1 BUTTON TERM, 3/8–18 THD) (USED ON VEHS W/TWO SPD CLG FAN) (AC–DELCO #D1852B)
86–89	Y 5.7–8 (L98), FAN (B4P)	14043276	1	10.51	SWITCH, FAN CONT (1 BUTTON TERM, 3/8–18 THD) (USE ON VEHS W/2 SPD CLG FAN) (AC–DELCO #D1852B)

© 2000 GENERAL MOTORS SERVICE PARTS OPERATIONS

1.097 BOLT – BRACKET – HOSE – NUT – PIPE – SEAL, Engine Coolant By-Pass

92–94	Y 5.7P (LT1)	12552074	1	3.95	BOLT, ENG COOL AIR BL PIPE
95–96	Y 5.7P (LT1)	12552074	2	3.95	BOLT, ENG COOL AIR BL PIPE
96	Y 5.7–5 (LT4)	12552074	2	3.95	BOLT, ENG COOL AIR BL PIPE
96	Y 5.7P (LT1)	09442958	3	*1.00	NUT, ENG COOL AIR BL PIPE (3/8–16 PC, 206M) (HEX, FLANGE) (08.017)
96	Y 5.7–5 (LT4)	09442958	3	*1.00	NUT, ENG COOL AIR BL PIPE (3/8–16 PC, 206M) (HEX, FLANGE) (08.017)
90	Y 5.7J (LT5)	10146245	LH	9.35	PIPE, COOLANT AIR BLEED
86–89	Y 5.7–8 (L08)	14087587	1	8.25	PIPE, ENG COOL (INT MANIF VPR PIPE TO HTR OTLT PIPE)
92–94	Y 5.7P (LT1)	10108636	1	39.50	PIPE, ENG COOL AIR BL
95–96	Y 5.7P (LT1)	12556260	1	39.50	PIPE, ENG COOL AIR BL (INCLUDES BOLTS & SEALS)
96	Y 5.7–5 (LT4), 6–SPD M/TRANS (ML9)	12556260	1	39.50	PIPE, ENG COOL AIR BL (INCLUDES BOLTS & SEALS)
92–94	Y 5.7P (LT1)	10108689	2	5.78	SEAL, ENG COOL AIR BL PIPE (O RING)
95–96	Y 5.7P (LT1)	10108689	4	5.78	SEAL, ENG COOL AIR BL PIPE (O RING)
96	Y 5.7–5 (LT4)	10108689	4	5.78	SEAL, ENG COOL AIR BL PIPE (O RING)

1.150 CONNECTOR – SENSOR, Coolant Temperature (Engine Unit)

84	Y	10045847	1	36.58	SENSOR, ENG COOL T/GA ((BUTN OTR & CNTR TERM, 3/8–18 THD) (WHITE) (AC12V STAMPED) (3.682)) (AC–DELCO #213–52)
84–89	Y	25036135	1	34.89	SENSOR, ENG COOL T/GA (1 PLAIN BLADE TERM, 3/8–18 THD) (AC–DELCO #25036135)
90	Y	08993146	1	27.25	SENSOR, ENG COOL T/GA (LOCK BLADE, 3/8–18 THD (MAY ALSO REQ TERM #6288704 TO ENABLE CHANGE FROM BUTTON TO BLADE TERM) (AC–DELCO #D1885)
90–95	Y 5.7J (LT5)	25037346	1	28.54	SENSOR, ENG COOL T/GA (3/8–18 THD, COLLAR BUTTON) (AC–DELCO #213–80)
91	Y 5.7J (LT5)	08993146	1	27.25	SENSOR, ENG COOL T/GA (LOCK BLADE, 3/8–18 THD) (MAY ALSO REQ TERM #6288704 TO ENABLE CHANGE FROM BUTTON TO BLADE TERM) (AC–DELCO #D1885)
91	Y 5.7–8 (L08)	25037346	1	28.54	SENSOR, ENG COOL T/GA (3/8–18 THD, COLLAR BUTTON) (AC–DELCO #213–80)
92–96	Y 5.7P (LT1)	25037332	1	18.82	SENSOR, ENG COOL T/GA (2 BLADE TERM) (3/8–18 THD) (2 TERM, CAN BE USED AS 1 TERM CONN) (AC–DELCO #213–77)
96	Y 5.7–5 (LT4)	25037332	1	18.82	SENSOR, ENG COOL T/GA (2 BLADE TERM) (3/8–18 THD) (2 TERM, CAN BE USED AS 1 TERM CONN) (AC–DELCO #213–77)
86–96	Y	12146312	1	9.10	SENSOR, ENG COOL TEMP (UND PLENUM) (USED FOR CLUSTERS W/OIL GAGE & LGT COMB) (2–WAY M) (03.682) (AC–DELCO #213–310)

© 2000 GENERAL MOTORS SERVICE PARTS OPERATIONS

1.166 CLAMP – GUARD – SUPPORT, Hose (Radiator, Heater, A/C)

84–87	Y	02012781	1	3.70	CLAMP, A/C CMPR & CNDSR HOSE
90–95	Y 5.7J (LT5)	10157996	2	2.00	CLAMP, RAD BYPASS HOSE (08.948)
91	Y 5.7–8 (L98)	21030917	1	4.35	CLAMP, RAD INL HOSE ((37.5MM TO 44.5MM) NOMINAL SIZE 42MM, STAMPED "P") (08.948)
90–94	Y 5.7J (LT5)	10100240	5	1.85	CLAMP, RAD INL HOSE ENG (44MM) (08.948)
92–94	Y 5.7P (LT1)	21030917	1	4.35	CLAMP, RAD INL HOSE ENG ((37.5MM TO 44.5MM) NOMINAL SIZE 42MM, STAMPED "P") (08.948)
90–94	Y	21030894	1	3.05	CLAMP, RAD INL HOSE RAD (47MM)
95	Y 5.7P (LT1)	21030894	1	3.05	CLAMP, RAD INL HOSE RAD (47MM)
96	Y	21030894	1	3.05	CLAMP, RAD INL HOSE RAD (47MM)
90–91	Y 5.7–8 (L98)	21030894	1	3.05	CLAMP, RAD OTLT HOSE ENG (47MM)
91	Y	11516239	1	6.90	CLAMP, RAD OTLT HOSE ENG (LT BROWN) (08.948)
92–94	Y 5.7P (LT1)	21030917	1	4.35	CLAMP, RAD OTLT HOSE ENG ((37.5MM TO 44.5MM) NOMINAL SIZE 42MM, STAMPED "P") (08.948)
90–91	Y 5.7–8 (L98)	10158012	AR	3.05	CLAMP, RAD OTLT HOSE RAD (53MM) (08.948)
90–95	Y 5.7J (LT5)	10158012	AR	3.05	CLAMP, RAD OTLT HOSE RAD (53MM) (08.948)
92–96	Y 5.7P (LT1)	10158012	AR	3.05	CLAMP, RAD OTLT HOSE RAD (53MM) (08.948)
90–94	Y 5.7J (LT5)	11516239	2	6.90	CLAMP, RAD OTLT RR HOSE ENG (51MM) (LT BROWN) (08.948)
90–95	Y 5.7J (LT5)	10019739	1	1.10	CLAMP, SECD AIR INJN CHK VLV HOSE (31.5 TO 36MM) (01.762)
92–93	Y 5.7P (LT1)	22518665	AR	*.93	CLAMP, SECD AIR INJN CHK VLV HOSE (9/16 TO 1 1/16 DIA) (08.948)
84–91	Y	22518665	AR	*.93	CLAMP, WORM TYPE (9/16 TO 1 1/16 DIA) (08.948)

1.745 BOLT – CONNECTOR – COVER – FILTER – GASKET – GROMMET – NIPPLE – SEAL – STRAP – TEE – VALVE, Engine Crankcase

Note: SEE GROUP 2.270 FOR TUNE-UP PARTS CHART

90–95	Y 5.7J (LT5)	10153503	1	3.60	CONNECTOR, PCV VLV (01.762)
92–96	Y 5.7P (LT1)	00336018	1	1.52	CONNECTOR, PCV VLV HOSE (1/4–18 NPTF W/3/8 NIPPLE)
96	Y 5.7–5 (LT4)	00336018	1	1.52	CONNECTOR, PCV VLV HOSE (1/4–18 NPTF W/3/8 NIPPLE)
90–95	Y 5.7J (LT5)	10168603	1	284.90	COVER, PCV VLV (01.762)
90–95	Y 5.7J (LT5)	10135879	2	.22	FILTER, PCV (00.386)
90–95	Y	10168682	1	24.43	GASKET, CYL CASE VENT CVR
85–87	Y	14082445	1	4.70	GROMMET, PCV TUBE
89–91	Y 5.7–8 (L98), FEDERAL EMIS (NA5)	10088198	1	4.70	GROMMET, PCV VLV
90–95	Y 5.7J (LT5)	14078872	2	6.30	GROMMET, PCV VLV (15/32I.D. X 25/32O.D)
92–93	Y 5.7P (LT1)	10207699	1	3.05	GROMMET, PCV VLV (01.762)
94–96	Y 5.7P (LT1)	10240678	1	3.05	GROMMET, PCV VLV (01.762)
96	Y 5.7–5 (LT4)	10240678	1	3.05	GROMMET, PCV VLV (01.762)
84	Y	03989348	1	*1.95	GROMMET, VENT (3/4 IDX1 1/8 OD SQ FLAT)
84–88	Y	03989349	LH	2.65	GROMMET, VENT (3/4 IDX1 1/8 OD SQ RAMPED)
90–95	Y 5.7J (LT5)	10110955	RH	15.20	SEAL, PCV TUBE
84–90	Y	14023108	1	2.80	TEE, INT MANIF PCV HOSE 3–WAY (04.931)

© 2000 GENERAL MOTORS SERVICE PARTS OPERATIONS

1.745 BOLT – CONNECTOR – COVER – FILTER – GASKET – GROMMET – NIPPLE – SEAL – STRAP – TEE – VALVE, Engine Crankcase(Con't)

84	Y 5.7–8 (L83)	25040026	1	*4.59	VALVE, PCV (AC–DELCO #CV853C)
85–88	Y 5.7–8 (L98)	06407770	1	*3.50	VALVE, PCV (AC–DELCO #CV774C)
89–91	Y 5.7–8 (L98)	08996284	1	*5.40	VALVE, PCV (AC–DELCO #CV789C)
90–95	Y 5.7J (LT5)	06407532	LH	*3.50	VALVE, PCV (AC–DELCO #CV769C)
90–95	Y 5.7J (LT5)	25098197	RH	*9.41	VALVE, PCV (AC–DELCO #CV913C)
92–96	Y 5.7P (LT1)	25095452	1	*7.65	VALVE, PCV (CV895C, 1 VACUUM PORT) (AC–DELCO #CV895C)
96	Y 5.7–5 (LT4)	25095452	1	*7.65	VALVE, PCV (CV895C, 1 VACUUM PORT) (AC–DELCO #CV895C)

1.762 BOLT – CLAMP – CONNECTOR – FITTING – GROMMET – HOSE – PIPE – PLUG – STUD – TUBE, Engine Crankcase Ventilation

90–95	Y 5.7J (LT5)	11514119	1	3.10	BOLT, PCV TUBE (M12X1.75X110)
85–87	Y	14082446	1	3.82	CONNECTOR, C/CASE VENT TUBE
88–91	Y 5.7–8 (L98)	10055873	1	3.60	CONNECTOR, PCV HOSE
90–95	Y 5.7J (LT5)	10110946	2	10.10	CONNECTOR, PCV HOSE (TO PLNM) (01.750)
92–96	Y 5.7P (LT1)	12550625	1	*.98	CONNECTOR, PCV HOSE
96	Y 5.7–5 (LT4)	12550625	1	*.98	CONNECTOR, PCV HOSE
90–95	Y 5.7J (LT5)	10110911	1	13.10	CONNECTOR, PCV TUBE (03.305)
84	Y	00366846	1	3.82	CONNECTOR, VENT HOSE (A/CL TO CVR)
88–91	Y 5.7–8 (L98)	14087402	1	3.40	FITTING, PCV
92	Y 5.7P (LT1)	10088198	1	4.70	GROMMET, PCV HOSE CONN (01.745)
93	Y 5.7P (LT1)	10207699	1	3.05	GROMMET, PCV HOSE CONN
94–96	Y 5.7P (LT1)	10240678	1	3.05	GROMMET, PCV HOSE CONN
85–87	Y	14082442	1	11.12	HOSE, CR/CASE VENT VLV
88–91	Y 5.7–8 (L98)	10055872	1	9.28	HOSE, PCV
90–95	Y 5.7J (LT5)	10122196	1	36.72	HOSE, PCV (01.745)
92	Y 5.7P (LT1)	10128365	1	7.14	HOSE, PCV
90–95	Y 5.7J (LT5)	10110950	RH	7.45	HOSE, PCV TUBE
90–95	Y 5.7J (LT5)	10135802	1	6.94	HOSE, PCV TUBE
88–91	Y 5.7–8 (L98)	14088538	1	10.00	HOSE, PCV VLV (TO PCV VLV)
90–95	Y 5.7J (LT5)	10110907	LH	9.28	HOSE, PCV VLV
90–95	Y 5.7J (LT5)	10110908	RH	9.28	HOSE, PCV VLV
90–95	Y 5.7J (LT5)	10174350	1	22.34	HOSE, PCV VLV (W/90 DEGREE CONN)
92–95	Y 5.7P (LT1)	10128361	1	3.62	HOSE, PCV VLV
96	Y 5.7P (LT1)	12551389	1	3.15	HOSE, PCV VLV
96	Y 5.7–5 (LT4)	12551389	1	3.15	HOSE, PCV VLV
90–92	Y 5.7J (LT5)	10110988	1	6.94	HOSE, PORTED PURGE SOL
90	Y 5.7J (LT5)	10110980	1	10.00	HOSE, PURGE & PCV VLV, W/STRAIGHT CONN
84	Y A/TRNS	14045839	1	DISCON	HOSE, VENT
84	Y	14057007	1	10.00	HOSE, VENT TUBE
85	Y	14082449	1	DISCON	PIPE, CR/CASE VENT
86–87	Y	14087569	1	DISCON	PIPE, CR/CASE VENT
85	Y	14080634	1	DISCON	PIPE, CR/CASE VENT VLV
86	Y	14087570	1	DISCON	PIPE, CR/CASE VENT VLV
87	Y	10046142	1	DISCON	PIPE, CR/CASE VENT VLV
90–95	Y 5.7J (LT5)	10146296	RH	29.07	PIPE, PCV VLV (INJ HSG TO PCV VLV) (01.745)
90–95	Y 5.7J (LT5)	10146298	LH	29.07	PIPE, PCV VLV (INJ HSG TO PCV VLV) (01.745)
90–95	Y 5.7J (LT5)	10153501	1	58.17	PIPE, PCV VLV (PCV VALVE PLENUM)
96	Y 5.7P (LT1), 4–SPD A/TRANS (M30)	12556257	1	7.14	PIPE, PCV VLV

© 2000 GENERAL MOTORS SERVICE PARTS OPERATIONS

1.762 BOLT – CLAMP – CONNECTOR – FITTING – GROMMET – HOSE – PIPE – PLUG – STUD – TUBE, Engine Crankcase Ventilation(Con't)

96	Y 5.7–5 (LT4), 6–SPD M/TRANS (ML9)	12556257	1	7.14	PIPE, PCV VLV
90–95	Y 5.7J (LT5)	10110936	2	1.20	STUD, C/BLK VENT VAC RSVR (M6X1.0–THD)
86–87	Y	14087571	1	DISCON	STUD, CR/CASE VENT TUBE (M6X1X25, M6X1X12, TL 43)
86–87	Y	14087572	1	DISCON	STUD, CR/CASE VENT TUBE (M6X1X12, M6X1X12)
90–92	Y 5.7J (LT5)	10110936	1	1.20	STUD, OIL PICKUP PIPE (M6X1.0–THD)
85–87	Y	14087567	1	5.30	TUBE, CR/CASE VENT (01.745)
90–95	Y 5.7J (LT5)	10135804	LH	21.45	TUBE, PCV
90–95	Y 5.7J (LT5)	10135857	RH	21.45	TUBE, PCV
93–96	Y 5.7P (LT1)	12550624	1	4.18	TUBE, PCV
96	Y 5.7–5 (LT4)	12550624	1	4.18	TUBE, PCV

1.800 CONNECTOR – ELBOW – FITTING – RING – SENSOR – SWITCH, Engine Oil Pressure/Temperature

90–91	Y 5.7–8 (L98)	14078987	1	7.52	ELBOW, ENG OIL PRESS GA SEN (TO BLK (105 DEG W/HEX BODY) (01.803)
90–91	Y 5.7–8 (L98)	14078988	1	9.45	ELBOW, ENG OIL PRESS GA SEN (TO BLK) (01.803)
92–96	Y 5.7P (LT1)	14078988	1	9.45	ELBOW, ENG OIL PRESS GA SEN (TO BLK) (01.803) (USED W/1052080, SEALER)
96	Y 5.7–5 (LT4)	14078988	1	9.45	ELBOW, ENG OIL PRESS GA SEN (TO BLK) (01.803) (USED W/1052080, SEALER)
84	Y (2ND DES)	14078988	1	9.45	ELBOW, OIL PRESS GA SEN TO BLK FTG (DOUBLE OUTLET W/HEX BODY) (01.803)
92–96	Y 5.7P (LT1)	10137636	1	8.11	FITTING, ENG OIL PRESS GA SEN
96	Y 5.7–5 (LT4)	10137636	1	8.11	FITTING, ENG OIL PRESS GA SEN
90–95	Y 5.7J (LT5)	10122195	1	10.25	FITTING, ENG OIL TEMP SEN
89	Y FEDERAL EMIS (NA5), (5.7–8)	10096122	2	DISCON	FITTING, F/PMP & ENG OIL PRESS IND SW (01.803)
85–88	Y	14078988	1	9.45	FITTING, OIL PRESS GA SEN TO BLK FTG (01.803)
90–95	Y 5.7J (LT5)	00274843	1	3.70	RING, ENG OIL TEMP CONT VLV RET (08.934)
84	Y 1ST DES	14073454	1	53.40	SENSOR, ENG OIL PRESS GA (3 BLADE TERM, 1/8–27 THD) (AC–DELCO #14073454)
84	Y 2ND DES	14078954	1	33.65	SENSOR, ENG OIL PRESS GA (1 BLADE TERM, 1/8–27 THD) (AC–DELCO #14078954)
85–86	Y	14078954	1	33.65	SENSOR, ENG OIL PRESS GA (1 BLADE TERM, 1/8–27 THD) (AC–DELCO #14078954)
90–95	Y 5.7J (LT5)	12555492	1	32.91	SENSOR, ENG OIL PRESS GA (3 TERMINALS:A, C, D) (AC–DELCO #D1808A)
90–91	Y 5.7–8 (L98)	10096136	1	26.04	SENSOR, ENG OIL T/GA (CHG MON & TEMP GA) (3 BLADE TERM, 1/4–18 THD) (AC–DELCO #10096136)
90–91	Y 5.7J (LT5)	10096136	1	26.04	SENSOR, ENG OIL T/GA (3 BLADE TERM, 1/4–18 THD) (AC–DELCO #10096136)

© 2000 GENERAL MOTORS SERVICE PARTS OPERATIONS

1.800 CONNECTOR – ELBOW – FITTING – RING – SENSOR – SWITCH, Engine Oil Pressure/Temperature(Con't)

92–95	Y 5.7J (LT5)	10096101	1	20.00	SENSOR, ENG OIL T/GA (3 BLADE TERM) (W/IND SW) (03.602) (AC–DELCO #213–815)
92–96	Y 5.7P (LT1)	10096136	1	26.04	SENSOR, ENG OIL T/GA & OIL CHANGE IND (AC–DELCO #10096136)
96	Y 5.7–5 (LT4)	10096136	1	26.04	SENSOR, ENG OIL T/GA & OIL CHANGE IND (AC–DELCO #10096136)
84–88	Y	25036292	1	20.97	SENSOR, ENG OIL TEMP (1 BLADE TERM, 1/4–18 THD) (AC–DELCO #25036292)
89	Y 5.7–8	25036292	1	20.97	SENSOR, ENG OIL TEMP (AC–DELCO #25036292)
89	Y 5.7–8 (L98)	10201491	1	32.12	SENSOR, F/PMP SW & ENG OIL PRESS GA (3 BLADE TERM, 1/8–27 THD) (AC–DELCO #10201491)
90	Y 5.7–8	10201491	1	32.12	SENSOR, F/PMP SW & ENG OIL PRESS GA (3 BLADE TERM, 1/8–27 THD) (AC–DELCO #10201491)
90–91	Y 5.7–8 (L98)	10201491	1	32.12	SENSOR, F/PMP SW & ENG OIL PRESS GA (1/8–27 THD SIZE) (3 BLADE TERM) (AC–DELCO #10201491)
92–96	Y 5.7P (LT1)	10201491	1	32.12	SENSOR, F/PMP SW & ENG OIL PRESS GA (1/8–27 THD SIZE) (3 BLADE TERM) (AC–DELCO #10201491)
96	Y 5.7–5 (LT4)	10201491	1	32.12	SENSOR, F/PMP SW & ENG OIL PRESS GA (1/8–27 THD SIZE) (3 BLADE TERM) (AC–DELCO #10201491)
90–91	Y 5.7–8 (L98)	25036935	1	16.32	SWITCH, ENG OIL PRESS IND (OIL FLTR HSG) (1 BLADE TERM, 1/8–27 THD) (AC–DELCO #D1846)
90–92	Y 5.7J (LT5)	25036935	1	16.32	SWITCH, ENG OIL PRESS IND (OIL FLTR HSG (1 BLADE TERM, 1/8–27 THD)) (AC–DELCO #D1846)
92–96	Y 5.7P (LT1)	25036935	1	16.32	SWITCH, ENG OIL PRESS IND (OIL FLTR HSG (1 BLADE TERM, 1/8–27 THD)) (AC–DELCO #D1846)
93–95	Y 5.7J (LT5)	25036935	1	16.32	SWITCH, ENG OIL PRESS IND (AC–DELCO #D1846)
96	Y 5.7–5 (LT4)	25036935	1	16.32	SWITCH, ENG OIL PRESS IND (OIL FLTR HSG (1 BLADE TERM, 1/8–27 THD)) (AC–DELCO #D1846)
85–87	Y	25036553	2	12.65	SWITCH, OIL PRESS (2 BLADE TERM, 1/8–27 THD) (AC–DELCO #D1818)
88	Y	25036936	1	14.09	SWITCH, OIL PRESS IND (2 BLADE TERM, 1/8–27 THD) (AC–DELCO #D1835)

1.803 FITTING, Engine Oil Pressure Gage

84	Y	14047169	2	9.20	FITTING, OIL PRESS GA
84	Y (1ST DES)	14066510	1	DISCON	FITTING, OIL PRESS GA SEN (1/8–27 NPT 1 EXT 1 INT AT 90 DEG M42 X 25) (SINGLE OUTLET W/SQUARE BODY)

© 2000 GENERAL MOTORS SERVICE PARTS OPERATIONS

1.803 FITTING, Engine Oil Pressure Gage(Con't)

84	Y (1ST DES)	14066511	1	DISCON	FITTING, OIL PRESS GA SEN (1/8-27 1 INT, 1 EXT AT 90 DEG M23 X 21) (90 DEG W/SQUARE BODY)
84	Y (2ND DES)	14078987	1	7.52	FITTING, OIL PRESS GA SEN TO BLK (105 DEG W/HEX BODY)
85-88	Y	14078987	1	7.52	FITTING, OIL PRESS GA SEN TO BLK (105 DEG W/HEX BODY)

2.251 BOLT - CLIP - NUT - RETAINER - SHIELD - STUD - SUPPORT - WASHER, Spark Plug Ignition Wire

92-93	Y 5.7P (LT1)	09439930	8	*.58	BOLT, SPLG WIRE SUPT (08.900)
92-93	Y 5.7P (LT1)	11516100	2	*.70	BOLT, SPLG WIRE SUPT (M8X1.25X16 17.8.9.8PZOR) (08.900)
93-96	Y 5.7P (LT1)	09439930	1	*.58	BOLT, SPLG WIRE SUPT (08.900)
96	Y 5.7-5 (LT4)	09439930	1	*.58	BOLT, SPLG WIRE SUPT (08.900)
85-88	Y	08917256	1	7.10	CLIP, ACCEL CONT CBL
89-90	Y 5.7-8 (L98)	08917256	1	7.10	CLIP, ACCEL CONT CBL
89-91	Y 5.7-8 (L98)	08917256	1	7.10	CLIP, SPLG WIRE (4 LOOM)
90-95	Y 5.7J (LT5)	10135818	2	14.54	CLIP, SPLG WIRE (TO INJ HSG)
85-88	Y	08917256	1	7.10	CLIP, SPLG WIRE 4 LOOM
85-88	Y	12041472	1	3.26	RETAINER, SPLG WIRE (5-WIRE 8MM CBL)
89-91	Y 5.7-8 (L98)	12041472	1	3.26	RETAINER, SPLG WIRE (5-WIRE 8MM CBL)
89-91	Y 5.7-8 (L98)	12043550	6	3.26	RETAINER, SPLG WIRE (4-WIRE)
92-95	Y 5.7P (LT1)	12043158	AR	1.84	RETAINER, SPLG WIRE (W/CVR, 2-WIRE)
92-96	Y 5.7P (LT1)	12059510	1	.88	RETAINER, SPLG WIRE (4-WIRE) (CLIP, LWR)
92-96	Y 5.7P (LT1)	12059514	AR	3.85	RETAINER, SPLG WIRE (UPR) (4-WIRE, BRKT MT, TWO LK PIN TOP)
92-93	Y 5.7P (LT1)	12073948	AR	5.88	RETAINER, SPLG WIRE (4/WIRE) (AC-DELCO #8073)
96	Y 5.7P (LT1), 4-SPD A/TRANS (M30)	12047523	2	.70	RETAINER, SPLG WIRE (RETAINS 3-7MM LEADS, BRKT MT, HINGE STYLE)
96	Y 5.7P (LT1)	12059510	AR	.88	RETAINER, SPLG WIRE (4-WIRE) (CLIP, LWR)
96	Y 5.7P (LT1)	12065767	1	.66	RETAINER, SPLG WIRE (RETAINS 4-7MM LEADS, CROSS SHAPED)
96	Y 5.7P (LT1), 4-SPD A/TRANS (M30)	12073948	RH	5.88	RETAINER, SPLG WIRE (AC-DELCO #8073)
96	Y 5.7P (LT1)	12132229	1	*.88	RETAINER, SPLG WIRE (RETAINS 2-7MM LEADS, HINGE LOCKING CVR, NARROW BLADE MT)
84-86	Y	12004716	1	*11.41	RETAINER, SPLG WIRE TO DIST (4 TO 8 WIRES) (AC-DELCO #12004716)
84-88	Y	12043158	7	1.84	RETAINER, W/COVER, SPLG WIRE (2-WIRE)
84-88	Y	12043550	6	3.26	RETAINER, W/COVER, SPLG WIRE (4-WIRE)
84	Y	52350585	1	1.50	STUD, SPLG WIRE SUPT (3/8-16X1.52 LONG) (02.277)
84-85	Y	14055123	LH	1.22	SUPPORT, SPLG WIRE (TO VLV CVR)
84-85	Y	14055124	RH	1.22	SUPPORT, SPLG WIRE (TO VLV CVR)
84-86	Y	14055125	LH	DISCON	SUPPORT, SPLG WIRE (TO ENG LH OTR)
84-86	Y	14055126	RH	DISCON	SUPPORT, SPLG WIRE (TO ENG RH OTR)

© 2000 GENERAL MOTORS SERVICE PARTS OPERATIONS

2.251 BOLT – CLIP – NUT – RETAINER – SHIELD – STUD – SUPPORT – WASHER, Spark Plug Ignition Wire(Con't)

86	Y CAST IRON HD (KB2)	14101130	1	DISCON	SUPPORT, SPLG WIRE
89–91	Y 5.7–8 (L98)	14087574	RH	3.57	SUPPORT, SPLG WIRE (CYL HD SI RR, USE W/ALUM HDS)
89–91	Y 5.7–8 (L98)	14087575	RH	1.22	SUPPORT, SPLG WIRE (CYL HD SI FRT, USE W/ALUM HDS)
89–91	Y 5.7–8 (L98)	14087576	2	1.22	SUPPORT, SPLG WIRE (LH CYL HD SI, USE W/ALUM HDS)
89–91	Y 5.7–8 (L98)	14087578	RH	2.19	SUPPORT, SPLG WIRE (CYL HD R/END, STRAIGHT)
92–96	Y 5.7P (LT1)	10096185	RH	3.57	SUPPORT, SPLG WIRE
92–96	Y 5.7P (LT1)	10096186	LH	3.57	SUPPORT, SPLG WIRE
92–96	Y 5.7P (LT1)	10137631	1	3.57	SUPPORT, SPLG WIRE
96	Y 5.7–5 (LT4)	10096185	RH	3.57	SUPPORT, SPLG WIRE
96	Y 5.7–5 (LT4)	10096186	LH	3.57	SUPPORT, SPLG WIRE
96	Y 5.7–5 (LT4)	10137631	1	3.57	SUPPORT, SPLG WIRE
86–88	Y	14087578	RH	2.19	SUPPORT, SPLG WIRE CYL HD R/END (STRAIGHT)
86–88	Y	14087575	RH	1.22	SUPPORT, SPLG WIRE CYL HD SI FRT (USE W/ALUM HDS)
86–88	Y	14087574	RH	3.57	SUPPORT, SPLG WIRE CYL HD SI RR (USE W/ALUM HDS)
86–88	Y	14087576	2	1.22	SUPPORT, SPLG WIRE LH CYL HD SI (USE W/ALUM HDS)

2.277 BOLT – BRACE – BRACKET – SHIELD – SPACER, Generator Mounting

92–95	Y 5.7P (LT1)	10105345	1	3.06	BOLT, GEN
96	Y 5.7P (LT1), 5.7–5 (LT4)	10105345	1	3.06	BOLT, GEN
90–95	Y 5.7J (LT5)	10049639	1	3.70	BOLT, GEN BRKT (M10X1.5X100 13HEX) (00.002)
90–95	Y 5.7J (LT5)	11508355	1	.95	BOLT, GEN BRKT (TOP) (M10X1.5X50 10.9 POR) (08.900)
92	Y 5.7P (LT1)	09440073	1	2.25	BOLT, GEN BRKT (HFH 3/8–16X2.00 280M POR 6174M) (08.900)
92–96	Y 5.7P (LT1)	09441560	2	*1.50	BOLT, GEN BRKT (HFH, 3/8–16X1.75, 1.12–THD LEN 0.75–OD, 300M, POR) (3/8–16X1.75, 1.12–THD) (08.900)
91	Y 5.7J (LT5)	11508687	2	1.82	BOLT, GEN BRKT BTM (HEX M8X1.25X20) (08.900) (AC–DELCO #11508687)
95–96	Y	11516523	1	DISCON	BOLT, GEN RR BR (08.900)
84	Y	14063758	1	DISCON	BRACKET, GEN
85	Y	14084384	1	19.84	BRACKET, GEN
86–89	Y	14087519	1	19.43	BRACKET, GEN
90–95	Y 5.7J (LT5)	10067545	1	51.00	BRACKET, GEN (TOP) (02.317)
90–95	Y 5.7J (LT5)	10067686	1	32.39	BRACKET, GEN (BOTTOM)
90–91	Y 5.7–8 (L98)	14087519	1	19.43	BRACKET, GEN
92–95	Y 5.7P (LT1)	12550052	1	77.01	BRACKET, GEN & A/C CMPR & P/S PUMP
93	Y 5.7J (LT5)	12550052	1	77.01	BRACKET, GEN & A/C CMPR & P/S PUMP
96	Y	12550052	1	77.01	BRACKET, GEN & A/C CMPR & P/S PUMP
85–90	Y	14087559	1	43.35	BRACKET, GEN & P/S PUMP
91	Y 5.7–8 (L98)	14087559	1	43.35	BRACKET, GEN & P/S PUMP
85	Y	14085724	1	DISCON	BRACKET, GEN SUP RR
92–96	Y 5.7P (LT1)	10028767	1	1.58	SPACER, GEN

© 2000 GENERAL MOTORS SERVICE PARTS OPERATIONS

2.277 BOLT – BRACE – BRACKET – SHIELD – SPACER, Generator Mounting(Con't)

93	Y 5.7J (LT5)	10028767	1	1.58	SPACER, GEN
96	Y 5.7–5 (LT4), 6–SPD M/TRANS (ML9)	10028767	1	1.58	SPACER, GEN

2.383 BOLT – BRACKET – CONNECTOR – GASKET – HARNESS – HEAT SINK – MODULE – RING – SCREW – SEAL – SENSOR – SHIELD – SHIM – SLEEVE – TERMINAL BLOCK, Distributor (also Knock Sensor)

Note: FOR 1985–1991 USAGE REFER TO DISTRIBUTOR CHART GRP 2.361

92–93	Y 5.7J (LT5)	11508805	1	*.41	BOLT, CM/SHF POSN SEN (HFH M6X1X16 9.8 PCR 14 OD 14MM THD) (08.900)
91–93	Y 5.7J (LT5)	11508805	1	*.41	BOLT, CR/SHF POSN SEN (HFH M6X1X16 9.8 PCR 14 OD 14MM THD) (08.900)
92–93	Y 5.7J (LT5)	11508805	4	*.41	BOLT, CR/SHF POSN SEN (HFH M6X1X16 9.8 PCR 14 OD 14MM THD) (08.900)
96	Y 5.7–5 (LT4)	11508805	1	*.41	BOLT, CR/SHF POSN SEN (HFH M6X1X16 9.8 PCR 14 OD 14MM THD) (08.900)
90–92	Y 5.7J (LT5)	11517518	4	1.85	BOLT, ELEK ICM (HEAVY HEX FLANGE HD) (HFH, M6X1X20, 19 THD, 14.2 OD, 9.8, 6280M, MACH HD PT) (08.900) (AC–DELCO #11517518)
93–95	Y 5.7J (LT5)	11514150	4	7.50	BOLT, ELEK ICM ((6X1X20) (PE 9.8)) (08.900)
93–95	Y	12126487	1	37.29	CONNECTOR, MDL–DISTR IGN CONT (4–WAY F) (W/LEADS) (AC–DELCO #PT757)
94	Y 5.7P (LT1)	12126456	1	55.52	CONNECTOR, MDL–DISTR IGN CONT (1–WAY M, W/LEADS, HIGH TEMP) (01.150) (AC–DELCO #PT727)
90–95	Y 5.7J (LT5)	12101855	1	19.95	CONNECTOR, MDL–ELEK IGN CONT (2–WAY F) (W/LEADS) (W/SEAL) (02.535) (AC–DELCO #PT247)
90–95	Y 5.7J (LT5)	12102776	1	30.66	CONNECTOR, MDL–ELEK IGN CONT (4–WAY F, W/LEADS) (02.170) (AC–DELCO #PT402)
90	Y 5.7J (LT5)	12167116	1	31.13	CONNECTOR, MDL–ELEK IGN CONT (3–WAY F W/LEADS) (AC–DELCO #PT782)
91–95	Y 5.7J (LT5)	12117339	1	26.83	CONNECTOR, MDL–ELEK IGN CONT (3–WAY F) (W/LEADS) (10.150) (AC–DELCO #PT472)
90	Y 5.7J (LT5)	12117025	1	21.82	CONNECTOR, SEN–CM/SHF POSN (AC–DELCO #PT420)
92–95	Y 5.7J (LT5)	12117025	1	21.82	CONNECTOR, SEN–CM/SHF POSN (BLACK) (3–WAY F) (W/LEADS) (AC–DELCO #PT420)
96	Y	12085495	1	26.46	CONNECTOR, SEN–CR/SHF POSN (BLACK) (3–WAY F) (W/LEADS) (02.535) (AC–DELCO #PT117)
91–96	Y	12126453	1	55.52	CONNECTOR, SEN–KNOCK (1–WAY M, W/LEADS, HIGH TEMP) (01.150) (AC–DELCO #PT727)
92	Y 5.7P (LT1)	12106522	1	DISCON	HARNESS, DISTR WRG (02.240)
93	Y 5.7P (LT1)	12106559	1	88.07	HARNESS, DISTR WRG
94	Y 5.7P (LT1), (1ST DES)	12106559	1	88.07	HARNESS, DISTR WRG (DISTR CONN IS APPX 1" LG)

© 2000 GENERAL MOTORS SERVICE PARTS OPERATIONS

2.383 BOLT – BRACKET – CONNECTOR – GASKET – HARNESS – HEAT SINK – MODULE – RING – SCREW – SEAL – SENSOR – SHIELD – SHIM – SLEEVE – TERMINAL BLOCK, Distributor (also Knock Sensor)(Con't)

94	Y 5.7P (LT1), (2ND DES)	12130319	1	38.32	HARNESS, DISTR WRG (DISTR CONN IS APPX 2" LG)
95–96	Y 5.7P (LT1)	12130319	1	38.32	HARNESS, DISTR WRG
96	Y 5.7–5 (LT4)	12130319	1	38.32	HARNESS, DISTR WRG
84–85	Y	10462832	1	67.83	MODULE, DISTR (AC–DELCO #D1961A)
90–95	Y 5.7J (LT5)	01163841	1	748.54	MODULE, DISTR IGN CONT
87–89	YY V8, 5.7L ALL, (350–8)	10462832	AR	67.83	MODULE, ELEK IGN CONT (AC–DELCO #D1961A)
90–91	YY V8, 5.7L ALL, (350–8)	10462827	AR	67.83	MODULE, ELEK IGN CONT (AC–DELCO #D1943A)
90–91	YY V8, 5.7L ALL, CANADIAN, (350–8)	10462832	AR	67.83	MODULE, ELEK IGN CONT (AC–DELCO #D1961A)
92	Y 5.7P (LT1)	10463131	1	124.44	MODULE, ELEK IGN CONT (W/O COIL) (AC–DELCO #D1971A)
93	Y 5.7P (LT1), 4–SPD A/TRANS (MD8), 6–SPD M/TRANS (ML9)	10463131	1	124.44	MODULE, ELEK IGN CONT (W/O COIL) (AC–DELCO #D1971A)
94–96	Y 5.7P (LT1)	10463139	1	96.15	MODULE, ELEK IGN CONT (W/O COIL) (AC–DELCO #D1966A)
96	Y	10462803	1	111.18	MODULE, ELEK IGN CONT (W/O COIL) (AC–DELCO #D579)
90	Y 5.7J (LT5)	16000211	1	70.89	MODULE, ELEK SPARK CONT (AC–DELCO #D1931A)
84–86	Y	16126761	1	84.64	MODULE, KNOCK SEN (AC–DELCO #216–45)
87–89	Y 5.7–8 (L98)	16128261	1	84.64	MODULE, KNOCK SEN (AC–DELCO #216–47)
94–95	Y 5.7P (LT1)	16177690	1	75.48	MODULE, KNOCK SEN (8 PIN MDL PLUGS INTO PCM LIKE A PROM)
96	Y 5.7P (LT1)	16214671	1	50.59	MODULE, KNOCK SEN (PLUGS INTO PCM MDL) (AC–DELCO #216–66)
96	Y 5.7–5 (LT4)	16214681	1	50.59	MODULE, KNOCK SEN (AC–DELCO #216–67)
96	Y 5.7P (LT1), 4–SPD A/TRANS (M30)	10190917	1	6.89	RING, CR/SHF POSN SEN RELUCTOR
96	Y 5.7–5 (LT4), 6–SPD M/TRANS (ML9)	10190917	1	6.89	RING, CR/SHF POSN SEN RELUCTOR
90–94	Y 5.7J (LT5)	01989366	1	*.59	SEAL, CR/SHF POSN SEN (O RING) (02.170) (AC–DELCO #1989866)
96	Y 5.7P (LT1), 4–SPD A/TRANS (M30)	10476885	1	*1.08	SEAL, CR/SHF POSN SEN (O RING) (AC–DELCO #219–194)
96	Y 5.7–5 (LT4)	10476885	1	*1.08	SEAL, CR/SHF POSN SEN (O RING) (AC–DELCO #219–194)
90–95	Y 5.7J (LT5)	10137658	1	205.65	SENSOR, CM/SHF POSN (IF USE IN PLC OF 10096172 MUST ALSO USE 10199080 SHLD) (AC–DELCO #213–141)
90–95	Y 5.7J (LT5)	10457661	1	22.58	SENSOR, CR/SHF POSN (AC–DELCO #213–153)
96	Y 5.7P (LT1), 4–SPD A/TRANS (M30)	10456534	1	62.98	SENSOR, CR/SHF POSN (AC–DELCO #213–314)
96	Y 5.7–5 (LT4), 6–SPD M/TRANS (ML9)	10456534	1	62.98	SENSOR, CR/SHF POSN (AC–DELCO #213–314)
96	Y 5.7P (LT1), 6–SPD M/TRANS (MM6)	10456534	1	62.98	SENSOR, CR/SHF POSN (AC–DELCO #213–314)
84–86	Y	10456287	1	45.12	SENSOR, KNOCK (DR–592 STAMPED) (AC–DELCO #213–32[illegible])

© 2000 GENERAL MOTORS SERVICE PARTS OPERATIONS

2.383 BOLT – BRACKET – CONNECTOR – GASKET – HARNESS – HEAT SINK – MODULE – RING – SCREW – SEAL – SENSOR – SHIELD – SHIM – SLEEVE – TERMINAL BLOCK, Distributor (also Knock Sensor)(Con't)

87–89	Y	10456288	1	46.06	SENSOR, KNOCK (AC–DELCO #213–324)
90	Y 5.7J (LT5)	10456075	1	54.22	SENSOR, KNOCK (AC–DELCO #213–94)
90–91	Y 5.7–8 (L98)	10456649	1	46.18	SENSOR, KNOCK (1 BUTTON TYPE TERM, 1/4–18 THD) (AC–DELCO #213–92)
91–95	Y 5.7J (LT5)	10456207	1	50.59	SENSOR, KNOCK (AC–DELCO #213–266)
92–95	Y 5.7P (LT1)	10456126	2	30.64	SENSOR, KNOCK (AC–DELCO #213–96)
93–96	Y	10456287	1	45.12	SENSOR, KNOCK (AC–DELCO #213–325)
90–91	Y 5.7J (LT5)	10135807	1	7.10	SHIELD, CM/SHF POSN SEN HT (03.320) (AC–DELCO #10135807)
92	Y 5.7J (LT5), (1ST DES)	10135807	1	7.10	SHIELD, CM/SHF POSN SEN HT (03.320) (ID BY 8.0MM CLER RADIUS) (AC–DELCO #10135807)
92	Y 5.7J (LT5), (2ND DES)	10199080	1	8.22	SHIELD, CM/SHF POSN SEN HT (ID BY 9.5MM CLER RADIUS) (AC–DELCO #10199080)
93–95	Y 5.7J (LT5)	10199080	1	8.22	SHIELD, CM/SHF POSN SEN HT (AC–DELCO #10199080)
92	Y 5.7J (LT5)	10168649	1	54.83	SHIELD, CR/SHF POSN SEN
93–95	Y 5.7J (LT5)	10168649	1	54.83	SHIELD, CR/SHF POSN SEN (W/OIL LVL IND TUBE SHLD)
84	Y	10067503	1	DISCON	SHIELD, DISTR
84–88	Y	10096158	1	2.50	SHIELD, ESC KNOCK SEN
89–91	Y 5.7–8 (L98)	10096158	1	2.50	SHIELD, KNOCK SEN
90–95	Y 5.7J (LT5)	10199007	1	68.34	SHIELD, KNOCK SEN
92–95	Y 5.7P (LT1)	10096158	RH	2.50	SHIELD, KNOCK SEN
92–95	Y 5.7P (LT1)	10204240	LH	2.50	SHIELD, KNOCK SEN
96	Y	10096158	RH	2.50	SHIELD, KNOCK SEN
96	Y	10204240	LH	2.50	SHIELD, KNOCK SEN
84	Y	01984382	1	1.69	SHIELD, MODULE (AC–DELCO #1984382)
85–91	Y FOR MDL APPL & POA INFO SEE DISTR CHT	01984382	1	1.69	SHIELD, MODULE (AC–DELCO #1984382)

2.420 HARNESS, Distributor Vacuum Control

95	Y 5.7P (LT1)	12554393	1	12.84	HARNESS, DISTR VAC (INCLS CK VLVS)
96	Y 5.7P (LT1), 5.7–5 (LT4)	12556174	1	12.84	HARNESS, DISTR VAC

2.440 BRACKET – CONNECTOR – COVER, Chassis Electric Diagnostic

84–96	Y	14073479	1	1.63	BRACKET, I/P WRG HARN ECM DATA LINK CONN (DIAG CONN)
84–93	Y	10021766	1	2.24	COVER, I/P WRG HARN DATA LINK CONN

2.447 ACTUATOR – BRACKET – CONNECTOR – NUT – RETAINER – SWITCH, Stop Lamp Switch

84–89	Y	14053686	1	3.72	BRACKET, S/LP SW
90–91	Y	10097689	1	7.55	BRACKET, S/LP SW
92	Y 6–SPD M/TRANS (ML9)	10097689	1	7.55	BRACKET, S/LP SW
92	Y 5.7P (LT1), 3–SPD A/TRANS (MD9)	10097689	1	7.55	BRACKET, S/LP SW

© 2000 GENERAL MOTORS SERVICE PARTS OPERATIONS

2.447 ACTUATOR – BRACKET – CONNECTOR – NUT – RETAINER – SWITCH, Stop Lamp Switch(Con't)

93	Y 5.7P (LT1), 4–SPD A/TRANS (MD8)	10214036	1	7.55	BRACKET, S/LP SW
93–96	Y 6–SPD M/TRANS (ML9)	10214036	1	7.55	BRACKET, S/LP SW
94–96	Y 5.7P (LT1), 4–SPD A/TRANS (M30)	10214036	1	7.55	BRACKET, S/LP SW
84–87	Y	12337995	1	*.46	NUT, S/LP SW ACTR (00.334) (AC–DELCO #12337995)
93–96	Y	10211657	1	24.54	SWITCH, ELEK BRK CONT BRK PED (W/ S/LP SW) (04.710) (AC–DELCO #10211657)
84–86	Y (EXC CRCONT (K34), (M/TRNS)	25524844	1	8.22	SWITCH, S/LP (AC–DELCO #D889)
84–86	Y CRCONT (K34)	25524845	1	13.46	SWITCH, S/LP (AC–DELCO #D850A)
84–86	Y (EXC CRCONT (K34), (A/TRNS)	25524846	1	11.63	SWITCH, S/LP (AC–DELCO #D851A)
87	Y A/TRNS (EXC CRUISE CONT K34)	25529861	1	15.40	SWITCH, S/LP (AC–DELCO #D853A)
87	Y (EXC CRCONT (K34), (M/TRNS)	25529862	1	5.81	SWITCH, S/LP (AC–DELCO #D854A)
89–92	Y	25529860	1	11.69	SWITCH, S/LP (AC–DELCO #D[illegible]2A)
87–88	Y 3–SPD A/TRANS (MD9), (EXC CRCONT (K34)	25523465	1	6.17	SWITCH, S/LP & TCC
87–88	Y CRUISE CONT (K34)	25523463	1	6.94	SWITCH, STOP LP

2.480 BRACKET – CONNECTOR – HARNESS – WIRE, Chassis Wiring

94	Y 4–SPD A/TRANS (M30)	15320479	1	119.63	HARNESS, A/TRNS WRG (AC–DELCO #15320479)
95	Y 4–SPD A/TRANS (M30)	15320477	1	75.73	HARNESS, A/TRNS WRG (INCLS TCC SOLENOID W/TCC DRAINDOWN FEATURE) (AC–DELCO #15320477)
96	Y 4–SPD A/TRANS (M30)	15320476	1	81.04	HARNESS, A/TRNS WRG (INCLS TCC SOL VLV) (AC–DELCO #15320476)
85	Y A/TRNS (MD8)	12048732	1	DISCON	HARNESS, E.C.M.
85	Y M/TRNS (MH5, MK2) W/FED (NA5)	12048733	1	DISCON	HARNESS, E.C.M.
84	Y A/TRNS, FED, CALIF (1ST DES)	12028754	1	DISCON	HARNESS, ELEK CONT MDL WRG (SGL WIRE OIL PRESS SW CONN)
84	Y M/TRNS, FED, CALIF (1ST DES)	12029199	1	DISCON	HARNESS, ELEK CONT MDL WRG (SGL WIRE OIL PRESS SW CONN)
84	Y M/TRNS, FED, CALIF (2ND DES)	12029216	1	DISCON	HARNESS, ELEK CONT MDL WRG (DBL WIRE OIL PRESS SW CONN)
84	Y A/TRNS, FED, CALIF (2ND DES)	12029217	1	DISCON	HARNESS, ELEK CONT MDL WRG (DBL WIRE OIL PRESS SW CONN)
89	Y (5.7–8) A/TRNS, A/C (C68)	12090323	1	1266.25	HARNESS, ENG & ECM (02.525)
86	Y M/TRNS, A/C (C60), FED (NA5) (EXC NM8 EXPORT)	12048815	1	DISCON	HARNESS, ENG & ECM WRG (02.525)
86	Y A/TRNS, A/C (C60) (EXC NM8 EXPORT)	12048817	1	DISCON	HARNESS, ENG & ECM WRG (02.525)
86	Y A/TRNS, A/C (C68) (EXC NM8 EXPORT)	12048818	1	DISCON	HARNESS, ENG & ECM WRG (02.525)
86	Y07 M/TRNS, A/C (C68), FED (NA5) (EXC NM8 EXPORT)	12048816	1	DISCON	HARNESS, ENG & ECM WRG (02.525)
87	Y M/TRNS, A/C (C60)	12067670	1	DISCON	HARNESS, ENG & ECM WRG (02.525)
87	Y M/TRNS, A/C (C68)	12067671	1	DISCON	HARNESS, ENG & ECM WRG (02.525)
87	Y A/TRNS, A/C, FED (NA5) (EXC NM8 EXPORT)	12067672	1	DISCON	HARNESS, ENG & ECM WRG (02.525)
87	Y A/TRNS, A/C (C68), FED (NA5) (EXC NM8 EXPORT)	12067673	1	DISCON	HARNESS, ENG & ECM WRG (02.525)
88	Y A/TRNS, A/C (C60)	12055800	1	DISCON	HARNESS, ENG & ECM WRG (02.525)
88	Y A/TRNS, A/C (C68)	12055809	1	DISCON	HARNESS, ENG & ECM WRG (02.525)
88	Y M/TRNS, A/C (C60)	12080840	1	DISCON	HARNESS, ENG & ECM WRG (02.525)
88	Y M/TRNS, A/C (C68)	12080841	1	DISCON	HARNESS, ENG & ECM WRG (02.525)

© 2000 GENERAL MOTORS SERVICE PARTS OPERATIONS

2.480 BRACKET – CONNECTOR – HARNESS – WIRE, Chassis Wiring(Con't)

89	Y (5.7–8) M/TRNS, A/C (C60) (2ND DES)	12090320	1	1266.25	HARNESS, ENG & ECM WRG (02.525) (ORANGE WIRE IN B–8 CAV OF VATS MDL CONN)
89	Y (5.7–8) M/TRNS, A/C (C60)	12090321	1	1266.25	HARNESS, ENG & ECM WRG (02.525)
89	Y (5.7–8) A/TRNS, A/C (C60) (2ND DES)	12090322	1	1266.25	HARNESS, ENG & ECM WRG (02.525) (ORANGE WIRE IN B–8 CAV OF VATS MDL CONN)
89	Y (5.7J)	12090324	1	1266.25	HARNESS, ENG & ECM WRG (02.525)
91	Y 5.7J (LT6)	12106549	1	26.14	HARNESS, ENG PWR SW WRG (I/P TO VALET MODE SW) (USE W/4 PIN ENG PWR SW CONN)
87–89	Y	12067418	1	DISCON	HARNESS, F/FLR CNSL
84–86	Y	12029153	1	DISCON	HARNESS, FRT FLR CNSL WRG
85	Y (EXC VB4, VD1, VE1, VT7 EXPORT)	12050645	1	DISCON	HARNESS, FWD LP
86	Y (EXC VB4, VD1, VE1, VT7 EXPORT)	12048809	1	DISCON	HARNESS, FWD LP
87	Y (EXC T72, T84 EXPORT)	12067732	1	DISCON	HARNESS, FWD LP
84	Y	12020953	1	DISCON	HARNESS, FWD LP WRG
88	Y (EXC T72, T84 EXPORT)	12073487	1	666.86	HARNESS, FWD LP WRG
89	Y (5.7–8)	12073487	1	666.86	HARNESS, FWD LP WRG
90	Y (5.7–8) (EXC CANADIAN T61)	12073776	1	666.86	HARNESS, FWD LP WRG
90	Y (5.7J) SOFT RIDE SUSP (FE1), H .D .SUSP (EXC CANADIAN T61)	12090331	1	985.50	HARNESS, FWD LP WRG
91	Y 5.7–8 (L98), (EXC DAYTIME RUNNING LGT (T61)	12080863	1	985.50	HARNESS, FWD LP WRG
91	Y 5.7J (LT5), SOFT RIDE SUSP (FE1), HVY DUTY SUSP (FE7), (EXC DAYTIME RUNNING LGT (T61)	12080864	1	666.86	HARNESS, FWD LP WRG
92	Y 5.7P (LT1), (EXC DAYTIME RUNNING LGT (T61)	12090371	1	292.85	HARNESS, FWD LP WRG
92	Y 5.7J (LT5), (EXC DAYTIME RUNNING LGT (T61)	12090372	1	315.14	HARNESS, FWD LP WRG
93	Y 5.7P (LT1), (EXC DIAGNOSTIC SYSTEM (BAK), DAYTIME RUNNING LGT (T61)	12106580	1	816.00	HARNESS, FWD LP WRG
93–94	Y 5.7J (LT5), (EXC DAYTIME RUNNING LGT (T61)	12106583	1	985.50	HARNESS, FWD LP WRG
93	Y 5.7P (LT1), DIAGNOSTIC SYSTEM (BAK), (EXC DAYTIME RUNNING LGT (T61)	12141822	1	292.85	HARNESS, FWD LP WRG
94	Y 5.7P (LT1), (EXC HDLP (T72) (EXPORT), RH RULE OF ROAD HDLP (T84) (EXPORT), LH RULE OF ROAD HDLP (T85) (EXPORT), SIG & MKR LP (T90) (EXPORT)	12130480	1	292.85	HARNESS, FWD LP WRG
94	Y 5.7J (LT5), (EXC HDLP (T72) (EXPORT), RH RULE OF ROAD HDLP (T84) (EXPORT), LH RULE OF ROAD HDLP (T85) (EXPORT), SIG & MKR LP (T90) (EXPORT)	12154336	1	292.85	HARNESS, FWD LP WRG
95	Y 5.7P (LT1), (EXC HDLP (T72) (EXPORT), RH RULE OF ROAD HDLP (T84) (EXPORT), LH RULE OF ROAD HDLP (T85) (EXPORT), SIG & MKR LP (T90) (EXPORT)	12130484	1	292.85	HARNESS, FWD LP WRG

© 2000 GENERAL MOTORS SERVICE PARTS OPERATIONS

2.480 BRACKET – CONNECTOR – HARNESS – WIRE, Chassis Wiring(Con't)

95	Y 5.7J (LT5), (EXC HDLP (T72) (EXPORT), RH RULE OF ROAD HDLP (T84), (EXPORT), LH RULE OF ROAD HDLP (T85) (EXPORT), SIG & MKR LP (T90) (EXPORT) ...	12130486	1	292.85	HARNESS, FWD LP WRG .....
96	Y (EXC HDLP (T72) (EXPORT), RH RULE OF ROAD HDLP (T84) (EXPORT), LH RULE OF ROAD HDLP (T85) (EXPORT), SIG & MKR LP (T90) (EXPORT)	12163717	1	292.85	HARNESS, FWD LP WRG .....
85	Y A/TRNS (MD8), A/C (C60)	12048741	1	DISCON	HARNESS, I/P .....
85	Y M/TRNS (MH5, MK2), A/C (C60) ..	12048742	1	DISCON	HARNESS, I/P .....
86	Y M/TRNS, A/C (C60)	12048793	1	DISCON	HARNESS, I/P .....
86	Y A/TRNS, A/C (C60)	12048794	1	DISCON	HARNESS, I/P .....
86	Y M/TRNS, A/C (C68)	12048795	1	DISCON	HARNESS, I/P .....
86	Y A/TRNS, A/C (C68)	12048796	1	DISCON	HARNESS, I/P .....
87	Y A/TRNS, A/C (C68)	12068102	1	1257.59	HARNESS, I/P .....
87	Y M/TRNS, A/C (C68)	12068103	1	1257.59	HARNESS, I/P .....
87	Y A/TRNS, A/C (C60)	12073820	1	DISCON	HARNESS, I/P .....
84	Y A/TRNS (1ST DES)	12036383	1	DISCON	HARNESS, I/P WRG (BLACK 5–WAY AC CONN W/2 DBL WIRES IN CAVS C & D) .....
84	Y M/TRNS	12043083	1	DISCON	HARNESS, I/P WRG .....
84	Y A/TRNS (2ND DES)	12043276	1	DISCON	HARNESS, I/P WRG (1 DBL WIRE IN CAV D) .....
87	Y M/TRNS (MH5, MK2), A/C (C60) ..	12073821	1	DISCON	HARNESS, I/P WRG .....
88	Y (5.7–8) M/TRNS, A/C (C60)	12073824	1	DISCON	HARNESS, I/P WRG .....
88	Y (5.7–8) A/TRNS, A/C (C60)	12073825	1	DISCON	HARNESS, I/P WRG .....
88	Y (5.7–8) M/TRNS, A/C (C68)	12073826	1	DISCON	HARNESS, I/P WRG .....
88	Y (5.7–8) A/TRNS, A/C (C68)	12073827	1	DISCON	HARNESS, I/P WRG .....
89	Y (5.7–8) ML9, A/C (C60) (1ST DES)	12073507	1	1548.75	HARNESS, I/P WRG (PINK WIRE IN B–8 CAV OF VATS MDL CONN) .....
89	Y (5.7–8) A/TRNS (MD8), A/C (C60) (1ST DES)	12073509	1	1548.75	HARNESS, I/P WRG (PINK WIRE IN B–8 CAV OF VATS MDL CONN) .....
89	Y (5.7–8) M/TRNS (ML9), A/C (C68) (1ST DES)	12073511	1	1548.75	HARNESS, I/P WRG (PINK WIRE IN B–8 CAV OF VATS MDL CONN) .....
89	Y (5.7–8) A/TRNS (MD8), A/C (C68) (1ST DES)	12073513	1	1548.75	HARNESS, I/P WRG (PINK WIRE IN B–8 CAV OF VATS MDL CONN) .....
89	Y (5.7–8) ML9, A/C (C60) (2ND DES)	12090315	1	1548.75	HARNESS, I/P WRG (ORANGE WIRE IN B–8 CAV OF VATS MDL CONN) .....
89	Y (5.7–8) A/TRNS (MD8), A/C (C60) (2ND DES)	12090316	1	1257.59	HARNESS, I/P WRG (ORANGE WIRE IN B–8 CAV OF VATS MDL CONN) .....
89	Y (5.7–8) M/TRNS (ML9), A/C (C68) (2ND DES)	12090318	1	1548.75	HARNESS, I/P WRG (ORANGE WIRE IN B–8 CAV OF VATS MDL CONN) .....
89	Y (5.7–8) A/TRNS (MD8), A/C (C68) (2ND DES)	12090319	1	1266.25	HARNESS, I/P WRG (ORANGE WIRE IN B–8 CAV OF VATS MDL CONN) .....
90	Y M/TRNS (ML9), A/C (C60) (EXC CANADIAN T61)	12101432	1	1239.00	HARNESS, I/P WRG (**VPI 1–877–846–8243) .....
90	Y M/TRNS (ML9), A/C (C68) (EXC CANADIAN T61)	12101434	1	1548.75	HARNESS, I/P WRG .....
90	Y 4–SPD A/TRANS (MD8), A/C MAN CONT (C60), (EXC DAYTIME RUNNING LGT (T61)	12102274	1	1257.59	HARNESS, I/P WRG .....
90	Y A/TRNS (MD8), A/C (C68) (EXC CANADIAN T61)	12102538	1	1257.59	HARNESS, I/P WRG .....
91	Y 4–SPD A/TRANS (MD8), A/C MAN CONT (C60), (EXC DAYTIME RUNNING LGT (T61)	12116436	1	1028.20	HARNESS, I/P WRG .....

© 2000 GENERAL MOTORS SERVICE PARTS OPERATIONS

2.480 BRACKET – CONNECTOR – HARNESS – WIRE, Chassis Wiring(Con't)

01	Y 6–SPD M/TRANS (ML9), A/C MAN CONT (C60), (EXC DAYTIME RUNNING LGT (T61)	12110438	1	1020.20	HARNESS, I/P WRG .....
01	Y 4–SPD A/TRANS (MD8), A/C AUTO ELEC CONT (C68), (EXC DAYTIME RUNNING LGT (T61)	12116500	1	1266.25	HARNESS, I/P WRG (MAY REQ 12106663 WIRE IF JMPR PRESENT AT THE PWR SEAT FEED) .....
01	Y 6–SPD M/TRANS (ML9), A/C AUTO ELEC CONT (C68), (EXC DAYTIME RUNNING LGT (T61)	12116502	1	1020.20	HARNESS, I/P WRG .....
02	Y 4–SPD A/TRANS (MD8), A/C MAN CONT (C60), (EXC DAYTIME RUNNING LGT (T61)	12125005	1	1020.20	HARNESS, I/P WRG .....
02	Y 6–SPD M/TRANS (ML9), A/C MAN CONT (C60), (EXC DAYTIME RUNNING LGT (T61)	12125007	1	1257.59	HARNESS, I/P WRG .....
02	Y 4–SPD A/TRANS (MD8), A/C AUTO ELEC CONT (C68), (EXC DAYTIME RUNNING LGT (T61)	12125013	1	881.59	HARNESS, I/P WRG .....
02	Y 6–SPD M/TRANS (ML9), A/C AUTO ELEC CONT (C68), (EXC DAYTIME RUNNING LGT (T61)	12125015	1	881.59	HARNESS, I/P WRG .....
03	Y 4–SPD A/TRANS (MD8), A/C MAN CONT (C60), (EXC SIG & MKR LP (T90) (EXPORT)	12141443	1	1257.59	HARNESS, I/P WRG .....
03	Y 6–SPD M/TRANS (ML9), A/C AUTO ELEC CONT (C68), (EXC SIG & MKR LP (T90) (EXPORT) ...	12141444	1	1257.59	HARNESS, I/P WRG (FOR VEH –DRL, SPLICE CAV D TO CAV E @ BLUE 8–WAY DRL MDL CONN.) .....
03	Y 6–SPD M/TRANS (ML9), A/C MAN CONT (C60), (EXC SIG & MKR LP (T90) (EXPORT)	12141445	1	1257.59	HARNESS, I/P WRG .....
03	Y 4–SPD A/TRANS (MD8), A/C AUTO ELEC CONT (C68), (EXC SIG & MKR LP (T90) (EXPORT) ...	12141446	1	1257.59	HARNESS, I/P WRG (ON VEHS W/O DAYTIME RUNNING LPS SPLICE CAV D & E WIRES TOGETHER AT BLUE DRL MDL CONN.) .....
94	Y 6–SPD M/TRANS (ML9), A/C MAN CONT (C60), (EXC DAYTIME RUNNING LGT (T61), HDLP (T72) (EXPORT), RH RULE OF ROAD HDLP (T84) (EXPORT), LH RULE OF ROAD HDLP (T85) (EXPORT), SIG & MKR LP (T90) (EXPORT) ...	12130324	1		HARNESS, I/P WRG .....
94	Y 6–SPD M/TRANS (ML9), A/C AUTO ELEC CONT (C68), (EXC DAYTIME RUNNING LGT (T61), HDLP (T72) (EXPORT), RH RULE OF ROAD HDLP (T84) (EXPORT), LH RULE OF ROAD HDLP (T85) (EXPORT), SIG & MKR LP (T90) (EXPORT)	12130326	1	1548.75	HARNESS, I/P WRG .....
94	Y 4–SPD A/TRANS (M30), A/C MAN CONT (C60), (EXC DAYTIME RUNNING LGT (T61), HDLP (T72) (EXPORT), RH RULE OF ROAD HDLP (T84) (EXPORT), LH RULE OF ROAD HDLP (T85) (EXPORT), SIG & MKR LP (T90) (EXPORT), (2ND DES)	12130491	1		HARNESS, I/P WRG .....

© 2000 GENERAL MOTORS SERVICE PARTS OPERATIONS

2.480 BRACKET – CONNECTOR – HARNESS – WIRE, Chassis Wiring(Con't)

94	Y 4–SPD A/TRANS (M30), A/C MAN CONT (C60), DAYTIME RUNNING LGT (T61), (EXC HDLP (T72) (EXPORT), RH RULE OF ROAD HDLP (T84) (EXPORT), LH RULE OF ROAD HDLP (T85) (EXPORT), SIG & MKR LP (T90) (EXPORT) ...	12130402	1		HARNESS, I/P WRG .....
94	Y 4–SPD A/TRANS (M30), A/C AUTO ELEC CONT (C68), (EXC DAYTIME RUNNING LGT (T61), HDLP (T72) (EXPORT), RH RULE OF ROAD HDLP (T84) (EXPORT), LH RULE OF ROAD HDLP (T85) (EXPORT), SIG & MKR LP (T90) (EXPORT)	12130403	1	1488.75	HARNESS, I/P WRG .....
94	Y 4–SPD A/TRANS (M30), A/C AUTO ELEC CONT (C68), DAYTIME RUNNING LGT (T61), (EXC HDLP (T72) (EXPORT), RH RULE OF ROAD HDLP (T84) (EXPORT), LH RULE OF ROAD HDLP (T85) (EXPORT), SIG & MKR LP (T90) (EXPORT)	12130404	1		HARNESS, I/P WRG .....
94	Y 4–SPD A/TRANS (M30), A/C MAN CONT (C60), DAYTIME RUNNING LGT (T61), (EXC HDLP (T72) (EXPORT), RH RULE OF ROAD HDLP (T84) (EXPORT), LH RULE OF ROAD HDLP (T85) (EXPORT), SIG & MKR LP (T90) (EXPORT), (1ST DES)	12141767	1		HARNESS, I/P WRG (TAGGED 0320 OR 0321) (ON VEH W/O DRL, AT 8–WAY BLUE CONN TO DRL MDL SPLICE CAV D & CAV E LEADS TOGETHER.) .....
94	Y 4–SPD A/TRANS (M30), A/C AUTO ELEC CONT (C68), DAYTIME RUNNING LGT (T61), (EXC HDLP (T72) (EXPORT), RH RULE OF ROAD HDLP (T84) (EXPORT), LH RULE OF ROAD HDLP (T85) (EXPORT), SIG & MKR LP (T90) (EXPORT), (1ST DES) ...	12141768	1		HARNESS, I/P WRG (TAGGED 0322 OR 0323) (ON VEH W/DAYTIME RUNNING LGHTS, ADD 8–WAY BLUE CONN TO DAYTIME RUNNING LGHT, SPLICE CAV D & CAV E WIRES TOGETHER) .....
94	Y 6–SPD M/TRANS (ML9), A/C MAN CONT (C60), DAYTIME RUNNING LGT (T61), (EXC HDLP (T72) (EXPORT), RH RULE OF ROAD HDLP (T84) (EXPORT), LH RULE OF ROAD HDLP (T85) (EXPORT), SIG & MKR LP (T90) (EXPORT) ...	12141789	1		HARNESS, I/P WRG .....
94	Y 6–SPD M/TRANS (ML9), A/C AUTO ELEC CONT (C68), DAYTIME RUNNING LGT (T61), (EXC HDLP (T72) (EXPORT), RH RULE OF ROAD HDLP (T84) (EXPORT), LH RULE OF ROAD HDLP (T85) (EXPORT), SIG & MKR LP (T90) (EXPORT)	12141790	1		HARNESS, I/P WRG .....
94	Y 6–SPD M/TRANS (ML9), A/C AUTO ELEC CONT (C68), (EXC HDLP (T72) (EXPORT), RH RULE OF ROAD HDLP (T84) (EXPORT), LH RULE OF ROAD HDLP (T85) (EXPORT), SIG & MKR LP (T90) (EXPORT)	12163703	1	1257.59	HARNESS, I/P WRG .....

© 2000 GENERAL MOTORS SERVICE PARTS OPERATIONS

2.480 BRACKET – CONNECTOR – HARNESS – WIRE, Chassis Wiring(Con't)

95	Y 5.7J (LT5), 6–SPD M/TRANS (ML9), A/C AUTO ELEC CONT (C68), (EXC DAYTIME RUNNING LGT (T61)	12130326	1	1548.75	HARNESS, I/P WRG .....
95	Y 5.7P (LT1), 4–SPD A/TRANS (M30), A/C MAN CONT (C60), DAYTIME RUNNING LGT (T61), (EXC HDLP (T72) (EXPORT), RH RULE OF ROAD HDLP (T84) (EXPORT), LH RULE OF ROAD HDLP (T85) (EXPORT), SIG & MKR LP (T90) (EXPORT)	12130389	1	1424.85	HARNESS, I/P WRG .....
95	Y 5.7P (LT1), 4–SPD A/TRANS (M30), A/C AUTO ELEC CONT (C68), DAYTIME RUNNING LGT (T61), (EXC HDLP (T72) (EXPORT), RH RULE OF ROAD HDLP (T84) (EXPORT), LH RULE OF ROAD HDLP (T85) (EXPORT), SIG & MKR LP (T90) (EXPORT)	12130391	1	1424.85	HARNESS, I/P WRG (SPLICE CAV D & E WIRES @ BLUE DRL MDL CONN FOR VEH W/O DRL.) .....
95	Y 5.7J (LT5), 6–SPD M/TRANS (ML9), A/C AUTO ELEC CONT (C68), DAYTIME RUNNING LGT (T61)	12141790	1		HARNESS, I/P WRG .....
95	Y 5.7P (LT1), 6–SPD M/TRANS (ML9), A/C MAN CONT (C60), (EXC DAYTIME RUNNING LGT (T61), HDLP (T72) (EXPORT), RH RULE OF ROAD HDLP (T84) (EXPORT), LH RULE OF ROAD HDLP (T85) (EXPORT), SIG & MKR LP (T90) (EXPORT)	12163700	1	1548.75	HARNESS, I/P WRG .....
95	Y 5.7P (LT1), 6–SPD M/TRANS (ML9), A/C AUTO ELEC CONT (C68), (EXC DAYTIME RUNNING LGT (T61), HDLP (T72) (EXPORT), RH RULE OF ROAD HDLP (T84) (EXPORT), LH RULE OF ROAD HDLP (T85) (EXPORT), SIG & MKR LP (T90) (EXPORT)	12163702	1	1257.59	HARNESS, I/P WRG .....
95	Y 5.7J (LT5), 6–SPD M/TRANS (ML9), A/C AUTO ELEC CONT (C68)	12163703	1	1257.59	HARNESS, I/P WRG .....
96	Y 4–SPD A/TRANS (M30), A/C MAN CONT (C60), (EXC HDLP (T72) (EXPORT), RH RULE OF ROAD HDLP (T84) (EXPORT), LH RULE OF ROAD HDLP (T85) (EXPORT), SIG & MKR LP (T90) (EXPORT) ...	12130468	1	1548.75	HARNESS, I/P WRG (WHEN USE ON VEH W/O DAYTIME RUN LIGHTS, SPLICE CAV D&E TOGETHER @ BLUE 8–WAY DRL MOD CONN) .....
96	Y 4–SPD A/TRANS (M30), A/C AUTO ELEC CONT (C68), (EXC HDLP (T72) (EXPORT), RH RULE OF ROAD HDLP (T84) (EXPORT), LH RULE OF ROAD HDLP (T85) (EXPORT), SIG & MKR LP (T90) (EXPORT)	12130470	1	1061.69	HARNESS, I/P WRG (WHEN USE ON VEH W/O DAYTIME RUN LIGHTS, SPLICE CAV D&E TOGETHER @ BLUE 8–WAY DRL MOD CONN) .....
96	Y 6–SPD M/TRANS (ML9), A/C MAN CONT (C60), (EXC HDLP (T72) (EXPORT), RH RULE OF ROAD HDLP (T84) (EXPORT), LH RULE OF ROAD HDLP (T85) (EXPORT), SIG & MKR LP (T90) (EXPORT) ...	12130472	1	1257.59	HARNESS, I/P WRG (WHEN USE ON VEH W/O DAYTIME RUN LIGHTS, SPLICE CAV D&E TOGETHER @ BLUE 8–WAY DRL MOD CONN) .....

© 2000 GENERAL MOTORS SERVICE PARTS OPERATIONS

2.480 BRACKET – CONNECTOR – HARNESS – WIRE, Chassis Wiring(Con't)

96	Y 6–SPD M/TRANS (ML9), A/C AUTO ELEC CONT (C68), (EXC HDLP (T72) (EXPORT), RH RULE OF ROAD HDLP (T84) (EXPORT), LH RULE OF ROAD HDLP (T85) (EXPORT), SIG & MKR LP (T90) (EXPORT)	12130474	1	1257.59	HARNESS, I/P WRG (WHEN USE ON VEH W/O DAYTIME RUN LIGHTS, SPLICE CAV D&E TOGETHER @ BLUE 8–WAY DRL MOD CONN) .....
94–01	Y RECL FRT BKT ST (AQ9)	12028999	1	DISCON	HARNESS, I/P WRG HARN EXTN .....
01	Y	12126533	1	DISCON	HARNESS, I/P WRG HARN EXTN (VALET MODE) (USE W/4 PIN ENG PWR SW CONN) .....
92–93	Y RECL FRT BKT ST (AQ9)	12106560	1	47.45	HARNESS, I/P WRG HARN EXTN .....
95–01	Y	12029463	1	25.75	HARNESS, INT AIR TEMP SEN WRG ...
94–95	Y	12028667	1	DISCON	HARNESS, MIR LP WRG .....
	*EXPORT*********EXPORT*********EXPORT*********EXPORT*********EXPORT*********EXPORT*				
94	Y NM6 (EXPORT CANADA) (2ND DES)	12029435	1	DISCON	HARNESS, ELEK CONT MDL (OIL PRESS SW HAS 3 SINGLE WIRES) ..
94	Y NM6 (EXPORT, CANADA) (1ST DES)	12029044	1	DISCON	HARNESS, ELEK CONT MDL WRG (OIL PRESS SW CONN HAS 1 DBL WIRE & 1 SGL WIRE) .....
96	Y M/TRNS, A/C (C60), (NM5) EXPORT, CANADA (EXC NM8 EXPORT)	12048816	1	DISCON	HARNESS, ENG & ECM WRG (02.525) .
96	Y A/TRNS, NM8 (EXPORT)	12048819	1	DISCON	HARNESS, ENG & ECM WRG (02.525) .
96	Y07 M/TRNS, A/C (C68), (NM5) EXPORT, CANADA (EXC NM8 EXPORT)	12048816	1	DISCON	HARNESS, ENG & ECM WRG (02.525) .
97	Y A/TRNS, A/C, NM5 (EXPORT, CANADA) (EXC NM8 EXPORT)	12067672	1	DISCON	HARNESS, ENG & ECM WRG (02.525) .
97	Y A/TRNS, A/C (C68), NM5 (EXPORT, CANADA) (EXC NM8 EXPORT)	12067673	1	DISCON	HARNESS, ENG & ECM WRG (02.525) .
97	Y A/TRNS, NM8 (EXPORT)	12067674	1	DISCON	HARNESS, ENG & ECM WRG (02.525) .
94	Y VB4, VD1, VE1, VT7 (EXPORT) ...	12029218	1	DISCON	HARNESS, FWD LP .....
95	Y VD4, VD1, VE1, VT7 (EXPORT) ...	12050642	1	DISCON	HARNESS, FWD LP .....
96	Y VB4, VD1, VE1, VT7 (EXPORT) ...	12055776	1	DISCON	HARNESS, FWD LP .....
97	Y T72, T84 (EXPORT)	12067734	1	DISCON	HARNESS, FWD LP .....
98	Y T72, T84 (EXPORT)	12055815	1	DISCON	HARNESS, FWD LP WRG .....
90	Y (5.7–8) T61 (CANADIAN)	12090336	1	667.87	HARNESS, FWD LP WRG .....
90	Y (5.7J) T61 (CANADIAN)	12090337	1	987.00	HARNESS, FWD LP WRG .....
91	Y 5.7–8 (L98), DAYTIME RUNNING LGT (T61)	12090346	1	667.87	HARNESS, FWD LP WRG .....
91	Y 5.7J (LT5), DAYTIME RUNNING LGT (T61)	12090347	1	667.87	HARNESS, FWD LP WRG .....
92	Y 5.7P (LT1), DAYTIME RUNNING LGT (T61)	12090373	1	667.87	HARNESS, FWD LP WRG .....
92	Y 5.7J (LT5), DAYTIME RUNNING LGT (T61)	12090374	1	667.87	HARNESS, FWD LP WRG .....
93	Y 5.7P (LT1), DAYTIME RUNNING LGT (T61)	12106581	1	666.86	HARNESS, FWD LP WRG .....
93	Y 5.7J (LT5), DAYTIME RUNNING LGT (T61)	12106582	1	611.03	HARNESS, FWD LP WRG .....
94	Y 5.7P (LT1), HDLP (T72) (EXPORT), RH RULE OF ROAD HDLP (T84) (EXPORT), LH RULE OF ROAD HDLP (T85) (EXPORT), SIG & MKR LP (T90) (EXPORT)	12130481	1		HARNESS, FWD LP WRG .....

© 2000 GENERAL MOTORS SERVICE PARTS OPERATIONS

2.480 BRACKET – CONNECTOR – HARNESS – WIRE, Chassis Wiring(Con't)

94	Y 5.7J (LT5), HDLP (T72) (EXPORT), RH RULE OF ROAD HDLP (T84) (EXPORT), LH RULE OF ROAD HDLP (T85) (EXPORT), SIG & MKR LP (T90) (EXPORT)	12164337	1		HARNESS, FWD LP WRG
95	Y 5.7P (LT1), HDLP (T72) (EXPORT), RH RULE OF ROAD HDLP (T84) (EXPORT), LH RULE OF ROAD HDLP (T85) (EXPORT), SIG & MKR LP (T90) (EXPORT)	12130485	1	292.85	HARNESS, FWD LP WRG
96	Y HDLP (T72) (EXPORT), RH RULE OF ROAD HDLP (T84) (EXPORT), LH RULE OF ROAD HDLP (T85) (EXPORT), SIG & MKR LP (T90) (EXPORT)	12163718	1	272.58	HARNESS, FWD LP WRG
94–96	Y HDLP (T72) (EXPORT), RH RULE OF ROAD HDLP (T84) (EXPORT), LH RULE OF ROAD HDLP (T85) (EXPORT), SIG & MKR LP (T90) (EXPORT)	12130344	2	40.09	HARNESS, FWD LP WRG HARN EXTN
90	Y M/TRNS (ML9), A/C (C60), T61 (CANADIAN)	12101433	1	1266.25	HARNESS, I/P WRG
90	Y M/TRNS (ML9), A/C (C68), T61 (CANADIAN)	12101435	1	1266.25	HARNESS, I/P WRG
90	Y A/TRNS (MD8), A/C (C68), T61 (CANADIAN)	12102273	1	1028.20	HARNESS, I/P WRG
90	Y A/TRNS (MD8), A/C (C60), T61 (CANADIAN)	12102537	1		HARNESS, I/P WRG
91	Y 4–SPD A/TRANS (MD8), A/C MAN CONT (C60), DAYTIME RUNNING LGT (T61)	12116437	1	1028.20	HARNESS, I/P WRG
91	Y 6–SPD M/TRANS (ML9), A/C MAN CONT (C60), DAYTIME RUNNING LGT (T61)	12116439	1	1028.20	HARNESS, I/P WRG
91	Y 4–SPD A/TRANS (MD8), A/C AUTO ELEC CONT (C68), DAYTIME RUNNING LGT (T61)	12116501	1	1028.20	HARNESS, I/P WRG
91	Y 6–SPD M/TRANS (ML9), A/C AUTO ELEC CONT (C68), DAYTIME RUNNING LGT (T61)	12116503	1	1028.20	HARNESS, I/P WRG
92	Y 4–SPD A/TRANS (MD8), A/C MAN CONT (C60), DAYTIME RUNNING LGT (T61)	12125006	1	1028.20	HARNESS, I/P WRG
92	Y 6–SPD M/TRANS (ML9), A/C MAN CONT (C60), DAYTIME RUNNING LGT (T61)	12125008	1	1028.20	HARNESS, I/P WRG
92	Y 4–SPD A/TRANS (MD8), A/C AUTO ELEC CONT (C68), DAYTIME RUNNING LGT (T61)	12125814	1	1028.20	HARNESS, I/P WRG
92	Y 6–SPD M/TRANS (ML9), A/C AUTO ELEC CONT (C68), DAYTIME RUNNING LGT (T61)	12125816	1	1028.20	HARNESS, I/P WRG
93	Y 6–SPD M/TRANS (ML9), A/C AUTO ELEC CONT (C63), SIG & MKR LP (T90) (EXPORT)	12141441	1	1547.50	HARNESS, I/P WRG
93	Y 4–SPD A/TRANS (MD8), A/C AUTO ELEC CONT (C68), SIG & MKR LP (T90) (EXPORT)	12141442	1	1256.57	HARNESS, I/P WRG

© 2000 GENERAL MOTORS SERVICE PARTS OPERATIONS

MICROFICHE INDEX

GROUP 3.000

FICHE 4 OF 11

GROUP	DESCRIPTION	STARTING GRID LOCATION PARTS	ILLUSTRATIONS
--	GENERAL INFORMATION	1-A2	1-G2
--	ALPHABETICAL INDEX	1-B13	N.A.
3.000	FUEL TANK -- INTAKE MANIFOLD -- FUEL INJECTION -- THROTTLE BODY -- AIR CLEANER -- ACCELERATOR	4-A2	4-E2
3.000	EXHAUST & EMISSIONS SYSTEMS -- CARBURETOR -- CRUISE -- FUEL FILTER & PUMP	4-C2	4-H2
--	OUT OF FICHE CALLS	N.A.	4-M0

4-N1

2.480 BRACKET – CONNECTOR – HARNESS – WIRE, Chassis Wiring(Con't)

04	Y 4–SPD A/TRANS (M30), A/C AUTO ELEC CONT (C68), HDLP (T72) (EXPORT), RH RULE OF ROAD HDLP (T84) (EXPORT), LH RULE OF ROAD HDLP (T85) (EXPORT), SIG & MKR LP (T90) (EXPORT)	12130495	1		HARNESS, I/P WRG .....
04	Y 4–SPD A/TRANS (M30), A/C AUTO ELEC CONT (C68), HDLP (T72) (EXPORT), RH RULE OF ROAD HDLP (T84) (EXPORT), LH RULE OF ROAD HDLP (T85) (EXPORT), SIG & MKR LP (T90) (EXPORT), (1ST DES)	12141791	1		HARNESS, I/P WRG (TAGGED 0328) ...
04	Y 6–SPD M/TRANS (ML9), A/C AUTO ELEC CONT (C68), HDLP (T72) (EXPORT), RH RULE OF ROAD HDLP (T84) (EXPORT), LH RULE OF ROAD HDLP (T85) (EXPORT), SIG & MKR LP (T90) (EXPORT)	12141792	1		HARNESS, I/P WRG .....
05	Y 5.7P (LT1), 4–SPD A/TRANS (M30), A/C AUTO ELEC CONT (C68), HDLP (T72) (EXPORT), RH RULE OF ROAD HDLP (T84) (EXPORT), LH RULE OF ROAD HDLP (T85) (EXPORT), SIG & MKR LP (T90) (EXPORT), (EXC DAYTIME RUNNING LGT (T61)	12130396	1	1257.59	HARNESS, I/P WRG .....
05	Y 5.7P (LT1), 6–SPD M/TRANS (ML9), A/C MAN CONT (C60), DAYTIME RUNNING LGT (T61), (EXC HDLP (T72) (EXPORT), RH RULE OF ROAD HDLP (T84) (EXPORT), LH RULE OF ROAD HDLP (T85) (EXPORT), SIG & MKR LP (T90) (EXPORT)	12163701	1	1257.59	HARNESS, I/P WRG .....
05	Y 5.7P (LT1), 6–SPD M/TRANS (ML9), A/C AUTO ELEC CONT (C68), DAYTIME RUNNING LGT (T61), (EXC HDLP (T72) (EXPORT), RH RULE OF ROAD HDLP (T84) (EXPORT), LH RULE OF ROAD HDLP (T85) (EXPORT), SIG & MKR LP (T90) (EXPORT)	12163703	1	1257.59	HARNESS, I/P WRG .....
05	Y 5.7P (LT1), 6–SPD M/TRANS (ML9), A/C AUTO ELEC CONT (C68), HDLP (T72) (EXPORT), RH RULE OF ROAD HDLP (T84) (EXPORT), LH RULE OF ROAD HDLP (T85) (EXPORT), SIG & MKR LP (T90) (EXPORT), (EXC DAYTIME RUNNING LGT (T61)	12163704	1	1257.59	HARNESS, I/P WRG .....

© 2000 GENERAL MOTORS SERVICE PARTS OPERATIONS

2.480 BRACKET – CONNECTOR – HARNESS – WIRE, Chassis Wiring(Con't)

96	Y 4-SPD A/TRANS (M30), A/C AUTO ELEC CONT (C68), HDLP (T72) (EXPORT), RH RULE OF ROAD HDLP (T84) (EXPORT), LH RULE OF ROAD HDLP (T85) (EXPORT), SIG & MKR LP (T90) (EXPORT), (EXC DAYTIME RUNNING LGT (T61)	12130475	1	1257.59	HARNESS, I/P WRG
96	Y 5.7-5 (LT4), 6-SPD M/TRANS (ML9), A/C AUTO ELEC CONT (C68), HDLP (T72) (EXPORT), RH RULE OF ROAD HDLP (T84) (EXPORT), LH RULE OF ROAD HDLP (T85) (EXPORT), SIG & MKR LP (T90) (EXPORT), (EXC DAYTIME RUNNING LGT (T61)	12163715	1	1257.59	HARNESS, I/P WRG

2.483 BLOCK – BRACKET – BREAKER – CLIP – CONNECTOR – COVER – HOUSING – INSULATOR – LABEL – NUT – PULLER – RETAINER – RIVET, Main Wiring Junction and Fuse Block

93	Y	10165399	1	4.34	BRACKET, ENG WRG HARN FUSE BLK (LOCATED BEHIND BATT)
94-95	Y 5.7J (LT5)	10165399	1	4.34	BRACKET, ENG WRG HARN FUSE BLK (LOCATED BEHIND BATT)
94-96	Y 5.7P (LT1)	10252093	1	4.34	BRACKET, ENG WRG HARN FUSE BLK (LOCATED BEHIND BATT)
86-92	Y	14093148	1	DISCON	BRACKET, ENG WRG HARN J/BLK
93-96	Y	10202843	1	4.34	BRACKET, FWD LP WRG HARN FUSE BLK (LOCATED ON WHL/HSE PNL)
84-96	Y	14062568	1	3.72	BRACKET, I/P WRG HARN FUSE BLK
84-85	Y	14062512	1	DISCON	BRACKET, MULTIUSE RLY
90-96	Y	10172488	1	6.58	BRACKET, MULTIUSE RLY (RIGHT BRKT) (4.0", 102.0 MM LG) (PLASTIC)
90-91	Y	10175542	LH	22.29	BRACKET, MULTIUSE RLY (LEFT BRKT) (5.2", 132.0 MM LG) (PLASTIC)
90-93	Y	10240571	1	11.58	BRACKET, MULTIUSE RLY (BLACK) (18.3", 465.0MM LONG) (PLASTIC)
90	Y 5.7J (LT5), A/C MAN CONT (C60)	14104778	1	3.06	BRACKET, MULTIUSE RLY (STEEL) (8.7"X3.5") (220.0MMX88.5MM)
92	Y 5.7P (LT1), 6-SPD M/TRANS (ML9), A/C MAN CONT (C60)	10165350	1	6.58	BRACKET, MULTIUSE RLY (7.4", 188.0 MM LG) (STEEL)
92	Y 5.7J (LT5)	10165350	1	6.58	BRACKET, MULTIUSE RLY (7.4", 188.0 MM LG) (STEEL)
92	Y 5.7P (LT1), 4-SPD A/TRANS (MD8), A/C MAN CONT (C60)	10165387	1	DISCON	BRACKET, MULTIUSE RLY (5.4", 136.0 MM LG) (STEEL)
92-96	Y	10167109	1	11.58	BRACKET, MULTIUSE RLY (5.2", 132 MM LG) (PLASTIC)
92	Y 5.7P (LT1), 6-SPD M/TRANS (ML9), A/C AUTO ELEC CONT (C68)	14104140	1	1.88	BRACKET, MULTIUSE RLY (STEEL) (3.0"X2.0") (76.7MMX51.0MM)) (01.055)
93-95	Y 5.7J (LT5)	10204735	1	6.58	BRACKET, MULTIUSE RLY
93-95	Y 5.7P (LT1), A/C AUTO ELEC CONT (C68)	10214029	1	6.58	BRACKET, MULTIUSE RLY
93-95	Y 5.7P (LT1), A/C MAN CONT (C60)	10214030	1	6.58	BRACKET, MULTIUSE RLY
94-96	Y	10131867	1	11.58	BRACKET, MULTIUSE RLY
96	Y A/C AUTO ELEC CONT (C68)	10214029	1	6.58	BRACKET, MULTIUSE RLY
96	Y A/C MAN CONT (C60)	10214030	1	6.58	BRACKET, MULTIUSE RLY
84-89	Y	14062543	1	DISCON	COVER, F/FLR CNSL COMPT LP
93-96	Y	12077538	2	5.57	COVER, FUSE BLK

© 2000 GENERAL MOTORS SERVICE PARTS OPERATIONS

2.483 BLOCK – BRACKET – BREAKER – CLIP – CONNECTOR – COVER – HOUSING – INSULATOR – LABEL – NUT – PULLER – RETAINER – RIVET, Main Wiring Junction and Fuse Block(Con't)

84–89	Y	14047597	1	7.29	COVER, FUSE BOX ACC HOLE (SCREW LOCK IS PART OF ASM)
90–92	Y	10172478	1	22.38	COVER, I/P FUSE BLK ACC HOLE
93	Y	10221936	1	22.38	COVER, I/P FUSE BLK ACC HOLE
94	Y	10257359	1	10.23	COVER, I/P FUSE BLK ACC HOLE (BLACK)
95	Y	10257359	1	10.23	COVER, I/P FUSE BLK ACC HOLE (BLACK)
96	Y	10280357	1	22.38	COVER, I/P FUSE BLK ACC HOLE (BLACK)
94	Y 4–SPD A/TRANS (M30), A/C MAN CONT (C60), A/C AUTO ELEC CONT (C68)	12077573	1	3.80	COVER, MULTIUSE RLY & FUSE (PART OF HARN) (FROM I/P HARNESS)
95	Y 6–SPD M/TRANS (ML9), A/C MAN CONT (C60), A/C AUTO ELEC CONT (C68)	12077573	1	3.80	COVER, MULTIUSE RLY & FUSE (PART OF HARN) (FROM I/P HARNESS)
96	Y	12077573	1	3.80	COVER, MULTIUSE RLY & FUSE (FROM I/P HARNESS)
84–92	Y	14049066	1	1.05	NUT, I/P FUSE BLK ACC HOLE CVR

2.525 HARNESS, Engine Wiring

86	Y M/TRNS, A/C (C60), FED (NA5) (EXC NM8 EXPORT)	12048815	1	DISCON	HARNESS, ENG & ECM WRG
86	Y A/TRNS, A/C (C60) (EXC NM8 EXPORT)	12048817	1	DISCON	HARNESS, ENG & ECM WRG
86	Y A/TRNS, A/C (C68) (EXC NM8 EXPORT)	12048816	1	DISCON	HARNESS, ENG & ECM WRG
86	Y07 M/TRNS, A/C (C68), FED (NA5) (EXC NM8 EXPORT)	12048816	1	DISCON	HARNESS, ENG & ECM WRG
87	Y M/TRNS, A/C (C60)	12067670	1	DISCON	HARNESS, ENG & ECM WRG
87	Y M/TRNS, A/C (C68)	12067671	1	DISCON	HARNESS, ENG & ECM WRG
87	Y A/TRNS, A/C, FED (NA5) (EXC NM8 EXPORT)	12067672	1	DISCON	HARNESS, ENG & ECM WRG
87	Y A/TRNS, A/C (C68), FED (NA5) (EXC NM8 EXPORT)	12067673	1	DISCON	HARNESS, ENG & ECM WRG
88	Y A/TRNS, A/C (C60)	12055808	1	DISCON	HARNESS, ENG & ECM WRG
88	Y A/TRNS, A/C (C68)	12055809	1	DISCON	HARNESS, ENG & ECM WRG
88	Y M/TRNS, A/C (C60)	12080840	1	DISCON	HARNESS, ENG & ECM WRG
88	Y M/TRNS, A/C (C68)	12080841	1	DISCON	HARNESS, ENG & ECM WRG
89	Y (5.7–8) M/TRNS, A/C (C60) (2ND DES)	12090320	1	1266.25	HARNESS, ENG & ECM WRG (ORANGE WIRE IN B–8 CAV OF VATS MDL CONN)
89	Y (5.7–8) M/TRNS, A/C (C68)	12090321	1	1266.25	HARNESS, ENG & ECM WRG
89	Y (5.7–8) A/TRNS, A/C (C60) (2ND DES)	12090322	1	1265.25	HARNESS, ENG & ECM WRG (ORANGE WIRE IN B–8 CAV OF VATS MDL CONN)
89	Y (5.7–8) A/TRNS, A/C (C68)	12090323	1	1266.25	HARNESS, ENG & ECM WRG
89	Y (5.7J)	12090324	1	1266.25	HARNESS, ENG & ECM WRG
84	Y	12029248	1	DISCON	HARNESS, ENG WRG
85	Y	12029301	1	DISCON	HARNESS, ENG WRG
90	Y 5.7J (LT5), A/C MAN CONT (C60), SOFT RIDE SUSP (FE1), HVY DUTY SUSP (FE7)	12090375	1	1337.50	HARNESS, ENG WRG
90	Y 5.7J (LT5), A/C AUTO ELEC CONT (C68), SOFT RIDE SUSP (FE1), HVY DUTY SUSP (FE7)	12090376	1	1311.25	HARNESS, ENG WRG
90	Y (5.7–8) M/TRNS (ML9), A/C (C60)	12090377	1	1086.05	HARNESS, ENG WRG
90	Y (5.7–8) M/TRNS (ML9), A/C (C68)	12090378	1	1086.05	HARNESS, ENG WRG

© 2000 GENERAL MOTORS SERVICE PARTS OPERATIONS

2.525 HARNESS, Engine Wiring(Con't)

90	Y (5.7–8) A/TRNS (MD8), A/C (C60)	12090379	1	1311.25	HARNESS, ENG WRG
90	Y (5.7–8) A/TRNS (MD8), A/C (C68)	12090380	1	1311.25	HARNESS, ENG WRG
91	Y 5.7–8 (L98), 4–SPD A/TRANS (MD8), A/C MAN CONT (C60)	12080865	1	1086.05	HARNESS, ENG WRG
91	Y 5.7–8 (L98), 6–SPD M/TRANS (ML9), A/C MAN CONT (C60)	12080866	1	1086.05	HARNESS, ENG WRG
91	Y 5.7–8 (L98), 4–SPD A/TRANS (MD8), A/C AUTO ELEC CONT (C68)	12080867	1	1086.05	HARNESS, ENG WRG
91	Y 5.7–8 (L98), 6–SPD M/TRANS (ML9), A/C AUTO ELEC CONT (C68)	12080868	1	1086.05	HARNESS, ENG WRG
91	Y 5.7J (LT5), A/C AUTO ELEC CONT (C68), SOFT RIDE SUSP (FE1), HVY DUTY SUSP (FE7)	12080870	1	1086.05	HARNESS, ENG WRG
92	Y 5.7J (LT5)	12117829	1	1086.05	HARNESS, ENG WRG
92	Y 5.7P (LT1), 4–SPD A/TRANS (MD8), A/C MAN CONT (C60)	12125009	1	1086.05	HARNESS, ENG WRG
92	Y 5.7P (LT1), 6–SPD M/TRANS (ML9), A/C MAN CONT (C60)	12125010	1	1086.05	HARNESS, ENG WRG
92	Y 5.7P (LT1), 4–SPD A/TRANS (MD8), A/C AUTO ELEC CONT (C68)	12125011	1	867.83	HARNESS, ENG WRG
92	Y 5.7P (LT1), 6–SPD M/TRANS (ML9), A/C AUTO ELEC CONT (C68)	12125012	1	1086.05	HARNESS, ENG WRG
93–95	Y 5.7J (LT5)	12141078	1	1086.05	HARNESS, ENG WRG
93	Y 5.7P (LT1), 6–SPD M/TRANS (ML9), A/C MAN CONT (C60)	12154081	1		HARNESS, ENG WRG
93	Y 5.7P (LT1), 6–SPD M/TRANS (ML9), A/C AUTO ELEC CONT (C68)	12154082	1	3054.14	HARNESS, ENG WRG
93	Y 5.7P (LT1), 4–SPD A/TRANS (MD8), A/C MAN CONT (C60)	12154083	1	1086.05	HARNESS, ENG WRG
93	Y 5.7P (LT1), 4–SPD A/TRANS (MD8), A/C AUTO ELEC CONT (C68)	12154084	1	1086.05	HARNESS, ENG WRG
94	Y 5.7P (LT1), 6–SPD M/TRANS (ML9), A/C MAN CONT (C60), (EXC VE1 (EXPORT)	1214.752	1	1086.05	HARNESS, ENG WRG
94	Y 5.7P (LT1), 6–SPD M/TRANS (ML9), A/C AUTO ELEC CONT (C68), (EXC VE1 (EXPORT)	12141753	1	1337.50	HARNESS, ENG WRG
94	Y 5.7P (LT1), 4–SPD A/TRANS (M30), A/C MAN CONT (C60), (EXC VE1 (EXPORT)	12141754	1	1086.05	HARNESS, ENG WRG
94	Y 5.7P (LT1), 4–SPD A/TRANS (M30), A/C AUTO ELEC CONT (C68), (EXC VE1 (EXPORT)	12141755	1	1068.75	HARNESS, ENG WRG
95	Y 5.7P (LT1), 6–SPD M/TRANS (ML9), A/C MAN CONT (C60), (EXC VE1 (EXPORT)	12130370	1	1337.50	HARNESS, ENG WRG
95	Y 5.7P (LT1), 4–SPD A/TRANS (M30), A/C MAN CONT (C60), (EXC VE1 (EXPORT)	12130371	1	1086.05	HARNESS, ENG WRG
95	Y 5.7P (LT1), 6–SPD M/TRANS (ML9), A/C AUTO ELEC CONT (C68), (EXC VE1 (EXPORT)	12130372	1	1086.05	HARNESS, ENG WRG
95	Y 5.7P (LT1), 4–SPD A/TRANS (M30), A/C AUTO ELEC CONT (C68), (EXC VE1 (EXPORT)	12130373	1	1068.75	HARNESS, ENG WRG

© 2000 GENERAL MOTORS SERVICE PARTS OPERATIONS

2.525 HARNESS, Engine Wiring(Con't)

96	Y 6-SPD M/TRANS (ML9), A/C MAN CONT (C60), (EXC VE1 (EXPORT) .	12130461	1	1337.50	HARNESS, ENG WRG .....
96	Y 4-SPD A/TRANS (M30), A/C MAN CONT (C60), (EXC VE1 (EXPORT) .	12130462	1	1086.05	HARNESS, ENG WRG .....
96	Y 6-SPD M/TRANS (ML9), A/C AUTO ELEC CONT (C68), (EXC VE1 (EXPORT)	12130463	1	1337.50	HARNESS, ENG WRG .....
96	Y 4-SPD A/TRANS (M30), A/C AUTO ELEC CONT (C68), (EXC VE1 (EXPORT)	12130464	1	842.45	HARNESS, ENG WRG .....
86-91	Y	12048806	1	DISCON	HARNESS, ENG WRG HARN EXTN (WSW PUMP JPR) .....
	*EXPORT**********EXPORT**********EXPORT**********EXPORT**********EXPORT*				
86	Y M/TRNS, A/C (C60), (NM5) EXPORT, CANADA (EXC NM8 EXPORT)	12048815	1	DISCON	HARNESS, ENG & ECM WRG .....
86	Y A/TRNS, NM8 (EXPORT)	12048819	1	DISCON	HARNESS, ENG & ECM WRG .....
86	Y07 M/TRNS, A/C (C68), (NM5) EXPORT, CANADA (EXC NM8 EXPORT)	12048816	1	DISCON	HARNESS, ENG & ECM WRG .....
87	Y A/TRNS, A/C, NM5 (EXPORT, CANADA) (EXC NM8 EXPORT)	12067672	1	DISCON	HARNESS, ENG & ECM WRG .....
87	Y A/TRNS, A/C (C68), NM5 (EXPORT, CANADA) (EXC NM8 EXPORT)	12067673	1	DISCON	HARNESS, ENG & ECM WRG .....
87	Y A/TRNS, NM8 (EXPORT)	12067674	1	DISCON	HARNESS, ENG & ECM WRG .....
94	Y 5.7P (LT1), 4-SPD A/TRANS (M30), A/C AUTO ELEC CONT (C68), VE1 (EXPORT)	12141756	1	851.59	HARNESS, ENG WRG .....
94	Y 5.7P (LT1), 6-SPD M/TRANS (ML9), A/C AUTO ELEC CONT (C68), VE1 (EXPORT)	12141757	1	1064.74	HARNESS, ENG WRG .....
95	Y 5.7P (LT1), 4-SPD A/TRANS (M30), A/C AUTO ELEC CONT (C68), VE1 (EXPORT)	12130374	1	867.83	HARNESS, ENG WRG .....
95	Y 5.7P (LT1), 6-SPD M/TRANS (ML9), A/C AUTO ELEC CONT (C68), VE1 (EXPORT)	12130375	1	1086.05	HARNESS, ENG WRG .....
96	Y 4-SPD A/TRANS (M30), A/C AUTO ELEC CONT (C68), VE1 (EXPORT)	12130465	1	867.83	HARNESS, ENG WRG .....

2.530 BOOT - CONDUIT - CONNECTOR - COVER - INSULATOR - LOCK - PLUG - PROTECTOR - SEAL - TERMINAL, Chassis Electrical

Note: FOR ILLUSTRATION ON TERMINALS AND CONNECTORS SEE STANDARD PARTS BOOK GRP 8.965

84-96	Y	10098907	2	12.55	CONDUIT, S/D WRG .....
87-93	Y	12101857	1	18.70	CONNECTOR, AIR DVTR VLV WRG (WHITE) (2-WAY F, W/LEADS) (02.535) (AC-DELCO #PT249) .....
93	Y 5.7P (LT1)	15306045	1	28.78	CONNECTOR, AIR SW VLV (W/LEADS) (TWO 12GA AND THREE 14GA WIRES) (08.855) (AC-DELCO #PT1205) .....
94	Y 5.7P (LT1)	12117025	1	21.82	CONNECTOR, AIR SW VLV (W/LEADS) (BLACK) (3-WAY F) (W/LEADS) (02.383) (AC-DELCO #PT420) .....
90	Y 4-SPD A/TRANS (MD8), 6-SPD M/TRANS (ML9)	12116930	1	29.89	CONNECTOR, DIODE NETWORK (W/LEADS) (02.535) (AC-DELCO #PT418) .....

© 2000 GENERAL MOTORS SERVICE PARTS OPERATIONS

2.530 BOOT – CONDUIT – CONNECTOR – COVER – INSULATOR – LOCK – PLUG – PROTECTOR – SEAL – TERMINAL, Chassis Electrical(Con't)

90–91	Y07 STEREO CASSETTE (UM6), CASSETTE STEREO (UU8), CASSETTE/CD PLAYER (U1F)	12116930	1	29.89	CONNECTOR, DIODE NETWORK (4–WAY FEMALE EDGE BOARD) (W/LEADS) (02.535) (AC–DELCO #PT418) .....
91–95	Y	12116930	1	29.89	CONNECTOR, DIODE NETWORK (4–WAY FEMALE EDGE BOARD) (W/LEADS) (02.535) (AC–DELCO #PT418) .....
92	Y STEREO CASSETTE (UM6), CASSETTE STEREO (UU8), CASSETTE/CD PLAYER (U1F)	12116930	1	29.89	CONNECTOR, DIODE NETWORK (4–WAY FEMALE EDGE BOARD) (W/LEADS) (02.535) (AC–DELCO #PT418) .....
93	Y07	12069433	1	94.88	CONNECTOR, DIODE NETWORK (02.342) (AC–DELCO #4SW37FS) ...
90–91	Y 5.7–8 (L98)	12101910	1	35.81	CONNECTOR, DISTR (BLACK) (4–WAY F) (W/LEADS) (02.535) (AC–DELCO #PT182) .....
93	Y	15305942	1	36.08	CONNECTOR, DISTR (W/LEADS) (4–WAY F, W/LEADS) (02.383) (AC–DELCO #PT1174) .....
95–96	Y 5.7P (LT1)	12129619	1	2.79	CONNECTOR, DISTR (4–WAY F, W/O LEADS) .....
96	Y 5.7–5 (LT4)	12129619	1	2.79	CONNECTOR, DISTR (4–WAY F, W/O LEADS) .....
90–93	Y	12101918	1	27.21	CONNECTOR, I/P WRG HARN DATA LINK CONN BYPASS (12–WAY F) (W/LEADS) (02.535) (AC–DELCO #PT190) .....
91	Y 5.7–8 (L98)	12126446	1	60.39	CONNECTOR, INLINE–FUSE (2–WAY F, W/LEADS & COVER) (02.535) .....
92–93	Y 5.7J (LT5)	12126446	1	60.39	CONNECTOR, INLINE–FUSE (2–WAY F, W/LEADS & COVER) (02.535) .....
92–95	Y ELEK RIDE & HANDLING (FX3) ..	12092249	2	2.44	CONNECTOR, INLINE–TO CHAS HARN (23–WAY F) (W/LEADS) .....
92	Y	12116445	1	DISCON	CONNECTOR, INLINE–TO CHAS HARN (W/LEADS) .....
92–95	Y 5.7J (LT5)	12117271	1	57.63	CONNECTOR, INLINE–TO CHAS HARN (WHITE) (8–WAY F) (W/LEADS) (02.535) (AC–DELCO #PT444) .....
93	Y	12101853	1	19.29	CONNECTOR, INLINE–TO CHAS HARN (2–WAY M, W/LEADS, USED T/W 15300591) (02.535) (AC–DELCO #PT245) .....
93	Y 5.7P (LT1)	12117271	1	57.63	CONNECTOR, INLINE–TO CHAS HARN (WHITE) (8–WAY F) (W/LEADS) (02.535) (AC–DELCO #PT444) .....
94–95	Y	12092248	1	1.73	CONNECTOR, INLINE–TO CHAS HARN (23–WAY M) (W/O LEADS) ....
95	Y	12101953	1	19.29	CONNECTOR, INLINE–TO CHAS HARN (2–WAY M, W/LEADS, USED T/W 15300591) (02.535) (AC–DELCO #PT245) .....
94–96	Y	12117363	1	17.87	CONNECTOR, INLINE–TO COR LP (3–WAY F) (02.895) (AC–DELCO #PT496) .....

© 2000 GENERAL MOTORS SERVICE PARTS OPERATIONS

2.530 BOOT – CONDUIT – CONNECTOR – COVER – INSULATOR – LOCK – PLUG – PROTECTOR – SEAL – TERMINAL, Chassis Electrical(Con't)

02	Y 5.7P (LT1), 4–SPD A/TRANS (MD8), 6–SPD M/TRANS (ML9), A/C MAN CONT (C60), A/C AUTO ELEC CONT (C68)	12101854	1	43.66	CONNECTOR, INLINE–TO DISTR HARN (6–WAY F) (W/LEADS) (02.535) (AC–DELCO #PT246) .....
03	Y 5.7P (LT1)	12085537	2	31.88	CONNECTOR, INLINE–TO DISTR HARN (4–WAY F) (W/LEADS) (02.535) (AC–DELCO #PT147) .....
03–04	Y	12085537	2	31.88	CONNECTOR, INLINE–TO ELEK IGN (4–WAY F) (W/LEADS) (02.535) (AC–DELCO #PT147) .....
96	Y	12085537	2	31.88	CONNECTOR, INLINE–TO ELEK IGN (4–WAY F) (W/LEADS) (02.535) (AC–DELCO #PT147) .....
96	Y CHASSIS, REALTIME DAMPING (F45)	12117025	4	21.82	CONNECTOR, INLINE–TO ELEK SUSP POSN SEN (BLACK) (3–WAY F) (W/LEADS) (02.383) (AC–DELCO #PT420) .....
90	Y 5.7J (LT5), SOFT RIDE SUSP (FE1), HVY DUTY SUSP (FE7), (EXC DAYTIME RUNNING LGT (T61)	12085509	1	48.33	CONNECTOR, INLINE–TO ENG HARN (6–WAY F, W/LEADS) (02.535) (AC–DELCO #PT130) .....
90	Y 4–SPD A/TRANS (MD8), 6–SPD M/TRANS (ML9)	12101762	1	68.40	CONNECTOR, INLINE–TO ENG HARN (10–WAY F, W/LEADS) (02.535) (AC–DELCO #PT150) .....
90–96	Y	12101823	1	49.04	CONNECTOR, INLINE–TO ENG HARN (10–WAY M) (W/LEADS) (02.535) (AC–DELCO #PT215) .....
90	Y 5.7–8 (L98)	12101910	1	35.81	CONNECTOR, INLINE–TO ENG HARN (4–WAY F, W/LEADS) (02.535) (AC–DELCO #PT182) .....
90	Y 6–SPD M/TRANS (ML9), A/C MAN CONT (C60)	12125674	1	35.57	CONNECTOR, INLINE–TO ENG HARN (8–WAY M, W/LEADS) (AC–DELCO #PT586) .....
90	Y 6–SPD M/TRANS (ML9), A/C AUTO ELEC CONT (C68), SOFT RIDE SUSP (FE1), HVY DUTY SUSP (FE7), (EXC DAYTIME RUNNING LGT (T61)	12125674	1	35.57	CONNECTOR, INLINE–TO ENG HARN (8–WAY M, W/LEADS) (AC–DELCO #PT586) .....
90	Y 4–SPD A/TRANS (MD8), A/C MAN CONT (C60), A/C AUTO ELEC CONT (C68)	12125674	1	35.57	CONNECTOR, INLINE–TO ENG HARN (8–WAY M, W/LEADS) (AC–DELCO #PT586) .....
91	Y 6–SPD M/TRANS (ML9), A/C MAN CONT (C60), A/C AUTO ELEC CONT (C68)	12085481	1	17.56	CONNECTOR, INLINE–TO ENG HARN (BLACK) (2–WAY M) (W/LEADS) (02.535) (AC–DELCO #PT103) .....
91	Y 5.7J (LT5), SOFT RIDE SUSP (FE1), HVY DUTY SUSP (FE7), (EXC DAYTIME RUNNING LGT (T61)	12085509	1	48.33	CONNECTOR, INLINE–TO ENG HARN (6–WAY F) (W/LEADS) (02.535) (AC–DELCO #PT130) .....
91–93	Y 4–SPD A/TRANS (MD8), 6–SPD M/TRANS (ML9), A/C MAN CONT (C60), A/C AUTO ELEC CONT (C68)	12101762	1	68.40	CONNECTOR, INLINE–TO ENG HARN (10–WAY F) (W/LEADS) (02.535) (AC–DELCO #PT150) .....
91	Y 4–SPD A/TRANS (MD8), 6–SPD M/TRANS (ML9), A/C MAN CONT (C60), A/C AUTO ELEC CONT (C68)	12125674	1	35.57	CONNECTOR, INLINE–TO ENG HARN (8–WAY M) (W/LEADS) (AC–DELCO #PT586) .....
92–96	Y	12101832	1	45.10	CONNECTOR, INLINE–TO ENG HARN (BLUE) (10–WAY F, W/LEADS) (02.535) (AC–DELCO #PT224) .....

© 2000 GENERAL MOTORS SERVICE PARTS OPERATIONS

2.530 BOOT – CONDUIT – CONNECTOR – COVER – INSULATOR – LOCK – PLUG – PROTECTOR · SEAL – TERMINAL, Chassis Electrical(Con't)

92–94	Y	1210 854	1	43.66	CONNECTOR, INLINE–TO ENG HARN (6–WAY F) (W/LEADS) (02.535) (AC–DELCO #PT246)
92	Y	12116 '5	1	DISCON	CONNECTOR, INLINE–TO ENG HARN (W/LEADS)
92–96	Y	12117270	1	54.65	CONNECTOR, INLINE–TO ENG HARN (8–WAY M, W/LEADS) (AC–DELCO #PT443)
93–95	Y	12101855	1	19.95	CONNECTOR, INLINE–TO ENG HARN (2–WAY F) (W/LEADS) (W/SEAL) (02.535) (AC–DELCO #PT247)
94–96	Y 6–SPD M/TRANS (ML9)	12092248	1	1.73	CONNECTOR, INLINE–TO ENG HARN (23–WAY M) (W/O LEADS)
94–95	Y	12101853	1	19.29	CONNECTOR, INLINE–TO ENG HARN (2–WAY M, W/LEADS, USED T/W 15300591) (02.535) (AC–DELCO #PT245)
95	Y 5.7J (LT5)	12117270	1	54.65	CONNECTOR, INLINE–TO ENG HARN (8–WAY M, W/LEADS) (AC–DELCO #PT443)
95–96	Y 5.7P (LT1)	12126023	1	48.08	CONNECTOR, INLINE–TO ENG HARN (4–WAY M, W/LEADS) (AC–DELCO #PT654)
96	Y 4–SPD A/TRANS (M30)	12092248	1	1.73	CONNECTOR, INLINE–TO ENG HARN (23–WAY M) (W/O LEADS)
96	Y	12101854	1	43.66	CONNECTOR, INLINE–TO ENG HARN (6–WAY F) (W/LEADS) (02.535) (AC–DELCO #PT246)
90	Y	12058688	1	DISCON	CONNECTOR, INLINE –TO ENG HARN, ECM HARN (CRT MONITOR COAXIAL LEAD–IN) (32 PIN) (JUNC 2) (02.535)
90	Y 5.7J (LT5), A/C MAN CONT (C60), SOFT RIDE SUSP (FE1), HVY DUTY SUSP (FE7), A/C AUTO ELEC CONT (C68)	12085491	AR	16.87	CONNECTOR, INLINE–TO F/INJR HARN (W/LEADS) (02.535) (AC–DELCO #PT113)
90–91	Y 5.7–8 (L98), 6–SPD M/TRANS (ML9), 4–SPD A/TRANS (MD8), A/C MAN CONT (C60), A/C AUTO ELEC CONT (C68)	12085491	AR	16.87	CONNECTOR, INLINE–TO F/INJR HARN (2–WAY F) (W/LEADS) (02.535) (AC–DELCO #PT113)
90–91	Y 5.7–8 (L98), 4–SPD A/TRANS (MD8), 6–SPD M/TRANS (ML9), A/C MAN CONT (C60), A/C AUTO ELEC CONT (C68)	12085534	1	32.61	CONNECTOR, INLINE–TO FWD LP HARN (4–WAY, W/LEADS) (02.535) (AC–DELCO #PT145)
91–96	Y	02935810	2	.70	CONNECTOR, INLINE–TO FWD LP HARN (3–WAY F, W/O LEADS)
91	Y 5.7J (LT5), A/C AUTO ELEC CONT (C68), SOFT RIDE SUSP (FE1), HVY DUTY SUSP (FE7)	12101892	1	47.82	CONNECTOR, INLINE–TO FWD LP HARN (W/LEADS) (02.535) (AC–DELCO #PT162)
91–96	Y	12117367	2	24.98	CONNECTOR, INLINE–TO FWD LP HARN (3–WAY F) (W/LEADS, 59 SERIES) (AC–DELCO #PT500)
92–96	Y	12101852	1	39.24	CONNECTOR, INLINE–TO FWD LP HARN (6–WAY M) (W/LEADS) (02.535) (AC–DELCO #PT244)
94	Y	12102747	2	21.07	CONNECTOR, INLINE–TO HTD OXY SEN (BLACK) (2–WAY F) (W/LEADS) (03.670) (AC–DELCO #PT374)

© 2000 GENERAL MOTORS SERVICE PARTS OPERATIONS

2.530 BOOT – CONDUIT – CONNECTOR – COVER – INSULATOR – LOCK – PLUG – PROTECTOR – SEAL – TERMINAL, Chassis Electrical(Con't)

90–96	Y	12101762	1	68.40	CONNECTOR, INLINE–TO I/P HARN (10–WAY F) (W/LEADS) (02.535) (AC–DELCO #PT160)
90	Y 5.7J (LT5), A/C MAN CONT (C60), A/C AUTO ELEC CONT (C68), SOFT RIDE SUSP (FE1), HVY DUTY SUSP (FE7)	12101823	1	49.04	CONNECTOR, INLINE–TO I/P HARN (10–WAY M, W/LEADS) (02.535) (AC–DELCO #PT215)
90–91	Y 5.7–8 (L98), 4–SPD A/TRANS (MD8), 6–SPD M/TRANS (ML9), A/C MAN CONT (C60), A/C AUTO ELEC CONT (C68)	12101823	1	49.04	CONNECTOR, INLINE–TO I/P HARN (10–WAY M) (W/LEADS) (02.535) (AC–DELCO #PT215)
90	Y STEREO CASSETTE (UM6), CASSETTE STEREO (UU8), CASSETTE/CD PLAYER (U1F)	12126015	1	28.45	CONNECTOR, INLINE–TO I/P HARN (4–WAY M, W/LEADS) (AC–DELCO #PT646)
90–92	Y67 STEREO CASSETTE (UM6), CASSETTE STEREO (UU8), CASSETTE/CD PLAYER (U1F)	12101823	1	49.04	CONNECTOR, INLINE–TO I/P HARN (10–WAY M) (W/LEADS) (02.535) (AC–DELCO #PT215)
91	Y 5.7J (LT5), A/C AUTO ELEC CONT (C68), SOFT RIDE SUSP (FE1), HVY DUTY SUSP (FE7)	12085535	1	17.46	CONNECTOR, INLINE–TO I/P HARN (2–WAY F) (W/LEADS) (HAS INDEX TAB @ OUTER EDGE OF CAVITY B) (02.535) (AC–DELCO #PT146)
91–95	Y	12101822	1	32.35	CONNECTOR, INLINE–TO I/P HARN (GRAY) (8–WAY F) (W/LEADS) (02.535) (AC–DELCO #PT214)
91	Y 5.7J (LT5), A/C AUTO ELEC CONT (C68), SOFT RIDE SUSP (FE1), HVY DUTY SUSP (FE7)	12101823	1	49.04	CONNECTOR, INLINE–TO I/P HARN (10–WAY M) (W/LEADS) (02.535) (AC–DELCO #PT215)
91	Y	12116926	1	61.00	CONNECTOR, INLINE–TO I/P HARN (PART OF SIR SUB HARN) (8–WAY F) (14.865) (AC–DELCO #PT415)
91–92	Y07 STEREO CASSETTE (UM6), CASSETTE STEREO (UU8), CASSETTE/CD PLAYER (U1F)	12126015	1	28.45	CONNECTOR, INLINE–TO I/P HARN (4–WAY M) (W/LEADS) (AC–DELCO #PT646)
92–96	Y	12092249	2	2.44	CONNECTOR, INLINE–TO I/P HARN (23–WAY F) (W/LEADS)
93–96	Y	12092248	1	1.73	CONNECTOR, INLINE–TO I/P HARN (23–WAY M) (W/O LEADS)
93–96	Y	12101823	1	49.04	CONNECTOR, INLINE–TO I/P HARN (10–WAY M) (W/LEADS) (02.535) (AC–DELCO #PT215)
93	Y	12101836	1	17.46	CONNECTOR, INLINE–TO I/P HARN (2–WAY M, W/LEADS) (02.535) (AC–DELCO #PT228)
93–96	Y	12103188	1	1.82	CONNECTOR, INLINE–TO I/P HARN (BLUE) (10–WAY M, W/O LEADS)
94	Y	12117371	1	13.24	CONNECTOR, INLINE–TO I/P HARN (3–WAY M) (W/LEADS) (AC–DELCO #PT504)
95–96	Y RECL FRT BKT ST (AQ9)	12117371	1	13.24	CONNECTOR, INLINE–TO I/P HARN (3–WAY M) (W/LEADS) (AC–DELCO #PT504)
94	Y 6–SPD M/TRANS (ML9)	12065803	1	2.20	CONNECTOR, INLINE–TO INST CSTR (34–WAY F) (09.735)
90–95	Y	12085481	1	17.56	CONNECTOR, INLINE–TO STRG COL HARN (BLACK) (2–WAY M) (W/LEADS) (02.535) (AC–DELCO #PT103)

© 2000 GENERAL MOTORS SERVICE PARTS OPERATIONS

2.530 BOOT – CONDUIT – CONNECTOR – COVER – INSULATOR – LOCK – PLUG – PROTECTOR – SEAL – TERMINAL, Chassis Electrical(Con't)

91–95	Y 5.7J (LT5)	12101899	1	17.95	CONNECTOR, INLINE–TO STRG COL HARN (FEM METRI–PACK, PULL TO ST) (BLACK) (2–WAY F) (W/LEADS) (02.383) (AC–DELCO #PT169)
90–95	Y	12102756	1	38.31	CONNECTOR, INLINE–TO T/SIG SW (TO STRG COL) (11–WAY F) (AC–DELCO #PT386)
93	Y 4–SPD A/TRANS (M30)	12102633	1	18.27	CONNECTOR, INLINE–TO TRANS (5–WAY F, W/LEADS) (09.652) (AC–DELCO #12102633)
93–94	Y 5.7P (LT1)	15306045	1	28.78	CONNECTOR, INLINE–TO TRANS (4TH & 6TH GR/RLY) (TWO 12GA AND THREE 14GA WIRES) (08.855) (AC–DELCO #PT1205)
94	Y	12126459	1	61.55	CONNECTOR, INLINE–TO TRANS (12–WAY F, W/LEADS) (AC–DELCO #PT729)
96	Y 4–SPD A/TRANS (M30)	12160492	1	5.56	CONNECTOR, INLINE–TO TRANS (13–WAY F, W/O LEADS)
96	Y 4–SPD A/TRANS (M30)	12160782	1	4.66	CONNECTOR, INLINE–TO TRANS (20–WAY M)
90	Y 5.7J (LT5), SOFT RIDE SUSP (FE1), HVY DUTY SUSP (FE7), (EXC DAYTIME RUNNING LGT (T61)	12126032	1	15.88	CONNECTOR, INLINE–TO VAC PUMP HARN (W/LEADS) (02.575) (AC–DELCO #PT663)
90	Y 5.7J (LT5), DAYTIME RUNNING LGT (T61)	12126032	1	15.88	CONNECTOR, INLINE–TO VAC PUMP HARN (W/LEADS) (02.575) (AC–DELCO #PT663)
90–94	Y	12117379	1	29.43	CONNECTOR, PARK/NEU POSN SW WRG HARN (6 CAV F) (04.054) (AC–DELCO #PT512)
90–94	Y	12101864	1	17.62	CONNECTOR, PWR FEED HARN (BLACK) (3–WAY F) (W/LEADS) (02.535) (AC–DELCO #PT256)
96	Y	15305875	1		CONNECTOR, RLY–BLO MOT LOW SPD (5–WAY F) (W/LEADS & RELAY) (08.855) (AC–DELCO #PT1016)
96	Y	15306045	1	28.78	CONNECTOR, RLY–BLO MOT LOW SPD (TWO 12GA AND THREE 14GA WIRES) (08.855) (AC–DELCO #PT1205)
96	Y 4–SPD A/TRANS (M30)	12162201	1	.56	CONNECTOR, SOL–A SHFT VLV (NATURAL) (2–WAY F) (W/O LEADS)
90	Y	10098903	1	11.82	COVER, ENG WRG HARN ECM CONN (02.525)
91	Y 5.7J (LT5)	10098903	1	11.82	COVER, ENG WRG HARN ECM CONN (02.525)
91	Y 5.7–8 (L98)	12064802	1	10.29	COVER, ENG WRG HARN ECM CONN
92–93	Y	12064802	1	10.29	COVER, ENG WRG HARN ECM CONN
94–95	Y 5.7J (LT5)	12064802	1	10.29	COVER, ENG WRG HARN ECM CONN
84–93	Y	10054241	1	*1.82	SEAL, A/TRNS WRG CONN (O RING) (.687 I.D. X .1" THK) (04.338) (AC–DELCO #10054241)
94	Y 5.7P (LT1), 4–SPD A/TRANS (M30), 2.59R (GM1), 3.07R (G44)	10054241	1	*1.82	SEAL, A/TRNS WRG CONN (O RING) (.687 I.D. X .1" THK) (04.338) (AC–DELCO #10054241)
	*EXPORT**********EXPORT**********EXPORT**********EXPORT**********EXPORT*				
96	Y SIG & MKR LP (T90) (EXPORT)	12101823	1	49.04	CONNECTOR, INLINE–TO ELEK BRK MDL (10–WAY M) (W/LEADS) (02.535) (AC–DELCO #PT215)

© 2000 GENERAL MOTORS SERVICE PARTS OPERATIONS

2.530 BOOT – CONDUIT – CONNECTOR – COVER – INSULATOR – LOCK – PLUG – PROTECTOR – SEAL – TERMINAL, Chassis Electrical(Con't)

90	Y 5.7J (LT5), DAYTIME RUNNING LGT (T61)	12085509	1	48.33	CONNECTOR, INLINE–TO ENG HARN (6–WAY F, W/LEADS) (02.535) (AC–DELCO #PT130)
90	Y 6–SPD M/TRANS (ML9), A/C AUTO ELEC CONT (C68), DAYTIME RUNNING LGT (T61)	12125674	1	35.57	CONNECTOR, INLINE–TO ENG HARN (8–WAY M, W/LEADS) (AC–DELCO #PT586)
91	Y 5.7J (LT5), DAYTIME RUNNING LGT (T61)	12085509	1	48.33	CONNECTOR, INLINE–TO ENG HARN (6–WAY F) (W/LEADS) (02.535) (AC–DELCO #PT130)
94–95	Y07 SIG & MKR LP (T90) (EXPORT)	12084203	1	4.74	CONNECTOR, INLINE–TO F/PMP (4–WAY M) (03.107)
94–96	Y HDLP (T72) (EXPORT), RH RULE OF ROAD HDLP (T84) (EXPORT), LH RULE OF ROAD HDLP (T85) (EXPORT), SIG & MKR LP (T90) (EXPORT)	12085537	2	31.68	CONNECTOR, INLINE–TO FWD LP HARN (4–WAY F) (W/LEADS) (02.535) (AC–DELCO #PT147)
90	Y 4–SPD A/TRANS (MD8), A/C MAN CONT (C60), DAYTIME RUNNING LGT (T61)	12167138	1	15.40	CONNECTOR, INLINE–TO I/P HARN (W/LEADS) (02.485) (AC–DELCO #LS71)

2.559 BOLT – BRACKET – CLIP – COVER – INSULATOR – PLATE – RETAINER – SHIELD – SPACER – STRAP – STUD – WASHER, Chassis/Engine Wiring Harness

84–89	Y 5.7–8	14062552	1	1.12	BRACKET, ECM WRG HARN
90–91	Y 5.7–8 (L98)	14062552	1	1.12	BRACKET, ECM WRG HARN
84	Y	14066570	2	DISCON	BRACKET, ELEC CONT MDL HARN (TO ENG HD CVR)
84	Y	14057560	1	DISCON	BRACKET, ENG WRG HARN (TO CASE)
84–91	Y	14062511	AR	2.04	BRACKET, ENG WRG HARN (R/SI RR)
84–85	Y	14062552	1	1.12	BRACKET, ENG WRG HARN (TO OIL PAN)
84–88	Y	14062599	AR	.68	BRACKET, ENG WRG HARN (ABOVE LH ENG MT)
84–88	Y	14073493	1	2.04	BRACKET, ENG WRG HARN (L/SI RR)
85–87	Y	14100810	1	DISCON	BRACKET, ENG WRG HARN (RH SI INT MANIF)
89–91	Y 5.7–8 (L98)	14062599	AR	.68	BRACKET, ENG WRG HARN (ABOVE LH ENG MT)
89–91	Y 5.7–8 (L98), 4–SPD A/TRANS (MD8)	14073493	1	2.04	BRACKET, ENG WRG HARN (L/SI RR)
89	Y M/TRNS	14104953	1	DISCON	BRACKET, ENG WRG HARN (L/SI RR)
90	Y 5.7J (LT5), A/C MAN CONT (C60), A/C AUTO ELEC CONT (C68), SOFT RIDE SUSP (FE1), HVY DUTY SUSP (FE7)	14104749	1	2.04	BRACKET, ENG WRG HARN (ALUM, LOC AT RR OF ENG)
90–91	Y 5.7J (LT5)	14104938	1	35.45	BRACKET, ENG WRG HARN (AT OXY & KNOCK SEN CABLES) (STEEL) (LWR LH SI OF BLK NEAR OIL PAN)
91–95	Y 5.7J (LT5)	14104749	1	2.04	BRACKET, ENG WRG HARN (ALUM, LOC AT RR OF ENG)
91–92	Y 5.7J (LT5)	14104941	1	12.90	BRACKET, ENG WRG HARN (TO OIL PAN) (03.682)
91	Y 5.7–8 (L98)	15664822	1	1.05	BRACKET, ENG WRG HARN (01.166)
92–95	Y 5.7J (LT5)	10098912	1	12.90	BRACKET, ENG WRG HARN (03.682)
92–95	Y 5.7P (LT1)	12553341	4	1.12	BRACKET, ENG WRG HARN
92–95	Y 5.7J (LT5)	14104938	1	35.45	BRACKET, ENG WRG HARN (STEEL) (LWR LH SI OF BLK NEAR OIL PAN)

© 2000 GENERAL MOTORS SERVICE PARTS OPERATIONS

2.559 BOLT – BRACKET – CLIP – COVER – INSULATOR – PLATE – RETAINER – SHIELD – SPACER – STRAP – STUD – WASHER, Chassis/Engine Wiring Harness(Con't)

96	Y	12553341	5	1.12	BRACKET, ENG WRG HARN (POS#RH–3, 6, 8, LH–6, 7)
89	Y A/C MAN CONT (C60), A/C AUTO ELEC CONT (C68), SOFT RIDE SUSP (FE1), HVY DUTY SUSP (FE7)	14104961	1	11.32	BRACKET, ENG WRG HARN SHLD
90–91	Y 5.7J (LT5), A/C MAN CONT (C60), A/C AUTO ELEC CONT (C68), SOFT RIDE SUSP (FE1), HVY DUTY SUSP (FE7)	14104961	1	11.32	BRACKET, ENG WRG HARN SHLD
92–95	Y 5.7J (LT5)	14104961	1	11.32	BRACKET, ENG WRG HARN SHLD
84–86	Y	14066531	LH	DISCON	BRACKET, FWD LP WRG HARN (TO FRT BPR IMPACT BAR)
84–86	Y	14066532	RH	DISCON	BRACKET, FWD LP WRG HARN (TO FRT BPR IMPACT BAR)
84–90	Y	14091207	LH	7.55	BRACKET, FWD LP WRG HARN (TO REINFORCEMENT OTR)
84–89	Y	14091208	RH	7.55	BRACKET, FWD LP WRG HARN (TO REINFORCEMENT OTR)
90	Y SOFT RIDE SUSP (FE1), H .D .SUSP (FE7)	14091208	RH	7.55	BRACKET, FWD LP WRG HARN (TO REINFORCEMENT OTR)
84–86	Y	14062523	1	DISCON	BRACKET, I/P WRG HARN
90–93	Y	10165378	1	DISCON	BRACKET, I/P WRG HARN
94–96	Y	10251214	1	6.03	BRACKET, I/P WRG HARN
84–96	Y	14066583	2	3.26	BRACKET, I/P WRG HARN DR LEAD
84–88	Y M/TRNS	14081179	1	DISCON	BRACKET, TBI HARNESS CLIP
88–89	Y A/C (C68)	09798835	1	1.20	CLIP, A .C. DA WIRE TO EVAP HSNG
84–93	Y 4–SPD A/TRANS (MD8)	08673068	2	1.82	CLIP, A/TRNS WRG HARN (04.197) (AC–DELCO #8673068)
90–91	Y 5.7J (LT5), A/C MAN CONT (C60), A/C AUTO ELEC CONT (C68), SOFT RIDE SUSP (FE1), HVY DUTY SUSP (FE7)	14104936	1	.94	CLIP, ENG WRG HARN (2 HOLES) (FRT CVR CYL CASE)
90–95	Y 5.7J (LT5)	14104937	1	.94	CLIP, ENG WRG HARN (1 HOLE) (OIL FILTER HSG)
92–95	Y 5.7J (LT5)	14104936	1	.94	CLIP, ENG WRG HARN (2 HOLES) (FRT CVR CYL CASE)
93–95	Y 5.7P (LT1)	01864022	1	.77	CLIP, ENG WRG HARN (1/2 DIA HARD STL)
93–94	Y 5.7P (LT1)	01864022	1	.77	CLIP, FWD LP WRG HARN (1/2 DIA HARD STL)
93–94	Y	03816659	AR	*.87	CLIP, FWD LP WRG HARN (/' ADJ, W/ROSEBUD FOR .25 DIA HOLE .031–.14 TH) (08.965) (STRAP)
94	Y 5.7J (LT5)	01864022	1	.77	CLIP, FWD LP WRG HARN (1/2 DIA HARD STL)
85	Y	09798835	1	1.20	CLIP, I/P WRG HARN
93–94	Y	01839906	1	*.13	CLIP, I/P WRG HARN (LARGE 3–5 WIRE) (08.965) (AC–DELCO #1839906)
93	Y	01864022	1	.77	CLIP, I/P WRG HARN (1/2 DIA HARD STL)
92–93	Y RECL FRT BKT ST (AQ9)	01864022	1	.77	CLIP, I/P WRG HARN EXTN HARN (1/2 DIA HARD STL)
94–95	Y	01864022	1	.77	CLIP, WRG HARN (BRK PRESS MOD VLV) (1/2 DIA HARD STL)
86–96	Y	14090618	1	7.05	PLATE, ECM WRG HARN GROM RET STUD (03.675)

© 2000 GENERAL MOTORS SERVICE PARTS OPERATIONS

2.559 BOLT – BRACKET – CLIP – COVER – INSULATOR – PLATE – RETAINER – SHIELD – SPACER – STRAP – STUD – WASHER, Chassis/Engine Wiring Harness(Con't)

92–96	Y	10086254	1	3.37	PLATE, ELEK BRK CONT WRG HARN GROM MT
90–96	Y	10086254	1	3.37	PLATE, ENG WRG HARN GROM BKG
84–87	Y	00480534	AR	*.84	RETAINER, PNL HOLE (DIA.250, THK .03–.30) (11.419)
93	Y 5.7P (LT1), 6–SPD M/TRANS (ML9), DIAGNOSTIC SYSTEM (BAK), A/C MAN CONT (C60)	12129021	4	1.52	RETAINER, ECM WRG HARN (BLACK) (32–WAY F)
93	Y 5.7P (LT1), 6–SPD M/TRANS (ML9), DIAGNOSTIC SYSTEM (BAK), A/C MAN CONT (C60)	12129022	4	1.52	RETAINER, ECM WRG HARN (CLEAR) (USE W/32–WAY CONN)
93	Y 5.7P (LT1), 6–SPD M/TRANS (ML9), DIAGNOSTIC SYSTEM (BAK), A/C MAN CONT (C60)	12129023	4	1.52	RETAINER, ECM WRG HARN (BLUE) (USE W/32–WAY CONN)
94	Y 5.7P (LT1)	12129021	4	1.52	RETAINER, ECM WRG HARN (BLACK) (32–WAY F)
94	Y 5.7P (LT1)	12129022	4	1.52	RETAINER, ECM WRG HARN (CLEAR) (USE W/32–WAY CONN)
94	Y 5.7P (LT1)	12129023	4	1.52	RETAINER, ECM WRG HARN (BLUE) (USE W/32–WAY CONN)
89–91	Y	12020833	1	*.73	RETAINER, ECM WRG HARN CONN (GRAY) (1" LONG) (PUSH–IN)
94–96	Y	12129030	2	2.50	RETAINER, ECM WRG HARN CONN (GRAY) (STRAIN RELIEF)
96	Y	12129021	4	1.52	RETAINER, ECM WRG HARN CONN (BLACK) (32–WAY F)
96	Y	12129022	4	1.52	RETAINER, ECM WRG HARN CONN (CLEAR) (USE W/32–WAY CONN)
96	Y	12129023	4	1.52	RETAINER, ECM WRG HARN CONN (BLUE) (USE W/32–WAY CONN)
96	Y	12129024	3	2.50	RETAINER, ECM WRG HARN CONN (RED) (USE W/32–WAY CONN)
96	Y	12129028	2	2.50	RETAINER, ECM WRG HARN CONN (GRAY) (32–WAY)
84–88	Y	14066575	1	DISCON	RETAINER, ENG WRG HARN
89–91	Y 5.7–8 (L98)	14104541	1	4.13	RETAINER, ENG WRG HARN
92–95	Y 5.7P (LT1)	14104541	1	4.13	RETAINER, ENG WRG HARN
96	Y	14104541	1	4.13	RETAINER, ENG WRG HARN
90–91	Y	12077996	1	.52	RETAINER, F/INJR WRG HARN CONN (02.535)
84	Y 5.7–8 (L83)	08917236	1	1.45	RETAINER, OXY SEN CONN
85–91	Y 5.7–8 (L98)	08917236	1	1.45	RETAINER, OXY SEN CONN
92–94	Y 5.7P (LT1), (EXC LEADED FUEL EMIS EXPORT (NM8)	08917236	1	1.45	RETAINER, OXY SEN CONN

2.587 BRACKET – HINGE – NUT – SPACER – SPRING, Parking, Turn Signal & Cornering Lamp

91–96	Y	10153676	2	2.30	HINGE, FRT PARK & T/SIG & FOG LP
84–90	Y	14049171	2	1.43	HINGE, PK, T/SIG AND FOG LP

2.729 INSULATOR – NUT, Capsule/Headlamp Trim

84–85	Y	14013246	AR	*1.10	NUT (M4.2 DIA SCR M7.8 DIA RND HOLE)
84–90	Y	00347047	AR	*1.00	NUT, SPL ANC (NYLON) (SQUARE HOLE) (01.267)

© 2000 GENERAL MOTORS SERVICE PARTS OPERATIONS

2.726 INSULATOR – NUT, Capsule/Headlamp Trim(Con't)

*EXPORT***************EXPORT***************EXPORT***************EXPORT***************EXPORT*

94–96	Y HDLP (T72) (EXPORT), RH RULE OF ROAD HDLP (T84) (EXPORT), LH RULE OF ROAD HDLP (T85) (EXPORT)	00347347	2	*1.00	NUT, HDLP BZL (UPLEVEL) (01.267)

2.897 LEVER, Turn Signal Control

90–93	Y	25140558	1	108.71	LEVER, T/SIG & HDLP D/SW & CRCONT ACTR (AC–DELCO #25140558)
94–96	Y	25140540	1	114.54	LEVER, T/SIG & HDLP D/SW & CRCONT ACTR (AC–DELCO #25140540)
84–87	Y CRCONT (K34)	25111318	1	114.54	LEVER, T/SIG & HDLP DIMR SW & CRCONT (AC–DELCO # 25111318)
88–89	Y	25111318	1	114.54	LEVER, T/SIG & HDLP DIMR SW & CRCONT (AC–DELCO #25111318)
84–87	Y (EXC CRUISE)	14047150	1	11.78	LEVER, T/SIG AND HDLP DIM/SW

4.461 BODY – BOLT – CLIP – CONNECTOR – GASKET – LEVER – PLATE – SOLENOID – SPRING – STOP – SWITCH – WASHER – WIRE, Transmission Overdrive [4–SPEED MANUAL]

84–88	Y	24205373	1	5.23	CONNECTOR, 1 BLADE TERM (04.115) (AC–DELCO #24205373)

4.480 BLOCK – GASKET – RELAY – SEAL – SWITCH, Transmission Overdrive [4–SPEED MANUAL]

84–88	Y	14081180	2	3.11	GASKET, 1ST & 2ND OVERDRIVE OVERIDE SW (AC–DELCO #14081180)
84–87	Y	14078915	1	14.70	RELAY, M/TRNS O/D SW (03.140) (AC–DELCO #212–307)
88–89	Y	14089936	1	16.26	RELAY, M/TRNS O/D SW (USE W/CONN 15306002) (01.055) (AC–DELCO #15–8240)
86–88	Y	14057528	2	14.78	SWITCH, OVERDRIVE OVERRIDE REV (AC–DELCO #14057528)
84–85	Y	14057528	2	14.78	SWITCH, OVERDRIVE OVERRIDE REV & 4TH GEAR (AC–DELCO #14057528)
84	Y	14078914	1	11.02	SWITCH, TRANS OVERDRIVE (MTS ON CNSL) (AC–DELCO #14078914)
85	Y	14087647	1	DISCON	SWITCH, TRANS OVERDRIVE (MTS ON CNSL)
85	Y (2ND DES)	14087686	1	104.04	SWITCH, TRANS OVERDRIVE (IN SHFTR KNOB) (AC–DELCO #14087686)
86–88	Y	14087693	1	86.87	SWITCH, TRANS OVERDRIVE (ON SHFTR LVR–UNDER BOOT) (AC–DELCO #14087693)
84–88	Y	14057529	2	17.27	SWITCH, 1ST & 2ND OVERDRIVE OVERIDE (AC–DELCO #14057529)

4.054 BUSHING – CONNECTOR – RELAY – RETAINER – ROD – SOLENOID – SWITCH, Safety Starting Switch Or Speed Sensing [6–SPEED MANUAL]

90–96	Y 6–SPD M/TRANS (ML9)	14006979	1	.99	BUSHING, CLUPED POSN SW ROD
90–92	Y 6–SPD M/TRANS (ML9)	14089936	1	16.26	RELAY, M/TRNS 2ND & 3RD GR BLOCKOUT (5–PIN OVAL SHAPE) (USE W/CONN 15306002) (01.055) (AC–DELCO #15–8240)

© 2000 GENERAL MOTORS SERVICE PARTS OPERATIONS

4.054 BUSHING – CONNECTOR – RELAY – RETAINER – ROD – SOLENOID – SWITCH, Safety Starting Switch Or Speed Sensing [6–SPEED MANUAL](Con't)

96	Y 6–SPD M/TRANS (ML9), (EXC VE1 (EXPORT)	12193603	2	20.30	RELAY, M/TRNS 2ND & 3RD GR BLOCKOUT (GRAY) (SPST 280 MINI) (4–WAY) (02.100) (AC–DELCO #12193603) .....
84–96	Y	03989067	1	*.94	RETAINER, CLU PED POSN SW ROD (03.425) .....
89–95	Y	14080260	1	6.85	ROD, CLU PED POSN SW .....
96	Y 6–SPD M/TRANS (ML9)	14080260	1	6.85	ROD, CLU PED POSN SW .....
89–96	Y 6–SPD M/TRANS (ML9)	10045822	1	30.87	SWITCH, CLU PED POSN (AC–DELCO #D2213A) .....

4.329 SENSOR, Speedometer Drive [6–SPEED MANUAL]

94–96	Y 6–SPD M/TRANS (ML9)	10456089	1	36.09	SENSOR, VEH SPD (W/ O–RING) (AC–DELCO #213–198) .....

4.337 GEAR, Speedometer Driven [6–SPEED MANUAL]

94	Y 5.7P (LT1), 6–SPD M/TRANS (ML9)	25513047	1	7.60	GEAR, SPEEDO DRVN (BLACK) (40 TEETH) (AC–DELCO #25513047) ...
94–96	Y 6–SPD M/TRANS (ML9)	25513049	1	7.60	GEAR, SPEEDO DRVN (GREEN) (42 TEETH) (AC–DELCO #25513049) ...

4.338 SEAL, Speedometer Driven Gear [6–SPEED MANUAL]

89–91	Y	15552872	1	*1.82	SEAL, SPEEDO DRVN GR SLEV (O RING) (TEFLON) (AC–DELCO #15552872) .....

4.050 BRACE – CABLE – SEAL, Transmission Detent Shift Control [AUTOMATIC]

92	Y 5.7P (LT1), 4–SPD A/TRANS (MD8)	10163848	1	104.04	CABLE, ACCEL CONT & A/TRNS T/V (03.430) .....
93	Y 5.7P (LT1), 4–SPD A/TRANS (MD8)	10215862	1	104.04	CABLE, ACCEL CONT & A/TRNS T/V (03.430) .....
84	Y 4–SPD A/TRANS (MD8)	25515601	1	26.25	CABLE, TRANS THROT VLV .....
85–88	Y	25521263	1	26.25	CABLE, TRANS THROT VLV .....
89–91	Y (5.7–8) (MD8)	10163879	1	26.78	CABLE, TRANS THROT VLV .....
84–93	Y	25518260	1	1.75	SEAL, A/TRNS T/V CBL (21.26MM DIA) .

4.085 STUD. Transmission Mount and Support [AUTOMATIC]

88–89	Y A/TRNS (MD8)	14091545	1	1.65	STUD, TRANS (3/8–16X0.78 BOTH ENDS) (03.275) .....
90–91	Y 4–SPD A/TRANS (MD8)	10085606	1	1.65	STUD, TRANS (T/W 1052080) (3/8–16X25/32 BOTH ENDS) (03.275) .....
92	Y 4–SPD A/TRANS (MD8), (USE W/O CTLTC CONV BRACE) (1ST DES)	10085606	1	1.65	STUD, TRANS (T/W 1052080) (3/8–16X25/32 BOTH ENDS) (03.275) .....
92	Y 4–SPD A/TRANS (MD8), (USE W/CTLTC CONV BRACE) (2ND DES)	10220063	1	1.25	STUD, TRANS .....
93	Y 4–SPD A/TRANS (MD8)	10220063	1	1.25	STUD, TRANS .....
94–96	Y 4–SPD A/TRANS (M30)	10220063	1	1.25	STUD, TRANS .....

4.115 BOLT – BUSHING – CONNECTOR – CONVERTER – SEAL – SWITCH, Transmission Converter [AUTOMATIC]

94–96	Y 4–SPD A/TRANS (M30)	20616587	3	*1.82	BOLT, STAT SHF (M6X1X19.0) (11.561) (AC–DELCO #20616587) .....
84–91	Y	01261968	AR	*1.82	BOLT, TRANS T/CV (TO FLYWHEEL) (M10X1.5X15 12.5 THD) (AC–DELCO #1261968) .....

© 2000 GENERAL MOTORS SERVICE PARTS OPERATIONS

4.115 BOLT – BUSHING – CONNECTOR – CONVERTER – SEAL – SWITCH, Transmission Converter [AUTOMATIC](Con't)

92–93	Y 4–SPD A/TRANS (MD8)	01261968	3	*1.82	BOLT, TRANS T/CV (M10X1.5X15 12.5 THD) (AC–DELCO #1261968)
94–96	Y 4–SPD A/TRANS (M30)	01261968	3	*1.82	BOLT, TRANS T/CV (M10X1.5X15 12.5 THD) (AC–DELCO #1261968)
84–93	Y 4–SPD A/TRANS (MD8)	08634383	1	11.02	CONNECTOR, A/TRNS WRG (W/SEAL CONVR CLU) (ELECTRICAL) (3–WAY) (AC–DELCO #8634383)
92	Y 4–SPD A/TRANS (MD8)	08682294	1	4.60	CONNECTOR, A/TRNS WRG (5 TERM, W/SEAL) (AC–DELCO #8682294)
96	Y 4–SPD A/TRANS (M30)	12162202	1	.77	CONNECTOR, SOL–TCC PWM VLV (BLUE) (2–WAY F) (W/O LEADS)
92–93	Y 5.7P (LT1), 4–SPD A/TRANS (MD8)	12102612	1	42.12	CONNECTOR, TCC WRG (BLACK) (5–WAY M)
84–90	Y	10054241	1	*1.82	SEAL, O–RING, ELEC CONN (04.338) (AC–DELCO #10054241)

4.329 SENSOR, Speedometer Drive [AUTOMATIC]

91–93	Y (D8L)	10456092	1	32.70	SENSOR, VEH SPD (AC–DELCO #213–200)
94–96	Y 4–SPD A/TRANS (M30)	08673299	1	35.43	SENSOR, VEH SPD (AC–DELCO #213–194)

4.337 GEAR, Speedometer Drive [AUTOMATIC]

Note: FOR USAGE REFER TO SPEEDO GEAR CHART A.T. GRP 4.337

91–93	Y (D4L)	25513050	1	7.60	GEAR, SPEEDO DRVN (PURPLE) (43 TEETH) (AC–DELCO #25513050)
92	Y (D7B)	25513043	1	1.85	GEAR, SPEEDO DRVN (WHITE) (36 TEETH)
92	Y (D7C)	25513045	1	7.60	GEAR, SPEEDO DRVN (BLUE) (38 TEETH) (AC–DELCO #25513045)
92–93	Y (D3X)	25513049	1	7.60	GEAR, SPEEDO DRVN (GREEN) (42 TEETH) (AC–DELCO #25513049)
93	Y (D7A)	25513042	1	7.60	GEAR, SPEEDO DRVN (ORANGE) (35 TEETH) (AC–DELCO #25513042)
93	Y (D3W)	25513044	1	7.60	GEAR, SPEEDO DRVN (RED) (37 TEETH) (AC–DELCO #25513044)

4.338 SEAL, Speedometer Driven Gear [AUTOMATIC]

84–93	Y 4–SPD A/TRANS (MD8)	25518664	1	1.82	SEAL, SPEEDO DRVN GR SLEV (O RING) (.3" I.D. X .5" O.D.) (ASM) (RUBBER & METAL)) (AC–DELCO #25518664)
84–88	Y	15552872	1	*1.82	SEAL, SPEEDO SEN (AC–DELCO #15552872)
94–96	Y 4–SPD A/TRANS (M30)	15552872	1	*1.82	SEAL, VEH SPD SEN (O RING) (TEFLON) (AC–DELCO #15552872)

4.710 BRACKET – CONNECTOR – SENSOR – SWITCH, Electronic Brake Control

Note: AT TIMES THE BRAKE SENSOR IS SERVICED ONLY AS PART OF THE REAR WHEEL HUB ASSEMBLY LOCATED IN GROUP 5.806

86	Y	14093145	1	DISCON	BRACKET, ELEC BRK CONT LATL ACCEL SWITCH
86–88	Y	14091268	2	DISCON	BRACKET, FRT LWR WHL SPD SEN MT (POSN #2)
86–88	Y	14091237	2	DISCON	BRACKET, FRT UPR WHL SPD SEN MT (POSN #5)
86–87	Y	14091235	LH	DISCON	BRACKET, FRT WHL KNU SPD SEN MT
86–87	Y	14091236	RH	DISCON	BRACKET, FRT WHL KNU SPD SEN MT

© 2000 GENERAL MOTORS SERVICE PARTS OPERATIONS

4.710 BRACKET – CONNECTOR – SENSOR – SWITCH, Electronic Brake Control(Con't)

86–87	Y	14091257	LH	DISCON	BRACKET, RR WHL KNU SPD SEN MT
86–87	Y	14091258	RH	DISCON	BRACKET, RR WHL KNU SPD SEN MT
86–91	Y	14091259	2	.75	BRACKET, WHL SPD SEN (POSN #4)
88–91	Y	10052288	2	.77	BRACKET, WHL SPD SEN (RR WHL TO TOP OF KNUCKLE) (POSN #3)
88–91	Y	10052289	2	.77	BRACKET, WHL SPD SEN (RR WHL TO SIDE OF KNUCKLE) (POSN #1)
89	Y	10087787	LH	.85	BRACKET, WHL SPD SEN
89	Y	10087788	RH	.85	BRACKET, WHL SPD SEN
90–91	Y SOFT RIDE SUSP (FE1), HVY DUTY SUSP (FE7)	10087787	LH	.85	BRACKET, WHL SPD SEN
90–91	Y SOFT RIDE SUSP (FE1), HVY DUTY SUSP (FE7)	10087788	RH	.85	BRACKET, WHL SPD SEN
91–96	Y	10158005	2	.90	BRACKET, WHL SPD SEN (POSN #5)
92–96	Y	10052288	2	.77	BRACKET, WHL SPD SEN (POSN #1)
92–96	Y	10052289	2	.77	BRACKET, WHL SPD SEN (POSN #2)
92–96	Y	10087787	LH	.85	BRACKET, WHL SPD SEN (POSN #3)
92–96	Y	10087788	RH	.85	BRACKET, WHL SPD SEN (POSN #4)
92–96	Y	14091259	2	.75	BRACKET, WHL SPD SEN (POSN #6)
96	Y CHASSIS, REALTIME DAMPING (F45)	10260107	LH	.73	BRACKET, WHL SPD SEN (POSN #7)
96	Y CHASSIS, REALTIME DAMPING (F45)	10260108	RH	.73	BRACKET, WHL SPD SEN (POSN #8)
89–90	Y	10087789	LH	DISCON	BRACKET, WHL SPD SEN FRT (POSN #9)
89–90	Y	10087790	RH	DISCON	BRACKET, WHL SPD SEN FRT (POSN #9)
89–90	Y	14104969	LH	3.47	BRACKET, WHL SPD SEN FRT (POSN #8)
89–90	Y	14104970	RH	3.26	BRACKET, WHL SPD SEN FRT (POSN #8)
93–96	Y	10211657	1	24.54	SWITCH, ELEK BRK CONT BRK PED (W/ S/LP SW) (AC–DELCO #10211657)
86–89	Y	14093144	1	137.33	SWITCH, ELEK BRK CONT LATL ACCLRTN (AC–DELCO #14093144)

4.720 BOLT – BRACKET – CLIP – CONNECTOR – COVER – DIODE – GASKET – HARNESS – MODULE – PLATE – RELAY – RETAINER – SUPPORT – WIRE, Electronic Brake Control

92–94	Y	10143546	1	3.26	BRACKET, ELEK BRK & TRACT CONT MDL
95	Y 5.7J (LT5)	10143546	1	3.26	BRACKET, ELEK BRK & TRACT CONT MDL
86–91	Y	14088443	1	DISCON	BRACKET, ELEK BRK CONT MDL (RR)
86–91	Y	14088444	1	DISCON	BRACKET, ELEK BRK CONT MDL (FRT)
96	Y (EXC DAYTIME RUNNING LGT (T61), HDLP (T72) (EXPORT), RH RULE OF ROAD HDLP (T84) (EXPORT), LH RULE OF ROAD HDLP (T85) (EXPORT), SIG & MKR LP (T90) (EXPORT)	12129073	1	.45	BRACKET, ELEK BRK CONT RLY (BLACK) (AC–DELCO #12129073)
87–95	Y	14062552	2	1.12	BRACKET, WHL SPD SEN WRG HARN CLIP (02.559)
96	Y	14062552	1	1.12	BRACKET, WHL SPD SEN WRG HARN CLIP (02.559)
92–94	Y	10143537	1	21.78	COVER, ELEK BRK CONT MDL

© 2000 GENERAL MOTORS SERVICE PARTS OPERATIONS

4.720 BOLT – BRACKET – CLIP – CONNECTOR – COVER – DIODE – GASKET – HARNESS – MODULE – PLATE – RELAY – RETAINER – SUPPORT – WIRE, Electronic Brake Control(Con't)

95	Y SPECIAL PERFORMANCE PKG (ZR1)	10143537	1	21.78	COVER, ELEK BRK CONT MDL
95	Y (EXC SPECIAL PERFORMANCE PKG (ZR1)	10225919	1	23.31	COVER, ELEK BRK CONT MDL
96	Y	10225919	1	23.31	COVER, ELEK BRK CONT MDL
92–96	Y	10167107	1	4.13	GASKET, ELEK BRK CONT MDL CVR
86	Y (2ND DES)	12046506	1	DISCON	HARNESS, BRK PRESS MOD VLV WRG (HAS 3 CONNECTORS FOR WHL SPD SEN HARNESS)
86	Y (1ST DES)	12046801	1	DISCON	HARNESS, BRK PRESS MOD VLV WRG (HAS 2 CONNECTORS FOR WHL SPD SEN HARNESS)
87	Y	12067433	1	DISCON	HARNESS, BRK PRESS MOD VLV WRG
88	Y	12083507	1	DISCON	HARNESS, BRK PRESS MOD VLV WRG
89	Y	12083507	1	DISCON	HARNESS, BRK PRESS MOD VLV WRG
90	Y (EXC FX3)	12080844	1	DISCON	HARNESS, BRK PRESS MOD VLV WRG
90	Y RIDE & HDLG (FX3)	12080845	1	DISCON	HARNESS, BRK PRESS MOD VLV WRG
91	Y (EXC ELEK RIDE & HANDLING (FX3)	12112465	1	DISCON	HARNESS, BRK PRESS MOD VLV WRG
91	Y ELEK RIDE & HANDLING (FX3)	12112466	1	DISCON	HARNESS, BRK PRESS MOD VLV WRG
93	Y (EXC ELEK RIDE & HANDLING (FX3)	12106505	1	260.86	HARNESS, BRK PRESS MOD VLV WRG
93	Y ELEK RIDE & HANDLING (FX3)	12106507	1	DISCON	HARNESS, BRK PRESS MOD VLV WRG
94	Y (EXC ELEK RIDE & HANDLING (FX3)	12130360	1	260.86	HARNESS, BRK PRESS MOD VLV WRG
94	Y ELEK RIDE & HANDLING (FX3)	12130361	1	260.86	HARNESS, BRK PRESS MOD VLV WRG
95	Y 5.7J (LT5)	12130361	1	260.86	HARNESS, BRK PRESS MOD VLV WRG
86–90	Y	12055840	1	DISCON	HARNESS, BRK PRESS MOD VLV WRG HARN GRD
92	Y (EXC ELEK RIDE & HANDLING (FX3)	12106545	1	390.00	HARNESS, ELEK BRK CONT & ELEC TRACT CONT WRG (CONT MDL TO WHL SEN HARN)
92	Y (EXC ELEK RIDE & HANDLING (FX3)	12106546	1	260.86	HARNESS, ELEK BRK CONT & ELEC TRACT CONT WRG (FRT & RR WHL SEN TO CONT HARN)
93–94	Y ELEK RIDE & HANDLING (FX3)	12130313	1	522.73	HARNESS, ELEK BRK CONT & ELEC TRACT CONT WRG
93–94	Y (EXC ELEK RIDE & HANDLING (FX3)	12130314	1	260.86	HARNESS, ELEK BRK CONT & ELEC TRACT CONT WRG
95	Y 5.7J (LT5)	12130313	1	522.73	HARNESS, ELEK BRK CONT & ELEC TRACT CONT WRG
95	Y 5.7P (LT1)	12130367	1	772.50	HARNESS, ELEK BRK CONT & ELEC TRACT CONT WRG
96	Y CHASSIS, REALTIME DAMPING (F45)	12130459	1	522.73	HARNESS, ELEK BRK CONT & ELEC TRACT CONT WRG
96	Y (EXC CHASSIS, REALTIME DAMPING (F45)	12130496	1	522.73	HARNESS, ELEK BRK CONT & ELEC TRACT CONT WRG
92	Y ELEK RIDE & HANDLING (FX3)	12106547	1	DISCON	HARNESS, ELEK BRK CONT & ELEK SUSP & TRACTION CONT WRG (CONT MDL TO WHL SEN HARN)

© 2000 GENERAL MOTORS SERVICE PARTS OPERATIONS

4.720 BOLT – BRACKET – CLIP – CONNECTOR – COVER – DIODE – GASKET – HARNESS – MODULE – PLATE – RELAY – RETAINER – SUPPORT – WIRE, Electronic Brake Control(Con't)

92	Y ELEK RIDE & HANDLING (FX3) ..	12106548	1	DISCON	HARNESS, ELEK BRK CONT & ELEK SUSP & TRACTION CONT WRG (FRT & RR WHL SEN TO CONT HARN) ....
86	Y07 (1ST DES)	12046802	1	DISCON	HARNESS, WHL SPD SEN WRG (2 CONNECTORS FOR BRK MODULE HARN) .....
86	Y07 (2ND DES)	12055921	1	DISCON	HARNESS, WHL SPD SEN WRG (3 CONNECTORS FOR BRK MODULE HARN) .....
86	Y67 (1ST DES)	12046803	1	DISCON	HARNESS, WHL SPD SEN WRG (HAS 2 CONNECTORS FOR BRK MODULE HARN) .....
86	Y67 (2ND DES)	12056922	1	DISCON	HARNESS, WHL SPD SEN WRG (HAS 3 CONNECTORS FOR BRK MODULE HARN) .....
87	Y07 (EXC 1BL PERF HDLG PKG Z51, B2B SPORT HDLG PKG Z52) .	12046597	1	DISCON	HARNESS, WHL SPD SEN WRG .....
87	Y07 1BL (PERF HDLG PKG Z51), B2B (SPORT HDLG PKG Z52)	12067499	1	DISCON	HARNESS, WHL SPD SEN WRG .....
87	Y67	12046598	1	DISCON	HARNESS, WHL SPD SEN WRG .....
88–90	Y	12073484	1	385.50	HARNESS, WHL SPD SEN WRG .....
91	Y (EXC ELEK RIDE & HANDLING (FX3)	12090313	1	260.86	HARNESS, WHL SPD SEN WRG .....
91	Y ELEK RIDE & HANDLING (FX3) ..	12090314	1	260.86	HARNESS, WHL SPD SEN WRG .....
91–96	Y	12090339	2	80.25	HARNESS, WHL SPD SEN WRG HARN EXTN .....
92–94	Y	10241014	1	1030.00	MODULE, ELEK BRK & TRACT CONT (AC–DELCO #10241014) .....
95	Y 5.7J (LT5)	10241014	1	1030.00	MODULE, ELEK BRK & TRACT CONT (AC–DELCO #10241014) .....
86–89	Y	14103343	1	990.05	MODULE, ELEK BRK CONT (MODULE, ELEK BRK CONT) (AC–DELCO #14103343) .....
90–91	Y	10223326	1	1030.00	MODULE, ELEK BRK CONT (AC–DELCO #10223326) .....
95	Y 5.7P (LT1)	12521972	1	643.62	MODULE, ELEK BRK CONT (& TRACT CONT) .....
96	Y	12525023	1	857.82	MODULE, ELEK BRK CONT .....
92–94	Y	14058658	2	1.68	PLATE, ELEK BRK & TRACT CONT MDL BRKT STUD (12.986) .....
95	Y 5.7J (LT5)	14058658	1	1.68	PLATE, ELEK BRK & TRACT CONT MDL BRKT STUD (12.986) .....
86–91	Y	14091012	1	DISCON	PLATE, ELEK BRK CONT WRG HARN CLIP TAP (U–SHAPE) (03.675) .....
92–96	Y	10045625	7	1.07	PLATE, ELEK BRK CONT WRG HARN CLIP TAP (W/STUD) (12.981) .....
92–96	Y	14090618	1	7.05	PLATE, ELEK BRK CONT WRG HARN GROM TAP (03.675) .....
92–94	Y	10143547	1	2.19	SUPPORT, ELEK BRK & TRACT CONT MDL .....
95	Y 5.7J (LT5)	10143547	1	2.19	SUPPORT, ELEK BRK & TRACT CONT MDL .....
91–96	Y	12080079	1	9.90	WIRE, BRK PRESS MOD VLV WRG HARN GND .....

© 2000 GENERAL MOTORS SERVICE PARTS OPERATIONS

4.805 GASKET – SEAL, Hydraulic Power Brake Booster

89–91	Y 5.7–8 (L98)	14089147	1	3.98	SEAL, P/B BOOS (ECM BRKT TO BOOS) (04.910)
90–96	Y	10097676	1	2.91	SEAL, P/B BOOS (ECM BRKT TO FIRE WALL) (04.845)
92–94	Y 5.7J (LT6)	10132872	1	2.01	SEAL, P/B BOOS (04.868) (USED TO SERVICE BOOSTER 10242104)
92–94	Y 5.7P (LT1)	14089147	1	3.98	SEAL, P/B BOOS (ECM BRKT TO BOOS) (04.910)
95–96	Y	10132872	1	2.01	SEAL, P/B BOOS (04.868)

6.758 BOLT – PLATE – SEAL, Steering Column

Note: FOR 1986–1991 USAGE REFER TO STEERING COLUMN CHART GRP 6.518

84–96	Y	14104186	1	10.73	PLATE, STRG COL DA CVR STUD

7.039 BOLT – BRACE – BRACKET – COVER – GUSSET – NUT – PLATE – REINFORCEMENT – SHIM – SPACER, Frame Front Cross Member

91–96	Y	11508331	8	1.80	BOLT, DRIVETRAIN & FRT SUSP FRM (M10X1.5X45) (TO RR) (08.900)
84–88	Y	14069669	2	*1.10	BOLT, FRT C/MBR (M10–1.25X21.5)
89–90	Y 5.7–8 (L98)	14069669	2	*1.10	BOLT, FRT C/MBR (M10–1.25X21.5)
91	Y 5.7–8 (L98)	14069669	4	*1.10	BOLT, FRT C/MBR (M10X1.5X25 13HEX)
90	Y	11516186	AR	*.70	BOLT, OTR FRT C/MBR UPR BR (M8X1.25X16) (08.900)
91–95	Y	11504611	2	2.10	BOLT, U/B FRT S/RL UPR BR (08.900)
95–96	Y	14088310	4	*1.30	BOLT, U/B RR C/MBR GUSS (M8X1.25X24) (03.671)
84–85	Y	14094299	LH	DISCON	BRACE, FRT C/MBR RR
84–85	Y	14094300	RH	DISCON	BRACE, FRT C/MBR RR
86	Y07	14094299	LH	DISCON	BRACE, FRT C/MBR RR
86	Y07	14094300	RH	DISCON	BRACE, FRT C/MBR RR
86–88	Y67	14092611	LH	43.20	BRACE, FRT C/MBR RR
86–88	Y67	14092612	RH	43.20	BRACE, FRT C/MBR RR
87	Y07 1BL (PERF HDLG PKG Z51), B2B (SPORT HDLG PKG Z52)	14092611	LH	43.20	BRACE, FRT C/MBR RR
87	Y07 1BL (PERF HDLG PKG Z51), B2B (SPORT HDLG PKG Z52)	14092612	RH	43.20	BRACE, FRT C/MBR RR
87–88	Y07 (EXC 1BL PERF HDLG PKG Z51, B2B SPORT HDLG PKG Z52)	14094299	LH	DISCON	BRACE, FRT C/MBR RR
87–88	Y07 (EXC 1BL PERF HDLG PKG Z51, B2B SPORT HDLG PKG Z52)	14094300	RH	DISCON	BRACE, FRT C/MBR RR
88	Y07 PERF HDLG PKG (Z51), SPORT HDLG PKG (Z52)	14092611	LH	43.20	BRACE, FRT C/MBR RR
88	Y07 PERF HDLG PKG (Z51), SPORT HDLG PKG (Z52)	14092612	RH	43.20	BRACE, FRT C/MBR RR
89–91	Y 5.7–8 (L98)	14092611	LH	43.20	BRACE, FRT C/MBR RR
89–91	Y 5.7–8 (L98)	14092612	RH	43.20	BRACE, FRT C/MBR RR
84–89	Y	10208440	RH	31.90	BRACE, OTR FRT S/MBR UPR
84–89	Y	14081859	LH	DISCON	BRACE, OTR FRT S/MBR UPR
90–96	Y	10208440	RH	31.90	BRACE, U/B FRT S/RL UPR
90–96	Y	10208441	LH	31.90	BRACE, U/B FRT S/RL UPR
84–86	Y07	14090675	2	DISCON	BRACKET, FRT C/MBR
86–88	Y67	14092617	LH	40.80	BRACKET, FRT C/MBR (RR)
86–88	Y67	14092618	RH	40.80	BRACKET, FRT C/MBR (RR)
87–88	Y07 (EXC 1BL PERF HDLG PKG Z51, B2B SPORT HDLG PKG Z52)	14090675	2	DISCON	BRACKET, FRT C/MBR
87	Y07 1BL (PERF HDLG PKG Z51), B2B (SPORT HDLG PKG Z52)	14092617	LH	40.80	BRACKET, FRT C/MBR (RR)
87	Y07 1BL (PERF HDLG PKG Z51), B2B (SPORT HDLG PKG Z52)	14092618	RH	40.80	BRACKET, FRT C/MBR (RR)

© 2000 GENERAL MOTORS SERVICE PARTS OPERATIONS

7.039 BOLT – BRACE – BRACKET – COVER – GUSSET – NUT – PLATE – REINFORCEMENT – SHIM – SPACER, Frame Front Cross Member(Con't)

88	Y07 PERF HDLG PKG (Z51), SPORT HDLG PKG (Z52)	14092617	LH	40.80	BRACKET, FRT C/MBR (RR)
88	Y07 PERF HDLG PKG (Z51), SPORT HDLG PKG (Z52)	14092618	RH	40.80	BRACKET, FRT C/MBR (RR)
89–96	Y	14092617	LH	40.80	BRACKET, FRT C/MBR (RR)
89–96	Y	14092618	RH	40.80	BRACKET, FRT C/MBR (RR)
84–96	Y	14078627	LH	6.60	COVER, RR SI MBR
84–96	Y	14078628	RH	6.60	COVER, RR SI MBR
84–96	Y	14064523	LH	11.40	GUSSET, U/B RR C/MBR
84–96	Y	14064524	RH	11.40	GUSSET, U/B RR C/MBR
84–85	Y	14100201	1	DISCON	REINFORCEMENT, FRT C/MBR (LWR)
86	Y07	14100201	1	DISCON	REINFORCEMENT, FRT C/MBR (LWR)
86–88	Y07	14092613	1	DISCON	REINFORCEMENT, FRT C/MBR (UPR)
87	Y07 1BL (PERF HDLG PKG Z51), B2B (SPORT HDLG PKG Z52)	14092613	1	DISCON	REINFORCEMENT, FRT C/MBR (UPR)
87	Y07 (EXC 1BL PERF HDLG PKG Z51, B2B SPORT HDLG PKG Z52)	14100201	1	DISCON	REINFORCEMENT, FRT C/MBR (LWR)
88	Y PERF HDLG PKG (Z51), SPORT HDLG PKG (Z52)	14092613	1	DISCON	REINFORCEMENT, FRT C/MBR (UPR)
88	Y07 (EXC PERF HDLG PKG Z51, SPORT HDLG PKG Z52)	14100201	1	DISCON	REINFORCEMENT, FRT C/MBR (LWR)
89–90	Y (5.7–8)	14092613	1	DISCON	REINFORCEMENT, FRT C/MBR (UPR)
89–90	Y (5.7–8)	14100201	1	DISCON	REINFORCEMENT, FRT C/MBR (LWR)
90–91	Y 5.7J (LT5)	10098136	1	32.40	REINFORCEMENT, FRT C/MBR
91	Y 5.7–8 (L98)	14092613	1	DISCON	REINFORCEMENT, FRT C/MBR (UPR)
91	Y 5.7–8 (L98)	14100201	1	DISCON	REINFORCEMENT, FRT C/MBR (LWR)
92–96	Y	10098136	1	32.40	REINFORCEMENT, FRT C/MBR
84–88	Y	14060122	AR	1.60	SHIM, DRIVETRAIN AND FRT SUSP FRM
84–96	Y	14044588	4	1.10	SPACER, DRIVETRAIN & FRT SUSP FRM

8.016 BOLT – SHIM – WASHER, Hood Hinge

84–93	Y	14078623	2	.73	WASHER, HOOD HGE (13MM I.D.)

8.846 BRACKET – CLAMP – FITTING – HOSE – PIPE – RETAINER – SLEEVE – TEE, Heater

88–91	Y 5.7–8 (L98), FEDERAL EMIS (NA5)	10088196	1	4.32	FITTING, HTR HOSE
93–94	Y 5.7P (LT1)	10157918	1	19.67	FITTING, HTR OTLT HOSE
86–88	Y A/C	14093180	1	DISCON	HOSE, HTR & A/C CONT VAC
89	Y (5.7–8)	14093180	1	DISCON	HOSE, HTR & A/C CONT VAC
84	Y	14046044	1	12.90	HOSE, HTR INL
85–87	Y	14091348	1	12.90	HOSE, HTR INL
88–91	Y 5.7–8 (L98), FEDERAL EMIS (NA5)	10108510	1	14.32	HOSE, HTR INL
92	Y 5.7P (LT1)	10213634	1	26.92	HOSE, HTR INL
93–95	Y 5.7P (LT1)	10157913	1	40.90	HOSE, HTR INL
96	Y	10157913	1	40.90	HOSE, HTR INL
89	Y (5.7J)	10135629	1	161.54	HOSE, HTR INL & OTLT
90–92	Y 5.7J (LT5), SOFT RIDE SUSP (FE1), HVY DUTY SUSP (FE7)	10135629	1	161.54	HOSE, HTR INL & OTLT
93–95	Y 5.7J (LT5), SOFT RIDE SUSP (FE1)	10135629	1	161.54	HOSE, HTR INL & OTLT
84	Y	14052406	1	DISCON	HOSE, HTR OTLT
85–87	Y A/C MAN CONT (C60), A/C AUTO ELEC CONT (C68), (EXC ENG OIL CLG (KC4)	14081349	1	10.36	HOSE, HTR OTLT

© 2000 GENERAL MOTORS SERVICE PARTS OPERATIONS

8.846 BRACKET – CLAMP – FITTING – HOSE – PIPE – RETAINER – SLEEVE – TEE, Heater(Con't)

85	Y ENG OIL CLG (KC4)	14091278	1	40.00	HOSE, HTR OTLT (MOLDED FITTING) (01.640)
88	Y ENG OIL CLG (KC4)	10158081	1	97.30	HOSE, HTR OTLT
88–89	Y A/C MAN CONT (C60), A/C AUTO ELEC CONT (C68), (EXC ENG OIL CLG (KC4)	10158082	1	DISCON	HOSE, HTR OTLT
89	Y 5.7–8 (L98), ENG OIL CLG (KC4)	10158081	1	97.30	HOSE, HTR OTLT
90	Y 5.7–8 (L98), (EXC ENG OIL CLG (KC4)	10135656	1	17.06	HOSE, HTR OTLT
90–91	Y 5.7–8 (L98), ENG OIL CLG (KC4)	10135657	1	40.90	HOSE, HTR OTLT
91	Y 5.7–8 (L98), (EXC ENG OIL CLG (KC4)	10135656	1	17.06	HOSE, HTR OTLT
92	Y 5.7P (LT1)	10135697	1	21.50	HOSE, HTR OTLT
93–94	Y 5.7P (LT1)	10157915	1	18.66	HOSE, HTR OTLT (FROM RAD SURGE TK TO TEE)
93–94	Y 5.7P (LT1)	10157916	1	18.66	HOSE, HTR OTLT (FROM W/PMP TO TEE)
93–94	Y 5.7P (LT1)	10157917	1	18.66	HOSE, HTR OTLT (FROM THROT BODY TO TEE)
95	Y 5.7P (LT1)	10262505	1	28.96	HOSE, HTR OTLT
96	Y	10262505	1	28.96	HOSE, HTR OTLT
90–92	Y 5.7J (LT5)	10089613	1	*1.07	RETAINER, HTR PIPE (BLACK)
90–95	Y 5.7J (LT5)	10089613	1	*1.07	RETAINER, HTR WAT FLOW C/VLV HOSE (BLACK)
92–94	Y 5.7P (LT1)	10157956	1	12.55	TEE, HTR WAT BYPASS VLV OTLT HOSE

8.866 NIPPLE – RETAINER – VALVE, Heater Coolant Flow

84–85	Y	03771940	1		NIPPLE, HTR HOSE OTLT (08.963)
84–85	Y	06272959	1	5.18	NIPPLE, HTR HOSE OTLT
90–95	Y 5.7J (LT5)	24503681	1	9.20	NIPPLE, HTR WAT ENG INL (USE T/W 1052080 SEALER) (W/O–RING & PET) (1/2 THD, 59.5 TL) (OLD PART MAY APPEAR LARGER DUE TO HEAT EXPANSION)
84–87	Y	22532158	1	9.62	VALVE, HTR WAT FLOW CONT (AC–DELCO #15–5372)
88–91	Y 5.7–8 (L98)	22532158	1	9.62	VALVE, HTR WAT FLOW CONT (16 MM) (AC–DELCO #15–5372)
92–95	Y 5.7P (LT1)	10157988	1	17.64	VALVE, HTR WAT FLOW CONT (W/O HOSE) (AC–DELCO #15–5423)
96	Y	10157988	1	17.64	VALVE, HTR WAT FLOW CONT (W/O HOSE) (AC–DELCO #15–5423)

9.262 DUCT – INSULATOR – OUTLET – RETAINER – SEAL, Air Distributor

84–88	Y A/C	14052309	RH	DISCON	OUTLET, FLR AIR
84–85	Y A/C	14052317	LH	DISCON	OUTLET, FLR AIR
89	Y	14052309	RH	DISCON	OUTLET, FLR AIR
90–96	Y	10086100	1	22.25	OUTLET, FLR AIR
90–91	Y	10199754	RH	68.07	OUTLET, I/P OTR AIR (BLACK)
92–93	Y	10199754	RH	68.07	OUTLET, I/P OTR AIR (BLACK)
94–96	Y (EXC EUROPEAN PROVISIONS (VD1) (EXPORT)	10263246	RH	64.27	OUTLET, I/P OTR AIR (INCL GRL & 2 DFL)
85–89	Y (5.7–8)	14050619	2	.93	RETAINER, FRT AIR INT DUCT
	*EXPORT**********EXPORT**********EXPORT**********EXPORT**********EXPORT*				
94–96	Y EUROPEAN PROVISIONS (VD1) (EXPORT)	10263248	RH	88.65	OUTLET, I/P OTR AIR

© 2000 GENERAL MOTORS SERVICE PARTS OPERATIONS

9.277 BRACKET – CONNECTOR – RELAY, A/C Electrical

90–91	Y 5.7–8 (L98), A/C MAN CONT (C60)	14104140	1	1.88	BRACKET, BLO MOT RLY (STEEL) (3.0"X2.0") (76.7MMX51.0 MM)) (01.055)
86–87	Y	14091291	1	DISCON	BRACKET, BLO MTR RLY
88–89	Y	14104533	10	DISCON	BRACKET, BLO MTR RLY
84–85	Y	14062695	1	DISCON	BRACKET, MOD WIRING HARN
90–91	Y	14100455	1	16.26	RELAY, A/C CMPR (BLACK) (5–WAY) (AC–DELCO #15–8426)
92	Y	14089036	1	16.26	RELAY, A/C CMPR (5–PIN OVAL SHAPE) (USE W/CONN 15306002) (01.055) (AC–DELCO #15–8240)
93–94	Y 5.7P (LT1), 5.7J (LT5)	12193601	1	23.44	RELAY, A/C CMPR (BLACK) (5–WAY M) (USED W/CONNECTOR 15306045) (AC–DELCO #15–8719)
93–96	Y	12193603	1	20.30	RELAY, A/C CMPR (GRAY) (SPST 280 MINI) (4–WAY) (02.100) (AC–DELCO #12193603)
84–87	Y	10019535	1	23.44	RELAY, BLO MOT (HIGH BLOWER) (AC–DELCO #15–8206)
88–92	Y A/C MAN CONT (C60)	14089036	1	16.26	RELAY, BLO MOT (5–PIN OVAL SHAPE) (USE W/CONN 15306002) (01.055) (AC–DELCO #15–8240)
93–95	Y 5.7P (LT1), A/C MAN CONT (C60)	12193601	1	23.44	RELAY, BLO MOT (BLACK) (5–WAY M) (USED W/CONNECTOR 15306045) (AC–DELCO #15–8719)
96	Y A/C MAN CONT (C60), (EXC VE1 (EXPORT)	12193601	1	23.44	RELAY, BLO MOT (BLACK) (5–WAY M) (USED W/CONNECTOR 15306045) (AC–DELCO #15–8719)

9.280 ACTUATOR – BRACKET – CONNECTOR – VALVE, A/C Control

84–96	Y	01996718	1	25.64	ACTUATOR, AIR INL VLV (AC–DELCO #15–71499)
84–89	Y	01996717	1	25.64	ACTUATOR, DEFR VLV (AC–DELCO #15–71498)
90–96	Y	52461295	1	25.64	ACTUATOR, DEFR VLV (AC–DELCO #15–71938)
84–96	Y	01996719	1	19.22	ACTUATOR, MODE VLV (PLST) (AC–DELCO #15–71500)
84–89	Y	01996720	1	25.64	ACTUATOR, MODE VLV (AC–DELCO #15–71501)
90–96	Y	01996770	1	19.22	ACTUATOR, MODE VLV (AC–DELCO #15–71645)
86–89	Y A/C (C68)	16025581	1	44.45	ACTUATOR, TEMP VLV
92–96	Y A/C AUTO ELEC CONT (C68)	16124952	1	70.54	ACTUATOR, TEMP VLV (AC–DELCO #15–71937)
92–95	Y 5.7P (LT1)	10135692	1	6.42	VALVE, HTR & A/C CONT & CRCONT VAC CHK (AC–DELCO #15–5421)
96	Y	10135692	1	6.42	VALVE, HTR & A/C CONT & CRCONT VAC CHK (AC–DELCO #15–5421)
85–88	Y A/C MAN CONT (C60)	16040637	1	9.62	VALVE, HTR & A/C CONT VAC (AC–DELCO #15–71421)
86–90	Y	14056648	1	2.73	VALVE, HTR & A/C CONT VAC (4.0 I.D. HOSE) (03.885) (AC–DELCO #14056648)
89	Y07 A/C MAN CONT (C60)	16040637	1	9.62	VALVE, HTR & A/C CONT VAC (AC–DELCO #15–71421)
89	Y67 A/C MAN CONT (C60), ELEC R/CON HTD MIR (DL8)	16040637	1	9.62	VALVE, HTR & A/C CONT VAC (AC–DELCO #15–71421)
84–85	Y	14056648	1	2.73	VALVE, HTR & A/C CONT VAC TK CHK (03.885) (AC–DELCO #14056648)

© 2000 GENERAL MOTORS SERVICE PARTS OPERATIONS

9.280 ACTUATOR – BRACKET – CONNECTOR – VALVE, A/C Control(Con't)

89–91	Y 5.7–8 (L98)	14056648	1	2.73	VALVE, HTR & A/C CONT VAC TK CHK (STAMPED 6648) (03.885) (AC–DELCO #14056648)
92–95	Y 5.7P (LT1)	14056648	1	2.73	VALVE, HTR & A/C CONT VAC TK CHK (STAMPED 6648) (03.885) (AC–DELCO #14056648)
96	Y	14056648	1	2.73	VALVE, HTR & A/C CONT VAC TK CHK (STAMPED 6648) (03.885) (AC–DELCO #14056648)
84	Y	16037[illegible]		DISCON	VALVE, VAC

9.281 BOLT – CLAMP – CLIP – [illegible]ESS – HOSE – TANK, A/C Vacuum and Temperature

Note: FOR 1986–1988 USAGE REFER TO HEATER MODULE CHART GRP 8.846

Note: FOR 1986–1988 USAGE REFER TO AIR CONDITIONING MODULE CHART GRP 9.169

85–86	Y A/C (C68)	09798835	1	1.20	CLIP, ACTR & BRKT (02.559)
84–96	Y	14056624	1	17.64	TANK, HTR & A/C CONT VAC (AC–DELCO #15–72234)

9.667 BOLT – BRACKET – INSULATOR – NUT – RETAINER – TAPE, Radio Mounting

89–92	Y	12337892	2	*1.13	BOLT, RDO (POSN #2) (M5X.8X16 THD) (SPECIAL) (03.671) (AC–DELCO #12337892)
89–92	Y	12337892	1	*1.13	BOLT, RDO (POSN #1) (M5X.8X16 THD) (SPECIAL) (03.671) (AC–DELCO #12337892)
90–96	Y	12337892	1	*1.13	BOLT, RDO CONT (POSN #2) (M5X.8X16 THD) (SPECIAL) (03.671) (AC–DELCO #12337892)
84–96	Y	10027015	1	.53	NUT, RDO CONT (PUSH–ON) (OVERALL LENGTH 1.25") (03.671) (AC–DELCO #10027015)

9.795 CAP – VALVE, Heater Water Temperature Control

84	Y	14046043	1	153.88	VALVE, HTR WAT (AC–DELCO #15–5344)
84–89	Y	16040986	1	9.62	VALVE, HTR WAT (WATER) (09.280) (AC–DELCO #15–71390)
85–87	Y A/C MAN CONT (C60)	10120965	1	112.20	VALVE, HTR WAT (AC–DELCO #15–5389)
92–95	Y 5.7P (LT1)	10157988	1	17.64	VALVE, HTR WAT FLOW CONT (W/O HOSE) (08.866) (AC–DELCO #15–5423)
96	Y	10157988	1	17.64	VALVE, HTR WAT FLOW CONT (W/O HOSE) (08.866) (AC–DELCO #15–5423)

12.945 BEZEL – BUMPER – DOOR – EMBLEM – HINGE KIT – SEAL – SHUTTER – SPRING, Fuel Tank Filler Door

84–87	Y07 (EXC NM8 EXPORT)	10279992	1	112.00	BEZEL, F/TNK FIL DR (W/UNLEADED FUEL LABEL)
86–87	Y67 FED (NA5) (EXC NM8 EXPORT)	10125967	1	256.36	BEZEL, F/TNK FIL DR (W/UNLEADED FUEL LABEL)
88–93	Y07	10279992	1	112.00	BEZEL, F/TNK FIL DR (W/UNLEADED FUEL LABEL)
88–93	Y67	10125967	1	256.36	BEZEL, F/TNK FIL DR (W/UNLEADED FUEL LABEL)
94	Y07 (EXC LEADED FUEL EMIS EXPORT (NM8)	10279992	1	112.00	BEZEL, F/TNK FIL DR (W/UNLEADED FUEL LABEL)

© 2000 GENERAL MOTORS SERVICE PARTS OPERATIONS

12.945 BEZEL – BUMPER – DOOR – EMBLEM – HINGE KIT – SEAL – SHUTTER – SPRING, Fuel Tank Filler Door(Con't)

94	Y67 (EXC LEADED FUEL EMIS EXPORT (NM8)	10125967	1	256.36	BEZEL, F/TNK FIL DR (W/UNLEADED FUEL LABEL)
94–96	Y67 LEADED FUEL EMIS EXPORT (NM8)	10279995	1	256.36	BEZEL, F/TNK FIL DR (W/O UNLEADED FUEL LABEL)
95	Y07 5.7P (LT1), (EXC LEADED FUEL EMIS EXPORT (NM8)	10279992	1	112.00	BEZEL, F/TNK FIL DR (W/UNLEADED FUEL LABEL)
95	Y07 5.7J (LT5)	10279994	1	112.00	BEZEL, F/TNK FIL DR (W/UNLEADED FUEL LABEL)
95	Y67 5.7P (LT1), (EXC LEADED FUEL EMIS EXPORT (NM8)	10125967	1	256.36	BEZEL, F/TNK FIL DR (W/UNLEADED FUEL LABEL)
96	Y07 5.7P (LT1), (EXC LEADED FUEL EMIS EXPORT (NM8)	10279992	1	112.00	BEZEL, F/TNK FIL DR (W/UNLEADED FUEL LABEL)
96	Y07 5.7–5 (LT4)	10279994	1	112.00	BEZEL, F/TNK FIL DR (W/UNLEADED FUEL LABEL)
96	Y67 5.7–5 (LT4)	10271452	1	199.92	BEZEL, F/TNK FIL DR (W/UNLEADED FUEL LABEL)
84–96	Y	10280811	4	.48	BUMPER, F/TNK FIL DR (RR)
84	Y	12521930	1	5.49	BUMPER, F/TNK FIL DR (CLSD LOOP (NB1)
84–87	Y07	12521930	1	5.49	BUMPER, F/TNK FIL DR (EXC NM8 EXPORT)
84–91	Y07	12521930	2	5.49	BUMPER, F/TNK FIL DR (FRT)
85	Y	12521930	1	5.49	BUMPER, F/TNK FIL DR (FED (NA5)
92–95	Y	12521930	2	5.49	BUMPER, F/TNK FIL DR (FRT)
84–96	Y07	14047485	1	130.18	DOOR, F/TNK FIL
86–96	Y67	10107910	1	177.98	DOOR, F/TNK FIL
86–92	Y	10146466	1	65.76	HINGE KIT, F/TNK FIL DR
84–96	Y	14064578	AR	1.45	SEAL, F/TNK FIL DR BZL NUT (09.665)
	*EXPORT*********EXPORT*********EXPORT*********EXPORT*********EXPORT*				
84	Y NM8 (EXPORT)	10279996	1	241.00	BEZEL, F/TNK FIL DR (W/O UNLEADED FUEL LABEL)
85–87	Y07 LEADED FUEL EMIS EXPORT (NM8)	10279996	1	241.00	BEZEL, F/TNK FIL DR (W/O UNLEADED FUEL LABEL)
86–87	Y67 NM5 (EXPORT, CANADA) (EXC NM8 EXPORT)	10125967	1	256.36	BEZEL, F/TNK FIL DR (W/UNLEADED FUEL LABEL)
94–95	Y07 LEADED FUEL EMIS EXPORT (NM8)	10279996	1	241.00	BEZEL, F/TNK FIL DR (W/O UNLEADED FUEL LABEL)
96	Y07 LEADED FUEL EMIS EXPORT (NM8)	10279996	1	241.00	BEZEL, F/TNK FIL DR (W/O UNLEADED FUEL LABEL)

14.865 BOLT – BRACKET – CLIP – COIL – COIL KIT – CONNECTOR – HARNESS – INSULATOR – MODULE – NUT – RESISTOR – RETAINER – SENSOR – SWITCH KIT – WASHER, Inflatable Restraint System

91	Y	11507066	AR	1.00	BOLT, F/END INFL RST DISCRM SEN (8 X 1.25 X 16) (08.900) (TORQ S25.0+/–3.0 NM)
92	Y	11507066	2	1.00	BOLT, F/END INFL RST DISCRM SEN (8 X 1.25 X 16) (08.900)
91–94	Y	15714276	2	.30	BOLT, F/END INFL RST DISCRM SEN BRKT (4.2X1.41X16MM HEX WSR HD 12.50 DIA TAPPING) (08.977)
94–96	Y	11508948	2	.06	BOLT, I/P INFL RST MDL TR CVR HGE (08.900)
91	Y	11507066	AR	1.00	BOLT, INFL RST ARMING SEN (8 X 1.25 X 16) (08.900) (TORQ S25.0+/–3.0 NM)
90–95	Y	11514623	2	.96	BOLT, INFL RST CONT MDL BRKT LWR (M6X1X20) (HEX W/CON WA) (08.900)

© 2000 GENERAL MOTORS SERVICE PARTS OPERATIONS

14.865 BOLT – BRACKET – CLIP – COIL – COIL KIT – CONNECTOR – HARNESS – INSULATOR – MODULE – NUT – RESISTOR – RETAINER – SENSOR – SWITCH KIT – WASHER, Inflatable Restraint System(Con't)

90–95	Y	11514623	2	*.06	BOLT, INFL RST CONT MDL BRKT UPR (M6X1X20) (HEX W/CON WA) (08.900)
90–93	Y	12337892	4	*1.13	BOLT, INFL RST DIAGN ENGY RESV MDL (M5X.8X16 THD) (SPECIAL) (03.671) (AC–DELCO #12337892)
90–91	Y	12506006	4	DISCON	BOLT, STRG WHL INFL RST MDL
96	Y	10192577	4	1.30	BOLT, STRG WHL INFL RST MDL (M6X1.0X13.0) (METRIC TORX HD) (08.913)
91–93	Y	14062552	1	1.12	BRACKET, F/END INFL RST DISCRM SEN (02.559)
94–96	Y F/SEAT INFL RST SYS (AK5)	10161868	1	10.00	BRACKET, F/END INFL RST DISCRM SEN
94–96	Y F/SEAT INFL RST SYS (AK5)	14062552	1	1.12	BRACKET, F/END INFL RST DISCRM SEN (02.559)
90	Y	10086036	1	DISCON	BRACKET, INFL RST CONT MDL (2 WELDED NUTS & 6 STUDS)
90–93	Y	10086086	LH	1.50	BRACKET, INFL RST CONT MDL (4 HOLES, L–SHAPED, POSN #1)
90–93	Y	10086177	RH	1.50	BRACKET, INFL RST CONT MDL (4 HOLES, L–SHAPED, POSN #1)
91–93	Y	10193 '23	1	DISCON	BRACKET, INFL RST CONT MDL (2 WELDED NUTS, 4 WELDED STUDS)
93	Y	10211797	1	DISCON	BRACKET, INFL RST CONT MDL (10.235)
94–96	Y F/SEAT INFL RST SYS (AK5)	10086086	LH	1.50	BRACKET, INFL RST CONT MDL
94–96	Y F/SEAT INFL RST SYS (AK5)	10086177	RH	1.50	BRACKET, INFL RST CONT MDL
91–93	Y 4–SPD A/TRANS (MD8), 6–SPD M/TRANS (ML9)	26013854	1	177.00	COIL KIT, STRG WHL INFL RST MDL
94–96	Y 4–SPD A/TRANS (M30)	26041005	1	144.00	COIL KIT, STRG WHL INFL RST MDL
89	Y 6–SPD M/TRANS (ML9), ACTIVE SUSP (Z5Z)	26013920	1	214.00	COIL, STRG WHL INFL RST MDL
90	Y	26013920	1	214.00	COIL, STRG WHL INFL RST MDL
91–92	Y	12106550	1	DISCON	HARNESS, INFL RST WRG (ELEMENT)
96	Y	12163006	1	102.00	HARNESS, INFL RST WRG
94–96	Y RECL FRT BKT ST (AQ9), IL3	10250232	1	25.22	HARNESS, INFLR AIR WRG (PASS SEAT)
94	Y 4–SPD A/TRANS (M30), A/C MAN CONT (C60), A/C AUTO ELEC CONT (C68)	12143757	1	141.00	HARNESS, INFLR AIR WRG
95	Y 5.7P (LT1), 4–SPD A/TRANS (M30), 6–SPD M/TRANS (ML9), A/C MAN CONT (C60), A/C AUTO ELEC CONT (C68)	12143757	1	141.00	HARNESS, INFLR AIR WRG
95–96	Y	14064578	1	1.43	INSULATOR, INFL RST CONT MDL (09.665)
91–96	Y	03999572	3	1.98	INSULATOR, INFL RST DIAGN ENGY RESV MDL (09.260)
94–96	Y F/SEAT INFL RST SYS (AK5)	10252293	1	625.00	MODULE, I/P INFL RST
91	Y	01228874	1	418.35	MODULE, INFL RST DIAGN ENGY RESV (REMAN) (DERM) (AC–DELCO #1228874)
92	Y (1ST DES)	01228874	1	418.35	MODULE, INFL RST DIAGN ENGY RESV (REMAN) (DERM) (USE ON PROD UNITS W/16081221 ON LABEL) (AC–DELCO #1228874)

© 2000 GENERAL MOTORS SERVICE PARTS OPERATIONS

14.865 BOLT – BRACKET – CLIP – COIL – COIL KIT – CONNECTOR – HARNESS – INSULATOR – MODULE – NUT – RESISTOR – RETAINER – SENSOR – SWITCH KIT – WASHER, Inflatable Restraint System(Con't)

02	Y (2ND DES)	16177277	1	293.13	MODULE, INFL RST DIAGN ENGY RESV (REMAN) (USE ON PROD UNITS W/16176561 ON LABEL) (AC–DELCO #16177277)
03	Y	16177277	1	293.13	MODULE, INFL RST DIAGN ENGY RESV (REMAN) (AC–DELCO #16177277)
94–96	Y F/SEAT INFL RST SYS (AK5)	16176550	1	322.00	MODULE, INFL RST DIAGN ENGY RESV (REMAN)
90	Y	10094616	1	625.00	MODULE, INFL RST RESV ENGY
90	Y	10158008	1	625.00	MODULE, STRG WHL INFL RST (IF REPLC 1990, COIL 26013864 MUST REPLC EXISTING COIL & MUST ALSO REPLC WHEEL USING 10201320) (PROBE CONN IN OWN BOX)
91–93	Y	10158008	1	625.00	MODULE, STRG WHL INFL RST (PROBE CONN IN OWN BOX)
94–96	Y F/SEAT INFL RST SYS (AK5)	16752392	1	625.00	MODULE, STRG WHL INFL RST
90	Y	10094613	2	72.25	SENSOR, F/END INFL RST DISCRM
91–93	Y	10177901	1	72.25	SENSOR, F/END INFL RST DISCRM
94–96	Y F/SEAT INFL RST SYS (AK5)	10177901	1	72.25	SENSOR, F/END INFL RST DISCRM
91–93	Y	10177902	1	72.25	SENSOR, INFL RST ARMING
94–96	Y F/SEAT INFL RST SYS (AK5)	10143543	1	72.25	SENSOR, INFL RST ARMING
91–96	Y	26011609	1	7.15	WASHER, STRG WHL INFL RST MDL COIL
	*EXPORT***************EXPORT***************EXPORT***************EXPORT***************EXPORT*				
94–96	Y 6–SPD M/TRANS (ML9), EUROPEAN PROVISIONS (VD1) (EXPORT), VE1 (EXPORT)	26041005	1	144.00	COIL KIT, STRG WHL INFL RST MDL

© 2000 GENERAL MOTORS SERVICE PARTS OPERATIONS

MICROFICHE INDEX

GROUP 4.000

FICHE 5 OF 11

GROUP	DESCRIPTION	STARTING GRID LOCATION PARTS	ILLUSTRATIONS
–	GENERAL INFORMATION	1–A2	1–G2
–	ALPHABETICAL INDEX	1–B13	N.A.
4.000	4–SPEED TRANSMISSION	5–A2	5–F2
4.000	6–SPEED TRANSMISSION	5–B2	5–G2
4.000	AUTOMATIC TRANSMISSION	5–C2	5–H2
–	OUT OF FICHE CALLS	N.A.	5–M23

5–A1

CHEVROLET
CHASSIS GROUP 4.000

TRANSMISSION – BRAKES

ALPHABETICAL INDEX

B

BEARING, Transmission Countershaft Gear [4–SPEED MANUAL] 4.422 5–A17
BEARING, Transmission Main Drive Gear (Clutch) [4–SPEED MANUAL] 4.355 5–A15
BEARING, Transmission Mainshaft (Clutch) [4–SPEED MANUAL] 4.352 5–A15
BEARING, Transmission Mainshaft Center/Rear [4–SPEED MANUAL] .. 4.408 5–A16
BEARING, Transmission Overdrive Clutch [4–SPEED MANUAL] 4.468 5–A20
BEARING, Transmission Overdrive Out/Input [4–SPEED MANUAL] 4.465 5–A20
BEARING, Transmission Overdrive Sun Gear Cover [4–SPEED MANUAL] ... 4.472 5–A22
BEARING, Transmission Reverse Idler Gear [4–SPEED MANUAL] 4.437 5–A18
BLOCK, Transmission Overdrive [4–SPEED MANUAL] 4.480 5–A22
BODY, Transmission Overdrive [4–SPEED MANUAL] 4.461 5–A19
BOLT, Transmission Case [4–SPEED MANUAL] 4.105 5–A14
BOLT, Transmission Extension [4–SPEED MANUAL] 4.319 5–A15
BOLT, Transmission Mount and Support [4–SPEED MANUAL] 4.085 5–A13
BOLT, Transmission Oil Cooler [4–SPEED MANUAL] 4.128 5–A14
BOLT, Transmission Overdrive [4–SPEED MANUAL] 4.461 5–A19
BOLT, Transmission Overdrive Case [4–SPEED MANUAL] 4.455 5–A18
BOLT, Transmission Overdrive Clutch [4–SPEED MANUAL] 4.468 5–A20
BOLT, Transmission Overdrive Oil Pump [4–SPEED MANUAL] 4.466 5–A20
BOOT, Transmission Control Lever [4–SPEED MANUAL] 4.015 5–A12
BRACKET, Transmission Case [4–SPEED MANUAL] 4.104 5–A13
BRACKET, Transmission Control Cable [4–SPEED MANUAL] 4.047 5–A13
BRACKET, Transmission Oil Cooler [4–SPEED MANUAL] 4.128 5–A14
BRACKET, Transmission Overdrive [4–SPEED MANUAL] 4.060 5–A13
BRACKET, Transmission Overdrive Case [4–SPEED MANUAL] 4.455 5–A18
BRACKET, Transmission Shift Lever [4–SPEED MANUAL] 4.046 5–A13
BUSHING, Transmission Safety Starting Switch Or Speed Sensing [4–SPEED MANUAL] 4.054 5–A13
BUTTON, Transmission Control Lever [4–SPEED MANUAL] 4.006 5–A12

C

CABLE, Transmission Control Cable [4–SPEED MANUAL] 4.047 5–A13
CABLE, Transmission Overdrive Control [4–SPEED MANUAL] 4.495 5–A23
CARRIER, Transmission Overdrive Sun Gear [4–SPEED MANUAL] 4.470 5–A21
CASE, Transmission Case [4–SPEED MANUAL] 4.103 5–A13
CASE, Transmission Overdrive Case [4–SPEED MANUAL] 4.455 5–A18
CLIP, Speedometer Drive Gear [4–SPEED MANUAL] 4.345 5–A15
CLIP, Transmission Control Cable [4–SPEED MANUAL] 4.047 5–A13
CLIP, Transmission Overdrive [4–SPEED MANUAL] 4.461 5–A19
CLIP, Transmission Overdrive Control [4–SPEED MANUAL] 4.495 5–A23
CONNECTOR, Transmission Case [4–SPEED MANUAL] 4.104 5–A13
CONNECTOR, Transmission Overdrive [4–SPEED MANUAL] 4.461 5–A19
CONNECTOR, Transmission Overdrive Oil Cooler [4–SPEED MANUAL] 4.457 5–A18
CONTROL, Transmission Shift Control [4–SPEED MANUAL] 4.004 5–A12
COVER, Transmission Case [4–SPEED MANUAL] 4.105 5–A14

D

DRUM, Transmission Overdrive Clutch [4-SPEED MANUAL] 4.468 5-A20

F

FORK, Transmission Internal Shift [4-SPEED MANUAL] 4.303 5-A14

G

GASKET, Transmission Case [4-SPEED MANUAL] 4.109 5-A14
GASKET, Transmission Main Drive Gear Bearing Retainer [4-SPEED MANUAL] 4.356 5-A15
GASKET, Transmission Overdrive [4-SPEED MANUAL] 4.460 5-A19
GASKET, Transmission Overdrive [4-SPEED MANUAL] 4.461 5-A19
GASKET, Transmission Overdrive [4-SPEED MANUAL] 4.480 5-A22
GASKET, Transmission Overdrive Case [4-SPEED MANUAL] 4.455 5-A18
GEAR PKG, Transmission Overdrive Sun Gear [4-SPEED MANUAL] 4.470 5-A21
GEAR SET, Transmission Overdrive Sun Gear [4-SPEED MANUAL] 4.470 5-A21
GEAR, Transmission Countershaft [4-SPEED MANUAL] 4.421 5-A17
GEAR, Transmission First/Reverse Gear [4-SPEED MANUAL] 4.417 5-A17
GEAR, Transmission Main Drive (Clutch) [4-SPEED MANUAL] 4.351 5-A15
GEAR, Transmission Overdrive Sun Gear [4-SPEED MANUAL] 4.470 5-A21
GEAR, Transmission Reverse Idler [4-SPEED MANUAL] 4.430 5-A17
GEAR, Transmission Second Speed [4-SPEED MANUAL] 4.395 5-A16
GEAR, Transmission Third/Forth/Fifth Gear [4-SPEED MANUAL] 4.415 5-A17
GRIP, Transmission Control Lever [4-SPEED MANUAL] 4.006 5-A12
GROMMET, Transmission Overdrive Oil Pan [4-SPEED MANUAL] 4.456 5-A18
GROMMET, Transmission Shift Shaft Lever Rod [4-SPEED MANUAL] 4.037 5-A13

H

HOUSING, Transmission Overdrive Oil Pump [4-SPEED MANUAL] 4.466 5-A20
HUB, Transmission Overdrive Clutch [4-SPEED MANUAL] 4.468 5-A20

K

KEY, Transmission Synchronizer [4-SPEED MANUAL] 4.384 5-A16
KNOB, Transmission Control Lever [4-SPEED MANUAL] 4.006 5-A12

L

LEVER, Transmission Control [4-SPEED MANUAL] 4.045 5-A13
LEVER, Transmission Overdrive [4-SPEED MANUAL] 4.461 5-A19

M

MAGNET, Transmission Overdrive Oil Pan [4-SPEED MANUAL] 4.456 5-A18

N

NUT, Transmission Oil Cooler [4-SPEED MANUAL] 4.128 5-A14
NUT, Transmission Overdrive Sun Gear Cover [4-SPEED MANUAL] 4.472 5-A22
NUT, Transmission Shift Lever [4-SPEED MANUAL] 4.046 5-A13

O

OVERDRIVE, Transmission Overdrive Case [4-SPEED MANUAL] 4.455 5-A18

P

PAN, Transmission Overdrive Oil Pan [4-SPEED MANUAL] 4.456 5-A18
PIN, Transmission Control Lever [4-SPEED MANUAL] 4.008 5-A12
PIN, Transmission First/Reverse Gear [4-SPEED MANUAL] 4.419 5-A17
PIN, Transmission Internal Shift [4-SPEED MANUAL] 4.307 5-A14
PIN, Transmission Overdrive Oil Pump [4-SPEED MANUAL] 4.466 5-A20
PIN, Transmission Shift Shaft Detent [4-SPEED MANUAL] 4.311 5-A14
PIPE, Transmission Case [4-SPEED MANUAL] 4.104 5-A13
PISTON, Transmission Overdrive Accumulator [4-SPEED MANUAL] .. 4.462 5-A19
PISTON, Transmission Overdrive Clutch [4-SPEED MANUAL] 4.468 5-A20

PLATE, Transmission Overdrive [4-SPEED MANUAL] 4.461 5-A19
PLATE, Transmission Overdrive [4-SPEED MANUAL] 4.469 5-A21
PLATE, Transmission Overdrive Case [4-SPEED MANUAL] 4.455 5-A18
PLATE, Transmission Overdrive Clutch [4-SPEED MANUAL] 4.468 5-A20
PLATE, Transmission Overdrive Sun Gear Cover [4-SPEED MANUAL] ... 4.472 5-A22
PLUG, Transmission Case [4-SPEED MANUAL] 4.105 5-A14
PLUG, Transmission Overdrive Case [4-SPEED MANUAL] 4.455 5-A18
PUMP, Transmission Overdrive Oil Pump [4-SPEED MANUAL] 4.466 5-A20

R

REINFORCEMENT, Transmission Control Lever [4-SPEED MANUAL] 4.010 5-A12
RELAY, Transmission Overdrive [4-SPEED MANUAL] 4.480 5-A22
RETAINER, Transmission Case Extension [4-SPEED MANUAL] 4.317 5-A15
RETAINER, Transmission Control Lever [4-SPEED MANUAL] 4.015 5-A12
RETAINER, Transmission Main Drive Gear Bearing (Clutch) [4-SPEED MANUAL] 4.376 5-A15
RETAINER, Transmission Overdrive [4-SPEED MANUAL] 4.060 5-A13
RETAINER, Transmission Shift Shaft Lever Rod [4-SPEED MANUAL] 4.037 5-A13
RING, Transmission Main Drive Gear Bearing (Clutch) [4-SPEED MANUAL] 4.376 5-A15
RING, Transmission Overdrive Accumulator [4-SPEED MANUAL] .. 4.462 5-A19
RING, Transmission Rear Bearing and Mainshaft [4-SPEED MANUAL] 4.412 5-A16
RING, Transmission Reverse Idler Shaft [4-SPEED MANUAL] 4.135 5-A16
RING, Transmission Synchronizer [4-SPEED MANUAL] 4.383 5-A16
ROD, Transmission Overdrive Control [4-SPEED MANUAL] 4.495 5-A23
ROD, Transmission Safety Starting Switch Or Speed Sensing [4-SPEED MANUAL] 4.054 5-A13
ROD, Transmission Shift Shaft Lever [4-SPEED MANUAL] 4.035 5-A12

S

SCREEN, Transmission Overdrive Oil Pan [4-SPEED MANUAL] 4.456 5-A18
SCREW, Transmission Extension [4-SPEED MANUAL] 4.319 5-A15
SCREW, Transmission Overdrive Case [4-SPEED MANUAL] 4.455 5-A18
SCREW, Transmission Overdrive Oil Pump [4-SPEED MANUAL] 4.466 5-A20
SCREW, Transmission Overdrive Out/Input [4-SPEED MANUAL] 4.465 5-A20
SEAL, Transmission Cover To Gearshift Shaft [4-SPEED MANUAL] 4.107 5-A14
SEAL, Transmission Main Drive Gear Bearing (Clutch) [4-SPEED MANUAL] 4.354 5-A15
SEAL, Transmission Overdrive [4-SPEED MANUAL] 4.480 5-A22
SEAL, Transmission Overdrive Accumulator [4-SPEED MANUAL] .. 4.462 5-A19
SEAL, Transmission Overdrive Case [4-SPEED MANUAL] 4.455 5-A18
SEAL, Transmission Overdrive Clutch [4-SPEED MANUAL] 4.468 5-A20
SEAL, Transmission Overdrive Control [4-SPEED MANUAL] 4.495 5-A23
SEAL, Transmission Overdrive Oil Cooler [4-SPEED MANUAL] 4.457 5-A18
SEAL, Transmission Overdrive Oil Pan [4-SPEED MANUAL] 4.456 5-A18
SEAL, Transmission Overdrive Oil Pump [4-SPEED MANUAL] 4.466 5-A20
SEAL, Transmission Overdrive Sun Gear Cover [4-SPEED MANUAL] 4.472 5-A22
SEAL, Transmission Rear Bearing and Mainshaft [4-SPEED MANUAL] 4.412 5-A16
SHAFT, Transmission Countershaft [4-SPEED MANUAL] 4.428 5-A17
SHAFT, Transmission Internal Shift [4-SPEED MANUAL] 4.302 5-A14
SHAFT, Transmission Mainshaft [4-SPEED MANUAL] 4.403 5-A16
SHAFT, Transmission Overdrive Out/Input [4-SPEED MANUAL] 4.465 5-A20
SHAFT, Transmission Reverse Idler [4-SPEED MANUAL] 4.433 5-A17
SLEEVE, Transmission First/Reverse Gear [4-SPEED MANUAL] 4.419 5-A17
SLEEVE, Transmission Internal Shift [4-SPEED MANUAL] 4.307 5-A14
SOCKET, Transmission Control Indicator Lamp [4-SPEED MANUAL] 4.022 5-A12
SOLENOID, Transmission Overdrive [4-SPEED MANUAL] 4.461 5-A19
SPACER, Transmission Countershaft Gear Bearing [4-SPEED MANUAL] . 4.423 5-A17
SPACER, Transmission Main Drive Gear Bearing (Clutch) [4-SPEED MANUAL] 4.376 5-A15
SPACER, Transmission Mainshaft Bearing [4-SPEED MANUAL] 4.353 5-A15
SPOOL, Transmission Overdrive Oil Pump [4-SPEED MANUAL] 4.466 5-A20
SPRAG, Transmission Overdrive Clutch [4-SPEED MANUAL] 4.468 5-A20
SPRING, Transmission Control Lever [4-SPEED MANUAL] 4.008 5-A12
SPRING, Transmission Overdrive [4-SPEED MANUAL] 4.461 5-A19
SPRING, Transmission Overdrive Accumulator [4-SPEED MANUAL] .. 4.462 5-A19
SPRING, Transmission Overdrive Clutch [4-SPEED MANUAL] 4.468 5-A20
SPRING, Transmission Overdrive Control [4-SPEED MANUAL] 4.495 5-A23
SPRING, Transmission Overdrive Oil Cooler [4-SPEED MANUAL] 4.457 5-A18

SPRING, Transmission Shift Shaft Detent [4-SPEED MANUAL] 4.311 5-A14
SPRING, Transmission Synchronizer [4-SPEED MANUAL] 4.413 5-A17
STOP, Transmission Overdrive [4-SPEED MANUAL] 4.461 5-A19
SWITCH, Transmission Overdrive [4-SPEED MANUAL] 4.461 5-A19
SWITCH, Transmission Overdrive [4-SPEED MANUAL] 4.480 5-A22
SWITCH, Transmission Safety Starting Switch Or Speed Sensing [4-SPEED MANUAL] 4.054 5-A13
SWIVEL, Transmission Shift Shaft Lever Rod [4-SPEED MANUAL] 4.037 5-A13
SYNCHRONIZER, Transmission Synchronizer [4-SPEED MANUAL] . 4.380 5-A16

T

TRANSMISSION, Manual (4 Speed) [4-SPEED MANUAL] 4.003 5-A12
TUBE, Transmission Overdrive Oil Cooler [4-SPEED MANUAL] 4.457 5-A18
TUBE, Transmission Overdrive Oil Pan [4-SPEED MANUAL] 4.456 5-A18

V

VALVE, Transmission Overdrive Oil Cooler [4-SPEED MANUAL] 4.457 5-A18
VENTILATOR, Transmission Case [4-SPEED MANUAL] 4.104 5-A13

W

WASHER, Transmission Countershaft Gear Bearing [4-SPEED MANUAL] . 4.423 5-A17
WASHER, Transmission First/Reverse Gear [4-SPEED MANUAL] 4.419 5-A17
WASHER, Transmission Mount and Support [4-SPEED MANUAL] 4.085 5-A13
WASHER, Transmission Overdrive [4-SPEED MANUAL] 4.461 5-A19
WASHER, Transmission Overdrive Case [4-SPEED MANUAL] 4.455 5-A18
WASHER, Transmission Overdrive Clutch [4-SPEED MANUAL] 4.468 5-A20
WASHER, Transmission Overdrive Oil Cooler [4-SPEED MANUAL] 4.457 5-A18
WASHER, Transmission Overdrive Out/Input [4-SPEED MANUAL] 4.465 5-A20
WASHER, Transmission Overdrive Sun Gear Cover [4-SPEED MANUAL] ... 4.472 5-A22
WASHER, Transmission Parking Lock [4-SPEED MANUAL] 4.295 5-A14
WASHER, Transmission Reverse Idler [4-SPEED MANUAL] 4.430 5-A17
WASHER, Transmission Reverse Idler Gear [4-SPEED MANUAL] 4.437 5-A18
WIRE, Transmission Overdrive [4-SPEED MANUAL] 4.461 5-A19

CHART INDEX

GROUP 4 GRID

ILLUS INDEX (GRP 4) 5–A8
TRANS AND ENGINE 5–A9

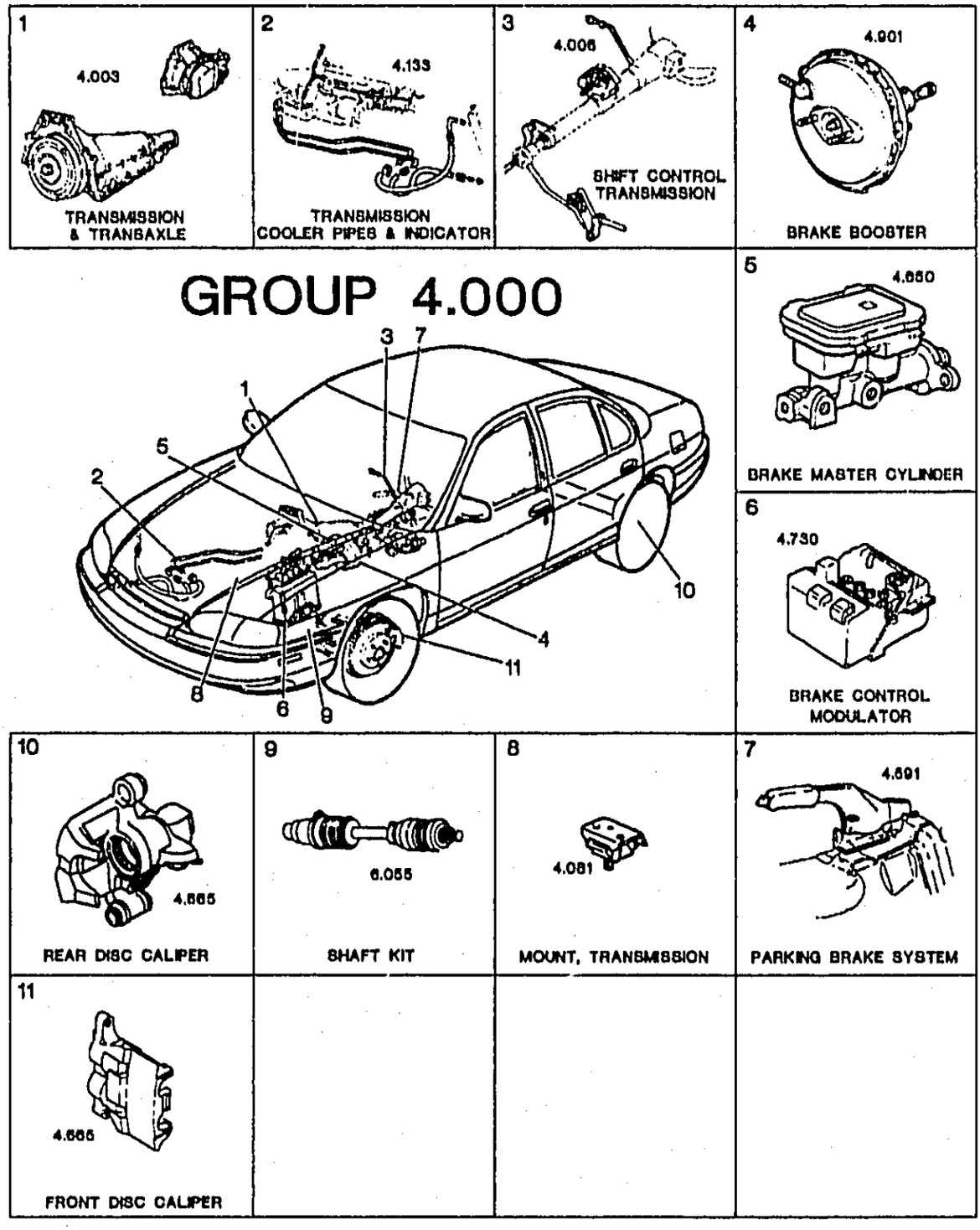

© 2000 GENERAL MOTORS SERVICE PARTS OPERATIONS–CHEVROLET–14Y

MANUAL TRANSMISSION EXCHANGE (ML9)

UNTIL FURTHER NOTICE, COMPLETE TRANSMISSION EXCHANGE FOR ML9-6 SPEED WILL BE HANDLED DIRECTLY BETWEEN DEALER AND ZF OF NORTH AMERICA. THIS TRANSMISSION EXCHANGE PROGRAM WILL BE ADMINISTERED BY CHEVROLET TECHNICAL ASSISTANCE NETWORK (TAN). FOR SPECIFIC DETAILS PLEASE REFER TO CHEVROLET DEALER SERVICE BULLETIN 89-58-7B (JAN., 1989)
NO INTERNAL TRANSMISSION COMPONENTS WILL BE SERVICED AND WILL NOT APPEAR IN THE 14Y CATALOG.
EXTERNAL TRANSMISSION PARTS WILL BE SERVICED AND WILL APPEAR IN THEIR RESPECTIVE CATALOG GROUPS.
SEE ILLUSTRATION SECTION 4.000 ZF S6-40 MANUAL TRANSMISSION (ML9) AND ATTACHING PARTS FOR THOSE EXTERNAL DETAILS.

TRANSMISSION AND ENGINE USAGE

1984

VIN CODE	CUBIC DISP	LITER TYPE	ENGINE TYPE	FUEL TYPE	ENGINE OPT.	SERIES USAGE	TRANSMISSION USAGE
8	350	5.7	V8	TBI	L83	Y	MD8,MK2

AUTO TRANS.			MAN. TRANS.	
MD8	THM700R4	4 SPEED	MK2	4 SPEED

1985 - 86

VIN CODE	CUBIC DISP	LITER TYPE	ENGINE TYPE	FUEL TYPE	ENGINE OPT.	SERIES USAGE	TRANSMISSION USAGE
8	350	5.7	V8	TPI	L98	Y	MD8,MK2

AUTO TRANS.			MAN. TRANS.	
MD8	THM700R4	4 SPEED	MK2	4 SPEED

1987 - 88

VIN CODE	CUBIC DISP	LITER TYPE	ENGINE TYPE	FUEL TYPE	ENGINE OPT.	SERIES USAGE	TRANSMISSION USAGE
8	350	5.7	V8	TPI	L98	Y	MD8,MH5,MK2

AUTO TRANS.			MAN. TRANS.	
MD8	THM700R4	4 SPEED	MH5	4 SPEED
			MK2	4 SPEED

1989

VIN CODE	CUBIC DISP	LITER TYPE	ENGINE TYPE	FUEL TYPE	ENGINE OPT.	SERIES USAGE	TRANSMISSION USAGE
8	350	5.7	V8	TPI	L98	Y	MD8,ML9

AUTO TRANS.			MAN. TRANS.	
MD8	THM700R4	4 SPEED	ML9	6 SPEED

© 2000 GENERAL MOTORS SERVICE PARTS OPERATIONS-CHEVROLET-14Y

1990 - 91

VIN CODE	CUBIC DISP	LITER TYPE	ENGINE TYPE	FUEL TYPE	ENGINE OPT.	SERIES USAGE	TRANSMISSION USAGE
8	350	5.7	V8	TPI	L98	Y	MD8,ML9
J	350	5.7	V8	MFI	LT5	Y	ML9

AUTO TRANS.			MAN. TRANS.		
MD8	THM700R4	4 SPEED	ML9		6 SPEED

1992

VIN CODE	CUBIC DISP	LITER TYPE	ENGINE TYPE	FUEL TYPE	ENGINE OPT.	SERIES USAGE	TRANSMISSION USAGE
P	350	5.7	V8	MFI	LTI	Y	MD8,ML9
J	350	5.7	V8	MFI	LT5	Y	ML9

AUTO TRANS.			MAN. TRANS.		
MD8	THM700R4/4L60	4 SPEED	ML9	ZF	6 SPEED

1993

VIN CODE	CUBIC DISP	LITER TYPE	ENGINE TYPE	FUEL TYPE	ENGINE OPT.	SERIES USAGE	TRANSMISSION USAGE
P	350	5.7	V8	MFI	LTI	Y	MD8,ML9
J	350	5.7	V8	MFI	LT5	Y	ML9

AUTO TRANS.			MAN. TRANS.		
MD8	THM700R4/4L60	4 SPEED	ML9	ZF	6 SPEED

1994 - 1995

VIN CODE	CUBIC DISP	LITER TYPE	ENGINE TYPE	FUEL TYPE	ENGINE OPT.	SERIES USAGE	TRANSMISSION USAGE
P	350	5.7	V8	MFI	LTI	Y	M30,ML9
J	350	5.7	V8	MFI	LT5	Y	ML9

AUTO TRANS.			MAN. TRANS.		
M30	4L60E	4 SPEED	ML9	ZF	6 SPEED

1996

VIN CODE	CUBIC DISP	LITER TYPE	ENGINE TYPE	FUEL TYPE	ENGINE OPT.	SERIES USAGE	TRANSMISSION USAGE
P	350	5.7	V8	MFI	LTI	Y	M30
5	350	5.7	V8	MFI	LT4	Y	ML9

AUTO TRANS.			MAN. TRANS.		
M30	4L60E	4 SPEED	ML9	ZF	6 SPEED

© 2000 GENERAL MOTORS SERVICE PARTS OPERATIONS-CHEVROLET-14Y

TRANSMISSION IDENTIFICATION

TRANSMISSION TO ASSEMBLY CODES

Note: Transmission identification can be located in one of three positions on the transmission.
A. Identification plate on side of case.
B. Stamping number on governor cover.
C. Ink stamped on bell housing.

1984 - 1985

MD8 - 4 SPD A.T. THM700	MK2 - 4 SPD M.T.
Y9	5DY

1986

MD8 - 4 SPD A.T.	MK2 - 4 SPD M.T.
6YC 6YA	DDK

1987

MD8 - 4 SPD A.T.	MK2 - 4 SPD M.T.
7YAM 7YCM 7YDM	DDK

1988

MD8 - 4 SPD A.T.	MK2 - 4 SPD M.T.
8YDM	DD"

1989

MD8 - 4 SPD A.T.	ML9 - 6 SPD M.T.
9YDM	NNC NNF

1990

MD8 - 4 SPD A.T.	ML9 - 6 SPD M.T.
0YDM	DHS DHT DHU

1991

MD8 - 4 SPD A.T.	ML9 - 6 SPD M.T.
1YDM	DCB DCC DCH

1992

MD8 - 4 SPD A.T.	ML9 - 6 SPD M.T.
2YCM 2YDM	DCD DCF DLA

1993

MD8 - 4 SPD A.T.	ML9 - 6 SPD M.T.
3YCM 3YDM 3YAM	DHY DHZ DPA DJA DJ8

1994

M30 - 4 SPD A.T.	ML9 - 6 SPD M.T.
4YDD	DCT DCU

1995

M30 - 4 SPD A.T.	ML9 - 6 SPD M.T.
5YDD	DCR DCS

1996

M30 - 4 SPD A.T.	ML9 - 6 SPD M.T.
6YDD	DCR

© 2000 GENERAL MOTORS SERVICE PARTS OPERATIONS–CHEVROLET–14Y

4.003 TRANSMISSION, Manual (4 Speed)

84-88	Y (MK2, MH5)	10121025	1	2212.50	TRANSMISSION	

4.004 CONTROL, Transmission Shift Control

84	Y	14050078	1	DISCON	CONTROL, TRANS	
85	Y (2ND DES)	10132798	1	DISCON	CONTROL, TRANS (OVRDRV SW IN SHFTR KNOB)	
85	Y (1ST DES)	14050078	1	DISCON	CONTROL, TRANS (OVRDRV SW ON CNSL)	
86-88	Y	10132798	1	DISCON	CONTROL, TRANS	

4.006 BUTTON - GRIP - KNOB, Transmission Control Lever

84	Y	14076131	1	DISCON	BUTTON, CONT LVR REL	
85	Y (1ST DES)	14076131	1	DISCON	BUTTON, CONT LVR REL (OVRDRV SW ON CNSL)	
85	Y (2ND DES)	14087690	1	4.90	BUTTON, TRANS O/D CONT KNOB (OVRDRV SW IN SHFTR KNOB)	5-F13,37
86-88	Y	14087690	1	4.90	BUTTON, TRANS O/D CONT KNOB	5-F13,37
85	Y (2ND DES)	12525548	1	DISCON	GRIP, REV FINGER (OVRDRV SW IN SHFTR KNOB) (USE W/SHFTR ASM 10132798)	
86-88	Y	12525548	1	DISCON	GRIP, REV FINGER (USE W/SHFTR ASM 10132798)	
84	Y	14084054	1	57.89	KNOB, TRANS CONT LVR (BLACK LEATHER)	5-F13,9
85	Y (1ST DES)	14084054	1	57.89	KNOB, TRANS CONT LVR (BLACK LEATHER) (OVRDRV SW ON CNSL)	5-F13,9
85	Y (2ND DES)	14087689	1	DISCON	KNOB, TRANS CONT LVR (OVRDRV SW IN SHFTR KNOB)	
86-88	Y M/TRNS	14087689	1	DISCON	KNOB, TRANS CONT LVR	

4.008 PIN - SPRING, Transmission Control Lever

84-88	Y	10150014	1	*4.03	PIN, CONT LVR PIV (04.006)	5-F13,38
88	Y M/TRNS	3859759	1	DISCON	PIN, TRANS CONT LVR REV	
88	Y	371757	1	2.40	SPRING, TRANS CONT REV REL RTN	5-F13,7

4.010 REINFORCEMENT, Transmission Control Lever

84-88	Y	14046620	1	DISCON	REINFORCEMENT, CONT	

4.015 BOOT - RETAINER, Transmission Control Lever

84-88	Y	14047412	1	33.15	BOOT, CONT LVR UPR	5-F13,11
84-88	Y	14046623	1	DISCON	RETAINER, CONT LVR BOOT	

4.022 SOCKET, Transmission Control Indicator Lamp

93	Y 4-SPD A/TRANS (MD8), A/C MAN CONT (C60), (EXC DAYTIME RUNNING LGT (T61), SIG & MKR LP (T90) (EXPORT)	12167138	1	15.40	SOCKET, A/TRNS DIAL IND LP (W/LEADS, USES 09421330/L194 BULB) (02.485) (AC-DELCO #LS71)	

4.035 ROD, Transmission Shift Shaft Lever

84-88	Y	14048956	1	DISCON	ROD, REV	
84-88	Y	14048954	1	DISCON	ROD, 1ST & 2ND	
84-88	Y	14048955	1	DISCON	ROD, 3RD & 4TH	

© 2000 GENERAL MOTORS SERVICE PARTS OPERATIONS-CHEVROLET-14Y

4.037 GROMMET – RETAINER – SWIVEL, Transmission Shift Shaft Lever Rod

84-86	Y	1234418	3	3.72	GROMMET, CONT SHAFT LVR	5-F13,22
88	Y M/TRNS	1234418	3	3.72	GROMMET, CONT SHAFT LVR	5-F13,22
84-88	Y	14047706	1	DISCON	GROMMET, SEL SHF LVR ROD	
84-88	Y	15553615	AR	*.36	RETAINER, TRANS SEL LVR ROD	5-F13,6
84-88	Y	14076103	3	DISCON	SWIVEL, SEL LVR ROD	

4.045 LEVER, Transmission Control

84-88	Y	14048953	1	DISCON	LEVER, REV	
84-88	Y	14048951	1	DISCON	LEVER, 1ST & 2ND	
84-88	Y	14048952	1	DISCON	LEVER, 3RD & 4TH	

4.046 BRACKET – NUT, Transmission Shift Lever

84-88	Y	14048935	1	DISCON	BRACKET, CONT	
84-88	Y	14[illegible]31	AR	1.25	NUT, M .T 1ST, 2ND, 3RD, 4TH & REV SEL LVR ROD ADJ (07.245)	5-F13,20

4.047 BRACKET – CABLE – CLIP, Transmission Control Cable

84-88	Y	14050023	1	DISCON	BRACKET, PARK LOCK CBL	
84	Y	14038660	1	DISCON	BRACKET, T .V. CONT CBL	
84-88	Y	14076182	1	DISCON	CABLE, PARK LOCK	
86-89	Y	25526629	AR	1.75	CLIP, TRANS PK LK CBL (03.880)	

4.054 BUSHING – ROD – SWITCH, Transmission Safety Starting Switch Or Speed Sensing

86-88	Y	14006979	2	.99	BUSHING, CLU OPER NEU START SW	1-K14,6
84-88	Y	14080260	1	6.85	ROD, CLU START SW	1-K14,9
84-86	Y	14047136	1	22.05	SWITCH, TRANS NEU START (ON CLU PED BRKT)	1-K5,9
87-88	Y	10045822	1	30.87	SWITCH, TRANS NEU START (AC-DELCO #D2213A)	1-K14,7

4.060 BRACKET – RETAINER, Transmission Overdrive

84-87	Y	14087643	1	DISCON	BRACKET, TRANS O/D SW RLY	
84-88	Y	17071924	1	.60	RETAINER, PK LK CBL	5-F13,13

4.085 BOLT – WASHER, Transmission Mount and Support

84-88	Y	14075765	1	DISCON	BOLT, TRANS	
84-87	Y	459948	1	1.45	WASHER, TRANS CONT (12.2X26X3.38) (00.002)	5-F13,30
88	Y	10085400	1	DISCON	WASHER, TRANS CONT (10.2X26X1.69)	

4.103 CASE, Transmission Case

84-88	Y	14081162	1	DISCON	CASE, TRANS	

4.104 BRACKET – CONNECTOR – PIPE – VENTILATOR, Transmission Case

84-88	Y	14080215	1	DISCON	BRACKET, TRANS VENT PIPE	
84-88	Y	14080215	1	DISCON	BRACKET, VENT PIPE	
84-88	Y	14056299	1	3.47	CONNECTOR, TRANS VENT TUBE (06.008)	
84-88	Y	14101477	1	DISCON	PIPE, OVERDRIVE VENT	
84-88	Y	14105970	1	DISCON	VENTILATOR, TRANS	

© 2000 GENERAL MOTORS SERVICE PARTS OPERATIONS-CHEVROLET-14Y

4.105 BOLT – COVER – PLUG, Transmission Case

84-88	Y	14082797	9	DISCON	BOLT, TRANS COVER	
84-88	Y M/TRNS (MK2)	14081166	1	DISCON	COVER, TRANS (3 SW HOLES)	
84-88	Y	3930923	1	6.60	PLUG, TRANS CASE MAGNETIC (08.971) (AC-DELCO #3930923)	5-F4,9

4.107 SEAL, Transmission Cover To Gearshift Shaft

84-88	Y	5696537	3	13.54	SEAL, OIL, SHFT LVR (1ST & 2ND, 3RD & 4TH, REV) (06.525)	5-F4,23

4.109 GASKET, Transmission Case

84-88	Y	3709316	1	*1.82	GASKET, CVR (AC-DELCO #3709316)	5-F4,16

4.128 BOLT – BRACKET – NUT, Transmission Oil Cooler

84-88	Y	14076110	1	4.07	BOLT, W/LK WA, OIL CLR PIPE CLIP BRKT (1/4-20X.53) (AC-DELCO #14076110)	
84-88	Y	14076106	1	DISCON	BRACKET, OIL CLR PIPE CLIP	
85-88	Y	14076157	2	5.30	NUT, TRANS OIL CLR UPR & LWR PIPE	5-L12,9

4.295 WASHER, Transmission Parking Lock

84-88	Y	14091256	1	*.60	WASHER, TRANS PK LK CBL (03.880)	

4.302 SHAFT, Transmission Internal Shift

84-88	Y	14081175	1	DISCON	SHAFT, REV SHIFT	
84-88	Y	14081168	1	DISCON	SHAFT, 1ST & 2ND SHIFT	
84-88	Y	14081169	1	81.04	SHAFT, 3RD & 4TH SHIFT (AC-DELCO #14081169)	5-F4,26

4.303 FORK, Transmission Internal Shift

84-88	Y	14081173	1	DISCON	FORK, REV SHIFT	
84-88	Y	360088	2	68.87	FORK, SHIFT (AC-DELCO #360088)	5-F4,17

4.307 PIN – SLEEVE, Transmission Internal Shift

84-88	Y	3709315	1	*1.82	PIN, INTLK (AC-DELCO #3709315)	5-F4,25
84-88	Y	360089	AR	DISCON	SLEEVE, INTLK (25.66MM)	
84-88	Y	360090	AR	DISCON	SLEEVE, INTLK (25.70MM)	
84-88	Y	360091	AR	DISCON	SLEEVE, INTLK (25.74MM)	
84-88	Y	360092	AR	DISCON	SLEEVE, INTLK (25.77MM)	
84-88	Y	360093	AR	DISCON	SLEEVE, INTLK (25.81MM)	
84-87	Y	360094	AR	DISCON	SLEEVE, INTLK (25.85MM)	
84-88	Y	360095	AR	DISCON	SLEEVE, INTLK (25.89MM)	
84-88	Y	360096	AR	DISCON	SLEEVE, INTLK (25.93MM)	
84-88	Y	360097	AR	DISCON	SLEEVE, INTLK (25.97MM)	
84-88	Y	360098	AR	DISCON	SLEEVE, INTLK (26.00MM)	
84	Y	474032	AR	DISCON	SLEEVE, INTLK (26.04MM)	
84	Y	474033	AR	DISCON	SLEEVE, INTLK (26.08MM)	

4.311 PIN – SPRING, Transmission Shift Shaft Detent

84-88	Y	14081176	1	DISCON	PIN, REV DETENT	
84-88	Y	14082799	1	DISCON	SPRING, REV DETENT PIN	
84-88	Y	3709310	1	DISCON	SPRING, SHFT LVR POPPET	

© 2000 GENERAL MOTORS SERVICE PARTS OPERATIONS-CHEVROLET-14Y

	4.317	**RETAINER, Transmission Case Extension**					
84-88	Y	14091353	1		DISCON	RETAINER, RR BRG	
	4.319	**BOLT – SCREW, Transmission Extension**					
84-88	Y	14083501	2		DISCON	BOLT, RR BRG RET	
84-88	Y	3774911	3		3.67	BOLT, TRANS RR BRG RET (AC-DELCO #3774911)	5-F4,54
84-88	Y	14082800	1		3.12	SCREW, RR BRG RET (AC-DELCO #14082800)	5-F4,59
	4.345	**CLIP, Speedometer Drive Gear**					
84-88	Y	6261781	1		*1.82	CLIP, (AC-DELCO #6261781)	5-F8,63
	4.351	**GEAR, Transmission Main Drive (Clutch)**					
84-88	Y	14024318	2		751.51	GEAR, MAIN DR (AC-DELCO #14024318)	5-F4,13
	4.352	**BEARING, Transmission Mainshaft (Clutch)**					
84-88	Y	7451735	16		.46	BEARING, MAIN DR GR PILOT RLR	5-F4,14
	4.353	**SPACER, Transmission Mainshaft Bearing**					
84-88	Y	389677	1		1.82	SPACER, MAIN SHF PILOT BRG (AC-DELCO #389677)	5-F4,15
	4.354	**SEAL, Transmission Main Drive Gear Bearing (Clutch)**					
84-88	Y	3987936	1		*7.60	SEAL, MAIN DR GR BRG FRT (AC-DELCO #3987936)	5-F4,4
	4.355	**BEARING, Transmission Main Drive Gear (Clutch)**					
84-88	Y	9441907	1		59.62	BEARING, MAIN DR GR (AC-DELCO #9441907)	5-F4,10
	4.358	**GASKET, Transmission Main Drive Gear Bearing Retainer**					
84-88	Y	1359473	1		1.82	GASKET, MAIN DR GR BRG RET (AC-DELCO #1359473)	5-F4,5
	4.376	**RETAINER – RING – SPACER, Transmission Main Drive Gear Bearing (Clutch)**					
84-88	Y	360806	1		64.20	RETAINER, MAIN DR GR BRG FRT (04.356) (AC-DELCO #360806)	5-F4,3
84-88	Y	2475652	AR			RING, MAIN DR GR BRG RET (2.29MM)	
84-88	Y	3709351	AR		*1.82	RING, MAIN DR GR BRG RET (2.21MM) (AC-DELCO #3709351)	5-F4,6
84-88	Y	3709353	AR		*1.82	RING, MAIN DR GR BRG RET (2.36MM) (AC-DELCO #3709353)	5-F4,6
84-88	Y	3709354	AR		*3.67	RING, MAIN DR GR BRG RET (2.44MM) (AC-DELCO #3709354)	5-F4,6
84-88	Y	3709355	AR		DISCON	RING, MAIN DR GR BRG RET (2.51MM)	
84-88	Y	3709356	AR		DISCON	RING, MAIN DR GR BRG RET (2.59MM)	

© 2000 GENERAL MOTORS SERVICE PARTS OPERATIONS-CHEVROLET-14Y

4.376 RETAINER – RING – SPACER, Transmission Main Drive Gear Bearing (Clutch) (Con't)

84-88	Y	12384946	AR	9.60	RING, MAIN DR GR BRG RET (2.29MM) (04.525) (AC-DELCO #12384946)	5-F4,6
84-88	Y	3709350	1	6.60	SPACER, MAIN DR GR BRG (AC-DELCO #3709350)	5-F4,7

4.380 SYNCHRONIZER, Transmission Synchronizer

84-88	Y	14101337	1	265.93	SYNCHRONIZER, 1ST & 2ND (AC-DELCO #14101337)	5-F4,41
84-88	Y	14101336	1	DISCON	SYNCHRONIZER, 3RD & 4TH	

4.383 RING, Transmission Synchronizer

84-88	Y	360812	4	31.92	RING, SYN BLOCKING (AC-DELCO #360812)	5-F4,35

4.384 KEY, Transmission Synchronizer

84-88	Y	3870793	6	2.77	KEY, 1ST & 2ND, 3RD & 4TH SYN (AC-DELCO #3870793)	5-F4,37

4.395 GEAR, Transmission Second Speed

84-88	Y	474035	1	DISCON	GEAR, TRANS 2ND SPD	

4.403 SHAFT, Transmission Mainshaft

84-88	Y	14081170	1	312.12	SHAFT, MAIN (AC-DELCO #14081170)	5-F4,42

4.408 BEARING, Transmission Mainshaft Center/Rear

84	Y (2ND DES)	9441624	1	47.04	BEARING, MAIN SHF (AC-DELCO #9441624)	5-F4,47
85-88	Y	9441624	1	47.04	BEARING, MAIN SHF (AC-DELCO #9441624)	5-F4,47
84	Y (MK2) (1ST DES)	12334785	1	DISCON	BEARING, MAIN SHF RR (3.15 O.D.)	

4.412 RING – SEAL, Transmission Rear Bearing and Mainshaft

84-88	Y	2830050	1	*2.40	RING, MAIN DR GR BRG LOC (AC-DELCO #2830050)	5-F4,8
84-88	Y	2475652	AR		RING, MAIN DR GR BRG RET (2.29MM) (04.376)	
84-88	Y	12384946	AR	9.60	RING, MAIN DR GR BRG RET (2.29MM) (04.525) (AC-DELCO #12384946)	5-F4,34
84-88	Y	3709351	AR	*1.82	RING, MAIN SHF RR BRG RET (2.21MM) (04.376) (AC-DELCO #3709351)	5-F4,34
84-88	Y	3709353	AR	*1.82	RING, MAIN SHF RR BRG RET (2.36MM) (04.376) (AC-DELCO #3709353)	5-F4,34
84-88	Y	3709354	AR	*3.67	RING, MAIN SHF RR BRG RET (2.44MM) (04.376) (AC-DELCO #3709354)	5-F4,34
84-88	Y	3709355	AR	DISCON	RING, MAIN SHF RR BRG RET (2.51MM) (04.376)	
84-88	Y	3709356	AR	DISCON	RING, MAIN SHF RR BRG RET (2.59MM) (04.376)	
84	Y	3911967	1	DISCON	RING, SNAP, RR BRG LOC	

© 2000 GENERAL MOTORS SERVICE PARTS OPERATIONS-CHEVROLET-14Y

4.412 RING – SEAL, Transmission Rear Bearing and Mainshaft (Con't)

85	Y (1ST DES)	3911967	1	DISCON	RING, SNAP, RR BRG LOC (3.00" I.D.)	
85	Y (2ND DES)	14091354	1	DISCON	RING, SNAP, RR BRG LOC (3.38" I.D.)	
86-88	Y	14091354	1	DISCON	RING, SNAP, RR BRG LOC	
84-88	Y	5696537	2	13.54	SEAL, OIL, RR BRG (06.525)	

4.413 SPRING, Transmission Synchronizer

84-88	Y	3870810	4	*1.82	SPRING, 1ST & 2ND, 3RD & 4TH SYN (AC-DELCO #3870810)	5-F4,36

4.415 GEAR, Transmission Third/Forth/Fifth Gear

84-88	Y	14024322	1	242.82	GEAR, 3RD SPD (AC-DELCO #14024322)	5-F4,39

4.417 GEAR, Transmission First/Reverse Gear

84-88	Y	14081174	1	DISCON	GEAR, REV	
84-88	Y	360803	1	DISCON	GEAR, 1ST SPD	

4.419 PIN – SLEEVE – WASHER, Transmission First/Reverse Gear

84-88	Y	14081172	1	DISCON	PIN, REV DETENT SPRING	
84-88	Y	6260712	1	DISCON	SLEEVE, 1ST SPD GR	
84	Y (1ST DESIGN)	6260715	1	DISCON	WASHER, 1ST SPD GR THR (.134" THK)	
84	Y (2ND DESIGN)	14091352	1	DISCON	WASHER, 1ST SPD GR THR (.118" THK)	
85-88	Y	14091352	1	DISCON	WASHER, 1ST SPD GR THR	

4.421 GEAR, Transmission Countershaft

84-88	Y	14024317	1	575.00	GEAR, CNTR (AC-DELCO #14024317)	5-F4,30

4.422 BEARING, Transmission Countershaft Gear

84-88	Y	435847	AR	*.18	BEARING, CNTR GR (AC-DELCO #435847)	5-F4,29

4.423 SPACER – WASHER, Transmission Countershaft Gear Bearing

84-88	Y	474036	1	DISCON	SPACER, CNTR GR BRG	
84-88	Y	3864856	6	*3.12	WASHER, CNTR SHF BRG (AC-DELCO #3864856)	5-F4,28
84-88	Y	6260714	2	4.07	WASHER, THRUST, CNTR GR RR (AC-DELCO #6260714)	5-F4,27

4.428 SHAFT, Transmission Countershaft

84-88	Y	14105969	1	219.73	SHAFT, CNTR GR (AC-DELCO #14105969)	5-F4,32

4.430 GEAR – WASHER, Transmission Reverse Idler

84-88	Y	14024315	1	DISCON	GEAR, REV IDLER, FRT	
84-88	Y	14081171	1	DISCON	GEAR, REV IDLER, RR	
84-88	Y	14082798	1	DISCON	WASHER, THRUST, RR REV IDLER GR (1.657-1.677 OD)	

4.433 SHAFT, Transmission Reverse Idler

84-88	Y	3746277	1	DISCON	SHAFT, REV IDL	

© 2000 GENERAL MOTORS SERVICE PARTS OPERATIONS-CHEVROLET-14Y

4.435 RING, Transmission Reverse Idler Shaft

84-88	Y	3774910	1	DISCON	RING, RR REV IDL GR RET	

4.437 BEARING – WASHER, Transmission Reverse Idler Gear

84-88	Y	9441010	1	DISCON	BEARING, REV IDLER GR THRUST	
84-88	Y	3774909	1	*4.60	WASHER, THRUST, FRT REV IDL GR (AC-DELCO #3774909)	5-F4,66

4.455 BOLT – BRACKET – CASE – GASKET – OVERDRIVE – PLATE – PLUG – SCREW – SEAL – WASHER, Transmission Overdrive Case

84	Y	14060030	7	2.10	BOLT, TRANS TO OVERDRIVE (00.029)	
85-88	Y	14091484	1	DISCON	BRACKET, TRANS VENT TUBE	
84-85	Y	14081181	1	DISCON	CASE, W/BUSH, OVERDRIVE	
86-88	Y	14105939	1	DISCON	CASE, W/BUSH, OVERDRIVE	
84-88	Y	14081178	1	2.40	GASKET, ADAPTER PLATE (BETWEEN REV HSG & OVERDRIVE)	5-F4,56
84	Y	10121020	1	3588.75	OVERDRIVE (COMPL ASM) (ON 1984-85 VEHS, REMOVE & DISCARD VLV CBL, THIS CBL NOT REQ FOR LATER MODEL UNIT)	
85-88	Y (MK2)	10121020	1	3588.75	OVERDRIVE, (COMPL ASM)	
85-88	Y (MH5)	10121021	1	DISCON	OVERDRIVE, MAN TRANS	
84-88	Y	14082724	1	DISCON	PLATE, OVERDRIVE ADAPTER	
84-88	Y	10040001	5	2.52	PLUG, OVERDRIVE HOUSING (03.665) (AC-DELCO #10040001)	5-F8,69
84-88	Y	14082769	4	1.05	SCREW, OVERDRIVE ADAPTER PLATE	5-F8,6
84-88	Y	14082751	1	17.75	SEAL, OVERDRIVE ADAPTER PLT (6.987 I.D.) (O RING)	5-F8,9
84-88	Y	14082796	7	2.10	WASHER, LOCK, TRANS TO OVERDRIVE	5-F4,79

4.456 GROMMET – MAGNET – PAN – SCREEN – SEAL – TUBE, Transmission Overdrive Oil Pan

84-88	Y	14082783	1	3.95	GROMMET, OVERDRIVE OIL SCREEN TUBE	5-F8,76
84-88	Y	14082736	1	DISCON	MAGNET, OVERDRIVE OIL PAN	
84-88	Y	14082737	1	DISCON	PAN, OVERDRIVE OIL	
84-88	Y	14082735	1	19.55	SCREEN, OVERDRIVE OIL	5-F8,77
84-88	Y	14082750	1	DISCON	SEAL, PICK-UP TUBE (.676 ID) (O-RING) (04.466)	
84-88	Y	14082731	1	DISCON	TUBE, OVERDRIVE OIL SCREEN	

4.457 CONNECTOR – SEAL – SPRING – TUBE – VALVE – WASHER, Transmission Overdrive Oil Cooler

84-88	Y	14082739	1	DISCON	CONNECTOR, OVERDRIVE OIL COOLER BY-PASS VALVE
84-88	Y	14082753	1	DISCON	SEAL, OVERDRIVE OIL COOLER VLV (.810 ID) (O-RING)
84-88	Y	14082752	1	DISCON	SEAL, OVERDRIVE OIL COOLER VLV CONN (.410 ID) (O-RING)
84-88	Y	14091333	1	DISCON	SPRING, OVERDRIVE OIL COOLER CHK VLV
84-88	Y	14082740	1	DISCON	TUBE, OVERDRIVE OIL VLV

© 2000 GENERAL MOTORS SERVICE PARTS OPERATIONS-CHEVROLET-14Y

4.457 CONNECTOR – SEAL – SPRING – TUBE – VALVE – WASHER, Transmission Overdrive Oil Cooler (Con't)

84–88	Y	14082738	1	DISCON	VALVE, OVERDRIVE OIL COOLER	
84–88	Y	14082776	2	1.30	WASHER, LOCK, OVERDRIVE OIL COOLER VLV BOLT	5–F11,42

4.460 GASKET, Transmission Overdrive

84–88	Y	12524261	1	2.50	GASKET, O/D ADAP (04.318)	5–F4,52

4.461 BODY – BOLT – CLIP – CONNECTOR – GASKET – LEVER – PLATE – SOLENOID – SPRING – STOP – SWITCH – WASHER – WIRE, Transmission Overdrive

84	Y	14091355	1	DISCON	BODY, OVERDRIVE VLV (W/CNTRSUNK SOC HD SCREWS)	
85	Y	14091355	1	DISCON	BODY, OVERDRIVE VLV	
86–88	Y	14105937	1	DISCON	BODY, OVERDRIVE VLV	
84–85	Y	14082782	1	DISCON	BOLT, OVERDRIVE THROT VLV LVR	
84–88	Y	14082773	1	DISCON	BOLT, OVERDRIVE VLV BODY	
84–88	Y	14091331	1	DISCON	BOLT, OVERDRIVE VLV BODY SOCKET HEAD	
84	Y	14082771	2	.92	BOLT, OVERDRIVE VLV BODY SOLENOID	5–F11,27
85	Y	25527674	2	DISCON	BOLT, OVERDRIVE VLV BODY SOLENOID (03.463)	
86	Y (MK2)	25527674	2	DISCON	BOLT, OVERDRIVE VLV BODY SOLENOID (03.463)	
84–88	Y	14082780	1	DISCON	CLIP, OVERDRIVE THROT VLV CABLE	
84–88	Y	24205373	1	5.23	CONNECTOR, 1 BLADE TERM (04.115) (AC–DELCO #24205373)	5–F8,74
84–88	Y	14082726	2	2.30	GASKET, OVERDRIVE VALVE BODY	5–F11,1
84–85	Y	14082733	1	DISCON	LEVER, OVERDRIVE THROT VLV	
84–85	Y	14091493	1	DISCON	PLATE, OVERDRIVE VLV BODY SPACER	
86–88	Y	14105936	1	DISCON	PLATE, OVERDRIVE VLV BODY SPACER	
84–88	Y	14082729	1	118.00	SOLENOID, OVERDRIVE VLV BODY	5–F11,25
84–88	Y	14082760	1	DISCON	SPRING, OVERDRIVE PISTON EXH CK VLV BALL	
84–88	Y	14082778	1	DISCON	STOP, OVERDRIVE THROT VLV LVR	
84–88	Y	14082730	1	DISCON	SWITCH, PRESSURE, OVERDRIVE VLV BODY	
84–88	Y	14082779	1	.78	WASHER, OVERDRIVE THROT VLV LVR STOP	5–F11,12
84–88	Y	14082772	2	.38	WASHER, OVERDRIVE VLV BODY SOLENOID BOLT	5–F11,26
84–88	Y	14082732	1	DISCON	WIRE, OVERDRIVE VLV BODY PRESS SW	

4.462 PISTON – RING – SEAL – SPRING, Transmission Overdrive Accumulator

84–85	Y	14082722	1	DISCON	PISTON, OVERDRIVE ACCUMULATOR	
86–88	Y	14105935	1	DISCON	PISTON, OVERDRIVE ACCUMULATOR	
84–88	Y	14105923	1	DISCON	PISTON, OVERDRIVE ACCUMULATOR, CUSHION	

© 2000 GENERAL MOTORS SERVICE PARTS OPERATIONS–CHEVROLET–14Y

4.462 PISTON – RING – SEAL – SPRING, Transmission Overdrive Accumulator (Con't)

84–88	Y	14082768	1	DISCON	RING, OVERDRIVE ACCUM CUSHION PISTON, RET	
84–88	Y	14082767	1	DISCON	RING, OVERDRIVE ACCUM PISTON, RET	
84–88	Y	14082755	1	DISCON	SEAL, OVERDRIVE ACCUM PISTON (5.734 ID)	
84–88	Y	14082756	1	DISCON	SEAL, OVERDRIVE ACCUM PISTON (3.86 ID)	
84–88	Y	14082757	2	14.50	SEAL, OVERDRIVE ACCUM PISTON (6.734 ID)	5–F8,24
84–88	Y	14082759	24	DISCON	SPRING, OVERDRIVE ACCUM PISTON	

4.465 BEARING – SCREW – SHAFT – WASHER, Transmission Overdrive Out/Input

84–88	Y	9440399	1	DISCON	BEARING, OUTPUT SHAFT THRUST	
84–88	Y	14082763	4	DISCON	SCREW, OVERDRIVE PUMP & OUTPUT SHAFT	
84–88	Y	14081185	1	DISCON	SHAFT, OVERDRIVE OUTPUT	
84–88	Y	14082743	1	DISCON	WASHER, THRUST, OVERDRIVE OUTPUT SHAFT (2.033–2.045 O.D.)	

4.466 BOLT – HOUSING – PIN – PUMP – SCREW – SEAL – SPOOL, Transmission Overdrive Oil Pump

84–88	Y	11503864	12	1.75	BOLT, OVERDRIVE OIL PAN (08.900)	5–F8,80
84–88	Y	14081187	1	DISCON	HOUSING, W/BRG, OVERDRIVE PUMP (GEROTOR)	
84–88	Y	14082747	1	DISCON	PIN, OIL PUMP DRIVE	
84–88	Y	14081188	1	DISCON	PUMP, OVERDRIVE OIL (GEROTOR)	
84–88	Y	14082762	4	DISCON	SCREW, OVERDRIVE PUMP SPOOL (GEROTOR)	
84	Y (2ND DES)	14091351	1	DISCON	SEAL, GEROTOR SPOOL (NO COMPARABLE 1ST DES)	
85–88	Y	14091351	1	DISCON	SEAL, GEROTOR SPOOL	
84–88	Y	14082749	1	DISCON	SEAL, OVERDRIVE OIL PUMP (.489 ID) (O–RING)	
84–88	Y	14082750	1	DISCON	SEAL, OVERDRIVE OIL PUMP (.676 ID) (O–RING)	
84–88	Y	14091349	1	DISCON	SPOOL, PUMP (GEROTOR)	

4.468 BEARING – BOLT – DRUM – HUB – PISTON – PLATE – SEAL – SPRAG – SPRING – WASHER, Transmission Overdrive Clutch

84–88	Y	9440402	1	DISCON	BEARING, DIR CLU	
84–88	Y	9440401	1	DISCON	BEARING, THRUST, OVERDRIVE DIR CLU HUB	
84–88	Y	14082703	4	DISCON	BOLT, OVERDRIVE CLU DRUM	
84–88	Y	14082702	1	DISCON	DRUM, OVERDRIVE CLU	
84–88	Y	14081186	1	DISCON	HUB, OVERDRIVE DIR CLU	
84–88	Y	14082707	1	DISCON	PISTON, OVERDRIVE CLU	
84–88	Y	14081184	1	DISCON	PISTON, OVERDRIVE DIR CLU	
84–85	Y	14081191	1	DISCON	PLATE, DIR CLU PRESS	
86–88	Y	14105929	1	DISCON	PLATE, DIR CLU PRESS	
84–88	Y	14105933	4	28.00	PLATE, OVERDRIVE CLU	5–F8,47

© 2000 GENERAL MOTORS SERVICE PARTS OPERATIONS–CHEVROLET–14Y

4.468 BEARING – BOLT – DRUM – HUB – PISTON – PLATE – SEAL – SPRAG – SPRING – WASHER, Transmission Overdrive Clutch (Con't)

86-88	Y	14105931	1	DISCON	PLATE, OVERDRIVE CLU DRIVEN (.058-.063) (30 SPLINES)	
86-88	Y	14105934	4	DISCON	PLATE, OVERDRIVE CLU DRIVEN (.058-.063) (24 SPLINES)	
86-88	Y	14105941	4	DISCON	PLATE, OVERDRIVE CLU DRIVEN (.050-.053)	
86-88	Y	14105932	1	DISCON	PLATE, OVERDRIVE CLU PRESSURE	
84-85	Y	14082706	4	DISCON	PLATE, OVERDRIVE CLU, DRIVEN	
84-85	Y	14082704	1	DISCON	PLATE, OVERDRIVE CLU, PRESSURE	
84-85	Y	14081192	5	20.62	PLATE, OVERDRIVE DIR CLU	5-F8,41
86-88	Y	14105930	AR	DISCON	PLATE, OVERDRIVE DIR CLU	
84-88	Y	14081193	1	DISCON	PLATE, OVERDRIVE DIR CLU DRIVEN (.070-.073)	
86-88	Y	14105931	5	DISCON	PLATE, OVERDRIVE DIR CLU DRIVEN, FDT	
84-88	Y	8673526	1	9.88	SEAL, OUTPUT (04.318) (AC-DELCO #8673526)	5-F8,70
84-88	Y	10121024	1	64.20	SPRAG, OVERDRIVE DIR CLU (AC-DELCO #10121024)	5-F8,37
84-85	Y	14081183	16	DISCON	SPRING, OVERDRIVE DIR CLU INR	
86-88	Y	14081183	15	DISCON	SPRING, OVERDRIVE DIR CLU INR	
84-85	Y	14081182	16	DISCON	SPRING, OVERDRIVE DIR CLU OTR	
86-88	Y	14081182	21	DISCON	SPRING, OVERDRIVE DIR CLU OTR	
84-88	Y	14091496	1	94.96	WASHER, THRUST, DIR CLU (AC-DELCO #14091496)	5-F8,50
84-88	Y	14082742	2	DISCON	WASHER, THRUST, OVERDRIVE DIR CLU HUB (3.220-3.240 O.D.)	

4.469 PLATE, Transmission Overdrive

84-88	Y	14081195	1	13.84	PLATE, OVERDRIVE DIR CLU INR DRIVEN (.080-.084) (04.468)	5-F8,40
84-88	Y	14081196	1	DISCON	PLATE, OVERDRIVE DIR CLU INR DRIVEN (.090-.094) (04.468)	
84-88	Y	14081197	1	DISCON	PLATE, OVERDRIVE DIR CLU INR DRIVEN (.100-.104) (04.468)	
84-85	Y	14081198	1	DISCON	PLATE, OVERDRIVE DIR CLU INR DRIVEN (.110-.114) (04.468)	
84-85	Y	14081199	1	DISCON	PLATE, OVERDRIVE DIR CLU INR DRIVEN (.120-.124) (04.468)	

4.470 CARRIER – GEAR – GEAR PKG – GEAR SET, Transmission Overdrive Sun Gear

84-88	Y	14105940	1	DISCON	CARRIER, OVERDRIVE PLANETARY GEAR (INCLS BEARING)
84-88	Y (MK2)	14091329	1	DISCON	GEAR PKG, OVERDRIVE PLANETARY
85-88	Y (MH5)	14091491	1	DISCON	GEAR SET, OVERDRIVE PLANETARY
84-88	Y (MK2)	14082711	1	DISCON	GEAR, OVERDRIVE INPUT, SUN
85-88	Y (MH5)	14091492	1	DISCON	GEAR, OVERDRIVE INPUT, SUN

© 2000 GENERAL MOTORS SERVICE PARTS OPERATIONS-CHEVROLET-14Y

4.472 BEARING – NUT – PLATE – SEAL – WASHER, Transmission Overdrive Sun Gear Cover

84-88	Y	9440400	1	11.60	BEARING, THRUST, INPUT SUN GEAR	5-F8,16
84-88	Y	14082765	4	DISCON	NUT, OVERDRIVE CARRIER, LOCK	
84-88	Y	14082708	1	DISCON	PLATE, THRUST, OVERDRIVE PLANETARY GR	
84-88	Y	14082784	1	9.45	SEAL, OIL, OVERDRIVE INPUT SUN GR	5-F8,11
84-88	Y	14082713	1	DISCON	WASHER, THRUST, OVERDRIVE INPUT SUN GR (.158-.160)	
84-88	Y	14082714	1	DISCON	WASHER, THRUST, OVERDRIVE INPUT SUN GR (.153-.155)	
84-88	Y	14082715	1	DISCON	WASHER, THRUST, OVERDRIVE INPUT SUN GR (.148-.150)	
84-88	Y	14082716	1	DISCON	WASHER, THRUST, OVERDRIVE INPUT SUN GR (.143-.145)	
84-88	Y	14082717	1	DISCON	WASHER, THRUST, OVERDRIVE INPUT SUN GR (.138-.140)	
84-88	Y	14082718	1	DISCON	WASHER, THRUST, OVERDRIVE INPUT SUN GR (.133-.135)	
84-88	Y	14082719	1	DISCON	WASHER, THRUST, OVERDRIVE INPUT SUN GR (.128-.130)	
84-88	Y	14082720	1	DISCON	WASHER, THRUST, OVERDRIVE INPUT SUN GR (.123-.125)	
84-88	Y	14082744	1	DISCON	WASHER, THRUST, OVERDRIVE INPUT SUN GR (2.742-2.754 O.D.)	
84-88	Y	14082710	4	DISCON	WASHER, THRUST, OVERDRIVE PLANETARY GR	

4.480 BLOCK – GASKET – RELAY – SEAL – SWITCH, Transmission Overdrive

85-88	Y	14087685	1	DISCON	BLOCK, TRANS OVERDRIVE SW ACTU	
84-88	Y	14081180	2	3.11	GASKET, 1ST & 2ND OVERDRIVE OVERIDE SW (AC-DELCO #14081180)	5-F4,81
84-87	Y	14078915	1	14.70	RELAY, M/TRNS O/D SW (03.140) (AC-DELCO #212-307)	4-J24,33
88-89	Y	14089936	1	16.26	RELAY, M/TRNS O/D SW (USE W/CONN 15306002) (01.055) (AC-DELCO #15-8240)	
84	Y	14073444	2	DISCON	SEAL, OVERDRIVE SW 4TH & REV	
86-88	Y	14057528	2	14.78	SWITCH, OVERDRIVE OVERRIDE REV (AC-DELCO #14057528)	5-F4,75
84-85	Y	14057528	2	14.78	SWITCH, OVERDRIVE OVERRIDE REV & 4TH GEAR (AC-DELCO #14057528)	5-F4,75
84	Y	14078914	1	11.02	SWITCH, TRANS OVERDRIVE (MTS ON CNSL) (AC-DELCO #14078914)	5-F13,40
85	Y	14087647	1	DISCON	SWITCH, TRANS OVERDRIVE (MTS ON CNSL)	
85	Y (2ND DES)	14087686	1	104.04	SWITCH, TRANS OVERDRIVE (IN SHFTR KNOB) (AC-DELCO #14087686)	5-F13,40

© 2000 GENERAL MOTORS SERVICE PARTS OPERATIONS-CHEVROLET-14Y

4.480 BLOCK – GASKET – RELAY – SEAL – SWITCH, Transmission Overdrive (Con't)

86-88	Y	14087693	1	86.87	SWITCH, TRANS OVERDRIVE (ON SHFTR LVR-UNDER BOOT) (AC-DELCO #14087693)	5-F13,46
84-88	Y	14057529	2	17.27	SWITCH, 1ST & 2ND OVERDRIVE OVERIDE (AC-DELCO #14057529)	5-F4,82

4.495 CABLE – CLIP – ROD – SEAL – SPRING, Transmission Overdrive Control

84	Y	25516214	1	DISCON	CABLE, OVERDRIVE THROTTLE VALVE
85	Y	25521264	1	DISCON	CABLE, OVERDRIVE THROTTLE VALVE
84-85	Y	14082734	1	DISCON	CABLE, OVERDRIVE VLV BODY THROT VLV
84-85	Y	14060712	1	DISCON	CLIP, OVERDRIVE THROT VLV CBL
85-88	Y	14087691	1	DISCON	ROD, TRANS OVERDRIVE SW ACTU
84-85	Y	25518260	1	1.75	SEAL, OVERDRIVE THROT VLV CBL (MULTI LIP) (04.050)
85-88	Y	14101369	1	DISCON	SPRING, TRANS OVERDRIVE SW ACTU BLK

© 2000 GENERAL MOTORS SERVICE PARTS OPERATIONS-CHEVROLET-14Y

MICROFICHE INDEX

GROUP 4.000

FICHE 5 OF 11

GROUP	DESCRIPTION	STARTING GRID LOCATION PARTS	ILLUSTRATIONS
–	GENERAL INFORMATION	1–A2	1–G2
–	ALPHABETICAL INDEX	1–B13	N.A.
4.000	4–SPEED TRANSMISSION	5–A2	5–F2
4.000	6–SPEED TRANSMISSION	5–B2	5–G2
4.000	AUTOMATIC TRANSMISSION	5–C2	5–H2
–	OUT OF FICHE CALLS	N.A.	5–M23

5–B1

CHEVROLET
CHASSIS GROUP 4.000

TRANSMISSION – BRAKES

ALPHABETICAL INDEX

B

BOLT, Transmission Case [6-SPEED MANUAL] 4.104 5-B7
BOLT, Transmission Control [6-SPEED MANUAL] 4.012 5-B6
BOLT, Transmission Control Lever [6-SPEED MANUAL] 4.010 5-B5
BOLT, Transmission Control Lever [6-SPEED MANUAL] 4.046 5-B6
BOLT, Transmission Countershaft Gear [6-SPEED MANUAL] 4.422 5-B10
BOLT, Transmission Extension [6-SPEED MANUAL] 4.319 5-B8
BOLT, Transmission Mount and Support [6-SPEED MANUAL] 4.085 5-B7
BOLT, Transmission Reverse Idler Shaft [6-SPEED MANUAL] 4.435 5-B10
BOOT, Transmission Control Lever [6-SPEED MANUAL] 4.015 5-B6
BRACKET, Transmission Control Lever [6-SPEED MANUAL] 4.010 5-B5
BUSHING, Safety Starting Switch Or Speed Sensing [6-SPEED MANUAL] 4.054 5-B6

C

CLIP, Speedometer Drive Gear [6-SPEED MANUAL] 4.345 5-B8
CONNECTOR, Control module [6-SPEED MANUAL] 4.056 5-B7
CONNECTOR, Safety Starting Switch Or Speed Sensing [6-SPEED MANUAL] 4.054 5-B6
CONNECTOR, Transmission Internal Shift [6-SPEED MANUAL] 4.307 5-B8
COVER, Transmission Reverse Idler Shaft [6-SPEED MANUAL] 4.435 5-B10

E

EXTENSION, Transmission Case Extension [6-SPEED MANUAL] 4.317 5-B8

G

GASKET, Transmission Case [6-SPEED MANUAL] 4.109 5-B7
GASKET, Transmission Extension [6-SPEED MANUAL] 4.318 5-B8
GASKET, Transmission Main Drive Gear Bearing Retainer [6-SPEED MANUAL] 4.358 5-B9
GEAR, Speedometer Drive [6-SPEED MANUAL] 4.343 5-B8
GEAR, Speedometer Driven [6-SPEED MANUAL] 4.337 5-B8

H

HANDLE, Transmission Gearshift Control [6-SPEED MANUAL] 4.006 5-B5

I

INSERT, Transmission Gearshift Control [6-SPEED MANUAL] 4.006 5-B5

K

KNOB, Transmission Gearshift Control [6-SPEED MANUAL] 4.006 5-B5

N

NUT, Transmission Control Lever [6-SPEED MANUAL] 4.015 5-B6

P

PIN, Transmission Case Extension [6-SPEED MANUAL] 4.317 5-B8

© GENERAL MOTORS SERVICE PARTS OPERATIONS-CHEVROLET-14Y

PLUG, Transmission Case [6-SPEED MANUAL] 4.105 5-B7
PLUG, Transmission Internal Shift [6-SPEED MANUAL] 4.307 5-B8
PUSHBUTTON, Transmission Gearshift Control [6-SPEED MANUAL] 4.006 5-B5

R

RELAY, Safety Starting Switch Or Speed Sensing [6-SPEED MANUAL] 4.054 5-B6
RELAY, Transmission Overdrive [6-SPEED MANUAL] 4.480 5-B11
RETAINER, Safety Starting Switch Or Speed Sensing [6-SPEED MANUAL] 4.054 5-B6
RETAINER, Transmission Clutch Gear [6-SPEED MANUAL] 4.352 5-B8
RETAINER, Transmission Clutch Gear [6-SPEED MANUAL] 4.353 5-B9
RETAINER, Transmission Control Lever [6-SPEED MANUAL] 4.015 5-B6
RING, Transmission Case Extension [6-SPEED MANUAL] 4.317 5-B8
ROD, Safety Starting Switch Or Speed Sensing [6-SPEED MANUAL] 4.054 5-B6

S

SEAL, Speedometer Driven Gear [6-SPEED MANUAL] 4.338 5-B8
SEAL, Transmission Clutch Gear Oil [6-SPEED MANUAL] 4.354 5-B9
SEAL, Transmission Countershaft Gear Bearing [6-SPEED MANUAL] 4.423 5-B10
SEAL, Transmission Extension [6-SPEED MANUAL] 4.318 5-B8
SEAL, Transmission Reverse Idler Shaft [6-SPEED MANUAL] 4.435 5-B10
SENSOR, Speedometer Drive [6-SPEED MANUAL] 4.329 5-B8
SHIFTER KIT, Transmission Shift Control [6-SPEED MANUAL] 4.004 5-B5
SHIFTER, Transmission Shift Control [6-SPEED MANUAL] 4.004 5-B5
SHIM, Transmission Mainshaft [6-SPEED MANUAL] 4.412 5-B9
SOLENOID, Safety Starting Switch Or Speed Sensing [6-SPEED MANUAL] 4.054 5-B6
STUD, Transmission Case [6-SPEED MANUAL] 4.105 5-B7
STUD, Transmission Mount and Support [6-SPEED MANUAL] 4.085 5-B7
SWITCH, Safety Starting Switch Or Speed Sensing [6-SPEED MANUAL] 4.054 5-B6

T

TRANSMISSION, Manual (6-Speed) [6-SPEED MANUAL] 4.003 5-B5
TUBE, Transmission Front [6-SPEED MANUAL] 4.356 5-B9

V

VENT, Transmission Case [6-SPEED MANUAL] 4.104 5-B7

W

WASHER, Transmission Extension [6-SPEED MANUAL] 4.319 5-B8

4.003 TRANSMISSION, Manual (6-Speed)

NOTE: COMPLETE TRANSMISSION WILL BE EXCHANGED DIRECT BETWEEN DEALER AND Z-F OF NORTH AMERICA. EXCHANGE WILL BE HANDLED BY CHEVROLET.

89-91	Y 5.7-8 (L98), 6-SPD M/TRANS (ML9)	12351965	1		TRANSMISSION, MAN (REMAN)	5-G4,1
90-93	Y 5.7J (LT5), 6-SPD M/TRANS (ML9)	12352884	1		TRANSMISSION, MAN (REMAN)	5-G4,1
92-93	Y 5.7P (LT1), 6-SPD M/TRANS (ML9)	12351965	1		TRANSMISSION, MAN (REMAN)	5-G4,1
94	Y 5.7J (LT5), 6-SPD M/TRANS (ML9)	12455186	1		TRANSMISSION, MAN (REMAN) (EXCHANGE ONLY)	5-G8,1
94	Y 5.7P (LT1), 6-SPD M/TRANS (ML9)	12455187	1		TRANSMISSION, MAN (REMAN) (EXCHANGE ONLY)	5-G8,1
95	Y 5.7J (LT5), 6-SPD M/TRANS (ML9)	12455188	1		TRANSMISSION, MAN (REMAN) (EXCHANGE ONLY)	5-G8,1
95	Y 5.7P (LT1), 6-SPD M/TRANS (ML9)	12455189	1		TRANSMISSION, MAN (REMAN) (EXCHANGE ONLY)	5-G8,1
96	Y 6-SPD M/TRANS (ML9) ...	12455189	1		TRANSMISSION, MAN (REMAN) (EXCHANGE ONLY)	5-G8,1

4.004 SHIFTER - SHIFTER KIT, Transmission Shift Control

91	Y 6-SPD M/TRANS (ML9) ...	12353638	1	DISCON	SHIFTER KIT, M/TRANS	
91-94	Y 6-SPD M/TRANS (ML9) ...	12355192	1	888.68	SHIFTER KIT, TRANS (REMAN) .	5-G8,3
95-96	Y 6-SPD M/TRANS (ML9) ...	12534207	1	888.68	SHIFTER KIT, TRANS (REMAN) .	5-G15,12
91	Y 6-SPD M/TRANS (ML9) ...	12353636	1	DISCON	SHIFTER, M/TRANS (REMAN) ...	

4.006 HANDLE - INSERT - KNOB - PUSHBUTTON, Transmission Gearshift Control

89-94	Y 6-SPD M/TRANS (ML9) ...	10079757	1	15.20	HANDLE, M/TRNS CONT LVR REL .	5-G15,4
89-96	Y	10150014	1	*4.03	INSERT, M/TRNS CONT LVR KNOB	5-G15,5
89	Y 6-SPD M/TRANS (ML9) ...	14084054	1	57.89	KNOB, M/TRNS CONT LVR (W/O SHFT PATT) (BLACK LEATHER)	5-G13,9
90-93	Y 6-SPD M/TRANS (ML9) ...	10111658	1	69.62	KNOB, M/TRNS CONT LVR (W/O SHFT PATT) (BLACK LEATHER)	5-G15,2
94-96	Y 6-SPD M/TRANS (ML9) ...	10224091	1	69.62	KNOB, M/TRNS CONT LVR (W/O SHFT PATT) (BLACK LEATHER)	5-G15,2
89	Y 6-SPD M/TRANS (ML9) ...	10079756	1	10.10	PUSHBUTTON, M/TRNS CONT LVR REL (W/SHFT PATT)	5-G15,1
90-91	Y 6-SPD M/TRANS (ML9) ...	10085218	1	4.90	PUSHBUTTON, M/TRNS CONT LVR REL (W/SHFT PATT)	5-G15,1
92	Y 6-SPD M/TRANS (ML9), (EXC MODIFICATION-NOISE CONTROL (B4H) (EXPORT)	10085218	1	4.90	PUSHBUTTON, M/TRNS CONT LVR REL (W/SHFT PATT)	5-G15,1
93	Y 6-SPD M/TRANS (ML9) ...	10085218	1	4.90	PUSHBUTTON, M/TRNS CONT LVR REL (W/SHFT PATT)	5-G15,1
94-96	Y 6-SPD M/TRANS (ML9) ...	10079756	1	10.10	PUSHBUTTON, M/TRNS CONT LVR REL (W/SHFT PATT)	5-G15,1

*EXPORT**********EXPORT**********EXPORT**********EXPORT**********EXPORT*

92	Y 6-SPD M/TRANS (ML9), MODIFICATION-NOISE CONTROL (B4H) (EXPORT)	10186829	1	DISCON	PUSHBUTTON, M/TRNS CONT LVR REL (W/SHFT PATT)	

4.010 BOLT - BRACKET, Transmission Control Lever

89-95	Y 6-SPD M/TRANS (ML9) ...	10159403	1	1.55	BOLT, M/TRNS CONT BRKT	5-G4,37
96	Y 6-SPD M/TRANS (ML9) ...	10159403	2	1.55	BOLT, M/TRNS CONT BRKT	5-G4,37
89-96	Y 6-SPD M/TRANS (ML9) ...	10140675	1	49.75	BRACKET, M/TRNS CONT (04.046)	5-G4,36

© 2000 GENERAL MOTORS SERVICE PARTS OPERATIONS-CHEVROLET-14Y

4.480 RELAY, Transmission Overdrive

89-91	Y	14089936	1	16.26	RELAY, M/TRNS O/D SW (5-PIN OVAL SHAPE) (USE W/CONN 15308002) (01.055) (AC-DELCO #15-8240) .....
93-94	Y 5.7P (LT1), 6-SPD M/TRANS (ML9)	12193601	1	23.44	RELAY, M/TRNS O/D SW (4TH/6TH GR) (BLACK) (5-WAY M) (USED W/CONNECTOR 15306045) (09.277) (AC-DELCO #15-8719) .....
93-94	Y	12193603	1	20.30	RELAY, M/TRNS O/D SW (GRAY) (SPST 280 MINI) (4-WAY) (02.100) (AC-DELCO #12193603) .....

© 2000 GENERAL MOTORS SERVICE PARTS OPERATIONS-CHEVROLET-14Y

4.054 BUSHING – CONNECTOR – RELAY – RETAINER – ROD – SOLENOID – SWITCH, Safety Starting Switch Or Speed Sensing (Con't)

89	Y 6-SPD M/TRANS (ML9) ...	10159404	1	774.73	SOLENOID, M/TRNS 2ND & 3RD GR BLOCKOUT (04.307) (AC-DELCO #10159404)	5-G4,22
90-96	Y 6-SPD M/TRANS (ML9) ...	10140541	1	774.73	SOLENOID, M/TRNS 2ND & 3RD GR BLOCKOUT (04.307) (AC-DELCO #10140541)	5-G4,22
89-96	Y 6-SPD M/TRANS (ML9) ...	10045822	1	30.87	SWITCH, CLU PED POSN (AC-DELCO #D2213A)	1-K14,7

4.056 CONNECTOR, Control module

90-92	Y 6-SPD M/TRANS (ML9) ...	12116958	1	20.24	CONNECTOR, M/TRNS CMPTR AIDE SHFT SOL (GRAY) (2-WAY F) (W/LEADS) (02.535) (AC-DELCO #PT419)	
93-94	Y	12116958	1	20.24	CONNECTOR, M/TRNS CMPTR AIDE SHFT SOL (GRAY) (2-WAY F) (W/LEADS) (02.535) (AC-DELCO #PT419)	

4.085 BOLT – STUD, Transmission Mount and Support

89-90	Y	10111696	5	1.80	BOLT, TRANS	5-G4,13
91-95	Y 5.7J (LT5), 6-SPD M/TRANS (ML9)	10111696	5	1.80	BOLT, TRANS (M12X1.75X40) ...	5-G4,13
91	Y 5.7-8 (L98)	10174418	5	3.00	BOLT, TRANS (M12X1.75X45) ...	5-G8,13
92-95	Y 5.7P (LT1), 6-SPD M/TRANS (ML9)	10174418	5	3.00	BOLT, TRANS (M12X1.75X45) ...	5-G8,13
96	Y 6-SPD M/TRANS (ML9) ...	10174418	5	3.00	BOLT, TRANS (M12X1.75X45) ...	5-G8,13
89	Y	10140805	1	DISCON	STUD, TRANSAXLE	

4.104 BOLT – VENT, Transmission Case

91-94	Y 5.7J (LT5)	11514569	2	8.40	BOLT, TRANS CASE (M10X1.5X135, 39 THD, 9.8, PE) (08.900)	
89-96	Y 6-SPD M/TRANS (ML9) ...	10140671	1	79.75	VENT, M/TRNS	5-G4,12

4.105 PLUG – STUD, Transmission Case

91-96	Y 6-SPD M/TRANS (ML9) ...	12507666	1	7.35	PLUG, REV IDLER GR SHF HOLE	5-G8,16
89-96	Y 6-SPD M/TRANS (ML9) ...	10140673	1	6.60	PLUG, TRANS OIL FIL (& DRAIN) (AC-DELCO #10140673)	5-G4,11
89-96	Y 6-SPD M/TRANS (ML9) ...	10147909	1	12.18	STUD, REV IDLER GR ACC HOLE CVR (04.431) (AC-DELCO #10147909)	5-G4,25

4.109 GASKET, Transmission Case

89-96	Y 6-SPD M/TRANS (ML9) ...	10147907	1	5.62	GASKET, REV IDLER GR ACC HOLE CVR (04.435) (AC-DELCO #10147907)	5-G4,23

© 2000 GENERAL MOTORS SERVICE PARTS OPERATIONS-CHEVROLET-14Y

4.307 CONNECTOR – PLUG, Transmission Internal Shift

90-91	Y 5.7J (LT5), 5.7-6 (L98)	12102491	1	28.96	CONNECTOR, M/TRNS CMPTR AIDE SHFT RLY (4-WAY F) (W/LEADS) (01.055) (AC-DELCO #PT282)	
92	Y 5.7P (LT1), 6-SPD M/TRANS (ML9)	12102491	1	28.96	CONNECTOR, M/TRNS CMPTR AIDE SHFT RLY (4-WAY F) (W/LEADS) (01.055) (AC-DELCO #PT282)	
89-96	Y 6-SPD M/TRANS (ML9) ...	10140674	1	.59	PLUG, REV SHFT SHF DTNT (04.052)	5-G4,17

4.317 EXTENSION – PIN – RING, Transmission Case Extension

91-96	Y 6-SPD M/TRANS (ML9) ...	12456331	1	632.00	EXTENSION, TRANS	5-G8,2
91-96	Y 6-SPD M/TRANS (ML9) ...	12507676	1	.55	PIN, TRANS EXTN	5-G8,41
91-96	Y 6-SPD M/TRANS (ML9) ...	12507675	1	48.50	RING, TRANS EXTN SUPT	5-G8,40

4.318 GASKET – SEAL, Transmission Extension

91-96	Y 6-SPD M/TRANS (ML9) ...	12508276	1	5.50	GASKET, TRANS EXTN	5-G8,42
89-96	Y 6-SPD M/TRANS (ML9) ...	10140538	1	13.53	SEAL, MAIN SHF (AC-DELCO #10140538)	5-G4,29

4.319 BOLT – WASHER, Transmission Extension

91-96	Y 6-SPD M/TRANS (ML9) ...	12507668	1	1.25	BOLT, TRANS EXTN (M8X30)	5-G8,39
91-96	Y 6-SPD M/TRANS (ML9) ...	12507669	6	2.65	BOLT, TRANS EXTN (M8X40)	5-G8,39
91-96	Y 6-SPD M/TRANS (ML9) ...	12507667	1	5.35	WASHER, TRANS EXTN (04.318)	5-G8,45

4.329 SENSOR, Speedometer Drive

94-96	Y 6-SPD M/TRANS (ML9) ...	10456089	1	36.09	SENSOR, VEH SPD (W/ O-RING) (AC-DELCO #213-198)	5-G8,32

4.337 GEAR, Speedometer Driven

94	Y 5.7P (LT1), 6-SPD M/TRANS (ML9)	25513047	1	7.60	GEAR, SPEEDO DRVN (BLACK) (40 TEETH) (AC-DELCO #25513047)	5-G8,30
94-96	Y 6-SPD M/TRANS (ML9) ...	25513049	1	7.60	GEAR, SPEEDO DRVN (GREEN) (42 TEETH) (AC-DELCO #25513049)	5-G8,30

4.338 SEAL, Speedometer Driven Gear

89-91	Y	15552872	1	*1.82	SEAL, SPEEDO DRVN GR SLEV (O RING) (TEFLON) (AC-DELCO #15552872)	5-G4,31

4.343 GEAR, Speedometer Drive

89-96	Y 6-SPD M/TRANS (ML9) ...	12507670	1	4.95	GEAR, SPEEDO DRV (GRAY) (15 TEETH)	5-G8,43

4.345 CLIP, Speedometer Drive Gear

91-96	Y 6-SPD M/TRANS (ML9) ...	12507671	1	.92	CLIP, SPEEDO DRV GR	5-G8,44

4.352 RETAINER, Transmission Clutch Gear

89-96	Y 6-SPD M/TRANS (ML9) ...	10140670	1	57.22	RETAINER, INPUT SHF BRG RET (04.412) (AC-DELCO #10140670)	5-G4,5

© 2000 GENERAL MOTORS SERVICE PARTS OPERATIONS-CHEVROLET-14Y

4.353 RETAINER, Transmission Clutch Gear

89	Y 6-SPD M/TRANS (ML9) ...	12514095	1	111.00	RETAINER, INPUT SHF BRG (1.373 DIA TUBE)	5-G4,1
89	Y 6-SPD M/TRANS (ML9) ...	12533800	1	198.00	RETAINER, INPUT SHF BRG (1.305 DIA TUBE)	5-G4,1
90-95	Y 5.7J (LT5), 6-SPD M/TRANS (ML9)	12514095	1	111.00	RETAINER, INPUT SHF BRG (1.373 DIA TUBE)	5-G4,1
90-95	Y 5.7J (LT5), 6-SPD M/TRANS (ML9)	12533300	1	198.00	RETAINER, INPUT SHF BRG (1.305 DIA TUBE)	5-G4,1
92-96	Y 5.7P (LT1), 6-SPD M/TRANS (ML9), (1ST DES)	12514094	1	111.00	RETAINER, INPUT SHF BRG (FOR 2ND DES ID BY 1.305 DIA TUBE SEE 12533801) (1.373 DIA TUBE)	5-G8,1
92-96	Y 5.7P (LT1), 6-SPD M/TRANS (ML9), (2ND DES)	12533801	1	111.00	RETAINER, INPUT SHF BRG (FOR 1ST DES ID BY 1.373 DIA TUBE SEE 12514094) (1.305 DIA TUBE)	5-G8,1

4.354 SEAL, Transmission Clutch Gear Oil

89-96	Y 6-SPD M/TRANS (ML9) ...	10140532	1	4.07	SEAL, INPUT SHF BRG RET (O RING) (04.358) (AC-DELCO #10140532)	5-G4,6
89-96	Y 6-SPD M/TRANS (ML9) ...	10140533	1	31.92	SEAL, MAIN DRV GR BRG OIL (AC-DELCO #10140533)	5-G4,8

4.356 TUBE, Transmission Front

89-91	Y 5.7-8 (L98), 6-SPD M/TRANS (ML9)	12511387	1	81.04	TUBE, MAIN DRV GR BRG RET (AC-DELCO #12511387)	5-G4,7
90-93	Y 5.7J (LT5), 6-SPD M/TRANS (ML9)	12511386	1	54.93	TUBE, MAIN DRV GR BRG RET (AC-DELCO #12511386)	5-G4,7
92-96	Y 5.7P (LT1), 6-SPD M/TRANS (ML9)	12511387	1	81.04	TUBE, MAIN DRV GR BRG RET (AC-DELCO #12511387)	5-G4,7

4.358 GASKET, Transmission Main Drive Gear Bearing Retainer

89-96	Y 6-SPD M/TRANS (ML9) ...	10147905	1	7.60	GASKET, INPUT SHF BRG RET (AC-DELCO #10147905)	5-G4,9

4.412 SHIM, Transmission Mainshaft

90-96	Y 6-SPD M/TRANS (ML9) ...	10181341	AR	17.00	SHIM, INPUT SHF BRG RET (RR EXT GSKT & OUTPUT SHAFT ENDPLAY) (1.65MM THK)	5-G4,10
90-96	Y 6-SPD M/TRANS (ML9) ...	10181342	AR	17.00	SHIM, INPUT SHF BRG RET (RR EXT GSKT & OUTPUT SHAFT ENDPLAY) (1.70MM THK)	5-G4,10
90-96	Y 6-SPD M/TRANS (ML9) ...	10181343	AR	17.00	SHIM, INPUT SHF BRG RET (RR EXT GSKT & OUTPUT SHAFT ENDPLAY, 1.75MM THK) (70.2 ID X 79.8 OD X 1.75 MM THK)	5-G4,10
90-96	Y 6-SPD M/TRANS (ML9) ...	10181344	AR	17.00	SHIM, INPUT SHF BRG RET (RR EXT GSKT & OUTPUT SHAFT ENDPLAY, 1.80MM THK) (70.2 ID X 79.8 OD X 1.80 MM THK)	5-G4,10
90-96	Y 6-SPD M/TRANS (ML9) ...	10181345	AR	17.00	SHIM, INPUT SHF BRG RET (RR EXT GSKT & OUTPUT SHAFT ENDPLAY, 1.85MM THK) (1.85MM THK)	5-G4,10
90-96	Y 6-SPD M/TRANS (ML9) ...	10181346	AR	17.00	SHIM, INPUT SHF BRG RET (RR EXT GSKT & OUTPUT SHAFT ENDPLAY, 1.90MM THK) (1.90MM THK)	5-G4,10

© 2000 GENERAL MOTORS SERVICE PARTS OPERATIONS-CHEVROLET-14Y

4.412 SHIM, Transmission Mainshaft (Con't)

90-96	Y 6-SPD M/TRANS (ML9) ...	10181347	AR	17.00	SHIM, INPUT SHF BRG RET (RR EXT GSKT & OUTPUT SHAFT ENDPLAY, 1.95MM THK)	5-G4,10
90-96	Y 6-SPD M/TRANS (ML9) ...	10181348	AR	17.00	SHIM, INPUT SHF BRG RET (RR EXT GSKT & OUTPUT SHAFT ENDPLAY, 2.00MM THK)	5-G4,10
90-96	Y 6-SPD M/TRANS (ML9) ...	10181349	AR	17.00	SHIM, INPUT SHF BRG RET (RR EXT GSKT & OUTPUT SHAFT ENDPLAY, 2.05MM THK)	5-G4,10
90-96	Y 6-SPD M/TRANS (ML9) ...	10181350	AR	17.00	SHIM, INPUT SHF BRG RET (RR EXT GSKT & OUTPUT SHAFT ENDPLAY, 2.10MM THK)	5-G4,10
90-96	Y 6-SPD M/TRANS (ML9) ...	10181351	AR	17.00	SHIM, INPUT SHF BRG RET (RR EXT GSKT & OUTPUT SHAFT ENDPLAY, 2.15MM THK)	5-G4,10
90-96	Y 6-SPD M/TRANS (ML9) ...	10181352	AR	17.00	SHIM, INPUT SHF BRG RET (RR EXT GSKT & OUTPUT SHAFT ENDPLAY, 2.20MM THK)	5-G4,10
90-96	Y 6-SPD M/TRANS (ML9) ...	10181353	AR	17.00	SHIM, INPUT SHF BRG RET (RR EXT GSKT & OUTPUT SHAFT ENDPLAY, 2.25MM THK)	5-G4,10
90-96	Y 6-SPD M/TRANS (ML9) ...	10181354	AR	17.00	SHIM, INPUT SHF BRG RET (RR EXT GSKT & OUTPUT SHAFT ENDPLAY, 2.30MM THK)	5-G4,10
90-96	Y 6-SPD M/TRANS (ML9) ...	10181355	1	17.00	SHIM, INPUT SHF BRG RET (2.35MM THK)	5-G4,10
90-96	Y 6-SPD M/TRANS (ML9) ...	10181356	1	17.00	SHIM, INPUT SHF BRG RET (2.40MM THK)	5-G4,10
90-96	Y 6-SPD M/TRANS (ML9) ...	10181357	1	17.00	SHIM, INPUT SHF BRG RET (2.45MM THK)	5-G4,10
90-96	Y 6-SPD M/TRANS (ML9) ...	10181358	1	17.00	SHIM, INPUT SHF BRG RET (2.50MM THK)	5-G4,10

4.422 BOLT, Transmission Countershaft Gear

89-96	Y 6-SPD M/TRANS (ML9) ...	10140542	6	2.77	BOLT, INPUT SHF BRG RET (04.356) (AC-DELCO #10140542)	5-G4,4

4.423 SEAL, Transmission Countershaft Gear Bearing

89-96	Y 6-SPD M/TRANS (ML9) ...	10140535	1	29.53	SEAL, CNTR GR SHF (O RING) (04.435) (AC-DELCO #10140535)	5-G4,47

4.435 BOLT - COVER - SEAL, Transmission Reverse Idler Shaft

89-96	Y 6-SPD M/TRANS (ML9) ...	10140571	1	3.12	BOLT, REV IDLER GR SHF (AC-DELCO #10140571)	5-G4,27
89-96	Y 6-SPD M/TRANS (ML9) ...	10147906	1	38.80	COVER, REV IDLER (AC-DELCO #10147906)	5-G4,24
89-96	Y 6-SPD M/TRANS (ML9) ...	10140537	1	3.67	SEAL, REV IDLER GR ACC HOLE CVR BOLT (O RING) (AC-DELCO #10140537)	5-G4,28

© 2000 GENERAL MOTORS SERVICE PARTS OPERATIONS-CHEVROLET-14Y

4.480 RELAY, Transmission Overdrive

89-91	Y	14089936	1	16.26	RELAY, M/TRNS O/D SW (5-PIN OVAL SHAPE) (USE W/CONN 15308002) (01.055) (AC-DELCO #15-8240) .....
93-94	Y 5.7P (LT1), 6-SPD M/TRANS (ML9)	12193601	1	23.44	RELAY, M/TRNS O/D SW (4TH/6TH GR) (BLACK) (5-WAY M) (USED W/CONNECTOR 15306045) (09.277) (AC-DELCO #15-8719) .....
93-94	Y	12193603	1	20.30	RELAY, M/TRNS O/D SW (GRAY) (SPST 280 MINI) (4-WAY) (02.100) (AC-DELCO #12193603) .....

© 2000 GENERAL MOTORS SERVICE PARTS OPERATIONS-CHEVROLET-14Y

MICROFICHE INDEX

GROUP 4.000

FICHE 5 OF 11

GROUP	DESCRIPTION	STARTING GRID LOCATION PARTS	ILLUSTRATIONS
–	GENERAL INFORMATION	1–A2	1–G2
–	ALPHABETICAL INDEX	1–B13	N.A.
4.000	4–SPEED TRANSMISSION	5–A2	5–F2
4.000	6–SPEED TRANSMISSION	5–B2	5–G2
4.000	AUTOMATIC TRANSMISSION	5–C2	5–H2
–	OUT OF FICHE CALLS	N.A.	5–M23

5–C1

CHEVROLET
CHASSIS GROUP 4.000

TRANSMISSION – BRAKES

ALPHABETICAL INDEX

A

ACCUMULATOR, Transmission Servo & Accumulator [AUTOMATIC] 4.228 5–D12
ACTUATOR, Transmission Park Lock [AUTOMATIC] 4.290 5–D25

B

BALL, Transmission Governor [AUTOMATIC] 4.256 5–D17
BALL, Transmission Main Control Valve Body [AUTOMATIC] 4.265 5–D18
BAND, Transmission Brake [AUTOMATIC] 4.251 5–D17
BEARING, Transmission Housing [AUTOMATIC] 4.162 5–C19
BEARING, Transmission Output/Counter Shaft or Carrier [AUTOMATIC] 4.176 5–D3
BEARING, Transmission Sun Gear [AUTOMATIC] 4.159 5–C19
BODY KIT, Transmission Oil Pump [AUTOMATIC] 4.224 5–D7
BODY, Transmission Main Control Valve Body [AUTOMATIC] 4.265 5–D18
BODY, Transmission Oil Pump [AUTOMATIC] 4.224 5–D7
BOLT, Transmission Auxiliary Valve Body Cover [AUTOMATIC] 4.216 5–D7
BOLT, Transmission Case Extension [AUTOMATIC] 4.317 5–D26
BOLT, Transmission Converter [AUTOMATIC] 4.115 5–C14
BOLT, Transmission Main Control Valve Body [AUTOMATIC] 4.265 5–D18
BOLT, Transmission Oil Pan [AUTOMATIC] 4.196 5–D6
BOLT, Transmission Oil Pump [AUTOMATIC] 4.226 5–D10
BOLT, Transmission Oil Suction Tube [AUTOMATIC] 4.197 5–D6
BOLT, Transmission Rear Servo Accumulator [AUTOMATIC] 4.241 5–D16
BOLT, Transmission Servo & Accumulator [AUTOMATIC] 4.228 5–D12
BOOT, Transmission Control Lever [AUTOMATIC] 4.015 5–C11
BRACE, Transmission Detent Shift Control [AUTOMATIC] 4.050 5–C12
BRACKET, Transmission Park Lock [AUTOMATIC] 4.290 5–D25
BRACKET, Transmission Shift Control Cable [AUTOMATIC] 4.047 5–C11
BUSHING, Transmission Case Extension [AUTOMATIC] 4.319 5–D27
BUSHING, Transmission Clutch [AUTOMATIC] 4.169 5–C28
BUSHING, Transmission Clutch [AUTOMATIC] 4.180 5–D3
BUSHING, Transmission Converter [AUTOMATIC] 4.115 5–C14
BUSHING, Transmission Governor [AUTOMATIC] 4.256 5–D17
BUSHING, Transmission Input and Turbine Shaft [AUTOMATIC] 4.123 5–C16
BUSHING, Transmission Oil Pump [AUTOMATIC] 4.226 5–D10
BUSHING, Transmission Output/Counter Shaft or Carrier [AUTOMATIC] 4.176 5–D3

C

CABLE, Transmission Detent Shift Control [AUTOMATIC] 4.050 5–C12
CABLE, Transmission Shift Control Cable [AUTOMATIC] 4.047 5–C11
CAP, Transmission Governor [AUTOMATIC] 4.256 5–D17
CARRIER, Transmission Output/Counter Shaft or Carrier [AUTOMATIC] 4.175 5–D2
CASE KIT, Transmission Case [AUTOMATIC] 4.103 5–C14
CASE, Transmission Case [AUTOMATIC] 4.103 5–C14
CLAMP, Transmission Main Control Valve Body [AUTOMATIC] 4.265 5–D18
CLIP, Speedometer Drive Gear [AUTOMATIC] 4.345 5–E13
CLIP, Transmission Oil Cooler [AUTOMATIC] 4.128 5–C17
CLIP, Transmission Oil Suction Tube [AUTOMATIC] 4.197 5–D6
CLUTCH, Transmission Clutch [AUTOMATIC] 4.164 5–C26
CLUTCH, Transmission Clutch [AUTOMATIC] 4.180 5–D3

© GENERAL MOTORS SERVICE PARTS OPERATIONS–CHEVROLET–14Y

CONDUIT, Transmission Solenoid [AUTOMATIC] 4.122 5-C15
CONNECTOR, Transmission Control [AUTOMATIC] 4.057 5-C13
CONNECTOR, Transmission Converter [AUTOMATIC] 4.115 5-C14
CONNECTOR, Transmission Interlock [AUTOMATIC] 4.307 5-D26
CONNECTOR, Transmission Main Control Valve Body [AUTOMATIC] .. 4.265 5-D18
CONNECTOR, Transmission Safety Start/Warning [AUTOMATIC] 4.054 5-C13
CONNECTOR, Transmission Shift Brake Interlock [AUTOMATIC] 4.053 5-C13
CONTROL, Transmission Shift [AUTOMATIC] 4.004 5-C10
CONVERSION KIT, Transmission Control Module [AUTOMATIC] 4.056 5-C13
CONVERTER, Transmission Converter [AUTOMATIC] 4.115 5-C14
COOLER, Transmission Oil Cooler [AUTOMATIC] 4.128 5-C17
COVER, Transmission Governor [AUTOMATIC] 4.256 5-D17
COVER, Transmission Main Control Valve Body [AUTOMATIC] 4.265 5-D18
COVER, Transmission Oil Pump [AUTOMATIC] 4.224 5-D7
COVER, Transmission Oil Suction Tube [AUTOMATIC] 4.197 5-D6
COVER, Transmission Servo & Accumulator [AUTOMATIC] 4.228 5-D12

D

DEFLECTOR, Transmission Oil Pan [AUTOMATIC] 4.195 5-D5
DETENT, Transmission Throttle Valve [AUTOMATIC] 4.275 5-D24
DIAL, Transmission Shift Control Selector [AUTOMATIC] 4.020 5-C11

E

EXTENSION, Transmission Case Extension [AUTOMATIC] 4.317 5-D26

F

FILTER KIT, Transmission Oil Suction Tube [AUTOMATIC] 4.197 5-D6
FILTER, Transmission Main Control Valve Body [AUTOMATIC] 4.265 5-D18
FITTING, Transmission Oil Cooler [AUTOMATIC] 4.128 5-C17

G

GASKET KIT, Transmission Main Control Valve Body [AUTOMATIC] 4.265 5-D18
GASKET KIT, Transmission Overhaul [AUTOMATIC] 4.005 5-C10
GASKET, Transmission Main Control Valve Body [AUTOMATIC] 4.265 5-D18
GASKET, Transmission Oil Pan [AUTOMATIC] 4.196 5-D6
GASKET, Transmission Oil Pump [AUTOMATIC] 4.226 5-D10
GEAR, Speedometer Drive [AUTOMATIC] 4.337 5-D27
GEAR, Speedometer Drive [AUTOMATIC] 4.343 5-E13
GEAR, Transmission Governor [AUTOMATIC] 4.256 5-D17
GEAR, Transmission Input [AUTOMATIC] 4.158 5-C18
GEAR, Transmission Sun Gear [AUTOMATIC] 4.159 5-C19
GOVERNOR, Transmission Governor [AUTOMATIC] 4.256 5-D17
GROMMET, Transmission Shift Control Cable [AUTOMATIC] 4.047 5-C11
GUIDE, Transmission Oil Pump [AUTOMATIC] 4.226 5-D10

H

HARNESS, Transmission Solenoid [AUTOMATIC] 4.122 5-C15
HOUSING, Transmission Clutch [AUTOMATIC] 4.169 5-C28
HOUSING, Transmission Input [AUTOMATIC] 4.158 5-C18
HOUSING, Transmission Servo & Accumulator [AUTOMATIC] 4.228 5-D12
HOUSING, Transmission Shift Control Selector [AUTOMATIC] 4.020 5-C11

I

INDICATOR, Transmission Oil Filler [AUTOMATIC] 4.133 5-C17
INDICATOR, Transmission Shift Control Selector [AUTOMATIC] 4.020 5-C11

K

KNOB PKG, Transmission Control Lever [AUTOMATIC] 4.006 5-C10
KNOB, Transmission Control Lever [AUTOMATIC] 4.006 5-C10

L

LEVER, Transmission Control [AUTOMATIC] 4.045 5-C11
LEVER, Transmission Detent [AUTOMATIC] 4.279 5-D25
LEVER, Transmission Throttle Valve [AUTOMATIC] 4.275 5-D24
LINK, Transmission Throttle Valve [AUTOMATIC] 4.275 5-D24

M

MAGNET, Transmission Oil Pan [AUTOMATIC] 4.195 5-D5

N

NUT, Transmission Oil Cooler [AUTOMATIC] 4.128 5-C17
NUT, Transmission Safety Start/Warning [AUTOMATIC] 4.054 5-C13
NUT, Transmission Throttle Valve [AUTOMATIC] 4.275 5-D24

O

ORIFICE, Transmission Case [AUTOMATIC] 4.105 5-C14
ORIFICE, Transmission Oil Pump [AUTOMATIC] 4.224 5-D7

P

PAN KIT, Transmission Oil Pan [AUTOMATIC] 4.195 5-D5
PAWL KIT, Transmission Park Lock [AUTOMATIC] 4.294 5-D26
PIN, Transmission Clutch [AUTOMATIC] 4.169 5-C28
PIN, Transmission Control Lever [AUTOMATIC] 4.008 5-C11
PIN, Transmission Governor [AUTOMATIC] 4.256 5-D17
PIN, Transmission Main Control Valve Body [AUTOMATIC] 4.265 5-D18
PIN, Transmission Manual Detent [AUTOMATIC] 4.293 5-D25
PIN, Transmission Oil Pump [AUTOMATIC] 4.226 5-D10
PIN, Transmission Rear Servo Piston [AUTOMATIC] 4.246 5-D16
PIN, Transmission Servo & Accumulator [AUTOMATIC] 4.228 5-D12
PIN, Transmission Servo & Accumulator [AUTOMATIC] 4.229 5-D14
PIN, Transmission Servo & Accumulator [AUTOMATIC] 4.233 5-D15
PIN, Transmission Shift Control Cable [AUTOMATIC] 4.047 5-C11
PIPE, Transmission Case [AUTOMATIC] 4.104 5-C14
PIPE, Transmission Main Control Valve Body [AUTOMATIC] 4.265 5-D18
PISTON KIT, Transmission Servo & Accumulator [AUTOMATIC] 4.228 5-D12
PISTON, Transmission Clutch [AUTOMATIC] 4.166 5-C27
PISTON, Transmission Servo & Accumulator [AUTOMATIC] 4.228 5-D12
PLATE KIT, Transmission Clutch [AUTOMATIC] 4.163 5-C20
PLATE, Transmission Clutch [AUTOMATIC] 4.163 5-C20
PLATE, Transmission Main Control Valve Body [AUTOMATIC] 4.265 5-D18
PLATE, Transmission Shift Control [AUTOMATIC] 4.012 5-C11
PLUG, Transmission Case [AUTOMATIC] 4.104 5-C14
PLUG, Transmission Main Control Valve Body [AUTOMATIC] 4.265 5-D18
PLUG, Transmission Oil Cooler [AUTOMATIC] 4.128 5-C17
PLUG, Transmission Oil Pump [AUTOMATIC] 4.224 5-D7
PLUG, Transmission Park Lock [AUTOMATIC] 4.294 5-D26
PUMP, Transmission Oil Pump [AUTOMATIC] 4.224 5-D7
PUSHBUTTON, Transmission Control Lever [AUTOMATIC] 4.006 5-C10

R

RACE, Transmission Clutch [AUTOMATIC] 4.180 5-D3
RETAINER, Transmission Auxiliary Valve Body Cover [AUTOMATIC] 4.216 5-D7
RETAINER, Transmission Clutch [AUTOMATIC] 4.166 5-C27
RETAINER, Transmission Clutch [AUTOMATIC] 4.169 5-C28
RETAINER, Transmission Control Lever [AUTOMATIC] 4.006 5-C10
RETAINER, Transmission Control Switch [AUTOMATIC] 4.060 5-C13
RETAINER, Transmission Main Control Valve Body [AUTOMATIC] 4.265 5-D18
RETAINER, Transmission Oil [AUTOMATIC] 4.248 5-D17
RETAINER, Transmission Oil Pump [AUTOMATIC] 4.226 5-D10
RETAINER, Transmission Servo & Accumulator [AUTOMATIC] 4.233 5-D15
RETAINER, Transmission Shift Control Cable [AUTOMATIC] 4.047 5-C11
RETAINER, Transmission Throttle Valve [AUTOMATIC] 4.275 5-D24
RING KIT, Transmission Overhaul [AUTOMATIC] 4.005 5-C10
RING KIT, Transmission Servo & Accumulator [AUTOMATIC] 4.229 5-D14

RING, Transmission Clutch [AUTOMATIC] 4.163 5-C20
RING, Transmission Clutch [AUTOMATIC] 4.164 5-C26
RING, Transmission Clutch [AUTOMATIC] 4.167 5-C28
RING, Transmission Clutch [AUTOMATIC] 4.180 5-D3
RING, Transmission Control Valve [AUTOMATIC] 4.262 5-D17
RING, Transmission Input and Turbine Shaft [AUTOMATIC] 4.123 5-C16
RING, Transmission Main Control Valve Body [AUTOMATIC] 4.265 5-D18
RING, Transmission Oil Pump [AUTOMATIC] 4.226 5-D10
RING, Transmission Output/Counter Shaft or Carrier [AUTOMATIC] 4.176 5-D3
RING, Transmission Servo & Accumulator [AUTOMATIC] 4.228 5-D12
RING, Transmission Servo & Accumulator [AUTOMATIC] 4.229 5-D14
RING, Transmission Sun Gear [AUTOMATIC] 4.159 5-C19
RIVET, Transmission Control Valve [AUTOMATIC] 4.262 5-D17
ROLLER, Transmission Clutch [AUTOMATIC] 4.180 5-D3
ROTOR KIT, Transmission Oil Pump [AUTOMATIC] 4.224 5-D7
ROTOR, Transmission Oil Pump [AUTOMATIC] 4.224 5-D7
ROTOR, Transmission Oil Pump & Governor [AUTOMATIC] 4.210 5-D6

S

SCREEN, Transmission Main Control Valve Body [AUTOMATIC] 4.265 5-D18
SCREEN, Transmission Oil [AUTOMATIC] 4.248 5-D17
SCREEN, Transmission Oil Pump [AUTOMATIC] 4.224 5-D7
SCREW, Transmission Oil Pan [AUTOMATIC] 4.196 5-D6
SEAL KIT, Transmission Clutch (Low & Reverse) [AUTOMATIC] 4.189 5-D4
SEAL KIT, Transmission Clutch [AUTOMATIC] 4.166 5-C27
SEAL KIT, Transmission Oil Pump [AUTOMATIC] 4.226 5-D10
SEAL, Speedometer Driven Gear [AUTOMATIC] 4.338 5-E13
SEAL, Transmission Clutch [AUTOMATIC] 4.166 5-C27
SEAL, Transmission Converter [AUTOMATIC] 4.115 5-C14
SEAL, Transmission Detent Shift Control [AUTOMATIC] 4.050 5-C12
SEAL, Transmission Extension [AUTOMATIC] 4.318 5-D26
SEAL, Transmission Input and Turbine Shaft [AUTOMATIC] 4.123 5-C16
SEAL, Transmission Manual Shaft [AUTOMATIC] 4.282 5-D25
SEAL, Transmission Oil Filler [AUTOMATIC] 4.133 5-C17
SEAL, Transmission Oil Pump [AUTOMATIC] 4.224 5-D7
SEAL, Transmission Oil Pump [AUTOMATIC] 4.226 5-D10
SEAL, Transmission Output/Counter Shaft or Carrier [AUTOMATIC] 4.176 5-D3
SEAL, Transmission Servo & Accumulator [AUTOMATIC] 4.228 5-D12
SEAL, Transmission Servo & Accumulator [AUTOMATIC] 4.229 5-D14
SEAL, Transmission Solenoid [AUTOMATIC] 4.122 5-C15
SEAL, Transmission Vacuum [AUTOMATIC] 4.206 5-D6
SENSOR, Speedometer Drive [AUTOMATIC] 4.329 5-D27
SHAFT KIT, Transmission Park Lock [AUTOMATIC] 4.294 5-D26
SHAFT, Transmission Output/Counter Shaft or Carrier [AUTOMATIC] 4.175 5-D2
SHELL, Transmission Output/Counter Shaft or Carrier [AUTOMATIC] 4.175 5-D2
SHIELD, Transmission Control Indicator Lamp [AUTOMATIC] 4.022 5-C11
SLIDE, Transmission Oil Pump [AUTOMATIC] 4.224 5-D7
SOCKET, Transmission Control Indicator Lamp [AUTOMATIC] 4.022 5-C11
SOLENOID, Transmission Solenoid [AUTOMATIC] 4.122 5-C15
SPRING, Transmission Clutch [AUTOMATIC] 4.163 5-C20
SPRING, Transmission Clutch [AUTOMATIC] 4.164 5-C26
SPRING, Transmission Clutch [AUTOMATIC] 4.167 5-C28
SPRING, Transmission Clutch [AUTOMATIC] 4.180 5-D3
SPRING, Transmission Control Valve [AUTOMATIC] 4.262 5-D17
SPRING, Transmission Main Control Valve Body [AUTOMATIC] 4.265 5-D18
SPRING, Transmission Oil Pump [AUTOMATIC] 4.226 5-D10
SPRING, Transmission Park Lock [AUTOMATIC] 4.295 5-D26
SPRING, Transmission Rear Servo Piston [AUTOMATIC] 4.246 5-D16
SPRING, Transmission Servo & Accumulator [AUTOMATIC] 4.233 5-D15
STOP, Transmission Control Valve [AUTOMATIC] 4.262 5-D17
STOP, Transmission Oil Filler [AUTOMATIC] 4.133 5-C17
STUD, Transmission Control Lever [AUTOMATIC] 4.006 5-C10
STUD, Transmission Mount and Support [AUTOMATIC] 4.085 5-C13
SUPPORT, Transmission Clutch [AUTOMATIC] 4.166 5-C27
SUPPORT, Transmission Output/Counter Shaft or Carrier [AUTOMATIC] 4.175 5-D2
SWITCH, Transmission Converter [AUTOMATIC] 4.115 5-C14

SWITCH, Transmission Main Control Valve Body [AUTOMATIC] 4.265 5-D18
SWITCH, Transmission Safety Start/Warning [AUTOMATIC] 4.054 5-C13

T

TRANSMISSION, Automatic [AUTOMATIC] 4.003 5-C9
TUBE, Transmission Oil Filler [AUTOMATIC] 4.133 5-C17

V

VALVE KIT, Transmission Main Control Valve Body [AUTOMATIC] 4.265 5-D18
VALVE, Transmission Clutch [AUTOMATIC] 4.169 5-C28
VALVE, Transmission Clutch [AUTOMATIC] 4.180 5-D3
VALVE, Transmission Control Valve [AUTOMATIC] 4.262 5-D17
VALVE, Transmission Detent [AUTOMATIC] 4.279 5-D25
VALVE, Transmission Governor [AUTOMATIC] 4.256 5-D17
VALVE, Transmission Input and Turbine Shaft [AUTOMATIC] 4.123 5-C16
VALVE, Transmission Main Control Valve Body [AUTOMATIC] 4.265 5-D18
VALVE, Transmission Oil Pump [AUTOMATIC] 4.226 5-D10
VALVE, Transmission Servo & Accumulator [AUTOMATIC] 4.228 5-D12
VALVE, Transmission Solenoid [AUTOMATIC] 4.122 5-C15
VALVE, Transmission Throttle Valve [AUTOMATIC] 4.275 5-D24
VANE, Transmission Oil Pump [AUTOMATIC] 4.226 5-D10

W

WASHER, Transmission Clutch (Low & Reverse) [AUTOMATIC] 4.189 5-D4
WASHER, Transmission Oil Pump [AUTOMATIC] 4.226 5-D10
WASHER, Transmission Output/Counter Shaft or Carrier [AUTOMATIC] 4.176 5-D3
WASHER, Transmission Park Lock [AUTOMATIC] 4.295 5-D26
WASHER, Transmission Servo & Accumulator [AUTOMATIC] 4.233 5-D15
WASHER, Transmission Shift Control Cable [AUTOMATIC] 4.047 5-C11
WASHER, Transmission Sun Gear [AUTOMATIC] 4.159 5-C19
WHEEL, Speedometer Drive [AUTOMATIC] 4.343 5-E13

CHART INDEX

GROUP 4 GRID

SPEEDOMETER GEAR 5–D28

4.003 TRANSMISSION, Automatic

NOTE: REFER TO TRANSMISSION IDENTIFICATION PAGES FOR CODE LOCATION & OPTION IDENT.
NOTE: TRANSMISSION THM700R4/4L60 = MD8 4L60E = M30
NOTE: ALL NEW AND REMANUFACTURED HYDRA-MATIC AUTOMATIC TRANSMISSIONS INCLUDE TORQUE CONVERTER.

87	Y (MD8) (W/OVERDRIVE) ...	8663985	1	N.L.	TRANSMISSION, (CODE 7YDM) (REMAN)	
88	Y (MD8) (W/OVERDRIVE)	8663985	1	N.L.	TRANSMISSION, (CODE 8YDM) (REMAN)	
89	Y (MD8) (W/OVERDRIVE) ...	8663985	1	N.L.	TRANSMISSION, (CODE 9YDM) (REMAN)	
90	Y (MD8)	8673955	1	N.L.	TRANSMISSION, (CODE 0YDM, 1YHM) (REMAN)	
84-86	Y (MD8) (W/OVERDRIVE) ...	8659906	1	DISCON	TRANSMISSION, AUTO (GOODWRENCH REMAN) (CODE YA, YB, YC, YD, YW, Y9)	
84	Y 5.7-8 (L83), 4-SPD A/TRANS (MD8)	24209718	1	N.L.	TRANSMISSION, AUTO (A/C DELCO REMAN) (CODE AYCM (WITH OVERDRIVE)) (AC-DELCO #24209718) (4L60)	
85-86	Y 5.7-8 (L98), 4-SPD A/TRANS (MD8)	24209718	1	N.L.	TRANSMISSION, AUTO (A/C DELCO REMAN) (CODE AYCM) (WITH OVERDRIVE) (AC-DELCO #24209718) (4L60)	
87-89	Y 5.7-8 (L98), 4-SPD A/TRANS (MD8)	24212079	1	N.L.	TRANSMISSION, AUTO (A/C DELCO REMAN) (CODE AYDM) (WITH OVERDRIVE) (AC-DELCO #24212079) (4L60)	
90-91	Y 5.7-8 (L98), 4-SPD A/TRANS (MD8)	24212088	1	N.L.	TRANSMISSION, AUTO (A/C DELCO REMAN) (CODE AYHM) (AC-DELCO #24212088) (4L60)	
91	Y 5.7-8 (L98), 4-SPD A/TRANS (MD8)	8673955	1	N.L.	TRANSMISSION, AUTO (GOODWRENCH REMAN) (CODE 1YDM, 1YHM)	
92	Y 5.7P (LT1), 4-SPD A/TRANS (MD8), 2.59R (GM1)	8686963	1	N.L.	TRANSMISSION, AUTO (GOODWRENCH REMAN) (CODE 2YCM))	
92	Y 5.7P (LT1), 4-SPD A/TRANS (MD8), 2.73R (GU2), 3.07R (G44)	8686964	1	N.L.	TRANSMISSION, AUTO (GOODWRENCH REMAN) (CODE 2YDM))	
92-93	Y 5.7P (LT1), 4-SPD A/TRANS (MD8), 2.73R (GU2), 3.07R (G44)	24212118	1	N.L.	TRANSMISSION, AUTO (A/C DELCO REMAN) (CODE AYDM) (AC-DELCO #24212118) (4L60)	
92-93	Y 5.7P (LT1), 4-SPD A/TRANS (MD8), 2.59R (GM1)	24212122	1	N.L.	TRANSMISSION, AUTO (A/C DELCO REMAN) (CODE AYCM) (AC-DELCO #24212122) (4L60)	
93	Y 5.7P (LT1), 4-SPD A/TRANS (MD8), 2.59R (GM1), (EXC VE1 (EXPORT)	8686963	1	N.L.	TRANSMISSION, AUTO (GOODWRENCH REMAN) (CODE 3YCM)	
93	Y 5.7P (LT1), 4-SPD A/TRANS (MD8), 2.73R (GU2), 3.07R (G44)	8686964	1	N.L.	TRANSMISSION, AUTO (GOODWRENCH REMAN) (CODE 3YDM)	
94	Y 4-SPD A/TRANS (M30) ...	8690990	1	N.L.	TRANSMISSION, AUTO (CODE 4YDD) (REMAN)	5-K2
95	Y 4-SPD A/TRANS (M30) ...	24201935	1	N.L.	TRANSMISSION, AUTO (GOODWRENCH REMAN) (5YDD)	5-K2
96	Y 4-SPD A/TRANS (M30) ...	24203884	1	N.L.	TRANSMISSION, AUTO (GOODWRENCH REMAN) (CODE 6YDD)	5-L2

© 2000 GENERAL MOTORS SERVICE PARTS OPERATIONS-CHEVROLET-14Y

4.003 TRANSMISSION, Automatic (Con't)

	*EXPORT**********EXPORT**********EXPORT**********EXPORT**********EXPORT**********EXPORT*					
87	Y 5.7-8 (L98), 4-SPD A/TRANS (MD8), LEADED FUEL EMIS EXPORT (NM8) .	24209719	1	N.L.	TRANSMISSION, AUTO (A/C DELCO REMAN) (CODE AYAM) (AC-DELCO #24209719) (4L60)	
93	Y 5.7P (LT1), 4-SPD A/TRANS (MD8), 2.59R (GM1), VE1 (EXPORT)	8686963	1	N.L.	TRANSMISSION, AUTO (GOODWRENCH REMAN) (CODE 3YAM)	

4.004 CONTROL, Transmission Shift

84-85	Y (MD8)	14048996	1	DISCON	CONTROL	
92-93	Y 4-SPD A/TRANS (MD8), (EXC VE1 (EXPORT)	10204489	1	DISCON	CONTROL, A/TRNS	
94-96	Y 4-SPD A/TRANS (M30), (EXC VE1 (EXPORT)	12551499	1	81.09	CONTROL, A/TRNS (BTSI SOLENOID IS ONLY PART OF CNTRL ASM)	5-L16,8
86-91	Y	10111020	1	64.77	CONTROL, TRANS	5-L14,8
	*EXPORT**********EXPORT**********EXPORT**********EXPORT**********EXPORT**********EXPORT*					
92-93	Y VE1 (EXPORT)	10186863	1	80.84	CONTROL, A/TRNS	5-L16,8
94-96	Y 4-SPD A/TRANS (M30), VE1 (EXPORT)	12551500	1	80.84	CONTROL, A/TRNS	5-L16,8

4.005 GASKET KIT - RING KIT, Transmission Overhaul

84-93	Y 4-SPD A/TRANS (MD8) ...	24201804	1	131.07	GASKET KIT, A/TRNS (W/SEALS) (W/O PLATES OR PISTONS) (AC-DELCO #24201804)	5-I9,2
94-96	Y 4-SPD A/TRANS (M30) ...	24201803	1	196.62	GASKET KIT, A/TRNS SERV (W/O PLATES OR PISTONS) (AC-DELCO #24201803)	5-J19,1
84-93	Y 4-SPD A/TRANS (MD8) ...	8642910	1	27.28	RING KIT, RET (AC-DELCO #8642910)	5-I17,2
94-96	Y 4-SPD A/TRANS (M30) ...	8642910	1	27.28	RING KIT, RET (AC-DELCO #8642910)	5-I17,2

4.006 KNOB - KNOB PKG - PUSHBUTTON - RETAINER - STUD, Transmission Control Lever

84	Y A/TRNS (MD8)	10079858	1	DISCON	KNOB PKG, W/VINYL CVR, A/TRNS CONT LVR	
84-96	Y	10111697	1	76.50	KNOB, A/TRNS CONT LVR (W/LEATHER CVR)	5-L14,4
84	Y (MD8)	14076135	1	DISCON	KNOB, W/VINYL CVR & BUTTON	
84-93	Y	10142032	1	3.72	PUSHBUTTON, A/TRNS CONT LVR REL	5-L14,1
94-96	Y 4-SPD A/TRANS (M30) ...	10142032	1	3.72	PUSHBUTTON, A/TRNS CONT LVR REL	5-L14,1
84-91	Y	274273	1	*2.60	RETAINER, A/TRNS CONT LVR KNOB (04.008)	5-L14,3
92-93	Y 4-SPD A/TRANS (MD8) ...	274273	1	*2.60	RETAINER, A/TRNS CONT LVR KNOB (04.008)	5-L14,3
94-96	Y 4-SPD A/TRANS (M30) ...	274273	1	*2.60	RETAINER, A/TRNS CONT LVR KNOB (04.008)	5-L14,3
84-91	Y	14076140	1	*2.10	RETAINER, A/TRNS CONT LVR REL P/BUT (04.008)	5-L14,2
92-93	Y 4-SPD A/TRANS (MD8) ...	14076140	1	*2.10	RETAINER, A/TRNS CONT LVR REL P/BUT (04.008)	5-L14,2
94-96	Y 4-SPD A/TRANS (M30) ...	14076140	1	*2.10	RETAINER, A/TRNS CONT LVR REL P/BUT (04.008)	5-L14,2
86	Y A/TRNS (MD8)	14089222	2	2.25	STUD, A/TRANS RANGE SEL LVR CBL BRKT (03.265)	

© 2000 GENERAL MOTORS SERVICE PARTS OPERATIONS-CHEVROLET-14Y

4.008 PIN, Transmission Control Lever

84-86	Y	10150014	1	*4.03	PIN, CONT LVR PIV (04.006)	5-G10,43

4.012 PLATE, Transmission Shift Control

84-92	Y	14046619	1	7.34	PLATE, A/TRNS CONT MT (04.015)	5-L14,19
93	Y 4-SPD A/TRANS (MD8)	14046619	1	7.34	PLATE, A/TRNS CONT MT (04.015)	5-L14,19
94-96	Y 4-SPD A/TRANS (M30)	14046619	1	7.34	PLATE, A/TRNS CONT MT (04.015)	5-L14,19

4.015 BOOT, Transmission Control Lever

90-96	Y	10175792	1	104.04	BOOT, A/TRNS CONT	5-L14,6
84-89	Y	10104025	1	106.11	BOOT, CONT LVR UPR	5-L14,6

4.020 DIAL – HOUSING – INDICATOR, Transmission Shift Control Selector

84-89	Y	10146407	1	7.30	DIAL, A/TRNS CONT IND	5-L14,29
90-91	Y 4-SPD A/TRANS (MD8)	10153627	1	7.30	DIAL, A/TRNS CONT IND	5-L14,29
92-93	Y 4-SPD A/TRANS (MD8), (EXC VE1 (EXPORT)	10153627	1	7.30	DIAL, A/TRNS CONT IND	5-L14,29
94-96	Y 4-SPD A/TRANS (M30), (EXC VE1 (EXPORT)	10220955	1	7.30	DIAL, A/TRNS CONT IND	5-L16,29
84-93	Y 4-SPD A/TRANS (MD8)	10146440	1	10.50	HOUSING, A/TRNS CONT IND	5-L14,26
94-96	Y 4-SPD A/TRANS (M30)	10146440	1	10.50	HOUSING, A/TRNS CONT IND	5-L14,26
84-89	Y	14046747	1	17.27	INDICATOR, A/TRNS CONT	5-L14,28
90-91	Y	10146437	1	6.85	INDICATOR, A/TRNS CONT	5-L14,28
92-93	Y 4-SPD A/TRANS (MD8)	10146437	1	6.85	INDICATOR, A/TRNS CONT	5-L14,28
94-96	Y 4-SPD A/TRANS (M30)	10146437	1	6.85	INDICATOR, A/TRNS CONT	5-L14,28
	*EXPORT**********EXPORT**********EXPORT**********EXPORT**********EXPORT*					
92	Y 4-SPD A/TRANS (MD8), VE1 (EXPORT)	10175897	1	DISCON	DIAL, A/TRNS CONT IND	
93	Y 4-SPD A/TRANS (MD8), VE1 (EXPORT)	10175897	1	DISCON	DIAL, A/TRNS CONT IND	
94-96	Y 4-SPD A/TRANS (M30), VE1 (EXPORT)	10220956	1	7.25	DIAL, A/TRNS CONT IND	5-L16,29

4.022 SHIELD – SOCKET, Transmission Control Indicator Lamp

84-96	Y	14046746	1	2.40	SHIELD, A/TRNS CONT IND LGT	5-L14,27
90-92	Y	12167138	1	15.40	SOCKET, A/TRNS DIAL IND LP (W/LEADS, USES 09421330/L194 BULB) (02.485) (AC-DELCO #LS71)	

4.045 LEVER, Transmission Control

84-91	Y	14046979	1	4.90	LEVER, A/TRNS RANGE SEL (04.006)	5-L14,17
92-93	Y 4-SPD A/TRANS (MD8)	14046979	1	4.90	LEVER, A/TRNS RANGE SEL (04.006)	5-L14,17
94-96	Y 4-SPD A/TRANS (M30)	14046979	1	4.90	LEVER, A/TRNS RANGE SEL (04.006)	5-L14,17

4.047 BRACKET – CABLE – GROMMET – PIN – RETAINER – WASHER, Transmission Shift Control Cable

84-93	Y	14076160	1	1.95	BRACKET, A/TRNS RANGE SEL LVR CBL	5-L14,10
94-96	Y 4-SPD A/TRANS (M30)	14076160	1	1.95	BRACKET, A/TRNS RANGE SEL LVR CBL	5-L14,10
91	Y 4-SPD A/TRANS (MD8)	7841371	1	8.48	BRACKET, STRG COL BACKDRIVE CBL (06.518)	7-F13,81
92-93	Y 4-SPD A/TRANS (MD8)	7841371	1	8.48	BRACKET, STRG COL BACKDRIVE CBL (06.518)	7-F13,81

© 2000 GENERAL MOTORS SERVICE PARTS OPERATIONS–CHEVROLET–14Y

4.047 BRACKET – CABLE – GROMMET – PIN – RETAINER – WASHER, Transmission Shift Control Cable (Con't)

94–96	Y 4–SPD A/TRANS (M30) ...	7841371	1	8.48	BRACKET, STRG COL BACKDRIVE CBL (06.518)	7–F13,81
84	Y 4–SPD A/TRANS (MD8) ...	14038660	1	DISCON	BRACKET, T.V. CONT CBL	
92–93	Y 4–SPD A/TRANS (MD8) ...	12551274	1	26.50	CABLE, A/TRNS PK LK	5–L14,21
94–96	Y 4–SPD A/TRANS (M30) ...	12551274	1	26.50	CABLE, A/TRNS PK LK	5–L14,21
91–93	Y 4–SPD A/TRANS (MD8) ...	10219967	1	59.67	CABLE, A/TRNS RANGE SEL LVR	5–L14,24
94–96	Y 4–SPD A/TRANS (M30) ...	10219967	1	59.67	CABLE, A/TRNS RANGE SEL LVR	5–L14,24
84–91	Y	12551274	1	26.50	CABLE, PK LK	5–L14,21
84–90	Y	10219967	1	59.67	CABLE, RANGE SEL LVR	5–L14,24
84–91	Y	14093175	1	DISCON	GROMMET, TRANS RANGE SEL LVR CBL	
92–93	Y 4–SPD A/TRANS (MD8) ...	14050019	1	2.65	PIN, A/TRNS RANGE SEL LVR CBL	5–L14,14
94–96	Y 4–SPD A/TRANS (M30) ...	14050019	1	2.65	PIN, A/TRNS RANGE SEL LVR CBL	5–L14,14
84–91	Y	14050019	1	2.65	PIN, RANGE SEL LVR CBL	5–L14,14
92–93	Y 4–SPD A/TRANS (MD8) ...	17071924	1	.60	RETAINER, A/TRNS PK LK CBL (04.060)	5–L14,9
94–96	Y 4–SPD A/TRANS (M30) ...	17071924	1	.60	RETAINER, A/TRNS PK LK CBL (04.060)	5–L14,9
84–91	Y	3974730	1	1.85	RETAINER, A/TRNS RANGE SEL LVR CBL	5–L14,25
84–91	Y	14050024	1	1.12	RETAINER, A/TRNS RANGE SEL LVR CBL (AT BRKT) (04.006) ..	5–L14,15
84–93	Y 4–SPD A/TRANS (MD8) ...	17071924	1	.60	RETAINER, A/TRNS RANGE SEL LVR CBL (04.060)	5–L14,9
92–93	Y 4–SPD A/TRANS (MD8) ...	3974730	1	1.85	RETAINER, A/TRNS RANGE SEL LVR CBL	5–L14,25
92–93	Y 4–SPD A/TRANS (MD8) ...	14050024	1	1.12	RETAINER, A/TRNS RANGE SEL LVR CBL (AT BRKT) (04.006) ..	5–L14,15
94–96	Y 4–SPD A/TRANS (M30) ...	3974730	1	1.85	RETAINER, A/TRNS RANGE SEL LVR CBL	5–L14,25
94–96	Y 4–SPD A/TRANS (M30) ...	14050024	1	1.12	RETAINER, A/TRNS RANGE SEL LVR CBL (AT BRKT) (04.006) ..	5–L14,15
94–96	Y 4–SPD A/TRANS (M30) ...	17071924	1	.60	RETAINER, A/TRNS RANGE SEL LVR CBL (04.060)	5–L14,9
84–96	Y	14091256	1	*.60	WASHER, A/TRNS PK LK CBL (03.880)	5–L16,32
84–93	Y 4–SPD A/TRANS (MD8) ...	3718496	1	.46	WASHER, A/TRNS RANGE SEL LVR CBL (00.662)	5–L14,13
94–96	Y 4–SPD A/TRANS (M30) ...	3718496	1	.46	WASHER, A/TRNS RANGE SEL LVR CBL (00.662)	5–L14,13

4.050 BRACE – CABLE – SEAL, Transmission Detent Shift Control

92–95	Y 5.7J (LT5)	10177907	1	8.72	BRACE, ACCEL CONT & CRCONT SERVO CBL ADJR BRKT (03.454)	
92	Y 5.7P (LT1), 4–SPD A/TRANS (MD8)	10163848	1	104.04	CABLE, ACCEL CONT & A/TRNS T/V (03.430)	4–G14,1
93	Y 5.7P (LT1), 4–SPD A/TRANS (MD8)	10215862	1	104.04	CABLE, ACCEL CONT & A/TRNS T/V (03.430)	4–G14,1
84	Y 4–SPD A/TRANS (MD8) ...	25515601	1	26.25	CABLE, TRANS THROT VLV	4–G11,6
85–88	Y	25521263	1	26.25	CABLE, TRANS THROT VLV	4–G12,1
89–91	Y (5.7–8) (MD8)	10163879	1	26.78	CABLE, TRANS THROT VLV	4–G12,1
84–93	Y	25518260	1	1.75	SEAL, A/TRNS T/V CBL (21.26MM DIA)	4–G14,3

© 2000 GENERAL MOTORS SERVICE PARTS OPERATIONS–CHEVROLET–14Y

4.053 CONNECTOR, Transmission Shift Brake Interlock

94	Y	12101825	AR	17.46	CONNECTOR, SOL-A/TRNS SHFT LK CONT (GRAY) (2-WAY F) (W/LEADS) (HAS INDEX TAB CTR BETWEEN CAVITY A & B) (02.535) (AC-DELCO #PT217)	
96	Y	12101825	AR	17.46	CONNECTOR, SOL-A/TRNS SHFT LK CONT (GRAY) (2-WAY F) (W/LEADS) (HAS INDEX TAB CTR BETWEEN CAVITY A & B) (02.535) (AC-DELCO #PT217)	

4.054 CONNECTOR – NUT – SWITCH, Transmission Safety Start/Warning

92-03	Y	12167138	1	15.40	CONNECTOR, SW-PARK/NEU POSN (W/LEADS, USES 09421330/L194 BULB) (02.485) (AC-DELCO #LS71)	
96	Y	12117379	1	29.43	CONNECTOR, SW-PARK/NEU POSN (6 CAV F) (AC-DELCO #PT512)	
91-93	Y 4-SPD A/TRANS (MD8) ...	16512106	2	.31	NUT, PARK/NEU POSN SW (4 X 0.7 THD X 4.85MM) (02.679)	5-L16,30
94-96	Y 4-SPD A/TRANS (M30) ...	16512106	2	.31	NUT, PARK/NEU POSN SW (4 X 0.7 THD X 4.85MM) (02.679)	5-L16,30
89-90	Y	10159402	1	72.69	SWITCH, B/U LP AND NEU SAF (02.698) (AC-DELCO #D2245A)	
92-93	Y 4-SPD A/TRANS (MD8) ...	1994242	1	26.52	SWITCH, PARK/NEU POSN & B/U LP (AC-DELCO #D2297)	5-L14,31
94-96	Y 4-SPD A/TRANS (M30) ...	1994242	1	26.52	SWITCH, PARK/NEU POSN & B/U LP (AC-DELCO #D2297)	5-L14,31
84-91	Y	1994242	1	26.52	SWITCH, PART/NEU POSN & B/U LP (ON SHIFT CONT) (AC-DELCO #D2297)	5-L14,31
90-93	Y 4-SPD A/TRANS (MD8) ...	8673634	1	24.87	SWITCH, TCC TEMP (AC-DELCO #8673634)	5-H20,

4.056 CONVERSION KIT, Transmission Control Module

94	Y 4-SPD A/TRANS (M30) ...	24202270	1	104.03	CONVERSION KIT, C/VLV CALN (04.265) (AC-DELCO #24202270)	5-J11,9

4.057 CONNECTOR, Transmission Control

96	Y 4-SPD A/TRANS (M30) ...	12146094	1	.78	CONNECTOR, SOL-3-2 DNSHFT VLV (GRAY) (2-WAY F) (W/O LEADS)	

4.060 RETAINER, Transmission Control Switch

84-91	Y (MD8)	17071924	1	.60	RETAINER, PK LK CBL	5-G13,13

4.085 STUD, Transmission Mount and Support

88-89	Y A/TRNS (MD8)	14091545	1	1.65	STUD, TRANS (3/8-16X0.78 BOTH ENDS) (03.275)	
90-91	Y 4-SPD A/TRANS (MD8) ...	10085606	1	1.65	STUD, TRANS (T/W 1052080) (3/8-16X25/32 BOTH ENDS) (03.275)	3-H12,23
92	Y 4-SPD A/TRANS (MD8), (USE W/O CTLTC CONV BRACE) (1ST DES)	10085606	1	1.65	STUD, TRANS (T/W 1052080) (3/8-16X25/32 BOTH ENDS) (03.275)	3-H12,23

© 2000 GENERAL MOTORS SERVICE PARTS OPERATIONS-CHEVROLET-14Y

4.085 STUD, Transmission Mount and Support (Con't)

92	Y 4-SPD A/TRANS (MD8), (USE W/CTLTC CONV BRACE) (2ND DES)	10220063	1	1.25	STUD, TRANS	4-L2,26
93	Y 4-SPD A/TRANS (MD8) ...	10220063	1	1.25	STUD, TRANS	4-L2,26
94-96	Y 4-SPD A/TRANS (M30) ...	10220063	1	1.25	STUD, TRANS	4-L2,26

4.103 CASE - CASE KIT, Transmission Case

87-93	Y 4-SPD A/TRANS (MD8) ...	8657911	1	405.03	CASE KIT, A/TRNS (AC-DELCO #8657911)	5-H20,10
94-96	Y 4-SPD A/TRANS (M30) ...	24200929	1	635.87	CASE KIT, A/TRNS (AC-DELCO #24200929)	5-K2,8
84-86	Y (MD8)	24212409	1	DISCON	CASE, A/TRNS (REMAN)	
84-86	Y (MD8)	8657936	1	DISCON	CASE, W/BUSH, TRANS	

4.104 PIPE - PLUG, Transmission Case

84-93	Y 4-SPD A/TRANS (MD8) ...	24200374	1	*1.82	PIPE, A/TRNS VENT (AC-DELCO #24200374)	5-H5,11
94-96	Y 4-SPD A/TRANS (M30) ...	24202440	1	2.00	PIPE, A/TRNS VENT	5-K2,9
86-93	Y 4-SPD A/TRANS (MD8) ...	8654381	3	1.82	PLUG, A/TRNS FLUID PRESS TEST HOLE (04.265) (AC-DELCO #8654381)	5-H20,32

4.105 ORIFICE, Transmission Case

84-95	Y	8628864	1	1.82	ORIFICE, FWD CLU FEED (6.4MM DIA) (NO DIMPLE) (04.104) (AC-DELCO #8628864)	5-H5,81
90-93	Y 4-SPD A/TRANS (MD8) ...	8667040	1	1.82	ORIFICE, FWD CLU FEED (9.12 MM DIA) (1 DIMPLE) (04.265) (AC-DELCO #8667040)	5-H20,359
96	Y 4-SPD A/TRANS (M30) ...	8628864	1	1.82	ORIFICE, FWD CLU FEED (6.4MM DIA) (NO DIMPLE) (04.104) (AC-DELCO #8628864)	5-H5,81
84-93	Y (MD8)	8628864	2	1.82	ORIFICE, 3RD ACCUM BL (6.4MM DIA) (NO DIMPLE) (04.104) (AC-DELCO #8628864)	5-H5,81
84-93	Y 4-SPD A/TRANS (MD8) ...	8628864	2	1.82	ORIFICE, 3RD ACCUM BL (6.4MM DIA) (NO DIMPLE) (04.104) (AC-DELCO #8628864)	5-H5,81
94-96	Y 4-SPD A/TRANS (M30) ...	8628864	2	1.82	ORIFICE, 3RD ACCUM BL (6.4MM DIA) (NO DIMPLE) (04.104) (AC-DELCO #8628864)	5-H5,81

4.115 BOLT - BUSHING - CONNECTOR - CONVERTER - SEAL - SWITCH, Transmission Converter

94-96	Y 4-SPD A/TRANS (M30) ...	20616587	3	*1.82	BOLT, STAT SHF (M6X1X19.0) (11.561) (AC-DELCO #20616587)	
84-91	Y	1261968	AR	*1.82	BOLT, TRANS T/CV (TO FLYWHEEL) (M10X1.5X15 12.5 THD) (AC-DELCO #1261968)	1-J24,3
92-93	Y 4-SPD A/TRANS (MD8) ...	1261968	3	*1.82	BOLT, TRANS T/CV (M10X1.5X15 12.5 THD) (AC-DELCO #1261968)	1-J24,3
94-96	Y 4-SPD A/TRANS (M30) ...	1261968	3	*1.82	BOLT, TRANS T/CV (M10X1.5X15 12.5 THD) (AC-DELCO #1261968)	1-J24,3
84-93	Y 4-SPD A/TRANS (MD8) ...	24206030	1	10.42	BUSHING, T/CV (AC-DELCO #24206030)	5-H5,3

© 2000 GENERAL MOTORS SERVICE PARTS OPERATIONS-CHEVROLET-14Y

4.115 BOLT – BUSHING – CONNECTOR – CONVERTER – SEAL – SWITCH, Transmission Converter (Con't)

94–96	Y 4–SPD A/TRANS (M30) ...	24206030	1	10.42	BUSHING, T/CV (AC–DELCO #24206030)	5–H5,3
84–93	Y 4–SPD A/TRANS (MD8) ...	8634383	1	11.02	CONNECTOR, A/TRNS WRG (W/SEAL CONVR CLU) (ELECTRICAL) (3–WAY) (AC–DELCO #8634383)	5–H5,33
92	Y 4–SPD A/TRANS (MD8) ...	8682294	1	4.60	CONNECTOR, A/TRNS WRG (5 TERM, W/SEAL) (AC–DELCO #8682294)	5–I9,33
96	Y 4–SPD A/TRANS (M30) ...	12162202	1	.77	CONNECTOR, SOL–TCC PWM VLV (BLUE) (2–WAY F) (W/O LEADS)	
92–93	Y 5.7P (LT1), 4–SPD A/TRANS (MD8)	12102612	1	42.12	CONNECTOR, TCC WRG (BLACK) (5–WAY M)	3–H12,25
87–93	Y 4–SPD A/TRANS (MD8) ...	24202174	1	275.00	CONVERTER, TORQ (REMAN) ..	5–H20,1
94–95	Y 4–SPD A/TRANS (M30) ...	24202174	1	275.00	CONVERTER, TORQ (REMAN) ..	5–H20,1
96	Y 4–SPD A/TRANS (M30) ...	24204668	1	275.00	CONVERTER, TORQ (REMAN) (DHHG)	5–L2,1
96	Y 4–SPD A/TRANS (M30) ...	24208649	1	250.00	CONVERTER, TORQ (REMAN) (DHPG)	5–L2,1
84	Y (MD8) (1ST DES)	8656957	1	275.00	CONVERTER, TRANS (REMAN) .	5–H5,1
84	Y (MD8) (2ND DES)	24201203	1	275.00	CONVERTER, TRANS (REMAN) (USE ON TRANS W/SERIAL NO ENDING IN T)	5–H5,1
85–86	Y (MD8)	24201203	1	275.00	CONVERTER, TRANS (REMAN) .	5–H5,1
84–90	Y	10054241	1	*1.62	SEAL, O–RING, ELEC CONN (04.338) (AC–DELCO #10054241)	5–F8,75
86–89	Y	14093146	1	29.53	SWITCH, TRANS O/D (AC–DELCO #14093146)	

4.122 CONDUIT – HARNESS – SEAL – SOLENOID – VALVE, Transmission Solenoid

84–93	Y 4–SPD A/TRANS (MD8) ...	8654081	1	1.82	CONDUIT, SOL WIRE (AC–DELCO #8654081)	5–H5,92
96	Y 4–SPD A/TRANS (M30) ...	15320476	1	81.04	HARNESS, A/TRNS WRG (INCLS TCC SOL VLV) (02.480) (AC–DELCO #15320476)	5–L2,66
92–93	Y 4–SPD A/TRANS (MD8) ...	8634188	1	1.82	SEAL, TCC SOL VLV (O RING) (AC–DELCO #8634188)	
94	Y 4–SPD A/TRANS (M30) ...	8634188	1	1.82	SEAL, TCC SOL VLV (O RING) (AC–DELCO #8634188)	
84–85	Y (MD8)	8654129	1	27.28	SOLENOID, CONV CLU (W/SEAL) (FOR 1984, THE 4 WIRE SOL HAS BEEN REPLCD BY 3 WIRE SOL, BLACK 4–3 DNSHFT SW SHOULD BE BYPASSED) (AC–DELCO #8654129)	5–H5,50
86	Y07 (MD8) 3.07R (EXC EXPORT)	8654129	1	27.28	SOLENOID, CONV CLU (W/SEAL) (AC–DELCO #8654129)	5–H5,50
87–89	Y (MD8)	8654129	1	27.28	SOLENOID, CONV CLU (W/SEAL) (AC–DELCO #8654129)	5–H5,50
86	Y07 (MD8) 2.59R (EXC EXPORT)	8654126	1	38.80	SOLENOID, W/SEAL, CONVR CLU (AC–DELCO #8654126)	5–H5,50
86	Y67 (MD8)	8654126	1	38.80	SOLENOID, W/SEAL, CONVR CLU (AC–DELCO #8654126)	5–H5,50
90–91	Y 4–SPD A/TRANS (MD8) ...	10478100	1	38.80	VALVE, TCC SOL (LT BROWN) (AC–DELCO #10478100)	5–H20,50

© 2000 GENERAL MOTORS SERVICE PARTS OPERATIONS–CHEVROLET–14Y

4.122 CONDUIT – HARNESS – SEAL – SOLENOID – VALVE, Transmission Solenoid (Con't)

92–93	Y 4–SPD A/TRANS (MD8) ...	10478114	1	38.80	VALVE, TCC SOL (AC–DELCO #10478114)	5–I9,50
	*EXPORT*********EXPORT*********EXPORT*********EXPORT*********EXPORT*					
86	Y07 (MD8) EXPORT	8654129	1	27.28	SOLENOID, CONV CLU (W/SEAL) (AC–DELCO #8654129)	5–H5,50

4.123 BUSHING – RING – SEAL – VALVE, Transmission Input and Turbine Shaft

84–93	Y 4–SPD A/TRANS (MD8) ...	8628915	1	10.42	BUSHING, TURB SHF (STATOR SHF FRT) (04.226) (AC–DELCO #8628915)	5–H5,4
94–96	Y 4–SPD A/TRANS (M30) ...	8628915	1	10.42	BUSHING, TURB SHF (04.226) (AC–DELCO #8628915)	5–H5,4
87–03	Y 4–SPD A/TRANS (MD8) ...	8667035	4	*1.82	RING, INPUT SHF FLUID SEAL (TEFLON) (AC–DELCO #8667035)	5–H24,619
94–96	Y 4–SPD A/TRANS (M30) ...	8667035	4	*1.82	RING, INPUT SHF FLUID SEAL (TEFLON) (AC–DELCO #8667035)	5–H24,619
84–86	Y (MD8)	8642420	4	2.93	RING, OIL SEAL, TURB SHAFT (TEFLON) (AC–DELCO #8642420)	5–H9,619
84–93	Y 4–SPD A/TRANS (MD8) ...	8630049	1	*2.93	SEAL, INPUT SHF (O RING) (AC–DELCO #8630049)	5–H5,49
94–96	Y 4–SPD A/TRANS (M30) ...	8330049	1	*2.93	SEAL, TURB SHF (O RING) (AC–DELCO #8630049)	5–H5,49
84–93	Y 4–SPD A/TRANS (MD8) ...	8654438	1	2.93	VALVE, FWD CLU HSG BALL CHK (RET) (04.169) (AC–DELCO #8654438)	5–H9,604
88–93	Y 4–SPD A/TRANS (MD8) ...	8628732	AR	1.82	VALVE, FWD CLU HSG BALL CHK (7.10MM 0 MAX) (SINGLE ORIFICE) (TALL & NARROW) (04.226) (AC–DELCO #8628732)	5–H9,627
94–96	Y 4–SPD A/TRANS (M30) ...	8628732	2	1.82	VALVE, FWD CLU HSG BALL CHK (SINGLE ORIFICE) (TALL & NARROW) (04.226) (AC–DELCO #8628732)	5–H9,627
84	Y (MD8)	8639284	1	2.93	VALVE, TURB SHF BALL CHK (RETAINER, W/BALL, TURB SHF CHK VLV) (AC–DELCO #8639284)	5–I17,617
85–87	Y (MD8)	8647037	1	4.60	VALVE, TURB SHF BALL CHK (RETAINER, W/BALL, TURB SHF CHK VLV) (AC–DELCO #8647037)	
88–93	Y 4–SPD A/TRANS (MD8) ...	8639284	1	2.93	VALVF, TURB SHF BALL CHK (YELLOW) (RET) (AC–DELCO #8639284)	5–I17,617
94	Y 4–SPD A/TRANS (M30) ...	8639284	1	2.93	VALVE, TURB SHF BALL CHK (YELLOW) (RET) (AC–DELCO #8639284)	5–I17,617
95–96	Y 4–SPD A/TRANS (M30) ...	8685839	1	1.82	VALVE, TURB SHF BALL CHK (AC–DELCO #8685839)	5–H9,617
84–93	Y 4–SPD A/TRANS (MD8) ...	24208262	1	1.82	VALVE, 3–4 CLU HSG BALL CHK (AC–DELCO #24208262)	5–H9,620
94–96	Y 4–SPD A/TRANS (M30) ...	24208262	1	1.82	VALVE, 3–4 CLU HSG BALL CHK (AC–DELCO #24208262)	5–H9,620

© 2000 GENERAL MOTORS SERVICE PARTS OPERATIONS–CHEVROLET–14Y

4.128 CLIP – COOLER – FITTING – NUT – PLUG, Transmission Oil Cooler

90–93	Y 4–SPD A/TRANS (MD8) ...	15596455	2	1.62	CLIP, TRANS FLUID CLR PIPE (OPEN TWO TUBE 7.70 & 8.11MM) (SYMMETRICAL C SHAPE) (AC–DELCO #15596455)	5–L12,8
94–95	Y 4–SPD A/TRANS (M30) ...	10225624	2	1.30	CLIP, TRANS FLUID CLR PIPE ...	5–L12,8
96	Y 4–SPD A/TRANS (M30) ...	10182465	2	2.10	CLIP, TRANS FLUID CLR PIPE ...	5–L12,8
86–89	Y (5.7–8) A/TRNS (MD8)	15596455	2	1.62	CLIP, TRANS OIL CLR PIPE (OPEN TWO TUBE 7.70 & 8.11MM) (AC–DELCO #15596455)	5–L12,8
85	Y H .D .C. (VO8) (EXC VB4, VD1, VT7)	3056569	1	DISCON	COOLER, OIL (TRANS) (AC–DELCO #3056569)	
86–88	Y	3056569	1	DISCON	COOLER, OIL (TRANS) (AC–DELCO #3056569)	
89	Y (5.7–8)	3056569	1	DISCON	COOLER, OIL (TRANS) (AC–DELCO #3056569)	
84	Y (EXC HVY D[illegible] RAD (V01)	3053016	1	70.12	COOLER, TRANS FLUID (USE ON ASM 3052025, 3053501) (AC–DELCO #3053016)	
85	Y HVY DUTY CLG (V08), ([illegible] EXPORT (VB4), EUROPEAN PROVISIONS (VD1) (EXPORT), VT7 (EXPORT) ..	3053016	1	70.12	COOLER, TRANS FLUID (AC–DELCO #3053016)	
85	Y (EXC HVY DUTY CLG (V08)	3053016	1	70.12	COOLER, TRANS FLUID (AC–DELCO #3053016)	
90–93	Y 4–SPD A/TRANS (MD8) ...	3055675	1	106.26	COOLER, TRANS FLUID (AC–DELCO #3055675)	2–C6,7
94–96	Y 4–SPD A/TRANS (M30) ...	3055675	1	106.26	COOLER, TRANS FLUID (AC–DELCO #3055675)	2–C6,7
84–93	Y 4–SPD A/TRANS (MD8) ...	8637742	2	6.60	FITTING, TRANS FLUID CLR PIPE (TO CASE) (5/16) (AC–DELCO #8637742)	5–H5,12
94–96	Y 4–SPD A/TRANS (M30) ...	8637742	2	6.60	FITTING, TRANS FLUID CLR PIPE (TO CASE) (5/16) (AC–DELCO #8637742)	5–H5,12
89–91	Y 5.7–8 (L98)	14076157	2	5.30	NUT, TRANS FLUID CLR PIPE (UPR & LWR)	5–L12,9
92–93	Y 5.7P (LT1), 4–SPD A/TRANS (MD8)	14076157	2	5.30	NUT, TRANS FLUID CLR PIPE (UPR & LWR)	5–L12,9
94–95	Y 5.7P (LT1), 4–SPD A/TRANS (M30)	14076157	2	5.30	NUT, TRANS FLUID CLR PIPE (UPR & LWR)	5–L12,9
96	Y 4–SPD A/TRANS (M30) ...	14076157	2	5.30	NUT, TRANS FLUID CLR PIPE (UPR & LWR)	5–L12,9
85–88	Y (MD8)	14076157	2	5.30	NUT, TRANS OIL CLR UPR & LWR PIPE	5–L12,9
84–93	Y 4–SPD A/TRANS (MD8) ...	8634285	1	1.82	PLUG, A/TRNS O/PMP FLUID CLR HOLE (6.84MM DIA) (AC–DELCO #8634285)	5–H13,239
94	Y 4–SPD A/TRANS (M30) ...	8634285	1	1.82	PLUG, A/TRNS O/PMP FLUID CLR HOLE (6.84MM DIA) (AC–DELCO #8634285)	5–H13,239

4.133 INDICATOR – SEAL – STOP – TUBE, Transmission Oil Filler

89–91	Y 4–SPD A/TRANS (MD8) ...	10079808	1	7.15	INDICATOR, TRANS FLUID LVL .	5–L12,1
92–93	Y 4–SPD A/TRANS (MD8) ...	10174498	1	6.60	INDICATOR, TRANS FLUID LVL (AC–DELCO #10174498)	5–L12,1
94	Y 4–SPD A/TRANS (M30) ...	10238801	1	DISCON	INDICATOR, TRANS FLUID LVL .	
94–96	Y 4–SPD A/TRANS (M30) ...	12551273	1	5.45	INDICATOR, TRANS FLUID LVL .	5–L12,1
84–85	Y (MD8)	14068768	1	DISCON	INDICATOR, TRANS OIL LVL (563MM FROM STOP TO END)	

© 2000 GENERAL MOTORS SERVICE PARTS OPERATIONS–CHEVROLET–14Y

4.133 INDICATOR – SEAL – STOP – TUBE, Transmission Oil Filler (Con't)

84–90	Y	14091229	1	9.60	INDICATOR, TRANS OIL LVL (624MM FROM STOP TO END) (AC–DELCO #14091229)	
84–91	Y	1259475	1	*1.82	SEAL, TRANS FLUID FIL TUBE (LIP TYPE) (AC–DELCO #1259475)	5–L12,10
92–93	Y 4–SPD A/TRANS (MD8)	1259475	1	*1.82	SEAL, TRANS FLUID FIL TUBE (AC–DELCO #1259475)	5–L12,10
94–96	Y 4–SPD A/TRANS (M30)	1259475	1	*1.82	SEAL, TRANS FLUID FIL TUBE (AC–DELCO #1259475)	5–L12,10
94–96	Y 4–SPD A/TRANS (M30)	8684890	1	5.00	STOP, TRANS FLUID LVL IND	5–K2,93
84–88	Y	10174497	1	11.02	TUBE, TRANS FLUID FIL (ALSO USE 10174498 FLUID LVL IND) (AC–DELCO #10174497)	5–L12,2
89–91	Y 4–SPD A/TRANS (MD8)	10174497	1	11.02	TUBE, TRANS FLUID FIL (ALSO USE 10174498 FLUID LVL IND) (AC–DELCO #10174497)	5–L12,2
92–93	Y 4–SPD A/TRANS (MD8)	10174497	1	11.02	TUBE, TRANS FLUID FIL (AC–DELCO #10174497)	5–L12,2
94–96	Y 4–SPD A/TRANS (M30)	10235123	1	11.30	TUBE, TRANS FLUID FIL	5–L12,2

4.158 GEAR – HOUSING, Transmission Input

84–93	Y 4–SPD A/TRANS (MD8)	8663639	1	75.73	GEAR, INPUT INTL (AC–DELCO #8663639)	5–H9,664
94–96	Y 4–SPD A/TRANS (M30)	8663639	1	75.73	GEAR, INPUT INTL (AC–DELCO #8663639)	5–H9,664
84–93	Y 4–SPD A/TRANS (MD8)	8667055	1	38.80	GEAR, REACTION INTL (AC–DELCO #8667055)	5–H9,664
94–96	Y 4–SPD A/TRANS (M30)	8667055	1	38.30	GEAR, REACTION INTL (AC–DELCO #8667055)	5–H9,664
85	Y (MD8)	8654156	1	203.02	HOUSING, W/SHF, INPUT (AC–DELCO #8654156)	5–H9,621
84	Y (MD8) (1ST DES)	8647963	1	DISCON	HOUSING, W/SHF, INPUT CLU (USE ON TRANS W/SERIAL NO ENDING IN A, B, C, H, N)	
84	Y (MD8) (2ND DES)	8654156	1	203.02	HOUSING, W/SHF, INPUT CLU (USE ON TRANS W/SERIAL NO ENDING IN T, ALSO HAS LETTER T STAMPED ON PAN RL FOL TRANS ID NO)) (AC–DELCO #8654156)	5–H9,621
86	Y (MD8)	8657901	1	242.82	HOUSING, W/SHF, INPUT CLU (AC–DELCO #8657901)	5–H9,621
87	Y (MD8) (2ND DES)	8657904	1	DISCON	HOUSING, W/SHF, INPUT CLU (TRANS BUILT BEFORE JULIAN DATE 87040)	
87	Y (MD8) (3RD DES)	8667660	1	280.60	HOUSING, W/SHF, INPUT CLU (USE ON TRAN BUILT ON OR AFTER JULIAN DATE 87040) (AC–DELCO #8667660)	5–H24,621
88–91	Y 4–SPD A/TRANS (MD8)	8667660	1	280.60	HOUSING, 3–4 CLU (W/INPUT SHF) (AC–DELCO #8667660)	5–H24,621
92–93	Y 4–SPD A/TRANS (MD8)	8667659	1	280.60	HOUSING, 3–4 CLU (W/INPUT SHF) (AC–DELCO #8667659)	5–I17,621
94	Y 4–SPD A/TRANS (M30)	8667659	1	280.60	HOUSING, 3–4 CLU (W/INPUT SHF) (AC–DELCO #8667659)	5–I17,621
95–96	Y 4–SPD A/TRANS (M30)	24200901	1	242.82	HOUSING, 3–4 CLU (W/INPUT SHF) (AC–DELCO #24200901)	5–K12,621

© 2000 GENERAL MOTORS SERVICE PARTS OPERATIONS–CHEVROLET–14Y

4.159 BEARING – GEAR – RING – WASHER, Transmission Sun Gear

84–91	Y 3–SPD A/TRANS (MD9) ...	8646254	1	11.02	BEARING, INPUT CARR THR (AC–DELCO #8646254)	5–I17,663
84–93	Y 4–SPD A/TRANS (MD8) ...	8646254	1	11.02	BEARING, INPUT CARR THR (AC–DELCO #8646254)	5–I17,663
94–96	Y 4–SPD A/TRANS (M30) ...	8646254	1	11.02	BEARING, INPUT CARR THR (AC–DELCO #8646254)	5–I17,663
94–96	Y 4–SPD A/TRANS (M30) ...	8642162	1	9.66	BEARING, INPUT SUN GR THR (AC–DELCO #8642162)	5–J11,637
84–93	Y 4–SPD A/TRANS (MD8) ...	8642191	1	11.02	BEARING, INT REACTION GR SUPT THR (AC–DELCO #8642191)	5–H9,663
94–96	Y 4–SPD A/TRANS (M30) ...	8642191	1	11.02	BEARING, INT REACTION GR SUPT THR (AC–DELCO #8642191)	5–H9,663
84–93	Y 4–SPD A/TRANS (MD8) ...	8642191	1	11.02	BEARING, REACTION CARR THR (TO REACT SHF) (AC–DELCO #8642191)	5–H9,663
84–93	Y 4–SPD A/TRANS (MD8) ...	8642215	1	13.63	BEARING, REACTION CARR THR (TO SUPT) (04.176) (AC–DELCO #8642215)	5–H9,663
94–96	Y 4–SPD A/TRANS (M30) ...	8642191	1	11.02	BEARING, REACTION CARR THR (AC–DELCO #8642191)	5–H9,663
94–96	Y 4–SPD A/TRANS (M30) ...	8642215	1	13.63	BEARING, REACTION CARR THR (04.176) (AC–DELCO #8642215)	5–H9,663
84–93	Y 4–SPD A/TRANS (MD8) ...	8647093	1	59.62	GEAR, INPUT SUN (AC–DELCO #8647093)	5–H9,658
94–96	Y 4–SPD A/TRANS (M30) ...	8647093	1	59.62	GEAR, INPUT SUN (AC–DELCO #8647093)	5–H9,658
84–93	Y 4–SPD A/TRANS (MD8) ...	8642204	1	59.62	GEAR, REACTION SUN (INCLS BUSH & GEAR) (INDIVIDUAL COMPONENTS NOT SOLD SEPARATELY) (AC–DELCO #8642204)	5–H9,673
94–96	Y 4–SPD A/TRANS (M30) ...	8642204	1	59.62	GEAR, REACTION SUN (INCLS BUSH & GEAR) (INDIVIDUAL COMPONENTS NOT SOLD SEPARATELY) (AC–DELCO #8642204)	5–H9,673
84–92	Y 4–SPD A/TRANS (MD8) ...	8647337	1	1.82	RING, REACTION SUN GR RET (AC–DELCO #8647337)	5–H9,671
92–93	Y 4–SPD A/TRANS (MD8) ...	8681553	1	1.82	RING, REACTION SUN GR RET (AC–DELCO #8681553)	5–H24,671
94–96	Y 4–SPD A/TRANS (M30) ...	8681553	1	1.82	RING, REACTION SUN GR RET (AC–DELCO #8681553)	5–H24,671
84–93	Y 4–SPD A/TRANS (MD8) ...	8642331	1	1.82	WASHER, REACTION SUN GR SHELL THR (04.176) (AC–DELCO #8642331)	5–H9,674
94–96	Y 4–SPD A/TRANS (M30) ...	8642331	1	1.82	WASHER, REACTION SUN GR SHELL THR (04.176) (AC–DELCO #8642331)	5–H9,674

4.162 BEARING, Transmission Housing

84–93	Y 4–SPD A/TRANS (MD8) ...	8642066	1	8.73	BEARING, REV INPUT CLU HSG THR (STATOR SHFT) (TO SEL WASHER) (AC–DELCO #8642066)	5–H9,615
94–96	Y 4–SPD A/TRANS (M30) ...	8642066	1	8.73	BEARING, REV INPUT CLU HSG THR (STATOR SHFT) (TO SEL WASHER) (AC–DELCO #8642066)	5–H9,615

© 2000 GENERAL MOTORS SERVICE PARTS OPERATIONS–CHEVROLET–14Y

4.163 PLATE – PLATE KIT – RING – SPRING, Transmission Clutch

84–86	Y 4–SPD A/TRANS (MD8) . . .	24201805	AR	94.97	PLATE KIT, CLU (INCLS ALL FIBER & STEEL CLU PLTS, USED W/OVERHAUL GSKT KIT FOR COMPL OVERHAUL) (AC–DELCO #24201805)	
87–90	Y 4–SPD A/TRANS (MD8) . . .	24201806	6	94.97	PLATE KIT, CLU (CONTAINS ALL FIBER & STEEL CLU PLTS, USE W/OVERHAUL GSKT KITS FOR COMPL OVERHAUL) (AC–DELCO #24201806)	
91	Y 4–SPD A/TRANS (MD8), (1ST DES)	24201806	6	94.97	PLATE KIT, CLU (USED ON TRANS W/ID CODE 1YDM) (W/O 2050 STAMPED ON PLTS) (CONTAINS ALL FIBER & STEEL CLU PLTS, USE W/OVERHAUL GSKT KIT FOR COMPL OVERHAUL) (AC–DELCO #24201806)	
91	Y 4–SPD A/TRANS (MD8), (2ND DES)	24201807	1	94.97	PLATE KIT, CLU (USED ON TRANS W/ID CODE 1YHM) (HAS 2050 STAMPED ON PART) (CONTAINS ALL FIBER & STEEL CLU PLTS, USE W/OVERHAUL GSKT KIT FOR COMPL OVERHAUL) (AC–DELCO #24201807)	5–I17,9
92–93	Y 4–SPD A/TRANS (MD8) . . .	8679390	1	13.53	PLATE KIT, CLU (HAS 2050 STAMPED ON PART) (AC–DELCO #8679390)	5–I17,654
92–93	Y 4–SPD A/TRANS (MD8) . . .	24201807	1	94.97	PLATE KIT, CLU (HAS 2050 STAMPED ON PART) (CONTAINS ALL FIBER & STEEL CLU PLTS, USE W/OVERHAUL GSKT KIT FOR COMPL OVERHAUL) (AC–DELCO #24201807)	5–I17,9
94	Y 4–SPD A/TRANS (M30) . . .	24201807	1	94.97	PLATE KIT, CLU (HAS 2050 STAMPED ON PART) (CONTAINS ALL FIBER & STEEL CLU PLTS, USE W/OVERHAUL GSKT KIT FOR COMPL OVERHAUL) (AC–DELCO #24201807)	5–I17,9
95–96	Y 4–SPD A/TRANS (M30) . . .	24209562	1	131.07	PLATE KIT, CLU (COMPL KIT, INCLUDING 3–4) (AC–DELCO #24209562)	5–K12,8
84–93	Y 4–SPD A/TRANS (MD8) . . .	8647991	AR	68.87	PLATE KIT, FWD CLU (INCLS INST SHEET & PLATES) (AC–DELCO #8647991)	5–H24,649
94–96	Y 4–SPD A/TRANS (M30) . . .	8647991	AR	68.87	PLATE KIT, FWD CLU (INCLS INST SHEET & PLATES) (AC–DELCO #8647991)	5–H24,649
84–93	Y 4–SPD A/TRANS (MD8) . . .	8687496	1	242.82	PLATE KIT, LOW & REV CLU (W/SUPT) (W/PSTN) (STEEL PLATES) (AC–DELCO #8687996)	5–H9,678
94–96	Y 4–SPD A/TRANS (M30) . . .	8687996	1	242.82	PLATE KIT, LOW & REV CLU (W/SUPT) (W/PSTN) (STEEL PLATES) (AC–DELCO #8687996)	5–H9,678
84–93	Y 4–SPD A/TRANS (MD8) . . .	8671900	1	27.28	PLATE KIT, 3–4 CLU (1.97MM THK) (AC–DELCO #8671900)	5–H24,654
84–86	Y 4–SPD A/TRANS (MD8) . . .	24203547	1	131.07	PLATE KIT, 3–4 CLU (ID 4 OR 1 BAR) (AC–DELCO #24203547)	

© 2000 GENERAL MOTORS SERVICE PARTS OPERATIONS–CHEVROLET–14Y

4.163 PLATE – PLATE KIT – RING – SPRING, Transmission Clutch (Con't)

87–92	Y 4–SPD A/TRANS (MD8) ...	8690923	1	131.07	PLATE KIT, 3–4 CLU (W/APPLY & BKG PLTS) (AC–DELCO #8690923)	5–I17,8
93	Y 4–SPD A/TRANS (MD8) ...	8690923	1	131.07	PLATE KIT, 3–4 CLU (W/JULIAN DATE OTHER THAN 005–230) (W/APPLY & BKG PLTS) (AC–DELCO #8690923)	5–I17,8
95–96	Y 4–SPD A/TRANS (M30) ...	24209032	1	119.64	PLATE KIT, 3–4 CLU (AC–DELCO #24209032)	5–K12,7
84–93	Y 4–SPD A/TRANS (MD8) ...	8647058	1	11.43	PLATE, FWD CLU (WAVED) (AC–DELCO #8647058)	5–H9,648
85–93	Y 4–SPD A/TRANS (MD8) ...	8654325	AR	22.58	PLATE, FWD CLU (STEEL) (AC–DELCO #8654325)	5–H9,649
85–93	Y 4–SPD A/TRANS (MD8) ...	8673254	5	13.53	PLATE, FWD CLU (FIBER) (AC–DELCO #8673254)	5–H9,649
94–96	Y 4–SPD A/TRANS (M30) ...	8647058	1	11.43	PLATE, FWD CLU (WAVED) (AC–DELCO #8647058)	5–H9,648
94–96	Y 4–SPD A/TRANS (M30) ...	8654325	5	22.58	PLATE, FWD CLU (STEEL) (AC–DELCO #8654325)	5–H9,649
94–96	Y 4–SPD A/TRANS (M30) ...	8673254	5	13.53	PLATE, FWD CLU (FIBER) (AC–DELCO #8673254)	5–H9,649
84–86	Y (MD8)	8642163	1	22.58	PLATE, FWD CLU APPLY (6.44MM) (AC–DELCO #8642163)	5–H9,646
87–93	Y 4–SPD A/TRANS (MD8) ...	8682866	1	11.43	PLATE, FWD CLU APPLY (AC–DELCO #8682866)	5–H24,646
94–96	Y 4–SPD A/TRANS (M30) ...	8682866	1	11.43	PLATE, FWD CLU APPLY (AC–DELCO #8682866)	5–H24,646
84–86	Y (MD8)	8642169	1	57.22	PLATE, FWD CLU BKG (6.75MM) (AC–DELCO #8642169)	5–H9,650
87–93	Y 4–SPD A/TRANS (MD8) ...	8682867	1	11.43	PLATE, FWD CLU BKG (6.92–7.07MM) (ID A) (AC–DELCO #8682867)	5–H24,650
87	Y 4–SPD A/TRANS (MD8) ...	8682868	1	9.17	PLATE, FWD CLU BKG (USE ON TRAN BUILT ON OR AFTER JULIAN DATE 87040) (AC–DELCO #8682868)	5–H24,650
87	Y 4–SPD A/TRANS (MD8) ...	8682868	1	9.17	PLATE, FWD CLU BKG (8.73–9.03MM) (AC–DELCO #8682868)	5–H24,650
87	Y (MD8) (2ND DES)	8682869	1	9.17	PLATE, FWD CLU BKG (5.74–5.89MM) (USE ON TRAN BUILT ON OR AFTER JULIAN DATE 87040) (AC–DELCO #8682869)	5–H24,650
87	Y (MD8) (1ST DES)	8682869	1	9.17	PLATE, FWD CLU BKG (8.14–8.44MM) (USE ON TRAN BUILT BEFORE JULIAN DATE 87040) (AC–DELCO #8682869) .	5–H24,650
87	Y (MD8) (2ND DES)	8682870	1	9.17	PLATE, FWD CLU BKG (5.15–5.30MM) (USE ON TRAN BUILT ON OR AFTER JULIAN DATE 87040) (AC–DELCO #8682870)	5–H24,650
87	Y (MD8) (2ND DES)	8682871	1	9.17	PLATE, FWD CLU BKG (4.56–4.71MM) (USE ON TRAN BUILT ON OR AFTER JULIAN DATE 87040) (AC–DELCO #8682871)	5–H24,650
88–93	Y 4–SPD A/TRANS (MD8) ...	8682868	1	9.17	PLATE, FWD CLU BKG (8.73–9.03MM) (ID B) (AC–DELCO #8682868)	5–H24,650

© 2000 GENERAL MOTORS SERVICE PARTS OPERATIONS–CHEVROLET–14Y

4.163 PLATE – PLATE KIT – RING – SPRING, Transmission Clutch (Con't)

88–93	Y 4–SPD A/TRANS (MD8) ...	8682869	1	9.17	PLATE, FWD CLU BKG (5.74–5.89MM) (ID C) (AC–DELCO #8682869)	5–H24,650
88–93	Y 4–SPD A/TRANS (MD8) ...	8682870	1	9.17	PLATE, FWD CLU BKG (5.15–5.30MM) (5.15–5.30MM) (ID D) (AC–DELCO #8682870)	5–H24,650
88–93	Y 4–SPD A/TRANS (MD8) ...	8682871	1	9.17	PLATE, FWD CLU BKG (4.56–4.71MM) (4.56–4.71MM) (ID E) (AC–DELCO #8682871)	5–H24,650
94–96	Y 4–SPD A/TRANS (M30) ...	8682867	1	11.43	PLATE, FWD CLU BKG (6.92–7.07MM) (ID A) (AC–DELCO #8682867)	5–H24,650
94–96	Y 4–SPD A/TRANS (M30) ...	8682868	1	9.17	PLATE, FWD CLU BKG (8.73–9.03MM) (ID B) (AC–DELCO #8682868)	5–H24,650
94–96	Y 4–SPD A/TRANS (M30) ...	8682869	1	9.17	PLATE, FWD CLU BKG (5.74–5.89MM) (ID C) (AC–DELCO #8682869)	5–H24,650
94–96	Y 4–SPD A/TRANS (M30) ...	8682870	1	9.17	PLATE, FWD CLU BKG (5.15–5.30MM) (ID D) (AC–DELCO #8682870)	5–H24,650
94–96	Y 4–SPD A/TRANS (M30) ...	8682871	1	9.17	PLATE, FWD CLU BKG (4.56–4.71MM) (ID E) (AC–DELCO #8682871)	5–H24,650
87	Y (MD8) (2ND DES)	8676362	1	6.60	PLATE, LO & REV CLU (WAVED) (NO COMPARABLE 1ST DES) (USE ON TRAN BUILT ON OR AFTER JULIAN DATE 87040) (AC–DELCO #8676362)	5–H24,682
87	Y (MD8) (2ND DES)	6261120	1	11.43	PLATE, LO & REV CLU SPACER (ID BLANK) (USE ON TRANS BUILT ON OR AFTER JULIAN DATE 87040, NO COMPARABLE 1ST DES) (AC–DELCO #6261120)	5–H9,682
87	Y 4–SPD A/TRANS (MD8), (2ND DES)	24205268	1	11.43	PLATE, LO & REV CLU SPACER (ID BLANK) (USED ON TRANS BUILT ON OR AFTER JULIAN DATE 87040–NO COMPARABLE 1ST DES) (AC–DELCO #24205268)	5–H24,682
88–89	Y (MD8)	6261120	1	11.43	PLATE, LO & REV CLU SPACER (ID BLANK) (AC–DELCO #6261120)	5–H9,682
84–89	Y (MD8)	6261120	AR	11.43	PLATE, LOW & REV CLU (FLAT STEEL) (AC–DELCO #6261120)	5–H9,682
84–93	Y 4–SPD A/TRANS (MD8) ...	8684089	5	9.16	PLATE, LOW & REV CLU (FLAT FACED) (AC–DELCO #8684089)	5–H17,682
84–93	Y 4–SPD A/TRANS (MD8) ...	24205268	AR	11.43	PLATE, LOW & REV CLU (1.829MM) (HAS HOLES IN TURB PLATES) (STEEL) (AC–DELCO #24205268)	5–H24,682
87	Y (MD8) (2ND DES)	8667584	1	7.60	PLATE, LOW & REV CLU (ID4) (NO COMPARABLE 1ST DES) (USE ON TRAN BUILT ON OR AFTER JULIAN DATE 87040) (AC–DELCO #8667584)	5–H24,682
87	Y (MD8) (2ND DES)	24205270	1	12.18	PLATE, LOW & REV CLU (ID5) (NO COMPARABLE 1ST DES) (USE ON TRAN BUILT ON OR AFTER JULIAN DATE 87040) (AC–DELCO #24205270)	5–H24,682
88–93	Y 4–SPD A/TRANS (MD8) ...	8676362	1	6.60	PLATE, LOW & REV CLU (WAVED) (AC–DELCO #8676362)	5–H24,682

© 2000 GENERAL MOTORS SERVICE PARTS OPERATIONS–CHEVROLET–14Y

4.163 PLATE – PLATE KIT – RING – SPRING, Transmission Clutch (Con't)

88–93	Y 4–SPD A/TRANS (MD8) ...	8680440	1	7.60	PLATE, LOW & REV CLU (ID 4, 8, 0) (1.314MM) (SELECTIVE) (AC–DELCO #8680440)	5–H24,682
88–93	Y 4–SPD A/TRANS (MD8) ...	8680441	1	11.43	PLATE, LOW & REV CLU ((ID 1, 5, 9)) (2.344MM) (SELECTIVE) (AC–DELCO #8680441)	5–K12,682
88–93	Y 4–SPD A/TRANS (MD8) ...	24205270	1	12.16	PLATE, LOW & REV CLU (ID 4, 8, 0) (2.344MM) (HAS HOLES IN TURB PLATES) (AC–DELCO #24205270)	5–H24,682
94–96	Y 4–SPD A/TRANS (M30) ...	8676362	1	6.60	PLATE, LOW & REV CLU (WAVED) (AC–DELCO #8676362)	5–H24,682
94–96	Y 4–SPD A/TRANS (M30) ...	8680440	1	7.60	PLATE, LOW & REV CLU (ID 4, 8, 0) (1.314MM) (SELECTIVE) (AC–DELCO #8680440)	5–H24,682
94–96	Y 4–SPD A/TRANS (M30) ...	8680441	1	11.43	PLATE, LOW & REV CLU ((ID 1, 5, 9)) (2.344MM) (SELECTIVE) (AC–DELCO #8680441)	5–K12,682
94–96	Y 4–SPD A/TRANS (M30) ...	8684089	5	9.16	PLATE, LOW & REV CLU (FLAT FACED) (AC–DELCO #8684089)	5–I17,682
94–96	Y 4–SPD A/TRANS (M30) ...	24205266	4	11.43	PLATE, LOW & REV CLU (ID BLANK) (1.829MM) (HAS HOLES IN TURB PLATES) (STEEL) (AC–DELCO #24205266)	5–H24,682
94–96	Y 4–SPD A/TRANS (M30) ...	24205270	1	12.16	PLATE, LOW & REV CLU (ID 4, 8, 0) (2.344MM) (HAS HOLES IN TURB PLATES) (AC–DELCO #24205270)	5–H24,682
84–93	Y 4–SPD A/TRANS (MD8) ...	8642154	2	22.58	PLATE, OVERRUN CLU (2.34MM THK) (FLAT STEEL) (AC–DELCO #8642154)	5–H9,645
84–93	Y 4–SPD A/TRANS (MD8) ...	8673253	2	13.53	PLATE, OVERRUN CLU (1.93–2.13 THK) (GROOVED) (AC–DELCO #8673253)	5–H9,645
94–96	Y 4–SPD A/TRANS (M30) ...	8642154	2	22.58	PLATE, OVERRUN CLU (2.34MM THK) (FLAT STEEL) (AC–DELCO #8642154)	5–H9,645
94–96	Y 4–SPD A/TRANS (M30) ...	8673253	2	13.53	PLATE, OVERRUN CLU (1.93–2.13 THK) (GROOVED) (AC–DELCO #8673253)	5–H9,645
84–86	Y 4–SPD A/TRANS (MD8) ...	8642063	4	13.53	PLATE, REV INPUT CLU (FLAT FACED) (AC–DELCO #8642063)	5–H9,612
84–86	Y 4–SPD A/TRANS (MD8) ...	8673605	4	5.62	PLATE, REV INPUT CLU (FLAT FACED) (AC–DELCO #8673605)	5–H24,612
84–93	Y 4–SPD A/TRANS (MD8) ...	24205267	3	2.93	PLATE, REV INPUT CLU (W/ HOLES IN TURB PLATES) (AC–DELCO #24205267)	5–H9,612
87	Y (MD8) (2ND DES)	8663074	1	13.53	PLATE, REV INPUT CLU (WAVED STEEL) (USE ON TRANS BUILT ON OR AFTER JULIAN DATE 87040) (AC–DELCO #8663074) .	5–H24,611
87–94	Y 4–SPD A/TRANS (MD8) ...	8673605	4	5.62	PLATE, REV INPUT CLU (FLAT FACED) (153MM DIA) (AC–DELCO #8673605)	5–H24,612
88–93	Y 4–SPD A/TRANS (MD8) ...	8663074	1	13.53	PLATE, REV INPUT CLU (WAVED) (AC–DELCO #8663074)	5–H24,611
94–96	Y 4–SPD A/TRANS (M30) ...	8663074	1	13.53	PLATE, REV INPUT CLU (WAVED) (AC–DELCO #8663074)	5–H24,611
94–96	Y 4–SPD A/TRANS (M30) ...	8673605	4	5.62	PLATE, REV INPUT CLU (FLAT FACED) (153MM DIA) (AC–DELCO #8673605)	5–H24,612

© 2000 GENERAL MOTORS SERVICE PARTS OPERATIONS–CHEVROLET–14Y

4.163 PLATE – PLATE KIT – RING – SPRING, Transmission Clutch (Con't)

94–96	Y 4–SPD A/TRANS (M30) ...	24205267	3	2.93	PLATE, REV INPUT CLU (W/ HOLES IN TURB PLATES) (AC–DELCO #24205267)	5–H9,612
87	Y (MD8) (2ND DES)	8682863	1	11.43	PLATE, REV INPUT CLU BKG (7.45–7.60MM) (USE ON TRAN BUILT ON OR AFTER JULIAN DATE 87040) (AC–DELCO #8682863)	5–H24,613
87	Y (MD8) (2ND DES)	8682864	1	11.43	PLATE, REV INPUT CLU BKG (6.79–6.94MM) (USE ON TRAN BUILT ON OR AFTER JULIAN DATE 87040) (AC–DELCO #8682864)	5–H24,613
87	Y (MD8) (2ND DES)	8682865	1	11.43	PLATE, REV INPUT CLU BKG (5.47–5.62MM) (USE ON TRAN BUILT ON OR AFTER JULIAN DATE 87040) (AC–DELCO #8682865)	5–H24,613
88–93	Y 4–SPD A/TRANS (MD8) ...	8682863	1	11.43	PLATE, REV INPUT CLU BKG (7.25–7.41MM) (AC–DELCO #8682863)	5–H24,613
88–90	Y 4–SPD A/TRANS (MD8) ...	8682864	1	11.43	PLATE, REV INPUT CLU BKG (6.13–6.28MM) (AC–DELCO #8682864)	5–H24,613
88–93	Y 4–SPD A/TRANS (MD8) ...	8682865	1	11.43	PLATE, REV INPUT CLU BKG (5.79–5.95MM) (AC–DELCO #8682865)	5–H24,613
91–93	Y 4–SPD A/TRANS (MD8) ...	8682864	1	11.43	PLATE, REV INPUT CLU BKG (6.52–6.68MM) (AC–DELCO #8682864)	5–H24,613
94–96	Y 4–SPD A/TRANS (M30) ...	8682863	1	11.43	PLATE, REV INPUT CLU BKG (7.25–7.41MM) (AC–DELCO #8682863)	5–H24,613
94–96	Y 4–SPD A/TRANS (M30) ...	8682864	1	11.43	PLATE, REV INPUT CLU BKG (6.52–6.68MM) (AC–DELCO #8682864)	5–H24,613
94–96	Y 4–SPD A/TRANS (M30) ...	8682865	1	11.43	PLATE, REV INPUT CLU BKG (5.79–5.95MM) (AC–DELCO #8682865)	5–H24,613
84–90	Y 4–SPD A/TRANS (MD8) ...	8654145	6	11.43	PLATE, 3–4 CLU (AC–DELCO 8654145)	5–H9,654
88–93	Y 4–SPD A/TRANS (MD8) ...	8678053	5	8.73	PLATE, 3–4 CLU (1.37MM) (5 LG SPACES EQUAL SPACED BETWEEN CLSTR OF SMALL TEETH) (AC–DELCO #8678053)	5–H24,654
91	Y 4–SPD A/TRANS (MD8), (1ST DES)	8654145	6	11.43	PLATE, 3–4 CLU (USE ON TRANS W/ID CODE 1YDM) (W/O 2050 STAMPED ON PART) (AC–DELCO #8654145)	5–H9,654
91	Y 4–SPD A/TRANS (MD8), (2ND DES)	8679390	6	13.53	PLATE, 3–4 CLU (USED ON TRANS W/ID CODE 1YHM) (HAS 2050 STAMPED ON PART) (AC–DELCO #8679390)	5–I17,654
92	Y 4–SPD A/TRANS (MD8) ...	8685045	5	13.53	PLATE, 3–4 CLU (2.71MM (STEEL) (5 LG SPACES EQUAL SPACED BETWEEN CLSTR OF SMALL TEETH) (AC–DELCO #8685045)	5–I17,652
94	Y 4–SPD A/TRANS (M30) ...	8679390	6	13.53	PLATE, 3–4 CLU (HAS 2050 STAMPED ON PART) (AC–DELCO #8679390)	5–I17,654

© 2000 GENERAL MOTORS SERVICE PARTS OPERATIONS–CHEVROLET–14Y

4.163 PLATE – PLATE KIT – RING – SPRING, Transmission Clutch (Con't)

94–96	Y 4–SPD A/TRANS (M30) ...	8685045	1	13.53	PLATE, 3–4 CLU (2.71MM (STEEL) (5 LG SPACES EQUAL SPACED BETWEEN CLSTR OF SMALL TEETH) (AC–DELCO #8685045)	5–I17,652
95–96	Y 4–SPD A/TRANS (M30) ...	24201132	6	5.62	PLATE, 3–4 CLU (FIBER) (AC–DELCO #24201132)	5–K12,654
93	Y 4–SPD A/TRANS (MD8) ...	8685044	1	13.53	PLATE, 3–4 CLU APPLY (AC–DELCO #8685044)	5–I17,653
94–96	Y 4–SPD A/TRANS (M30) ...	8685044	1	13.53	PLATE, 3–4 CLU APPLY (AC–DELCO #8685044)	5–I17,653
84–86	Y (MD8)	8642621	1	13.53	PLATE, 3–4 CLU BKG (7.13MM) (AC–DELCO #8642621)	5–H9,655
84–86	Y (MD8)	8642622	1	13.53	PLATE, 3–4 CLU BKG (6.13MM) (AC–DELCO #8642622)	5–H9,655
84–86	Y (MD8)	8642623	1	13.53	PLATE, 3–4 CLU BKG (5.13MM) (AC–DELCO #8642623)	5–H9,655
84–86	Y (MD8)	8642624	1	13.53	PLATE, 3–4 CLU BKG (4.13MM) (AC–DELCO #8642624)	5–H9,655
87	Y (MD8) (1ST DES)	8642621	1	13.53	PLATE, 3–4 CLU BKG (7.13MM) (W/TRANS BUILT BEFORE JULIAN DATE 87040) (AC–DELCO #8642621)	5–H9,655
87	Y (MD8) (1ST DES)	8642622	1	13.53	PLATE, 3–4 CLU BKG (6.13MM) (W/TRANS BUILT BEFORE JULIAN DATE 87040) (AC–DELCO #8642622)	5–H9,655
87	Y (MD8) (1ST DES)	8642623	1	13.53	PLATE, 3–4 CLU BKG (5.13MM) (W/TRANS BUILT BEFORE JULIAN DATE 87040) (AC–DELCO #8642623)	5–H9,655
87	Y (MD8) (1ST DES)	8642624	1	13.53	PLATE, 3–4 CLU BKG (4.13MM) (W/TRANS BUILT BEFORE JULIAN DATE 87040) (AC–DELCO #8642624)	5–H9,655
88–93	Y 4–SPD A/TRANS (MD8) ...	8667535	1	13.53	PLATE, 3–4 CLU BKG (6.58–.38MM) (AC–DELCO #8667535)	5–H24,655
88–93	Y 4–SPD A/TRANS (MD8) ...	8667537	1	13.53	PLATE, 3–4 CLU BKG (4.92–.72MM) (AC–DELCO #8667537)	5–H24,655
92	Y 4–SPD A/TRANS (MD8) ...	8685046	1	13.53	PLATE, 3–4 CLU BKG (ID A) (AC–DELCO #8685046)	5–I17,655
92–93	Y 4–SPD A/TRANS (MD8) ...	8685047	1	13.53	PLATE, 3–4 CLU BKG (ID B) (AC–DELCO #8685047)	5–I17,655
92–93	Y 4–SPD A/TRANS (MD8) ...	8685048	1	13.53	PLATE, 3–4 CLU BKG (ID C) (AC–DELCO #8685048)	5–I17,655
93	Y 4–SPD A/TRANS (MD8) ...	8685046	1	13.53	PLATE, 3–4 CLU BKG (ID A) (W/JULIAN DATE 005–230) (AC–DELCO #8685046)	5–I17,655
94–96	Y 4–SPD A/TRANS (M30) ...	8685046	1	13.53	PLATE, 3–4 CLU BKG (ID A) (AC–DELCO #8685046)	5–I17,655
94–96	Y 4–SPD A/TRANS (M30) ...	8685047	1	13.53	PLATE, 3–4 CLU BKG (ID B) (AC–DELCO #8685047)	5–I17,655
94–96	Y 4–SPD A/TRANS (M30) ..	8685048	1	13.53	PLATE, 3–4 CLU BKG (ID C) (AC–DELCO #8685048)	5–I17,655
87	Y (MD8) (2ND DES)	8678053	5	8.73	PLATE, 3RD & 4TH CLU (FLAT STEEL, 1.97MM, NO COMPARABLE 1ST DES, 5 LG SPACES EQUAL SPACED BETWEEN CLSTR OF SMALL TEETH) (AC–DELCO #8678053)	5–H24,654

© 2000 GENERAL MOTORS SERVICE PARTS OPERATIONS–CHEVROLET–14Y

4.163 PLATE – PLATE KIT – RING – SPRING, Transmission Clutch (Con't)

84–86	Y (MD8)	8642172	1	13.53	PLATE, 3RD & 4TH CLU APPLY (3.30MM) (AC–DELCO #8642172)	5–H9,653
87	Y (MD8) (1ST DES)	8642172	1	13.53	PLATE, 3RD & 4TH CLU APPLY (3.30MM) (USE ON TRAN BUILT BEFORE JULIAN DATE 87040) (AC–DELCO #8642172)	5–H9,653
87	Y (MD8) (2ND DES)	8667535	1	13.53	PLATE, 3RD & 4TH CLU BKG (0.48MM) (USE ON TRAN BUILT ON OR AFTER JULIAN DATE 87040) (AC–DELCO #8667535) .	5–H24,655
87	Y (MD8) (2ND DES)	8667537	1	13.53	PLATE, 3RD & 4TH CLU BKG (4.62MM) (USE ON TRAN BUILT ON OR AFTER JULIAN DATE 87040) (AC–DELCO #8667537) .	5–H24,655
84–93	Y 4–SPD A/TRANS (MD8) ...	8642170	1	9.17	RING, FWD CLU BKG PLT RET (AC–DELCO #8642170)	5–H9,651
94–96	Y 4–SPD A/TRANS (M30) ...	8642170	1	9.17	RING, FWD CLU BKG PLT RET (AC–DELCO #8642170)	5–H9,651
87–93	Y 4–SPD A/TRANS (MD8) ...	8363636	1	1.82	RING, 3–4 CLU BKG PLT RET (AC–DELCO #8663636)	5–H24,656
94–96	Y 4–SPD A/TRANS (M30) ...	8663636	1	1.82	RING, 3–4 CLU BKG PLT RET (AC–DELCO #8663636)	5–H24,656
84–93	Y 4–SPD A/TRANS (MD8) ...	8677876	1	4.07	SPRING, OVERRUN CLU (AC–DELCO #8677876)	5–H9,634
94–96	Y 4–SPD A/TRANS (M30) ...	8677876	1	4.07	SPRING, OVERRUN CLU (AC–DELCO #8677876)	5–H9,634

4.164 CLUTCH – RING – SPRING, Transmission Clutch

84–93	Y 4–SPD A/TRANS (MD8) ...	24210960	1	173.44	CLUTCH, FWD RLR (HIGH SPD, INCLS INPUT SUN GEAR) (AC–DELCO #24210960)	5–H9,642
84–93	Y 4–SPD A/TRANS (MD8) ...	24210961	1	173.44	CLUTCH, FWD RLR (REG SPD, INCLS INPUT SUN GEAR) (AC–DELCO #24210961)	5–H9,642
94–96	Y 4–SPD A/TRANS (M30) ...	24210960	1	173.44	CLUTCH, FWD RLR (HIGH SPD, INCLS INPUT SUN GEAR) (AC–DELCO #24210960)	5–H9,642
94–96	Y 4–SPD A/TRANS (M30) ...	24210961	1	173.44	CLUTCH, FWD RLR (REG SPD, INCLS INPUT SUN GEAR) (AC–DELCO #24210961)	5–H9,642
84–93	Y 4–SPD A/TRANS (MD8) ...	8647337	1	1.82	RING, LOW & REV CLU PLT RET (04.159) (AC–DELCO #8647337)	5–H9,693
94–96	Y 4–SPD A/TRANS (M30) ...	8647337	1	1.82	RING, LOW & REV CLU SPR RET RET (04.159) (AC–DELCO #8647337)	5–H9,693
84–93	Y 4–SPD A/TRANS (MD8) ...	8667022	1	1.82	RING, REV INPUT CLU BKG PLT RET (YELLOW) (AC–DELCO #8667022)	5–H9,614
94–96	Y 4–SPD A/TRANS (M30) ...	8667022	1	1.82	RING, REV INPUT CLU BKG PLT RET (YELLOW) (AC–DELCO #8667022)	5–H9,614
84–93	Y 4–SPD A/TRANS (MD8) ...	8628059	1	1.82	RING, REV INPUT CLU SPR RET (SNAP) (AC–DELCO #8628059)	5–H9,610
94–96	Y 4–SPD A/TRANS (M30) ...	8628059	1	1.82	RING, REV INPUT CLU SPR RET (AC–DELCO #8628059)	5–H9,610
84–93	Y 4–SPD A/TRANS (MD8) ...	8642227	1	8.73	SPRING, LOW & REV CLU (AC–DELCO #8642227)	5–H9,694
94–96	Y 4–SPD A/TRANS (M30) ...	8642227	1	8.73	SPRING, LOW & REV CLU (AC–DELCO #8642227)	5–H9,694

© 2000 GENERAL MOTORS SERVICE PARTS OPERATIONS–CHEVROLET–14Y

4.164 CLUTCH – RING – SPRING, Transmission Clutch (Con't)

84–93	Y 4–SPD A/TRANS (MD8) ...	8647204	1	8.73	SPRING, REV INPUT CLU (AC–DELCO #8647204)	5–H9,609
94–96	Y 4–SPD A/TRANS (M30) ...	8647204	1	8.73	SPRING, REV INPUT CLU (AC–DELCO #8647204)	5–H9,609

4.166 PISTON – RETAINER – SEAL – SEAL KIT – SUPPORT, Transmission Clutch

84–93	Y 4–SPD A/TRANS (MD8) ...	8663513	1	16.00	PISTON, FWD CLU (AC–DELCO #8663513)	5–H9,630
94–96	Y 4–SPD A/TRANS (M30) ...	8663513	1	16.00	PISTON, FWD CLU (AC–DELCO #8663513)	5–H9,630
93	Y 4–SPD A/TRANS (MD8) ...	8665549	1	43.40	PISTON, LOW & REV CLU (AC–DELCO #8665549)	5–I17,695
94–96	Y 4–SPD A/TRANS (M30) ...	8665549	1	43.40	PISTON, LOW & REV CLU (AC–DELCO #8665549)	5–I17,695
84–93	Y 4–SPD A/TRANS (MD8) ...	8642148	1	34.12	PISTON, OVERRUN CLU (AC–DELCO #8642148)	5–H9,632
94–96	Y 4–SPD A/TRANS (M30) ...	8642148	1	34.12	PISTON, OVERRUN CLU (AC–DELCO #8642148)	5–H9,632
87	Y (MD8) (2ND DES)	8667841	1	24.87	PISTON, REV INPUT CLU (USE ON TRAN BUILT ON OR AFTER JULIAN DATE 87040) (AC–DELCO #8667841)	5–H24,607
88–93	Y 4–SPD A/TRANS (MD8) ...	8667841	1	24.87	PISTON, REV INPUT CLU (.095 HOLE) (AC–DELCO #8667841) .	5–H24,607
92–93	Y 5.7P (LT1), 4–SPD A/TRANS (MD8)	8663071	1	14.78	PISTON, REV INPUT CLU (AC–DELCO #8663071)	
94–96	Y 4–SPD A/TRANS (M30) ...	8667841	1	24.87	PISTON, REV INPUT CLU (.095 HOLE) (AC–DELCO #8667841) .	5–H24,607
84–93	Y 4–SPD A/TRANS (MD8) ...	24200290	1	34.12	PISTON, 3–4 CLU (INPUT) (AC–DELCO #24200290)	5–H9,623
94–96	Y 4–SPD A/TRANS (M30) ...	24200290	1	34.12	PISTON, 3–4 CLU (AC–DELCO #24200290)	5–H9,623
87–93	Y 4–SPD A/TRANS (MD8) ...	8663890	3	2.93	RETAINER, LOW & REV CLU PSTN (10.30MM 0 MAX) (DOUBLE ORIFICE) (W/BALL) (04.180) (AC–DELCO #8663890)	5–H20,106
94–96	Y 4–SPD A/TRANS (M30) ...	8663890	1	2.93	RETAINER, LOW & REV CLU PSTN (DOUBLE ORIFICE) (W/BALL) (04.180) (AC–DELCO #8663890)	5–H20,106
84–86	Y (MD8)	8657922	1	5.83	SEAL KIT, REV INPUT CLU (AC–DELCO #8657922)	5–H9,608
87	Y (MD8) (2ND DES)	8657922	1	5.83	SEAL KIT, REV INPUT CLU (USE ON TRAN BUILT ON OR AFTER JULIAN DATE 87040) (AC–DELCO #8657922)	5–H9,608
88–93	Y 4–SPD A/TRANS (MD8) ...	8657922	1	5.83	SEAL KIT, REV INPUT CLU (INCLS SEALS) (AC–DELCO #8657922)	5–H9,608
94–96	Y 4–SPD A/TRANS (M30) ...	8657922	1	5.83	SEAL KIT, REV INPUT CLU (INCLS SEALS) (AC–DELCO #8657922)	5–H9,608
84–93	Y 4–SPD A/TRANS (MD8) ...	8642919	1	10.42	SEAL KIT, 3–4 CLU PSTN (FOA) (AC–DELCO #8642919)	5–I17,1
94–96	Y 4–SPD A/TRANS (M30) ...	8642919	1	10.42	SEAL KIT, 3–4 CLU PSTN (FOA) (AC–DELCO #8642919)	5–I17,1
92–93	Y 4–SPD A/TRANS (MD8) ...	8686146	1	6.60	SEAL, FWD CLU PSTN OTR (AC–DELCO #8686146)	5–J11,629
94–96	Y 4–SPD A/TRANS (M30) ...	8686146	1	6.60	SEAL, FWD CLU PSTN OTR (AC–DELCO #8686146)	5–J11,629
93	Y 4–SPD A/TRANS (MD8) ...	8682137	1	1.82	SEAL, 3–4 CLU PSTN INR (AC–DELCO #8682137)	5–J11,624

© 2000 GENERAL MOTORS SERVICE PARTS OPERATIONS–CHEVROLET–14Y

4.166 PISTON – RETAINER – SEAL – SEAL KIT – SUPPORT, Transmission Clutch (Con't)

94	Y 4-SPD A/TRANS (M30) ...	8682137	1	1.82	SEAL, 3-4 CLU PSTN INR (AC-DELCO #8682137)	5-J11,624
84-93	Y 4-SPD A/TRANS (MD8) ...	8642138	1	1.00	SEAL, 3-4 CLU PSTN OTR	
94	Y 4-SPD A/TRANS (M30) ...	8642138	1	1.00	SEAL, 3-4 CLU PSTN OTR	
84-93	Y 4-SPD A/TRANS (MD8) ...	8681727	1	119.04	SUPPORT, LOW & REV CLU (04.100) (AC-DELCO #8681727)	5-H9,679
94-96	Y 4-SPD A/TRANS (M30) ...	8681727	1	119.04	SUPPORT, LOW & REV CLU (04.100) (AC-DELCO #8681727)	5-H9,679

4.167 RING – SPRING, Transmission Clutch

93	Y 4-SPD A/TRANS (MD8) ...	8685043	1	13.53	RING, 3-4 CLU APPL (W/TRANS JULIAN DATE 005-230, FOR OTHER DATES SEE 8690923) (AC-DELCO #8685043)	5-I17,625
94-96	Y 4-SPD A/TRANS (M30) ...	8685043	1	13.53	RING, 3-4 CLU APPL (AC-DELCO #8685043)	5-I17,625
84-93	Y 4-SPD A/TRANS (MD8) ...	8685244	1	5.24	SPRING, 3-4 CLU (INPUT) (10512 MM) (CLUTCH) (AC-DELCO #8685244)	5-H9,626
88-93	Y 4-SPD A/TRANS (MD8) ...	8667424	6	1.82	SPRING, 3-4 CLU (BOOST) (INCLS RET & (2) SPRINGS) (04.163) (AC-DELCO #8667424)	5-H24,600
94-96	Y 4-SPD A/TRANS (M30) ...	8667424	5	1.82	SPRING, 3-4 CLU (BOOST) (INCLS RET & (2) SPRINGS) (04.163) (AC-DELCO #8667424)	5-H24,600
94-96	Y 4-SPD A/TRANS (M30) ...	8685244	1	5.24	SPRING, 3-4 CLU (INPUT) (10512 MM) (AC-DELCO #8685244) .	5-H9,626

4.169 BUSHING – HOUSING – PIN – RETAINER – VALVE, Transmission Clutch

94-96	Y 4-SPD A/TRANS (M30) ...	8628917	1	4.60	BUSHING, DIR CLU HSG RR (AC-DELCO #8628917)	5-H9,606
84-93	Y 4-SPD A/TRANS (MD8) ...	8628917	1	4.60	BUSHING, REV INPUT CLU HSG RR (AC-DELCO #8628917) ..	5-H9,606
84-93	Y 4-SPD A/TRANS (MD8) ...	8654326	1	29.53	HOUSING, FWD CLU (AC-DELCO #8654326)	5-H9,628
94	Y 4-SPD A/TRANS (M30) ...	8654326	1	29.53	HOUSING, FWD CLU (AC-DELCO #8654326)	5-H9,628
95	Y 4-SPD A/TRANS (M30), (1ST DES)	8654326	1	29.53	HOUSING FWD CLU (W/JULIAN DATE 95-097 & PRIOR) (AC-DELCO #8654326)	5-H9,628
95	Y 4-SPD A/TRANS (M30), (2ND DES)	24205298	1	104.04	HOUSING, FWD CLU (W/JULIAN DATE 95-093 & AFTER) (INCLS HOUSINGS & VALVE) (AC-DELCO #24205298)	5-K12,628
96	Y 4-SPD A/TRANS (M30) ...	24205298	1	104.04	HOUSING, FWD CLU (INCLS HOUSINGS & VALVE) (AC-DELCO #24205298)	5-K12,628
88-94	Y 4-SPD A/TRANS (MD8) ...	8681295	1	68.87	HOUSING, REV INPUT CLU (W/DRUM & RET) (AC-DELCO #8681295)	5-H24,605
94-96	Y 4-SPD A/TRANS (M30) ...	8681295	1	68.87	HOUSING, REV INPUT CLU (AC-DELCO #8681295)	5-H24,605
87	Y (MD8) (2ND DES)	8681295	1	68.87	HOUSING, W/DRUM & RET, REV INPUT CLU (USE ON TRAN BUILT ON OR AFTER JULIAN DATE 87040) (AC-DELCO #8681295) .	5-H24,605

© 2000 GENERAL MOTORS SERVICE PARTS OPERATIONS – CHEVROLET – 14Y

MICROFICHE INDEX

GROUP 4.000

FICHE 5 OF 11

GROUP	DESCRIPTION	STARTING GRID LOCATION PARTS	ILLUSTRATIONS
–	GENERAL INFORMATION	1–A2	1–G2
–	ALPHABETICAL INDEX	1–B13	N.A.
4.000	4–SPEED TRANSMISSION	5–A2	5–F2
4.000	6–SPEED TRANSMISSION	5–B2	5–G2
4.000	AUTOMATIC TRANSMISSION	5–C2	5–H2
–	OUT OF FICHE CALLS	N.A.	5–M23

5–D1

4.169 BUSHING – HOUSING – PIN – RETAINER – VALVE, Transmission Clutch(Con't)

94–96	Y 4–SPD A/TRANS (M30) ...	8680765	1	1.82	PIN, FWD CLU ABUSE VLV BORE PLUG (04.265) (AC–DELCO #8680765)	5–K9,360
87	Y (MD8)	8633748	2	2.93	RETAINER, W/BALL, CHK VLV (FWD & DIR CLU) (AC–DELCO #8633748)	
92–93	Y 4–SPD A/TRANS (MD8) ...	8622757	1	*1.82	VALVE, FWD CLU HSG BALL CHK (3/16 DIA) (STL BALL ONLY) (04.256) (AC–DELCO #8622757)	
94–96	Y 4–SPD A/TRANS (M30) ...	8622757	1	*1.82	VALVE, FWD CLU HSG BALL CHK (3/16 DIA) (STL BALL ONLY) (04.256) (AC–DELCO #8622757)	
92–93	Y 4–SPD A/TRANS (MD8) ...	8622757	1	*1.82	VALVE, OVERRUN CLU BALL CHK (3/16 DIA) (STL BALL ONLY) (04.256) (AC–DELCO #8622757)	

4.175 CARRIER – SHAFT – SHELL – SUPPORT, Transmission Output/Counter Shaft or Carrier

84–87	Y (MD8)	24212177	1	108.11	CARRIER, INPUT (CARRIER, INPUT COMPL) (AC–DELCO #24212177)	5–H9,662
88–93	Y 4–SPD A/TRANS (MD8) ...	24212177	1	108.11	CARRIER, INPUT (COMPL) (AC–DELCO #24212177)	5–H9,662
94–96	Y 4–SPD A/TRANS (M30) ...	24212177	1	108.11	CARRIER, INPUT (COMPL) (AC–DELCO #24212177)	5–H9,662
84	Y 4–SPD A/TRANS (MD8), (EXC EUROPEAN PROVISIONS (VD1) (EXPORT)	8654200	1	150.37	CARRIER, REACTION (AC–DELCO #8654200)	5–H9,681
85–93	Y 4–SPD A/TRANS (MD8) ...	8654200	1	150.37	CARRIER, REACTION (AC–DELCO #8654200)	5–H9,681
94–96	Y 4–SPD A/TRANS (M30) ...	8654200	1	150.37	CARRIER, REACTION (AC–DELCO #8654200)	5–H9,681
84–86	Y (MD8)	8681807	1	104.04	SHAFT, OUTPUT (AC–DELCO #8681807)	5–H9,687
87	Y07 (MD8) (EXC EXPORT) ..	8681809	1	131.07	SHAFT, OUTPUT (AC–DELCO #8681809)	5–H24,687
88–93	Y 4–SPD A/TRANS (MD8) ...	8681807	1	104.04	SHAFT, OUTPUT (AC–DELCO #8681807)	5–H9,687
94–96	Y 4–SPD A/TRANS (M30) ...	8685754	1	131.07	SHAFT, OUTPUT (AC–DELCO #8685754)	5–J11,687
84–93	Y 4–SPD A/TRANS (MD8) ...	8681518	1	108.12	SHAFT, REACTION CARR (AC–DELCO #8681518)	5–H9,666
94–96	Y 4–SPD A/TRANS (M30) ...	8681518	1	108.12	SHAFT, REACTION CARR (AC–DELCO #8681518)	5–H9,666
84–93	Y 4–SPD A/TRANS (MD8) ...	8683439	1	41.53	SHELL, REACTION SUN GR (AC–DELCO #8683439)	5–H9,670
94–96	Y 4–SPD A/TRANS (M30) ...	8683439	1	41.53	SHELL, REACTION SUN GR (AC–DELCO #8683439)	5–H9,670
84–93	Y 4–SPD A/TRANS (MD8) ...	8681491	1	41.53	SUPPORT, REACTION INTL GR (AC–DELCO #8681491)	5–H9,685
94–96	Y 4–SPD A/TRANS (M30) ...	8681491	1	41.53	SUPPORT, REACTION INTL GR (AC–DELCO #8681491)	5–H9,685
	*EXPORT****************EXPORT****************EXPORT****************EXPORT****************EXPORT*					
87	Y07 (MD8) 3.07R, NM8 (EXPORT)	8681807	1	104.04	SHAFT, OUTPUT (AC–DELCO #8681807)	5–H9,687

© 2000 GENERAL MOTORS SERVICE PARTS OPERATIONS–CHEVROLET–14Y

4.176 BEARING – BUSHING – RING – SEAL – WASHER, Transmission Output/Counter Shaft or Carrier

84–93	Y 4–SPD A/TRANS (MD8) ...	8642162	1	9.68	BEARING, INPUT SUN GR (04.159) (AC–DELCO #8642162)	5–H9,637
84–93	Y 4–SPD A/TRANS (MD8) ...	8642908	1	13.83	BUSHING, REACTION CARR SHF FRT (AC–DELCO #8642908) .	5–H9,665
94–96	Y 4–SPD A/TRANS (M30) ...	8642908	1	13.83	BUSHING, REACTION CARR SHF FRT (AC–DELCO #8642908) .	5–H9,665
84–93	Y 4–SPD A/TRANS (MD8) ...	8642907	1	13.83	BUSHING, REACTION CARR SHF RR (AC–DELCO #8642907) ..	5–H9,667
94–96	Y 4–SPD A/TRANS (M30) ...	8642907	1	13.83	BUSHING, REACTION CARR SHF RR (AC–DELCO #8642907) ..	5–H9,667
84–93	Y 4–SPD A/TRANS (MD8) ...	8642909	1	13.83	BUSHING, REACTION SUN GR (AC–DELCO #8642909)	5–H9,672
94–96	Y 4–SPD A/TRANS (M30) ...	8642909	1	13.83	BUSHING, REACTION SUN GR (AC–DELCO #8642909)	5–H9,672
84–93	Y 4–SPD A/TRANS (MD8) ...	8642220	1	1.82	RING, INT REACTION GR SUPT RET (AC–DELCO #8642220) .	5–H9,686
94–96	Y 4–SPD A/TRANS (M30) ...	8642220	1	1.82	RING, INT REACTION GR SUPT RET (AC–DELCO #8642220) .	5–H9,686
84–93	Y 4–SPD A/TRANS (MD8) ...	8654141	1	1.82	RING, OUTPUT SHF RET (TO INPUT CARR) (AC–DELCO #8654141)	5–H9,661
94–96	Y 4–SPD A/TRANS (M30) ...	8654141	1	1.82	RING, OUTPUT SHF RET (TO INPUT CARR) (AC–DELCO #8654141)	5–H9,661
84–93	Y 4–SPD A/TRANS (MD8) ...	8642201	1	1.82	RING, REACTION CARR SHF RET (TO INT GR) (AC–DELCO #8642201)	5–H9,668
94–96	Y 4–SPD A/TRANS (M30) ...	8642201	1	1.82	RING, REACTION CARR SHF RET (TO INT GR) (AC–DELCO #8642201)	5–H9,668
84–93	Y 4–SPD A/TRANS (MD8) ...	8642105	1	1.82	RING, 2–4 BAND SERVO 2ND APPL PSTN RET (AC–DELCO #8642105)	5–H5,28
94–96	Y 4–SPD A/TRANS (M30) ...	8642105	1	1.82	RING, 2–4 BAND SERVO 2ND APPL PSTN RET (AC–DELCO #8642105)	5–H5,28
84–91	Y 4–SPD A/TRANS (MD8) ...	8642178	1	*1.82	SEAL, OUTPUT SHF (INPUT HSG TO OTPUT) (AC–DELCO #8642178)	5–H9,636
92–93	Y 4–SPD A/TRANS (MD8) ...	8677268	1	*1.82	SEAL, OUTPUT SHF (INPUT HSG TO OTPUT) (AC–DELCO #8677268)	5–I17,636
94–96	Y 4–SPD A/TRANS (M30) ...	8677268	1	*1.82	SEAL, OUTPUT SHF (AC–DELCO #8677268)	5–I17,636
84–86	Y (MD8)	12337941	1	*1.82	WASHER, INPUT CARR TO RACE THR (AC–DELCO #12337941)	5–H9,660
84–93	Y 4–SPD A/TRANS (MD8) ...	8642202	1	4.07	WASHER, REACTION CARR SHF THR (TO SHELL) (AC–DELCO #8642202)	5–H9,669
94–96	Y 4–SPD A/TRANS (M30) ...	8642202	1	4.07	WASHER, REACTION CARR SHF THR (AC–DELCO #8642202) .	5–H9,669

4.180 BUSHING – CLUTCH – RACE – RING – ROLLER – SPRING – VALVE, Transmission Clutch

84–93	Y 4–SPD A/TRANS (MD8) ...	8642905	1	11.02	BUSHING, REV INPUT CLU HSG FRT (AC–DELCO #8642905) .	5–H9,603
94–96	Y 4–SPD A/TRANS (M30) ...	8642905	1	11.02	BUSHING, REV INPUT CLU HSG FRT (AC–DELCO #8642905) .	5–H9,603
84–86	Y (MD8)	8690907	1	242.82	CLUTCH, REV INPUT (AC–DELCO #8690907)	5–H9,605

© 2000 GENERAL MOTORS SERVICE PARTS OPERATIONS–CHEVROLET–14Y

4.180 BUSHING – CLUTCH – RACE – RING – ROLLER – SPRING – VALVE, Transmission Clutch (Con't)

87	Y (MD8) (1ST DES)	8690907	1	242.82	CLUTCH, REV INPUT (REQ ONLY ON TRAN BUILT BEFORE JULIAN DATE 87040) (AC–DELCO #8690907)	5–H9,605
84–93	Y 4–SPD A/TRANS (MD8) ...	8673300	1	41.53	RACE, LOW CLU RLR INR (OVERRUN CLU) (AC–DELCO #8673300)	5–H9,675
94–96	Y 4–SPD A/TRANS (M30) ...	8673300	1	41.53	RACE, LOW CLU RLR INR (OVERRUN CLU) (AC–DELCO #8673300)	5–H9,675
84–93	Y 4–SPD A/TRANS (MD8) ...	24200278	1	2.40	RING, LOW & REV CLU SUPT RET (AC–DELCO #24200278)	5–H9,676
94–96	Y 4–SPD A/TRANS (M30) ...	24200278	1	2.40	RING, LOW & REV CLU SUPT RET (AC–DELCO #24200278)	5–H5,676
84–93	Y 4–SPD A/TRANS (MD8) ...	6261051	1	1.82	RING, LOW CLU RLR RET (O/RUN) (AC–DELCO #6261051)	5–H9,677
94–96	Y 4–SPD A/TRANS (M30) ...	6261051	1	1.82	RING, LOW CLU RLR RET (O/RUN) (AC–DELCO #6261051)	5–H9,677
84–93	Y 4–SPD A/TRANS (MD8) ...	8647083	1	1.82	RING, OVERRUN CLU HUB RET (SNAP) (AC–DELCO #8647083)	5–H9,638
94–96	Y 4–SPD A/TRANS (M30) ...	8647083	1	1.82	RING, OVERRUN CLU HUB RET (SNAP) (AC–DELCO #8647083)	5–H9,638
93	Y 4–SPD A/TRANS (MD8) ...	7471008	1	34.11	ROLLER, LOW CLU (AC–DELCO #7471008)	5–K12,678
94–96	Y 4–SPD A/TRANS (M30) ...	7471008	1	34.11	ROLLER, LOW CLU (AC–DELCO #7471008)	5–K12,678
84–93	Y 4–SPD A/TRANS (MD8) ...	6261415	1	4.07	SPRING, LOW & REV CLU SUPT (RET) (AC–DELCO #6261415)	5–H9,680
94–96	Y 4–SPD A/TRANS (M30) ...	6261415	1	4.07	SPRING, LOW & REV CLU SUPT (RET) (AC–DELCO #6261415)	5–H9,680
84–93	Y 4–SPD A/TRANS (MD8) ...	8628732	AR	1.82	VALVE, A/TRNS FLUID/PUMP CVR BALL CHK (7.10MM 0 MAX) (SINGLE ORIFICE) (TALL & NARROW) (04.226) (AC–DELCO #8628732)	5–H13,241
94–96	Y 4–SPD A/TRANS (M30) ...	8628732	AR	1.82	VALVE, A/TRNS FLUID/PUMP CVR BALL CHK (7.10MM 0 MAX) (SINGLE ORIFICE) (TALL & NARROW) (04.226) (AC–DELCO #8628732)	5–H13,241

4.189 SEAL KIT – WASHER, Transmission Clutch (Low & Reverse)

84–93	Y 4–SPD A/TRANS (MD8) ...	8648987	1	1.82	SEAL KIT, LOW & REV CLU (INCLS INR, OTR & INTER SEALS) (04.166) (AC–DELCO #8648987)	5–H9,696
94–96	Y 4–SPD A/TRANS (M30) ...	8648987	1	1.82	SEAL KIT, LOW & REV CLU (INCLS INR, OTR & INTER SEALS) (04.166) (AC–DELCO #8648987)	5–H9,696
84–93	Y 4–SPD A/TRANS (MD8) ...	8642067	1	6.60	WASHER, REV INPUT CLU HSG THR (TO STATOR SHF) (1.87–1.97MM) (04.158) (AC–DELCO #8642067)	5–H9,616
84–93	Y 4–SPD A/TRANS (MD8) ...	8642068	1	6.60	WASHER, REV INPUT CLU HSG THR (TO STATOR SHF) (2.04–2.14MM) (04.158) (AC–DELCO #8642068)	5–H9,616
84–93	Y 4–SPD A/TRANS (MD8) ...	8642069	1	6.60	WASHER, REV INPUT CLU HSG THR (TO STATOR SHF) (2.21–2.31MM) (04.158) (AC–DELCO #8642069)	5–H9,616

© 2000 GENERAL MOTORS SERVICE PARTS OPERATIONS–CHEVROLET–14Y

4.189 SEAL KIT – WASHER, Transmission Clutch (Low & Reverse) (Con't)

84–93	Y 4–SPD A/TRANS (MD8) ...	8642070	1	6.60	WASHER, REV INPUT CLU HSG THR (TO STATOR SHF) (2.38–2.48MM) (04.158) (AC–DELCO #8642070)	5–H9,616
84–93	Y 4–SPD A/TRANS (MD8) ...	8642071	1	6.60	WASHER, REV INPUT CLU HSG THR (TO STATOR SHF) (2.55–2.65MM) (04.158) (AC–DELCO #8642071)	5–H9,616
84–93	Y 4–SPD A/TRANS (MD8) ...	8642072	1	6.60	WASHER, REV INPUT CLU HSG THR (TO STATOR SHF) (2.72–2.82MM) (04.158) (AC–DELCO #8642072)	5–H9,616
84–93	Y 4–SPD A/TRANS (MD8) ...	8642073	1	6.60	WASHER, REV INPUT CLU HSG THR (TO STATOR SHF) (2.89–2.99MM) (04.158) (AC–DELCO #8642073)	5–H9,616
92–93	Y 4–SPD A/TRANS (MD8) ...	8642074	1	6.60	WASHER, REV INPUT CLU HSG THR (TO STATOR SHF) (3.06–3.16MM) (04.158) (AC–DELCO #8642074)	5–H9,616
94–96	Y 4–SPD A/TRANS (M30) ...	8642067	1	6.60	WASHER, REV INPUT CLU HSG THR (TO STATOR SHF) (1.87–1.97MM) (04.158) (AC–DELCO #8642067)	5–H9,616
94–96	Y 4–SPD A/TRANS (M30) ...	8642068	1	6.60	WASHER, REV INPUT CLU HSG THR (TO STATOR SHF) (2.04–2.14MM) (04.158) (AC–DELCO #8642068)	5–H9,616
94–96	Y 4–SPD A/TRANS (M30) ...	8642069	1	6.60	WASHER, REV INPUT CLU HSG THR (TO STATOR SHF) (2.21–2.31MM) (04.158) (AC–DELCO #8642069)	5–H9,616
94–96	Y 4–SPD A/TRANS (M30) ...	8642070	1	6.60	WASHER, REV INPUT CLU HSG THR (TO STATOR SHF) (2.38–2.48MM) (04.158) (AC–DELCO #8642070)	5–H9,616
94–96	Y 4–SPD A/TRANS (M30) ...	8642071	1	6.60	WASHER, REV INPUT CLU HSG THR (TO STATOR SHF) (2.55–2.65MM) (04.158) (AC–DELCO #8642071)	5–H9,616
94–96	Y 4–SPD A/TRANS (M30) ...	8642072	1	6.60	WASHER, REV INPUT CLU HSG THR (TO STATOR SHF) (2.72–2.82MM) (04.158) (AC–DELCO #8642072)	5–H9,616
94–96	Y 4–SPD A/TRANS (M30) ...	8642073	1	6.60	WASHER, REV INPUT CLU HSG THR (TO STATOR SHF) (2.89–2.99MM) (04.158) (AC–DELCO #8642073)	5–H9,616
94–96	Y 4–SPD A/TRANS (M30) ...	8642074	1	6.60	WASHER, REV INPUT CLU HSG THR (TO STATOR SHF) (3.06–3.16MM) (04.158) (AC–DELCO #8642074)	5–H9,616

4.195 DEFLECTOR – MAGNET – PAN KIT, Transmission Oil Pan

87–88	Y (MD8)	8654702	1	DISCON	DEFLECTOR, TRANS FILTER OIL	
84–93	Y 4–SPD A/TRANS (MD8) ...	8665830	1	4.07	MAGNET, A/TRNS FLUID PAN (04.105) (AC–DELCO #8665830)	5–H5,93
94–96	Y 4–SPD A/TRANS (M30) ...	8665830	1	4.07	MAGNET, A/TRNS FLUID PAN (04.105) (AC–DELCO #8665830)	5–H5,93

© 2000 GENERAL MOTORS SERVICE PARTS OPERATIONS–CHEVROLET–14Y

4.195 DEFLECTOR – MAGNET – PAN KIT, Transmission Oil Pan (Con't)

84–93	Y 4–SPD A/TRANS (MD8) ...	8663948	1	29.53	PAN KIT, A/TRNS FLUID (SHALLOW W/PAN, GSKT & MAGNET) (AC–DELCO #8663948)	5–H5,73
94–96	Y 4–SPD A/TRANS (M30) ...	8663948	1	29.53	PAN KIT, A/TRNS FLUID (SHALLOW W/PAN, GSKT & MAGNET) (AC–DELCO #8663948)	5–H5,73

4.196 BOLT – GASKET – SCREW, Transmission Oil Pan

92–93	Y 5.7P (LT1), 4–SPD A/TRANS (MD8)	8657000	14	*.90	BOLT, A/TRNS FLUID PAN (M8X1.25X19, 16)	5–K2,76
94–96	Y 4–SPD A/TRANS (M30) ...	8657000	14	*.90	BOLT, A/TRNS FLUID PAN (M8X1.25X19, 16)	5–K2,76
84–93	Y 4–SPD A/TRANS (MD8) ...	8654799	1	6.60	GASKET, A/TRNS FLUID PAN (AC–DELCO #8654799)	5–H5,72
94–96	Y 4–SPD A/TRANS (M30) ...	8654799	1	6.60	GASKET, A/TRNS FLUID PAN (AC–DELCO #8654799)	5–H5,72
84–87	Y (MD8)	15614709	16	1.82	SCREW, OIL PAN (01.270) (AC–DELCO #15614709)	

4.197 BOLT – CLIP – COVER – FILTER KIT, Transmission Oil Suction Tube

94–96	Y 4–SPD A/TRANS (M30) ...	8680764	1	*1.82	BOLT, FLUID PASG CVR (M6X1X17.7) (04.265) (AC–DELCO #8680764)	5–K2,77
84–87	Y (MD8)	8663232	1	2.76	CLIP, FLTR RET (AC–DELCO #8663232)	5–H5,67
94–96	Y 4–SPD A/TRANS (M30) ...	8682792	1	7.60	COVER, FLUID PASG (04.265) (AC–DELCO #8682792)	5–K2,53
84–87	Y (MD8)	8642055	1	DISCON	COVER, OIL PASS	
84–93	Y 4–SPD A/TRANS (MD8) ...	8657926	1	24.92	FILTER KIT, A/TRNS FLUID (W/SEAL & GSKT) (AC–DELCO #8657926)	5–H5,71
94–96	Y 4–SPD A/TRANS (M30) ...	24200796	1	24.92	FILTER KIT, A/TRNS FLUID (USED W/SHALLOW PAN) (AC–DELCO #24200796)	5–K2,3

4.205 SEAL, Transmission Vacuum

84–90	Y	10054241	1	*1.82	SEAL, VAC MOD (O RING) (04.338) (AC–DELCO #10054241)	

4.210 ROTOR, Transmission Oil Pump & Governor

87–93	Y 4–SPD A/TRANS (MD8) ...	8649951	1	54.93	ROTOR, A/TRNS FLUID PUMP (17.955MM) (W/GUIDE, VANES & SEALS) (04.224) (AC–DELCO #8649951)	5–J2,214
87–90	Y (MD8)	8649952	1	54.93	ROTOR, A/TRNS FLUID PUMP (W/GDE, VANES & SEALS) (17.968MM) (04.224) (AC–DELCO #8649952)	5–J2,214
87–93	Y 4–SPD A/TRANS (MD8) ...	8649952	1	54.93	ROTOR, A/TRNS FLUID PUMP (17.968MM) (W/GDE, VANES & SEALS) (04.224) (AC–DELCO #8649952)	5–J2,214
87–90	Y (MD8)	8649953	1	54.93	ROTOR, A/TRNS FLUID PUMP (W/GDE, VANES & SEALS) (17.981MM) (04.224) (AC–DELCO #8649953)	5–J2,214

© 2000 GENERAL MOTORS SERVICE PARTS OPERATIONS–CHEVROLET–14Y

4.210 ROTOR, Transmission Oil Pump & Governor (Con't)

87-93	Y 4-SPD A/TRANS (MD8) ...	8649953	1	54.93	ROTOR, A/TRNS FLUID PUMP (17.981MM) (W/GDE, VANES & SEALS) (04.224) (AC-DELCO #8649953)	5-J2,214
87-93	Y 4-SPD A/TRANS (MD8) ...	8649954	1	54.93	ROTOR, A/TRNS FLUID PUMP (17.994MM) (W/GDE, VANES & SEALS) (04.224) (AC-DELCO #8649954)	5-J2,214
87-93	Y 4-SPD A/TRANS (MD8) ...	8649955	1	54.93	ROTOR, A/TRNS FLUID PUMP (18.007MM) (W/GDE, VANES & SEALS) (04.224) (AC-DELCO #8649955)	5-J2,214
94-96	Y 4-SPD A/TRANS (M30) ...	8649951	1	54.93	ROTOR, A/TRNS FLUID PUMP (17.955MM) (W/GUIDE, VANES & SEALS) (04.224) (AC-DELCO #8649951)	5-J2,214
94-96	Y 4-SPD A/TRANS (M30) ...	8649952	1	54.93	ROTOR, A/TRNS FLUID PUMP (17.968MM) (W/GDE, VANES & SEALS) (04.224) (AC-DELCO #8649952)	5-J2,214
94-96	Y 4-SPD A/TRANS (M30) ...	8649953	1	54.93	ROTOR, A/TRNS FLUID PUMP (17.981MM) (W/GDE, VANES & SEALS) (04.224) (AC-DELCO #8649953)	5-J2,214
94-96	Y 4-SPD A/TRANS (M30) ...	8649954	1	54.93	ROTOR, A/TRNS FLUID PUMP (17.994MM) (W/GDE, VANES & SEALS) (04.224) (AC-DELCO #8649954)	5-J2,214
94-96	Y 4-SPD A/TRANS (M30) ...	8649955	1	54.93	ROTOR, A/TRNS FLUID PUMP (18.007MM) (W/GDE, VANES & SEALS) (04.224) (AC-DELCO #8649955)	5-J2,214

4.216 BOLT - RETAINER, Transmission Auxiliary Valve Body Cover

92-93	Y 4-SPD A/TRANS (MD8) ...	15566853	3	.42	BOLT, AUX VLV BODY CVR (M6X1X24) (02.559)	
89-93	Y 4-SPD A/TRANS (MD8) ...	8667679	1	*1.82	RETAINER, AUX C/VLV BODY PIPE (FLAT) (04.265) (AC-DELCO #8667679)	5-I9,97
89-93	Y 4-SPD A/TRANS (MD8) ...	8673044	1	*1.82	RETAINER, AUX C/VLV BODY PIPE (04.265) (AC-DELCO #8673044)	5-I9,97

4.224 BODY - BODY KIT - COVER - ORIFICE - PLUG - PUMP - ROTOR - ROTOR KIT - SCREEN - SEAL - SLIDE, Transmission Oil Pump

95-96	Y 4-SPD A/TRANS (M30) ...	24204797	1	405.03	BODY KIT, A/TRNS FLUID PUMP (AC-DELCO #24204797)	5-K20,200
85-93	Y 4-SPD A/TRANS (MD8) ...	8649964	1	575.00	BODY, A/TRNS FLUID PUMP (10 VANE) (INCLS BODY, GUIDE, RING, RET, ROTOR, PIN, SEAL KIT, SLIDE, SPR&VANE) (AC-DELCO #8649964)	5-H13,203
94	Y 4-SPD A/TRANS (M30) ...	8649964	1	575.00	BODY, A/TRNS FLUID PUMP (10 VANE) (INCLS BODY, GUIDE, RING, RET, ROTOR, PIN, SEAL KIT, SLIDE, SPR&VANE) (AC-DELCO #8649964)	5-H13,203

© 2000 GENERAL MOTORS SERVICE PARTS OPERATIONS-CHEVROLET-14Y

4.224 BODY – BODY KIT – COVER – ORIFICE – PLUG – PUMP – ROTOR – ROTOR KIT – SCREEN – SEAL – SLIDE, Transmission Oil Pump (Con't)

90	Y 4–SPD A/TRANS (MD8) ...	24200303	1	543.43	COVER, A/TRNS FLUID PUMP (COMPL) (WHEN USED ON VEH FROM 1982–86, 8667093 MUST BE USED T/W 24200303) (AC–DELCO #24200303)	5–I2,217
91	Y 4–SPD A/TRANS (MD8), (2ND DES)	8680175	1	405.03	COVER, A/TRNS FLUID PUMP (COMPL (USED ON TRANS W/ID CODE 1YHM) (AC–DELCO #8680175)	5–J2,217
91	Y 4–SPD A/TRANS (MD8), (1ST DES)	24200303	1	543.43	COVER, A/TRNS FLUID PUMP (COMPL (USED ON TRANS W/ID CODE 1YDM) (WHEN USED ON VEH FROM 1982–86, 8667093 MUST BE USED T/W 24200303) (AC–DELCO #24200303)	5–I2,217
92	Y 4–SPD A/TRANS (MD8) ...	8680175	1	405.03	COVER, A/TRNS FLUID PUMP (COMPL) (AC–DELCO #8680175)	5–J2,217
93	Y 4–SPD A/TRANS (MD8) ...	24200310	1	543.43	COVER, A/TRNS FLUID PUMP (COMPL) (WHEN USED ON VEH FROM 1982–86, 8667093 MUST BE USED T/W 24200310) (AC–DELCO #24200310)	5–J2,217
94	Y 4–SPD A/TRANS (M30) ...	24201277	1	543.43	COVER, A/TRNS FLUID PUMP (AC–DELCO #24201277)	5–J19,215
95–96	Y 4–SPD A/TRANS (M30) ...	24213019	1	392.84	COVER, A/TRNS FLUID PUMP (REMAN) (AC–DELCO #24213019)	5–K20,215
85–86	Y (MD8)	8667083	1	543.43	COVER, PUMP (COMPL) (AC–DELCO #8667083)	5–H13,217
87	Y (MD8) (2ND DES)	8667010	1	543.43	COVER, PUMP (COMPL) (USE ON TRAN BUILT ON OR AFTER JULIAN DATE 87040) (AC–DELCO #8667010)	5–I2,217
88–89	Y (MD8)	8667010	1	543.43	COVER, PUMP (COMPL) (AC–DELCO #8667010)	5–I2,217
89–93	Y 4–SPD A/TRANS (MD8) ...	24203787	1	1.82	ORIFICE, A/TRNS FLUID PUMP AIR BL (AC–DELCO #24203787) ..	5–J2,237
94–96	Y 4–SPD A/TRANS (M30) ...	24203787	1	1.82	ORIFICE, A/TRNS FLUID PUMP AIR BL (AC–DELCO #24203787) ..	5–J2,237
87–93	Y 4–SPD A/TRANS (MD8) ...	8663707	2	1.82	ORIFICE, LUB FLUID (4.3MM DIA) (AC–DELCO #8663707)	5–H24,698
94–96	Y 4–SPD A/TRANS (M30) ...	8663707	2	1.82	ORIFICE, LUB FLUID (4.3MM DIA) (AC–DELCO #8663707)	5–H24,698
84–93	Y 4–SPD A/TRANS (MD8) ...	8634284	1	6.60	ORIFICE, TCC SIG (4.85MM DIA) (AC–DELCO #8634284)	5–H13,240
94–96	Y 4–SPD A/TRANS (M30) ...	8634284	1	6.60	ORIFICE, TCC SIG (4.85MM DIA) (AC–DELCO #8634284)	5–H13,240
92–93	Y 4–SPD A/TRANS (MD8) ...	24203787	1	1.82	ORIFICE, 3–4 CLU BL (AC–DELCO #24203787)	5–J2,237
94–96	Y 4–SPD A/TRANS (M30) ...	24203787	1	1.82	ORIFICE, 3–4 CLU BL (AC–DELCO #24203787)	5–J2,237
84–93	Y 4–SPD A/TRANS (MD8) ...	8623886	8	1.82	PLUG, A/TRNS FLUID PUMP CVR (6.80MM DIA) (AC–DELCO #8623886)	5–H13,238
87–90	Y 4–SPD A/TRANS (MD8) ...	8663707	3	1.82	PLUG, A/TRNS FLUID PUMP CVR (4.3MM DIA) (AC–DELCO #8663707)	5–H24,698

© 2000 GENERAL MOTORS SERVICE PARTS OPERATIONS–CHEVROLET–14Y

4.224 BODY – BODY KIT – COVER – ORIFICE – PLUG – PUMP – ROTOR – ROTOR KIT – SCREEN – SEAL – SLIDE, Transmission Oil Pump (Con't)

94–96	Y 4–SPD A/TRANS (M30) ...	8623886	8	1.82	PLUG, A/TRNS FLUID PUMP CVR (6.80MM DIA) (AC–DELCO #8623886)	5–H13,238
84–86	Y (MD8)	8631146	2	1.82	PLUG, INPUT HSG AIR BLEED (4.3MM DIA) (AC–DELCO #8631146)	5–H9,698
84–86	Y (MD8)	8631146	3	1.82	PLUG, OIL PUMP CVR AIR BLEED (4.3MM DIA) (AC–DELCO #8631146)	5–H9,698
84	Y 4–SPD A/TRANS (MD8), (1ST DES)	24210773	1	606.04	PUMP A/TRNS FLUID (REMAN) (COMPL) (USED ON TRANS W/SERIAL NO.ENDING IN A, B, C, H, N) (AC–DELCO #24210773)	5–H5,7
84–86	Y (MD8)	8649951	1	54.93	ROTOR KIT, OIL PUMP SEL (17.955MM) (AC–DELCO #8649951)	
84–86	Y (MD8)	8649952	1	54.93	ROTOR, OIL PUMP SEL (17.968MM) (AC–DELCO #8649952)	
84–86	Y (MD8)	8649953	1	54.93	ROTOR, OIL PUMP SEL (17.981MM) (AC–DELCO #8649953)	
84–86	Y (MD8)	8649954	1	54.93	ROTOR, OIL PUMP SEL (17.994MM) (AC–DELCO #8649954)	
84–86	Y (MD8)	8649955	1	54.93	ROTOR, OIL PUMP SEL (18.007MM) (AC–DELCO #8649955)	
84–93	Y 4–SPD A/TRANS (MD8) ...	8642912	1	2.93	SCREEN, A/TRNS FLUID PUMP CVR (W/SEAL) (AC–DELCO #8642912)	5–H13,235
94–96	Y 4–SPD A/TRANS (M30) ...	8642912	1	2.93	SCREEN, A/TRNS FLUID PUMP CVR (W/SEAL) (AC–DELCO #8642912)	5–H13,235
84–94	Y	12338044	2	*2.77	SCREEN, A/TRNS O/PMP PRESS (04.248) (AC–DELCO #12338044)	
84–93	Y 4–SPD A/TRANS (MD8) ...	8642581	1	*1.82	SEAL, A/TRNS FLUID PUMP CVR SCRN (AC–DELCO #8642581)	5–I2,234
94–96	Y 4–SPD A/TRANS (M30) ...	8642581	1	*1.82	SEAL, A/TRNS FLUID PUMP CVR SCRN (AC–DELCO #8642581)	5–I2,234
84–93	Y 4–SPD A/TRANS (MD8) ...	8634081	1	27.28	SLIDE, A/TRNS FLUID PUMP (17.955 MM) (AC–DELCO #8634081)	5–H13,206
84–93	Y 4–SPD A/TRANS (MD8) ...	8634082	1	27.28	SLIDE, A/TRNS FLUID PUMP (SEL) (17.968 MM) (AC–DELCO #8634082)	5–H13,206
84–93	Y 4–SPD A/TRANS (MD8) ...	8634083	1	27.28	SLIDE, A/TRNS FLUID PUMP (SEL) (17.981 MM) (AC–DELCO #8634083)	5–H13,206
84–93	Y 4–SPD A/TRANS (MD8) ...	8634084	1	27.28	SLIDE, A/TRNS FLUID PUMP (SEL) (17.987 MM) (AC–DELCO #8634084)	5–H13,206
84–93	Y 4–SPD A/TRANS (MD8) ...	8634085	1	27.28	SLIDE, A/TRNS FLUID PUMP (SEL) (18.007 MM) (AC–DELCO #8634085)	5–H13,206
94–96	Y 4–SPD A/TRANS (M30) ...	8634081	1	27.28	SLIDE, A/TRNS FLUID PUMP (17.955 MM) (AC–DELCO #8634081)	5–H13,206

© 2000 GENERAL MOTORS SERVICE PARTS OPERATIONS–CHEVROLET–14Y

4.224 BODY – BODY KIT – COVER – ORIFICE – PLUG – PUMP – ROTOR – ROTOR KIT – SCREEN – SEAL – SLIDE, Transmission Oil Pump (Con't)

94–96	Y 4–SPD A/TRANS (M30) ...	8634082	1	27.28	SLIDE, A/TRNS FLUID PUMP (17.968 MM) (AC–DELCO #8634082)	5–H13,206
94–96	Y 4–SPD A/TRANS (M30) ...	8634083	1	27.28	SLIDE, A/TRNS FLUID PUMP (17.981 MM) (AC–DELCO #8634083)	5–H13,206
94–96	Y 4–SPD A/TRANS (M30) ...	8634084	1	27.28	SLIDE, A/TRNS FLUID PUMP (17.987 MM) (AC–DELCO #8634084)	5–H13,206
94–96	Y 4–SPD A/TRANS (M30) ...	8634085	1	27.28	SLIDE, A/TRNS FLUID PUMP (18.007 MM) (AC–DELCO #8634085)	5–H13,206
96	Y 4–SPD A/TRANS (M30) ...	24205406	1	27.28	SLIDE, A/TRNS FLUID PUMP (17.961 MM) (AC–DELCO #24205406)	5–K20,203
96	Y 4–SPD A/TRANS (M30) ...	24205407	1	27.28	SLIDE, A/TRNS FLUID PUMP (17.974 MM) (AC–DELCO #24205407)	5–K20,203
96	Y 4–SPD A/TRANS (M30) ...	24205408	1	27.28	SLIDE, A/TRNS FLUID PUMP (17.987 MM) (AC–DELCO #24205408)	5–K20,203
96	Y 4–SPD A/TRANS (M30) ...	24205409	1	27.28	SLIDE, A/TRNS FLUID PUMP (18.000 MM) (AC–DELCO #24205409)	5–K20,203

4.226 BOLT – BUSHING – GASKET – GUIDE – PIN – RETAINER – RING – SEAL – SEAL KIT – SPRING – VALVE – VANE – WASHER, Transmission Oil Pump

84–93	Y 4–SPD A/TRANS (MD8) ...	8673596	7	1.92	BOLT, A/TRNS FLUID PUMP (M8X1.25X60) (M8X1.25X60) (W/ SEAL) (AC–DELCO #8673596)	5–H5,5
91–93	Y 4–SPD A/TRANS (MD8) ...	20616587	3	*1.82	BOLT, A/TRNS FLUID PUMP (M6X1X19.0) (11.561) (AC–DELCO #20616587)	5–H13,242
94–96	Y 4–SPD A/TRANS (M30) ...	8673596	7	1.82	BOLT, A/TRNS FLUID PUMP (M8X1.25X60) (M8X1.25X60) (W/ SEAL) (AC–DELCO #8673596)	5–H5,5
85–93	Y 4–SPD A/TRANS (MD8) ...	8647954	1	10.42	BUSHING, INPUT SHF FRT (AC–DELCO #8647954)	5–H5,4
94–96	Y 4–SPD A/TRANS (M30) ...	8647954	1	10.42	BUSHING, INPUT SHF FRT (AC–DELCO #8647954)	5–H5,4
84–93	Y 4–SPD A/TRANS (MD8) ...	8642904	1	8.73	BUSHING, INPUT SHF RR (AC–DELCO #8642904)	5–H5,90
94–96	Y 4–SPD A/TRANS (M30) ...	8642904	1	8.73	BUSHING, INPUT SHF RR (AC–DELCO #8642904)	5–H5,90
94–96	Y 4–SPD A/TRANS (M30) ...	24206030	1	10.42	BUSHING, O/PMP BODY (04.115) (AC–DELCO #24206030)	
84	Y (MD8) (2ND DES)	8647954	1	10.42	BUSHING, STATOR SHF FRT (USE ON TRAN W/SERIAL NO.ENDING IN "T" WILL ALSO HAVE THE LETTER "T" STAMPED ON PAN RAIL FOLLOWING THE I"D" #) (AC–DELCO #8647954)	5–H5,4
84–93	Y 4–SPD A/TRANS (MD8) ...	12337931	1	1.82	GASKET, A/TRNS FLUID PUMP (TO CASE) (AC–DELCO #12337931)	5–H5,9
94–96	Y 4–SPD A/TRANS (M30) ...	12337931	1	1.82	GASKET, A/TRNS FLUID PUMP (AC–DELCO #12337931)	5–H5,9

© 2000 GENERAL MOTORS SERVICE PARTS OPERATIONS–CHEVROLET–14Y

4.226 BOLT – BUSHING – GASKET – GUIDE – PIN – RETAINER – RING – SEAL – SEAL KIT – SPRING – VALVE – VANE – WASHER, Transmission Oil Pump (Con't)

87–93	Y (MD8)	12337830	1	*1.82	GUIDE, A/TRNS FLUID PUMP ROT (10 VANE) (ALSO PART OF ROTOR KITS) (AC–DELCO #12337830)	5–I2,213
94–95	Y 4–SPD A/TRANS (M30) ...	12337830	1	*1.82	GUIDE, A/TRNS FLUID PUMP ROT (10 VANE) (ALSO PART OF ROTOR KITS) (AC–DELCO #12337830)	5–I2,213
96	Y 4–SPD A/TRANS (M30) ...	24205410	1	1.82	GUIDE, A/TRNS FLUID PUMP ROT (13 VANE) (AC–DELCO #24205410)	5–K20,211
84–86	Y (MD8)	8654733	1	3.67	GUIDE, OIL PUMP ROTOR (AC–DELCO #8654733)	5–H13,213
84–93	Y 4–SPD A/TRANS (MD8) ...	8634097	1	2.40	PIN, A/TRNS FLUID PUMP SLIDE PIV (AC–DELCO #8634097) ..	5–H13,208
94–96	Y 4–SPD A/TRANS (M30) ...	8634097	1	2.40	PIN, A/TRNS FLUID PUMP SLIDE PIV (AC–DELCO #8634097) ..	5–H13,208
84–93	Y 4–SPD A/TRANS (MD8) ...	8654491	1	*1.82	RETAINER, FRT HELIX SEAL (AC–DELCO #8654491)	5–H13,94
94–96	Y 4–SPD A/TRANS (M30) ...	8654491	1	*1.82	RETAINER, T/CV FLUID SEAL (AC–DELCO #8654491)	5–H13,94
84–93	Y 4–SPD A/TRANS (MD8) ...	24201144	2	6.60	RING, A/TRNS FLUID PUMP VANE (AC–DELCO #24201144)	5–H13,212
94–96	Y 4–SPD A/TRANS (M30) ...	24201144	2	6.60	RING, A/TRNS FLUID PUMP VANE (AC–DELCO #24201144)	5–H13,212
84–91	Y 4–SPD A/TRANS (MD8) ...	8628055	2	*2.40	RING, REV INPUT CLU HSG FLUID SEAL (AC–DELCO #8628055)	5–H13,233
92–93	Y 4–SPD A/TRANS (MD8) ...	8681292	2	1.82	RING, REV INPUT CLU HSG FLUID SEAL (AC–DELCO #8681292)	5–J2,233
94–96	Y 4–SPD A/TRANS (M30) ...	8681292	2	1.82	RING, REV INPUT CLU HSG FLUID SEAL (AC–DELCO #8681292)	5–J2,233
84–93	Y 4–SPD A/TRANS (MD8) ...	8634906	1	10.42	SEAL KIT, A/TRNS FLUID PUMP SLIDE (INCLS RING, SEALS&SUPT) (AC–DELCO #8634906)	5–J2,1
94–96	Y 4–SPD A/TRANS (M30) ...	8634906	1	10.42	SEAL KIT, A/TRNS FLUID PUMP SLIDE (INCLS RING, SEALS&SUPT) (AC–DELCO #8634906)	5–J2,1
84–90	Y	10054241	1	*1.82	SEAL, A/TRNS FLUID FLTR (O RING) (FLTR TO PUMP) (04.338) (AC–DELCO #10054241)	5–H5,70
89–93	Y 4–SPD A/TRANS (MD8) ...	8657767	1	5.62	SEAL, A/TRNS FLUID FLTR (O RING) (04.197) (AC–DELCO #8657767)	5–I9,70
84–93	Y 4–SPD A/TRANS (MD8) ...	24210605	1	2.40	SEAL, A/TRNS FLUID PUMP (AC–DELCO #24210605)	5–H5,8
94–96	Y 4–SPD A/TRANS (M30) ...	24210605	1	2.40	SEAL, A/TRNS FLUID PUMP (AC–DELCO #24210605)	5–H5,8
84–93	Y 4–SPD A/TRANS (MD8) ...	12337996	7	*1.82	SEAL, A/TRNS FLUID PUMP BOLT (PUMP TO CASE BOLT) (AC–DELCO #12337996)	5–H5,6
94–96	Y 4–SPD A/TRANS (M30) ...	12337996	7	*1.82	SEAL, A/TRNS FLUID PUMP BOLT (PUMP TO CASE BOLT) (AC–DELCO #12337996)	5–H5,6
84–93	Y 4–SPD A/TRANS (MD8) ...	24202535	1	3.12	SEAL, T/CV FLUID (AC–DELCO #24202535)	5–H5,2
94–96	Y 4–SPD A/TRANS (M30) ...	24202535	1	3.12	SEAL, T/CV FLUID (AC–DELCO #24202535)	5–H5,2

© 2000 GENERAL MOTORS SERVICE PARTS OPERATIONS–CHEVROLET–14Y

4.226 BOLT – BUSHING – GASKET – GUIDE – PIN – RETAINER – RING – SEAL – SEAL KIT – SPRING – VALVE – VANE – WASHER, Transmission Oil Pump (Con't)

85–93	Y 4–SPD A/TRANS (MD8) ...	8639562	1	3.67	SPRING, A/TRNS FLUID PUMP SLIDE INR (AC–DELCO #8639562)	5–H13,243
94–96	Y 4–SPD A/TRANS (M30) ...	8639562	1	3.67	SPRING, A/TRNS FLUID PUMP SLIDE INR (AC–DELCO #8639562)	5–H13,243
84–93	Y 4–SPD A/TRANS (MD8) ...	8639563	1	3.67	SPRING, A/TRNS FLUID PUMP SLIDE OTR (AC–DELCO #8639563)	5–H13,209
94–96	Y 4–SPD A/TRANS (M30) ...	8639563	1	3.67	SPRING, A/TRNS FLUID PUMP SLIDE OTR (AC–DELCO #8639563)	5–H13,209
84–93	Y 4–SPD A/TRANS (MD8) ...	8634098	1	1.82	SPRING, A/TRNS FLUID PUMP SLIDE PIV PIN (AC–DELCO #8634098)	5–H13,207
94–96	Y 4–SPD A/TRANS (M30) ...	8634098	1	1.82	SPRING, A/TRNS FLUID PUMP SLIDE PIV PIN (AC–DELCO #8634098)	5–H13,207
92–93	Y 5.7P (LT1), 4–SPD A/TRANS (MD8)	8622757	1	*1.82	VALVE, A/TRNS FLUID/PUMP CVR BALL CHK (3/16 DIA) (STL BALL ONLY) (04.256) (AC–DELCO #8622757)	
94–96	Y 4–SPD A/TRANS (M30) ...	8622757	1	*1.82	VALVE, A/TRNS FLUID/PUMP CVR BALL CHK (3/16 DIA) (STL BALL ONLY) (04.256) (AC–DELCO #8622757)	
84–93	Y 4–SPD A/TRANS (MD8) ...	8631280	AR	*1.67	VANE, A/TRNS FLUID PUMP (AC–DELCO #8631280)	5–H13,215
84–88	Y 4–SPD A/TRANS (MD8) ...	8634904	1	38.80	VANE, A/TRNS FLUID PUMP (W/RING) (AC–DELCO #8634904)	
94–96	Y	8631280	10	*1.67	VANE, A/TRNS FLUID PUMP (AC–DELCO #8631280)	5–H13,215
84–93	Y MD8	12338134	1	*1.82	WASHER, A/TRNS FLUID PUMP (AC–DELCO #12338134)	5–H9,601
94–96	Y 4–SPD A/TRANS (M30) ...	12338134	1	*1.82	WASHER, A/TRNS FLUID PUMP (AC–DELCO #12338134)	5–H9,601
84–86	Y (MD8)	8626281	AR	*1.82	WASHER, PUMP TO CASE BOLTS (AC–DELCO #8626281)	

4.228 ACCUMULATOR – BOLT – COVER – HOUSING – PIN – PISTON – PISTON KIT – RING – SEAL – VALVE, Transmission Servo & Accumulator

94	Y 4–SPD A/TRANS (M30) ...	8665760	1	64.20	ACCUMULATOR, 1–2 (AC–DELCO #8665760)	5–K2,7
95–96	Y 4–SPD A/TRANS (M30) ...	24201956	1	38.00	ACCUMULATOR, 1–2 (AC–DELCO #24201956)	5–K2,7
94–95	Y 4–SPD A/TRANS (M30) ...	2436162	2	*.34	BOLT, 1–2 ACCUM CVR (5/16X5/8X1/16, ZP) (HARDENED) (08.929)	
94–96	Y 4–SPD A/TRANS (M30) ...	24206338	1	6.60	COVER, FWD CLU ACCUM (W/SLOTS) (AC–DELCO #24206338)	5–K9,363
84–93	Y 4–SPD A/TRANS (MD8) ...	8683543	1	24.87	COVER, 1–2 ACCUM (AC–DELCO #8683543)	5–H5,62
94–96	Y 4–SPD A/TRANS (M30) ...	8686084	1	22.58	COVER, 1–2 ACCUM (AC–DELCO #8686084)	5–K2,57

© 2000 GENERAL MOTORS SERVICE PARTS OPERATIONS–CHEVROLET–14Y

4.228 ACCUMULATOR – BOLT – COVER – HOUSING – PIN – PISTON – PISTON KIT – RING – SEAL – VALVE, Transmission Servo & Accumulator (Con't)

84–93	Y 4–SPD A/TRANS (MD8) ...	8642979	1	17.27	COVER, 2–4 SERVO (W/SEAL) (INCLS RING) (04.241) (AC–DELCO #8642979)	5–H5,15
94–96	Y 4–SPD A/TRANS (M30) ...	8642979	1	17.27	COVER, 2–4 SERVO (W/SEAL) (INCLS RING) (04.241) (AC–DELCO #8642979)	5–H5,15
84–93	Y 4–SPD A/TRANS (MD8) ...	8673039	1	10.42	HOUSING, 2–4 BAND SERVO 2ND APPL (ALSO USE SEAL 08642112) (AC–DELCO #8673039)	5–H5,22
94–96	Y 4–SPD A/TRANS (M30) ...	8673039	1	10.42	HOUSING, 2–4 BAND SERVO 2ND APPL (AC–DELCO #8673039)	5–H5,22
93	Y 4–SPD A/TRANS (MD8) ...	8628273	1	2.40	PIN, 1–2 ACCUM PSTN (04.226) (AC–DELCO #8628273)	5–H5,77
94–96	Y 4–SPD A/TRANS (M30) ...	8684426	1	1.82	PIN, 1–2 ACCUM PSTN (04.226) (AC–DELCO #8684426)	5–K2,57
84–93	Y 4–SPD A/TRANS (MD8) ...	8628273	1	2.40	PIN, 3–4 ACCUM PSTN (04.226) (AC–DELCO #3628273)	5–H5,77
94–96	Y 4–SPD A/TRANS (M30) ...	8628273	1	2.40	PIN, 3–4 ACCUM PSTN (04.226) (AC–DELCO #8628273)	5–H5,77
84–93	Y 4–SPD A/TRANS (MD8) ...	24204495	1	13.53	PISTON KIT, 1–2 & 3–4 ACCUM (W/SEALS) (AC–DELCO #24204495)	5–I9,5
94–96	Y 4–SPD A/TRANS (M30) ...	24204496	1	13.53	PISTON KIT, 1–2 & 3–4 ACCUM (W/RINGS & ALUM PISTONS) (AC–DELCO #24204496)	5–K2,6
95–96	Y 4–SPD A/TRANS (M30) ...	24214343	1	19.58	PISTON KIT, 1–2 ACCUM (W/RING & PLASTIC PISTON) (AC–DELCO #24214343)	
88–93	Y 4–SPD A/TRANS (MD8) ...	8642079	1	36.40	PISTON KIT, 2–4 BAND SERVO 2ND APPLY (YELLOW) (.74) (AC–DELCO #8642079)	5–H5,25
94–96	Y 4–SPD A/TRANS (M30) ...	8642079	1	36.40	PISTON KIT, 2–4 BAND SERVO 2ND APPLY (YELLOW) (.74) (AC–DELCO #8642079)	5–H5,25
92–93	Y 4–SPD A/TRANS (MD8) ...	8663608	1	8.73	PISTON, FWD CLU ACCUM (AC–DELCO #8663608)	5–H5,52
94–96	Y 4–SPD A/TRANS (M30) ...	24200126	1	7.83	PISTON, FWD CLU ACCUM (AC–DELCO #24200126)	5–K9,354
84–93	Y 4–SPD A/TRANS (MD8) ...	8642478	1	27.28	PISTON, 2–4 BAND SERVO 4TH APPLY (W/RING) (AC–DELCO #8642478)	5–H5,16
94–96	Y 4–SPD A/TRANS (M30) ...	8642478	1	27.28	PISTON, 2–4 BAND SERVO 4TH APPLY (W/RING) (AC–DELCO #8642478)	5–H5,16
84–86	Y (MD8)	8642079	1	36.40	PISTON, 2ND APPLY (AC–DELCO #8642079)	5–H5,25
87	Y (MD8) (EXC NM8 EXPORT)	8642079	1	36.40	PISTON, 2ND APPLY (AC–DELCO #8642079)	5–H5,25
84–93	Y 4–SPD A/TRANS (MD8) ...	8663608	1	8.73	PISTON, 3–4 ACCUM (AC–DELCO #8663608)	5–H5,52
94–96	Y 4–SPD A/TRANS (M30) ...	8663608	1	8.73	PISTON, 3–4 ACCUM (AC–DELCO #8663608)	5–H5,52
84–93	Y 4–SPD A/TRANS (MD8) ...	8642124	1	7.83	RING, 2–4 BAND SERVO CVR RET (AC–DELCO #8642124)	5–H5,13
94–96	Y 4–SPD A/TRANS (M30) ...	8642124	1	7.83	RING, 2–4 BAND SERVO CVR RET (AC–DELCO #8642124)	5–H5,13
84–86	Y (MD8)	8630120	2	*1.82	SEAL, 2ND APPLY PSTN PIN (AC–DELCO #8630120)	5–H5,30

© 2000 GENERAL MOTORS SERVICE PARTS OPERATIONS–CHEVROLET–14Y

4.228 ACCUMULATOR – BOLT – COVER – HOUSING – PIN – PISTON – PISTON KIT – RING – SEAL – VALVE, Transmission Servo & Accumulator (Con't)

87	Y (MD8) (1ST DES)	8630120	2	*1.82	SEAL, 2ND APPLY PSTN PIN (USED ON TRANS BUILT BEFORE JULIAN DATE 87047) (NO COMPARABLE 2ND DES–SEAL NOT REQ'D) (AC–DELCO #8630120)	5–H5,30
84–93	Y 4–SPD A/TRANS (MD8) ...	8634400	1	4.60	VALVE, 3RD ACCUM BALL CHK (AC–DELCO #8634400)	5–H5,60
94–96	Y 4–SPD A/TRANS (M30) ...	8634400	1	4.60	VALVE, 3RD ACCUM BALL CHK (AC–DELCO #8634400)	5–H5,60
	*EXPORT**********EXPORT**********EXPORT**********EXPORT**********EXPORT*					
87	Y (MD8) NM8 (EXPORT)	8642614	1	41.53	PISTON, 2ND APPLY (AC–DELCO #8642614)	5–H20,25

4.229 PIN – RING – RING KIT – SEAL, Transmission Servo & Accumulator

84–93	Y 4–SPD A/TRANS (MD8) ...	8654581	1	1.82	PIN, 2–4 BAND ANC (AC–DELCO #8654581)	5–H5,46
94–96	Y 4–SPD A/TRANS (M30) ...	8654581	1	1.82	PIN, 2–4 BAND ANC (AC–DELCO #8654581)	5–H5,46
84–93	Y 4–SPD A/TRANS (MD8) ...	8642925	1	2.40	RING KIT, 2–4 BAND SERVO 2ND APPL PSTN FLUID SEAL (.74 RATIO) (INCLS 2 RINGS) (AC–DELCO #8642925)	5–H5,23
94–96	Y 4–SPD A/TRANS (M30) ...	8642924	1	2.40	RING KIT, 2–4 BAND SERVO 2ND APPL PSTN FLUID SEAL (.55 RATIO) (INCLS INR & OTR RING) (AC–DELCO #8642924)	5–K2,5
94–96	Y 4–SPD A/TRANS (M30) ...	8642925	1	2.40	RING KIT, 2–4 BAND SERVO 2ND APPL PSTN FLUID SEAL (.74 RATIO) (INCLS 2 RINGS) (AC–DELCO #8642925)	5–H5,23
92–93	Y 4–SPD A/TRANS (MD8) ...	24206509	1	1.24	RING, FWD CLU ACCUM PSTN FLUID SEAL (AC–DELCO #24206509)	5–H5,53
94–96	Y 4–SPD A/TRANS (M30) ...	8680653	1	3.12	RING, FWD CLU ACCUM PSTN FLUID SEAL (AC–DELCO #8680653)	5–K9,353
87–93	Y 4–SPD A/TRANS (MD8) ...	24206509	2	1.24	RING, 1–2 ACCUM PSTN FLUID SEAL (AC–DELCO #24206509) .	5–H5,53
94–96	Y 4–SPD A/TRANS (M30) ...	24206509	1	1.24	RING, 1–2 ACCUM PSTN FLUID SEAL (AC–DELCO #24206509) .	5–H5,53
84–93	Y 4–SPD A/TRANS (MD8) ...	8642480	1	2.77	RING, 2–4 BAND SERVO PSTN FLUID SEAL (4TH APPLY) (AC–DELCO #8642480)	5–H5,17
94–96	Y 4–SPD A/TRANS (M30) ...	8642480	1	2.77	RING, 2–4 BAND SERVO PSTN FLUID SEAL (AC–DELCO #8642480)	5–H5,17
87–93	Y 4–SPD A/TRANS (MD8) ...	24206509	2	1.24	RING, 3–4 ACCUM PSTN FLUID SEAL (AC–DELCO #24206509) .	5–H5,53
94–96	Y 4–SPD A/TRANS (M30) ...	24206509	1	1.24	RING, 3–4 ACCUM PSTN FLUID SEAL (AC–DELCO #24206509) .	5–H5,53
84–93	Y 4–SPD A/TRANS (MD8) ...	8647351	1	2.40	SEAL, 2–4 BAND SERVO CVR (O RING) (AC–DELCO #8647351)	5–H5,14
94–96	Y 4–SPD A/TRANS (M30) ...	8647351	1	2.40	SEAL, 2–4 BAND SERVO CVR (O RING) (AC–DELCO #8647351)	5–H5,14

© 2000 GENERAL MOTORS SERVICE PARTS OPERATIONS–CHEVROLET–14Y

4.229 PIN – RING – RING KIT – SEAL, Transmission Servo & Accumulator (Con't)

84–93	Y 4–SPD A/TRANS (MD8) ...	8642112	1	2.40	SEAL, 2–4 BAND SERVO 2ND APPL PSTN HSG (O RING) (AC–DELCO #8642112)	5–H5,21
94–96	Y 4–SPD A/TRANS (M30) ...	8642112	1	2.40	SEAL, 2–4 BAND SERVO 2ND APPL PSTN HSG (O RING) (AC–DELCO #8642112)	5–H5,21

4.233 PIN – RETAINER – SPRING – WASHER, Transmission Servo & Accumulator

84–93	Y 4–SPD A/TRANS (MD8) ...	8628400	1	*1.82	PIN, 1–2 ACCUM VLV BUSH (25MM LG 2.7MM DIA) (COILED SPG) (04.265) (AC–DELCO #8628400)	
84–93	Y 4–SPD A/TRANS (MD8) ...	8642416	1	1.82	RETAINER, 2–4 BAND SERVO CUSH SPR (AC–DELCO #8642416)	5–H5,27
94–96	Y 4–SPD A/TRANS (M30) ...	8642416	1	1.82	RETAINER, 2–4 BAND SERVO CUSH SPR (AC–DELCO #8642416)	5–H5,27
87–89	Y 4–SPD A/TRANS (MD8) ...	8667045	1	4.60	SPRING, ACCUM PSTN (ORANGE) (AC–DELCO #8667045)	5–I5,370
90–93	Y 4–SPD A/TRANS (MD8) ...	8667046	1	4.07	SPRING, ACCUM PSTN (PINK) (04.265) (AC–DELCO #8667046)	5–J7,370
94–96	Y 4–SPD A/TRANS (M30) ...	24208765	1	4.60	SPRING, FWD CLU ACCUM PSTN (AC–DELCO #24208765)	5–K9,356
84–85	Y (MD8)	8634703	2	7.60	SPRING, 1–2 & 3–4 ACCUM (AC–DELCO #8634703)	5–H5,54
86	Y (MD8) 3.07R	8634703	2	7.60	SPRING, 1–2 & 3–4 ACCUM (AC–DELCO #8634703)	5–H5,54
85	Y (MD8)	8654183	1	5.84	SPRING, 1–2 ACCUM (04.265) (AC–DELCO #8654183)	
86	Y (MD8) 2.59R	8654183	1	5.84	SPRING, 1–2 ACCUM (04.265) (AC–DELCO #8654183)	
87–88	Y 4–SPD A/TRANS (MD8) ...	8654554	1	4.07	SPRING, 1–2 ACCUM PSTN (OTR) (AC–DELCO #8354554)	5–H20,54
89–90	Y (MD8)	8663384	2	4.07	SPRING, 1–2 ACCUM PSTN (AC–DELCO #8663384)	5–H20,54
92	Y 4–SPD A/TRANS (MD8), 3.07R (G44)	8634163	1	3.67	SPRING, 1–2 ACCUM PSTN (VIOLET) (OTR) (AC–DELCO #8634163)	
94–96	Y 4–SPD A/TRANS (M30) ...	8654554	1	4.07	SPRING, 1–2 ACCUM PSTN (DK GREEN) (OTR) (AC–DELCO #8654554)	5–H20,54
94	Y 4–SPD A/TRANS (M30) ...	8684570	1	6.60	SPRING, 1–2 ACCUM PSTN (INNER) (AC–DELCO #8684570)	5–K2,54
95–96	Y 4–SPD A/TRANS (M30) ...	8685655	1	4.07	SPRING, 1–2 ACCUM PSTN (ORANGE) (INNER) (AC–DELCO #8685655)	5–K2,54
84–93	Y 4–SPD A/TRANS (MD8) ...	8642539	1	3.12	SPRING, 2–4 BAND SERVO PSTN CUSH (PINK) (AC–DELCO #8642539)	5–H5,26
94–96	Y 4–SPD A/TRANS (M30) ...	8642539	1	3.12	SPRING, 2–4 BAND SERVO PSTN CUSH (PINK) (AC–DELCO #8642539)	5–H5,26
90–93	Y 4–SPD A/TRANS (MD8) ...	8681195	1	5.83	SPRING, 2–4 BAND SERVO PSTN CUSH INR (AC–DELCO #8681195)	5–H20,26
94–96	Y 4–SPD A/TRANS (M30) ...	8681195	1	5.83	SPRING, 2–4 BAND SERVO PSTN CUSH INR (AC–DELCO #8681195)	5–H20,26

© 2000 GENERAL MOTORS SERVICE PARTS OPERATIONS–CHEVROLET–14Y

4.233 PIN – RETAINER – SPRING – WASHER, Transmission Servo & Accumulator (Con't)

84–93	Y 4–SPD A/TRANS (MD8) ...	8642273	1	1.82	SPRING, 2–4 BAND SERVO RTN (ORANGE) (AC–DELCO #8642273)	5–H5,31
94–96	Y 4–SPD A/TRANS (M30) ...	8642273	1	1.82	SPRING, 2–4 BAND SERVO RTN (ORANGE) (AC–DELCO #8642273)	5–H5,31
90–93	Y 4–SPD A/TRANS (MD8) ...	8673387	2	4.60	SPRING, 3–4 ACCUM PSTN (PSTN) (REPLACES WHITE, LT GRN) (ORANGE) (AC–DELCO #8673387)	5–H20,54
94–96	Y 4–SPD A/TRANS (M30) ...	8639074	1	7.60	SPRING, 3–4 ACCUM PSTN (LT BLUE) (AC–DELCO #8639074)	5–K2,46
84–93	Y	8642107	1	1.82	WASHER, 2–4 BAND SERVO PIN (3/8) (AC–DELCO #8642107) .	5–H5,19
94–96	Y 4–SPD A/TRANS (M30) ...	8642107	1	1.82	WASHER, 2–4 BAND SERVO PIN (3/8) (AC–DELCO #8642107) .	5–H5,19
	*EXPORT****************EXPORT****************EXPORT****************EXPORT****************EXPORT*					
87	Y (MD8) VB4, VE1, VT7 (EXPORT)	8634703	2	7.60	SPRING, 1–2 ACCUM (AC–DELCO #8634703)	5–H5,54
87	Y (MD8) NM8 (EXPORT)	8663384	2	4.07	SPRING, 1–2 ACCUM PSTN (AC–DELCO #8663384)	5–H20,54

4.241 BOLT, Transmission Rear Servo Accumulator

94–96	Y 4–SPD A/TRANS (M30) ...	8680764	3	*1.82	BOLT, FWD CLU ACCUM CVR (M6X1X17.7) (04.265) (AC–DELCO #8680764)	5–K9,364

4.246 PIN – SPRING, Transmission Rear Servo Piston

84–93	Y 4–SPD A/TRANS (MD8) ...	8680499	1	16.13	PIN, 2–4 BAND SERVO PSTN (I.D BY 1 GROOVE IN TAPPERED POINT) (04.228) (AC–DELCO #8680499)	5–H5,29
84–93	Y 4–SPD A/TRANS (MD8) ...	8680500	1	17.27	PIN, 2–4 BAND SERVO PSTN (I.D BY 2 GROOVES IN TAPPERED POINT) (04.228) (AC–DELCO #8680500)	5–H5,29
84–93	Y 4–SPD A/TRANS (MD8) ...	8680501	1	17.27	PIN, 2–4 BAND SERVO PSTN (I.D BY NO GROOVES IN TAPPERED POINT) (04.228) (AC–DELCO #8680501)	5–H5,29
94–96	Y 4–SPD A/TRANS (M30) ...	8680499	1	16.13	PIN, 2–4 BAND SERVO PSTN (I.D BY 1 GROOVE IN TAPPERED POINT) (04.228) (AC–DELCO #8680499)	5–H5,29
94–96	Y 4–SPD A/TRANS (M30) ...	8680500	1	17.27	PIN, 2–4 BAND SERVO PSTN (I.D BY 2 GROOVES IN TAPPERED POINT) (04.228) (AC–DELCO #8680500)	5–H5,29
94–96	Y 4–SPD A/TRANS (M30) ...	8680501	1	17.[illegible]	PIN, 2–4 BAND SERVO PSTN (I.D BY NO GROOVES IN TAPPERED POINT) (04.228) (AC–DELCO #8680501)	5–H5,29
84–93	Y 4–SPD A/TRANS (MD8) ...	8642106	1	1.82	SPRING, 2–4 BAND SERVO PSTN (AC–DELCO #8642106)	5–H5,20
94–96	Y 4–SPD A/TRANS (M30) ...	8642106	1	1.82	SPRING, 2–4 BAND SERVO PSTN (AC–DELCO #8642106)	5–H5,20

© 2000 GENERAL MOTORS SERVICE PARTS OPERATIONS–CHEVROLET–14Y

4.248 RETAINER – SCREEN, Transmission Oil

84–93	Y (MD8)	11503346	1	1.82	RETAINER, A/TRNS FLUID DAM (04.216) (AC–DELCO #11503346)	5–H13,224
84–93	Y 4–SPD A/TRANS (MD8) ...	12336044	2	*2.77	SCREEN, GOV FLUID (GOV FEED) (AC–DELCO #12336044)	5–H5,47

4.251 BAND, Transmission Brake

84–93	Y 4–SPD A/TRANS (MD8) ...	8673175	1	24.87	BAND, 2–4 (04.163) (AC–DELCO #8673175)	5–H9,602
94	Y 4–SPD A/TRANS (M30) ...	8673175	1	24.87	BAND, 2–4 (04.163) (AC–DELCO #8673175)	5–H9,602
95–96	Y 4–SPD A/TRANS (M30) ...	24201131	1	22.58	BAND, 2–4 (AC–DELCO #24201131)	5–K12,602

4.256 BALL – BUSHING – CAP – COVER – GEAR – GOVERNOR – PIN – VALVE, Transmission Governor

84–87	Y (MD8)	8622757	1	*1.82	BALL, OVERRUN CLU (4.76MM) (AC–DELCO #8622757)	
84–88	Y (MD8)	1235259	1	13.53	BUSHING, GOV SLEEVE (REQUIRES PROPER GOVERNOR BORE REPAIR PROCEDURE–REFER TO SERVICE MANUAL) (AC–DELCO #1235259)	
84–93	Y 4–SPD A/TRANS (MD8) ...	6261239	1	1.82	CAP, GOV THR (AC–DELCO #6261239)	5–H5,65
84–93	Y 4–SPD A/TRANS (MD8) ...	8667827	1	8.73	COVER, GOV (AC–DELCO #8667827)	5–H5,46
84–93	Y 4–SPD A/TRANS (MD8) ...	8663995	1	13.53	GEAR, GOV DRV (LT GREEN) (AC–DELCO #8663995)	5–H5,63
92	Y 4–SPD A/TRANS (MD8), 2.73R (GU2)	8680658	1	86.87	GOVERNOR, (AC–DELCO #8680658)	5–I9,45
92–93	Y 4–SPD A/TRANS (MD8), 2.59R (GM1)	8680658	1	86.87	GOVERNOR, (AC–DELCO #8680658)	5–I9,45
84–89	Y 4–SPD A/TRANS (MD8) ...	24202117	1	22.58	GOVERNOR, A/TRANS (REMAN) (AC–DELCO #24202117)	5–H5,45
90–91	Y 4–SPD A/TRANS (MD8) ...	24202122	1	27.29	GOVERNOR, A/TRANS (REMAN) (AC–DELCO #24202122)	5–H20,45
92–93	Y 4–SPD A/TRANS (MD8), 3.07R (G44)	24201874	1	22.58	GOVERNOR, A/TRANS (REMAN) (AC–DELCO #24201874)	5–I9,45
93	Y 4–SPD A/TRANS (MD8), 2.73R (GU2)	24201874	1	22.58	GOVERNOR, A/TRANS (REMAN) (AC–DELCO #24201874)	5–I9,45
84–93	Y 4–SPD A/TRANS (MD8) ...	8663706	2	1.82	PIN, GOV WT (AC–DELCO #8663706)	5–H5,64
87–93	Y 4–SPD A/TRANS (MD8) ...	1244031	1	16.13	VALVE, GOV CONT (TRANS) (AC–DELCO #1244031)	

4.262 RING – RIVET – SPRING – STOP – VALVE, Transmission Control Valve

84–93	Y 4–SPD A/TRANS (MD8) ...	274267	1	1.82	RING, TCC VLV STOP RET (TO PUMP) (08.934) (AC–DELCO #274267)	5–H13,225
94–96	Y 4–SPD A/TRANS (M30) ...	274267	1	1.82	RING, TCC VLV STOP RET (TO PUMP) (08.934) (AC–DELCO #274267)	5–H13,225
84–93	Y 4–SPD A/TRANS (MD8) ...	8642619	1	1.82	RIVET, PRESS RLF BALL VLV SPR (OIL PUMP) (04.216) (AC–DELCO #8642619)	5–H13,230
94–96	Y 4–SPD A/TRANS (M30) ...	8642619	1	1.82	RIVET, PRESS RLF BALL VLV SPR (04.216) (AC–DELCO #8642619)	5–H13,230

© 2000 GENERAL MOTORS SERVICE PARTS OPERATIONS–CHEVROLET–14Y

4.262 RING – RIVET – SPRING – STOP – VALVE, Transmission Control Valve (Con't)

84–89	Y 4–SPD A/TRANS (MD8) ...	8642494	1	4.07	SPRING, PRESS REG VLV (OIL PUMP) (04.216) (AC–DELCO #8642494)	5–H13,219
90–93	Y 4–SPD A/TRANS (MD8) ...	8642751	1	1.82	SPRING, PRESS REG VLV (OIL PUMP) (PINK) (04.216) (AC–DELCO #8642751)	5–J2,219
94–96	Y 4–SPD A/TRANS (M30) ...	8680604	1	.43	SPRING, PRESS REG VLV INR (AC–DELCO #8680604)	5–J19,218
94–96	Y 4–SPD A/TRANS (M30) ...	8680602	1	1.82	SPRING, PRESS REG VLV OTR (04.216) (AC–DELCO #8680602)	5–J19,217
84–93	Y 4–SPD A/TRANS (MD8) ...	8634705	1	1.82	STOP, TCC VLV (04.216) (AC–DELCO #8634705)	5–H13,226
94–96	Y 4–SPD A/TRANS (M30) ...	8634705	1	1.82	STOP, TCC VLV (04.216) (AC–DELCO #8634705)	5–H13,226
84–93	Y 4–SPD A/TRANS (MD8) ...	8684048	1	22.58	VALVE, PRESS REG (OIL PUMP) (04.216) (AC–DELCO #8684048)	5–H13,218
94–96	Y 4–SPD A/TRANS (M30) ...	8684049	1	6.60	VALVE, PRESS REG (04.216) (AC–DELCO #8684049)	5–J19,216

4.265 BALL – BODY – BOLT – CLAMP – CONNECTOR – COVER – FILTER – GASKET – GASKET KIT – PIN – PIPE – PLATE – PLUG – RETAINER – RING – SCREEN – SPRING – SWITCH – VALVE – VALVE KIT, Transmission Main Control Valve Body

84–87	Y (MD8)	8654097	1	1.82	BALL, THROTTLE VLV EXH (AC–DELCO #8654097)	
91–93	Y 4–SPD A/TRANS (MD8) ...	24205606	1	150.37	BODY, AUX C/VLV (REMAN) (AC–DELCO #24205606)	5–H20,377
94–96	Y 4–SPD A/TRANS (M30) ...	8680764	1	*1.82	BOLT, A/TRNS FLUID PRESS MAN VLV POSN SW (M6X1X17.7) (AC–DELCO #8680764)	5–K2,70
87–93	Y 4–SPD A/TRANS (MD8) ...	8667821	1	*1.82	BOLT, AUX C/VLV BODY (M6X1X24) (04.228) (AC–DELCO #8667821)	5–H20,374
88–93	Y 4–SPD A/TRANS (MD8) ...	8667680	1	2.77	BOLT, AUX C/VLV BODY (CVR) (M6X1X7.4) (08.900) (AC–DELCO #8667680)	
94–96	Y 4–SPD A/TRANS (M30) ...	8680764	1	*1.82	BOLT, PRESS CONT SOL VLV CLA (M6X1X17.7) (AC–DELCO #8680764)	5–K2,70
94–95	Y 4–SPD A/TRANS (M30) ...	2436162	2	*.34	BOLT, VLV BODY (5/16X5/8X1/16, ZP) (HARDENED) (08.929)	
94–96	Y 4–SPD A/TRANS (M30) ...	8680741	3	*1.82	BOLT, VLV BODY (M6X1X54.4) (AC–DELCO #8680741)	5–K2,62
94–96	Y 4–SPD A/TRANS (M30) ...	8680742	9	*1.82	BOLT, VLV BODY (M6X1X47.5) (AC–DELCO #8680742)	5–K2,62
87–88	Y (MD8)	8663616	2	1.82	CLAMP, AUX VLV TUBE (TRANS W/AUX VLV BODY) (AC–DELCO #8663616)	5–H20,97
94–96	Y 4–SPD A/TRANS (M30) ...	8682007	1	1.82	CLAMP, PRESS CONT SOL VLV (AC–DELCO #8682007)	5–K9,378
96	Y 4–SPD A/TRANS (M30) ...	12162201	1	.56	CONNECTOR, SOL–B SHFT VLV (NATURAL) (2–WAY F) (W/O LEADS) (02.530)	
96	Y 4–SPD A/TRANS (M30) ...	12146800	1	.84	CONNECTOR, SOL–PRESS C/VLV (2–WAY F, W/O LEADS) (02.530)	
96	Y	12162213	1	.77	CONNECTOR, SW–A/TRNS FLUID PRESS MAN VLV POSN (NATURAL) (5–WAY F) (W/O LEADS)	
87–93	Y 4–SPD A/TRANS (MD8) ...	8673043	1	38.80	COVER, AUX C/VLV BODY (04.215) (AC–DELCO #8673043)	5–I5,371

© 2000 GENERAL MOTORS SERVICE PARTS OPERATIONS–CHEVROLET–14Y

4.265 BALL – BODY – BOLT – CLAMP – CONNECTOR – COVER – FILTER – GASKET – GASKET KIT – PIN – PIPE – PLATE – PLUG – RETAINER – RING – SCREEN – SPRING – SWITCH – VALVE – VALVE KIT, Transmission Main Control Valve Body (Con't)

94–96	Y 4–SPD A/TRANS (M30) ...	8633768	1	*1.82	FILTER, PRESS CONT SOL VLV FLUID (AC–DELCO #8633768)	5–K2,50
87–93	Y 4–SPD A/TRANS (MD8) ...	8689949	1	2.93	GASKET KIT, C/VLV BODY SPCR PLT (AC–DELCO #8689949) ..	5–I9,1
94–96	Y 4–SPD A/TRANS (M30) ...	8685951	1	5.83	GASKET KIT, C/VLV BODY SPCR PLT (AC–DELCO #8685951) ..	5–K2,4
84–86	Y (MD8)	8642993	1	2.93	GASKET KIT, VLV BODY SPCR PLT (AC–DELCO #8642993)	5–H5,88
94–96	Y 4–SPD A/TRANS (M30) ...	8681603	1	1.82	GASKET, C/VLV BODY (TO CASE) (AC–DELCO #8681603)	5–K2,47
94–96	Y 4–SPD A/TRANS (M30) ...	8681606	1	1.82	GASKET, C/VLV BODY SPCR PLT (AC–DELCO #8681606)	5–K2,52
84–93	Y 4–SPD A/TRANS (MD8) ...	8631290	2	*1.82	PIN, LINE BIAS VLV BORE PLUG (25MM LG 9MM DIA) (AC–DELCO #8631290)	5–H16,343
84–93	Y 4–SPD A/TRANS (MD8) ...	8628400	1	*1.82	PIN, LOW OVERRUN VLV SPR (25MM LG 2.7MM DIA) (COILED SPG) (AC–DELCO #8628400)	5–H16,341
94–96	Y 4–SPD A/TRANS (M30) ...	8680765	1	1.82	PIN, REV ABUSE VLV BORE PLUG (AC–DELCO #8680765)	5–K9,360
84–93	Y 4–SPD A/TRANS (MD8) ...	8654196	1	1.82	PIN, T/V BUSH (20MM LONG–2.72MM BOTH ENDS) (20MM LG) (AC–DELCO #8654196)	5–H16,342
84–93	Y 4–SPD A/TRANS (MD8) ...	8631290	2	*1.82	PIN, T/V LIM VLV BORE PLUG (25MM LG 9MM DIA) (AC–DELCO #8631290)	5–H16,343
84–93	Y 4–SPD A/TRANS (MD8) ...	8628400	1	*1.82	PIN, T/V MOD DNSHFT VLV BORE PLUG (25MM LG 2.7MM DIA) (COILED SPG) (AC–DELCO #8628400)	5–H16,341
84–93	Y 4–SPD A/TRANS (MD8) ...	8628400	1	*1.82	PIN, T/V MOD UPSHFT VLV BORE PLUG (25MM LG 2.7MM DIA) (COILED SPG) (AC–DELCO #8628400)	5–H16,341
84–93	Y 4–SPD A/TRANS (MD8) ...	8654196	1	1.82	PIN, T/V PLGR BUSH (20MM LONG–2.72MM BOTH ENDS) (20MM LG) (AC–DELCO #8654196)	5–H16,342
85–87	Y (MD8)	8654284	2	1.82	PIN, VLV BODY COILED SPR (20MM LONG–TAPERED 2.72MM ONE END, 3.1MM OTHER) (AC–DELCO #8654284)	5–H16,342
87–93	Y 4–SPD A/TRANS (MD8) ..	8663605	1	1.82	PIN, VLV BODY SPR RET (AC–DELCO #8663605)	5–I5,363
94–96	Y 4–SPD A/TRANS (M30) ...	8680765	1	1.82	PIN, 1–2 ACCUM VLV BORE PLUG (AC–DELCO #8680765)	5–K9,360
92–93	Y 4–SPD A/TRANS (MD8) ...	8649732	1	1.82	PIN, 1–2 LOW RANGE CONT BUSH (04.275) (AC–DELCO #8649732)	
84–93	Y 4–SPD A/TRANS (MD8) ...	8628400	1	*1.82	PIN, 1–2 T/V BUSH (25MM LG 2.7MM DIA) (COILED SPG) (AC–DELCO #8628400)	5–H16,341
84–93	Y 4–SPD A/TRANS (MD8) ...	8628400	1	*1.82	PIN, 2–3 T/V BUSH (25MM LG 2.7MM DIA) (COILED SPG) (AC–DELCO #8628400)	5–H16,341

© 2000 GENERAL MOTORS SERVICE PARTS OPERATIONS–CHEVROLET–14Y

4.265 BALL – BODY – BOLT – CLAMP – CONNECTOR – COVER – FILTER – GASKET – GASKET KIT – PIN – PIPE – PLATE – PLUG – RETAINER – RING – SCREEN – SPRING – SWITCH – VALVE – VALVE KIT, Transmission Main Control Valve Body (Con't)

84–93	Y 4–SPD A/TRANS (MD8) ...	8628400	1	*1.82	PIN, 3–2 C/VLV SPR (25MM LG 2.7MM DIA) (COILED SPG) (AC–DELCO #8628400)	5–H16,341
84–93	Y 4–SPD A/TRANS (MD8) ...	8628400	1	*1.82	PIN, 3–4 T/V BUSH (25MM LG 2.7MM DIA) (COILED SPG) (AC–DELCO #8628400)	5–H16,341
92–93	Y 4–SPD A/TRANS (MD8) ...	8649732	1	1.82	PIN, 3–4 T/V BUSH (04.275) (AC–DELCO #8649732)	
87–93	Y 4–SPD A/TRANS (MD8) ...	8663615	1	4.07	PIPE, AUX C/VLV BODY (TRANS W/AUX VLV BODY) (AC–DELCO #8663615)	5–H20,96
90–91	Y 4–SPD A/TRANS (MD8) ...	8681196	1	13.83	PLATE, C/VLV BODY SPCR (AC–DELCO #8681196)	5–H20,56
92	Y 4–SPD A/TRANS (MD8), 3.07R (G44), 2.73R (GU2) ..	8680677	1	13.83	PLATE, C/VLV BODY SPCR (YD) (AC–DELCO #8680677)	5–I9,56
92	Y 4–SPD A/TRANS (MD8), 2.59R (GM1)	8680678	1	13.83	PLATE, C/VLV BODY SPCR (YA YC) (AC–DELCO #8680678)	5–I9,56
92	Y 5.7P (LT1), 4–SPD A/TRANS (MD8), 2.73R (GU2)	8681272	1	13.83	PLATE, C/VLV BODY SPCR (YA YC) (AC–DELCO #8681272)	5–I9,56
92–93	Y 5.7P (LT1), 4–SPD A/TRANS (MD8), 2.59R (GM1)	8681272	1	13.83	PLATE, C/VLV BODY SPCR (YA YC) (AC–DELCO #8681272)	5–I9,56
92–93	Y 5.7P (LT1), 4–SPD A/TRANS (MD8), 3.07R (G44)	8681273	1	13.83	PLATE, C/VLV BODY SPCR (YD) (AC–DELCO #8681273)	5–I9,56
93	Y 5.7P (LT1), 4–SPD A/TRANS (MD8), 2.73R (GU2)	8681273	1	13.83	PLATE, C/VLV BODY SPCR (YD) (AC–DELCO #8681273)	5–I9,56
94	Y 4–SPD A/TRANS (M30) ...	24201474	1	13.83	PLATE, C/VLV BODY SPCR (AC–DELCO #24201474)	5–K2,48
95	Y 4–SPD A/TRANS (M30) ...	24201494	1	13.83	PLATE, C/VLV BODY SPCR (AC–DELCO #24201494)	5–K2,48
96	Y 4–SPD A/TRANS (M30) ...	24203953	1	13.83	PLATE, C/VLV BODY SPCR (AC–DELCO #24203953)	5–L2,48
84	Y (MD8)	8654484	1	6.60	PLATE, VLV BODY SPCR (AC–DELCO #8654484)	5–H5,56
85	Y (MD8) (EXC EXPORT)	8654484	1	6.60	PLATE, VLV BODY SPCR (AC–DELCO #8654484)	5–H5,56
86	Y07 (MD8) (EXC EXPORT) ..	8654484	1	6.60	PLATE, VLV BODY SPCR (AC–DELCO #8654484)	5–H5,56
86	Y67 (MD8)	8654484	1	6.60	PLATE, VLV BODY SPCR (AC–DELCO #8654484)	5–H5,56
87	Y (MD8) (EXC NM8) (EXPORT)	8663594	1	13.83	PLATE, VLV BODY SPCR (AC–DELCO #8663594)	5–H20,56
88	Y (MD8)	8667359	1	13.83	PLATE, VLV BODY SPCR (AC–DELCO #8667359)	5–H20,56
89	Y (MD8)	8673160	1	13.83	PLATE, VLV BODY SPCR (AC–DELCO #8673160)	5–H20,56
84–87	Y (MD8)	8647185	3	1.82	PLUG, CLU & ACCUM PRESS (1/4–18 PIPE) (AC–DELCO #8647185)	5–H5,32
84–93	Y 4–SPD A/TRANS (MD8) ...	8634239	3	1.82	PLUG, LINE BIAS VLV BORE (12.5MM DIA) (AC–DELCO #8634239)	5–H16,352
87–89	Y (MD8)	8667041	1	DISCON	PLUG, ORIFICE	
86–91	Y 4–SPD A/TRANS (MD8), (EXC EXPORT CANADA) ...	8654336	1	5.24	PLUG, SHFT VLV BORE (AC–DELCO #8654336)	5–H16,354

© 2000 GENERAL MOTORS SERVICE PARTS OPERATIONS–CHEVROLET–14Y

4.265 BALL – BODY – BOLT – CLAMP – CONNECTOR – COVER – FILTER – GASKET – GASKET KIT – PIN – PIPE – PLATE – PLUG – RETAINER – RING – SCREEN – SPRING – SWITCH – VALVE – VALVE KIT, Transmission Main Control Valve Body (Con't)

86–91	Y 4–SPD A/TRANS (MD8), (EXC EXPORT CANADA) ...	8654337	1	24.87	PLUG, SLEV VLV BORE (AC–DELCO #8654337)	5–H16,356
84–92	Y 4–SPD A/TRANS (MD8) ...	8647453	1	DISCON	PLUG, T/V LIM VLV BORE	
92	Y 4–SPD A/TRANS (MD8) ...	8634239	3	1.82	PLUG, T/V MOD DNSHFT VLV BORE (12.5MM DIA) (AC–DELCO #8634239)	5–H16,352
84–93	Y 4–SPD A/TRANS (MD8) ...	8634239	3	1.82	PLUG, T/V MOD UPSHFT VLV BORE (12.5MM DIA) (AC–DELCO #8634239)	5–H16,352
84–93	Y 4–SPD A/TRANS (MD8) ...	8625546	2	2.26	PLUG, 1–2 ACCUM VLV BORE (14.22MM DIA) (AC–DELCO #8625546)	5–I26,345
94	Y 5.7P (LT1), 4–SPD A/TRANS (M30), 2.59R (GM1), 3.07R (G44)	8625546	1	2.26	PLUG, 1–2 ACCUM VLV BORE (14.22MM DIA) (AC–DELCO #8625546)	5–I26,345
84–93	Y 4–SPD A/TRANS (MD8) ...	8625546	2	2.26	PLUG, 3–4 RLY VLV BORE (14.22MM DIA) (AC–DELCO #8625546)	5–I26,345
84–93	Y 4–SPD A/TRANS (MD8) ...	8639141	1	*1.82	PLUG, 3–4 RLY VLV BORE (CUP) (.33 DIA) (04.105) (AC–DELCO #8639141)	5–H16,345
94–96	Y 4–SPD A/TRANS (M30) ...	8680781	1	1.82	RETAINER, ACTR FEED LIM VLV BORE PLUG (AC–DELCO #8680781)	5–K9,379
91	Y 4–SPD A/TRANS (MD8), (2ND DES)	8679152	1	*1.82	RETAINER, FWD CLU BALL CHK VLV (USED ON TRANS BUILT ON ANY JULIAN DATE EXC 240 THRU 304, 1ST DES TRANS W/JULIAN DATE 240 THRU 304 HAS NO CK VLV) (AC–DELCO #8679152)	5–I9,55
92–93	Y 4–SPD A/TRANS (MD8) ...	8679152	1	*1.82	RETAINER, FWD CLU BALL CHK VLV (AC–DELCO #8679152) ..	5–I9,55
94–96	Y 4–SPD A/TRANS (M30) ...	8680781	1	1.82	RETAINER, TCC PWM SOL VLV (AC–DELCO #8680781)	5–K9,379
94–96	Y 4–SPD A/TRANS (M30) ...	8680781	1	1.82	RETAINER, TCC SIG VLV BORE PLUG (AC–DELCO #8680781)	5–K9,379
94–96	Y 4–SPD A/TRANS (M30) ...	8680781	1	1.82	RETAINER, 1–2, 3–4 SHFT SOL VLV (AC–DELCO #8680781) ..	5–K9,379
94–96	Y 4–SPD A/TRANS (M30) ...	8680781	1	1.82	RETAINER, 2–3 SHFT SOL VLV (AC–DELCO #8680781)	5–K9,379
94–96	Y 4–SPD A/TRANS (M30) ...	8680781	1	1.82	RETAINER, 3–2 C/VLV BORE PLUG (AC–DELCO #8680781)	5–K9,379
94–96	Y 4–SPD A/TRANS (M30) ...	8680781	1	1.82	RETAINER, 3–2 DNSHFT VLV BORE PLUG (AC–DELCO #8680781)	5–K9,379
94–96	Y 4–SPD A/TRANS (M30) ...	8680781	1	1.82	RETAINER, 3–2 SHFT SOL VLV (AC–DELCO #8680781)	5–K9,379
94–96	Y 4–SPD A/TRANS (M30) ...	8680781	1	1.82	RETAINER, 3–4 RLY VLV BORE PLUG (AC–DELCO #8680781)	5–K9,379
94–96	Y 4–SPD A/TRANS (M30) ...	8680781	1	1.82	RETAINER, 3–4 SHFT VLV BORE PLUG (AC–DELCO #8680781)	5–K9,379
94–96	Y 4–SPD A/TRANS (M30) ...	11503348	1	1.82	RING, T/V BOOST VLV BUSH RET (04.216) (AC–DELCO #11503348)	5–I2,224
84–94	Y 4–SPD A/TRANS (MD8) ...	12338044	2	*2.77	SCREEN, TCC SOL VLV (CONVR CLU) (04.248) (AC–DELCO #12338044)	5–I9,47

© 2000 GENERAL MOTORS SERVICE PARTS OPERATIONS–CHEVROLET–14Y

4.265 BALL – BODY – BOLT – CLAMP – CONNECTOR – COVER – FILTER – GASKET – GASKET KIT – PIN – PIPE – PLATE – PLUG – RETAINER – RING – SCREEN – SPRING – SWITCH – VALVE – VALVE KIT, Transmission Main Control Valve Body (Con't)

84–93	Y 4–SPD A/TRANS (MD8) ...	8634106	1	4.07	SPRING, PRESS RLF BALL VLV (OIL PUMP) (AC–DELCO #8634106)	5–H13,232
94–96	Y 4–SPD A/TRANS (M30) ...	8634106	1	4.07	SPRING, PRESS RLF BALL VLV (AC–DELCO #8634106)	5–H13,232
84–93	Y 4–SPD A/TRANS (MD8) ...	8634378	1	1.82	SPRING, TCC VLV INR (OIL PUMP) (04.216) (AC–DELCO #8634378)	5–H13,229
94	Y 4–SPD A/TRANS (M30) ...	8634378	1	1.82	SPRING, TCC VLV INR (04.216) (AC–DELCO #8634378)	5–H13,229
95–96	Y 4–SPD A/TRANS (M30) ...	24201610	1	1.23	SPRING, TCC VLV INR (04.216) (AC–DELCO #24201610)	5–K20,225
84–93	Y 4–SPD A/TRANS (MD8) ...	8634399	1	1.82	SPRING, TCC VLV OTR (OIL PUMP) (04.216) (AC–DELCO #8634399)	5–H13,228
94	Y 4–SPD A/TRANS (M30) ...	8634399	1	1.82	SPRING, TCC VLV OTR (04.216) (AC–DELCO #8634399)	5–H13,228
95–96	Y 4–SPD A/TRANS (M30) ...	24201611	1	1.23	SPRING, TCC VLV OTR (04.216) (AC–DELCO #24201611)	5–K20,226
94–96	Y 4–SPD A/TRANS (M30) ...	8686149	1	45.71	SWITCH, A/TRNS FLUID PRESS MAN VLV POSN (W/O PLASTIC COVER) (AC–DELCO #8686149)	5–K2,69
92–93	Y 4–SPD A/TRANS (MD8) ...	8683502	1	18.00	SWITCH, 2ND CLU PRESS (1 PRONG, 22MM DIA) (AC–DELCO #8683502)	5–H16,348
92–93	Y 4–SPD A/TRANS (MD8) ...	8683502	1	18.00	SWITCH, 3RD CLU PRESS (1 PRONG, 22MM DIA) (AC–DELCO #8683502)	5–H16,348
84	Y (MD8)	8642346	1	13.83	SWITCH, 4–3 PULSE OIL PRESS (AC–DELCO #8642346)	5–H16,347
90–93	Y 4–SPD A/TRANS (MD8) ...	8642473	1	6.60	SWITCH, 4–3 PULSE PRESS (1 PRONG, 28MM DIA) (AC–DELCO #8642473)	5–I6,348
84–89	Y 4–SPD A/TRANS (MD8) ...	8683502	1	18.00	SWITCH, 4TH CLU PRESS (OIL PRESS (1 PRONG) (AC–DELCO #8683502)	5–H16,348
92–93	Y 4–SPD A/TRANS (MD8) ...	8683502	1	18.00	SWITCH, 4TH CLU PRESS (1 PRONG, 22MM DIA) (AC–DELCO #8683502)	5–H16,348
93	Y 4–SPD A/TRANS (MD8) ...	[illegible]	1	6.60	SWITCH, 4TH CLU PRESS (1 PRONG, 28MM DIA) (AC–DELCO #8642473)	5–I6,348
92	Y 5.7P (LT1), 4–SPD A/TRANS (MD8), 2.59R (GM1), (#1–2)	8686900	1	63.50	VALVE KIT, ACCUM	
91	Y 4–SPD A/TRANS (MD8), (1ST DES)	8677422	1	405.03	VALVE KIT, CONT (W/BODY & VLV) (USED ON TRANS W/ID CODE 1YDM) (AC–DELCO #8677422) .	5–H20,67
91	Y 4–SPD A/TRANS (MD8), (2ND DES)	8680177	1	405.03	VALVE KIT, CONT (W/BODY & VLV) (USED ON TRANS W/ID CODE 1YHM) (AC–DELCO #8680177) .	5–I6,350
92	Y 4–SPD A/TRANS (MD8), 3.07R (G44), 2.73R (GU2) ..	8680661	1	405.03	VALVE KIT, CONT (W/BODY & VLV) (YD) (AC–DELCO #8680661) .	5–I9,67
92	Y 4–SPD A/TRANS (MD8), 2.59R (GM1), (EXC VE1 (EXPORT)	8680662	1	405.03	VALVE KIT, CONT (W/BODY & VLV) (YC) (AC–DELCO #8680662) .	5–I9,67
92	Y 5.7P (LT1), 4–SPD A/TRANS (MD8), 2.59R (GM1), 2.73R (GU2)	8681312	1	405.03	VALVE KIT, CONT (W/BODY & VLV) (YC) (AC–DELCO #8681312) .	5–I9,67

© 2000 GENERAL MOTORS SERVICE PARTS OPERATIONS–CHEVROLET–14Y

4.265 BALL – BODY – BOLT – CLAMP – CONNECTOR – COVER – FILTER – GASKET – GASKET KIT – PIN – PIPE – PLATE – PLUG – RETAINER – RING – SCREEN – SPRING – SWITCH – VALVE – VALVE KIT, Transmission Main Control Valve Body (Con't)

92–93	Y 5.7P (LT1), 4–SPD A/TRANS (MD8), 3.07R (G44)	24204691	1	119.64	VALVE KIT, CONT (W/BODY & VLV) (AC–DELCO #24204691)	5–I9,67
93	Y 5.7P (LT1), 4–SPD A/TRANS (MD8), 2.59R (GM1), (EXC VE1 (EXPORT)	8661312	1	405.03	VALVE KIT, CONT (W/BODY & VLV) (YC) (AC–DELCO #8661312) .	5–I9,67
93	Y 5.7P (LT1), 4–SPD A/TRANS (MD8), 2.73R (GU2)	24204691	1	119.64	VALVE KIT, CONT (W/BODY & VLV) (AC–DELCO #24204691)	5–I9,67
96	Y 4–SPD A/TRANS (M30) ...	24203264	1	405.03	VALVE KIT, CONT (W/BODY & VLV) (AC–DELCO #24203264)	5–L2,60
94–96	Y 4–SPD A/TRANS (M30) ...	24216252	1		VALVE KIT, PRESS CONT SOL (W/SHFT SOL VLV FLUID FLTR)	5–K2,10
94–96	Y 4–SPD A/TRANS (M30) ...	24200372	1	20.28	VALVE KIT, REV BOOST (AC–DELCO #24200372)	5–J19,4
91	Y 4–SPD A/TRANS (MD8), (2ND DES)	104918	1	*1.62	VALVE, C/VLV BODY BALL CHK (USED ON TRANS BUILT ON ANY JULIAN DATE EXC 240 THRU 304, 1ST DES TRANS W/JULIAN DATE 240 THRU 304 HAS NO CK VLV) (.25 DIA) (08.699) (AC–DELCO #104918)	
92	Y 4–SPD A/TRANS (MD8) ...	104918	1	*1.62	VALVE, C/VLV BODY BALL CHK (.25 DIA) (08.699) (AC–DELCO #104918)	
84	Y (MD8)	8654073	1	DISCON	VALVE, CONT	
85	Y	8654460	1	DISCON	VALVE, CONT (MD8) (EXC EXPORT)	
86	Y07	8654460	1	DISCON	VALVE, CONT (MD8) (EXC EXPORT)	
86	Y67	8654460	1	DISCON	VALVE, CONT (MD8)	
87	Y (MD8) (EXC NM8 EXPORT)	8663723	1	405.03	VALVE, CONT (AC–DELCO #8663723)	5–H16,350
88	Y (MD8)	8657442	1	DISCON	VALVE, CONT	
89	Y (MD8)	8673152	1	635.67	VALVE, CONT (AC–DELCO #8673152)	5–H20,67
90	Y	8673526	1	DISCON	VALVE, CONT	
94	Y 4–SPD A/TRANS (M30) ...	24214832	1	335.31	VALVE, CONT (W/BODY & VLV) (REMAN) (AC–DELCO #24214832)	5–K2,60
95	Y 4–SPD A/TRANS (M30) ...	24214844	1	335.31	VALVE, CONT (W/BODY & VLV) (REMAN) (AC–DELCO #24214844)	5–K2,60
84–89	Y 4–SPD A/TRANS (MD8) ...	8648959	1	14.78	VALVE, REV BOOS (W/SLV & BUSH) (AC–DELCO #8648959) .	5–I2,220
90	Y 4–SPD A/TRANS (MD8) ...	8648958	1	22.58	VALVE, REV BOOST (W/SLEV&BUSH) (AC–DELCO #8648958)	5–I2,220
91	Y 4–SPD A/TRANS (MD8), (1ST DES)	8648958	1	22.58	VALVE, REV BOOST (W/SLEV&BUSH (USED ON TRANS W/ID CODE 1YDM) (AC–DELCO #8648958)	5–I2,220
91	Y 4–SPD A/TRANS (MD8), (2ND DES)	8657925	1	11.40	VALVE, REV BOOST (W/SLEV & BUSH, USE ON TRANS W/ID CODE 1YHM)	5–J2,220
92–93	Y 4–SPD A/TRANS (MD8) ...	8657925	1	11.40	VALVE, REV BOOST (W/SLEV & BUSH)	5–J2,220

© 2000 GENERAL MOTORS SERVICE PARTS OPERATIONS–CHEVROLET–14Y

4.265 BALL – BODY – BOLT – CLAMP – CONNECTOR – COVER – FILTER – GASKET – GASKET KIT – PIN – PIPE – PLATE – PLUG – RETAINER – RING – SCREEN – SPRING – SWITCH – VALVE – VALVE KIT, Transmission Main Control Valve Body (Con't)

84–86	Y (MD8)	8642921	1	16.13	VALVE, REV BOOST W/BUSH & SLEEVE (AC–DELCO #8642921)	5–H13,220
84–93	Y 4–SPD A/TRANS (MD8) ..	8634031	1	16.13	VALVE, TCC (OIL PUMP) (AC–DELCO #8634031)	5–H13,227
94	Y 4–SPD A/TRANS (M30) ...	8634031	1	16.13	VALVE, TCC (OIL PUMP) (AC–DELCO #8634031)	5–H13,227
95–96	Y 4–SPD A/TRANS (M30) ...	24205509	1	11.02	VALVE, TCC (AC–DELCO #24205509)	5–K20,224
94–96	Y 4–SPD A/TRANS (M30) ...	24207054	1	45.72	VALVE, TCC PWM SOL (PWM) (04.122) (AC–DELCO #24207054)	5–K9,394
94–96	Y 4–SPD A/TRANS (M30) ...	10478131	1	24.87	VALVE, 1–2, 3–4 SHFT SOL (INCLS SEAL) (AC–DELCO #10478131)	5–K9,367
94–96	Y 4–SPD A/TRANS (M30) ...	10478131	1	24.87	VALVE, 2–3 SHFT SOL (INCLS SEAL) (AC–DELCO #10478131)	5–K9,367
94–95	Y 4–SPD A/TRANS (M30) ...	24207054	1	45.72	VALVE, 3–2 SHFT SOL (PWM) (04.122) (AC–DELCO #24207054)	5–K9,394
96	Y 4–SPD A/TRANS (M30) ...	24212327	1	27.29	VALVE, 3–2 SHFT SOL (04.122) (AC–DELCO #24212327)	5–L9,394
	*EXPORT****************EXPORT****************EXPORT****************EXPORT****************EXPORT*					
85	Y (MD8) EXPORT	8654465	1	DISCON	PLATE, VLV BODY SPCR	
87	Y (MD8) NM8 (EXPORT)	8663591	1	13.83	PLATE, VLV BODY SPCR (AC–DELCO #8663591)	5–H20,56
92	Y 4–SPD A/TRANS (MD8), 2.59R (GM1), VE1 (EXPORT)	8681706	1	543.44	VALVE KIT, CONT (W/BODY & VLV) (YA) (AC–DELCO #8681706) .	5–I9,67
93	Y 5.7P (LT1), 4–SPD A/TRANS (MD8), 2.59R (GM1), VE1 (EXPORT)	8682750	1	405.03	VALVE KIT, CONT (W/BODY & VLV) (YA) (AC–DELCO #8682750) .	5–I9,67
85–86	Y07 (MD8) VB4, VD1, VE1, VT7 (EXPORT)	8663239	1	DISCON	VALVE, CONT	
87	Y07 (MD8) 3.07R, NM8 (EXPORT)	8663722	1	349.00	VALVE, CONT	5–H16,350

4.275 DETENT – LEVER – LINK – NUT – RETAINER – VALVE, Transmission Throttle Valve

84–93	Y 4–SPD A/TRANS (MD8) ...	8642247	1	3.67	DETENT, MAN SHFT (AC–DELCO #8642247)	5–H5,709
94–96	Y 4–SPD A/TRANS (M30) ...	8642247	1	3.67	DETENT, MAN SHFT (AC–DELCO #8642247)	5–H5,709
84–93	Y 4–SPD A/TRANS (MD8) ...	8673606	1	24.87	LEVER, T/V (AC–DELCO #8673606)	5–H5,66
84–91	Y 4–SPD A/TRANS (MD8) ...	8654113	1	*1.82	LINK, MAN VLV (WHEN USED ON 82–84 VEH'S WHICH HAVE A DETENT LVR END CLIP, CLIP SHOULD BE DISCARDED.) (AC–DELCO #8654113)	5–H19,705
92–93	Y 4–SPD A/TRANS (MD8) ...	8654113	1	*1.82	LINK, MAN VLV (AC–DELCO #8654113)	5–H19,705
94–96	Y 4–SPD A/TRANS (M30) ...	8680731	1	1.82	LINK, MAN VLV (AC–DELCO #8680731)	5–K2,89
84–93	Y 4–SPD A/TRANS (MD8) ...	8642290	1	1.82	LINK, T/V CBL (AC–DELCO #8642290)	5–H5,64
84–93	Y 4–SPD A/TRANS (MD8) ...	8648178	AR	3.12	NUT, MAN SHFT DTNT LVR (M10X15.8H THD) (AC–DELCO #8648178)	5–H19,702

© 2000 GENERAL MOTORS SERVICE PARTS OPERATIONS–CHEVROLET–14Y

4.275 DETENT – LEVER – LINK – NUT – RETAINER – VALVE, Transmission Throttle Valve (Con't)

94–96	Y 4–SPD A/TRANS (M30) ...	8648178	1	3.12	NUT, MAN SHFT DTNT LVR (M10X15.0H THD) (AC–DELCO #8648178)	5–H19,702
84–93	Y 4–SPD A/TRANS (MD8) ...	8642246	1	1.82	RETAINER, MAN SHFT SHF (AC–DELCO #8642246)	5–H19,706
94–96	Y 4–SPD A/TRANS (M30) ...	8642246	1	1.82	RETAINER, MAN SHFT SHF (AC–DELCO #8642246)	5–H19,706
84–93	Y 4–SPD A/TRANS (MD8) ...	8634941	1	38.80	VALVE, T/V BOOS (W/BUSH) (PUMP CVR) (04.210) (AC–DELCO #8634941)	5–H13,222

4.279 LEVER – VALVE, Transmission Detent

84	Y (MD8) (EXC VD1 EXPORT) (2ND DES)	8642243	1	1.82	LEVER, INSIDE DETENT (TRANS CODE YW) (AC–DELCO #8642243)	5–H19,703
84	Y 4–SPD A/TRANS (MD8), (EXC EUROPLAN PROVISIONS (VD1) (EXPORT), (1ST DES)	8654106	1	3.12	LEVER, MAN SHFT DTNT (TRANS CODE Y9) (AC–DELCO #8654106)	5–H19,703
85–93	Y 4–SPD A/TRANS (MD8) ...	8654106	1	3.12	LEVER, MAN SHFT DTNT (GOLD) (SQUARE HOLE) (AC–DELCO #8654106)	5–H19,703
94–96	Y 4–SPD A/TRANS (M30) ...	8654106	1	3.12	LEVER, MAN SHFT DTNT (GOLD) (SQUARE HOLE) (AC–DELCO #8654106)	5–H19,703
84–93	Y 4–SPD A/TRANS (MD8) ...	8642336	1	16.13	VALVE, MAN (04.265) (AC–DELCO #8642336)	5–H16,340
93–95	Y	8680730	1	7.60	VALVE, MAN (04.265)	5–I26,340
96	Y 4–SPD A/TRANS (M30) ...	24203484	1	16.13	VALVE, MAN (04.265) (AC–DELCO #24203484)	5–L9,340
	*EXPORT****************EXPORT****************EXPORT****************EXPORT****************EXPORT*					
84	Y (MD8) VD1 EXPORT	8654106	1	3.12	LEVER, INSIDE DETENT (AC–DELCO #8654106)	5–H19,703

4.282 SEAL, Transmission Manual Shaft

84–93	Y 4–SPD A/TRANS (MD8) ...	8657163	1	2.77	SEAL, MAN SHFT SHF (AC–DELCO #8657163)	5–H19,708
94–96	Y 4–SPD A/TRANS (M30) ...	8657163	1	2.77	SEAL, MAN SHFT SHF (AC–DELCO #8657163)	5–H19,708

4.290 ACTUATOR – BRACKET, Transmission Park Lock

84–93	Y 4–SPD A/TRANS (MD8) ...	8667517	1	15.60	ACTUATOR, PARK PAWL (INCLS ACTUATOR, ROD & SPRINGS) (AC–DELCO #8667517)	5–H19,701
94–96	Y 4–SPD A/TRANS (M30) ...	8667517	1	15.60	ACTUATOR, PARK PAWL (INCLS ACTUATOR, ROD & SPRINGS) (AC–DELCO #8667517)	5–H19,701
84–93	Y 4–SPD A/TRANS (MD8) ...	8667574	1	12.18	BRACKET, PARK PAWL ACTR (AC–DELCO #8667574)	5–H19,710
94–96	Y 4–SPD A/TRANS (M30) ...	8667574	1	12.18	BRACKET, PARK PAWL ACTR (AC–DELCO #8667574)	5–H19,710

4.293 PIN, Transmission Manual Detent

84–93	Y 4–SPD A/TRANS (MD8) ...	6261174	1	.77	PIN, MAN SHFT DTNT RLR (04.311) (AC–DELCO #6261174)	5–K2,63
94–96	Y 4–SPD A/TRANS (M30) ...	6261174	1	.77	PIN, MAN SHFT DTNT RLR (04.311) (AC–DELCO #6261174)	5–K2,63

© 2000 GENERAL MOTORS SERVICE PARTS OPERATIONS–CHEVROLET–14Y

4.294 PAWL KIT – PLUG – SHAFT KIT, Transmission Park Lock

94–93	Y 4–SPD A/TRANS (MD8) ...	8669911	1	13.53	PAWL KIT, PARK (INST SHT, PAWL, PLUG & SHF) (AC–DELCO #8669911)	5–H19,712
94–96	Y 4–SPD A/TRANS (M30) ...	8669911	1	13.53	PAWL KIT, PARK (INST SHT, PAWL, PLUG & SHF) (AC–DELCO #8669911)	5–H19,712
84–93	Y (MD8)	8620318	1	*1.82	PLUG, PARK PAWL SHF HOLE (9.65MM DIA STEEL) (.38 DIA) (AC–DELCO #8620318)	5–H8,713
94–96	Y 4–SPD A/TRANS (M30) ...	8620318	1	*1.82	PLUG, PARK PAWL SHF HOLE (9.65MM DIA STEEL) (.38 DIA) (AC–DELCO #8620318)	5–H8,713
84–93	Y 4–SPD A/TRANS (MD8) ...	24210712	1	17.27	SHAFT KIT, MAN SHFT (SHORT) (INCLS SEAL, INDIVIDUAL COMPONENT NOT SOLD SEPARATELY) (AC–DELCO #24210712)	5–H19,707
94	Y 4–SPD A/TRANS (M30) ...	24210711	1	17.27	SHAFT KIT, MAN SHFT (128.2MM) (LONG) (INCLS SEAL) (AC–DELCO #24210711)	5–K2,84
94–96	Y 4–SPD A/TRANS (M30) ...	24210712	1	17.27	SHAFT KIT, MAN SHFT (SHORT) (INCLS SEAL, INDIVIDUAL COMPONENT NOT SOLD SEPARATELY) (AC–DELCO #24210712)	5–H19,707
96	Y 4–SPD A/TRANS (M30) ...	24210711	1	17.27	SHAFT KIT, MAN SHFT (128.2MM) (LONG) (INCLS SEAL) (AC–DELCO #24210711)	5–K2,84

4.295 SPRING – WASHER, Transmission Park Lock

84–93	Y 4–SPD A/TRANS (MD8) ...	8642193	1	1.82	SPRING, PARK PAWL (AC–DELCO #8642193)	5–H19,714
94–96	Y 4–SPD A/TRANS (M30) ...	8642193	1	1.82	SPRING, PARK PAWL (AC–DELCO #8642193)	5–H19,714
84–90	Y	14091256	1	*.60	WASHER, TRANS PK LK CBL (03.880)	

4.307 CONNECTOR, Transmission Interlock

90–91	Y 4–SPD A/TRANS (MD8) ...	12102491	1	28.96	CONNECTOR, M/TRNS CMPTR AIDE SHFT RLY (4–WAY F) (W/LEADS) (01.055) (AC–DELCO #PT282)	

4.317 BOLT – EXTENSION, Transmission Case Extension

84	Y (MD8)	14060030	1	2.10	BOLT, CASE EXT (00.029)	
84–93	Y 4–SPD A/TRANS (MD8) ...	24201517	1	81.04	EXTENSION, A/TRNS CASE (AC–DELCO #24201517)	5–H5,36
94–96	Y 4–SPD A/TRANS (M30) ...	24201517	1	81.04	EXTENSION, A/TRNS CASE (AC–DELCO #24201517)	5–H5,36

4.318 SEAL, Transmission Extension

84–90	Y 4–SPD A/TRANS (MD8) ...	1358899	1	*1.82	SEAL, A/TRNS CASE EXTN (AC–DELCO #1358899)	5–H5,35
84–93	Y 4–SPD A/TRANS (MD8) ...	8673526	1	9.88	SEAL, A/TRNS CASE EXTN (NON BOOTED) (AC–DELCO #8673526)	5–H5,39
94–96	Y 4–SPD A/TRANS (M30) ...	1358899	1	*1.82	SEAL, A/TRNS CASE EXTN (AC–DELCO #1358899)	5–H5,35

© 2000 GENERAL MOTORS SERVICE PARTS OPERATIONS–CHEVROLET–14Y

4.318 SEAL, Transmission Extension (Con't)

92–93	Y 4–SPD A/TRANS (MD8) ...	8673526	1	9.86	SEAL, PROP SHF FRT SLIP YOKE OIL (NON BOOTED) (AC–DELCO #8673526)	5–H5,39
94–96	Y 4–SPD A/TRANS (M30) ...	24201470	1	9.89	SEAL, PROP SHF FRT SLIP YOKE OIL (AC–DELCO #24201470) .	5–K2,30

4.319 BUSHING, Transmission Case Extension

84–93	Y 4–SPD A/TRANS (MD8) ...	8642181	2	4.07	BUSHING, OUTPUT SHF (FRT & RR) (04.159) (AC–DELCO #8642181)	5–H9,667
94–96	Y 4–SPD A/TRANS (M30) ...	8642181	2	4.07	BUSHING, OUTPUT SHF (FRT & RR) (04.159) (AC–DELCO #8642181)	5–H9,667
84–93	Y 4–SPD A/TRANS (MD8) ...	24207915	1	2.76	BUSHING, TRANS EXTN (INSIDE DIAM 1.506– 1.504 (PT OF TRANS EXT) (05.556) (AC–DELCO #24207915)	5–H5,38
94–96	Y 4–SPD A/TRANS (M30) ...	24207915	1	2.76	BUSHING, TRANS EXTN (INSIDE DIAM 1.506– 1.504 (PT OF TRANS EXT) (05.556) (AC–DELCO #24207915)	5–H5,38

4.329 SENSOR, Speedometer Drive

91–93	Y (D8L)	10456092	1	32.70	SENSOR, VEH SPD (AC–DELCO #213–200)	5–Q8,32
94–96	Y 4–SPD A/TRANS (M30) ...	8673299	1	35.43	SENSOR, VEH SPD (AC–DELCO #213–194)	5–K2,36

4.337 GEAR, Speedometer Drive

NOTE: FOR USAGE REFER TO SPEEDO GEAR CHART A.T. GRP 4.337

91–93	Y (D4L)	25513050	1	7.60	GEAR, SPEEDO DRVN (PURPLE) (43 TEETH) (AC–DELCO #25513050)	5–H20,44
92	Y (D7B)	25513043	1	1.05	GEAR, SPEEDO DRVN (WHITE) (36 TEETH)	5–L19,2
92	Y (D7C)	25513045	1	7.60	GEAR, SPEEDO DRVN (BLUE) (38 TEETH) (AC–DELCO #25513045)	5–H20,44
92–93	Y (D3X)	25513049	1	7.60	GEAR, SPEEDO DRVN (GREEN) (42 TEETH) (AC–DELCO #25513049)	5–H20,44
93	Y (D7A)	25513042	1	7.60	GEAR, SPEEDO DRVN (ORANGE) (35 TEETH) (AC–DELCO #25513042)	5–L19,2
93	Y (D3W)	25513044	1	7.60	GEAR, SPEEDO DRVN (RED) (37 TEETH) (AC–DELCO #25513044)	5–L19,2

© 2000 GENERAL MOTORS SERVICE PARTS OPERATIONS–CHEVROLET–14Y

1984 SPEEDO GEAR USAGE CHART
"Y" CAR

NOTE: SLEEVE PART NUMBER IS SHOWN ONLY IF SERVICED SEPARATELY. WHEN SLEEVE NUMBER IS NOT SHOWN THEN IT IS SERVICED AS PART OF THE DRIVEN GEAR.

CODE	DRIVE GEAR	TEETH	COLOR	CODE	DRIVEN GEAR	TEETH	COLOR OR CODE	SLEEVE OR SENSOR	CODE	ADAPTER	RATIO	STMP'D
A	8640517	17	RED	N	26613017	40	BLACK	26007300				
				O	26613049	42	GREEN	26007300				
				P	26613052	46	LT BLUE	26007300				

TIRE SIZE	AXLE	TRANS	DRIVE GEAR	DRIVEN GEAR	ADAPTER
P255/60R16		MDU (46)	A	O	
P255/60R16		MDU (47)	A	N	
P255/60R16	3.07	MK2	A	O	
P255/60R16		MDU	A	P	
P255/60R16	3.31	MK2	A	P	

NOTE: (46) EXC EXPORT (VB4,VD1,VE1,VT7)
(47) WITH EXPORT (VB4,VD1,VE1,VT7)

© 2000 GENERAL MOTORS SERVICE PARTS OPERATIONS - CHEVROLET - 14Y

MICROFICHE INDEX

GROUP 4.000

FICHE 5 OF 11

GROUP	DESCRIPTION	STARTING GRID LOCATION PARTS	ILLUSTRATIONS
–	GENERAL INFORMATION	1–A2	1–G2
–	ALPHABETICAL INDEX	1–B13	N.A.
4.000	4–SPEED TRANSMISSION	5–A2	5–F2
4.000	6–SPEED TRANSMISSION	5–B2	5–G2
4.000	AUTOMATIC TRANSMISSION	5–C2	5–H2
–	OUT OF FICHE CALLS	N.A.	5–M23

5–E1

1985 SPEEDO GEAR USAGE CHART
"Y" CAR

NOTE: SLEEVE PART NUMBER IS SHOWN ONLY IF SERVICED SEPARATELY. WHEN SLEEVE NUMBER IS NOT SHOWN THEN IT IS SERVICED AS PART OF THE DRIVEN GEAR.

CODE	DRIVE GEAR	TEETH	COLOR	CODE	DRIVEN GEAR	TEETH	COLOR OR CODE	SLEEVE OR SENSOR	CODE	ADAPTER	RATIO	STMP'D
A	8640517	17	RED	N	25513043	36	WHITE	25007224				
				O	25513044	37	RED	25007224				
				P	25513046	39	BROWN	25007224				
				Q	25513049	42	GREEN	25007300				

TIRE SIZE	AXLE	TRANS	DRIVE GEAR	DRIVEN GEAR	ADAPT'R
P255/50VR16		MD8 (60)	A	Q	
P255/50VR16	2.73	MD8 (61)	A	N	
P255/50VR16		MH5	A	P	
P255/50VR16	2.87	MK2	A	P	
P255/50VR16		MD8	A	Q	
P255/50VR16		MH5	A	Q	
P255/50VR16	3.07	MK2	A	Q	

NOTE: (60) EXC EXPORT (VB4,VD1,VE1,VT7)
(61) WITH EXPORT (VB4,VD1,VE1,VT7)

© 2000 GENERAL MOTORS SERVICE PARTS OPERATIONS-CHEVROLET-14Y

1986 SPEEDO GEAR USAGE CHART
"Y" CAR

NOTE: SLEEVE PART NUMBER IS SHOWN ONLY IF SERVICED SEPARATELY. WHEN SLEEVE NUMBER IS NOT SHOWN THEN IT IS SERVICED AS PART OF THE DRIVEN GEAR.

CODE	DRIVE GEAR	TEETH	COLOR	CODE	DRIVEN GEAR	TEETH	COLOR OR CODE	SLEEVE OR SENSOR	CODE	ADAPTER	RATIO	STMPD
A	C640517	17	RED	N	25513042	35	ORANGE	25007224				
				O	25513044	37	RED	25007224				
				P	25513047	40	BLACK	25007300				
				Q	25513049	42	GREEN	25007300				

TIRE SIZE	AXLE	TRANS	DRIVE GEAR	DRIVEN GEAR	ADAPTER
P255/50VR16	2.59	MD8	A	N	
P255/50VR16	2.73	MD8	A	O	
P255/50VR16		MD8 (60)	A	Q	
P255/50VR16		MD8 (61)	A	P	
P255/50VR16		MH5	A	O	
P255/50VR16		MK2 (50)	A	O	
P255/50VR16	3.07	MK2 (61)	A	P	

NOTE: (60) EXC EXPORT (VB4,VD1,VE1,VT7)
(61) WITH EXPORT (VB4,VD1,VE1,VT7)

© 2000 GENERAL MOTORS SERVICE PARTS OPERATIONS–CHEVROLET–14Y

1987 SPEEDO GEAR USAGE CHART
"Y" CAR

NOTE: SLEEVE PART NUMBER IS SHOWN ONLY IF SERVICED SEPARATELY. WHEN SLEEVE NUMBER IS NOT SHOWN THEN IT IS SERVICED AS PART OF THE DRIVEN GEAR.

CODE	DRIVE GEAR	TEETH	COLOR	CODE	DRIVEN GEAR	TEETH	COLOR OR CODE	SLEEVE OR SENSOR	CODE	ADAPTER	RATIO	STMPD
A	8640517	17	RED	N O P	25513042 25513044 25513049	36 37 42	ORANGE RED GREEN	25007224 25007224 25007300				

TIRE SIZE	AXLE	TRANS	DRIVE GEAR	DRIVEN GEAR	ADAPTER
P255/50VR16	2.59	MD8	A	N	
P255/50VR16	2.73	MD8	A	O	
P255/50VR16		MD8	A	P	
P255/50VR16		MH5	A	P	
P255/50VR16	3.07	MK2	A	P	

© 2000 GENERAL MOTORS SERVICE PARTS OPERATIONS CHEVROLET-14Y

1988 SPEEDO GEAR USAGE CHART
"Y" CAR

NOTE: SLEEVE PART NUMBER IS SHOWN ONLY IF SERVICED SEPARATELY. WHEN SLEEVE NUMBER IS NOT SHOWN THEN IT IS SERVICED AS PART OF THE DRIVEN GEAR.

CODE	DRIVE GEAR	TEETH	COLOR	CODE	DRIVEN GEAR	TEETH	COLOR OR CODE	SLEEVE OR SENSOR	CODE	ADAPTER	RATIO	STMP'D
A	8640517	17	RED	NOPOR	25513042	35	ORANGE	25007224				
					25513043	36	WHITE	25007224				
					25513044	37	RED	25007224				
					25513045	38	BLUE	25007224				
					25513049	42	GREEN	25007308				

TIRE SIZE	AXLE	TRANS	DRIVE GEAR	DRIVEN GEAR	ADAPTR
P255/50ZR16	2.59	MD8	A	N	
P275/40ZR17			A	O	
P255/50ZR16	2.73	MD8	A	P	
P275/40ZR17			A	O	
P255/50ZR16,P275/40ZR17	3.07	MD8	A	R	
P255/50ZR16,P275/40ZR17		MU5	A	R	
P255/50ZR16,P275/40ZR17		MK2	A	R	

© 2000 GENERAL MOTORS SERVICE PARTS OPERATIONS - CHEVROLET - 14Y

1989 SPEEDO GEAR USAGE CHART
"Y" CAR

NOTE: SLEEVE PART NUMBER IS SHOWN ONLY IF SERVICED SEPARATELY. WHEN SLEEVE NUMBER IS NOT SHOWN THEN IT IS SERVICED AS PART OF THE DRIVEN GEAR.

CODE	DRIVE GEAR	TEETH	COLOR	CODE	DRIVEN GEAR	TEETH	COLOR OR CODE	SLEEVE OR SENSOR	CODE	ADAPTER	RATIO	STMPD
A	8640517	17	RED	N	25513042	35	ORANGE	25007224				
B	8642620	16	GRAY	O	25513043	36	WHITE	25007224				
				P	25513044	37	RED	25007224				
				Q	25513045	38	BLUE	25007224				
				R	25513049	42	GREEN	25007308				
				S	25513050	43	PURPLE	25007308				

TIRE SIZE	AXLE	TRANS	DRIVE GEAR	DRIVEN GEAR	ADAPTER
P255/50ZR16			A	N	
P275/40ZR17	2.59	MD8	A	O	
P255/50ZR16			A	P	
P275/40ZR17	2.73	MD8	A	Q	
P255/50ZR16,P275/40ZR17	3.07	MD8	A	R	
P255/50ZR16			B	R	
P275/40ZR17,P315/35ZR17	3.54	ML9	B	S	

© 2000 GENERAL MOTORS SERVICE PARTS OPERATIONS–CHEVROLET–14Y

1990 SPEEDO GEAR USAGE CHART
"Y" CAR

NOTE: SLEEVE PART NUMBER IS SHOWN ONLY IF SERVICED SEPARATELY. WHEN SLEEVE NUMBER IS NOT SHOWN THEN IT IS SERVICED AS PART OF THE DRIVEN GEAR.

CODE	DRIVE GEAR	TEETH	COLOR	CODE	DRIVEN GEAR	TEETH	COLOR OR CODE	SLEEVE OR SENSOR	CODE	ADAPTER	RATIO	STMPD
A	8640517	17	RED	O	25513043	36	WHITE	25007224				
B	8642620	16	GRAY	P	25513045	38	BLUE	25007224				
				Q	25513047	40	BLACK	25007308				
				R	25513049	42	GREEN	25007308				
				S	25513050	43	PURPLE	25007308				

TIRE SIZE	AXLE	TRANS	DRIVE GEAR	DRIVEN GEAR	ADAPTER
P275/40ZR17	2.59	MD8	A	O	
P275/40ZR17	2.73	MD8	A	P	
P255/50ZR16,P275/40ZR17	3.07	MD8	A	R	
P275/40ZR17	3.33	ML9	B	Q	
P275/40ZR17,P315/35ZR17	3.45	ML9	B	R	

© 2000 GENERAL MOTORS SERVICE PARTS OPERATIONS-CHEVROLET-14Y

1991 SPEEDO GEAR USAGE CHART
"Y" CAR

NOTE: SLEEVE PART NUMBER IS SHOWN ONLY IF SERVICED SEPARATELY. WHEN SLEEVE NUMBER IS NOT SHOWN THEN IT IS SERVICED AS PART OF THE DRIVEN GEAR.

CODE	DRIVE GEAR	TEETH	COLOR	CODE	DRIVEN GEAR	TEETH	COLOR OR CODE	SLEEVE OR SENSOR	CODE	ADAPTER	RATIO	STMPD
A	8640517	17	RED	O	26513043	36	WHITE	10456092				
B	12607670	16	GRAY	P	26513046	38	BLUE	10456092				
				Q	26513049	42	GREEN	10456091				
				R	26513049	42	GREEN	10456089				
				S	26513050	43	PURPLE	10456089				

TIRE SIZE	AXLE	TRANS	DRIVE GEAR	DRIVEN GEAR	ADAPTER
P275/40ZR17	2.59	MD8	A	O	
P275/40ZR17	2.73	MD8	A	P	
P275/40ZR17	3.07	MD8	A	Q	
P275/40ZR17,P315/35ZR17	3.45	ML9	B	R	
P275/40ZR17,P315/35ZR17	3.64	ML9	B	S	

© 2000 GENERAL MOTORS SERVICE PARTS OPERATIONS--CHEVROLET-14Y

1992 SPEEDO GEAR USAGE CHART
"Y" CAR

NOTE: SLEEVE PART NUMBER IS SHOWN ONLY IF SERVICED SEPARATELY. WHEN SLEEVE NUMBER IS NOT SHOWN THEN IT IS SERVICED AS PART OF THE DRIVEN GEAR.

CODE	DRIVE GEAR	TEETH	COLOR	CODE	DRIVEN GEAR	TEETH	COLOR OR CODE	SLEEVE OR SENSOR	CODE	ADAPTER	RATIO	STMP'D
A	06405?/	17	RED	O	25513043	36	WHITE	10456091				
B	12507670	16	GRAY	P	25513045	38	BLUE	10456091				
				Q	25513049	42	GREEN	10456092				
				R	25513049	42	GREEN	10456089				
				S	25513050	43	PURPLE	10456089				

TIRE SIZE	AXLE	TRANS	DRIVE GEAR	DRIVEN GEAR	ADAPTER
P275/40ZR17	2.59	MD8	A	O	
P275/40ZR17	2.73	MD8	A	P	
P275/40ZR17	3.07	MD8	A	Q	
P275/40ZR17,P315/35ZR17	3.45	ML9	B	R	
P275/40ZR17,P315/35ZR17	3.54	ML9	B	S	

© 2000 GENERAL MOTORS SERVICE PARTS OPERATIONS-CHEVROLET-14Y

1993 SPEEDO GEAR USAGE CHART
"Y" CAR

NOTE: SLEEVE PART NUMBER IS SHOWN ONLY IF SERVICED SEPARATELY. WHEN SLEEVE NUMBER IS NOT SHOWN THEN IT IS SERVICED AS PART OF THE DRIVEN GEAR.

CODE	DRIVE GEAR	TEETH	COLOR	CODE	DRIVEN GEAR	TEETH	COLOR OR CODE	SLEEVE OR SENSOR	CODE	ADAPTER	RATIO	STMPD
A	8640617	17	RED	O	25513042	35	ORANGE	10456091				
B	12507670	16	GRAY	P	25513044	37	RED	10456091				
				Q	25513049	42	GREEN	10456092				
				R	25513049	42	GREEN	10456089				
				S	25513050	43	PURPLE	10456089				

TIRE SIZE	AXLE	TRANS	DRIVE GEAR	DRIVEN GEAR	ADAPTR
P285/40ZR17	2.59	MD8	A	O	
P285/40ZR17	2.73	MD8	A	P	
P275/40ZR17,P285/40ZR17	3.07	MD8	A	Q	
P275/40ZR17,P315/35ZR17,P285/40ZR17	3.45	ML9	B	R	
P315/35ZR17	3.54	ML9	B	S	

© 2000 GENERAL MOTORS SERVICE PARTS OPERATIONS-CHEVROLET-14Y

1994 SPEEDO GEAR USAGE CHART
"Y" CAR

NOTE: SLEEVE PART NUMBER IS SHOWN ONLY IF SERVICED SEPARATELY. WHEN SLEEVE NUMBER IS NOT SHOWN THEN IT IS SERVICED AS PART OF THE DRIVEN GEAR.

CODE	DRIVE GEAR	TEETH	COLOR	CODE	DRIVEN GEAR	TEETH	COLOR OR CODE	SLEEVE OR SENSOR	CODE	ADAPTER	RATIO	STMPD
D	12507670	15	GRAY	R T	25513049 25513047	42 40	GREEN BLACK	10456089 10456089				

TIRE SIZE	AXLE	TRANS	DRIVE GEAR	DRIVEN GEAR	ADAPTER
P255/45ZR17,P285/40ZR17	3.33	ML9	D	T	
P285/40ZR17,P275/40ZR17,P315/35ZR17	3.45	ML9	D	R	

© 2000 GENERAL MOTORS SERVICE PARTS OPERATIONS–CHEVROLET–14Y

1995 - 1996 SPEEDO GEAR USAGE CHART
"Y" CAR

NOTE: SLEEVE PART NUMBER IS SHOWN ONLY IF SERVICED SEPARATELY. WHEN SLEEVE NUMBER IS NOT SHOWN THEN IT IS SERVICED AS PART OF THE DRIVEN GEAR.

CODE	DRIVE GEAR	TEETH	COLOR	CODE	DRIVEN GEAR	TEETH	COLOR OR CODE	SLEEVE OR SENSOR	CODE	ADAPTER	RATIO	STMP'D
B	12507670	16	GRAY	R	25513049	42	GREEN	10466089				

TIRE SIZE	AXLE	TRANS	DRIVE GEAR	DRIVEN GEAR	ADAPT'R
P255/45ZR17, P285/40ZR17	3.45	ML9	B	R	

© 2000 GENERAL MOTORS SERVICE PARTS OPERATIONS-CHEVROLET-14Y

4.338 SEAL, Speedometer Driven Gear

84-93	Y 4-SPD A/TRANS (MD8) ...	25518664	1	1.82	SEAL, SPEEDO DRVN GR SLEV (O RING) (.3" I.D. X .5" O.D.) (ASM) (RUBBER & METAL)) (AC-DELCO #25518664)	5-H20,42
84-88	Y	15552872	1	*1.82	SEAL, SPEEDO SEN (AC-DELCO #15552872)	5-H5,42
94-96	Y 4-SPD A/TRANS (M30) ...	15552872	1	*1.82	SEAL, VEH SPD SEN (O RING) (TEFLON) (AC-DELCO #15552872)	5-H5,42

4.343 GEAR - WHEEL, Speedometer Drive

NOTE: FOR 1984-1991 USAGE REFER TO SPEEDO GEAR CHART GRP 4.337

84-93	Y 4-SPD A/TRANS (MD8) ...	8640517	1	5.23	GEAR, SPEEDO SEN (17 TEETH, RED) (AC-DELCO #8640517)	5-H9,689
94-96	Y 4-SPD A/TRANS (M30) ...	24202711	1	7.60	WHEEL, VEH SPD SEN RELUCTOR (AC-DELCO #24202711)	5-J11,699

4.345 CLIP, Speedometer Drive Gear

84-90	Y	6261781	1	*1.82	CLIP, SPEEDO DRV GR (AC-DELCO #6261781)	5-H9,688
84-93	Y 4-SPD A/TRANS (MD8) ...	6261781	1	*1.82	CLIP, SPEEDO DRV GR (AC-DELCO #6261781)	5-H9,688

© 2000 GENERAL MOTORS SERVICE PARTS OPERATIONS-CHEVROLET-14Y

MICROFICHE INDEX

GROUP 4.000

FICHE 5 OF 11

GROUP	DESCRIPTION	STARTING GRID LOCATION PARTS	ILLUSTRATIONS
–	GENERAL INFORMATION	1–A2	1–G2
–	ALPHABETICAL INDEX	1–B13	N.A.
4.000	4–SPEED TRANSMISSION	5–A2	5–F2
4.000	6–SPEED TRANSMISSION	5–B2	5–G2
4.000	AUTOMATIC TRANSMISSION	5–C2	5–H2
·	OUT OF FICHE CALLS	N.A.	5–M23

5–F1

CHEVROLET
CHASSIS GROUP 4.000

ILLUSTRATION INDEX

	TITLE	GRID
1984–1988	Y 4–SPEED MANUAL TRANSMISSION PART 1 (MK2,MH5)	5–F4
1984–1988	Y 4–SPEED MANUAL TRANSMISSION PART 2 (MK2,MH5)	5–F8
1984–1988	Y 4–SPEED MANUAL TRANSMISSION PART 3 (MK2,MH5)	5–F11
1984–1988	Y SHIFT CONTROLS/MANUAL TRANSMISSION 4 SPEED (MK2)	5–F13
1989–1996	Y SHIFT CONTROLS/MANUAL TRANSMISSION (ML9)	5–F15

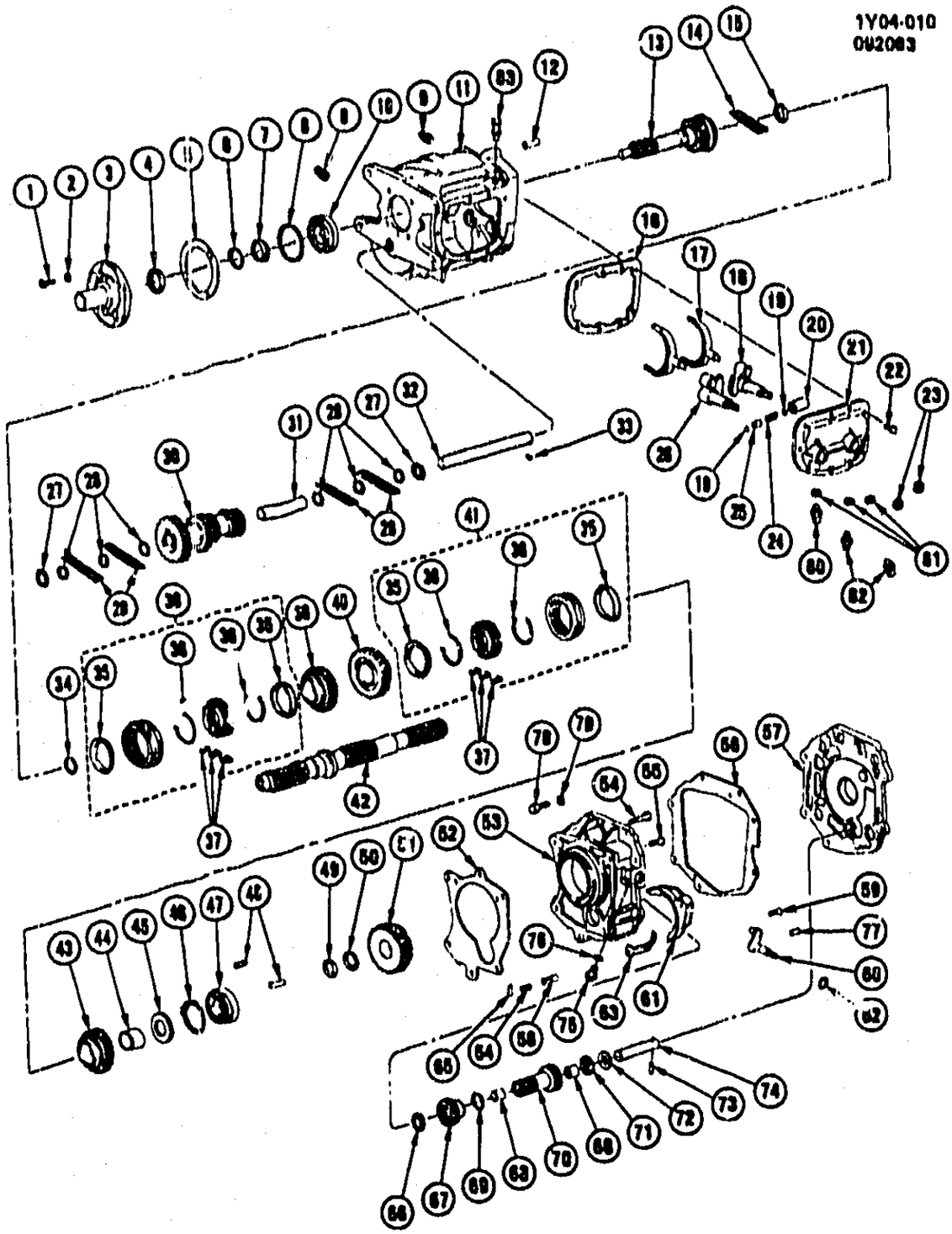

1Y04-010

1984-1988 Y 4-SPEED MANUAL TRANSMISSION PART 1 (MK2,MH5)

1.		8.900	BOLT, HEX (5/16"-18 X 7/8")	
2.		8.932	WASHER, EXT LK (M8 X 15)	
3.	5-A15	4.376	RETAINER, MAIN DR GR BRG FRT (AC-DELCO #360806)	360806
4.	5-A15	4.354	SEAL, MAIN DR GR BRG FRT OIL (AC-DELCO #3987936)	3987936
5.	5-A15	4.358	GASKET, MAIN DR GR BRG RET (AC-DELCO #1359473)	1359473

© 2000 GENERAL MOTORS SERVICE PARTS OPERATIONS-CHEVROLET-14Y

				1Y04-010
6.	5-A15	4.376	RING, MAIN DR GR BRG RET SNAP (2.21MM) (AC-DELCO #3709351)	3709351
	5-A15	4.376	RING, MAIN DR GR BRG RET SNAP (2.29MM) (AC-DELCO #12384946)	12384946
	5-A15	4.376	RING, MAIN DR GR BRG RET SNAP (2.36MM) (AC-DELCO #3709353)	3709353
	5-A15	4.376	RING, MAIN DR GR BRG RET SNAP (2.44MM) (AC-DELCO #3709354)	3709354
		DISCON	RING, MAIN DR GR BRG RET SNAP (2.51MM)	3709355
		DISCON	RING, MAIN DR GR BRG RET SNAP (2.59MM)	3709356
7.	5-A15	4.376	SPACER, MAIN DR G BRG (AC-DELCO #3709350)	3709350
8.	5-A16	4.412	RING, MAIN DR GR BRG LOC (AC-DELCO #2830050)	2830050
9.	5-A14	4.105	PLUG, TRANS CASE MAGNETIC (AC-DELCO #3930923)	3930923
		8.971	PLUG, SQ HD FILL (1/2"-14)	
10.	5-A15	4.355	BEARING, MAIN DR GR (AC-DELCO #9441907)	9441907
11.		DISCON	CASE, TRANS	14081162
12.		N.S.	PIN, DOWEL (5/16" X 1")	
13.	5-A15	4.351	GEAR, MAIN DRIVE (AC-DELCO #14024318)	14024318
14.	5-A15	4.352	BEARING, MAIN DR GR PILOT RR	7451735
15.	5-A15	4.353	SPACER, MAIN SHF PILOT BRG (AC-DELCO #389677)	389677
16.	5-A14	4.109	GASKET, SI CVR (AC-DELCO #3709316)	3709316
17.	5-A14	4.303	FORK, SHFT (1-2, 3-4) (AC-DELCO #360088)	360088
18.		DISCON	SHAFT, 1ST & 2ND SHFT	14081168
19.		8.899	BALL, STL (3/8")	
20.		DISCON	SLEEVE, INTLK (25.66MM)	360089
		DISCON	SLEEVE, INTLK (25.70MM)	360090
		DISCON	SLEEVE, INTLK (25.74MM)	360091
		DISCON	SLEEVE, INTLK (25.77MM)	360092
		DISCON	SLEEVE, INTLK (25.81MM)	360093
		DISCON	SLEEVE, INTLK (25.85MM)	360094
		DISCON	SLEEVE, INTLK (25.89MM)	360095
		DISCON	SLEEVE, INTLK (25.93MM)	360096
		DISCON	SLEEVE, INTLK (25.97MM)	360097
		DISCON	SLEEVE, INTLK (26.00MM)	360098
		DISCON	SLEEVE, INTLK (26.04MM)	474032
		DISCON	SLEEVE, INTLK (26.08MM)	474033
21.		DISCON	COVER, SI (1984)	14081166
		DISCON	COVER, SI (1985) (1987-88)	14081166
		DISCON	COVER, SI (1986)	14081166
22.		DISCON	BOLT, CVR	14082797
23.	5-A14	4.107	SEAL, SHFT LVR SHF OIL	5696537
24.		DISCON	SPRING, SHFT LVR POPPET	3709310
25.	5-A14	4.307	PIN, INTLK (AC-DELCO #3709315)	3709315
26.	5-A14	4.302	SHAFT, 3RD & 4TH SHFT (AC-DELCO #14081169)	14081169
27.	5-A17	4.423	WASHER, CNTR GR RR (AC-DELCO #6260714)	6260714
28.	5-A17	4.423	WASHER, CNTR SHF BRG RLR (AC-DELCO #3864856)	3864856
29.	5-A17	4.422	BEARING, CNTR GR RLR (AC-DELCO #435847)	435847
30.	5-A17	4.421	GEAR, CNTR (AC-DELCO #14024317)	14024317
31.		DISCON	SPACER, CNTR GR BRG	474036
32.	5-A17	4.428	SHAFT, CNTR GR (AC-DELCO #14105969)	14105969
33.		8.960	KEY, WOODRUFF (1/8" X 5/8")	
34.	5-A16	4.412	RING, MAIN SHF RR BRG RET (2.21MM) (AC-DELCO #3709351)	3709351
	5-A16	4.412	RING, MAIN SHF RR BRG RET (2.29MM) (AC-DELCO #12384946)	12384946
	5-A16	4.412	RING, MAIN SHF RR BRG RET (2.36MM) (AC-DELCO #3709353)	3709353
	5-A16	4.412	RING, MAIN SHF RR BRG RET (2.44MM) (AC-DELCO #3709354)	3709354
		DISCON	RING, MAIN SHF RR BRG RET (2.51MM)	3709355
		DISCON	RING, MAIN SHF RR BRG RET (2.59MM)	3709356

© 2000 GENERAL MOTORS SERVICE PARTS OPERATIONS-CHEVROLET-14Y

				1Y04-010
35.	5-A16	4.383	RING, SYNC BLOCKING (AC-DELCO #360812)	360812
36.	5-A17	4.413	SPRING, SYNC (AC-DELCO #3870810)	3870810
37.	5-A16	4.384	KEY, SYNC (AC-DELCO #3870793)	3870793
38.		DISCON	SYNCHRONIZER, 3RD & 4TH-W/BLOCKING RINGS	14101338
39.	5-A17	4.415	GEAR, 3RD SPD (21 TEETH) (AC-DELCO #14024322)	14024322
40.		DISCON	GEAR, 2ND SPD (25 TEETH)	474035
41.	5-A16	4.360	SYNCHRONIZER, 1ST & 2ND-W/BLOCKING RINGS (AC-DELCO #14101337)	14101337
42.	5-A16	4.403	SHAFT, MAIN (AC-DELCO #14081170)	14081170
43.		DISCON	GEAR, 1ST SPD (34 TEETH)	360803
44.		DISCON	SLEEVE, 1ST SPD GR	6260712
45.		DISCON	WASHER, 1ST SPD GR THR (1984) (1984 1ST DES IS .134 THK.)	6260715
		DISCON	WASHER, 1ST SPD GR THR (1984-88) (1984 2ND DES IS .118 THK.)	14091352
46.		DISCON	RING, SNAP-RR BRG LOC (1984) (1984 1ST DES IS 3.00 I.D.)	3911967
		DISCON	RING, SNAP-RR BRG LOC (1984-88) (1984 2ND DES IS 3.38 I.D.)	14091354
47.		DISCON	BEARING, MAIN SHF RR (1ST DESIGN) (1984) (1984 1ST DES IS 3.15 O.D.)	12334785
	5-A16	4.408	BEARING, MAIN SHF RR (2ND DESIGN) (1984-88) (1984 2ND DES IS 3.54 O.D.) (AC-DELCO #9441624)	9441624
48.		N.S.	PIN, DOWEL (PART OF #53)	
49.	5-A15	4.376	SPACER, MAIN DR GR BRG (AC-DELCO #3709350)	3709350
50.	5-A16	4.412	RING, MAIN DR GR BRG RET (2.21MM) (AC-DELCO #3709351)	3709351
	5-A16	4.412	RING, MAIN DR GR BRG RET (2.29MM) (AC-DELCO #12364946)	12364946
	5-A16	4.412	RING, MAIN DR GR BRG RET (2.36MM) (AC-DELCO #3709353)	3709353
	5-A16	4.412	RING, MAIN DR GR BRG RET (2.44MM) (AC-DELCO #3709354)	3709354
		DISCON	RING, MAIN DR GR BRG RET (2.51MM)	3709355
		DISCON	RING, MAIN DR GR BRG RET (2.59MM)	3709356
51.		DISCON	GEAR, REV (39 TEETH)	14081174
52.	5-A19	4.460	GASKET, O/D ADAP	12524261
53.		DISCON	RETAINER, RR BRG (INCL #46, 47, 48, 62)	14091353
54.	5-A15	4.319	BOLT, RR BRG RET (HEX 1/2"-13 X 1 1/8") (3 REQD) (AC-DELCO #3774911)	3774911
55.		DISCON	BOLT, RR BRG RET (SOC HD 12PT 1/2"-13 X 2") (2 REQD)	14083501
56.	5-A18	4.455	GASKET, ADAPT PLATE	14081178
57.		DISCON	PLATE, ADAPTER	14082724
58.		DISCON	PIN, REV DETENT	14081176
59.	5-A15	4.319	SCREW, RR BRG RET (FL HD W/NY INS 1/2"-13 X 1 1/4") (AC-DELCO #14082800)	14082800
60.		DISCON	SHAFT, REV SHFT	14081175
61.		DISCON	FORK, REV SHFT	14081173
62.	5-A14	4.107	SEAL, REV SHFT SHF OIL (6.525)	5696537
63.		DISCON	BRACKET, TBI HARN CLIP	14081179
64.		DISCON	SPRING, REV DETNET PIN POPPET	14082799
65.		DISCON	PIN, REV DETENT SPR	14081172
66.	5-A18	4.437	WASHER, FRT REV IDL GR THR (AC-DELCO #3774909)	3774909
67.		DISCON	GEAR, REV IDL FRT	14024315
68.		N.S.	BUSHING, REV IDL (PART OF #70)	
69.		DISCON	RING, REV IDL GR RET	3774910
70.		DISCON	GEAR, REV IDL RR (INCL #68)	14081171
71.		DISCON	BEARING, REV IDL THR	9441010
72.		DISCON	WASHER, RR REV IDL GR THR	14082798
73.		8.939	PIN, SPR (1/4" X 1/2")	
74.		DISCON	SHAFT, REV IDL	3746277
75.	5-A22	4.480	SWITCH, O/D OVERRIDE REV GR (AC-DELCO #14057528)	14057528
76.		DISCON	SEAL, REV GR SW (1984)	14073444
77.		8.940	PIN, SOLID TAPER (5/32" X 1 1/4")	

© 2000 GENERAL MOTORS SERVICE PARTS OPERATIONS-CHEVROLET-14Y

				1Y04-010
78.		8.000	BOLT, TRANS TO O/D (0.029)	14060030
79.	5-A18	4.463	WASHER, TRANS TO O/D BOLT LK	14062796
80.	5-A22	4.480	SWITCH, O/D OVERRIDE (3-4) (AC-DELCO #14057528)	14057528
81.	5-A22	4.480	GASKET, O/D OVERRIDE SW (AC-DELCO #14081180)	14081180
82.	5-A22	4.480	SWITCH, O/D OVERRIDE (1-2) (2 REQD) (AC-DELCO #14057529)	14057529
83.		DISCON	VENTILATOR, TRANS	14105970

© 2000 GENERAL MOTORS SERVICE PARTS OPERATIONS-CHEVROLET-14Y

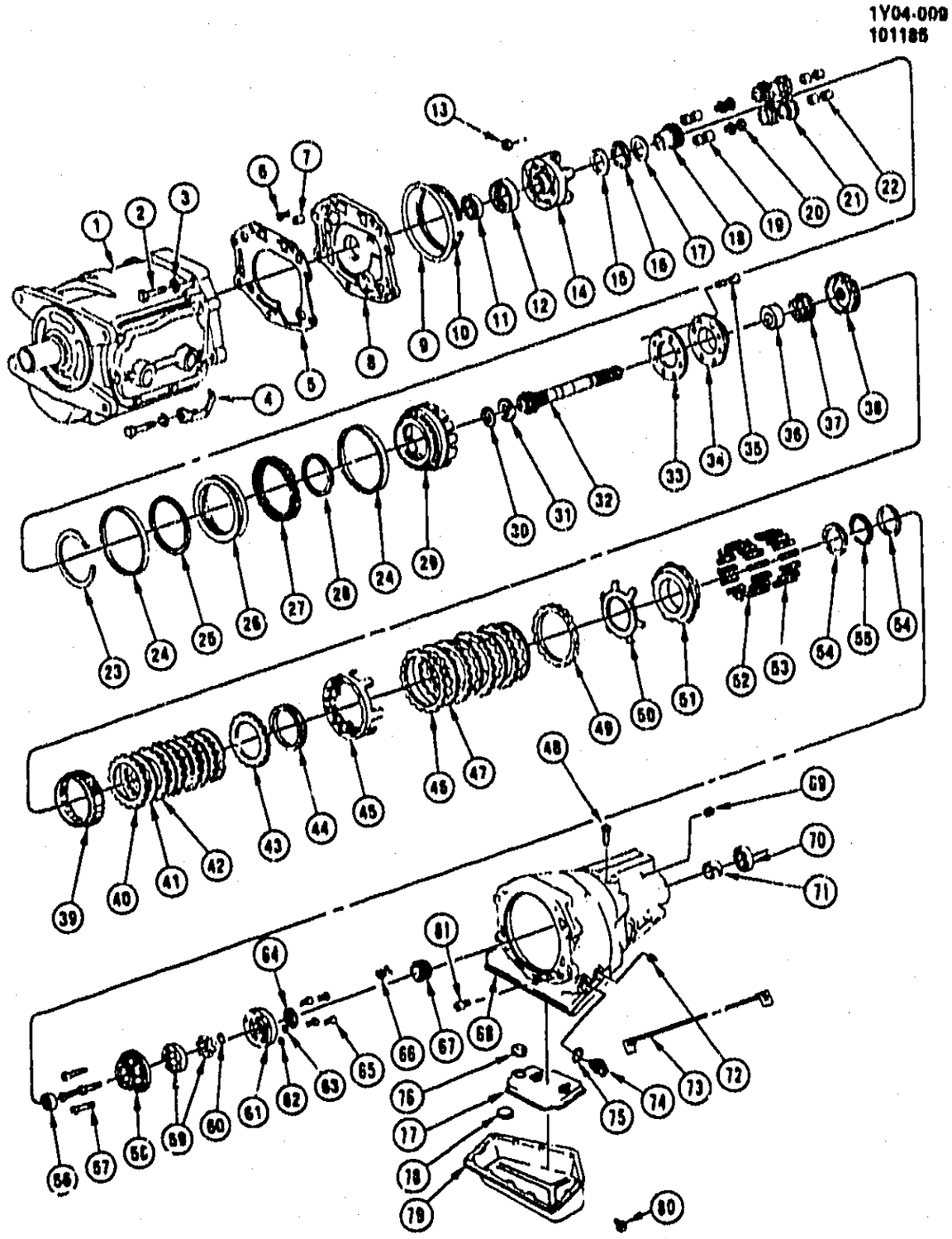

1Y04-009

1984-1988 Y 4-SPEED MANUAL TRANSMISSION PART 2 (MK2,MH5)

1.		4.003	TRANSMISSION (LESS O/D UNIT) (1984)	
		4.003	TRANSMISSION (LESS O/D UNIT) (1985)	
		4.003	TRANSMISSION (LESS O/D UNIT) (1986)	
2.		8.900	BOLT, TRANS TO O/D (0.029)	14060030
3.	5-A18	4.455	WASHER, TRANS TO O/D BOLT LK	14082796

© 2000 GENERAL MOTORS SERVICE PARTS OPERATIONS-CHEVROLET-14Y

				1Y04-009
4.		DISCON	BRACKET, TBI HARN CLIP	14081179
5.	5-A18	4.455	GASKET, ADAP PLATE	14081178
6.	5-A18	4.455	SCREW, ADAP PLATE	14082769
7.		N.S.	PIN, DOWEL (M3.095 HOLE DIA)	
8.		DISCON	PLATE, ADAP	14082724
9.	5-A18	4.455	SEAL, OVERDRIVE ADAPTER PLT (6.987 I.D.) (O RING)	14082751
10.		DISCON	RING, ACCUM PSTN RET	14082767
11.	5-A22	4.472	SEAL, INPUT SUN GR OIL	14082784
12.		N.S.	BEARING, ANNULAR (PART OF #14)	
13.		DISCON	NUT, CARRIER BRG LK	14082765
14.		DISCON	CARRIER, PLNT GR	14105940
15.		DISCON	WASHER, INPUT SUN GR THR	14082744
16.	5-A22	4.472	BEARING, INPUT SUN GR THR	9440400
17.		DISCON	WASHER, OVERDRIVE INPUT SUN GR THR (.158-160)	14082713
		DISCON	WASHER, OVERDRIVE INPUT SUN GR THR (.153-.155)	14082714
		DISCON	WASHER, OVERDRIVE INPUT SUN GR THR (.148-.150)	14082715
		DISCON	WASHER, OVERDRIVE INPUT SUN GR THR (.143-.145)	14082716
		DISCON	WASHER, OVERDRIVE INPUT SUN GR THR (.138-140)	14082717
		DISCON	WASHER, OVERDRIVE INPUT SUN GR THR (.133-.135)	14082718
		DISCON	WASHER, OVERDRIVE INPUT SUN GR THR (.128-.130)	14082719
		DISCON	WASHER, OVERDRIVE INPUT SUN GR THR (.123-.125)	14082720
18.		DISCON	GEAR, INPUT SUN (1984-86-MK2)	14082711
		DISCON	GEAR, INPUT SUN (1985-88-MH5)	14091492
19.		N.S.	CUP, BRG (PART OF #14)	
20.		DISCON	WASHER, PLNT GR THR	14082710
21.		DISCON	GEAR PKG, OVERDRIVE PLANETARY	14091329
		DISCON	GEAR SET, OVERDRIVE PLANETARY (1985-88-MH5)	14091491
22.		N.S.	CUP, BRG (PART OF #39)	
23.		DISCON	RING, ACCUM PSTN RET	14082768
24.	5-A19	4.462	SEAL, ACCUM PSTN (6.734 ID)	14082757
25.		DISCON	SEAL, ACCUM PSTN (5.734 ID)	14082755
26.		DISCON	PISTON, ACCUM CUSH	14105923
27.		DISCON	SPRING, ACCUM PSTN	14082759
28.		DISCON	SEAL, ACCUM PSTN (3.86 ID)	14082756
29.		DISCON	PISTON, ACCUM (INCL #23, 25, 26, 27) (1984-85)	14082722
		DISCON	PISTON, ACCUM (1986-88)	14105935
30.		DISCON	WASHER, OTPT SHF THR	14082743
31.		DISCON	BEARING, OTPT SHF THR	9440399
32.		DISCON	SHAFT, OTPT (INCL #36)	14081185
33.		DISCON	PLATE, PLNT GR THR	14082708
34.		N.S.	PLATE, CLU DRUM (PART OF #39)	
35.		DISCON	BOLT, CLU DRUM	14082703
36.		N.S.	RACE, INR (PART OF #32)	
37.	5-A20	4.468	SPRAG, DIR CLU (4.180) (AC-DELCO #10121024)	10121024
38.		DISCON	HUB, DIR CLU	14081186
39.		DISCON	DRUM, DIR CLU (INCL #22, 34)	14082702
40.	5-A21	4.469	PLATE, DIR CLU INR DRIVEN (.080-.084)	14081195
		DISCON	PLATE, DIR CLU INR DRIVEN (.090-.094)	14081196
		DISCON	PLATE, DIR CLU INR DRIVEN (.100-.104)	14081197
		DISCON	PLATE, DIR CLU INR DRIVEN (.110-.114) (1984-85)	14081198
		DISCON	PLATE, DIR CLU INR DRIVEN (.120-.124) (1984-85)	14081199
		DISCON	PLATE, CLU DRIVEN (.058- 063) (1986-88)	14105931
41.	5-A20	4.468	PLATE, DIR CLU (1984-85)	14081192
		DISCON	PLATE, DIR CLU (1986-88)	14105930
42.		DISCON	PLATE, DIR CLU DRIVEN	14081193
43.		DISCON	PLATE, DIR CLU PRESS (1984-85)	14081191
		DISCON	PLATE, DIR CLU PRESS (1986-87)	14105929

© 2000 GENERAL MOTORS SERVICE PARTS OPERATIONS-CHEVROLET-14Y

				1Y04-009
44.		DISCON	BEARING, DIR CLU	9440402
45.		DISCON	PISTON, O/D CLU	14082707
46.		DISCON	PLATE, CLU DRIVEN	14082706
47.	5-A20	4.468	PLATE, CLU (1984-85)	14105933
	5-A20	4.468	PLATE, CLU (1986-88)	14105933
48.		DISCON	PIPE, O/D VENT	14101477
49.		DISCON	PLATE, O/D CLU PRESS (1984-85)	14082704
		DISCON	PLATE, O/D CLU PRESS (1986-88)	14105932
50.	5-A20	4.468	WASHER, DIR CLU THR (AC-DELCO #14091496)	14091496
51.		DISCON	PISTON, DIR CLU	14081184
52.		DISCON	SPRING, DIR CLU OTR	14081182
53.		DISCON	SPRING, DIR CLU INR	14081183
54.		DISCON	WASHER, DIR CLU HUB THR	14082742
55.		DISCON	BEARING, DIR CLU HUB THR	9440401
56.		N.S.	CUR PUMP BRG (PART OF #58)	
57.		DISCON	SCREW, PUMP & OTPT SHF	14082763
58.		DISCON	HOUSING, W/BRG-PUMP (INCL #56, 65)	14081187
59.		DISCON	PUMP, OIL	14081188
60.		DISCON	PIN, OIL PUMP DRIVE	14082747
61.		DISCON	SPOOL, PUMP (GEROTOR)	14091349
62.		DISCON	SEAL, OVERDRIVE OIL PUMP (.676 I.D.) (O RING)	14082750
63.		DISCON	SEAL, OVERDRIVE OIL PUMP (.489 I.D.) (O RING)	14082749
64.		DISCON	SEAL, GEROTOR SPOOL	14091351
65.		DISCON	SCREW, PUMP SPOOL	14082762
66.	5-A15	4.345	CLIP, SPEEDO DRIVE GR (AC-DELCO #6261781)	6261781
67.	5-E13	4.343	GEAR, SPEEDO DRIVE (17 TEETH) (RED) (AC-DELCO #8640517)	8640517
68.		DISCON	CASE, O/D (INCL #71) (1984-85)	14081181
		DISCON	CASE, O/D (INCL #71) (1986-88)	14105939
69.	5-A18	4.455	PLUG, OVERDRIVE HOUSING (1.153) (MK2, MH5) (AC-DELCO #10040001)	10040001
70.	5-A20	4.468	SEAL, OTPT SHF OIL (4.318) (AC-DELCO #8673526)	8673526
71.		N.S.	BUSHING, CASE (PART OF #68)	
72.		8.971	PLUG, SQ HD FILLER (1/2"-14)	
73.		DISCON	WIRE, VLV BODY PRESS SW	14082732
74.	5-A19	4.461	CONNECTOR, SOL ELEC (4.205) (AC-DELCO #24205373)	24205373
75.	5-C14	4.115	SEAL, SOL ELEC CONN O RING (4.338) (AC-DELCO #10054241)	10054241
76.	5-A18	4.456	GROMMET, OIL SCREEN TUBE	14082783
77.	5-A18	4.456	SCREEN, OIL	14082735
78.		DISCON	MAGNET, OIL PAN	14082736
79.		DISCON	PAN, OIL	14082737
80.	5-A20	4.460	BOLT, OIL PAN	11503864
81.		N.S.	FITTING, OIL COOLER	

© 2000 GENERAL MOTORS SERVICE PARTS OPERATIONS-CHEVROLET-14Y

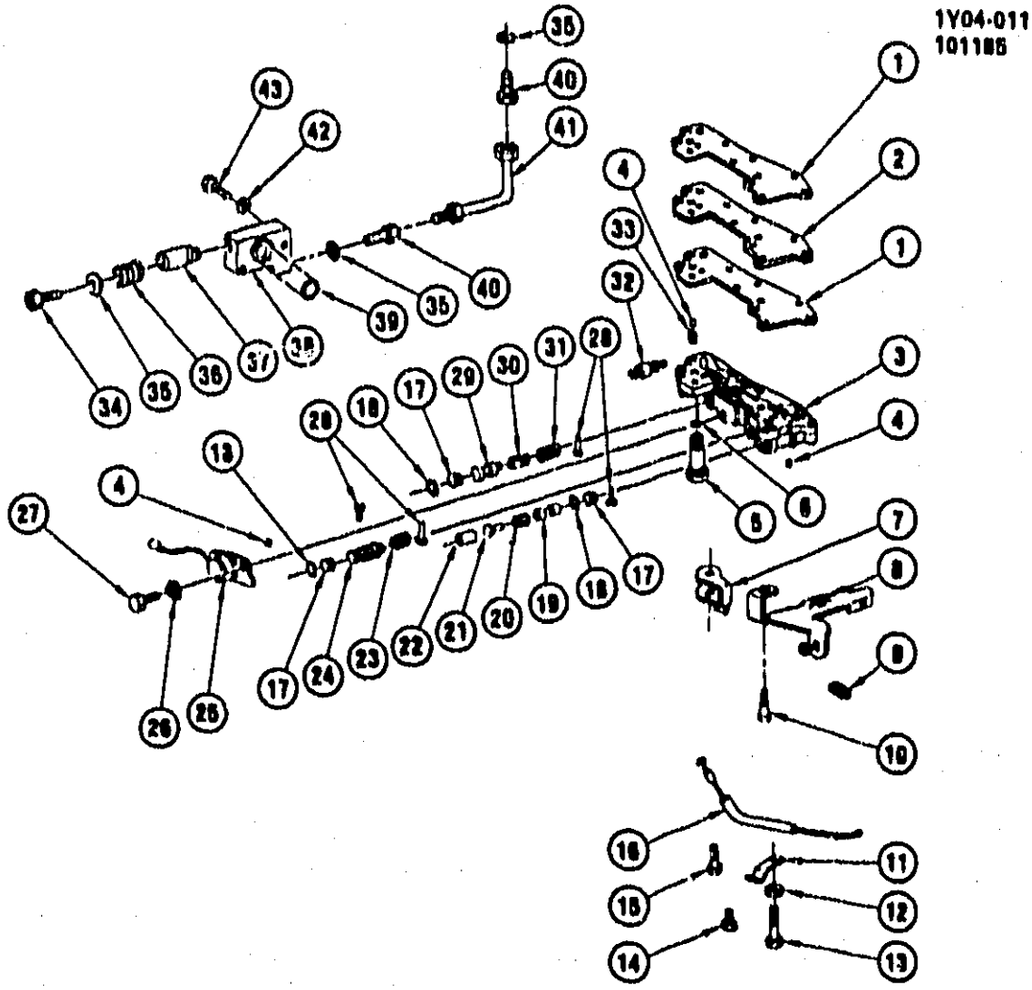

1Y04-011

1984-1988 Y 4-SPEED MANUAL TRANSMISSION PART 3 (MK2,MH5)

1.	5-A19	4.461	GASKET, VLV BODY	14082726
2.		DISCON	PLATE, VLV BODY SPCR (1984-85-MK2)	14091493
		DISCON	PLATE, VLV BODY SPCR (1985-MH5)	14091493
		DISCON	PLATE, VLV BODY SPCR (1986-88)	14105936
3.		DISCON	BODY, OVERDRIVE VLV (W/CNTRSUNK SOCKET HEAD SCREWS) (INCLS 4 THRU 33) (1984)	14091355
		DISCON	BODY, OVERDRIVE VLV (1985)	14091355
		DISCON	BODY, OVERDRIVE VLV (1986-88)	14105937
4.		8.899	BALL, STL (5/16")	
5.		DISCON	TUBE, OIL SCRN	14082731
6.		DISCON	SEAL, PICK-UP TUBE (.676 I.D.) (O RING)	14082750
7.		N.S.	CAM, THROT VLV LVR (PART OF #3)	
8.		DISCON	LEVER, THROT VLV	14082733
9.		DISCON	STOP, THROT VLV LVR	14082778
10.		DISCON	BOLT, THROT VLV LVR	14082782
11.		DISCON	CLIP, THROT VLV CABLE	14082780
12.	5-A19	4.461	WASHER, THROT VLV LVR STOP	14082779
13.		DISCON	BOLT, VLV BODY	14082773
14.		8.900	BOLT, HEX (M6 X 1 X 25)	
15.		8.900	BOLT, HEX (M6 X 1 X 40)	
		8.900	BOLT, HEX (M6 X 1 X 45)	
16.		DISCON	CABLE, VLV BODY THROT VLV	14082734

© 2000 GENERAL MOTORS SERVICE PARTS OPERATIONS-CHEVROLET-14Y

17.		N.S.	PLUG, END (PART OF #3)	
18.		DISCON	SEAL, OVERDRIVE OIL PUMP (.489 I.D.) (O RING)	14082749
		DISCON	SEAL, OVERDRIVE OIL PUMP (.676 I.D.) (O RING)	14082750
19.		N.S.	SPOOL, MOD (PART OF #3)	
20.		N.S.	SPRING, MOD (PART OF #3)	
21.		N.S.	BUSHING, PSTN (PART OF #3)	
22.		N.S.	PISTON, MOD (PART OF #3)	
23.		N.S.	SPRING, SHFT (PART OF #3)	
24.		N.S.	SPOOL, SHFT (PART OF #3)	
25.	5-A19	4.461	SOLENOID, VLV BODY	14082729
26.	5-A19	4.461	WASHER, VLV BODY SOL BOLT	14082772
27.	5-A19	4.461	BOLT, VLV BODY SOL (1984)	14082771
		DISCON	BOLT, VLV BODY SOL (1985-86)	25527674
28.		N.S.	PIN (PART OF #3)	
29.		N.S.	SPOOL, RLF (PART OF #3)	
30.		N.S.	SPRING, INR RLF (PART OF #3)	
31.		N.S.	SPRING, OTR RLF (PART OF #3)	
32.		DISCON	SWITCH, PRESS O/D VLV BODY	14082730
33.		DISCON	SPRING, PSTN EXH CHK VLV BALL	14082760
34.		DISCON	CONNECTOR, OIL COOLER BY-PASS VLV	14082739
35.		DISCON	SEAL, OVERDRIVE OIL COOLER VLV CONN (.410 I.D.) (O RING)	14082752
36.		DISCON	SPRING, OIL COOLER CHK VLV	14091333
37.		N.S.	SPOOL, COOLER VLV (PART OF #38)	
38.		DISCON	VALVE, OIL COOLER	14082738
39.		DISCON	SEAL, OVERDRIVE OIL COOLER VLV (.810 I.D.) (O RING)	14082753
40.		N.S.	FITTING, OIL COOLER (1/2"-20 45~ FLARE) (ITEM #40 IS PART OF ITEM #38)	
41.		DISCON	TUBE, OIL VLV (2.68 LG)	14082740
42.	5-A18	4.457	WASHER, OIL COOLER VLV BOLT LK	14082776
43.		8.900	BOLT, HEX, M6X1X30, 18 THD, 10.9, P0 (OIL COOLER VLV) (AR) (AC-DELCO #11514756)	11514756

© 2000 GENERAL MOTORS SERVICE PARTS OPERATIONS-CHEVROLET-14Y

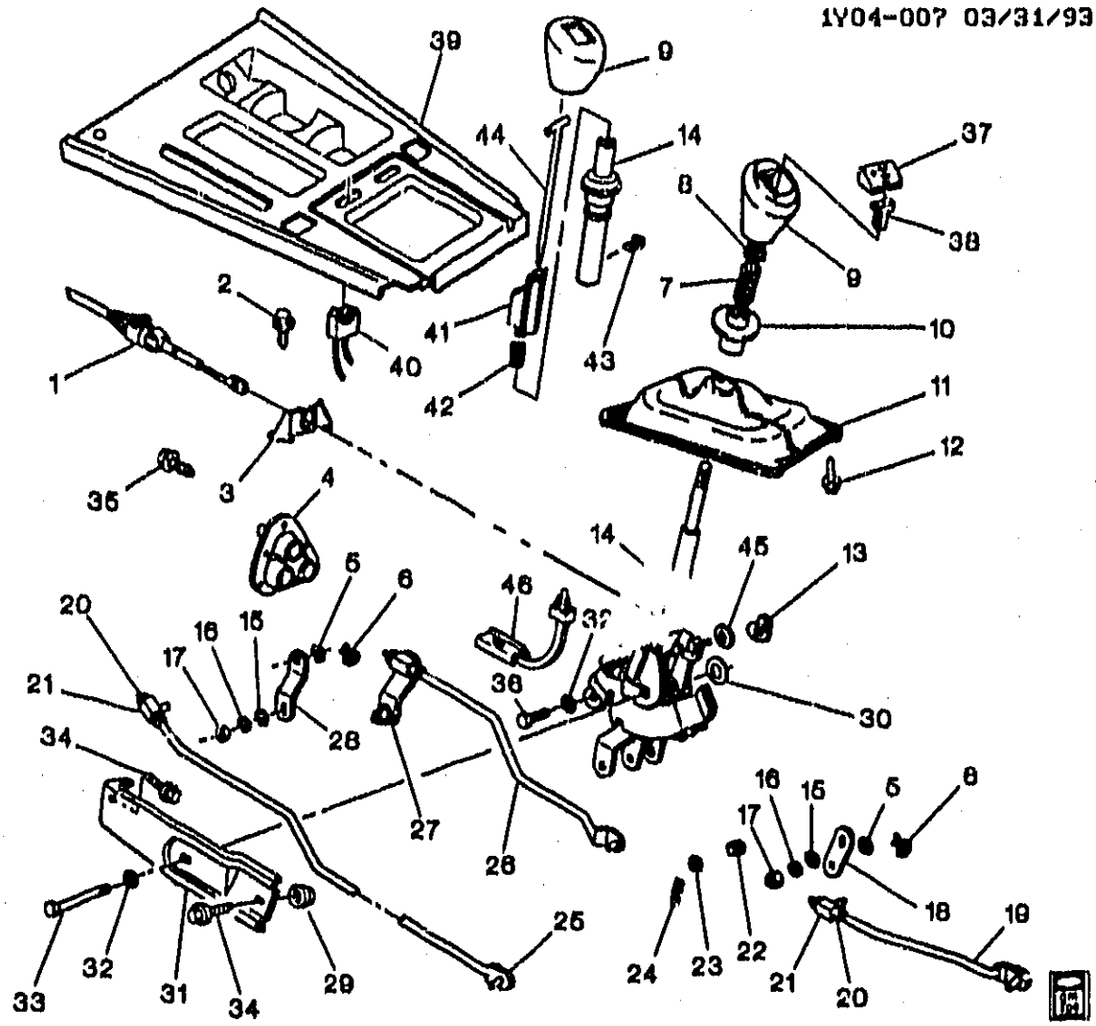

1984-1988 Y SHIFT CONTROLS/MANUAL TRANSMISSION 4 SPEED (MK2)

1.		DISCON	CABLE, TRANS PK LK	14076182
2.	5-N24	8.080	BOLT, HEX (M6X1X20) (AC-DELCO #11508600)	11508600
3.		DISCON	BRACKET, PK LK CBL	14050023
4.		DISCON	GROMMET, TRANS SEL SHF LVR ROD	14047706
5.		8.929	WASHER, FL (.406X.812X.065)	187372
6.	5-A13	4.037	RETAINER, TRANS CONT ROD	15553615
7.	5-A12	4.008	SPRING, TRANS CONT REV REL RTN (1988)	371757
8.	5-C11	4.047	RETAINER, A/TRNS RANGE SEL LVR CBL (PART OF 9)	14050024
9.	5-A12	4.006	KNOB, (1984-85) (1ST DES) (INCL 8) (*1)	14084054
		DISCON	KNOB, (1985-88) (2ND DES) (INCL 8) (*1)	14087689
10.		N.S.	FINGER GRIP, (PART OF 14)	
11.	5-A12	4.015	BOOT, TRANS CONT LVR UPR	14047412
12.		8.977	SCREW, RD THIN WA HD C/R (M4.2X1.41X20) BLK	10180421
13.	5-A13	4.060	RETAINER, TRANS PK LK CBL	17071924
14.		DISCON	CONTROL, TRANS (1984-1985) (1ST DES) (*1)	14050076
		DISCON	CONTROL, TRANS (1985-1988) (2ND DES) (*2)	10132798
15.		8.929	WASHER FL .406X.812X.065 SS PL (AR)	187372
16.		8.931	WASHER, SPR LK ID 3/8X11/16 OD (AR)	9439512
17.		8.915	NUT, HEX (.375"-16)	9439521
18.		DISCON	LEVER, TRANS SEL (REV)	14048953
19.		DISCON	ROD, CONT SEL LVR (REV)	14048956
20.	5-A13	4.046	NUT, HEX (M10X1.5)	14060131

© 2000 GENERAL MOTORS SERVICE PARTS OPERATIONS-CHEVROLET-14Y

				1Y04-007
21.		DISCON	SWIVEL, TRANS CONT ROD	14076103
22.	5-A13	4.037	GROMMET, CONT SHFT LVR	1234418
23.		6.929	WASHER, SPL (.390IDX.75OD)	
24.		6.934	RETAINER, (.062) SPR STL	
25.		DISCON	ROD, CONT SEL LVR (3RD & 4TH)	14048955
26.		DISCON	ROD, CONT SEL LVR (1ST & 2ND)	14048954
27.		DISCON	LEVER, TRANS SEL (1ST & 2ND)	14048951
28.		DISCON	LEVER, TRANS SEL (3RD & 4TH)	14048952
29.		6.924	NUT, FL HD (M6X1.25X18) (AC-DELCO #11514596)	11514596
30.	5-A13	4.085	WASHER, TRANS CONT (0.002)	459948
31.		DISCON	BRACKET, TRANS CONT	14048935
32.		6.932	WASHER, LOCK INTER TOOTH M10X7 ZC (AR)	11504247
33.		6.900	BOLT, HEX (M10X1.5X85)	1150[illegible]
34.		6.900	BOLT, HFH M6X1.25X21MM, 17 OD, 10.9 (AR)	12[illegible]1177
35.		6.977	SCREW, HWH (M4.2X1.41X14)	11[illegible]
36.		6.900	BOLT (AR)	11504[illegible]
37.		DISCON	BUTTON, CONT LVR REL (1984,1ST DES 1985)	14076131
	5-A12	4.006	BUTTON, CONT LVR REL (2ND DES 1985) 1986-88)	14087690
38.	5-A12	4.008	PIN, CONT LVR PIV	10150014
39.		DISCON	PLATE, FRT FLR CNSL TRIM (1984-85)	14089617
		DISCON	PLATE, FRT FLR CNSL TRIM (1986-88)	14090633
40.	5-A22	4.460	SWITCH, TRANS O/D (MTS ON CNSL) (1984) (AC-DELCO #14076914)	14076914
		DISCON	SWITCH, TRANS O/D (MTS ON CNSL) (1ST DES 1985)	14087647
	5-A22	4.460	SWITCH, TRANS O/D (IN SHIFTER KNOB) (2ND DES 1985) (AC-DELCO #14087686)	14087686
41.		DISCON	BLOCK, TRANS O/D SW ACTU W/M .T. (2ND DES) (*2)	14087685
		N.S.	BLOCK, TRANS O/D SW ACTU W/M .T. (NO COMPARABLE 1ST DES)	
42.		DISCON	SPRING, TRANS O/D SW ACTU BLK W/M .T. (2ND DES) (*2)	14101389
		N.S.	SPRING, TRANS O/D SW ACTU BLK W/M .T. (NO COMPARABLE 1ST DES) (*2)	
43.	5-A12	4.008	PIN, TRANS CONT LVR PIV	10150014
44.		N.S.	ROD, TRANS O/D SW ACTU W/M .T. (NO COMPARABLE 1ST DES) (*2)	
		DISCON	ROD, TRANS O/D SW ACTU W/M .T. (2ND DES-1985) (1986-88) (*2)	14087691
45.	5-N19	3.885	WASHER, CRCONT SERVO	14091256
46.	5-A22	4.460	SWITCH, TRANS O/D (IN SHIFTER KNOB) (1986-88) (AC-DELCO #14087693)	14087693

NOTE 1: 1ST DES. (1985), IDENTIFIED BY OVERDRIVE SWITCH ON CONSOLE.
NOTE 2: 2ND DES. (1985), IDENTIFIED BY OVERDRIVE SWITCH ON SHIFTER KNOB.

© 2000 GENERAL MOTORS SERVICE PARTS OPERATIONS-CHEVROLET-14Y

1Y04-010 06/27/00

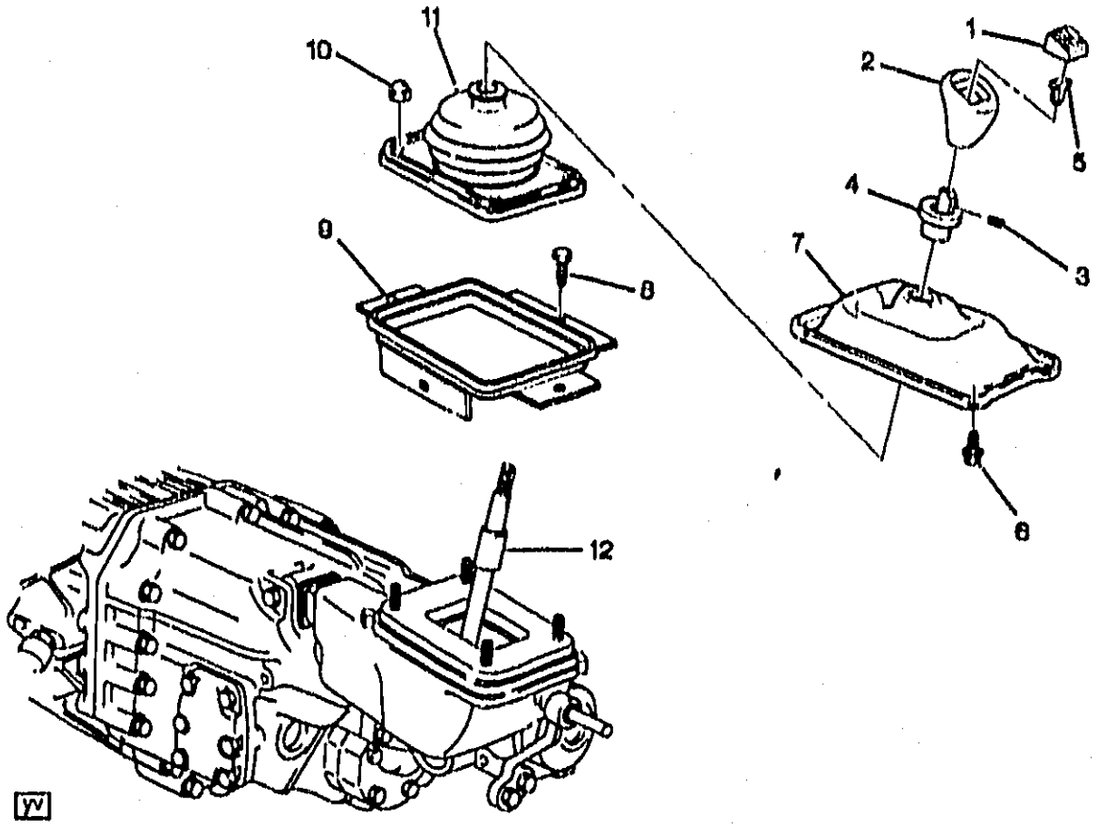

1Y04-019

1989-1996 Y SHIFT CONTROLS/MANUAL TRANSMISSION (ML9)

1.	5-B5	4.006	PUSHBUTTON, M/TRNS CONT LVR REL (W/SHFT PATT)	89	Y (ML9)	1	10079756
	5-B5	4.006	PUSHBUTTON, M/TRNS CONT LVR REL (W/SHFT PATT)	90-91	Y (ML9)	1	10085218
	5-B5	4.006	PUSHBUTTON, M/TRNS CONT LVR REL (W/SHFT PATT)	92	Y (ML9) (EXC B4H)	1	10085218
	5-B5	4.006	PUSHBUTTON, M/TRNS CONT LVR REL (W/SHFT PATT)	93	Y (ML9)	1	10085218
	5-B5	4.003	PUSHBUTTON, M/TRNS CONT LVR REL (W/SHFT PATT)	94-96	Y (ML9)	1	10079756
		DISCON	PUSHBUTTON, M/TRNS CONT LVR REL (W/SHFT PATT)	92	Y (ML9, B4H) (EXPORT)	1	10186629
2.	5-A12	4.006	KNOB, M/TRNS CONT LVR (W/O SHFT PATT) (BLACK LEATHER)	89	Y (ML9)	1	14084054
	5-B5	4.006	KNOB, M/TRNS CONT LVR (W/O SHFT PATT) (BLACK LEATHER)	90-93	Y (ML9)	1	10111658
	5-B5	4.006	KNOB, M/TRNS CONT LVR (W/O SHFT PATT) (BLACK LEATHER)	94-96	Y (ML9)	1	10224091
3.		N.S.	SCREW, SOCKET SET RING (PART OF 4)	89-94			
4.	5-B5	4.006	HANDLE, M/TRNS CONT LVR REL (INCLS 3)	89-94	Y (ML9)	1	10079757
5.	5-B5	4.006	INSERT, M/TRNS CONT LVR KNOB (4.570)	89-96	Y	1	10150014
6.		8.977	SCREW-ROUNDWASHER M4.2X1.4X13, 8.63OD, 6010M, 6138M, C/R, TAP (M/TRNS CONT LVR BOOT)	89-96		4	11515893
7.	5-B6	4.015	BOOT, M/TRNS CONT LVR (UPR)	89	Y	1	14104919

© 2000 GENERAL MOTORS SERVICE PARTS OPERATIONS-CHEVROLET-14Y

								1Y04-019
	5-B6	4.015	BOOT, M/TRNS CONT LVR (UPR)	95-96	Y (ML9)	.....	1	10267746
	5-B6	4.015	BOOT, M/TRNS CONT LVR (UPR) (ON EARLY 92 & PRIOR MDLS, REMOVE & DISCARD C-CLIP ON SHFTR LVR) (UPR)	90-94	Y (ML9)	.....	1	10193729
8.		8.967	RIVET, DOME HD BLIND TYPE .125 .357 (M/TRNS CONT LVR BOOT RET)	89-96		.....	4	9418068
9.	5-B6	4.015	RETAINER, M/TRNS CONT LVR BOOT	89-96	Y (ML9)	.....	1	14104931
10.	5-B6	4.015	NUT, M/TRNS CONT LVR BOOT (M6X1X12)	89-96	Y (ML9)	.....	4	14104848
11.	5-B6	4.015	BOOT, M/TRNS CONT LVR LWR .	89-96	Y	.....	1	14104932
12.	5-B5	4.004	SHIFTER KIT, TRANS (REMAN) .	91-94	Y (ML9)	.....	1	12355192
	5-B5	4.004	SHIFTER KIT, TRANS (REMAN) .	95-96	Y (ML9)	.....	1	12534207

RPO DEFINITIONS
B4H – MODIFICATION–NOISE CONTROL, EXPORT
ML9 – TRANSMISSION,MANUAL 6–SPEED

MICROFICHE INDEX

GROUP 4.000

FICHE 5 OF 11

GROUP	DESCRIPTION	STARTING GRID LOCATION PARTS	ILLUSTRATIONS
–	GENERAL INFORMATION	1–A2	1–G2
–	ALPHABETICAL INDEX	1–B13	N.A.
4.000	4–SPEED TRANSMISSION	5–A2	5–F2
4.000	6–SPEED TRANSMISSION	5–B2	5–G2
4.000	AUTOMATIC TRANSMISSION	5–C2	5–H2
–	OUT OF FICHE CALLS	N.A.	5–M23

5–G1

CHEVROLET
CHASSIS GROUP 4.000

ILLUSTRATION INDEX

	TITLE	GRID
1989–1990	Y 6–SPEED MANUAL TRANSMISSION ZF S6–40(ML9)	5–G4
1991–1996	Y 6–SPEED MANUAL TRANSMISSION ZF S6–40(ML9)	5–G8
1984–1988	Y SHIFT CONTROLS/MANUAL TRANSMISSION 4 SPEED (MK2)	5–G13
1989–1996	Y SHIFT CONTROLS/MANUAL TRANSMISSION (ML9)	5–G15

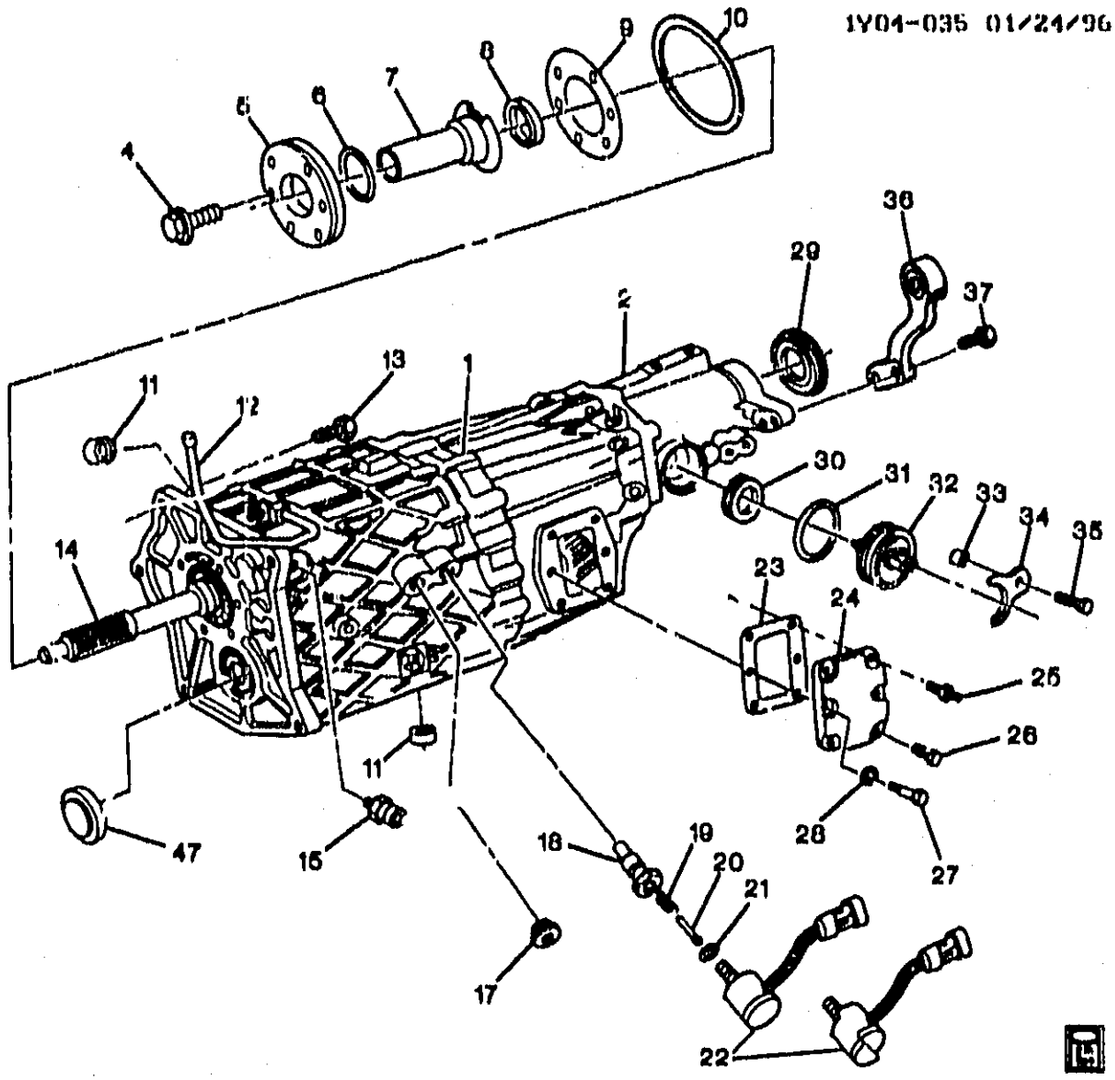

1989-1990 Y 6-SPEED MANUAL TRANSMISSION ZF S6-40(ML9)

1.	5-B5	4.003	**TRANSMISSION**, MAN (REMAN) (INCLS 2, 14, 29)	89-90	Y (L98, ML9)	1	12351965
	5-B5	4.003	**TRANSMISSION**, MAN (REMAN) (INCLS 2, 14, 29)	90	Y (LT5, ML9)	1	12352884
2.		N.S.	**EXTENSION**, HOUSING (PART OF 1)		.....		
4.	5-B10	4.422	**BOLT**, INPUT SHF BRG RET (4.356) (AC-DELCO #10140542)	89-90	Y (ML9)	6	10140542
5.	5-B8	4.352	**RETAINER**, INPUT SHF BRG RET (*KIT1) (4.412) (AC-DELCO #10140670)	89-90	Y (ML9)	1	10140670
6.	5-B9	4.354	**SEAL**, INPUT SHF BRG RET (O RING) (*KIT1) (4.358) (AC-DELCO #10140532)	89-90	Y (ML9)	1	10140532
7.	5-B9	4.356	**TUBE**, MAIN DRV GR BRG RET (*KIT1) (AC-DELCO #12511387)	89-90	Y (L98, ML9)	1	12511387
	5-B9	4.356	**TUBE**, MAIN DRV GR BRG RET (*KIT1) (AC-DELCO #12511386)	90	Y (LT5, ML9)	1	12511386
8.	5-B9	4.354	**SEAL**, MAIN DRV GR BRG OIL (AC-DELCO #10140533)	89-90	Y (ML9)	1	10140533

© 2000 GENERAL MOTORS SERVICE PARTS OPERATIONS-CHEVROLET-14Y

							1Y04-035	
9.	5-B9	4.358	GASKET, INPUT SHF BRG RET (AC-DELCO #10147905)	89-90	Y (ML9)		1	10147905
10.		N.S.	SHIM, INPUT SHF BRG RET (NOT SERVICED FOR 1989)	89	.....			
	5-B9	4.412	SHIM, INPUT SHF BRG RET (RR EXT GSKT & OUTPUT SHAFT ENDPLAY) (1.65MM THK)	90	Y (ML9)		AR	10181341
	5-B9	4.412	SHIM, INPUT SHF BRG RET (RR EXT GSKT & OUTPUT SHAFT ENDPLAY) (1.70MM THK)	90	Y (ML9)		AR	10181342
	5-B9	4.412	SHIM, INPUT SHF BRG RET (RR EXT GSKT & OUTPUT SHAFT ENDPLAY, 1.75MM THK) (70.2 ID X 79.8 OD X 1.75 MM THK)	90	Y (ML9)		AR	10181343
	5-B9	4.412	SHIM, INPUT SHF BRG RET (RR EXT GSKT & OUTPUT SHAFT ENDPLAY, 1.80MM THK) (70.2 ID X 79.8 OD X 1.80 MM THK)	90	Y (ML9)		AR	10181344
	5-B9	4.412	SHIM, INPUT SHF BRG RET (RR EXT GSKT & OUTPUT SHAFT ENDPLAY, 1.85MM THK) (1.85MM THK)	90	Y (ML9)		AR	10181345
	5-B9	4.412	SHIM, INPUT SHF BRG RET (RR EXT GSKT & OUTPUT SHAFT ENDPLAY, 1.90MM THK) (1.90MM THK)	90	Y (ML9)		AR	10181346
	5-B9	4.412	SHIM, INPUT SHF BRG RET (RR EXT GSKT & OUTPUT SHAFT ENDPLAY, 1.95MM THK)	90	Y (ML9)		AR	10181347
	5-B9	4.412	SHIM, INPUT SHF BRG RET (RR EXT GSKT & OUTPUT SHAFT ENDPLAY, 2.00MM THK)	90	Y (ML9)		AR	10181348
	5-B9	4.412	SHIM, INPUT SHF BRG RET (RR EXT GSKT & OUTPUT SHAFT ENDPLAY, 2.05MM THK)	90	Y (ML9)		AR	10181349
	5-B9	4.412	SHIM, INPUT SHF BRG RET (RR EXT GSKT & OUTPUT SHAFT ENDPLAY, 2.10MM THK)	90	Y (ML9)		AR	10181350
	5-B9	4.412	SHIM, INPUT SHF BRG RET (RR EXT GSKT & OUTPUT SHAFT ENDPLAY, 2.15MM THK)	90	Y (ML9)		AR	10181351
	5-B9	4.412	SHIM, INPUT SHF BRG RET (RR EXT GSKT & OUTPUT SHAFT ENDPLAY, 2.20MM THK)	90	Y (ML9)		AR	10181352
	5-B9	4.412	SHIM, INPUT SHF BRG RET (RR EXT GSKT & OUTPUT SHAFT ENDPLAY, 2.25MM THK)	90	Y (ML9)		AR	10181353
	5-B9	4.412	SHIM, INPUT SHF BRG RET (RR EXT GSKT & OUTPUT SHAFT ENDPLAY, 2.30MM THK)	90	Y (ML9)		AR	10181354
	5-B9	4.412	SHIM, INPUT SHF BRG RET (2.35MM THK)	90	Y (ML9)		1	10181355
	5-B9	4.412	SHIM, INPUT SHF BRG RET (2.40MM THK)	90	Y (ML9)		1	10181356
	5-B9	4.412	SHIM, INPUT SHF BRG RET (2.45MM THK)	90	Y (ML9)		1	10181357
	5-B9	4.412	SHIM, INPUT SHF BRG RET (2.50MM THK)	90	Y (ML9)		1	10181358

© 2000 GENERAL MOTORS SERVICE PARTS OPERATIONS-CHEVROLET-14Y

							1Y04-035
11.	5-B7	4.105	PLUG, TRANS OIL FIL (& DRAIN) (AC-DELCO #10140673)	89-90	Y (ML9)	1	10140673
12.	5-B7	4.104	VENT, M/TRNS	89-90	Y (ML9)	1	10140671
13.	5-B7	4.085	BOLT, TRANS	89-90	Y	5	10111696
14.		N.S.	SHAFT, MAIN DRIVE (PART OF 1)				
15.	5-N15	2.698	SWITCH, B/U LP (AC-DELCO #D2245A)	89-90	Y (ML0)	1	10159402
17.	5-B6	4.307	PLUG, REV SHFT SHF DTNT (4.052)	89-90	Y (ML9)	1	10140574
18.		N.S.	SLEEVE, SOLENIOD (PART OF 22)				
19.		N.S.	SPRING, SOLENIOD (PART OF 22)				
20.		N.S.	PIN, SOLENIOD (PART OF 22)				
21.		N.S.	SEAL, SOLENIOD (PART OF 22)				
22.	5-B6	4.054	SOLENOID, M/TRNS 2ND & 3RD GR BLOCKOUT (INCLS 18, 19, 20, 21) (4.307) (AC-DELCO #10159404)	89	Y (ML9)	1	10159404
	5-B6	4.054	SOLENOID, M/TRNS 2ND & 3RD GR BLOCKOUT (INCLS 18, 19, 20, 21) (4.307) (AC-DELCO #10140541)	90	Y (ML9)	1	10140541
23.	5-B7	4.109	GASKET, REV IDLER GR ACC HOLE CVR (4.435) (AC-DELCO #10147907)	89-90	Y (ML9)	1	10147907
24.	5-B10	4.435	COVER, REV IDLER (AC-DELCO #10147906)	89-90	Y (ML9)	1	10147906
25.	5-B7	4.105	STUD, REV IDLER GR ACC HOLE CVR (4.431) (AC-DELCO #10147909)	89-90	Y (ML9)	1	10147909
26.	5-B6	4.046	BOLT, REV IDLER GR ACC HOLE CVR (4.431) (AC-DELCO #10140561)	89-90	Y (ML9)	4	10140561
27.	5-B10	4.435	BOLT, REV IDLER GR SHF (AC-DELCO #10140571)	89-90	Y (ML9)	1	10140571
28.	5-B10	4.435	SEAL, REV IDLER GR ACC HOLE CVR BOLT (O RING) (AC-DELCO #10140537)	89-90	Y (ML9)	1	10140537
29.	5-B8	4.318	SEAL, MAIN SHF (PART OF 1) (AC-DELCO #10140538)	89-90	Y (ML9)	1	10140538
30.		N.S.	GEAR, SPEEDO DRVN (SEE SPEEDO GEAR CHART)				
31.	5-B8	4.338	SEAL, SPEEDO SEN (TEFLON) (AC-DELCO #15552872)	89-90	Y (ML9)	1	15552872
32.	5-N16	3.682	SENSOR, VEH SPD (TRANS MTD) (AC-DELCO #213-223)	89-90	Y (ML9, D9B)	1	25007308
	5-N16	3.682	SENSOR, VEH SPD (TRANS MTD) (AC-DELCO #213-210)	89-90	Y (ML9, D9A)	1	25007224
33.		DISCON	SPACER, VEH SPD SENSOR	89-90	Y (ML0)	1	14053672
34.	5-N16	3.682	RETAINER, VEH SPD SEN (4338) (AC-DELCO #12338069)	89-90	Y (ML9)	1	12338069
35.		8.900	SCREW, M6X1X30, 11 THD, 12.5 OD, 4.8, 6047M, P-PT	89-90		AR	11508128
36.	5-B5	4.010	BRACKET, M/TRNS CONT (4.046)	89-90	Y (ML9)	1	10140675
37.	5-B5	4.010	BOLT, M/TRNS CONT BRKT	89-90	Y (ML9)	1	10159403
47.	5-B10	4.423	SEAL, CNTR GR SHF (O RING) (4.435) (AC-DELCO #10140535)	89-90	Y (ML9)	1	10140535

© 2000 GENERAL MOTORS SERVICE PARTS OPERATIONS-CHEVROLET-14Y

SERVICE KITS

1.	5-B9	4.353	RETAINER, INPUT SHF BRG (INCLS 5, 6, 7) (1.373 DIA TUBE) .	90	Y (LT5, ML9)	1	12514095
	5-B9	4.353	RETAINER, INPUT SHF BRG (INCLS 5, 6, 7) (1.305 DIA TUBE) .	90	Y (LT5, ML9)	1	12533800
	5-B9	4.353	RETAINER, INPUT SHF BRG (1.305 DIA TUBE) (INCLS 5, 6, 7) .	69	Y (ML9)	1	12533800
	5-B9	4.353	RETAINER, INPUT SHF BRG (1.373 DIA TUBE) (INCLS 5, 6, 7) .	69	Y (ML9)	1	12514095

RPO DEFINITIONS
D9A – SENSOR
D9B – SENSOR
LT5 – ENGINE,5.7L(5.7J),TPI
L98 – ENGINE, 5.7L, (5.7-8) 350 CID, V8, TPI
ML9 – TRANSMISSION,MANUAL 6-SPEED

© 2000 GENERAL MOTORS SERVICE PARTS OPERATIONS-CHEVROLET-14Y

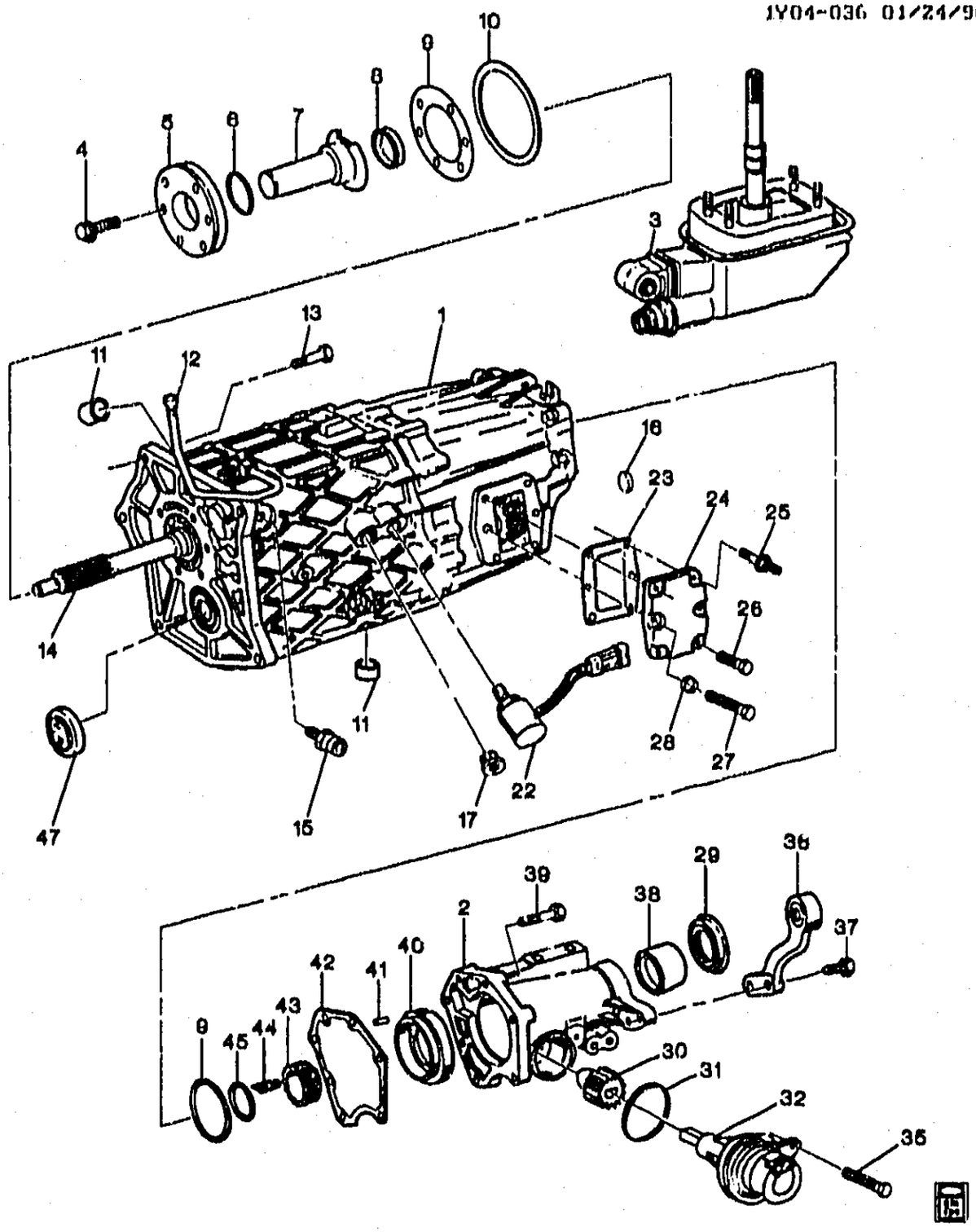

1Y04-036

1991-1996 Y 6-SPEED MANUAL TRANSMISSION ZF S6-40(ML9)

1.	5-B5	4.003	TRANSMISSION, MAN (REMAN)	91	Y (L98, ML9)	1	12351965
	5-B5	4.003	TRANSMISSION, MAN (REMAN)	91-93	Y (LT5, ML9)	1	12352884
	5-B5	4.003	TRANSMISSION, MAN (REMAN)	92-93	Y (LT1, ML9)	1	12351965
	5-B5	4.003	TRANSMISSION, MAN (REMAN) (EXCHANGE ONLY)	94	Y (LT5, ML9)	1	12455186

© 2000 GENERAL MOTORS SERVICE PARTS OPERATIONS-CHEVROLET-14Y

							1Y04-036
	5-B5	4.003	**TRANSMISSION**, MAN (REMAN) (EXCHANGE ONLY)	94	Y (LT1, ML9)	1	12455187
	5-B5	4.003	**TRANSMISSION**, MAN (REMAN) (EXCHANGE ONLY)	95	Y (LT5, ML9)	1	12455188
	5-B5	4.003	**TRANSMISSION**, MAN (REMAN) (EXCHANGE ONLY)	95	Y (LT1, ML9)	1	12455189
	5-B5	4.003	**TRANSMISSION**, MAN (REMAN) (EXCHANGE ONLY)	96	Y (ML9)	1	12455189
2.	5-B6	4.317	**EXTENSION**, TRANS (INCLS 38) .	91-96	Y (ML9)	1	12456331
3.	5-B5	4.004	**SHIFTER KIT**, TRANS (REMAN) .	91-94	Y (ML9)	1	12355192
		N.S.	**SHIFTER KIT**, TRANS (NOT SERVICED SEPARATE FROM TRANS, TRANS TO BE EXCHANGE DIRECT BETWEEN DLR & ZF OF N.AMERICA. CONTACT CHEVROLET TECH ASSIST NETWORK (TAN))	95-96	.....		
4.	5-B10	4.422	**BOLT**, INPUT SHF BRG RET (4.356) (AC-DELCO #10140542)	91-96	Y (ML9)	6	10140542
5.	5-B8	4.352	**RETAINER**, INPUT SHF BRG RET (*KIT1) (4.412) (AC-DELCO #10140670)	91-96	Y (ML9)	1	10140670
6.	5-B9	4.354	**SEAL**, INPUT SHF BRG RET (O RING) (*KIT1) (4.358) (AC-DELCO #10140532)	91-96	Y (ML9)	1	10140532
7.	5-B9	4.356	**TUBE**, MAIN DRV GR BRG RET (*KIT1) (AC-DELCO #12511387)	91	Y (L98, ML9)	1	12511387
	5-B9	4.356	**TUBE**, MAIN DRV GR BRG RET (*KIT1) (AC-DELCO #12511386)	91-93	Y (LT5, ML9)	1	12511386
	5-B9	4.356	**TUBE**, MAIN DRV GR BRG RET (*KIT1) (AC-DELCO #12511387)	92-96	Y (LT1, ML9)	1	12511387
8.	5-B9	4.354	**SEAL**, MAIN DRV GR BRG OIL (AC-DELCO #10140533)	91-96	Y (ML9)	1	10140533
9.	5-B9	4.358	**GASKET**, INPUT SHF BRG RET (AC-DELCO #10147905)	91-96	Y (ML9)	1	10147905
10.	5-B9	4.412	**SHIM**, INPUT SHF BRG RET (RR EXT GSKT & OUTPUT SHAFT ENDPLAY) (1.65MM THK)	91-96	Y (ML9)	AR	10181341
	5-B9	4.412	**SHIM**, INPUT SHF BRG RET (RR EXT GSKT & OUTPUT SHAFT ENDPLAY) (1.70MM THK)	91-96	Y (ML9)	AR	10181342
	5-B9	4.412	**SHIM**, INPUT SHF BRG RET (RR EXT GSKT & OUTPUT SHAFT ENDPLAY, 1.75MM THK) (70.2 ID X 79.8 OD X 1.75 MM THK)	91-96	Y (ML9)	AR	10181343
	5-B9	4.412	**SHIM**, INPUT SHF BRG RET (RR EXT GSKT & OUTPUT SHAFT ENDPLAY, 1.80MM THK) (70.2 ID X 79.8 OD X 1.80 MM THK)	91-96	Y (ML9)	AR	10181344
	5-B9	4.412	**SHIM**, INPUT SHF BRG RET (RR EXT GSKT & OUTPUT SHAFT ENDPLAY, 1.85MM THK) (1.85MM THK)	91-96	Y (ML9)	AR	10181345
	5-B9	4.412	**SHIM**, INPUT SHF BRG RET (RR EXT GSKT & OUTPUT SHAFT ENDPLAY, 1.90MM THK) (1.90MM THK)	91-96	Y (ML9)	AR	10181346

© 2000 GENERAL MOTORS SERVICE PARTS OPERATIONS-CHEVROLET-14Y

							1Y04-036
	5-B9	4.412	SHIM, INPUT SHF BRG RET (RR EXT GSKT & OUTPUT SHAFT ENDPLAY, 1.95MM THK)	91-96	Y (ML9)	AR	10181347
	5-B9	4.412	SHIM, INPUT SHF BRG RET (RR EXT GSKT & OUTPUT SHAFT ENDPLAY, 2.00MM THK)	91-96	Y (ML9)	AR	10181348
	5-B9	4.412	SHIM, INPUT SHF BRG RET (RR EXT GSKT & OUTPUT SHAFT ENDPLAY, 2.05MM THK)	91-96	Y (ML9)	AR	10181349
	5-B9	4.412	SHIM, INPUT SHF BRG RET (RR EXT GSKT & OUTPUT SHAFT ENDPLAY, 2.10MM THK)	91-96	Y (ML9)	AR	10181350
	5-B9	4.412	SHIM, INPUT SHF BRG RET (RR EXT GSKT & OUTPUT SHAFT ENDPLAY, 2.15MM THK)	91-96	Y (ML9)	AR	10181351
	5-B9	4.412	SHIM, INPUT SHF BRG RET (RR EXT GSKT & OUTPUT SHAFT ENDPLAY, 2.20MM THK)	91-96	Y (ML9)	AR	10181352
	5-B9	4.412	SHIM, INPUT SHF BRG RET (RR EXT GSKT & OUTPUT SHAFT ENDPLAY, 2.25MM THK)	91-96	Y (ML9)	AR	10181353
	5-B9	4.412	SHIM, INPUT SHF BRG RET (RR EXT GSKT & OUTPUT SHAFT ENDPLAY, 2.30MM THK)	91-96	Y (ML9)	AR	10181354
	5-B9	4.412	SHIM, INPUT SHF BRG RET (2.35MM THK)	91-96	Y (ML9)	1	10181355
	5-B9	4.412	SHIM, INPUT SHF BRG RET (2.40MM THK)	91-96	Y (ML9)	1	10181356
	5-B9	4.412	SHIM, INPUT SHF BRG RET (2.45MM THK)	91-96	Y (ML9)	1	10181357
	5-B9	4.412	SHIM, INPUT SHF BRG RET (2.50MM THK)	91-96	Y (ML9)	1	10181358
11.	5-B7	4.105	PLUG, TRANS OIL FIL (& DRAIN) (AC-DELCO #10140673)	91-96	Y (ML9)	1	10140673
12.	5-B7	4.104	VENT, M/TRNS	91-96	Y (ML9)	1	10140571
13.	5-B7	4.085	BOLT, TRANS (M12X1.75X40) ...	91-95	Y (LT5, ML9)	5	10111096
	5-B7	4.085	BOLT, TRANS (M12X1.75X45) ...	91	Y (ML9)	5	10174418
	5-B7	4.085	BOLT, TRANS (M12X1.75X45) ...	92-95	Y (LT1, ML9)	5	10174418
	5-B7	4.085	BOLT, TRANS (M12X1.75X45) ...	[illegible]	Y (ML9)	5	10174418
14.		N.S.	SHAFT, MAIN DRIVE (PART OF 1)		.....		
15.	5-N15	2.698	SWITCH, B/U LP (AC-DELCO #D2245A)	91-96	Y (ML9)	1	10150402
16.	5-B7	4.105	PLUG, REV IDLER GR SHF HOLE	91-96	Y (ML9)	1	12507666
17.	5-B6	4.307	PLUG, REV SHFT SHF DTNT (4.052)	91-96	Y (ML9)	1	10140674
22.	5-B6	4.054	SOLENOID, M/TRNS 2ND & 3RD GR BLOCKOUT (4.307) (AC-DELCO #10140541)	91-96	Y (ML9)	1	10140541
23.	5-B7	4.109	GASKET, REV IDLER GR ACC HOLE CVR (4.435) (AC-DELCO #10147907)	91-96	Y (ML9)	1	10147907
24.	5-B10	4.435	COVER, REV IDLER (AC-DELCO #10147906)	91-96	Y (ML9)	1	10147906
25.	5-B7	4.105	STUD, REV IDLER GR ACC HOLE CVR (4.431) (AC-DELCO #10147909)	91-96	Y (ML9)	1	10147909

© 2000 GENERAL MOTORS SERVICE PARTS OPERATIONS-CHEVROLET-14Y

						1Y04-036	
26.	5-B6	4.046	BOLT, REV IDLER GR ACC HOLE CVR (4.431) (AC-DELCO #10140561)	91-96	Y (ML9)	4	10140561
27.	5-B10	4.435	BOLT, REV IDLER GR SHF (AC-DELCO #10140571)	91-96	Y (ML9)	1	10140571
28.	5-B10	4.435	SEAL, REV IDLER GR ACC HOLE CVR BOLT (O RING) (AC-DELCO #10140537)	91-96	Y (ML9)	1	10140537
29.	5-B8	4.318	SEAL, MAIN SHF (AC-DELCO #10140538)	91-96	Y (ML9)	1	10140538
30.	5-D27	4.337	GEAR, SPEEDO DRVN (PURPLE) (43 TEETH) (AC-DELCO #25513050)	91-93	Y (D4L)	1	25513050
	5-D27	4.337	GEAR, SPEEDO DRVN (WHITE) (36 TEETH)	92	Y (D7B)	1	25513043
	5-D27	4.337	GEAR, SPEEDO DRVN (BLUE) (38 TEETH) (AC-DELCO #25513045)	92	Y (D7C)	1	25513045
	5-B8	4.337	GEAR, SPEEDO DRVN (GREEN) (42 TEETH) (AC-DELCO #25513049)	92-93	Y (D3X)	1	25513049
	5-D27	4.337	GEAR, SPEEDO DRVN (ORANGE) (35 TEETH) (AC-DELCO #25513042)	93	Y (D7A)	1	25513042
	5-D27	4.337	GEAR, SPEEDO DRVN (RED) (37 TEETH) (AC-DELCO #25513044)	93	Y (D3W)	1	25513044
	5-B8	4.337	GEAR, SPEEDO DRVN (BLACK) (40 TEETH) (AC-DELCO #25513047)	94	Y (LT1, ML9)	1	25513047
	5-B8	4.337	GEAR, SPEEDO DRVN (GREEN) (42 TEETH) (AC-DELCO #25513049)	94-96	Y (ML9)	1	25513049
31.		N.S.	SEAL, SPD SENSOR O-RING (PART OF 32)		.....		
32.	5-B8	4.329	SENSOR, VEH SPD (INCLS 31) (W/ O-RING) (AC-DELCO #213-198)	91-93	Y (D8I)	1	10456089
	5-N16	3.682	SENSOR, VEH SPD (INCLS 31) (W/ O-RING) (4.329) (AC-DELCO #213-198)	91-93	Y (D8I)	1	10456089
	5-D27	4.329	SENSOR, VEH SPD (INCLS 31) (AC-DELCO #213-200)	91-93	Y (D8L)	1	10456092
	5-B8	4.329	SENSOR, VEH SPD (INCLS 31) (W/ O-RING) (AC-DELCO #213-198)	94-96	Y (ML9)	1	10456089
	5-N16	3.682	SENSOR, VEH SPD (INCLS 31) (W/ O-RING) (4.329) (AC-DELCO #213-198)	94-96	Y (ML9)	1	10456089
	5-N16	3.682	SENSOR, VEH SPD (BLACK COLOR) (PART NO STAMPED ON HSG) (INCLS 31) (4.329) (AC-DELCO #213-200)	91-93	Y (D8L)	1	10456092
		4.329	SENSOR, VEH SPD (NATURAL COLOR) (PART NO STAMPED ON HSG) (INCLS 31) (AC-DELCO #213-199)	91-93	Y (D8K)	1	10456091

© 2000 GENERAL MOTORS SERVICE PARTS OPERATIONS-CHEVROLET-14Y

							1Y04-036
	5-N16	3.602	SENSOR, VEH SPD (NATURAL COLOR) (PART NO STAMPED ON HSG) (INCLS 31) (4.329) (AC-DELCO #213-199)	91-93	Y (D8K)	1	10456091
35.		0.900	BOLT, HEX W/CON WA M6X1X15 9.8 PZOR 12.5-OD FULL THD (VEH SPD SEN) (AC-DELCO #8639743)	91-96	.....	AR	8639743
36.	5-B5	4.010	BRACKET, M/TRNS CONT (4.046)	91-96	Y (ML9)	1	10140675
37.	5-B5	4.010	BOLT, M/TRNS CONT BRKT	91-96	Y (ML9)	1	10159403
38.		N.S.	BUSHING, TRANS EXT (PART OF 2)		.....		
39.	5-B8	4.319	BOLT, TRANS EXTN (M8X30)	91-96	Y (ML9)	1	12507668
	5-B8	4.319	BOLT, TRANS EXTN (M8X40)	91-96	Y (ML9)	6	12507669
40.	5-B8	4.317	RING, TRANS EXTN SUPT	91-96	Y (ML9)	1	12507675
41.	5-B8	4.317	PIN, TRANS EXTN	91-96	Y (ML9)	1	12507676
42.	5-B8	4.318	GASKET, TRANS EXTN	91-96	Y (ML9)	1	12508276
43.	5-B8	4.343	GEAR, SPEEDO DRV (GRAY) (15 TEETH)	91-96	Y (ML9)	1	12507670
44.	5-B8	4.345	CLIP, SPEEDO DRV GR	91-96	Y (ML9)	1	12507671
45.	5-B8	4.319	WASHER, TRANS EXTN (4.318) .	91-96	Y (ML9)	1	12507667
47.	5-B10	4.423	SEAL, CNTR GR SHF (O RING) (4.435) (AC-DELCO #10140535)	91-96	Y (ML9)	1	10140535

SERVICE KITS

1.	5-B9	4.353	RETAINER, INPUT SHF BRG (INCLS 5, 6, 7) (1.373 DIA TUBE) .	91-95	Y (LT5, ML9)	1	12514095
	5-B9	4.353	RETAINER, INPUT SHF BRG (INCLS 5, 6, 7) (1.305 DIA TUBE) .	91-95	Y (LT5, ML9)	1	12533800
	5-B9	4.353	RETAINER, INPUT SHF BRG (FOR 1ST DES ID BY 1.373 DIA TUBE SEE 12514094) (INCLS 5, 6, 7) (1.305 DIA TUBE)	92-96	Y (LT1, ML9) (2ND DES)	1	12533801
	5-B9	4.353	RETAINER, INPUT SHF BRG (FOR 2ND DES ID BY 1.305 DIA TUBE SEE 12533801) (INCLS 5, 6, 7) (1.373 DIA TUBE)	92-96	Y (LT1, ML9) (1ST DES)	1	12514094

RPO DEFINITIONS

D3W – GEAR-SPEEDO DRIVEN (25513044)
D3X – GEAR-SPEEDOMETER DRIVEN (25513049)
D4L – GEAR-SPEEDOMETER DRIVEN (25513050)
D7A – GEAR-SPEEDOMETER DRIVEN (25513042)
D7B – GEAR-SPEEDOMETER DRIVEN (25513043)
D7C – GEAR-SPEEDO DRIVEN (25513045)
D8I – SENSOR-VEH SPD (10456089)
D8K – SENSOR-VEH SPD (10456091)
D8L – SENSOR-VEH SPD (10456092)
LT1 – ENGINE-GAS, 8 CYL, 5.7L(5.7P),MFI,HO
LT5 – ENGINE,5.7L(5.7J),TPI
L98 – ENGINE, 5.7L, (5.7-8) 350 CID, V8, TPI
ML9 – TRANSMISSION,MANUAL 6-SPEED

© 2000 GENERAL MOTORS SERVICE PARTS OPERATIONS-CHEVROLET-14Y

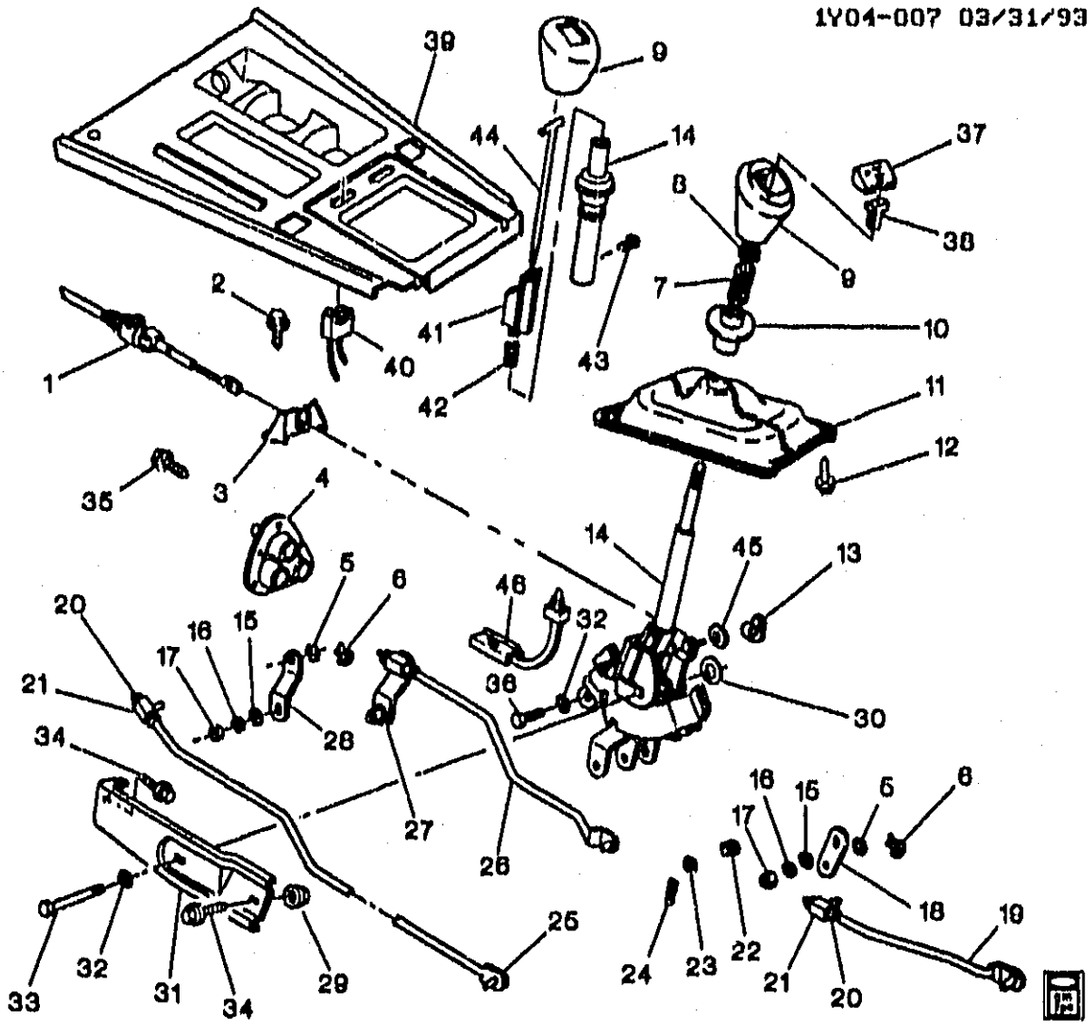

1984-1988 Y SHIFT CONTROLS/MANUAL TRANSMISSION 4 SPEED (MK2)

1.		DISCON	CABLE, TRANS PK LK	14076182
2.	5-N24	8.080	BOLT, HEX (M6X1X20) (AC-DELCO #11508600)	11508600
3.		DISCON	BRACKET, PK LK CBL	14050023
4.		DISCON	GROMMET, TRANS SEL SHF LVR ROD	14047706
5.		8.929	WASHER, FL (.406X.812X.065)	187372
6.	5-A13	4.037	RETAINER, TRANS CONT ROD	15553615
7.	5-A12	4.008	SPRING, TRANS CONT REV REL RTN (1988)	371757
8.	5-C11	4.047	RETAINER, A/TRNS RANGE SEL LVR CBL (PART OF 9)	14050024
9.	5-B5	4.006	KNOB, (1984-85) (1ST DES) (INCL 8) (*1)	14084054
		DISCON	KNOB, (1985-88) (2ND DES) (INCL 8) (*1)	14087609
10.		N.S.	FINGER GRIP, (PART OF 14)	
11.	5-A12	4.015	BOOT, TRANS CONT LVR UPR	14047412
12.		8.977	SCREW, RD THIN WA HD C/R (M4.2X1.41X20) BLK	10180421
13.	5-A13 5-C13	4.060	RETAINER, TRANS PK LK CBL	17071924
14.		DISCON	CONTROL, TRANS (1984-1985) (1ST DES) (*1)	14050078
		DISCON	CONTROL, TRANS (1985-1988) (2ND DES) (*2)	10132798
15.		8.929	WASHER FL .406X.812X.065 SS PL (AR)	187372
16.		8.931	WASHER, SPR LK ID 3/8X11/16 OD (AR)	9439512
17.		8.915	NUT, HEX (.375"-16)	9439521
18.		DISCON	LEVER, TRANS SEL (REV)	14048953
19.		DISCON	ROD, CONT SEL LVR (REV)	14048956

© 2000 GENERAL MOTORS SERVICE PARTS OPERATIONS-CHEVROLET-14Y

				1Y04-007
20.	5-A13	4.046	NUT, HEX (M10X1.5)	14060131
21.		DISCON	SWIVEL, TRANS CONT ROD	14076103
22.	5-A13	4.037	GROMMET, CONT SHFT LVR	1234418
23.		6.929	WASHER, SPL (.390IDX.75OD)	
24.		6.934	RETAINER, (.062) SPR STL	
25.		DISCON	ROD, CONT SEL LVR (3RD & 4TH)	14048955
26.		DISCON	ROD, CONT SEL LVR (1ST & 2ND)	14048954
27.		DISCON	LEVER, TRANS SEL (1ST & 2ND)	14048951
28.		DISCON	LEVER, TRANS SEL (3RD & 4TH)	14048952
29.		6.924	NUT, FL. HD (M8X1.25X16) (AC-DELCO #11514596)	11514596
30.	5-A13	4.085	WASHER, TRANS CONT (0.002)	459948
31.		DISCON	BRACKET, TRANS CONT	14048935
32.		6.932	WASHER, LOCK INTER TOOTH M10X7 ZC (AR)	11504247
33.		6.900	BOLT, HEX (M10X1.5X85)	11504598
34.		6.900	BOLT, HFH M8X1.25X21MM, 17 OD, 10.9 (AR)	12551177
35.		6.977	SCREW, HWH (M4.2X1.41X14)	11501866
36.		6.900	BOLT (AR)	11504596
37.		DISCON	BUTTON, CONT LVR REL (1984,1ST DES 1985)	14076131
	5-A12	4.006	BUTTON, CONT LVR REL (2ND DES 1985) 1986-88)	14087690
38.	5-A12 5-C11	4.008	PIN, CONT LVR PIV	10150014
39.		DISCON	PLATE, FRT FLR CNSL TRIM (1984-85)	14069617
		DISCON	PLATE, FRT FLR CNSL TRIM (1986-88)	14090633
40.	5-A22	4.480	SWITCH, TRANS O/D (MTS ON CNSL) (1984) (AC-DELCO #14078914)	14078914
		DISCON	SWITCH, TRANS O/D (MTS ON CNSL) (1ST DES 1985)	14087647
	5-A22	4.480	SWITCH, TRANS O/D (IN SHIFTER KNOB) (2ND DES 1985) (AC-DELCO #14087686)	14087686
41.		DISCON	BLOCK, TRANS O/D SW ACTU W/M .T. (2ND DES) (*2)	14087685
		N.S.	BLOCK, TRANS O/D SW ACTU W/M .T. (NO COMPARABLE 1ST DES)	
42.		DISCON	SPRING, TRANS O/D SW ACTU BLK W/M .T. (2ND DES) (*2)	14101389
		N.S.	SPRING, TRANS O/D SW ACTU BLK W/M .T. (NO COMPARABLE 1ST DES) (*2)	
43.	5-A12 5-C11	4.008	PIN, TRANS CONT LVR PIV	10150014
44.		N.S.	ROD, TRANS O/D SW ACTU W/M .T. (NO COMPARABLE 1ST DES) (*2)	
		DISCON	ROD, TRANS O/D SW ACTU W/M .T. (2ND DES-1985) (1986-88) (*2)	14087691
45.	5-N19	3.885	WASHER, CRCONT SERVO	14091256
46.	5-A22	4.480	SWITCH, TRANS O/D (IN SHIFTER KNOB) (1986-88) (AC-DELCO #14087693)	14087693

NOTE 1: 1ST DES. (1985), IDENTIFIED BY OVERDRIVE SWITCH ON CONSOLE.
NOTE 2: 2ND DES. (1985), IDENTIFIED BY OVERDRIVE SWITCH ON SHIFTER KNOB.

© 2000 GENERAL MOTORS SERVICE PARTS OPERATIONS-CHEVROLET-14Y

1Y04-019 06/27/98

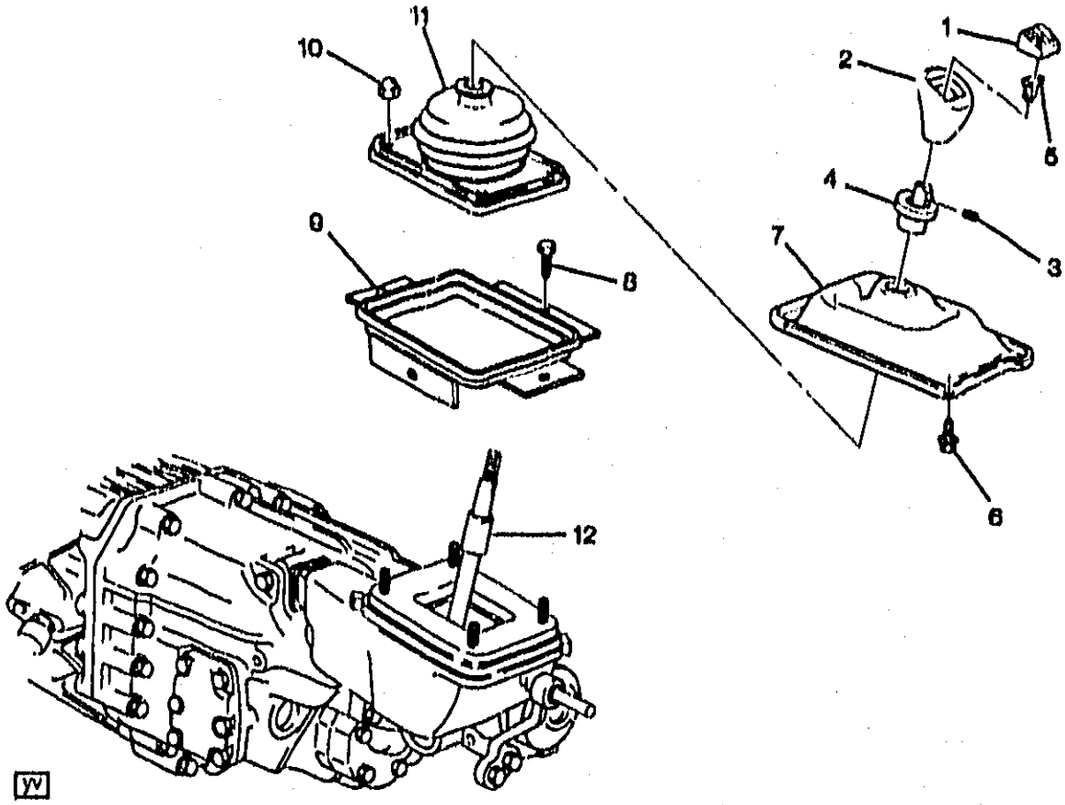

1Y04-019

1989-1996 Y SHIFT CONTROLS/MANUAL TRANSMISSION (ML9)

1.	5-B5	4.006	PUSHBUTTON, M/TRNS CONT LVR REL (W/SHFT PATT)	89	Y (ML9)	1	10079756
	5-B5	4.006	PUSHBUTTON, M/TRNS CONT LVR REL (W/SHFT PATT)	90-91	Y (ML9)	1	10085218
	5-B5	4.006	PUSHBUTTON, M/TRNS CONT LVR REL (W/SHFT PATT)	92	Y (ML9) (EXC B4H)	1	10085218
	5-B5	4.006	PUSHBUTTON, M/TRNS CONT LVR REL (W/SHFT PATT)	93	Y (ML9)	1	10085218
	5-B5	4.006	PUSHBUTTON, M/TRNS CONT LVR REL (W/SHFT PATT)	94-96	Y (ML9)	1	10079756
		DISCON	PUSHBUTTON, M/TRNS CONT LVR REL (W/SHFT PATT)	92	Y (ML9, B4H) (EXPORT)	1	10186829
2.	5-B5	4.006	KNOB, M/TRNS CONT LVR (W/O SHFT PATT) (BLACK LEATHER) ..	89	Y (ML9)	1	14084054
	5-B5	4.006	KNOB, M/TRNS CONT LVR (W/O SHFT PATT) (BLACK LEATHER) ..	90-93	Y (ML9)	1	10111658
	5-B5	4.006	KNOB, M/TRNS CONT LVR (W/O SHFT PATT) (BLACK LEATHER) ..	94-96	Y (ML9)	1	10224091
3.		N.S.	SCREW, SOCKET SET RING (PART OF 4)	89-94	.....		
4.	5-B5	4.006	HANDLE, M/TRNS CONT LVR REL (INCLS 3)	89-94	Y (ML9)	1	10075757
5.	5-B5	4.006	INSERT, M/TRNS CONT LVR KNOB (4.570)	89-96	Y	1	10150014
6.		8.977	SCREW-ROUNDWASHER M4.2X1.4X13, 8.63OD, 6010M, 6138M, C/R, TAP (M/TRNS CONT LVR BOOT)	89-96	.....	4	11515893
7.	5-B6	4.015	BOOT, M/TRNS CONT LVR (UPR)	89	Y	1	14104919

© 2000 GENERAL MOTORS SERVICE PARTS OPERATIONS-CHEVROLET-14Y

							1Y04-019
	5-B6	4.015	BOOT, M/TRNS CONT LVR (UPR)	95-96	Y (ML9)	1	10267746
	5-B6	4.015	BOOT, M/TRNS CONT LVR (UPR) (ON EARLY 92 & PRIOR MDLS, REMOVE & DISCARD C-CLIP ON SHFTR LVR) (UPR)	90-94	Y (ML9)	1	10193729
8.		6.967	RIVET, DOME HD BLIND TYPE .125 .357 (M/TRNS CONT LVR BOOT RET)	89-96	.....	4	9418060
9.	5-B6	4.015	RETAINER, M/TRNS CONT LVR BOOT	89-96	Y (ML9)	1	14104931
10.	5-B6	4.015	NUT, M/TRNS CONT LVR BOOT (M6X1X12)	89-96	Y (ML9)	4	14104840
11.	5-B6	4.015	BOOT, M/TRNS CONT LVR LWR .	89-96	Y	1	14104932
12.	5-B5	4.004	SHIFTER KIT, TRANS (REMAN) .	91-94	Y (ML9)	1	12355192
	5-B5	4.004	SHIFTER KIT, TRANS (REMAN) .	95-96	Y (ML9)	1	12534207

RPO DEFINITIONS
B4H - MODIFICATION--NOISE CONTROL, EXPORT
ML9 - TRANSMISSION,MANUAL 6-SPEED

© 2000 GENERAL MOTORS SERVICE PARTS OPERATIONS-CHEVROLET-14Y

MICROFICHE INDEX

GROUP 4.000

FICHE 5 OF 11

GROUP	DESCRIPTION	STARTING GRID LOCATION PARTS	ILLUSTRATIONS
–	GENERAL INFORMATION	1–A2	1–G2
–	ALPHABETICAL INDEX	1–B13	N.A.
4.000	4–SPEED TRANSMISSION	5–A2	5–F2
4.000	6–SPEED TRANSMISSION	5–B2	5–G2
4.000	AUTOMATIC TRANSMISSION	5–C2	5–H2
–	OUT OF FICHE CALLS	N.A.	5–M23

5–H1

CHEVROLET
CHASSIS GROUP 4.000

ILLUSTRATION INDEX

	TITLE	GRID
1984–1986	Y AUTOMATIC TRANSMISSION (MD8) THM700–R4 A.T. CASE & RELATED PARTS	5–H5
1984–1986	Y AUTOMATIC TRANSMISSION (MD8) THM700–R4 A.T. INTERNAL POWER TRAIN PARTS	5–H9
1984–1986	Y AUTOMATIC TRANSMISSION (MD8) THM700–R4 A.T. OIL PUMP	5–H13
1984–1987	Y AUTOMATIC TRANSMISSION (MD8) THM700–R4 A.T. CONTROL VALVE	5–H16
1984–1987	Y AUTOMATIC TRANSMISSION (MD8) THM700–R4 A.T. PARK LOCK	5–H19
1987–1989	Y AUTOMATIC TRANSMISSION (MD8) PART 1 THM700–R4 A.T. CASE & RELATED PARTS	5–H20
1990–1991	Y AUTOMATIC TRANSMISSION (MD8) PART 1 HM 4L60 CASE & RELATED PARTS	5–H20
1987–1989	Y AUTOMATIC TRANSMISSION (MD8) PART 2 THM700–R4 A.T. INTERNAL POWER TRAIN PARTS	5–H24
1990–1991	Y AUTOMATIC TRANSMISSION (MD8) PART 2 THM 4L60 INTERNAL POWER TRAIN PARTS	5–H24
1987–1989	Y AUTOMATIC TRANSMISSION (MD8) PART 4 THM700–R4 A.T. OIL PUMP	5–I2
1990–1991	Y AUTOMATIC TRANSMISSION (MD8) PART 4 HM 4L60 OIL PUMP	5–I2
1987–1989	Y AUTOMATIC TRANSMISSION (MD8) PART 5 THM700–R4 A.T. AUXILIARY ACCUMULATOR VALVE	5–I5
1990–1991	Y AUTOMATIC TRANSMISSION (MD8) PART 5 HM 4L60 AUXILIARY ACCUMILATOR VALVE	5–I5
1988–1989	Y AUTOMATIC TRANSMISSION (MD8) PART 3 THM700–R4 A.T. CONTROL VALVE	5–I6
1990–1991	Y AUTOMATIC TRANSMISSION (MD8) PART 3 HM 4L60 CONTROL VALVE	5–I6
1988–1989	Y AUTOMATIC TRANSMISSION (MD8) PART 6 THM700–R4 A.T. PARK LOCK	5–I8
1990–1991	Y AUTOMATIC TRANSMISSION (MD8) PART 6 HM 4L60 PARK LOCK	5–I8
1992–1993	Y AUTOMATIC TRANSMISSION (MD8) PART 1 HM 4L60 CASE & RELATED PARTS	5–I9
1992–1993	Y AUTOMATIC TRANSMISSION (MD8) PART 2 HM 4L60 INTERNAL POWER TRAIN PARTS	5–I17
1992–1993	Y AUTOMATIC TRANSMISSION (MD8) PART 3 HM 4L60 CONTROL VALVE	5–I20
1992–1993	Y AUTOMATIC TRANSMISSION (MD8) PART 4 HM 4L60 OIL PUMP	5–J2
1992–1993	Y AUTOMATIC TRANSMISSION (MD8) PART 5 HM 4L60 AUXILIARY ACCUMULATOR VALVE	5–J7
1992–1993	Y AUTOMATIC TRANSMISSION (MD8) PART 6 HM 4L60 PARK LOCK	5–J9
1994	Y AUTOMATIC TRANSMISSION (M30) PART 2 (4L60E) CLUTCH GEARS	5–J11
1994	Y AUTOMATIC TRANSMISSION (M30) PART 4 (4L60E) OIL PUMP	5–J19
1994–1995	Y AUTOMATIC TRANSMISSION (M30) PART 1 (4L60E) CASE & RELATED PARTS/PARK LOCK LINKAGE	5–K2
1994–1995	Y AUTOMATIC TRANSMISSION (M30) PART 3 (4L60E) CONTROL VALVE	5–K9
1995–1996	Y AUTOMATIC TRANSMISSION (M30) PART 2 (4L60E) CLUTCH GEARS	5–K12
1995–1996	Y AUTOMATIC TRANSMISSION (M30) PART 4 (4L60E) OIL PUMP	5–K20
1996	Y AUTOMATIC TRANSMISSION (M30) PART 1 (4L60E) CASE & RELATED PARTS/PARK LOCK LINKAGE	5–L2
1996	Y AUTOMATIC TRANSMISSION (M30) PART 3 (4L60E) CONTROL VALVE	5–L9
1990–1996	Y FILLER TUBE & OIL COOLER PIPES	5–L12
1984–1991	Y SHIFT CONTROL/AUTOMATIC TRANSMISSION FLOOR(MD8)	5–L14
1992–1993	Y SHIFT CONTROL/AUTOMATIC TRANSMISSION FLOOR(MD8)	5–L16
1994–1996	Y SHIFT CONTROL/AUTOMATIC TRANSMISSION FLOOR(M30)	5–L16
1992–1993	Y SPEED SENSOR/TRANSMISSION (MD8)	5–L19
1992–1996	Y SPEED SENSOR/TRANSMISSION (ML9)	5–L19
1992–1994	Y TRACTION CONTROL & ABS SYSTEM (LT1)	5–L22
1992–1995	Y TRACTION CONTROL & ABS SYSTEM (LT5)	5–L22

© GENERAL MOTORS SERVICE PARTS OPERATIONS–CHEVROLET–14Y

ILLUSTRATION INDEX

	TITLE	GRID
1995	Y TRACTION CONTROL & ABS SYSTEM (LT1)	5-L26
1996	Y TRACTION CONTROL & ABS SYSTEM	5-L26

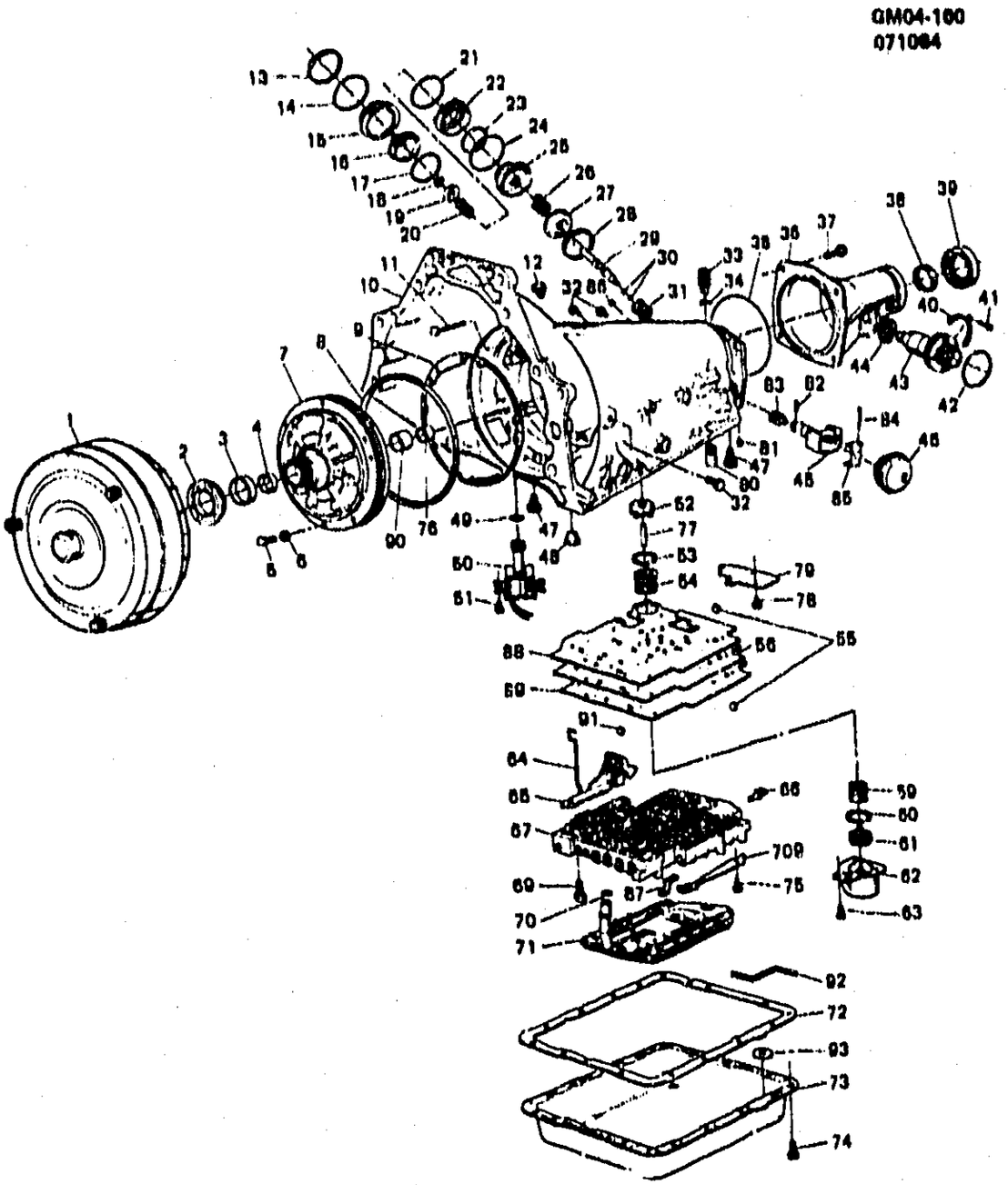

GM04-1601

1984-1986 Y AUTOMATIC TRANSMISSION (MD8) THM700-R4 A.T. CASE & RELATED PARTS

1.	5-C14	4.115	CONVERTER, TRANS-REMFD (1984-Y9, YA, YW) (*1)	8656957
	5-C14	4.115	CONVERTER, TRANS-REMFD (1984-Y9, YA, YW) (*2)	24201203
	5-C14	4.115	CONVERTER, TRANS-REMFD (1985-86)	24201203
2.	5-D10	4.226	SEAL, T/CV FLUID (FRT) (*3, 4) (AC-DELCO #24202535)	24202535
3.	5-C14	4.115	BUSHING, T/CV (PUMP BODY) (AC-DELCO #24206030)	24206030
4.	5-C16	4.123	BUSHING, TURB SHF (*1) (AC-DELCO #8628915)	8628915
	5-D10	4.226	BUSHING, STATOR SHF FRT (1984-86) (*2) (AC-DELCO #8647954)	8647954

© 2000 GENERAL MOTORS SERVICE PARTS OPERATIONS-CHEVROLET-14Y

5.	5-D10	4.226	BOLT, PUMP TO CASE-W/WASHER (AC-DELCO #8673596)	8673596
6.	5-D10	4.226	SEAL, PUMP TO CASE BOLT, O RING (AC-DELCO #12337996)	12337996
7.	5-D7	4.224	PUMR COMPL (1984) (*1) (AC-DELCO #24210773)	24210773
		DISCON	PUMR COMPL (1984) (*2)	8667080
		N.S.	PUMR COMPL (1985-6) (SEE BODY AND/OR COVER) (4.224) (*2) .	
8.	5-D10	4.226	SEAL, A/TRNS FLUID PUMP (*3) (AC-DELCO #24210605)	24210605
9.	5-D10	4.226	GASKET, PUMP CVR (*3, 4) (AC-DELCO #12337931)	12337931
10.		DISCON	CASE, (INCL 11, 76)	8667936
11.	5-C14	4.104	PIPE, A/TRNS VENT (PART OF 10) (AC-DELCO #24200374)	24200374
12.	5-C17	4.126	FITTING, TRANS FLUID CLR PIPE (AC-DELCO #8637742)	8637742
13.	5-D12	4.228	RING, SERVO CVR RET (AC-DELCO #8642124)	8642124
14.	5-D14	4.229	SEAL, 2-4 SERVO CVR O RING (PART OF 15, 22) (*3, 4) (AC-DELCO #8647351)	8647351
15.	5-D12	4.228	COVER, 2-4 SERVO (W/SEAL) (INCL 14) (AC-DELCO #8642979) ..	8642979
16.	5-D12	4.228	PISTON, 4TH APPLY (INCL 17) (AC-DELCO #8642478)	8642478
17.	5-D14	4.229	RING, 4TH APPLY PSTN OTR OIL SEAL (PART OF 16) (AC-DELCO #8642480)	8642480
18.		8.934	RETAINER, SNAP RING BOWED EXT FITS SHF (7/16") (AC-DELCO #9415640)	9415640
19.	5-D15	4.233	WASHER, SERVO APPLY PIN (AC-DELCO #8642107)	8642107
20.	5-D16	4.246	SPRING, SERVO APPLY PIN (AC-DELCO #8642106)	8642106
21.	5-D14	4.229	SEAL, SERVO PSTN INR HSG O RING (*3, 4) (AC-DELCO #8642112)	8642112
22.	5-D12	4.228	HOUSING, SERVO PSTN INR (INCL 14) (AC-DELCO #8673039) ...	8673039
23.	5-D14	4.229	RING KIT, 2-4 BAND SERVO 2ND APPL PSTN FLUID SEAL (INCL 23) (AC-DELCO #8642925)	8642925
24.		N.S.	RING, OIL SEAL OTR (PART OF 23)	
25.	5-D12	4.228	PISTON, 2ND APPLY (AC-DELCO #8642079)	8642079
26.	5-D15	4.233	SPRING, SERVO CUSH (AC-DELCO #8642539)	8642539
27.	5-D15	4.233	RETAINER, SERVO CUSH SPR (AC-DELCO #8642416)	8642416
28.	5-D3	4.176	RING, 2ND APPLY PSTN RET (AC-DELCO #8642105)	8642105
29.	5-D16	4.246	PIN, 2-4 BAND SERVO PSTN (2 RING) (INCL 30) (AC-DELCO #8680499)	8680499
	5-D16	4.246	PIN, 2-4 BAND SERVO PSTN (3 RING) (INCL 30) (AC-DELCO #8680500)	8680500
	5-D16	4.246	PIN, 2-4 BAND SERVO PSTN (WIDE BAND) (INCL 30) (AC-DELCO #8680501)	8680501
30.	5-D12	4.228	SEAL, 2ND APPLY PSTN PIN (*3, 4) (AC-DELCO #8630120)	8630120
31.	5-D15	4.233	SPRING, SERVO RET (AC-DELCO #8642273)	8642273
32.	5-D18	4.265	PLUG, CLU & ACCUM PRESS (1/4"-18 PIPE) (AC-DELCO #8647185)	8647185
33.	5-C14	4.115	CONNECTOR, A/TRNS WRG (INCL 34) (AC-DELCO #8634383)	8634383
34.	5-N7	2.530	SEAL, A/TRNS WRG CONN (O RING) (4.338) (PART OF 33) (*3, 4) (AC-DELCO #10054241)	10054241
35.	5-D26	4.318	SEAL, EXTN TO CASE (*3, 4) (AC-DELCO #1358899)	1358899
36.	5-D26	4.317	EXTENSION, CASE-W/BUSH (INCL 38, 39) (AC-DELCO #24201517)	24201517
37.		8.900	BOLT, CASE EXT (M10 X 1.5 X 35) 10.9 PC	14060030
38.	5-D27	4.319	BUSHING, CASE EXT (PART OF 36) (AC-DELCO #24207915)	24207915
39.	5-D26	4.318	SEAL, EXT OIL (PART OF 36) (*3, 4) (AC-DELCO #8673526)	8673526
40.	5-N16	3.682	RETAINER, VEH SPD SENSOR (AC-DELCO #12338069)	12338069
41.		8.900	BOLT, HWH (M6X1X25)	11508128
42.	5-E13	4.338	SEAL, SPEEDO SENSOR (AC-DELCO #15552872)	15552872
43.	5-N16	3.682	SENSOR, VEH SPD (TRANS MTD) (W/D9A) (AC-DELCO #213-210)	25007224
	5-N16	3.682	SENSOR, VEH SPD (TRANS MTD) (W/D9B) (AC-DELCO #213-223)	25007308
44.		N.S.	GEAR, SPEEDO DRVN (SEE SPEEDO GEAR CHART)	

© 2000 GENERAL MOTORS SERVICE PARTS OPERATIONS-CHEVROLET-14Y

45.	5-D17	4.256	GOVERNOR, TRANS (AC-DELCO #24202117)	24202117
46.	5-D17	4.256	COVER, GOV (AC-DELCO #8667827)	8667827
47.	5-D17	4.248	SCREEN, OIL PRESS (CONV & GOV) (AC-DELCO #12338044)	12338044
48.	5-D14	4.229	PIN, BAND ANCH (AC-DELCO #8654581)	8654581
49.	5-C16	4.123	SEAL, CONV CLU SOL (4.123) (PART OF 50) (AC-DELCO #8630049)	8630049
50.	5-C15	4.122	SOLENOID, CONV CLU (INCL 49) (1984-85) (FOR 1984 THE 4 WIRE SOLENOID HAS BEEN RPLD BY 3 WIRE SOLENOID, THE BLACK 4-3 DOWNSHIFT SW WIRE SHOULD BE BYPASSED) (AC-DELCO #8654129)	8654129
	5-C15	4.122	SOLENOID, CONV CLU (INCL 49) (1986-YA, YC, YD) (AC-DELCO #8654126)	8654126
51.		8.900	BOLT, HWH (M6X1X12) 9.8 PS (AC-DELCO #11514149)	11514149
52.	5-D12	4.228	PISTON, 3-4 ACCUM (*5) (AC-DELCO #8663608)	8663608
53.	5-D14	4.229	RING, 3-4 ACCUM PSTN FLUID SEAL (*5) (AC-DELCO #24206509)	24206509
54.	5-D15	4.233	SPRING, 3-4 ACCUM (AC-DELCO #8634703)	8634703
55.		8.899	BALL, GRADE 2, STD DIA 1/4 (2), CHROME STL (AR) (AC-DELCO #104918)	104918
56.	5-D18	4.265	PLATE, VLV BODY SPCR (1984) (1985-YC) (1986) (AC-DELCO #8654484)	8654484
		DISCON	PLATE, VLV BODY SPACER (1985-YA)	8654485
59.	5-D15	4.233	SPRING, 1-2 ACCUM (AC-DELCO #8634703)	8634703
60.	5-D14	4.229	RING, 1-2 ACCUM PSTN FLUID SEAL (*5) (AC-DELCO #24206509)	24206509
61.		N.S.	PISTON, 1-2 ACCUM (*5)	
62.	5-D12	4.228	COVER, 1-2 ACCUM-W/PIN (AC-DELCO #8663543)	8663543
63.		8.900	BOLT, HEX (M6X1X35) 10.0 PC (2 REQD) (AC-DELCO #11503870)	11503870
64.	5-D24	4.275	LINK, THROT LVR TO CBL (AC-DELCO #8642290)	8642290
65.	5-D24	4.275	LEVER, T/V (AC-DELCO #8673606)	8673606
66.	5-N13	2.559	CLIP, A/TRNS WRG HARN (AC-DELCO #8673068)	8673068
67.		DISCON	VALVE, CONT (1984)	8654073
		DISCON	VALVE, CONT (1985-YC)	8654460
		DISCON	VALVE, CONT (1985-YA)	8663239
		DISCON	VALVE, CONT (1986-YA)	8663239
		DISCON	VALVE, CONT (1986-YD)	8654460
69.		8.900	BOLT, HEX (M6X1X50) 10.9 PL (AC-DELCO #11503861)	11503861
70.	5-D10	4.226	SEAL, A/TRNS FLUID FLTR (O RING) (4.338) (PART OF 71) (AC-DELCO #10054241)	10054241
71.	5-D6	4.197	FILTER KIT, A/TRNS FLUID (INCL 70, 72) (AC-DELCO #8657926)	8657926
72.	5-D6	4.196	GASKET, OIL PAN (PART OF 71) (*3, 4) (AC-DELCO #8654799)	8654799
73.	5-D5	4.195	PAN KIT, A/TRNS FLUID (AC-DELCO #8663948)	8663948
74.		8.900	BOLT, W/CON SPR WA, M8X1.25X20, 9.8, ZO (OIL PAN) (AR) (AC-DELCO #15614709)	15614709
75.		8.900	BOLT, HEX (M8X1.25X20) 10.9 PZOR (AC-DELCO #11508687)	11508687
76.		N.S.	BUSHING, CASE (PART OF 10)	
77.	5-D12	4.228	PIN, 3-4 ACCUM PSTN (AC-DELCO #8628273)	8628273
78.		8.900	BOLT, HEX (M6X1X16) 10.9 ZP (AC-DELCO #11500413)	11500413
79.		DISCON	COVER, OIL PASS	8642055
80.	5-D12	4.228	VALVE, 3RD ACCUM BALL CHK (AC-DELCO #8634400)	8634400
81.	5-C14	4.105	ORIFICE, 3RD ACCUM BL (AC-DELCO #8628864)	8628864
82.		8.939	PIN, SPR COILED (1/8"X5/8") (PART OF 83) (AC-DELCO #273337)	273337
83.	5-D17	4.256	GEAR, GOV DRVN-W/PINS (INCL 82, 84) (AC-DELCO #8663995)	8663995
84.	5-D17	4.256	PIN, GOV WEIGHT (PART OF 83) (AC-DELCO #8663706)	8663706
85.	5-D17	4.256	CAP, GOV THR (AC-DELCO #6261239)	6261239
86.	5-C14	4.105	ORIFICE, FWD CLU FEED (ALSO PART OF 10) (AC-DELCO #8628864)	8628864
87.	5-D6	4.197	CLIP, FILTER RET (AC-DELCO #8663232)	8663232

© 2000 GENERAL MOTORS SERVICE PARTS OPERATIONS-CHEVROLET-14Y

88.	5-D16	4.265	GASKET KIT, VLV BODY SPCR PLT (PART OF 89) (AC-DELCO #8642993)	8642993
89.		N.S.	GASKET, VLV BODY LWR (PART OF 88)	
90.	5-D10	4.226	BUSHING, STATOR SHF RR (AC-DELCO #8642004)	8642004
91.		8.699	BALL, 5/16 CHROME STEEL (AR) (AC-DELCO #104919)	104919
92.	5-C15	4.122	CONDUIT, SOL WIRE (AC-DELCO #8654081)	8654081
93.	5-D5	4.195	MAGNET, A/TRNS FLUID PAN (AC-DELCO #8665630)	8665630
709.	5-D24	4.275	DETENT, MAN SHFT (AC-DELCO #8642247)	8642247

NOTE 1: 1ST DES BUILT BEFORE JULIAN DATE 84107.
NOTE 2: 2ND DES BUILT ON OR AFTER JULIAN DATE 84107.
NOTE 3: PART OF 4.005 24201804 – GASKET KIT, W/SEALS.
NOTE 4: OVERHAUL KIT IS REPLACED BY 24201804 GASKET KIT T/W 24201805 PLATE KIT T/W 24204495 PISTON KIT.
NOTE 5: PART OF 04.226 24204495 – PISTON & SEAL KIT.

© 2000 GENERAL MOTORS SERVICE PARTS OPERATIONS–CHEVROLET–14Y

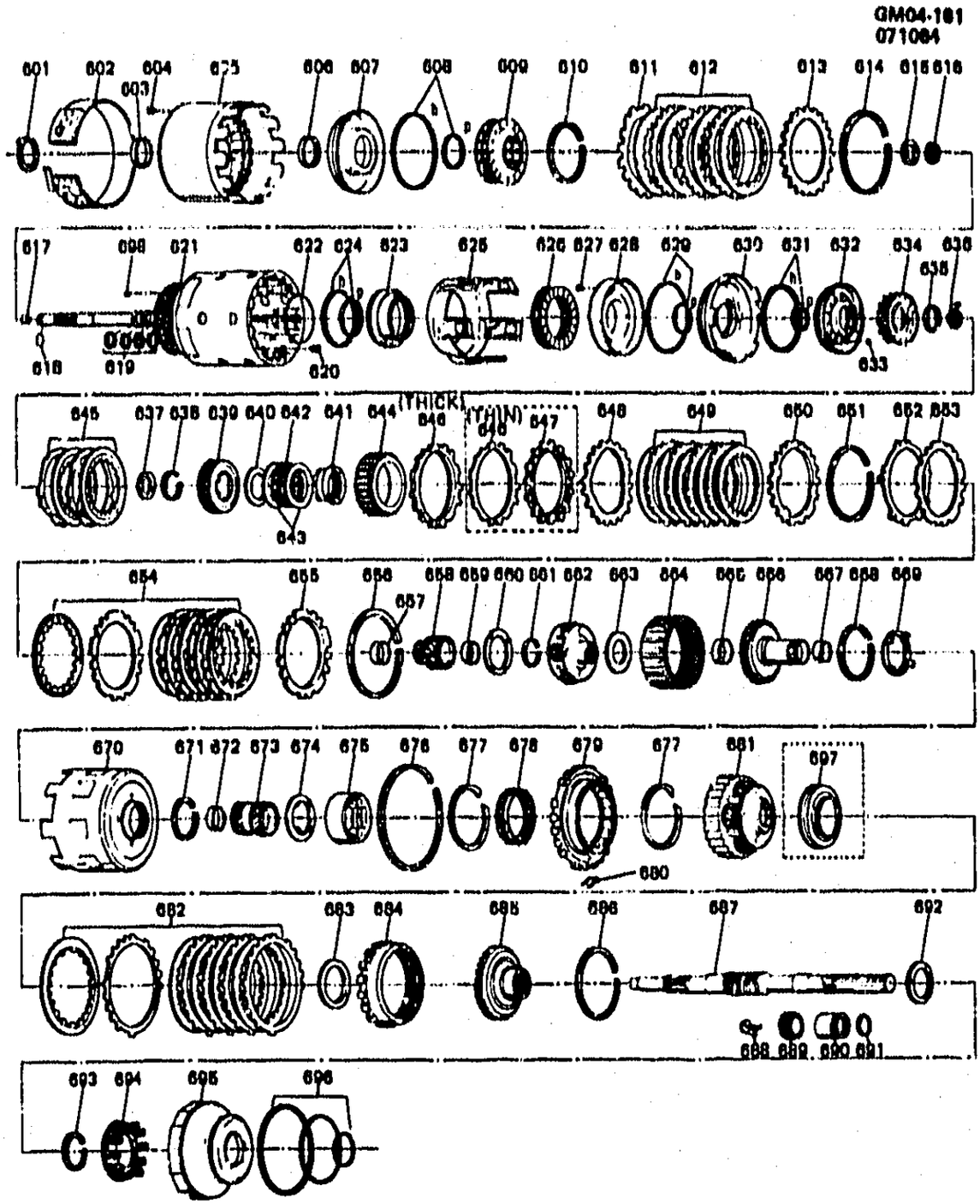

GM04-1613

1984-1986 Y AUTOMATIC TRANSMISSION (MD8) THM700-R4 A.T. INTERNAL POWER TRAIN PARTS

601.	5-D10	4.226	WASHER, A/TRNS FLUID PUMP (AC-DELCO #12338134)	12338134
602.	5-D17	4.251	BAND, 2-4 (AC-DELCO #8673175)	8673175
603.	5-D3	4.180	BUSHING, REV INPUT CLU HSG FRT (PART OF 605) (AC-DELCO #8642905)	8642905

© 2000 GENERAL MOTORS SERVICE PARTS OPERATIONS-CHEVROLET-14Y

604.	5-C16	4.123	VALVE, FWD CLU HSG BALL CHK (PART OF 605) (AC-DELCO #8654436)	8654436
605.	5-D3	4.180	CLUTCH, REV INPUT ((INCL 603-4, 606, 613)) (AC-DELCO #8690907)	8690907
606.	5-C28	4.169	BUSHING, REV INPUT CLU RR (PART OF 605) (AC-DELCO #8628917)	8628917
607.		DISCON	PISTON, REV INPUT CLU (*9)	8654077
608.	5-C27	4.166	SEAL KIT, REV INPUT CLU (AC-DELCO #8657922)	8657922
609.	5-C26	4.164	SPRING, REV INPUT CLU (AC-DELCO #8647284)	8647284
610.	5-C26	4.164	RING, REV INPUT CLU SPR RET (AC-DELCO #8628059)	8628059
611.	5-D3	4.180	CLUTCH, REV INPUT (WAVED) (AC-DELCO #8690907)	8690907
612.	5-C20	4.163	PLATE, REV INPUT CLU (GROOVED) (AC-DELCO #8642063)	8642063
	5-C20	4.163	PLATE, REV INPUT CLU (FLAT STL) (1.97MM THK) (AC-DELCO #24205267)	24205267
613.		DISCON	PLATE, REV INPUT CLU BKG (FLAT STL) (6.30MM) (PART OF 605)	8663654
614.	5-C26	4.164	RING, REV INPUT CLU RET (AC-DELCO #8667022)	8667022
615.	5-C19	4.162	BEARING, STATOR SHF TO SEL WA (AC-DELCO #8642066)	8642066
616.	5-D4	4.189	WASHER, REV INPUT CLU HSG THR (1.92MM) (AC-DELCO #8642067)	8642067
	5-D4	4.189	WASHER, REV INPUT CLU HSG THR (2.09MM) (AC-DELCO #8642068)	8642068
	5-D4	4.189	WASHER, REV INPUT CLU HSG THR (2.26MM) (AC-DELCO #8642069)	8642069
	5-D4	4.189	WASHER, REV INPUT CLU HSG THR (2.43MM) (AC-DELCO #8642070)	8642070
	5-D4	4.189	WASHER, REV INPUT CLU HSG THR (2.60MM) (AC-DELCO #8642071)	8642071
	5-D4	4.189	WASHER, REV INPUT CLU HSG THR (2.77MM) (AC-DELCO #8642072)	8642072
	5-D4	4.189	WASHER, REV INPUT CLU HSG THR (2.94MM) (AC-DELCO #8642073)	8642073
	5-D4	4.189	WASHER, REV INPUT CLU HSG THR (3.11MM) (AC-DELCO #8642074)	8642074
617.	5-C16	4.123	VALVE, TURB SHF BALL CHK (YELLOW) (1984) (AC-DELCO #8685839)	8685839
	5-C16	4.123	VALVE, TURB SHF BALL CHK (1985-86) (AC-DELCO #8685839)	8685839
618.	5-C16	4.123	SEAL, TURB SHF TO SEL WA (AC-DELCO #8630049)	8630049
619.	5-C16	4.123	RING, TURB SHF OIL SEAL (TEFLON) (4 REQD) (AC-DELCO #8642420)	8642420
620.	5-C16	4.123	VALVE, 3-4 CLU HSG BALL CHK (4.76MM) (AC-DELCO #24208262)	24208262
621.		DISCON	HOUSING, INPUT CLU-W/SHF (1984) (*2)	8647963
	5-C18	4.158	HOUSING, INPUT CLU-W/SHF (1984) (*6) (AC-DELCO #8654156)	8654156
	5-C18	4.158	HOUSING, INPUT CLU-W/SHF (1985) (AC-DELCO #8654156)	8654156
	5-C18	4.158	HOUSING, INPUT CLU-W/SHF (1986) (AC-DELCO #8657901)	8657901
622.		N.S.	SEAL, INPUT TO FWD HSG O RING (*1, 3, 4)	
623.	5-C27	4.166	PISTON, 3RD & 4TH INPUT CLU (AC-DELCO #24200290)	24200290
624.		N.S.	SEAL, 3RD & 4TH CLU INR & OTR (*1, 3, 4)	
625.		DISCON	RING, 3RD & 4TH CLU APPLY (*7)	8642374
626.	5-C28	4.167	SPRING, 3RD & 4TH INPUT CLU (AC-DELCO #8685244)	8685244
627.	5-C16	4.123	VALVE, FWD CLU HSG-W/BALL (PART OF 628) (AC-DELCO #8628732)	8628732
628.	5-C28	4.169	HOUSING, FWD CLU (INCL 627) (AC-DELCO #8654326)	8654326
629.		N.S.	SEAL, FWD CLU INR & OTR (*1, 3, 4)	
630.	5-C27	4.166	PISTON, FWD CLU (AC-DELCO #8683513)	8683513
631.		N.S.	SEAL, OVERRUN CLU INR & OTR (*1, 3, 4)	
632.	5-C27	4.166	PISTON, OVERRUN CLU (INCL 633) (AC-DELCO #8642148)	8642148
633.		8.899	BALL, SPECIAL (PART OF 632) (AR) (AC-DELCO #7002117)	7002117

© 2000 GENERAL MOTORS SERVICE PARTS OPERATIONS-CHEVROLET-14Y

634.	5-C20	4.163	SPRING, OVERRUN CLU (AC-DELCO #8677876)	8677876
635.		8.934	RING, EXT SNAP FITS M30 DIA SHF (*5)	11500692
636.	5-D3	4.176	SEAL, INPUT HSG TO OUTPUT SHF (*1, 3, 4) (AC-DELCO #8642176)	8642176
637.	5-D3	4.176	BEARING, INPUT SUN GR (AC-DELCO #8642162)	8642162
638.	5-D3	4.180	RING, OVERRUN CLU HUB RET (*5) (AC-DELCO #8647083)	8647083
639.		N.S.	HUB, OVERRUN CLU (PART OF 642)	
640.		DISCON	PLATE, FWD CLU SPRAG WEAR (PART OF CLUTCH ASM)	8663773
641.		N.S.	RETAINER, FWD CLU SPRAG INR-W/RACE (PART OF 642)	
642.	5-C26	4.164	CLUTCH, FWD RLR (INCL 639, 641, 643-4) (AC-DELCO #24210961)	24210961
	5-C26	4.164	CLUTCH, FWD RLR (1985-86) (AC-DELCO #24210960)	24210960
643.		N.S.	RETAINER (PART OF 642)	
644.		N.S.	RACE, FWD CLU SPRAG OTR (PART OF 642)	
645.	5-C20	4.163	PLATE, OVERRUN CLU (FLAT STL) (*3, 4) (AC-DELCO #8642154)	8642154
	5-C20	4.163	PLATE, OVERRUN CLU (GROOVED) (*3, 4) (AC-DELCO #8673253)	8673253
646.	5-C20	4.163	PLATE, FWD CLU APPLY (6.44MM) (AC-DELCO #8642163)	8642163
647.		N.S.	PLATE, FWD CLU SPCR	
648.	5-C20	4.163	PLATE, FWD CLU (WAVED STL) (AC-DELCO #8647058)	8647058
649.		DISCON	PLATE, FWD CLU (FLAT STL) (1984) (*4, 8)	8642167
	5-C20	4.163	PLATE, FWD CLU (FLAT STL) (1985-86) (*4, 8) (AC-DELCO #8654325)	8654325
	5-C20	4.163	PLATE, FWD CLU (FLAT FACED) (1985-86) (*4, 8) (AC-DELCO #8673254)	8673254
650.	5-C20	4.163	PLATE, FWD CLU BKG (6.75MM) (AC-DELCO #8642169)	8642169
651.	5-C20	4.163	RING, FWD CLU BKG PLT RET (AC-DELCO #8642170)	8642170
652.		DISCON	PLATE, 3RD & 4TH CLU RING RET (*7)	8642171
653.	5-C20	4.163	PLATE, 3RD & 4TH CLU APPLY (3.30MM) (*7) (AC-DELCO #8642172)	8642172
654.		DISCON	PLATE, 3RD & 4TH CLU (FLAT STL) (1.97MM) (*3, 4, 7)	8678054
	5-C20	4.163	PLATE, 3RD & 4TH CLU (SMOOTH) (*3, 4, 7) (AC-DELCO #8654145)	8654145
655.	5-C20	4.163	PLATE, 3RD & 4TH CLU (7.13MM) (*3, 4, 7) (AC-DELCO #8642621)	8642621
	5-C20	4.163	PLATE, 3RD & 4TH CLU (6.13MM) (*3, 4, 7) (AC-DELCO #8642622)	8642622
	5-C20	4.163	PLATE, 3RD & 4TH CLU (5.13MM) (*3, 4, 7) (AC-DELCO #8642623)	8642623
	5-C20	4.163	PLATE, 3RD & 4TH CLU (4.13MM) (*3, 4, 7) (AC-DELCO #8642624)	8642624
656.		DISCON	RING, 3RD & 4TH CLU BKG PLT RET (*7)	8642177
657.	5-D27	4.319	BUSHING, OUTPUT SHF (PART OF 658) (AC-DELCO #8642181)	8642181
658.	5-C19	4.159	GEAR, INPUT SUN (INCL 657, 659) (AC-DELCO #8647093)	8647093
659.	5-D27	4.319	BUSHING, OUTPUT SHF (RR) (PART OF 658) (AC-DELCO #8642181)	8642181
660.	5-D3	4.176	WASHER, INPUT CARR TO RACE THR (AC-DELCO #12337941)	12337941
661.	5-D3	4.176	RING, OUTPUT SHF RET (*3, 4) (AC-DELCO #8654141)	8654141
662.	5-D2	4.175	CARRIER, INPUT (COMPL) (AC-DELCO #24212177)	24212177
663.	5-C19	4.159	BEARING, INPUT CARR TO REACT SHF THR (AC-DELCO #8642191)	8642191
664.	5-C18	4.158	GEAR, INPUT INT (AC-DELCO #8663639)	8663639
665.	5-D3	4.176	BUSHING, REACT CARR SHF FRT (PART OF 666) (AC-DELCO #8642908)	8642908
666.	5-D2	4.175	SHAFT, REACT CARR-W/BUSH (1984) (INCL 665, 667) (AC-DELCO #8681518)	8681518
	5-D2	4.175	SHAFT, REACT CARR-W/BUSH (1985-86) (INCL 665, 667) (AC-DELCO #8681518)	8681518

© 2000 GENERAL MOTORS SERVICE PARTS OPERATIONS-CHEVROLET-14Y

667.	5-D3	4.176	BUSHING, REACT CARR SHF RR (PART OF 666) (AC-DELCO #8642907)	8642907
668.	5-D3	4.176	RING, REACT SHF TO INT GR RET (AC-DELCO #8642201)	8642201
669.	5-D3	4.176	WASHER, REACTION CARR SHF THR (AC-DELCO #8642202)	8642202
670.	5-D2	4.175	SHELL, REACT SUN (AC-DELCO #8683439)	8683439
671.	5-C19	4.159	RING, REACT SUN GR RET (AC-DELCO #8647337)	8647337
672.	5-D3	4.176	BUSHING, REACT SUN (PART OF 673) (AC-DELCO #8642909)	8642909
673.	5-C19	4.159	GEAR, REACT SUN (INCL 672) (AC-DELCO #8642204)	8642204
674.	5-C19	4.159	WASHER, REACTION SUN GR SHELL THR (AC-DELCO #8642331)	8642331
675.	5-D3	4.180	RACE, LO & REV OVERRUN CLU (AC-DELCO #8673300)	8673300
676.	5-D3	4.180	RING, LO & REV SUPT TO CASE RET (AC-DELCO #24200278)	24200278
677.	5-D3	4.180	RING, LO & REV OVERRUN CLU (AC-DELCO #6261051)	6261051
678.	5-C20	4.163	PLATE KIT, LOW & REV CLU (W/SUPT) (INCL 679) (AC-DELCO #8687996)	8687996
679.	5-C27	4.166	SUPPORT, LOW & REV CLU (PART OF 678) (AC-DELCO #8681727)	8681727
680.	5-D3	4.180	SPRING, LO & REV CLU SUPT RET (AC-DELCO #6261415)	6261415
681.	5-D2	4.175	CARRIER, REACT (INCL 697) (AC-DELCO #8654200)	8654200
682.	5-C20	4.163	PLATE, LOW & REV CLU (FLAT STEEL) (*4) (AC-DELCO #6261120)	6261120
683.	5-C19	4.159	BEARING, REACTION CARR THR (AC-DELCO #8642215)	8642215
684.	5-C18	4.156	GEAR, INT REACT (AC-DELCO #8667055)	8667055
685.	5-D2	4.175	SUPPORT, INT REACT GR (AC-DELCO #8681491)	8681491
686.	5-D3	4.176	RING, REACT GR TO SUPT RET (AC-DELCO #8642220)	8642220
687.	5-D2	4.175	SHAFT, OUTPUT (INCL 690-1) (AC-DELCO #8681807)	8681807
688.	5-E13	4.345	CLIP, SPEEDO DR GR (AC-DELCO #6261781)	6261781
689.	5-E13	4.343	GEAR, SPEEDO DRIVE (17 TEETH) (RED) (AC-DELCO #8640517)	8640517
690.		N.S.	SLEEVE, OUTPUT SHF (PART OF 687)	
691.		N.S.	SEAL, OUTPUT SHF (PART OF 687) (*3, 4)	
692.	5-C19	4.159	BEARING, INT REACTION GR SUPT THR (AC-DELCO #8642191)	8642191
693.	5-C26	4.164	RING, LO & REV CLU RET (4.159) (*5) (AC-DELCO #8647337)	8647337
694.	5-C26	4.164	SPRING, LO & REV CLU (AC-DELCO #8642227)	8642227
695.	5-C20	4.163	PLATE KIT, LOW & REV CLU (AC-DELCO #8687996)	8687996
696.	5-D4	4.189	SEAL KIT, LOW & REV CLU (AC-DELCO #8648987)	8648987
697.		N.S.	DEFLECTOR, OIL (REQD ON HIGH OUTPUT MODELS ONLY) (PART OF 681) (*1)	
698.	5-D7	4.224	PLUG, INPUT HSG AIR BLEED (4.3MM DIA) (AC-DELCO #8631146)	8631146

NOTE 1: PART OF 4.166 8642919 – SEAL KIT, INPUT HSG PSTN
NOTE 2: 1ST DES BUILT BEFORE JULIAN DATE 84107.
NOTE 3: PART OF 4.005 24201804 – GASKET KIT, W/SEALS
NOTE 4: OVERHAUL KIT IS REPLACED BY 24201804 GASKET KIT T/W 24201805 PLATE KIT T/W 24204495 PISTON KIT.
NOTE 5: PART OF 4.005 8642910 – RING KIT, SNAP
NOTE 6: 2ND DES BUILT ON OR AFTER JULIAN DATE 84107. 2ND DES WILL ALSO HAVE THE LETTER "T" STAMPED ON PAN RAIL FOLLOWING THE TRANS I.D. NUMBER.
NOTE 7: PART OF 4.163 24203547 – PLATE KIT,3RD & 4TH CLU
NOTE 8: PART OF 04.163 08647991 – PLATE KIT,FWD CLU
NOTE 9: PART OF 4.108 8U90907 – CLUTCH REV INPUT

© 2000 GENERAL MOTORS SERVICE PARTS OPERATIONS-CHEVROLET-14Y

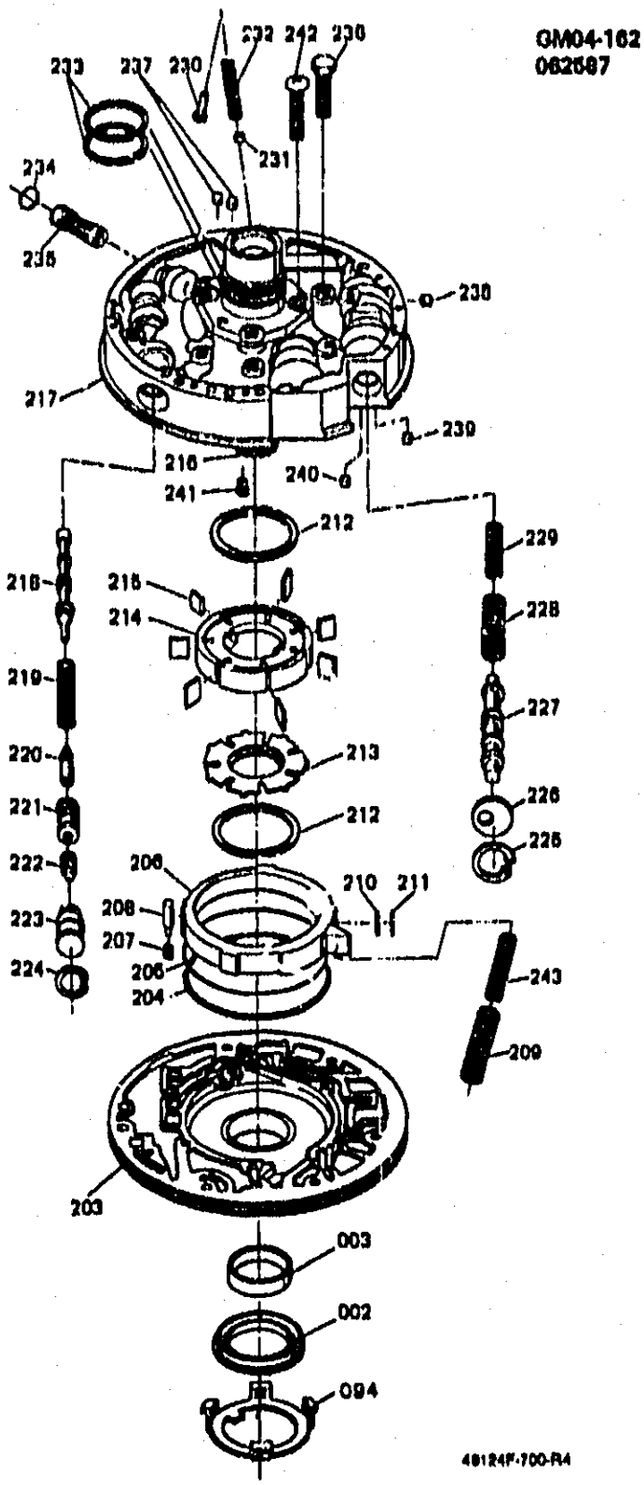

GM04-1622

1984-1986 Y AUTOMATIC TRANSMISSION (MD8) THM700-R4 A.T. OIL PUMP

2.	5-D10	4.226	SEAL, T/CV FLUID (PART OF 203) (AC-DELCO #24202535)	24202535
3.	5-C14	4.115	BUSHING, T/CV (PART OF 203) (AC-DELCO #24206030)	24206030
94.	5-D10	4.226	RETAINER, FRT HELIX SEAL (AC-DELCO #8654491)	8654491
203.	5-D7	4.224	PUMP, (COMPL) (1984 1ST DES) (INCL 2, 3, 204-215) (*8) (AC-DELCO #24210773)	24210773

© 2000 GENERAL MOTORS SERVICE PARTS OPERATIONS-CHEVROLET-14Y

		DISCON	BODY, PUMP (1984 2ND DES) (INCL 2, 3, 204 215) (*9)	8667080
	5-D7	4.224	BODY, PUMP (1985-86) (INCL 2, 3, 204-215' (AC-DELCO #8649964)	8649964
204.		N.S.	RING, SLIDE OIL SEAL (PART OF 203) (*1, 5, 6)	
205.		N.S.	SEAL, SLIDE SEAL O RING (PART OF 203) (*1, 5, 6)	
206.	5-D7	4.224	SLIDE, A/TRNS FLUID PUMP (17.955MM) (PART OF 203) (AC-DELCO #8634081)	8634081
	5-D7	4.224	SLIDE, A/TRNS FLUID PUMP (17.968MM) (PART OF 203) (AC-DELCO #8634082)	8634082
	5-D7	4.224	SLIDE, A/TRNS FLUID PUMP (17.981MM) (PART OF 203) (AC-DELCO #8634083)	8634083
	5-D7	4.224	SLIDE, A/TRNS FLUID PUMP (17.994MM) (PART OF 203) (AC-DELCO #8634084)	8634084
	5-D7	4.224	SLIDE, A/TRNS FLUID PUMP (18.007MM) (PART OF 203) (AC-DELCO #8634085)	8634085
207.	5-D10	4.226	SPRING, PIV PIN (AC-DELCO #8634098)	8634098
208.	5-D10	4.226	PIN, PIV SLIDE (AC-DELCO #8634097)	8634097
209.	5-D10	4.226	SPRING, PUMP SLIDE OTR (AC-DELCO #8639563)	8639563
210.		N.S.	SUPPORT, PUMP SLIDE SEAL (PART OF 203) (*1, 5, 6)	
211.		N.S.	SEAL, PUMP SLIDE (PART OF 203) (*1, 5, 6)	
212.	5-D10	4.226	RING, PUMP VANE (*2) (AC-DELCO #24201144)	24201144
213.	5-D10	4.226	GUIDE, ROTOR (AC-DELCO #8654733)	8654733
214.		N.S.	ROTOR, OIL PUMP (PART OF 203)	
215.	5-D10	4.226	VANE, PUMP (*2) (AC-DELCO #8631280)	8631280
216.		N.S.	SHAFT & FLANGE ASM, STATOR (*3)	
217.		N.S.	COVER, PUMP (1984) (PART OF 203) (*4)	
	5-D7	4.224	COVER, PUMP (1985-86) (*4) (AC-DELCO #8667083)	8667083
218.	5-D17	4.262	VALVE, PRESS REG (*3) (AC-DELCO #8684048)	8684048
219.	5-D17	4.262	SPRING, PRESS REG VLV (*3) (AC-DELCO #8642494)	8642494
220.	5-D18	4.265	VALVE, REV BOOST-W/BUSH & SLEV (*3) (AC-DELCO #8642921)	8642921
221.		N.S.	BUSHING, REV BOOST VLV (PART OF 220) (*3)	
222.	5-D24	4.275	VALVE, T/V BOOS (INCL 223) (*3) (AC-DELCO #8634941)	8634941
223.		N.S.	BUSHING, T .V. BOOST (PART OF 222) (*3)	
224.	5-D17	4.248	RETAINER, A/TRNS FLUID DAM (*3, 7) (AC-DELCO #11503348)	11503348
225.	5-D17	4.262	RING, TCC VLV STOP RET (SNAP) (*3, 7) (AC-DELCO #274267)	274267
226.	5-D17	4.262	STOP, TCC VLV (*3) (AC-DELCO #8634705)	8634705
227.	5-D18	4.265	VALVE, CONV CLU (*3) (AC-DELCO #8634031)	8634031
228.	5-D18	4.265	SPRING, TCC VLV OTR (*3) (AC-DELCO #8634399)	8634399
229.	5-D18	4.265	SPRING, TCC VLV INR (*3) (AC-DELCO #8634378)	8634378
230.	5-D17	4.262	RIVET, PRESS RLF BALL VLV SPR (*3) (AC-DELCO #8642619)	8642619
231.		8.899	BALL, 3/8 STEEL (AR) (*3) (AC-DELCO #7826284)	7826284
232.	5-D18	4.265	SPRING, PRESS RLF BALL VLV (*3) (AC-DELCO #8634106)	8634106
233.	5-D10	4.226	RING, PUMP CVR (2 REQD) (*1, 7) (AC-DELCO #8628055)	8628055
234.		N.S.	SEAL, PUMP CVR SCRN (PART OF 235) (*3)	
235.	5-D7	4.224	SCREEN, PUMP CVR (INCL 234) (*3) (AC-DELCO #8642912)	8642912
236.		8.900	BOLT, HEX (M8 X 1.25 X 40) 10.9 PC (AC-DELCO #11500921)	11500921
237.	5-D7	4.224	PLUG, PUMP AIR BLEED (4.3MM DIA) (*3) (AC-DELCO #8631146)	8631146
238.	5-D7	4.224	PLUG, PUMP CVR (6.60MM DIA) (*3) (AC-DELCO #8623886)	8623886
239.	5-C17	4.128	PLUG, A/TRNS O/PMP FLUID CLR HOLE (*3) (AC-DELCO #8634285)	8634285
240.	5-D7	4.224	ORIFICE, TCC SIG (*3) (AC-DELCO #8634284)	8634284
241.	5-D3	4.180	VALVE, A/TRNS FLUID/PUMP CVR BALL CHK (*3) (AC-DELCO #8628732)	8628732
242.	5-D10	4.226	BOLT, A/TRNS FLUID PUMP (PUMP CVR) (AC-DELCO #20616587)	20616587
243.	5-D10	4.226	SPRING, A/TRNS FLUID PUMP SLIDE INR (1985-86) (AC-DELCO #8639562)	8639562

© 2000 GENERAL MOTORS SERVICE PARTS OPERATIONS-CHEVROLET-14Y

NOTE 1: PART OF 4.226 – 8634906 – SEAL KIT, PUMP SLIDE–W/SUPT.
NOTE 2: PART OF 4.226 – 8634904 – VANE KIT, W/RING.
NOTE 3: PART OF 217.
NOTE 4: INCL 216,218 THRU 232,234,235,237 THRU 241.
NOTE 5: PART OF 4.005 – 24201804 – GASKET KIT, W/SEALS.
NOTE 6: OVERHAUL KIT IS REPLACED BY 24201804 GASKET KIT T/W 24201805 PLATE KIT T/W 24204405 PISTON KIT.
NOTE 7: PART OF 4.005 – 8642910 – RING KIT, SNAP.
NOTE 8: 1ST DES – USED ON TRANS W/SERIAL NO. ENDING IN A,B,C,H,N
NOTE 9: 2ND DES – USED ON TRANS W/SERIAL NO. ENDING IN "T"

© 2000 GENERAL MOTORS SERVICE PARTS OPERATIONS–CHEVROLET–14Y

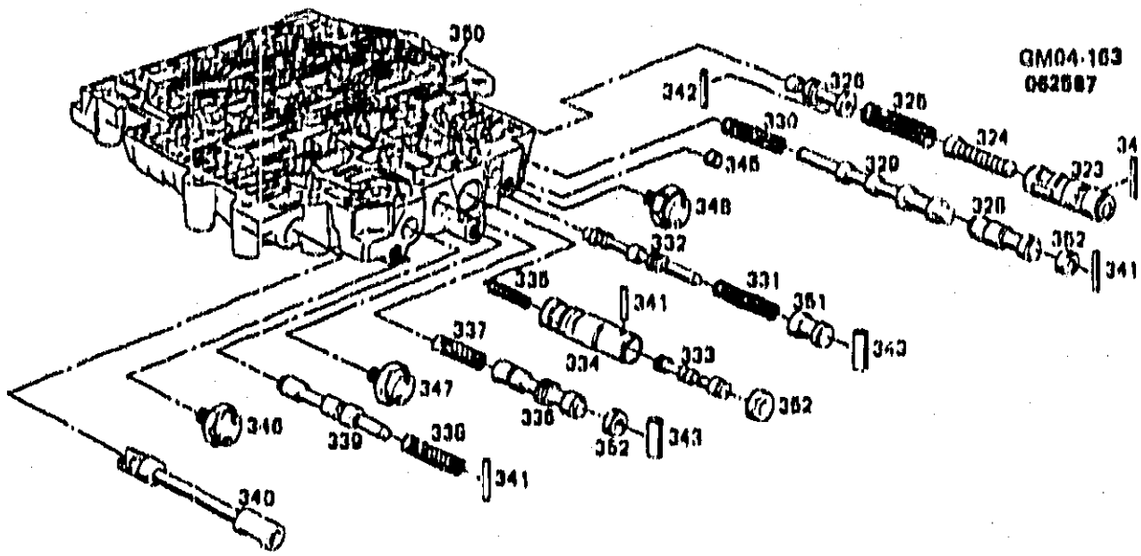

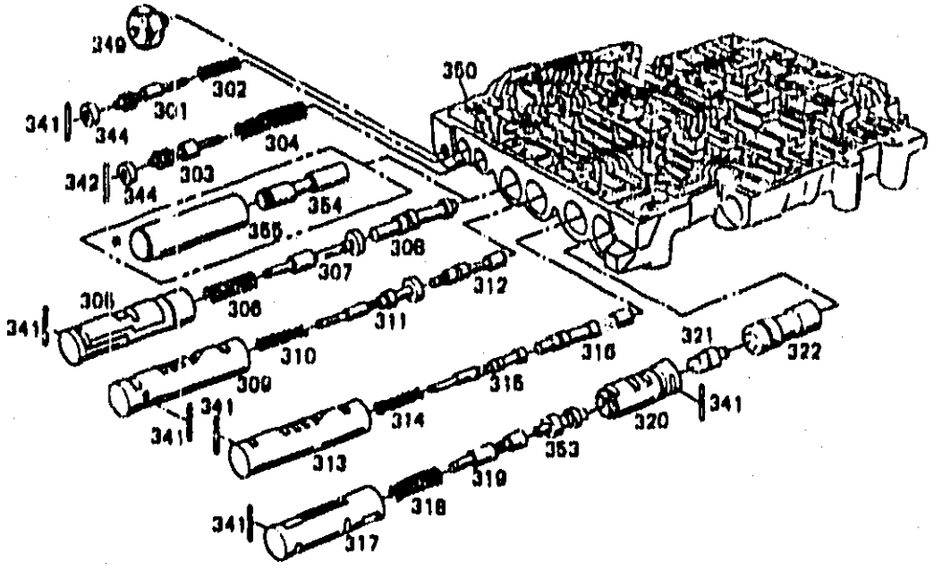

*USED ON VEHICLES HAVING ECM CONTROL OF T.C.C. APPLY

492128-700-R4

GM04-1632

1984-1987 Y AUTOMATIC TRANSMISSION (MD8) THM700-R4 A.T. CONTROL VALVE

301.	N.S.	VALVE, T .V. MOD DN SHF (*1) .....
302.	N.S.	SPRING, T .V. MOD DN SHF VLV (*1) .....
303.	N.S.	VALVE, T .V. MOD UPSHIFT (*1) .....
304.	N.S.	SPRING, T .V. MOD UPSHIFT VLV (*1) .....
305.	N.S.	SLEEVE, CONV CLU THROT VLV (*1) .....
306.	N.S.	SPRING, CONV CLU THROT VLV (*1) .....

© 2000 GENERAL MOTORS SERVICE PARTS OPERATIONS-CHEVROLET-14Y

307.		N.S.	VALVE, CONV CLU THROT (*1)	
308.		N.S.	VALVE, CONV CLU SHF (*1)	
309.		N.S.	SLEEVE, 3-4 THROT VLV (*1)	
310.		N.S.	SPRING, 3-4 THROT VLV (*1)	
311.		N.S.	VALVE, 3-4 THROT (*1)	
312.		N.S.	VALVE, 3-4 SHF (*1)	
313.		N.S.	SLEEVE, 2-3 THROT VLV (*1)	
314.		N.S.	SPRING, 2-3 THROT VLV (*1)	
315.		N.S.	VALVE, 2-3 THROT (*1)	
316.		N.S.	VALVE, 2-3 SHF (*1)	
317.		N.S.	SLEEVE, 1-2 THROT VLV (*1)	
318.		N.S.	SPRING, 1-2 THROTVLV (*1)	
319.		N.S.	VALVE, 1-2 THROT (*1)	
320.		N.S.	SLEEVE, LO RANGE CONT (*1)	
321.		N.S.	VALVE, 1-2 LO RANGE DN SHF (*1)	
322.		N.S.	VALVE, 1-2 SHF (*1)	
323.		N.S.	SLEEVE, THROT VLV PLGR (*1)	
324.		N.S.	PLUNGER, THROT VLV (*1)	
325.		N.S.	SPRING, THROT VLV (*1)	
326.		N.S.	VALVE, THROT (*1)	
328.		N.S.	VALVE, 3-4 RELAY (*1)	
329.		N.S.	VALVE, 4-3 SEQUENCE (*1)	
330.		N.S.	SPRING, 4-3 SEQUENCE VLV (*1)	
331.		N.S.	SPRING, T.V. LIM VLV (*1)	
332.		N.S.	VALVE, T.V. LIM (*1)	
333.		N.S.	VALVE, ACCUM (*1)	
334.		N.S.	BUSHING, ACCUM VLV (*1)	
335.		N.S.	SPRING, ACCUM VLV (NOT REQD) (*1)	
336.		N.S.	VALVE, LINE BIAS (*1)	
337.		N.S.	SPRING, LINE BIAS VLV (*1)	
338.		N.S.	SPRING, 3-2 CONT VLV (*1)	
339.		N.S.	VALVE, 3-2 CONT (*1)	
340.	5-D25	4.279	VALVE, MAN (AC-DELCO #8642336)	8642336
341.	5-D18	4.265	PIN, COILED SPR (25MM LONG) (AC-DELCO #8628400)	8628400
342.	5-D18	4.265	PIN, T/V (*4) (AC-DELCO #8654196)	8654196
	5-D18	4.265	PIN, COILED SPR (20MM LONG) (*5) (AC-DELCO #8654284)	8654284
343.	5-D18	4.265	PIN, LINE BIAS VLV BORE PLUG (AC-DELCO #8631290)	8631290
	5-D18	4.265	PIN, T/V LIM VLV BORE PLUG (AC-DELCO #8631290)	8631290
344.		4.265	PLUG, VLV BORE (14.22MM DIA)	8655045
345.	5-D18	4.265	PLUG, 3-4 RLY VLV BORE (CUP) (.33 DIA) (AC-DELCO #8639141)	8639141
346.		N.S.	SWITCH, CLU OIL PRESS (NOT REQ'D)	
347.	5-D18	4.265	SWITCH, 4-3 PULSE OIL PRESS (1984) (AC-DELCO #8642346)	8642346
348.	5-D18	4.265	SWITCH, 4TH CL OIL PRESS (1 PRONG) (AC-DELCO #8683502)	8683502
349.		N.S.	SWITCH, PRESS (TCC SIGNAL) (NOT REQ'D) (*3)	
350.		DISCON	VALVE, CONT (1984)	8654073
		DISCON	VALVE, CONT (1985-YC) (AR)	8654460
		DISCON	VALVE, CONT (1985-86-YA)	8663239
		DISCON	VALVE, CONT (1986-YD)	8654460
	5-D18	4.265	VALVE, CONT (1987 W/NM8)	8663722
	5-D18	4.265	VALVE, CONT (1987 EXC/NM8) (AC-DELCO #8663723)	8663723
351.		DISCON	PLUG, T.V. LIM VLV	8647453
352.	5-D18	4.265	PLUG, TCC REG VLV BORE (12.5MM DIA) (AC-DELCO #8634239)	8634239
		4.265	PLUG, VLV BORE (14.22MM DIA)	8655045
353.		N.S.	VALVE, 1-2 LO RANGE UPSHIFT (*1)	
354.		N.S.	PLUG, SHF VLV BORE (1985)	
	5-D18	4.265	PLUG, SHF VLV BORE (1985-5YC) (1986-87) (AC-DELCO #8654336)	8654336

© 2000 GENERAL MOTORS SERVICE PARTS OPERATIONS-CHEVROLET-14Y

355.		N.S.	PLUG, SLEV BORE (1984)	
	5-D18	4.265	PLUG, SLEV BORE (1985--5YC) (1986-87) (AC-DELCO #6654337)	6654337

NOTE 1: PART OF ITEM #350.
NOTE 3: USED ONLY ON VEHICLES HAVING ECM CONTROL OF T.C.C. APPLY.
NOTE 4: 2.72MM BOTH ENDS, 3.1MM CENTER BY 20MM LONG.
NOTE 5: TAPERED, 2.72MM ONE END, 3.1MM OTHER END BY 20MM LONG.

© 2000 GENERAL MOTORS SERVICE PARTS OPERATIONS-CHEVROLET-14Y

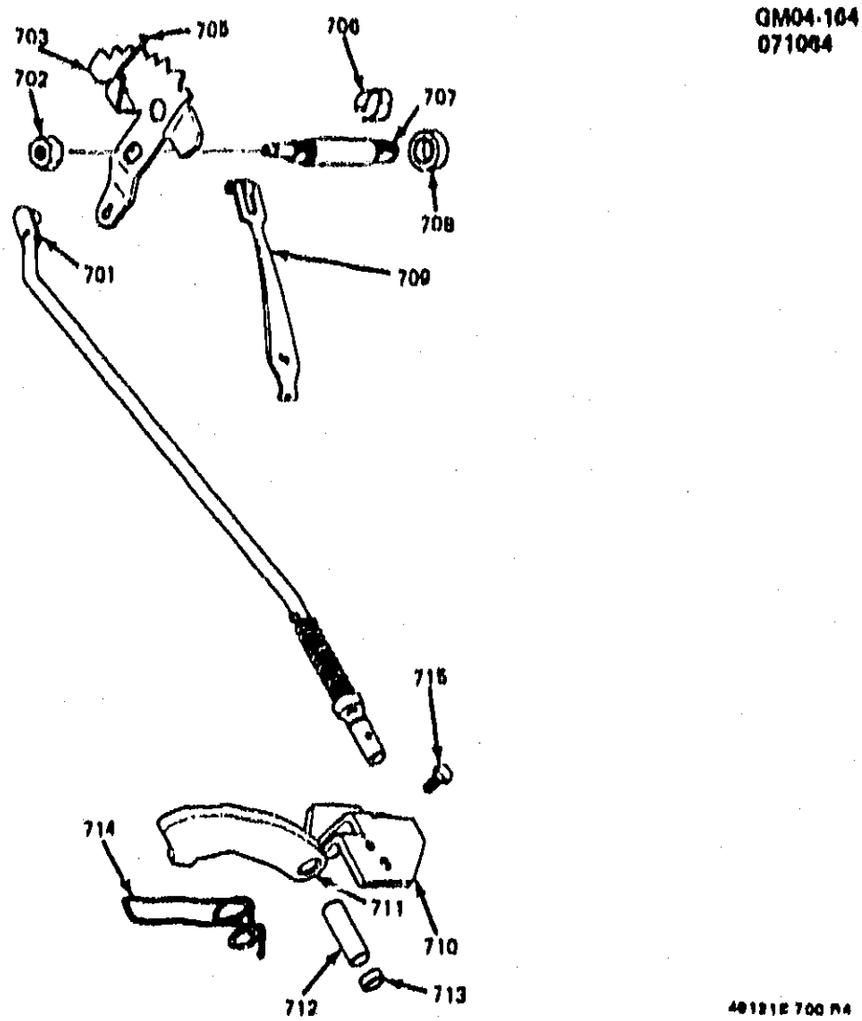

GM04-1642

1984-1987 Y AUTOMATIC TRANSMISSION (MD8) THM700-R4 A.T. PARK LOCK

701.	5-D25	4.290	ACTUATOR, PK LK (AC-DELCO #8667517)	8667517
702.	5-D24	4.275	NUT, MAN SHF TO I/S DET LVR (AC-DELCO #8648178)	8648178
703.	5-D25	4.279	LEVER, I/S DET (1984-4YA, Y9) (AC-DELCO #8654106)	8654106
	5-D25	4.279	LEVER, I/S DET (1984-4YW) (AC-DELCO #8642243)	8642243
	5-D25	4.279	LEVER, I/S DET (1985-87) (AC-DELCO #8654106)	8654106
705.	5-D24	4.275	LINK, MAN VLV (*1, 2) (AC-DELCO #8654113)	8654113
706.	5-D24	4.275	RETAINER, MAN SHF (AC-DELCO #8642246)	8642246
707.	5-D26	4.294	SHAFT KIT, MAN SHFT (INCL 708) (AC-DELCO #24210712)	24210712
708.	5-D25	4.282	SEAL, MAN SHF (PART OF 707) (AC-DELCO #8657163)	8657163
709.	5-D24	4.275	DETENT, MAN SHFT (AC-DELCO #8642247)	8642247
710.	5-D25	4.290	BRACKET, PK LK (AC-DELCO #8667574)	8667574
711.		N.S.	PAWL, PARK (PART OF 712)	
712.	5-D26	4.294	PAWL KIT, PARK (INCL 711, 713) (AC-DELCO #8669911)	8669911
713.		N.S.	PLUG, STL CUP (PART OF 712)	
714.	5-D26	4.295	SPRING, PK PAWL RTN (AC-DELCO #8642193)	8642193
715.		8.900	BOLT, HEX (M8 X 1.25 X 20) 10.9 PZOR (AC-DELCO #11508687)	11508687

NOTE 1: PART OF 4.005 24201804 – GASKET KIT, W/SEALS.
NOTE 2: OVERHAUL KIT IS REPLACED BY 24201804 GASKET KIT T/W 24201805 (1984-86) OR 24201806 (1987) PLATE KIT T/W 24204495 PISTON KIT.

© 2000 GENERAL MOTORS SERVICE PARTS OPERATIONS-CHEVROLET-14Y

GM04-267
022789

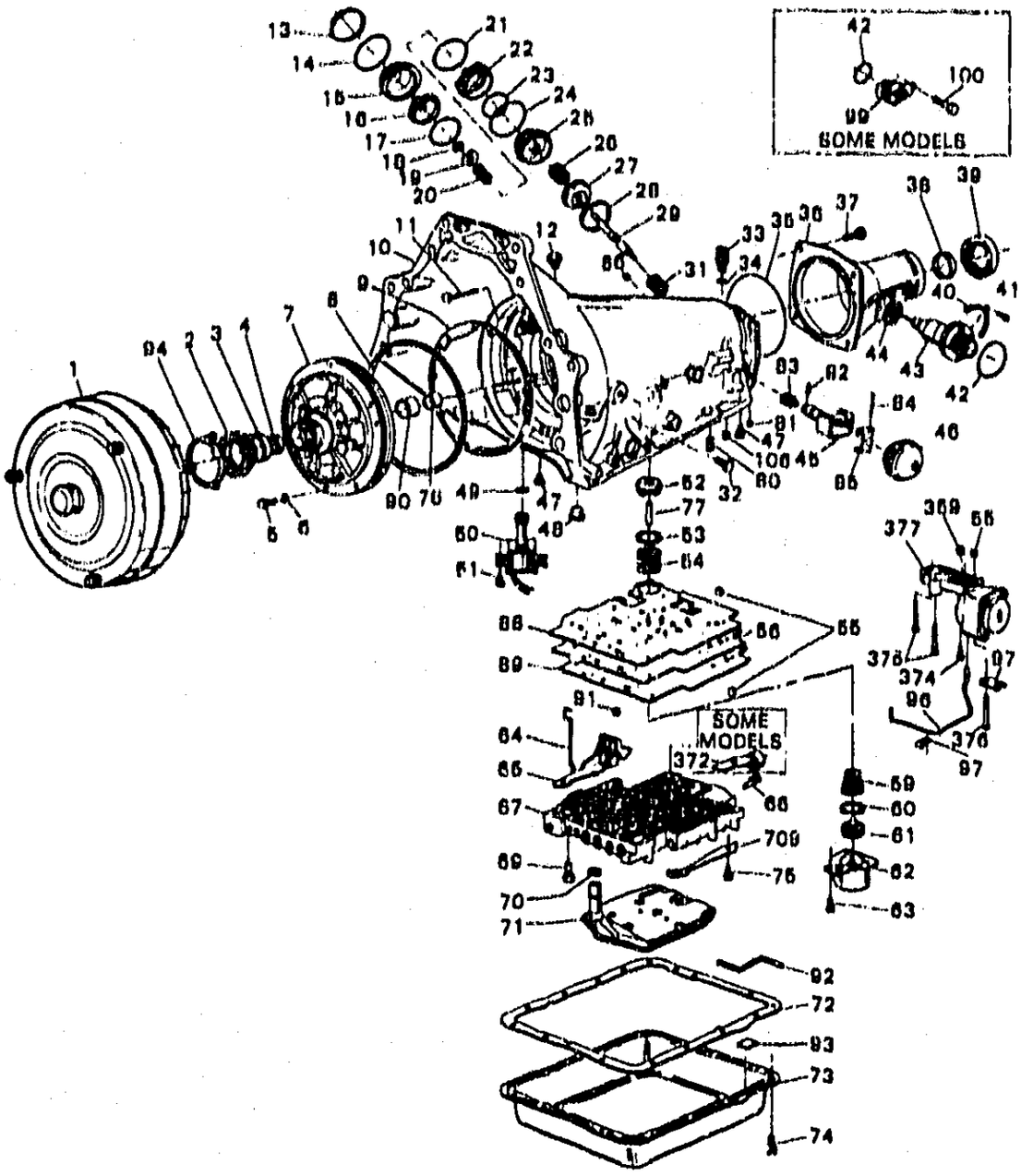

GM04-2672

1987-1989 Y AUTOMATIC TRANSMISSION (MD8) PART 1 THM700-R4 A.T. CASE & RELATED PARTS
1990-1991 Y AUTOMATIC TRANSMISSION (MD8) PART 1 HM 4L60 CASE & RELATED PARTS

1.	5-C14	4.115	CONVERTER, TRANS-REMFD	24202174
2.	5-D10	4.226	SEAL, T/CV FLUID (*4, 5) (AC-DELCO #24202535)	24202535
3.	5-C14	4.115	BUSHING, T/CV (AC-DELCO #24206030)	24206030
4.	5-C16	4.123	BUSHING, TURB SHF (AC-DELCO #8628915)	8628915
5.	5-D10	4.226	BOLT, A/TRNS FLUID PUMP (INCL 6) (*4, 5) (AC-DELCO #3673596)	3673596
6.	5-D10	4.226	SEAL, A/TRNS FLUID PUMP (O RING) (ALSO PART OF 5) (AC-DELCO #12337996)	12337996

© 2000 GENERAL MOTORS SERVICE PARTS OPERATIONS--CHEVROLET-14Y

7.		N.S.	PUMP (*1)	
8.	5-D10	4.276	SEAL, A/TRNS FLUID PUMP (*4, 5) (AC-DELCO #24210605)	24210605
9.	5-D10	4.226	GASKET, PUMP CVR TO CASE (*4, 5) (AC-DELCO #12337931)	12337931
10.	5-C14	4.103	CASE KIT, A/TRNS (INCL 11, 76) (AC-DELCO #8657911)	8657911
11.	5-C14	4.104	PIPE, A/TRNS VENT (PART OF 10) (AC-DELCO #24200374)	24200374
12.	5-C17	4.128	FITTING, TRANS FLUID CLR PIPE (TO CASE) (AC-DELCO #8637742)	8637742
13.	5-D12	4.228	RING, INTER BAND SERVO CVR RET (AC-DELCO #8642124)	8642124
14.	5-D14	4.229	SEAL, INTER BAND SERVO CVR (O RING) (ALSO PART OF 15, 22) (*4, 5) (AC-DELCO #8647351)	8647351
15.	5-D12	4.228	COVER, 2-4 SERVO (W/SEAL) (INCL 14) (AC-DELCO #8642079)	8642079
16.	5-D12	4.228	PISTON, 2-4 BAND SERVO 4TH APPLY (INCL 17) (AC-DELCO #8642478)	8642478
17.	5-D14	4.229	RING, 4TH APPLY PSTN OTR OIL SEAL (PART OF 16) (*4, 5) (AC-DELCO #8642480)	8642480
18.		8.934	RETAINER, SNAP RING BOWED EXT FITS SHF (7/16") (AC-DELCO #9415640)	9415640
19.	5-D16	4.233	WASHER, SERVO APPLY PIN (AC-DELCO #8642107)	8642107
20.	5-D16	4.246	SPRING, SERVO APPLY PIN (AC-DELCO #8642106)	8642106
21.	5-D14	4.229	SEAL, SERVO PSTN INR HSG O RING (*4, 5) (AC-DELCO #8642112)	8642112
22.	5-D12	4.228	HOUSING, SERVO PSTN INR (INCL 14) (AC-DELCO #8673039)	8673039
23.	5-D14	4.229	RING KIT, 2-4 BAND SERVO 2ND APPL PSTN FLUID SEAL (INCL 24) (AC-DELCO #8642926)	8642926
24.		N.S.	RING, OIL SEAL OTR (PART OF 23)	
25.	5-D12	4.228	PISTON, 2ND APPLY (1987-7YAM) (AC-DELCO #8642614)	8642614
	5-D12	4.228	PISTON, 2ND APPLY (1987-7YDM) (AC-DELCO #8642079)	8642079
	5-D12	4.228	PISTON, 2ND APPLY (1988-91) (AC-DELCO #8642079)	8642079
26.	5-D16	4.233	SPRING, SERVO CUSH (AC-DELCO #8642539)	8642539
	5-D16	4.233	SPRING, SERVO CUSH INR (FIX FOR COASTDOWN CLUNK) (AC-DELCO #8681195)	8681195
27.	5-D16	4.233	RETAINER, SERVO CUSH SPR (AC-DELCO #8642416)	8642416
28.	5-D3	4.176	RING, 2ND APPLY PSTN RET (AC-DELCO #8642105)	8642105
29.	5-D16	4.246	PIN, 2-4 BAND SERVO PSTN (2 RINGS) (AC-DELCO #8680499)	8680499
	5-D16	4.246	PIN, 2-4 BAND SERVO PSTN (3 RINGS) (AC-DELCO #8680500)	8680500
	5-D16	4.246	PIN, 2-4 BAND SERVO PSTN (WIDE BAND) (AC-DELCO #8680501)	8680501
31.	5-D16	4.233	SPRING, SERVO RET (AC-DELCO #8642273)	8642273
32.	5-D18	4.265	PLUG, CLD & ACCUM PRESS (1/4"-18 PIPE) (1987) (AC-DELCO #8647185)	8647185
	5-C14	4.104	PLUG, A/TRNS FLUID PRESS TEST HOLE (AC-DELCO #8654381)	8654381
33.	5-C14	4.115	CONNECTOR, A/TRNS WRG (INCL 34) (AC-DELCO #8634383)	8634383
34.	5-N7	2.530	SEAL, A/TRNS WRG CONN (O RING) (ALSO PART OF 33) (*4, 5) (AC-DELCO #10054241)	10054241
35.	5-D26	4.318	SEAL, EXTN TO CASE (*4, 5) (AC-DELCO #1358899)	1358899
36.	5-D26	4.317	EXTENSION, A/TRNS CASE (INCL 38, 39) (AC-DELCO #24201517)	24201517
37.		8.900	BOLT, HEX M10X1.5X35 10.9 PC (AR)	14060030
38.		N.S.	BUSHING, CASE EXT (PART OF 36)	
39.	5-D26	4.318	SEAL, A/TRNS CASE EXTN (ALSO PART OF 36) (*4, 5) (AC-DELCO #8673526)	8673526
40.		N.S.	RETAINER, VEH SPD SEN (NOT REQD)	
41.		N.S.	BOLT, (NOT REQD)	
42.	5-E13	4.338	SEAL, SPEEDO DRVN GR SLEV (O RING) (*4, 5) (AC-DELCO #25518664)	25518664
43.		N.S.	SLEEVE, SPEEDO DRVN (PART OF 44)	
44.	5-D27	4.337	GEAR, SPEEDO DRVN (38 TEETH-BLUE) (1988-91) (AC-DELCO #25513045)	25513045

© 2000 GENERAL MOTORS SERVICE PARTS OPERATIONS-CHEVROLET-14Y

	5-D27	4.337	GEAR, SPEEDO DRVN (42 TEETH-GREEN) (1987-91) (AC-DELCO #25513049)	25513049
	5-B6	4.337	GEAR, SPEEDO DRVN (40 TEETH-BLACK) (1990) (AC-DELCO #25513047)	25513047
	5-D27	4.337	GEAR, SPEEDO DRVN (43 TEETH -PURPLE) (1990) (AC-DELCO #25513050)	25513050
45.	5-D17	4.256	GOVERNOR, TRANS (1987-89) (AC-DELCO #24202117)	24202117
	5-D17	4.256	GOVERNOR, A/TRANS (REMAN) (1990-91) (AC-DELCO #24202122)	24202122
46.	5-D17	4.256	COVER, GOV (AC-DELCO #8667627)	8667627
47.	5-D17	4.248	SCREEN, OIL PRESS (CONVR & GOV) (AC-DELCO #12338044)	12338044
48.	5-D14	4.229	PIN, BAND ANCH (AC-DELCO #8654581)	8654581
49.	5-C16	4.123	SEAL, INPUT SHF (O RING) (ALSO PART OF 50) (*4, 5) (AC-DELCO #8630049)	8630049
50.	5-C15	4.122	SOLENOID, CONVR CLU (INCL 49) (1987-89) (AC-DELCO #8654129)	8654129
	5-C15	4.122	VALVE, TCC SOL (1990-91) (INCL 49) (AC-DELCO #10478100)	10478100
51.		8.900	BOLT, M6X1X12, 10 THD, 11.6 OD, 9.8 GM500-M, POR, MACH (AR) (AC-DELCO #11514149)	11514149
52.	5-D12	4.228	PISTON, 3-4 ACCUM (*7) (AC-DELCO #8663608)	8663608
53.	5-D14	4.229	RING, 3-4 ACCUM PSTN FLUID SEAL (*4, 5, 7) (AC-DELCO #24206509)	24206509
54.	5-D15	4.233	SPRING, 3-4 ACCUM PISTON (1987-7YAM) (AC-DELCO #8663384)	8663384
	5-D15	4.233	SPRING, 3-4 ACCUM (1987-7YDM) (1988) (AC-DELCO #8654554)	8654554
	5-D15	4.233	SPRING, 3-4 ACCUM (1989) (AC-DELCO #8663384)	8663384
	5-D15	4.233	SPRING, 3-4 ACCUM (1990-91) (AC-DELCO #8673387)	8673387
55.		8.899	BALL, GRADE 2, STD DIA 1/4 (2), CHROME STL (AR) (AC-DELCO #104918)	104918
56.	5-D18	4.265	PLATE, VLV BODY SPCR (1987-7YDM) (AC-DELCO #8663594)	8663594
	5-D18	4.265	PLATE, VLV BODY SPCR (1987-7YAM) (AC-DELCO #8663591)	8663591
	5-D18	4.265	PLATE, VLV BODY SPCR (1988) (AC-DELCO #8667359)	8667359
	5-D18	4.265	PLATE, VLV BODY SPCR (1989) (AC-DELCO #8673160)	8673160
	5-D18	4.265	PLATE, VLV BODY SPCR (1990-91) (AC-DELCO #8681196)	8681196
59.	5-D15	4.233	SPRING, 1-2 ACCUM PISTON (1987-88) (AC-DELCO #8654554)	8654554
	5-D15	4.233	SPRING, 1-2 ACCUM (1989-91) (AC-DELCO #8663384)	8663384
60.	5-D14	4.229	RING, 1-2 ACCUM PSTN FLUID SEAL (*7) (AC-DELCO #24206509)	24206509
61.	5-D12	4.228	PISTON, 1-2 ACCUM (*7) (AC-DELCO #8663608)	8663608
62.	5-D12	4.228	COVER, 1-2 ACCUM-W/PIN (AC-DELCO #8683543)	8683543
63.		8.900	BOLT, HFH M6X1X65 9.8 PL (AR)	11506078
64.	5-D24	4.275	LINK, THROT LVR TO CBL (AC-DELCO #8642290)	8642290
65.	5-D24	4.275	LEVER, T/V (AC-DELCO #8673606)	8673606
66.	5-N13	2.559	CLIP, A/TRNS WRG HARN (AC-DELCO #8673068)	8673068
67.	5-D18	4.265	VALVE, CONT (1987-7YAM)	8663722
	5-D18	4.265	VALVE, CONT (1987-7YDM) (AC-DELCO #8663723)	8663723
		DISCON	VALVE, CONT (1988)	8667442
	5-D18	4.265	VALVE, CONT (1989) (AC-DELCO #8673152)	8673152
		DISCON	VALVE, CONT (1990)	8673528
	5-D18	4.265	VALVE KIT, CONT (W/BODY & VLV) (1991) (AC-DELCO #8677422)	8677422
69.		8.900	BOLT, HEX M6X1X50 10.9 PL (AR) (AC-DELCO #11503861)	11503861
70.	5-D10	4.226	SEAL, A/TRNS FLUID FLTR (O RING) (ALSO PART OF 71) (*4, 5) (AC-DELCO #10054241)	10054241
71.	5-D6	4.197	FILTER KIT, A/TRNS FLUID (INCL 70, 72) (*4, 5) (AC-DELCO #8657926)	8657926
72.	5-D6	4.196	GASKET, A/TRNS FLUID PAN (ALSO PART OF 71) (*4, 5) (AC-DELCO #8654799)	8654799

© 2000 GENERAL MOTORS SERVICE PARTS OPERATIONS-CHEVROLET-14Y

73.	5-D5	4.195	PAN KIT, W/GSKT & MAGNET, OIL (AC-DELCO #8663948)	8663948
74.		8.900	BOLT, W/CON SPR WA (M8X1.25X20) (9.8 ZN) (AC-DELCO #15614709)	15614709
75.		8.900	BOLT, HEX (M8X1.25X20) 10.9 PZOR (AC-DELCO #11508687)	11508687
76.		N.S.	BUSHING, CASE (PART OF 10)	
77.	5-D12	4.228	PIN, ACCUM PSTN (7.953 DIA X 45) (AC-DELCO #8620273)	8620273
80.	5-D12	4.228	VALVE, 3RD ACCUM BALL CHK (AC-DELCO #8634400)	8634400
81.	5-C14	4.105	ORIFICE, 3RD ACCUM BL (AC-DELCO #8628864)	8628864
82.		8.939	PIN, SPR COILED (1/8" X 5/8") (AC-DELCO #273337)	273337
83.	5-D17	4.256	GEAR, GOV DRV (INCL 82, 84) (AC-DELCO #8663905)	8663905
84.	5-D17	4.256	PIN, GOV WT (AC-DELCO #8663706)	8663706
85.	5-D17	4.256	CAR GOV THR (AC-DELCO #8261239)	8261239
86.	5-C14	4.105	ORIFICE, FWD CLU FEED (AC-DELCO #8628864)	8628864
88.		N.S.	GASKET, VLV BODY UPR (*2)	
89.		N.S.	GASKET, VLV BODY LWR (*2)	
90.	5-D10	4.226	BUSHING, STATOR SHF RR (AC-DELCO #8642904)	8642904
91.		8.899	BALL, 5/16 CHROME STEEL (AR) (AC-DELCO #104919)	104919
92.	5-C15	4.122	CONDUIT, SOL WIRE (AC-DELCO #8654081)	8654081
93.	5-D5	4.195	MAGNET, A/TRNS FLUID PAN (AC-DELCO #8665630)	8665630
94.	5-D10	4.226	RETAINER, FRT HELIX SEAL (AC-DELCO #8654491)	8654491
96.	5-D16	4.265	PIPE, AUX C/VLV BODY (*3) (AC-DELCO #8663615)	8663615
97.	5-D16	4.265	CLAMP, AUX VLV TUBE (*3) (AC-DELCO #8663616)	8663616
99.		N.S.	SENSOR, SPEED INT TRANS (TRUCK ONLY)	
100.		N.S.	BOLT, SENSOR RET (TRUCK ONLY)	
106.	5-C27	4.166	RETAINER, LOW & REV CLU PSTN (1987) (*6) (AC-DELCO #8663890)	8663890
	5-C27	4.166	RETAINER, LOW & REV CLU PSTN (1988-91) (AC-DELCO #8663890)	8663890
359.		DISCON	PLUG, ORIFICE	8667041
	5-C14	4.105	ORIFICE, FWD CLU FEED (1990-91) (1 DIMPLE) (AC-DELCO #8667040)	8667040
372.		N.S.	SWITCH, TEMP (NOT REQD 1987-89)	
	5-C13	4.054	SWITCH, TCC TEMP (1990-91) (AC-DELCO #8673634)	8673634
374.	5-D16	4.265	BOLT, AUX C/VLV BODY (AC-DELCO #8667821)	8667821
375.		8.900	BOLT, HEX M6X1X35 10.9 PC (AR) (AC-DELCO #11503870)	11503870
376.		8.900	BOLT, HEX WA HD, M6X1X7.4 (AR) (AC-DELCO #8667680)	8667680
377.		DISCON	VALVE BODY, AUX (1987-90)	8667038
	5-D16	4.265	BODY, AUX C/VLV (REMAN) (1991) (AC-DELCO #24205606)	24205606
709.	5-D24	4.275	DETENT, MAN SHFT (AC-DELCO #8642247)	8642247

NOTE 1: REFER ILLUSTRATION 3M04-268.1 THM700-R4 A.T. OIL PUMP.
NOTE 2: PART OF 4.265 8669949 - GASKET KIT, VLV BODY SPCR PLT.
NOTE 3: W/AUX VLV BODY. AUX VLV BODY IS A 2ND SMALLER VLV BODY ALONGSIDE THE MAIN VLV BODY.
NOTE 4: PART OF 4.005 24201804 - GASKET KIT, W/SEALS
NOTE 5: OVERHAUL KIT IS REPLACED BY 24201804 GASKET KIT T/W 24201806 (TRAN CODE 1YDM) OR 24202807 (TRAN CODE 1YHM) PLATE KIT T/W 24204495 PISTON KIT.
NOTE 6: REQ ON TRANS BUILT ON OR AFTER JULIAN DATE 87040.
NOTE 7: PART OF 4.228 24204495 - PISTON & SEAL KIT.

© 2000 GENERAL MOTORS SERVICE PARTS OPERATIONS-CHEVROLET-14Y

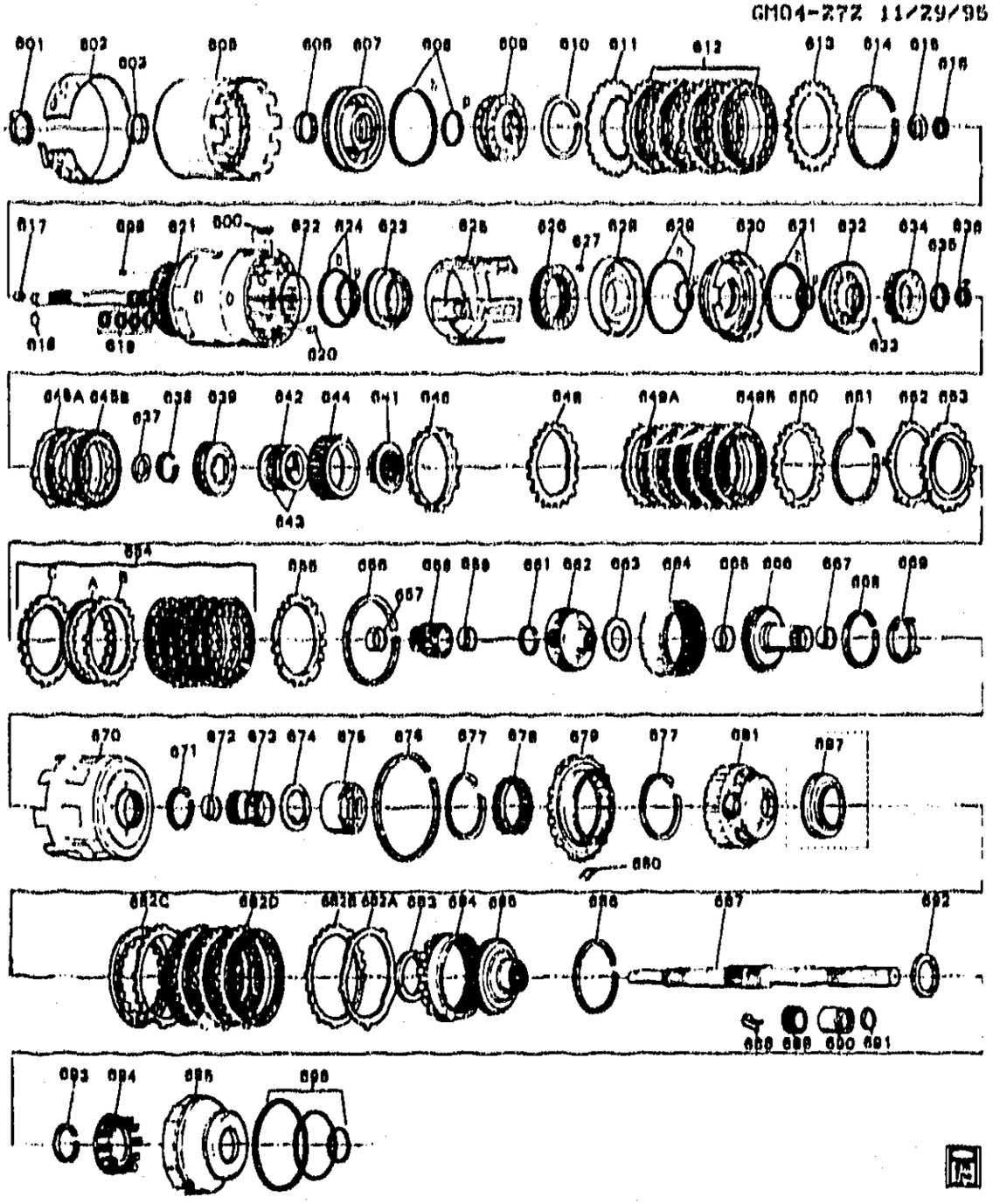

GM04-2721

1987-1989 Y AUTOMATIC TRANSMISSION (MD8) PART 2 THM700-R4 A.T. INTERNAL POWER TRAIN PARTS

1990-1991 Y AUTOMATIC TRANSMISSION (MD8) PART 2 THM 4L60 INTERNAL POWER TRAIN PARTS

600.	5-C28	4.167	SPRING, 3-4 CLU (BOOST) (1988-91) (*9) (AC-DELCO #8667424)	8667424
601.	5-D10	4.226	WASHER, A/TRNS FLUID PUMP (AC-DELCO #12338134)	12338134
602.	5-D17	4.251	BAND, 2-4 (AC-DELCO #8673175)	8673175
603.	5-D3	4.180	BUSHING, REV INPUT CLU FRT (ALSO PART OF 605) (AC-DELCO #8642905)	8642905
605.	5-D3	4.180	CLUTCH, REV INPUT ((1987 (INCL 603, 606, 613)) (*1) (AC-DELCO #8690907)	8690907

© 2000 GENERAL MOTORS SERVICE PARTS OPERATIONS-CHEVROLET-14Y

	5-C28	4.169	HOUSING, REV INPUT CLU-W/DRUM (1987) (1988-91) (INCL 603, 606) (*2) (AC-DELCO #8661295)	8661295
606.	5-C28	4.169	BUSHING, REV INPUT CLU RR (ALSO PART OF 605) (AC-DELCO #8628917)	8628917
607.		DISCON	PISTON, REV INPUT CLU (1987) (*1, 11)	8654077
	5-C27	4.166	PISTON, REV INPUT CLU (1987) (1988-91) (*2) (AC-DELCO #8667041)	8667041
608.	5-C27	4.166	SEAL KIT, REV INPUT CLU (1987) (*1) (AC-DELCO #8657922)	8657922
	5-C27	4.166	SEAL KIT, REV INPUT CLU (1987) (1988-91) (*2) (AC-DELCO #8657922)	8657922
609.	5-C26	4.164	SPRING, REV INPUT CLU (*11) (AC-DELCO #8647284)	8647284
610.	5-C26	4.164	RING, REV INPUT CLU SPR RET SNAP (*4, 11) (AC-DELCO #8628059)	8628059
611.	5-D3	4.160	CLUTCH, REV INPUT (WAVED) (1987) (*1) (AC-DELCO #8690907)	8690907
	5-C20	4.163	PLATE, REV INPUT CLU (WAVED) (1987) (1988-91) (*2, 11) (AC-DELCO #8663074)	8663074
612.	5-C20	4.163	PLATE, REV INPUT CLU (FLAT STL) (1.97MM THK) (*11) (AC-DELCO #24205267)	24205267
	5-C20	4.163	PLATE, REV INPUT CLU (FLAT FACED) (GROOVED) (AC-DELCO #8673605)	8673605
613.		DISCON	PLATE, REV INPUT CLU BKG (6.30MM) (1987) (PART OF 605) (*1)	8663654
	5-C20	4.163	PLATE, REV INPUT CLU BKG (5.47-5.62MM) (*2, 11) (AC-DELCO #8682865)	8682865
	5-C20	4.163	PLATE, REV INPUT CLU BKG (6.13-6.28MM) (*2) (AC-DELCO #8682864)	8682864
	5-C20	4.163	PLATE, REV INPUT CLU BKG (6.79-6.94MM) (*2, 11) (AC-DELCO #8682864)	8682864
	5-C20	4.163	PLATE, REV INPUT CLU BKG (7.45-7.60MM) (*2) (AC-DELCO #8682863)	8682863
614.	5-C26	4.164	RING, REV INPUT CLU RET (*1, 11) (AC-DELCO #8667022)	8667022
615.	5-C19	4.162	BEARING, STATOR SHF TO SEL WA (AC-DELCO #8642066)	8642066
616.	5-D4	4.189	WASHER, REV INPUT CLU HSG THR (1.87-1.97MM) (AC-DELCO #8642067)	8642067
	5-D4	4.189	WASHER, REV INPUT CLU HSG THR (2.09MM) (AC-DELCO #8642068)	8642068
	5-D4	4.189	WASHER, REV INPUT CLU HSG THR (2.26MM) (AC-DELCO #8642069)	8642069
	5-D4	4.189	WASHER, REV INPUT CLU HSG THR (2.43MM) (AC-DELCO #8642070)	8642070
	5-D4	4.189	WASHER, REV INPUT CLU HSG THR (2.60MM) (AC-DELCO #8642071)	8642071
	5-D4	4.189	WASHER, REV INPUT CLU HSG THR (2.77MM) (AC-DELCO #8642072)	8642072
	5-D4	4.189	WASHER, REV INPUT CLU HSG THR (2.94MM) (AC-DELCO #8642073)	8642073
	5-D4	4.189	WASHER, REV INPUT CLU HSG THR (3.11MM) (AC-DELCO #8642074)	8642074
617.	5-C16	4.123	VALVE, TURB SHF BALL CHK (AC-DELCO #8685839)	8685839
618.	5-C16	4.123	SEAL, TURB SHF/SEL WA O RING (AC-DELCO #8630049)	8630049
619.	5-C16	4.123	RING, TURB SHF OIL SEAL (TEFLON-4 REQ'D) (*7, 8) (AC-DELCO #8667035)	8667035
620.	5-C16	4.123	VALVE, 3-4 CLU HSG BALL CHK (4.76MM) (AC-DELCO #24208262)	24208262
621.		DISCON	HOUSING, INPUT CLU-W/SHF (1987) (*5)	8657904
	5-C18	4.158	HOUSING, INPUT CLU-W/SHF (1987) (*6) (AC-DELCO #8667660)	8667660
	5-C18	4.158	HOUSING, INPUT CLU-W/SHF (1988-91) (AC-DELCO #8667660)	8667660
622.		N.S.	SEAL, INPUT TO FWD HSG O RING (*3, 7, 8)	
623.	5-C27	4.166	PISTON, 3RD & 4TH INPUT CLU (AC-DELCO #24200290)	24200290
624.		N.S.	SEAL, 3RD & 4TH CLU INR & OTR (*3, 7, 8)	

625.		DISCON	RING, 3RD & 4TH CLU APPLY (1 BAR) (*9)	8642374
626.	5-C26	4.167	SPRING, 3RD & 4TH INPUT CLU (AC-DELCO #8685244)	8685244
627.	5-C16	4.123	VALVE, FWD CLU HSG BALL CHK (ALSO PART OF 628) (AC-DELCO #8654438)	8654438
628.	5-C26	4.169	HOUSING, FWD CLU (INCL 627) (AC-DELCO #8654326)	8654326
629.		N.S.	SEAL, FWD CLU (*3, 7, 8)	
630.	5-C27	4.166	PISTON, FWD CLU (AC-DELCO #8683513)	8683513
631.		N.S.	SEAL, OVERRUN CLU INR & OTR (*3, 7, 8)	
632.	5-C27	4.166	PISTON, O/R CLU (INCL 633) (AC-DELCO #8642148)	8642148
633.		8.699	BALL, SPECIAL (ALSO PART OF 632) (AR) (AC-DELCO #7002117)	7002117
634.	5-C20	4.163	SPRING, OVERRUN CLU (AC-DELCO #8677876)	8677876
635.		8.934	RING, EXT SNAP FITS M36 DIA SHF (PART OF 4.005 8642910 - RING KIT, SNAP)	11500692
636.	5-D3	4.176	SEAL, INPUT HSG TO OUTPUT SHF (*3, 7, 8) (AC-DELCO #8642178)	8642178
637.	5-D3	4.176	BEARING, INPUT SUN GR (AC-DELCO #8642162)	8642162
638.	5-D3	4.180	RING, O/R CLU HUB RET SNAP (*4) (AC-DELCO #8647083)	8647083
639.		N.S.	HUB, OVERRUN CLU (PART OF 642)	
641.		N.S.	RETAINER, FWD CLU SPRAG INR-W/RACE (PART OF 642)	
642.	5-C26	4.164	CLUTCH, FWD RLR (INCL 639, 641, 643-4) (AC-DELCO #24210960)	24210960
643.		N.S.	RETAINER, SPRAG (PART OF 642)	
644.		N.S.	RACE, FWD CLU SPRAG OTR (PART OF 642)	
645.	5-C20	4.163	PLATE, OVERRUN CLU (FLAT STL) (2.34MM THK) (*8) (AC-DELCO #8642154)	8642154
	5-C20	4.163	PLATE, OVERRUN CLU (FLAT FACED) (*8) (AC-DELCO #8673253)	8673253
646.	5-C20	4.163	PLATE, FWD CLU APPLY (4.30MM) (AC-DELCO #8682866)	8682866
648.	5-C20	4.163	PLATE, FWD CLU (WAVED STL) (AC-DELCO #8647058)	8647058
649.	5-C20	4.163	PLATE, FWD CLU (FLAT STL) (AC-DELCO #8654325)	8654325
	5-C20	4.163	PLATE, FWD CLU (FLAT FACED) (AC-DELCO #8673254)	8673254
	5-C20	4.163	PLATE KIT, FWD CLU (INCLS 4 OF 8654325 & 5 OF 08654324) (AC-DELCO #8647991)	8647991
650.	5-C20	4.163	PLATE, FWD CLU BKG (6.96-7.26MM) (1987) (*1) (AC-DELCO #8682871)	8682871
	5-C20	4.163	PLATE, FWD CLU BKG (7.55-7.85MM) (1987) (*1) (AC-DELCO #8682870)	8682870
	5-C20	4.163	PLATE, FWD CLU BKG (8.14-8.44MM) (1987) (*1) (AC-DELCO #8682869)	8682869
	5-C20	4.163	PLATE, FWD CLU BKG (8.73-9.03MM) (1987) (*1) (AC-DELCO #8682868)	8682868
	5-C20	4.163	PLATE, FWD CLU BKG (9.32-9.62MM) (1987) (*1) (AC-DELCO #8682867)	8682867
	5-C20	4.163	PLATE, FWD CLU BKG (4.56-4.71MM) (1987) (1988-91) (*2) (AC-DELCO #8682871)	8682871
	5-C20	4.163	PLATE, FWD CLU BKG (5.15-5.30MM) (1987) (1988-91) (*2) (AC-DELCO #8682870)	8682870
	5-C20	4.163	PLATE, FWD CLU BKG (5.74-5.89MM) (1987) (1988-91) (*2) (AC-DELCO #8682869)	8682869
	5-C20	4.163	PLATE, FWD CLU BKG (6.33-6.48MM) (1987) (1988-91) (*2) (AC-DELCO #8682868)	8682868
	5-C20	4.163	PLATE, FWD CLU BKG (6.92-7.07MM) (1987) (1988-91) (*2) (AC-DELCO #8682867)	8682867
651.	5-C20	4.163	RING, FWD CLU BKG PLT RET (AC-DELCO #8642170)	8642170
652.		DISCON	PLATE, 3RD & 4TH CLU RING RET (*9)	8642171
653.	5-C20	4.163	PLATE, 3RD & 4TH CLU APPLY (1987) (*1, 9) (AC-DELCO #8642172)	8642172
		DISCON	PLATE, 3RD & 4TH CLU APPLY (1987) (1988-91) (*2, 9)	8676379
654.		DISCON	PLATE, 3RD & 4TH CLU (FLAT STL) (1.97MM THK) (*9)	8678054

© 2000 GENERAL MOTORS SERVICE PARTS OPERATIONS-CHEVROLET-14Y

	5-C20	4.163	PLATE, 3RD & 4TH CLU (SMOOTH FACED) (*8, 9) (AC-DELCO #8654145)	8654145
	5-C20	4.163	PLATE, 3RD & 4TH CLU (FLAT STL) (1.97MM THK) (*9) (AC-DELCO #8678053)	8678053
	5-C20	4.163	PLATE KIT, 3-4 CLU (INCLS 1 OF 8678054 & 6 OF 8678053) (*9) (AC-DELCO #8671900)	8671900
655.	5-C20	4.163	PLATE, 3RD & 4TH CLU BKG (7.13MM) (1987) (*1) (AC-DELCO #8642621)	8642621
	5-C20	4.163	PLATE, 3RD & 4TH CLU BKG (6.13MM) (1987) (*1, 9) (AC-DELCO #8642622)	8642622
	5-C20	4.163	PLATE, 3RD & 4TH CLU BKG (5.13MM) (1987) (*1, 9) (AC-DELCO #8642623)	8642623
	5-C20	4.163	PLATE, 3RD & 4TH CLU BKG (4.13MM) (1987) (*1, 9) (AC-DELCO #8642624)	8642624
	5-C20	4.163	PLATE, 3RD & 4TH CLU BKG (6.48MM) (1987) (1988-91) (*2, 9) (AC-DELCO #8667535)	8667535
		DISCON	PLATE, 3RD & 4TH CLU BKG (5.65MM) (1987) (1988-91) (*2, 9)	8667536
	5-C20	4.163	PLATE, 3RD & 4TH CLU BKG (4.82MM) (1987) (1988-91) (*2, 9) (AC-DELCO #8667537)	8667537
		DISCON	PLATE, 3RD & 4TH CLU BKG (3.99MM) (1987) (1988-91) (*2, 9)	8667538
656.	5-C20	4.163	RING, 3RD & 4TH CLU BKG PLT RET (AC-DELCO #8663636)	8663636
657.	5-D27	4.319	BUSHING, OUTPUT SHF (FRT) (ALSO PART OF 658) (AC-DELCO #8642181)	8642181
658.	5-C19	4.159	GEAR, INPUT SUN (INCL 657, 659) (AC-DELCO #8647093)	8647093
659.	5-D27	4.319	BUSHING, OUTPUT SHF (RR) (ALSO PART OF 658) (AC-DELCO #8642181)	8642181
661.	5-D3	4.176	RING, OUTPUT SHF RET (*3, 7, 8) (AC-DELCO #8654141)	8654141
662.	5-D2	4.175	CARRIER, INPUT (AC-DELCO #24212177)	24212177
663.	5-C19	4.159	BEARING, INPUT CARR TO REACT SHF (AC-DELCO #8642191)	8642191
664.	5-C18	4.158	GEAR, INPUT INT (AC-DELCO #8663639)	8663639
665.	5-D3	4.176	BUSHING, REACT CARR SHF FRT (ALSO PART OF 666) (AC-DELCO #8642908)	8642908
666.	5-D2	4.175	SHAFT, REACTION CARR (INCL 665, 667) (AC-DELCO #8681518)	8681518
667.	5-D3	4.176	BUSHING, REACT CARR SHF RR (ALSO PART OF 666) (AC-DELCO #8642907)	8642907
668.	5-D3	4.176	RING, REACT SHF TO INT GR RET (AC-DELCO #8642201)	8642201
669.	5-D3	4.176	WASHER, REACTION CARR SHF THR (AC-DELCO #8642202)	8642202
670.	5-D2	4.175	SHELL, REACT SUN (AC-DELCO #8663439)	8663439
671.	5-C19	4.159	RING, REACT SUN GR RET (*4, 10) (AC-DELCO #8681553)	8681553
672.	5-D3	4.176	BUSHING, REACTION SUN GR (ALSO PART OF 673) (AC-DELCO #8642909)	8642909
673.	5-C19	4.159	GEAR, REACTION SUN (INCL 672) (AC-DELCO #8642204)	8642204
674.	5-C19	4.159	WASHER, REACTION SUN GR SHELL THR (AC-DELCO #8642331)	8642331
675.	5-D3	4.180	RACE, LO & REV O/R CLU (PART OF 679) (AC-DELCO #8673300)	8673300
676.	5-D3	4.180	RING, LO & REV SUPT RET (AC-DELCO #24200278)	24200278
677.	5-D3	4.180	RING, LO & REV O/R CLU RET (PART OF 679) (AC-DELCO #6261051)	6261051
678.		N.S.	SUPPORT, LOW & REV CLU (PART OF 679) (*10)	
679.	5-C27	4.166	SUPPORT, LOW & REV CLU (INCL 675, 677, 678) (*10) (AC-DELCO #8681727)	8681727
680.	5-D3	4.180	SPRING, LO & REV CLU SUPT RET (AC-DELCO #6261415)	6261415
681.	5-D2	4.175	CARRIER, REACTION (INCL 697) (AC-DELCO #8654200)	8654200
682.	5-C20	4.163	PLATE, LOW & REV CLU (ID BLANK) (87-91)) (*10) (AC-DELCO #24205268)	24205268
	5-C20	4.163	PLATE, LOW & REV CLU (ID 4, 8, 0) (1988-91)) (*10) (AC-DELCO #8680440)	8680440
	5-C20	4.163	PLATE, LOW & REV CLU (ID 1, 5, 9) (1988-91)) (*10) (AC-DELCO #24205270)	24205270

© 2000 GENERAL MOTORS SERVICE PARTS OPERATIONS-CHEVROLET-14Y

	5-C20	4.163	PLATE, LOW & REV CLU (WAVED) (*2, 10) (AC-DELCO #8676362) .	8676362
	5-C20	4.163	PLATE, LO & REV CLU SPCR (ID 4) (1987) (*2, 10) (AC-DELCO #8667584)	8667584
	5-C20	4.163	PLATE, LO & REV CLU SPCR (ID 5) (1987) (*2, 10) (AC-DELCO #24205270)	24205270
683.	5-C19	4.159	BEARING, REACTION CARR THR (AC-DELCO #8642215)	8642215
684.	5-C18	4.158	GEAR, INT REACT (AC-DELCO #8667055)	8667055
685.	5-D2	4.175	SUPPORT, INT REACT GR (AC-DELCO #8681491)	8681491
686.	5-D3	4.176	RING, REACT GR TO SUPT RET (AC-DELCO #8642220)	8642220
687.	5-D2	4.175	SHAFT, OUTPUT (1987-7YAM) (1988-91) (AC-DELCO #8681807) .	8681807
	5-D2	4.175	SHAFT, OUTPUT (1987-7YDM) (AC-DELCO #8681809)	8681809
688.	5-E13	4.345	CLIP SPEEDO DR GR (AC-DELCO #6261781)	6261781
689.	5-E13	4.343	GEAR, SPEEDO DR (17 TEETH-RED) (AC-DELCO #8640517)	8640517
690.		N.S.	SLEEVE, (NOT REQ'D)	
691.		N.S.	SEAL, (NOT REQ'D)	
692.	5-C19	4.159	BEARING, REACTION CARR THR (AC-DELCO #8642191)	8642191
693.	5-C26	4.164	RING, LO & REV CLU RET (4.159) (*10) (AC-DELCO #8647337)	8647337
694.	5-C26	4.164	SPRING, LO & REV CLU (AC-DELCO #8642227)	8642227
695.		DISCON	PISTON, LO & REV CLU (*2, 10)	8667583
696.	5-D4	4.189	SEAL KIT, LOW & REV CLU (*10) (AC-DELCO #8646987)	8646987
697.		N.S.	DEFLECTOR, (PART OF 681)	
698.	5-D7	4.224	PLUG, INPUT HSG AIR BLEED (4.3MM DIA) (AC-DELCO #8663707)	8663707

NOTE 1: 1ST DES BUILT BEFORE JULIAN DATE 87040.
NOTE 2: 2ND DES BUILT ON OR AFTER JULIAN DATE 87040.
NOTE 3: PART OF 4.166 8642919 - SEAL KIT, INPUT HSG PSTN.
NOTE 4: PART OF 4.005 8642910 - RING KIT, SNAP.
NOTE 5: 2ND DES BUILT BEFORE JULIAN DATE 87040.
NOTE 6: 3RD DES BUILT ON OR AFTER JULIAN DATE 87040.
NOTE 7: PART OF 4.005 24201804 - GASKET KIT, W/SEALS.
NOTE 8: OVERHAUL KIT IS REPLACED BY 24201804 GASKET KIT T/W 24201806 (TRAN CODE [illegible]) OR 24201807 (TRAN CODE 1YHM) PLATE KIT T/W 24204495 PISTON KIT.
NOTE 9: PART OF 4.163 08690923 - PLATE KIT,3RD & 4TH CLU
NOTE 10: PART OF 4.166 08687996 - PLATE KIT, LOW & REV CLU W/PSTN & SUPT.
NOTE 11: PART OF 4.180 8690907 - CLUTCH ASM, REV INPUT

© 2000 GENERAL MOTORS SERVICE PARTS OPERATIONS-CHEVROLET-14Y

MICROFICHE INDEX

GROUP 4.000

FICHE 5 OF 11

GROUP	DESCRIPTION	STARTING GRID LOCATION PARTS	ILLUSTRATIONS
–	GENERAL INFORMATION	1–A2	1–G2
–	ALPHABETICAL INDEX	1–B13	N.A.
4.000	4–SPEED TRANSMISSION	5–A2	5–F2
4.000	6–SPEED TRANSMISSION	5–B2	5–G2
4.000	AUTOMATIC TRANSMISSION	5–C2	5–H2
–	OUT OF FICHE CALLS	N.A.	5–M23

5–11

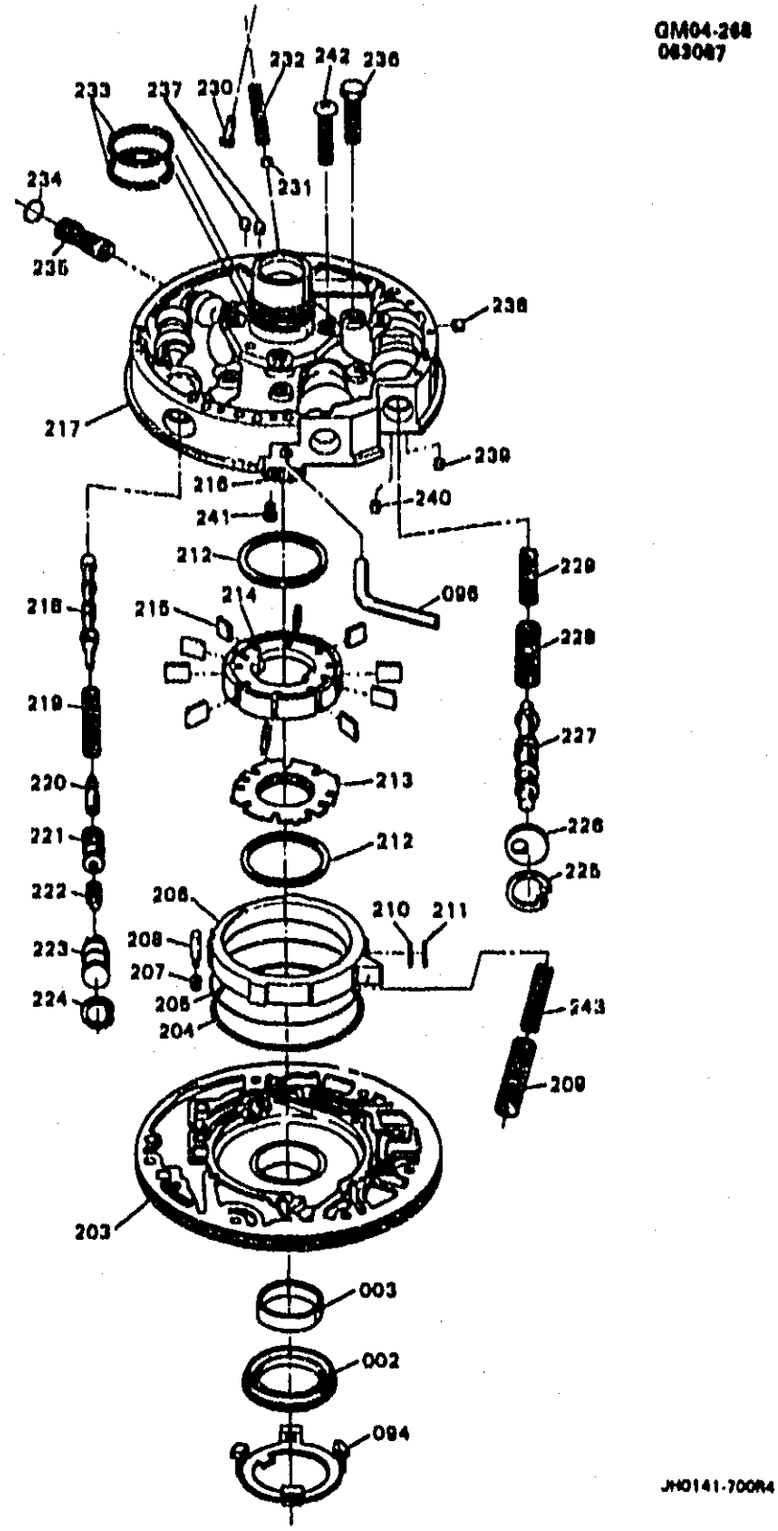

GM04-2681

1987-1989 Y AUTOMATIC TRANSMISSION (MD8) PART 4 THM700-R4 A.T. OIL PUMP
1990-1991 Y AUTOMATIC TRANSMISSION (MD8) PART 4 HM 4L60 OIL PUMP

2.	5-D10	4.226	SEAL, T/CV FLUID (ALSO PART OF 203) (*7, 8) (AC-DELCO #24202535)	24202535
3.	5-C14	4.115	BUSHING, T/CV (ALSO PART OF 203) (AC-DELCO #24206030)	24206030

© 2000 GENERAL MOTORS SERVICE PARTS OPERATIONS-CHEVROLET-14Y

94.	5-D10	4.226	RETAINER, FRT HELIX SEAL (ALSO PART OF 203) (*7, 8) (AC-DELCO #8654491)	8654491
96.	5-D18	4.265	PIPE, AUX C/VLV BODY (TRANS W/AUX VLV BDY) (AC-DELCO #8663615)	8663615
203.	5-D7	4.224	BODY, A/TRNS FLUID PUMP (INCL 2, 3, 94, 203 THRU 215) (AC-DELCO #8649964)	8649964
204.		N.S.	RING, OIL SEAL SLIDE TO WEAR PLATE (PART OF 203) (*1, 6)	
205.		N.S.	SEAL, O RING SLIDE SEAL BACK-UP (PART OF 203) (*1, 6)	
206.	5-D7	4.224	SLIDE, A/TRNS FLUID PUMP (17.955MM) (PART OF 203) (AC-DELCO #8634081)	8634081
	5-D7	4.224	SLIDE, A/TRNS FLUID PUMP (17.968MM) (PART OF 203) (AC-DELCO #8634082)	8634082
	5-D7	4.224	SLIDE, A/TRNS FLUID PUMP (17.981MM) (PART OF 203) (AC-DELCO #8634083)	8634083
	5-D7	4.224	SLIDE, A/TRNS FLUID PUMP (17.994MM) (PART OF 203) (AC-DELCO #8634084)	8634084
	5-D7	4.224	SLIDE, A/TRNS FLUID PUMP (18.007MM) (PART OF 203) (AC-DELCO #8634085)	8634085
207.	5-D10	4.226	SPRING, PIV PIN (AC-DELCO #8634098)	8634098
208.	5-D10	4.226	PIN, A/TRNS FLUID PUMP SLIDE PIV (PART OF 203) (AC- DELCO #8634097)	8634097
209.	5-D10	4.226	SPRING, A/TRNS FLUID PUMP SLIDE OTR (PART OF 203) (AC-DELCO #8639563)	8639563
210.		N.S.	SUPPORT, PUMP SLIDE SEAL (PART OF 203) (*1, 6)	
211.		N.S.	SEAL, PUMP SLIDE (PART OF 203) (*1, 6)	
212.	5-D10	4.226	RING, A/TRNS FLUID PUMP VANE (PART OF 203) (*2) (AC-DELCO #24201144)	24201144
213.	5-D10	4.226	GUIDE, A/TRNS FLUID PUMP ROT (PART OF 203) (*6) (AC-DELCO #12337830)	12337830
214.		N.S.	RTR, (PART OF 203) (*6)	
215.	5-D10	4.226	VANE, A/TRNS FLUID PUMP (ALSO PART OF 203, 214) (*2, 6) (AC-DELCO #8631280)	8631280
216.		N.S.	SHAFT & FLANGE ASM, STATOR (PART OF 217)	
217.	5-D7	4.224	COVER, PUMP (INCL 216, 218-232, 234, 5, 237-241) (1987-89) (*3) (AC-DELCO #8667010)	8667010
	5-D7	4.224	COVER, PUMP (INCL #216, 218-232, 234, 5, 237-241) (1990-91) (AC-DELCO #24200303)	24200303
218.	5-D17	4.262	VALVE, PRESS REG (AC-DELCO #8684048)	8684048
219.	5-D17	4.262	SPRING, PRESS REG VLV (SPRING, PRES REG VLV) (AC-DELCO #8642494)	8642494
220.	5-D18	4.265	VALVE, REV BOOST-W/BUSH (1987-89) (INCL 221) (AC-DELCO #8648959)	8648959
	5-D18	4.265	VALVE, REV BOOST (1990-91) (INCL 221) (AC-DELCO #8648958)	8648958
221.		N.S.	BUSHING, REV BOOST VLV (PART OF 220)	
222.	5-D24	4.275	VALVE, T/V BOOS (INCL 223) (AC-DELCO #8634941)	8634941
223.		N.S.	BUSHING, T .V. BOOST (PART OF 222)	
224.	5-D18	4.265	RING, REV BOOST VLV RET (*9) (AC-DELCO #11503348)	11503348
225.	5-D17	4.262	RING, TCC VLV STOP RET (SNAP) (*9) (AC-DELCO #274267)	274267
226.	5-D17	4.262	STOP, TCC VLV (AC-DELCO #8634705)	8634705
227.	5-D18	4.265	VALVE, CONVR CLU (AC-DELCO #8634031)	8634031
228.	5-D18	4.265	SPRING, TCC VLV OTR (AC-DELCO #8634399)	8634399
229.	5-D18	4.265	SPRING, TCC VLV INR (AC-DELCO #8634378)	8634378
230.	5-D17	4.262	RIVET, PRESS RLF BALL VLV SPR (AC-DELCO #8642619)	8642619
231.		8.890	BALL, 3/8 STEEL (AR) (AC-DELCO #7826284)	7826284
232.	5-D18	4.265	SPRING, PRESS RLF BALL VLV (AC-DELCO #8634106)	8634106
233.	5-D10	4.226	RING, STATOR SHF OIL SEAL (*7, 8) (AC-DELCO #8628055)	8628055
234.	5-D7	4.224	SEAL, PUMP CVR SCRN (PART OF 235) (AC-DELCO #8642581)	8642581
235.	5-D7	4.224	SCREEN, PUMP CVR (INCL 234) (AC-DELCO #8642912)	8642912

© 2000 GENERAL MOTORS SERVICE PARTS OPERATIONS-CHEVROLET-14Y

236.		6.900	BOLT, HEX (M8 X 1.25 X 40) (AC-DELCO #11500921)	11500921
237.	5-D7	4.224	PLUG, PUMP AIR BLEED (4.3MM DIA) (AC-DELCO #6663707)	6663707
238.	5-D7	4.224	PLUG, PUMP CVR (6.60MM DIA) (AC-DELCO #6623686)	6623686
239.	5-C17	4.128	PLUG, A/TRNS O/PMP FLUID CLR HOLE (AC-DELCO #6634285) ..	6634285
240.	5-D7	4.224	ORIFICE, TCC SIG (AC-DELCO #6634284)	6634284
241.	5-D3	4.180	VALVE, A/TRNS FLUID/PUMP CVR BALL CHK (*5) (AC-DELCO #6628732)	6628732
242.		N.S.	SCREW, PUMP CVR, STATOR SHF (M6X1X16.0)	
243.	5-D10	4.226	SPRING, PUMP SLIDE (INR) (PART OF 203) (AC-DELCO #6639562)	6639562

NOTE 1: PART OF 4.226 6634906-- SEAL KIT, PUMP SLIDE-W/SUPT.
NOTE 2: PART OF 4.226 6634904-- VANE KIT, W/RING (1987-88).
NOTE 3: 1ST DES BUILT BEFORE JULIAN DATE 87040.
NOTE 5: ON 1987 TRANS BUILT BEFORE JULIAN DATE 87040. NO 2ND DES.
NOTE 6: PART OF ROTOR, OIL PUMP SEL (17.955MM-6649951)(17.968MM-6649952)(17.981MM-6649953)(17.994MM-6649954)(18.007MM-6649955) GROUP 4.224.
NOTE 7: PART OF 4.005 24201804 -- GASKET KIT, W/SEALS.
NOTE 8: OVERHAUL KIT IS REPLACED BY 24201804 GASKET KIT T/W 24201806 (TRAN CODE 1YDMS) OR 24201807 (TRAN CODE 1YHM) PLATE KIT (2ND DES) T/W 24204495 PISTON KIT.
NOTE 9: PART OF 4.005 6642910 -- RING KIT, SNAP.

© 2000 GENERAL MOTORS SERVICE PARTS OPERATIONS-CHEVROLET-14Y

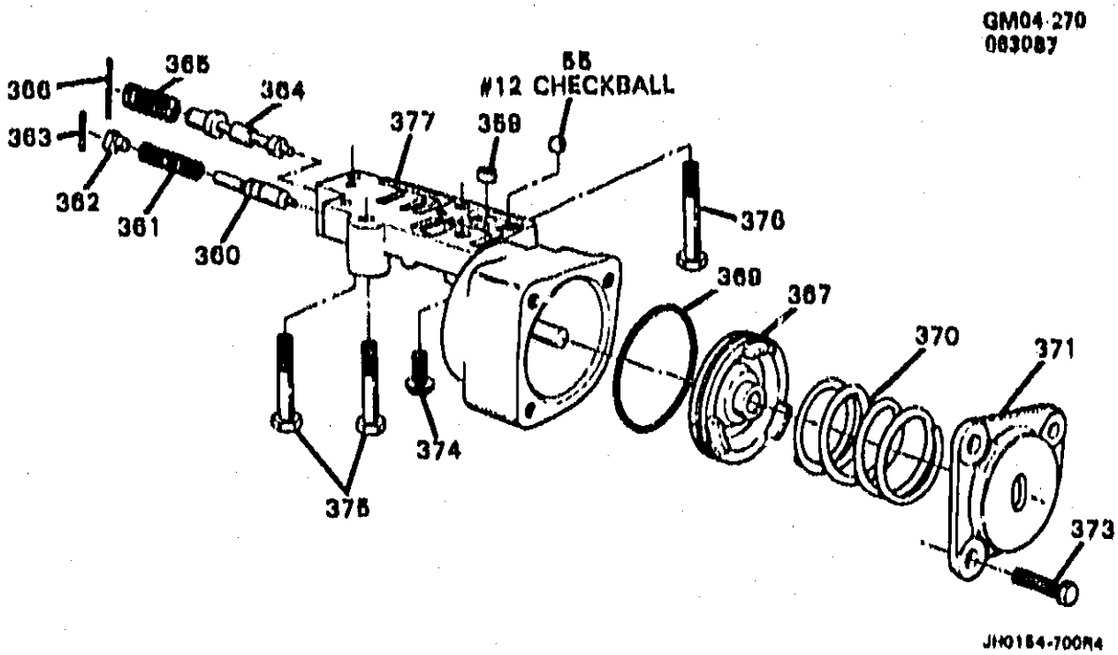

GM04-2701

1987-1989 Y AUTOMATIC TRANSMISSION (MD8) PART 5 THM700-R4 A.T. AUXILIARY ACCUMULATOR VALVE

1990-1991 Y AUTOMATIC TRANSMISSION (MD8) PART 5 HM 4L60 AUXILIARY ACCUMILATOR VALVE

55.		8.899	BALL, GRADE 2, STD DIA 1/4 (2), CHROME STL (AR) (AC-DELCO #104918)	104918
359.		DISCON	PLUG, ORIFICE (1987-89)	8667041
	5-C14	4.105	ORIFICE, FWD CLU FEED (1990-91) (1 DIMPLE) (AC-DELCO #8667040)	8667040
360.		N.S.	VALVE, ABUSE (PART OF 377)	
361.		N.S.	SPRING, ABUSE VLV (PART OF 377)	
362.		N.S.	STOP, ABUSE VLV (PART OF 377)	
363.	5-D16	4.265	PIN, VLV BODY SPR (AC-DELCO #8663605)	8663605
364.		N.S.	VALVE, LO OVERRUN CLU (PART OF 377)	
365.		N.S.	SPRING, LO OVERRUN CLU VLV (PART OF 377)	
366.	5-D18	4.265	PIN, VLV BDY COILED SPR (25MM) (AC-DELCO #8628400)	8628400
367.	5-D12	4.228	PISTON, ACCUM AUX BODY (*1, 2) (AC-DELCO #8663608)	8663608
369.	5-D14	4.229	RING, AUX ACUMM PSTN OIL SEAL (AC-DELCO #24206509)	24206509
370.	5-D15	4.233	SPRING, ACCUM PSTN (AC-DELCO #8667045)	8667045
371.	5-D18	4.255	COVER, AUX C/VLV BODY (AC-DELCO #8673043)	8673043
373.		8.900	BOLT-HEX, M6X1X25, 22.5 THD, GM500 (10.9) PC (AR) (AC-DELCO #11509417)	11509417
374.	5-D18	4.265	BOLT, AUX C/VLV BODY (AC-DELCO #8667821)	8667821
375.		8.900	BOLT, HEX M6X1X35 10.9 PC (AR) (AC-DELCO #11503870)	11503870
376.		8.900	BOLT, HEX WA HD, M6X1X7.4 (AR) (AC-DELCO #8667680)	8667680
377.		DISCON	VALVE BODY, AUX (1987-90) (INCL 360-2, 364-5, 369)	8667038
	5-D16	4.265	BODY, AUX C/VLV (1991) (INCL 360-2, 364-5, 369) (AC-DELCO #24205606)	24205606

NOTE 1: PART OF 4.003 24201804 – GASKET KIT, W/SEALS.
NOTE 2: OVERHAUL KIT IS REPLACED BY 24201804 GASKET KIT T/W 24201806 (TRAN CODE 1YDM) OR 24201807 (TRAN CODE 1YHM) PLATE KIT T/W 24204495 PISTON KIT.

© 2000 GENERAL MOTORS SERVICE PARTS OPERATIONS-CHEVROLET-14Y

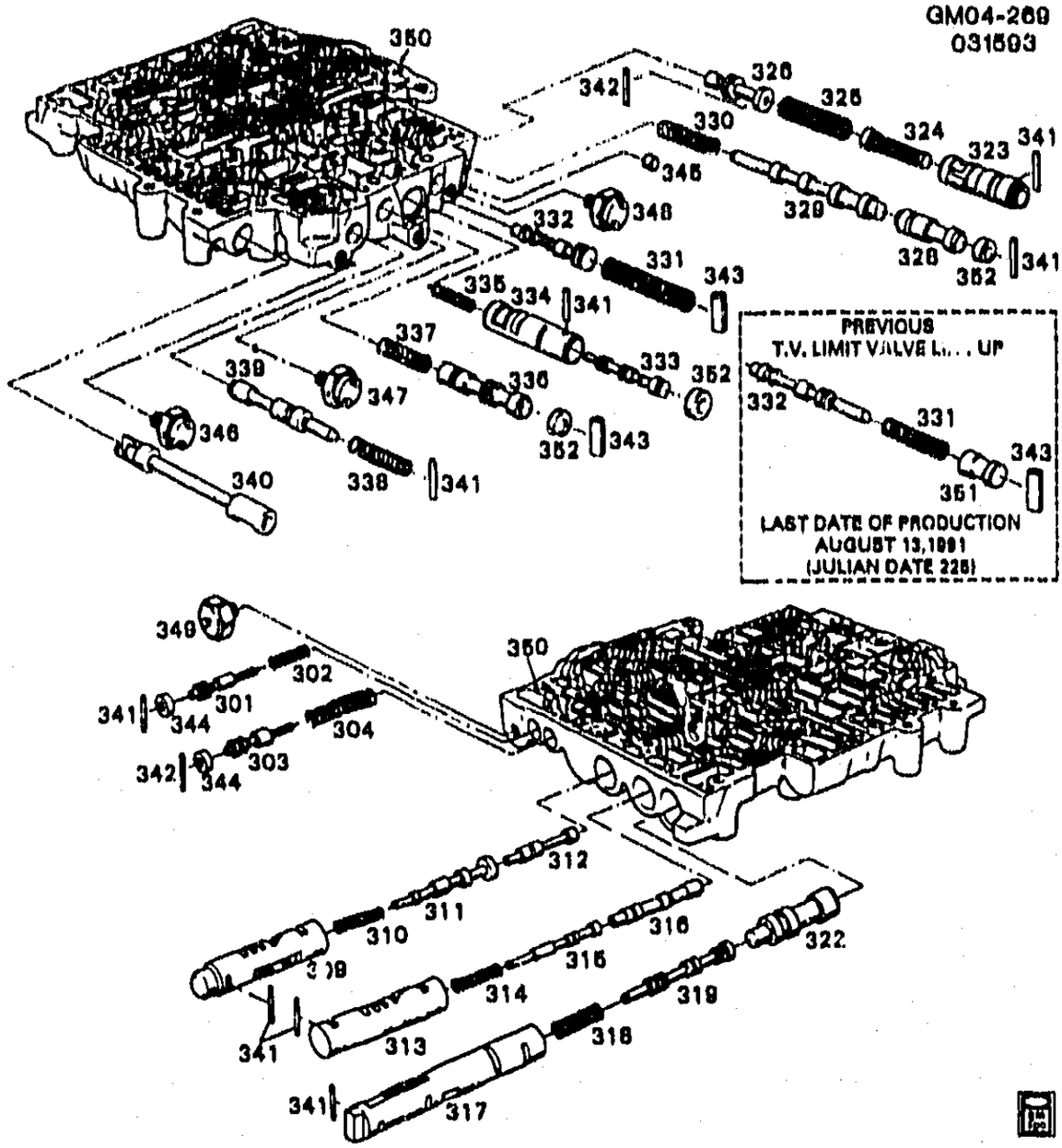

GM04-2691

1988-1989 Y AUTOMATIC TRANSMISSION (MD8) PART 3 THM700-R4 A.T. CONTROL VALVE
1990-1991 Y AUTOMATIC TRANSMISSION (MD8) PART 3 HM 4L60 CONTROL VALVE

301.	N.S.	VALVE, T .V. MOD DN SHFT (*1) .....
302.	N.S.	SPRING, T .V. MOD DN SHFT VLV (*1) .....
303.	N.S.	VALVE, T .V. MOD UPSHIFT (*1) .....
304.	N.S.	SPRING, T .V. MOD UPSHIFT VLV (*1) .....
309.	N.S.	SLEEVE, 3-4 THROT VLV (*1) .....
310.	N.S.	SPRING, 3-4 THROT VLV (*1) .....
311.	N.S.	VALVE, 3-4 THROT (*1) .....
312.	N.S.	VALVE, 3-4 SHFT (*1) .....
313.	N.S.	SLEEVE, 2-3 THROT VLV (*1) .....
314.	N.S.	SPRING, 2-3 THROT VLV (*1) .....
315.	N.S.	VALVE, 2-3 THROT (*1) .....
316.	N.S.	VALVE, 2-3 SHFT (*1) .....
317.	N.S.	SLEEVE, 1-2 THROT VLV (*1) .....
318.	N.S.	SPRING, 1-2 THROT VLV (*1) .....

© 2000 GENERAL MOTORS SERVICE PARTS OPERATIONS-CHEVROLET-14Y

319.		N.S.	VALVE, 1-2 THROT (*1)	
322.		N.S.	VALVE, 1-2 SHFT (*1)	
323.		N.S.	SLEEVE, THROT VLV PLGR (*1)	
324.		N.S.	PLUNGER, THROT VLV (*1)	
325.		N.S.	SPRING, THROT VLV (*1)	
326.		N.S.	VALVE, THROT (*1)	
328.		N.S.	VALVE, 3-4 RLY (*1)	
329.		N.S.	VALVE, 4-3 SEQUENCE (*1)	
330.		N.S.	SPRING, 4-3 SEQUENCE VLV (*1)	
331.		N.S.	SPRING, T.V. LIMIT VLV (*1)	
332.		N.S.	VALVE, T.V. LIMIT (*1)	
333.		N.S.	VALVE, 1-2 ACCUM (*1)	
334.		N.S.	BUSHING, 1-2 ACCUM VLV (*1)	
335.		N.S.	SPRING, 1-2 ACCUM VLV (*1)	
336.		N.S.	VALVE, LINE BIAS (*1)	
337.		N.S.	SPRING, LINE BIAS VLV (*1)	
338.		N.S.	SPRING, 3-2 CONT VLV (*1)	
339.		N.S.	VALVE, 3-2 CONT (*1)	
340.	5-D25	4.279	VALVE, MAN (AC-DELCO #8642336)	8642336
341.	5-D18	4.265	PIN, COILED SPR (2.75MM X 25MM) (AC-DELCO #8628400)	8628400
342.	5-D18	4.265	PIN, T/V (AC-DELCO #8654196)	8654196
343.	5-D18	4.265	PIN, LINE BIAS VLV BORE PLUG (AC-DELCO #8631290)	8631290
	5-D18	4.265	PIN, T/V LIM VLV BORE PLUG (AC-DELCO #8631290)	8631290
344.		4.265	PLUG, 1-2 ACCUM VLV BORE (14.22 MM DIA)	8655045
		4.265	PLUG, 3-4 RLY VLV BORE (14.22 MM DIA)	8655045
345.	5-D18	4.265	PLUG, 3-4 RLY VLV BORE (AC-DELCO #8639141)	8639141
346.		N.S.	SWITCH, 3RD CLU PRESS (NOT REQ'D)	
347.		N.S.	SWITCH, 4-3 PULSE PRESS (NOT REQ'D)	
348.	5-D18	4.265	SWITCH, 4TH CL PRESS (1 PRONG) (1988-89) (AC-DELCO #8683502)	8683502
	5-D18	4.265	SWITCH, 4TH CL PRESS (1 PRONG) (1990-91) (AC-DELCO #8642473)	8642473
349.		4.265	SWITCH, TCC SIG PRESS (1986 & PRIOR ONLY)	
350.		DISCON	VALVE, CONT (1988) (*2)	8667442
	5-D18	4.265	VALVE, CONT (1989) (*2) (AC-DELCO #8673152)	8673152
		DISCON	VALVE, CONT (1990) (*2)	8673528
	5-D18	4.265	VALVE KIT, CONT (W/BODY & VLV) (1991) (W/TRNS CODE 1YDM)) (*2) (AC-DELCO #8677422)	8677422
	5-D18	4.265	VALVE KIT, CONT (W/BODY & VLV) (1991) (W/TRNS CODE 1YHM)) (*2) (AC-DELCO #8680177)	8680177
351.		DISCON	PLUG, T.V. LIMIT VLV	3647453
352.	5-D18	4.265	PLUG, TCC REG VLV BORE (AC-DELCO #8634239)	8634239

NOTE 1: PART OF ITEM 350.
NOTE 2: SERVICE CONTROL VALVE INCLUDES ALL ITEMS ILLUSTRATED HERE.

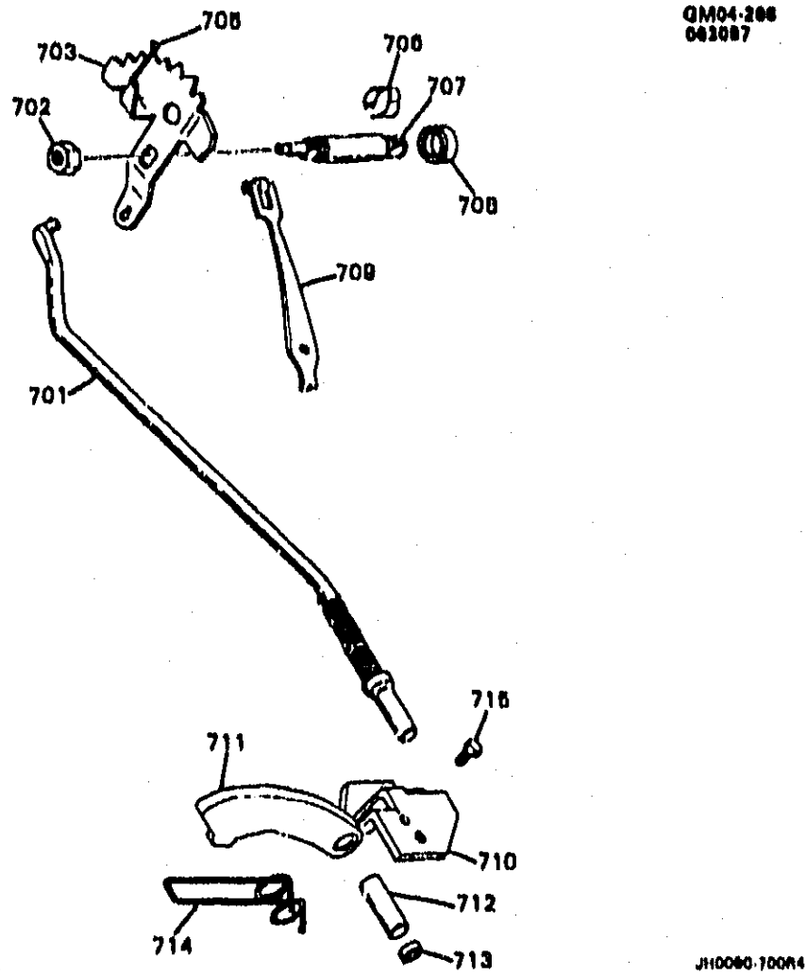

GM04-2881

1986-1989 Y AUTOMATIC TRANSMISSION (MD8) PART 6 THM700-R4 A.T. PARK LOCK
1990-1991 Y AUTOMATIC TRANSMISSION (MD8) PART 6 HM 4L60 PARK LOCK

701.	5-D25	4.290	ACTUATOR, PK LK (AC-DELCO #8667517)	8667517
702.	5-D24	4.275	NUT, MAN SHF TO I/S DETENT LVR (AC-DELCO #8648178)	8648178
703.	5-D25	4.279	LEVER, I/S DETENT (AC-DELCO #8654106)	8654106
705.	5-D24	4.275	LINK, MAN VLV (*1, 2) (AC-DELCO #8654113)	8654113
706.	5-D24	4.275	RETAINER, MAN SHF (AC-DELCO #8642246)	8642246
707.	5-D26	4.294	SHAFT KIT, MAN SHFT (INCL 708) (AC-DELCO #24210712)	24210712
708.	5-D25	4.282	SEAL, MAN SHF (PART OF 707) (*1, 2) (AC-DELCO #8657163)	8657163
709.	5-D24	4.275	DETENT, MAN SHFT (AC-DELCO #8642247)	8642247
710.	5-D25	4.290	BRACKET, PK LK (AC-DELCO #8667574)	8667574
711.		N.S.	PAWL, PK LK (PART OF 712)	
712.	5-D26	4.294	PAWL KIT, PARK (INCL 711, 713) (AC-DELCO #8669911)	8669911
713.	5-D26	4.294	PLUG, PARK PAWL SHF HOLE (ALSO PART OF 712) (*1, 2) (AC-DELCO #8620318)	8620318
714.	5-D26	4.295	SPRING, PK PAWL RTN (AC-DELCO #8642193)	8642193
715.		8.900	BOLT, HEX (M8 X 1.25 X 20) (AC-DELCO #11508687)	11508687

NOTE 1: PART OF 4.005 24201804 – GASKET KIT, W/SEALS.
NOTE 2: OVERHAUL KIT IS REPLACED BY 24201804 GASKET KIT T/W 24201806 (TRAN CODE 1YDM) OR 24201807 (TRAN CODE 1YHM) PLATE KIT T/W 24204495 PISTON KIT.

© 2000 GENERAL MOTORS SERVICE PARTS OPERATIONS-CHEVROLET-14Y

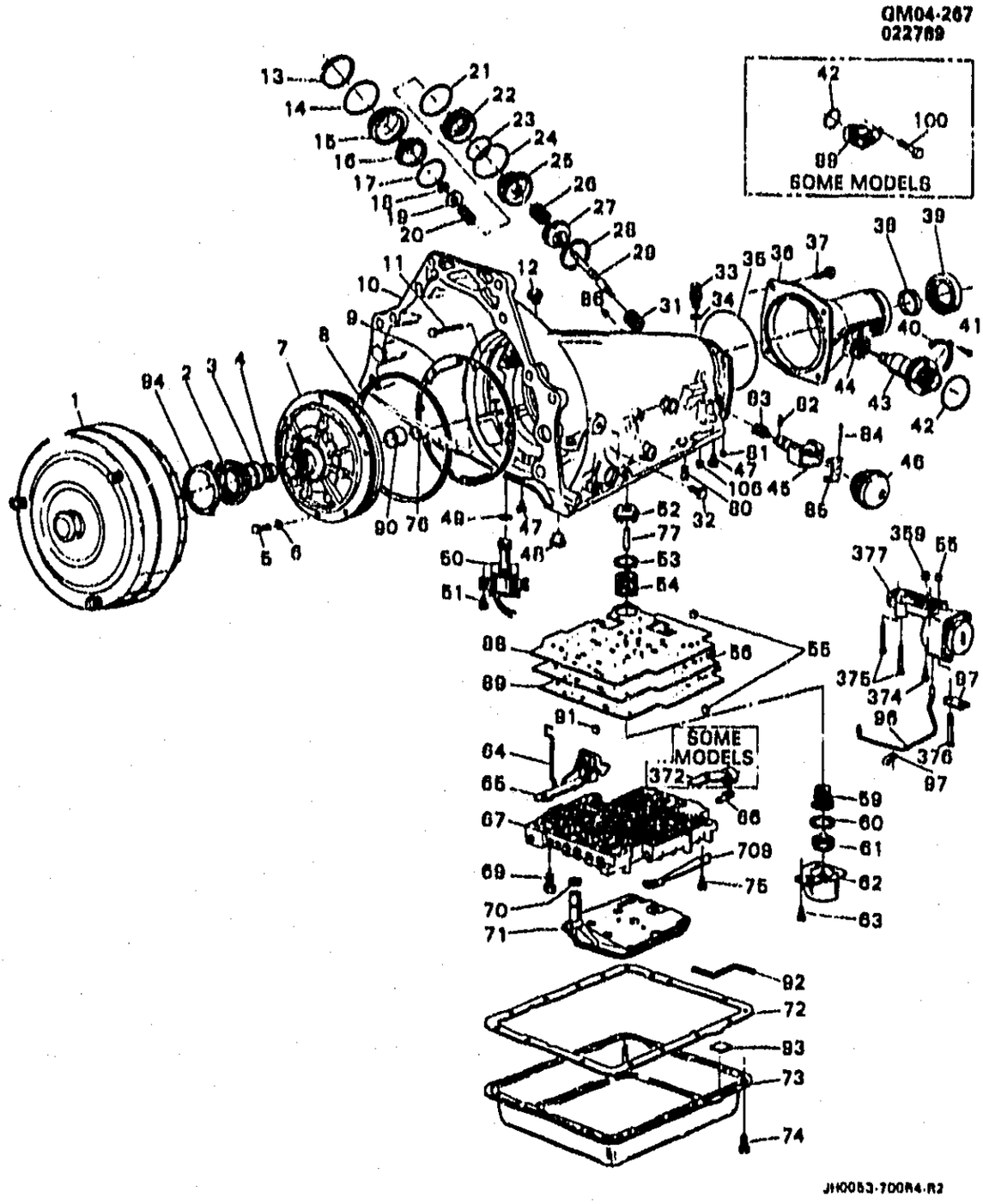

GM04-267Y

1992-1993 Y AUTOMATIC TRANSMISSION (MD8) PART 1 HM 4L60 CASE & RELATED PARTS

1.	5-C14	4.115	CONVERTER, TORQ (REMAN) ..	92-93	Y (MD8)	1	24202174
2.	5-D10	4.226	SEAL, T/CV FLUID (*KIT2, KIT3) (AC-DELCO #24202535)	92-93	Y (MD8)	1	24202535
3.	5-C14	4.115	BUSHING, T/CV (AC-DELCO #24206030)	92-93	Y (MD8)	1	24206030
4.	5-D10	4.226	BUSHING, INPUT SHF FRT (AC-DELCO #8647954)	92-93	Y (MD8)	1	8647954

© 2000 GENERAL MOTORS SERVICE PARTS OPERATIONS-CHEVROLET-14Y

5.	5-D10	4.226	BOLT, A/TRNS FLUID PUMP (INCL 6) (M6X1X19.0) (*KIT2, KIT3) (11.561) (AC-DELCO #20616507)	92-93	Y (MD8)	3	20616507
	5-D10	4.226	BOLT, A/TRNS FLUID PUMP (M8X1.25X60) (INCL 6) (M8X1.25X60) (W/ SEAL) (*KIT2, KIT3) (AC-DELCO #8673596) ...	92-93	Y (MD8)	7	8673596
6.	5-D10	4.226	SEAL, A/TRNS FLUID PUMP BOLT (PUMP TO CASE BOLT) (PART OF 5) (AC-DELCO #12337996)	92-93	Y (MD8)	7	12337996
7.		N.S.	PUMP (REFER ILLUSTRATION HM 4L60 A.T. OIL PUMP)		.....		
8.	5-D10	4.226	SEAL, A/TRNS FLUID PUMP (BLUE) (*KIT2, KIT3) (AC-DELCO #24210605)	92-93	Y (MD8)	1	24210605
9.	5-D10	4.226	GASKET, A/TRNS FLUID PUMP (TO CASE) (*KIT2, KIT3) (AC-DELCO #12337931)	92-93	Y (MD8)	1	12337931
10.	5-C14	4.103	CASE KIT, A/TRNS (INCL 76) (AC-DELCO #8657911)	92-93	Y (MD8)	1	8657911
11.	5-C14	4.104	PIPE, A/TRNS VENT (AC-DELCO #24200374)	92-93	Y (MD8)	1	24200374
12.	5-C17	4.128	FITTING, TRANS FLUID CLR PIPE (TO CASE) (5/16) (AC-DELCO #8637742)	92-93	Y (MD8)	2	8637742
13.	5-D12	4.228	RING, 2-4 BAND SERVO CVR RET (AC-DELCO #8642124) ...	92-93	Y (MD8)	1	8642124
14.	5-D14	4.229	SEAL, 2-4 BAND SERVO CVR (O RING) (PART OF 15) (*KIT2, KIT3) (AC-DELCO #8647351) ...	92-93	Y (MD8)	1	8647351
15.	5-D12	4.228	COVER, 2-4 SERVO (W/SEAL) (INCL 14) (INCLS RING) (4.241) (AC-DELCO #8642979)	92-93	Y (MD8)	1	8642979
16.	5-D12	4.228	PISTON, 2-4 BAND SERVO 4TH APPLY (W/RING) (AC-DELCO #8642478)	92-93	Y (MD8)	1	8642478
17.	5-D14	4.229	RING, 2-4 BAND SERVO PSTN FLUID SEAL (4TH APPLY) (*KIT2, KIT3) (AC-DELCO #8642480) ...	92-93	Y (MD8)	1	8642480
18.		8.934	RETAINER, SNAP RING BOWED EXT .FITS SHFT 7/16 PL (AC-DELCO #9415640)	92-93	.....	AR	9415640
19.	5-D15	4.233	WASHER, 2-4 BAND SERVO PIN (3/8) (AC-DELCO #8642107)	92-93	Y	1	8642107
20.	5-D16	4.246	SPRING, 2-4 BAND SERVO PSTN (AC-DELCO #8642106) ..	92-93	Y (MD8)	1	8642106
21.	5-D14	4.229	SEAL, 2-4 BAND SERVO 2ND APPL PSTN HSG (O RING) (*KIT2, KIT3) (AC-DELCO #8642112)	92-93	Y (MD8)	1	8642112
22.	5-D12	4.228	HOUSING, 2-4 BAND SERVO 2ND APPL (AC-DELCO #8673039) (ALSO USE SEAL 08642112)	92-93	Y (MD8)	1	8673039
23.		N.S.	RING, OIL SEAL INR (PART OF 25) (*KIT3, KIT4)		.....		

© 2000 GENERAL MOTORS SERVICE PARTS OPERATIONS-CHEVROLET-14Y

24.		N.S.	RING, SEAL OTR OIL (PART OF 25) (*KIT3, KIT4)				
25.	5-D12	4.226	PISTON KIT, 2-4 BAND SERVO 2ND APPLY (INCL 23-4) (YELLOW) (.74) (AC-DELCO #8642079)	92-93	Y (MD8)	1	8642079
26.	5-D15	4.233	SPRING, 2-4 BAND SERVO PSTN CUSH (PINK) (AC-DELCO #8642539)	92-93	Y (MD8)	1	8642539
	5-D15	4.233	SPRING, 2-4 BAND SERVO PSTN CUSH INR (AC-DELCO #8681195)	92-93	Y (MD8)	1	8681195
27.	5-D15	4.233	RETAINER, 2-4 BAND SERVO CUSH SPR (AC-DELCO #8642416)	92-93	Y (MD8)	1	8642416
28.	5-D3	4.176	RING, 2-4 BAND SERVO 2ND APPL PSTN RET (AC-DELCO #8642105)	92-93	Y (MD8)	1	8642105
29.	5-D16	4.246	PIN, 2-4 BAND SERVO PSTN (I.D BY NO GROOVES IN TAPPERED POINT) (4.228) (AC-DELCO #8680501)	92-93	Y (MD8)	1	8680501
	5-D16	4.246	PIN, 2-4 BAND SERVO PSTN (I.D BY 1 GROOVE IN TAPPERED POINT) (4.228) (AC-DELCO #8680499)	92-93	Y (MD8)	1	8680499
	5-D16	4.246	PIN, 2-4 BAND SERVO PSTN (I.D BY 2 GROOVES IN TAPPERED POINT) (4.228) (AC-DELCO #8680500)	92-93	Y (MD8)	1	8680500
31.	5-D15	4.233	SPRING, 2-4 BAND SERVO RTN (ORANGE) (AC-DELCO #8642273)	92-93	Y (MD8)	1	8642273
32.	5-C14	4.104	PLUG, A/TRNS FLUID PRESS TEST HOLE (4.265) (AC-DELCO #8654381)	92-93	Y (MD8)	3	8654381
33.	5-C14	4.115	CONNECTOR, A/TRNS WRG (5 TERM, W/SEAL) (AC-DELCO #8682294)	92	Y (MD8)	1	8682294
	5-C14	4.115	CONNECTOR, A/TRNS WRG (W/SEAL CONVR CLU) (ELECTRICAL) (3-WAY) (AC-DELCO #8634383)	92-93	Y (MD8)	1	8634383
34.	5-N7	2.530	SEAL, A/TRNS WRG CONN (O RING) (.687 I.D. X .1" THK) (*KIT2, KIT3) (4.338) (AC-DELCO #10054241)	92-93	Y	1	10054241
35.	5-D25	4.318	SEAL, A/TRNS CASE EXTN (*KIT2, KIT3) (AC-DELCO #1358899)	92-93	Y (MD8)	1	1358899
36.	5-D26	4.317	EXTENSION, A/TRNS CASE (INCL 36, 39) (AC-DELCO #24201517)	92-93	Y (MD8)	1	24201517
37.		8.900	BOLT	92-93		AR	11503428
		8.900	BOLT, HEX M10X1.5X35 10.9 PC (0.029)	92-93		AR	14060030

© 2000 GENERAL MOTORS SERVICE PARTS OPERATIONS-CHEVROLET-14Y

38.	5-D27	4.319	BUSHING, TRANS EXTN (PART OF 36) (INSIDE DIAM 1.500-1.504 (PT OF TRANS EXT) (5.556) (AC-DELCO #24207915)	92-93	Y (MD8)	1	24207915
39.	5-D26	4.318	SEAL, PROP SHF FRT SLIP YOKE OIL (PART OF 36) (NON BOOTED) (*KIT2, KIT3) (AC-DELCO #8673526)	92-93	Y (MD8)	1	8673526
40.		N.S.	RETAINER, SPEEDO DRVN GR SLV (NOT REQ'D)				
41.		8.900	BOLT, HEX W/CON WA M6X1X16 9.8 PZOR 12.5-OD FULL THD (AC-DELCO #8639743)	92-93		AR	8639743
42.	5-E13	4.338	SEAL, SPEEDO DRVN GR SLEV (O RING) (.3" I.D. X .5" O.D.) (ASM) (RUBBER & METAL)) (*KIT2, KIT3) (AC-DELCO #25518664)	92-93	Y (MD8)	1	25518664
43.		N.S.	SLEEVE, SPEEDO DRVN (PART OF 44)				
44.		N.S.	GEAR, SPEEDO DRVN (SEE SPEEDO GEAR CHART) (INCL 43)				
45.	5-D17	4.256	GOVERNOR, (NO SERVICE COMP) (AC-DELCO #8680658)	92-93	Y (MD8, GM1)	1	8680658
	5-D17	4.256	GOVERNOR, (NO SERVICE COMP) (AC-DELCO #8680658)	92	Y (MD8, GU2)	1	8680658
	5-D17	4.256	GOVERNOR, A/TRANS (REMAN) (AC-DELCO #24201874)	92-93	Y (MD8, G44)	1	24201874
	5-D17	4.256	GOVERNOR, A/TRANS (REMAN) (AC-DELCO #24201874)	93	Y (MD8, GU2)	1	24201874
46.	5-D17	4.256	COVER, GOV (AC-DELCO #8667827)	92-93	Y (MD8)	1	8667827
47.	5-D18	4.265	SCREEN, TCC SOL VLV (CONVR CLU) (4.248) (AC-DELCO #12338044)	92-93	Y (MD8)	2	12338044
48.	5-D14	4.229	PIN, 2-4 BAND ANC (AC-DELCO #8654581)	92-93	Y (MD8)	1	8654581
49.	5-C16	4.123	SEAL, INPUT SHF (O RING) (*KIT2, KIT3) (AC-DELCO #8630049)	92-93	Y (MD8)	1	8630049
50.	5-C15	4.122	VALVE, TCC SOL (ORANGE (INCL 92)) (AC-DELCO #10478114)	92-93	Y (MD8)	1	10478114
51.		8.900	BOLT, M6X1X12, 10 THD, 11.6 OD, 9.8 GM500-M, POR, MACH (AC-DELCO #11514149)	92-93		AR	11514149
52.	5-D12	4.228	PISTON, 3-4 ACCUM (*KIT5) (AC-DELCO #8663608)	92-93	Y (MD8)	1	8663608
53.	5-D14	4.229	RING, 3-4 ACCUM PSTN FLUID SEAL (*KIT2, KIT3, KIT5) (AC-DELCO #24206509)	92-93	Y (MD8)	2	24206509
54.	5-D15	4.233	SPRING, 3-4 ACCUM PSTN (PSTN) (REPLACES WHITE, LT GRN) (ORANGE) (AC-DELCO #8673387)	92-93	Y (MD8)	2	8673387
55.	5-D18	4.265	RETAINER, FWD CLU BALL CHK VLV (AC-DELCO #8679152)	92-93	Y (MD8)	1	8679152

© 2000 GENERAL MOTORS SERVICE PARTS OPERATIONS-CHEVROLET-14Y

56.	5-D18	4.265	PLATE, C/VLV BODY SPCR (YD) (AC-DELCO #8680677)	92	Y (MD8, G44, GU2)	1	8680677
	5-D18	4.265	PLATE, C/VLV BODY SPCR (YA YC) (AC-DELCO #8680678)	92	Y (MD8, GM1)	1	8680678
	5-D18	4.265	PLATE, C/VLV BODY SPCR (YA YC) (AC-DELCO #8681272)	92-93	Y (LT1, MD8, GM1)	1	8681272
	5-D18	4.265	PLATE, C/VLV BODY SPCR (YA YC) (AC-DELCO #8681272)	92	Y (LT1, MD8, GU2)	1	8681272
	5-D18	4.265	PLATE, C/VLV BODY SPCR (YD) (AC-DELCO #8681273)	92-93	Y (LT1, MD8, G44)	1	8681273
	5-D18	4.265	PLATE, C/VLV BODY SPCR (YD) (AC-DELCO #8681273)	93	Y (LT1, MD8, GU2)	1	8681273
59.	5-D15	4.233	SPRING, 3-4 ACCUM PSTN (PSTN) (REPLACES WHITE, LT GRN) (ORANGE) (AC-DELCO #8673307)	92-93	Y (MD8)	2	8673307
60.	5-D14	4.229	RING, 1-2 ACCUM PSTN FLUID SEAL (*KIT2, KIT3, KIT5) (AC-DELCO #24206509)	92-93	Y (MD8)	2	24206509
61.		N.S.	PISTON, 1-2 ACCUM (*KIT5) ...		.....		
62.	5-D12	4.228	COVER, 1-2 ACCUM (AC-DELCO #8683543)	92-93	Y (MD8)	1	8683543
63.		8.900	BOLT, HFH M6X1X65 9.8 PL	92-93	.....	AR	11506078
64.	5-D24	4.275	LINK, T/V CBL (AC-DELCO #8642290)	92-93	Y (MD8)	1	8642290
65.	5-D24	4.275	LEVER, T/V (AC-DELCO #8673606)	92-93	Y (MD8)	1	8673606
66.	5-N13	2.559	CLIP, A/TRNS WRG HARN (4.197) (AC-DELCO #8673068) .	92-93	Y (MD8)	2	8673068
67.	5-D18	4.265	VALVE KIT, CONT (W/BODY & VLV) (YD) (AC-DELCO #8680661)	92	Y (MD8, G44, GU2)	1	8680661
	5-D18	4.265	VALVE KIT, CONT (W/BODY & VLV) (YC) (AC-DELCO #8680662)	92	Y (MD8, GM1) (EXC VE1)	1	8680662
	5-D18	4.265	VALVE KIT, CONT (W/BODY & VLV) (YC) (AC-DELCO #8681312)	92	Y (LT1, MD8, GM1, GU2)	1	8681312
	5-D18	4.265	VALVE KIT, CONT (W/BODY & VLV) (AC-DELCO #24204891) .	92-93	Y (LT1, MD8, G44)	1	24204891
	5-D18	4.265	VALVE KIT, CONT (W/BODY & VLV) (YC) (AC-DELCO #8681312)	93	Y (LT1, MD8, GM1) (EXC VE1)	1	8681312
	5-D18	4.265	VALVE KIT, CONT (W/BODY & VLV) (AC-DELCO #24204891) ..	93	Y (LT1, MD8, GU2)	1	24204891
	5-D18	4.265	VALVE KIT, CONT (W/BODY & VLV) (YA) (AC-DELCO #8681706)	92	Y (MD8, GM1, VE1) (EXPORT)	1	8681706
	5-D18	4.265	VALVE KIT, CONT (W/BODY & VLV) (YA) (AC-DELCO #8682750)	93	Y (LT1, MD8, GM1, VE1) (EXPORT)	1	8682750
69.		8.900	BOLT, HEX M6X1X50 10.9 PL (AC-DELCO #11503861)	92-93	.....	AR	11503861
70.	5-D10	4.226	SEAL, A/TRNS FLUID FLTR (O RING) (PART OF 71) (*KIT2, KIT3) (4.197) (AC-DELCO #8657767) .	92-93	Y (MD8)	1	8657767

© 2000 GENERAL MOTORS SERVICE PARTS OPERATIONS-CHEVROLET-14Y

71.	5-D6	4.197	FILTER KIT, A/TRNS FLUID (W/SEAL & GSKT) (INCL 70, 72) (*KIT2, KIT3) (AC-DELCO #8667926)	92-93	Y (MD8)	1	8667926
72.	5-D6	4.196	GASKET, A/TRNS FLUID PAN (ALSO PART OF 71, 73) (*KIT2, KIT3) (AC-DELCO #8654799) ...	92-93	Y (MD8)	1	8654799
73.	5-D5	4.195	PAN KIT, A/TRNS FLUID (INCL 72, 93) (SHALLOW W/PAN, GSKT & MAGNET) (AC-DELCO #8663948)	92-93	Y (MD8)	1	8663948
74.		8.900	BOLT, W/CON SPR WA, M8X1.25X20, 9.8, ZD (1.270) (AC-DELCO #15614709)	92-93	.....	AR	15614709
75.		8.900	BOLT-HEX, M8X1.25X20, 16.88 THD, GM500 (10.9), PZOR, MACH (AC-DELCO #11508687)	92-93	.....	AR	11508687
76.	5-N22	5.556	BUSHING, PROP SHF FRT SLIP YOKE (PART OF 10) (INSIDE DIAM 1.506-1.509) (PT OF TRANS EXT) (AC-DELCO #24207915)	92-93	Y (MD8)	1	24207915
	5-N22	5.556	BUSHING, PROP SHF FRT SLIP YOKE (PART OF 10) (INSIDE DIA 1.506-1.509) (PART OF TRANS CASE) (4.104) (AC-DELCO #8680027)	92-93	Y (MD8)	1	8680027
77.	5-D12	4.228	PIN, 3-4 ACCUM PSTN (4.226) (AC-DELCO #8628273)	92-93	Y (MD8)	1	8628273
80.	5-D12	4.228	VALVE, 3RD ACCUM BALL CHK (AC-DELCO #8634400)	92-93	Y (MD8)	1	8634400
81.	5-C14	4.105	ORIFICE, 3RD ACCUM BL (6.4MM DIA) (NO DIMPLE) (4.104) (AC-DELCO #8628864) .	92-93	Y (MD8)	2	8628864
82.		8.939	PIN, SPR COILED .125X.625 PL (PART OF 83) (AC-DELCO #273337)	92-93	.....	AR	273337
83.	5-D17	4.256	GEAR, GOV DRV (INCL 82) (LT GREEN) (AC-DELCO #8663995)	92-93	Y (MD8)	1	8663995
84.	5-D17	4.256	PIN, GOV WT (AC-DELCO #8663706)	92-93	Y (MD8)	2	8663706
85.	5-D17	4.256	CAP, GOV THR (AC-DELCO #6261239)	92-93	Y (MD8)	1	6261239
86.	5-C14	4.105	ORIFICE, FWD CLU FEED (6.4MM DIA) (NO DIMPLE) (4.104) (AC-DELCO #8628864) .	92-93	Y	1	8628864
	5-C14	4.105	ORIFICE, FWD CLU FEED (9.12 MM DIA) (1 DIMPLE) (4.265) (AC-DELCO #8667040)	92-93	Y (MD8)	1	8667040
88.		N.S.	GASKET, VLV BODY UPR (*KIT1)		.....		
89.		N.S.	GASKET, VLV BODY LWR (*KIT1)		.....		
90.	5-D10	4.226	BUSHING, INPUT SHF RR (AC-DELCO #8642904)	92-93	Y (MD8)	1	8642904
91.		8.899	BALL, 5/16 CHROME STEEL (AC-DELCO #104919)	92-93	.....	AR	104919
92.		N.S.	CONDUIT, SOL WIRE (PART OF 50)		.....		

© 2000 GENERAL MOTORS SERVICE PARTS OPERATIONS-CHEVROLET-14Y

93.	5-D5	4.195	MAGNET, A/TRNS FLUID PAN (ALSO PART OF 73) (4.105) (AC-DELCO #8665830)	92-93	Y (MD8)	1	8665830
94.	5-D10	4.226	RETAINER, FRT HELIX SEAL (AC-DELCO #8654491)	92-93	Y (MD8)	1	8654491
96.	5-D16	4.265	PIPE, AUX C/VLV BODY (TRANS W/AUX VLV BODY) (AC-DELCO #8663615)	92-93	Y (MD8)	1	8663615
97.	5-D7	4.216	RETAINER, AUX C/VLV BODY PIPE (FLAT) (4.265) (AC-DELCO #8667679)	92-93	Y (MD8)	1	8667679
	5-D7	4.216	RETAINER, AUX C/VLV BODY PIPE (CURVED) (4.265) (AC-DELCO #8673044)	92-93	Y (MD8)	1	8673044
99.		N.S.	SENSOR, SPD INT TRANS (NOT AVAIL ON SOME MDLS)		.....		
100.		N.S.	BOLT, SENSOR RET (TRUCK ONLY)		.....		
106.	5-C27	4.166	RETAINER, LOW & REV CLU PSTN (10.30MM 0 MAX) (DOUBLE ORIFICE) (W/BALL) (4.180) (AC-DELCO #8663890) .	92-93	Y (MD8)	3	8663890
359.	5-C14	4.105	ORIFICE, FWD CLU FEED (6.4MM DIA) (NO DIMPLE) (4.104) (AC-DELCO #8628864) .	92-93	Y	1	8628864
	5-C14	4.105	ORIFICE, FWD CLU FEED (9.12 MM DIA) (1 DIMPLE) (4.265) (AC-DELCO #8667040)	92-93	Y (MD8)	1	8667040
372.	5-C13	4.054	SWITCH, TCC TEMP (NOT AVAIL ON SOME MDLS) (AC-DELCO #8673634)	92-93	Y (MD8)	1	8673634
374.	5-D18	4.265	BOLT, AUX C/VLV BODY (M6X1X24) (4.226) (AC-DELCO #8667821)	92-93	Y (MD8)	1	8667821
375.		8.900	BOLT, HEX M6X1X35 10.9 PC (AC-DELCO #11503870)	92-93	.....	AR	11503870
376.		8.900	BOLT, HEX WA HD, M6X1X7.4 (AC-DELCO #8667680)	92-93	.....	AR	8667680
377.	5-D18	4.265	BODY, AUX C/VLV (REMAN) (AC-DELCO #24205606)	92-93	Y (MD8)	1	24205606
709.	5-D24	4.275	DETENT, MAN SHFT (AC-DELCO #8642247)	92-93	Y (MD8)	1	8642247

SERVICE KITS

1.	5-D18	4.265	GASKET KIT, C/VLV BODY SPCR PLT (INCL 88, 89.) (AC-DELCO #8689949)	92-93	Y (MD8)	1	8689949
2.	5-C10	4.005	GASKET KIT, A/TRNS (W/SEALS) (INCL 2, 5, 8, 9, 14, 17, 21, 23, 24, 34, 35, 39, 42, 49, 53, 60, 70-2.) (W/O PLATES OR PISTONS) (AC-DELCO #24201804)	92-93	Y (MD8)	1	24201804
3.		N.S.	TRANSMISSION KIT, AUTO (SERV OVERHAUL W/PLT, GSKT, SEAL) (USE GASKET KIT 24201804 T/W PLATE KIT 24201807 T/W PISTON KIT 24204495)		.....		

© 2000 GENERAL MOTORS SERVICE PARTS OPERATIONS-CHEVROLET-14Y

4.	5-D14	4.220	RING KIT, 2-4 BAND SERVO 2ND APPL PSTN FLUID SEAL (INCL 23, 24) (.74 RATIO) (INCLS 2 RINGS) (AC-DELCO #8042925)	92-93	Y (MD8)	1	8042925
5.	5-D12	4.220	PISTON KIT, 1-2 & 3-4 ACCUM (INCL 52, 53, 60, 61) (W/SEALS) (AC-DELCO #24204495)	92-93	Y (MD8)	1	24204495

RPO DEFINITIONS
GM1 - AXLE,REAR,2.59 RATIO
GU2 - AXLE,REAR,2.73 RATIO
Q44 - AXLE,REAR,3.07 RATIO
LT1 - ENGINE-GAS, 8 CYL, 5.7L(5.7P),MFI,HO
MD8 - TRANSMISSION,AUTOMATIC 4-SPEED(THM700R4/4L60)
VE1 - PROVISION OPTIONS,JAPAN(EXPORT)

GM04-272 11/29/95

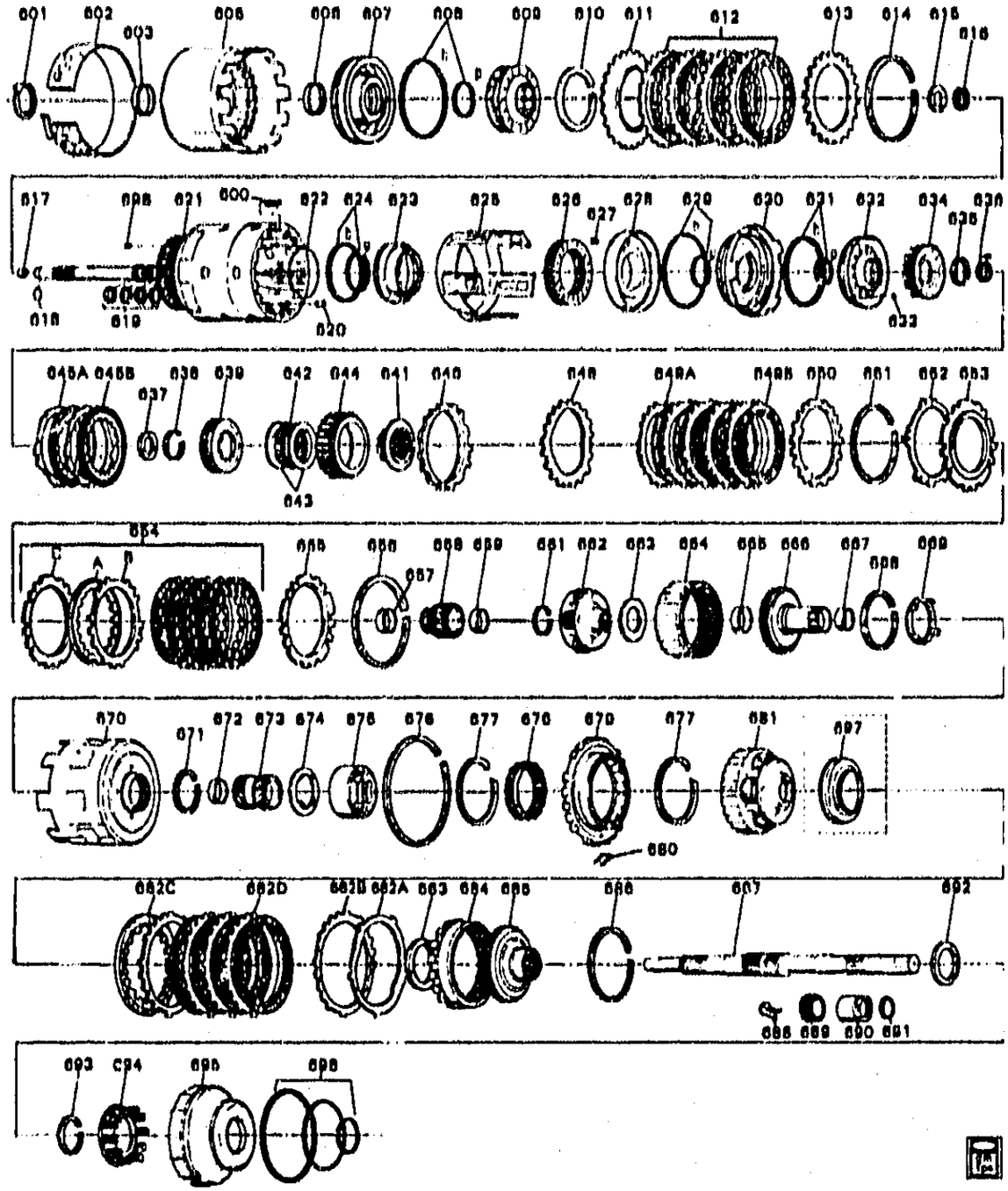

GM04-272Y

1992-1993 Y AUTOMATIC TRANSMISSION (MD8) PART 2 HM 4L60 INTERNAL POWER TRAIN PARTS

600.	5-C28	4.167	SPRING, 3-4 CLU (INCLS RET & (2) SPRNGS) (*KIT8) (4.163) (AC-DELCO #8667424)	92-93	Y (MD8)	AR	8667424
601.	5-D10	4.226	WASHER, A/TRNS FLUID PUMP (AC-DELCO #12338134)	92-93	Y (MD8)	1	12338134
602.	5-D17	4.251	BAND, 2-4 (4.163) (AC-DELCO #8673175)	92-93	Y (MD8)	1	8673175
603.	5-D3	4.180	BUSHING, REV INPUT CLU HSG FRT (PART OF 605) (AC-DELCO #8642905)	92-93	Y (MD8)	1	8642905

© 2000 GENERAL MOTORS SERVICE PARTS OPERATIONS-CHEVROLET-14Y

605.	5-C20	4.169	**HOUSING**, REV INPUT CLU (W/DRUM & RET) (INCL 603, 604) (AC-DELCO #8661295) ...	92-93	Y (MD8)	1	8661295
606.	5-C20	4.169	**BUSHING**, REV INPUT CLU HSG RR (PART OF 605) (AC-DELCO #8628917)	92-93	Y (MD8)	1	8628917
607.	5-C27	4.166	**PISTON**, REV INPUT CLU (.095 HOLE) (AC-DELCO #8667041) .	92-93	Y (MD8)	1	8667041
608.	5-C27	4.166	**SEAL KIT**, REV INPUT CLU (INCLS SEALS) (*KIT3, KIT4) (AC-DELCO #8657922)	92-93	Y (MD8)	1	8657922
609.	5-C26	4.164	**SPRING**, REV INPUT CLU (AC-DELCO #8647284)	92-93	Y (MD8)	1	8647284
610.	5-C26	4.164	**RING**, REV INPUT CLU SPR RET (SNAP) (*KIT2) (AC-DELCO #8628059)	92-93	Y (MD8)	1	8628059
611.	5-C20	4.163	**PLATE**, REV INPUT CLU (W/ HOLES IN TURB PLATES) (AC-DELCO #24205267)	92-93	Y (MD8)	3	24205267
	5-C20	4.163	**PLATE**, REV INPUT CLU (WAVED) (AC-DELCO #8663074)	92-93	Y (MD8)	1	8663074
612.	5-C20	4.163	**PLATE**, REV INPUT CLU (153MM DIA) (*KIT4, KIT9) (AC-DELCO #8673605)	92-93	Y (MD8)	4	8673605
613.	5-C20	4.163	**PLATE**, REV INPUT CLU BKG (7.25-7.41MM) (AC-DELCO #8682863)	92-93	Y (MD8)	1	8682863
	5-C20	4.163	**PLATE**, REV INPUT CLU BKG (5.79-5.95MM) (AC-DELCO #8682865)	92-93	Y (MD8)	1	8682865
	5-C20	4.163	**PLATE**, REV INPUT CLU BKG (6.52-6.68MM) (AC-DELCO #8682864)	92-93	Y (MD8)	1	8682864
614.	5-C26	4.164	**RING**, REV INPUT CLU BKG PLT RET (YELLOW) (AC-DELCO #8667022)	92-93	Y (MD8)	1	8667022
615.	5-C19	4.162	**BEARING**, REV INPUT CLU HSG THR (STATOR SHFT) (TO SEL WASHER) (AC-DELCO #8642066)	92-93	Y (MD8)	1	8642066
616.	5-D4	4.189	**WASHER**, REV INPUT CLU HSG THR (TO STATOR SHF) (1.87-1.97MM) (4.158) (AC-DELCO #8642067)	92-93	Y (MD8)	1	8642067
	5-D4	4.189	**WASHER**, REV INPUT CLU HSG THR (TO STATOR SHF) (2.04-2.14MM) (4.158) (AC-DELCO #8642068)	92-93	Y (MD8)	1	8642068
	5-D4	4.189	**WASHER**, REV INPUT CLU HSG THR (TO STATOR SHF) (2.21-2.31MM) (4.158) (AC-DELCO #8642069)	92-93	Y (MD8)	1	8642069
	5-D4	4.189	**WASHER**, REV INPUT CLU HSG THR (TO STATOR SHF) (2.38-2.48MM) (4.158) (AC-DELCO #8642070)	92-93	Y (MD8)	1	8642070

© 2000 GENERAL MOTORS SERVICE PARTS OPERATIONS-CHEVROLET-14Y

	5-D4	4.169	WASHER, REV INPUT CLU HSG THR (TO STATOR SHF) (2.55-2.65MM) (4.150) (AC-DELCO #8642071)	92-93	Y (MD8)	1	8642071
	5-D4	4.169	WASHER, REV INPUT CLU HSG THR (TO STATOR SHF) (2.72-2.82MM) (4.150) (AC-DELCO #8642072)	92-93	Y (MD8)	1	8642072
	5-D4	4.169	WASHER, REV INPUT CLU HSG THR (TO STATOR SHF) (2.89-2.99MM) (4.150) (AC-DELCO #8642073)	92-93	Y (MD8)	1	8642073
	5-D4	4.169	WASHER, REV INPUT CLU HSG THR (TO STATOR SHF) (3.06-3.16MM) (4.150) (AC-DELCO #8642074)	92-93	Y (MD8)	1	8642074
617.	5-C16	4.123	VALVE, TURB SHF BALL CHK (YELLOW) (RET) (AC-DELCO #8639284)	92-93	Y (MD8)	1	8639284
618.	5-C16	4.123	SEAL, TURB SHF (O RING) (AC-DELCO #8630049)	92-93	Y (MD8)	1	8630049
619.	5-C16	4.123	RING, INPUT SHF FLUID SEAL (TEFLON) (*KIT3, KIT4) (AC-DELCO #8667035)	92-93	Y (MD8)	4	8667035
620.	5-C16	4.123	VALVE, 3-4 CLU HSG BALL CHK (AC-DELCO #24208262)	92-93	Y (MD8)	1	24208262
621.	5-C18	4.156	HOUSING, 3-4 CLU (W/INPUT SHF) (AC-DELCO #8667659) ...	92-93	Y (MD8)	1	8667659
622.		N.S.	SEAL, INPUT TO FWD HSG O RING (*KIT1, KIT3, KIT4)		.....		
623.	5-C27	4.166	PISTON, 3-4 CLU (INPUT) (AC-DELCO #24200290)	92-93	Y (MD8)	1	24200290
624.		N.S.	SEAL, 3RD & 4TH CLU INR & OTR (*KIT1, KIT3, KIT4)		.....		
625.		N.S.	RING, 3-4 CLU APPL (*KIT8) ...	92	.....		
		N.S.	RING, 3-4 CLU APPL (W/JULIAN DATE OTHER THAN 005-230) (*KIT8)	93	.....		
	5-C28	4.167	RING, 3-4 CLU APPL (W/TRANS JULIAN DATE 005-230, FOR OTHER DATES SEE 8690[illegible]3) (AC-DELCO #8685043)	93	Y (MD8)	1	8685043
626.	5-C28	4.167	SPRING, 3-4 CLU (10512 MM) (AC-DELCO #8685244)	92-93	Y (MD8)	1	8685244
627.	5-C16	4.123	VALVE, FWD CLU HSG BALL CHK (PART OF 628) (RET) (4.169) (AC-DELCO #8654438) .	92-93	Y (MD8)	1	8654438
	5-C16	4.123	VALVE, FWD CLU HSG BALL CHK (7.10MM 0 MAX) (PART OF 628) (SINGLE ORIFICE) (TALL & NARROW) (4.226) (AC-DELCO #8628732)	92-93	Y (MD8)	AR	8628732
628	5-C28	4.169	HOUSING, FWD CLU (W/INPUT SHF) (INCL 627) (AC-DELCO #8654326)	92-93	Y (MD8)	1	8654326
629.		N.S.	SEAL, FWD CLU (*KIT1, KIT3, KIT4)		.....		
630.	5-C27	4.166	PISTON, FWD CLU (AC-DELCO #8683513)	92-93	Y (MD8)	1	8683513

© 2000 GENERAL MOTORS SERVICE PARTS OPERATIONS-CHEVROLET-14Y

631.		N.S.	SEAL, OVERRUN CLU INR & OTR (*KIT1, KIT3, KIT4)				
632.	5-C27	4.166	PISTON, OVERRUN CLU (INCL 633) (AC-DELCO #8642140)	92-93	Y (MD8)	1	8642140
633.		8.899	BALL, SPECIAL (PART OF 632) (AC-DELCO #7002117)	92-93		AR	7002117
634.	5-C20	4.163	SPRING, OVERRUN CLU (AC-DELCO #8677876)	92-93	Y (MD8)	1	8677876
635.		8.934	RING, EXT SNAP FITS M36 DIA SHT .PL (*KIT2)	92-93		AR	11500692
636.	5-D3	4.176	SEAL, OUTPUT SHF (INPUT HSG TO OTPUT) (*KIT1, KIT3, KIT4) (AC-DELCO #8677268)	92-93	Y (MD8)	1	8677268
637.	5-D3	4.176	BEARING, INPUT SUN GR (4.159) (AC-DELCO #8642162)	92-93	Y (MD8)	1	8642162
638.	5-D3	4.180	RING, OVERRUN CLU HUB RET (SNAP) (*KIT2) (AC-DELCO #8647083)	92-93	Y (MD8)	1	8647083
639.		N.S.	HUB, OVERRUN CLU (PART OF 642)				
641.		N.S.	RETAINER, FWD CLU SPRAG INR-W/RACE (PART OF 642)				
642.	5-C26	4.164	CLUTCH, FWD RLR (INCL 639, 641, 643-4) (HIGH SPD, INCLS INPUT SUN GEAR) (AC-DELCO #24210960)	92-93	Y (MD8)	1	24210960
	5-C26	4.164	CLUTCH, FWD RLR (INCL 639, 641, 643-4) (REG SPD, INCLS INPUT SUN GEAR) (AC-DELCO #24210961)	92-93	Y (MD8)	1	24210961
643.		N.S.	RETAINER, SPRAG (PART OF 642)				
644.		N.S.	RACE, FWD CLU SPRAG OTR (PART OF 642)				
645.	5-C20	4.163	PLATE, OVERRUN CLU (A) (FIBER) (1.93-2.13 THK) (GROOVED) (*KIT4, KIT9) (AC-DELCO #8673253)	92-93	Y (MD8)	2	8673253
	5-C20	4.163	PLATE, OVERRUN CLU (B) (STEEL) (2.34MM THK) (FLAT STEEL) (AC-DELCO #8642154)	92-93	Y (MD8)	2	8642154
646.	5-C20	4.163	PLATE, FWD CLU APPLY (AC-DELCO #8682866)	92-93	Y (MD8)	1	8682866
648.	5-C20	4.163	PLATE, FWD CLU (WAVED) (AC-DELCO #8647058)	92-93	Y (MD8)	1	8647058
649.	5-C20	4.163	PLATE, FWD CLU (STEEL) (*KIT4, KIT6, KIT7, KIT9) (AC-DELCO #8654325)	92-93	Y (MD8)	AR	8654325
	5-C20	4.163	PLATE, FWD CLU (FIBER) (*KIT4, KIT6, KIT7) (AC-DELCO #8673254)	92-93	Y (MD8)	5	8673254
650.	5-C20	4.163	PLATE, FWD CLU BKG (6.92-7.07MM) (ID A) (AC-DELCO #8682867)	92-93	Y (MD8)	1	8682867
	5-C20	4.163	PLATE, FWD CLU BKG (8.73-9.03MM) (ID B) (AC-DELCO #8682868)	92-93	Y (MD8)	1	8682868

	5-C20	4.163	PLATE, FWD CLU BKG (5.74-5.89MM) (ID C) (AC-DELCO #8662869)	92-93	Y (MD8)	1	8662869
	5-C20	4.163	PLATE, FWD CLU BKG (4.56-4.71MM) (4.56-4.71MM) (ID E) (AC-DELCO #8662871) ..	92-93	Y (MD8)	1	8662871
	5-C20	4.163	PLATE, FWD CLU BKG (5.15-5.30MM) (5.15-5.30MM) (ID D) (AC-DELCO #8662870) ..	92-93	Y (MD8)	1	8662870
651.	5-C20	4.163	RING, FWD CLU BKG PLT RET (AC-DELCO #8642170)	92-93	Y (MD8)	1	8642170
652.	5-C20	4.163	PLATE, 3-4 CLU (1.97MM) (5 LG SPACES EQUAL SPACED BETWEEN CLSTR OF SMALL TEETH) (AC-DELCO #8678053)	92-93	Y (MD8)	5	8678053
	5-C20	4.163	PLATE, 3-4 CLU (2.71MM (STEEL) (5 LG SPACES EQUAL SPACED BETWEEN CLSTR OF SMALL TEETH) (AC-DELCO #8685045)	92	Y (MD8)	5	8685045
653.		N.S.	PLATE, 3-4 CLU APPLY (3.30MM THK) (W/JULIAN DATE OTHER THAN 005-230) (*KIT8) .	92-93	.....		
	5-C20	4.163	PLATE, 3-4 CLU APPLY (W/JULIAN DATE 005-230) (AC-DELCO #8685044)	93	Y (MD8)	1	8685044
654.	5-C20	4.163	PLATE KIT, CLU (A) (HAS 2050 STAMPED ON PART) (*KIT4, KIT9) (AC-DELCO #8679390) ...	92-93	Y (MD8)	6	8679390
	5-C20	4.163	PLATE, 3-4 CLU (B) (1.97MM) (5 LG SPACES EQUAL SPACED BETWEEN CLSTR OF SMALL TEETH) (*KIT6) (AC-DELCO #8678053)	92-93	Y (MD8)	5	8678053
		N.S.	PLATE, 3-4 CLU (STEEL) (B) (*KIT6, KIT8)	92-93	.....		
	5-C20	4.163	PLATE, 3-4 CLU (STEEL) (B) (2.71MM (STEEL) (5 LG SPACES EQUAL SPACED BETWEEN CLSTR OF SMALL TEETH) (AC-DELCO #8685045)	92	Y (MD8)	1	8685045
655.	5-C20	4.163	PLATE, 3-4 CLU BKG (6.58-.38MM) (AC-DELCO #8667535)	92-93	Y (MD8)	1	8667535
	5-C20	4.163	PLATE, 3-4 CLU BKG (4.92-.72MM) (AC-DELCO #8667537)	92-93	Y (MD8)	1	8667537
	5-C20	4.163	PLATE, 3-4 CLU BKG (ID B) (AC-DELCO #8685047)	92-93	Y (MD8)	1	8685047
	5-C20	4.163	PLATE, 3-4 CLU BKG (ID C) (AC-DELCO #8685048)	92-93	Y (MD8)	1	8685048
	5-C20	4.163	PLATE, 3-4 CLU BKG (ID A) (AC-DELCO #8685046) (W/JULIAN DATE 005-230)	92-93	Y (MD8)	1	8685046
656.	5-C20	4.163	RING, 3-4 CLU BKG PLT RET (AC-DELCO #8663636)	92-93	Y (MD8)	1	8663636

© 2000 GENERAL MOTORS SERVICE PARTS OPERATIONS-CHEVROLET-14Y

657.	5-D27	4.319	BUSHING, OUTPUT SHF (FRONT) (PART OF 656) (FRT & RR) (4.159) (AC-DELCO #8642181)	92-93	Y (MD8)	1	8642181
658.	5-C19	4.159	GEAR, INPUT SUN (INCL 657, 659) (AC-DELCO #8647093)	92-93	Y (MD8)	1	8647093
659.	5-D27	4.319	BUSHING, OUTPUT SHF (REAR) (ALSO PART OF 656) (FRT & RR) (4.159) (AC-DELCO #8642181)	92-93	Y (MD8)	1	8642181
661.	5-D3	4.176	RING, OUTPUT SHF RET (TO INPUT CARR) (*KIT2, KIT3, KIT4) (AC-DELCO #8654141)	92-93	Y (MD8)	1	8654141
662.	5-D2	4.175	CARRIER, INPUT (COMPL) (AC-DELCO #24212177)	92-93	Y (MD8)	1	24212177
663.	5-C19	4.159	BEARING, INT REACTION GR SUPT THR (AC-DELCO #8642191)	92-93	Y (MD8)	1	8642191
664.	5-C18	4.156	GEAR, INPUT INTL (AC-DELCO #8663639)	92-93	Y (MD8)	1	8663639
665.	5-D3	4.176	BUSHING, REACTION CARR SHF FRT (PART OF 666) (AC-DELCO #8642908)	92-93	Y (MD8)	1	8642908
666.	5-D2	4.175	SHAFT, REACTION CARR (INCL 665, 667) (AC-DELCO #8681518)	92-93	Y (MD8)	1	8681518
667.	5-D3	4.176	BUSHING, REACTION CARR SHF RR (ALSO PART OF 666) (AC-DELCO #8642907)	92-93	Y (MD8)	1	8642907
668.	5-D3	4.176	RING, REACTION CARR SHF RET (TO INT GR) (AC-DELCO #8642201)	92-93	Y (MD8)	1	8642201
669.	5-D3	4.176	WASHER, REACTION CARR SHF THR (TO SHELL) (AC-DELCO #8642202)	92-93	Y (MD8)	1	8642202
670.	5-D2	4.175	SHELL, REACTION SUN GR (AC-DELCO #8683439)	92-93	Y (MD8)	1	8683439
671.	5-C19	4.159	RING, REACTION SUN GR RET (*KIT2) (AC-DELCO #8681553)	92-93	Y (MD8)	1	8681553
672.	5-D3	4.176	BUSHING, REACTION SUN GR (AC-DELCO #8642909)	92-93	Y (MD8)	1	8642909
673.	5-C19	4.159	GEAR, REACTION SUN (INCLS BUSH & GEAR) (INDIVIDUAL COMPONENTS NOT SOLD SEPARATELY) (AC-DELCO #8642204)	92-93	Y (MD8)	1	8642204
674.	5-C19	4.159	WASHER, REACTION SUN GR SHELL THR (4.176) (AC-DELCO #8642331)	92-93	Y (MD8)	1	8642331
675.	5-D3	4.180	RACE, LOW CLU RLR INR (OVERRUN CLU) (AC-DELCO #8673300)	92-93	Y (MD8)	1	8673300
676.	5-D3	4.180	RING, LOW & REV CLU SUPT RET (AC-DELCO #24200278)	92-93	Y (MD8)	1	24200278
677.	5-D3	4.180	RING, LOW CLU RLR RET (ROLLER ASSY/CAM) (AC-DELCO #6261051)	92-93	Y (MD8)	1	6261051
678.	5-C27	4.166	SUPPORT, LOW & REV CLU (INCL 679) (*KIT5) (4.180) (AC-DELCO #8681727)	92-93	Y (MD8)	1	8681727

© 2000 GENERAL MOTORS SERVICE PARTS OPERATIONS-CHEVROLET-14Y

679.		N.S.	SUPPORT, LO & REV CLU (PART OF 678) (*KIT5)				
680.	5-D3	4.160	SPRING, LOW & REV CLU SUPT (RET) (AC-DELCO #6261415)	92-93	Y (MD8)	1	6261415
681.	5-D2	4.175	CARRIER, REACTION (INCL 697) (AC-DELCO #6654200)	92-93	Y (MD8)	1	6654200
682.	5-C20	4.163	PLATE, LOW & REV CLU (WAVED) (A) (*KIT4, KIT5) (AC-DELCO #6676362)	92-93	Y (MD8)	1	6676362
	5-C20	4.163	PLATE, LOW & REV CLU (ID 1, 5, 9) (B) (2.344MM) (HAS HOLES IN TURB PLATES) (*KIT5) (AC-DELCO #24205270)	92-93	Y (MD8)	1	24205270
	5-C20	4.163	PLATE, LOW & REV CLU (ID 4, 8, 0) (B) (1.314MM) (SELECTIVE) (*KIT5) (AC-DELCO #6690440)	92-93	Y (MD8)	1	6690440
	5-C20	4.163	PLATE, LOW & REV CLU (FIBRE) (C) (*KIT5, KIT9) (AC-DELCO #6664089)	92-93	Y (MD8)	5	6664089
	5-C20	4.163	PLATE, LOW & REV CLU SPCR (ID BLANK) (D) (1.629MM) (HAS HOLES IN TURB PLATES) (STEEL) (*KIT5) (AC-DELCO #24205268)	92-93	Y (MD8)	1	24205268
683.	5-C19	4.159	BEARING, REACTION CARR THR (4.176) (AC-DELCO #6642215)	92-93	Y (MD8)	1	6642215
	5-C19	4.159	BEARING, DIFF CARR SUN GR THR (AC-DELCO #6646254)	92-93	Y (MD8)	1	6646254
684.	5-C18	4.158	GEAR, REACTION INTL (AC-DELCO #6637055)	92-93	Y (MD8)	1	6637055
685.	5-D2	4.175	SUPPORT, REACTION INTL GR (AC-DELCO #6681491)	92-93	Y (MD8)	1	6681491
686.	5-D3	4.176	RING, INT REACTION GR SUPT RET (AC-DELCO #6642220)	92-93	Y (MD8)	1	6642220
687.	5-D2	4.175	SHAFT, OUTPUT (AC-DELCO #6681807)	92-93	Y (MD8)	1	6681807
688.	5-E13	4.345	CLIP, SPEEDO DRV GR (AC-DELCO #6261781)	92-93	Y (MD8)	1	6261781
689.	5-E13	4.343	GEAR, SPEEDO SEN (17 TEETH, RED) (AC-DELCO #6640517)	92-93	Y (MD8)	1	6640517
690.		N.S.	SLEEVE, (TRUCK ONLY)				
691.		N.S.	SEAL, (TRUCK ONLY)				
692.	5-C19	4.159	BEARING, INT REACTION GR SUPT THR (AC-DELCO #6642191)	92-93	Y (MD8)	1	6642191
693.	5-C26	4.164	RING, LOW & REV CLU SPR RET RET (*KIT2, KIT5) (4.159) (AC-DELCO #6647337)	92	Y (MD8)	1	6647337
	5-C19	4.159	RING, REACTION SUN GR RET (*KIT2, KIT5) (AC-DELCO #6681553)	93	Y (MD8)	1	6681553
694.	5-C26	4.164	SPRING, LOW & REV CLU (AC-DELCO #6642227)	92-93	Y (MD8)	1	6642227
695.		N.S.	PISTON, LOW & REV CLU (USE PLATE KIT W/SUPT) (*KIT5)	92			
	5-C27	4.166	PISTON, LOW & REV CLU (*KIT5) (AC-DELCO #6685549)	93	Y (MD8)	1	6685549

© 2000 GENERAL MOTORS SERVICE PARTS OPERATIONS-CHEVROLET-14Y

696.	5-D4	4.169	SEAL KIT, LOW & REV CLU (INCLS INR, OTR & INTER SEALS) (*KIT3, KIT4, KIT5) (4.160) (AC-DELCO #8646907) .	92-93	Y (MD8)	1	8646907
697.		N.S.	DEFLECTOR, (PART OF 661) ...		.....		
698.	5-D7	4.224	ORIFICE, LUB FLUID (4.3MM DIA) (AC-DELCO #8663707) ...	92-93	Y (MD8)	2	8663707

SERVICE KITS

1.	5-C27	4.166	SEAL KIT, 3-4 CLU PSTN (FOA) (INCL 622, 624, 629, 631, 636.) (AC-DELCO #8642919)	92-93	Y (MD8)	1	8642919
2.	5-C10	4.005	RING KIT, RET (INCL 635, 636, 661, 671, 693.) (AC-DELCO #8642910)	92-93	Y (MD8)	1	8642910
3.	5-C10	4.005	GASKET KIT, A/TRNS (W/SEALS) (INCL 608, 619, 622, 624, 629, 631, 636, 661, 696.) (W/O PLATES OR PISTONS) (AC-DELCO #24201804)	92-93	Y (MD8)	1	24201804
4.		N.S.	TRANSMISSION KIT, AUTO (SERV OVERHAUL W/PLT, GSKT, SEAL) (USE 24201804 GASKET KIT T/W 24201807 PLATE KIT T/W 24204495 PISTON KIT)	92	.....		
		N.S.	TRANSMISSION KIT, AUTO (SERV OVERHAUL W/PLT, GSKT, SEAL) (USE 24201804 GASKET KIT T/W 24201807 PLATE KIT T/W 24204495 PISTON KIT)	93	.....		
5.	5-C20	4.163	PLATE KIT, LOW & REV CLU (W/SUPT) (W/PSTN) (INCL 678, 679, 682, 693, 695, 696.) (STEEL PLATES) (AC-DELCO #8687996)	92-93	Y (MD8)	1	8687996
6.	5-C20	4.163	PLATE KIT, 3-4 CLU (INCL 654) (6 OF 08678053 & 1 FLAT STEEL PLATE) (1.97MM THK) (AC-DELCO #8671900)	92-93	Y (MD8)	1	8671900
7.	5-C20	4.163	PLATE KIT, FWD CLU (INCL 649) (INCLS INST SHEET & PLATES) (AC-DELCO #8647991)	92-93	Y (MD8)	AR	8647991
8.	5-C20	4.163	PLATE KIT, 3-4 CLU (INCL 600, 625) (W/APPLY & BKG PLTS) (AC-DELCO #8690923)	92	Y (MD8)	1	8690923
	5-C20	4.163	PLATE KIT, 3-4 CLU (1ST DES W/JULIAN DATE OTHER THAN 00-230) (INCL 600, 625) (W/APPLY & BKG PLTS) (AC-DELCO #8690923)	93	Y (MD8)	1	8690923
		N.S.	PLATE KIT, 3-4 CLU (2ND DES) (USED 600, 625, 653-5 FOR TRANS W/JULIAN DATE 005-230)	93	Y (MD8)		
9.	5-C20	4.163	PLATE KIT, CLU (INCL 612, 645, 649, 654, 682.) (HAS 2050 STAMPED ON PART) (AC-DELCO #24201807)	92-93	Y (MD8)	1	24201807

© 2000 GENERAL MOTORS SERVICE PARTS OPERATIONS-CHEVROLET-14Y

© 2000 GENERAL MOTORS SERVICE PARTS OPERATIONS–CHEVROLET–14Y

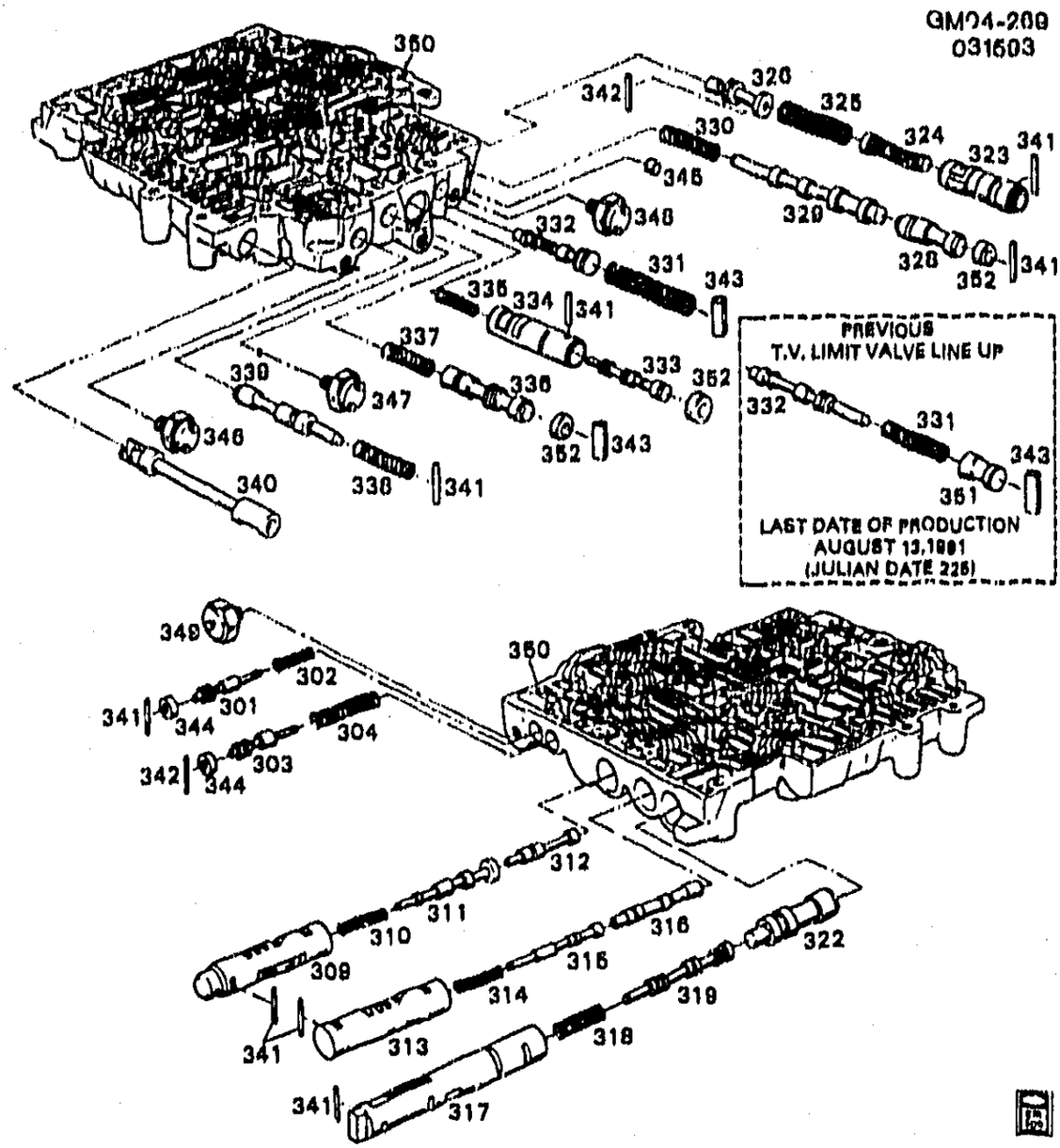

GM04-269Y

1992-1993 Y AUTOMATIC TRANSMISSION (MD8) PART 3 HM 4L60 CONTROL VALVE

301.	N.S.	VALVE, T .V. MOD DN SHFT (*KIT1)	
302.	N.S.	SPRING, T .V. MOD DN SHFT VLV (*KIT1)	
303.	N.S.	VALVE, T .V. MOD UPSHIFT (*KIT1)	
304.	N.S.	SPRING, T .V. MOD UPSHIFT VLV (*KIT1)	
309.	N.S.	SLEEVE, 3-4 THROT VLV (*KIT1)	
310.	N.S.	SPRING, 3-4 THROT VLV (*KIT1)	
311.	N.S.	VALVE, 3-4 THROT (*KIT1)	
312.	N.S.	VALVE, 3-4 SHFT (*KIT1)	

© 2000 GENERAL MOTORS SERVICE PARTS OPERATIONS-CHEVROLET-14Y

313.		N.S.	SLEEVE, 3-3 THROT VLV (*KIT1)				
314.		N.S.	SPRING, 2-3 THROT VLV (*KIT1)				
315.		N.S.	VALVE, 2-3 THROT (*KIT1)				
316.		N.S.	VALVE, 2-3 SHFT (*KIT1)				
317.		N.S.	SLEEVE, 1-2 THROT VLV (*KIT1)				
318.		N.S.	SPRING, 1-2 THROT VLV (*KIT1)				
319.		N.S.	VALVE, 1-2 THROT (*KIT1)				
322.		N.S.	VALVE, 1-2 SHFT (*KIT1)				
323.		N.S.	SLEEVE, THROT VLV PLGR (*KIT1)				
324.		N.S.	PLUNGER, THROT VLV (*KIT1)				
325.		N.S.	SPRING, THROT VLV (*KIT1)				
326.		N.S.	VALVE, THROT (*KIT1)				
328.		N.S.	VALVE, 3-4 RLY (*KIT1)				
329.		N.S.	VALVE, 4-3 SEQUENCE (*KIT1)				
330.		N.S.	SPRING, 4-3 SEQUENCE VLV (*KIT1)				
331.		N.S.	SPRING, T.V. LIMIT VLV (*KIT1)				
332.		N.S.	VALVE, T.V. LIMIT (*KIT1)				
333.		N.S.	VALVE, 1-2 ACCUM (*KIT1)				
334.		N.S.	BUSHING, 1-2 ACCUM VLV (*KIT1)				
335.		N.S.	SPRING, 1-2 ACCUM VLV (*KIT1)				
336.		N.S.	VALVE, LINE BIAS (*KIT1)				
337.		N.S.	SPRING, LINE BIAS VLV (*KIT1)				
338.		N.S.	SPRING, 3-2 CONT VLV (*KIT1)				
339.		N.S.	VALVE, 3-2 CONT (*KIT1)				
340.	5-D25	4.279	VALVE, MAN (4.265) (AC-DELCO #8642336)	92-93	Y (MD8)	1	8642336
	5-D25	4.279	VALVE, MAN (4.265)	93	Y	1	8680730
341.	5-D18	4.265	PIN, TCC REG VLV BORE PLUG (25MM LG 2.7MM DIA) (COILED SPG) (AC-DELCO #8628400)	92-93	Y (MD8)	1	8628400
342.	5-D18	4.265	PIN, T/V (20MM LG) (AC-DELCO #8654196)	92-93	Y (MD8)	1	8654196
343.	5-D18	4.265	PIN, LINE BIAS VLV BORE PLUG (25MM LG 9MM DIA) (AC-DELCO #8631290)	92-93	Y (MD8)	2	8631290
	5-D18	4.265	PIN, T/V LIM VLV BORE PLUG (25MM LG 9MM DIA) (AC-DELCO #8631290)	92-93	Y (MD8)	2	8631290
344.		4.275	PLUG, SHFT T/V BORE (14.22MM DIA) (4.265)	92-93	Y (MD8)	AR	8655045
345.	5-D18	4.265	PLUG, 3-4 RLY VLV BORE (14.22MM DIA) (AC-DELCO #8625546)	92-93	Y (MD8)	2	8625546
	5-D18	4.265	PLUG, 3-4 RLY VLV BORE (CUP) (.33 DIA) (4.105) (AC-DELCO #8639141)	92-93	Y (MD8)	1	8639141
346.		N.S.	SWITCH, 3RD CLU PRESS (LT TRK ONLY)				
347.		N.S.	SWITCH, 4-3 PULSE PRESS (NOT REQD)				

© 2000 GENERAL MOTORS SERVICE PARTS OPERATIONS-CHEVROLET-14Y

348.	5-D18	4.265	SWITCH, 4TH CLU PRESS (1 PRONG, 28MM DIA) (AC-DELCO #8642473)	93	Y (MD8)	1	8642473
	5-D18	4.265	SWITCH, 4TH CLU PRESS (1 PRONG, 22MM DIA) (AC-DELCO #8663502)	92-93	Y (MD8)	1	8663502
349.		N.S.	SWITCH, TCC SIG PRESS (1996 & PRIOR ONLY)		.....		
350.		N.S.	BODY, C/VLV (*KIT1)		.....		
351.		DISCON	PLUG, T/V LIM VLV BORE (NOT REQD 1993)	92	Y (MD8)	1	8647453
352.	5-D18	4.265	PLUG, LINE BIAS VLV BORE (12.5MM DIA) (AC-DELCO #8634239)	92-93	Y (MD8)	AR	8634239

SERVICE KITS

1.	5-D18	4.265	VALVE KIT, CONT (W/BODY & VLV) (INCL 350) (YD) (AC-DELCO #8680661)	92	Y (MD8, G44, GU2)	1	8680661
	5-D18	4.265	VALVE KIT, CONT (W/BODY & VLV) (INCL 350) (YC) (AC-DELCO #8680662)	92	Y (MD8, GM1) (EXC VE1)	1	8680662
	5-D18	4.265	VALVE KIT, CONT (W/BODY & VLV) (INCL 350) (YC) (AC-DELCO #8681312)	92	Y (LT1, MD8, GM1, GU2)	1	8681312
	5-D18	4.265	VALVE KIT, CONT (W/BODY & VLV) (INCL 350) (AC-DELCO #24204891)	92-93	Y (LT1, MD8, G44)	1	24204891
	5-D18	4.265	VALVE KIT, CONT (W/BODY & VLV) (INCL 350) (YC) (AC-DELCO #8681312)	93	Y (LT1, MD8, GM1) (EXC VE1)	1	8681312
	5-D18	4.265	VALVE KIT, CONT (W/BODY & VLV) (INCL 350) (AC-DELCO #24204891)	93	Y (LT1, MD8, GU2)	1	24204891
	5-D18	4.265	VALVE KIT, CONT (W/BODY & VLV) (INCL 350) (YA) (AC-DELCO #8681706)	92	Y (MD8, GM1, VE1) (EXPORT)	1	8681706
	5-D18	4.265	VALVE KIT, CONT (W/BODY & VLV) (INCL 350) (YA) (AC-DELCO #8682750)	93	Y (LT1, MD8, GM1, VE1) (EXPORT)	1	8682750

RPO DEFINITIONS
GM1 - AXLE,REAR,2.59 RATIO
GU2 - AXLE,REAR,2.73 RATIO
G44 - AXLE,REAR,3.07 RATIO
LT1 - ENGINE-GAS, 8 CYL, 5.7L(5.7P),MFI,HO
MD8 - TRANSMISSION,AUTOMATIC 4-SPEED(THM700R4/4L60)
VE1 - PROVISION OPTIONS,JAPAN(EXPORT)

© 2000 GENERAL MOTORS SERVICE PARTS OPERATIONS-CHEVROLET-14Y

MICROFICHE INDEX

GROUP 4.000

FICHE 5 OF 11

GROUP	DESCRIPTION	STARTING GRID LOCATION PARTS	ILLUSTRATIONS
–	GENERAL INFORMATION	1–A2	1–G2
–	ALPHABETICAL INDEX	1–B13	N.A.
4.000	4–SPEED TRANSMISSION	5–A2	5–F2
4.000	6–SPEED TRANSMISSION	5–B2	5–G2
4.000	AUTOMATIC TRANSMISSION	5–C2	5–H2
–	OUT OF FICHE CALLS	N.A.	5–M23

5–J1

GM04-397
051392

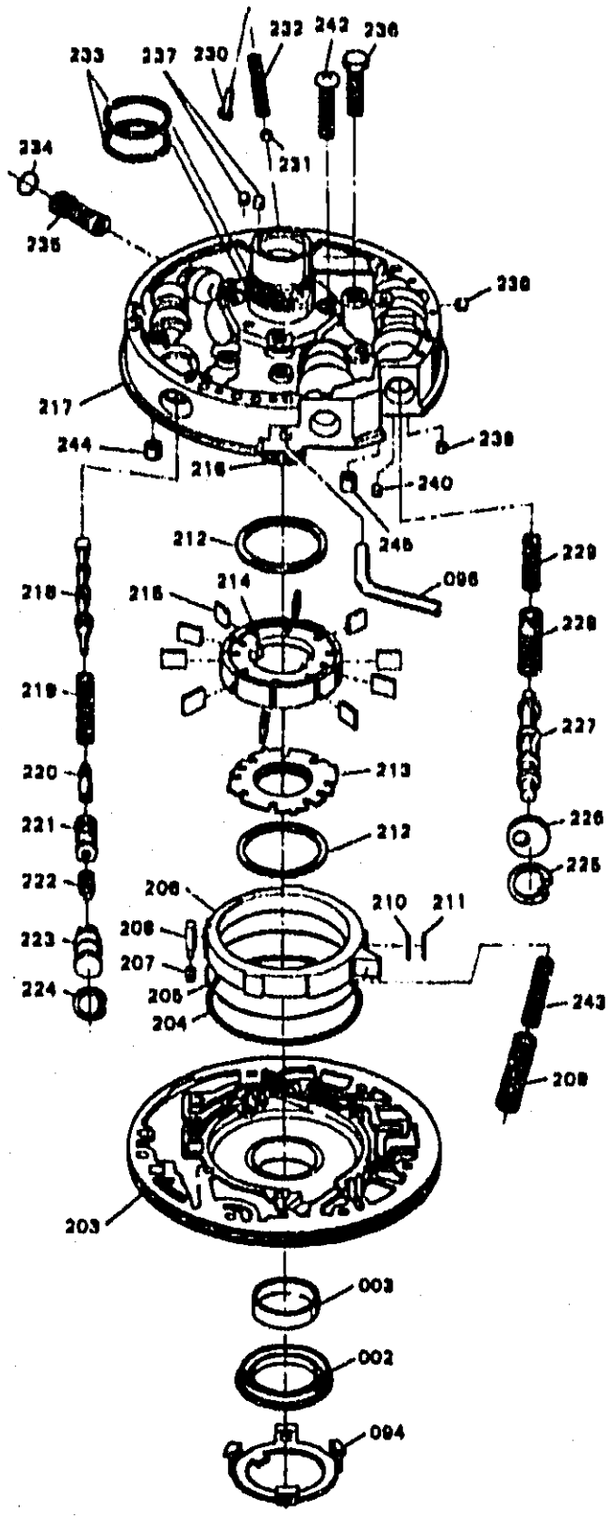

GM04-397Y

1992-1993 Y AUTOMATIC TRANSMISSION (MD8) PART 4 HM 4L60 OIL PUMP

2.	5-D10	4.226	SEAL, T/CV FLUID (PART OF 203) (*KIT2, KIT3) (AC-DELCO #24202535)	92-93 Y (MD8)	1	24202535
3.	5-C14	4.115	BUSHING, T/CV (PART OF 203) (AC-DELCO #24206030)	92-93 Y (MD8)	1	24206030

© 2000 GENERAL MOTORS SERVICE PARTS OPERATIONS - CHEVROLET - 14Y

94.	5-D10	4.226	RETAINER, FRT HELIX SEAL (PART OF 203) (*KIT2, KIT3) (AC-DELCO #8654491)	92-93	Y (MD8)	1	8654491
96.	5-D18	4.265	PIPE, AUX C/VLV BODY (TRANS W/AUX VLV BODY) (AC-DELCO #8663615)	92-93	Y (MD8)	1	8663615
203.	5-D7	4.224	BODY, A/TRNS FLUID PUMP (INCL 2, 3, 94, 204 THRU 215, 243) (10 VANE) (INCLS BODY, GUIDE, RING, RET, ROTOR, PIN, SEAL KIT, SLIDE, SPR&VANE) (AC-DELCO #8649964)	92-93	Y (MD8)	1	8649964
204.		N.S.	RING, OIL SEAL SLIDE TO WEAR PLATE (PART OF 203, 214) (*KIT1)		.....		
205.		N.S.	SEAL, O RING SLIDE SEAL BACK-UP (PART OF 203, 214) (*KIT1)		.....		
206.	5-D7	4.224	SLIDE, A/TRNS FLUID PUMP (ALSO PART OF 203) (17.955 MM) (AC-DELCO #8634081) ...	92-93	Y (MD8)	1	8634081
	5-D7	4.224	SLIDE, A/TRNS FLUID PUMP (SEL) (ALSO PART OF 203) (17.968 MM) (AC-DELCO #8634082)	92-93	Y (MD8)	1	8634082
	5-D7	4.224	SLIDE, A/TRNS FLUID PUMP (SEL) (ALSO PART OF 203) (17.981 MM) (AC-DELCO #8634083)	92-93	Y (MD8)	1	8634083
	5-D7	4.224	SLIDE, A/TRNS FLUID PUMP (SEL) (ALSO PART OF 203) (17.987 MM) (AC-DELCO #8634084)	92-93	Y (MD8)	1	8634084
	5-D7	4.224	SLIDE, A/TRNS FLUID PUMP (SEL) (ALSO PART OF 203) (18.007 MM) (AC-DELCO #8634085)	92-93	Y (MD8)	1	8634085
207.	5-D10	4.226	SPRING, A/TRNS FLUID PUMP SLIDE PIV PIN (PART OF 203) (AC-DELCO #8634098)	92-93	Y (MD8)	1	8634098
208.	5-D10	4.226	PIN, A/TRNS FLUID PUMP SLIDE PIV (PART OF 203) (AC-DELCO #8634097)	92-93	Y (MD8)	1	8634097
209.	5-D10	4.226	SPRING, A/TRNS FLUID PUMP SLIDE OTR (PART OF 203) (AC-DELCO #8639563)	92-93	Y (MD8)	1	8639563
210.		N.S.	SUPPORT, PUMP SLIDE SEAL (PART OF 203, 214) (*KIT1)		.....		
211.		N.S.	SEAL, PUMP SLIDE (PART OF 203, 214) (*KIT1)		.....		
212.	5-D10	4.226	RING, A/TRNS FLUID PUMP VANE (PART OF 203) (AC-DELCO #24201144)	92-93	Y (MD8)	2	24201144
213.	5-D10	4.226	GUIDE, A/TRNS FLUID PUMP ROT (PART OF 203, 214) (10 VANE) (ALSO PART OF ROTOR KITS) (AC-DELCO #12337830) .	92-93	Y (MD8)	1	12337830

© 2000 GENERAL MOTORS SERVICE PARTS OPERATIONS-CHEVROLET-14Y

214.	5-D6	4.210	ROTOR, A/TRNS FLUID PUMP (PART OF 203) (INCL 205) (17.955MM) (W/GUIDE, VANES & SEALS) (4.224) (AC-DELCO #8649951)	92-93	Y (MD8)	1	8649951
	5-D6	4.210	ROTOR, A/TRNS FLUID PUMP (PART OF 203) (INCL 205) (17.968MM) (W/GDE, VANES & SEALS) (4.224) (AC-DELCO #8649952)	92-93	Y (MD8)	1	8649952
	5-D6	4.210	ROTOR, A/TRNS FLUID PUMP (PART OF 203) (INCL 205) (17.981MM) (W/GDE, VANES & SEALS) (4.224) (AC-DELCO #8649953)	92-93	Y (MD8)	1	8649953
	5-D6	4.210	ROTOR, A/TRNS FLUID PUMP (PART OF 203) (INCL 205) (17.994MM) (W/GDE, VANES & SEALS) (4.224) (AC-DELCO #8649954)	92-93	Y (MD8)	1	8649954
	5-D6	4.210	ROTOR, A/TRNS FLUID PUMP (PART OF 203) (INCL 205) (18.007MM) (W/GDE, VANES & SEALS) (4.224) (AC-DELCO #8649955)	92-93	Y (MD8)	1	8649955
215.	5-D10	4.226	VANE, A/TRNS FLUID PUMP (PART OF 203, 214) (AC-DELCO #8631280)	92-93	Y (MD8)	AR	8631280
216.		N.S.	SHAFT & FLANGE ASM, STATOR (PART OF 217)				
217.	5-D7	4.224	COVER, A/TRNS FLUID PUMP (COMPL) (INCL 216, 244, 245) (AC-DELCO #8680175)	92	Y (MD8)	1	8680175
	5-D7	4.224	COVER, A/TRNS FLUID PUMP (COMPL) (INCL 216, 244, 245) (AC-DELCO #24200310) (WHEN USED ON VEH FROM 1982-86, 8667093 MUST BE USED T/W 24200310)	93	Y (MD8)	1	24200310
218.	5-D17	4.262	VALVE, PRESS REG (OIL PUMP) (4.216) (AC-DELCO #8684048)	92-93	Y (MD8)	1	8684048
219.	5-D17	4.262	SPRING, PRESS REG VLV (OIL PUMP) (PINK) (4.216) (AC-DELCO #8642751)	92-93	Y (MD8)	1	8642751
220.	5-D18	4.265	VALVE, REV BOOST (W/SLEV & BUSH)	92-93	Y (MD8)	1	8657925
221.		N.S.	BUSHING, REV BOOST VLV (PART OF 220)				
222.	5-D24	4.275	VALVE, T/V BOOS (W/BUSH) (PUMP CVR) (INCL 221, 223) (4.216) (AC-DELCO #8634941)	92-93	Y (MD8)	1	8634941
223.		N.S.	BUSHING, T.V. BOOST (PART OF 222)				
224.	5-D17	4.248	RETAINER, A/TRNS FLUID DAM (*KIT4) (4.216) (AC-DELCO #11503348)	92-93	Y (MD8)	1	11503348
225.	5-D17	4.262	RING, TCC VLV STOP RET (TO PUMP) (*KIT4) (8.934) (AC-DELCO #274267)	92-93	Y (MD8)	1	274267

© 2000 GENERAL MOTORS SERVICE PARTS OPERATIONS-CHEVROLET-14Y

226.	5-D17	4.262	STOP, TCC VLV (4.216) (AC-DELCO #8634706)	92-93	Y (MD8)	1	8634706
227.	5-D18	4.265	VALVE, TCC (OIL PUMP) (AC-DELCO #8634031)	92-93	Y (MD8)	1	8634031
228.	5-D18	4.265	SPRING, TCC VLV OTR (OIL PUMP) (4.216) (AC-DELCO #8634399)	92-93	Y (MD8)	1	8634399
229.	5-D18	4.265	SPRING, TCC VLV INR (OIL PUMP) (4.216) (AC-DELCO #8634378)	92-93	Y (MD8)	1	8634378
230.	5-D17	4.262	RIVET, PRESS RLF BALL VLV SPR (OIL PUMP) (4.216) (AC-DELCO #8642619)	92-93	Y (MD8)	1	8642619
231.		8.899	BALL, 3/8 STEEL (AC-DELCO #7826284)	92-93	.....	AR	7826284
232.	5-D18	4.265	SPRING, PRESS RLF BALL VLV (OIL PUMP) (AC-DELCO #8634106)	92-93	Y (MD8)	1	8634106
233.	5-D10	4.226	RING, REV INPUT CLU HSG FLUID SEAL (*KIT2, KIT3) (AC-DELCO #8681292)	92-93	Y (MD8)	2	8681292
234.	5-D7	4.224	SEAL, A/TRNS FLUID PUMP CVR SCRN (PART OF 235) (AC-DELCO #8642581)	92-93	Y (MD8)	1	8642581
235.	5-D7	4.224	SCREEN, A/TRNS FLUID PUMP CVR (W/SEAL) (INCL 234) (AC-DELCO #8642912)	92-93	Y (MD8)	1	8642912
236.		8.900	BOLT, HEX, 8X1.25X40, 33.2 THD, GM 500M, 10.9, PC, MACH (AC-DELCO #11500921)	92-93	.....	AR	11500921
237.	5-D7	4.224	ORIFICE, A/TRNS FLUID PUMP AIR BL (AC-DELCO #24203787)	92-93	Y (MD8)	1	24203787
238.	5-D7	4.224	PLUG, A/TRNS FLUID PUMP CVR (6.80MM DIA) (AC-DELCO #8623886)	92-93	Y (MD8)	8	8623886
239.	5-C17	4.128	PLUG, A/TRNS O/PMP FLUID CLR HOLE (6.84MM DIA) (AC-DELCO #8634285)	92-93	Y (MD8)	1	8634285
240.	5-D7	4.224	ORIFICE, TCC SIG (4.85MM DIA) (AC-DELCO #8634284)	92-93	Y (MD8)	1	8634284
242.	5-D10	4.226	BOLT, A/TRNS FLUID PUMP (M6X1X19.0) (11.561) (AC-DELCO #20616587)	92-93	Y (MD8)	3	20616587
243.	5-D10	4.226	SPRING, A/TRNS FLUID PUMP SLIDE INR (PART OF 203) (AC-DELCO #8639562)	92-93	Y (MD8)	1	8639562
244.	5-D3	4.180	VALVE, A/TRNS FLUID/PUMP CVR BALL CHK (7.10MM 0 MAX) (PART OF 217) (SINGLE ORIFICE) (TALL & NARROW) (4.226) (AC-DELCO #8628732) .	92-93	Y (MD8)	AR	8628732
245.	5-D3	4.180	VALVE, A/TRNS FLUID/PUMP CVR BALL CHK (7.10MM 0 MAX) (PART OF 217) (SINGLE ORIFICE) (TALL & NARROW) (4.226) (AC-DELCO #8628732) .	92-93	Y (MD8)	AR	8628732

© 2000 GENERAL MOTORS SERVICE PARTS OPERATIONS-CHEVROLET-14Y

SERVICE KITS

1.	5-D10	4.226	SEAL KIT, A/TRNS FLUID PUMP SLIDE (INCL 204-5, 210-1.) (INCLS RING, SEALS&SUPT) (AC-DELCO #8634906)	92-93	Y (MD8)	1	8634906
2.	5-C10	4.005	GASKET KIT, A/TRNS (W/SEALS) (INCL 2, 94, 233.) (W/O PLATES OR PISTONS) (AC-DELCO #24201804)	92-93	Y (MD8)	1	24201804
3.		N.S.	TRANSMISSION KIT, AUTO (SERV OVERHAUL W/PLT, GSKT, SEAL) (USE 24201804 GASKET KIT T/W 24201807 PLATE KIT T/W 24204495 PISTON KIT.)		.....		
4.	5-C10	4.005	RING KIT, RET (INCL 224-5.) (AC-DELCO #8642910)	92-93	Y (MD8)	1	8642910

RPO DEFINITIONS

MD8 - TRANSMISSION,AUTOMATIC 4-SPEED(THM700R4/4L60)

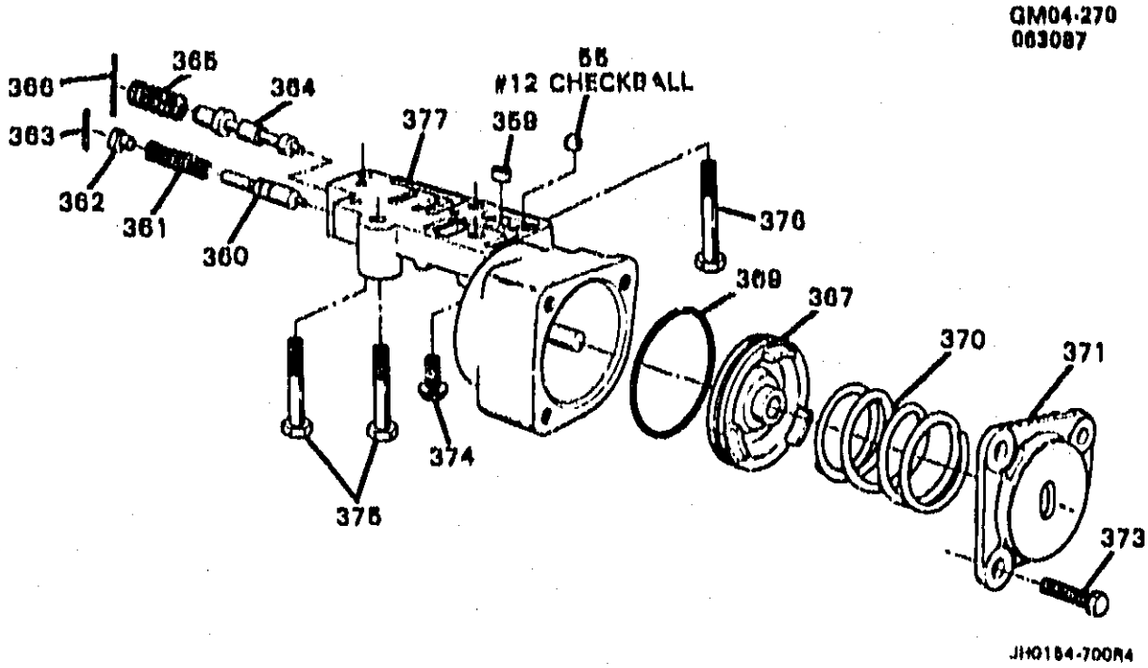

GM04-270Y

1992-1993 Y AUTOMATIC TRANSMISSION (MD8) PART 5 HM 4L60 AUXILIARY ACCUMULATOR VALVE

55.		8.899	BALL, GRADE 2, STD DIA 1/4 (2), CHROME STL (AC-DELCO #104918)	92-93	.....	AR	104918
359.	5-C14	4.105	ORIFICE, FWD CLU FEED (9.12 MM DIA) (1 DIMPLE) (4.265) (AC-DELCO #8667040)	92-93	.....	1	8667040
360.		N.S.	VALVE, ABUSE (PART OF 377) ..		.....		
361.		N.S.	SPRING, ABUSE VLV (PART OF 377)		.....		
362.		N.S.	STOP, ABUSE VLV (PART OF 377)		.....		
363.	5-D18	4.265	PIN, FWD CLU ABUSE VLV STOP (AC-DELCO #8663605)	92-93	Y (MD8)	1	8663605
364.		N.S.	VALVE, LO OVERRUN CLU (PART OF 377)		.....		
365.		N.S.	SPRING, LO OVERRUN CLU VLV (PART OF 377)		.....		
366.	5-D18	4.265	PIN, TCC REG VLV BORE PLUG (25MM LG 2.7MM DIA) (COILED SPG) (AC-DELCO #8628400) ..	92-93	Y (MD8)	AR	8628400
367.	5-D12	4.228	PISTON, 1-2 ACCUM (*KIT1, KIT2, KIT3) (AC-DELCO #8663608)	92-93	Y (MD8)	1	8663608
369.	5-D14	4.229	RING, 1-2 ACCUM PSTN FLUID SEAL (*KIT1, KIT2, KIT3) (AC-DELCO #24206509)	92-93	Y (MD8)	2	24206509
370.	5-D15	4.233	SPRING, ACCUM PSTN (PINK) (4.265) (AC-DELCO #8667046) .	92-93	Y (MD8)	1	8667046
371.	5-D18	4.265	COVER, AUX C/VLV BODY (4.215) (AC-DELCO #8673043) .	92-93	Y (MD8)	1	8673043

© 2000 GENERAL MOTORS SERVICE PARTS OPERATIONS-CHEVROLET-14Y

							GM04-270Y
373.		8.000	BOI -HEX, M6X1X25, 22.5 THD, GM500 (10.9) PC (AC-DELCO #11509417)	92-93	.....	AR	11509417
374.	5-D18	4.265	BOLT, AUX C/VLV BODY (M6X1X24) (4.226) (AC-DELCO #8667021)	92-93	Y (MD8)	1	8667021
375.		8.000	BOLT, HEX M6X1X35 10.9 PC (AC-DELCO #11503870)	92-93	.....	AR	11503870
376.		8.000	BOLT, HEX WA HD, M6X1X7.4 (AC-DELCO #8667680)	92-93	.....	AR	8667680
377.	5-D18	4.265	BODY, AUX C/VLV (REMAN) (INCL 360, 362, 364-5) (AC-DELCO #24205606)	92-93	Y (MD8)	1	24205606

SERVICE KITS

1.	5-C10	4.005	GASKET KIT, A/TRNS (W/SEALS) (INCL 367, 369.) (W/O PLATES OR PISTONS) (AC-DELCO #24201804)	92-93	Y (MD8)	1	24201804
2.		N.S.	TRANSMISSION KIT, AUTO (SERV OVERHAUL W/PLT, GSKT, SEAL) (USE 24201804 GASKET KIT T/W 24201807 PLATE KIT T/W 24204495 PISTON KIT.)		.....		
3.	5-D12	4.228	PISTON KIT, 1-2 & 3-4 ACCUM (INCL 367, 369.) (W/SEALS) (AC-DELCO #24204495)	92-93	Y (MD8)	1	24204495

RPO DEFINITIONS
MD8 - TRANSMISSION,AUTOMATIC 4-SPEED(THM700R4/4L60)

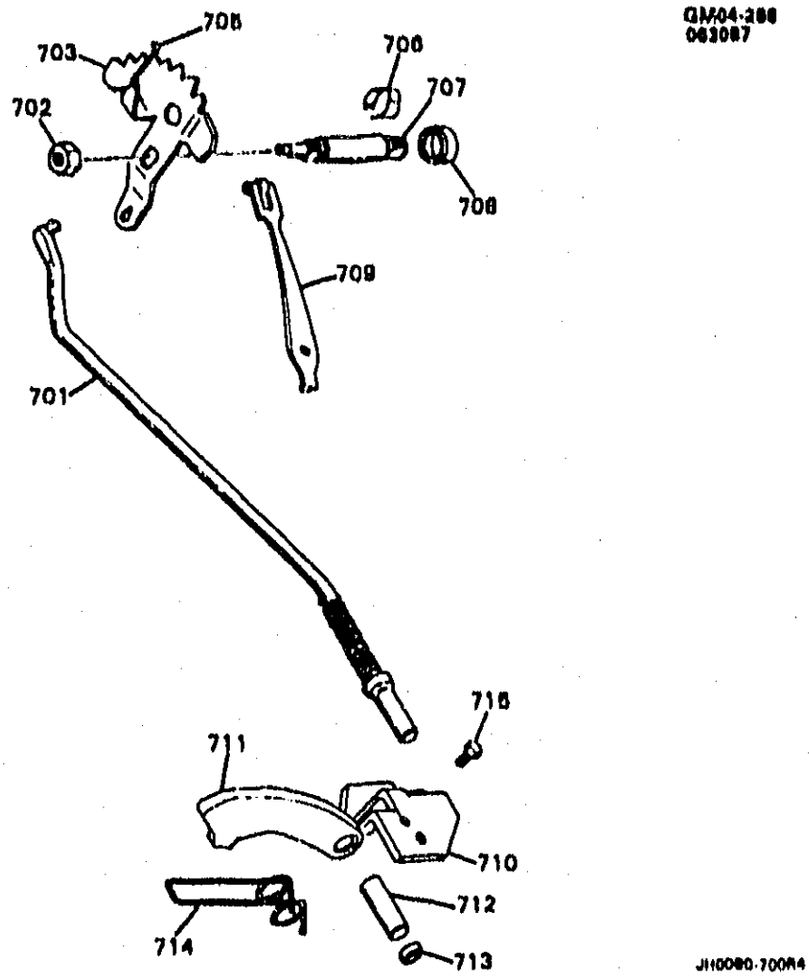

GM04-288Y

1992-1993 Y AUTOMATIC TRANSMISSION (MD8) PART 6 HM 4L60 PARK LOCK

701.	5-D25	4.290	ACTUATOR, PARK PAWL (INCLS ACTUATOR, ROD & SPRINGS) (AC-DELCO #8667517)	92-93	Y (MD8)	1	8667517
702.	5-D24	4.275	NUT, MAN SHFT DTNT LVR (M10X15.6H THD) (AC-DELCO #8648178)	92-93	Y (MD8)	AR	8648178
703.	5-D25	4.279	LEVER, MAN SHFT DTNT (GOLD) (SQUARE HOLE) (AC-DELCO #8654106)	92-93	Y (MD8)	1	8654106
705.	5-D24	4.275	LINK, MAN VLV (*KIT1, KIT2) (AC-DELCO #8654113)	92-93	Y (MD8)	1	8654113
706.	5-D24	4.275	RETAINER, MAN SHFT SHF (AC-DELCO #8642246)	92-93	Y (MD8)	1	8642246
707.	5-D26	4.294	SHAFT KIT, MAN SHFT (INCL 708) (SHORT) (INCLS SEAL, INDIVIDUAL COMPONENT NOT SOLD SEPARATELY) (AC-DELCO #24210712)	92-93	Y (MD8)	1	24210712
708.	5-D25	4.282	SEAL, MAN SHFT SHF (PART OF 707) (*KIT1, KIT2) (AC-DELCO #8657163)	92-93	Y (MD8)	1	8657163

© 2000 GENERAL MOTORS SERVICE PARTS OPERATIONS-CHEVROLET-14Y

								GM04-288Y
709.	5-D24	4.275	DETENT, MAN SHFT (AC-DELCO #8642247)	92-93	Y (MD8)	1		8642247
710.	5-D25	4.290	BRACKET, PARK PAWL ACTR (AC-DELCO #8667574)	92-93	Y (MD8)	1		8667574
711.		N.S.	PAWL, PARK (PART OF 712)		.....			
712.	5-D26	4.294	PAWL KIT, PARK (INCL 711, 713) (INST SHT, PAWL, PLUG & SHF) (AC-DELCO #8669911)	92-93	Y (MD8)	1		8669911
713.	5-D26	4.294	PLUG, PARK PAWL SHF HOLE (9.65MM DIA STEEL) (PART OF 712) (.38 DIA) (*KIT1, KIT2) (AC-DELCO #8620318)	92-93	Y (MD8)	1		8620318
714.	5-D26	4.295	SPRING, PARK PAWL (AC-DELCO #8642193)	92-93	Y (MD8)	1		8642193
715.		8.600	BOLT [illegible], M8X1.25X20, 16.88 THD, GM500 (10.9), PZOR, MACH (AC-DELCO #11508687)	92-93	.....	AR		11508687

SERVICE KITS

1.	5-C10	4.005	GASKET KIT, A/TRNS (W/SEALS) (INCL 705, 708, 713.) (W/O PLATES OR PISTONS) (AC-DELCO #24201804)	92-93	Y (MD8)	1	24201804
2.		N.S.	TRANSMISSION KIT, AUTO (SERV OVERHAUL W/PLT, GSKT, SEAL, (USE 24201804 GASKET KIT T/W 24201807 PLATE KIT T/W 24204495 PISTON KIT.)		.....		

RPO DEFINITIONS

MD8 – TRANSMISSION,AUTOMATIC 4-SPEED(THM700R4/4L60)

© 2000 GENERAL MOTORS SERVICE PARTS OPERATIONS-CHEVROLET-14Y

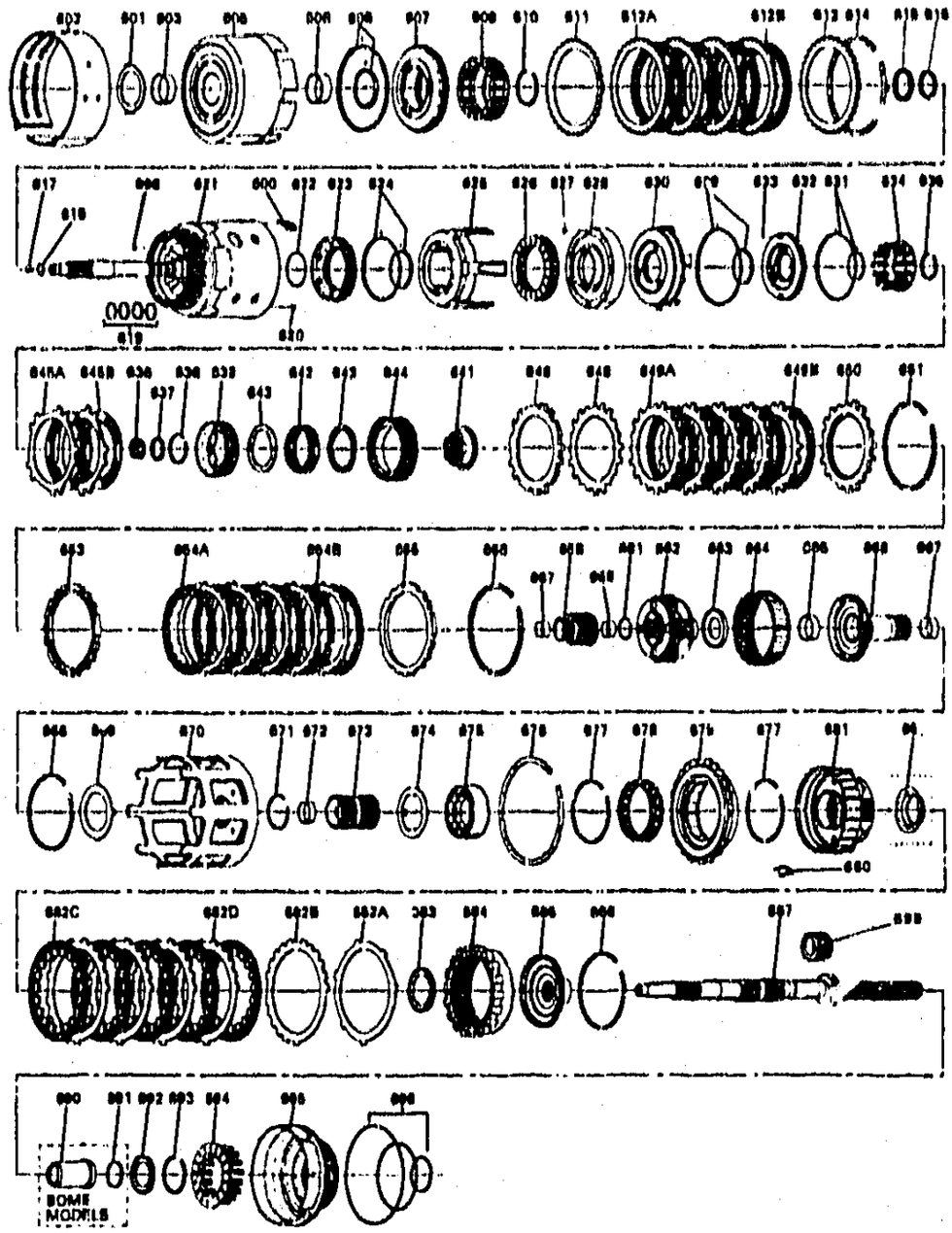

GM04-417Y

1994 Y AUTOMATIC TRANSMISSION (M30) PART 2 (4L60E) CLUTCH GEARS

600.	5-C28	4.167	SPRING, 3-4 CLU (INCLS RET & (2) SPRNGS) (4.163) (AC-DELCO #8667424)	94	Y (M30)	5	8667424
601.	5-D10	4.226	WASHER, A/TRNS FLUID PUMP (AC-DELCO #12338134)	94	Y (M30)	1	12338134
602.	5-D17	4.251	BAND, 2-4 (4.163) (AC-DELCO #8673175)	94	Y (M30)	1	8673175
603.	5-D3	4.160	BUSHING, REV INPUT CLU HSG FRT (ALSO PART OF 605) (AC-DELCO #8642905)	94	Y (M30)	1	8642905

© 2000 GENERAL MOTORS SERVICE PARTS OPERATIONS-CHEVROLET-14Y

605.	5-C26	4.169	**HOUSING**, REV INPUT CLU (INCL 603, 606) (AC-DELCO #8601295)	94	Y (M30)	1	8601295
606.	5-C26	4.169	**BUSHING**, DIR CLU HSG RR (ALSO PART OF 605) (AC-DELCO #8628917)	94	Y (M30)	1	8628917
607.	5-C27	4.166	**PISTON**, REV INPUT CLU (.095 HOLE) (*KIT9) (AC-DELCO #8667841)	94	Y (M30)	1	8667841
608.	5-C27	4.166	**SEAL KIT**, REV INPUT CLU (INCLS SEALS) (*KIT2, KIT3) (AC-DELCO #8657922)	94	Y (M30)	1	8657922
609.	5-C26	4.164	**SPRING**, REV INPUT CLU (AC-DELCO #8647264)	94	Y (M30)	1	8647264
610.	5-C26	4.164	**RING**, REV INPUT CLU SPR RET (*KIT4) (AC-DELCO #8628059) .	94	Y (M30)	1	8628059
611.	5-C20	4.163	**PLATE**, REV INPUT CLU (WAVED) (AC-DELCO #8663074)	94	Y (M30)	1	8663074
612.	5-C20	4.163	**PLATE**, REV INPUT CLU (ILLUSTRATED AS 612A) (153MM DIA) (*KIT9) (AC-DELCO #8673605)	94	Y (M30)	4	8673605
	5-C20	4.163	**PLATE**, REV INPUT CLU (ILLUSTRATED AS 612B) (W/ HOLES IN TURB PLATES) (AC-DELCO #24205267)	94	Y (M30)	4	24205267
613.	5-C20	4.163	**PLATE**, REV INPUT CLU BKG (7.25-7.41MM) (AC-DELCO #8682863)	94	Y (M30)	1	8682863
	5-C20	4.163	**PLATE**, REV INPUT CLU BKG (6.52-6.68MM) (AC-DELCO #8682864)	94	Y (M30)	1	8682864
	5-C20	4.163	**PLATE**, REV INPUT CLU BKG (5.79-5.95MM) (AC-DELCO #8682865)	94	Y (M30)	1	8682865
614.	5-C26	4.164	**RING**, REV INPUT CLU BKG PLT RET (YELLOW) (AC-DELCO #8667022)	94	Y (M30)	1	8667022
615.	5-C19	4.162	**BEARING**, REV INPUT CLU HSG THR (STATOR SHFT) (TO SEL. WASHER) (AC-DELCO #8642066)	94	Y (M30)	1	8642066
616.	5-D4	4.189	**WASHER**, REV INPUT CLU HSG THR (TO STATOR SHF) (1.87-1.97MM) (4.158) (AC-DELCO #8642067)	94	Y (M30)	1	8642067
	5-D4	4.189	**WASHER**, REV INPUT CLU HSG THR (TO STATOR SHF) (2.04-2.14MM) (4.158) (AC-DELCO #8642068)	94	Y (M30)	1	8642068
	5-D4	4.189	**WASHER**, REV INPUT CLU HSG THR (TO STATOR SHF) (2.21-2.31MM) (4.158) (AC-DELCO #8642069)	94	Y (M30)	1	8642069
	5-D4	4.189	**WASHER**, REV INPUT CLU HSG THR (TO STATOR SHF) (2.38-2.48MM) (4.158) (AC-DELCO #8642070)	94	Y (M30)	1	8642070

© 2000 GENERAL MOTORS SERVICE PARTS OPERATIONS-CHEVROLET-14Y

	5-D4	4.169	WASHER, RI NPUT CLU HSG THR (TO STATOR SHF) (2.55-2.65MM) (4.158) (AC-DELCO #8642071)	94	Y (M30)	1	8642071
	5-D4	4.169	WASHER, REV INPUT CLU HSG THR (TO STATOR SHF) (2.72-2.82MM) (4.158) (AC-DELCO #8642072)	94	Y (M30)	1	8642072
	5-D4	4.169	WASHER, REV INPUT CLU HSG THR (TO STATOR SHF) (2.89-2.99MM) (4.158) (AC-DELCO #8642073)	94	Y (M30)	1	8642073
	5-D4	4.169	WASHER, REV INPUT CLU HSG THR (TO STATOR SHF) (3.06-3.16MM) (4.158) (AC-DELCO #8642074)	94	Y (M30)	1	8642074
617.	5-C16	4.123	VALVE, TURB SHF BALL CHK (PART OF 621) (YELLOW) (RET) (AC-DELCO #8639284)	94	Y (M30)	1	8639284
618.	5-C16	4.123	SEAL, TURB SHF (O RING) (*KIT2, KIT3) (AC-DELCO #8630049)	94	Y (M30)	1	8630049
619.	5-C16	4.123	RING, INPUT SHF FLUID SEAL (TEFLON) (TEFLON) (*KIT2, KIT3) (AC-DELCO #8667035)	94	Y (M30)	4	8667035
620.	5-C16	4.123	VALVE, 3-4 CLU HSG BALL CHK (ALSO PART OF 621) (AC-DELCO #24208262)	94	Y (M30)	1	24208262
621.	5-C18	4.158	HOUSING, 3-4 CLU (W/INPUT SHF) (INCL 617, 620) (AC-DELCO #8667659)	94	Y (M30)	1	8667659
622.		N.S.	SEAL, O-RING INPUT TO FWD HSG (*KIT1, KIT2, KIT3)		.....		
623.	5-C27	4.166	PISTON, 3-4 CLU (AC-DELCO #24200290)	94	Y (M30)	1	24200290
624.	5-C27	4.166	SEAL, 3-4 CLU PSTN INR (*KIT1, KIT2, KIT3) (AC-DELCO #8682137)	94	Y (M30)	1	8682137
		N.S.	SEAL, 3RD & 4TH CLU PSTN OTR (*KIT1, KIT2, KIT3)		.....		
625.	5-C28	4.167	RING, 3-4 CLU APPL (1 BAR) (AC-DELCO #8685043)	94	Y (M30)	1	8685043
626.	5-C28	4.167	SPRING, 3-4 CLU (10512 MM) (AC-DELCO #8685244)	94	Y (M30)	1	8685244
627.	5-D3	4.180	VALVE, A/TRNS FLUID/PUMP CVR BALL CHK (7.10MM 0 MAX) (ALSO PART OF 628) (SINGLE ORIFICE) (TALL & NARROW) (4.226) (AC-DELCO #8628732) .	94	Y (M30)	AR	8628732
628.	5-C28	4.169	HOUSING, FWD CLU (INCL 627) (*KIT9) (AC-DELCO #8654326) .	94	Y (M30)	1	8654326
629.	5-C27	4.166	SEAL, FWD CLU PSTN OTR (*KIT1, KIT2, KIT3) (AC-DELCO #8686146)	94	Y (M30)	1	8686146
		N.S.	SEAL, FWD CLU INR (*KIT1, KIT2, KIT3)		.....		
630.	5-C27	4.166	PISTON, FWD CLU (AC-DELCO #8683513)	94	Y (M30)	1	8683513

© 2000 GENERAL MOTORS SERVICE PARTS OPERATIONS-CHEVROLET-14Y

631.		N.S.	SEAL, OVERRUN CLU INR & OTR (*KIT1, KIT2, KIT3)		.....		
632.	5-C27	4.166	PISTON, OVERRUN CLU (INCL 633) (AC-DELCO #8642148) ...	94	Y (M30)	1	8642148
633.		8.899	BALL, SPECIAL (ALSO PART OF 632) (AC-DELCO #7002117) ...	94	.....	AR	7002117
634.	5-C20	4.163	SPRING, OVERRUN CLU (AC-DELCO #8677876)	94	Y (M30)	1	8677876
635.		8.934	RING, EXT SNAP FITS M38 DIA SHT .PL (*KIT4)	94	.....	AR	11500092
636.	5-D3	4.176	SEAL, OUTPUT SHF (*KIT1, KIT2, KIT3) (AC-DELCO #8677268)	94	Y (M30)	1	8677268
637.	5-C19	4.159	BEARING, INPUT SUN GR THR (AC-DELCO #8642162)	94	Y (M30)	1	8642162
638.	5-D3	4.180	RING, OVERRUN CLU HUB RET (SNAP) (ALSO PART OF 642) (*KIT4) (AC-DELCO #8647083) .	94	Y (M30)	1	8647083
639.		N.S.	HUB, OVERRUN CLU (PART OF 642)		.....		
641.		N.S.	RETAINER, FWD CLU SPRAG INR (PART OF 642)		.....		
642.	5-C26	4.164	CLUTCH, FWD RLR (INCL 638-9, 641, 643-4) (HIGH SPD, INCLS INPUT SUN GEAR) (AC-DELCO #24210960)	94	Y (M30)	1	24210960
	5-C26	4.164	CLUTCH, FWD RLR (INCL 638-9, 641, 643-4) (REG SPD, INCLS INPUT SUN GEAR) (AC-DELCO #24210961)	94	Y (M30)	1	24210961
643.		N.S.	RETAINER, (PART OF 642)		.....		
644.		N.S.	RACE, FWD CLU SPRAG OTR (PART OF 642)		.....		
645.	5-C20	4.163	PLATE, OVERRUN CLU (ILLUSTRATED AS 654A) (1.93-2.13 THK) (GROOVED) (AC-DELCO #8673253)	94	Y (M30)	AR	8673253
	5-C20	4.163	PLATE, OVERRUN CLU (ILLUSTRATED AS 654B) (2.34MM THK) (FLAT STEEL) (AC-DELCO #8642154)	94	Y (M30)	2	8642154
646.	5-C20	4.163	PLATE, FWD CLU APPLY (AC-DELCO #8682866)	94	Y (M30)	1	8682866
648.	5-C20	4.163	PLATE, FWD CLU (WAVED) (AC-DELCO #8647058)	94	Y (M30)	1	8647058
649.	5-C20	4.163	PLATE, FWD CLU (ILLUSTRATED AS 649A) (FIBER) (*KIT3, KIT5, KIT8) (AC-DELCO #8673254) ...	94	Y (M30)	5	8673254
	5-C20	4.163	PLATE, FWD CLU (ILLUSTRATED AS 649B) (STEEL) (*KIT3, KIT5, KIT8) (AC-DELCO #8654325) ...	94	Y (M30)	5	8654325
650.	5-C20	4.163	PLATE, FWD CLU BKG (6.92-7.07MM) (ID A) (AC-DELCO #8682867)	94	Y (M30)	1	8682867
	5-C20	4.163	PLATE, FWD CLU BKG (8.73-9.03MM) (ID B) (AC-DELCO #8682868)	94	Y (M30)	1	8682868

© 2000 GENERAL MOTORS SERVICE PARTS OPERATIONS-CHEVROLET-14Y

	5-C20	4.163	PLATE, FWD CLU BKG (5.74-5.89MM) (ID C) (AC-DELCO #8682869)	94	Y (M30)	1	8682869
	5-C20	4.163	PLATE, FWD CLU BKG (5.15-5.30MM) (ID D) (AC-DELCO #8682870)	94	Y (M30)	1	8682870
	5-C20	4.163	PLATE, FWD CLU BKG (4.56-4.71MM) (ID E) (AC-DELCO #8682871)	94	Y (M30)	1	8682871
651.	5-C20	4.163	RING, FWD CLU BKG PLT RET (AC-DELCO #8642170)	94	Y (M30)	1	8642170
653.	5-C20	4.163	PLATE, 3-4 CLU APPLY (AC-DELCO #8685044)	94	Y (M30)	1	8685044
654.	5-C20	4.163	PLATE, 3-4 CLU (ILLUSTRATED AS 654A) (HAS 2050 STAMPED ON PART) (*KIT3, KIT7, KIT8) (AC-DELCO #8679390)	94	Y (M30)	6	8679390
	5-C20	4.163	PLATE, 3-4 CLU (ILLUSTRATED AS 654B) (2.71MM (STEEL) (5 LG SPACES EQUAL SPACED BETWEEN CLSTR OF SMALL TEETH) (*KIT3, KIT7) (AC-DELCO #8685045)	94	Y (M30)	1	8685045
655.	5-C20	4.163	PLATE, 3-4 CLU BKG (ID A) (AC-DELCO #8685046)	94	Y (M30)	1	8685046
	5-C20	4.163	PLATE, 3-4 CLU BKG (ID B) (AC-DELCO #8685047)	94	Y (M30)	1	8685047
	5-C20	4.163	PLATE, 3-4 CLU BKG (ID C) (AC-DELCO #8685048)	94	Y (M30)	1	8685048
656.	5-C20	4.163	RING, 3-4 CLU BKG PLT RET (AC-DELCO #8663636)	94	Y (M30)	1	8663636
657.	5-D27	4.319	BUSHING, OUTPUT SHF (FRT) (ALSO PART OF 658) (FRT & RR) (4.159) (AC-DELCO #8642181) .	94	Y (M30)	1	8642181
658.	5-C19	4.159	GEAR, INPUT SUN (INCL 657, 659) (AC-DELCO #8647093) ...	94	Y (M30)	1	8647093
659.	5-D27	4.319	BUSHING, OUTPUT SHF (REAR) (ALSO PART OF 658) (FRT & RR) (4.159) (AC-DELCO #8642181) .	94	Y (M30)	1	8642181
661.	5-D3	4.176	RING, OUTPUT SHF RET (TO INPUT CARR) (*KIT2, KIT3, KIT4) (AC-DELCO #8654141)	94	Y (M30)	1	8654141
662.	5-D2	4.175	CARRIER, INPUT (COMPL) (AC-DELCO #24212177)	94	Y (M30)	1	24212177
663.	5-C19	4.159	BEARING, INT REACTION GR SUPT THR (AC-DELCO #8642191)	94	Y (M30)	1	8642191
664.	5-C18	4.158	GEAR, INPUT INTL (AC-DELCO #8663639)	94	Y (M30)	1	8663639
665.	5-D3	4.176	BUSHING, REACTION CARR SHF FRT (ALSO PART OF 666) (AC-DELCO #8642908)	94	Y (M30)	1	8642908
666.	5-D2	4.175	SHAFT, REACTION CARR (INCL 665, 667) (AC-DELCO #8681518)	94	Y (M30)	1	8681518
667.	5-D3	4.176	BUSHING, REACTION CARR SHF RR (ALSO PART OF 666) (AC-DELCO #8642907)	94	Y (M30)	1	8642907

© 2000 GENERAL MOTORS SERVICE PARTS OPERATIONS-CHEVROLET-14Y

668.	5-D3	4.176	**RING**, REACTION CARR SHF RET (TO INT GR) (AC-DELCO #8642201)	94	Y (M30)	1	8642201
669.	5-D3	4.176	**WASHER**, REACTION CARR SHF THR (AC-DELCO #8642202) ...	94	Y (M30)	1	8642202
670.	5-D2	4.175	**SHELL**, REACTION SUN GR (AC-DELCO #8603439)	94	Y (M30)	1	8603439
671.	5-C19	4.159	**RING**, REACTION SUN GR RET (AC-DELCO #8681553)	94	Y (M30)	1	8681553
672.	5-D3	4.176	**BUSHING**, REACTION SUN GR (ALSO PART OF 673) (AC-DELCO #8642909)	94	Y (M30)	1	8642909
673.	5-C19	4.159	**GEAR**, REACTION SUN (INCL 672) (INCLS BUSH & GEAR) (INDIVIDUAL COMPONENTS NOT SOLD SEPARATELY) (AC-DELCO #8642204)	94	Y (M30)	1	8642204
674.	5-C19	4.159	**WASHER**, REACTION SUN GR SHELL THR (4.176) (AC-DELCO #8642331)	94	Y (M30)	1	8642331
675.	5-D3	4.180	**RACE**, LOW CLU RLR INR (OVERRUN CLU) (PART OF 676) (AC-DELCO #8673300)	94	Y (M30)	1	8673300
676.	5-D3	4.180	**RING**, LOW & REV CLU SUPT RET (AC-DELCO #24200278) ..	94	Y (M30)	1	24200278
677.	5-D3	4.180	**RING**, LOW CLU RLR RET (O/RUN) (PART OF 676) (AC-DELCO #6261051)	94	Y (M30)	1	6261051
678.	5-C27	4.166	**SUPPORT**, LOW & REV CLU (INCL 675, 677, 679) (*KIT6) (4.180) (AC-DELCO #8681727) .	94	Y (M30)	1	8681727
679.		N.S.	**SUPPORT**, LO & REV CLU (PART OF 678) (*KIT6)		.....		
680.	5-D3	4.180	**SPRING**, LOW & REV CLU SUPT (RET) (AC-DELCO #6261415) ..	94	Y (M30)	1	6261415
681.	5-D2	4.175	**CARRIER**, REACTION (W/DEFLECTOR) (HI-SPEED) (INCL 697) (AC-DELCO #8654200)	94	Y (M30)	1	8654200
682.	5-C20	4.163	**PLATE**, LOW & REV CLU (WAVED) (ILLUSTRATED AS 682A) (*KIT3, KIT6) (AC-DELCO #8676362)	94	Y (M30)	1	8676362
	5-C20	4.163	**PLATE**, LOW & REV CLU (ILLUSTRATED AS 682B) (1.314MM) (SELECTIVE) (*KIT3, KIT6) (AC-DELCO #8680440) ...	94	Y (M30)	1	8680440
	5-C20	4.163	**PLATE**, LOW & REV CLU (ILLUSTRATED AS 682B) (2.344MM) (HAS HOLES IN TURB PLATES) (*KIT3, KIT6) (AC-DELCO #24205270)	94	Y (M30)	1	24205270
	5-C20	4.163	**PLATE**, LOW & REV CLU (ILLUSTRATED AS 682C) (*KIT3, KIT6, KIT8) (AC-DELCO #8684089)	94	Y (M30)	5	8684089

© 2000 GENERAL MOTORS SERVICE PARTS OPERATIONS-CHEVROLET-14Y

	5-C20	4.163	PLATE, LOW & REV CLU (ILLUSTRATED AS 662D) (1.029MM) (HAS HOLES IN TURB PLATES) (STEEL) (*KIT3, KIT6) (AC-DELCO #24205268)	94	Y (M30)	1	24205268
683.	5-C19	4.159	BEARING, REACTION CARR THR (4.170) (AC-DELCO #8642215)	94	Y (M30)	1	8642215
	5-C19	4.159	BEARING, DIFF CARR SUN GR THR (AC-DELCO #8646254) ...	94	Y (M30)	1	8646254
684.	5-C18	4.158	GEAR, REACTION INTL (AC-DELCO #8667055)	94	Y (M30)	1	8667055
685.	5-D2	4.175	SUPPORT, REACTION INTL GR (AC-DELCO #8681491)	94	Y (M30)	1	8681491
686.	5-D3	4.176	RING, INT REACTION GR SUPT RET (AC-DELCO #8642220) ...	94	Y (M30)	1	8642220
687.	5-D2	4.175	SHAFT, OUTPUT (AC-DELCO #8685754)	94	Y (M30)	1	8685754
690.		N.S.	SLEEVE, OUTPUT SHF (NOT REQD)		.....		
691.		N.S.	SEAL, OUTPUT SHF (NOT REQ'D) (*KIT2, KIT3)		.....		
692.	5-C19	4.159	BEARING, REACTION CARR THR (AC-DELCO #8642191) ...	94	Y (M30)	1	8642191
693.	5-C26	4.164	RING, LOW & REV CLU SPR RET RET (*KIT4, KIT6) (4.160) (AC-DELCO #8647337)	94	Y (M30)	1	8647337
694.	5-C26	4.164	SPRING, LOW & REV CLU (AC-DELCO #8642227)	94	Y (M30)	1	8642227
695.	5-C27	4.166	PISTON, LOW & REV CLU (*KIT6) (AC-DELCO #8685549) .	94	Y (M30)	1	8685549
696.	5-D4	4.189	SEAL KIT, LOW & REV CLU (INCLS INR, OTR & INTER SEALS) (*KIT2, KIT3, KIT6) (4.166) (AC-DELCO #8646987) .	94	Y (M30)	1	8646987
697.		N.S.	DEFLECTOR, OIL (PART OF 681)		.....		
698.	5-D7	4.224	ORIFICE, LUB FLUID (4.3MM DIA) (AC-DELCO #8663707) ...	94	Y (M30)	2	8663707
699.	5-E13	4.343	WHEEL, VEH SPD SEN RELUCTOR (AC-DELCO #24202711)	94	Y (M30)	1	24202711

SERVICE KITS

1.	5-C27	4.166	SEAL KIT, 3-4 CLU PSTN (FOA) (INCL 622, 624, 629, 631, 636) (AC-DELCO #8642919)	94	Y (M30)	1	8642919
2.		N.S.	TRANSMISSION KIT, AUTO (SERV OVERHAUL W/PLT, GSKT, SEAL) (USE 24201803 GASKET KIT T/W 24201807 FOR 1994 OR 24201808 FOR 1995 PLATE KIT T/W 24204496 PISTON KIT.)		.....		
3.		N.S.	TRANSMISSION KIT, AUTO (SERV OVERHAUL W/PLT, GSKT, SEAL) (USE 24201803 GASKET KIT T/W 24201807 PLATE KIT T/W 24204496 PISTON KIT.)		.....		

© 2000 GENERAL MOTORS SERVICE PARTS OPERATIONS-CHEVROLET-14Y

4.	5-C10	4.005	RING KIT, RET (INCL 610, 635, 638, 661, 693) (AC-DELCO #8642010)	94	Y (M30)	1	8642010
5.	5-C20	4.163	PLATE KIT, FWD CLU (INCL 649, 702) (INCLS INST SHEET & PLATES) (AC-DELCO #8647991)	94	Y (M30)	AR	8647991
6.	5-C20	4.163	PLATE KIT, LOW & REV CLU (W/SUPT) (W/PSTN) (INCL ITEMS 670-9, 682, 693, 695-6) (STEEL PLATES) (AC-DELCO #8687996)	94	Y (M30)	1	8687996
7.	5-C20	4.163	PLATE KIT, 3-4 CLU (INCL 654) (1.97MM THK) (AC-DELCO #8671900)	94	Y (M30)	1	8671900
8.	5-C20	4.163	PLATE KIT, CLU (INCL 612A, 645A, 649, 654A, 682C) (HAS 2050 STAMPED ON PART) (AC-DELCO #24201807) (CONTAINS ALL FIBER & STEEL CLU PLTS, USE W/OVERHAUL GSKT KIT FOR COMPL OVERHAUL)	94	Y (M30)	1	24201807
9.	5-C13	4.056	CONVERSION KIT, C/VLV CALN (INCLS ITEM #607, 628) (4.265) (AC-DELCO #24202270)	94	Y (M30)	1	24202270

RPO DEFINITIONS
M30 – TRANSMISSION,AUTOMATIC 4 SPEED,4L60E,ELECTRONIC

© 2000 GENERAL MOTORS SERVICE PARTS OPERATIONS-CHEVROLET-14Y

GM04-419 05/26/93

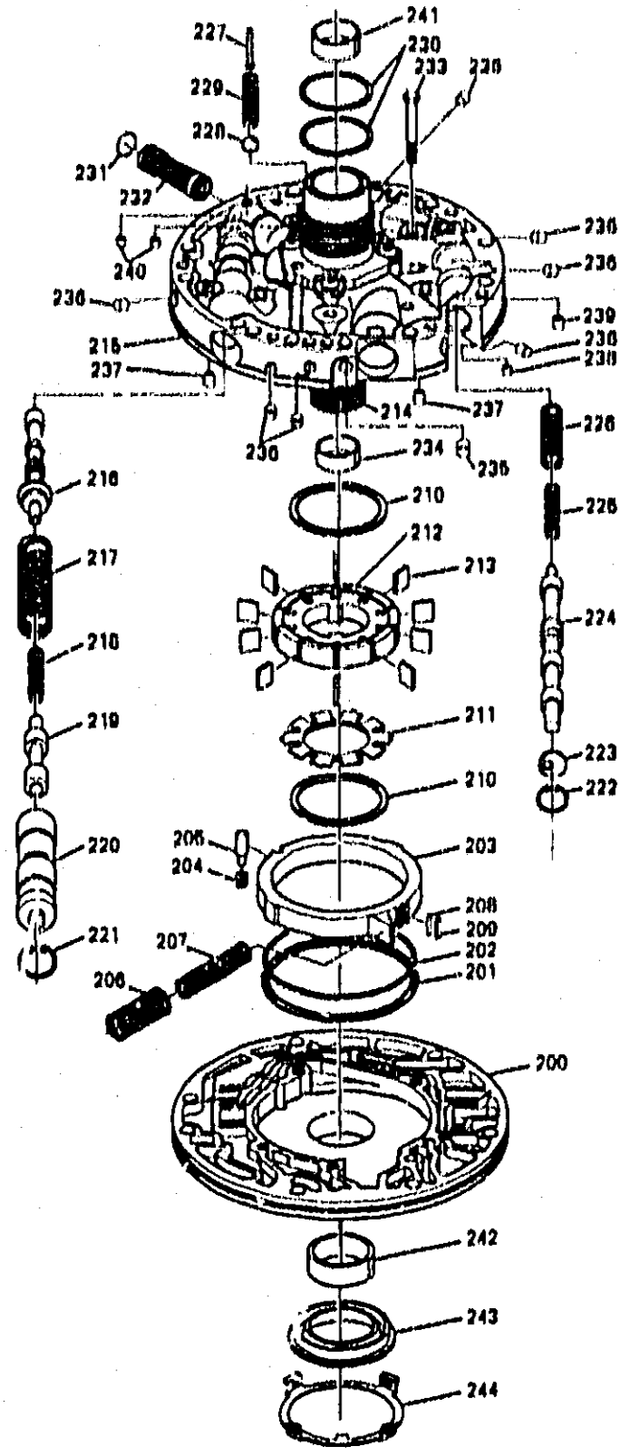

GM04-419Y

1994 Y AUTOMATIC TRANSMISSION (M30) PART I (4L60E) OIL PUMP

200.	5-D7	4.224	BODY, A/TRNS FLUID PUMP (INCL 201 THRU 213, 242 THRU 244) (10 VANE) (INCLS BODY, GUIDE, RING, RET, ROTOR, PIN, SEAL KIT, SLIDE, SPR&VANE) (AC-DELCO #8649964)	94 Y (M30)	1	8649964

© 2000 GENERAL MOTORS SERVICE PARTS OPERATIONS-CHEVROLET-14Y

201.		N.S.	RING, A/TRNS FLUID PUMP SLIDE FLUID SEAL (ALSO PART OF 200, 212) (*KIT1, KIT2, KIT3)				
202.		N.S.	SEAL, A/TRNS O/PMP SLIDE (O RING) (ALSO PART OF 200, 212) (*KIT1, KIT2, KIT3)				
203.	5-D7	4.224	SLIDE, A/TRNS FLUID PUMP (ALSO PART OF 200) (17.955 MM) (AC-DELCO #8634081)	94	Y (M30)	1	8634081
	5-D7	4.224	SLIDE, A/TRNS FLUID PUMP (ALSO PART OF 200) (17.960 MM) (AC-DELCO #8634082)	94	Y (M30)	1	8634082
	5-D7	4.224	SLIDE, A/TRNS FLUID PUMP (ALSO PART OF 200) (17.961 MM) (AC-DELCO #8634083)	94	Y (M30)	1	8634083
	5-D7	4.224	SLIDE, A/TRNS FLUID PUMP (ALSO PART OF 200) (17.967 MM) (AC-DELCO #8634084)	94	Y (M30)	1	8634084
	5-D7	4.224	SLIDE, A/TRNS FLUID PUMP (ALSO PART OF 200) (18.007 MM) (AC-DELCO #8634085)	94	Y (M30)	1	8634085
204.	5-D10	4.226	SPRING, A/TRNS FLUID PUMP SLIDE PIV PIN (ALSO PART OF 200) (AC-DELCO #8634098)	94	Y (M30)	1	8634098
205.	5-D10	4.226	PIN, A/TRNS FLUID PUMP SLIDE PIV (ALSO PART OF 200) (AC-DELCO #8634097)	94	Y (M30)	1	8634097
206.	5-D10	4.226	SPRING, A/TRNS FLUID PUMP SLIDE OTR (ALSO PART OF 200) (AC-DELCO #8639563)	94	Y (M30)	1	8639563
207.	5-D10	4.226	SPRING, A/TRNS FLUID PUMP SLIDE INR (ALSO PART OF 200) (AC-DELCO #8639562)	94	Y (M30)	1	8639562
208.		N.S.	SUPPORT, A/TRNS FLUID PUMP SLIDE SEAL (PART OF 200, 212) (*KIT1, KIT2, KIT3)				
209.		N.S.	SEAL, A/TRNS FLUID PUMP SLIDE (PART OF 200, 212) (*KIT1, KIT2, KIT3)				
210.	5-D10	4.226	RING, A/TRNS FLUID PUMP VANE (ALSO PART OF 200) (AC-DELCO #24201144)	94	Y (M30)	2	24201144
211.	5-D10	4.226	GUIDE, A/TRNS FLUID PUMP ROT (ALSO PART OF 200, 212) (10 VANE) (ALSO PART OF ROTOR KITS) (AC-DELCO #12337630)	94	Y (M30)	1	12337630
212.	5-D6	4.210	ROTOR, A/TRNS FLUID PUMP (ALSO PART OF 200) (INCL 201-2, 208-9, 211, 213) (17.955MM) (W/GUIDE, VANES & SEALS) (4.224) (AC-DELCO #8649951)	94	Y (M30)	1	8649951
	5-D6	4.210	ROTOR, A/TRNS FLUID PUMP (ALSO PART OF 200) (INCL 201-2, 208-9, 211, 213) (17.968MM) (W/GDE, VANES & SEALS) (4.224) (AC-DELCO #8649952)	94	Y (M30)	1	8649952

© 2000 GENERAL MOTORS SERVICE PARTS OPERATIONS-CHEVROLET-14Y

	5-D6	4.210	**ROTOR**, A/TRNS FLUID PUMP (ALSO PART OF 200) (INCL 201-2, 208-9, 211, 213) (17.991MM) (W/GDE, VANES & SEALS) (4.224) (AC-DELCO #8649953)	94	Y (M30)	1	8649953
	5-D6	4.210	**ROTOR**, A/TRNS FLUID PUMP (ALSO PART OF 200) (INCL 201-2, 208-9, 211, 213) (17.994MM) (W/GDE, VANES & SEALS) (4.224) (AC-DELCO #8649954)	94	Y (M30)	1	8649954
	5-D6	4.210	**ROTOR**, A/TRNS FLUID PUMP (ALSO PART OF 200) (INCL 201-2, 208-9, 211, 213) (18.007MM) (W/GDE, VANES & SEALS) (4.224) (AC-DELCO #8649955)	94	Y (M30)	1	8649955
213.	5-D10	4.226	**VANE**, A/TRNS FLUID PUMP (ALSO PART OF 200, 212) (AC-DELCO #8631280)	94	Y	10	8631280
214.		N.S.	**SHAFT**, STATOR (PART OF 215) .		.....		
215.	5-D7	4.224	**COVER**, A/TRNS FLUID PUMP (INCL 214, 216 THRU 221, 223 THRU 232) (AC-DELCO #24201277)	94	Y (M30)	1	24201277
216.	5-D17	4.262	**VALVE**, PRESS REG (ALSO PART OF 215) (4.216) (AC-DELCO #8684049)	94	Y (M30)	1	8684049
217.	5-D17	4.262	**SPRING**, PRESS REG VLV OTR (ALSO PART OF 215) (4.216) (AC-DELCO #8680682)	94	Y (M30)	1	8680682
218.	5-D17	4.262	**SPRING**, PRESS REG VLV INR (ALSO PART OF 215) (AC-DELCO #8680684)	94	Y (M30)	1	8680684
219.		N.S.	**VALVE**, REV BOOST (PART OF 215) (*KIT4)		.....		
220.		N.S.	**SLEEVE**, REV BOOST VLV (PART OF 215) (*KIT4)		.....		
221.	5-D18	4.265	**RING**, T/V BOOST VLV BUSH RET (ALSO PART OF 215) (*KIT5) (4.216) (AC-DELCO #11503348)	94	Y (M30)	1	11503348
222.		8.934	**RING**, TYPE TA INT RET .000X.68X.037PL (ALSO PART OF 215) (*KIT5) (AC-DELCO #274267)	94	.....	AR	274267
223.	5-D17	4.262	**STOP**, TCC VLV (ALSO PART OF 215) (4.216) (AC-DELCO #8634705)	94	Y (M30)	1	8634705
224.	5-D18	4.265	**VALVE**, TCC (OIL PUMP) (ALSO PART OF 215) (AC-DELCO #8634031)	94	Y (M30)	1	8634031
225.	5-D18	4.265	**SPRING**, TCC VLV INR (ALSO PART OF 215) (4.216) (AC-DELCO #8634378)	94	Y (M30)	1	8634378
226.	5-D18	4.265	**SPRING**, TCC VLV OTR (ALSO PART OF 215) (4.216) (AC-DELCO #8634399)	94	Y (M30)	1	8634399

© 2000 GENERAL MOTORS SERVICE PARTS OPERATIONS-CHEVROLET-14Y

227.	5-D17	4.262	RIVET, PRESS RLF BALL VLV SPR (ALSO PART OF 215) (4.210) (AC-DELCO #8042019)	94	Y (M30)	1	8042019
228.		6.899	BALL, 3/8 STEEL (CLU PRESS RLF VLV) (AC-DELCO #7826284)	94	.....	AR	7826284
229.	5-D10	4.265	SPRING, PRESS RLF BALL VLV (AC-DELCO #8634100)	94	Y (M30)	1	8634100
230.	5-D10	4.226	RING, REV INPUT CLU HSG FLUID SEAL (*KIT1, KIT2) (AC-DELCO #8661292)	94	Y (M30)	2	8661292
231.	5-D7	4.224	SEAL, A/TRNS FLUID PUMP CVR SCRN (ALSO PART OF 215, 232) (AC-DELCO #8642581)	94	Y (M30)	1	8642581
232.	5-D7	4.224	SCREEN, A/TRNS FLUID PUMP CVR (W/SEAL) (ASLO PART OF 215) (INCL 231) (AC-DELCO #8642912)	94	Y (M30)	1	8642912
233.		6.900	BOLT, HEX, 8X1.25X40, 33.2 THD, GM 500M, 10.9, PC, MACH (AC-DELCO #11500921)	94	(M30)	AR	11500921
234.	5-D10	4.226	BUSHING, INPUT SHF FRT (ALSO PART OF 215) (AC-DELCO #8647954)	94	Y (M30)	1	8647954
235.		N.S.	PLUG, A/TRNS FLUID PUMP CVR (REQ'D ON TRANS W/O AUX VLV BODY)		.....		
236.	5-D7	4.224	PLUG, A/TRNS FLUID PUMP CVR (ALSO PART OF 215) (6.80MM DIA) (AC-DELCO #8623886) ...	94	Y (M30)	8	8623886
237.	5-C16	4.123	VALVE, FWD CLU HSG BALL CHK (ALSO PART OF 215) (SINGLE ORIFICE) (TALL & NARROW) (4.226) (AC-DELCO #8628732)	94	Y (M30)	1	8628732
238.	5-D7	4.224	ORIFICE, TCC SIG (ALSO PART OF 215) (4.85MM DIA) (AC-DELCO #8634284)	94	Y (M30)	1	8634284
239.	5-C17	4.128	PLUG, A/TRNS O/PMP FLUID CLR HOLE (ALSO PART OF 215) (6.84MM DIA) (AC-DELCO #8634285)	94	Y (M30)	1	8634285
240.	5-D7	4.224	ORIFICE, A/TRNS FLUID PUMP AIR BL (ALSO PART OF 215) (AC-DELCO #24203787)	94	Y (M30)	AR	24203787
241.	5-D10	4.226	BUSHING, INPUT SHF RR (AC-DELCO #8642904)	94	Y (M30)	1	8642904
242.	5-C14	4.115	BUSHING, T/CV (ALSO PART OF 200) (AC-DELCO #24206030) ..	94	Y (M30)	1	24206030
243.	5-D10	4.226	SEAL, T/CV FLUID (ALSO PART OF 200) (AC-DELCO #24202535)	94	Y (M30)	1	24202535
244.	5-D10	4.226	RETAINER, T/CV FLUID SEAL (ALSO PART OF 200) (*KIT1, KIT2) (AC-DELCO #8654491) ...	94	Y (M30)	1	8654491

© 2000 GENERAL MOTORS SERVICE PARTS OPERATIONS-CHEVROLET-14Y

SERVICE KITS

1.	5-C10	4.005	GASKET KIT, A/TRNS SERV (INCL 201-2, 208-9, 230, 244) (W/O PLATES OR PISTONS) (AC-DELCO #24201803)	94	Y (M30)	1	24201803
2.		N.S.	TRANSMISSION KIT, AUTO (SERV OVERHAUL W/PLT, GSKT, SEAL) (USE 24201803 GASKET KIT T/W 24201807 PLATE KIT T/W 24204498 PISTON KIT.)		.....		
3.	5-D10	4.226	SEAL KIT, A/TRNS FLUID PUMP SLIDE (INCL 201-2, 208-9) (INCLS RING, SEALS&SUPT) (AC-DELCO #8634906)	94	Y (M30)	1	8634906
4.	5-D19	4.265	VALVE KIT, REV BOOST (INCL 219, 220) (AC-DELCO #24200372)	94	Y (M30)	1	24200372
5.	5-C10	4.005	RING KIT, RET (INCL 221, 222) (AC-DELCO #8642910)	94	Y (M30)	1	8642910

RPO DEFINITIONS

M30 - TRANSMISSION,AUTOMATIC 4 SPEED,4L60E,ELECTRONIC

© 2000 GENERAL MOTORS SERVICE PARTS OPERATIONS-CHEVROLET-14Y

MICROFICHE INDEX

GROUP 4.000

FICHE 5 OF 11

GROUP	DESCRIPTION	STARTING GRID LOCATION PARTS	ILLUSTRATIONS
--	GENERAL INFORMATION	1-A2	1-G2
--	ALPHABETICAL INDEX	1-B13	N.A.
4.000	4-SPEED TRANSMISSION	5-A2	5-F2
4.000	6-SPEED TRANSMISSION	5-B2	5-G2
4.000	AUTOMATIC TRANSMISSION	5-C2	5-H2
--	OUT OF FICHE CALLS	N.A.	5-M23

5-K1

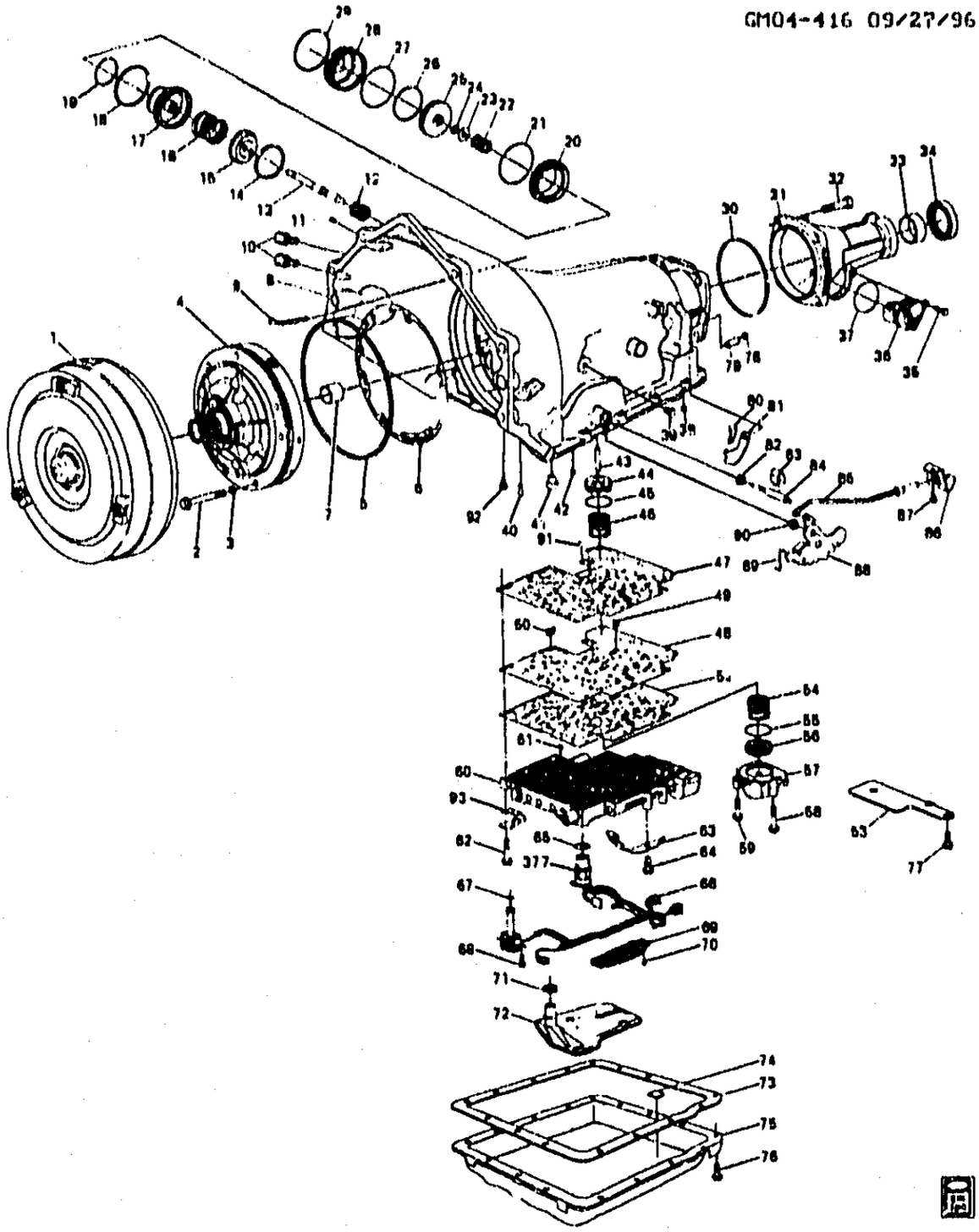

GM04-416Y

1994-1995 Y AUTOMATIC TRANSMISSION (M30) PART 1 (4L60E) CASE & RELATED PARTS/PARK LOCK LINKAGE

1.	5-C14	4.115	CONVERTER, TORQ (REMAN) ..	94-95 Y (M30)	1	24202174
2.	5-D10	4.226	BOLT, A/TRNS FLUID PUMP (M8X1.25X60) (M8X1.25X60) (W/ SEAL) (*KIT1, KIT2) (AC-DELCO #8673596)	94-95 Y (M30)	7	8673596

© 2000 GENERAL MOTORS SERVICE PARTS OPERATIONS-CHEVROLET-14Y

							QM04-416Y
3.	5-D10	4.226	SEAL, A/TRNS FLUID PUMP BOLT (PUMP TO CASE BOLT) (AC-DELCO #12337996)	94-95	Y (M30)	7	12337996
4.		N.S.	PUMP, A/TRNS OIL (SEE PUMP ILLUSTRATION)		.....		
5.	5-D10	4.226	SEAL, A/TRNS FLUID PUMP (*KIT1, KIT2) (AC-DELCO #24210605)	94-95	Y (M30)	1	24210605
6.	5-D10	4.226	GASKET, A/TRNS FLUID PUMP (*KIT1, KIT2, KIT9) (AC-DELCO #12337931)	94-95	Y (M30)	1	12337931
7.	5-N22	5.556	BUSHING, PROP SHF FRT SLIP YOKE (PART OF 8) (INSIDE DIA 1.506-1.509) (PART OF TRANS CASE) (4.104) (AC-DELCO #8680027)	94-95	Y (M30)	1	8680027
8.	5-C14	4.103	CASE KIT, A/TRNS (INCL 7, 8) (AC-DELCO #24200929)	94-95	Y (M30)	1	24200929
9.	5-C14	4.104	PIPE, A/TRNS VENT	94-95	Y (M30)	1	24202440
10.	5-C17	4.128	FITTING, TRANS FLUID CLR PIPE (TO CASE) (5/16) (AC-DELCO #8637742)	94-95	Y (M30)	2	8637742
11.	5-C14	4.105	ORIFICE, FWD CLU FEED (6.4MM DIA) (NO DIMPLE) (4.104) (AC-DELCO #8628864) .	94-95	Y (M30)	AR	8628864
12.	5-D15	4.233	SPRING, 2-4 BAND SERVO RTN (ORANGE) (AC-DELCO #8642273)	94-95	Y (M30)	1	8642273
13.	5-D16	4.246	PIN, 2-4 BAND SERVO PSTN (I.D BY 1 GROOVE IN TAPPERED POINT) (4.228) (AC-DELCO #8680499)	94-95	Y (M30)	1	8680499
	5-D16	4.246	PIN, 2-4 BAND SERVO PSTN (I.D BY 2 GROOVES IN TAPPERED POINT) (4.228) (AC-DELCO #8680500)	94-95	Y (M30)	1	8680500
	5-D16	4.246	PIN, 2-4 BAND SERVO PSTN (I.D BY NO GROOVES IN TAPPERED POINT) (4.228) (AC-DELCO #8680501)	94-95	Y (M30)	1	8680501
14.	5-D3	4.176	RING, 2-4 BAND SERVO 2ND APPL PSTN RET (AC-DELCO #8642105)	94-95	Y (M30)	1	8642105
15.	5-D15	4.233	RETAINER, 2-4 BAND SERVO CUSH SPR (AC-DELCO #8642416)	94-95	Y (M30)	1	8642416
16.	5-D15	4.233	SPRING, 2-4 BAND SERVO PSTN CUSH (PINK) (AC-DELCO #8642539)	94-95	Y (M30)	1	8642539
17.		N.S.	PISTON, 2-4 BAND SERVO 2ND APPLY (*KIT8)		.....		
18.		N.S.	RING, LOW & REV ACCUM PSTN OTR FLUID SEAL (*KIT1, KIT2, KIT5, KIT8)		.....		
19.		N.S.	RING, LOW & REV ACCUM PSTN INR FLUID SEAL (*KIT1, KIT2, KIT5, KIT8)		.....		

© 2000 GENERAL MOTORS SERVICE PARTS OPERATIONS-CHEVROLET-14Y

20.	5-D12	4.228	HOUSING, 2-4 BAND SERVO 2ND APPL (AC-DELCO #8673039)	94-95	Y (M30)	1	8673039
21.	5-D14	4.229	SEAL, 2-4 BAND SERVO 2ND APPL PSTN HSG (O RING) (*KIT1, KIT2) (AC-DELCO #8642112)	94-95	Y (M30)	1	8642112
22.	5-D16	4.246	SPRING, 2-4 BAND SERVO PSTN (AC-DELCO #8642106)	94-95	Y (M30)	1	8642106
23.	5-D15	4.233	WASHER, 2-4 BAND SERVO PIN (3/8) (AC-DELCO #8642107)	94-95	Y (M30)	1	8642107
24.		8.934	RETAINER, SNAP RING BOWED EXT .FITS SHFT 7/16 PL (OUTPUT SHF) (AC-DELCO #9415640)	94-95		AR	9415640
25.	5-D12	4.228	PISTON, 2-4 BAND SERVO 4TH APPLY (W/RING) (AC-DELCO #8642478)	94-95	Y (M30)	1	8642478
26.	5-D14	4.229	RING, 2-4 BAND SERVO PSTN FLUID SEAL (*KIT1, KIT2) (AC-DELCO #8642480)	94-95	Y (M30)	1	8642480
27.	5-D14	4.229	SEAL, 2-4 BAND SERVO CVR (O RING) (ALSO PART OF 28) (*KIT1, KIT2) (AC-DELCO #8647351)	94-95	Y (M30)	1	8647351
28.	5-D12	4.228	COVER, 2-4 SERVO (W/SEAL) (INCL 27) (INCLS RING) (4.241) (AC-DELCO #8642979)	94-95	Y (M30)	1	8642979
29.	5-D12	4.228	RING, 2-4 BAND SERVO CVR RET (AC-DELCO #8642124)	94-95	Y (M30)	1	8642124
30.	5-D26	4.318	SEAL, PROP SHF FRT SLIP YOKE OIL (*KIT1, KIT2) (AC-DELCO #24201470)	94-95	Y (M30)	1	24201470
31.	5-D26	4.317	EXTENSION, A/TRNS CASE (AC-DELCO #24201517)	94-95	Y (M30)	1	24201517
32.		8.900	BOLT (EXTN TO CASE)	94-95		AR	11503428
33.	5-D27	4.319	BUSHING, TRANS EXTN (INSIDE DIAM 1.506- 1.504 (PT OF TRANS EXT) (5.556) (AC-DELCO #24207915)	94-95	Y (M30)	1	24207915
34.	5-D26	4.318	SEAL, PROP SHF FRT SLIP YOKE OIL (*KIT1, KIT2) (AC-DELCO #24201470)	94-95	Y (M30)	1	24201470
35.		4.329	BOLT, VEH SPD SEN	94-95	Y (M30)	1	8655314
36.	5-D27	4.329	SENSOR, VEH SPD (INCL 37) (AC-DELCO #213-194)	94-95	Y (M30)	1	8673299
37.	5-E13	4.338	SEAL, VEH SPD SEN (O RING) (PART OF 36) (TEFLON) (AC-DELCO #15552872)	94-95	Y (M30)	1	15552872
38.	5-C14	4.105	ORIFICE, 3RD ACCUM BL (6.4MM DIA) (NO DIMPLE) (4.104) (AC-DELCO #8628864)	94-95	Y (M30)	1	8628864
39.		8.971	PLUG, (OIL PRESS TEST HOLE) (AC-DELCO #444613)	94-95		1	444613
40.	5-D12	4.228	VALVE, 3RD ACCUM BALL CHK (AC-DELCO #8634400)	94-95	Y (M30)	1	8634400
41.	5-D14	4.229	PIN, 2-4 BAND ANC (AC-DELCO #8654581)	94-95	Y (M30)	1	8654581

© 2000 GENERAL MOTORS SERVICE PARTS OPERATIONS-CHEVROLET-14Y

42.	5-C27	4.166	RETAINER, LOW & REV CLU PSTN (PART OF 8) (DOUBLE ORIFICE) (W/BALL) (4.160) (AC-DELCO #8663890)	94-95	Y (M30)	1	8663890
43.	5-D12	4.226	PIN, 3-4 ACCUM PSTN (4.226) (AC-DELCO #8626273)	94-95	Y (M30)	1	8626273
44.	5-D12	4.228	PISTON, 3-4 ACCUM (*KIT6) (AC-DELCO #8663608)	94-95	Y (M30)	1	8663608
45.	5-D14	4.229	RING, 3-4 ACCUM PSTN FLUID SEAL (*KIT1, KIT2, KIT6) (AC-DELCO #24206509)	94-95	Y (M30)	1	24206509
46.	5-D15	4.233	SPRING, 3-4 ACCUM PSTN (LT BLUE) (AC-DELCO #8639074) ..	94-95	Y (M30)	1	8639074
47.	5-D18	4.265	GASKET, C/VLV BODY (TO CASE) (*KIT1, KIT2, KIT4, KIT9) (AC-DELCO #8681603)	94-95	Y (M30)	1	8681603
48.	5-D18	4.265	PLATE, C/VLV BODY SPCR (AC-DELCO #24201474)	94	Y (M30)	1	24201474
	5-D18	4.265	PLATE, C/VLV BODY SPCR (AC-DELCO #24201494)	95	Y (M30)	1	24201494
49.		4.265	FILTER, SHFT SOL VLV FLUID (*KIT10)	94-95	.....		
50.	5-D10	4.265	FILTER, PRESS CONT SOL VLV FLUID (*KIT10) (AC-DELCO #8683768)	94-95	Y (M30)	1	8683768
52.	5-D18	4.265	GASKET, C/VLV BODY SPCR PLT (*KIT1, KIT2, KIT4, KIT9) (AC-DELCO #8681606)	94-95	Y (M30)	1	8681606
53.	5-D6	4.197	COVER, FLUID PASG (4.265) (AC-DELCO #8682792)	94-95	Y (M30)	1	8682792
54.	5-D15	4.233	SPRING, 1-2 ACCUM PSTN (DK GREEN) (OTR) (*KIT7) (AC-DELCO #8654554)	94-95	Y (M30)	1	8654554
	5-D15	4.233	SPRING, 1-2 ACCUM PSTN (INNER) (*KIT7) (AC-DELCO #8684570)	94	Y (M30)	1	8684570
	5-D15	4.233	SPRING, 1-2 ACCUM PSTN (ORANGE) (INNER) (*KIT7) (AC-DELCO #8685655)	95	Y (M30)	1	8685655
55.	5-D14	4.229	RING, 1-2 ACCUM PSTN FLUID SEAL (*KIT1, KIT2, KIT7) (AC-DELCO #24206509)	94-95	Y (M30)	1	24206509
56.		N.S.	PISTON, 1-2 ACCUM (*KIT1, KIT2, KIT6, KIT7)		.....		
57.	5-D12	4.228	COVER, 1-2 ACCUM (INCLS PIN) (*KIT7) (AC-DELCO #8686084)	94-95	Y (M30)	1	8686084
	5-D12	4.228	PIN, 1-2 ACCUM PSTN (PART OF COVER) (*KIT7) (4.226) (AC-DELCO #8684426)	94-95	Y (M30)	1	8684426
58.		8.900	BOLT, HFH M6X1X65 9.8 PL	94-95	.....	AR	11506078
59.		8.900	BOLT, HEX M6X1X35 10.9 PC (ACCUM CVR TO CASE) (AC-DELCO #11503870)	94-95	.....	AR	11503870
		8.929	WASHER, FLAT 5/16X5/8X1/16 ZP HARD	94-95	.....	AR	2436162
60.	5-D18	4.265	VALVE, CONT (W/BODY & VLV) (REMAN) (AC-DELCO #24214832)	94	Y (M30)	1	24214832

© 2000 GENERAL MOTORS SERVICE PARTS OPERATIONS-CHEVROLET-14Y

	5-D18	4.265	VALVE, CONT (W/BODY & VLV) (REMAN) (AC-DELCO #24214844)	95	Y (M30)	1	24214844
61.		8.899	BALL, GRADE 2, STD DIA 1/4 (2), CHROME STL (AC-DELCO #104918)	94-95		AR	104918
62.	5-D18	4.265	BOLT, VLV BODY (M6X1X47.5) (AC-DELCO #8680742)	94-95	Y (M30)	9	8680742
	5-D18	4.265	BOLT, VLV BODY (M6X1X54.4) (AC-DELCO #8680741)	94-95	Y (M30)	3	8680741
63.	5-D24	4.275	DETENT, MAN SHFT (CPS) (AC-DELCO #8642247)	94-95	Y (M30)	1	8642247
	5-D25	4.293	PIN, MAN SHFT DTNT RLR (4.311) (AC-DELCO #6261174)	94-95	Y (M30)	1	6261174
64.		8.900	BOLT-HEX, M8X1.25X20, 16.88 THD, GM500 (10.9), PZOR, MACH (DTNT SPR TO VB) (AC-DELCO #11508687)	94-95		AR	11508687
65.		N.S.	SEAL, WRG HARN PASS-THRU CONN O-RING (PART OF 66)				
66.	5-M24	2.480	HARNESS, A/TRNS WRG (INCL 65, 67, 92) (AC-DELCO #15320479)	94	Y (M30)	1	15320479
	5-M24	2.480	HARNESS, A/TRNS WRG (INCL 65, 67, 92) (INCLS TCC SOLENOID W/TCC DRAINDOWN FEATURE) (AC-DELCO #15320477)	95	Y (M30)	1	15320477
67.		N.S.	SEAL, TCC SOL VLV (O RING) (PART OF 66)				
68.		8.900	BOLT, HEX M6X1X35 10.9 PC (TCC SOL VLV) (AC-DELCO #11503870)	94-95		AR	11503870
69.	5-D18	4.265	SWITCH, A/TRNS FLUID PRESS MAN VLV POSN (W/O PLASTIC COVER) (AC-DELCO #8686149)	94-95	Y (M30)	1	8686149
70.	5-D18	4.265	BOLT, A/TRNS FLUID PRESS MAN VLV POSN SW (M6X1X17.7) (AC-DELCO #8680764)	94-95	Y (M30)	1	8680764
71.		N.S.	SEAL, A/TRNS FLUID FLTR (*KIT3)				
72.		N.S.	FILTER, A/TRNS FLUID (*KIT1, KIT2, KIT3)				
73.	5-D6	4.196	GASKET, A/TRNS FLUID PAN (ALSO PART OF 75) (*KIT1, KIT2, KIT3, KIT9) (AC-DELCO #8654799)	94-95	Y (M30)	1	8654799
74.	5-D5	4.195	MAGNET, A/TRNS FLUID PAN (ALSO PART OF 75) (4.105) AC-DELCO #8665830)	94-95	Y (M30)	1	8665830
75.	5-D5	4.195	PAN KIT, A/TRNS FLUID (INCL 73, 74) (SHALLOW W/PAN, GSKT & MAGNET) (AC-DELCO #8663948)	94-95	Y (M30)	1	8663948
76.	5-D6	4.196	BOLT, A/TRNS FLUID PAN (M8X1.25X19, 16)	94-95	Y (M30)	14	8657000
77.	5-D6	4.197	BOLT, FLUID PASG CVR (M6X1X17.7) (4.265) (AC-DELCO #8680764)	94-95	Y (M30)	1	8680764

© 2000 GENERAL MOTORS SERVICE PARTS OPERATIONS-CHEVROLET-14Y

78.	5-D26	4.294	PLUG, PARK PAWL SHF HOLE (ALSO PART OF 79) (.38 DIA) (AC-DELCO #8620318)	94-95	Y (M30)	1	8620318
79.	5-D26	4.294	PAWL KIT, PARK (INCLS 78, 81) (INST SHT, PAWL, PLUG & SHF) (AC-DELCO #8669911)	94-95	Y (M30)	1	8669911
80.	5-D26	4.295	SPRING, PARK PAWL (AC-DELCO #8642193)	94-95	Y (M30)	1	8642193
81.		N.S.	PAWL, PARK (PART OF 79)		.....		
82.	5-D25	4.262	SEAL, MAN SHFT SHF (ALSO PART OF 84) (*KIT1, KIT2) (AC-DELCO #8667163)	94-95	Y (M30)	1	8667163
83.	5-D24	4.275	RETAINER, MAN SHFT SHF (AC-DELCO #8642246)	94-95	Y (M30)	1	8642246
84.	5-D26	4.294	SHAFT KIT, MAN SHFT (INCL 82) (128.2MM) (LONG) (INCLS SEAL) (AC-DELCO #24210711)	94	Y (M30)	1	24210711
	5-D26	4.294	SHAFT KIT, MAN SHFT (INCL 82) (SHORT) (INCLS SEAL, INDIVIDUAL COMPONENT NOT SOLD SEPARATELY) (AC-DELCO #24210712)	94-95	Y (M30)	1	24210712
85.	5-D25	4.290	ACTUATOR, PARK PAWL (INCLS ACTUATOR, ROD & SPRINGS) (AC-DELCO #8667517)	94-95	Y (M30)	1	8667517
86.	5-D25	4.290	BRACKET, PARK PAWL ACTR (AC-DELCO #8667574)	94-95	Y (M30)	1	8667574
87.		8.900	BOLT-HEX, M8X1.25X20, 16.88 THD, GM500 (10.9), PZOR, MACH (PARK LOCK BRACKET TO CASE) (AC-DELCO #11508687)	94-95	.....	AR	11508687
88.	5-D25	4.279	LEVER, MAN SHFT DTNT (GOLD) (SQUARE HOLE) (AC-DELCO #8654106)	94-95	Y (M30)	1	8654106
89.	5-D24	4.275	LINK, MAN VLV (*KIT1, KIT2) (AC-DELCO #8680731)	94-95	Y (M30)	1	8680731
90.	5-D24	4.275	NUT, MAN SHFT DTNT LVR (M10X15.6H THD) (AC-DELCO #8648178)	94-95	Y (M30)	1	8648178
91.		8.899	BALL, GRADE 2, STD DIA 1/4 (2), CHROME STL (NO. 10 CHECKBALL) (AC-DELCO #104918)	94-95	.....	AR	104918
92.	5-D18	4.265	SCREEN, TCC SOL VLV (PART OF SOLENOID) (PART OF 66) (4.248) (AC-DELCO #12338044)	94	Y (M30)	2	12338044
		N.S.	SCREEN, TCC SOL VLV (PART OF SOLENOID) (PART OF 66) ...	95	.....		
93.	5-C17	4.133	STOP, TRANS FLUID LVL IND	94-95	Y (M30)	1	8684890
377.		N.S.	VALVE, PRESS CONT SOL (*KIT10)		.....		

SERVICE KITS

	5-C9	4.003	TRANSMISSION, AUTO (CODE 4YDD) (REMAN)	94	Y (M30)	1	8690990
	5-C9	4.003	TRANSMISSION, AUTO (GOODWRENCH REMAN) (5YDD)	95	Y (M30)	1	24201935

© 2000 GENERAL MOTORS SERVICE PARTS OPERATIONS-CHEVROLET-14Y

1.	5–C10	4.005	GASKET KIT, A/TRNS SERV (INCL 2, 5, 6, 16–0, 21, 26–7, 30, 34, 44–5, 47, 52, 55–6, 72–3, 82, 89) (W/O PLATES OR PISTONS) (AC–DELCO #24201803)	94–95	Y (M30)	1	24201803
2.		N.S.	TRANSMISSION KIT, AUTO (SERV OVERHAUL W/PLT, GSKT, SEAL) (USE 24201803 GASKET KIT T/W 24201807 FOR 1994 OR 24201808 FOR 1995 PLATE KIT T/W 24204496 PISTON KIT.)		.....		
3.	5–D6	4.197	FILTER KIT, A/TRNS FLUID (INCL 71–73) (USED W/SHALLOW PAN) (AC–DELCO #24200796) ..	94–95	Y (M30)	1	24200796
4.	5–D18	4.265	GASKET KIT, C/VLV BODY SPCR PLT (INCL 47, 52) (AC–DELCO #8685951)	94–95	Y (M30)	1	8685951
5.	5–D14	4.229	RING KIT, 2–4 BAND SERVO 2ND APPL PSTN FLUID SEAL (INCL 19) (.55 RATIO) (INCLS INR & OTR RING) (AC–DELCO #8642924)	94–95	Y (M30)	1	8642924
	5–D14	4.229	RING KIT, 2–4 BAND SERVO 2ND APPL PSTN FLUID SEAL (INCL 18, 19) (.74 RATIO) (INCLS 2 RINGS) (AC–DELCO #8642925)	94–95	Y (M30)	1	8642925
6.	5–D12	4.228	PISTON KIT, 1–2 & 3–4 ACCUM (INCL 44, 45, 55, 56) (W/RINGS & ALUM PISTONS) (AC–DELCO #24204496)	94–95	Y (M30)	1	24204496
7.	5–D12	4.228	ACCUMULATOR, 1–2 (INCL 43, 54–7) (AC–DELCO #8685760) ..	94	Y (M30)	1	8685760
	5–D12	4.228	ACCUMULATOR, 1–2 (INCL 43, 54–7) (AC–DELCO #24201956)	95	Y (M30)	1	24201956
8.	5–D12	4.228	PISTON KIT, 2–4 BAND SERVO 2ND APPLY (INCL 17, 18, 19) (YELLOW) (.74) (AC–DELCO #8642079)	94–95	Y (M30)	1	8642079
9.	5–C13	4.056	CONVERSION KIT, C/VLV CALN (INCL 6, 47, 52, 73) (4.265) (AC–DELCO #24202270)	94	Y (M30)	1	24202270
10.	5–D18	4.265	VALVE KIT, PRESS CONT SOL (W/SHFT SOL VLV FLUID FLTR) (INCL 49, 50, 377)	94–95	Y (M30)	1	24216252

RPO DEFINITIONS
M30 – TRANSMISSION,AUTOMATIC 4 SPEED,4L60E,ELECTRONIC

© 2000 GENERAL MOTORS SERVICE PARTS OPERATIONS–CHEVROLET–14Y

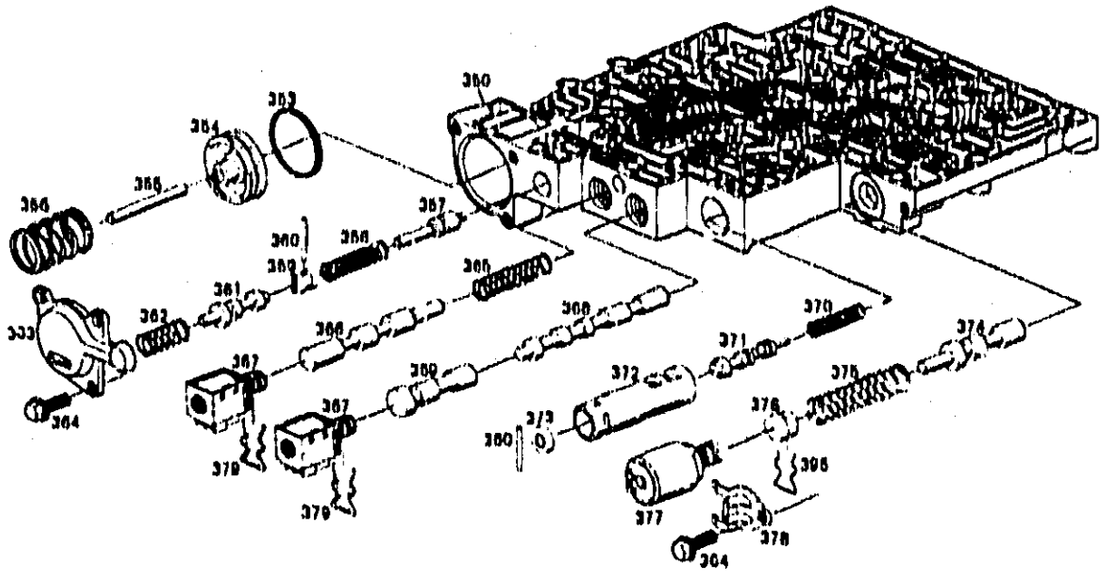

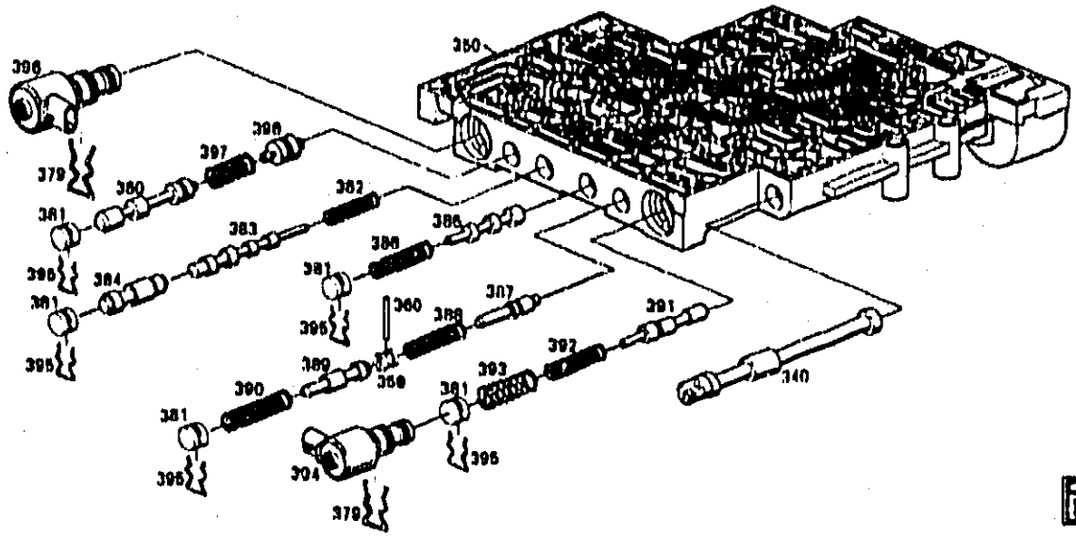

GM04-418Y

1994-1995 Y AUTOMATIC TRANSMISSION (M30) PART 3 (4L60E) CONTROL VALVE

340.	5-D25	4.279	VALVE, MAN (*KIT1) (4.265)	94-95	Y	1	8680730
350.		N.S.	BODY, C/VLV (*KIT1)		.....		
353.	5-D14	4.229	RING, FWD CLU ACCUM PSTN FLUID SEAL (*KIT1) (AC-DELCO #8680653)	94-95	Y (M30)	1	8680653
354.	5-D12	4.228	PISTON, FWD CLU ACCUM (*KIT1) (AC-DELCO #24200126)	94-95	Y (M30)	1	24200126
355.		N.S.	PIN, 1-2 ACCUM PSTN (*KIT1) .		.....		
		N.S.	PIN, 2-3 ACCUM PSTN (*KIT1) .		.....		
356.	5-D15	4.233	SPRING, FWD CLU ACCUM PSTN (*KIT1) (AC-DELCO #24208765)	94-95	Y (M30)	1	24208765
357.		N.S.	VALVE, FWD CLU ABUSE (*KIT1)		.....		

© 2000 GENERAL MOTORS SERVICE PARTS OPERATIONS-CHEVROLET-14Y

358.		N.S.	SPRING, FWD CLU ABUSE VLV (*KIT1)				
359.		N.S.	PLUG, TCC C/VLV BORE (*KIT1)				
360.	5-C28	4.160	PIN, FWD CLU ABUSE VLV BORE PLUG (*KIT1) (4.265) (AC-DELCO #8680765)	94-95	Y (M30)	1	8680765
	5-D18	4.265	PIN, REV ABUSE VLV BORE PLUG (*KIT1) (AC-DELCO #8680765)	94-95	Y (M30)	1	8680765
	5-D18	4.265	PIN, 1-2 ACCUM VLV BORE PLUG (*KIT1) (AC-DELCO #8680765)	94-95	Y (M30)	1	8680765
361.		N.S.	VALVE, LOW OVERRUN (*KIT1)				
362.		N.S.	SPRING, LOW OVERRUN VLV (*KIT1)				
363.	5-D12	4.228	COVER, FWD CLU ACCUM (W/SLOTS) (*KIT1) (AC-DELCO #24206338)	94-95	Y (M30)	1	24206338
364.	5-D16	4.241	BOLT, FWD CLU ACCUM CVR (M6X1X17.7) (*KIT1) (4.265) (AC-DELCO #8680764)	94-95	Y (M30)	3	8680764
	5-D18	4.265	BOLT, PRESS CONT SOL VLV CLA (M6X1X17.7) (*KIT1) (AC-DELCO #8680764)	94-95	Y (M30)	1	8680764
365.		N.S.	SPRING, 1-2 SHFT VLV (*KIT1)				
366.		N.S.	VALVE, 1-2 SHFT (*KIT1)				
367.	5-D18	4.265	VALVE, 1-2, 3-4 SHFT SOL (CPS) (INCLS SEAL) (*KIT1) (AC-DELCO #10478131)	94-95	Y (M30)	2	10478131
	5-D18	4.265	VALVE, 2-3 SHFT SOL (CPS) (INCLS SEAL) (*KIT1) (AC-DELCO #10478131)	94-95	Y (M30)	2	10478131
		4.122	SEAL, TCC SOL VLV (O RING) (13MM I.D.) (OTR) (*KIT1) (AC-DELCO #10471813)	94-95	Y (M30)	2	10471813
368.		N.S.	VALVE, 2-3 SHUTTLE (*KIT1)				
369.		N.S.	VALVE, 2-3 SHFT (*KIT1)				
370.		N.S.	SPRING, 1-2 ACCUM VLV (*KIT1)				
371.		N.S.	VALVE, 1-2 ACCUM (*KIT1)				
372.		N.S.	SLEEVE, 1-2 ACCUM VLV (*KIT1)				
373.		N.S.	PLUG, TCC C/VLV BORE (*KIT1)				
374.		N.S.	VALVE, ACTR FEED LIM (*KIT1)				
375.		N.S.	SPRING, ACTR FEED LIM VLV (*KIT1)				
376.		N.S.	PLUG, TCC C/VLV BORE (*KIT1)				
377.		N.S.	VALVE, PRESS CONT SOL (*KIT1, KIT2)				
378.	5-D18	4.265	CLAMP, PRESS CONT SOL VLV (*KIT1) (AC-DELCO #8682007)	94-95	Y (M30)	1	8682007
379.	5-D18	4.265	RETAINER, 1-2, 3-4 SHFT SOL VLV (*KIT1) (AC-DELCO #8680781)	94-95	Y (M30)	1	8680781
380.		N.S.	VALVE, TCC (*KIT1)				
381.		N.S.	PLUG, TCC C/VLV BORE (*KIT1)				
382.		N.S.	SPRING, 4-3 SEQUENCE VLV (*KIT1)				

© 2000 GENERAL MOTORS SERVICE PARTS OPERATIONS-CHEVROLET-14Y

303.		N.S.	VALVE, 4-3 SEQUENCE (*KIT1)					
304.		N.S.	VALVE, 3-4 RLY (*KIT1)					
305.		N.S.	VALVE, 3-4 SHFT (*KIT1)					
306.		N.S.	SPRING, 3-4 SHFT VLV (*KIT1)					
307.		N.S.	VALVE, ABUSE (REV) (*KIT1)					
308.		N.S.	SPRING, ABUSE VLV (REV) (*KIT1)					
309.		N.S.	VALVE, 3-2 DNSHFT (*KIT1)					
310.		N.S.	SPRING, 3-2 DNSHFT VLV (*KIT1)					
311.		N.S.	VALVE, 2-3 CONT (*KIT1)					
312.		N.S.	SPRING, 3-2 C/VLV (*KIT1)					
313.		N.S.	SPRING, PLUG BORE (*KIT1)					
314.	5-D18	4.265	VALVE, 3-2 SHFT SOL (*KIT1) (4.122) (AC-DELCO #24207054)	94-95	Y (M30)		1	24207054
315.	5-D18	4.265	RETAINER, CONT VLV PLUG (AC-DELCO #8680781)	94-95	Y (M30)		AR	8680781
316.		N.S.	VALVE, TCC PWM SOL (NOT REQ'D) (*KIT1)	94				
	5-D18	4.265	VALVE, TCC PWM SOL (*KIT1) (4.122) (AC-DELCO #24207054)	95	Y (M30)		1	24207054
317.		N.S.	SPRING, TCC C/VLV (*KIT1)					
318.		N.S.	VALVE, TCC PWM SOL (*KIT1)					

SERVICE KITS

1.	5-D18	4.265	VALVE, CONT (W/BODY & VLV) (REMAN) (INCL 340-398) (AC-DELCO #24214832)	94	Y (M30)		1	24214832
	5-D18	4.265	VALVE, CONT (W/BODY & VLV) (REMAN) (INCL 340-398) (AC-DELCO #24214844)	95	Y (M30)		1	24214844
2.	5-D18	4.265	VALVE KIT, PRESS CONT SOL (W/SHFT SOL VLV FLUID FLTR) (INCL 377)	94-95	Y (M30)		1	24216252

RPO DEFINITIONS
M30 – TRANSMISSION,AUTOMATIC 4 SPEED,4L60E,ELECTRONIC

© 2000 GENERAL MOTORS SERVICE PARTS OPERATIONS-CHEVROLET-14Y

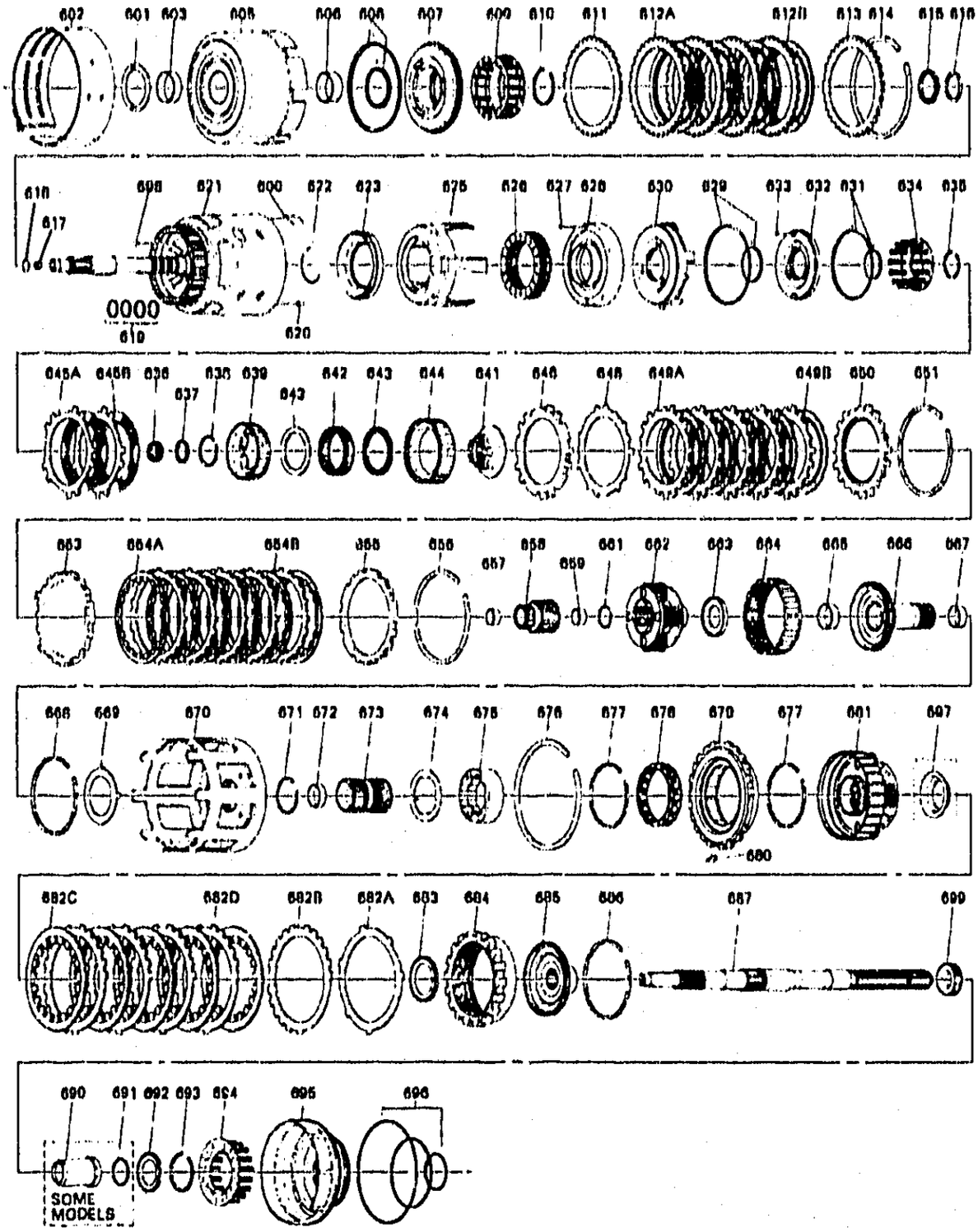

GM04-468Y

1995-1996 Y AUTOMATIC TRANSMISSION (M30) PART 2 (4L60E) CLUTCH GEARS

600.	5-C28	4.167	SPRING, 3-4 CLU (BOOST) (INCLS RET & (2) SPRNGS) (*KIT7) (4.163) (AC-DELCO #8667424)	95-96	Y (M30)	5	8667424
601.	5-D10	4.226	WASHER, A/TRNS FLUID PUMP (AC-DELCO #12339134)	95-96	Y (M30)	1	12339134

© 2000 GENERAL MOTORS SERVICE PARTS OPERATIONS-CHEVROLET-14Y

602.	5-D17	4.251	BAND, 2-4 (AC-DELCO #24201131)	95-96	Y (M30)	1	24201131
603.	5-D3	4.180	BUSHING, REV INPUT CLU HSG FRT (ALSO PART OF 605) (AC-DELCO #8642905)	95-96	Y (M30)	1	8642905
605.	5-C28	4.169	HOUSING, REV INPUT CLU (INCL 603, 606) (AC-DELCO #8681295)	95-96	Y (M30)	1	8681295
606.	5-C28	4.169	BUSHING, DIR CLU HSG RR (ALSO PART OF 605) (AC-DELCO #8628917)	95-96	Y (M30)	1	8628917
607.	5-C27	4.166	PISTON, REV INPUT CLU (.095 HOLE) (AC-DELCO #8667841)	95-96	Y (M30)	1	8667841
608.	5-C27	4.166	SEAL KIT, REV INPUT CLU (INCLS SEALS) (*KIT2, KIT3) (AC-DELCO #8657922)	95-96	Y (M30)	1	8657922
609.	5-C26	4.164	SPRING, REV INPUT CLU (AC-DELCO #8647284)	95-96	Y (M30)	1	8647284
610.	5-C26	4.164	RING, REV INPUT CLU SPR RET (*KIT4) (AC-DELCO #8628059)	95-96	Y (M30)	1	8628059
611.	5-C20	4.163	PLATE, REV INPUT CLU (WAVED) (AC-DELCO #8663074)	95-96	Y (M30)	1	8663074
612.	5-C20	4.163	PLATE, REV INPUT CLU (ILLUSTRATED AS 612A) (153MM DIA) (*KIT8, KIT9) (AC-DELCO #8673605)	95-96	Y (M30)	4	8673605
	5-C20	4.163	PLATE, REV INPUT CLU (ILLUSTRATED AS 612B) (W/ HOLES IN TURB PLATES) (AC-DELCO #24205267)	95-96	Y (M30)	4	24205267
613.	5-C20	4.163	PLATE, REV INPUT CLU BKG (7.25-7.41MM) (AC-DELCO #8682863)	95-96	Y (M30)	1	8682863
	5-C20	4.163	PLATE, REV INPUT CLU BKG (6.52-6.68MM) (AC-DELCO #8682864)	95-96	Y (M30)	1	8682864
	5-C20	4.163	PLATE, REV INPUT CLU BKG (5.79-5.95MM) (AC-DELCO #8682865)	95-96	Y (M30)	1	8682865
614.	5-C26	4.164	RING, REV INPUT CLU BKG PLT RET (YELLOW) (AC-DELCO #8667022)	95-96	Y (M30)	1	8667022
615.	5-C19	4.162	BEARING, REV INPUT CLU HSG THR (STATOR SHFT) (TO SEL WASHER) (AC-DELCO #8642066)	95-96	Y (M30)	1	8642066
616.	5-D4	4.169	WASHER, REV INPUT CLU HSG THR (TO STATOR SHF) (1.87-1.97MM) (4.158) (AC-DELCO #8642067)	95-96	Y (M30)	1	8642067
	5-D4	4.169	WASHER, REV INPUT CLU HSG THR (TO STATOR SHF) (2.04-2.14MM) (4.158) (AC-DELCO #8642068)	95-96	Y (M30)	1	8642068
	5-D4	4.169	WASHER, REV INPUT CLU HSG THR (TO STATOR SHF) (2.21-2.31MM) (4.158) (AC-DELCO #8642069)	95-96	Y (M30)	1	8642069

© 2000 GENERAL MOTORS SERVICE PARTS OPERATIONS-CHEVROLET-14Y

	5-D4	4.169	WASHER, REV INPUT CLU HSG THR (TO STATOR SHF) (2.36-2.40MM) (4.158) (AC-DELCO #8642070)	95-96	Y (M30)	1	8642070
	5-D4	4.169	WASHER, REV INPUT CLU HSG THR (TO STATOR SHF) (2.55-2.65MM) (4.158) (AC-DELCO #8642071)	95-96	Y (M30)	1	8642071
	5-D4	4.169	WASHER, REV INPUT CLU HSG THR (TO STATOR SHF) (2.72-2.82MM) (4.158) (AC-DELCO #8642072)	95-96	Y (M30)	1	8642072
	5-D4	4.169	WASHER, REV INPUT CLU HSG THR (TO STATOR SHF) (2.89-2.99MM) (4.158) (AC-DELCO #8642073)	95-96	Y (M30)	1	8642073
	5-D4	4.169	WASHER, REV INPUT CLU HSG THR (TO STATOR SHF) (3.06-3.16MM) (4.158) (AC-DELCO #8642074)	95-96	Y (M30)	1	8642074
617.	5-C16	4.123	VALVE, TURB SHF BALL CHK (PART OF 621) (AC-DELCO #8685839)	95-96	Y (M30)	1	8685839
618.	5-C16	4.123	SEAL, TURB SHF (O RING) (*KIT2, KIT3) (AC-DELCO #8630049)	95-96	Y (M30)	1	8630049
619.	5-C16	4.123	RING, INPUT SHF FLUID SEAL (TEFLON) (TEFLON) (*KIT2, KIT3) (AC-DELCO #8667035)	95-96	Y (M30)	4	8667035
620.	5-C16	4.123	VALVE, 3-4 CLU HSG BALL CHK (ALSO PART OF 621) (AC-DELCO #24208262)	95-96	Y (M30)	1	24208262
621.	5-C18	4.158	HOUSING, 3-4 CLU (W/INPUT SHF) (INCL 617, 620) (AC-DELCO #24200901)	95-96	Y (M30)	1	24200901
622.		N.S.	SEAL, O-RING INPUT TO FWD HSG (*KIT1, KIT2, KIT3)		.....		
623.	5-C27	4.166	PISTON, 3-4 CLU (AC-DELCO #24200290)	95-96	Y (M30)	1	24200290
625.	5-C28	4.167	RING, 3-4 CLU APPL (1 BAR) (*KIT7) (AC-DELCO #8685043) .	95-96	Y (M30)	1	8685043
626.	5-C28	4.167	SPRING, 3-4 CLU (10512 MM) (AC-DELCO #8685244)	95-96	Y (M30)	1	8685244
627.	5-C16	4.123	VALVE, FWD CLU HSG BALL CHK (ALSO PART OF 628) (SINGLE ORIFICE) (TALL & NARROW) (4.226) (AC-DELCO #8628732)	95-96	Y (M30)	2	8628732
628.	5-C28	4.169	HOUSING, FWD CLU (INCL 627) (INCLS HOUSINGS & VALVE) (AC-DELCO #24205298)	96	Y (M30)	1	24205298
	5-C28	4.169	HOUSING, FWD CLU (W/JULIAN DATE 95-092 & PRIOR) (INCL 627) (AC-DELCO #8654326) ...	95	Y (M30) (1ST DES)	1	8654326
	5-C28	4.169	HOUSING, FWD CLU (W/JULIAN DATE 95-093 & AFTER) (INCL 627) (INCLS HOUSINGS & VALVE) (AC-DELCO #24205298)	95	Y (M30) (2ND DES)	1	24205298

© 2000 GENERAL MOTORS SERVICE PARTS OPERATIONS-CHEVROLET-14Y

629.	5-C27	4.166	SEAL, FWD CLU PSTN OTR (*KIT1, KIT2, KIT3) (AC-DELCO #8686140)	95-96	Y (M30)	1	8686140
		N.S.	SEAL, FWD CLU PSTN INR (*KIT1, KIT2, KIT3)				
630.	5-C27	4.166	PISTON, FWD CLU (AC-DELCO #8683513)	95-96	Y (M30)	1	8683513
631.		N.S.	SEAL, OVERRUN CLU INR & OTR (*KIT1, KIT2, KIT3)				
632.	5-C27	4.166	PISTON, OVERRUN CLU (INCL 633) (AC-DELCO #8642148)	95-96	Y (M30)	1	8642148
633.		8.899	BALL, SPECIAL (ALSO PART OF 632) (AC-DELCO #7002117)	95-96		AR	7002117
634.	5-C20	4.163	SPRING, OVERRUN CLU (AC-DELCO #8677876)	95-96	Y (M30)	1	8677876
635.		8.934	RING, EXT SNAP FITS M38 DIA SHT .PL (*KIT4)	95-96		AR	11500692
636.	5-D3	4.176	SEAL, OUTPUT SHF (*KIT1, KIT2, KIT3) (AC-DELCO #8677268)	95-96	Y (M30)	1	8677268
637.	5-C19	4.159	BEARING, INPUT SUN GR THR (AC-DELCO #8642162)	95-96	Y (M30)	1	8642162
638.	5-D3	4.180	RING, OVERRUN CLU HUB RET (SNAP) (ALSO PART OF 642) (*KIT4) (AC-DELCO #8647083)	95-96	Y (M30)	1	8647083
639.		N.S.	HUB, OVERRUN CLU (PART OF 642)				
641.		N.S.	RETAINER, FWD CLU SPRAG INR (PART OF 642)				
642.	5-C26	4.164	CLUTCH, FWD RLR (INCL 638-9, 641, 643-4) (HIGH SPD, INCLS INPUT SUN GEAR) (AC-DELCO #24210960)	95-96	Y (M30)	1	24210960
	5-C26	4.164	CLUTCH, FWD RLR (INCL 638-9, 641, 643-4) (REG SPD, INCLS INPUT SUN GEAR) (AC-DELCO #24210961)	95-96	Y (M30)	1	24210961
643.		N.S.	RETAINER, (PART OF 642)				
644.		N.S.	RACE, FWD CLU SPRAG OTR (PART OF 642)				
645.	5-C20	4.163	PLATE, OVERRUN CLU (ILLUSTRATED AS 645A) (1.93-2.13 THK) (GROOVED) (*KIT9) (AC-DELCO #8673253)	95-96	Y (M30)	AR	8673253
	5-C20	4.163	PLATE, OVERRUN CLU (ILLUSTRATED AS 645B) (2.34MM THK) (FLAT STEEL) (AC-DELCO #8642154)	95-96	Y (M30)	2	8642154
646.	5-C20	4.163	PLATE, FWD CLU APPLY (AC-DELCO #8682866)	95-96	Y (M30)	1	8682866
648.	5-C20	4.163	PLATE, FWD CLU (WAVED) (AC-DELCO #8647058)	95-96	Y (M30)	1	8647058
649.	5-C20	4.163	PLATE, FWD CLU (ILLUSTRATED AS 649A) (FIBER) (*KIT3, KIT5, KIT8, KIT9) (AC-DELCO #8673254)	95-96	Y (M30)	5	8673254
	5-C20	4.163	PLATE, FWD CLU (ILLUSTRATED AS 649B) (STEEL) (*KIT3, KIT5, KIT8) (AC-DELCO #8654325)	95-96	Y (M30)	8	8654325

© 2000 GENERAL MOTORS SERVICE PARTS OPERATIONS-CHEVROLET-14Y

650.	5-C20	4.163	PLATE, FWD CLU BKG (6.92-7.07MM) (ID A) (AC-DELCO #8682867)	95-96	Y (M30)	1	8682867
	5-C20	4.163	PLATE, FWD CLU BKG (6.73-6.83MM) (ID B) (AC-DELCO #8682868)	95-96	Y (M30)	1	8682868
	5-C20	4.163	PLATE, FWD CLU BKG (5.74-5.80MM) (ID C) (AC-DELCO #8682869)	95-96	Y (M30)	1	8682869
	5-C20	4.163	PLATE, FWD CLU BKG (5.15-5.30MM) (ID D) (AC-DELCO #8682870)	95-96	Y (M30)	1	8682870
	5-C20	4.163	PLATE, FWD CLU BKG (4.56-4.71MM) (ID E) (AC-DELCO #8682871)	95-96	Y (M30)	1	8682871
651.	5-C20	4.163	RING, FWD CLU BKG PLT RET (AC-DELCO #8642170)	95-96	Y (M30)	1	8642170
653.	5-C20	4.163	PLATE, 3-4 CLU APPLY (*KIT7) (AC-DELCO #8685044)	95-96	Y (M30)	1	8685044
654.	5-C20	4.163	PLATE, 3-4 CLU (FIBER) (*KIT3, KIT7, KIT8) (AC-DELCO #24201132)	95-96	Y (M30)	6	24201132
	5-C20	4.163	PLATE, 3-4 CLU (2.71MM (STEEL) (5 LG SPACES EQUAL SPACED BETWEEN CLSTR OF SMALL TEETH) (*KIT3, KIT7) (AC-DELCO #8685045)	95-96	Y (M30)	1	8685045
655.	5-C20	4.163	PLATE, 3-4 CLU BKG (ID A) (*KIT7) (AC-DELCO #8685046)	95-96	Y (M30)	1	8685046
	5-C20	4.163	PLATE, 3-4 CLU BKG (ID B) (*KIT7) (AC-DELCO #8685047)	95-96	Y (M30)	1	8685047
	5-C20	4.163	PLATE, 3-4 CLU BKG (ID C) (*KIT7) (AC-DELCO #8685048)	95-96	Y (M30)	1	8685048
656.	5-C20	4.163	RING, 3-4 CLU BKG PLT RET (AC-DELCO #8663636)	95-96	Y (M30)	1	8663636
657.	5-D27	4.319	BUSHING, OUTPUT SHF (FRT) (ALSO PART OF 658) (FRT & RR) (4.159) (AC-DELCO #8642181)	95-96	Y (M30)	1	8642181
658.	5-C19	4.159	GEAR, INPUT SUN (INCL 657, 659) (AC-DELCO #8647093)	95-96	Y (M30)	1	8647093
659.	5-D27	4.319	BUSHING, OUTPUT SHF (REAR) (ALSO PART OF 658) (FRT & RR) (4.159) (AC-DELCO #8642181)	95-96	Y (M30)	1	8642181
661.	5-D3	4.176	RING, OUTPUT SHF RET (TO INPUT CARR) (*KIT2, KIT3, KIT4) (AC-DELCO #8654141)	95-96	Y (M30)	1	8654141
662.	5-D2	4.175	CARRIER, INPUT (COMPL) (AC-DELCO #24212177)	95-03	Y (M30)	1	24212177
663.	5-C19	4.159	BEARING, INT REACTION GR SUPT THR (AC-DELCO #8642191)	95-96	Y (M30)	1	8642191
664.	5-C18	4.158	GEAR, INPUT INTL (AC-DELCO #8663639)	95-96	Y (M30)	1	8663639
665.	5-D3	4.176	BUSHING, REACTION CARR SHF FRT (ALSO PART OF 666) (AC-DELCO #8642908)	95-96	Y (M30)	1	8642908
666.	5-D2	4.175	SHAFT, REACTION CARR (INCL 665, 667) (AC-DELCO #8681518)	95-96	Y (M30)	1	8681518

© 2000 GENERAL MOTORS SERVICE PARTS OPERATIONS-CHEVROLET-14Y

667.	5-D3	4.176	**BUSHING**, REACTION CARR SHF RR (ALSO PART OF 666) (AC-DELCO #8642907)	95-96	Y (M30)	1	8642907
668.	5-D3	4.176	**RING**, REACTION CARR SHF RET (TO INT GR) (AC-DELCO #8642201)	95-96	Y (M30)	1	8642201
669.	5-D3	4.176	**WASHER**, REACTION CARR SHF THR (AC-DELCO #8642202) ...	95-96	Y (M30)	1	8642202
670.	5-D2	4.175	**SHELL**, REACTION SUN GR (AC-DELCO #8603439)	95-96	Y (M30)	1	8603439
671.	5-C19	4.159	**RING**, REACTION SUN GR RET (AC-DELCO #8601553)	95-96	Y (M30)	1	8601553
672.	5-D3	4.176	**BUSHING**, REACTION SUN GR (ALSO PART OF 673) (AC-DELCO #8642909)	95-96	Y (M30)	1	8642909
673.	5-C19	4.159	**GEAR**, REACTION SUN (INCL 672) (INCLS BUSH & GEAR) (INDIVIDUAL COMPONENTS NOT SOLD SEPARATELY) (AC-DELCO #8642204)	95-96	Y (M30)	1	8642204
674.	5-C19	4.159	**WASHER**, REACTION SUN GR SHELL THR (4.176) (AC-DELCO #8642331)	95-96	Y (M30)	1	8642331
675.	5-D3	4.180	**RACE**, LOW CLU RLR INR (OVERRUN CLU) (PART OF 679) (*KIT6) (AC-DELCO #8673300) .	95-96	Y (M30)	1	8673300
676.	5-D3	4.180	**RING**, LOW & REV CLU SUPT RET (AC-DELCO #24200278) ..	95-96	Y (M30)	1	24200278
677.	5-D3	4.180	**RING**, LOW CLU RLR RET (O/RUN) (PART OF 679) (*KIT6) (AC-DELCO #6261051)	95-96	Y (M30)	1	6261051
678.	5-D3	4.180	**ROLLER**, LOW CLU (PART OF 679) (*KIT6) (AC-DELCO #7471008)	95-96	Y (M30)	1	7471008
679.	5-C27	4.166	**SUPPORT**, LOW & REV CLU (INCL 675, 677, 678) (*KIT6) (4.180) (AC-DELCO #8601727) .	95-96	Y (M30)	1	8601727
680.	5-D3	4.180	**SPRING**, LOW & REV CLU SUPT (RET) (AC-DELCO #6261415) ..	95-96	Y (M30)	1	6261415
681.	5-D2	4.175	**CARRIER**, REACTION (W/DEFLECTOR) (HI-SPEED) (INCL 697) (AC-DELCO #8654200)	95-96	Y (M30)	1	8654200
682.	5-C20	4.163	**PLATE**, LOW & REV CLU (WAVED) (ILLUSTRATED AS 682A) (*KIT3, KIT6) (AC-DELCO #8676362)	95-96	Y (M30)	1	8676362
	5-C20	4.163	**PLATE**, LOW & REV CLU ((ID 1, 5, 9)) (ILLUSTRATED AS 682B) (2.344MM) (SELECTIVE) (*KIT3, KIT6) (AC-DELCO #8680441) ...	95-96	Y (M30)	1	8680441
	5-C20	4.163	**PLATE**, LOW & REV CLU (ID BLANK) (ILLUSTRATED AS 682B) (1.829MM) (HAS HOLES IN TURB PLATES) (STEEL) (*KIT3, KIT6) (AC-DELCO #24205268)	95-96	Y (M30)	4	24205268

© 2000 GENERAL MOTORS SERVICE PARTS OPERATIONS-CHEVROLET-14Y

	5-C20	4.163	PLATE, LOW & REV CLU (ID 4, 8, 0) (ILLUSTRATED AS 682B) (1.314MM) (SELECTIVE) (*KIT3, KIT6) (AC-DELCO #8680440) ...	95-96	Y (M30)	1	8680440
	5-C20	4.163	PLATE, LOW & REV CLU (ID 4, 8, 0) (ILLUSTRATED AS 682B) (2.344MM) (HAS HOLES IN TURB PLATES) (*KIT3, KIT6) (AC-DELCO #24205270)	95-96	Y (M30)	1	24205270
	5-C20	4.163	PLATE, LOW & REV CLU (FLAT FACED) (ILLUSTRATED AS 682C) (*KIT3, KIT6) (AC-DELCO #8684089)	95-96	Y (M30)	5	8684089
	5-C20	4.163	PLATE, LOW & REV CLU (ILLUSTRATED AS 682D) (1.829MM) (HAS HOLES IN TURB PLATES) (STEEL) (*KIT3, KIT6) (AC-DELCO #24205268)	95-96	Y (M30)	1	24205268
683.	5-C19	4.159	BEARING, REACTION CARR THR (4.176) (AC-DELCO #8642215)	95-96	Y (M30)	1	8642215
	5-C19	4.159	BEARING, DIFF CARR SUN GR THR (AC-DELCO #8646254) ...	95-96	Y (M30)	1	8646254
684.	5-C18	4.158	GEAR, REACTION INTL (AC-DELCO #8667055)	95-96	Y (M30)	1	8667055
685.	5-D2	4.175	SUPPORT, REACTION INTL GR (AC-DELCO #8681491)	95-96	Y (M30)	1	8681491
686.	5-D3	4.176	RING, INT REACTION GR SUPT RET (AC-DELCO #8642220) ...	95-96	Y (M30)	1	8642220
687.	5-D2	4.175	SHAFT, OUTPUT (AC-DELCO #8685754)	95-96	Y (M30)	1	8685754
690.		N.S.	SLEEVE, OUTPUT SHF (NOT REQD)		.....		
691.		N.S.	SEAL, OUTPUT SHF (NOT REQ'D) (*KIT2, KIT3)		.....		
692.	5-C19	4.159	BEARING, REACTION CARR THR (AC-DELCO #8642191) ...	95-96	Y (M30)	1	8642191
693.	5-C26	4.164	RING, LOW & REV CLU SPR RET RET (*KIT4, KIT6) (4.159) (AC-DELCO #8647337)	95-96	Y (M30)	1	8647337
694.	5-C26	4.164	SPRING, LOW & REV CLU (AC-DELCO #8642227)	95-96	Y (M30)	1	8642227
695.	5-C27	4.166	PISTON, LOW & REV CLU (*KIT6) (AC-DELCO #8685549) .	95-96	Y (M30)	1	8685549
696.	5-D4	4.189	SEAL KIT, LOW & REV CLU (INCLS INR, OTR & INTER SEALS) (*KIT2, KIT3, KIT6) (4.166) (AC-DELCO #8648987) .	95-96	Y (M30)	1	8648987
697.		N.S.	DEFLECTOR, OIL (PART OF 681)		.....		
698.	5-D7	4.224	ORIFICE, LUB FLUID (4.3MM DIA) (AC-DELCO #8663707) ...	95-96	Y (M30)	2	8663707
699.	5-E13	4.343	WHEEL, VEH SPD SEN RELUCTOR (AC-DELCO #24202711)	95-96	Y (M30)	1	24202711

© 2000 GENERAL MOTORS SERVICE PARTS OPERATIONS-CHEVROLET-14Y

SERVICE KITS

1.	5-C27	4.166	SEAL KIT, 3-4 CLU PSTN (FOA) (INCL 622, 624, 629, 631, 636) (AC-DELCO #8642910)	95-96	Y (M30)	1	8642910
2.	5-C10	4.005	GASKET KIT, A/TRNS SERV (INCL 608, 610-10, 622, 624, 629, 631, 636, 661, 691, 696) (W/O PLATES OR PISTONS) (AC-DELCO #24201803)	95-96	Y (M30)	1	24201803
3.		N.S.	TRANSMISSION KIT, AUTO (SERV OVERHAUL W/PLT, GSKT, SEAL) (USE 24201803 GASKET KIT T/W 24201808 PLATE KIT T/W 24204496 PISTON KIT.)		.....		
4.	5-C10	4.005	RING KIT, RET (INCL 610, 635, 636, 661, 693) (AC-DELCO #8642910)	95-96	Y (M30)	1	8642910
5.	5-C20	4.163	PLATE KIT, FWD CLU (INCL 649, 702) (INCLS INST SHEET & PLATES) (AC-DELCO #8647991)	95-96	Y (M30)	AR	8647991
6.	5-C20	4.163	PLATE KIT, LOW & REV CLU (W/SUPT) (W/PSTN) (INCL 675, 677-9, 682, 693, 695-6) (STEEL PLATES) (AC-DELCO #8687996)	95-96	Y (M30)	1	8687996
7.	5-C20	4.163	PLATE KIT, 3-4 CLU (INCL 600, 625, 653, 654, 655B) (AC-DELCO #24209032)	95-96	Y (M30)	1	24209032
8.	5-C20	4.163	PLATE KIT, CLU (INCL 612A, 645A, 649, 654A, 682C) (COMPL KIT, INCLUDING 3-4) (AC-DELCO #24209562)	95-96	Y (M30)	1	24209562

RPO DEFINITIONS

M30 – TRANSMISSION,AUTOMATIC 4 SPEED,4L60E,ELECTRONIC

© 2000 GENERAL MOTORS SERVICE PARTS OPERATIONS-CHEVROLET-14Y

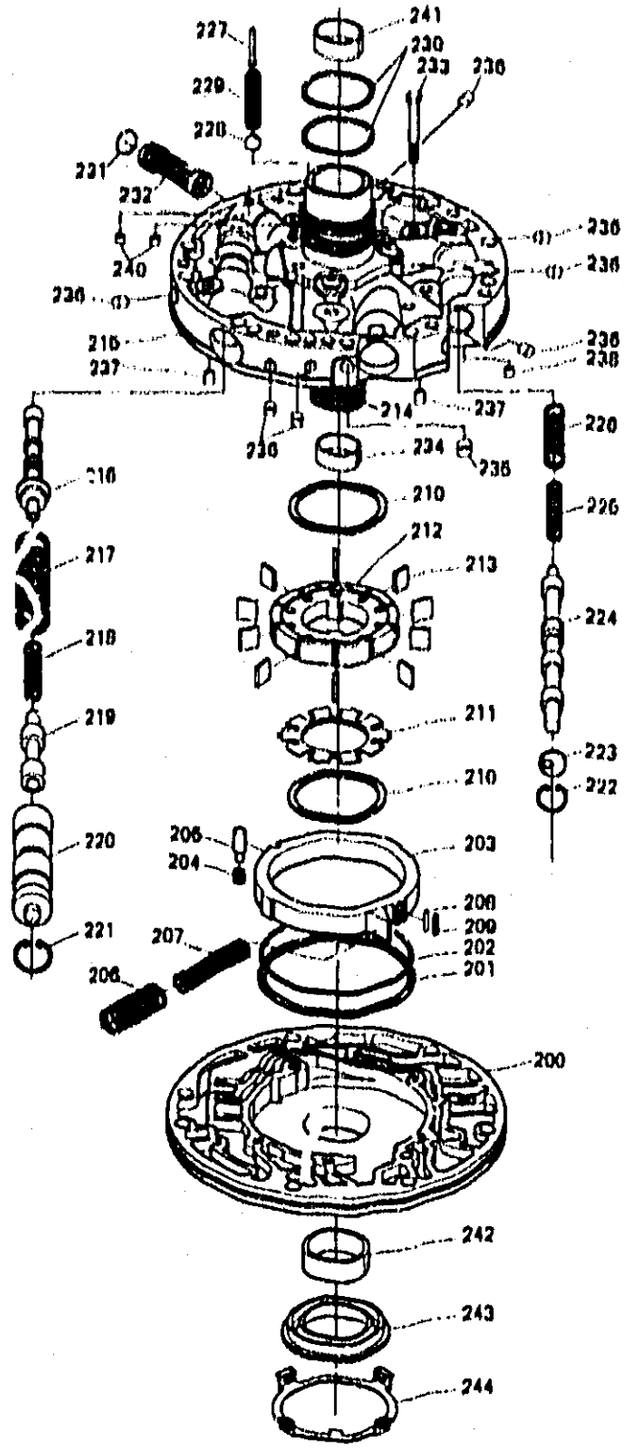

GM04-470Y

1995-1996 Y AUTOMATIC TRANSMISSION (M30) PART 4 (4L60E) OIL PUMP

200.	5-D7	4.224	BODY KIT, A/TRNS FLUID PUMP (INCL 201 THRU 213, 242 THRU 244) (AC-DELCO #24204797) ..	95-96 Y (M30)	1	24204797
201.		N.S.	RING, A/TRNS FLUID PUMP SLIDE FLUID SEAL (ALSO PART OF 200, 212) (*KIT1, KIT2, KIT3) .	.....		

© 2000 GENERAL MOTORS SERVICE PARTS OPERATIONS-CHEVROLET-14Y

202.		N.S.	SEAL, A/TRNS O/PMP SLIDE (O RING) (ALSO PART OF 200, 212) (*KIT1, KIT2, KIT3)		.....		
203.	5-D7	4.224	SLIDE, A/TRNS FLUID PUMP (ALSO PART OF 200) (17.955 MM) (AC-DELCO #8634081) ...	95-96	Y (M30)	1	8634081
	5-D7	4.224	SLIDE, A/TRNS FLUID PUMP (ALSO PART OF 200) (17.968 MM) (AC-DELCO #8634082) ...	95-96	Y (M30)	1	8634082
	5-D7	4.224	SLIDE, A/TRNS FLUID PUMP (ALSO PART OF 200) (17.981 MM) (AC-DELCO #8634083) ...	95-96	Y (M30)	1	8634083
	5-D7	4.224	SLIDE, A/TRNS FLUID PUMP (ALSO PART OF 200) (17.987 MM) (AC-DELCO #8634084) ...	95-96	Y (M30)	1	8634084
	5-D7	4.224	SLIDE, A/TRNS FLUID PUMP (ALSO PART OF 200) (18.007 MM) (AC-DELCO #8634085) ...	95-96	Y (M30)	1	8634085
	5-D7	4.224	SLIDE, A/TRNS FLUID PUMP (ALSO PART OF 200) (17.961 MM) (AC-DELCO #24205406) ..	96	Y (M30)	1	24205406
	5-D7	4.224	SLIDE, A/TRNS FLUID PUMP (ALSO PART OF 200) (17.974 MM) (AC-DELCO #24205407) ..	96	Y (M30)	1	24205407
	5-D7	4.224	SLIDE, A/TRNS FLUID PUMP (ALSO PART OF 200) (17.987 MM) (AC-DELCO #24205408) ..	96	Y (M30)	1	24205408
	5-D7	4.224	SLIDE, A/TRNS FLUID PUMP (ALSO PART OF 200) (18.000 MM) (AC-DELCO #24205409) ..	96	Y (M30)	1	24205409
204.	5-D10	4.226	SPRING, A/TRNS FLUID PUMP SLIDE PIV PIN (ALSO PART OF 200) (AC-DELCO #8634098) ...	95-96	Y (M30)	1	8634098
205.	5-D10	4.226	PIN, A/TRNS FLUID PUMP SLIDE PIV (ALSO PART OF 200) (AC-DELCO #8634097)	95-96	Y (M30)	1	8634097
206.	5-D10	4.226	SPRING, A/TRNS FLUID PUMP SLIDE OTR (AC-DELCO #8639563)	95-96	Y (M30)	1	8639563
207.	5-D10	4.226	SPRING, A/TRNS FLUID PUMP SLIDE INR (ALSO PART OF 200) (AC-DELCO #8639562)	95-96	Y (M30)	1	8639562
208.		N.S.	SUPPORT, A/TRNS FLUID PUMP SLIDE SEAL (PART OF 200, 212) (*KIT1, KIT2, KIT3)		.....		
209.		N.S.	SEAL, A/TRNS FLUID PUMP SLIDE (PART OF 200, 212) (*KIT1, KIT2, KIT3)		.....		
210.	5-D10	4.226	RING, A/TRNS FLUID PUMP VANE (ALSO PART OF 200) (AC-DELCO #24201144)	95-96	Y (M30)	2	24201144
211.	5-D10	4.226	GUIDE, A/TRNS FLUID PUMP ROT (ALSO PART OF 200, 212) (10 VANE) (ALSO PART OF ROTOR KITS) (AC-DELCO #12337830)	95	Y (M30)	1	12337830

© 2000 GENERAL MOTORS SERVICE PARTS OPERATIONS-CHEVROLET-14Y

	5-D10	4.226	GUIDE, A/TRNS FLUID PUMP ROT (ALSO PART OF 200, 212) (13 VANE) (AC-DELCO #24205410)	96	Y (M30)	1	24205410
212.	5-D6	4.210	ROTOR, A/TRNS FLUID PUMP (INCL 201-2, 208-9, 211, 213) (17.966MM) (W/GUIDE, VANES & SEALS) (4.224) (AC-DELCO #8649951)	95-96	Y (M30)	1	8649951
	5-D6	4.210	ROTOR, A/TRNS FLUID PUMP (INCL 201-2, 208-9, 211, 213) (17.969MM) (W/GDE, VANES & SEALS) (4.224) (AC-DELCO #8649952)	95-96	Y (M30)	1	8649952
	5-D6	4.210	ROTOR, A/TRNS FLUID PUMP (INCL 201-2 208-9, 211, 213) (17.981MM) (W/GDE, VANES & SEALS) (4.224) (AC-DELCO #8649953)	95-96	Y (M30)	1	8649953
	5-D6	4.210	ROTOR, A/TRNS FLUID PUMP (INCL 201-2, 208-9, 211, 213) (17.994MM) (W/GDE, VANES & SEALS) (4.224) (AC-DELCO #8649954)	95-96	Y (M30)	1	8649954
	5-D6	4.210	ROTOR, A/TRNS FLUID PUMP (INCL 201-2, 208-9, 211, 213) (18.007MM) (W/GDE, VANES & SEALS) (4.224) (AC-DELCO #8649955)	95-96	Y (M30)	1	8649955
213.	5-D10	4.226	VANE, A/TRNS FLUID PUMP (ALSO PART OF 200, 212) (AC-DELCO #8631280)	95-96	Y	10	8631280
214.		N.S.	SHAFT, STATOR (PART OF 215) .		.....		
215.	5-D7	4.224	COVER, A/TRNS FLUID PUMP (REMAN) (INCL 214, 216 THRU 227, 231, 232, 234 THRU 240.) (AC-DELCO #24213019)	95-96	Y (M30)	1	24213019
216.	5-D17	4.262	VALVE, PRESS REG (PART OF 215) (4.216) (AC-DELCO #8684049)	95-96	Y (M30)	1	8684049
217.	5-D17	4.262	SPRING, PRESS REG VLV OTR (PART OF 215) (4.216) (AC-DELCO #8680682)	95-96	Y (M30)	1	8680682
218.	5-D17	4.262	SPRING, PRESS REG VLV INR (PART OF 215) (AC-DELCO #8680684)	95-96	Y (M30)	1	8680684
219.		N.S.	VALVE, REV BOOST (PART OF 215) (*KIT4)		.....		
220.		N.S.	SLEEVE, REV BOOST VLV (PART OF 215) (*KIT4)		.. ..		
221.	5-D18	4.265	RING, T/V BOOST VLV BUSH RET (PART OF 215) (*KIT5) (4.216) (AC-DELCO #11503348)	95-96	Y (M30)	1	11503348
222.		8.934	RING, TYPE TA INT RET .000X.68X.037PL (PART OF 215) (*KIT5) (AC-DELCO #274267) ..	95-96	.....	AR	274267
223.	5-D17	4.262	STOP, TCC VLV (PART OF 215) (4.216) (AC-DELCO #8634705) .	95-96	Y (M30)	1	8634705

© 2000 GENERAL MOTORS SERVICE PARTS OPERATIONS-CHEVROLET-14Y

224.	5-D10	4.265	VALVE, TCC (PART OF 215) (AC-DELCO #24205509)	95-96	Y (M30)	1	24205509
225.	5-D11	4.265	SPRING, TCC VLV INR (PART OF 215) (4.210) (AC-DELCO #24201610)	95-96	Y (M30)	1	24201610
226.	5-D10	4.265	SPRING, TCC VLV OTR (PART OF 215) (4.210) (AC-DELCO #24201611)	95-96	Y (M30)	1	24201611
227.	5-D17	4.262	RIVET, PRESS RLF BALL VLV SPR (PART OF 215) (4.210) (AC-DELCO #8642619)	95-96	Y (M30)	1	8642619
228.		0.699	BALL, 3/8 STEEL (CLU PRESS RLF VLV) (AC-DELCO #7026284)	95-96	.....	AR	7026284
229.	5-D10	4.265	SPRING, PRESS RLF BALL VLV (AC-DELCO #8634106)	95-96	Y (M30)	1	8634106
230.	5-D10	4.226	RING, REV INPUT CLU HSG FLUID SEAL (*KIT1, KIT2) (AC-DELCO #8681292)	95-96	Y (M30)	2	8681292
231.	5-D7	4.224	SEAL, A/TRNS FLUID PUMP CVR SCRN (ALSO PART OF 215, 232) (AC-DELCO #8642581)	95-96	Y (M30)	1	8642581
232.	5-D7	4.224	SCREEN, A/TRNS FLUID PUMP CVR (W/SEAL) (INCL 231, PART OF 215) (AC-DELCO #8642912)	95-96	Y (M30)	1	8642912
233.		0.900	BOLT, HEX, 8X1.25X40, 33.2 THD, GM 500M, 10.9, PC, MACH (AC-DELCO #11500921)	95-96	.....	AR	11500921
234.	5-D10	4.226	BUSHING, INPUT SHF FRT (PART OF 215) (AC-DELCO #8647954)	95-96	Y (M30)	1	8647954
235.		N.S.	PLUG, A/TRNS FLUID PUMP CVR (REQ'D ON TRANS W/O AUX VLV BODY)		.....		
236.	5-D7	4.224	PLUG, A/TRNS FLUID PUMP CVR (PART OF 215) (6.80MM DIA) (AC-DELCO #8623866)	95-96	Y (M30)	8	8623866
237.	5-C16	4.123	VALVE, FWD CLU HSG BALL CHK (PART OF 215) (SINGLE ORIFICE) (TALL & NARROW) (4.226) (AC-DELCO #8628732) .	95-96	Y (M30)	1	8628732
238.	5-D7	4.224	ORIFICE, TCC SIG (PART OF 215) (4.85MM DIA) (AC-DELCO #8634284)	95-96	Y (M30)	1	8634284
240.	5-D7	4.224	ORIFICE, A/TRNS FLUID PUMP AIR BL (PART OF 215) (AC-DELCO #24203787)	95-96	Y (M30)	1	24203787
	5-D7	4.224	ORIFICE, 3-4 CLU BL (AC-DELCO #24203787)	95-96	Y (M30)	1	24203787
241.	5-D10	4.226	BUSHING, INPUT SHF RR (AC-DELCO #8642904)	95-96	Y (M30)	1	8642904
242.	5-C14	4.115	BUSHING, T/CV (ALSO PART OF 200) (AC-DELCO #24206030) ..	95-96	Y (M30)	1	24206030
243.	5-D10	4.226	SEAL, T/CV FLUID (ALSO PART OF 200) (AC-DELCO #24202535)	95-96	Y (M30)	1	24202535
244.	5-D10	4.226	RETAINER, T/CV FLUID SEAL (ALSO PART OF 200) (*KIT1, KIT2) (AC-DELCO #8654491) ...	95-96	Y (M30)	1	8654491

© 2000 GENERAL MOTORS SERVICE PARTS OPERATIONS-CHEVROLET-14Y

SERVICE KITS

1.	5-C10	4.005	GASKET KIT, A/TRNS SLDV (INCL 201, 202, 208-9, 230, 244) (W/O PLATES OR PISTONS) (AC-DELCO #24201603)	95-96	Y (M30)	1	24201603
2.		N.S.	TRANSMISSION KIT, AUTO (SERV OVERHAUL W/PLT, GSKT, SEAL) (USE 24201603 GASKET KIT T/W 24209562 PLATE KIT T/W 24204496 PISTON KIT.)	95-96	.....		
3.	5-D10	4.226	SEAL KIT, A/TRNS FLUID PUMP SLIDE (INCL 201-2, 208-9) (INCLS RING, SEALS&SUPT) (AC-DELCO #8634906)	95-96	Y (M30)	1	8634906
4.	5-D18	4.265	VALVE KIT, REV BOOST (INCL 219, 220) (AC-DELCO #24200372)	95-96	Y (M30)	1	24200372
5.	5-C10	4.005	RING KIT, RET (INCL 221, 222) (AC-DELCO #8642910)	95-96	Y (M30)	1	8642910

RPO DEFINITIONS
M30 - TRANSMISSION,AUTOMATIC 4 SPEED,4L60E,ELECTRONIC

© 2000 GENERAL MOTORS SERVICE PARTS OPERATIONS-CHEVROLET-14Y

MICROFICHE INDEX

GROUP 4.000

FICHE 5 OF 11

GROUP	DESCRIPTION	STARTING GRID LOCATION PARTS	ILLUSTRATIONS
–	GENERAL INFORMATION	1–A2	1–G2
–	ALPHABETICAL INDEX	1–B13	N.A.
4.000	4–SPEED TRANSMISSION	5–A2	5–F2
4.000	6–SPEED TRANSMISSION	5–B2	5–G2
4.000	AUTOMATIC TRANSMISSION	5–C2	5–H2
–	OUT OF FICHE CALLS	N.A.	5–M23

5–L1

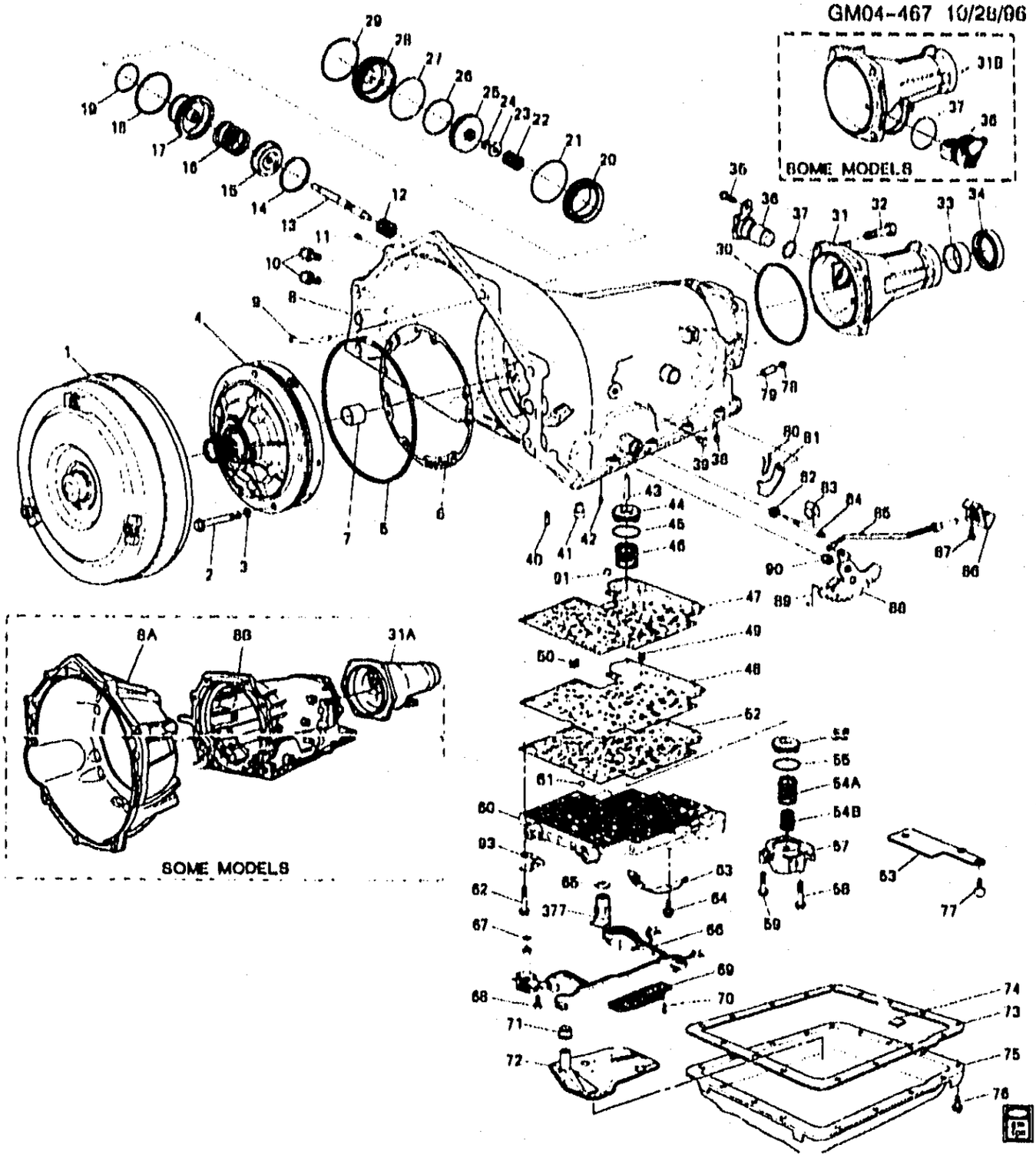

GM04-467Y

1996 Y AUTOMATIC TRANSMISSION (M30) PART 1 (4L60E) CASE & RELATED PARTS/PARK LOCK LINKAGE

1.	5-C14	4.115	CONVERTER, TORQ (REMAN) (DHHG)	96 Y (M30)	1 24204668
	5-C14	4.115	CONVERTER, TORQ (REMAN) (DHPG)	96 Y (M30)	1 24208649

© 2000 GENERAL MOTORS SERVICE PARTS OPERATIONS - CHEVROLET - 14Y

2.	5-D10	4.226	BOLT, A/TRNS FLUID PUMP (M8X1.25X60) (M8X1.25X60) (W/ SEAL) (*KIT1, KIT2) (AC-DELCO #8673596)	96	Y (M30)	7	8673596
3.	5-D10	4.226	SEAL, A/TRNS FLUID PUMP BOLT (PUMP TO CASE BOLT) (AC-DELCO #12337996)	96	Y (M30)	7	12337996
4.		N.S.	PUMP, A/TRNS OIL (SEE PUMP ILLUSTRATION)				
5.	5-D10	4.226	SEAL, A/TRNS FLUID PUMP (*KIT1, KIT2) (AC-DELCO #24210605)	96	Y (M30)	1	24210605
6.	5-D10	4.226	GASKET, A/TRNS FLUID PUMP (*KIT1, KIT2) (AC-DELCO #12337931)	96	Y (M30)	1	12337931
7.	5-N22	5.556	BUSHING, PROP SHF FRT SLIP YOKE (ALSO PART OF 8) (INSIDE DIA 1.506-1.509) (PART OF TRANS CASE) (4.104) (AC-DELCO #8680027)	96	Y (M30)	1	8680027
8.	5-C14	4.103	CASE KIT, A/TRNS (INCL 7) (AC-DELCO #24200929)	96	Y (M30)	1	24200929
9.	5-C14	4.104	PIPE, A/TRNS VENT	96	Y (M30)	1	24202440
10.	5-C17	4.128	FITTING, TRANS FLUID CLR PIPE (TO CASE) (5/16) (AC-DELCO #8637742)	96	Y (M30)	2	8637742
11.	5-C14	4.105	ORIFICE, FWD CLU FEED (6.4MM DIA) (NO DIMPLE) (4.104) (AC-DELCO #8628864)	96	Y (M30)	1	8628864
12.	5-D15	4.233	SPRING, 2-4 BAND SERVO RTN (ORANGE) (AC-DELCO #8642273)	96	Y (M30)	1	8642273
13.	5-D16	4.246	PIN, 2-4 BAND SERVO PSTN (I.D BY 1 GROOVE IN TAPPERED POINT) (4.228) (AC-DELCO #8680499)	96	Y (M30)	1	8680499
	5-D16	4.246	PIN, 2-4 BAND SERVO PSTN (I.D BY 2 GROOVES IN TAPPERED POINT) (4.228) (AC-DELCO #8680500)	96	Y (M30)	1	8680500
	5-D16	4.246	PIN, 2-4 BAND SERVO PSTN (I.D BY NO GROOVES IN TAPPERED POINT) (4.228) (AC-DELCO #8680501)	96	Y (M30)	1	8680501
14.	5-D3	4.176	RING, 2-4 BAND SERVO 2ND APPL PSTN RET (AC-DELCO #8642105)	96	Y (M30)	1	8642105
15.	5-D15	4.233	RETAINER, 2-4 BAND SERVO CUSH SPR (AC-DELCO #8642416)	96	Y (M30)	1	8642416
16.	5-D15	4.233	SPRING, 2-4 BAND SERVO PSTN CUSH (PINK) (AC-DELCO #8642539)	96	Y (M30)	1	8642539
17.		N.S.	PISTON, 2-4 BAND SERVO 2ND APPLY (*KIT8)				
18.		N.S.	RING, LOW & REV ACCUM PSTN OTR FLUID SEAL (*KIT1, KIT2, KIT5, KIT8)				

© 2000 GENERAL MOTORS SERVICE PARTS OPERATIONS-CHEVROLET-14Y

19.		N.S.	RING, LOW & REV ACCUM PSTN INR FLUID SEAL (*KIT1, KIT2, KIT5, KIT8)				
20.	5-D12	4.228	HOUSING, 2-4 BAND SERVO 2ND APPL (AC-DELCO #8673039)	96	Y (M30)	1	8673039
21.	5-D14	4.229	SEAL, 2-4 BAND SERVO 2ND APPL PSTN HSG (O RING) (*KIT1, KIT2) (AC-DELCO #8642112)	96	Y (M30)	1	8642112
22.	5-D16	4.246	SPRING, 2-4 BAND SERVO PSTN (AC-DELCO #8642106)	96	Y (M30)	1	8642106
23.	5-D15	4.233	WASHER, 2-4 BAND SERVO PIN (3/8) (AC-DELCO #8642107)	96	Y (M30)	1	8642107
24.		8.934	RETAINER, SNAP RING BOWED EXT .FITS SHFT 7/16 PL (OUTPUT SHF) (AC-DELCO #9415640)	96		AR	9415640
25.	5-D12	4.228	PISTON, 2-4 BAND SERVO 4TH APPLY (W/RING) (AC-DELCO #8642478)	96	Y (M30)	1	8642478
26.	5-D14	4.229	RING, 2-4 BAND SERVO PSTN FLUID SEAL (*KIT1, KIT2) (AC-DELCO #8642480)	96	Y (M30)	1	8642480
27.	5-D14	4.229	SEAL, 2-4 BAND SERVO CVR (O RING) (ALSO PART OF 28) (*KIT1, KIT2) (AC-DELCO #8647351)	96	Y (M30)	1	8647351
28.	5-D 2	4.228	COVER, 2-4 SERVO (W/SEAL) (INCL 27) (INCLS RING) (4.241) (AC-DELCO #8642979)	96	Y (M30)	1	8642979
29.	5-D12	4.228	RING, 2-4 BAND SERVO CVR RET (AC-DELCO #8642124)	96	Y (M30)	1	8642124
30.	5-D26	4.318	SEAL, A/TRNS CASE EXTN (*KIT1, KIT2) (AC-DELCO #1358899)	96	Y (M30)	1	1358899
31.	5-D26	4.317	EXTENSION, A/TRNS CASE (AC-DELCO #24201517)	96	Y (M30)	1	24201517
32.		8.900	BOLT (EXTN TO CASE)	96		AR	11503428
33.	5-D27	4.319	BUSHING, TRANS EXTN (INSIDE DIAM 1.506- 1.504 (PT OF TRANS EXT) (5.556) (AC-DELCO #24207915)	96	Y (M30)	1	24207915
34.	5-D26	4.318	SEAL, PROP SHF FRT SLIP YOKE OIL (*KIT1, KIT2) (AC-DELCO #24201470)	96	Y (M30)	1	24201470
35.		4.329	BOLT, VEH SPD SEN	96	Y (M30)	1	8655314
36.	5-D27	4.329	SENSOR, VEH SPD (INCL 37) (AC-DELCO #213-194)	96	Y (M30)	1	8673299
37.	5-E13	4.338	SEAL, VEH SPD SEN (O RING) (PART OF 36) (TEFLON) (AC-DELCO #15552872)	96	Y (M30)	1	15552872
38.	5-C14	4.105	ORIFICE, 3RD ACCUM BL (6.4MM DIA) (NO DIMPLE) (4.104) (AC-DELCO #8628864)	96	Y (M30)	1	8628864
39.		8.971	PLUG, (OIL PRESS TEST HOLE) (AC-DELCO #444613)	96		1	444613

© 2000 GENERAL MOTORS SERVICE PARTS OPERATIONS-CHEVROLET-14Y

40.	5-D12	4.228	VALVE, 3RD ACCUM BALL CHK (AC-DELCO #8634400)	96	Y (M30)	1	8634400
41.	5-D14	4.229	PIN, 2-4 BAND ANC (AC-DELCO #8654581)	96	Y (M30)	1	8654581
42.	5-C27	4.166	RETAINER, LOW & REV CLU PSTN (DOUBLE ORIFICE) (W/BALL) (4.160) (AC-DELCO #8663890)	96	Y (M30)	1	8663890
43.	5-D12	4.228	PIN, 3-4 ACCUM PSTN (4.226) (AC-DELCO #8628273)	96	Y (M30)	1	8628273
44.	5-D12	4.228	PISTON, 3-4 ACCUM (*KIT6) (AC-DELCO #8663600)	96	Y (M30)	1	8663600
45.	5-D14	4.229	RING, 3-4 ACCUM PSTN FLUID SEAL (*KIT1, KIT2, KIT6) (AC-DELCO #24206509)	96	Y (M30)	1	24206509
46.	5-D15	4.233	SPRING, 3-4 ACCUM PSTN (LT BLUE) (AC-DELCO #8639074) ..	96	Y (M30)	1	8639074
47.	5-D18	4.265	GASKET, C/VLV BODY (TO CASE) (*KIT1, KIT2, KIT4) (AC-DELCO #8681603)	96	Y (M30)	1	8681603
48.	5-D18	4.265	PLATE, C/VLV BODY SPCR (AC-DELCO #24203953)	96	Y (M30)	1	24203953
49.		4.265	FILTER, SHFT SOL VLV FLUID (*KIT10)	96	.....		
50.	5-D18	4.265	FILTER, PRESS CONT SOL VLV FLUID (*KIT10) (AC-DELCO #8683768)	96	Y (M30)	1	8683768
52.	5-D18	4.265	GASKET, C/VLV BODY SPCR PLT (*KIT1, KIT2, KIT4) (AC-DELCO #8681606)	96	Y (M30)	1	8681606
53.	5-D6	4.197	COVER, FLUID PASG (4.265) (AC-DELCO #8682792)	96	Y (M30)	1	8682792
54.	5-D15	4.233	SPRING, 1-2 ACCUM PSTN (DK GREEN) (OTR) (*KIT7) (AC-DELCO #8654554)	96	Y (M30)	1	8654554
	5-D15	4.233	SPRING, 1-2 ACCUM PSTN (ORANGE) (INNER) (*KIT7) (AC-DELCO #8685655)	96	Y (M30)	1	8685655
55.	5-D14	4.229	RING, 1-2 ACCUM PSTN FLUID SEAL (*KIT1, KIT2, KIT6, KIT7) (AC-DELCO #24206509)	96	Y (M30)	1	24206509
56.		N.S.	PISTON, 1-2 ACCUM (*KIT1, KIT2, KIT6, KIT7)		.....		
57.	5-D12	4.228	COVER, 1-2 ACCUM (INCLS PIN) (*KIT7) (AC-DELCO #8686084)	96	Y (M30)	1	868 034
	5-D12	4.228	PIN, 1-2 ACCUM PSTN (PART OF COVER) (*KIT7) (4.226) (AC-DELCO #8684426)	96	Y (M30)	1	8684426
58.		8.900	BOLT, HFH M6X1X65 9.8 PL	96	.....	AR	11506078
59.		8.900	BOLT, HEX M6X1X35 10.9 PC (ACCUM CVR TO CASE) (AC-DELCO #11503870)	96	.....	AR	11503870
		8.929	WASHER, FLAT 5/16X5/8X1/16 ZP HARD	96	.....	AR	2436162
60.	5-D18	4 265	VALVE KIT, CONT (W/BODY & VLV) (AC-DELCO #24203264) ..	96	Y (M30)	1	24203264

© 2000 GENERAL MOTORS SERVICE PARTS OPERATIONS-CHEVROLET-14Y

							GM04-467Y
61.		8.899	BALL, GRADE 2, STD DIA 1/4 (2), CHROME STL (AC-DELCO #104918)	96		AR	104918
62.	5-D18	4.265	BOLT, VLV BODY (M6X1X54.4) (AC-DELCO #8680741)	96	Y (M30)	3	[illegible]741
	5-D18	4.265	BOLT, VLV BODY (M6X1X47.5) (AC-DELCO #8680742)	96	Y (M30)	[illegible]	[illegible]0742
63.	5-D24	4.275	DETENT, MAN SHFT (CPS) (AC-DELCO #8642247)	96	Y (M30)	1	8642247
	5-D25	4.293	PIN, MAN SHFT DTNT RLR (4.311) (AC-DELCO #6261174)	96	Y (M30)	1	6261174
64.		8.900	BOLT-HEX, M8X1.25X20, 10.88 THD, GM500 (10.9), PZOR, MACH (DTNT SPR TO VB) (AC-DELCO #11500687)	96		AR	11500687
65.		N.S.	SEAL, WRG HARN PASS-THRU CONN O-RING (PART OF 66)				
66.	5-M24	2.480	HARNESS, A/TRNS WRG (INCL 65, 67) (INCLS TCC SOL VLV) (AC-DELCO #15320476)	96	Y (M30)	1	15320476
	5-C15	4.122	HARNESS, A/TRNS WRG (INCL 65, 67) (INCLS TCC SOL VLV) (2.480) (AC-DELCO #15320476)	96	Y (M30)	1	15320476
67.		N.S.	SEAL, TCC SOL VLV (O RING) (PART OF 66)				
68.		8.900	BOLT, HEX M6X1X35 10.9 PC (TCC SOL VLV) (AC-DELCO #11503870)	96		AR	11503870
69.	5-D18	4.265	SWITCH, A/TRNS FLUID PRESS MAN VLV POSN (W/O PLASTIC COVER) (AC-DELCO #8686149)	96	Y (M30)	1	8686149
70.	5-D18	4.265	BOLT, A/TRNS FLUID PRESS MAN VLV POSN SW (M6X1X17.7) (AC-DELCO #8680764)	96	Y (M30)	1	8680764
71.		N.S.	SEAL, A/TRNS FLUID FLTR (*KIT3)				
72.		N.S.	FILTER, A/TRNS FLUID (*KIT1, KIT2, KIT3)				
73.	5-D6	4.196	GASKET, A/TRNS FLUID PAN (ALSO PART OF 75) (*KIT1, KIT2, KIT3) (AC-DELCO #8654799)	96	Y (M30)	1	8654799
74.	5-D5	4.195	MAGNET, A/TRNS FLUID PAN (ALSO PART OF 75) (4.105) (AC-DELCO #8665830)	96	Y (M30)	1	8665830
75.	5-D5	4.195	PAN KIT, A/TRNS FLUID (INCL 73, 74) (SHALLOW W/PAN, GSKT & MAGNET) (AC-DELCO #8663948)	96	Y (M30)	1	8663948
76.	5-D6	4.196	BOLT, A/TRNS FLUID PAN (M8X1.25X19, 16)	96	Y (M30)	14	8657000
77.	5-D6	4.197	BOLT, FLUID PASG CVR (M6X1X17.7) (4.265) (AC-DELCO #8680764)	96	Y (M30)	1	8680764
78.	5-D26	4.294	PLUG, PARK PAWL SHF HOLE (ALSO PART OF 79) (.38 DIA) (AC-DELCO #8620318)	96	Y (M30)	1	8620318
79.	5-D26	4.294	PAWL KIT, PARK (INCLS 78, 81) (INST SHT, PAWL, PLUG & SHF) (AC-DELCO #8669911)	96	Y (M30)	1	8669911

© 2000 GENERAL MOTORS SERVICE PARTS OPERATIONS-CHEVROLET-14Y

80.	5-D26	4.295	SPRING, PARK PAWL (AC-DELCO #8642193)	96	Y (M30)	1	8642193
81.		N.S.	PAWL, PARK (PART OF 79)		.....		
82	5-D25	4.282	SEAL, MAN SHFT SHF (ALSO PART OF 84) (*KIT1, KIT2) (AC-DELCO #8667163)	96	Y (M30)	1	8667163
83.	5-D24	4.275	RETAINER, MAN SHFT SHF (AC-DELCO #8642246)	96	Y (M30)	1	8642246
84.	5-D26	4.294	SHAFT KIT, MAN SHFT (INCL 82) (SHORT) (INCLS SEAL, INDIVIDUAL COMPONENT NOT SOLD SEPARATELY) (AC-DELCO #24210712)	96	Y (M30)	1	24210712
	5-D26	4.294	SHAFT KIT, MAN SHFT (INCL 82) (128.2MM) (LONG) (INCLS SEAL) (AC-DELCO #24210711)	96	Y (M30)	1	24210711
85.	5-D25	4.290	ACTUATOR, PARK PAWL (INCLS ACTUATOR, ROD & SPRINGS) (AC-DELCO #8667517)	96	Y (M30)	1	8667517
86.	5-D25	4.290	BRACKET, PARK PAWL ACTR (AC-DELCO #8667574)	96	Y (M30)	1	8667574
87.		8.900	BOLT-HEX, M8X1.25X20, 16.88 THD, GM500 (10.9), PZOR, MACH (PARK LOCK BRACKET TO CASE) (AC-DELCO #11508687)	96	.....	AR	11508687
88.	5-D25	4.279	LEVER, MAN SHFT DTNT (GOLD) (SQUARE HOLE) (AC-DELCO #8654106)	96	Y (M30)	1	8654106
89.	5-D24	4.275	LINK, MAN VLV (*KIT1, KIT2) (AC-DELCO #8680731)	96	Y (M30)	1	8680731
90.	5-D24	4.275	NUT, MAN SHFT DTNT LVR (M10X15.6H THD) (AC-DELCO #8648178)	96	Y (M30)	1	8648178
91.		8.899	BALL, GRADE 2, STD DIA 1/4 (2), CHROME STL (NO. 10 CHECKBALL) (AC-DELCO #104918)	96	.....	AR	104918
93.	5-C17	4.133	STOP, TRANS FLUID LVL IND	96	Y (M30)	1	8684890
377.		N.S.	VALVE, PRESS CONT SOL (*KIT10)		.....		

SERVICE KITS

	5-C9	4.003	TRANSMISSION, AUTO (GOODWRENCH REMAN) (CODE 6YDD)	96	Y (M30)	1	24203884
1.	5-C10	4.005	GASKET KIT, A/TRNS SERV (INCL 2, 5, 6, 18-9, 21, 26-7, 30, 34, 44-5, 47, 52, 55-6, 72-3, 82, 89) (W/O PLATES OR PISTONS) (AC-DELCO #24201803)	96	Y (M30)	1	24201803
2.		N.S.	TRANSMISSION KIT, AUTO (SERV OVERHAUL W/PLT, GSKT, SEAL) (USE 24201803 GASKET KIT T/W 24201808 PLATE KIT T/W 24204496 PISTON KIT.)	96	.....		

© 2000 GENERAL MOTORS SERVICE PARTS OPERATIONS-CHEVROLET-14Y

3.	5-D6	4.197	FILTER KIT, A/TRNS FLUID (INCL 71-73) (USED W/SHALLOW PAN) (AC-DELCO #24200796) ..	96	Y (M30)	1	24200796
4.	5-D16	4.265	GASKET KIT, C/VLV BODY SPCR PLT (INCL 47, 52) (AC-DELCO #8665951)	96	Y (M30)	1	8665951
5.	5-D14	4.229	RING KIT, 2-4 BAND SERVO 2ND APPL PSTN FLUID SEAL (INCL 19) (.55 RATIO) (INCLS INR & OTR RING) (AC-DELCO #8642924)	96	Y (M30)	1	8642924
	5-D14	4.229	RING KIT, 2-4 BAND SERVO 2ND APPL PSTN FLUID SEAL (INCL 18, 19) (.74 RATIO) (INCLS 2 RINGS) (AC-DELCO #8642925)	96	Y (M30)	1	8642925
6.	5-D12	4.228	PISTON KIT, 1-2 & 3-4 ACCUM (INCL 44, 45, 55, 56) (W/RINGS & ALUM PISTONS) (AC-DELCO #24204496)	96	Y (M30)	1	24204496
7.	5-D12	4.228	ACCUMULATOR, 1-2 (INCL 43, 54-7) (AC-DELCO #24201956)	96	Y (M30)	1	24201956
8.	5-D12	4.228	PISTON KIT, 2-4 BAND SERVO 2ND APPLY (INCL 17, 18, 19) (YELLOW) (.74) (AC-DELCO #8642079)	96	Y (M30)	1	8642079
10.	5-D16	4.265	VALVE KIT, PRESS CONT SOL (W/SHFT SOL VLV FLUID FLTR) (INCL 49, 50, 377)	96	Y (M30)	1	24216252

RPO DEFINITIONS
M30 – TRANSMISSION,AUTOMATIC 4 SPEED,4L60E,ELECTRONIC

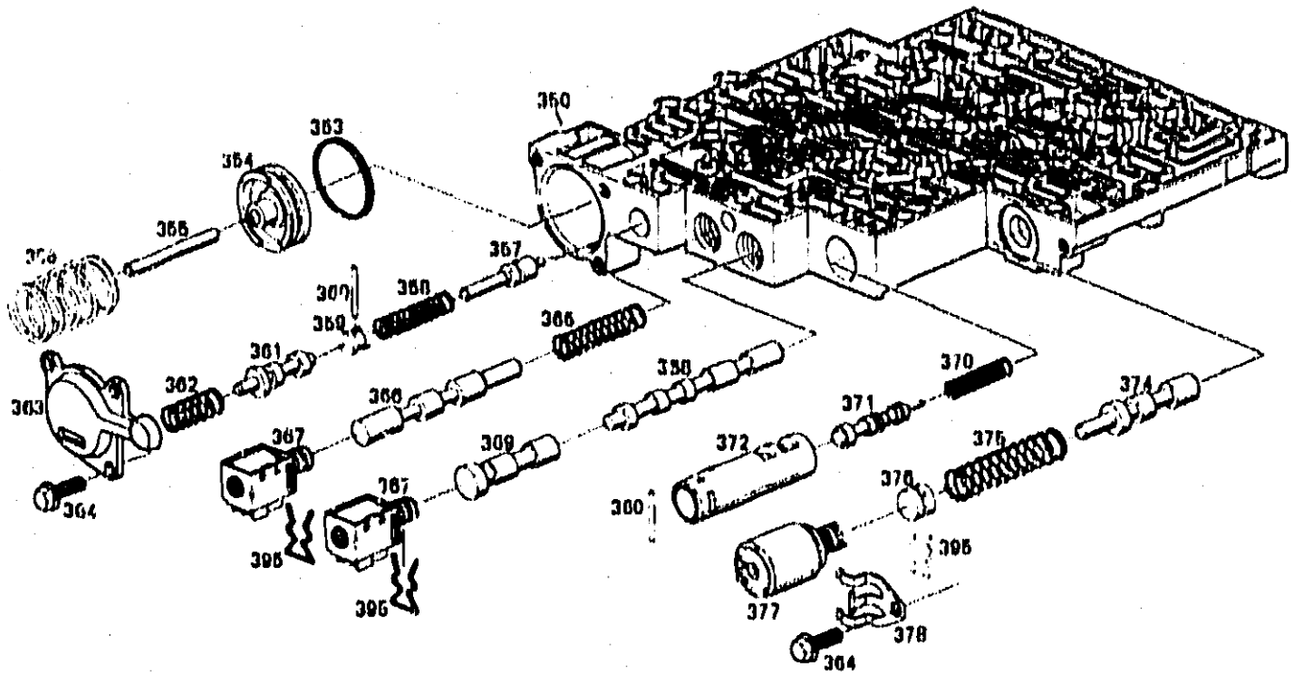

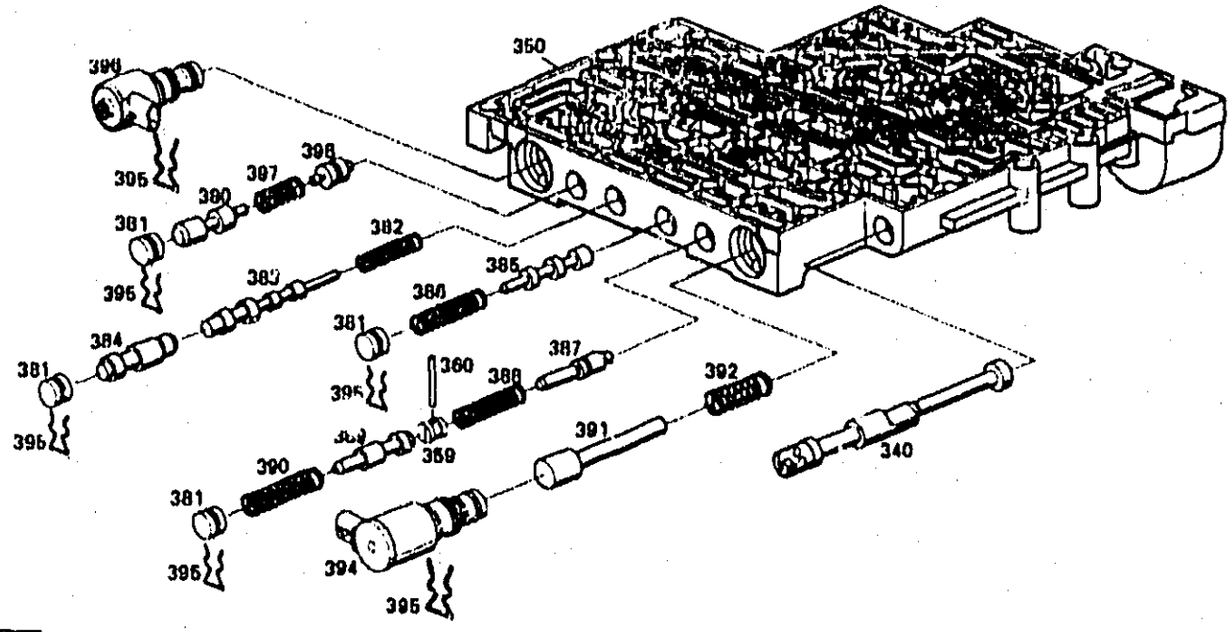

GM04-469Y

1996 Y AUTOMATIC TRANSMISSION (M30) PART 3 (4L60E) CONTROL VALVE

340.	5-D25	4.279	VALVE, MAN (*KIT1) (4.265) (AC-DELCO #24203484)	96 Y (M30)	1	24203484
350.		N.S.	BODY, C/VLV (*KIT1)	.....		
353.	5-D14	4.229	RING, FWD CLU ACCUM PSTN FLUID SEAL (*KIT1) (AC-DELCO #8680653)	96 Y (M30)	1	8680653
354.	5-D12	4.228	PISTON, FWD CLU ACCUM (*KIT1) (AC-DELCO #24200126)	96 Y (M30)	1	24200126

© 2000 GENERAL MOTORS SERVICE PARTS OPERATIONS-CHEVROLET-14Y

355.		N.S.	PIN, 1-2 ACCUM PSTN (*KIT1)				
		N.S.	PIN, 2-3 ACCUM PSTN (*KIT1)				
356.	5-D15	4.233	SPRING, FWD CLU ACCUM PSTN (*KIT1) (AC-DELCO #24206765)	96	Y (M30)	1	24206765
357.		N.S.	VALVE, FWD CLU ABUSE (*KIT1)				
358.		N.S.	SPRING, FWD CLU ABUSE VLV (*KIT1)				
359.		N.S.	PLUG, TCC C/VLV BORE (*KIT1)				
360.	5-C28	4.169	PIN, FWD CLU ABUSE VLV BORE PLUG (*KIT1) (4.265) (AC-DELCO #8680765)	96	Y (M30)	1	8680765
	5-D18	4.265	PIN, REV ABUSE VLV BORE PLUG (*KIT1) (AC-DELCO #8680765)	96	Y (M30)	1	8680765
	5-D18	4.265	PIN, 1-2 ACCUM VLV BORE PLUG (*KIT1) (AC-DELCO #8680765)	96	Y (M30)	1	8680765
361.		N.S.	VALVE, LOW OVERRUN (*KIT1)				
362.		N.S.	SPRING, LOW OVERRUN VLV (*KIT1)				
363.	5-D12	4.228	COVER, FWD CLU ACCUM (W/SLOTS) (*KIT1) (AC-DELCO #24206338)	96	Y (M30)	1	24206338
364.	5-D16	4.241	BOLT, FWD CLU ACCUM CVR (M8X1X17.7) (*KIT1) (4.265) (AC-DELCO #8680764)	96	Y (M30)	3	8680764
	5-D18	4.265	BOLT, PRESS CONT SOL VLV CLA (M6X1X17.7) (*KIT1) (AC-DELCO #8680764)	96	Y (M30)	1	8680764
365.		N.S.	SPRING, 1-2 SHFT VLV (*KIT1)				
366.		N.S.	VALVE, 1-2 SHFT (*KIT1)				
367.	5-D18	4.265	VALVE, 1-2, 3-4 SHFT SOL (INCLS SEAL) (*KIT1) (AC-DELCO #10478131)	96	Y (M30)	1	10478131
	5-D18	4.265	VALVE, 2-3 SHFT SOL (INCLS SEAL) (*KIT1) (AC-DELCO #10478131)	96	Y (M30)	1	10478131
368.		N.S.	VALVE, 2-3 SHUTTLE (*KIT1)				
369.		N.S.	VALVE, 2-3 SHFT (*KIT1)				
370.		N.S.	SPRING, 1-2 ACCUM VLV (*KIT1)				
371.		N.S.	VALVE, 1-2 ACCUM (*KIT1)				
372.		N.S.	SLEEVE, 1-2 ACCUM VLV (*KIT1)				
374.		N.S.	VALVE, ACTR FEED LIM (*KIT1)				
375.		N.S.	SPRING, ACTR FEED LIM VLV (*KIT1)				
376.		N.S.	PLUG, TCC C/VLV BORE (*KIT1)				
377.		N.S.	VALVE, PRESS CONT SOL (*KIT1, KIT2)				
378.	5-D18	4.265	CLAMP, PRESS CONT SOL VLV (*KIT1) (AC-DELCO #8682007)	96	Y (M30)	1	8682007
380.		N.S.	VALVE, TCC (*KIT1)				
381.		N.S.	PLUG, TCC C/VLV BORE (*KIT1)				
382.		N.S.	SPRING, 4-3 SEQUENCE VLV (*KIT1)				
383.		N.S.	VALVE, 4-3 SEQUENCE (*KIT1)				

© 2000 GENERAL MOTORS SERVICE PARTS OPERATIONS-CHEVROLET-14Y

384.		N.S.	VALVE, 3-4 RLY (*KIT1)				
385.		N.S.	VALVE, 3-4 SHFT (*KIT1)				
386.		N.S.	SPRING, 3-4 SHFT VLV (*KIT1)				
387.		N.S.	VALVE, ABUSE (REV) (*KIT1)				
388.		N.S.	SPRING, ABUSE VLV (REV) (*KIT1)				
389.		N.S.	VALVE, 3-2 DNSHFT (*KIT1)				
390.		N.S.	SPRING, 3-2 DNSHFT VLV (*KIT1)				
391.		N.S.	VALVE, 2-3 CONT (*KIT1)				
392.		N.S.	SPRING, 3-2 C/VLV (*KIT1)				
394.	5-D18	4.265	VALVE, 3-2 SHFT SOL (*KIT1) (4.122) (AC-DELCO #24212327)	96	Y (M30)	1	24212327
395.	5-D18	4.265	RETAINER, TCC PWM SOL VLV (*KIT1) (AC-DELCO #8680781)	96	Y (M30)	1	8680781
	5-D18	4.265	RETAINER, 1-2, 3-4 SHFT SOL VLV (*KIT1) (AC-DELCO #8680781)	96	Y (M30)	1	8680781
	5-D18	4.265	RETAINER, 2-3 SHFT SOL VLV (*KIT1) (AC-DELCO #8680781)	96	Y (M30)	1	8680781
	5-D18	4.265	RETAINER, 3-4 SHFT VLV BORE PLUG (*KIT1) (AC-DELCO #8680781)	96	Y (M30)	1	8680781
	5-D18	4.265	RETAINER, ACTR FEED LIM VLV BORE PLUG (*KIT1) (AC-DELCO #8680781)	96	Y (M30)	1	8680781
	5-D18	4.265	RETAINER, TCC SIG VLV BORE PLUG (*KIT1) (AC-DELCO #8680781)	96	Y (M30)	1	8680781
	5-D18	4.265	RETAINER, 3-4 RLY VLV BORE PLUG (*KIT1) (AC-DELCO #8680781)	96	Y (M30)	1	8680781
	5-D18	4.265	RETAINER, 3-2 DNSHFT VLV BORE PLUG (*KIT1) (AC-DELCO #8680781)	96	Y (M30)	1	8680781
	5-D18	4.265	RETAINER, 3-2 SHFT SOL VLV (*KIT1) (AC-DELCO #8680781)	96	Y (M30)	1	8680781
396.	5-D18	4.265	VALVE, TCC PWM SOL (PWM) (*KIT1) (4.122) (AC-DELCO #24207054)	96	Y (M30)	1	24207054
397.		N.S.	SPRING, TCC C/VLV (*KIT1)				
398.		N.S.	VALVE, TCC PWM SOL (*KIT1)				

SERVICE KITS

1.	5-D18	4.265	VALVE KIT, CONT (W/BODY & VLV) (INCL 340-398) (AC-DELCO #24203264)	96	Y (M30)	1	24203264
2.	5-D18	4.265	VALVE KIT, PRESS CONT SOL (W/SHFT SOL VLV FLUID FLTR) (INCL 377)	96	Y (M30)	1	24216252

RPO DEFINITIONS
M30 – TRANSMISSION,AUTOMATIC 4 SPEED,4L60E,ELECTRONIC

© 2000 GENERAL MOTORS SERVICE PARTS OPERATIONS-CHEVROLET-14Y

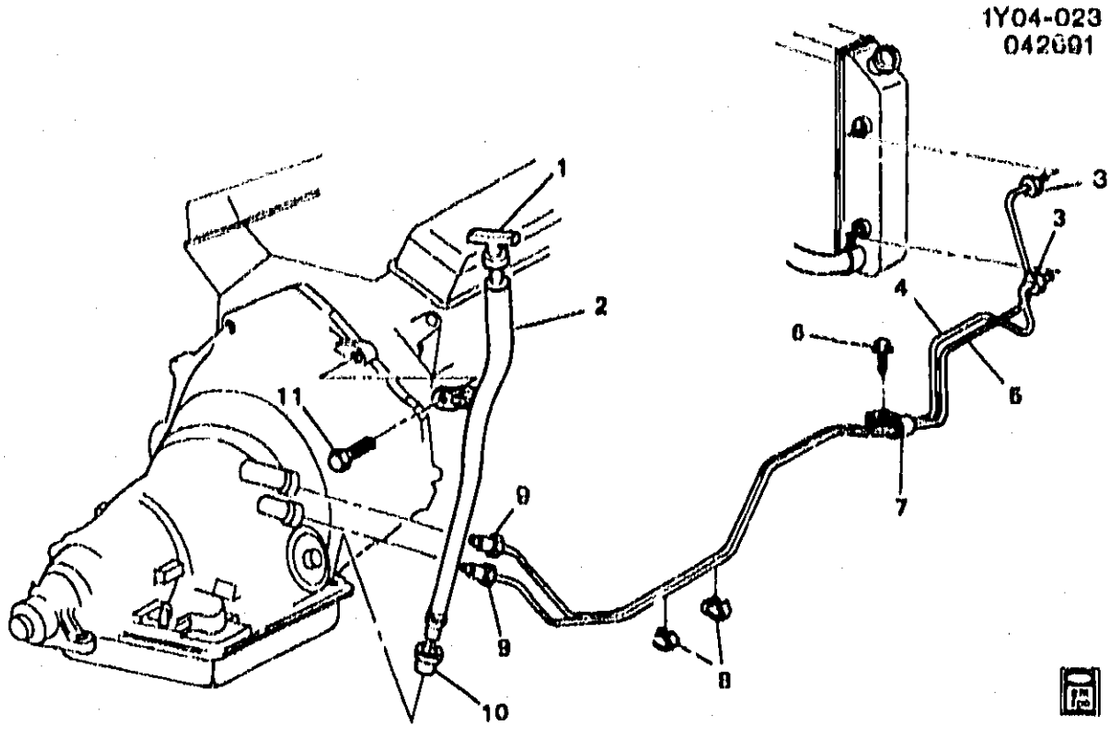

1Y04-023

1990-1996 Y FILLER TUBE & OIL COOLER PIPES

1.	5-C17	4.133	INDICATOR, TRANS FLUID LVL	90-91	Y (MD8)	1	10079808
	5-C17	4.133	INDICATOR, TRANS FLUID LVL (AC-DELCO #10174498)	92-93	Y (MD8)	1	10174498
		DISCON	INDICATOR, TRANS FLUID LVL	94	Y (M30)	1	10238801
	5-C17	4.133	INDICATOR, TRANS FLUID LVL	94-96	Y (M30)	1	12551273
2.	5-C17	4.133	TUBE, TRANS FLUID FIL (AC-DELCO #10174497) (ALSO USE 10174498 FLUID LVL IND)	90-93	Y (MD8)	1	10174497
	5-C17	4.133	TUBE, TRANS FLUID FIL	94-96	Y (M30)	1	10235123
3.		6.963	NUT, INVTD FLRD TUBE, 5/16 1/2-20, .62 LNG (4.128)	90-96		2	15725180
4.		6.964	TUBING (PIPE, TRANS OIL CLR LWR)	90-96		AR	12541500
5.		6.964	TUBING (PIPE, TRANS OIL CLR UPR)	90-96		AR	12541500
6.		6.977	SCREW, HEX W/FLAT WA (TRANS FLUID CLR PIPE CLIP)	90-96		1	12337828
7.		6.950	CLIP, CLSD TUBE, TWO TUBES, TUBE A-.38, TUBE B-.25, HOLE SIZE 11/32, DIM A-.70, STL (POSN #2)	90-96		1	15522163
8.	5-C17	4.128	CLIP, TRANS FLUID CLR PIPE (POSN #1)	94-95	Y (M30)	2	10225624
	5-C17	4.128	CLIP, TRANS FLUID CLR PIPE (POSN #1)	96	Y (M30)	2	10182465
	5-C17	4.128	CLIP, TRANS FLUID CLR PIPE (OPEN TWO TUBE 7.70 & 8.11MM) (POSN #1) (SYMMETRICAL C SHAPE) (AC-DELCO #15596455)	90-93	Y (MD8)	2	15596455

© 2000 GENERAL MOTORS SERVICE PARTS OPERATIONS-CHEVROLET-14Y

							1Y04-023
9.	5-C17	4.120	NUT, TRANS FLUID CLR PIPE (UPR & LWR)	90-91	Y (L98)	2	14076157
	5-C17	4.120	NUT, TRANS FLUID CLR PIPE (UPR & LWR)	92-93	Y (LT1, MD8)	2	14076157
	5-C17	4.120	NUT, TRANS FLUID CLR PIPE (UPR & LWR)	94-95	Y (LT1, M30)	2	14076157
	5-C17	4.120	NUT, TRANS FLUID CLR PIPE (UPR & LWR)	96	Y (M30)	2	14076157
10.	5-C17	4.133	SEAL, TRANS FLUID F TUBE (AC-DELCO #1259475)	92-93	Y (MD8)	1	1259475
	5-C17	4.133	SEAL, TRANS FLUID FIL TUBE (AC-DELCO #1259475)	94-96	Y (M30)	1	1259475
	5-C17	4.133	SEAL, TRANS FLUID FIL TUBE (LIP TYPE) (AC-DELCO #1259475)	90-91	Y	1	1259475
11.		8.900	BOLT, HEX 3/8-16X1.375 280M PZOR (TRANS)	90-92	.....	4	9439900
		8.900	BOLT, HFH 3/8-16X1.38 280M PZOR (TRANS)	93-96	.....	5	9439918

RPO DEFINITIONS
LT1 – ENGINE-GAS, 8 CYL, 5.7L(5.7P),MFI,HO
L98 – ENGINE, 5.7L, (5.7-8) 350 CID, V8, TPI
MD8 – TRANSMISSION,AUTOMATIC 4-SPEED(THM700R4/4L60)
M30 – TRANSMISSION,AUTOMATIC 4 SPEED,4L60E,ELECTRONIC

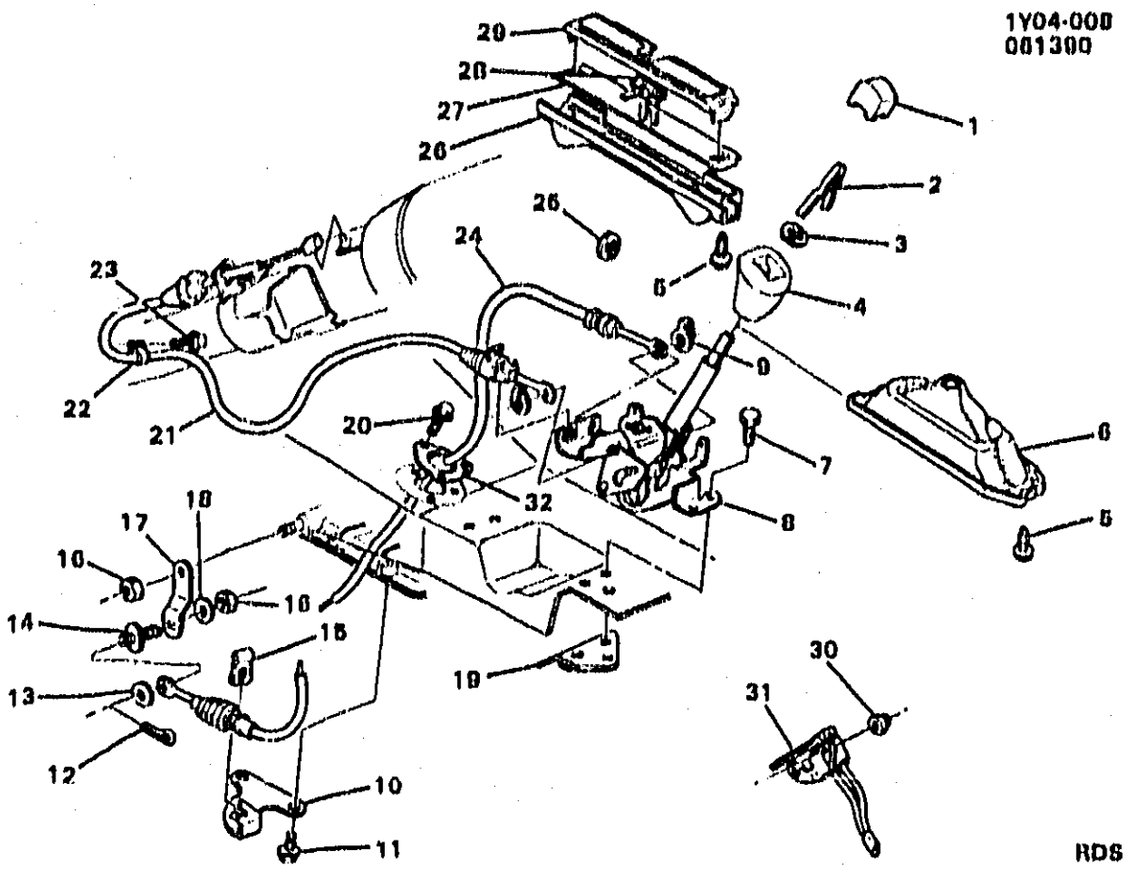

1Y04-008

1984-1991 Y SHIFT CONTROL/AUTOMATIC TRANSMISSION FLOOR(MD8)

1.	5-C10	4.006	PUSHBUTTON, A/TRNS CONT LVR REL (PART OF 4)	84-91	Y	1	10142032
2.	5-C10	4.006	RETAINER, A/TRNS CONT LVR REL P/BUT (PART OF 4) (4.008) ..	84-91	Y	1	14076140
3.	5-C10	4.006	RETAINER, A/TRNS CONT LVR KNOB (PART OF 4) (4.008)	84-91	Y	1	274273
4.	5-C10	4.006	KNOB, A/TRNS CONT LVR (W/LEATHER CVR) (INCLS 1, 2, 3)	84-91	Y	1	10111697
5.		8.977	SCREW-ROUNDWASHER M4.2X1.4X13, 8.63OD, 6010M, 6138M, C/R, TAP (A/TRNS CONT IND HSG)	84-91	.....	6	11515893
6.	5-C11	4.015	BOOT, A/TRNS CONT (LVR UPR)	84-89	Y	1	10104025
	5-C11	4.015	BOOT, A/TRNS CONT	90-91	Y	1	10175792
7.		8.900	BOLT, HEX WA HD (M6X1X20) GM500 9.8 ST (A/TRNS CONT) ..	84-91	.....	4	11503800
8.		DISCON	CONTROL, TRANS	84-85	Y	1	14048996
	5-C10	4.004	CONTROL, TRANS	86-91	Y	1	10111620
9.	5-C11	4.047	RETAINER, A/TRNS RANGE SEL LVR CBL (POSN #2) (4.060)	84-91	Y	1	17071924
	5-C11	4.047	RETAINER, A/TRNS PK LK CBL (4.060)	84-91	Y	1	17071924
10.	5-C11	4.047	BRACKET, A/TRNS RANGE SEL LVR CBL	84-91	Y	1	14076160

© 2000 GENERAL MOTORS SERVICE PARTS OPERATIONS-CHEVROLET-14Y

							1Y04-008
11.		8.000	BOLT- HEX, M8X1.25X20, 10.00 THD, GM500 (10.9), PZOR, MACH (A/TRNS RANGE SEL LVR CBL BRKT) (AC-DELCO #11500607)	84-91		2	11500607
12.		8.930	PIN, COTTER 3/32X1 1/2 PL (A/TRNS RANGE SEL LVR CBL COT)	84-91		1	103376
13.	5-C11	4.047	WASHER, A/TRNS RANGE SEL LVR CBL (0.062)	84-91	Y	1	3710496
14.	5-C11	4.047	PIN, A/TRNS RANGE SEL LVR CBL	84-91	Y	1	14050019
15.	5-C11	4.047	RETAINER, A/TRNS RANGE SEL LVR CBL (AT BRKT) (4.006)	84-91	Y	1	14050024
16.		8.915	NUT (A/TRNS RANGE SEL LVR CBL PIN)	84-91		1	11514603
17.	5-C11	4.045	LEVER, A/TRNS RANGE SEL (4.006)	84-91	Y	1	14040979
18.		8.929	WASHER FL .406X.812X.065 SS PL (A/TRNS RANGE SEL LVR CBL PIN)	84-91		1	187372
19.	5-C11	4.012	PLATE, A/TRNS CONT MT (4.015)	84-91	Y	1	14046619
20.		8.977	SCREW, HWH TAP M4.2X1.41X16 9.2-OD DRILPT BLK PZOR (A/TRNS RANGE SEL)	84-91		3	11509135
21.	5-C11	4.047	CABLE, A/TRNS PK LK	84-91	Y	1	12551274
22.		8.950	CLIP, OPEN LOOP .44 DIA RUBBER COAT (A/TRNS PK LK CBL)	84-91		1	3866187
23.		8.977	BOLT, SCR HEX W/FLAT WA 12 DIA TYPE AB (HTR & A/C PROGMR)	84-91		1	1150[illegible]374
24.	5-C11	4.047	CABLE, A/TRNS RANGE SEL LVR (INCLS 32)	84-90	Y	1	10219967
	5-C11	4.047	CABLE, A/TRNS RANGE SEL LVR	91	Y (MD8)	1	10219967
25.	5-C11	4.047	RETAINER, A/TRNS RANGE SEL LVR CBL (POSN #1)	84-91	Y	1	3974730
26.	5-C11	4.020	HOUSING, A/TRNS CONT IND	84-91	Y (MD8)	1	10146440
27.	5-C11	4.022	SHIELD, A/TRNS CONT IND LGT	84-91	Y	1	14046746
28.	5-C11	4.020	INDICATOR, A/TRNS CONT	84-89	Y	1	14046747
	5-C11	4.020	INDICATOR, A/TRNS CONT	90-91	Y	1	10146437
29.	5-C11	4.020	DIAL, A/TRNS CONT IND	84-89	Y	1	10146407
	5-C11	4.020	DIAL, A/TRNS CONT IND	90-91	Y (MD8)	1	10153627
30.	5-N16	3.469	NUT, ACCEL CONT CBL SPH SHLD (4 X 0.7 THD X 4.85MM) (2.679)	87-91	Y	2	16512106
31.	5-C13	4.054	SWITCH, PARK/NEU POSN & B/U LP (ON SHIFT CONT) (AC-DELCO #D2297)	84-91	Y	1	1994242
32.		DISCON	GROMMET, RANGE SEL LVR CBL (PART OF 24)	84-91	Y	1	14093175

RPO DEFINITIONS
MD8 – TRANSMISSION,AUTOMATIC 4-SPEED(THM700R4/4L60)

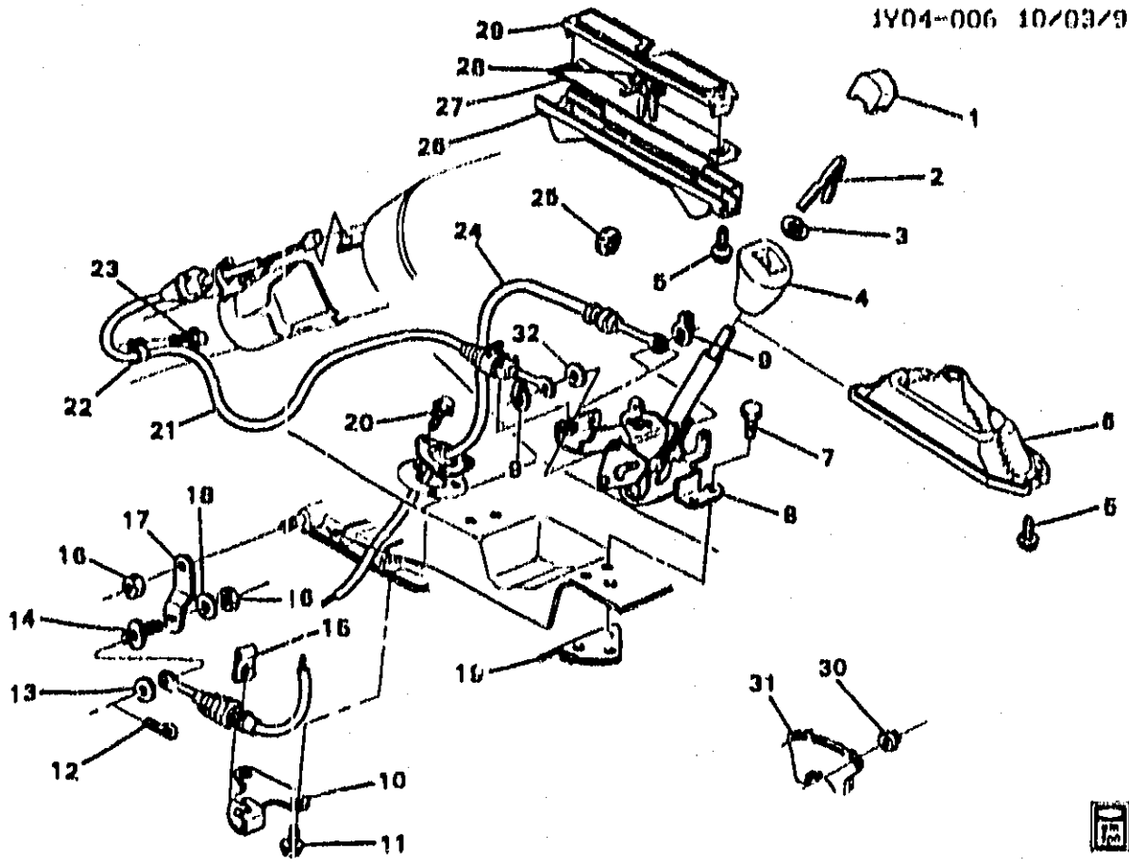

1Y04-006

1992-1993 Y SHIFT CONTROL/AUTOMATIC TRANSMISSION FLOOR(MD8)
1994-1996 Y SHIFT CONTROL/AUTOMATIC TRANSMISSION FLOOR(M30)

1.	5-C10	4.006	PUSHBUTTON, A/TRNS CONT LVR REL (PART OF 4)	92-93	Y	1	10142032
	5-C10	4.006	PUSHBUTTON, A/TRNS CONT LVR REL (PART OF 4)	94-96	Y (M30)	1	10142032
2.	5-C10	4.006	RETAINER, A/TRNS CONT LVR REL P/BUT (PART OF 4) (4.008)	92-93	Y (MD8)	1	14076140
	5-C10	4.006	RETAINER, A/TRNS CONT LVR REL P/BUT (PART OF 4) (4.008)	94-96	Y (M30)	1	14076140
3.	5-C10	4.006	RETAINER, A/TRNS CONT LVR KNOB (PART OF 4) (4.008)	92-93	Y (MD8)	1	274273
	5-C10	4.006	RETAINER, A/TRNS CONT LVR KNOB (PART OF 4) (4.008)	94-96	Y (M30)	1	274273
4.	5-C10	4.006	KNOB, A/TRNS CONT LVR (W/LEATHER CVR) (INCLS 1, 2, 3)	92-96	Y	1	10111627
5.		8.977	SCREW-ROUNDWASHER M4.2X1.4X13, 8.63OD, 6010M, 6138M, C/R, TAP (A/TRNS CONT IND HSG)	92-96		6	11515893
6.	5-C11	4.015	BOOT, A/TRNS CONT	92-96	Y	1	10175792
7.		8.900	BOLT, HEX WA HD (M6X1X20) GM500 9.8 ST (A/TRNS CONT)	92-96		4	11503800
8.		DISCON	CONTROL, A/TRNS	92-93	Y (MD8) (EXC VE1)	1	10204489
	5-C10	4.004	CONTROL, A/TRNS (BTSI SOLENOID IS ONLY PART OF CNTRL ASM)	94-96	Y (M30) (EXC VE1)	1	12551499
	5-C10	4.004	CONTROL, A/TRNS	92-93	Y (VE1) (EXPORT)	1	10186863

© 2000 GENERAL MOTORS SERVICE PARTS OPERATIONS-CHEVROLET-14Y

							1Y04-006
	5-C10	4.004	CONTROL, A/TRNS	94-96	Y (M30, VE1) (EXPORT)	1	12551500
9.	5-C11	4.047	RETAINER, A/TRNS RANGE SEL LVR CBL (POSN #2) (4.060)	92-96	Y	1	17071924
	5-C11	4.047	RETAINER, A/TRNS PK LK CBL (4.060)	92-96	Y	1	17071924
10.	5-C11	4.047	BRACKET, A/TRNS RANGE SEL LVR CBL	92-93	Y	1	14076160
	5-C11	4.047	BRACKET, A/TRNS RANGE SEL LVR CBL	94-96	Y (M30)	1	14076160
11.		8.900	BOLT, HWH, M8X1.25X40, SPL FULLTHD, AC PT, 10.9 PZOR (A/TRNS RANGE SEL LVR CBL BRKT)	92-96		2	11515750
12.		8.938	PIN, COTTER 3/32X1 1/2 PL (A/TRNS RANGE SEL LVR CBL COT)	92-96		1	103376
13.	5-C11	4.047	WASHER, A/TRNS RANGE SEL LVR CBL (0.662)	92-93	Y (MD8)	1	3718496
	5-C11	4.047	WASHER, A/TRNS RANGE SEL LVR CBL (0.662)	94-96	Y (M30)	1	3718496
14.	5-C11	4.047	PIN, A/TRNS RANGE SEL LVR CBL	92-93	Y (MD8)	1	14050019
	5-C11	4.047	PIN, A/TRNS RANGE SEL LVR CBL	94-96	Y (M30)	1	14050019
15.	5-C11	4.047	RETAINER, A/TRNS RANGE SEL LVR CBL (AT BRKT) (4.006)	92-96	Y	1	14050024
16.		8.915	NUT (A/TRNS RANGE SEL LVR CBL PIN)	92-96		1	11514603
		8.915	NUT (A/TRNS RANGE SEL LVR)	92-96		1	11514603
17.	5-C11	4.045	LEVER, A/TRNS RANGE SEL (4.006)	92-93	Y (MD8)	1	14048979
	5-C11	4.045	LEVER, A/TRNS RANGE SEL (4.006)	94-96	Y (M30)	1	14048979
18.		8.979	WASHER FL .406X.812X.065 SS PL (A/TRNS RANGE SEL LVR CBL PIN)	92-96		1	187372
19.	5-C11	4.012	PLATE, A/TRNS CONT MT (4.015)	92	Y	1	14046619
	5-C11	4.012	PLATE, A/TRNS CONT MT (4.015)	93	Y (MD8)	1	14046619
	5-C11	4.012	PLATE, A/TRNS CONT MT (4.015)	94-96	Y (M30)	1	14046619
20.		8.977	SCREW, HWH TAP M4.2X1.41X16 9.2-OD DRILPT BLK PZOR (A/TRNS RANGE SEL LVR CBL GROM RET)	92-96		3	11509135
21.	5-C11	4.047	CABLE, A/TRNS PK LK	92-93	Y (MD8)	1	12551274
	5-C11	4.047	CABLE, A/TRNS PK LK	94-96	Y (M30)	1	12551274
22.		8.950	CLIP, OPEN LOOP .44 DIA RUBBER COAT	92-96		AR	3866187
23.		8.977	BOLT, SCR HEX W/FLAT WA 12 DIA TYPE AB (HTR & A/C PROGMR)	92-96		1	11509374
24.	5-C11	4.047	CABLE, A/TRNS RANGE SEL LVR	92-93	Y (MD8)	1	10219967
	5-C11	4.047	CABLE, A/TRNS RANGE SEL LVR	94-96	Y (M30)	1	10219967
25.	5-C11	4.047	RETAINER, A/TRNS RANGE SEL LVR CBL (POSN #1)	92-96	Y	1	3974730

							1Y04-006
26.	5-C11	4.020	HOUSING, A/TRNS CONT IND ..	92-93	Y (MD8)	1	10146440
	5-C11	4.020	HOUSING, A/TRNS CONT IND ..	94-96	Y (M30)	1	10146440
27.	5-C11	4.022	SHIELD, A/TRNS CONT IND LGT	92-96	Y	1	14046746
28.	5-C11	4.020	INDICATOR, A/TRNS CONT	92-93	Y (MD8)	1	10146437
	5-C11	4.020	INDICATOR, A/TRNS CONT	94-96	Y (M30)	1	10146437
29.	5-C11	4.020	DIAL, A/TRNS CONT IND	92-93	Y (MD8) (EXC VE1)	1	10153627
	5-C11	4.020	DIAL, A/TRNS CONT IND	94-96	Y (M30) (EXC VE1)	1	10220956
		DISCON	DIAL, A/TRNS CONT IND	92-93	Y (MD8, VE1) (EXPORT)	1	10175697
	5-C11	4.020	DIAL, A/TRNS CONT IND	94-96	Y (M30, VE1) (EXPORT)	1	10220956
30.	5-C13	4.054	NUT, PARK/NEU POSN SW (4 X 0.7 THD X 4.86MM) (2.679)	92-93	Y (MD8)	2	16512106
	5-C13	4.054	NUT, PARK/NEU POSN SW (4 X 0.7 THD X 4.86MM) (2.679)	94-96	Y (M30)	2	16512106
31.	5-C13	4.054	SWITCH, PARK/NEU POSN & B/U LP (ON SHIFT CONT) (AC-DELCO #D2297)	92-93	Y (MD8)	1	1994242
	5-N15	2.698	SWITCH, PARK/NEU POSN & B/U LP (ON SHIFT CONT) (4.054) (AC-DELCO #D2297)	92-93	Y (MD8)	1	1994242
	5-C13	4.054	SWITCH, PARK/NEU POSN & B/U LP (ON SHIFT CONT) (AC-DELCO #D2297)	94-96	Y (M30)	1	1994242
	5-N15	2.698	SWITCH, PARK/NEU POSN & B/U LP (ON SHIFT CONT) (4.054) (AC-DELCO #D2297)	94-96	Y (M30)	1	1994242
32.	5-C11	4.047	WASHER, A/TRNS PK LK CBL (3.880)	92-96	Y	1	14091256

RPO DEFINITIONS

MD8 - TRANSMISSION,AUTOMATIC 4-SPEED(THM700R4/4L60)
M30 - TRANSMISSION,AUTOMATIC 4 SPEED,4L60E,ELECTRONIC
VE1 - PROVISION OPTIONS,JAPAN(EXPORT)

© 2000 GENERAL MOTORS SERVICE PARTS OPERATIONS-CHEVROLET-14Y

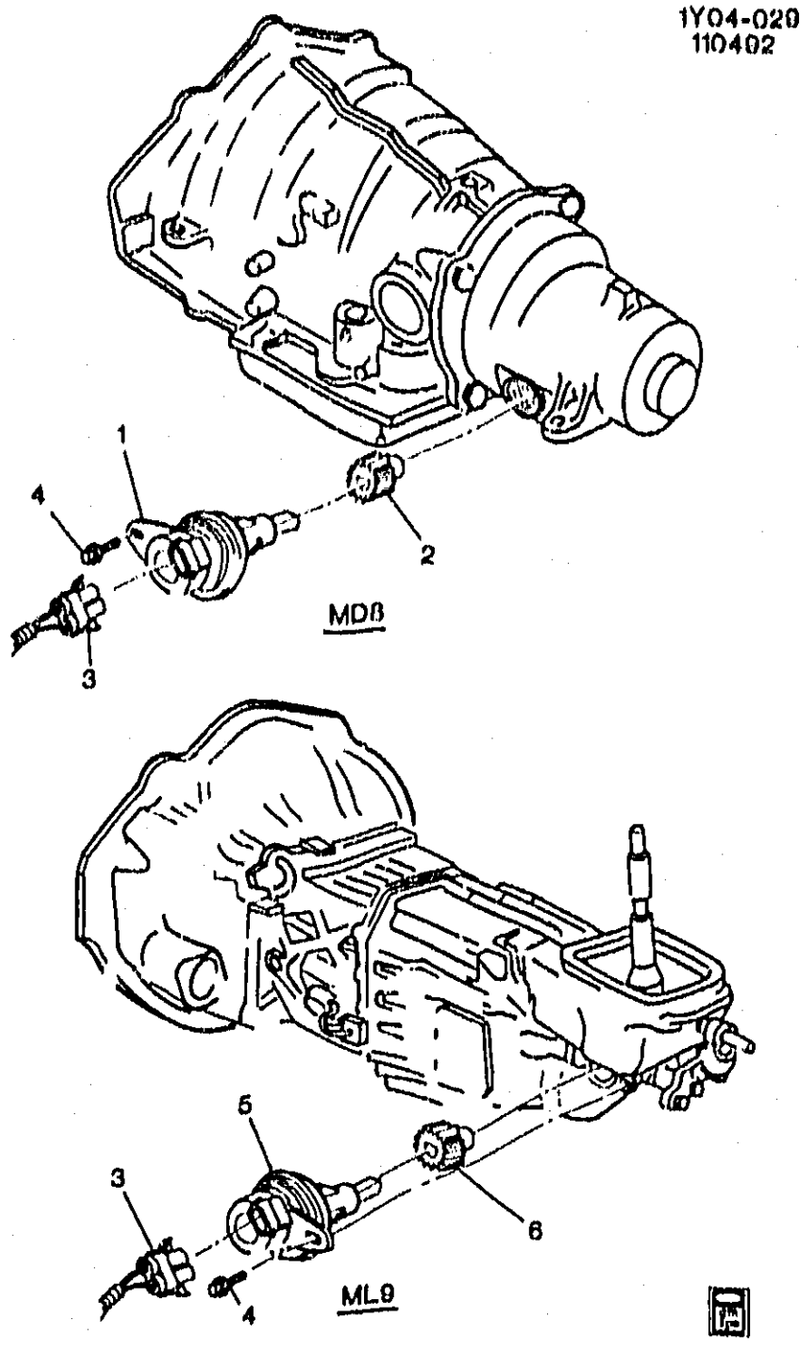

1Y04-029

1992-1993 Y SPEED SENSOR/TRANSMISSION (MD8)
1992-1996 Y SPEED SENSOR/TRANSMISSION (ML9)

1.	5-N16	3.682	SENSOR, VEH SPD (BLACK COLOR) (PART NO STAMPED ON HSG) (4.329) (AC-DELCO #213-200)	92-93 Y (D8L)	1	10456092
	5-N16	3.682	SENSOR, VEH SPD (NATURAL COLOR) (PART NO STAMPED ON HSG) (4.329) (AC-DELCO #213-199)	92-93 Y (D8K)	1	10456091
2.	5-D27	4.337	GEAR, SPEEDO DRVN (WHITE) (36 TEETH)	92 Y (D7B)	1	25513043

© 2000 GENERAL MOTORS SERVICE PARTS OPERATIONS-CHEVROLET-14Y

							1Y04-029
	5-D27	4.337	GEAR, SPEEDO DRVN (BLUE) (36 TEETH) (AC-DELCO #25513045)	92	Y (D7C)	1	25513045
	5-D27	4.337	GEAR, SPEEDO DRVN (GREEN) (42 TEETH) (AC-DELCO #25513049)	92-93	Y (D3X)	1	25513049
	5-D27	4.337	GEAR, SPEEDO DRVN (ORANGE) (35 TEETH) (AC-DELCO #25513042)	93	Y (D7A)	1	25513042
	5-D27	4.337	GEAR, SPEEDO DRVN (RED) (37 TEETH) (AC-DELCO #25513044)	93	Y (D3W)	1	25513044
	5-B8	4.337	GEAR, SPEEDO DRVN (BLACK) (40 TEETH) (AC-DELCO #25513047)	94	Y (LT1, ML9)	1	25513047
	5-D27	4.337	GEAR, SPEEDO DRVN (GREEN) (42 TEETH) (AC-DELCO #25513049)	94-96	Y (ML9)	1	25513049
3.	5-N5	2.525	HARNESS, ENG WRG	92	Y (LT5)	1	12117029
	5-N5	2.525	HARNESS, ENG WRG	92	Y (LT1, MD8, C60)	1	12125009
	5-N5	2.525	HARNESS, ENG WRG	92	Y (LT1, ML9, C60)	1	12125010
	5-N5	2.525	HARNESS, ENG WRG	92	Y (LT1, MD8, C68)	1	12125011
	5-N5	2.525	HARNESS, ENG WRG	92	Y (LT1, ML9, C68)	1	12125012
	5-N5	2.525	HARNESS, ENG WRG	93	Y (LT5)	1	12141078
	5-N5	2.525	HARNESS, ENG WRG	93	Y (LT1, ML9, C60)	1	12154081
	5-N5	2.525	HARNESS, ENG WRG	93	Y (LT1, ML9, C68)	1	12154082
	5-N5	2.525	HARNESS, ENG WRG	93	Y (LT1, MD8, C60)	1	12154083
	5-N5	2.525	HARNESS, ENG WRG	93	Y (LT1, MD8, C68)	1	12154084
4.		4.329	BOLT, VEH SPD SEN (M6X1X15) (8.900) (AC-DELCO #8639743)	92-93	Y	1	8639743
		4.329	BOLT, VEH SPD SEN (M6X1X15) (8.900) (AC-DELCO #8639743)	94-96	Y (ML9)	1	8639743
		4.329	BOLT, VEH SPD SEN	94-96	Y (M30)	1	8675314
5.	5-N16	3.682	SENSOR, VEH SPD (W/ O-RING) (4.329) (AC-DELCO #213-198)	92-93	Y (D8I)	1	10456089
	5-N16	3.682	SENSOR, VEH SPD (W/ O-RING) (4.329) (AC-DELCO #213-198)	94-96	Y (ML9)	1	10456089
6.	5-D27	4.337	GEAR, SPEEDO DRVN (PURPLE) (43 TEETH) (AC-DELCO #25513050)	92-93	Y (D4L)	1	25513050
	5-D27	4.337	GEAR, SPEEDO DRVN (GREEN) (42 TEETH) (AC-DELCO #25513049)	92-93	Y (D3X)	1	25513049
	5-B8	4.337	GEAR, SPEEDO DRVN (BLACK) (40 TEETH) (AC-DELCO #25513047)	94	Y (LT1, ML9)	1	25513047
	5-D27	4.337	GEAR, SPEEDO DRVN (GREEN) (42 TEETH) (AC-DELCO #25513049)	94-96	Y (ML9)	1	25513049

RPC DEFINITIONS
C60 - AIR CONDITIONER,FRONT,MANUAL CONTROLS
C68 - AIR CONDITIONER,FRONT,AUTOMATIC,ELECTRONIC CONTROLS
D3W - GEAR-SPEEDO DRIVEN (25513044)
D3X - GEAR-SPEEDOMETER DRIVEN (25513049)
D4L - GEAR-SPEEDOMETER DRIVEN (25513050)
D7A - GEAR-SPEEDOMETER DRIVEN (25513042)

© 2000 GENERAL MOTORS SERVICE PARTS OPERATIONS-CHEVROLET-14Y

D7B -- GEAR-SPEEDOMETER DRIVEN (25513043)
D7C -- GEAR-SPEEDO DRIVEN (25513045)
D8I -- SENSOR-VEH SPD (10456089)
D8K -- SENSOR-VEH SPD (10456091)
D8L -- SENSOR-VEH SPD (10456092)
LT1 -- ENGINE-GAS, 8 CYL, 5.7L(5.7P),MFI,HO
LT5 -- ENGINE,5.7L(5.7J),TPI
MD8 -- TRANSMISSION,AUTOMATIC 4-SPEED(THM700R4/4L60)
ML9 -- TRANSMISSION,MANUAL 6-SPEED
M30 -- TRANSMISSION,AUTOMATIC 4 SPEED,4L60E,ELECTRONIC

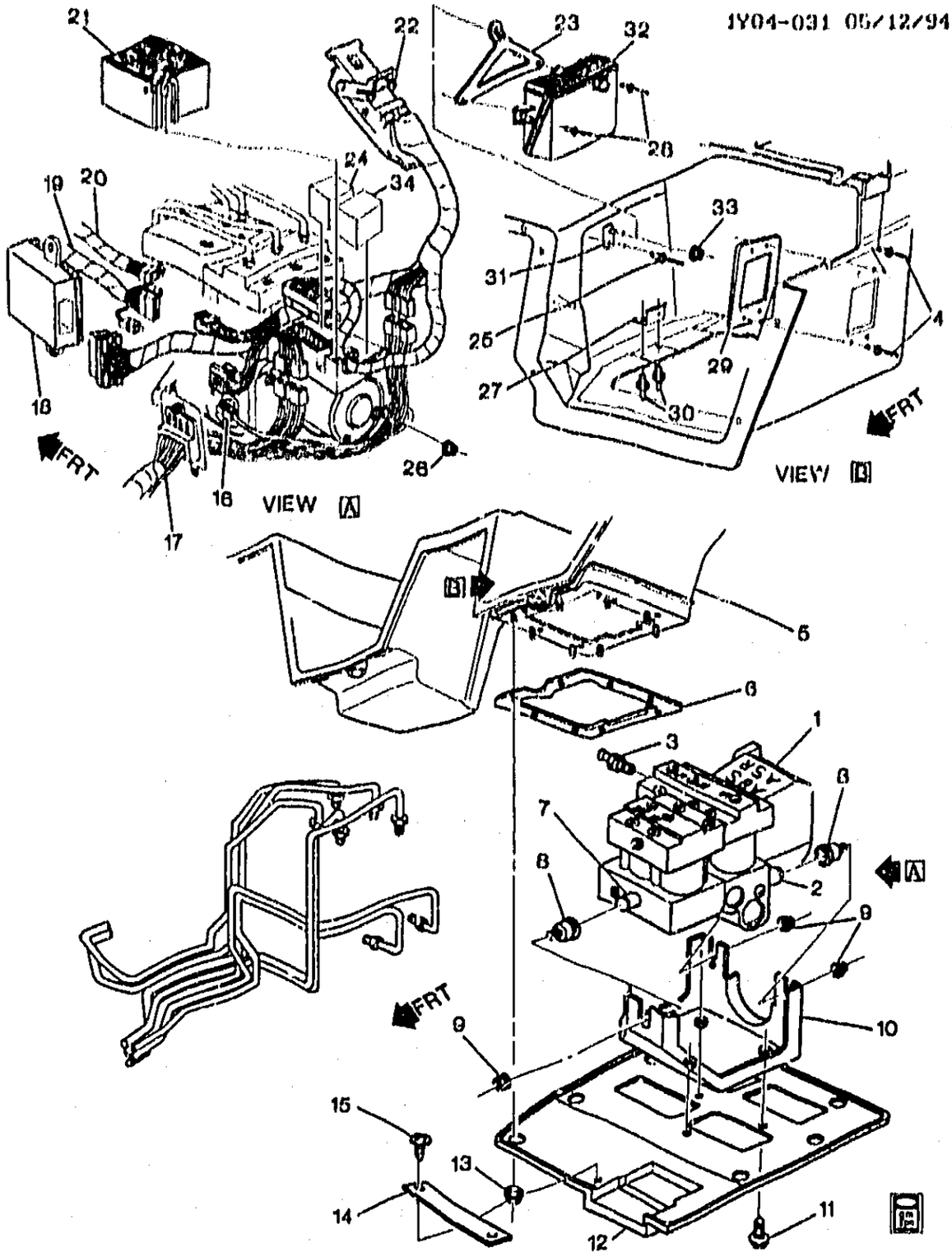

1Y04-031

1992-1994 Y TRACTION CONTROL & ABS SYSTEM (LT1)
1992-1995 Y TRACTION CONTROL & ABS SYSTEM (LT5)

1.	5-N21	4.730	VALVE, BRK PRESS MOD (AC-DELCO #12516323)	92-94 Y	1	12516323
	5-N21	4.730	VALVE, BRK PRESS MOD (AC-DELCO #12516323)	95 Y (LT5)	1	12516323

© 2000 GENERAL MOTORS SERVICE PARTS OPERATIONS-CHEVROLET-14Y

							1Y04-031
2.	5-N21	4.730	PIN, BRK PRESS MOD VLV (M6X1)				12516330
3.	5-N21	4.730	BOLT, BRK PRESS MOD VLV BLEDR (4.666)	92-94	Y	4	14071026
	5-N21	4.730	BOLT, BRK PRESS MOD VLV BLEDR (4.666)	95	Y (LT5)	1	14071026
4.		N.S.	RIVET, ELEK BRK CONT WRG HARN GROM TAP PLT			2	
5.		N.S.	PANEL ASM RR FLR (SEE 12.000 GROUP FOR PART NUMBERS AND ILLUS)				
6.	5-N19	4.720	GASKET, ELEK BRK CONT MDL CVR	92-95	Y	1	10167107
7.	5-N21	4.730	PIN, BRK PRESS MOD VLV (M10X1)				12516331
8.	5-N21	4.730	INSULATOR, BRK PRESS MOD VLV	92-95	Y	3	14087660
9.		8.917	NUT, HEX W/CON WA M6X1X5.5 (9) 7111M 16-OD (BRK PRESS MOD VLV BRKT)	92-95		3	11516793
10.	5-N21	4.730	BRACKET, BRK PRESS MOD VLV	92-94	Y	1	10143511
	5-N21	4.730	BRACKET, BRK PRESS MOD VLV	95	Y (LT5)	1	10143511
11.		8.900	BOLT-METRIC HEAVY HEX FLANGE HEAD (BRK PRESS MOD VLV BRKT)	92-95		3	11516061
12.	5-N19	4.720	COVER, ELEK BRK CONT MDL	92-94	Y	1	10143537
	5-N19	4.720	COVER, ELEK BRK CONT MDL	95	Y (ZR1)	1	10143537
	5-N19	4.720	COVER, ELEK BRK CONT MDL	95	Y (EXC ZR1)	1	10225919
13.		8.917	NUT, HFH, M8X1.25, 17.9 OD, 7.36 THK, 13MM HEX, 10, ZF (ELEK BRK CONT MDL CVR) (8.915) (AC-DELCO #11514596)	92-95		8	11514596
14.	5-N19	4.686	RETAINER, BRK PIPE				10218188
15.	5-N19	4.686	BOLT, BRK PIPE RET (10.685)	92-95	Y	2	11515397
16.	5-N19	4.720	WIRE, BRK PRESS MOD VLV WRG HARN GND	92-95	Y	1	12080879
17.	5-N19	4.720	HARNESS, ELEK BRK CONT & ELEC TRACT CONT WRG	93-94	Y (FX3)	1	12130313
	5-N19	4.720	HARNESS, ELEK BRK CONT & ELEC TRACT CONT WRG	93-94	Y (EXC FX3)	1	12130314
	5-N19	4.720	HARNESS, ELEK BRK CONT & ELEC TRACT CONT WRG	95	Y (LT5)	1	12130313
	5-N19	4.720	HARNESS, ELEK BRK CONT & ELEC TRACT CONT WRG (CONT MDL TO WHL SEN HARN)	92	Y (EXC FX3)	1	12106545
	5-N19	4.720	HARNESS, ELEK BRK CONT & ELEC TRACT CONT WRG (FRT & RR WHL SEN TO CONT HARN)	92	Y (EXC FX3)	1	12106546
18.	5-N23	7.450	MODULE ELEK SUSP CONT	92-95	Y	1	22052752
19.	5-N23	7.450	HARNESS, ELEK SUSP STRUT WRG HARN EXTN	92-93	Y (FX3)	1	12080856
	5-N23	7.450	HARNESS, ELEK SUSP STRUT WRG HARN EXTN	94-95	Y (ML9, FX3)	1	12130362
	5-N23	7.450	HARNESS, ELEK SUSP STRUT WRG HARN EXTN	94-95	Y (M30, FX3)	1	12130490
20.		DISCON	HARNESS, BODY FRT WRG	92	Y07 (UU8, U1F)	1	12125811
		DISCON	HARNESS, BODY FRT WRG	92	Y07 (UM6)	1	12125812

© 2000 GENERAL MOTORS SERVICE PARTS OPERATIONS-CHEVROLET-14Y

		DISCON	HARNESS, BODY FRT WRG	92	Y07 (UM0)	1	12106537
		DISCON	HARNESS, BODY FRT WRG	92	Y07 (UU8, U1F)	1	12106530
	5-N25	13.090	HARNESS, BODY FRT WRG	93	Y07	1	12141706
	5-N25	13.090	HARNESS, BODY FRT WRG	93	Y07	1	12130341
	5-N25	13.090	HARNESS, BODY FRT WRG	94	Y07 (T90)	1	12141706
	5-N25	13.090	HARNESS, BODY FRT WRG	94	Y07 (EXC T90)	1	12141706
	5-N25	13.090	HARNESS, BODY FRT WRG	94	Y07 (EXC T90)	1	12130355
	5-N25	13.090	HARNESS, BODY FRT WRG	95	Y07 (EXC T90, ZR1) ...	1	12130403
	5-N25	13.090	HARNESS, BODY FRT WRG	95	Y07 (ZR1)	1	12141706
	5-N25	13.090	HARNESS, BODY FRT WRG	95	Y07 (EXC T90)	1	12130476
	5-N25	13.090	HARNESS, BODY FRT WRG	94	Y07 (T90) (EXPORT) ...	1	12130341
	5-N25	13.090	HARNESS, BODY FRT WRG	95	Y07 (T90) (EXPORT) ...	1	12130402
	5-N25	13.090	HARNESS, BODY FRT WRG	95	Y07 (T90) (EXPORT) ...	1	12130477
21.	5-N21	4.730	COVER, BRK PRESS MOD VLV RLY	92-94	Y	1	12516329
	5-N21	4.730	COVER, BRK PRESS MOD VLV RLY	95	Y (LT5)	1	12516329
22.	5-N19	4.720	HARNESS, BRK PRESS MOD VLV WRG	93	Y (EXC FX3)	1	12106505
		DISCON	HARNESS, BRK PRESS MOD VLV WRG	93	Y (FX3)	1	12106507
	5-N19	4.720	HARNESS, BRK PRESS MOD VLV WRG	94	Y (EXC FX3)	1	12130360
	5-N19	4.720	HARNESS, BRK PRESS MOD VLV WRG	94	Y (FX3)	1	12130361
	5-N19	4.720	HARNESS, BRK PRESS MOD VLV WRG	95	Y (LT5)	1	12130361
23.	5-N19	4.720	BRACKET, ELEK BRK & TRACT CONT MDL	92-94	Y	1	10143546
	5-N19	4.720	BRACKET, ELEK BRK & TRACT CONT MDL	95	Y (LT5)	1	10143546
24.	5-N21	4.730	RELAY, BRK PRESS MOD VLV (AC-DELCO #12516332)	92-94	Y	1	12516332
	5-N21	4.730	RELAY, BRK PRESS MOD VLV (AC-DELCO #12516332)	95	Y (LT5)	1	12516332
25.		N.S.	RIVET, ELEK BRK & TRACT CONT MDL BRKT STUD PLT		.....		
26.		8.915	NUT, M5X.8, 5 THK, 9M, PEOR (BRK PRESS MOD VLV WRG HARN GND)	92-95	.....	1	11509203
27.	5-N19	4.720	SUPPORT, ELEK BRK & TRACT CONT MDL	92-94	Y	1	10143547
	5-N19	4.720	SUPPORT, ELEK BRK & TRACT CONT MDL	95	Y (LT5)	1	10143547
28.		N.S.	RIVET, ELEK BRK & TRACT CONT MDL		.....		
29.	5-N19	4.720	PLATE, ELEK BRK CONT WRG HARN GROM TAP (3.675)	92-95	Y	1	14090618
30.		N.S.	RIVET, ELEK BRK & TRACT CONT MDL SUPT		.....		
31.	5-N19	4.720	PLATE, ELEK BRK & TRACT CONT MDL BRKT STUD (12.986)	92-94	Y	2	14058658
	5-N19	4.720	PLATE, ELEK BRK & TRACT CONT MDL BRKT STUD (12.986)	95	Y (LT5)	1	14058658
32.	5-N19	4.720	MODULE, ELEK BRK & TRACT CONT (AC-DELCO #10241014) .	92-94	Y	1	10241014
	5-N19	4.720	MODULE, ELEK BRK & TRACT CONT (AC-DELCO #10241014) .	95	Y (LT5)	1	10241014

								1Y04-031
33.		0.017	NUT, HEX 6X1X7 SELF LK 14.2-OD (0) 7111M ALL MET PREV TORQ (ELEK BRK & TRACT CONT MDL BRKT)	02-95	.....	1	11510075
34.	5-N21	4.730	RELAY, BRK PRESS MOD VLV PUMP MOT (4 TERMINAL) (AC-DELCO #12513302)	02-94	Y	1	12513302
	5-N21	4.730	RELAY, BRK PRESS MOD VLV PUMP MOT (4 TERMINAL) (AC-DELCO #12513302)	95	Y (LT5)	1	12513302

RPO DEFINITIONS

FX3 – RIDE AND HANDLING,ELECTRONIC CONTROLLED
LT1 – ENGINE-GAS, 8 CYL, 5.7L(5.7P),MFI,HO
LT5 – ENGINE,5.7L(5.7J),TPI
ML9 – TRANSMISSION,MANUAL 6-SPEED
M30 – TRANSMISSION,AUTOMATIC 4 SPEED,4L60E,ELECTRONIC
T90 – LAMP,SIGNALING AND MARKER(EXPORT)
UM6 – RADIO,AM/FM STEREO,CASSETTE,ETR,INCLUDES CLOCK
UU8 – RADIO,AM/FM STEREO,CASSETTE,ETR,DELCO/BOSE,DOLBY,INCLUDES CLOCK
U1F – RADIO,AM/FM STEREO,CASSETTE,C.D. PLAYER,ETR,BOSE,INCLUDES CLOCK
ZR1 – PACKAGE,SPECIAL PERFORMANCE COUPE(1Y07 + ZR1 == 1YZ07)

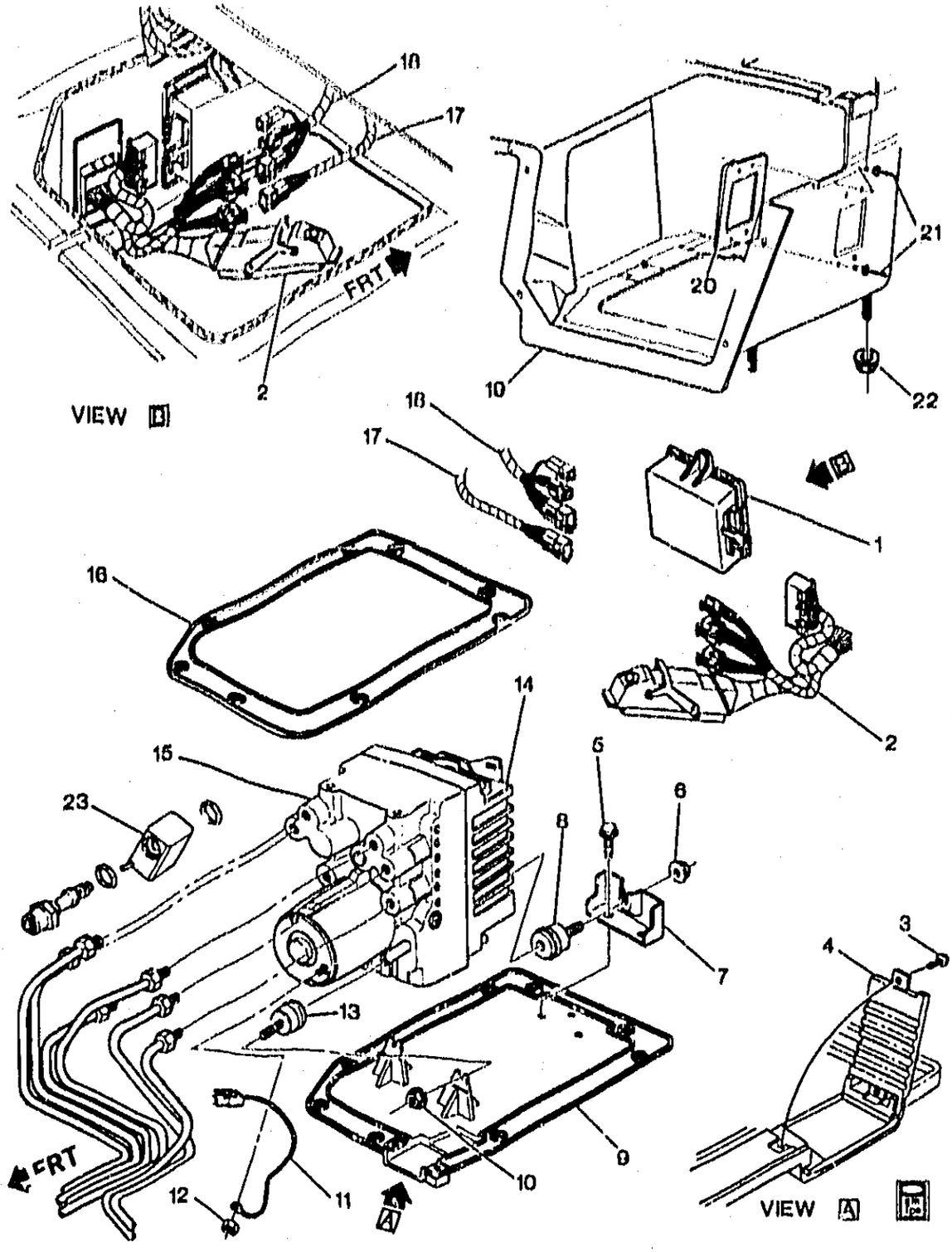

1Y04-030

1995 Y TRACTION CONTROL & ABS SYSTEM (LT1)
1996 Y TRACTION CONTROL & ABS SYSTEM

1.	5-N23	7.450	MODULE, ELEK SUSP CONT ...	95 Y (FX3)	1	22052752
	5-N23	7.450	MODULE, ELEK SUSP CONT (MUST BE PROGRAMMED AT DEALER)	96 Y (F45)	1	16205661

© 2000 GENERAL MOTORS SERVICE PARTS OPERATIONS- CHEVROLET-14Y

	5-N23	7.450	MODULE, ELEK SUSP CONT (FILTER) (PART OF ELEK SUSP WRG HARN EXTN)	95	Y (M30, FX3)	1	12135092
2.	5-N19	4.720	HARNESS, ELEK BRK CONT & ELEC TRACT CONT WRG	95	Y (LT1)	1	12130367
	5-N19	4.720	HARNESS, ELEK BRK CONT & ELEC TRACT CONT WRG	96	Y (F45)	1	12130459
	5-N19	4.720	HARNESS, ELEK BRK CONT & ELEC TRACT CONT WRG	96	Y (EXC F45)	1	1213[illegible]
3.	5-N19	4.686	BOLT, BRK PIPE RET (10.686)	95-96	Y	2	11515397
4.	5-N19	4.686	RETAINER, BRK PIPE	95-96	Y	1	10218188
5.		9.900	BOLT, HEX W/CON WA, M6X1X20 (BRK PRESS MOD VLV BRKT)	95-96		2	11514623
6.		8.917	NUT, HEX W/CON WA M6X1X5.5 (9) 7111M 16-OD (BRK PRESS MOD VLV BRKT)	95-96		3	11516793
7.	5-N21	4.730	BRACKET, BRK PRESS MOD VLV	95	Y (LT1)	1	10218185
	5-N21	4.730	BRACKET, BRK PRESS MOD VLV	96	Y	1	10218185
8.	5-N21	4.730	INSULATOR, BRK PRESS MOD VLV	95-96	Y	3	14087680
9.	5-N19	4.720	COVER, ELEK BRK CONT MDL	95	Y (ZR1)	1	10143537
	5-N19	4.720	COVER, ELEK BRK CONT MDL	95	Y (EXC ZR1)	1	10225919
	5-N19	4.720	COVER, ELEK BRK CONT MDL	96	Y	1	10225919
10.		8.917	NUT, HEX W/CON WA M6X1X5.5 (9) 7111M 16-OD (BRK PRESS MOD VLV BRKT)	95-96		3	11516793
11.	5-N19	4.720	WIRE, BRK PRESS MOD VLV WRG HARN GND	95-96	Y	1	12080879
12.		8.015	NUT, M5X.8, 5 THK, 9M, PEOR (BRK PRESS MOD VLV WRG HARN GND)	95-96		1	11509203
13.	5-N21	4.730	INSULATOR, BRK PRESS MOD VLV	95-96	Y	3	14087680
14.	5-N19	4.720	MODULE, ELEK BRK CONT	96	Y	1	12525023
	5-N19	4.720	MODULE, ELEK BRK CONT (& TRACT CONT)	95	Y (LT1)	1	12521972
15.	5-N21	4.730	VALVE, BRK PRESS MOD (DOES NOT INCL MODULE C/O 14.)	96	Y	1	12525062
	5-N21	4.730	VALVE, BRK PRESS MOD (& TRACT CONT) (DOES NOT INCL MODULE C/O 14.)	95	Y (LT1)	1	12521971
16.	5-N19	4.720	GASKET, ELEK BRK CONT MDL CVR	95-96	Y	1	10167107
17.	5-N23	7.450	HARNESS, ELEK SUSP STRUT WRG HARN EXTN	95	Y (ML9, FX3)	1	12130362
	5-N23	7.450	HARNESS, ELEK SUSP STRUT WRG HARN EXTN	95	Y (M30, FX3)	1	12130490
	5-N23	7.450	HARNESS, ELEK SUSP STRUT WRG HARN EXTN	96	Y (F45)	1	12130460
18.	5-N25	13.090	HARNESS, BODY FRT WRG	95	Y07 (EXC T90, ZR1)	1	12130403
	5-N25	13.090	HARNESS, BODY FRT WRG	95	Y07 (ZR1)	1	12141796
	5-N25	13.090	HARNESS, BODY FRT WRG	95	Y37 (EXC T90)	1	12130478
	5-N25	13.090	HARNESS, BODY FRT WRG	96	Y07 (EXC T90)	1	12130458
	5-N25	13.090	HARNESS, BODY FRT WRG	96	Y67 (EXC T90)	1	12130456
	5-N25	13.090	HARNESS, BODY FRT WRG	95	Y07 (T90) (EXPORT)	1	12130402

© 2000 GENERAL MOTORS SERVICE PARTS OPERATIONS - CHEVROLET - 14Y

							1Y04-030
	5-N25	13.090	HARNESS, BODY FRT WRG	95	Y07 (T90) (EXPORT) ...	1	12130477
	5-N25	13.090	HARNESS, BODY FRT WRG	96	Y07 (T90) (EXPORT) ...	1	12130457
	5-N25	13.090	HARNESS, BODY FRT WRG	96	Y07 (T90) (EXPORT) ...	1	12130455
19.		N.S.	PANEL ASM RR FLR (SEE GROUP 12.000 "SHEET METAL/BODY" ILLUS)		.....		
20.	5-N19	4.720	PLATE, ELEK BRK CONT WRG HARN GROM TAP (3.075)	95-96	Y	1	14090610
21.		N.S.	RIVET, ELEK BRK CONT WRG HARN GROM TAP PLT		.....		
22.		0.017	NUT, HFH, M8X1.25, 17.0 OD, 730 THK, 13MM HEX, 10, ZF (ELEK BRK CONT MDL CVR) (0.015) (AC-DELCO #11514596)	95-96	.....	8	11514596
23.	5-N21	4.730	VALVE, BRK PRESS MOD DAMPING (& TRACT CONT) (W/BOLT & O-RINGS)	95	Y (LT1)	1	12525660
	5-N21	4.730	VALVE, BRK PRESS MOD DAMPING (& TRACT CONT) (W/BOLT & O-RINGS)	96	Y	1	12525060

RPO DEFINITIONS

FX3 -- RIDE AND HANDLING,ELECTRONIC CONTROLLED
F45 -- CHASSIS CONTINUOUS VALVE REAL TIME DAMPING
LT1 -- ENGINE-GAS, 8 CYL, 5.7L(5.7P),MFI,HO
ML9 -- TRANSMISSION,MANUAL 6-SPEED
M30 -- TRANSMISSION,AUTOMATIC 4 SPEED,4L60E,ELECTRONIC
T90 -- LAMP,SIGNALING AND MARKER(EXPORT)
ZR1 -- PACKAGE,SPECIAL PERFORMANCE COUPE(1YY07 + ZR1 == 1YZ07)

MICROFICHE INDEX

GROUP 4.000

FICHE 5 OF 11

GROUP	DESCRIPTION	STARTING GRID LOCATION PARTS	ILLUSTRATIONS
–	GENERAL INFORMATION	1–A2	1–G2
–	ALPHABETICAL INDEX	1–B13	N.A.
4.000	4–SPEED TRANSMISSION	5–A2	5–F2
4.000	6–SPEED TRANSMISSION	5–B2	5–G2
4.000	AUTOMATIC TRANSMISSION	5–C2	5–H2
–	OUT OF FICHE CALLS	N.A.	5–M23

5–M1

2.480 BRACKET – CONNECTOR – HARNESS – WIRE, Chassis Wiring

94	Y 4–SPD A/TRANS (M30)	16320479	1	119.63	HARNESS, A/TRNS WRG (AC–DELCO #16320479) .....
95	Y 4–SPD A/TRANS (M30)	16320477	1	75.73	HARNESS, A/TRNS WRG (INCLS TCC SOLENOID W/TCC DRAINDOWN FEATURE) (AC–DELCO #16320477)
96	Y 4–SPD A/TRANS (M30)	16320476	1	81.04	HARNESS, A/TRNS WRG (INCLS TCC SOL VLV) (AC–DELCO #16320476) .
85	Y A/TRNS (MD8)	12048732	1	DISCON	HARNESS, E .C .M. .....
85	Y M/TRNS (MH6, MK2) W/FED (NA5)	12048733	1	DISCON	HARNESS, E .C .M. .....
84	Y A/TRNS, FED, CALIF (1ST DES) ..	12028754	1	DISCON	HARNESS, ELEK CONT MDL WRG (SGL WIRE OIL PRESS SW CONN) ..
84	Y M/TRNS, FED, CALIF (1ST DES) .	12029199	1	DISCON	HARNESS, ELEK CONT MDL WRG (SGL WIRE OIL PRESS SW CONN) ..
84	Y M/TRNS, FED, CALIF (2ND DES) .	12029216	1	DISCON	HARNESS, ELEK CONT MDL WRG (DBL WIRE OIL PRESS SW CONN) ..
84	Y A/TRNS, FED, CALIF (2ND DES) .	12029217	1	DISCON	HARNESS, ELEK CONT MDL WRG (DBL WIRE OIL PRESS SW CONN) ..
89	Y (5.7–8) A/TRNS, A/C (C68)	12090323	1	1266.25	HARNESS, ENG & ECM (02.525) .....
86	Y M/TRNS, A/C (C60), FED (NA5) (EXC NM8 EXPORT)	12048815	1	DISCON	HARNESS, ENG & ECM WRG (02.525) .
86	Y A/TRNS, A/C (C60) (EXC NM8 EXPORT)	12048817	1	DISCON	HARNESS, ENG & ECM WRG (02.525) .
86	Y A/TRNS, A/C (C68) (EXC NM8 EXPORT)	12048818	1	DISCON	HARNESS, ENG & ECM WRG (02.525) .
86	Y07 M/TRNS, A/C (C68), FED (NA5) (EXC NM8 EXPORT)	12048816	1	DISCON	HARNESS, ENG & ECM WRG (02.525) .
87	Y M/TRNS, A/C (C60)	12067670	1	DISCON	HARNESS, ENG & ECM WRG (02.525) .
87	Y M/TRNS, A/C (C68)	12067671	1	DISCON	HARNESS, ENG & ECM WRG (02.525) .
87	Y A/TRNS, A/C, FED (NA5) (EXC NM8 EXPORT)	12067672	1	DISCON	HARNESS, ENG & ECM WRG (02.525) .
87	Y A/TRNS, A/C (C68), FED (NA5) (EXC NM8 EXPORT)	12067673	1	DISCON	HARNESS, ENG & ECM WRG (02.525) .
88	Y A/TRNS, A/C (C60)	12055808	1	DISCON	HARNESS, ENG & ECM WRG (02.525) .
88	Y A/TRNS, A/C (C68)	12055809	1	DISCON	HARNESS, ENG & ECM WRG (02.525) .
88	Y M/TRNS, A/C (C60)	12080840	1	DISCON	HARNESS, ENG & ECM WRG (02.525) .
88	Y M/TRNS, A/C (C68)	12080841	1	DISCON	HARNESS, ENG & ECM WRG (02.525) .
89	Y (5.7–8) M/TRNS, A/C (C60) (2ND DES)	12090320	1	1266.25	HARNESS, ENG & ECM WRG (02.525) (ORANGE WIRE IN B–8 CAV OF VATS MDL CONN) .....
89	Y (5.7–8) M/TRNS, A/C (C68)	12090321	1	1266.25	HARNESS, ENG & ECM WRG (02.525) .
89	Y (5.7–8) A/TRNS, A/C (C60) (2ND DES)	12090322	1	1266.25	HARNESS, ENG & ECM WRG (02.525) (ORANGE WIRE IN B–8 CAV OF VATS MDL CONN) .....
89	Y (5.7J)	12090324	1	1266.25	HARNESS, ENG & ECM WRG (02.525) .
91	Y 5.7J (LT5)	12106549	1	26.14	HARNESS, ENG PWR SW WRG (I/P TO VALET MODE SW) (USE W/4 PIN ENG PWR SW CONN) .....
87–89	Y	12067418	1	DISCON	HARNESS, F/FLR CNSL . .....
84–86	Y	12029153	1	DISCON	HARNESS, FRT FLR CNSL WRG .....
85	Y (EXC VB4, VD1, VE1, VT7 EXPORT)	12050645	1	DISCON	HARNESS, FWD LP .....
86	Y (EXC VB4, VD1, VE1, VT7 EXPORT)	12048809	1	DISCON	HARNESS, FWD LP .....
87	Y (EXC T72, T84 EXPORT)	12067732	1	DISCON	HARNESS, FWD LP .....
84	Y	12028953	1	DISCON	HARNESS, FWD LP WRG .....
88	Y (EXC T72, T84 EXPORT)	12073487	1	666.86	HARNESS, FWD LP WRG .....
89	Y (5.7–8)	12073487	1	666.86	HARNESS, FWD LP WRG .....
90	Y (5.7–8) (EXC CANADIAN T61) ...	12073776	1	666.86	HARNESS, FWD LP WRG .....

© 2000 GENERAL MOTORS SERVICE PARTS OPERATIONS

2.480 BRACKET – CONNECTOR – HARNESS – WIRE, Chassis Wiring(Con't)

90	Y (5.7J) SOFT RIDE SUSP (FE1), H .D .SUSP (EXC CANADIAN T61) ...	12090331	1	985.50	HARNESS, FWD LP WRG .....
91	Y 5.7–8 (L98), (EXC DAYTIME RUNNING LGT (T61)	12080063	1	985.50	HARNESS, FWD LP WRG .....
91	Y 5.7J (LT5), SOFT RIDE SUSP (FE1), HVY DUTY SUSP (FE7), (EXC DAYTIME RUNNING LGT (T61)	12080064	1	666.86	HARNESS, FWD LP WRG .....
92	Y 5.7P (LT1), (EXC DAYTIME RUNNING LGT (T61)	12090371	1	292.85	HARNESS, FWD LP WRG .....
92	Y 5.7J (LT5), (EXC DAYTIME RUNNING LGT (T61)	12090372	1	315.14	HARNESS, FWD LP WRG .....
93	Y 5.7P (LT1), (EXC DIAGNOSTIC SYSTEM (BAK), DAYTIME RUNNING LGT (T61)	12106560	1	816.00	HARNESS, FWD LP WRG .....
93–94	Y 5.7J (LT5), (EXC DAYTIME RUNNING LGT (T61)	12106563	1	985.50	HARNESS, FWD LP WRG .....
93	Y 5.7P (LT1), DIAGNOSTIC SYSTEM (BAK), (EXC DAYTIME RUNNING LGT (T61)	12141022	1	292.85	HARNESS, FWD LP WRG .....
94	Y 5.7P (LT1), (EXC HDLP (T72) (EXPORT), RH RULE OF ROAD HDLP (T84) (EXPORT), LH RULE OF ROAD HDLP (T85) (EXPORT), SIG & MKR LP (T90) (EXPORT) ...	12130480	1	292.85	HARNESS, FWD LP WRG .....
94	Y 5.7J (LT5), (EXC HDLP (T72) (EXPORT), RH RULE OF ROAD HDLP (T84) (EXPORT), LH RULE OF ROAD HDLP (T85) (EXPORT), SIG & MKR LP (T90) (EXPORT) ...	12164336	1	292.85	HARNESS, FWD LP WRG .....
95	Y 5.7P (LT1), (EXC HDLP (T72) (EXPORT), RH RULE OF ROAD HDLP (T84) (EXPORT), LH RULE OF ROAD HDLP (T85) (EXPORT), SIG & MKR LP (T90) (EXPORT) ...	12130484	1	292.85	HARNESS, FWD LP WRG .....
95	Y 5.7J (LT5), (EXC HDLP (T72) (EXPORT), RH RULE OF ROAD HDLP (T84) (EXPORT), LH RULE OF ROAD HDLP (T85) (EXPORT), SIG & MKR LP (T90) (EXPORT) ...	12130486	1	292.85	HARNESS, FWD LP WRG .....
96	Y (EXC HDLP (T72) (EXPORT), RH RULE OF ROAD HDLP (T84) (EXPORT), LH RULE OF ROAD HDLP (T85) (EXPORT), SIG & MKR LP (T90) (EXPORT)	12163717	1	292.85	HARNESS, FWD LP WRG .....
85	Y A/TRNS (MD8), A/C (C60)	12048741	1	DISCON	HARNESS, I/P .....
85	Y M/TRNS (MH5, MK2), A/C (C60) ..	12048742	1	DISCON	HARNESS, I/P .....
86	Y M/TRNS, A/C (C60)	12048793	1	DISCON	HARNESS, I/P .....
86	Y A/TRNS, A/C (C60)	12048794	1	DISCON	HARNESS, I/P .....
86	Y M/TRNS, A/C (C68)	12048795	1	DISCON	HARNESS, I/P .....
86	Y A/TRNS, A/C (C68)	12048796	1	DISCON	HARNESS, I/P .....
87	Y A/TRNS, A/C (C68)	12068102	1	1257.59	HARNESS, I/P .....
87	Y M/TRNS, A/C (C68)	12068103	1	1257.59	HARNESS, I/P .....
87	Y A/TRNS, A/C (C60)	12073820	1	DISCON	HARNESS, I/P .....
84	Y A/TRNS (1ST DES)	12036383	1	DISCON	HARNESS, I/P WRG (BLACK 5–WAY AC CONN W/2 DBL WIRES IN CAVS C & D) .....
84	Y M/TRNS	12043083	1	DISCON	HARNESS, I/P WRG .....
84	Y A/TRNS (2ND DES)	12043276	1	DISCON	HARNESS, I/P WRG (1 DBL WIRE IN CAV D) .....
87	Y M/TRNS (MH5, MK2), A/C (C60) ..	12073821	1	DISCON	HARNESS, I/P WRG .....

© 2000 GENERAL MOTORS SERVICE PARTS OPERATIONS

2.480 BRACKET – CONNECTOR – HARNESS – WIRE, Chassis Wiring(Con't)

88	Y (5.7–8) M/TRNS, A/C (C60)	12073824	1	DISCON	HARNESS, I/P WRG .....
88	Y (5.7–8) A/TRNS, A/C (C60)	12073825	1	DISCON	HARNESS, I/P WRG .....
88	Y (5.7–8) M/TRNS, A/C (C68)	12073826	1	DISCON	HARNESS, I/P WRG .....
88	Y (5.7–8) A/TRNS, A/C (C68)	12073827	1	DISCON	HARNESS, I/P WRG .....
89	Y (5.7–8) ML9, A/C (C60) (1ST DES)	12073507	1	1548.75	HARNESS, I/P WRG (PINK WIRE IN B–8 CAV OF VATS MDL CONN) .....
89	Y (5.7–8) A/TRNS (MD8), A/C (C60) (1ST DES)	12073509	1	1548.75	HARNESS, I/P WRG (PINK WIRE IN B–8 CAV OF VATS MDL CONN) .....
89	Y (5.7–8) M/TRNS (ML9), A/C (C68) (1ST DES)	12073511	1	1548.75	HARNESS, I/P WRG (PINK WIRE IN B–8 CAV OF VATS MDL CONN) .....
89	Y (5.7–8) A/TRNS (MD8), A/C (C68) (1ST DES)	12073513	1	1548.75	HARNESS, I/P WRG (PINK WIRE IN B–8 CAV OF VATS MDL CONN) .....
89	Y (5.7–8) ML9, A/C (C60) (2ND DES)	12090315	1	1548.75	HARNESS, I/P WRG (ORANGE WIRE IN B–8 CAV OF VATS MDL CONN) .....
89	Y (5.7–8) A/TRNS (MD8), A/C (C60) (2ND DES)	12090316	1	1257.59	HARNESS, I/P WRG (ORANGE WIRE IN B–8 CAV OF VATS MDL CONN) .....
89	Y (5.7–8) M/TRNS (ML9), A/C (C68) (2ND DES)	12090318	1	1548.75	HARNESS, I/P WRG (ORANGE WIRE IN B–8 CAV OF VATS MDL CONN) .....
89	Y (5.7–8) A/TRNS (MD8), A/C (C68) (2ND DES)	12090319	1	1266.25	HARNESS, I/P WRG (ORANGE WIRE IN B–8 CAV OF VATS MDL CONN) .....
90	Y M/TRNS (ML9), A/C (C60) (EXC CANADIAN T61)	12101432	1	1239.00	HARNESS, I/P WRG (**VPI 1–877–846–8243) .....
90	Y M/TRNS (ML9), A/C (C68) (EXC CANADIAN T61)	12101434	1	1548.75	HARNESS, I/P WRG .....
90	Y 4–SPD A/TRANS (MD8), A/C MAN CONT (C60), (EXC DAYTIME RUNNING LGT (T61)	12102274	1	1257.59	HARNESS, I/P WRG .....
90	Y A/TRNS (MD8), A/C (C68) (EXC CANADIAN T61)	12102538	1	1257.59	HARNESS, I/P WRG .....
91	Y 4–SPD A/TRANS (MD8), A/C MAN CONT (C60), (EXC DAYTIME RUNNING LGT (T61)	12116436	1	1028.20	HARNESS, I/P WRG .....
91	Y 6–SPD M/TRANS (ML9), A/C MAN CONT (C60), (EXC DAYTIME RUNNING LGT (T61)	12116438	1	1028.20	HARNESS, I/P WRG .....
91	Y 4–SPD A/TRANS (MD8), A/C AUTO ELEC CONT (C68), (EXC DAYTIME RUNNING LGT (T61)	12116500	1	1266.25	HARNESS, I/P WRG (MAY REQ 12106563 WIRE IF IMPR PRESENT AT THE PWR SEAT FEED) .....
91	Y 6–SPD M/TRANS (ML9), A/C AUTO ELEC CONT (C68), (EXC DAYTIME RUNNING LGT (T61)	12116502	1	1028.20	HARNESS, I/P WRG .....
92	Y 4–SPD A/TRANS (MD8), A/C MAN CONT (C60), (EXC DAYTIME RUNNING LGT (T61)	12125005	1	1028.20	HARNESS, I/P WRG .....
92	Y 6–SPD M/TRANS (ML9), A/C MAN CONT (C60), (EXC DAYTIME RUNNING LGT (T61)	12125007	1	1257.59	HARNESS, I/P WRG .....
92	Y 4–SPD A/TRANS (MD8), A/C AUTO ELEC CONT (C68), (EXC DAYTIME RUNNING LGT (T61)	12125813	1	881.59	HARNESS, I/P WRG .....
92	Y 6–SPD M/TRANS (ML9), A/C AUTO ELEC CONT (C68), (EXC DAYTIME RUNNING LGT (T61)	12125815	1	881.59	HARNESS, I/P WRG .....
93	Y 4–SPD A/TRANS (MD8), A/C MAN CONT (C60), (EXC SIG & MKR LP (T90) (EXPORT)	12141443	1	1257.59	HARNESS, I/P WRG .....
93	Y 6–SPD M/TRANS (ML9), A/C AUTO ELEC CONT (C68), (EXC SIG & MKR LP (T90) (EXPORT) ...	12141444	1	1257.59	HARNESS, I/P WRG (FOR VEH –DRL, SPLICE CAV D TO CAV E @ BLUE 8–WAY DRL MDL CONN.) .....

© 2000 GENERAL MOTORS SERVICE PARTS OPERATIONS

93	Y 6–SPD M/TRANS (ML9), A/C MAN CONT (C60), (EXC SIG & MKR LP (T90) (EXPORT)	12141446	1	1257.59	HARNESS, I/P WRG .....
93	Y 4–SPD A/TRANS (MD8), A/C AUTO ELEC CONT (C68), (EXC SIG & MKR LP (T90) (EXPORT) ...	12141446	1	1257.59	HARNESS, I/P WRG (ON VEHS W/O DAYTIME RUNNING LPS SPLICE CAV D & E WIRES TOGETHER AT BLUE DRL MDL CONN.) .....
94	Y 6–SPD M/TRANS (ML9), A/C MAN CONT (C60), (EXC DAYTIME RUNNING LGT (T61), HDLP (T72) (EXPORT), RH RULE OF ROAD HDLP (T84) (EXPORT), LH RULE OF ROAD HDLP (T85) (EXPORT), SIG & MKR LP (T90) (EXPORT) ...	12130324	1		HARNESS, I/P WRG .....
94	Y 6–SPD M/TRANS (ML9), A/C AUTO ELEC CONT (C68), (EXC DAYTIME RUNNING LGT (T61), HDLP (T72) (EXPORT), RH RULE OF ROAD HDLP (T84) (EXPORT), LH RULE OF ROAD HDLP (T85) (EXPORT), SIG & MKR LP (T90) (EXPORT)	12130326	1	1548.75	HARNESS, I/P WRG .....
94	Y 4–SPD A/TRANS (M30), A/C MAN CONT (C60), (EXC DAYTIME RUNNING LGT (T61), HDLP (T72) (EXPORT), RH RULE OF ROAD HDLP (T84) (EXPORT), LH RULE OF ROAD HDLP (T85) (EXPORT), SIG & MKR LP (T90) (EXPORT), (2ND DES)	12130491	1		HARNESS, I/P WRG .....
94	Y 4–SPD A/TRANS (M30), A/C MAN CONT (C60), DAYTIME RUNNING LGT (T61), (EXC HDLP (T72) (EXPORT), RH RULE OF ROAD HDLP (T84) (EXPORT), LH RULE OF ROAD HDLP (T85) (EXPORT), SIG & MKR LP (T90) (EXPORT) ...	12130492	1		HARNESS, I/P WRG .....
94	Y 4–SPD A/TRANS (M30), A/C AUTO ELEC CONT (C68), (EXC DAYTIME RUNNING LGT (T61), HDLP (T72) (EXPORT), RH RULE OF ROAD HDLP (T84) (EXPORT), LH RULE OF ROAD HDLP (T85) (EXPORT), SIG & MKR LP (T90) (EXPORT)	12130493	1	1488.75	HARNESS, I/P WRG .....
94	Y 4–SPD A/TRANS (M30), A/C AUTO ELEC CONT (C68), DAYTIME RUNNING LGT (T61), (EXC HDLP (T72) (EXPORT), RH RULE OF ROAD HDLP (T84) (EXPORT), LH RULE OF ROAD HDLP (T85) (EXPORT), SIG & MKR LP (T90) (EXPORT)	12130494	1		HARNESS, I/P WRG .....
94	Y 4–SPD A/TRANS (M30), A/C MAN CONT (C60), DAYTIME RUNNING LGT (T61), (EXC HDLP (T72) (EXPORT), RH RULE OF ROAD HDLP (T84) (EXPORT), LH RULE OF ROAD HDLP (T85) (EXPORT), SIG & MKR LP (T90) (EXPORT), (1ST DES)	12141787	1		HARNESS, I/P WRG (TAGGED 0320 OR 0321) (ON VEH W/O DRL, AT 8–WAY BLUE CONN TO DRL MDL SPLICE CAV D & CAV E LEADS TOGETHER.) .....

© 2000 GENERAL MOTORS SERVICE PARTS OPERATIONS

2.480 BRACKET – CONNECTOR – HARNESS – WIRE, Chassis Wiring(Con't)

94	Y 4–SPD A/TRANS (M30), A/C AUTO ELEC CONT (C68), DAYTIME RUNNING LGT (T61), (EXC HDLP (T72) (EXPORT), RH RULE OF ROAD HDLP (T84) (EXPORT), LH RULE OF ROAD HDLP (T85) (EXPORT), SIG & MKR LP (T90) (EXPORT), (1ST DES) ...	12141788	1		HARNESS, I/P WRG (TAGGED 0322 OR 0323) (ON VEH W/DAYTIME RUNNING LGHTS, ADD 8–WAY BLUE CONN TO DAYTIME RUNNING LGHT, SPLICE CAV D & CAV E WIRES TOGETHER) .....
94	Y 6–SPD M/TRANS (ML9), A/C MAN CONT (C60), DAYTIME RUNNING LGT (T61), (EXC HDLP (T72) (EXPORT), RH RULE OF ROAD HDLP (T84) (EXPORT), LH RULE OF ROAD HDLP (T85) (EXPORT), SIG & MKR LP (T90) (EXPORT) ...	12141789	1		HARNESS, I/P WRG .....
94	Y 6–SPD M/TRANS (ML9), A/C AUTO ELEC CONT (C68), DAYTIME RUNNING LGT (T61), (EXC HDLP (T72) (EXPORT), RH RULE OF ROAD HDLP (T84) (EXPORT), LH RULE OF ROAD HDLP (T85) (EXPORT), SIG & MKR LP (T90) (EXPORT)	12141790	1		HARNESS, I/P WRG .....
94	Y 6–SPD M/TRANS (ML9), A/C AUTO ELEC CONT (C68), (EXC HDLP (T72) (EXPORT), RH RULE OF ROAD HDLP (T84) (EXPORT), LH RULE OF ROAD HDLP (T85) (EXPORT), SIG & MKR LP (T90) (EXPORT)	12163703	1	1257.59	HARNESS, I/P WRG .....
95	Y 5.7J (LT5), 6–SPD M/TRANS (ML9), A/C AUTO ELEC CONT (C68), (EXC DAYTIME RUNNING LGT (T61)	12130326	1	1548.75	HARNESS, I/P WRG .....
95	Y 5.7P (LT1), 4–SPD A/TRANS (M30), A/C MAN CONT (C60), DAYTIME RUNNING LGT (T61), (EXC HDLP (T72) (EXPORT), RH RULE OF ROAD HDLP (T84) (EXPORT), LH RULE OF ROAD HDLP (T85) (EXPORT), SIG & MKR LP (T90) (EXPORT)	12130389	1	1424.85	HARNESS, I/P WRG .....
95	Y 5.7P (LT1), 4–SPD A/TRANS (M30), A/C AUTO ELEC CONT (C68), DAYTIME RUNNING LGT (T61), (EXC HDLP (T72) (EXPORT), RH RULE OF ROAD HDLP (T84) (EXPORT), LH RULE OF ROAD HDLP (T85) (EXPORT), SIG & MKR LP (T90) (EXPORT)	12130391	1	1424.85	HARNESS, I/P WRG (SPLICE CAV D & E WIRES @ BLUE DRL MDL CONN FOR VEH W/O DRL.) .....
95	Y 5.7J (LT5), 6–SPD M/TRANS (ML9), A/C AUTO ELEC CONT (C68), DAYTIME RUNNING LGT (T61)	12141790	1		HARNESS, I/P WRG .....
95	Y 5.7P (LT1), 6–SPD M/TRANS (ML9), A/C MAN CONT (C60), (EXC DAYTIME RUNNING LGT (T61), HDLP (T72) (EXPORT), RH RULE OF ROAD HDLP (T84) (EXPORT), LH RULE OF ROAD HDLP (T85) (EXPORT), SIG & MKR LP (T90) (EXPORT)	12163700	1	1548.75	HARNESS, I/P WRG .....

© 2000 GENERAL MOTORS SERVICE PARTS OPERATIONS

MICROFICHE INDEX

GROUP 4.000

FICHE 5 OF 11

GROUP	DESCRIPTION	STARTING GRID LOCATION PARTS	ILLUSTRATIONS
–	GENERAL INFORMATION	1–A2	1–G2
–	ALPHABETICAL INDEX	1–B13	N.A.
4.000	4–SPEED TRANSMISSION	5–A2	5–F2
4.000	6–SPEED TRANSMISSION	5–B2	5–G2
4.000	AUTOMATIC TRANSMISSION	5–C2	5–H2
–	OUT OF FICHE CALLS	N.A.	5–M23

5–N1

2.480 BRACKET – CONNECTOR – HARNESS – WIRE, Chassis Wiring(Con't)

95	Y 5.7P (LT1), 6–SPD M/TRANS (ML9), A/C AUTO ELEC CONT (C68), (EXC DAYTIME RUNNING LGT (T61), HDLP (T72) (EXPORT), RH RULE OF ROAD HDLP (T84) (EXPORT), LH RULE OF ROAD HDLP (T85) (EXPORT), SIG & MKR LP (T90) (EXPORT)	12163702	1	1257.59	HARNESS, I/P WRG .....
95	Y 5.7J (LT5), 6–SPD M/TRANS (ML9), A/C AUTO ELEC CONT (C68)	12163703	1	1257.59	HARNESS, I/P WRG .....
96	Y 4–SPD A/TRANS (M30), A/C MAN CONT (C60), (EXC HDLP (T72) (EXPORT), RH RULE OF ROAD HDLP (T84) (EXPORT), LH RULE OF ROAD HDLP (T85) (EXPORT), SIG & MKR LP (T90) (EXPORT) ...	12130468	1	1548.75	HARNESS, I/P WRG (WHEN USE ON VEH W/O DAYTIME RUN LIGHTS, SPLICE CAV D&E TOGETHER @ BLUE 8–WAY DRL MOD CONN) .....
96	Y 4–SPD A/TRANS (M30), A/C AUTO ELEC CONT (C68), (EXC HDLP (T72) (EXPORT), RH RULE OF ROAD HDLP (T84) (EXPORT), LH RULE OF ROAD HDLP (T85) (EXPORT), SIG & MKR LP (T90) (EXPORT)	12130470	1	1061.69	HARNESS, I/P WRG (WHEN USE ON VEH W/O DAYTIME RUN LIGHTS, SPLICE CAV D&E TOGETHER @ BLUE 8–WAY DRL MOD CONN) .....
96	Y 6–SPD M/TRANS (ML9), A/C MAN CONT (C60), (EXC HDLP (T72) (EXPORT), RH RULE OF ROAD HDLP (T84) (EXPORT), LH RULE OF ROAD HDLP (T85) (EXPORT), SIG & MKR LP (T90) (EXPORT) ...	12130472	1	1257.59	HARNESS, I/P WRG (WHEN USE ON VEH W/O DAYTIME RUN LIGHTS, SPLICE CAV D&E TOGETHER @ BLUE 8–WAY DRL MOD CONN) .....
96	Y 6–SPD M/TRANS (ML9), A/C AUTO ELEC CONT (C68), (EXC HDLP (T72) (EXPORT), RH RULE OF ROAD HDLP (T84) (EXPORT), LH RULE OF ROAD HDLP (T85) (EXPORT), SIG & MKR LP (T90) (EXPORT)	12130474	1	1257.59	HARNESS, I/P WRG (WHEN USE ON VEH W/O DAYTIME RUN LIGHTS, SPLICE CAV D&E TOGETHER @ BLUE 8–WAY DRL MOD CONN) .....
84–91	Y RECL FRT BKT ST (AQ9)	12028999	1	DISCON	HARNESS, I/P WRG HARN EXTN .....
91	Y	12126533	1	DISCON	HARNESS, I/P WRG HARN EXTN (VALET MODE) (USE W/4 PIN ENG PWR SW CONN) .....
92–93	Y RECL FRT BKT ST (AQ9)	12106560	1	47.45	HARNESS, I/P WRG HARN EXTN .....
85–91	Y	12029463	1	25.75	HARNESS, INT AIR TEMP SEN WRG ...
84–85	Y	12028667	1	DISCON	HARNESS, MIR LP WRG .....
	*EXPORT***************EXPORT***************EXPORT***************EXPORT***************EXPORT*				
84	Y NM5 (EXPORT CANADA) (2ND DES)	12029435	1	DISCON	HARNESS, ELEK CONT MDL (OIL PRESS SW HAS 3 SINGLE WIRES) ..
84	Y NM5 (EXPORT, CANADA) (1ST DES)	12029044	1	DISCON	HARNESS, ELEK CONT MDL WRG (OIL PRESS SW CONN HAS 1 DBL WIRE & 1 SGL WIRE) .....
86	Y M/TRNS, A/C (C60), (NM5) EXPORT, CANADA (EXC NM8 EXPORT)	12048815	1	DISCON	HARNESS, ENG & ECM WRG (02.525) .
86	Y A/TRNS, NM8 (EXPORT)	12048819	1	DISCON	HARNESS, ENG & ECM WRG (02.525) .
86	Y07 M/TRNS, A/C (C68), (NM5) EXPORT, CANADA (EXC NM8 EXPORT)	12048816	1	DISCON	HARNESS, ENG & ECM WRG (02.525)
87	Y A/TRNS, A/C, NM5 (EXPORT, CANADA) (EXC NM8 EXPORT)	12067672	1	DISCON	HARNESS, ENG & ECM WRG (02.525) .
87	Y A/TRNS, A/C (C68), NM5 (EXPORT, CANADA) (EXC NM8 EXPORT)	12067673	1	DISCON	HARNESS, ENG & ECM WRG (02.525) .

© 2000 GENERAL MOTORS SERVICE PARTS OPERATIONS

2.480 BRACKET – CONNECTOR – HARNESS – WIRE, Chassis Wiring(Con't)

87	Y A/TRNS, NM8 (EXPORT)	12067674	1	DISCON	HARNESS, ENG & ECM WRG (02.525)
84	Y VB4, VD1, VE1, VT7 (EXPORT)	12029218	1	DISCON	HARNESS, FWD LP
85	Y VB4, VD1, VE1, VT7 (EXPORT)	12050642	1	DISCON	HARNESS, FWD LP
86	Y VB4, VD1, VE1, VT7 (EXPORT)	12055776	1	DISCON	HARNESS, FWD LP
87	Y T72, T84 (EXPORT)	12067734	1	DISCON	HARNESS, FWD LP
88	Y T72, T84 (EXPORT)	12055815	1	DISCON	HARNESS, FWD LP WRG
90	Y (5.7–8) T61 (CANADIAN)	12090336	1	667.87	HARNESS, FWD LP WRG
90	Y (5.7J) T61 (CANADIAN)	12090337	1	987.00	HARNESS, FWD LP WRG
91	Y 5.7–8 (L98), DAYTIME RUNNING LGT (T61)	12090346	1	667.87	HARNESS, FWD LP WRG
91	Y 5.7J (LT5), DAYTIME RUNNING LGT (T61)	12090347	1	667.87	HARNESS, FWD LP WRG
92	Y 5.7P (LT1), DAYTIME RUNNING LGT (T61)	12090373	1	667.87	HARNESS, FWD LP WRG
92	Y 5.7J (LT5), DAYTIME RUNNING LGT (T61)	12090374	1	667.87	HARNESS, FWD LP WRG
93	Y 5.7P (LT1), DAYTIME RUNNING LGT (T61)	12106581	1	666.86	HARNESS, FWD LP WRG
93	Y 5.7J (LT5), DAYTIME RUNNING LGT (T61)	12106582	1	611.03	HARNESS, FWD LP WRG
94	Y 5.7P (LT1), HDLP (T72) (EXPORT), RH RULE OF ROAD HDLP (T84) (EXPORT), LH RULE OF ROAD HDLP (T85) (EXPORT), SIG & MKR LP (T90) (EXPORT)	12130481	1		HARNESS, FWD LP WRG
94	Y 5.7J (LT5), HDLP (T72) (EXPORT), RH RULE OF ROAD HDLP (T84) (EXPORT), LH RULE OF ROAD HDLP (T85) (EXPORT), SIG & MKR LP (T90) (EXPORT)	12154337	1		HARNESS, FWD LP WRG
95	Y 5.7P (LT1), HDLP (T72) (EXPORT), RH RULE OF ROAD HDLP (T84) (EXPORT), LH RULE OF ROAD HDLP (T85) (EXPORT), SIG & MKR LP (T90) (EXPORT)	12130485	1	292.85	HARNESS, FWD LP WRG
96	Y HDLP (T72) (EXPORT), RH RULE OF ROAD HDLP (T84) (EXPORT), LH RULE OF ROAD HDLP (T85) (EXPORT), SIG & MKR LP (T90) (EXPORT)	12163718	1	172.58	HARNESS, FWD LP WRG
94–96	Y HDLP (T72) (EXPORT), RH RULE OF ROAD HDLP (T84) (EXPORT), LH RULE OF ROAD HDLP (T85) (EXPORT), SIG & MKR LP (T90) (EXPORT)	12130344	2	40.09	HARNESS, FWD LP WRG HARN EXTN
90	Y M/TRNS (ML9), A/C (C60), T61 (CANADIAN)	12101433	1	1266.25	HARNESS, I/P WRG
90	Y M/TRNS (ML9), A/C (C68), T61 (CANADIAN)	12101435	1	1266.25	HARNESS, I/P WRG
90	Y A/TRNS (MD8), A/C (C68), T61 (CANADIAN)	12102273	1	1028.20	HARNESS, I/P WRG
90	Y A/TRNS (MD8), A/C (C60), T61 (CANADIAN)	12102537	1		HARNESS, I/P WRG
91	Y 4–SPD A/TRANS (MD8), A/C MAN CONT (C60), DAYTIME RUNNING LGT (T61)	12116437	1	1028.20	HARNESS, I/P WRG
91	Y 6–SPD M/TRANS (ML9), A/C MAN CONT (C60), DAYTIME RUNNING LGT (T61)	12116439	1	1028.20	HARNESS, I/P WRG

© 2000 GENERAL MOTORS SERVICE PARTS OPERATIONS

2.480 BRACKET – CONNECTOR – HARNESS – WIRE, Chassis Wiring(Con't)

91	Y 4-SPD A/TRANS (MD8), A/C AUTO ELEC CONT (C68), DAYTIME RUNNING LGT (T61)	12116501	1	1028.20	HARNESS, I/P WRG .....
91	Y 6-SPD M/TRANS (ML9), A/C AUTO ELEC CONT (C68), DAYTIME RUNNING LGT (T61)	12116503	1	1028.20	HARNESS, I/P WRG .....
92	Y 4-SPD A/TRANS (MD8), A/C MAN CONT (C60), DAYTIME RUNNING LGT (T61)	12125006	1	1028.20	HARNESS, I/P WRG .....
92	Y 6-SPD M/TRANS (ML9), A/C MAN CONT (C60), DAYTIME RUNNING LGT (T61)	12125008	1	1028.20	HARNESS, I/P WRG .....
92	Y 4-SPD A/TRANS (MD8), A/C AUTO ELEC CONT (C68), DAYTIME RUNNING LGT (T61)	12125814	1	1028.20	HARNESS, I/P WRG .....
92	Y 6-SPD M/TRANS (ML9), A/C AUTO ELEC CONT (C68), DAYTIME RUNNING LGT (T61)	12125816	1	1028.20	HARNESS, I/P WRG .....
93	Y 6-SPD M/TRANS (ML9), A/C AUTO ELEC CONT (C68), SIG & MKR LP (T90) (EXPORT)	12141441	1	1547.50	HARNESS, I/P WRG .....
93	Y 4-SPD A/TRANS (MD8), A/C AUTO ELEC CONT (C68), SIG & MKR LP (T90) (EXPORT)	12141442	1	1256.57	HARNESS, I/P WRG .....
94	Y 4-SPD A/TRANS (M30), A/C AUTO ELEC CONT (C68), HDLP (T72) (EXPORT), RH RULE OF ROAD HDLP (T84) (EXPORT), LH RULE OF ROAD HDLP (T85) (EXPORT), SIG & MKR LP (T90) (EXPORT)	12130495	1		HARNESS, I/P WRG .....
94	Y 4-SPD A/TRANS (M30), A/C AUTO ELEC CONT (C68), HDLP (T72) (EXPORT), RH RULE OF ROAD HDLP (T84) (EXPORT), LH RULE OF ROAD HDLP (T85) (EXPORT), SIG & MKR LP (T90) (EXPORT), (1ST DES)	12141791	1		HARNESS, I/P WRG (TAGGED 0328) ...
94	Y 6-SPD M/TRANS (ML9), A/C AUTO ELEC CONT (C68), HDLP (T72) (EXPORT), RH RULE OF ROAD HDLP (T84) (EXPORT), LH RULE OF ROAD HDLP (T85) (EXPORT), SIG & MKR LP (T90) (EXPORT)	12141792	1		HARNESS, I/P WRG .....
95	Y 5.7P (LT1), 4-SPD A/TRANS (M30), A/C AUTO ELEC CONT (C68), HDLP (T72) (EXPORT), RH RULE OF ROAD HDLP (T84) (EXPORT), LH RULE OF ROAD HDLP (T85) (EXPORT), SIG & MKR LP (T90) (EXPORT), (EXC DAYTIME RUNNING LGT (T61)	12130396	1	1257.59	HARNESS, I/P WRG .....
95	Y 5.7P (LT1), 6-SPD M/TRANS (ML9), A/C MAN CONT (C60), DAYTIME RUNNING LGT (T61), (EXC HDLP (T72) (EXPORT), RH RULE OF ROAD HDLP (T84) (EXPORT), LH RULE OF ROAD HDLP (T85) (EXPORT), SIG & MKR LP (T90) (EXPORT)	12163701	1	1257.59	HARNESS, I/P WRG .....

© 2000 GENERAL MOTORS SERVICE PARTS OPERATIONS

2.480 BRACKET – CONNECTOR – HARNESS – WIRE, Chassis Wiring(Con't)

95	Y 5.7P (LT1), 6-SPD M/TRANS (ML9), A/C AUTO ELEC CONT (C68), DAYTIME RUNNING LGT (T61), (EXC HDLP (T72) (EXPORT), RH RULE OF ROAD HDLP (T84) (EXPORT), LH RULE OF ROAD HDLP (T85) (EXPORT), SIG & MKR LP (T90) (EXPORT)	12163703	1	1257.59	HARNESS, I/P WRG
95	Y 5.7P (LT1), 6-SPD M/TRANS (ML9), A/C AUTO ELEC CONT (C68), HDLP (T72) (EXPORT), RH RULE OF ROAD HDLP (T84) (EXPORT), LH RULE OF ROAD HDLP (T85) (EXPORT), SIG & MKR LP (T90) (EXPORT), (EXC DAYTIME RUNNING LGT (T61)	12163704	1	1257.59	HARNESS, I/P WRG
96	Y 4-SPD A/TRANS (M30), A/C AUTO ELEC CONT (C68), HDLP (T72) (EXPORT), RH RULE OF ROAD HDLP (T84) (EXPORT), LH RULE OF ROAD HDLP (T85) (EXPORT), SIG & MKR LP (T90) (EXPORT), (EXC DAYTIME RUNNING LGT (T61)	12130475	1	1257.59	HARNESS, I/P WRG
96	Y 5.7-5 (LT4), 6-SPD M/TRANS (ML9), A/C AUTO ELEC CONT (C68), HDLP (T72) (EXPORT), RH RULE OF ROAD HDLP (T84) (EXPORT), LH RULE OF ROAD HDLP (T85) (EXPORT), SIG & MKR LP (T90) (EXPORT), (EXC DAYTIME RUNNING LGT (T61)	12163715	1	1257.59	HARNESS, I/P WRG

2.525 HARNESS, Engine Wiring

86	Y M/TRNS, A/C (C60), FED (NA5) (EXC NM8 EXPORT)	12048815	1	DISCON	HARNESS, ENG & ECM WRG
86	Y A/TRNS, A/C (C60) (EXC NM8 EXPORT)	12048817	1	DISCON	HARNESS, ENG & ECM WRG
86	Y A/TRNS, A/C (C68) (EXC NM8 EXPORT)	12048818	1	DISCON	HARNESS, ENG & ECM WRG
86	Y07 M/TRNS, A/C (C68), FED (NA5) (EXC NM8 EXPORT)	12048816	1	DISCON	HARNESS, ENG & ECM WRG
87	Y M/TRNS, A/C (C60)	12067670	1	DISCON	HARNESS, ENG & ECM WRG
87	Y M/TRNS, A/C (C68)	12067671	1	DISCON	HARNESS, ENG & ECM WRG
87	Y A/TRNS, A/C, FED (NA5) (EXC NM8 EXPORT)	12067672	1	DISCON	HARNESS, ENG & ECM WRG
87	Y A/TRNS, A/C (C68), FED (NA5) (EXC NM8 EXPORT)	12067673	1	DISCON	HARNESS, ENG & ECM WRG
88	Y A/TRNS, A/C (C60)	12055808	1	DISCON	HARNESS, ENG & ECM WRG
88	Y A/TRNS, A/C (C68)	12055809	1	DISCON	HARNESS, ENG & ECM WRG
88	Y M/TRNS, A/C (C60)	12080840	1	DISCON	HARNESS, ENG & ECM WRG
88	Y M/TRNS, A/C (C68)	12080841	1	DISCON	HARNESS, ENG & ECM WRG
89	Y (5.7-8) M/TRNS, A/C (C60) (2ND DES)	12090320	1	1266.25	HARNESS, ENG & ECM WRG (ORANGE WIRE IN B-8 CAV OF VATS MDL CONN)
89	Y (5.7-8) M/TRNS, A/C (C68)	12090321	1	1266.25	HARNESS, ENG & ECM WRG
89	Y (5.7-8) A/TRNS, A/C (C60) (2ND DES)	12090322	1	1266.25	HARNESS, ENG & ECM WRG (ORANGE WIRE IN B-8 CAV OF VATS MDL CONN)
89	Y (5.7-8) A/TRNS, A/C (C68)	12090323	1	1266.25	HARNESS, ENG & ECM WRG
89	Y (5.7J)	12090324	1	1266.25	HARNESS, ENG & ECM WRG

© 2000 GENERAL MOTORS SERVICE PARTS OPERATIONS

2.525 HARNESS, Engine Wiring(Con't)

84	Y	12029248	1	DISCON	HARNESS, ENG WRG
85	Y	12029301	1	DISCON	HARNESS, ENG WRG
90	Y 5.7J (LT5), A/C MAN CONT (C60), SOFT RIDE SUSP (FE1), HVY DUTY SUSP (FE7)	12090375	1	1337.50	HARNESS, ENG WRG
90	Y 5.7J (LT5), A/C AUTO ELEC CONT (C68), SOFT RIDE SUSP (FE1), HVY DUTY SUSP (FE7)	12090376	1	1311.25	HARNESS, ENG WRG
90	Y (5.7-8) M/TRNS (ML9), A/C (C60)	12090377	1	1086.05	HARNESS, ENG WRG
90	Y (5.7-8) M/TRNS (ML9), A/C (C68)	12090378	1	1086.05	HARNESS, ENG WRG
90	Y (5.7-8) A/TRNS (MD8), A/C (C60)	12090379	1	1311.25	HARNESS, ENG WRG
90	Y (5.7-8) A/TRNS (MD8), A/C (C68)	12090380	1	1311.25	HARNESS, ENG WRG
91	Y 5.7-8 (L98), 4-SPD A/TRANS (MD8), A/C MAN CONT (C60)	12080865	1	1086.05	HARNESS, ENG WRG
91	Y 5.7-8 (L98), 6-SPD M/TRANS (ML9), A/C MAN CONT (C60)	12080866	1	1086.05	HARNESS, ENG WRG
91	Y 5.7-8 (L98), 4-SPD A/TRANS (MD8), A/C AUTO ELEC CONT (C68)	12080867	1	1086.05	HARNESS, ENG WRG
91	Y 5.7-8 (L98), 6-SPD M/TRANS (ML9), A/C AUTO ELEC CONT (C68)	12080868	1	1086.05	HARNESS, ENG WRG
91	Y 5.7J (LT5), A/C AUTO ELEC CONT (C68), SOFT RIDE SUSP (FE1), HVY DUTY SUSP (FE7)	12080870	1	1086.05	HARNESS, ENG WRG
92	Y 5.7J (LT5)	12117829	1	1086.05	HARNESS, ENG WRG
92	Y 5.7P (LT1), 4-SPD A/TRANS (MD8), A/C MAN CONT (C60)	12125009	1	1086.05	HARNESS, ENG WRG
92	Y 5.7P (LT1), 6-SPD M/TRANS (ML9), A/C MAN CONT (C60)	12125010	1	1086.05	HARNESS, ENG WRG
92	Y 5.7P (LT1), 4-SPD A/TRANS (MD8), A/C AUTO ELEC CONT (C68)	12125011	1	867.83	HARNESS, ENG WRG
92	Y 5.7P (LT1), 6-SPD M/TRANS (ML9), A/C AUTO ELEC CONT (C68)	12125012	1	1086.05	HARNESS, ENG WRG
93-95	Y 5.7J (LT5)	12141078	1	1086.05	HARNESS, ENG WRG
93	Y 5.7P (LT1), 6-SPD M/TRANS (ML9), A/C MAN CONT (C60)	12154081	1		HARNESS, ENG WRG
93	Y 5.7P (LT1), 6-SPD M/TRANS (ML9), A/C AUTO ELEC CONT (C68)	12154082	1	3054.14	HARNESS, ENG WRG
93	Y 5.7P (LT1), 4-SPD A/TRANS (MD8), A/C MAN CONT (C60)	12154083	1	1086.05	HARNESS, ENG WRG
93	Y 5.7P (LT1), 4-SPD A/TRANS (MD8), A/C AUTO ELEC CONT (C68)	12154084	1	1086.05	HARNESS, ENG WRG
94	Y 5.7P (LT1), 6-SPD M/TRANS (ML9), A/C MAN CONT (C60), (EXC VE1 (EXPORT)	12141752	1	1086.05	HARNESS, ENG WRG
94	Y 5.7P (LT1), 6-SPD M/TRANS (ML9), A/C AUTO ELEC CONT (C68), (EXC VE1 (EXPORT)	12141753	1	1337.50	HARNESS, ENG WRG
94	Y 5.7P (LT1), 4-SPD A/TRANS (M30), A/C MAN CONT (C60), (EXC VE1 (EXPORT)	12141754	1	1086.05	HARNESS, ENG WRG
94	Y 5.7P (LT1), 4-SPD A/TRANS (M30), A/C AUTO ELEC CONT (C68), (EXC VE1 (EXPORT)	12141755	1	1068.75	HARNESS, ENG WRG

© 2000 GENERAL MOTORS SERVICE PARTS OPERATIONS

2.525 HARNESS, Engine Wiring(Con't)

95	Y 5.7P (LT1), 6-SPD M/TRANS (ML9), A/C MAN CONT (C60), (EXC VE1 (EXPORT)	12130370	1	1337.50	HARNECS, ENG WRG
95	Y 5.7P (LT1), 4-SPD A/TRANS (M30), A/C MAN CONT (C60), (EXC VE1 (EXPORT)	12130371	1	1086.05	HARNESS, ENG WRG
95	Y 5.7P (LT1), 6-SPD M/TRANS (ML9), A/C AUTO ELEC CONT (C68), (EXC VE1 (EXPORT)	12130372	1	1086.05	HARNESS, ENG WRG
95	Y 5.7P (LT1), 4-SPD A/TRANS (M30), A/C AUTO ELEC CONT (C68), (EXC VE1 (EXPORT)	12130373	1	1068.75	HARNESS, ENG WRG
96	Y 6-SPD M/TRANS (ML9), A/C MAN CONT (C60), (EXC VE1 (EXPORT)	12130461	1	1337.50	HARNESS, ENG WRG
96	Y 4-SPD A/TRANS (M30), A/C MAN CONT (C60), (EXC VE1 (EXPORT)	12130462	1	1086.05	HARNESS, ENG WRG
96	Y 6-SPD M/TRANS (ML9), A/C AUTO ELEC CONT (C68), (EXC VE1 (EXPORT)	12130463	1	1337.50	HARNESS, ENG WRG
96	Y 4-SPD A/TRANS (M30), A/C AUTO ELEC CONT (C68), (EXC VE1 (EXPORT)	12130464	1	842.45	HARNESS, ENG WRG
86-91	Y	12048806	1	DISCON	HARNESS, ENG WRG HARN EXTN (WSW PUMP JPR)
	*EXPORT*****EXPORT*****EXPORT*****EXPORT*****EXPORT*				
86	Y M/TRNS, A/C (C60), (NM5) EXPORT, CANADA (EXC NM8 EXPORT)	12048815	1	DISCON	HARNESS, ENG & ECM WRG
86	Y A/TRNS, NM8 (EXPORT)	12048819	1	DISCON	HARNESS, ENG & ECM WRG
86	Y07 M/TRNS, A/C (C68), (NM5) EXPORT, CANADA (EXC NM8 EXPORT)	12048816	1	DISCON	HARNESS, ENG & ECM WRG
87	Y A/TRNS, A/C, NM5 (EXPORT, CANADA) (EXC NM8 EXPORT)	12067672	1	DISCON	HARNESS, ENG & ECM WRG
87	Y A/TRNS, A/C (C68), NM5 (EXPORT, CANADA) (EXC NM8 EXPORT)	12067673	1	DISCON	HARNESS, ENG & ECM WRG
87	Y A/TRNS, NM8 (EXPORT)	12067674	1	DISCON	HARNESS, ENG & ECM WRG
94	Y 5.7P (LT1), 4-SPD A/TRANS (M30), A/C AUTO ELEC CONT (C68), VE1 (EXPORT)	12141756	1	851.59	HARNESS, ENG WRG
94	Y 5.7P (LT1), 6-SPD M/TRANS (ML9), A/C AUTO ELEC CONT (C68), VE1 (EXPORT)	12141757	1	1064.74	HARNESS, ENG WRG
95	Y 5.7P (LT1), 4-SPD A/TRANS (M30), A/C AUTO ELEC CONT (C68), VE1 (EXPORT)	12130374	1	867.83	HARNESS, ENG WRG
95	Y 5.7P (LT1), 6-SPD M/TRANS (ML9), A/C AUTO ELEC CONT (C68), VE1 (EXPORT)	12130375	1	1086.05	HARNESS, ENG WRG
96	Y 4-SPD A/TRANS (M30), A/C AUTO ELEC CONT (C68), VE1 (EXPORT)	12130465	1	867.83	HARNESS, ENG WRG

2.530 BOOT – CONDUIT – CONNECTOR – COVER – INSULATOR – LOCK – PLUG – PROTECTOR – SEAL – TERMINAL, Chassis Electrical

Note: FOR ILLUSTRATION ON TERMINALS AND CONNECTORS SEE STANDARD PARTS BOOK GRP 8.965

84-96	Y	10098907	2	12.55	CONDUIT, S/D WRG
87-93	Y	12101857	1	18.70	CONNECTOR, AIR DVTR VLV WRG (WHITE) (2-WAY F, W/LEADS) (02.535) (AC-DELCO #PT249)

© 2000 GENERAL MOTORS SERVICE PARTS OPERATIONS

2.530 BOOT – CONDUIT – CONNECTOR – COVER – INSULATOR – LOCK – PLUG – PROTECTOR – SEAL – TERMINAL, Chassis Electrical(Con't)

93	Y 5.7P (LT1)	15306045	1	26.78	CONNECTOR, AIR SW VLV (W/LEADS) (TWO 12GA AND THREE 14GA WIRES) (08.855) (AC–DELCO #PT1205)
94	Y 5.7P (LT1)	12117025	1	21.82	CONNECTOR, AIR SW VLV (W/LEADS) (BLACK) (3–WAY F) (W/LEADS) (02.383) (AC–DELCO #PT420)
90	Y 4–SPD A/TRANS (MD8), 6–SPD M/TRANS (ML9)	12116930	1	29.89	CONNECTOR, DIODE NETWORK (W/LEADS) (02.535) (AC–DELCO #PT418)
90–91	Y07 STEREO CASSETTE (UM6), CASSETTE STEREO (UU8), CASSETTE/CD PLAYER (U1F)	12116930	1	29.89	CONNECTOR, DIODE NETWORK (4–WAY FEMALE EDGE BOARD) (W/LEADS) (02.535) (AC–DELCO #PT418)
91–95	Y	12116930	1	29.89	CONNECTOR, DIODE NETWORK (4–WAY FEMALE EDGE BOARD) (W/LEADS) (02.535) (AC–DELCO #PT418)
92	Y STEREO CASSETTE (UM6), CASSETTE STEREO (UU8), CASSETTE/CD PLAYER (U1F)	12116930	1	29.89	CONNECTOR, DIODE NETWORK (4–WAY FEMALE EDGE BOARD) (W/LEADS) (02.535) (AC–DELCO #PT418)
93	Y07	12069433	1	94.88	CONNECTOR, DIODE NETWORK (02.342) (AC–DELCO #4SW37FS)
90–91	Y 5.7–8 (L98)	12101910	1	35.81	CONNECTOR, DISTR (BLACK) (4–WAY F) (W/LEADS) (02.535) (AC–DELCO #PT182)
93	Y	15305942	1	36.08	CONNECTOR, DISTR (W/LEADS) (4–WAY F, W/LEADS) (02.383) (AC–DELCO #PT1174)
95–96	Y 5.7P (LT1)	12129619	1	2.79	CONNECTOR, DISTR (4–WAY F, W/O LEADS)
96	Y 5.7–5 (LT4)	12129619	1	2.79	CONNECTOR, DISTR (4–WAY F, W/O LEADS)
90–93	Y	12101918	1	27.21	CONNECTOR, I/P WIG HARN DATA LINK CONN BYPASS (12–WAY F) (W/LEADS) (02.535) (AC–DELCO #PT190)
91	Y 5.7–8 (L98)	12126446	1	60.39	CONNECTOR, INLINE–FUSE (2–WAY F, W/LEADS & COVER) (02.535)
92–93	Y 5.7J (LT5)	12126446	1	60.39	CONNECTOR, INLINE–FUSE (2–WAY F, W/LEADS & COVER) (02.535)
92–95	Y ELEK RIDE & HANDLING (FX3)	12092249	2	2.44	CONNECTOR, INLINE–TO CHAS HARN (23–WAY F) (W/LEADS)
92	Y	12116445	1	DISCON	CONNECTOR, INLINE–TO CHAS HARN (W/LEADS)
92–95	Y 5.7J (LT5)	12117271	1	57.63	CONNECTOR, INLINE–TO CHAS HARN (WHITE) (8–WAY F) (W/LEADS) (02.535) (AC–DELCO #PT444)
93	Y	12101853	1	19.29	CONNECTOR, INLINE–TO CHAS HARN (2–WAY M, W/LEADS, USED T/W 15300591) (02.535) (AC–DELCO #PT245)
93	Y 5.7P (LT1)	12117271	1	57.63	CONNECTOR, INLINE–TO CHAS HARN (WHITE) (8–WAY F) (W/LEADS) (02.535) (AC–DELCO #PT444)
94–95	Y	12092248	1	1.73	CONNECTOR, INLINE–TO CHAS HARN (23–WAY M) (W/O LEADS)

© 2000 GENERAL MOTORS SERVICE PARTS OPERATIONS

2.530 BOOT – CONDUIT – CONNECTOR – COVER -- INSULATOR – LOCK – PLUG – PROTECTOR – SEAL – TERMINAL, Chassis Electrical(Con't)

95	Y	12101863	1	19.29	CONNECTOR, INLINE–TO CHAS HARN (2–WAY M, W/LEADS, USED T/W 15300501) (02.535) (AC–DELCO #PT245)
94–96	Y	12117363	1	17.87	CONNECTOR, INLINE– TO COR LP (5–WAY F) (02.895) (AC–DELCO #PT406)
92	Y 5.7P (LT1), 4–SPD A/TRANS (MD8), 6–SPD M/TRANS (ML9), A/C MAN CONT (C60), A/C AUTO ELEC CONT (C68)	12101854	1	43.66	CONNECTOR, INLINE– TO DISTR HARN (6–WAY F) (W/LEADS) (02.535) (AC–DELCO #PT246)
93	Y 5.7P (LT1)	12085537	2	31.88	CONNECTOR, INLINE–TO DISTR HARN (4–WAY F) (W/LEADS) (02.535) (AC–DELCO #PT147)
93–94	Y	12085537	2	31.88	CONNECTOR, INLINE–TO ELEK IGN (4–WAY F) (W/LEADS) (02.535) (AC–DELCO #PT147)
96	Y	12085537	2	31.88	CONNECTOR, INLINE–TO ELEK IGN (4–WAY F) (W/LEADS) (02.535) (AC–DELCO #PT147)
96	Y CHASSIS, REALTIME DAMPING (F45)	12117025	4	21.82	CONNECTOR, INLINE–TO ELEK SUSP POSN SEN (BLACK) (3–WAY F) (W/LEADS) (02.383) (AC–DELCO #PT420)
90	Y 5.7J (LT5), SOFT RIDE SUSP (FE1), HVY DUTY SUSP (FE7), (EXC DAYTIME RUNNING LGT (T61)	12085509	1	48.33	CONNECTOR, INLINE–TO ENG HARN (6–WAY F, W/LEADS) (02.535) (AC–DELCO #PT130)
90	Y 4–SPD A/TRANS (MD8), 6–SPD M/TRANS (ML9)	12101762	1	68.40	CONNECTOR, INLINE–TO ENG HARN (10–WAY F, W/LEADS) (02.535) (AC–DELCO #PT150)
90–96	Y	12101823	1	49.04	CONNECTOR, INLINE–TO ENG HARN (10–WAY M) (W/LEADS) (02.535) (AC–DELCO #PT215)
90	Y 5.7–8 (L98)	12101910	1	35.81	CONNECTOR, INLINE–TO ENG HARN (4–WAY F, W/LEADS) (02.535) (AC–DELCO #PT182)
90	Y 6–SPD M/TRANS (ML9), A/C MAN CONT (C60)	12125674	1	35.57	CONNECTOR, INLINE–TO ENG HARN (8–WAY M, W/LEADS) (AC–DELCO #PT586)
90	Y 6–SPD M/TRANS (ML9), A/C AUTO ELEC CONT (C68), SOFT RIDE SUSP (FE1), HVY DUTY SUSP (FE7), (EXC DAYTIME RUNNING LGT (T61)	12125674	1	35.57	CONNECTOR, INLINE–TO ENG HARN (8–WAY M, W/LEADS) (AC–DELCO #PT586)
90	Y 4–SPD A/TRANS (MD8), A/C MAN CONT (C60), A/C AUTO ELEC CONT (C68)	12125674	1	35.57	CONNECTOR, INLINE–TO ENG HARN (8–WAY M, W/LEADS) (AC–DELCO #PT586)
91	Y 6–SPD M/TRANS (ML9), A/C MAN CONT (C60), A/C AUTO ELEC CONT (C68)	12085481	1	17.56	CONNECTOR, INLINE–TO ENG HARN (BLACK) (2–WAY M) (W/LEADS) (02.535) (AC–DELCO #PT103)
91	Y 5.7J (LT5), SOFT RIDE SUSP (FE1), HVY DUTY SUSP (FE7), (EXC DAYTIME RUNNING LGT (T61)	12085509	1	48.33	CONNECTOR, INLINE–TO ENG HARN (6–WAY F) (W/LEADS) (02.535) (AC–DELCO #PT130)
91–93	Y 4–SPD A/TRANS (MD8), 6–SPD M/TRANS (ML9), A/C MAN CONT (C60), A/C AUTO ELEC CONT (C68)	12101762	1	68.40	CONNECTOR, INLINE–TO ENG HARN (10–WAY F) (W/LEADS) (02.535) (AC–DELCO #PT150)

© 2000 GENERAL MOTORS SERVICE PARTS OPERATIONS

2.530 BOOT – CONDUIT – CONNECTOR – COVER – INSULATOR – LOCK – PLUG – PROTECTOR – SEAL – TERMINAL, Chassis Electrical(Con't)

91	Y 4-SPD A/TRANS (MD8), 6-SPD M/TRANS (ML9), A/C MAN CONT (C60), A/C AUTO ELEC CONT (C68)	12126674	1	35.57	CONNECTOR, INLINE-TO ENG HARN (8-WAY M) (W/LEADS) (AC-DELCO #PT586)
92-96	Y	12101832	1	45.10	CONNECTOR, INLINE-TO ENG HARN (BLUE) (10-WAY F, W/LEADS) (02.535) (AC-DELCO #PT224)
92-94	Y	12101854	1	43.66	CONNECTOR, INLINE-TO ENG HARN (6-WAY F) (W/LEADS) (02.535) (AC-DELCO #PT246)
92	Y	12116445	1	DISCON	CONNECTOR, INLINE-TO ENG HARN (W/LEADS)
92-93	Y	12117270	1	54.65	CONNECTOR, INLINE-TO ENG HARN (8-WAY M, W/LEADS) (AC-DELCO #PT443)
93-95	Y	12101855	1	19.95	CONNECTOR, INLINE-TO ENG HARN (2-WAY F) (W/LEADS) (W/SEAL) (02.535) (AC-DELCO #PT247)
94-96	Y 6-SPD M/TRANS (ML9)	12092248	1	1.73	CONNECTOR, INLINE-TO ENG HARN (23-WAY M) (W/O LEADS)
94-95	Y	12101853	1	19.29	CONNECTOR, INLINE-TO ENG HARN (2-WAY M, W/LEADS, USED T/W 15300591) (02.535) (AC-DELCO #PT245)
95	Y 5.7J (LT5)	12117270	1	54.65	CONNECTOR, INLINE-TO ENG HARN (8-WAY M, W/LEADS) (AC-DELCO #PT443)
95-96	Y 5.7P (LT1)	12126023	1	48.08	CONNECTOR, INLINE-TO ENG HARN (4-WAY M, W/LEADS) (AC-DELCO #PT654)
96	Y 4-SPD A/TRANS (M30)	12092248	1	1.73	CONNECTOR, INLINE-TO ENG HARN (23-WAY M) (W/O LEADS)
96	Y	12101854	1	43.66	CONNECTOR, INLINE-TO ENG HARN (6-WAY F) (W/LEADS) (02.535) (AC-DELCO #PT246)
90	Y	12058688	1	DISCON	CONNECTOR, INLINE-TO ENG HARN, ECM HARN (CRT MONITOR COAXIAL LEAD-IN) (32 PIN) (JUNC 2) (02.535)
90	Y 5.7J (LT5), A/C MAN CONT (C60), SOFT RIDE SUSP (FE1), HVY DUTY SUSP (FE7), A/C AUTO ELEC CONT (C68)	12085491	AR	16.87	CONNECTOR, INLINE-TO F/INJR HARN (W/LEADS) (02.535) (AC-DELCO #PT113)
90-91	Y 5.7-8 (L98), 6-SPD M/TRANS (ML9), 4-SPD A/TRANS (MD8), A/C MAN CONT (C60), A/C AUTO ELEC CONT (C68)	12085491	AR	16.87	CONNECTOR, INLINE-TO F/INJR HARN (2-WAY F) (W/LEADS) (02.535) (AC-DELCO #PT113)
90-91	Y 5.7-8 (L98), 4-SPD A/TRANS (MD8), 6-SPD M/TRANS (ML9), A/C MAN CONT (C60), A/C AUTO ELEC CONT (C68)	12085534	1	32.61	CONNECTOR, INLINE-TO FWD LP HARN (4-WAY, W/LEADS) (02.535) (AC-DELCO #PT145)
91-96	Y	02965810	2	.70	CONNECTOR, INLINE-TO FWD LP HARN (3-WAY F, W/O LEADS)
91	Y 5.7J (LT5), A/C AUTO ELEC CONT (C68), SOFT RIDE SUSP (FE1), HVY DUTY SUSP (FE7)	12101892	1	47.82	CONNECTOR, INLINE-TO FWD LP HARN (W/LEADS) (02.535) (AC-DELCO #PT162)
91-96	Y	12117367	2	24.98	CONNECTOR, INLINE-TO FWD LP HARN (3-WAY F) (W/LEADS, 59 SERIES) (AC-DELCO #PT500)

© 2000 GENERAL MOTORS SERVICE PARTS OPERATIONS

2.530 BOOT – CONDUIT – CONNECTOR – COVER – INSULATOR – LOCK – PLUG – PROTECTOR – SEAL – TERMINAL, Chassis Electrical(Con't)

92–96	Y	12101852	1	39.24	CONNECTOR, INLINE–TO FWD LP HARN (C–WAY M) (W/LEADS) (02.535) (AC–DELCO #PT244)
94	Y	12102747	2	21.07	CONNECTOR, INLINE–TO HTD OXY SEN (BLACK) (2–WAY F) (W/LEADS) (03.670) (AC–DELCO #PT374)
90–96	Y	12101762	1	68.40	CONNECTOR, INLINE–TO I/P HARN (10–WAY F) (W/LEADS) (02.535) (AC–DELCO #PT150)
90	Y 5.7J (LT5), A/C MAN CONT (C60), A/C AUTO ELEC CONT (C68), SOFT RIDE SUSP (FE1), HVY DUTY SUSP (FE7)	12101823	1	49.04	CONNECTOR, INLINE–TO I/P HARN (10–WAY M, W/LEADS) (02.535) (AC–DELCO #PT215)
90–91	Y 5.7–8 (L98), 4–SPD A/TRANS (MD8), 6–SPD M/TRANS (ML9), A/C MAN CONT (C60), A/C AUTO ELEC CONT (C68)	12101823	1	49.04	CONNECTOR, INLINE–TO I/P HARN (10–WAY M) (W/LEADS) (02.535) (AC–DELCO #PT215)
90	Y STEREO CASSETTE (UM6), CASSETTE STEREO (UU8), CASSETTE/CD PLAYER (U1F)	12126015	1	28.45	CONNECTOR, INLINE–TO I/P HARN (4–WAY M, W/LEADS) (AC–DELCO #PT646)
90–92	Y67 STEREO CASSETTE (UM6), CASSETTE STEREO (UU8), CASSETTE/CD PLAYER (U1F)	12101823	1	49.04	CONNECTOR, INLINE–TO I/P HARN (10–WAY M) (W/LEADS) (02.535) (AC–DELCO #PT215)
91	Y 5.7J (LT5), A/C AUTO ELEC CONT (C68), SOFT RIDE SUSP (FE1), HVY DUTY SUSP (FE7)	12085535	1	17.46	CONNECTOR, INLINE–TO I/P HARN (2–WAY F) (W/LEADS) (HAS INDEX TAB @ OUTER EDGE OF CAVITY B) (02.535) (AC–DELCO #PT146)
91–95	Y	12101822	1	32.35	CONNECTOR, INLINE–TO I/P HARN (GRAY) (8–WAY F) (W/LEADS) (02.535) (AC–DELCO #PT214)
91	Y 5.7J (LT5), A/C AUTO ELEC CONT (C68), SOFT RIDE SUSP (FE1), HVY DUTY SUSP (FE7)	12101823	1	49.04	CONNECTOR, INLINE–TO I/P HARN (10–WAY M) (W/LEADS) (02.535) (AC–DELCO #PT215)
91	Y	12116926	1	61.00	CONNECTOR, INLINE–TO I/P HARN (PART OF SIR SUB HARN) (8–WAY F) (14.865) (AC–DELCO #PT415)
91–92	Y07 STEREO CASSETTE (UM6), CASSETTE STEREO (UU8), CASSETTE/CD PLAYER (U1F)	12126015	1	28.45	CONNECTOR, INLINE–TO I/P HARN (4–WAY M) (W/LEADS) (AC–DELCO #PT646)
92–96	Y	12092249	2	2.44	CONNECTOR, INLINE–TO I/P HARN (23–WAY F) (W/LEADS)
93–96	Y	12092248	1	1.73	CONNECTOR, INLINE–TO I/P HARN (23–WAY M) (W/O LEADS)
93–96	Y	12101823	1	49.04	CONNECTOR, INLINE–TO I/P HARN (10–WAY M) (W/LEADS) (02.535) (AC–DELCO #PT215)
93	Y	12101836	1	17.46	CONNECTOR, INLINE–TO I/P HARN (2–WAY M, W/LEADS) (02.535) (AC–DELCO #PT228)
93–96	Y	12103188	1	1.82	CONNECTOR, INLINE–TO I/P HARN (BLUE) (10–WAY M, W/O LEADS)
94	Y	12117371	1	13.24	CONNECTOR, INLINE–TO I/P HARN (3–WAY M) (W/LEADS) (AC–DELCO #PT504)
95–96	Y RECL FRT BKT ST (AQ9)	12117371	1	13.24	CONNECTOR, INLINE–TO I/P HARN (3–WAY M) (W/LEADS) (AC–DELCO #PT504)
94	Y 6–SPD M/TRANS (ML9)	12065803	1	2.20	CONNECTOR, INLINE–TO INST CSTR (34–WAY F) (09.735)

© 2000 GENERAL MOTORS SERVICE PARTS OPERATIONS

2.530 BOOT – CONDUIT – CONNECTOR – COVER – INSULATOR – LOCK – PLUG – PROTECTOR – SEAL – TERMINAL, Chassis Electrical(Con't)

90–95	Y	12085481	1	17.56	CONNECTOR, INLINE–TO STRG COL HARN (BLACK) (2–WAY M) (W/LEADS) (02.535) (AC–DELCO #PT103)
91–95	Y 5.7J (LT5)	12101899	1	17.95	CONNECTOR, INLINE–TO STRG COL HARN (FEM METRI–PACK, PULL TO ST) (BLACK) (2–WAY F) (W/LEADS) (02.383) (AC–DELCO #PT169)
90–95	Y	12102756	1	38.31	CONNECTOR, INLINE–TO T/SIG SW (TO STRG COL) (11–WAY F) (AC–DELCO #PT386)
93	Y 4–SPD A/TRANS (M30)	12102633	1	18.27	CONNECTOR, INLINE–TO TRANS (5–WAY F, W/LEADS) (09.652) (AC–DELCO #12102633)
93–94	Y 5.7P (LT1)	15306045	1	28.78	CONNECTOR, INLINE–TO TRANS (4TH & 6TH GR/RLY) (TWO 12GA AND THREE 14GA WIRES) (08.855) (AC–DELCO #PT1205)
94	Y	12126459	1	61.55	CONNECTOR, INLINE–TO TRANS (12–WAY F, W/LEADS) (AC–DELCO #PT729)
96	Y 4–SPD A/TRANS (M30)	12160492	1	5.58	CONNECTOR, INLINE–TO TRANS (13–WAY F, W/O LEADS)
96	Y 4–SPD A/TRANS (M30)	12160782	1	4.66	CONNECTOR, INLINE–TO TRANS (20–WAY M)
90	Y 5.7J (LT5), SOFT RIDE SUSP (FE1), HVY DUTY SUSP (FE7), (EXC DAYTIME RUNNING LGT (T61)	12126032	1	15.88	CONNECTOR, INLINE–TO VAC PUMP HARN (W/LEADS) (02.575) (AC–DELCO #PT663)
90	Y 5.7J (LT5), DAYTIME RUNNING LGT (T61)	12126032	1	15.88	CONNECTOR, INLINE–TO VAC PUMP HARN (W/LEADS) (02.575) (AC–DELCO #PT663)
90–94	Y	12117379	1	29.43	CONNECTOR, PARK/NEU POSN SW WRG HARN (6 CAV F) (04.054) (AC–DELCO #PT512)
90–94	Y	12101864	1	17.62	CONNECTOR, PWR FEED HARN (BLACK) (3–WAY F) (W/LEADS) (02.535) (AC–DELCO #PT256)
96	Y	15305875	1		CONNECTOR, RLY–BLO MOT LOW SPD (5–WAY F) (W/LEADS & RELAY) (08.855) (AC–DELCO #PT1016)
96	Y	15306045	1	28.78	CONNECTOR, RLY–BLO MOT LOW SPD (TWO 12GA AND THREE 14GA WIRES) (08.855) (AC–DELCO #PT1205)
96	Y 4–SPD A/TRANS (M30)	12162201	1	.56	CONNECTOR, SOL–A SHFT VLV (NATURAL) (2–WAY F) (W/O LEADS)
90	Y	10098903	1	11.82	COVER, ENG WRG HARN ECM CONN (02.525)
91	Y 5.7J (LT5)	10098903	1	11.82	COVER, ENG WRG HARN ECM CONN (02.525)
91	Y 5.7–8 (L98)	12064802	1	10.29	COVER, ENG WRG HARN ECM CONN
92–93	Y	12064802	1	10.29	COVER, ENG WRG HARN ECM CONN
94–95	Y 5.7J (LT5)	12064802	1	10.29	COVER, ENG WRG HARN ECM CONN
84–93	Y	10054241	1	*1.82	SEAL, A/TRNS WRG CONN (O RING) (.687 I.D. X .1" THK) (04.338) (AC–DELCO #10054241)
94	Y 5.7P (LT1), 4–SPD A/TRANS (M30), 2.59R (GM1), 3.07R (G44)	10054241	1	*1.82	SEAL, A/TRNS WRG CONN (O RING) (.687 I.D. X .1" THK) (04.338) (AC–DELCO #10054241)

© 2000 GENERAL MOTORS SERVICE PARTS OPERATIONS

2.530 BOOT – CONDUIT – CONNECTOR – COVER – INSULATOR – LOCK – PLUG – PROTECTOR – SEAL – TERMINAL, Chassis Electrical(Con't)

*EXPORT***************EXPORT***************EXPORT***************EXPORT***************EXPORT*

96	Y SIG & MKR LP (T90) (EXPORT) ..	12101823	1	49.04	CONNECTOR, INLINE–TO ELEK BRK MDL (10–WAY M) (W/LEADS) (02.535) (AC–DELCO #PT215) .....
90	Y 5.7J (LT5), DAYTIME RUNNING LGT (T61)	12085509	1	48.33	CONNECTOR, INLINE–TO ENG HARN (6–WAY F, W/LEADS) (02.535) (AC–DELCO #PT130) .....
90	Y 6–SPD M/TRANS (ML9), A/C AUTO ELEC CONT (C68), DAYTIME RUNNING LGT (T61)	12125674	1	35.57	CONNECTOR, INLINE–TO ENG HARN (8–WAY M, W/LEADS) (AC–DELCO #PT588) .....
91	Y 5.7J (LT5), DAYTIME RUNNING LGT (T61)	12085509	1	48.33	CONNECTOR, INLINE–TO ENG HARN (6–WAY F) (W/LEADS) (02.535) (AC–DELCO #PT130) .....
94–95	Y07 SIG & MKR LP (T90) (EXPORT)	12084203	1	4.74	CONNECTOR, INLINE–TO F/PMP (4–WAY M) (03.107) .....
94–96	Y HDLP (T72) (EXPORT), RH RULE OF ROAD HDLP (T84) (EXPORT), LH RULE OF ROAD HDLP (T85) (EXPORT), SIG & MKR LP (T90) (EXPORT)	12085537	2	31.68	CONNECTOR, INLINE–TO FWD LP HARN (4–WAY F) (W/LEADS) (02.535) (AC–DELCO #PT147) .....
90	Y 4–SPD A/TRANS (MD8), A/C MAN CONT (C60), DAYTIME RUNNING LGT (T61)	12167136	1	15.40	CONNECTOR, INLINE–TO I/P HARN (W/LEADS) (02.485) (AC–DELCO #LS71) .....

2.559 BOLT – BRACKET – CLIP – COVER – INSULATOR – PLATE – RETAINER – SHIELD – SPACER – STRAP – STUD – WASHER, Chassis/Engine Wiring Harness

84–89	Y 5.7–8	14062552	1	1.12	BRACKET, ECM WRG HARN .....
90–91	Y 5.7–8 (L98)	14062552	1	1.12	BRACKET, ECM WRG HARN .....
84	Y	14066570	2	DISCON	BRACKET, ELEC CONT MDL HARN (TO ENG HD CVR) .....
84	Y	14057560	1	DISCON	BRACKET, ENG WRG HARN (TO CASE) .....
84–91	Y	14062511	AR	2.04	BRACKET, ENG WRG HARN (R/SI RR) .
84–85	Y	14062552	1	1.12	BRACKET, ENG WRG HARN (TO OIL PAN) .....
84–88	Y	14062599	AR	.68	BRACKET, ENG WRG HARN (ABOVE LH ENG MT) .....
84–88	Y	14073493	1	2.04	BRACKET, ENG WRG HARN (L/SI RR) ..
85–87	Y	14100810	1	DISCON	BRACKET, ENG WRG HARN (RH SI INT MANIF) .....
89–91	Y 5.7–8 (L98)	14062599	AR	.68	BRACKET, ENG WRG HARN (ABOVE LH ENG MT) .....
89–91	Y 5.7–8 (L98), 4–SPD A/TRANS (MD8)	14073493	1	2.04	BRACKET, ENG WRG HARN (L/SI RR) ..
89	Y M/TRNS	14104953	1	DISCON	BRACKET, ENG WRG HARN (L/SI RR) ..
90	Y 5.7J (LT5), A/C MAN CONT (C60), A/C AUTO ELEC CONT (C68), SOFT RIDE SUSP (FE1), HVY DUTY SUSP (FE7)	14104749	1	2.04	BRACKET, ENG WRG HARN (ALUM, LOC AT RR OF ENG) .....
90–91	Y 5.7J (LT5)	14104938	1	35.45	BRACKET, ENG WRG HARN (AT OXY & KNOCK SEN CABLES) (STEEL) (LWR LH SI OF BLK NEAR OIL PAN) .....
91–95	Y 5.7J (LT5)	14104749	1	2.04	BRACKET, ENG WRG HARN (ALUM, LOC AT RR OF ENG) .....
91–92	Y 5.7J (LT5)	14104941	1	12.90	BRACKET, ENG WRG HARN (TO OIL PAN) (03.682) .....
91	Y 5.7–8 (L98)	15664822	1	1.05	BRACKET, ENG WRG HARN (01.166) ..
92–95	Y 5.7J (LT5)	10098912	1	12.90	BRACKET, ENG WRG HARN (03.682) ..

© 2000 GENERAL MOTORS SERVICE PARTS OPERATIONS

2.559 BOLT – BRACKET – CLIP – COVER – INSULATOR – PLATE – RETAINER – SHIELD – SPACER – STRAP – STUD – WASHER, Chassis/Engine Wiring Harness(Con't)

92–95	Y 5.7P (LT1)	12553341	4	1.12	BRACKET, ENG WRG HARN
92–95	Y 5.7J (LT5)	14104938	1	35.45	BRACKET, ENG WRG HARN (STEEL) (LWR LH SI OF BLK NEAR OIL PAN)
96	Y	12553341	5	1.12	BRACKET, ENG WRG HARN (POS#RH–3, 6, 8, LH–6, 7)
89	Y A/C MAN CONT (C60), A/C AUTO ELEC CONT (C68), SOFT RIDE SUSP (FE1), HVY DUTY SUSP (FE7)	14104961	1	11.32	BRACKET, ENG WRG HARN SHLD
90–91	Y 5.7J (LT5), A/C MAN CONT (C60), A/C AUTO ELEC CONT (C68), SOFT RIDE SUSP (FE1), HVY DUTY SUSP (FE7)	14104961	1	11.32	BRACKET, ENG WRG HARN SHLD
92–95	Y 5.7J (LT5)	14104961	1	11.32	BRACKET, ENG WRG HARN SHLD
84–86	Y	14066531	LH	DISCON	BRACKET, FWD LP WRG HARN (TO FRT BPR IMPACT BAR)
84–86	Y	14066532	RH	DISCON	BRACKET, FWD LP WRG HARN (TO FRT BPR IMPACT BAR)
84–90	Y	14091207	LH	7.55	BRACKET, FWD LP WRG HARN (TO REINFORCEMENT OTR)
84–89	Y	14091208	RH	7.55	BRACKET, FWD LP WRG HARN (TO REINFORCEMENT OTR)
90	Y SOFT RIDE SUSP (FE1), H .D .SUSP (FE7)	14091208	RH	7.55	BRACKET, FWD LP WRG HARN (TO REINFORCEMENT OTR)
84–86	Y	14062523	1	DISCON	BRACKET, I/P WRG HARN
90–93	Y	10165378	1	DISCON	BRACKET, I/P WRG HARN
94–96	Y	10251214	1	6.03	BRACKET, I/P WRG HARN
84–96	Y	14066583	2	3.26	BRACKET, I/P WRG HARN DR LEAD
84–88	Y M/TRNS	14081179	1	DISCON	BRACKET, TBI HARNESS CLIP
88–89	Y A/C (C68)	09798835	1	1.20	CLIP, A .C. DA WIRE TO EVAP HSNG
84–93	Y 4–SPD A/TRANS (MD8)	08673068	2	1.82	CLIP, A/TRNS WRG HARN (04.197) (AC–DELCO #8673068)
90–91	Y 5.7J (LT5), A/C MAN CONT (C60), A/C AUTO ELEC CONT (C68), SOFT RIDE SUSP (FE1), HVY DUTY SUSP (FE7)	14104936	1	.94	CLIP, ENG WRG HARN (2 HOLES) (FRT CVR CYL CASE)
90–95	Y 5.7J (LT5)	14104937	1	.94	CLIP, ENG WRG HARN (1 HOLE) (OIL FILTER HSG)
92–95	Y 5.7J (LT5)	14104936	1	.94	CLIP, ENG WRG HARN (2 HOLES) (FRT CVR CYL CASE)
93–95	Y 5.7P (LT1)	01864022	1	.77	CLIP, ENG WRG HARN (1/2 DIA HARD STL)
93–94	Y 5.7P (LT1)	01864022	1	.77	CLIP, FWD LP WRG HARN (1/2 DIA HARD STL)
93–94	Y	03816659	AR	*.67	CLIP, FWD LP WRG HARN (7" ADJ, W/ROSEBUD FOR .25 DIA HOLE .031–.14 TH) (08.965) (STRAP)
94	Y 5.7J (LT5)	01864022	1	.77	CLIP, FWD LP WRG HARN (1/2 DIA HARD STL)
85	Y	09798835	1	1.20	CLIP, I/P WRG HARN
93–94	Y	01839906	1	*.13	CLIP, I/P WRG HARN (LARGE 3–5 WIRE) (08.965) (AC–DELCO #1839906)
93	Y	01864022	1	.77	CLIP, I/P WRG HARN (1/2 DIA HARD STL)
92–93	Y RECL FRT BKT ST (AQ9)	01864022	1	.77	CLIP, I/P WRG HARN EXTN HARN (1/2 DIA HARD STL)

© 2000 GENERAL MOTORS SERVICE PARTS OPERATIONS

2.559 BOLT – BRACKET – CLIP – COVER – INSULATOR – PLATE – RETAINER – SHIELD – SPACER – STRAP – STUD – WASHER, Chassis/Engine Wiring Harness(Con't)

94–95	Y	01664022	1	.77	CLIP, WRG HARN (BRK PRESS MOD VLV) (1/2 DIA HARD STL)
86–96	Y	14090618	1	7.05	PLATE, ECM WRG HARN GROM RET STUD (03.676)
92–96	Y	10086264	1	3.37	PLATE, ELEK BRK CONT WRG HARN GROM MT
90–96	Y	10086264	1	3.37	PLATE, ENG WRG HARN GROM BKG
84–87	Y	00480534	A/R	*.84	RETAINER, PNL HOLE (DIA.250, THK .03–.30) (11.419)
93	Y 5.7P (LT1), 6–SPD M/TRANS (ML9), DIAGNOSTIC SYSTEM (BAK), A/C MAN CONT (C60)	12129021	4	1.52	RETAINER, ECM WRG HARN (BLACK) (32–WAY F)
93	Y 5.7P (LT1), 6–SPD M/TRANS (ML9), DIAGNOSTIC SYSTEM (BAK), A/C MAN CONT (C60)	12129022	4	1.52	RETAINER, ECM WRG HARN (CLEAR) (USE W/32–WAY CONN)
93	Y 5.7P (LT1), 6–SPD M/TRANS (ML9), DIAGNOSTIC SYSTEM (BAK), A/C MAN CONT (C60)	12129023	4	1.52	RETAINER, ECM WRG HARN (BLUE) (USE W/32–WAY CONN)
94	Y 5.7P (LT1)	12129021	4	1.52	RETAINER, ECM WRG HARN (BLACK) (32–WAY F)
94	Y 5.7P (LT1)	12129022	4	1.52	RETAINER, ECM WRG HARN (CLEAR) (USE W/32–WAY CONN)
94	Y 5.7P (LT1)	12129023	4	1.52	RETAINER, ECM WRG HARN (BLUE) (USE W/32–WAY CONN)
89–91	Y	12020833	1	*.73	RETAINER, ECM WRG HARN CONN (GRAY) (1" LONG) (PUSH–IN)
94–96	Y	12129030	2	2.50	RETAINER, ECM WRG HARN CONN (GRAY) (STRAIN RELIEF)
96	Y	12129021	4	1.52	RETAINER, ECM WRG HARN CONN (BLACK) (32–WAY F)
96	Y	12129022	4	1.52	RETAINER, ECM WRG HARN CONN (CLEAR) (USE W/32–WAY CONN)
96	Y	12129023	4	1.52	RETAINER, ECM WRG HARN CONN (BLUE) (USE W/32–WAY CONN)
96	Y	12129024	3	2.50	RETAINER, ECM WRG HARN CONN (RED) (USE W/32–WAY CONN)
96	Y	12129028	2	2.50	RETAINER, ECM WRG HARN CONN (GRAY) (32–WAY)
84–88	Y	14066575	1	DISCON	RETAINER, ENG WRG HARN
89–91	Y 5.7–8 (L98)	14104541	1	4.13	RETAINER, ENG WRG HARN
92–95	Y 5.7P (LT1)	14104541	1	4.13	RETAINER, ENG WRG HARN
96	Y	14104541	1	4.13	RETAINER, ENG WRG HARN
90–91	Y	12077996	1	.52	RETAINER, F/INJR WRG HARN CONN (02.535)
84	Y 5.7–8 (L83)	08917236	1	1.45	RETAINER, OXY SEN CONN
85–91	Y 5.7–8 (L98)	08917236	1	1.45	RETAINER, OXY SEN CONN
92–94	Y 5.7P (LT1), (EXC LEADED FUEL EMIS EXPORT (NM8)	08917236	1	1.45	RETAINER, OXY SEN CONN

2.698 CLIP – CONNECTOR – NUT – SWITCH, Back Up Lamp

84–88	Y M/TRNS	14057528	1	14.78	SWITCH, B/U LP (04.480) (AC–DELCO #14057528)
89–96	Y 6–SPD M/TRANS (ML9)	10159402	1	72.69	SWITCH, B/U LP (AC–DELCO #D2245A)
92–93	Y 4–SPD A/TRANS (MD8)	01994242	1	26.52	SWITCH, PARK/NEU POSN & B/U LP (04.054) (AC–DELCO #D2297)

© 2000 GENERAL MOTORS SERVICE PARTS OPERATIONS

2.698 CLIP – CONNECTOR – NUT – SWITCH, Back Up Lamp(Con't)

94–96	Y 4–SPD A/TRANS (M30)	01994242	1	26.52	SWITCH, PARK/NEU POSN & B/U LP (04.054) (AC–DELCO #D2297)
84–91	Y A/TRNS	01994242	1	26.52	SWITCH, PART/NEU POSN & B/U LP (ON SHIFT CONT) (04.054) (AC–DELCO #D2297)

3.469 NUT – SHIELD, Accelerator Linkage

90–95	Y 5.7J (LT5)	16512106	2	.31	NUT, ACCEL CONT CBL SPH SHLD (4 X 0.7 THD X 4.85MM) (02.679)
92–96	Y	10192285	1	1.02	SHIELD, ACCEL CONT & CRCONT SERVO CBL ADJR (03.885)
90–95	Y 5.7J (LT5)	10150018	1	11.83	SHIELD, ACCEL CONT CBL SPH

3.682 BOLT – BRACKET – BUFFER – CLAMP – CONNECTOR – COVER – MODULE – PLUG – RELAY – RETAINER – SEAL – SENSOR – SPACER, Computer Control Sensors

90–95	Y 5.7J (LT5)	11514491	2	4.75	BOLT, MAP SEN (TO BRKT) (5X.8X30, 28.4 THD, 5.9 OD, T25 TORX DR, 9.0 STL) (08.907)
90–95	Y 5.7J (LT5)	10192577	2	1.30	BOLT, MAP SEN BRKT (TO PLENUM) (M6X1.0X13.0) (METRIC TORX HD) (08.913)
92	Y 5.7J (LT5)	11516061	1	*1.10	BOLT, OXY SEN BRKT (M6X1X12, FL HD) (08.900)
90–95	Y 5.7J (LT5)	10192577	4	1.30	BOLT, SECD PORT THROT VLV BRKT (M6X1.0X13.0) (METRIC TORX HD) (08.913)
90–95	Y 5.7J (LT5)	10067781	1	8.68	BRACKET, MAP SEN
90–91	Y 5.7–8 (L98)	10096141	1	4.44	BRACKET, MAP SEN
85	Y	14080660	1	DISCON	BRACKET, MASS AIR FLOW SEN BURNOFF MDL
88–89	Y 5.7–8	14104140	1	1.88	BRACKET, MASS AIRFLOW SEN RLY (01.055)
93–95	Y 5.7J (LT5)	10168622	1	26.01	BRACKET, MDP SEN (03.671)
89	Y	14062552	1	1.12	BRACKET, OXY SEN CONN RET (02.559)
90–91	Y 5.7–8 (L98)	14062552	1	1.12	BRACKET, OXY SEN CONN RET (02.559)
90–92	Y 5.7J (LT5)	14104941	1	12.90	BRACKET, OXY SEN CONN RET
92–96	Y 5.7P (LT1)	10165308	1	2.50	BRACKET, OXY SEN CONN RET (02.559)
93–95	Y 5.7J (LT5)	10225139	1	7.75	BRACKET, OXY SEN CONN RET
96	Y 5.7–5 (LT4)	10165388	1	2.50	BRACKET, OXY SEN CONN RET (02.559)
93–95	Y 5.7J (LT5)	10168670	1	31.60	CLAMP, MDP SEN (01.750)
90–95	Y 5.7J (LT5)	10090513	1	15.44	COVER, MAP SEN (AC–DELCO #10090513)
85	Y 5.7–8 (L98)	14080620	1	882.82	MODULE, MASS AIRFLOW SEN (AC–DELCO #216–52)
92–96	Y 5.7P (LT1)	03738198	1	.71	PLUG, MAP SEN HOLE (08.153)
96	Y 5.7–5 (LT4)	03738198	1	.71	PLUG, MAP SEN HOLE (08.153)
84–90	Y	12338069	1	*3.57	RETAINER, VEH SPD SEN (4338) (AC–DELCO #12338069)
86–96	Y	12146312	1	9.10	SENSOR, ENG COOL TEMP (UND PLENUM) (USED FOR CLUSTERS W/OIL GAGE & LGT COMB) (2–WAY M) (AC–DELCO #213–310)
90–91	Y 5.7J (LT5)	25176708	2	104.75	SENSOR, EXH OXY (STAMPED 10096129) (AC–DELCO #213–632) (RETAIL SENSOR)

© 2000 GENERAL MOTORS SERVICE PARTS OPERATIONS

3.682 BOLT – BRACKET – BUFFER – CLAMP – CONNECTOR – COVER – MODULE – PLUG – RELAY – RETAINER – SEAL – SENSOR – SPACER, Computer Control Sensors(Con't)

92	Y 5.7J (LT5), (1ST DES)	25176700	2	104.76	SENSOR, EXH OXY (W/HARN THAT IS 350MM LG) (STAMPED 10096120) (AC–DELCO #213–632) (RETAIL SENSOR)
92	Y 5.7J (LT5), (2ND DES)	25176700	2	117.30	SENSOR, EXH OXY (W/HARNESS THAT IS 240MM LG) (STAMPED 10137041) (AC–DELCO #213–633)
93–95	Y 5.7J (LT5)	25176700	2	117.30	SENSOR, HTD OXY (STAMPED 10137041) (AC–DELCO #213–633)
94	Y 5.7P (LT1), (EXC LEADED FUEL EMIS EXPORT (NM8)	25312184	3	62.81	SENSOR, HTD OXY (AC–DELCO #AFS75) (OEM SENSOR)
95	Y 5.7P (LT1), (EXC LEADED FUEL EMIS EXPORT (NM8), EUROPEAN PROVISIONS (VD1) (EXPORT), VE1 (EXPORT)	25312184	3	62.81	SENSOR, HTD OXY (AC–DELCO #AFS75) (OEM SENSOR)
96	Y 5.7–5 (LT4)	25312184	4	62.81	SENSOR, HTD OXY (2–PRE CONVERTER, 2–POST CONVERTER) (AC–DELCO #AFS75) (OEM SENSOR)
96	Y 5.7P (LT1), (EXC LEADED FUEL EMIS EXPORT (NM8)	25312184	4	62.81	SENSOR, HTD OXY (2–PRE CONVERTER, 2–POST CONVERTER) (AC–DELCO #AFS75) (OEM SENSOR)
90–95	Y 5.7J (LT5)	25036751	1	33.33	SENSOR, INT AIR TEMP (2 BLADE TERM, 3/8–18 THD) (STAMPED AC12V) (AC–DELCO #213–190)
92–95	Y 5.7P (LT1)	12160244	1	14.61	SENSOR, INT AIR TEMP (AC–DELCO #213–243)
96	Y	12160244	1	14.61	SENSOR, INT AIR TEMP (AC–DELCO #213–243)
85–90	Y	12146312	1	9.10	SENSOR, MANIF AIR TEMP (AT INT MANIF) (2 BLADE TERM, 3/8–18 THD) (USED FOR CLUSTERS W/OIL GAGE & LIGHT COMB) (AC–DELCO #213–310)
85	Y (1ST DES)	25036751	1	33.33	SENSOR, MANIF AIR TEMP (2 BLADE TERM, 3/8–18 THD) (STAMPED AC12V) (HOLES IN PROBE & MATES W/SQUARE SLOTTED CONN) (AC–DELCO #213–190)
91	Y 5.7–8 (L98)	12146312	1	9.10	SENSOR, MANIF AIR TEMP (AT INT MANIF) (USED FOR CLUSTER W/OIL GAGE & LIGHT COMB) (2–WAY M) (AC–DELCO #213–310)
84	Y	16137039	1	65.40	SENSOR, MAP (1 PORT, 3 BLADE TERM, 2 BOLT HOLES) (AC–DELCO #213–185)
90	Y	16137039	1	65.40	SENSOR, MAP (1 PORT, 3 TERM, 2 BOLT HOLES) (AC–DELCO #213–185)
91	Y 5.7–8 (L98)	16137039	1	65.40	SENSOR, MAP (1 PORT, 3 TERM, 2 BOLT HOLES) (AC–DELCO #213–185)
91–95	Y 5.7J (LT5)	16137039	1	65.40	SENSOR, MAP (1 PORT, 3 TERM, 2 BOLT HOLES) (AC–DELCO #213–185)
92–95	Y 5.7P (LT1)	16137039	1	65.40	SENSOR, MAP (1 PORT, 3 TERM, 2 BOLT HOLES) (AC–DELCO #213–185)

© 2000 GENERAL MOTORS SERVICE PARTS OPERATIONS

3.682 BOLT – BRACKET – BUFFER – CLAMP – CONNECTOR – COVER – MODULE – PLUG – RELAY – RETAINER – SEAL – SENSOR – SPACER, Computer Control Sensors(Con't)

96	Y	16137039	1	65.40	SENSOR, MAP (AC–DELCO #213–185)
85	Y	14081243	1	540.26	SENSOR, MASS AIRFLOW (AC–DELCO #213–162)
86–87	Y	14094712	1	507.44	SENSOR, MASS AIRFLOW (AC–DELCO #213–163)
88	Y	10055877	1	397.22	SENSOR, MASS AIRFLOW (AC–DELCO #213–161)
89	Y 5.7–8 (L98)	10055877	1	397.22	SENSOR, MASS AIRFLOW (AC–DELCO #213–161)
94–95	Y 5.7P (LT1)	25000308	1	367.42	SENSOR, MASS AIRFLOW (INCLS SNSR & 2 CLMPS) (AC–DELCO #213–252)
94	Y 5.7P (LT1)	25099215	1	579.98	SENSOR, MASS AIRFLOW (W/INT AIR TEMP SEN) (W/DUCT) (AC–DELCO #213–238)
96	Y	25000308	1	367.42	SENSOR, MASS AIRFLOW (INCLS SNSR & 2 CLMPS) (AC–DELCO #213–252)
90–95	Y 5.7J (LT5)	16006834	1	61.77	SENSOR, MDP (AC–DELCO #16006834)
84–87	Y	25162693	1	51.12	SENSOR, OXY (1 WIRE) (AC–DELCO #AFS20) (OEM SENSOR)
87	Y (EXC LEADED FUEL EMIS EXPORT (NM8)	25166816	2	51.55	SENSOR, OXY (1 WIRE) (AC–DELCO #AFS21) (OEM SENSOR)
88–91	Y 5.7–8 (L98)	25166816	2	51.55	SENSOR, OXY (PURPLE WIRE) (18 X 1.5) (TYPE #21 MATES W/12015791) (AC–DELCO #AFS21) (OEM SENSOR)
92–93	Y 5.7P (LT1), (EXC LEADED FUEL EMIS EXPORT (NM8)	25166816	2	51.55	SENSOR, OXY (PURPLE WIRE) (18 X 1.5) (TYPE #21 MATES W/12015791) (AC–DELCO #AFS21) (OEM SENSOR)
84–90	Y D9A	25007224	1	99.55	SENSOR, VEH SPD (TRANS MTD) (USED W/AXLE RATIO 2.59, 2.73) (AC–DELCO #213–210)
84–90	Y D9B	25007308	1	98.96	SENSOR, VEH SPD (TRANS MTD) (USED W/AXLE RATIO 3.07, 3.33, 3.45) (AC–DELCO #213–223)
91–93	Y (D8I)	10456089	1	36.09	SENSOR, VEH SPD (W/ O–RING) (04.329) (AC–DELCO #213–198)
91–93	Y (D8K)	10456091	1	32.70	SENSOR, VEH SPD (NATURAL COLOR) (PART NO STAMPED ON HSG) (04.329) (AC–DELCO #213–199)
91–93	Y (D8L)	10456092	1	32.70	SENSOR, VEH SPD (BLACK COLOR) (PART NO STAMPED ON HSG) (04.329) (AC–DELCO #213–200)
94–96	Y 6–SPD M/TRANS (ML9)	10456089	1	36.09	SENSOR, VEH SPD (W/ O–RING) (04.329) (AC–DELCO #213–198)
	*EXPORT***************EXPORT***************EXPORT***************EXPORT***************EXPORT*				
95	Y 5.7P (LT1), EUROPEAN PROVISIONS (VD1) (EXPORT), VE1 (EXPORT)	25312184	2	62.81	SENSOR, HTD OXY (AC–DELCO #AFS75) (OEM SENSOR)

© 2000 GENERAL MOTORS SERVICE PARTS OPERATIONS

3.885 BOOT – BRACKET – CHAIN – CONNECTOR – INSULATOR – RETAINER – SCREW – SERVO – SHIELD – SLEEVE – VALVE – WASHER, Cruise Control

93–96	Y 6–SPD M/TRANS (ML9)	10194431	1	*.04	RETAINER, CRCONT SW
84–92	Y	10075405	1	.34	RETAINER, CRCONT VAC REL VLV (03.887)
84–87	Y	01612303	1	1.45	RETAINER, VAC REL VLV
92–96	Y	10192285	1	1.02	SHIELD, ACCEL CONT & CRCONT SERVO CBL ADJR
91–95	Y 5.7J (LT5)	14056648	1	2.73	VALVE, CRCONT AIR PRESS REG (STAMPED 6640) (AC–DELCO #14056348)
84–92	Y	01648510	1	13.74	VALVE, CRCONT VAC REL (ON BRK) (W/SW) (AC–DELCO #212–346)
89–92	Y 6–SPD M/TRANS (ML9), SOFT RIDE SUSP (FE1), HVY DUTY SUSP (FE7)	14043256	1	9.84	VALVE, CRCONT VAC REL (ON CLU) (03.883)
85–92	Y	14091256	1	*.60	WASHER, CRCONT SERVO (03.880)

4.686 BOLT – BRACKET – CLIP – FITTING – GASKET – NUT – RETAINER – SPACER, Hydraulic Brake Pipe

92–96	Y	11515397	2	.22	BOLT, BRK PIPE RET (10.685)
90–96	Y	14092701	1	7.75	BRACKET, BRK PIPE (03.145)
86–91	Y	14094289	1	DISCON	RETAINER, BRK PIPE
92–96	Y	10218188	1	2.70	RETAINER, BRK PIPE

4.720 BOLT – BRACKET – CLIP – CONNECTOR – COVER – DIODE – GASKET – HARNESS – MODULE – PLATE – RELAY – RETAINER – SUPPORT – WIRE, Electronic Brake Control

92–94	Y	10143546	1	3.26	BRACKET, ELEK BRK & TRACT CONT MDL
95	Y 5.7J (LT5)	10143546	1	3.26	BRACKET, ELEK BRK & TRACT CONT MDL
86–91	Y	14088443	1	DISCON	BRACKET, ELEK BRK CONT MDL (RR)
86–91	Y	14088444	1	DISCON	BRACKET, ELEK BRK CONT MDL (FRT)
96	Y (EXC DAYTIME RUNNING LGT (T61), HDLP (T72) (EXPORT), RH RULE OF ROAD HDLP (T84) (EXPORT), LH RULE OF ROAD HDLP (T85) (EXPORT), SIG & MKR LP (T90) (EXPORT)	12129073	1	.45	BRACKET, ELEK BRK CONT RLY (BLACK) (AC–DELCO #12129073)
87–95	Y	14062552	2	1.12	BRACKET, WHL SPD SEN WRG HARN CLIP (02.559)
96	Y	14062552	1	1.12	BRACKET, WHL SPD SEN WRG HARN CLIP (02.559)
92–94	Y	10143537	1	21.78	COVER, ELEK BRK CONT MDL
95	Y SPECIAL PERFORMANCE PKG (ZR1)	10143537	1	21.78	COVER, ELEK BRK CONT MDL
95	Y (EXC SPECIAL PERFORMANCE PKG (ZR1)	10225919	1	23.31	COVER, ELEK BRK CONT MDL
96	Y	10225919	1	23.31	COVER, ELEK BRK CONT MDL
92–96	Y	10167107	1	4.13	GASKET, ELEK BRK CONT MDL CVR
86	Y (2ND DES)	12046596	1	DISCON	HARNESS, BRK PRESS MOD VLV WRG (HAS 3 CONNECTORS FOR WHL SPD SEN HARNESS)
86	Y (1ST DES)	12046801	1	DISCON	HARNESS, BRK PRESS MOD VLV WRG (HAS 2 CONNECTORS FOR WHL SPD SEN HARNESS)
87	Y	12067433	1	DISCON	HARNESS, BRK PRESS MOD VLV WRG

© 2000 GENERAL MOTORS SERVICE PARTS OPERATIONS

4.720 BOLT – BRACKET – CLIP – CONNECTOR – COVER – DIODE – GASKET – HARNESS – MODULE – PLATE – RELAY – RETAINER – SUPPORT – WIRE, Electronic Brake Control(Con't)

88	Y	12083507	1	DISCON	HARNESS, BRK PRESS MOD VLV WRG
89	Y	12083507	1	DISCON	HARNESS, BRK PRESS MOD VLV WRG
90	Y (EXC FX3)	12080844	1	DISCON	HARNESS, BRK PRESS MOD VLV WRG
90	Y RIDE & HDLG (FX3)	12080845	1	DISCON	HARNESS, BRK PRESS MOD VLV WRG
91	Y (EXC ELEK RIDE & HANDLING (FX3)	12112465	1	DISCON	HARNESS, BRK PRESS MOD VLV WRG
91	Y ELEK RIDE & HANDLING (FX3)	12112466	1	DISCON	HARNESS, BRK PRESS MOD VLV WRG
93	Y (EXC ELEK RIDE & HANDLING (FX3)	12106505	1	260.86	HARNESS, BRK PRESS MOD VLV WRG
93	Y ELEK RIDE & HANDLING (FX3)	12106507	1	DISCON	HARNESS, BRK PRESS MOD VLV WRG
94	Y (EXC ELEK RIDE & HANDLING (FX3)	12130360	1	260.86	HARNESS, BRK PRESS MOD VLV WRG
94	Y ELEK RIDE & HANDLING (FX3)	12130361	1	260.86	HARNESS, BRK PRESS MOD VLV WRG
95	Y 5.7J (LT5)	12130361	1	260.86	HARNESS, BRK PRESS MOD VLV WRG
86–90	Y	12055740	1	DISCON	HARNESS, BRK PRESS MOD VLV WRG HARN GRD
92	Y (EXC ELEK RIDE & HANDLING (FX3)	12106545	1	390.00	HARNESS, ELEK BRK CONT & ELEC TRACT CONT WRG (CONT MDL TO WHL SEN HARN)
92	Y (EXC ELEK RIDE & HANDLING (FX3)	12106546	1	260.86	HARNESS, ELEK BRK CONT & ELEC TRACT CONT WRG (FRT & RR WHL SEN TO CONT HARN)
93–94	Y ELEK RIDE & HANDLING (FX3)	12130313	1	522.73	HARNESS, ELEK BRK CONT & ELEC TRACT CONT WRG
93–94	Y (EXC ELEK RIDE & HANDLING (FX3)	12130314	1	260.86	HARNESS, ELEK BRK CONT & ELEC TRACT CONT WRG
95	Y 5.7J (LT5)	12130313	1	522.73	HARNESS, ELEK BRK CONT & ELEC TRACT CONT WRG
95	Y 5.7P (LT1)	12130367	1	772.50	HARNESS, ELEK BRK CONT & ELEC TRACT CONT WRG
96	Y CHASSIS, REALTIME DAMPING (F45)	12130459	1	522.73	HARNESS, ELEK BRK CONT & ELEC TRACT CONT WRG
96	Y (EXC CHASSIS, REALTIME DAMPING (F45)	12130496	1	522.73	HARNESS, ELEK BRK CONT & ELEC TRACT CONT WRG
92	Y ELEK RIDE & HANDLING (FX3)	12106547	1	DISCON	HARNESS, ELEK BRK CONT & ELEK SUSP & TRACTION CONT WRG (CONT MDL TO WHL SEN HARN)
92	Y ELEK RIDE & HANDLING (FX3)	12106548	1	DISCON	HARNESS, ELEK BRK CONT & ELEK SUSP & TRACTION CONT WRG (FRT & RR WHL SEN TO CONT HARN)
86	Y07 (1ST DES)	12048802	1	DISCON	HARNESS, WHL SPD SEN WRG (2 CONNECTORS FOR BRK MODULE HARN)
86	Y07 (2ND DES)	12055921	1	DISCON	HARNESS, WHL SPD SEN WRG (3 CONNECTORS FOR BRK MODULE HARN)
86	Y67 (1ST DES)	12048803	1	DISCON	HARNESS, WHL SPD SEN WRG (HAS 2 CONNECTORS FOR BRK MODULE HARN)

© 2000 GENERAL MOTORS SERVICE PARTS OPERATIONS

4.720 BOLT – BRACKET – CLIP – CONNECTOR – COVER – DIODE – GASKET – HARNESS – MODULE – PLATE – RELAY – RETAINER – SUPPORT – WIRE, Electronic Brake Control(Con't)

86	Y67 (2ND DES)	12055922	1	DISCON	HARNESS, WHL SPD SEN WRG (HAS 3 CONNECTORS FOR BRK MODULE HARN)
87	Y07 (EXC 1BL PERF HDLG PKG Z51, B2B SPORT HDLG PKG Z52)	12046597	1	DISCON	HARNESS, WHL SPD SEN WRG
87	Y07 1BL (PERF HDLG PKG Z51), B2B (SPORT HDLG PKG Z52)	12067499	1	DISCON	HARNESS, WHL SPD SEN WRG
87	Y67	12046598	1	DISCON	HARNESS, WHL SPD SEN WRG
88–90	Y	12073494	1	385.50	HARNESS, WHL SPD SEN WRG
91	Y (EXC ELEK RIDE & HANDLING (FX3)	12090313	1	260.86	HARNESS, WHL SPD SEN WRG
91	Y ELEK RIDE & HANDLING (FX3)	12090314	1	260.86	HARNESS, WHL SPD SEN WRG
91–96	Y	12090339	2	80.25	HARNESS, WHL SPD SEN WRG HARN EXTN
92–94	Y	10241014	1	1030.00	MODULE, ELEK BRK & TRACT CONT (AC–DELCO #10241014)
95	Y 5.7J (LT5)	10241014	1	1030.00	MODULE, ELEK BRK & TRACT CONT (AC–DELCO #10241014)
86–89	Y	14103343	1	990.05	MODULE, ELEK BRK CONT (MODULE, ELEK BRK CONT) (AC–DELCO #14103343)
90–91	Y	10223326	1	1030.00	MODULE, ELEK BRK CONT (AC–DELCO #10223326)
95	Y 5.7P (LT1)	12521972	1	643.62	MODULE, ELEK BRK CONT (& TRACT CONT)
96	Y	12525023	1	857.82	MODULE, ELEK BRK CONT
92–94	Y	14058658	2	1.68	PLATE, ELEK BRK & TRACT CONT MDL BRKT STUD (12.986)
95	Y 5.7J (LT5)	14058658	1	1.68	PLATE, ELEK BRK & TRACT CONT MDL BRKT STUD (12.986)
86–91	Y	14091012	1	DISCON	PLATE, ELEK BRK CONT WRG HARN CLIP TAP (U–SHAPE) (03.675)
92–96	Y	10045625	7	1.07	PLATE, ELEK BRK CONT WRG HARN CLIP TAP (W/STUD) (12.981)
92–96	Y	14090618	1	7.05	PLATE, ELEK BRK CONT WRG HARN GROM TAP (03.675)
92–94	Y	10143547	1	2.19	SUPPORT, ELEK BRK & TRACT CONT MDL
95	Y 5.7J (LT5)	10143547	1	2.19	SUPPORT, ELEK BRK & TRACT CONT MDL
91–96	Y	12080879	1	9.90	WIRE, BRK PRESS MOD VLV WRG HARN GND

4.730 BOLT – BRACKET – CONNECTOR – COVER – INSULATOR – PIN – RELAY – VALVE, Electronic Brake Control

90–94	Y	14071620	4	2.24	BOLT, BRK PRESS MOD VLV BLEDR (04.666)
95	Y 5.7J (LT5)	140[illegible]26	1	2.24	BOLT, BRK PRESS MOD VLV BLEDR (04.666)
86–91	Y	14087613	1	DISCON	BRACKET, BRK PRESS MOD VLV
92–94	Y	10143511	1	9.13	BRACKET, BRK PRESS MOD VLV
95	Y 5.7J (LT5)	10143511	1	9.13	BRACKET, BRK PRESS MOD VLV
95	Y 5.7P (LT1)	10218185	1	3.26	BRACKET, BRK PRESS MOD VLV
96	Y	10218185	1	3.26	BRACKET, BRK PRESS MOD VLV
92–94	Y	12516329	1	31.88	COVER, BRK PRESS MOD VLV RLY
95	Y 5.7J (LT5)	12516329	1	31.88	COVER, BRK PRESS MOD VLV RLY
86–96	Y	14087680	3	3.26	INSULATOR, BRK PRESS MOD VLV
92–94	Y	12516330	2	10.46	PIN, BRK PRESS MOD VLV (M6X1)

© 2000 GENERAL MOTORS SERVICE PARTS OPERATIONS

4.730 BOLT – BRACKET – CONNECTOR – COVER – INSULATOR – PIN – RELAY – VALVE, Electronic Brake Control(Con't)

92–94	Y	12516331	1	10.07	PIN, BRK PRESS MOD VLV (M10X1)
95	Y 5.7J (LT5)	12516330	2	10.46	PIN, BRK PRESS MOD VLV (M8X1)
95	Y 5.7J (LT5)	12516331	1	10.07	PIN, BRK PRESS MOD VLV (M10X1)
86–91	Y	14105967	1	49.00	RELAY, BRK PRESS MOD VLV (AC–DELCO #14105967)
91	Y	14100455	1	16.26	RELAY, BRK PRESS MOD VLV (BLACK) (5–WAY) (09.277) (AC–DELCO #15–8426)
92–94	Y	12516332	1	45.57	RELAY, BRK PRESS MOD VLV (AC–DELCO #12516332)
95	Y 5.7J (LT5)	12516332	1	45.57	RELAY, BRK PRESS MOD VLV (AC–DELCO #12516332)
86–91	Y	12513302	1	49.63	RELAY, BRK PRESS MOD VLV PUMP MOT (4 TERMINAL) (AC–DELCO #12513302)
92–94	Y	12513302	1	49.63	RELAY, BRK PRESS MOD VLV PUMP MOT (4 TERMINAL) (AC–DELCO #12513302)
95	Y 5.7J (LT5)	12513302	1	49.63	RELAY, BRK PRESS MOD VLV PUMP MOT (4 TERMINAL) (AC–DELCO #12513302)
86–91	Y	12506759	1	1473.21	VALVE, BRK PRESS MOD (AC–DELCO #12506759)
92–94	Y	12516323	1	1581.82	VALVE, BRK PRESS MOD (AC–DELCO #12516323)
95	Y 5.7J (LT5)	12516323	1	1581.82	VALVE, BRK PRESS MOD (AC–DELCO #12516323)
95	Y 5.7P (LT1)	12521971	1	1317.84	VALVE, BRK PRESS MOD (& TRACT CONT)
93	Y	12525062	1	1224.00	VALVE, BRK PRESS MOD
95	Y 5.7P (LT1)	12525660	1	258.06	VALVE, BRK PRESS MOD DAMPING (& TRACT CONT) (W/BOLT & O–RINGS)
96	Y	12525660	1	258.06	VALVE, BRK PRESS MOD DAMPING (& TRACT CONT) (W/BOLT & O–RINGS)

5.556 BUSHING, Universal Joint Sleeve Yoke

84–93	Y 4–SPD A/TRANS (MD8)	24207915	1	2.76	BUSHING, PROP SHF FRT SLIP YOKE (INSIDE DIAM 1.506– 1.504 (PT OF TRANS EXT) (AC–DELCO #24207915)
92–93	Y 4–SPD A/TRANS (MD8)	08680027	1	7.60	BUSHING, PROP SHF FRT SLIP YOKE (INSIDE DIA 1.506–1.509) (PART OF TRANS CASE) (04.104) (AC–DELCO #8680027)
94–96	Y 4–SPD A/TRANS (M30)	08680027	1	7.60	BUSHING, PROP SHF FRT SLIP YOKE (INSIDE DIA 1.506–1.509) (PART OF TRANS CASE) (04.104) (AC–DELCO #8680027)
94–96	Y 4–SPD A/TRANS (M30)	24207915	1	2.76	BUSHING, PROP SHF FRT SLIP YOKE (INSIDE DIAM 1.506– 1.504 (PT OF TRANS EXT) (AC–DELCO #24207915)

© 2000 GENERAL MOTORS SERVICE PARTS OPERATIONS

7.450 BRACKET – CONNECTOR – CONTROL – HARNESS – LAMP – MODULE – NUT – RETAINER – SWITCH – TAPE, Electronic Control Suspension

91	Y ELEK RIDE & HANDLING (FX3) ..	14104798	1	DISCON	BRACKET, ELEK SUSP CONT MDL ....
96	Y CHASSIS, REALTIME DAMPING (F45)	10274269	1	.99	BRACKET, ELEK SUSP CONT MDL ....
90–93	Y ELEK RIDE & HANDLING (FX3) ..	12125665	1	28.96	CONNECTOR, ELEK SUSP STRUT HARN EXTN (GRAY) (6–WAY F) (W/LEADS) (04.663) .....
92–93	Y	12101827	1	36.30	CONNECTOR, ELEK SUSP STRUT HARN EXTN (8–WAY M) (W/LEADS) (02.535) (AC–DELCO #PT219) .....
94	Y ELEK RIDE & HANDLING (FX3) ..	12125665	1	28.96	CONNECTOR, INLINE–TO ELEK SUSP MDL (GRAY) (6–WAY F) (W/LEADS) (04.663) .....
95	Y 5.7J (LT5)	12125665	1	28.96	CONNECTOR, INLINE–TO ELEK SUSP MDL (GRAY) (6–WAY F) (W/LEADS) (04.663) .....
96	Y	12085535	1	17.46	CONNECTOR, INLINE–TO ELEK SUSP MDL (2–WAY F) (W/LEADS) (HAS INDEX TAB @ OUTER EDGE OF CAVITY B) (02.535) (AC–DELCO #PT146) .....
94–95	Y	12041476	1	2.53	CONNECTOR, MDL–ELEK SUSP CONT (32–WAY FEMALE) (W/O LEADS) (02.480) .....
96	Y CHASSIS, REALTIME DAMPING (F45)	12110206	1	3.50	CONNECTOR, MDL–ELEK SUSP CONT (LT BLUE) (24–W F) (W/O LEADS) (03.670) .....
96	Y CHASSIS, REALTIME DAMPING (F45)	12129088	1	2.43	CONNECTOR, MDL–ELEK SUSP CONT (BLACK) (8–WAY F, W/O LEADS) (04.720) .....
91–95	Y ELEK RIDE & HANDLING (FX3) ..	12117350	1	22.35	CONNECTOR, SW–ELEK SUSP (4–WAY F) (W/LEADS) (09.764) (AC–DELCO #PT483) .....
93	Y	12125665	1	28.96	CONNECTOR, SW–ELEK SUSP (GRAY) (6–WAY F) (W/LEADS) (04.663) .....
94–95	Y	12101827	1	36.30	CONNECTOR, SW–ELEK SUSP (8–WAY M) (W/LEADS) (02.535) (AC–DELCO #PT219) .....
96	Y CHASSIS, REALTIME DAMPING (F45)	12117350	1	22.35	CONNECTOR, SW–ELEK SUSP (4–WAY F) (W/LEADS) (09.764) (AC–DELCO #PT483) .....
89	Y RIDE & HDLG (FX3)	10098464	1	24.78	CONTROL, ELEK SUSP .....
90–91	Y 6–WAY PWR D/SEAT ADJR (AC3), ELEK RIDE & HANDLING (FX3), (EXC 6–WAY PWR P/SEAT ADJR (AC1)	10098438	1	158.10	CONTROL, ELEK SUSP (W/D/SEAT ADJR SW) .....
90	Y 6–WAY (AC1, AC3), RIDE & HDLG (FX3)	14104668	1	DISCON	CONTROL, ELEK SUSP (W/FRT ST ADJR SW) .....
92–93	Y 6–WAY PWR D/SEAT ADJR (AC3), ELEK RIDE & HANDLING (FX3), (EXC 6–WAY PWR P/SEAT ADJR (AC1)	10161836	1	158.10	CONTROL, ELEK SUSP (W/D/SEAT ADJR SW) .....
89	Y ELEK SUSP CONT (FX3)	12080608	1	DISCON	HARNESS, ELEK SUSP STRUT WRG HARN EXTN .....
90–93	Y ELEK RIDE & HANDLING (FX3) ..	12080856	1	38.50	HARNESS, ELEK SUSP STRUT WRG HARN EXTN .....
94–95	Y 3–SPD M/TRANS (ML9), ELEK RIDE & HANDLING (FX3)	12130362	1	38.50	HARNESS, ELEK SUSP STRUT WRG HARN EXTN .....

© 2000 GENERAL MOTORS SERVICE PARTS OPERATIONS

7.450 BRACKET – CONNECTOR – CONTROL – HARNESS – LAMP – MODULE – NUT – RETAINER – SWITCH – TAPE, Electronic Control Suspension(Con't)

94–95	Y 4–SPD A/TRANS (M30), ELEK RIDE & HANDLING (FX3)	12130490	1	82.62	HARNESS, ELEK SUSP STRUT WRG HARN EXTN
96	Y CHASSIS, REALTIME DAMPING (F45)	12130460	1	30.50	HARNESS, ELEK SUSP STRUT WRG HARN EXTN
90–91	Y 6–WAY PWR P/SEAT ADJR (AC1), 6–WAY PWR D/SEAT ADJR (AC3), ELEK RIDE & HANDLING (FX3)	10159560	1	1.90	LAMP, SELECTIVE RIDE SW
92	Y ELEK RIDE & HANDLING (FX3)	10159560	1	1.90	LAMP, SELECTIVE RIDE SW
93	Y 6–WAY PWR P/SEAT ADJR (AC1), 6–WAY PWR D/SEAT ADJR (AC3), ELEK RIDE & HANDLING (FX3)	10159560	1	1.90	LAMP, SELECTIVE RIDE SW
90–91	Y ELEK RIDE & HANDLING (FX3)	22115156	1	1570.97	MODULE, ELEK SUSP CONT
92–95	Y ELEK RIDE & HANDLING (FX3)	22052752	1	1014.90	MODULE, ELEK SUSP CONT
94–95	Y 4–SPD A/TRANS (M30), ELEK RIDE & HANDLING (FX3)	12135092	1	27.53	MODULE, ELEK SUSP CONT (FILTER) (PART OF ELEK SUSP WRG HARN EXTN)
96	Y CHASSIS, REALTIME DAMPING (F45)	16205661	1	674.20	MODULE, ELEK SUSP CONT (MUST BE PROGRAMMED AT DEALER)
96	Y CHASSIS, REALTIME DAMPING (F45)	10257543	1	1.38	RETAINER, ELEK SUSP CONT MDL
90	Y ELEK RIDE & HANDLING (FX3), (EXC 6–WAY PWR P/SEAT ADJR (AC1), 6–WAY PWR D/SEAT ADJR (AC3)	10086226	1	54.07	SWITCH, ELEK SUSP
90–91	Y 6–WAY PWR D/SEAT ADJR (AC3), ELEK RIDE & HANDLING (FX3), (EXC 6–WAY PWR P/SEAT ADJR (AC1)	10086226	1	54.07	SWITCH, ELEK SUSP
90–91	Y 6–WAY PWR P/SEAT ADJR (AC1), 6–WAY PWR D/SEAT ADJR (AC3), ELEK RIDE & HANDLING (FX3)	10086226	1	54.07	SWITCH, ELEK SUSP
91	Y ELEK RIDE & HANDLING (FX3), (EXC 6–WAY PWR P/SEAT ADJR (AC1), 6–WAY PWR D/SEAT ADJR (AC3)	10098437	1	54.07	SWITCH, ELEK SUSP
92	Y ELEK RIDE & HANDLING (FX3)	10161836	1	54.07	SWITCH, ELEK SUSP
92	Y ELEK RIDE & HANDLING (FX3), (EXC 6–WAY PWR P/SEAT ADJR (AC1), 6–WAY PWR D/SEAT ADJR (AC3)	10161847	1	54.07	SWITCH, ELEK SUSP
93	Y ELEK RIDE & HANDLING (FX3), 6–WAY PWR D/SEAT ADJR (AC3)	10161836	1	54.07	SWITCH, ELEK SUSP
94–95	Y ELEK RIDE & HANDLING (FX3)	10212995	1	54.07	SWITCH, ELEK SUSP
96	Y CHASSIS, REALTIME DAMPING (F45)	10212995	1	54.07	SWITCH, ELEK SUSP

8.080 BOLT – BRACKET – BUSHING – COVER – LATCH KIT – NUT – PLATE – SUPPORT, Hood Latch

84–93	Y	10243052	2	6.53	BOLT, HOOD PRIM LAT (TO HOOD)
94–96	Y	11503800	6	*.12	BOLT, HOOD PRIM LAT (08.900)
96	Y	11513703	AR	*.61	BOLT, HOOD PRIM LAT BRKT (M8X1.25X18) (08.900)
92–95	Y	11508600	6	1.82	BOLT, HOOD PRIM LAT CTH (TO CAR) (HFH M6X1X20 9.8 PZOR) (08.900) (AC–DELCO #11508600)
94–96	Y	10243052	2	6.53	BOLT, HOOD PRIM LAT CTH (TO HOOD)

© 2000 GENERAL MOTORS SERVICE PARTS OPERATIONS

8.080 BOLT – BRACKET – BUSHING – COVER – LATCH KIT – NUT – PLATE – SUPPORT, Hood Latch(Con't)

00–03	Y 4–SPD A/TRANS (MD8)	14088310	2	*1.30	BOLT, HOOD PRIM LAT REL CBL BRKT (M8X1.25X24) (03.071)
04	Y 4–SPD A/TRANS (M30)	14088310	2	*1.30	BOLT, HOOD PRIM LAT REL CBL BRKT (M8X1.25X24) (03.071)
84–87	Y	14046733	LH	14.23	SUPPORT, HOOD PRIM LAT
84–87	Y	14046734	RH	DISCON	SUPPORT, HOOD PRIM LAT
88	Y	10123071	LH	DISCON	SUPPORT, HOOD PRIM LAT (HOOD ADJR BPR IN HOOD)
88	Y	14046733	LH	14.23	SUPPORT, HOOD PRIM LAT (HOOD ADJR BPR IN LAT)
88	Y	14046734	RH	DISCON	SUPPORT, HOOD PRIM LAT (HOOD ADJR BPR IN LAT)
89	Y	10123071	LH	DISCON	SUPPORT, HOOD PRIM LAT
89	Y	10225268	RH	DISCON	SUPPORT, HOOD PRIM LAT
90–91	Y SOFT RIDE SUSP (FE1), HVY DUTY SUSP (FE7)	10225267	LH	14.95	SUPPORT, HOOD PRIM LAT
90–91	Y SOFT RIDE SUSP (FE1), HVY DUTY SUSP (FE7)	10225268	RH	DISCON	SUPPORT, HOOD PRIM LAT
92–96	Y	10225267	LH	14.95	SUPPORT, HOOD PRIM LAT
92–96	Y	10225268	RH	DISCON	SUPPORT, HOOD PRIM LAT
88	Y	10225268	RH	DISCON	SUPPORT, HOOD PRIM LATCH (HOOD ADJR BPR IN HOOD)

13.090 BRACKET – CLIP – HARNESS – MODULE – RETAINER – STRAP – TAPE – WIRE, Body Wiring

86–89	Y67	14100354	1	DISCON	BRACKET, BODY WRG HARN
84–90	Y	14066514	2	DISCON	BRACKET, DR ELEC WRG LWR RR
84–96	Y	14073415	2	.70	BRACKET, P/W DR WRG HARN
89	Y07 STEREO (UU8)	12085454	1	DISCON	HARNESS, BODY FRT WRG
89	Y67 STEREO (UM6)	12080872	1	DISCON	HARNESS, BODY FRT WRG
89	Y67 STEREO (UU8)	12080873	1	DISCON	HARNESS, BODY FRT WRG
90	Y STEREO (UU8)	12101487	1	DISCON	HARNESS, BODY FRT WRG
90	Y STEREO (UM6)	12101488	1	DISCON	HARNESS, BODY FRT WRG
90	Y67 STEREO (UM6)	12073787	1	DISCON	HARNESS, BODY FRT WRG
90	Y67 STEREO (UU8, U1F)	12073788	1	DISCON	HARNESS, BODY FRT WRG
91	Y07 STEREO CASSETTE (UM6)	12112419	1	DISCON	HARNESS, BODY FRT WRG
91	Y07 CASSETTE STEREO (UU8), CASSETTE/CD PLAYER (U1F)	12112460	1	DISCON	HARNESS, BODY FRT WRG
91	Y67 STEREO CASSETTE (UM6)	12090311	1	DISCON	HARNESS, BODY FRT WRG
91	Y67 CASSETTE STEREO (UU8), CASSETTE/CD PLAYER (U1F)	12090312	1	DISCON	HARNESS, BODY FRT WRG
92	Y07 CASSETTE STEREO (UU8), CASSETTE/CD PLAYER (U1F)	12125811	1	DISCON	HARNESS, BODY FRT WRG
92	Y07 STEREO CASSETTE (UM6)	12125812	1	DISCON	HARNESS, BODY FRT WRG
92	Y67 STEREO CASSETTE (UM6)	12106537	1	DISCON	HARNESS, BODY FRT WRG
92	Y67 CASSETTE STEREO (UU8), CASSETTE/CD PLAYER (U1F)	12106538	1	DISCON	HARNESS, BODY FRT WRG
93	Y07	12141786	1	780.00	HARNESS, BODY FRT WRG
93	Y67	12130341	1	244.62	HARNESS, BODY FRT WRG
94	Y07 SIG & MKR LP (T90) (EXPORT)	12141786	1	780.00	HARNESS, BODY FRT WRG
94	Y07 (EXC SIG & MKR LP (T90) (EXPORT)	12141796	1	244.62	HARNESS, BODY FRT WRG
94	Y67 (EXC SIG & MKR LP (T90) (EXPORT)	12130355	1	361.50	HARNESS, BODY FRT WRG
95	Y07 (EXC SIG & MKR LP (T90) (EXPORT), SPECIAL PERFORMANCE PKG (ZR1)	12130403	1	244.62	HARNESS, BODY FRT WRG

© 2000 GENERAL MOTORS SERVICE PARTS OPERATIONS

13.090 BRACKET – CLIP – HARNESS – MODULE – RETAINER – STRAP – TAPE – WIRE, Body Wiring(Con't)

95	Y07 SPECIAL PERFORMANCE PKG (ZR1)	12141796	1	244.62	HARNESS, BODY FRT WRG
95	Y67 (EXC SIG & MKR LP (T90) (EXPORT)	12130476	1	244.62	HARNESS, BODY FRT WRG
96	Y07 (EXC SIG & MKR LP (T90) (EXPORT)	12130458	1	361.50	HARNESS, BODY FRT WRG
96	Y07 (EXC SIG & MKR LP (T90) (EXPORT)	12130456	1	244.62	HARNESS, BODY FRT WRG
86–88	Y67 (EXC EXPORT T89, T90)	12073839	1	DISCON	HARNESS, BODY RR WRG (WHEN SERVICING 1986–87 VEH, MUST ALSO USE (4) CONN 8918527)
87–88	Y07 (EXC TAIL & S/LP (T89) (EXPORT), SIG & MKR LP (T90) (EXPORT)	12067493	1	DISCON	HARNESS, BODY RR WRG (WHEN USED ON 1987 MODELS MUST USE 4 OF 8918527 SOCKETS)
87	Y67 STEREO (UM6, UM7) (EXC T89, T90 EXPORT)	12080872	1	DISCON	HARNESS, BODY RR WRG (MAY NEED TO USE CONN 12126015 & 12085482)
88	Y67 (EXC RDO, EXPORT T89, T90)	12080872	1	DISCON	HARNESS, BODY RR WRG (MAY NEED TO USE CONN 12126015 & 12085482)
88	Y67 STEREO (UM6) (EXC EXPORT T89, T90)	12080872	1	DISCON	HARNESS, BODY RR WRG (MAY NEED TO USE CONN 12126015 & 12085482)
89–90	Y07	12067493	1	DISCON	HARNESS, BODY RR WRG
89–92	Y67	12073839	1	DISCON	HARNESS, BODY RR WRG
91–92	Y07 SPECIAL PERFORMANCE PKG (ZR1)	12067493	1	DISCON	HARNESS, BODY RR WRG
91–92	Y07 (EXC SPECIAL PERFORMANCE PKG (ZR1)	12090341	1	DISCON	HARNESS, BODY RR WRG
93	Y (EXC SIG & MKR LP (T90) (EXPORT)	12130377	1	527.80	HARNESS, BODY RR WRG
94–95	Y07 (EXC SIG & MKR LP (T90) (EXPORT), SPECIAL PERFORMANCE PKG (ZR1)	12130357	1	244.62	HARNESS, BODY RR WRG
94–95	Y07 SPECIAL PERFORMANCE PKG (ZR1), (EXC SIG & MKR LP (T90) (EXPORT)	12130377	1	527.80	HARNESS, BODY RR WRG
94–96	Y67 (EXC SIG & MKR LP (T90) (EXPORT)	12130356	1	527.80	HARNESS, BODY RR WRG
96	Y07 (EXC SIG & MKR LP (T90) (EXPORT)	12130357	1	244.62	HARNESS, BODY RR WRG
84	Y STEREO (UU8)	12036116	1	DISCON	HARNESS, BODY WRG
84	Y STEREO (UM6, UM7), RDO UL5 (EXC EXPORT)	12036117	1	DISCON	HARNESS, BODY WRG
85	Y STEREO (UU8)	12049881	1	DISCON	HARNESS, BODY WRG
86	Y STEREO (UM6, UM7 (EXC EXPORT)	12048813	1	DISCON	HARNESS, BODY WRG
86	Y07 STEREO (UU8)	12048812	1	DISCON	HARNESS, BODY WRG
86	Y67 (EXC STEREO UU8)	12055600	1	DISCON	HARNESS, BODY WRG
86	Y67 STEREO (UU8)	12055601	1	DISCON	HARNESS, BODY WRG
87–88	Y07 STEREO (UU8)	12073831	1	DISCON	HARNESS, BODY WRG
87	Y07 STEREO (UM6, UM7) (EXC EXPORT T89, T90)	12085453	1	DISCON	HARNESS, BODY WRG
87–88	Y67 STEREO (UU8)	12073830	1	DISCON	HARNESS, BODY WRG
88	Y STEREO (UM6) (EXC EXPORT T89, T90)	12085453	1	DISCON	HARNESS, BODY WRG
89	Y07 STEREO (UM6)	12085453	1	DISCON	HARNESS, BODY WRG
84–90	Y AQ9	14079490	2	DISCON	HARNESS, CUSH WRG
91	Y RECL FRT BKT ST (AQ9)	12506477	1	DISCON	HARNESS, D/SEAT ADJR WRG

© 2000 GENERAL MOTORS SERVICE PARTS OPERATIONS

13.090 BRACKET – CLIP – HARNESS – MODULE – RETAINER – STRAP – TAPE – WIRE, Body Wiring(Con't)

91	Y RECL FRT BKT ST (AQ9)	14079481	2	DISCON	HARNESS, D/SEAT ADJR WRG .....
92–93	Y RECL FRT BKT ST (AQ9)	12520129	1	52.27	HARNESS, D/SEAT ADJR WRG .....
88	Y	12055829	LH	DISCON	HARNESS, ELEC DR WRG .....
88	Y	12055831	RH	DISCON	HARNESS, ELEC DR WRG .....
94–96	Y RECL FRT BKT ST (AQ9)	12141781	1	477.00	HARNESS, P/SEAT ADJR & LUMBAR CONT WRG (INCLUDES RELAY CTR)
84–91	Y RECL FRT BKT ST (AQ9)	14079481	2	DISCON	HARNESS, P/SEAT ADJR & RECL WRG
91	Y RECL FRT BKT ST (AQ9)	12506477	1	DISCON	HARNESS, P/SEAT ADJR WRG .....
92–93	Y RECL FRT BKT ST (AQ9)	12520129	1	52.27	HARNESS, P/SEAT ADJR WRG .....
84–85	Y (EXC ELEC DR LK AU3)	12016810	RH	DISCON	HARNESS, PWR WDO DR WRG .....
84–85	Y (EXC ELEC DR LK AU3)	12016811	LH	DISCON	HARNESS, PWR WDO DR WRG .....
84–85	Y ELEC DR LK (AU3)	12020821	LH	DISCON	HARNESS, PWR WDO DR WRG .....
84–85	Y ELEC DR LK (AU3)	12020822	RH	DISCON	HARNESS, PWR WDO DR WRG .....
86–87	Y	12069040	LH	DISCON	HARNESS, PWR WDO DR WRG .....
86–87	Y	12069841	RH	DISCON	HARNESS, PWR WDO DR WRG .....
93	Y67	12106561	1	34.26	HARNESS, R/CON DR LK RCVR ANT WRG .....
94–96	Y67 (EXC EUROPEAN PROVISIONS (VD1) (EXPORT), VE1 (EXPORT) ..	12106561	1	34.26	HARNESS, R/CON DR LK RCVR ANT WRG .....
88–96	Y	12073639	1	25.27	HARNESS, WSW & WSWA WRG .....
84–87	Y	12016892	1	DISCON	HARNESS, WSW MTR AND WSWA PUMP WRG .....
84–91	Y	12088529	1	22.29	MODULE, BODY WRG HARN (02.510) (IF USE IN PLC OF MDL W/DBL 4–WAY CONN, MUST ALSO ORDER 1–12116930 SINGLE ROW 4–WAY CONN) .....
91–92	Y07 STEREO CASSETTE (UM6), CASSETTE STEREO (UU8), CASSETTE/CD PLAYER (U1F)	12088529	1	22.29	MODULE, BODY WRG HARN (3 DIODE ARRAY) (02.510) .....
93	Y07	12088529	1	22.29	MODULE, BODY WRG HARN (3 DIODE ARRAY) (02.510) .....
94	Y	12088529	1	22.29	MODULE, BODY WRG HARN (3 DIODE ARRAY) (02.510) .....
84–96	Y	14073416	1	1.94	RETAINER, BODY WRG HARN .....
93–96	Y67	1[illegible]74	1	*1.50	RETAINER, BODY WRG HARN (4 1/4"X7 1/2") (TRIM AS REQ'D) (15.492) .....
88–96	Y	12020833	1	*.73	RETAINER, BODY WRG HARN CONN (GRAY) (1" LONG) (PUSH–IN) (02.559) .....
94	Y	20664092	2	*.40	RETAINER, F/TOP WRG HARN STRP (BLACK) (PUSH–IN) (01.276) .....
95–96	Y RECL FRT BKT ST (AQ9)	20664092	1	*.40	RETAINER, F/TOP WRG HARN STRP (BLACK) (PUSH–IN) (01.276) .....
94–95	Y RECL FRT BKT ST (AQ9)	11[illegible].5174	1	*1.50	RETAINER, P/SEAT LUMBAR CONT WRG HARN (4 1/4"X7 1/2") (TRIM AS REQ'D) (15.492) .....
88–89	Y07	03816659	1	*.87	STRAP, BODY FRT WRG HARN (08.965) .....
94–96	Y RECL FRT BKT ST (AQ9), IL3	10250231	1	6.32	STRAP, ST INFLR FEED WRG HARN (DRVR SEAT) .....
91–92	Y	12090348	1	DISCON	WIRE, CONV TOP .....
93	Y67	12106597	LH	DISCON	WIRE, CONV TOP .....
94–96	Y67	12130363	LH	59.12	WIRE, CONV TOP .....
91	Y	12106563	1	DISCON	WIRE, PWR ST DIODE JPR .....
90–92	Y67	12080875	1	DISCON	WIRE, R/CMPT LID LID REL .....
89	Y67	12080074	1	DISCON	WIRE, R/COMPT LID LK REL .....

© 2000 GENERAL MOTORS SERVICE PARTS OPERATIONS

13.090 BRACKET – CLIP – HARNESS – MODULE – RETAINER – STRAP – TAPE – WIRE, Body Wiring(Con't)

*EXPORT****************EXPORT****************EXPORT****************EXPORT****************EXPORT*

94	Y07 SIG & MKR LP (T90) (EXPORT)	12130341	1	244.62	HARNESS, BODY FRT WRG .....
95	Y07 SIG & MKR LP (T90) (EXPORT)	12130402	1	244.62	HARNESS, BODY FRT WRG .....
95	Y67 SIG & MKR LP (T90) (EXPORT)	12130477	1	244.62	HARNESS, BODY FRT WRG .....
96	Y07 SIG & MKR LP (T90) (EXPORT)	12130467	1	244.62	HARNESS, BODY FRT WRG .....
96	Y67 SIG & MKR LP (T90) (EXPORT)	12130455	1	244.62	HARNESS, BODY FRT WRG .....
87–88	Y07 T89, T90 (EXPORT)	12055623	1	137.03	HARNESS, BODY RR WRG .....
93	Y07 SIG & MKR LP (T90) (EXPORT)	12130379	1	DISCON	HARNESS, BODY RR WRG .....
93	Y67 SIG & MKR LP (T90) (EXPORT)	12130380	1	526.79	HARNESS, BODY RR WRG .....
94–96	Y07 SIG & MKR LP (T90) (EXPORT)	12130335	1	526.79	HARNESS, BODY RR WRG .....
94–96	Y67 SIG & MKR LP (T90) (EXPORT)	12130336	1	527.80	HARNESS, BODY RR WRG .....
84–85	Y VB4, VD1, VE1, VT7 (EXPORT) ...	12043419	1	DISCON	HARNESS, BODY WRG .....
86	Y EXPORT (VB4, VD1, VE1, VT7) ...	12048814	1	DISCON	HARNESS, BODY WRG .....
87–88	Y07 T89, T90 (EXPORT)	12068376	1	DISCON	HARNESS, BODY WRG .....
94–96	Y RH RULE OF ROAD HDLP (T84) (EXPORT), LH RULE OF ROAD HDLP (T85) (EXPORT), SIG & MKR LP (T90) (EXPORT)	11515174	2	*1.50	RETAINER, BODY RR WRG HARN (4 1/4"X7 1/2") (TRIM AS REQ'D) (15.492) .....

© 2000 GENERAL MOTORS SERVICE PARTS OPERATIONS

MICROFICHE INDEX

GROUPS 4.000 THRU 5.000

FICHE 6 OF 11

GROUP	DESCRIPTION	STARTING GRID LOCATION PARTS	ILLUSTRATIONS
–	GENERAL INFORMATION	1–A2	1–G2
–	ALPHABETICAL INDEX	1–B13	N.A.
4.000	BRAKES	6–A2	6–E2
5.000	BRAKES – REAR AXLE – PROPELLER SHAFT – WHEELS	6–C2	6–H2
–	OUT OF FICHE CALLS	N.A.	6–M22

6–A1

CHEVROLET
CHASSIS GROUP 4.000

TRANSMISSION – BRAKES

ALPHABETICAL INDEX

A

ACTUATOR KIT, Parking Brake Apply .. 4.591 6–A7
ADAPTER, Brake Master Cylinder Reservoir 4.651 6–A14

B

BEARING, Vacuum Power Brake Booster Cylinder 4.924 6–B13
BODY, Vacuum Power Brake Booster Valve Body 4.940 6–B14
BOLT, Brake Master Cylinder Reservoir . 4.651 6–A14
BOLT, Brake Master Cylinder Secondary 4.653 6–A15
BOLT, Brake Pedal 4.634 6–A8
BOLT, Electronic Brake Control 4.720 6–A25
BOLT, Electronic Brake Control 4.730 6–B4
BOLT, Hydraulic Brake Hose 4.681 6–A21
BOLT, Hydraulic Brake Pipe 4.686 6–A21
BOLT, Parking Brake Apply 4.591 6–A7
BOLT, Wheel Brake Cylinder/Caliper ... 4.665 6–A16
BOOSTER KIT, Vacuum Power Brake Booster 4.898 6–B7
BOOSTER, Vacuum Power Brake 4.901 6–B8
BOOT, Hydraulic Power Brake Booster . 4.815 6–B6
BOOT, Vacuum Power Brake Booster Cylinder 4.906 6–B12
BOOT, Vacuum Power Brake Booster Valve Body 4.940 6–B14
BOOT, Wheel Brake Cylinder/Caliper ... 4.665 6–A16
BRACKET, Brake Pedal 4.634 6–A8
BRACKET, Electronic Brake Control 4.710 6–A23
BRACKET, Electronic Brake Control 4.720 6–A25
BRACKET, Electronic Brake Control 4.730 6–B4
BRACKET, Hydraulic Brake Hose 4.681 6–A21
BRACKET, Hydraulic Brake Pipe 4.686 6–A21
BRACKET, Parking Brake Cable 4.785 6–B5
BRACKET, Wheel Brake Cylinder/Caliper 4.665 6–A16
BRAKE KIT, Wheel Brake Cylinder/Caliper 4.665 6–A16
BUSHING, Brake Pedal 4.626 6–A8

C

CABLE, Parking Brake 4.779 6–B5
CALIPER KIT, Wheel Brake Cylinder/Caliper Piston 4.667 6–A20
CALIPER, Wheel Brake Cylinder/Caliper 4.665 6–A16
CAP, Brake Master Cylinder Reservoir .. 4.651 6–A14
CAP, Wheel Brake Cylinder/Caliper Bleed 4.666 6–A20
CLAMP, Brake Master Cylinder Reservoir 4.651 6–A14
CLAMP, Hydraulic Brake Hose 4.681 6–A21
CLIP, Electronic Brake Control 4.720 6–A25
CLIP, Hydraulic Brake Pipe 4.686 6–A21
CLIP, Parking Brake Cable 4.785 6–B5
CLIP, Wheel Brake Cylinder/Caliper 4.665 6–A16
CONNECTOR, Brake Press Indicator .. 4.874 6–B7
CONNECTOR, Brake Pressure Warning 4.663 6–A16
CONNECTOR, Electronic Brake Control 4.710 6–A23
CONNECTOR, Electronic Brake Control 4.720 6–A25
CONNECTOR, Electronic Brake Control 4.730 6–B4
CONNECTOR, Parking Brake Cable ... 4.765 6–B5
CONNECTOR, Parking Brake Indicator . 4.589 6–A7
COVER, Brake/Clutch Pedal 4.630 6–A8
COVER, Electronic Brake Control 4.720 6–A25
COVER, Electronic Brake Control 4.730 6–B4
COVER, Parking Brake Apply Lever 4.612 6–A7
CYLINDER KIT, Brake Master Cylinder . 4.649 6–A8
CYLINDER, Brake Master 4.650 6–A9

D

DIAPHRAGM, Brake Master Cylinder Reservoir 4.651 6–A14
DIAPHRAGM, Cylinder Poppet 4.942 6–B15
DIAPHRAGM, Vacuum Power Brake Booster Cylinder 4.922 6–B12
DIODE, Electronic Brake Control 4.720 6–A25
DISC, Vacuum Power Brake Booster Cylinder 4.924 6–B13
DISC, Vacuum Power Brake Booster Reaction 4.934 6–B14

E

EQUALIZER, Parking Brake Cable 4.785 6–B5

F

FILTER, Power Brake Booster Air Cleaner 4.913 6–B12
FITTING, Brake Hose 4.671 6–A20
FITTING, Hydraulic Brake Pipe 4.686 6–A21
FITTING, Vacuum Power Brake 4.931 6–B14

G

GASKET, Brake Hose 4.671 6–A20
GASKET, Electronic Brake Control 4.720 6–A25
GASKET, Hydraulic Brake Hose 4.681 6–A21
GASKET, Hydraulic Brake Pipe 4.686 6–A21
GASKET, Hydraulic Power Brake Booster 4.805 6–B6
GASKET, Power Brake Booster 4.910 6–B12
GROMMET, Brake Master Cylinder Reservoir 4.651 6–A14
GROMMET, Vacuum Power Brake Booster Check 4.955 6–B15
GUIDE, Parking Brake Cable 4.785 6–B5

H

HARDWARE KIT, Wheel Brake Cylinder/Caliper 4.665 6–A16
HARNESS, Electronic Brake Control ... 4.720 6–A25
HOSE, Brake Master Cylinder Reservoir 4.651 6–A14
HOSE, Hydraulic Brake 4.680 6–A20
HOSE, Vacuum Power Brake 4.931 6–B14
HOUSING, Vacuum Power Brake Booster Cylinder 4.906 6–B12

I

INSULATOR, Electronic Brake Control . 4.730 6–B4
INSULATOR, Parking Brake Cable 4.765 6–B5

L

LEVER, Parking Brake Apply 4.591 6–A7
LEVER, Wheel Brake Cylinder/Caliper .. 4.665 6–A16

M

MODULE, Electronic Brake Control 4.720 6–A25

N

NUT, Brake Master Cylinder Adjusting .. 4.662 6–A15
NUT, Brake Pedal 4.634 6–A8
NUT, Hydraulic Brake Pipe 4.686 6–A21
NUT, Hydraulic Power Brake Booster .. 4.845 6–B6
NUT, Vacuum Power Brake Booster 4.898 6–B7

P

PEDAL, Brake 4.625 6–A7
PIN, Brake Master Cylinder Adjusting .. 4.662 6–A15
PIN, Brake Master Cylinder Piston Return 4.655 6–A15
PIN, Brake Master Cylinder Secondary . 4.653 6–A15
PIN, Electronic Brake Control 4.730 6–B4
PIN, Wheel Brake Cylinder/Caliper 4.665 6–A16
PIPE, Hydraulic Brake 4.685 6–A21
PIPE, Vacuum Power Brake 4.930 6–B13
PISTON KIT, Brake Master Cylinder Secondary 4.653 6–A15
PISTON, Brake Master Cylinder Secondary 4.653 6–A15
PISTON, Wheel Brake Cylinder or Caliper 4.668 6–A20
PLATE, Electronic Brake Control 4.720 6–A25
PLATE, Vacuum Power Brake Booster Reaction 4.934 6–B14
PLATE, Wheel Brake Cylinder/Caliper .. 4.665 6–A16
PLUG, Brake Master Cylinder and Pedal Shaft 4.648 6–A8
PLUG, Brake Master Cylinder Proportioning 4.652 6–A14

R

RELAY, Electronic Brake Control 4.720 6–A25
RELAY, Electronic Brake Control 4.730 6–B4
REPAIR KIT, Brake Master Cylinder 4.643 6–A8
REPAIR KIT, Vacuum Power Brake Booster 4.898 6–B7
RESERVOIR, Brake Master Cylinder Reservoir 4.651 6–A14
RETAINER, Brake Master Cylinder Adjusting 4.662 6–A15
RETAINER, Brake Master Cylinder Push Rod 4.658 6–A15
RETAINER, Electronic Brake Control ... 4.720 6–A25
RETAINER, Hydraulic Brake Hose 4.681 6–A21
RETAINER, Hydraulic Brake Pipe 4.686 6–A21
RETAINER, Parking Brake Cable 4.785 6–B5
RETAINER, Power Brake Booster (Vacuum) 4.918 6–B12
RETAINER, Vacuum Power Brake Cylinder Relay Valve 4.935 6–B14
RING, Brake Master Cylinder Piston ... 4.654 6–A15
ROD UNIT, Vacuum Power Brake Booster Cylinder 4.906 6–B12
ROD, Brake Master Cylinder Push Rod . 4.658 6–A15

S

SEAL KIT, Wheel Brake Cylinder/Caliper Piston 4.667 6–A20
SEAL, Air Brake Compressor 4.854 6–B6
SEAL, Air Brake Compressor 4.868 6–B7
SEAL, Brake Master Cylinder Proportioning 4.652 6–A14
SEAL, Brake Master Cylinder Reservoir 4.651 6–A14
SEAL, Hydraulic Power Brake Booster . 4.805 6–B6
SEAL, Hydraulic Power Brake Booster . 4.845 6–B6
SEAL, Power Brake Booster 4.910 6–B12
SEAL, Vacuum Power Brake Booster Cylinder 4.924 6–B13
SENSOR, Brake Master Cylinder Reservoir 4.651 6–A14
SENSOR, Electronic Brake Control 4.710 6–A23
SHIELD, Hydraulic Brake 4.685 6–A21
SILENCER, Vacuum Power Brake Booster Cylinder 4.906 6–B12
SPACER, Brake Pedal 4.626 6–A8
SPACER, Brake Pedal 4.634 6–A8
SPACER, Hydraulic Brake Pipe 4.686 6–A21
SPRING, Brake Master Cylinder Piston Return 4.655 6–A15
SPRING, Brake Pedal Pull Back 4.639 6–A8
SPRING, Hydraulic Brake Combo/Monitering Valve 4.690 6–A23
SPRING, Parking Brake Apply Lever ... 4.606 6–A7
SPRING, Parking Brake Cable 4.784 6–B5
SPRING, Vacuum Power Brake Booster Cylinder 4.924 6–B13
SPRING, Wheel Brake Cylinder/Caliper 4.665 6–A16
STOP, Air Brake Compressor 4.854 6–B6
STRAINER, Brake Master 4.650 6–A9
STUD KIT, Vacuum Power Brake Booster 4.898 6–B7
STUD, Hydraulic Power Brake Booster . 4.845 6–B6
SUPPORT, Electronic Brake Control ... 4.720 6–A25
SWITCH, Brake Pressure Warning 4.663 6–A16
SWITCH, Electronic Brake Control 4.710 6–A23
SWITCH, Parking Brake Indicator 4.589 6–A7

T

TUBE, Vacuum Power Brake 4.930 6–B13

V

VALVE BODY, Vacuum Power Brake Booster 4.902 6–B12
VALVE, Brake Master Cylinder Proportioning 4.652 6–A14
VALVE, Brake Master 4.650 6–A9
VALVE, Electronic Brake Control 4.730 6–B4
VALVE, Hydraulic Brake Combo/Monitering Valve 4.690 6–A23
VALVE, Vacuum Power Brake Booster Check 4.955 6–B15
VALVE, Vacuum Power Brake Booster Valve Body 4.940 6–B14
VALVE, Wheel Brake Cylinder/Caliper Bleed 4.666 6–A20

W

WASHER, Brake Master Cylinder Adjusting 4.662 6–A15
WASHER, Parking Brake Cable 4.785 6–B5
WASHER, Vacuum Power Brake Booster Cylinder 4.906 6–B12
WASHER, Wheel Brake Cylinder/Caliper 4.665 6–A16
WIRE, Electronic Brake Control 4.720 6–A25

CHART INDEX

GROUP 4 GRID

MASTER CYLINDER 6–A10
POWER BOOSTER 6–B9

4.589 CONNECTOR – SWITCH, Parking Brake Indicator

93	Y	12102561	1	10.67	CONNECTOR, SW–PARK BRK (1–WAY F, W/LEADS) (02.535) (AC–DELCO #PT230)	
84–87	Y	14047181	1	2.35	SWITCH, PARK BRK IND	6–G6,36
88–96	Y	10136720	1	2.09	SWITCH, PARK BRK IND	6–G8,20

4.591 ACTUATOR KIT – BOLT – LEVER, Parking Brake Apply

88–96	Y	10112656	2	108.63	ACTUATOR KIT, RR PARK BRK (04.665)	6–F23,2
96	Y HVY DUTY PWR BRK (J55)	18021202	2	108.63	ACTUATOR KIT, RR PARK BRK (RPR) (04.665)	6–F23,2
88–96	Y	14081017	1	*1.85	BOLT, PARK BRK LVR (REARWARD POSN #1) (TORX HEAD 8X1.25X54) (03.275)	6–G11,16
88–96	Y	14081021	1	*1.25	BOLT, PARK BRK LVR (FWD POSN #2) (TORX HD 8X1.25X20) (08.213)	6–G11,16
84–87	Y	14105127	1	DISCON	LEVER, PARK BRK (GRAPHITE)	
88–96	Y	12529393	1	67.58	LEVER, PARK BRK	6–G8,15

4.606 SPRING, Parking Brake Apply Lever

88–96	Y	10112651	2	2.25	SPRING, PARK BRK LVR RTN (04.665)	6–F21,3

4.612 COVER, Parking Brake Apply Lever

88–96	Y (19I)	10072131	1	20.86	COVER, PARK BRK LVR (BLACK)	6–G8,17
88–91	Y (60I)	10072133	1	DISCON	COVER, PARK BRK LVR (COGNAC)	
88–92	Y (73I)	10072134	1	20.86	COVER, PARK BRK LVR (RED)	
88–91	Y (90I)	10072135	1	DISCON	COVER, PARK BRK LVR (GRAYSMOKE)	
88–89	Y (21I)	10079301	1	DISCON	COVER, PARK BRK LVR (BLUE)	
90–91	Y (22I)	10132969	1	DISCON	COVER, PARK BRK LVR (BLUESTEEL)	
92–93	Y (10I)	10072131	1	20.86	COVER, PARK BRK LVR (BLACK)	6–G8,17
92–96	Y (64I)	10175626	1	20.86	COVER, PARK BRK LVR (BEIGE)	6–G11,17
92–96	Y (14I)	10175627	1	20.86	COVER, PARK BRK LVR (GRAY)	6–G11,17
93–95	Y (70I)	10199583	1	20.86	COVER, PARK BRK LVR (RED)	6–G11,17
96	Y (70I), (EXC GRAND SPORT EDITION (Z16)	10199583	1	20.86	COVER, PARK BRK LVR (RED)	6–G11,17
84	Y	14058624	1	DISCON	COVER, PK BRK LVR (GRAPHITE 12I, PAINT AS REQ	
85	Y (1ST DES)	14058624	1	DISCON	COVER, PK BRK LVR (GRAPHITE 12I, PAINT AS REQ	
85	Y (2ND DES)	14088497	1	DISCON	COVER, PK BRK LVR (PART NUMBER ON COVER SURFACE)	
86–87	Y	14088497	1	DISCON	COVER, PK BRK LVR	

4.625 PEDAL, Brake

84–89	Y M/TRNS	14046894	1	DISCON	PEDAL, BRK	
84–89	Y A/TRNS	14046895	1	DISCON	PEDAL, BRK	
90–91	Y 5.7–8 (L98), 4–SPD A/TRANS (MD8)	10097683	1	DISCON	PEDAL, BRK	
90–91	Y 6–SPD M/TRANS (ML9)	10097684	1	DISCON	PEDAL, BRK	
92–96	Y 6–SPD M/TRANS (ML9)	10165335	1	28.82	PEDAL, BRK	6–G4,15
92–93	Y 5.7P (LT1), 4–SPD A/TRANS (MD8)	10165338	1	28.82	PEDAL, BRK	6–G4,15
94–96	Y 5.7P (LT1), 4–SPD A/TRANS (M30)	10165338	1	28.82	PEDAL, BRK	6–G4,15

© 2000 GENERAL MOTORS SERVICE PARTS OPERATIONS–CHEVROLET–14Y

4.626 BUSHING – SPACER, Brake Pedal

84–96	Y	15594358	2	*.73	BUSHING, BRK PED PIV (00.831)	6–F26,4
84–88	Y	529323	AR	3.85	SPACER, STEEL TUBING (7/16"IDX2 3/8"LONG)	

4.630 COVER, Brake/Clutch Pedal

84–89	Y M/TRNS	14053657	2	4.35	COVER, BRK PED	6–F26,8
84–89	Y A/TRNS	14053658	1	6.40	COVER, BRK PED	6–F26,8
90–96	Y 6–SPD M/TRANS (ML9)	10150010	1	2.75	COVER, BRK PED	6–G2,14
90–91	Y 5.7–8 (L98), 4–SPD A/TRANS (MD8)	14053658	1	6.40	COVER, BRK PED	6–F26,8
92–93	Y 5.7P (LT1), 4–SPD A/TRANS (MD8)	14053658	1	6.40	COVER, BRK PED	6–F26,8
94–96	Y 5.7P (LT1), 4–SPD A/TRANS (M30)	14053658	1	6.40	COVER, BRK PED	6–F26,8
84–89	Y	14053657	2	4.35	COVER, CLU PED	6–F26,8
90–96	Y 6–SPD M/TRANS (ML9)	10150009	1	2.75	COVER, CLU PED	1–K14,14

4.634 BOLT – BRACKET – NUT – SPACER, Brake Pedal

84–85	Y	11509268	1	1.95	BOLT, BRK PED PIV (08.900)	6–F26,1
84–89	Y	10097591	1	DISCON	BRACKET, BRK PED	
90–91	Y 5.7–8 (L98), 5.7J (LT5)	10097074	1	DISCON	BRACKET, BRK PED PIV	
90–91	Y 5.7J (LT5), 6–SPD M/TRANS (ML9)	10097656	1	DISCON	BRACKET, BRK PED PIV	
92–96	Y	10165333	1	22.54	BRACKET, BRK PED PIV	6–G4,6
85–92	Y	11501033	1	.64	NUT, BRK PED PIV (M10X1.5, GR10, CAD) (HEX) (08.917)	6–F26,3
93–96	Y	11516077	1	.25	NUT, BRK PED PIV (08.917)	
95–96	Y	10255857	6	*1.75	NUT, BRK PED PIV (M10X1.5 FLANGED HEX HEAD) (08.917)	
84–96	Y	25505362	1	1.50	SPACER, BRK PED PIV	6–F26,5

4.639 SPRING, Brake Pedal Pull Back

84	Y	14084117	1	DISCON	SPRING, BRK PEDAL RETURN	

4.648 PLUG, Brake Master Cylinder and Pedal Shaft

84–91	Y	14085867	1	DISCON	PLUG, BRK M/CYL BODY (SILVER) (04.661)	
92–94	Y	12509982	1	8.26	PLUG, BRK M/CYL BODY	6–F12,17
95	Y 5.7J (LT5)	12509982	1	8.26	PLUG, BRK M/CYL BODY	6–F12,17

4.649 CYLINDER KIT – REPAIR KIT, Brake Master Cylinder

87	Y	10074133	1	DISCON	CYLINDER KIT, BRK MAS (REPAIR KIT, BRK M/CYL)	
88	Y	10140682	1	DISCON	CYLINDER KIT, BRK MAS (REPAIR KIT, BRK M/CYL)	
89–91	Y	10181304	1	143.07	CYLINDER KIT, BRK MAS (AC–DELCO #175–619)	6–F10,1
92–94	Y	12509987	1	175.83	CYLINDER KIT, BRK MAS (AC–DELCO #175–260)	6–F12,1
95	Y 5.7J (LT5)	12509987	1	175.83	CYLINDER KIT, BRK MAS (AC–DELCO #175–260)	6–F12,1
95	Y 5.7P (LT1)	12524140	1	143.07	CYLINDER KIT, BRK MAS (AC–DELCO #175–621)	6–F12,1
96	Y	12524140	1	143.07	CYLINDER KIT, BRK MAS (AC–DELCO #175–621)	6–F12,1
84	Y	14067548	1	DISCON	REPAIR KIT, BRK M/CYL	

© 2000 GENERAL MOTORS SERVICE PARTS OPERATIONS–CHEVROLET–14Y

4.649 CYLINDER KIT – REPAIR KIT, Brake Master Cylinder (Con't)

85	Y	14085868	1	DISCON	REPAIR KIT, BRK M/CYL	
86	Y	14105963	1	DISCON	REPAIR KIT, BRK M/CYL	

4.650 CYLINDER – STRAINER – VALVE, Brake Master

NOTE: FOR 1984–1991 USAGE REFER TO MASTER CYLINDER CHART GRP 4.650

84	Y	14046850	1	153.35	**CYLINDER**, BRK MAS (CYLINDER, BRK MASTER) (AC–DELCO #174–836)	6–E15,17
84	Y STINGRAY) (WITH POWER BRAKES	18030473	AR	302.54	**CYLINDER**, BRK MAS (13/16 CYLINDER BORE) (AC–DELCO #18M231) (DURASTOP)	
85	Y	14080223	1	150.45	**CYLINDER**, BRK MAS (CYLINDER, BRK MASTER) (AC–DELCO #174–840)	6–F6,21
85	Y STINGRAY) (WITH POWER BRAKES	18030523	AR	304.26	**CYLINDER**, BRK MAS (7/8 CYLINDER BORE) (AC–DELCO #18M281) (DURASTOP)	
86–87	Y	10052280	1	170.54	**CYLINDER**, BRK MAS (CYLINDER, BRK MASTER) (AC–DELCO #174–830)	6–E16,23
86–87	Y STINGRAY) (WITH POWER BRAKES	18030585	AR	319.06	**CYLINDER**, BRK MAS (7/8 CYLINDER BORE) (AC–DELCO #18M343) (DURASTOP)	
88	Y	10097905	1	244.80	**CYLINDER**, BRK MAS (CYLINDER, BRK MASTER) (AC–DELCO #174–831)	6–E16,23
88	Y STINGRAY) (WITH POWER BRAKES	18030897	AR	259.36	**CYLINDER**, BRK MAS (7/8 CYLINDER BORE) (AC–DELCO #18M655) (DURASTOP)	
89–91	Y	10157996	1	495.03	**CYLINDER**, BRK MAS (AC–DELCO #174–820)	6–E16,23
92–94	Y	10281466	1	478.69	**CYLINDER**, BRK MAS (ON 94 & PRIOR, NEED TO TRFER FLUID RSVR, P/N 12509940, & FLUID LVL SEN , P/N 18012741, FROM OLD M/CYL ONTO NEW M/CYL) (AC–DELCO #174–828)	6–E18,1
95–96	Y	10281466	1	478.69	**CYLINDER**, BRK MAS (AC–DELCO #174–828)	6–E18,1
86–88	Y	10074132	1	DISCON	**STRAINER**, BRK M/CYL RESVR ADAPTER	
87–91	Y	10140683	1	DISCON	**VALVE**, BRK M/CYL SECD PSTN CTR	

© 2000 GENERAL MOTORS SERVICE PARTS OPERATIONS–CHEVROLET–14Y

1984 MASTER CYLINDER CHART

Y

B.C.I.A.

PRODUCTION	SERVICE	DIVISION	USAGE	COL. NO.
14046850	14046850	1	Y	1

	GROUP	1
SERVICE MASTER CYLINDER	4.650	14046850
REPAIR KIT	4.649	14067548
RESERVOIR MOUNTING GROMMET	4.651	14067532
PISTON STOP BOLT	4.653	14070274
RESERVOIR	4.651	14067534
DIAPHRAGM	4.651	14067535
RESERVOIR CAP	4.651	10159584
SECONDARY PISTON SPRING LOCATING PIN	4.655	DISCON
SECONDARY PISTON RETURN SPRING	4.655	DISCON
SECONDARY PISTON	4.653	DISCON
PRIMARY PISTON RETURN SPRING	4.655	DISCON
PRIMARY PISTON	4.653	DISCON
PRIMARY PISTON RETAINING RING	4.656	DISCON
WARNING SWITCH	4.663	10074131
COMBINATION VALVE	4.690	14067544
COMBINATION VALVE GROUND SPRING	4.690	14067545
COMBINATION VALVE END PLUG O-RING SEAL	4.690	14067546
COMBINATION VALVE END PLUG	4.690	14085867

1985 MASTER CYLINDER CHART

Y

B.C.I.A.

PRODUCTION	SERVICE	DIVISION	USAGE	COL. NO.
14080223	14080223	1	Y	1

	GROUP	1
SERVICE MASTER CYLINDER	4.650	14080223
REPAIR KIT	4.649	14085868
RESERVOIR MOUNTING GROMMET	4.651	14067532
PISTON STOP BOLT	4.653	14070274
RESERVOIR	4.651	14067534
DIAPHRAGM	4.651	14067535
RESERVOIR CAP	4.651	10159584
SECONDARY PISTON SPRING LOCATING PIN	4.655	DISCON
SECONDARY PISTON RETURN SPRING	4.655	DISCON
SECONDARY PISTON	4.653	DISCON
PRIMARY PISTON RETURN SPRING	4.655	DISCON
PRIMARY PISTON	4.653	DISCON
PRIMARY PISTON RETAINING RING	4.656	14085866
WARNING SWITCH	4.663	10074131
COMBINATION VALVE	4.690	14089148
COMBINATION VALVE GROUND SPRING	4.690	14067545
COMBINATION VALVE END PLUG O-RING SEAL	4.690	14067546
COMBINATION VALVE END PLUG	4.690	14085867

© 2000 GENERAL MOTORS SERVICE PARTS OPERATIONS–CHEVROLET–14Y

1986 MASTER CYLINDER CHART

Y

B.C.I.A.

PRODUCTION	SERVICE	DIVISION	USAGE	COL. NO.
10052280	10052280	1	Y	1

	GROUP	1
SERVICE MASTER CYLINDER	4.650	10052280
REPAIR KIT	4.649	10074133
RESERVOIR MOUNTING GROMMET	4.651	14067532
PISTON STOP SCREW	4.653	14070274
RESERVOIR	4.651	14105958
RESERVOIR ADAPTOR	4.651	14105956
RESERVOIR ADAPTOR O-RING SEAL	4.651	14105957
DIAPHRAGHM	4.651	14105959
CAP,RESERVOIR DIAPHRAGM	4.651	10159584
SECONDARY PISTON KIT (NOTE 1)	4.653	10052271
PRIMARY PISTON	4.653	14105962
PRIMARY PISTON RETAINING RING	4.656	14085866
WARNING SWITCH	4.663	10074131
COMBINATION VALVE	4.690	14089148
COMBINATION VALVE GROUND SPRING	4.690	14067545
COMBINATION VLV END PLG O-RING SEAL	4.690	14067546
PISTON KIT	4.653	10052271

NOTE 1: INCLUDES SECD PISTON,CTR VALVE,SECD SEAL,MAIN SEAL,SEAL RETAINER.

1987 MASTER CYLINDER CHART

Y

B.C.I.A.

PRODUCTION	SERVICE	DIVISION	USAGE	COL. NO.
10052280	10052280	1	Y	1

	GROUP	1
SERVICE MASTER CYLINDER	4.650	10052280
REPAIR KIT	4.649	10074133
RESERVOIR MOUNTING GROMMET	4.651	14067532
PISTON STOP SCREW	4.653	14070274
RESERVOIR	4.651	14105958
RESERVOIR ADAPTOR	4.651	10074128
RESERVOIR ADAPTOR O-RING SEAL	4.651	14105957
DIAPHRAGHM	4.651	14105959
CAP,RESERVOIR DIAPHRAGM	4.651	10159584
SECONDARY PISTON CENTER VALVE	4.653	10140683
SECONDARY PISTON	4.655	10074130
PRIMARY PISTON	4.653	14105962
PRIMARY PISTON RETAINING RING	4.656	14085866
WARNING SWITCH	4.663	10074131
COMBINATION VALVE	4.690	14089148
COMBINATION VALVE GROUND SPRING	4.690	14067545
COMBINATION VLV END PLG O-RING SEAL	4.690	14067546
COMBINATION VALVE END PLUG	4.690	14085867
STRAINER,RESERVOIR ADAPTOR	4.650	10074132

© 2000 GENERAL MOTORS SERVICE PARTS OPERATIONS-CHEVROLET-14Y

1988 MASTER CYLINDER CHART

Y

B.C.I.A.

PRODUCTION	SERVICE	DIVISION	USAGE	COL. NO.
10097905	10097905	1	Y	1

	GROUP	1
SERVICE MASTER CYLINDER	4.650	10097905
REPAIR KIT	4.649	10140682
RESERVOIR	4.651	14067534
RESERVOIR COVER	4.651	10159584
GROMMET,RESERVOIR	4.651	14067532
VALVE FAST FILL	4.651	10140683
PISTON,PRIMARY	4.653	14105962
RING,PRIMARY PISTON RETAINING	4.656	14085866
STRAINER,RESERVOIR ADAPTOR	4.651	10074132
DIAPHRAM	4.651	14105959
BOLT,SECONDARY PISTON STOP	4.653	14070274
SEAL,BODY O-RING	4.657	14067546
PISTON,SECONDARY	4.650	10074130
SWITCH,BRK SYSTEM WARNING	4.663	10074131
VALVE,M/CYL BRK COMB	4.690	14089148
SPRING,BRK COMB VALVE GROUND	4.690	14067545
PLUG,BRK COMB VALVE END	4.661	14085867

1989 MASTER CYLINDER CHART

Y

B.C.I.A.

PRODUCTION	SERVICE	DIVISION	USAGE	COL. NO.
14104889	10157996	1	Y	1

	GROUP	1
SERVICE MASTER CYLINDER	4.650	10157996
REPAIR KIT	4.649	10140681
RESERVOIR	4.651	14067534
CAP,RSVR	4.651	10159584
GROMMET,RESERVOIR	4.651	14067532
VALVE,SECONDARY PISTON CENTER	4.651	10140683
PISTON,PRIMARY	4.653	14105962
RING,PRIMARY PISTON RETAINING	4.656	14085866
DIAPHRAM	4.651	14105959
BOLT,PISTON STOP	4.653	14070274
SEAL,M/CYL END PLUG	4.657	14067546
PISTON,SECONDARY	4.650	10074130
SWITCH,BRK SYSTEM WARNING	4.663	10074131
SPRING,BRK COMB VALVE GROUND	4.690	14067545
PLUG,M/CYL END	4.661	14085867
VALVE,RR BRK PROP	4.690	14067544

© 2000 GENERAL MOTORS SERVICE PARTS OPERATIONS–CHEVROLET–14Y

1990 MASTER CYLINDER CHART

Y

B.C.I.A.

PRODUCTION	SERVICE	DIVISION	USAGE	COL. NO.
10097700	10157996	1	Y	1

	GROUP	1
SERVICE MASTER CYLINDER	4.650	10157996
REPAIR KIT	4.649	10140681
RESERVOIR	4.651	14067534
CAP,RSVR	4.651	10159584
GROMMET,RESERVOIR	4.651	14067532
VALVE,SECONDARY PISTON CENTER	4.651	10140683
PISTON,PRIMARY	4.653	14105962
RING,PRIMARY PISTON RETAINING	4.656	14085866
DIAPHRAM	4.651	14105959
BOLT,PISTON STOP	4.653	14070274
SEAL,M/CYL END PLUG	4.657	14067546
PISTON,SECONDARY	4.650	10074130
SWITCH,BRK SYSTEM WARNING	4.663	10074131
SPRING,BRK COMB VALVE GROUND	4.690	14067545
PLUG,M/CYL END	4.661	14085867
VALVE,RR BRK PROP	4.690	14067544

1991 MASTER CYLINDER CHART

Y

B.C.I.A.

PRODUCTION	SERVICE	DIVISION	USAGE	COL. NO.
10157996	10157996	1	Y	1

	GROUP	1
SERVICE MASTER CYLINDER	4.650	10157996
REPAIR KIT	4.649	10181304
RESERVOIR	4.651	14067534
CAP,RSVR	4.651	10159584
GROMMET,RESERVOIR	4.651	14067532
VALVE,SECONDARY PISTON CENTER	4.651	10140683
PISTON,PRIMARY	4.653	14105962
RING,PRIMARY PISTON RETAINING	4.656	14085866
DIAPHRAM	4.651	14105959
BOLT,PISTON STOP	4.653	14070274
SEAL,M/CYL END PLUG	4.657	14067546
PISTON,SECONDARY	4.650	10074130
SWITCH,BRK SYSTEM WARNING	4.663	10074131
SPRING,BRK COMB VALVE GROUND	4.690	14067545
PLUG,M/CYL END	4.661	14085867
VALVE,RR BRK PROP	4.690	14067544

© 2000 GENERAL MOTORS SERVICE PARTS OPERATIONS–CHEVROLET–14Y

4.651 ADAPTER – BOLT – CAP – CLAMP – DIAPHRAGM – GROMMET – HOSE – RESERVOIR – SEAL – SENSOR, Brake Master Cylinder Reservoir

86	Y	10074128	1	DISCON	ADAPTER, M/CYL RESVR (04.650)	
92–96	Y	12509986	1	2.81	BOLT, BRK M/CYL RSVR	6–F12,22
84–91	Y	10159584	2	1.28	CAP, BRK M/CYL RSVR	6–F6,24
92–96	Y	18021306	1	19.01	CAP, BRK M/CYL RSVR (W/DIAPH)	6–F12,1
92–94	Y	1648216	1	*1.82	CLAMP, BRK M/CYL RSVR HOSE (BLACK) (1/4 X 5/8, .320 WIDE BAND, WORM GEAR HEX SLOT SCREW) (08.948) (AC–DELCO #1648216)	
95	Y 5.7J (LT5)	1648216	1	*1.82	CLAMP, BRK M/CYL RSVR HOSE (BLACK) (1/4 X 5/8, .320 WIDE BAND, WORM GEAR HEX SLOT SCREW) (08.948) (AC–DELCO #1648216)	
84–85	Y	14067535	2	3.79	DIAPHRAGM, BRK M/CYL RESVR	6–F6,25
86–91	Y	14105959	1	3.79	DIAPHRAGM, BRK M/CYL RSVR	6–F8,18
92–96	Y	12509975	1	8.11	DIAPHRAGM, BRK M/CYL RSVR	6–F12,2
84–85	Y	14067532	2	3.40	GROMMET, BRK M/CYL RSVR	6–F6,22
88–91	Y	14067532	2	3.40	GROMMET, BRK M/CYL RSVR	6–F6,22
84–90	Y	14067532	2	3.40	GROMMET, M/CYL RESVR MTG	6–F6,22
92–95	Y 5.7J (LT5)	10208515	1	53.60	HOSE, BRK M/CYL RSVR	6–E18,3
84–85	Y	14067534	2	2.43	RESERVOIR, BRK M/CYL	6–F6,26
86–87	Y	14105958	1	DISCON	RESERVOIR, BRK M/CYL	
88–91	Y	14067534	2	2.43	RESERVOIR, BRK M/CYL	6–F6,26
92–94	Y	12512995	1	19.36	RESERVOIR, BRK M/CYL	6–F12,3
95	Y 5.7J (LT5)	12512995	1	19.36	RESERVOIR, BRK M/CYL	6–F12,3
95	Y 5.7P (LT1)	12524134	1	18.34	RESERVOIR, BRK M/CYL	6–F12,3
96	Y	12524134	1	18.34	RESERVOIR, BRK M/CYL	6–F12,3
92–94	Y	12509976	1	3.66	SEAL, BRK M/CYL RSVR	6–F12,4
95	Y 5.7J (LT5)	12509976	1	3.66	SEAL, BRK M/CYL RSVR	6–F12,4
86–87	Y	14105957	1	DISCON	SEAL, M/CYL RESVR ADAPTOR O–RING	
92–94	Y	18029973	1	8.52	SENSOR, BRK FLUID LVL IND	6–F12,23
95	Y 5.7J (LT5)	18029973	1	8.52	SENSOR, BRK FLUID LVL IND	6–F12,23

4.652 PLUG – SEAL – VALVE, Brake Master Cylinder Proportioning

95	Y 5.7P (LT1)	12524138	1	6.14	PLUG, HEIGHT SEN & BRAKING PROPN C/VLV	6–F12,17
96	Y	12524138	1	6.14	PLUG, HEIGHT SEN & BRAKING PROPN C/VLV	6–F12,17
84–91	Y	14067546	1	1.28	SEAL, BRK M/CYL PROPN VLV (O RING) (04.690)	6–F6,19
92–94	Y	12509983	1	3.66	SEAL, BRK M/CYL PROPN VLV (O RING)	6–F12,18
95	Y 5.7J (LT5)	12509983	1	3.66	SEAL, BRK M/CYL PROPN VLV (O RING)	6–F12,18
84–91	Y	14067544	1	DISCON	VALVE, BRK M/CYL PROPN (04.690)	
92–94	Y	12509985	1	50.75	VALVE, BRK M/CYL PROPN	6–F12,20
95	Y 5.7J (LT5)	12509985	1	50.75	VALVE, BRK M/CYL PROPN	6–F12,20
95	Y 5.7P (LT1)	12524137	1	50.75	VALVE, BRK M/CYL PROPN	6–F12,20
96	Y	12524137	1	50.75	VALVE, BRK M/CYL PROPN	6–F12,20

© 2000 GENERAL MOTORS SERVICE PARTS OPERATIONS–CHEVROLET–IY

4.653 BOLT – PIN – PISTON – PISTON KIT, Brake Master Cylinder Secondary

84–91	Y	14070274	1	2.55	BOLT, BRK M/CYL PSTN STOP (**VPI 1–877–846–8243)	
92–96	Y	12509977	1	2.60	PIN, BRK M/CYL SECD PSTN STOP	6–F12,5
86	Y	10052271	1	DISCON	PISTON KIT, BRK M/CYL	
86–91	Y	14105962	1	DISCON	PISTON, BRK M/CYL PRIM	
92–96	Y	12515320	1	19.28	PISTON, BRK M/CYL PRIM	6–F12,15
87–91	Y	10074139	1	DISCON	PISTON, BRK M/CYL SECD	
92–94	Y	12509979	1	53.81	PISTON, BRK M/CYL SECD	6–F12,12
95	Y 5.7J (LT5)	12509979	1	53.81	PISTON, BRK M/CYL SECD	6–F12,12
95	Y 5.7P (LT1)	12524136	1	53.81	PISTON, BRK M/CYL SECD	6–F12,12
96	Y	12524136	1	53.81	PISTON, BRK M/CYL SECD	6–F12,12
84	Y	14067541	1	DISCON	PISTON, PRIM	
85	Y	14085865	1	DISCON	PISTON, PRIM	
84	Y	14067539	1	DISCON	PISTON, SECD	
85	Y	14085863	1	DISCON	PISTON, SECD	

4.654 RING, Brake Master Cylinder Piston

85–91	Y	14085866	1	DISCON	RING, BRK M/CYL PRIM PSTN RET	
92–96	Y	12509981	1	1.28	RING, BRK M/CYL PRIM PSTN RET	6–F12,16
84	Y	14067542	1	DISCON	RING, PRIM PSTN RET	

4.655 PIN – SPRING, Brake Master Cylinder Piston Return

84	Y	14067537	1	DISCON	PIN, SECD PSTN LOC	
92–94	Y	12509978	1	3.00	SPRING, BRK M/CYL SECD PSTN	6–F12,7
95	Y 5.7J (LT5)	12509978	1	3.00	SPRING, BRK M/CYL SECD PSTN	6–F12,7
95	Y 5.7P (LT1)	12524135	1	3.00	SPRING, BRK M/CYL SECD PSTN	6–F12,7
96	Y	12524135	1	3.00	SPRING, BRK M/CYL SECD PSTN	6–F12,7
84	Y	14067540	1	DISCON	SPRING, PRIM PSTN RTN	
85	Y	14085864	1	DISCON	SPRING, PRIM PSTN RTN	
84	Y	14067538	1	DISCON	SPRING, SECD PSTN RTN	
85	Y	14085862	1	DISCON	SPRING, SECD PSTN RTN	

4.658 RETAINER – ROD, Brake Master Cylinder Push Rod

85–88	Y	14085882	1	.70	RETAINER, P/B BOOS PUSH ROD (04.926)	6–F4,19
89–91	Y 5.7–8 (L98)	14085882	1	.70	RETAINER, P/B BOOS PUSH ROD (04.926)	6–F4,19
90–91	Y 5.7–8 (L98), 6–SPD M/TRANS (ML9)	10132874	1	2.91	RETAINER, P/B BOOS PUSH ROD (04.935)	6–F2,23
92–95	Y 5.7J (LT5)	10132874	1	2.91	RETAINER, P/B BOOS PUSH ROD (04.935)	6–F2,23
92–95	Y 5.7P (LT1)	14085882	1	.70	RETAINER, P/B BOOS PUSH ROD (04.926)	6–F4,19
96	Y	14085882	1	.70	RETAINER, P/B BOOS PUSH ROD (04.926)	6–F4,19
89–91	Y 5.7–8 (L98), 6–SPD M/TRANS (ML9)	10132861	1	DISCON	ROD, BRK PED PUSH (04.924)	
92–95	Y 5.7J (LT5)	12509989	1	31.11	ROD, P/B BOOS PUSH (INPUT)	6–F2,6

4.662 NUT – PIN – RETAINER – WASHER, Brake Master Cylinder Adjusting

85–94	Y	11516071	2	*.25	NUT, BRK M/CYL (M8X1.25X7.1, ZC 10) (HEX) (PRVL TORQ) (08.917)	
85	Y	14085861	1	DISCON	PIN, SECD PSTN SPR LOC	
90–96	Y	3817880	1	*.41	RETAINER, BRK PED PUSH ROD	6–G2,13
90–96	Y	25512286	1	*1.25	WASHER, BRK PED PUSH ROD	6–G2,12

© 2000 GENERAL MOTORS SERVICE PARTS OPERATIONS–CHEVROLET–14Y

4.663 CONNECTOR – SWITCH, Brake Pressure Warning

90	Y	12117268	1	33.93	CONNECTOR, SW–BRK PRESS DIFF (AC–DELCO #PT441)	
95	Y 5.7P (LT1)	12529318	1	11.53	SWITCH, BRK M/CYL DIFF PRESS BRK IND	
93	Y	12529318	1	11.53	SWITCH, BRK M/CYL DIFF PRESS BRK IND	
84–94	Y	10074131	1	8.01	SWITCH, BRK PRESS WRNG	6–F6,23
95	Y 5.7J (LT5)	10074131	1	8.01	SWITCH, BRK PRESS WRNG	6–F6,23

4.665 BOLT – BOOT – BRACKET – BRAKE KIT – CALIPER – CLIP – HARDWARE KIT – LEVER – PIN – PLATE – SPRING – WASHER, Wheel Brake Cylinder/Caliper

84–87	Y STINGRAY	18034577	AR	13.12	BOLT, FRT BRK CLPR (AC–DELCO #18K203) (DURASTOP)	6–F23,29
85–96	Y	14084051	4	4.15	BOLT, FRT BRK CLPR (M14X2X47)	6–F15,12
84–96	Y	14067559	8	1.17	BOLT, FRT BRK CLPR GDE PIN	6–F15,11
84–96	Y	14067559	8	1.17	BOLT, RR BRK CLPR (GDE PIN)	6–F15,11
84–87	Y STINGRAY	18034577	AR	13.12	BOLT, RR BRK CLPR (AC–DELCO #18K203) (DURASTOP)	6–F23,29
85–96	Y	14084053	4	4.05	BOLT, RR BRK CLPR	6–F21,29
88–96	Y STINGRAY	18034577	AR	13.12	BOLT, RR BRK CLPR (AC–DELCO #18K203) (DURASTOP)	6–F23,29
89–96	Y	10112649	2	2.55	BOLT, RR BRK CLPR (ANCHOR PLATE & BRK)	6–F21,23
88–96	Y	10112648	2	4.15	BOLT, RR PARK BRK ACTR LVR ADJ	
84	Y	14079998	4	4.15	BOLT, W/WA, FRT BRK CLPR (M12 X 1.75 X 40)	7–E4,11
84	Y	14079999	AR	DISCON	BOLT, W/WA, RR BRK CLPR (M10 X 1.5 X 32)	
84–96	Y	14067552	4	2.50	BOOT, RR BRK CLPR GDE PIN	6–F15,2
88–96	Y	10112652	2	37.23	BRACKET, RR BRK CLPR	6–F21,28
88–96	Y	10112655	2	35.19	BRAKE KIT, RR CLPR PARK RPR (AC–DELCO #173–512)	6–F23,1
84–87	Y	14105945	LH	96.41	CALIPER, FRT BRK (W/PSTN) (AC–DELCO #172–2143)	6–F15,1
84–87	Y	14105946	RH	96.41	CALIPER, FRT BRK (W/PSTN) (AC–DELCO #172–2144)	6–F15,1
84–87	Y STINGRAY) (LOADED	18035844	RH	167.30	CALIPER, FRT BRK (AC–DELCO #18R655) (DURASTOP)	
84–87	Y STINGRAY) (LOADED	18035845	LH	167.30	CALIPER, FRT BRK (AC–DELCO #18R656) (DURASTOP)	
84–87	Y STINGRAY) (UNLOADED	18036538	RH	152.26	CALIPER, FRT BRK (AC–DELCO #18S231) (DURASTOP)	
84–87	Y STINGRAY) (UNLOADED	18036539	LH	152.26	CALIPER, FRT BRK (AC–DELCO #18S232) (DURASTOP)	
88	Y (EXC HVY DUTY SUSP (FE7)	12520229	LH	153.51	CALIPER, FRT BRK (CONSISTS OF CALIPER, CLIP, WASHER & PIN) (AC–DELCO #172–2139)	6–F16,3
88	Y (EXC HVY DUTY SUSP (FE7)	12520230	RH	153.51	CALIPER, FRT BRK (CONSISTS OF CALIPER, CLIP, WASHER & PIN) (AC–DELCO #172–2140)	6–F16,3
88	Y CALLAWAY CONVERSION (Z5G)	12520231	LH	153.51	CALIPER, FRT BRK (CONSISTS OF CALIPER, CLIP, WASHER & PIN) (AC–DELCO #172–2141)	6–E22,48
88	Y HVY DUTY SUSP (FE7)	12520231	LH	153.51	CALIPER, FRT BRK (CONSISTS OF CALIPER, CLIP, WASHER & PIN) (AC–DELCO #172–2141)	6–E22,48

© 2000 GENERAL MOTORS SERVICE PARTS OPERATIONS–CHEVROLET–14Y

4.665 BOLT – BOOT – BRACKET – BRAKE KIT – CALIPER – CLIP – HARDWARE KIT – LEVER – PIN – PLATE – SPRING – WASHER, Wheel Brake Cylinder/Caliper (Con't)

88	Y HVY DUTY SUSP (FE7) ...	12520232	RH	153.51	CALIPER, FRT BRK (CONSISTS OF CALIPER, CLIP, WASHER & PIN) (AC–DELCO #172–2142)	6–E22,48
88	Y STINGRAY) (EXCEPT HEAVY DUTY SUSPENSION) (LOADED	18035904	RH	236.24	CALIPER, FRT BRK (AC–DELCO #18R715) (DURASTOP)	6–E22,53
88	Y STINGRAY) (EXCEPT HEAVY DUTY SUSPENSION) (LOADED	18035905	LH	236.24	CALIPER, FRT BRK (AC–DELCO #18R716) (DURASTOP)	6–E22,53
88	Y STINGRAY) (EXCEPT HEAVY DUTY SUSPENSION) (UNLOADED	18036588	RH	200.86	CALIPER, FRT BRK (AC–DELCO #18S281) (DURASTOP)	6–F18,3
88	Y STINGRAY) (EXCEPT HEAVY DUTY SUSPENSION) (UNLOADED	18036589	LH	200.86	CALIPER, FRT BRK (AC–DELCO #18S282) (DURASTOP)	6–F18,3
89–94	Y ANTILOCK DISC BRK (JL9)	12520229	LH	153.51	CALIPER, FRT BRK (CONSISTS OF CALIPER, CLIP, WASHER & PIN) (CONSISTS OF CALIPER, CLIP, WASHER & PIN) (AC–DELCO #172–2139)	6–F16,3
89–94	Y ANTILOCK DISC BRK (JL9)	12520230	RH	153.51	CALIPER, FRT BRK (CONSISTS OF CALIPER, CLIP, WASHER & PIN) (CONSISTS OF CALIPER, CLIP, WASHER & PIN) (AC–DELCO #172–2140)	6–F16,3
89–95	Y HVY DUTY PWR BRK (J55)	12520231	LH	153.51	CALIPER, FRT BRK (CONSISTS OF CALIPER, CLIP, WASHER & PIN) (AC–DELCO #172–2141)	6–E22,48
89–95	Y HVY DUTY PWR BRK (J55)	12520232	RH	153.51	CALIPER, FRT BRK (CONSISTS OF CALIPER, CLIP, WASHER & PIN) (AC–DELCO #172–2142)	6–E22,48
89–95	Y STINGRAY) (ANTILOCK BRAKES, EXCEPT HEAVY DUTY FRONT) (LOADED ...	18035904	RH	236.24	CALIPER, FRT BRK (AC–DELCO #18R715) (DURASTOP)	6–E22,53
89–95	Y STINGRAY) (ANTILOCK BRAKES, EXCEPT HEAVY DUTY FRONT) (LOADED ...	18035905	LH	236.24	CALIPER, FRT BRK (AC–DELCO #18R716) (DURASTOP)	6–E22,53
89–95	Y STINGRAY) (ANTILOCK BRAKES, EXCEPT HEAVY DUTY FRONT) (UNLOADED	18036588	RH	200.86	CALIPER, FRT BRK (AC–DELCO #18S281) (DURASTOP)	6–F18,3
89–95	Y STINGRAY) (ANTILOCK BRAKES, EXCEPT HEAVY DUTY FRONT) (UNLOADED	18036589	LH	200.86	CALIPER, FRT BRK (AC–DELCO #18S282) (DURASTOP)	6–F18,3
96	Y HVY DUTY PWR BRK (J55), (EXC COLLECTORS EDITION (Z15), GRAND SPORT EDITION (Z16)	12520231	LH	153.51	CALIPER, FRT BRK (CONSISTS OF CALIPER, CLIP, WASHER & PIN) (AC–DELCO #172–2141)	6–E22,48
96	Y HVY DUTY PWR BRK (J55), (EXC COLLECTORS EDITION (Z15), GRAND SPORT EDITION (Z16)	12520232	RH	153.51	CALIPER, FRT BRK (AC–DELCO #172–2142)	6–E22,48
96	Y HVY DUTY PWR BRK (J55), COLLECTORS EDITION (Z15), GRAND SPORT EDITION (Z16)	12528689	LH	214.20	CALIPER, FRT BRK (AC–DELCO #172–2121)	6–E22,48
96	Y HVY DUTY PWR BRK (J55), COLLECTORS EDITION (Z15), GRAND SPORT EDITION (Z16)	12528690	RH	214.20	CALIPER, FRT BRK (AC–DELCO #172–2122)	6–E22,48

© 2000 GENERAL MOTORS SERVICE PARTS OPERATIONS–CHEVROLET–14Y

4.665 BOLT – BOOT – BRACKET – BRAKE KIT – CALIPER – CLIP – HARDWARE KIT – LEVER – PIN – PLATE – SPRING – WASHER, Wheel Brake Cylinder/Caliper (Con't)

96	Y STINGRAY) (HEAVY DUTY) (LOADED	18035904	RH	236.24	CALIPER, FRT BRK (AC–DELCO #18R715) (DURASTOP)	6–E22,53
96	Y STINGRAY) (COLLECTORS OR GRAND SPORT EDITION) (LOADED	18035904	RH	236.24	CALIPER, FRT BRK (AC–DELCO #18R715) (DURASTOP)	6–E22,53
96	Y STINGRAY) (HEAVY DUTY) (LOADED	18035905	LH	236.24	CALIPER, FRT BRK (AC–DELCO #18R716) (DURASTOP)	6–E22,53
96	Y STINGRAY) (COLLECTORS OR GRAND SPORT EDITION) (LOADED	18035905	LH	236.24	CALIPER, FRT BRK (AC–DELCO #18R716) (DURASTOP)	6–E22,53
84–87	Y	14105947	LH	DISCON	CALIPER, RR BRK (W/PSTN)	
84–87	Y	14105948	RH	DISCON	CALIPER, RR BRK (W/PSTN)	
84–87	Y STINGRAY) (LOADED	18035846	RH	167.30	CALIPER, RR BRK (AC–DELCO #18R657) (DURASTOP)	
84–87	Y STINGRAY) (LOADED	18035847	LH	167.30	CALIPER, RR BRK (AC–DELCO #18R658) (DURASTOP)	
84–87	Y STINGRAY) (UNLOADED ..	18036540	RH	152.26	CALIPER, RR BRK (AC–DELCO #18S233) (DURASTOP)	
84–87	Y STINGRAY) (UNLOADED ..	18036541	LH	152.26	CALIPER, RR BRK (AC–DELCO #18S234) (DURASTOP)	
88	Y	10112641	LH	DISCON	CALIPER, RR BRK (W/PSTN)	
88	Y	10112642	RH	126.07	CALIPER, RR BRK (W/PSTN) (AC–DELCO #172–2138)	6–F21,1
88–96	Y STINGRAY) (LOADED	18035948	RH	179.12	CALIPER, RR BRK (CALIPER CAN MOUNT TO THE FRONT OR REAR OF THE AXLE. IF THE CALIPER MOUNTS TO THE FRONT OF AXLE, REVERSE CATALOG LISTINGS WHEN ORDERING.) (AC–DELCO #18R759) (DURASTOP)	6–E22,53
88–96	Y STINGRAY) (LOADED	18035949	LH	179.12	CALIPER, RR BRK (CALIPER CAN MOUNT TO THE FRONT OR REAR OF THE AXLE. IF THE CALIPER MOUNTS TO THE FRONT OF AXLE, REVERSE CATALOG LISTINGS WHEN ORDERING.) (AC–DELCO #18R760) (DURASTOP)	6–E22,53
88–96	Y STINGRAY) (UNLOADED ..	18036693	RH	167.70	CALIPER, RR BRK (AC–DELCO #18S386) (DURASTOP)	6–E22,53
88–96	Y STINGRAY) (UNLOADED ..	18036694	LH	167.70	CALIPER, RR BRK (AC–DELCO #18S387) (DURASTOP)	6–E22,53
89–95	Y	10132839	LH	202.47	CALIPER, RR BRK (AC–DELCO #172–2024)	6–E22,53
89–95	Y	10132840	RH	202.47	CALIPER, RR BRK (AC–DELCO #172–2025)	6–E22,53
96	Y HVY DUTY PWR BRK (J55), (EXC COLLECTORS EDITION (Z15), GRAND SPORT EDITION (Z16)	10132839	LH	202.47	CALIPER, RR BRK (AC–DELCO #172–2024)	6–E22,53
96	Y HVY DUTY PWR BRK (J55), (EXC COLLECTORS EDITION (Z15), GRAND SPORT EDITION (Z16)	10132840	RH	202.47	CALIPER, RR BRK (AC–DELCO #172–2025)	6–E22,53
96	Y STINGRAY) (COLLECTORS OR GRAND SPORT EDITION) (LOADED	18035904	RH	236.24	CALIPER, RR BRK (AC–DELCO #18R715) (DURASTOP)	6–E22,53

© 2000 GENERAL MOTORS SERVICE PARTS OPERATIONS–CHEVROLET–14Y

4.665 BOLT – BOOT – BRACKET – BRAKE KIT – CALIPER – CLIP – HARDWARE KIT – LEVER – PIN – PLATE – SPRING – WASHER, Wheel Brake Cylinder/Caliper (Con't)

96	Y STINGRAY) (COLLECTORS OR GRAND SPORT EDITION) (LOADED	18035905	LH	236.24	CALIPER, RR BRK (AC–DELCO #18R716) (DURASTOP)	6–E22,53
88–96	Y	10132842	2	5.96	CLIP, FRT BRK CLPR DPNR ("E") (AC–DELCO #179–950)	6–F16,10
84–87	Y	14067584	2	11.95	HARDWARE KIT, FRT BRK CLPR MTG (INCLS BOOT (GUIDE PIN), SEALING RING, BOLT, CAP (DUST COVER), INSTR SHT) (AC–DELCO #173–513)	
84–87	Y STINGRAY	18034632	AR	13.42	HARDWARE KIT, FRT BRK CLPR MTG (05.019) (AC–DELCO #18K258) (DURASTOP)	
88–96	Y STINGRAY	18034655	AR	12.98	HARDWARE KIT, FRT BRK CLPR MTG (05.019) (AC–DELCO #18K281) (DURASTOP)	
84–96	Y	14067585	2	10.30	HARDWARE KIT, RR BRK CLPR MTG (INCLS BOOT (GUIDE PIN), SEALING RING, BOLT, CAP (DUST COVER), INSTR SHT) (AC–DELCO #173–514)	
84–87	Y STINGRAY	18034632	AR	13.42	HARDWARE KIT, RR BRK CLPR MTG (05.019) (AC–DELCO #18K258) (DURASTOP)	
88–96	Y STINGRAY	18034632	AR	13.42	HARDWARE KIT, RR BRK CLPR MTG (05.019) (AC–DELCO #18K258) (DURASTOP)	
88	Y	10112645	2	DISCON	LEVER, RR CLPR PARKING BRK .	
86–87	Y	18022147	4	7.25	PIN, FRT BRK CLPR GDE	6–F15,8
88	Y (EXC H.D.SUSP FE7)	10140586	2	7.85	PIN, FRT DISC BRK PAD (FRT BRK CALIPER) (AC–DELCO #179–952)	6–F16,8
88	Y H .D. SUSP FE7	10140666	2	16.58	PIN, FRT DISC BRK PAD (BRK CLPR RET) (AC–DELCO #179–949)	6–F16,8
89–94	Y ANTILOCK DISC BRK (JL9)	10140586	2	7.85	PIN, FRT DISC BRK PAD (AC–DELCO #179–952)	6–F16,8
89–96	Y HVY DUTY PWR BRK (J55)	10140666	2	16.58	PIN, FRT DISC BRK PAD (AC–DELCO #179–949)	6–F16,8
84–96	Y	18022147	4	7.25	PIN, RR BRK CLPR GDE	6–F15,8
88	Y	10112644	2	DISCON	PIN, RR CLPR PARKING BRK LVR PIVOT	
88	Y (EXC H.D. SUSP FE7)	10181205	LH	46.92	PLATE, FRT BRK CLPR ANCHOR	6–F16,9
88	Y (EXC H.D. SUSP FE7)	10181206	RH	46.92	PLATE, FRT BRK CLPR ANCHOR	6–F16,9
88	Y H .D. SUSP FE7	10181207	LH	46.92	PLATE, FRT BRK CLPR ANCHOR	6–F16,9
88	Y HVY DUTY SUSP (FE7) ...	10181208	RH	46.92	PLATE, FRT BRK CLPR ANCHOR	6–F16,9
84	Y	14067557	2	DISCON	PLATE, FRT BRK CLPR MT	
85–87	Y	14085886	2	DISCON	PLATE, FRT BRK CLPR MT	
89–94	Y ANTILOCK DISC BRK (JL9)	10181205	LH	46.92	PLATE, FRT BRK CLPR MTG	6–F16,9
89–94	Y ANTILOCK DISC BRK (JL9)	10181206	RH	46.92	PLATE, FRT BRK CLPR MTG	6–F16,9
89–96	Y HVY DUTY PWR BRK (J55)	10181207	LH	46.92	PLATE, FRT BRK CLPR MTG	6–F16,9
89–96	Y HVY DUTY PWR BRK (J55)	10181208	RH	46.92	PLATE, FRT BRK CLPR MTG	6–F16,9
84	Y	14067558	2	DISCON	PLATE, RR BRK CLPR MT	
85–87	Y	14085887	2	DISCON	PLATE, RR BRK CLPR MT	
88–96	Y	10112650	4	3.40	SPRING, RR CLPR PARK BRK COLR RTN	6–F21,11
85–96	Y	10268876	4	1.05	WASHER, RR BRK CLPR	6–F21,30

© 2000 GENERAL MOTORS SERVICE PARTS OPERATIONS–CHEVROLET–14Y

4.666 CAP – VALVE, Wheel Brake Cylinder/Caliper Bleed

84–96	Y	14089150	4	1.43	CAP, FRT BRK CLPR BLEDR VLV (REPCO LTD) (STMPD WITH A DOT OF ORANGE PAINT)	6–F15,10
84–96	Y	14089150	4	1.43	CAP, RR BRK BLEDR VLV (REPCO LTD) (STMPD WITH A DOT OF ORANGE PAINT)	6–F15,10
84–96	Y	14071826	4	2.24	VALVE, FRT BRK CLPR BLEDR	6–F15,9
84–96	Y	14071826	2	2.24	VALVE, RR BRK CLPR BLEDR	6–F15,9

4.667 CALIPER KIT – SEAL KIT, Wheel Brake Cylinder/Caliper Piston

84–87	Y STINGRAY	18031559	AR	18.82	CALIPER KIT, FRT BRK (AC–DELCO #18H85) (DURASTOP)	
88–96	Y STINGRAY	18031644	AR	18.14	CALIPER KIT, FRT BRK (1 1/2 CYLINDER BORE) (AC–DELCO #18H170) (DURASTOP)	
84–87	Y STINGRAY	18031560	AR	14.74	CALIPER KIT, RR BRK (1 19/32 CYLINDER BORE) (AC–DELCO #18H86) (DURASTOP)	6–F23,1
88–96	Y STINGRAY	18031560	AR	14.74	CALIPER KIT, RR BRK (1 9/16 CYLINDER BORE) (AC–DELCO #18H86) (DURASTOP)	6–F23,1
96	Y HVY DUTY PWR BRK (J55), COLLECTORS EDITION (Z15), GRAND SPORT EDITION (Z16)	12528692	LH	214.20	CALIPER KIT, RR BRK (AC–DELCO #172–2123)	6–F23,1
96	Y HVY DUTY PWR BRK (J55), COLLECTORS EDITION (Z15), GRAND SPORT EDITION (Z16)	12528693	RH	214.20	CALIPER KIT, RR BRK (AC–DELCO #172–2124)	6–F23,1
88–96	Y	10104486	2	12.14	SEAL KIT, FRT BRK CLPR PSTN (CONSISTS OF PSTN SEAL, PSTN BOOT, BLEDR SCREW CAP, E–CLIP) (AC–DELCO #173–511)	6–F18,1

4.668 PISTON, Wheel Brake Cylinder or Caliper

84–87	Y	14105944	2	DISCON	PISTON, FRT BRK CLPR	
88–96	Y	10104482	4	28.91	PISTON, FRT BRK CLPR (AC–DELCO #179–986)	6–F16,7
84–87	Y	14105955	2	DISCON	PISTON, RR BRK CLPR (PISTON, RR BRK CLPR)	
88–96	Y	10112643	2	27.52	PISTON, RR BRK CLPR (AC–DELCO #179–987)	6–F21,16

4.671 FITTING – GASKET, Brake Hose

92–96	Y	10286122	2	2.45	FITTING, RR BRK HOSE (M10 X 1.0–6G THD 8) (04.686)	6–E18,31
84–88	Y	10139097	AR	*.24	GASKET, BRAKE HOSE (04.686) (AC–DELCO #10139097)	6–E16,19

4.680 HOSE, Hydraulic Brake

90–95	Y 5.7J (LT5)	10222294	2	64.01	HOSE, BRK PRESS MOD VLV (INTER RR) (12MMX1.0) (04.685)	6–E16,22
92–95	Y 5.7J (LT5)	10222295	1	64.01	HOSE, BRK PRESS MOD VLV (INTER FRT) (10MMX1.0) (04.685)	6–E18,9
84–87	Y	14076178	2	28.82	HOSE, FRT BRK (TO CALIPER)	6–E15,14
84–87	YY	18031997	LH	37.98	HOSE, FRT BRK (AC–DELCO #18J286) (DURASTOP)	

© 2000 GENERAL MOTORS SERVICE PARTS OPERATIONS–CHEVROLET–14Y

4.680 HOSE, Hydraulic Brake (Con't)

84-87	YY	18031997	RH	37.98	HOSE, FRT BRK (AC-DELCO #18J286) (DURASTOP)	
88-92	Y	10097647	LH	28.82	HOSE, FRT BRK (TO CALIPER)	6-E16,20
88-92	Y	10097648	RH	28.31	HOSE, FRT BRK (TO CALIPER)	6-E16,20
93	Y	18032754	2	28.42	HOSE, FRT BRK (AC-DELCO #18J1043) (DURASTOP)	6-E18,22
94-96	Y	17999661	LH	28.31	HOSE, FRT BRK	6-E18,22
94-96	Y	17999662	RH	28.82	HOSE, FRT BRK	6-E18,22
84-87	Y	14091293	2	DISCON	HOSE, RR BRK (WHEN USING ON 1984 VEH, IT WILL BE NECESSARY TO USE ALUM WASHER 14076180)	
88-92	Y	10097649	LH	30.09	HOSE, RR BRK	6-E16,5
88-92	Y	10097650	RH	30.86	HOSE, RR BRK	6-E16,5
93-96	Y	17999558	2	28.56	HOSE, RR BRK	6-E18,30

4.681 BOLT – BRACKET – CLAMP – GASKET – RETAINER, Hydraulic Brake Hose

84-91	Y	10286122	2	2.45	BOLT, FRT BRK HOSE FTG (M10 X 1.0-6G THD 8) (04.686)	6-E15,15
84-91	Y	10286122	2	2.45	BOLT, RR BRK HOSE FTG (M10 X 1.0-6G THD 8) (04.686)	6-E15,15
84-87	Y	14084003	LH	DISCON	BRACKET, RR BRK HOSE	
84-87	Y	14084004	RH	DISCON	BRACKET, RR BRK HOSE	
88-96	Y	10052263	LH	1.63	BRACKET, RR BRK HOSE	6-E16,3
88-96	Y	10221949	RH	1.63	BRACKET, RR BRK HOSE	6-E16,3
92-94	Y 5.7P (LT1), 5.7J (LT5)	1648216	1	*1.82	CLAMP, BRK PRESS MOD VLV HOSE (BLACK) (1/4 X 5/8, .320 WIDE BAND, WORM GEAR HEX SLOT SCREW) (08.948) (AC-DELCO #1648216)	
85-92	Y	14076180	4	*.30	GASKET, RR BRK HOSE FTG (04.671)	6-E18,32
93-96	Y	10139097	4	*.24	GASKET, RR BRK HOSE FTG (COPPER) (04.686) (AC-DELCO #10139097)	6-E18,32
84-96	Y	14084005	2	2.00	RETAINER, FRT BRK HOSE	6-E15,12
84-96	Y	14084005	2	2.00	RETAINER, RR BRK HOSE	6-E15,12

4.685 PIPE – SHIELD, Hydraulic Brake

92-94	Y 5.7J (LT5)	10158070	1	12.95	PIPE, BRK PRESS MOD VLV	6-E18,12
92-94	Y 5.7P (LT1)	10208421	1	30.35	PIPE, BRK PRESS MOD VLV (W/HOSE)	6-E18,12
95	Y 5.7J (LT5)	10254392	1	59.42	PIPE, BRK PRESS MOD VLV	6-E18,12
92-94	Y 5.7J (LT5)	10254385	1	12.95	PIPE, BRK PRESS MOD VLV FRT	6-E18,5
95	Y 5.7J (LT5)	10254385	1	12.95	PIPE, BRK PRESS MOD VLV FRT	6-E18,5
90-91	Y (5.7J)	14104683	1	DISCON	PIPE, FRT BRK FRT (M/CYL)	
90-95	Y 5.7J (LT5)	10254388	1	21.42	PIPE, RR BRK FRT	6-E16,6
86-96	Y	14104690	1	18.26	SHIELD, BRK & EVAP EMIS PIPE (03.145)	6-E18,23

4.686 BOLT – BRACKET – CLIP – FITTING – GASKET – NUT – RETAINER – SPACER, Hydraulic Brake Pipe

92-96	Y	11515397	2	.22	BOLT, BRK PIPE RET (10.685)	6-E18,46
90-96	Y	14092701	1	7.75	BRACKET, BRK PIPE (03.145)	6-E18,24
89-92	Y	10052169	2	1.45	CLIP, BRK PIPE (03.162)	6-E16,6
93-95	Y 5.7J (LT5)	10052169	1	1.45	CLIP, BRK PIPE (03.162)	6-E16,6
95	Y 5.7P (LT1)	10255421	4	2.55	CLIP, BRK PIPE	6-E18,10

© 2000 GENERAL MOTORS SERVICE PARTS OPERATIONS-CHEVROLET-14Y

4.686 BOLT – BRACKET – CLIP – FITTING – GASKET – NUT – RETAINER – SPACER, Hydraulic Brake Pipe (Con't)

96	Y	10255421	4	2.55	CLIP, BRK PIPE	6–E18,10
92–94	Y	10158060	4	6.95	CLIP, BRK PRESS MOD VLV INTER PIPE	6–E18,39
95	Y 5.7J (LT5)	10158060	4	6.95	CLIP, BRK PRESS MOD VLV INTER PIPE	6–E18,39
91	Y	10098178	3	DISCON	CLIP, FRT BRK & EVAP EMIS PIPE	
86–90	Y	14084086	4	1.10	CLIP, FRT BRK & FUEL VPR PIPE (LENGTH 29.8MM)	6–E16,13
84–90	Y	14050050	1	1.50	CLIP, FRT BRK C/OVR PIPE (08.950)	6–E15,16
86–87	Y67	14092703	2	DISCON	CLIP, FRT BRK C/OVR PIPE	
87	Y07 1BL (PERF HDLG PKG Z51), B2B (SPORT HDLG PKG Z52)	14092703	1	DISCON	CLIP, FRT BRK C/OVR PIPE	
88	Y07 PERF HDLG PKG (Z51), SPORT HDLG PKG (Z52)	14092703	1	DISCON	CLIP, FRT BRK C/OVR PIPE	
84–85	Y	14050051	3	2.45	CLIP, FRT BRK PIPE	6–E15,10
86–91	Y	14084085	1	1.25	CLIP, FRT BRK PIPE (37.8MM)	6–E16,16
88–90	Y	14050054	1	1.10	CLIP, FRT BRK PIPE (03.162)	6–E16,6
91	Y 5.7–8 (L98), 5.7J (LT5)	14050050	1	1.50	CLIP, FRT BRK PIPE (08.950)	6–E15,16
92–95	Y 5.7J (LT5)	14050050	2	1.50	CLIP, FRT BRK PIPE (POSN #3, 4) (08.950)	6–E15,16
92–95	Y 5.7P (LT1)	14050050	1	1.50	CLIP, FRT BRK PIPE (POSN #3) (08.950)	6–E15,16
92–95	Y 5.7P (LT1)	14084085	1	1.25	CLIP, FRT BRK PIPE (POSN #4) (37.8MM)	6–E16,16
96	Y	14050050	1	1.50	CLIP, FRT BRK PIPE (POSN #3) (08.950)	6–E15,16
96	Y	14084085	1	1.25	CLIP, FRT BRK PIPE (POSN #4) (37.8MM)	6–E16,16
84–90	Y	14084006	1	DISCON	CLIP, RR BRK C/OVR PIPE	
92–96	Y	14076130	2	1.12	CLIP, RR BRK C/OVR PIPE (POSN #11, #14)	6–E15,18
94–96	Y	22518436	2	.45	CLIP, RR BRK C/OVR PIPE (POSN #12, #13) (08.950)	6–E18,36
84–91	Y	14076130	2	1.12	CLIP, RR BRK PIPE	6–E15,18
86–96	Y	14084084	1	5.28	FITTING, FRT BRK C/OVR PIPE (ALUM FITTING)	6–E16,21
92–96	Y	10286122	2	2.45	FITTING, FRT BRK HOSE (M10 X 1.0–6G THD 8)	6–E18,21
84–85	Y	14050005	1	DISCON	FITTING, RR BRK PIPE	
86–91	Y	14087637	1	11.43	FITTING, RR BRK PIPE	6–E16,9
85–92	Y	14076180	4	*.30	GASKET, FRT BRK HOSE FTG (04.671)	6–E16,5
93–96	Y	10139097	4	*.24	GASKET, FRT BRK HOSE FTG (COPPER) (AC–DELCO #10139097)	6–E18,19
92–94	Y 5.7J (LT5)	11516404	AR	2.35	NUT, BRK PRESS MOD VLV FRT PIPE (METRIC MALE MUSHROOM FLARED TUBE) (08.924)	
92–94	Y	14076114	AR	1.30	NUT, BRK PRESS MOD VLV FRT PIPE (HEX 4.75 TUBE M10X1) (04.685)	6–E15,1
92–94	Y	11516404	1	2.35	NUT, BRK PRESS MOD VLV RR PIPE (METRIC MALE MUSHROOM FLARED TUBE) (08.924)	

© 2000 GENERAL MOTORS SERVICE PARTS OPERATIONS–CHEVROLET–14Y

4.686 BOLT – BRACKET – CLIP – FITTING – GASKET – NUT – RETAINER – SPACER, Hydraulic Brake Pipe (Con't)

92	Y	11516405	AR	2.35	NUT, BRK PRESS MOD VLV RR PIPE (M12X1, 6MMTUBE STL, ZE) (08.924)	6–E15,11
92–94	Y	14076114	AR	1.30	NUT, BRK PRESS MOD VLV RR PIPE (HEX 4.75 TUBE M10X1) (04.685)	6–E15,1
94–95	Y 5.7J (LT5)	11516405	1	2.35	NUT, BRK PRESS MOD VLV RR PIPE (M12X1, 6MMTUBE STL, ZE) (08.924)	6–E15,11
84–93	Y	14076114	AR	1.30	NUT, FRT BRK PIPE (HEX 4.75 TUBE M10X1) (04.685)	6–E15,1
86–93	Y	11516404	2	2.35	NUT, FRT BRK PIPE (METRIC MALE MUSHROOM FLARED TUBE) (08.924)	
84–85	Y	11516405	1	2.35	NUT, RR BRK FRT PIPE (08.924)	6–E15,11
84–94	Y	14076114	AR	1.30	NUT, RR BRK PIPE (HEX 4.75 TUBE M10X1) (04.685)	6–E15,1
86–94	Y	11516404	LH	2.35	NUT, RR BRK PIPE (METRIC MALE MUSHROOM FLARED TUBE) (08.924)	
86–91	Y	14094289	1	DISCON	RETAINER, BRK PIPE	
92–96	Y	10218188	1	2.70	RETAINER, BRK PIPE	6–E18,25
86–92	Y67	14100346	1	DISCON	SPACER, BRK & EVAP EMIS PIPE (FRT) (03.120)	

4.690 SPRING – VALVE, Hydraulic Brake Combo/Monitering Valve

84–91	Y	14067545	1	1.50	SPRING, BRK M/CYL PROPN VLV GRD (**VPI 1–877–846–8243)	
92–94	Y	12509984	1	1.26	SPRING, BRK M/CYL PROPN VLV GRD	6–F12,19
95	Y 5.7J (LT5)	12509984	1	1.26	SPRING, BRK M/CYL PROPN VLV GRD	6–F12,19
85–88	Y	14089148	1	59.30	VALVE, BRK COMB (M/CYL RR BRK PROPN) (AC–DELCO #172–2183)	6–F8,7

4.710 BRACKET – CONNECTOR – SENSOR – SWITCH, Electronic Brake Control

NOTE: AT TIMES THE BRAKE SENSOR IS SERVICED ONLY AS PART OF THE REAR WHEEL HUB ASSEMBLY LOCATED IN GROUP 5.806

86	Y	14093145	1	DISCON	BRACKET, ELEC BRK CONT LATL ACCEL SWITCH	
86–88	Y	14091268	2	DISCON	BRACKET, FRT LWR WHL SPD SEN MT (POSN #2)	
86–88	Y	14091237	2	DISCON	BRACKET, FRT UPR WHL SPD SEN MT (POSN #5)	
86–87	Y	14091235	LH	DISCON	BRACKET, FRT WHL KNU SPD SEN MT	
86–87	Y	14091236	RH	DISCON	BRACKET, FRT WHL KNU SPD SEN MT	
86–87	Y	14091257	LH	DISCON	BRACKET, RR WHL KNU SPD SEN MT	
86–87	Y	14091258	RH	DISCON	BRACKET, RR WHL KNU SPD SEN MT	
86–91	Y	14091259	2	.75	BRACKET, WHL SPD SEN (POSN #4)	6–E4,2
88–91	Y	10052288	2	.77	BRACKET, WHL SPD SEN (RR WHL TO TOP OF KNUCKLE) (POSN #3)	6–E4,43

© 2000 GENERAL MOTORS SERVICE PARTS OPERATIONS–CHEVROLET–14Y

4.710 BRACKET – CONNECTOR – SENSOR – SWITCH, Electronic Brake Control (Con't)

88–91	Y	10052289	2	.77	BRACKET, WHL SPD SEN (RR WHL TO SIDE OF KNUCKLE) (POSN #1)	6–E4,50
89	Y	10087787	LH	.85	BRACKET, WHL SPD SEN	6–E4,18
89	Y	10087788	RH	.85	BRACKET, WHL SPD SEN	6–E4,18
90–91	Y SOFT RIDE SUSP (FE1), HVY DUTY SUSP (FE7)	10087787	LH	.85	BRACKET, WHL SPD SEN	6–E4,18
90–91	Y SOFT RIDE SUSP (FE1), HVY DUTY SUSP (FE7)	10087788	RH	.85	BRACKET, WHL SPD SEN	6–E4,18
91–96	Y	10158005	2	.90	BRACKET, WHL SPD SEN (POSN #5)	6–E7,7
92–96	Y	10052288	2	.77	BRACKET, WHL SPD SEN (POSN #1)	6–E4,43
92–96	Y	10052289	2	.77	BRACKET, WHL SPD SEN (POSN #2)	6–E4,50
92–96	Y	10087787	LH	.85	BRACKET, WHL SPD SEN (POSN #3)	6–E4,18
92–96	Y	10087788	RH	.85	BRACKET, WHL SPD SEN (POSN #4)	6–E4,18
92–96	Y	14091259	2	.75	BRACKET, WHL SPD SEN (POSN #6)	6–E4,2
96	Y CHASSIS, REALTIME DAMPING (F45)	10260107	LH	.73	BRACKET, WHL SPD SEN (POSN #7)	6–E11,7
96	Y CHASSIS, REALTIME DAMPING (F45)	10260108	RH	.73	BRACKET, WHL SPD SEN (POSN #8)	6–E11,7
89–90	Y	10087789	LH	DISCON	BRACKET, WHL SPD SEN FRT (POSN #9)	
89–90	Y	10087790	RH	DISCON	BRACKET, WHL SPD SEN FRT (POSN #9)	
89–90	Y	14104969	LH	3.47	BRACKET, WHL SPD SEN FRT (POSN #8)	
89–90	Y	14104970	RH	3.26	BRACKET, WHL SPD SEN FRT (POSN #8)	
96	Y	12117320	1	20.27	CONNECTOR, SEN–VEH LATL (3–WAY F) (W/LEADS) (02.530) (AC–DELCO #12117320)	
92	Y 4–SPD A/TRANS (MD8), 6–SPD M/TRANS (ML9), A/C MAN CONT (C60), A/C AUTO ELEC CONT (C68)	12085535	1	17.46	CONNECTOR, SW–ELEK TRACT CONT (2–WAY F) (W/LEADS) (HAS INDEX TAB @ OUTER EDGE OF CAVITY B) (02.535) (AC–DELCO #PT146)	
93–96	Y	12085535	1	17.46	CONNECTOR, SW–ELEK TRACT CONT (2–WAY F) (W/LEADS) (HAS INDEX TAB @ OUTER EDGE OF CAVITY B) (02.535) (AC–DELCO #PT146)	
86–87	Y	10052261	LH	116.73	SENSOR, FRT WHL SPD (WITH O–RING SEAL IN STRG KNUCKLE) (AC–DELCO #10052261)	6–E4,20
86–87	Y	10052262	RH	116.73	SENSOR, FRT WHL SPD (WITH O–RING SEAL IN STRG KNUCKLE) (AC–DELCO #10052262)	6–E4,20
86–87	Y	14084077	LH	116.73	SENSOR, FRT WHL SPD (SENSOR, WHL SPD (FRT) (EXC O–RING SEAL IN STRG KNUCKLE)) (AC–DELCO #14084077)	6–E4,20

© 2000 GENERAL MOTORS SERVICE PARTS OPERATIONS–CHEVROLET–14Y

4.710 BRACKET – CONNECTOR – SENSOR – SWITCH, Electronic Brake Control (Con't)

86–87	Y	14084078	RH	116.73	SENSOR, FRT WHL SPD (SENSOR, WHL SPD (FRT) (EXC O–RING SEAL IN STRG KNUCKLE)) (AC–DELCO #14084078)	6–E4,20
86–87	Y	14084079	LH	116.73	SENSOR, RR WHL SPD (SENSOR, WHL SPD (RR)) (AC–DELCO #14084079)	6–E4,51
86–87	Y	14084080	RH	116.73	SENSOR, RR WHL SPD (SENSOR, WHL SPD (RR)) (AC–DELCO #14084080)	6–E4,51
88–91	Y SOFT RIDE SUSP (FE1), HVY DUTY SUSP (FE7)	10052273	LH	100.51	SENSOR, WHL SPD (RR) (AC–DELCO #10052273)	6–E4,51
88–91	Y SOFT RIDE SUSP (FE1), HVY DUTY SUSP (FE7)	10052274	RH	100.51	SENSOR, WHL SPD (RR) (AC–DELCO #10052274)	6–E4,51
88	Y	10052275	LH	116.73	SENSOR, WHL SPD (FRT) (AC–DELCO #10052275)	6–E4,20
88	Y	10052276	RH	116.73	SENSOR, WHL SPD (FRT) (AC–DELCO #10052276)	6–E4,20
89	Y	14104821	LH	100.51	SENSOR, WHL SPD (SENSOR, WHL SPD (FRT)) (AC–DELCO #14104821)	6–E4,20
89	Y	14104822	RH	100.51	SENSOR, WHL SPD (SENSOR, WHL SPD (FRT)) (AC–DELCO #14104822)	6–E4,20
90	Y SOFT RIDE SUSP (FE1), H .D .SUSP (FE7)	14104821	LH	100.51	SENSOR, WHL SPD (SENSOR, WHL SPD (FRT)) (AC–DELCO #14104821)	6–E4,20
90	Y SOFT RIDE SUSP (FE1), H .D .SUSP (FE7)	14104822	RH	100.51	SENSOR, WHL SPD (SENSOR, WHL SPD (FRT)) (AC–DELCO #14104822)	6–E4,20
92	Y	10052273	LH	100.51	SENSOR, WHL SPD (RR) (AC–DELCO #10052273)	6–E4,51
92	Y	10052274	RH	100.51	SENSOR, WHL SPD (RR) (AC–DELCO #10052274)	6–E4,51
93–94	Y	10052273	LH	100.51	SENSOR, WHL SPD (AC–DELCO #10052273)	6–E4,51
93–94	Y	10052274	RH	100.51	SENSOR, WHL SPD (AC–DELCO #10052274)	6–E4,51
95	Y 5.7J (LT5)	10052273	LH	100.51	SENSOR, WHL SPD (AC–DELCO #10052273)	6–E4,51
95	Y 5.7J (LT5)	10052274	RH	100.51	SENSOR, WHL SPD (AC–DELCO #10052274)	6–E4,51
95	Y 5.7P (LT1)	10235293	RH	83.90	SENSOR, WHL SPD (RR)	6–E9,12
95	Y 5.7P (LT1)	10235294	LH	83.90	SENSOR, WHL SPD (RR)	6–E9,9
96	Y	10254373	LH	37.74	SENSOR, WHL SPD (RR WHL)	6–E11,9
96	Y	10254374	RH	36.72	SENSOR, WHL SPD (RR WHL)	6–E11,12
93–96	Y	10211657	1	24.54	SWITCH, ELEK BRK CONT BRK PED (W/ S/LP SW) (AC–DELCO #10211657)	4–I16,2
86–89	Y	14093144	1	137.33	SWITCH, ELEK BRK CONT LATL ACCLRTN (AC–DELCO #14093144)	6–E4,9

4.720 BOLT – BRACKET – CLIP – CONNECTOR – COVER – DIODE – GASKET – HARNESS – MODULE – PLATE – RELAY – RETAINER – SUPPORT – WIRE, Electronic Brake Control

95	Y 5.7P (LT1)	10276651	1	20.60	BOLT, ELEK BRK CONT MDL
96	Y	10276651	1	20.60	BOLT, ELEK BRK CONT MDL

© 2000 GENERAL MOTORS SERVICE PARTS OPERATIONS–CHEVROLET–14Y

4.720 BOLT – BRACKET – CLIP – CONNECTOR – COVER – DIODE – GASKET – HARNESS – MODULE – PLATE – RELAY – RETAINER – SUPPORT – WIRE, Electronic Brake Control (Con't)

92–94	Y	10143546	1	3.26	BRACKET, ELEK BRK & TRACT CONT MDL	6–E7,1
95	Y 5.7J (LT5)	10143546	1	3.26	BRACKET, ELEK BRK & TRACT CONT MDL	6–E7,1
86–91	Y	14088443	1	DISCON	BRACKET, ELEK BRK CONT MDL (RR)	
86–91	Y	14088444	1	DISCON	BRACKET, ELEK BRK CONT MDL (FRT)	
96	Y (EXC DAYTIME RUNNING LGT (T61), HDLP (T72) (EXPORT), RH RULE OF ROAD HDLP (T84) (EXPORT), LH RULE OF ROAD HDLP (T85) (EXPORT), SIG & MKR LP (T90) (EXPORT)	12129073	1	.45	BRACKET, ELEK BRK CONT RLY (BLACK) (AC–DELCO #12129073)	
87–95	Y	14062552	2	1.12	BRACKET, WHL SPD SEN WRG HARN CLIP (02.559)	9–D11,28
96	Y	14062552	1	1.12	BRACKET, WHL SPD SEN WRG HARN CLIP (02.559)	9–D11,28
95	Y	1839906	1	*.13	CLIP, ELEK BRK CONT WRG HARN (LARGE 3–5 WIRE) (08.965) (AC–DELCO #1839906)	
95	Y 5.7P (LT1)	1864022	·	.77	CLIP, ELEK BRK CONT WRG HARN (1/2 DIA HARD STL) (02.559)	
95–96	Y	3816659	AR	*.87	CLIP, ELEK BRK CONT WRG HARN (7" ADJ, W/ROSEBUD FOR .25 DIA HOLE .031–.14 TH) (08.965)	
86–94	Y	12052881	1	2.45	CLIP, RR WHL SPD SEN WRG HARN	6–E4,12
95	Y 5.7P (LT1)	10243066	2	.27	CLIP, RR WHL SPD SEN WRG HARN	6–E9,8
95	Y 5.7J (LT5)	12052881	2	2.45	CLIP, RR WHL SPD SEN WRG HARN	6–E4,12
96	Y (EXC CHASSIS, REALTIME DAMPING (F45)	10243066	2	.27	CLIP, RR WHL SPD SEN WRG HARN	6–E9,8
96	Y	10258144	2	.41	CLIP, RR WHL SPD SEN WRG HARN (W/RR COMBO SENSOR & DAMPER CONNS)	6–E11,8
91	Y	12117268	1	33.93	CONNECTOR, BRK ECM SW (04.663) (AC–DELCO #PT441)	
91–95	Y ELEK RIDE & HANDLING (FX3)	12101876	1	26.75	CONNECTOR, INLINE–TO ANTILOCK BRK HARN (GRAY) (6–WAY M) (W/LEADS) (02.535) (AC–DELCO #PT267)	
93–94	Y 5.7P (LT1)	12101853	1	19.29	CONNECTOR, INLINE–TO ANTILOCK BRK HARN (2–WAY M, W/LEADS, USED T/W 15300591) (02.535) (AC–DELCO #PT245)	
94	Y	12085206	1	16.05	CONNECTOR, INLINE–TO ANTILOCK BRK HARN (BLACK) (4–WAY M) (02.535)	
94–96	Y	12101823	1	49.04	CONNECTOR, INLINE–TO ANTILOCK BRK HARN (10–WAY M) (W/LEADS) (02.535) (AC–DELCO #PT215)	

© 2000 GENERAL MOTORS SERVICE PARTS OPERATIONS–CHEVROLET–14Y

4.720 BOLT – BRACKET – CLIP – CONNECTOR – COVER – DIODE – GASKET – HARNESS – MODULE – PLATE – RELAY – RETAINER – SUPPORT – WIRE, Electronic Brake Control (Con't)

94	Y 5.7P (LT1)	12117271	1	57.63	CONNECTOR, INLINE–TO ANTILOCK BRK HARN (WHITE) (8–WAY F) (W/LEADS) (02.535) (AC–DELCO #PT444) .....
94–95	Y	12117320	1	20.27	CONNECTOR, INLINE–TO ANTILOCK BRK HARN (3–WAY F) (W/LEADS) (02.530) (AC–DELCO #12117320) .....
95	Y07 SPECIAL PERFORMANCE PKG (ZR1)	12085206	1	16.05	CONNECTOR, INLINE–TO ANTILOCK BRK HARN (BLACK) (4–WAY M) (02.535) .....
96	Y	12117271	1	57.63	CONNECTOR, INLINE–TO ANTILOCK BRK HARN (WHITE) (8–WAY F) (W/LEADS) (02.535) (AC–DELCO #PT444) .....
96	Y	15300003	1	1.63	CONNECTOR, INLINE–TO ANTILOCK BRK HARN (3–WAY M) (W/O LEADS) (M/P 280–BODY ONLY) (02.530) ...
89–90	Y	12101876	1	26.75	CONNECTOR, INLINE–TO ELEK BRK CONT HARN (6–WAY M, W/LEADS) (02.535) (AC–DELCO #PT267) .....
90–91	Y ELEK RIDE & HANDLING (FX3)	12101762	1	68.40	CONNECTOR, INLINE–TO ELEK BRK CONT HARN (10–WAY F) (W/LEADS) (02.535) (AC–DELCO #PT150) .....
90	Y ELEK RIDE & HANDLING (FX3)	12101823	AR	49.04	CONNECTOR, INLINE–TO ELEK BRK CONT HARN (10–WAY M, W/LEADS) (02.535) (AC–DELCO #PT215) .....
90–91	Y ELEK RIDE & HANDLING (FX3)	12101832	AR	45.10	CONNECTOR, INLINE–TO ELEK BRK CONT HARN (BLUE) (10–WAY F, W/LEADS) (02.535) (AC–DELCO #PT224) .....
90	Y CASSETTE STEREO (UU8), CASSETTE/CD PLAYER (U1F), STEREO CASSETTE (UM6)	12126015	1	28.45	CONNECTOR, INLINE–TO ELEK BRK CONT HARN (4–WAY M, W/LEADS) (02.530) (AC–DELCO #PT646) .....
91	Y	12015987	1	*5.51	CONNECTOR, INLINE–TO ELEK BRK CONT HARN (1–WAY M) (W/O LEADS) (09.778) (AC–DELCO #12015987) .....
91	Y	12101823	1	49.04	CONNECTOR, INLINE–TO ELEK BRK CONT HARN (10–WAY M) (W/LEADS) (02.535) (AC–DELCO #PT215) .....
91	Y	12117353	1	10.16	CONNECTOR, INLINE–TO ELEK BRK CONT HARN (*–WAY F) (W/LEADS) (M/P 480) (08.965) (AC–DELCO #PT486) .....
91	Y	12117383	1	9.33	CONNECTOR, INLINE–TO ELEK BRK CONT HARN (1–WAY M) (W/LEADS) (09.273) (AC–DELCO #PT515) .....
92–96	Y	12092249	2	2.44	CONNECTOR, INLINE–TO ELEK BRK CONT HARN (23–WAY F) (W/LEADS) (02.530) .....

© 2000 GENERAL MOTORS SERVICE PARTS OPERATIONS–CHEVROLET–14Y

4.720 BOLT – BRACKET – CLIP – CONNECTOR – COVER – DIODE – GASKET – HARNESS – MODULE – PLATE – RELAY – RETAINER – SUPPORT – WIRE, Electronic Brake Control (Con't)

92	Y 5.7P (LT1)	12101763	1	16.97	CONNECTOR, INLINE–TO ELEK BRK CONT HARN (1–WAY F) (W/LEADS) (02.535) (AC–DELCO #PT170)	
92	Y ELEK RIDE & HANDLING (FX3)	12116445	1	DISCON	CONNECTOR, INLINE–TO ELEK BRK CONT HARN (W/LEADS) (02.530)	
92–94	Y 5.7P (LT1)	12117271	1	57.63	CONNECTOR, INLINE–TO ELEK BRK CONT HARN (WHITE) (8–WAY F) (W/LEADS) (02.535) (AC–DELCO #PT444)	
92–94	Y 5.7J (LT5)	12117271	1	57.63	CONNECTOR, INLINE–TO ELEK BRK CONT HARN (WHITE) (8–WAY F) (W/LEADS) (02.535) (AC–DELCO #PT444)	
93	Y	12092248	1	1.73	CONNECTOR, INLINE–TO ELEK BRK CONT HARN (TO CHAS HARN) (23–WAY M) (W/O LEADS) (02.530)	
93	Y 5.7P (LT1)	12101853	1	19.29	CONNECTOR, INLINE–TO ELEK BRK CONT HARN (2–WAY M, W/LEADS, USED T/W 15300591) (02.535) (AC–DELCO #PT245)	
93	Y	12126456	1	55.52	CONNECTOR, INLINE–TO ELEK BRK CONT HARN (1–WAY M, W/LEADS, HIGH TEMP) (01.150) (AC–DELCO #PT727)	
95	Y 5.7J (LT5)	12092248	1	1.73	CONNECTOR, INLINE–TO ELEK BRK CONT HARN (TO CHAS HARN) (23–WAY M) (W/O LEADS) (02.530)	
96	Y	12015987	1	*5.51	CONNECTOR, INLINE–TO ELEK BRK CONT HARN (1–WAY M) (W/O LEADS) (09.778) (AC–DELCO #12015987)	
96	Y	12117383	1	9.33	CONNECTOR, INLINE–TO ELEK BRK CONT HARN (1–WAY M) (W/LEADS) (09.273) (AC–DELCO #PT515)	
90	Y (EXC ELEK RIDE & HANDLING (FX3)	12101823	AR	49.04	CONNECTOR, INLINE–TO WHL SPD SEN (10–WAY M, W/LEADS) (02.535) (AC–DELCO #PT215)	
96	Y	12116958	4	20.24	CONNECTOR, INLINE–TO WHL SPD SEN (GRAY) (2–WAY F) (W/LEADS) (02.535) (AC–DELCO #PT419)	6–E11,17
93–94	Y	12085206	1	16.05	CONNECTOR, MDL–ELEK BRK CONT (BLACK) (4–WAY M) (02.535)	
93–95	Y	12101823	1	49.04	CONNECTOR, MDL–ELEK BRK CONT (10–WAY M) (W/LEADS) (02.535) (AC–DELCO #PT215)	
96	Y	12166317	1	32.68	CONNECTOR, MDL–ELEK BRK CONT (CONTAINS 40–WAY F CONN, SEAL & 8 TERMINALS)	6–E11,17
93–94	Y 5.7P (LT1)	12126443	1	141.23	CONNECTOR, MDL–ELEK TRACT CONT (W/LEADS) (03.887) (AC–DELCO #12126443)	

MICROFICHE INDEX

GROUPS 4.000 THRU 5.000

FICHE 6 OF 11

GROUP	DESCRIPTION	STARTING GRID LOCATION PARTS	ILLUSTRATIONS
–	GENERAL INFORMATION	1–A2	1–G2
–	ALPHABETICAL INDEX	1–B13	N.A.
4.000	BRAKES	6–A2	6–E2
5.000	BRAKES – REAR AXLE – PROPELLER SHAFT – WHEELS	6–C2	6–H2
–	OUT OF FICHE CALLS	N.A.	6–M22

6–B1

4.720 BOLT – BRACKET – CLIP – CONNECTOR – COVER – DIODE – GASKET – HARNESS – MODULE – PLATE – RELAY – RETAINER – SUPPORT – WIRE, Electronic Brake Control(Con't)

86–91	Y	12126460	1	20.00	CONNECTOR, RLY–BRK PRESS MOD VLV (5–WAY F) (W/LEADS) (02.530) (AC–DELCO #PT730)	
92–94	Y	10143537	1	21.78	COVER, ELEK BRK CONT MDL	5–L26,9
95	Y SPECIAL PERFORMANCE PKG (ZR1)	10143537	1	21.78	COVER, ELEK BRK CONT MDL	5–L26,9
95	Y (EXC SPECIAL PERFORMANCE PKG (ZR1)	10225919	1	23.31	COVER, ELEK BRK CONT MDL	6–E22,21
96	Y	10225919	1	23.31	COVER, ELEK BRK CONT MDL	6–E22,21
88–89	Y	8907496	1	17.20	DIODE, W/CONNECTOR, ELEC BRK CONT	
92–96	Y	10167107	1	4.13	GASKET, ELEK BRK CONT MDL CVR	5–L26,16
86	Y (2ND DES)	12046596	1	DISCON	HARNESS, BRK PRESS MOD VLV WRG (HAS 3 CONNECTORS FOR WHL SPD SEN HARNESS)	
86	Y (1ST DES)	12048801	1	DISCON	HARNESS, BRK PRESS MOD VLV WRG (HAS 2 CONNECTORS FOR WHL SPD SEN HARNESS)	
87	Y	12067433	1	DISCON	HARNESS, BRK PRESS MOD VLV WRG	
88	Y	12083507	1	DISCON	HARNESS, BRK PRESS MOD VLV WRG	
89	Y	12083507	1	DISCON	HARNESS, BRK PRESS MOD VLV WRG	
90	Y (EXC FX3)	12080844	1	DISCON	HARNESS, BRK PRESS MOD VLV WRG	
90	Y RIDE & HDLG (FX3)	12080845	1	DISCON	HARNESS, BRK PRESS MOD VLV WRG	
91	Y (EXC ELEK RIDE & HANDLING (FX3)	12112465	1	DISCON	HARNESS, BRK PRESS MOD VLV WRG	
91	Y ELEK RIDE & HANDLING (FX3)	12112466	1	DISCON	HARNESS, BRK PRESS MOD VLV WRG	
93	Y (EXC ELEK RIDE & HANDLING (FX3)	12106505	1	260.86	HARNESS, BRK PRESS MOD VLV WRG	5–L22,22
93	Y ELEK RIDE & HANDLING (FX3)	12106507	1	DISCON	HARNESS, BRK PRESS MOD VLV WRG	
94	Y (EXC ELEK RIDE & HANDLING (FX3)	12130360	1	260.86	HARNESS, BRK PRESS MOD VLV WRG	5–L22,22
94	Y ELEK RIDE & HANDLING (FX3)	12130361	1	260.86	HARNESS, BRK PRESS MOD VLV WRG	5–L22,22
95	Y 5.7J (LT5)	12130361	1	260.86	HARNESS, BRK PRESS MOD VLV WRG	5–L22,22
86–90	Y	12055840	1	DISCON	HARNESS, BRK PRESS MOD VLV WRG HARN GRD	
92	Y (EXC ELEK RIDE & HANDLING (FX3)	12106545	1	390.00	HARNESS, ELEK BRK CONT & ELEC TRACT CONT WRG (CONT MDL TO WHL SEN HARN)	6–E7,18
92	Y (EXC ELEK RIDE & HANDLING (FX3)	12106546	1	260.86	HARNESS, ELEK BRK CONT & ELEC TRACT CONT WRG (FRT & RR WHL SEN TO CONT HARN)	6–E7,17
93–94	Y ELEK RIDE & HANDLING (FX3)	12130313	1	522.73	HARNESS, ELEK BRK CONT & ELEC TRACT CONT WRG	6–E9,17
93–94	Y (EXC ELEK RIDE & HANDLING (FX3)	12130314	1	260.86	HARNESS, ELEK BRK CONT & ELEC TRACT CONT WRG	6–E9,17
95	Y 5.7J (LT5)	12130313	1	522.73	HARNESS, ELEK BRK CONT & ELEC TRACT CONT WRG	6–E9,17
95	Y 5.7P (LT1)	12130367	1	772.50	HARNESS, ELEK BRK CONT & ELEC TRACT CONT WRG	6–E9,17

© 2000 GENERAL MOTORS SERVICE PARTS OPERATIONS–CHEVROLET–14Y

4.720 BOLT – BRACKET – CLIP – CONNECTOR – COVER – DIODE – GASKET – HARNESS – MODULE – PLATE – RELAY – RETAINER – SUPPORT – WIRE, Electronic Brake Control(Con't)

96	Y CHASSIS, REALTIME DAMPING (F45)	12130459	1	522.73	HARNESS, ELEK BRK CONT & ELEC TRACT CONT WRG	6–E11,17
96	Y (EXC CHASSIS, REALTIME DAMPING (F45)	12130496	1	522.73	HARNESS, ELEK BRK CONT & ELEC TRACT CONT WRG	6–E11,17
92	Y ELEK RIDE & HANDLING (FX3)	12106547	1	DISCON	HARNESS, ELEK BRK CONT & ELEK SUSP & TRACTION CONT WRG (CONT MDL TO WHL SEN HARN)	
92	Y ELEK RIDE & HANDLING (FX3)	12106548	1	DISCON	HARNESS, ELEK BRK CONT & ELEK SUSP & TRACTION CONT WRG (FRT & RR WHL SEN TO CONT HARN)	
86	Y07 (1ST DES)	12048802	1	DISCON	HARNESS, WHL SPD SEN WRG (2 CONNECTORS FOR BRK MODULE HARN)	
86	Y07 (2ND DES)	12055921	1	DISCON	HARNESS, WHL SPD SEN WRG (3 CONNECTORS FOR BRK MODULE HARN)	
86	Y67 (1ST DES)	12048803	1	DISCON	HARNESS, WHL SPD SEN WRG (HAS 2 CONNECTORS FOR BRK MODULE HARN)	
86	Y67 (2ND DES)	12055922	1	DISCON	HARNESS, WHL SPD SEN WRG (HAS 3 CONNECTORS FOR BRK MODULE HARN)	
87	Y07 (EXC 1BL PERF HDLG PKG Z51, B2B SPORT HDLG PKG Z52)	12046597	1	DISCON	HARNESS, WHL SPD SEN WRG .	
87	Y07 1BL (PERF HDLG PKG Z51), B2B (SPORT HDLG PKG Z52)	12067499	1	DISCON	HARNESS, WHL SPD SEN WRG .	
87	Y67	12046598	1	DISCON	HARNESS, WHL SPD SEN WRG .	
88–90	Y	12073494	1	385.50	HARNESS, WHL SPD SEN WRG .	6–E4,14
91	Y (EXC ELEK RIDE & HANDLING (FX3)	12090313	1	260.86	HARNESS, WHL SPD SEN WRG .	6–E4,14
91	Y ELEK RIDE & HANDLING (FX3)	12090314	1	260.86	HARNESS, WHL SPD SEN WRG .	6–E4,14
91–96	Y	12090339	2	80.25	HARNESS, WHL SPD SEN WRG HARN EXTN	6–E4,20
92–94	Y	10241014	1	1030.00	MODULE, ELEK BRK & TRACT CONT (AC–DELCO #10241014)	6–E7,5
95	Y 5.7J (LT5)	10241014	1	1030.00	MODULE, ELEK BRK & TRACT CONT (AC–DELCO #10241014)	6–E7,5
86–89	Y	14103343	1	990.05	MODULE, ELEK BRK CONT (MODULE, ELEK BRK CONT) (AC–DELCO #14103343)	6–E4,34
90–91	Y	10223326	1	1030.00	MODULE, ELEK BRK CONT (AC–DELCO #10223326)	6–E4,34
95	Y 5.7P (LT1)	12521972	1	643.62	MODULE, ELEK BRK CONT (& TRACT CONT)	6–E9,5
96	Y	12525023	1	857.82	MODULE, ELEK BRK CONT	6–E11,19
92–94	Y	14058658	2	1.68	PLATE, ELEK BRK & TRACT CONT MDL BRKT STUD (12.986)	5–L22,31
95	Y 5.7J (LT5)	14058658	1	1.68	PLATE, ELEK BRK & TRACT CONT MDL BRKT STUD (12.986)	5–L22,31
86–91	Y	14091012	1	DISCON	PLATE, ELEK BRK CONT WRG HARN CLIP TAP (U–SHAPE) (03.675)	

© 2000 GENERAL MOTORS SERVICE PARTS OPERATIONS–CHEVROLET–14Y

4.720 BOLT – BRACKET – CLIP – CONNECTOR – COVER – DIODE – GASKET – HARNESS – MODULE – PLATE – RELAY – RETAINER – SUPPORT – WIRE, Electronic Brake Control(Con't)

92–96	Y	10045625	7	1.07	PLATE, ELEK BRK CONT WRG HARN CLIP TAP (W/STUD) (12.981)	10–E24,14
92–96	Y	14090618	1	7.05	PLATE, ELEK BRK CONT WRG HARN GROM TAP (03.675)	6–E11,23
86–91	Y	1636973	1	36.10	RELAY, ELEK BRK CONT (AC–DELCO #1636973)	6–E4,32
91	Y	14100455	1	16.26	RELAY, ELEK BRK CONT (PART OF BRK CONT HARNESS) (BLACK) (5–WAY) (09.277) (AC–DELCO #15–8426)	
86–92	Y	14093182	1	DISCON	RETAINER, BRK PRESS MOD VLV WRG HARN	
86	Y	14091267	4	DISCON	RETAINER, WHL SPD SEN WRG HARN	
92–94	Y	10143547	1	2.19	SUPPORT, ELEK BRK & TRACT CONT MDL	6–E7,4
95	Y 5.7J (LT5)	10143547	1	2.19	SUPPORT, ELEK BRK & TRACT CONT MDL	6–E7,4
91–96	Y	12080879	1	9.90	WIRE, BRK PRESS MOD VLV WRG HARN GND	6–E11,26

4.730 BOLT – BRACKET – CONNECTOR – COVER – INSULATOR – PIN – RELAY – VALVE, Electronic Brake Control

90–94	Y	14071826	4	2.24	BOLT, BRK PRESS MOD VLV BLEDR (04.666)	5–L22,3
95	Y 5.7J (LT5)	14071826	1	2.24	BOLT, BRK PRESS MOD VLV BLEDR (04.666)	5–L22,3
86–91	Y	14087612	1	DISCON	BRACKET, BRK PRESS MOD VLV	
92–94	Y	10143511	1	9.13	BRACKET, BRK PRESS MOD VLV	5–L22,10
95	Y 5.7J (LT5)	10143511	1	9.13	BRACKET, BRK PRESS MOD VLV	5–L22,10
95	Y 5.7P (LT1)	10218185	1	3.26	BRACKET, BRK PRESS MOD VLV	6–E22,20
96	Y	10218185	1	3.26	BRACKET, BRK PRESS MOD VLV	6–E22,20
92–93	Y 5.7J (LT5)	12102747	1	21.07	CONNECTOR, SOL–BRK PRESS MOD VLV (BLACK) (2–WAY F) (W/LEADS) (03.670) (AC–DELCO #PT374)	
92–94	Y	12167103	1	132.75	CONNECTOR, SOL–BRK PRESS MOD VLV (14–WAY F)	
95	Y 5.7J (LT5)	12167103	1	132.75	CONNECTOR, SOL–BRK PRESS MOD VLV (14–WAY F)	
92–94	Y	12516329	1	31.88	COVER, BRK PRESS MOD VLV RLY	5–L22,21
95	Y 5.7J (LT5)	12516329	1	31.88	COVER, BRK PRESS MOD VLV RLY	5–L22,21
86–96	Y	14087680	3	3.26	INSULATOR, BRK PRESS MOD VLV	6–E4,36
92–94	Y	12516330	2	10.46	PIN, BRK PRESS MOD VLV (M6X1)	5–L22,2
92–94	Y	12516331	1	19.07	PIN, BRK PRESS MOD VLV (M10X1)	5–L22,7
95	Y 5.7J (LT5)	12516330	2	10.46	PIN, BRK PRESS MOD VLV (M6X1)	5–L22,2
95	Y 5.7J (LT5)	12516331	1	19.07	PIN, BRK PRESS MOD VLV (M10X1)	5–L22,7
86–91	Y	14105967	1	49.00	RELAY, BRK PRESS MOD VLV (AC–DELCO #14105967)	6–E4,45
91	Y	14100455	1	16.26	RELAY, BRK PRESS MOD VLV (BLACK) (5–WAY) (09.277) (AC–DELCO #15–8426)	
92–94	Y	12516332	1	45.57	RELAY, BRK PRESS MOD VLV (AC–DELCO #12516332)	5–L22,24

© 2000 GENERAL MOTORS SERVICE PARTS OPERATIONS–CHEVROLET–14Y

4.730 BOLT – BRACKET – CONNECTOR – COVER – INSULATOR – PIN – RELAY – VALVE, Electronic Brake Control (Con't)

95	Y 5.7J (LT5)	12516332	1	45.57	RELAY, BRK PRESS MOD VLV (AC–DELCO #12516332)	5–L22,24
86–91	Y	12513302	1	49.63	RELAY, BRK PRESS MOD VLV PUMP MOT (4 TERMINAL) (AC–DELCO #12513302)	6–E4,46
92–94	Y	12513302	1	49.63	RELAY, BRK PRESS MOD VLV PUMP MOT (4 TERMINAL) (AC–DELCO #12513302)	6–E4,46
95	Y 5.7J (LT5)	12513302	1	49.63	RELAY, BRK PRESS MOD VLV PUMP MOT (4 TERMINAL) (AC–DELCO #12513302)	6–E4,46
86–91	Y	12506759	1	1473.21	VALVE, BRK PRESS MOD (AC–DELCO #12506759)	6–E4,38
92–94	Y	12516323	1	1581.82	VALVE, BRK PRESS MOD (AC–DELCO #12516323)	6–E18,38
95	Y 5.7J (LT5)	12516323	1	1581.82	VALVE, BRK PRESS MOD (AC–DELCO #12516323)	6–E18,38
95	Y 5.7P (LT1)	12521971	1	1317.84	VALVE, BRK PRESS MOD (& TRACT CONT)	6–E18,38
96	Y	12525062	1	1224.00	VALVE, BRK PRESS MOD	6–E22,15
95	Y 5.7P (LT1)	12525660	1	258.06	VALVE, BRK PRESS MOD DAMPING (& TRACT CONT) (W/BOLT & O–RINGS)	6–E22,15
96	Y	12525660	1	258.06	VALVE, BRK PRESS MOD DAMPING (& TRACT CONT) (W/BOLT & O–RINGS)	6–E22,15

4.765 CONNECTOR – INSULATOR, Parking Brake Cable

84–96	Y	15714661	1	*1.60	CONNECTOR, PARK BRK CBL	6–G6,27
85–87	Y	14087650	1	DISCON	INSULATOR, PARK BRK CBL EQLSR CONN	

4.779 CABLE, Parking Brake

84–87	Y	14084024	1	26.01	CABLE, PARK BRK FRT	6–G6,18
88–96	Y	10113015	1	26.01	CABLE, PARK BRK FRT (INCLS CONNECTOR & INTERCABLE)	6–G8,25
84–87	Y	14048981	LH	24.23	CABLE, PARK BRK RR	6–G6,16
84–87	Y	14048982	RH	26.01	CABLE, PARK BRK RR	6–G6,26
88–95	Y	10284281	2	19.33	CABLE, PARK BRK RR	6–G8,24
96	Y	10284281	2	19.33	CABLE, PARK BRK RR	6–G8,24

4.784 SPRING, Parking Brake Cable

88–96	Y	10077272	1	16.35	SPRING, PARK BRK FRT CBL RTN	6–G8,11

4.785 BRACKET – CLIP – EQUALIZER – GUIDE – RETAINER – WASHER, Parking Brake Cable

88–96	Y	10132843	LH	5.10	BRACKET, PARK BRK CBL	6–F21,24
88–96	Y	10132844	RH	5.10	BRACKET, PARK BRK CBL	6–F21,24
88–96	Y	10052231	LH	4.23	BRACKET, PARK BRK RR CBL	6–G8,30
88–96	Y	10052232	RH	4.23	BRACKET, PARK BRK RR CBL	6–G8,23
84–87	Y	14087657	LH	DISCON	BRACKET, PK BRK RR CBL	
84–87	Y	14087658	RH	DISCON	BRACKET, PK BRK RR CBL	
88–93	Y	10069199	1	1.58	CLIP, PARK BRK FRT CBL	6–G8,13
94–96	Y07	10069199	1	1.58	CLIP, PARK BRK FRT CBL	6–G8,13
84–87	Y	15640543	1	6.12	EQUALIZER, PK BRK CBL (04.765)	6–G6,28
84–96	Y	14076152	1	.83	GUIDE, PARK BRK FRT CBL (ATTACH TO DRIVE LINE SUPT)	6–G6,37

© 2000 GENERAL MOTORS SERVICE PARTS OPERATIONS–CHEVROLET–14Y

4.785 BRACKET – CLIP – EQUALIZER – GUIDE – RETAINER – WASHER, Parking Brake Cable (Con't)

84–87	Y	14048986	1	DISCON	GUIDE, PK BRK FRT CBL (ATTACH TO LH FRAME SIDE MBR)	
85	Y	14087614	1	DISCON	GUIDE, PK BRK FRT CBL	
88	Y	10052230	2	DISCON	RETAINER, PARK BRK RR CBL	
86–96	Y	10267310	1	*.97	WASHER, PARK BRK FRT CBL (13.2X22.8X2.0, LCS, ZF) (06.164)	6–G8,18

4.805 GASKET – SEAL, Hydraulic Power Brake Booster

90–91	Y 5.7–8 (L98), 6–SPD M/TRANS (ML9)	10159582	1	3.98	GASKET, P/B BOOS (04.910)	6–F2,26
92–95	Y 5.7J (LT5)	10159582	1	3.98	GASKET, P/B BOOS (04.910)	6–F2,26
89–91	Y 5.7–8 (L98)	14089147	1	3.98	SEAL, P/B BOOS (ECM BRKT TO BOOS) (04.910)	6–F4,20
90–96	Y	10097675	1	2.91	SEAL, P/B BOOS (ECM BRKT TO FIRE WALL) (04.845)	6–G4,18
92–94	Y 5.7J (LT5)	10132872	1	2.91	SEAL, P/B BOOS (04.868) (USED TO SERVICE BOOSTER 10242104)	6–F2,21
92–94	Y 5.7P (LT1)	14089147	1	3.98	SEAL, P/B BOOS (ECM BRKT TO BOOS) (04.910)	6–F4,20
95–96	Y	10132872	1	2.91	SEAL, P/B BOOS (04.868)	6–F2,21

4.815 BOOT, Hydraulic Power Brake Booster

89–91	Y 5.7–8 (L98)	14085879	1	5.05	BOOT, P/B BOOS TIE ROD (04.906)	6–F4,16
90–91	Y 5.7–8 (L98), 6–SPD M/TRANS (ML9)	10132875	1	5.41	BOOT, P/B BOOS TIE ROD	6–E28,24
92	Y 5.7J (LT5)	10132875	1	5.41	BOOT, P/B BOOS TIE ROD	6–E28,24
92–94	Y 5.7P (LT1)	14085879	2	5.05	BOOT, P/B BOOS TIE ROD (04.906) (USED TO SERVICE BOOSTER 10253643)	6–F4,16
93–95	Y 5.7J (LT5)	10132875	1	5.41	BOOT, P/B BOOS TIE ROD	6–E28,24
95	Y 5.7P (LT1)	12524164	2	1.02	BOOT, P/B BOOS TIE ROD	6–F4,16
96	Y	12524164	2	1.02	BOOT, P/B BOOS TIE ROD	6–F4,16

4.845 NUT – SEAL – STUD, Hydraulic Power Brake Booster

89–91	Y	24576407	AR	*1.30	NUT, P/B BOOS (M8X1.25X11) (00.429)	6–G2,9
92–94	Y 5.7P (LT1)	12337995	2	*.46	NUT, P/B BOOS (M8X1.25X7.8, 15 OD, GM 510M STL, PC) (00.334) (AC–DELCO #12337995)	
92–94	Y	24576407	2	*1.30	NUT, P/B BOOS (M8X1.25X11) (00.429)	6–G2,9
95–96	Y	11515742	2	*.33	NUT, P/B BOOS (PRVG TORQ M8X1.25, 17.6 OD 9.0 THK) (10) (08.917)	
84–90	Y	26001594	AR	*2.45	SEAL (7.65MM I.D.X 1.63MM THICK) (HI TEMP SEAL) (06.674)	7–G12,11
85	Y	52350585	1	1.50	STUD, P/B BOOS VAC PIPE (3/8–16X1.52 LONG) (02.277)	1–G14,54

4.854 SEAL – STOP, Air Brake Compressor

90–91	Y 5.7–8 (L98), 6–SPD M/TRANS (ML9)	10132866	1	4.54	SEAL, P/B BOOS PWR PSTN	6–E28,11
92–95	Y 5.7J (LT5)	10132866	1	4.54	SEAL, P/B BOOS PWR PSTN	6–E28,11
89–91	Y 5.7–8 (L98)	14085881	1	3.74	STOP, P/B BOOS PWR PSTN (04.934)	6–F4,18

© 2000 GENERAL MOTORS SERVICE PARTS OPERATIONS–CHEVROLET–14Y

4.854 SEAL – STOP, Air Brake Compressor (Con't)

90–91	Y 5.7–8 (L98), 6–SPD M/TRANS (ML9)	10132873	1	2.81	STOP, P/B BOOS PWR PSTN	6–E28,22
92–94	Y 5.7J (LT5)	10132873	1	2.81	STOP, P/B BOOS PWR PSTN (USED TO SERVICE BOOSTER 10242104)	6–E28,22
92–95	Y 5.7P (LT1)	14085881	1	3.74	STOP, P/B BOOS PWR PSTN (04.934)	6–F4,18
95–96	Y	10132873	1	2.81	STOP, P/B BOOS PWR PSTN	6–E28,22
96	Y	14085881	1	3.74	STOP, P/B BOOS PWR PSTN (04.934)	6–F4,18

4.868 SEAL, Air Brake Compressor

89–91	Y 5.7–8 (L98)	14067551	1	9.69	SEAL, P/B BOOS OUTPUT ROD (04.924)	6–F4,11
90–91	Y 5.7J (LT5), 6–SPD M/TRANS (ML9)	10132869	1	8.67	SEAL, P/B BOOS OUTPUT ROD .	6–E28,15
90–91	Y 5.7–8 (L98), 6–SPD M/TRANS (ML9)	10132872	1	2.91	SEAL, P/B BOOS OUTPUT ROD .	6–E28,21
92–95	Y 5.7J (LT5)	10132869	1	8.67	SEAL, P/B BOOS OUTPUT ROD .	6–E28,15
92–94	Y 5.7P (LT1)	14067551	1	9.69	SEAL, P/B BOOS OUTPUT ROD (04.924)	6–F4,11

4.874 CONNECTOR, Brake Press Indicator

96	Y	12126014	1	14.48	CONNECTOR, SW–LOW AIR PRESS (3–WAY M) (W/LEADS) (02.530) (AC–DELCO #PT645)	

4.898 BOOSTER KIT – NUT – REPAIR KIT – STUD KIT, Vacuum Power Brake Booster

85–88	Y	14085883	1	64.36	BOOSTER KIT, P/B RPR (SERVICES BOOSTERS STAMPED 14080222)	
89	Y (5.7–8) M/TRNS (ML9) (1ST DES)	14085883	1	64.36	BOOSTER KIT, P/B RPR	
89	Y A/TRNS (MD8) (1ST DES) .	14085883	1	64.36	BOOSTER KIT, P/B RPR (USED ON VEH WITH VIN OF 112099 OR LESS)	
90	Y 5.7–8 (L98), 6–SPD M/TRANS (ML9)	10132876	1	DISCON	BOOSTER KIT, P/B RPR	
90–91	Y 4–SPD A/TRANS (MD8) ...	10159585	1	DISCON	BOOSTER KIT, P/B RPR	
91	Y 5.7–8 (L98), 6–SPD M/TRANS (ML9)	10159585	1	DISCON	BOOSTER KIT, P/B RPR	
92–95	Y 5.7J (LT5)	12509990	1	73.44	BOOSTER KIT, P/B RPR	6–F2,1
92	Y 4–SPD A/TRANS (MD8) ...	12509993	1	54.32	BOOSTER KIT, P/B RPR	6–F4,1
92–94	Y 5.7P (LT1)	12509993	1	54.32	BOOSTER KIT, P/B RPR (USED TO SERVICE BOOSTER 10253643)	6–F4,1
95	Y 5.7P (LT1)	12524166	1	56.61	BOOSTER KIT, P/B RPR	6–F4,2
96	Y	12524166	1	56.61	BOOSTER KIT, P/B RPR	6–F4,2
84–89	Y	11516071	2	*.25	NUT, P/B BOOS (08.917)	
85–88	Y	10132847	1	DISCON	REPAIR KIT, P/B BOOS (SERVICES BOOSTERS STAMPED 10097670)	
89	Y (5.7–8) M/TRNS (ML9) (2ND DES)	10132847	1	DISCON	REPAIR KIT, P/B BOOS (USED ON VEH WITH VIN OF 112100 OR MORE)	
89	Y A/TRNS (MD8) (2ND DES) .	10132847	1	DISCON	REPAIR KIT, P/B BOOS (USED ON VEH WITH VIN OF 112100 OR MORE)	

© 2000 GENERAL MOTORS SERVICE PARTS OPERATIONS–CHEVROLET - 14Y

4.898 BOOSTER KIT – NUT – REPAIR KIT – STUD KIT, Vacuum Power Brake Booster (Con't)

89	Y (5.7–8) M/TRNS (ML9)	10132847	1	DISCON	REPAIR KIT, P/B BOOS (USED ON VEH WITH VIN OF 112100 OR MORE)	
90–91	Y 4–SPD A/TRANS (MD8) ...	10159586	1	DISCON	STUD KIT, P/B BOOS (04.906) ...	
90–91	Y 5.7–8 (L98), 6–SPD M/TRANS (ML9)	10159586	1	DISCON	STUD KIT, P/B BOOS (04.906) ...	

4.901 BOOSTER, Vacuum Power Brake

NOTE: FOR 1984–1991 USAGE REFER TO POWER BOOSTER CHART GRP 4.901

84	Y	14046849	1	DISCON	BOOSTER, P/B (BOOSTER, P/B)	
85–88	Y	10097670	1	375.36	BOOSTER, P/B (AC–DELCO #178–509)	6–E27,22
89	Y A/TRNS (MD8)	10097670	1	375.36	BOOSTER, P/B (AC–DELCO #178–509)	6–E27,22
89	Y (5.7–8) M/TRNS (ML9)	10097670	1	375.36	BOOSTER, P/B (AC–DELCO #178–509)	6–E27,22
90–91	Y 4–SPD A/TRANS (MD8) ...	10097674	1	375.36	BOOSTER, P/B (AC–DELCO #178–515)	6–E27,22
90–91	Y 5.7–8 (L98), 6–SPD M/TRANS (ML9)	10097674	1	375.36	BOOSTER, P/B (AC–DELCO #178–515)	6–E27,22
90–91	Y 5.7J (LT5), 6–SPD M/TRANS (ML9)	10097697	1	DISCON	BOOSTER, P/B	
92–95	Y 5.7J (LT5)	10165315	1	511.24	BOOSTER, P/B (AC–DELCO #178–523)	6–F2,25
92–95	Y 5.7P (LT1)	10242104	1	326.40	BOOSTER, P/B (AC–DELCO #178–534)	6–F4,22
96	Y	10242104	1	326.40	BOOSTER, P/B (AC–DELCO #178–534)	6–F4,22

© 2000 GENERAL MOTORS SERVICE PARTS OPERATIONS–CHEVROLET–14Y

1984 POWER BOOSTER CHART

Y

B.C.I.A.

PRODUCTION	SERVICE	DIVISION	USAGE	COL. NO.
14046849	14046849	1	Y	1

	GROUP	1
SERVICE POWER BOOSTER.....	4.901	14046849
VACUUM CHECK VALVE.....	4.955	12521454
VACUUM CHECK VALVE GROMMET.....	4.955	14067550
OUTPUT ROD SEAL ASM.	4.659	14067551

1985 - 88 POWER BOOSTER CHART

Y

B.C.I.A.

PRODUCTION	SERVICE	DIVISION	USAGE	COL. NO.
14080222	10097670	1	Y	1

	GROUP	1
SERVICE POWER BOOSTER.....	4.901	10097670
POWER BOOSTER REPAIR KIT.....	4.898	14085883
BOOT,CONTROL VALVE.....	4.940	14085873
SEAL,VAC PISTON.....	4.924	14105943
VALVE,VAC CHECK.....	4.955	12521454
GROMMET,VAC CHECK VALVE.....	4.955	14067550
VALVE,CONTROL.....	4.940	14085875
SEAL,OUTPUT ROD.....	4.924	14067551
DIAPHRAGM VACUUM PISTON.....	4.922	14085876
WASHER,TIE ROD CONICAL SPRING.....	4.906	14085877
DISC,CONTROL VLV REACTION.....	4.934	14089149
BOOT,TIE ROD.....	4.906	14085879
SPRING,VAC PISTON RETURN.....	4.924	14085880
PLATE,VAC PISTON STOP.....	4.934	14085881
RETAINER,OUTPUT ROD SPRAG.....	4.926	14085882
ROD,SHELL TIE.....	4.906	14085884
GASKET,POWER BRK BOOS.....	4.910	14089147

© 2000 GENERAL MOTORS SERVICE PARTS OPERATIONS - CHEVROLET - 14Y

1989 POWER BOOSTER CHART

Y

B.C.I.A.

PRODUC-TION	SERVICE	DIVISION	USAGE	COL. NO.
14080222	10097670	1	Y (5.7-8)W/M.T.(ML9)(1ST DES)	1
14080222	10097670	1	Y W/A.T.(MD8)(1ST DES)	1
10097670	10097670	1	Y (5.7-8)W/M.T.(ML9)(2ND DES)	2
10097670	10097670	1	Y W/A.T.(MD8)(2ND DES)	2

NOTE: 1ST DES USED ON VEHICLES WITH VIN 112099 OR LESS. 2ND DES USED ON VEHICLES WITH VIN 112100 OR MORE.

	GROUP	1	2
SERVICE POWER BOOSTER	4.901	10097670	10097670
POWER BOOSTER REPAIR KIT	4.898	14085883	10132847
BOOT,CONTROL VALVE	4.940	14085873	14085373
SEAL,VAC PISTON	4.924	14105943	10132845
VALVE,VAC CHECK	4.955	12521454	12521454
GROMMET,VAC CHECK VALVE	4.955	14067550	14067550
VALVE,CONTROL	4.940	14085875	14085875
SEAL,OUTPUT ROD	4.924	14067551	14067551
DIAPHRAGM VACUUM PISTON	4.922	14085876	10132846
WASHER,TIE ROD CONICAL SPRING	4.906	14085877	14085877
DISC,CONTROL VLV REACTION	4.934	14089149	14089149
BOOT,TIE ROD	4.906	14085879	14085879
SPRING,VAC PISTON RETURN	4.924	14085880	14085880
PLATE,VAC PISTON STOP	4.934	14085881	14085881
RETAINER,OUTPUT ROD SPRAG	4.926	14085882	14085882
ROD,SHELL TIE	4.906	14085884	14085884
GASKET,POWER BRK BOOS	4.910	14089147	14089147
NUT,BOOS TO BRK PED BRKT @ DASH	4.910		22521550

© 2000 GENERAL MOTORS SERVICE PARTS OPERATIONS–CHEVROLET–14Y

1990 - 1991 POWER BOOSTER CHART

Y

B.C.I.A.

PRODUC-TION	SERVICE	DIVISION	USAGE	COL. NO.
10097674	10097674	1	Y (5.7-8)W/M.T.(ML9)	1
10097674	10097674	1	Y W/A.T.(MD8)	1

	GROUP	1
SERVICE POWER BOOSTER	4.901	10097674
POWER BOOSTER REPAIR KIT	4.898	10159585
BOOT,CONTROL VALVE	4.940	14085873
SEAL,VAC PISTON	4.924	10132845
VALVE,VAC CHECK	4.955	12521454
GROMMET,VAC CHECK VALVE	4.955	14067550
VALVE,CONTROL	4.940	10159581
SEAL,OUTPUT ROD	4.924	14067551
DIAPHRAGM VACUUM PISTON	4.922	10132846
WASHER,TIE ROD CONICAL SPRING	4.906	14085877
DISC,CONTROL VLV REACTION	4.934	14089149
BOOT,TIE ROD	4.906	14085879
SPRING,VAC PISTON RETURN	4.924	14085880
PLATE,VAC PISTON STOP	4.934	14085881
RETAINER,OUTPUT ROD SPRAG	4.926	14085882
ROD KIT,SHELL TIE	4.906	10159586
GASKET,POWER BRK BOOS	4.910	14089147
NUT,BOOS TO BRK PED BRKT @ DASH	4.910	22521550

1990 - 1991 POWER BOOSTER CHART

Y

B.C.I.A.

PRODUC-TION	SERVICE	DIVISION	USAGE	COL. NO.
10097697	10097697	1	Y (5.7J)W/M.T.(ML9)	1

	GROUP	1
SERVICE POWER BOOSTER	4.901	10097697
POWER BOOSTER REPAIR KIT	4.898	10132876
BOOT	4.815	10132875
RETAINER,FLTR	4.935	10132874
SUPPORT PLATE	4.854	10132873
FRONT SEAL	4.868	10132872
REAR SEAL	4.868	10132869
SPRING,RETURN	4.864	10132871
REACTION DISC	4.850	10132870
VALVE,CHECK	4.955	12521454
GROMMET,CHECK VLV	4.955	14067550
DIAPHRAGM,RR	4.942	10132868
DIAPHRAGM,FRT	4.942	10132860
RETAINER CLIP	4.935	10132867
SEAL,CTR PLT	4.854	10132866
BEARING,RING	4.924	10132865
RETAINER,PWR BOOS KEY	4.935	10132864
SILENCER	4.913	10132863
FILTER	4.913	10132862
PUSHROD,INPUT	4.924	10132861
VALVE BODY	4.902	10132859
GASKET,PWR BOOS TO FIREWALL	4.910	10159582
RETAINER,PWR BOOS FRT SEAL	4.910	10159583

© 2000 GENERAL MOTORS SERVICE PARTS OPERATIONS-CHEVROLET-14Y

4.902 VALVE BODY, Vacuum Power Brake Booster

89–91	Y (5.7J) M/TRNS (ML9)	10132859	1	DISCON	VALVE BODY	

4.906 BOOT – HOUSING – ROD UNIT – SILENCER – WASHER, Vacuum Power Brake Booster Cylinder

95	Y 5.7P (LT1)	12524163	1	2.75	BOOT, P/B BOOS RR HSG	
96	Y	12524163	1	2.75	BOOT, P/B BOOS RR HSG	
85–88	Y	14085879	2	5.05	BOOT, VAC PWR BRK BOOS TIE ROD	6–E27,16
95	Y 5.7P (LT1)	12524162	1	34.68	HOUSING, P/B BOOS RR	
96	Y	12524162	1	34.68	HOUSING, P/B BOOS RR	
85–88	Y	10159586	2	DISCON	ROD UNIT, PWR BOOS SHELL ROD TIE	
89	Y A/TRNS (MD8)	10159586	1	DISCON	ROD UNIT, PWR BOOS SHELL ROD TIE	
89	Y (5.7–8) M/TRNS (ML9)	10159586	1	DISCON	ROD UNIT, PWR BOOS SHELL ROD TIE	
90–91	Y 5.7–8 (L98), 6–SPD M/TRANS (ML9)	10132863	1	2.81	SILENCER, P/B BOOS AIR (04.913)	6–F2,8
92	Y 5.7J (LT5)	10132863	1	2.81	SILENCER, P/B BOOS AIR (04.913)	6–F2,8
93–95	Y 5.7J (LT5)	10132863	1	2.81	SILENCER, P/B BOOS AIR (04.913)	6–F2,8
85–91	Y 5.7–8 (L98)	14085877	2	2.85	WASHER, P/B BOOS TIE ROD SPR	6–E27,14
92–94	Y 5.7P (LT1)	14085877	2	2.85	WASHER, P/B BOOS TIE ROD SPR	6–E27,14

4.910 GASKET – SEAL, Power Brake Booster

84	Y	14046899	1	DISCON	GASKET	
85–88	Y	14089147	1	3.98	SEAL, P/B BOOS	6–E27,20

4.913 FILTER – SILENCER, Power Brake Booster Air Cleaner

89–90	Y (5.7J) M/TRNS (ML9)	10132862	2	2.45	FILTER, P/B BOOS AIR	6–E28,7
90–91	Y 5.7–8 (L98), 6–SPD M/TRANS (ML9)	10132862	1	2.45	FILTER, P/B BOOS AIR	6–E28,7
92–95	Y 5.7J (LT5)	10132862	2	2.45	FILTER, P/B BOOS AIR	6–E28,7
84	Y	17070814	1	12.65	FILTER, P/B BOOS VAC (AC–DELCO #179–983)	6–F23,25

4.918 RETAINER, Power Brake Booster (Vacuum)

90–91	Y 5.7–8 (L98), 6–SPD M/TRANS (ML9)	10159583	1	2.45	RETAINER, P/B BOOS FRT HSG SEAL (04.910)	
92–95	Y 5.7J (LT5)	10159583	1	2.45	RETAINER, P/B BOOS FRT HSG SEAL (04.910)	

4.922 DIAPHRAGM, Vacuum Power Brake Booster Cylinder

85–88	Y	14085876	1	21.23	DIAPHRAGM, P/B BOOS (SERVICES BOOSTERS STAMPED 14080222)	
89	Y (5.7–8) M/TRNS (ML9) (1ST DES)	14085876	1	21.23	DIAPHRAGM, P/B BOOS (USED ON VEH WITH VIN OF 112099 OR LESS)	
89	Y A/TRNS (MD8) (1ST DES) .	14085876	1	21.23	DIAPHRAGM, P/B BOOS (USED ON VEH WITH VIN OF 112099 OR LESS)	
90–91	Y 5.7–8 (L98)	10132846	1	21.27	DIAPHRAGM, P/B BOOS	6–E27,13
92–95	Y 5.7P (LT1)	10132846	1	21.27	DIAPHRAGM, P/B BOOS	6–E27,13
96	Y	10132846	1	21.27	DIAPHRAGM, P/B BOOS	6–E27,13
89	Y A/TRNS (MD8) (2ND DES) .	10132846	1	21.27	DIAPHRAGM, PWR BRK BOOS VAC PISTON (USED ON VEH WITH VIN OF 112100 OR MORE)	6–E27,13

© 2000 GENERAL MOTORS SERVICE PARTS OPERATIONS–CHEVROLET–14Y

4.922 DIAPHRAGM, Vacuum Power Brake Booster Cylinder (Con't)

89	Y (5.7–8) M/TRNS (ML9) (2ND DES)	10132846	1	21.27	DIAPHRAGM, PWR BRK BOOS VAC PISTON (USED ON VEH WITH VIN OF 112100 OR MORE)	6–E27,13
85–88	Y	10132846	1	21.27	DIAPHRAGM, VAC PWR BRK BOOS PSTN (SERVICES BOOSTERS STAMPED 10097670)	6–E27,13

4.924 BEARING – DISC – SEAL – SPRING, Vacuum Power Brake Booster Cylinder

92–95	Y 5.7J (LT5)	10132865	1	18.31	BEARING, P/B BOOS PWR PSTN SECD	6–E28,10
92–95	Y 5.7J (LT5)	12509991	1	4.39	DISC, P/B BOOS PWR PSTN REACTION	6–F2,19
85–88	Y	14105943	1	9.49	SEAL, P/B BOOS VAC PSTN	6–F4,6
89	Y (5.7–8) M/TRNS (ML9)	14105943	1	9.49	SEAL, P/B BOOS VAC PSTN (USE ON VEH WITH VIN 112099 OR LESS)	6–F4,6
89	Y A/TRNS (MD8)	14105943	1	9.49	SEAL, P/B BOOS VAC PSTN (USE ON VEH WITH VIN OF 112099 OR LESS)	6–F4,6
90–91	Y 5.7–8 (L98)	10132845	1	2.91	SEAL, P/B BOOS VAC PSTN	6–E27,6
92–94	Y 5.7P (LT1)	10132845	1	2.91	SEAL, P/B BOOS VAC PSTN (USE TO SERVICE BOOSTER 10253643)	6–E27,6
92–94	Y 5.7P (LT1)	14105943	1	9.49	SEAL, P/B BOOS VAC PSTN	6–F4,6
84–88	Y	14067551	1	9.69	SEAL, PWR BRK BOOS OUTPUT ROD	6–E27,11
89–90	Y (5.7–8) M/TRNS (ML9)	14067551	1	9.69	SEAL, PWR BRK BOOS OUTPUT ROD	6–E27,11
89	Y A/TRNS (MD8) (2ND DES) .	10132845	1	2.91	SEAL, PWR BRK BOOS VAC PSTN (USE ON VEH AFTER VIN 112099)	6–E27,6
89	Y (5.7–8) M/TRNS (ML9) (2ND DES)	10132845	1	2.91	SEAL, PWR BRK BOOS VAC PSTN (USE ON VEH AFTER VIN 112099)	6–E27,6
85–88	Y	10132845	1	2.91	SEAL, VAC PWR BRK BOOS PSTN (SERVICES BOOSTERS STAMPED 10097670)	6–E27,6
89–91	Y 5.7–8 (L98)	14085880	1	3.95	SPRING, P/B BOOS PWR PSTN RTN	6–E27,17
90–91	Y 5.7–8 (L98), 6–SPD M/TRANS (ML9)	10132871	1	7.95	SPRING, P/B BOOS PWR PSTN RTN (04.864)	6–E28,20
92–95	Y 5.7J (LT5)	10132871	1	7.95	SPRING, P/B BOOS PWR PSTN RTN (04.864)	6–E28,20
92–95	Y 5.7P (LT1)	14085880	1	3.95	SPRING, P/B BOOS PWR PSTN RTN	6–E27,17
96	Y	14085880	1	3.95	SPRING, P/B BOOS PWR PSTN RTN	6–E27,17
85–88	Y	14085880	1	3.95	SPRING, VAC PWR BRK BOOS PSTN RTN	6–E27,17

4.930 PIPE – TUBE, Vacuum Power Brake

85–91	Y	14087577	1	DISCON	PIPE, P/B BOOS VAC (04.845) ..	
84	Y	14056611	1	DISCON	TUBE, P/B BOOS	

© 2000 GENERAL MOTORS SERVICE PARTS OPERATIONS–CHEVROLET–14Y

4.931 FITTING – HOSE, Vacuum Power Brake

90–95	Y 5.7J (LT5)	336018	1	1.52	FITTING, P/B BOOS VAC TUBE (1/4–18 NPTF W/3/8 NIPPLE) (01.745)	1–J17,510
92–96	Y 5.7P (LT1)	336018	1	1.52	FITTING, P/B BOOS VAC TUBE (1/4–18 NPTF W/3/8 NIPPLE) (01.745)	1–J17,510
96	Y 5.7–5 (LT4)	336018	1	1.52	FITTING, P/B BOOS VAC TUBE (1/4–18 NPTF W/3/8 NIPPLE) (01.745)	1–J17,510
84	Y	14057031	1	DISCON	FITTING, PWR BRK BOOS TUBE	
89–91	Y 5.7–8 (L98)	10097651	1	DISCON	HOSE, P/B BOOS VAC (USE W/CHECK VLV 10117703)	
92	Y 5.7P (LT1)	10128396	1	DISCON	HOSE, P/B BOOS VAC	
93–95	Y 5.7P (LT1)	10214035	1	8.11	HOSE, P/B BOOS VAC	6–G4,2
96	Y	10214035	1	8.11	HOSE, P/B BOOS VAC	6–G4,2
88	Y	10097651	1	DISCON	HOSE, P/B BOOSTER (USE W/CHECK VLV 10117703)	

4.934 DISC – PLATE, Vacuum Power Brake Booster Reaction

89–91	Y 5.7–8 (L98)	14089149	1	2.06	DISC, P/B BOOS CONT VLV REACTION	6–E27,15
90–91	Y 5.7–8 (L98), 6–SPD M/TRANS (ML9)	10132870	1	DISCON	DISC, P/B BOOS CONT VLV REACTION (04.850)	
92–94	Y 5.7P (LT1)	14089149	1	2.06	DISC, P/B BOOS CONT VLV REACTION (USE TO SERVICE BOOSTER 10253643)	6–E27,15
95	Y 5.7P (LT1)	12524161	1	2.55	DISC, P/B BOOS CONT VLV REACTION	6–F4,15
96	Y	12524161	1	2.55	DISC, P/B BOOS CONT VLV REACTION	6–F4,15
85–88	Y	14089149	1	2.06	DISC, VAC PWR BOOS CONT VLV REACT	6–E27,15
85–88	Y	14085881	1	3.74	PLATE, VAC PWR BRK BOOS PSTN STOP	6–E27,18

4.935 RETAINER, Vacuum Power Brake Cylinder Relay Valve

90–91	Y 5.7J (LT5), 6–SPD M/TRANS (ML9)	10140680	1	6.12	RETAINER, BRK M/CYL SEAL	6–E28,12
92–95	Y 5.7J (LT5)	10140680	1	6.12	RETAINER, BRK M/CYL SEAL	6–E28,12
92–95	Y 5.7J (LT5)	10132864	1	9.64	RETAINER, P/B BOOS PWR PSTN REACTION	6–E28,9

4.940 BODY – BOOT – VALVE, Vacuum Power Brake Booster Valve Body

92–95	Y 5.7J (LT5)	12509988	1	31.11	BODY, P/B BOOS VLV (04.902)	6–F2,4
89–91	Y 5.7–8 (L98)	14085873	1	10.30	BOOT, VAC BRK BOOS CONT VLV	6–E27,5
92–94	Y 5.7P (LT1)	14085873	1	10.30	BOOT, VAC BRK BOOS CONT VLV (USE TO SERVICE BOOSTER 10253643)	6–E27,5
85–88	Y	14085873	1	10.30	BOOT, VAC PWR BRK BOOS CONT VLV	6–E27,5
85–88	Y	14085875	1	12.75	VALVE, VAC P/B BOOS CONT	6–E27,9
89	Y A/TRNS (MD8)	14085875	1	12.75	VALVE, VAC P/B BOOS CONT	6–E27,9
89	Y (5.7–8) M/TRNS (ML9)	14085875	1	12.75	VALVE, VAC P/B BOOS CONT	6–E27,9
90–91	Y 4–SPD A/TRANS (MD8)	10159581	1	DISCON	VALVE, VAC P/B BOOS CONT	
90–91	Y 5.7–8 (L98), 6–SPD M/TRANS (ML9)	10159581	1	DISCON	VALVE, VAC P/B BOOS CONT	
95	Y 5.7P (LT1)	12524165	1	26.96	VALVE, VAC P/B BOOS CONT	
96	Y	12524165	1	26.96	VALVE, VAC P/B BOOS CONT	

© 2000 GENERAL MOTORS SERVICE PARTS OPERATIONS–CHEVROLET–14Y

4.942 DIAPHRAGM, Cylinder Poppet

90–91	Y 5.7–8 (L98), 6–SPD M/TRANS (ML9)	10132868	1	21.27	DIAPHRAGM, P/B BOOS RR	6–E28,14
92–95	Y 5.7J (LT5)	10132868	1	21.27	DIAPHRAGM, P/B BOOS RR	6–E28,14
90–91	Y 5.7J (LT5), 6–SPD M/TRANS (ML9)	10132860	1	21.27	DIAPHRAGM, P/B BOOS SECD .	6–E28,5
92–95	Y 5.7J (LT5)	10132860	1	21.27	DIAPHRAGM, P/B BOOS SECD .	6–E28,5

4.955 GROMMET – VALVE, Vacuum Power Brake Booster Check

84–96	Y	14067550	1	6.40	GROMMET, P/B BOOS VAC CHK VLV	6–E27,8
84–96	Y	12521454	1	14.75	VALVE, P/B BOOS VAC CHK (AC–DELCO #179–981)	6–E27,7
92–94	Y 5.7P (LT1)	12509992	1	30.40	VALVE, P/B BOOS VAC CHK (04.902) (USE TO SERVICE BOOSTER 10253643)	6–F4,9

© 2000 GENERAL MOTORS SERVICE PARTS OPERATIONS–CHEVROLET–14Y

MICROFICHE INDEX

GROUPS 4.000 THRU 5.000

FICHE 6 OF 11

GROUP	DESCRIPTION	STARTING GRID LOCATION PARTS	ILLUSTRATIONS
–	GENERAL INFORMATION	1–A2	1–G2
–	ALPHABETICAL INDEX	1–B13	N.A.
4.000	BRAKES	6–A2	6–E2
5.000	BRAKES – REAR AXLE – PROPELLER SHAFT – WHEELS	6–C2	6–H2
–	OUT OF FICHE CALLS	N.A.	6–M22

6–C1

CHEVROLET
CHASSIS GROUP 5.000

BRAKES – REAR AXLE – PROPELLER SHAFT – WHEELS

ALPHABETICAL INDEX

A

ADJUSTER, Brake Shoe Adjusting 5.110 6–C13

B

BEARING, Differential Drive Pinion Front 5.447 6–C19
BEARING, Differential Drive Pinion 5.484 6–C22
BEARING, Differential Pinion 5.526 6–C27
BEARING, Differential Side Gear 5.536 6–C28
BEARING, Rear Axle Shaft 5.422 6–C18
BOLT KIT, Differential, with Cap 5.505 6–C22
BOLT, Differential Carrier 5.506 6–C24
BOLT, Front Propeller Shaft 5.546 6–D4
BOLT, Hub Front and Rear 5.813 6–D13
BOLT, Hub or Drum, Front and Rear Wheel 5.812 6–D13
BOLT, Pinion Shaft Lock 5.518 6–C26
BOLT, Propeller 5.544 6–D3
BOLT, Rear Axle Control Arm 5.380 6–C14
BOLT, Rear Axle Housing 5.398 6–C15
BOLT, Rear Axle Shaft Bearing 5.816 6–D14
BOLT, Rear Axle Tie Rod 5.418 6–C17
BOLT, Rear Axle 5.416 6–C16
BOLT, Rear Axle 5.830 6–D14
BOLT, Ring Gear 5.531 6–C28
BOLT, Universal Joint Bearing and Flange 5.586 6–D5
BOOT, Parking Brake Shoe 5.149 6–C14
BOOT, Rear Axle 5.416 6–C16
BRACKET, Rear Axle Control Arm 5.380 6–C14
BRACKET, Rear Axle Tie Rod 5.418 6–C17
BUMPER, Rear Axle 5.395 6–C15
BUSHING, Rear Axle Control Arm 5.381 6–C14
BUSHING, Rear Axle Tracking/Tracking 5.417 6–C17
BUSHING, Universal Joint Sleeve Yoke . 5.556 6–D5

C

CAM, Rear Axle Tracking/Tracking 5.417 6–C17
CAP, Hub Front and Rear 5.813 6–D13
CAP, Parking Brake Shoe Lever 5.158 6–C14
CAP, Tire Valve and Cover Lock 5.875 6–D15
CAP, Wheel Trim 5.858 6–D14
CARRIER, Differential, with Cap 5.505 6–C22
CASE, Differential (Ring Gear and Pinion) 5.510 6–C25
CLAMP, Rear Axle 5.416 6–C16
CLIP, Brake Shoe Anchor Pin 5.056 6–C13
CLUTCH PACK, Differential (Ring Gear and Pinion) 5.510 6–C25
CONNECTOR, Tire Pressure 5.890 6–D15
COVER, Rear Axle Housing 5.398 6–C15
CUP, Differential Drive Pinion Front 5.447 6–C19

D

DAMPENER, Propeller 5.544 6–D3
DISC KIT, Differential Clutch 5.511 6–C26
DISC, Differential Clutch 5.511 6–C26

E

EMBLEM, Wheel Cover Appearance ... 5.871 6–D15
END KIT, Rear Axle 5.416 6–C16
EXTENSION, Tire Valve and Cover Lock 5.875 6–D15

G

GAGE, Tire Pressure 5.890 6–D15
GEAR SET, Ring and Pinion 5.529 6–C27
GEAR, Differential Pinion 5.526 6–C27
GEAR, Differential Side 5.528 6–C27

H

HOLDER, Hub Front and Rear 5.813 6–D13
HUB, Rear Wheel 5.806 6–D11

© GENERAL MOTORS SERVICE PARTS OPERATIONS–CHEVROLET–14Y

I

INSULATOR, Front Propeller Shaft 5.546 6–D4
INSULATOR, Tire Pressure 5.890 6–D15

J

JOINT KIT, Propeller Shaft Universal Joint 5.548 6–D4

K

KNUCKLE, Rear Axle Control Arm 5.380 6–C14
KNUCKLE, Rear Wheel 5.806 6–D11

L

LEVER, Parking Brake Shoe 5.149 6–C14
LINK KIT, Rear Axle 5.416 6–C16
LOCKING KIT, Tire Valve and Cover Lock 5.875 6–D15
LUBRICANT, Rear Axle Housing Oil 5.392 6–C15

M

MAGNET, Axle Housing to Differential Carrier 5.508 6–C25
MODULE, Tire Pressure 5.890 6–D15

N

NUT KIT, Hub Front and Rear 5.813 6–D13
NUT, Differential Carrier 5.506 6–C24
NUT, Differential, with Cap 5.505 6–C22
NUT, Front Propeller Shaft 5.546 6–D4
NUT, Hub Front and Rear 5.813 6–D13
NUT, Parking Brake Shoe Lever 5.158 6–C14
NUT, Parking Brake Shoe 5.149 6–C14
NUT, Propeller Shaft Pinion Flange 5.595 6–D5
NUT, Rear Axle Control Arm 5.383 6–C14
NUT, Rear Axle Housing 5.398 6–C15
NUT, Rear Axle Tie Rod 5.418 6–C17
NUT, Rear Axle 5.416 6–C16
NUT, Rear Wheel 5.806 6–D11
NUT, Tire Valve and Cover Lock 5.875 6–D15

P

PAD KIT, Brake 5.017 6–C12
PIN, Brake Shoe Hold Down 5.043 6–C13
PIN, Parking Brake Shoe Lever 5.158 6–C14
PIN, Pinion Shaft Lock 5.518 6–C26
PINION, Differential Pinion 5.526 6–C27
PLATE KIT, Brake Flange/Backing 5.001 6–C12
PLATE, Brake Flange/Backing 5.001 6–C12
PLUG, Rear Axle or Final Drive Filler and Drain 5.400 6–C16

R

REPAIR KIT, Brake Shoe Hold Down ... 5.043 6–C13
RETAINER, Hub Front and Rear 5.813 6–D13
RETAINER, Rear Wheel 5.806 6–D11
RETAINER, Universal Joint Bearing and Flange 5.566 6–D5
RING KIT, Pinion Shaft Lock 5.518 6–C26
RING, Parking Brake Shoe Lever 5.158 6–C14
RING, Rear Axle U Joint 5.428 6–C19
ROD KIT, Rear Axle Tie 5.415 6–C16
ROD, Rear Axle Tie 5.415 6–C16
ROD, Rear Axle 5.416 6–C16
ROTOR, Front and Rear Wheel Brake .. 5.809 6–D11

S

SCREW, Differential Carrier 5.506 6–C24
SCREW, Parking Brake Shoe 5.149 6–C14
SEAL, Differential Drive Pinion Shaft Bearing 5.469 6–C21
SEAL, Rear Axle Shaft Bearing or Hub . 5.822 6–D14
SEAL, Rear Axle U Joint 5.430 6–C19
SEAL, Wheel Cap or Cover 5.864 6–D15
SENSOR, Tire Pressure 5.890 6–D15
SHAFT, Differential Planetary 5.515 6–C26
SHAFT, Differential Side Pinion 5.517 6–C26
SHAFT, Propeller 5.544 6–D3
SHAFT, Rear Axle Drive 5.420 6–C18
SHIELD, Brake Flange Plate 5.002 6–C12
SHIM KIT, Differential Bearing Adjusting 5.537 6–D2
SHIM KIT, Differential Drive Pinion 5.484 6–C22
SHIM KIT, Differential Rear Pinion Bearing 5.460 6–C20
SHIM, Differential Bearing Adjusting ... 5.537 6–D2
SHOE KIT, Brake 5.017 6–C12
SLINGER, Differential Drive Pinion 5.484 6–C22
SOCKET, Brake Shoe Adjusting Screw . 5.111 6–C13
SOCKET, Rear Axle Tie 5.415 6–C16
SOCKET, Rear Axle 5.416 6–C16
SPACER, Differential Drive Pinion Front and Center Bearing 5.453 6–C20
SPINDLE, Rear Wheel 5.806 6–D11
SPRING KIT, Brake Shoe Hold Down ... 5.043 6–C13
SPRING KIT, Brake Shoe Retractor 5.026 6–C13
SPRING, Brake Shoe Retractor 5.026 6–C13
STEM, Tire Valve and Cover Lock 5.875 6–D15
SUPPORT, Front Propeller Shaft 5.546 6–D4

T

TAG, Rear Axle or Final Drive Filler and Drain 5.400 6–C16

V

VENT, Rear Axle 5.387 6–C15

W

WASHER, Brake Shoe Anchor 5.075 6–C13
WASHER, Differential Carrier 5.506 6–C24
WASHER, Differential Pinion Thrust 5.542 6–D3
WASHER, Front Propeller Shaft 5.546 6–D4
WASHER, Hub or Drum, Front and Rear Wheel 5.812 6–D13
WASHER, Pinion Shaft Lock 5.518 6–C26
WASHER, Propeller Shaft Pinion Flange 5.595 6–D5
WASHER, Propeller Shaft Pinion 5.545 6–D4
WASHER, Rear Axle Control Arm 5.383 6–C14
WASHER, Rear Axle Tie Rod 5.418 6–C17
WASHER, Rear Axle 5.416 6–C16
WASHER, Rear Wheel 5.806 6–D11
WASHER, Tire Valve and Cover Lock .. 5.875 6–D15
WEIGHT, Wheel Balance 5.805 6–D8
WHEEL, Front or Rear 5.803 6–D6

Y

YOKE, Propeller Shaft Pinion 5.545 6–D4
YOKE, Rear Axle Shaft 5.425 6–C19

CHART INDEX

GROUP 5 GRID

ILLUS INDEX (GRP 5) 6–C7
REAR AXLE 6–C8
AXLE 6–C11

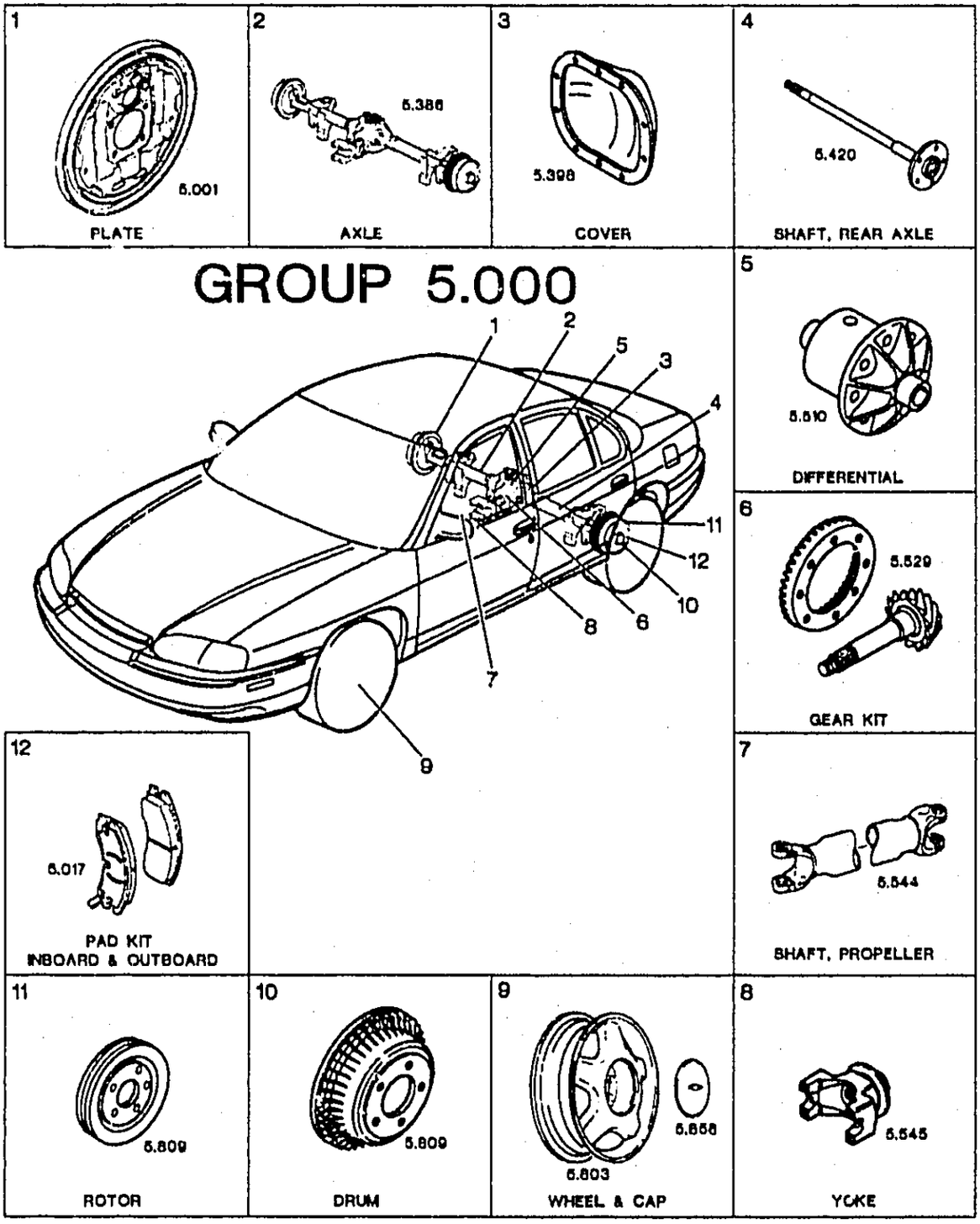

© 2000 GENERAL MOTORS SERVICE PARTS OPERATIONS-CHEVROLET-14Y

REAR AXLE FIELD IDENTIFICATION

Axles are manufactured by Buick,Chevrolet Buffalo,Chevrolet Warren,Chevrolet Gear and Axle,Oldsmobile,Pontiac and McKinnon. Divisional Manufacturer code letters will be metal stamped on the axle tube adjacent to the carrier for field identification.(See example) Metal stamped on right front inboard side,letters and numerals 1/4" high, 3" outboard of carrier or are located on a metal tag attached to cover bolt. Reference should be made to divisional service manuals for location on some models.

FIELD IDENTIFICATION

MINIMAL REQUIREMENTS FOR IDENTO-PLATE

NK — RATIO CODE

B — MANUFACTURER IDENTITY

218 — DAY OF YEAR AXLE BUILT

D — D - DAY SHIFT
N - NIGHT SHIFT

W — LIMITED SLIP IDENT. (G80 OPTION)
W - BORG WARNER
E - EATON
O - OLDS

MANUFACTURER IDENTITY

B - BUICK
O - OLDSMOBILE
P - PONTIAC
M - PONTIAC/CANADA
G - CHEVROLET GEAR AND AXLE
C - CHEVROLET BUFFALO
K - GM OF CANADA,ST. CATHERINES (MCKINNON)
W - CHEVROLET WARREN

MANUFACTURERS IDENTIFICATION WILL APPEAR IN THE DESCRIPTION COLUMN OF CATALOG.

EXAMPLE

82 A,B,C W/G80.....488333.....2 PLATE,DIFF(PRELOAD)(P-M TYPE)

AXLE IDENTIFICATION CODES

1984

3.07 RATIO - HE3 OPT	3.31 RATIO - GW4 OPT
4CC 4CF 4CH 4CJ 4CN 4CS 4YJ	4CB 4CK 4CR

1985

2.73 RATIO - GU2 OPT	2.87 RATIO - HK1 OPT	3.07 RATIO - G44 OPT
5YN	5YY	5YB 5YX 4YJ

1986

2.59 RATIO - GMI OPT	2.73 RATIO - GUR OPT	3.07 RATIO - GUU OPT
6YB	5YN	5YX 4YT 4YL

1987

2.59 RATIO - GMI OPT	2.73 RATIO - GUR OPT	3.07 RATIO - GUU OPT
6YB	5YN	5YX 4YL

1988

2.59 RATIO - GMI OPT	2.73 RATIO - GU2 OPT	3.07 RATIO - G44 OPT
8YA	8YB	8YC 8YH

1989

2.59 RATIO GM1 OPTION CODE	2.73 RATIO GH3 OPTION CODE	3.07 RATIO G44 OPTION CODE
8YA	8YB	8YC

3.33 RATIO GT7 OPTION CODE	3.54 RATIO GHO OPTION CODE
8YW	8YJ

1990

2.59 RATIO - GM1 OPT	2.73 RATIO - GU2 OPT	3.07 RATIO - G44 OPT
8YA CQT	8YB CQU	8YC CQW

3.33 RATIO - GT7 OPT	3.45 RATIO - GM8 OPT
8YW CQP	6YD CQR

© 2000 GENERAL MOTORS SERVICE PARTS OPERATIONS-CHEVROLET-14Y

AXLE IDENTIFICATION CODES

1991 - 92

2.59 RATIO - GM1 OPT	2.73 RATIO - GU2 OPT	3.07 RATIO - G44 OPT
CQT	CQU	CQW
3.45 RATIO - GM3 OPT	3.54 RATIO - GHO OPT	
CQR	CQX	

1993

2.59 RATIO - GM1 OPT	2.73 RATIO - GU2 OPT	3.07 RATIO - G44 OPT
CQT	CQU	CQW
3.45 RATIO - GM3 OPT		
CQR		

1994 - 1995

2.59 RATIO - GM1 OPT	3.33 RATIO - G95 OPT	3.07 RATIO - G44 OPT
CQT	CQY	CQW
3.45 RATIO - GM3 OPT		
CQR		

1996

2.59 RATIO - GM1 OPT	3.45 RATIO - GM3 OPT	3.07 RATIO - G44 OPT
CQT	QZZ	CQW

© 2000 GENERAL MOTORS SERVICE PARTS OPERATIONS-CHEVROLET-14Y

TRAILING AXLE

A TAG CONTAINING INFORMATION FOR AXLE CODE IDENTIFICATION IS LOCATED ON THE FRONT FACE OF THE LEFT HAND BRAKE HUB MOUNTING BRACKET.

© 2000 GENERAL MOTORS SERVICE PARTS OPERATIONS–CHEVROLET - 14Y

5.001 PLATE – PLATE KIT, Brake Flange/Backing

84	Y	10140515	LH	DISCON	PLATE KIT, RR BRK MTG (LESS SHOE & LINING)	
84	Y	10140516	RH	DISCON	PLATE KIT, RR BRK MTG (LESS SHOE & LINING)	
88–96	Y	10052211	LH	50.49	PLATE, RR BRK CLPR MT	6–G11,2
88–96	Y	10052212	RH	50.49	PLATE, RR BRK CLPR MT	6–G11,2
85–87	Y	14085891	LH	DISCON	PLATE, RR BRK MT	
85–87	Y	14085892	RH	DISCON	PLATE, RR BRK MT	

5.002 SHIELD, Brake Flange Plate

84–87	Y	14046905	2	DISCON	SHIELD, FRT BRK	
84–87	Y	14055965	LH	DISCON	SHIELD, RR BRK	
84–87	Y	14055966	RH	DISCON	SHIELD, RR BRK	

5.017 PAD KIT – SHOE KIT, Brake

84–87	Y	14091367	1	96.12	PAD KIT, FRT DISC BRK (PAD KIT, FRT DISC BRK) (AC–DELCO #171–733)	6–F15,7
84–87	Y STINGRAY	18028878	AR	70.54	PAD KIT, FRT DISC BRK (VEHICLES ORIGINALLY EQUIPPED WITH SEMI–METALLIC DISC BRAKE PADS) (AC–DELCO #17D294M) (DURASTOP)	
88–95	Y	12518935	1	199.61	PAD KIT, FRT DISC BRK (AC–DELCO #171–735)	6–F18,4
88–96	Y STINGRAY	18028995	AR	157.38	PAD KIT, FRT DISC BRK (VEHICLES ORIGINALLY EQUIPPED WITH SEMI–METALLIC DISC BRAKE PADS) (AC–DELCO #17D412M) (DURASTOP)	6–F18,4
88–92	YY	18037564	AR	181.14	PAD KIT, FRT DISC BRK (RECOMMENDED REPLACEMENT WITH SEMI–METALLIC DISC BRAKE PADS) (AC–DELCO #17D412MHP) (DURASTOP PERFORMANCE)	6–F18,4
96	Y HVY DUTY PWR BRK (J55), (EXC COLLECTORS EDITION (Z15), GRAND SPORT EDITION (Z16)	12518935	1	199.61	PAD KIT, FRT DISC BRK (AC–DELCO #171–735)	6–F18,4
96	Y HVY DUTY PWR BRK (J55), COLLECTORS EDITION (Z15), GRAND SPORT EDITION (Z16)	12528691	1	213.16	PAD KIT, FRT DISC BRK (AC–DELCO #171–759)	6–F18,4
84–87	Y	12514409	1	100.86	PAD KIT, RR DISC BRK (PAD KIT, RR PARK BRK DISC) (AC–DELCO #171–736)	6–G6,6
84–87	Y	14091368	1	80.38	PAD KIT, RR DISC BRK (PAD KIT, RR DISC BRK) (AC–DELCO #14091368)	6–F15,7
84–87	Y STINGRAY	18028879	AR	70.06	PAD KIT, RR DISC BRK (VEHICLES ORIGINALLY EQUIPPED WITH SEMI–METALLIC DISC BRAKE PADS) (AC–DELCO #17D295M) (DURASTOP)	

© 2000 GENERAL MOTORS SERVICE PARTS OPERATIONS–CHEVROLET–14Y

5.017 PAD KIT – SHOE KIT, Brake (Con't)

88	Y	10112657	1	100.33	PAD KIT, RR DISC BRK (PAD KIT, RR DISC BRK) (AC–DELCO #171–724)	
88–96	Y STINGRAY	18028996	AR	70.94	PAD KIT, RR DISC BRK (VEHICLES ORIGINALLY EQUIPPED WITH SEMI–METALLIC DISC BRAKE PADS) (AC–DELCO #17D413M) (DURASTOP)	6–F23,27
88–92	YY	18037565	AR	116.00	PAD KIT, RR DISC BRK (RECOMMENDED REPLACEMENT WITH SEMI–METALLIC DISC BRAKE PADS) (AC–DELCO #17D413MHP) (DURASTOP PERFORMANCE)	6–F23,27
89–96	Y	10132836	1	62.00	PAD KIT, RR DISC BRK (FOA) (AC–DELCO #10132836)	6–F23,27
84–85	Y	18039839	1		SHOE KIT, RR PARK BRK (AC–DELCO #17556B) (DURASTOP)	
84–85	Y	18039845	1		SHOE KIT, RR PARK BRK (REMAN) (AC–DELCO #14556B) (DURASTOP)	

5.026 SPRING – SPRING KIT, Brake Shoe Retractor

84–87	Y STINGRAY) (COMBI AXLE KIT	18034926	AR	32.86	SPRING KIT, RR BRK SHOE ADJR & RTN (PARKING BRAKE HARDWARE KIT) (AC–DELCO #18K552) (DURASTOP)	
84–87	Y	14067577	4	DISCON	SPRING, RR DISC BRK PAD RTN	

5.043 PIN – REPAIR KIT – SPRING KIT, Brake Shoe Hold Down

84–87	Y	14067628	4	2.81	PIN, RR DISC BRK PAD HOLDN	6–G6,11
84–87	Y	14069865	1	DISCON	REPAIR KIT, RR PARKING DISC BRK	
84–85	Y	14091366	2	10.65	SPRING KIT, BRK PAD ANTI–RATTLE	

5.056 CLIP, Brake Shoe Anchor Pin

84–87	Y	14067629	4	DISCON	CLIP, RR DISC BRK PAD HOLDN	

5.075 WASHER, Brake Shoe Anchor

85–96	Y	14080254	4	1.10	WASHER, FRT BRK CLPR MTG PLT (28MM OD X 15.75MM ID) (04.665)	6–F15,12
93–96	Y	12518940	2	2.00	WASHER, FRT BRK CLPR MTG PLT (.31X.32X.045, STL, ZC) (04.665)	7–E16,13

5.110 ADJUSTER, Brake Shoe Adjusting

84–87	Y	14069864	2	DISCON	ADJUSTER, RR PARKING DISC BRK	

5.111 SOCKET, Brake Shoe Adjusting Screw

84–87	Y	14067578	2	3.11	SOCKET, RR DISC PAD ADJ SCREW	6–G6,5

© 2000 GENERAL MOTORS SERVICE PARTS OPERATIONS–CHEVROLET–14Y

5.149 BOOT – LEVER – NUT – SCREW, Parking Brake Shoe

84–87	Y	14067574	2	5.50	BOOT, RR DISC BRK PARK LVR	6–G6,10
89–96	Y	10132841	2	6.63	LEVER, RR PARK BRK	6–F23,4
84–87	Y	14067575	LH	DISCON	LEVER, W/STRUT, RR DISC BRK	
84–87	Y	14067576	RH	DISCON	LEVER, W/STRUT, RR DISC BRK	
84–87	Y	14067579	2	2.04	NUT, RR DISC PAD ADJ SCREW (05.111)	6–G6,4
84–87	Y	14067580	2	2.14	SCREW, RR DISC PAD ADJ (05.110)	6–G6,3

5.158 CAP – NUT – PIN – RING, Parking Brake Shoe Lever

88–96	Y	10112647	2	3.47	CAP, RR PARK BRK ACTR LVR PIV PIN (04.665)	6–F23,7
88–96	Y	12337995	2	*.46	NUT, RR PARK BRK ACTR LVR (M8X1.25X7.8, 15 OD, GM 510M STL, PC) (00.334) (AC–DELCO #12337995)	6–F21,2
96	Y HVY DUTY PWR BRK (J55), (EXC COLLECTORS EDITION (Z15), GRAND SPORT EDITION (Z16)	12337995	2	*.46	NUT, RR PARK BRK ACTR LVR (M8X1.25X7.8, 15 OD, GM 510M STL, PC) (00.334) (AC–DELCO #12337995)	6–F21,2
89–96	Y	18020428	2	11.06	PIN, RR PARK BRK LVR PIV (AC–DELCO #179–980)	6–F23,6
88–96	Y	10112646	2	1.28	RING, RR PARK BRK ACTR LVR RET (04.665)	6–F23,5

5.380 BOLT – BRACKET – KNUCKLE, Rear Axle Control Arm

84	Y	11508540	1	*.72	BOLT, RR WHL SPDL ROD (M10X1.5X75) 10.9 PZOR (08.900)	7–H18,50
84–87	Y	11508540	1	*.72	BOLT, RR WHL SPDL ROD (8900) (08.900)	7–H18,50
84–87	Y	14060165	2	DISCON	BRACKET, RR WHL SPDL ROD	
88	Y	14105134	2	DISCON	BRACKET, RR WHL SPDL ROD	
89–96	Y	10097802	2	13.67	BRACKET, RR WHL SPDL ROD	7–H21,23
84–85	Y	14105903	LH	DISCON	KNUCKLE, RR SUSP	
84–85	Y	14105904	RH	DISCON	KNUCKLE, RR SUSP	
86–87	Y	14084093	LH	DISCON	KNUCKLE, RR SUSP	
86–87	Y	14084094	RH	DISCON	KNUCKLE, RR SUSP	

5.381 BUSHING, Rear Axle Control Arm

84–87	Y H.D. SUSP (FE7)	14066929	2	24.79	BUSHING, DIFF CARR (BLACK)	6–H4,33
89–90	Y 3.33R (GT7)	14066929	2	24.79	BUSHING, DIFF CARR (BLACK)	6–H4,33
84–87	Y 3.07R (G44), 2.73R (GU2) (EXC H.D. SUSPFE7)	14075762	2	21.73	BUSHING, DIFF CARR SUPT	6–H4,33
88–93	Y 2.73R (GU2)	14075762	2	21.73	BUSHING, DIFF CARR SUPT	6–H4,33
88–96	Y 2.59R (GM1), 3.07R (G44)	14075762	2	21.73	BUSHING, DIFF CARR SUPT	6–H4,33
90–96	Y 3.45R (GM3)	14066929	2	24.79	BUSHING, DIFF CARR SUPT	6–H4,33
94	Y G95	14066929	2	24.79	BUSHING, DIFF CARR SUPT	6–H4,33

5.383 NUT – WASHER, Rear Axle Control Arm

84–90	Y	10255857	4	*1.75	NUT, ENG TO FRT SUSP FRM (08.917)	7–E4,45
84–90	Y	11516383	4	*1.20	NUT, FRT UPR & LWR CONT ARM (08.917)	
90	Y	14047778	4	.63	WASHER, RR AXLE CONT ARM (06.178)	

© 2000 GENERAL MOTORS SERVICE PARTS OPERATIONS–CHEVROLET–14Y

5.387 VENT, Rear Axle

84–96	Y	3738462	1	9.08	VENT, R/AXL HSG	6–H4,19

5.392 LUBRICANT, Rear Axle Housing Oil

92–96	Y	12345977	AR	*4.70	LUBRICANT, R/AXL (LUBRICANT, RR AXL, SAE 80W–90, GL–5 (23 OZ)) (08.800)	
93–96	Y	1052358	AR	*6.70	LUBRICANT, R/AXL FRICT MODIFIER (LIMITED–SLIP DIFFERENTIAL) (4 OZ) (08.800)	

5.395 BUMPER, Rear Axle

84–87	Y	14044577	2	DISCON	BUMPER, RR SUSP JOUNCE	

5.398 BOLT – COVER – NUT, Rear Axle Housing

84–87	Y	10117731	2	1.74	BOLT, DIFF CARR CVR (05.535)	6–H8,17
85–87	Y M/TRNS	14091419	5	4.15	BOLT, DIFF CARR CVR	6–H4,17
88–93	Y 2.73R (GU2)	10117731	2	1.74	BOLT, DIFF CARR CVR (HFH, M8X1.25X78 TRI–LOBE TAP, 17.6 OD, STL) (05.535)	6–H8,17
88–96	Y 2.59R (GM1), 3.07R (G44)	10117731	2	1.74	BOLT, DIFF CARR CVR (HFH, M8X1.25X78 TRI–LOBE TAP, 17.6 OD, STL) (05.535)	6–H8,17
88–93	Y 2.73R (GU2)	10117732	4	1.28	BOLT, DIFF CARR CVR (HFH, M8X1.25X30 TRI–LOBE TAP, 17.6 OD, STL) (05.535)	6–H8,17
88–96	Y 2.59R (GM1), 3.07R (G44)	10117732	4	1.28	BOLT, DIFF CARR CVR (HFH, M8X1.25X30 TRI–LOBE TAP, 17.6 OD, STL) (05.535)	6–H8,17
88	Y 3.07R (G44), 8.50 DIA RNGR (G87)	14091419	5	4.15	BOLT, DIFF CARR CVR	6–H4,17
89–90	Y 3.33R (GT7)	14091419	5	4.15	BOLT, DIFF CARR CVR	6–H4,17
89–92	Y 3.54R (GH0)	14091419	5	4.15	BOLT, DIFF CARR CVR	6–H4,17
90–96	Y 3.45R (GM3)	14091419	5	4.15	BOLT, DIFF CARR CVR	6–H4,17
94	Y G95	14091419	5	4.15	BOLT, DIFF CARR CVR	6–H4,17
92–93	Y 2.73R (GU2)	11515784	2	*.92	BOLT, R/AXL HSG CVR (12X1.75X75 10.9M) (HEX FLG HD) (08.900)	
92–96	Y 2.59R (GM1), 3.45R (GM3), 3.07R (G44)	11515784	2	*.92	BOLT, R/AXL HSG CVR (12X1.75X75 10.9M) (HEX FLG HD) (08.900)	
94–96	Y 2.59R (GM1), 3.07R (G44)	10098202	2	5.61	BOLT, R/AXL HSG CVR (05.418)	
94	Y G95	11515784	2	*.92	BOLT, R/AXL HSG CVR (12X1.75X75 10.9M) (HEX FLG HD) (08.900)	
84	Y (EXC H.D.SUSP)	14079976	1	DISCON	COVER, DIFF CARR (W/BLUE BUSHINGS)	
84	Y H .D .SUSP	14079977	1	DISCON	COVER, DIFF CARR (W/BLACK BUSHINGS)	
85–86	Y A/TRNS (EXC H.D. SUSP FE7)	14079976	1	DISCON	COVER, DIFF CARR (W/BLUE BUSHINGS)	
85–87	Y A/TRNS, H .D. SUSP (FE7)	14079977	1	DISCON	COVER, DIFF CARR (W/BLACK BUSHINGS)	
85–86	Y M/TRNS (H.D. SUSP FE7)	14084008	1	DISCON	COVER, DIFF CARR (W/BLACK BUSHINGS)	
85–86	Y M/TRNS (EXC H.D. SUSP FE7)	14087653	1	DISCON	COVER, DIFF CARR (W/BLUE BUSHINGS)	
87	Y (EXC 8.50 DIA RNGR) (G87)	14079976	1	DISCON	COVER, DIFF CARR (W/BLUE BUSHINGS)	
87	Y 8.50 DIA. RNGR. (G87)	14084008	1	DISCON	COVER, DIFF CARR (W/BLACK BUSHINGS)	
88–93	Y 2.73R (GU2)	14105115	1	581.40	COVER, R/AXL HSG (W/MT MBR)	6–H4,16
88–96	Y 2.59R (GM1), 3.07R (G44)	14105115	1	581.40	COVER, R/AXL HSG (W/MT MBR)	6–H4,16

© 2000 GENERAL MOTORS SERVICE PARTS OPERATIONS–CHEVROLET–14Y

5.398 BOLT – COVER – NUT, Rear Axle Housing (Con't)

89–92	Y 3.54R (GH0)	14105117	1	581.40	COVER, R/AXL HSG (W/MT MBR)	6–H4,20
90–96	Y 3.45R (GM3)	14105117	1	581.40	COVER, R/AXL HSG (W/MT MBR)	6–H4,20
94	Y G95	14105117	1	581.40	COVER, R/AXL HSG (W/MT MBR)	6–H4,20
88	Y 3.07R (EXC G80)	14105115	1	581.40	COVER, W/MT MBR, DIFF CARR	6–H4,16
88	Y 3.07R (G44), 8.50 DIA RNGR	14105117	1	581.40	COVER, W/MT MBR, DIFF CARR	6–H4,20
89–90	Y 3.33R (GT7)	14105117	1	581.40	COVER, W/MT MBR, DIFF CARR	6–H4,20
92	Y	11508101	2	*1.06	NUT, R/AXL HSG CVR (M12X1.75X12 (10) 1050) (08.917)	

5.400 PLUG – TAG, Rear Axle or Final Drive Filler and Drain

84–96	Y	14024358	1	10.30	PLUG, R/AXL HSG FILL	6–H4,18
84–96	Y	12512590	1	.83	TAG, R/AXL LUB INFO	

5.415 ROD – ROD KIT – SOCKET, Rear Axle Tie

84–95	Y	26036730	1	320.28	ROD KIT, R/AXL TIE	
84–95	Y	17999723	2	68.34	ROD, RR WHL SPDL LWR CONT	7–H18,64
96	Y	17999723	2	68.34	ROD, RR WHL SPDL LWR CONT	7–H18,64
84–95	Y	17999720	2	68.34	ROD, RR WHL SPDL UPR CONT	7–H18,68
96	Y	17999720	2	68.34	ROD, RR WHL SPDL UPR CONT	7–H18,68
84–91	Y	14091319	2	91.04	SOCKET, RR AXLE TOE LINK OTR	7–H18,8

5.416 BOLT – BOOT – CLAMP – END KIT – LINK KIT – NUT – ROD – SOCKET – WASHER, Rear Axle

84–96	Y	11516331	6	1.35	BOLT, RR WHL SPDL CONT ROD BRKT (08.900)	7–H18,67
84–96	Y	11507007	2	8.10	BOLT, RR WHL SPDL ROD (M16X2X110, 9.8 POR) (08.900)	7–H18,62
84–96	Y	11515784	8	*.92	BOLT, RR WHL SPDL ROD (12X1.75X75 10.9M) (HEX FLG HD) (08.900)	7–H18,65
84–96	Y	14048990	4	5.87	BOLT, RR WHL SPDL ROD (M16X2X100, 9.8)	7–H18,63
84–96	Y	14060162	2	14.25	BOLT, RR WHL SPDL ROD ADJ (M14X2X95)	7–H18,48
92	Y 5.7J (LT5)	10098202	2	5.61	BOLT, RR WHL SPDL ROD BRKT (05.418)	7–H21,20
93–96	Y 3.45R (GM3)	10098202	2	5.61	BOLT, RR WHL SPDL ROD BRKT (05.418)	7–H21,20
92–96	Y	7844424	1	15.86	BOOT, RR SUSP ADJ LINK (RR TOE LINK SEAL)	7–I2,70
92–94	Y	7841062	1	6.68	CLAMP, RR SUSP ADJ LINK BOOT (45.5 MM DIA)	
92–96	Y	7844100	1	1.94	CLAMP, RR SUSP ADJ LINK BOOT (ROD BOOT, BLK OX COATING) (19MM)	7–I2,88
95–96	Y	26036823	1	2.50	CLAMP, RR SUSP ADJ LINK BOOT (RETAINING SEAL) (44MM)	7–I2,8
92–94	Y 5.7P (LT1), 5.7J (LT5)	26050222	2	51.02	END KIT, RR SUSP ADJ LINK OTR (05.415) (AC–DELCO #36–9515)	7–I2,5
95–96	Y	26048449	1	95.63	END KIT, RR SUSP ADJ LINK OTR (05.415)	7–I2,5
92–96	Y	26033818	1	230.52	LINK KIT, RR SUSP ADJ	7–I2,10
92	Y	26017267	2	6.95	NUT, RR SUSP ADJ LINK (M14X1.5X11, 510M (5), ZC) (06.526)	

© 2000 GENERAL MOTORS SERVICE PARTS OPERATIONS–CHEVROLET–14Y

5.416 BOLT – BOOT – CLAMP – END KIT – LINK KIT – NUT – ROD – SOCKET – WASHER, Rear Axle (Con't)

84–95	Y	11516211	2	*1.10	NUT, RR WHL SPDL CONT ROD (HEX M16X2X14.5) (08.915)	7–H18,55
89	Y	10255857	4	*1.75	NUT, RR WHL SPDL CONT ROD (08.917)	
84–95	Y	11516211	4	*1.10	NUT, RR WHL SPDL ROD (HEX M16X2X14.5) (08.915)	7–H18,55
85–94	Y	11508101	4	*1.05	NUT, RR WHL SPDL ROD (M12X1.75X12 (10) 1050) (08.917)	7–H21,64
95–96	Y	11502813	2	4.65	NUT, RR WHL SPDL ROD (M12X1.75X13.4 25.6OD) (HEX FLGD PREV TORQ CAD) (08.917)	
84–96	Y	14060164	2	*1.75	NUT, RR WHL SPDL ROD ADJ (HEX 14X2X16, PE 10) (08.915)	7–H18,57
84–89	Y	10098131	LH	70.13	ROD, RR WHL SPDL (IF USE ON 1989 & PRIOR, BUSHING–WHL SPDL ROD IS NOT REQ, MAY BE DISCARDED)	7–H18,45
84–89	Y	10098132	RH	70.13	ROD, RR WHL SPDL (ON 1989 & PRIOR, BUSHING 14060166 IS NOT REQ, MAY BE DISCARDED)	7–H18,45
90–96	Y	10098131	LH	70.13	ROD, RR WHL SPDL	7–H18,45
90–96	Y	10098132	RH	70.13	ROD, RR WHL SPDL	7–H18,45
84–91	Y	10181305	1	121.38	SOCKET, RR TOE ADJ W/RODS (CENTER)	7–H18,9
84–96	Y	14044574	8	.85	WASHER, RR WHL SPDL ROD (TO KNU UPR & LWR ATCH TO BODY)	7–H18,69
84–96	Y	14047725	2	.53	WASHER, RR WHL SPDL ROD (TO KNU FROM DIFF CARR)	7–H18,60

5.417 BUSHING – CAM, Rear Axle Tracking/Tracking

84–88	Y	14060166	4	4.44	BUSHING, RR WHL SPDL ROD	7–H18,47
84–96	Y	14060163	2	3.47	CAM, RR WHL SPDL ROD ADJ	7–H18,56

5.418 BOLT – BRACKET – NUT – WASHER, Rear Axle Tie Rod

90–96	Y	14050422	AR	2.15	BOLT, R/AXL TIE ROD (HWH M10.0X1.50X40, 26THD, 10.9 PO) (08.900)	7–H18,10
84	Y	14050422	AR	2.15	BOLT, RR AXLE TIE ROD (08.900)	7–H18,10
88–96	Y	10181209	2	27.29	BRACKET, RR WHL SPDL CONT ROD	7–H21,63
84–87	Y	14071742	2	DISCON	BRACKET, SPDL CONT ROD	
84–95	Y	14050089	1	1.80	NUT, R/AXL TIE ROD (HEX SLOTTED M12X1.75X13)	7–H18,52
92–96	Y	26017267	1	6.95	NUT, R/AXL TIE ROD (M14X1.5X11, 510M (5), ZC) (06.526)	7–I2,90
96	Y	14050089	2	1.80	NUT, R/AXL TIE ROD (HEX SLOTTED M12X1.75X13)	7–H18,52
84–87	Y	10255857	4	*1.75	NUT, RR WHL SPDL ROD BRKT (08.917)	
89–93	Y	11508101	4	*1.05	NUT, RR WHL SPDL ROD BRKT (M12X1.75X12 (10) 1050) (08.917)	7–H18,24
94–96	Y	11508101	2	*1.05	NUT, RR WHL SPDL ROD BRKT (M12X1.75X12 (10) 1050) (08.917)	7–H18,24
84–96	Y	10267310	2	*.97	WASHER, R/AXL TIE ROD (06.164)	7–I2,11

© 2000 GENERAL MOTORS SERVICE PARTS OPERATIONS–CHEVROLET–14Y

5.418 BOLT – BRACKET – NUT – WASHER, Rear Axle Tie Rod (Con't)

84–86	Y	473539	2	*.63	WASHER, RR AXLE TIE ROD (FL 3.50X13.2 ID) (00.002)	7–H18,53
89	Y	14008279	2	DISCON	WASHER, RR WHL SPDL ROD (00.831)	

5.420 SHAFT, Rear Axle Drive

84	Y (2ND DES)	14091459	LH	102.20	SHAFT, R/AXL (05.425) (IDENT BY PART # STAMPED ON UNDER SI OF CARR CVR–14087675–6–7–8)	6–H4,11
84	Y (2ND DES)	14091460	RH	104.24	SHAFT, R/AXL (05.425) (IDENT BY PART # STAMPED ON UNDER SI OF CARR CVR–14087675–6–7–8)	6–H4,40
85–87	Y A/TRNS	14091459	LH	102.20	SHAFT, R/AXL (05.425)	6–H4,11
85–87	Y A/TRNS	14091460	RH	104.24	SHAFT, R/AXL (05.425)	6–H4,40
88	Y 3.07R (G44), (EXC 8.50 DIAMETER R/GR (G87)	14091459	LH	102.20	SHAFT, R/AXL (05.425)	6–H4,11
88–93	Y 2.73R (GU2)	14091459	LH	102.20	SHAFT, R/AXL (6.74") (05.425)	6–H4,11
88–96	Y 2.59R (GM1)	14001459	LH	102.20	SHAFT, R/AXL (6.74") (05.425)	6–H4,11
88	Y 3.07R (G44), (EXC 8.50 DIAMETER R/GR (G87)	14091460	RH	104.24	SHAFT, R/AXL (05.425)	6–H4,40
88–93	Y 2.73R (GU2)	14091460	RH	104.24	SHAFT, R/AXL (7.27") (05.425)	6–H4,40
88–96	Y 2.59R (GM1)	14091460	RH	104.24	SHAFT, R/AXL (7.27") (05.425)	6–H4,40
89–92	Y 3.54R (GH0)	12529662	RH	261.63	SHAFT, R/AXL (05.425)	6–H8,11
89–96	Y 3.45R (GM3)	12529662	RH	261.63	SHAFT, R/AXL (05.425)	6–H8,11
89–92	Y 3.54R (GH0)	12529663	LH	261.63	SHAFT, R/AXL (05.425)	3–H8,40
89–96	Y 3.45R (GM3)	12529663	LH	261.63	SHAFT, R/AXL (05.425)	6–H8,40
89–96	Y 3.07R (G44)	14091459	LH	102.20	SHAFT, R/AXL (6.74") (05.425)	6–H4,11
89	Y 3.33R (GT7), 3.07R (G44)	14091460	RH	104.24	SHAFT, R/AXL (05.425)	6–H4,40
90–96	Y 3.07R (G44)	14091460	RH	104.24	SHAFT, R/AXL (7.27") (05.425)	6–H4,40
94	Y G95	12529662	RH	261.63	SHAFT, R/AXL (05.425)	6–H8,11
94	Y G95	12529663	LH	261.63	SHAFT, R/AXL (05.425)	6–H8,40
84–85	Y M/TRNS (MK2) (EXC 6–WAY A42)	10223032	2	208.49	SHAFT, RR WHL DRV UJT	6–H18,6
84–85	Y M/TRNS (EXC 6–WAY A42)	10223032	2	208.49	SHAFT, RR WHL DRV UJT	6–H18,6
84–86	Y 6–WAY (A42)	10223032	2	208.49	SHAFT, RR WHL DRV UJT	6–H18,6
84–86	Y A/TRNS (MD8) (EXC 6–WAY A42 OR 1BL PERF HDLG PKG Z51)	14046912	2	DISCON	SHAFT, RR WHL DRV UJT	
87–88	Y A/TRNS (MD8), 6–WAY (AC3)	10223032	2	208.49	SHAFT, RR WHL DRV UJT	6–H18,6
87–88	Y M/TRNS	10223032	2	208.49	SHAFT, RR WHL DRV UJT	6–H18,6
87–88	Y A/TRNS (MD8) (EXC 6–WAY AC3)	14046912	2	DISCON	SHAFT, RR WHL DRV UJT	
89	Y SOFT RIDE SUSP (FE1), H .D .SUSP (FE7)	10223032	2	208.49	SHAFT, RR WHL DRV UJT	6–H18,6
90	Y	10223032	2	208.49	SHAFT, RR WHL DRV UJT	6–H18,6
91	Y SOFT RIDE SUSP (FE1), HVY DUTY SUSP (FE7)	10223032	2	208.49	SHAFT, RR WHL DRV UJT	6–H18,6
92–96	Y	10223032	2	208.49	SHAFT, RR WHL DRV UJT	6–H18,6

5.422 BEARING, Rear Axle Shaft

84	Y	455724	2	19.48	BEARING, R/AXL SHF (05.536)	6–H4,9
85–91	Y A/TRNS	455724	2	19.48	BEARING, R/AXL SHF (05.536)	6–H4,9
85–91	Y M/TRNS	14091433	2	40.55	BEARING, R/AXL SHF (05.428)	6–H4,9
91–96	Y 3.45R (GM3)	14091433	2	40.55	BEARING, R/AXL SHF (05.428)	3–H4,9
92–93	Y 2.73R (GU2)	455724	2	19.48	BEARING, R/AXL SHF (05.536)	6–H4,9

© 2000 GENERAL MOTORS SERVICE PARTS OPERATIONS–CHEVROLET–14Y

5.422 BEARING, Rear Axle Shaft (Con't)

92–96	Y 2.59R (GM1), 3.07R (G44) .	455724	2	19.48	BEARING, R/AXL SHF (05.536) ..	6–H4,9
92	Y 3.54R (GH0)	14091433	2	40.55	BEARING, R/AXL SHF (05.428) ..	6–H4,9
94	Y G95	14091433	2	40.55	BEARING, R/AXL SHF (05.428) ..	6–H4,9

5.425 YOKE, Rear Axle Shaft

84	Y (1ST DES)	14079463	LH	DISCON	YOKE, DIFF, W/SHAFT (IDENT BY PART # STAMPED ON UNDER SI OF CARR CVR–14076905–6, 14078553, 14079973–4–5, 14084062–3–4)	
84	Y (1ST DES)	14079464	RH	DISCON	YOKE, DIFF, W/SHAFT (IDENT BY PART # STAMPED ON UNDER SI OF CARR CVR–14076905–6, 14078553, 14079973–4–5, 14084062–3–4)	
85–87	Y M/TRNS	12529662	RH	261.63	YOKE, DIFF, W/SHAFT	6–H4,11
85–87	Y M/TRNS	12529663	LH	261.63	YOKE, DIFF, W/SHAFT	6–H4,40
88	Y 3.07R (G44), 8.50 DIA RNGR (G87)	12529662	RH	261.63	YOKE, DIFF, W/SHAFT	6–H4,11
88	Y 3.07R (G44), 8.50 DIA RNGR (G87)	12529663	LH	261.63	YOKE, DIFF, W/SHAFT	6–H4,40
89–90	Y 3.33R (GT7)	12529662	RH	261.63	YOKE, DIFF, W/SHAFT	6–H4,11
89–90	Y 3.33R (GT7)	12529663	LH	261.63	YOKE, DIFF, W/SHAFT	6–H4,40

5.428 RING, Rear Axle U Joint

84	Y	14079465	2	28.75	RING, SNAP, YOKE SHFT	6–H4,32

5.430 SEAL, Rear Axle U Joint

84	Y	14079467	2	8.95	SEAL, YOKE SHAFT	6–H4,10

5.447 BEARING – CUP, Differential Drive Pinion Front

85–87	Y M/TRNS	26053758	1	51.02	BEARING, DIFF DRV P/GR OTR (05.484) (AC–DELCO #S1290)	6–H8,3
88–93	Y 2.73R (GU2)	9436127	1	49.22	BEARING, DIFF DRV P/GR OTR .	6–H4,3
88–96	Y 2.59R (GM1)	9436127	1	49.22	BEARING, DIFF DRV P/GR OTR .	6–H4,3
88	Y 3.07R (G44), 8.50 DIAMETER R/GR (G87)	26053758	1	51.02	BEARING, DIFF DRV P/GR OTR (05.484) (AC–DELCO #S1290)	6–H8,3
89–96	Y 3.07R (G44)	9436127	1	49.22	BEARING, DIFF DRV P/GR OTR .	6–H4,3
89	Y 3.33R (GT7), 3.54R (GH0) .	26053758	1	51.02	BEARING, DIFF DRV P/GR OTR (05.484) (AC–DELCO #S1290)	6–H8,3
90	Y 3.33R (GT7)	26053758	1	51.02	BEARING, DIFF DRV P/GR OTR (05.484) (AC–DELCO #S1290)	6–H8,3
90–92	Y 3.54R (GH0)	26053758	1	51.02	BEARING, DIFF DRV P/GR OTR (INCLS CUP/CONE 1 5/8"ID X 3 1/4"OD X 1"THICK) (TIMKEN NP926068) (05.484) (AC–DELCO #S1290)	6–H8,3
90–96	Y 3.45R (GM3)	26053758	AR	51.02	BEARING, DIFF DRV P/GR OTR (INCLS CUP/CONE 1 5/8"ID X 3 1/4"OD X 1"THICK) (TIMKEN NP926068) (05.484) (AC–DELCO #S1290)	6–H8,3
94	Y G95	26053758	AR	51.02	BEARING, DIFF DRV P/GR OTR (INCLS CUP/CONE 1 5/8"ID X 3 1/4"OD X 1"THICK) (TIMKEN NP926068) (05.484) (AC–DELCO #S1290)	6–H8,3
84	Y	9436127	1	49.22	BEARING, PNG OTR PRELOAD .	6–H4,3
85–87	Y A/TRNS	9436127	1	49.22	BEARING, PNG OTR PRELOAD .	6–H4,3

© 2000 GENERAL MOTORS SERVICE PARTS OPERATIONS–CHEVROLET–14Y

5.447 BEARING – CUP, Differential Drive Pinion Front (Con't)

88	Y 3.07R (G44) (EXC 8.50 DIA RNGR G87)	9436127	1	49.22	BEARING, PNG OTR PRELOAD .	6–H4,3
88	Y 3.07R (G44), 8.50 DIAMETER R/GR (G87), (8.50 DIA RNGR)	9418358	1	12.75	CUP, DIFF DRV P/GR BRG OTR (05.484)	6–H4,13
88–90	Y	9418358	1	12.75	CUP, DIFF DRV P/GR BRG OTR (05.484)	6–H4,13

5.453 SPACER, Differential Drive Pinion Front and Center Bearing

93–96	Y 3.45R (GM3)	12531142	1	5.36	SPACER, DIFF DRV P/GR BRG (05.506)	

5.460 SHIM KIT, Differential Rear Pinion Bearing

85–87	Y M/TRNS	14091423	1	12.00	SHIM KIT, DIFF BRG (ADJ SHIMS) (.003, .005, .010, .030)	6–H4,24
88	Y 3.07R, 8.50 DIA RNGR	14091423	1	12.00	SHIM KIT, DIFF BRG (ADJ SHIMS) (.003, .005, .010, .030)	6–H4,24
85–87	Y	10117714	AR	51.00	SHIM KIT, DIFF DRV P/GR BRG (A/TRAN .033–.037)	6–H4,24
85–87	Y M/TRNS	14091426	1	29.07	SHIM KIT, DIFF DRV P/GR BRG (FRT) (OTR) (.014–.030) (05.484)	6–H4,2
88	Y EXC 8.50 DIA RNGR G87) .	14044895	1	16.12	SHIM KIT, DIFF DRV P/GR BRG (PRE–LOAD) (.36MM–.76MM) (05.453)	6–H4,2
88	Y 8.50 DIA RNGR (G87)	14044895	1	16.12	SHIM KIT, DIFF DRV P/GR BRG (PRE–LOAD) (.36MM–.76MM) (05.453)	6–H4,2
88–93	Y 2.73R (GU2)	14044895	1	16.12	SHIM KIT, DIFF DRV P/GR BRG (.36MM–.76MM) (PRE–LOAD) (05.453)	6–H4,2
88–96	Y 2.59R (GM1), 3.07R (G44) .	14044895	1	16.12	SHIM KIT, DIFF DRV P/GR BRG (.36MM–.76MM) (PRE–LOAD) (05.453)	6–H4,2
88	Y 3.07R (G44), 8.50 DIA RNGR	14091426	1	29.07	SHIM KIT, DIFF DRV P/GR BRG (FRT) (OTR) (.014–.030) (05.484)	6–H4,2
89–93	Y 2.73R (GU2)	10117714	AR	51.00	SHIM KIT, DIFF DRV P/GR BRG (.033–.037)	6–H4,24
89–96	Y 2.59R (GM1), 3.07R (G44) .	10117714	AR	51.00	SHIM KIT, DIFF DRV P/GR BRG (.033–.037)	6–H4,24
89–90	Y 3.33R (GT7)	14091426	1	29.07	SHIM KIT, DIFF DRV P/GR BRG (FRT) (OTR) (.014–.030) (05.484)	6–H4,2
89–92	Y 3.54R (GH0)	14091426	1	29.07	SHIM KIT, DIFF DRV P/GR BRG (FRT) (OTR) (.014–.030) (05.484)	6–H4,2
89–92	Y 3.54R (GH0)	14091428	AR	74.72	SHIM KIT, DIFF DRV P/GR BRG (RR) (INR) (.030–.034)	6–H4,12
89–92	Y 3.54R (GH0)	14091429	AR	39.75	SHIM KIT, DIFF DRV P/GR BRG (RR) (INR) (.035–.039)	6–H8,1
89–92	Y 3.54R (GH0)	14091430	AR	39.75	SHIM KIT, DIFF DRV P/GR BRG (RR) (.040–.044)	6–H8,1
89–92	Y 3.54R (GH0)	14091431	AR	39.75	SHIM KIT, DIFF DRV P/GR BRG (RR) (.045–.049)	6–H8,1
89–92	Y 3.54R (GH0)	14091432	AR	39.75	SHIM KIT, DIFF DRV P/GR BRG (RR) (.050–.054)	6–H8,1
90–96	Y 3.45R (GM3)	14091426	1	29.07	SHIM KIT, DIFF DRV P/GR BRG (FRT) (OTR) (.014–.030) (05.484)	6–H4,2
90–96	Y 3.45R (GM3)	14091428	AR	74.72	SHIM KIT, DIFF DRV P/GR BRG (RR) (INR) (.030–.034)	6–H4,12
90–96	Y 3.45R (GM3)	14091429	AR	39.75	SHIM KIT, DIFF DRV P/GR BRG (RR) (INR) (.035–.039)	6–H8,1

© 2000 GENERAL MOTORS SERVICE PARTS OPERATIONS–CHEVROLET–14Y

5.460 SHIM KIT, Differential Rear Pinion Bearing (Con't)

90–96	Y 3.45R (GM3)	14091430	AR	39.75	SHIM KIT, DIFF DRV P/GR BRG (RR) (.040–.044)	6–H8,1
90–96	Y 3.45R (GM3)	14091431	AR	39.75	SHIM KIT, DIFF DRV P/GR BRG (RR) (.045–.049)	6–H8,1
90–96	Y 3.45R (GM3)	14091432	AR	39.75	SHIM KIT, DIFF DRV P/GR BRG (RR) (.050–.054)	6–H8,1
94	Y G95	14091426	1	29.07	SHIM KIT, DIFF DRV P/GR BRG (FRT) (OTR) (.014–.030) (05.484)	6–H4,2
94	Y G95	14091428	AR	74.72	SHIM KIT, DIFF DRV P/GR BRG (RR) (INR) (.030–.034)	6–H4,12
94	Y G95	14091429	AR	39.75	SHIM KIT, DIFF DRV P/GR BRG (RR) (INR) (.035–.039)	6–H8,1
94	Y G95	14091430	AR	39.75	SHIM KIT, DIFF DRV P/GR BRG (RR) (.040–.044)	6–H8,1
94	Y G95	14091431	AR	39.75	SHIM KIT, DIFF DRV P/GR BRG (RR) (.045–.049)	6–H8,1
94	Y G95	14091432	AR	39.75	SHIM KIT, DIFF DRV P/GR BRG (RR) (.050–.054)	6–H8,1
85–87	Y M/TRNS	14091428	AR	74.72	SHIM KIT, PINION BRG ADJ (RR) (.030–.034)	6–H4,12
85–87	Y M/TRNS	14091429	AR	39.75	SHIM KIT, PINION BRG ADJ (RR) (.035–.039)	6–H8,1
85–87	Y M/TRNS	14091430	AR	39.75	SHIM KIT, PINION BRG ADJ (RR) (.040–.044)	6–H8,1
85–87	Y M/TRNS	14091431	AR	39.75	SHIM KIT, PINION BRG ADJ (RR) (.045–.049)	6–H8,1
85–87	Y M/TRNS	14091432	AR	39.75	SHIM KIT, PINION BRG ADJ (RR) (.050–.054)	6–H8,1
88	Y 3.07R (G44), 8.50 DIA RNGR (G87)	14091428	AR	74.72	SHIM KIT, PINION BRG ADJ (RR) (.030–.034)	6–H4,12
88	Y 3.07R (G44), 8.50 DIA RNGR (G87)	14091429	AR	39.75	SHIM KIT, PINION BRG ADJ (RR) (.035–.039)	6–H8,1
88	Y 3.07R (G44), 8.50 DIA RNGR (G87)	14091430	AR	39.75	SHIM KIT, PINION BRG ADJ (RR) (.040–.044)	6–H8,1
88	Y 3.07R (G44), 8.50 DIA RNGR (G87)	14091431	AR	39.75	SHIM KIT, PINION BRG ADJ (RR) (.045–.049)	6–H8,1
88	Y 3.07R (G44), 8.50 DIA RNGR (G87)	14091432	AR	39.75	SHIM KIT, PINION BRG ADJ (RR) (.050–.054)	6–H8,1
89–90	Y 3.33R (GT7)	14091428	AR	74.72	SHIM KIT, PINION BRG ADJ (RR) (.030–.034)	6–H4,12
89–90	Y 3.33R (GT7)	14091429	AR	39.75	SHIM KIT, PINION BRG ADJ (RR) (.035–.039)	6–H8,1
89–90	Y 3.33R (GT7)	14091430	AR	39.75	SHIM KIT, PINION BRG ADJ (RR) (.040–.044)	6–H8,1
89–90	Y 3.33R (GT7)	14091431	AR	39.75	SHIM KIT, PINION BRG ADJ (RR) (.045–.049)	6–H8,1
89–90	Y 3.33R (GT7)	14091432	AR	39.75	SHIM KIT, PINION BRG ADJ (RR) (.050–.054)	6–H8,1

5.469 SEAL, Differential Drive Pinion Shaft Bearing

88–93	Y 2.73R (GU2)	10112635	1	19.62	SEAL, DIFF DRV P/GR	6–H4,5
88–96	Y 2.59R (GM1), 3.07R (G44)	10112635	1	19.62	SEAL, DIFF DRV P/GR	6–H4,5
89–90	Y 3.33R (GT7)	15583783	1	15.30	SEAL, DIFF DRV P/GR	6–H4,5
89–92	Y 3.54R (GH0)	15583783	1	15.30	SEAL, DIFF DRV P/GR	6–H4,5
90–96	Y 3.45R (GM3)	15583783	1	15.30	SEAL, DIFF DRV P/GR	6–H4,5
94	Y G95	15583783	1	15.30	SEAL, DIFF DRV P/GR	6–H4,5
84	Y	10046337	1	11.05	SEAL, FLANGE OIL	6–H4,5
85–87	Y A/TRNS	10046337	1	11.05	SEAL, FLANGE OIL	6–H4,5
88	Y (EXC 8.50 DIA RNGR G87)	10112635	1	19.62	SEAL, OIL OTR PINION	6–H4,5

© 2000 GENERAL MOTORS SERVICE PARTS OPERATIONS–CHEVROLET–14Y

5.469 SEAL, Differential Drive Pinion Shaft Bearing (Con't)

85–87	Y M/TRNS	15583783	1	15.30	SEAL, PINION GEAR OIL	6–H4,5
88	Y 3.07R (G44), 8.50 DIA RNGR (G87)	15583783	1	15.30	SEAL, PINION GEAR OIL	6–H4,5

5.484 BEARING – SHIM KIT – SLINGER, Differential Drive Pinion

85–87	Y M/TRNS	9413427	1	50.00	BEARING, DIFF DRV P/GR INR (05.447) (AC–DELCO #S29)	6–H4,3
88	Y 3.07R (G44), 8.50 DIAMETER R/GR (G87)	9413427	1	50.00	BEARING, DIFF DRV P/GR INR (05.447) (AC–DELCO #S29)	6–H4,3
88	Y 3.07R (G44 (EXC 8.50 DIA RNGR G87)	9417781	1	44.55	BEARING, DIFF DRV P/GR INR (AC–DELCO #S604)	6–H4,13
88–93	Y 2.73R (GU2)	9417781	1	44.55	BEARING, DIFF DRV P/GR INR (HM–88649–HM88610) (INCLS CUP&CONE) (1 3/8 ID X 2 27/32 OD X 1" THK) (TIMKEN) (AC–DELCO #S604)	6–H4,13
88–96	Y 2.59R (GM1)	9417781	1	44.55	BEARING, DIFF DRV P/GR INR (HM–88649–HM88610) (INCLS CUP&CONE) (1 3/8 ID X 2 27/32 OD X 1" THK) (TIMKEN) (AC–DELCO #S604)	6–H4,13
88	Y 3.07R (G44), 8.50 DIA RNGR (G87)	26053758	1	51.02	BEARING, DIFF DRV P/GR INR (AC–DELCO #S1290)	6–H4,13
89	Y 3.54R (GH0), 3.33R (GT7)	9413427	1	50.00	BEARING, DIFF DRV P/GR INR (05.447) (AC–DELCO #S29)	6–H4,3
89–96	Y 3.07R (G44)	9417781	1	44.55	BEARING, DIFF DRV P/GR INR (HM–88649–HM88610) (INCLS CUP&CONE) (1 3/8 ID X 2 27/32 OD X 1" THK) (TIMKEN) (AC–DELCO #S604)	6–H4,13
90	Y 3.33R (GT7)	9413427	1	50.00	BEARING, DIFF DRV P/GR INR (05.447) (AC–DELCO #S29)	6–H4,3
90–96	Y 3.45R (GM3)	9413427	AR	50.00	BEARING, DIFF DRV P/GR INR (# M88048–M88010) (INCLS CUP & CONE) (1 5/16 ID X 2 11/16 OD X 7/8" THICK) (TIMKEN) (05.447) (AC–DELCO #S29)	6–H4,3
91–92	Y 3.54R (GH0)	9413427	1	50.00	BEARING, DIFF DRV P/GR INR (# M88048–M88010) (INCLS CUP & CONE) (1 5/16 ID X 2 11/16 OD X 7/8" THICK) (TIMKEN) (05.447) (AC–DELCO #S29)	6–H4,3
94	Y G95	9413427	1	50.00	BEARING, DIFF DRV P/GR INR (# M88048–M88010) (INCLS CUP & CONE) (1 5/16 ID X 2 11/16 OD X 7/8" THICK) (TIMKEN) (05.447) (AC–DELCO #S29)	6–H4,3
84	Y	14079448	1	DISCON	SHIM KIT, PNG & BRG ADJ	
85–87	Y A/TRNS	14079448	1	DISCON	SHIM KIT, PNG & BRG ADJ	
88–93	Y 2.73R (GU2)	14079449	1	3.70	SLINGER, DIFF DRV P/GR OIL	6–H4,4
88–96	Y 2.59R (GM1), 3.07R (G44)	14079449	1	3.70	SLINGER, DIFF DRV P/GR OIL	6–H4,4
84	Y	14079449	1	3.70	SLINGER, PNG OTR	6–H4,4
85–87	Y A/TRNS	14079449	1	3.70	SLINGER, PNG OTR	6–H4,4
88	Y (EXC 8.50 DIA RNGR G87)	14079449	1	3.70	SLINGER, PNG OTR	6–H4,4

5.505 BOLT KIT – CARRIER – NUT, Differential, with Cap

84	Y 3.07R (G44)	10117744	1	21.67	BOLT KIT, DIFF R/GR	6–H4,14
85	Y 2.73R (GU2)	10117744	1	21.67	BOLT KIT, DIFF R/GR	6–H4,14
85	Y 3.07R (G44), A/TRNS	10117744	1	21.67	BOLT KIT, DIFF R/GR	6–H4,14
86–87	Y	10117744	1	21.67	BOLT KIT, DIFF R/GR	6–H4,14

© 2000 GENERAL MOTORS SERVICE PARTS OPERATIONS–CHEVROLET–14Y

5.505 BOLT KIT – CARRIER – NUT, Differential, with Cap (Con't)

88	Y 3.07R (G44) (EXC 8.50 DIA RNGR G87)	10117744	1	21.67	BOLT KIT, DIFF R/GR	6–H4,14
88–93	Y 2.59R (GM1), 2.73R (GU2), 3.07R (G44)	10117744	1	21.67	BOLT KIT, DIFF R/GR	6–H4,14
88	Y 8.50 DIA RNGR, 3.07R	10117883	1	15.38	BOLT KIT, DIFF R/GR	6–H4,14
89–90	Y 3.33R (GT7)	10117883	1	15.38	BOLT KIT, DIFF R/GR	6–H4,14
90	Y 3.54R (GH0), 3.45R (GM3)	10117883	1	15.38	BOLT KIT, DIFF R/GR	6–H4,14
91–96	Y 3.45R (GM3)	10117883	1	15.38	BOLT KIT, DIFF R/GR	6–H4,14
94–96	Y 2.59R (GM1), 3.07R (G44)	10117744	1	21.67	BOLT KIT, DIFF R/GR	6–H4,14
84	Y	10163876	1	DISCON	CARRIER, DIFF (3.31R) (STAMPED 4YK, 4CB, 4CK, 4CR)	
84	Y H.D. SUSP (FE7)	10163876	1	DISCON	CARRIER, DIFF (3.07R, 3.31R) (STAMPED 4YJ, 4CF, 4CJ, 4CN)	
84	Y (EXC H.D. SUSP FE7)	14087678	1	DISCON	CARRIER, DIFF (3.07R) (STAMPED 4CC, 4CH, 4CS, 4YL)	
85	Y A/TRNS, H.D. SUSP (FE7)	10163876	1	DISCON	CARRIER, DIFF (3.07R) (STAMPED 4YJ, 4CF, 4CJ, 4CN)	
85	Y M/TRNS (EXC H.D. SUSP FE7)	14084122	1	DISCON	CARRIER, DIFF (3.07R) (STAMPED 5YB)	
85	Y A/TRNS (EXC H.D. SUSP FE7)	14087678	1	DISCON	CARRIER, DIFF (3.07R) (STAMPED 4CH, 4CS, 4YL)	
86–87	Y A/TRNS, 1BL (PERF HDLG PKG Z51)	10163876	1	DISCON	CARRIER, DIFF (3.07R) (STAMPED 4YJ, 4CF, 4CJ, 4CN)	
86	Y A/TRNS (EXC 1BL PERF HDLG PKG Z51)	14087678	1	DISCON	CARRIER, DIFF (3.07R) (STAMPED 4CH, 4CS, 4YL)	
86–87	Y	14093143	1	DISCON	CARRIER, DIFF (2.59 RATIO)	
86	Y07 M/TRNS (MH5), 8.50 DIA RNGR (G87)	14084122	1	DISCON	CARRIER, DIFF (3.07R) (STAMPED 5YB)	
86	Y67 M/TRNS (MK2), 8.50 DIA RNGR (G87)	14084122	1	DISCON	CARRIER, DIFF (3.07R) (STAMPED 5YB)	
87	Y (EXC 8.50 DIA RNGR) (G87)	14087678	1	DISCON	CARRIER, DIFF (3.07R) (STAMPED 4CH, 4CS, 4YL)	
88	Y 3.07R (G44), 8.50 RNGR (G87)	10046618	1	DISCON	CARRIER, DIFF (3.07R) (STAMPED 8YH)	
88–93	Y 2.73R (GU2)	10112634	1	419.02	CARRIER, DIFF (W/CAP)	6–H4,1
88–96	Y 2.59R (GM1), 3.07R (G44)	10112634	1	419.02	CARRIER, DIFF (W/CAP)	6–H4,1
88–89	Y 2.59R (GM1)	10163874	1	DISCON	CARRIER, DIFF (2.59) (STAMPED 8YA)	
88–89	Y 2.73R (GU2)	10163875	1	DISCON	CARRIER, DIFF (2.73R) (STAMPED 8YB)	
88–89	Y 3.07R (G44) (EXC 8.50 RNGR)	10163876	1	DISCON	CARRIER, DIFF (3.07R) (STAMPED 8YC)	
89	Y	10054298	1	DISCON	CARRIER, DIFF (3.54R) (STAMPED 8YJ)	
89	Y	10192290	1	DISCON	CARRIER, DIFF (3.54R) (STAMPED 8YJ, CQX)	
90–92	Y 3.54R (GH0)	10132777	1	548.05	CARRIER, DIFF (W/CAP)	6–H4,1
90–96	Y 3.45R (GM3)	10132777	1	548.05	CARRIER, DIFF (W/CAP)	6–H4,1
90	Y 2.59R (GM1)	10163874	1	DISCON	CARRIER, DIFF (2.59) (STAMPED 8YA, CQT)	
90	Y 2.73R (GU2)	10163875	1	DISCON	CARRIER, DIFF (2.73R) (STAMPED 8YB, CQU)	
90	Y 3.07R (G44)	10163876	1	DISCON	CARRIER, DIFF (3.07R) (STAMPED 8YC, CQW)	
90	Y	12553791	1	DISCON	CARRIER, DIFF (3.45 RATIO) (STAMPED 6YD, CQR)	
91–96	Y 2.59R (GM1)	10163874	1	DISCON	CARRIER, DIFF (2.59 RATIO) (STAMPED CQT)	
91–93	Y 2.73R (GU2)	10163875	1	DISCON	CARRIER, DIFF (2.73 RATIO) (STAMPED CQU)	

© 2000 GENERAL MOTORS SERVICE PARTS OPERATIONS–CHEVROLET–14Y

5.505 BOLT KIT – CARRIER – NUT, Differential, with Cap (Con't)

91–96	Y 3.07R (G44)	10163876	1	DISCON	CARRIER, DIFF (3.07 RATIO) (STAMPED CQW)	
91–92	Y 3.54R (GH0)	10192290	1	DISCON	CARRIER, DIFF (3.54 RATIO) (STAMPED CQX)	
91–96	Y 3.45R (GM3)	12553791	1	DISCON	CARRIER, DIFF (3.45 RATIO) (STAMPED CQR)	
94	Y G95	10132777	1	548.05	CARRIER, DIFF (W/CAP)	6–H4,1
89	Y 3.33R (GT7), 3.54R (GH0)	10132777	1	548.05	CARRIER, DIFF W/CAP	6–H4,1
84	Y	14091330	1	DISCON	CARRIER, DIFF W/CAP	
85–87	Y A/TRNS	14091330	1	DISCON	CARRIER, DIFF W/CAP	
85–87	Y M/TRNS	14091393	1	DISCON	CARRIER, DIFF, W/CAP	
88	Y 3.07R (G44), 8.50 DIA RNGR	10112633	1	DISCON	CARRIER, DIFF, W/CAP	
88	Y (EXC 8.50 DIA RNGR G87)	10112634	1	419.02	CARRIER, DIFF, W/CAP	6–H4,1
90	Y 3.33R (GT7)	10132777	1	548.05	CARRIER, DIFF, W/CAP	6–H4,1
85	Y M/TRNS (EXC H.D. SUSP FE7)	9422310	1	*3.15	NUT, CARRIER (3.07R) (STAMPED 5YB) (08.917)	
85	Y M/TRNS, H.D. SUSP (FE7)	9422310	1	*3.15	NUT, CARRIER (3.07R) (STAMPED 5YX) (08.917)	
86	Y07 M/TRNS (MH5), 8.50 DIA RNGR (G87)	9422310	1	*3.15	NUT, CARRIER (3.07R) (STAMPED 5YB) (08.917)	
86	Y07 M/TRNS (MK2), 8.50 DIA RNGR (G87), NA5	9422310	1	*3.15	NUT, CARRIER (3.07R) (STAMPED 5YB) (08.917)	
86	Y67 M/TRNS (MK2), 8.50 DIA RNGR (G87)	9422310	1	*3.15	NUT, CARRIER (3.07R) (STAMPED 5YB) (08.917)	
87	Y 8.50 DIA RNGR (G87)	9422310	1	*3.15	NUT, CARRIER (3.07R) (STAMPED 5YX) (08.917)	
88	Y 3.07R (G44), 8.50 DIA RNGR (G87)	9422310	1	*3.15	NUT, CARRIER (08.917)	
	*EXPORT**********EXPORT**********EXPORT**********EXPORT**********EXPORT*					
86	Y07 M/TRNS, NM5 (EXPORT, CANADA) (EXC 1BL PERF HDLG PKG Z51)	14084122	1	DISCON	CARRIER, DIFF (3.07R) (STAMPED 5YB)	
86	Y07 M/TRNS, NM5 (EXPORT, CAN) (EXC Z51)	9422310	1	*3.15	NUT, CARRIER (3.07R) (STAMPED 5YB) (08.917)	
86	Y07 M/TRNS (MK2), 8.50 DIA RNGR (G87), NM5 (EXPORT, CANADA), Z51	9422310	1	*3.15	NUT, CARRIER (3.07R) (STAMPED 5YB) (08.917)	

5.506 BOLT – NUT – SCREW – WASHER, Differential Carrier

88–96	Y 2.59R (GM1), 3.07R (G44)	14091420	10	1.80	BOLT, DIFF BRG CAP (05.531)	6–H8,34
88–96	Y 2.59R (GM1), 3.07R (G44)	25533811	1	3.95	BOLT, DIFF BRG CAP (7/16–14X2.34") (OUTER) (00.293)	6–H8,34
90–92	Y 3.54R (GH0)	14091420	10	1.80	BOLT, DIFF BRG CAP (05.531)	6–H8,34
90–93	Y 2.73R (GU2)	14091420	10	1.80	BOLT, DIFF BRG CAP (05.531)	6–H8,34
90–96	Y 3.45R (GM3)	14091420	10	1.80	BOLT, DIFF BRG CAP (05.531)	6–H8,34
94	Y G95	14091420	10	1.80	BOLT, DIFF BRG CAP (05.531)	6–H8,34
84–96	Y	11508185	2	DISCON	BOLT, DIFF CARR (08.900) (M12X1.75X100 10.9 6183M Z BRKT)	
88	Y 2.73R (GU2)	25533811	1	3.95	BOLT, DIFF CARR (00.293)	6–H8,34
88	Y (EXC 8.50 DIA RNGR G87)	25533811	1	3.95	BOLT, DIFF CARR (00.293)	6–H8,34
90	Y 2.73R (GU2)	25533811	1	3.95	BOLT, DIFF CARR (00.293)	6–H8,34
85–96	Y	11508101	2	*1.05	NUT, DIFF CARR (M12X1.75X12 (10) 1050) (08.917)	7–H21,64
85–87	Y M/TRNS	14091421	4	4.15	SCREW, BRG CAP (1/2–13 X 2.8)	6–H4,34
88	Y 3.07R (G44), 8.50 DIA RNGR (G87)	14091421	4	4.15	SCREW, BRG CAP (1/2–13 X 2.8)	6–H4,34

© 2000 GENERAL MOTORS SERVICE PARTS OPERATIONS–CHEVROLET–14Y

5.506 BOLT – NUT – SCREW – WASHER, Differential Carrier (Con't)

89–90	Y 3.33R (GT7), 3.54R (GH0) .	14091421	4	4.15	SCREW, BRG CAP (1/2–13 X 2.8) .	6–H4,34
90–91	Y 3.45R (GM3)	14091421	4	4.15	SCREW, BRG CAP (1/2–13 X 2.8) .	6–H4,34
84–86	Y	473539	2	*.63	WASHER, DIFF CARR (FL 3.50X13.2 ID) (00.002)	7–H21,11
84–96	Y	10267310	2	*.97	WASHER, DIFF CARR (06.164) ..	7–I2,11

5.508 MAGNET, Axle Housing to Differential Carrier

84–93	Y 4–SPD A/TRANS (MD8) ...	8665830	1	4.07	MAGNET, R/AXL HSG CHIP COLLECTOR (04.105) (AC–DELCO #8665830)	

5.510 CASE – CLUTCH PACK, Differential (Ring Gear and Pinion)

84	Y	10181229	1	577.43	CASE, DIFF (W/INT GEARS) (STAMPED 14087675–6–7–8 ON UNDERSIDE OF CARR CVR) (WHEN USED IN PLC OF 1ST DES CASE, 14091436 SHAFT & 14091459–60 YOKE SHAFT MUST BE USED.)	6–H4,25
84	Y	14091437	1	244.26	CASE, DIFF (LESS INT GEARS) (2ND TYPE CASE STAMPED 14087675–6–7–8 ON UNDERSIDE OF CARR CVR.) ..	6–H4,25
85–87	Y M/TRNS	10181217	1	547.79	CASE, DIFF (W/INT GEARS)	6–H4,25
85–87	Y A/TRNS, 2.73R (GU2)	10181223	1	547.79	CASE, DIFF (W/INT GEARS)	6–H4,25
85–96	Y 2.59R (GM1)	10181223	1	547.79	CASE, DIFF (W/INT GEARS)	6–H4,25
85–96	Y 3.07R (G44)	10181229	1	577.43	CASE, DIFF (W/INT GEARS)	6–H4,25
85–87	Y A/TRNS	14091437	1	244.26	CASE, DIFF (LESS INT GEARS) .	6–H4,25
88–93	Y 2.73R (GU2)	10112639	1	288.20	CASE, DIFF (LESS INT GEARS) .	6–H8,25
88–96	Y 2.59R (GM1)	10112639	1	288.20	CASE, DIFF (LESS INT GEARS) .	6–H8,25
88	Y 3.07R (G44), 8.50 DIA RNGR (G87)	10181217	1	547.79	CASE, DIFF (W/INT GEARS)	6–H4,25
88–89	Y (2.73R (GU2)	10181223	1	547.79	CASE, DIFF (W/INT GEARS)	6–H4,25
88	Y (EXC 8.50 DIA RNGR G87)	10181229	1	577.43	CASE, DIFF (W/INT GEARS)	6–H4,25
88	Y (EXC 8.50 DIA RNGR G87)	14091437	1	244.26	CASE, DIFF (LESS INT GEARS) .	6–H4,25
88–96	Y 3.07R (G44)	14091437	1	244.26	CASE, DIFF (LESS INT GEARS) .	6–H4,25
89–90	Y 3.33R (GT7)	10181217	1	547.79	CASE, DIFF (W/INT GEARS)	6–H4,25
89–92	Y 3.54R (GH0)	10181217	1	547.79	CASE, DIFF (W/INT GEARS)	6–H4,25
90–96	Y 3.45R (GM3)	10181217	1	547.79	CASE, DIFF (W/INT GEARS)	6–H4,25
90–93	Y 2.73R (GU2)	10181223	1	547.79	CASE, DIFF (W/INT GEARS)	6–H4,25
94	Y G95	10181217	1	547.79	CASE, DIFF (W/INT GEARS)	6–H4,25
84	Y (2ND DES)	10181229	1	577.43	CASE, W/INT GEARS, DIFF	6–H4,25
84	Y	10181224	1	409.82	CLUTCH PACK, DIFF (W/INT GEARS)	6–H8,5
85–88	Y M/TRNS	10181218	1	385.29	CLUTCH PACK, DIFF (W/INT GEARS)	6–H8,5
85–87	Y A/TRNS	10181224	1	409.82	CLUTCH PACK, DIFF (W/INT GEARS)	6–H8,5
88	Y 3.07R (G44), (EXC 8.50 DIAMETER R/GR (G87)	10181224	1	409.82	CLUTCH PACK, DIFF (W/INT GEARS)	6–H8,5
88–89	Y 2.59R (GM1), 2.73R (GU2) .	10181224	1	409.82	CLUTCH PACK, DIFF (W/INT GEARS)	6–H8,5
89	Y 3.07R (G44)	10181224	1	409.82	CLUTCH PACK, DIFF (W/INT GEARS)	6–H8,5
90	Y 3.33R (GT7), 3.45R (GM3) .	10181218	1	385.29	CLUTCH PACK, DIFF (W/INT GEARS)	6–H8,5
90–93	Y 2.59R (GM1), 2.73R (GU2), 3.07R (G44)	10181224	1	409.82	CLUTCH PACK, DIFF (W/INT GEARS)	6–H8,5

© 2000 GENERAL MOTORS SERVICE PARTS OPERATIONS–CHEVROLET–14Y

5.510 CASE – CLUTCH PACK, Differential (Ring Gear and Pinion) (Con't)

91–92	Y 3.54R (GH0)	10181218	1	385.29	CLUTCH PACK, DIFF (W/INT GEARS)	6–H8,5
91–96	Y 3.45R (GM3)	10181218	1	385.29	CLUTCH PACK, DIFF (W/INT GEARS)	6–H8,5
94	Y G95	10181218	1	385.29	CLUTCH PACK, DIFF (W/INT GEARS)	6–H8,5
94–96	Y 2.59R (GM1), 3.07R (G44)	10181224	1	409.82	CLUTCH PACK, DIFF (W/INT GEARS)	6–H8,5

5.511 DISC – DISC KIT, Differential Clutch

89–92	Y 3.54R (GH0)	14091400	1	138.99	DISC KIT, L/SLIP DIFF CLU	6–H8,6
89–96	Y 3.45R (GM3)	14091400	1	138.99	DISC KIT, L/SLIP DIFF CLU	6–H8,6
94	Y G95	14091400	1	138.99	DISC KIT, L/SLIP DIFF CLU	6–H8,6
85–87	Y M/TRNS	14091400	1	138.99	DISC KIT, W/PLATES, LOCKING DIFF	6–H8,6
88	Y 3.07R (G44), 8.50 DIA RNGR (G87)	14091400	1	138.99	DISC KIT, W/PLATES, LOCKING DIFF	6–H8,6
89–90	Y 3.33R (GT7)	14091400	1	138.99	DISC KIT, W/PLATES, LOCKING DIFF	6–H8,6
88–91	Y 2.59R (GM1), 2.73R (GU2)	10112640	1	143.08	DISC, L/SLIP DIFF CLU (SPLINED)	
88–91	Y 2.59R (GM1), 2.73R (GU2)	10112640	1	143.08	DISC, L/SLIP DIFF CLU (EARED)	
89–91	Y 3.07R (G44)	10112640	1	143.08	DISC, L/SLIP DIFF CLU (SPLINED)	
89–91	Y 3.07R (G44)	10112640	1	143.08	DISC, L/SLIP DIFF CLU (EARED)	
84	Y	10112640	1	143.08	DISC, W/PLATE, L/S	
85–87	Y A/TRNS	10112640	1	143.08	DISC, W/PLATE, L/S	
88	Y 3.07R (G44) (EXC 8.50 DIA RNGR G87)	10112640	1	143.08	DISC, W/PLATE, L/S	

5.515 SHAFT, Differential Planetary

85–88	Y M/TRNS	10117854	1	12.93	SHAFT, DIFF STD & T/L	6–H4,31
89–90	Y 3.33R (GT7), 3.54R (GH0)	10117854	1	12.93	SHAFT, DIFF STD & T/L	6–H4,31

5.517 SHAFT, Differential Side Pinion

NOTE: FOR 1985–87 M.T.SHAFT–DIFF PINION APPLICTIONS USE DIFF KITS IN GROUP 5.510

90–96	Y 3.45R (GM3)	10117854	1	12.93	SHAFT, DIFF P/GR (05.515)	6–H4,31
90–94	Y 2.59R (GM1), 2.73R (GU2), 3.07R (G44)	14091436	1	12.01	SHAFT, DIFF P/GR	6–H4,31
95–96	Y 2.59R (GM1), 3.07R (G44)	14091436	1	12.01	SHAFT, DIFF P/GR	6–H4,31
84	Y	14091436	1	12.01	SHAFT, DIFF PINION (WHEN USING 14091436 IN PLC OF 14079460, 14091437 UNIT–DIFF CASE & 14091459–60 YOKE SHAFT ASMS MUST BE USED.)	6–H4,31
85–89	Y A/TRNS	14091436	1	12.01	SHAFT, DIFF PINION (WHEN USING 14091436 IN PLC OF 14079460, 14091437 UNIT–DIFF CASE & 14091459–60 YOKE SHAFT ASMS MUST BE USED.)	6–H4,31
90–91	Y 3.07R (G44)	14091436	1	12.01	SHAFT, DIFF PINION	6–H4,31

5.518 BOLT – PIN – RING KIT – WASHER, Pinion Shaft Lock

85–94	Y	2402527	1	*1.70	BOLT, DIFF P/GR SHF LK	6–H4,41
92–96	Y 2.59R (GM1)	12529340	1	201.96	BOLT, DIFF P/GR SHF LK (05.511)	
95–96	Y 2.59R (GM1)	2402527	1	*1.70	BOLT, DIFF P/GR SHF LK	6–H4,41
84	Y (2ND DES)	2402527	1	*1.70	PIN, DIFF PNG SHF LK (USES A PIN)	6–H4,41
84	Y (1ST DES)	14079451	1	3.15	RING KIT, PNG SHF SNAP (USES SNAP RINGS)	6–H4,30

© 2000 GENERAL MOTORS SERVICE PARTS OPERATIONS–CHEVROLET–14Y

5.518 BOLT – PIN – RING KIT – WASHER, Pinion Shaft Lock (Con't)

88	Y	12529331	1	DISCON	RING KIT, PNG SHF SNAP (05.511) (HAS 7 PCS IN KIT)	
88	Y	14079451	1	3.15	RING KIT, PNG SHF SNAP	6–H4,30
89–90	Y 2.59R (GM1), 2.73R (GU2), 3.07R (G44)	12529331	1	DISCON	RING KIT, PNG SHF SNAP (05.511) (HAS 7PC IN KIT)	
89–90	Y 2.59R (GM1), 2.73R (GU2), 3.07R (G44)	14079451	1	3.15	RING KIT, PNG SHF SNAP (HAS 1PC IN KIT)	6–H4,30
88	Y 2.73 (GU2)	15583247	1	2.65	WASHER, PINION NUT	6–H4,7
88	Y (EXC 8.50 DIA RNGR G87)	15583247	1	2.65	WASHER, PINION NUT	6–H4,7

5.526 BEARING – GEAR – PINION, Differential Pinion

84	Y	9417781	1	44.55	BEARING, FRT DIFF DRV P/GR OTR (05.484) (AC–DELCO #S604)	
85–87	Y A/TRNS	9417781	1	44.55	BEARING, FRT DIFF DRV P/GR OTR (05.484) (AC–DELCO #S604)	
88	Y 8.50 DIA RNGR, 3.07R	10181219	2	25.04	GEAR, DIFF PINION (DANA 32808)	6–H4,29
88–94	Y 2.59R (GM1), 2.73R (GU2)	14105971	1	21.31	GEAR, DIFF PINION	6–H4,29
89	Y 3.33R (GT7), 3.54R (GH0)	10181219	2	25.04	GEAR, DIFF PINION (DANA 32808)	6–H4,29
90	Y 3.33R (GT7), 3.45R (GM3)	10181219	2	25.04	GEAR, DIFF PINION (DANA 44010)	6–H4,29
90–91	Y 3.07R (G44)	14105971	1	21.31	GEAR, DIFF PINION	6–H4,29
91–96	Y 3.45R (GM3)	10181219	2	25.04	GEAR, DIFF PINION (DANA 44010)	6–H4,29
95–96	Y 2.59R (GM1), 3.07R (G44)	14105971	1	21.31	GEAR, DIFF PINION	6–H4,29
84	Y	14105971	1	21.31	PINION, DIFF	6–H4,29
85–87	Y A/TRNS	14105971	1	21.31	PINION, DIFF	6–H4,29
88	Y 3.07R (G44) (EXC 8.50 DIA RNGR G87)	14105971	1	21.31	PINION, DIFF	6–H4,29
88–89	Y 2.59R (GM1), 2.73R (GU2)	14105971	1	21.31	PINION, DIFF	6–H4,29
89	Y 3.07R (G44)	14105971	1	21.31	PINION, DIFF	6–H4,29

5.528 GEAR, Differential Side

84	Y	10181226	1	89.43	GEAR, DIFF SI (05.526)	6–H4,27
85–87	Y A/TRNS	10181226	1	89.43	GEAR, DIFF SI (05.526)	6–H4,27
88	Y 8.5 DIA RNGR, 3.07R	10181220	2	91.72	GEAR, DIFF SI (FINISHED) (05.526)	6–H4,27
88	Y 3.07R (G44), (EXC 8.50 DIA RNGR G87)	10181226	1	89.43	GEAR, DIFF SI (05.526)	6–H4,27
88–96	Y 2.59R (GM1), 2.73R (GU2)	10181226	1	89.43	GEAR, DIFF SI (05.526)	6–H4,27
89	Y 3.33R (GT7), 3.54 (GH0)	10181220	2	91.72	GEAR, DIFF SI (FINISHED) (05.526)	6–H4,27
89	Y 3.07R (G44)	10181226	1	89.43	GEAR, DIFF SI (05.526)	6–H4,27
90	Y 3.33R (GT7), 3.45R (GM3)	10181220	2	91.72	GEAR, DIFF SI (FINISHED) (DANNA 44008) (05.526)	6–H4,27
90–96	Y 3.07R (G44)	10181226	1	89.43	GEAR, DIFF SI (05.526)	6–H4,27
91–96	Y 3.45R (GM3)	10181220	2	91.72	GEAR, DIFF SI (FINISHED) (DANNA 44008) (05.526)	6–H4,27

5.529 GEAR SET, Ring and Pinion

85–93	Y 2.73R (GU2)	14091462	1	DISCON	GEAR SET, DIFF RING & DRV PINION	
86–96	Y 2.59R (GM1)	14101375	1	518.15	GEAR SET, DIFF RING & DRV PINION	6–H4,14
89–92	Y 3.54R (GH0)	10132758	1	554.95	GEAR SET, DIFF RING & DRV PINION	6–H8,14
89–96	Y 3.07R (G44)	14085885	1	518.15	GEAR SET, DIFF RING & DRV PINION	6–H4,14
90–96	Y 3.45R (GM3)	12525532	1	518.15	GEAR SET, DIFF RING & DRV PINION (INCLS SPCR/CRUSH SLV)	6–H4,14

© 2000 GENERAL MOTORS SERVICE PARTS OPERATIONS–CHEVROLET–14Y

5.529 GEAR SET, Ring and Pinion (Con't)

84	Y G95	10140641	1	509.98	GEAR SET, DIFF RING & DRV PINION	6-H4,14
84	Y 3.07R (G44), 3.31R (GW4)	14085885	1	518.15	GEAR SET, RG & PNG (IF USED FOR 3.31R RING & PINION, SPEEDO DRIVEN GR 25513049 (GREEN) AND ADAPTER 25007308 LOCATED IN TRANS TAIL SHAFT MUST ALSO BE USED)	6-H4,14
85-87	Y A/TRNS, 3.07R (G44)	14085885	1	518.15	GEAR SET, RG & PNG	6-H4,14
85-87	Y M/TRNS, 3.07R (G44)	14091394	1	DISCON	GEAR SET, RG & PNG	
88	Y 3.07R (G44) (EXC 8.50 DIA RNGR G87)	14085885	1	518.15	GEAR SET, RG & PNG	6-H4,14
88	Y 3.07R (G44), 8.50 DIA RNGR (G87)	14091394	1	DISCON	GEAR SET, RG & PNG	
89-90	Y 3.33R (GT7)	10140641	1	509.98	GEAR SET, RG & PNG	6-H4,14

5.531 BOLT, Ring Gear

90-91	Y 2.73R (GU2)	14091420	10	1.80	BOLT, GEAR TO CASE (RR AXLE)	6-H4,26
84	Y	14091420	10	1.80	BOLT, RNGR TO CASE	6-H4,26
85-87	Y M/TRNS	14091420	10	1.80	BOLT, RNGR TO CASE	6-H4,26
85-87	Y A/TRNS	14091420	10	1.80	BOLT, RNGR TO CASE	6-H4,26
88	Y 8.50 DIA RNGR (G87)	14091420	10	1.80	BOLT, RNGR TO CASE	6-H4,26
88	Y (EXC 8.50 DIA RNGR G87)	14091420	10	1.80	BOLT, RNGR TO CASE	6-H4,26
88-89	Y 2.73R (GU2)	14091420	10	1.80	BOLT, RNGR TO CASE	6-H4,26
89-90	Y 3.33R (GT7), 3.54R (GH0)	14091420	10	1.80	BOLT, RNGR TO CASE	6-H4,26

5.536 BEARING, Differential Side Gear

84	Y (2ND DES)	9420095	2	35.15	BEARING, DIFF (2ND DES STAMPED 14079075-4-5 ON THE UNDERSIDE OF CARR CVR.) (AC-DELCO #S13)	6-H4,23
85-87	Y M/TRNS	9418390	2	43.04	BEARING, DIFF (AC-DELCO #S23)	6-H4,23
85-89	Y A/TRNS	9420095	2	35.15	BEARING, DIFF (SIDE) (AC-DELCO #S13)	6-H4,23
88	Y 3.07R (G44), 8.50 DIA RNGR (G87)	9418390	2	43.04	BEARING, DIFF (AC-DELCO #S23)	6-H4,23
89	Y 3.33R (GT7)	9418390	2	43.04	BEARING, DIFF (AC-DELCO #S23)	6-H4,23
89-92	Y 3.54R (GH0)	9418390	2	43.04	BEARING, DIFF (SI GEAR) (LM603049-LM603012) (8.625 R/GR) (INCLS CUP & CONE) (1 25/32 ID X 3 1/16 OD X 27/32 THK) (TIMKEN) (AC-DELCO #S23)	6-H4,23
90	Y 3.33R (GT7)	9418390	2	43.04	BEARING, DIFF (AC-DELCO #S23)	6-H4,23
90-96	Y 3.45R (GM3)	9418390	2	43.04	BEARING, DIFF (SI GEAR) (LM603049-LM603012) (8.625 R/GR) (INCLS CUP & CONE) (1 25/32 ID X 3 1/16 OD X 27/32 THK) (TIMKEN) (AC-DELCO #S23)	6-H4,23
90-93	Y 2.73R (GU2)	9420095	2	35.15	BEARING, DIFF (SIDE) (LM-501349-LM-501314) (INCLS CUP&CONE) (1 5/8 ID X 2 57/64 OD X 27/32 THK) (TIMKEN) (AC-DELCO #S13)	6-H4,23

© 2000 GENERAL MOTORS SERVICE PARTS OPERATIONS-CHEVROLET-14Y

MICROFICHE INDEX

GROUPS 4.000 THRU 5.000

FICHE 6 OF 11

GROUP	DESCRIPTION	STARTING GRID LOCATION PARTS	ILLUSTRATIONS
–	GENERAL INFORMATION	1–A2	1–G2
–	ALPHABETICAL INDEX	1–B13	N.A.
4.000	BRAKES	6–A2	6–E2
5.000	BRAKES – REAR AXLE – PROPELLER SHAFT – WHEELS	6–C2	6–H2
–	OUT OF FICHE CALLS	N.A.	6–M22

6–D1

5.536 BEARING, Differential Side Gear(Con't)

90-96	Y 2.59R (GM1), 3.07R (G44) .	9420095	2	35.15	BEARING, DIFF (SIDE) (LM-501349-LM-501314) (INCLS CUP&CONE) (1 5/8 ID X 2 57/64 OD X 27/32 THK) (TIMKEN) (AC-DELCO #S13)	6-H4,23
94	Y G95	9418390	2	43.04	BEARING, DIFF (SI GEAR) (LM603049-LM603012) (8.625 R/GR) (INCLS CUP & CONE) (1 25/32 ID X 3 1/16 OD X 27/32 THK) (TIMKEN) (AC-DELCO #S23)	6-H4,23
84	Y (1ST DES)	457232	2	35.86	BEARING, DIFF SI GEAR (AC-DELCO #S21)	6-H4,23

5.537 SHIM - SHIM KIT, Differential Bearing Adjusting

84	Y	14079453	1	86.70	SHIM KIT, DIFF BRG (.003, .005, .010, .030, SNAP RNG, SEALER) .	6-H4,24
85-87	Y A/TRNS	14079453	1	86.70	SHIM KIT, DIFF BRG (.003, .005, .010, .030, SNAP RNG, SEALER) .	6-H4,24
88	Y (EXC 8.50 DIA RNGR G87)	14079453	1	86.70	SHIM KIT, DIFF BRG (.003, .005, .010, .030, SNAP RNG, SEALER) .	6-H4,24
88-93	Y 2.73R (GU2)	14079453	1	86.70	SHIM KIT, DIFF BRG (.003, .005, .010, .030, SNAP RNG, SEALER) .	6-H4,24
88-96	Y 2.59R (GM1), 3.07R (G44) .	14079453	1	86.70	SHIM KIT, DIFF BRG (.003, .005, .010, .030, SNAP RNG, SEALER) .	6-H4,24
88-93	Y 2.73R (GU2)	14079455	1	14.55	SHIM KIT, DIFF BRG (.003, .005, .010, .030) (05.460)	6-H4,24
88-96	Y 2.59R (GM1)	14079455	1	14.55	SHIM KIT, DIFF BRG (.003, .005, .010, .030) (05.460)	6-H4,24
89-90	Y 3.33R (GT7)	14091423	1	12.00	SHIM KIT, DIFF BRG (ADJ SHIMS) (.003, .005, .010, .030) (05.460)	6-H8,3
89-92	Y 3.54R (GH0)	14091423	1	12.00	SHIM KIT, DIFF BRG (ADJ SHIMS) (.003, .005, .010, .030) (05.460)	6-H8,3
90-96	Y 3.45R (GM3)	14091423	AR	12.00	SHIM KIT, DIFF BRG (ADJ SHIMS) (.003, .005, .010, .030) (05.460)	6-H8,3
94	Y G95	14091423	AR	12.00	SHIM KIT, DIFF BRG (ADJ SHIMS) (.003, .005, .010, .030) (05.460)	6-H8,3
84	Y	14079455	1	14.55	SHIM KIT, DIFF BRG ADJ (.003, .005, .010, .030) (05.460)	6-H4,24
85-87	Y A/TRNS	14079455	1	14.55	SHIM KIT, DIFF BRG ADJ (.003, .005, .010, .030) (05.460)	6-H4,24
88	Y (EXC 8.50 DIA RNGR G87)	14079455	1	14.55	SHIM KIT, DIFF BRG ADJ (.003, .005, .010, .030) (05.460)	6-H4,24
85-87	Y M/TRNS	1784579	AR	*1.50	SHIM, DIFF BRG (.003)	6-H8,24
85-87	Y M/TRNS	1784580	AR	*1.20	SHIM, DIFF BRG (.005)	6-H4,24
85-87	Y M/TRNS	1784581	AR	2.65	SHIM, DIFF BRG (.010)	6-H4,24
85-87	Y M/TRNS	1784582	AR	*1.65	SHIM, DIFF BRG (.030)	6-H4,24
88	Y 8.50 DIA RNGR, 3.07R	1784579	AR	*1.50	SHIM, DIFF BRG (.003)	6-H8,24
88	Y 8.50 DIA RNGR, 3.07R	1784580	AR	*1.20	SHIM, DIFF BRG (.005)	6-H4,24
88	Y 8.50 DIA RNGR, 3.07R	1784581	AR	2.65	SHIM, DIFF BRG (.010)	6-H4,24
88	Y 8.50 DIA RNGR, 3.07R	1784582	AR	*1.65	SHIM, DIFF BRG (.030)	6-H4,24
89	Y 3.54R (GH0), 3.33R (GT7) .	1784579	AR	*1.50	SHIM, DIFF BRG (.003)	6-H8,24
89	Y 3.54R (GH0), 3.33R (GT7) .	1784580	AR	*1.20	SHIM, DIFF BRG (.005)	6-H4,24
89	Y 3.54R (GH0), 3.33R (GT7) .	1784581	AR	2.65	SHIM, DIFF BRG (.010)	6-H4,24
89	Y 3.54R (GH0), 3.33R (GT7) .	1784582	AR	*1.65	SHIM, DIFF BRG (.030)	6-H4,24
90	Y 3.33R (GT7)	1784579	AR	*1.50	SHIM, DIFF BRG (.003)	6-H8,24
90-92	Y 3.54R (GH0)	1784579	AR	*1.50	SHIM, DIFF BRG (.003)	6-H8,24
90-96	Y 3.45R (GM3)	1784579	AR	*1.50	SHIM, DIFF BRG (.003)	6-H8,24
90	Y 3.33R (GT7)	1784580	AR	*1.20	SHIM, DIFF BRG (.005)	6-H4,24
90-92	Y 3.54R (GH0)	1784580	AR	*1.20	SHIM, DIFF BRG (.005)	6-H4,24

© 2000 GENERAL MOTORS SERVICE PARTS OPERATIONS-CHEVROLET-14Y

5.537 SHIM – SHIM KIT, Differential Bearing Adjusting (Con't)

90–96	Y 3.45R (GM3)	1784580	AR	*1.20	SHIM, DIFF BRG (.005)	6–H4,24
90	Y 3.33R (GT7)	1784581	AR	2.65	SHIM, DIFF BRG (.010)	6–H4,24
90–92	Y 3.54R (GH0)	1784581	AR	2.65	SHIM, DIFF BRG (.010)	6–H4,24
90–96	Y 3.45R (GM3)	1784581	AR	2.65	SHIM, DIFF BRG (.010)	6–H4,24
90	Y 3.33R (GT7)	1784582	AR	*1.65	SHIM, DIFF BRG (.030)	6–H4,24
90–92	Y 3.54R (GH0)	1784582	AR	*1.65	SHIM, DIFF BRG (.030)	6–H4,24
90–96	Y 3.45R (GM3)	1784582	AR	*1.65	SHIM, DIFF BRG (.030)	6–H4,24
94	Y G95	1784579	AR	*1.50	SHIM, DIFF BRG (.003)	6–H8,24
94	Y G95	1784580	AR	*1.20	SHIM, DIFF BRG (.005)	6–H4,24
94	Y G95	1784581	AR	2.65	SHIM, DIFF BRG (.010)	6–H4,24
94	Y G95	1784582	AR	*1.65	SHIM, DIFF BRG (.030)	6–H4,24

5.542 WASHER, Differential Pinion Thrust

84	Y	14079458	2	4.25	WASHER, DIFF BRG THRUST	6–H4,28
85–87	Y A/TRNS	14079458	2	4.25	WASHER, DIFF BRG THRUST	6–H4,28
88	Y 3.07R (G44) (EXC 8.50 DIA RNGR)	14079458	2	4.25	WASHER, DIFF BRG THRUST	6–H4,28
89–91	Y 3.07R (G44)	14079458	2	4.25	WASHER, DIFF BRG THRUST	6–H4,28
89–92	Y 3.54R (GH0)	15577321	1	3.85	WASHER, DIFF DRV P/GR THR (RR AXLE)	6–H4,28
90–96	Y 3.45R (GM3)	15577321	1	3.85	WASHER, DIFF DRV P/GR THR (RR AXLE)	6–H4,28
94	Y G95	15577321	1	3.85	WASHER, DIFF DRV P/GR THR (RR AXLE)	6–H4,28
88–95	Y 2.59R (GM1), 2.73R (GU2)	14079458	2	4.25	WASHER, DIFF P/GR THR	6–H4,28
90–94	Y 3.45R (GM3)	2346848	2	*1.75	WASHER, DIFF P/GR THR (RR AXLE) (49/64 I.D. 21/32 O.D.)	6–H4,28
96	Y 2.59R (GM1), 3.07R (G44)	14079458	2	4.25	WASHER, DIFF P/GR THR	6–H4,28
89–90	Y 3.33R (GT7)	15577321	1	3.85	WASHER, DIFF PINION OTR THRUST (RR AXLE)	6–H4,28
85–87	Y M/TRNS	15577321	1	3.85	WASHER, DIFF PNG OTR THRUST	6–H4,28
88	Y 3.07R (G44), 8.50 DIA RNGR (G87)	15577321	1	3.85	WASHER, DIFF PNG OTR THRUST	6–H4,28
88	Y 8.50 DIA RNGR, 3.07R	2346848	2	*1.75	WASHER, DIFF PNT THR (RR AXLE) (49/64 I.D. 21/32 O.D.)	6–H4,28
89–90	Y 3.33R (GT7), 3.54R (GH0)	2346848	2	*1.75	WASHER, DIFF PNT THR (RR AXLE) (49/64 I.D. 21/32 O.D.)	6–H4,28

5.544 BOLT – DAMPENER – SHAFT, Propeller

84–96	Y	14079980	2	2.20	BOLT, DRV LINE VIB DPNR	6–H4,22
84–96	Y	14079979	2	12.21	DAMPENER, DRV LINE VIB	6–H4,21
84	Y M/TRNS (MK2)	10054289	1	302.51	SHAFT, PROP	6–H20,13
84–86	Y A/TRNS, 6–WAY (A42)	10054289	1	302.51	SHAFT, PROP	6–H20,13
84–85	Y A/TRNS (EXC 6–WAY A42)	14076122	1	288.20	SHAFT, PROP	
85–88	Y M/TRNS	10054288	1	257.54	SHAFT, PROP	
86	Y 6–WAY (A42) (EXC 8.50 DIA RNGR G87)	10054289	1	302.51	SHAFT, PROP	6–H20,13
86	Y (EXC 6–WAY (A42), 8.50 DIA RNGR	14076122	1	288.20	SHAFT, PROP	
87–88	Y A/TRNS, 6–WAY (AC3)	10054289	1	302.51	SHAFT, PROP	6–H20,13
87–88	Y A/TRNS (EXC 6–WAY AC3)	14076122	1	288.20	SHAFT, PROP	
89–93	Y 4–SPD A/TRANS (MD8)	10054289	1	302.51	SHAFT, PROP	6–H20,13
89–96	Y 6–SPD M/TRANS (ML9)	12557818	1	269.81	SHAFT, PROP	6–H18,13
94–96	Y 4–SPD A/TRANS (M30)	10054289	1	302.51	SHAFT, PROP	6–H20,13

© 2000 GENERAL MOTORS SERVICE PARTS OPERATIONS–CHEVROLET–14Y

5.545 WASHER – YOKE, Propeller Shaft Pinion

85–87	Y M/TRNS	3865187	1	1.45	WASHER, PNG NUT (07.428)	6–H4,7
88	Y 3.07R (G44), 8.50 DIA RNGR (G87)	3865187	1	1.45	WASHER, PNG NUT (07.428)	6–H4,7
89–90	Y 3.33R (GT7)	3865187	1	1.45	WASHER, PNG NUT (07.428)	6–H4,7
88–96	Y 2.59R (GM1), 3.07R (G44)	10067311	1	58.25	YOKE, DIFF DRV P/GR	6–H4,6
89–93	Y 2.73R (GU2)	10067311	1	58.25	YOKE, DIFF DRV P/GR	6–H4,6
89–92	Y 3.54R (GH0)	10067312	1	68.47	YOKE, DIFF DRV P/GR	6–H4,6
90–96	Y 3.45R (GM3)	10067312	1	68.47	YOKE, DIFF DRV P/GR	6–H4,6
94	Y G95	10067312	1	68.47	YOKE, DIFF DRV P/GR	6–H4,6
85–87	Y M/TRNS	10049012	1	DISCON	YOKE, PROP SHAFT (THREADED)	
84	Y	10140520	1	DISCON	YOKE, PROP SHF PNG	
85–87	Y M/TRNS	462859	1	42.41	YOKE, PROP SHF PNG (UNTHREADED)	6–H4,6
85	Y A/TRNS	10140520	1	DISCON	YOKE, PROP SHF PNG	
86–87	Y A/TRNS	10067311	1	58.25	YOKE, PROP SHF PNG	6–H4,6
88	Y 2.73R (GU2)	10067311	1	58.25	YOKE, PROP SHF PNG	6–H4,6
88	Y (EXC 8.50 DIA RNGR)	10067311	1	58.25	YOKE, PROP SHF PNG	6–H4,6
88	Y 3.07R (G44), 8.50 DIA RNGR (G87)	10067312	1	68.47	YOKE, PROP SHF PNG (UNTHREADED)	6–H4,6
89–90	Y 3.33R (GT7)	10067312	1	68.47	YOKE, PROP SHF PNG (UNTHREADED)	6–H4,6

5.546 BOLT – INSULATOR – NUT – SUPPORT – WASHER, Front Propeller Shaft

84–96	Y	11507025	2	9.30	BOLT, DRIVELINE SUPT (M14X2X205 10.9) (08.900)	6–H20,9
84–96	Y	11508593	2	2.40	BOLT, DRIVELINE SUPT (M12X1.75X160 9.8) (08.900)	6–H20,15
84	Y	14084033	3	2.86	INSULATOR, DRIVELINE SUPT	6–H18,19
85–91	Y	14084033	3	2.86	INSULATOR, DRIVELINE SUPT	6–H18,19
92–96	Y 6–SPD M/TRANS (ML9)	14084033	3	2.86	INSULATOR, DRIVELINE SUPT	6–H18,19
84–94	Y	11515750	2	*1.05	NUT, DRIVELINE SUPT (M12X1.75X11 THK) (08.917)	6–H18,17
84	Y	14091265	1	151.26	SUPPORT, DRIVELINE	6–H18,18
85	Y M/TRNS (MH5, MK2)	14091264	1	153.30	SUPPORT, DRIVELINE	6–H18,18
85	Y A/TRNS	14091265	1	151.26	SUPPORT, DRIVELINE	6–H18,18
86–91	Y 8.50 DIAMETER R/GR (G87)	14091264	1	153.30	SUPPORT, DRIVELINE	6–H18,18
86–91	Y (EXC 8.50 DIAMETER R/GR (G87)	14091265	1	151.26	SUPPORT, DRIVELINE	6–H18,18
92–96	Y 6–SPD M/TRANS (ML9)	14091264	1	153.30	SUPPORT, DRIVELINE	6–H18,18
92–93	Y 4–SPD A/TRANS (MD8)	14091265	1	151.26	SUPPORT, DRIVELINE	6–H18,18
94–96	Y 4–SPD A/TRANS (M30)	14091265	1	151.26	SUPPORT, DRIVELINE	6–H18,18
84–96	Y	14046942	4	.73	WASHER, DRIVELINE SUPT (M13X24X2) (05.383)	6–H18,16
84–96	Y	14047778	4	.63	WASHER, DRIVELINE SUPT (M15X26X2) (06.178)	6–H18,8
84–96	Y	14055822	4	.31	WASHER, DRIVELINE SUPT (24X22.50) (08.929)	
84–96	Y	14055822	4	.31	WASHER, DRIVELINE SUPT (24X22.50) (08.929)	

5.548 JOINT KIT, Propeller Shaft Universal Joint

84–96	Y	14067678	1	41.39	JOINT KIT, PROP SHF FRT UNIVERSAL	6–H18,10
84–88	Y	12522048	2		JOINT KIT, PROP SHF UNIVERSAL (DANA 5–617X)	6–H18,5

© 2000 GENERAL MOTORS SERVICE PARTS OPERATIONS–CHEVROLET–14Y

5.548 JOINT KIT, Propeller Shaft Universal Joint (Con't)

89–91	Y SOFT RIDE SUSP (FE1), HVY DUTY SUSP (FE7)	12522048	2		JOINT KIT, PROP SHF UNIVERSAL (DANA)	6–H18,5
92–96	Y	12522048	2		JOINT KIT, PROP SHF UNIVERSAL (DANA)	6–H18,5

5.556 BUSHING, Universal Joint Sleeve Yoke

84–93	Y 4–SPD A/TRANS (MD8) ...	24207915	1	2.76	BUSHING, PROP SHF FRT SLIP YOKE (INSIDE DIAM 1.506–1.504 (PT OF TRANS EXT) (AC–DELCO #24207915)	5–I9,76
92–93	Y 4–SPD A/TRANS (MD8) ...	8680027	1	7.60	BUSHING, PROP SHF FRT SLIP YOKE (INSIDE DIA 1.506–1.509) (PART OF TRANS CASE) (04.104) (AC–DELCO #8680027)	5–L2,7
94–96	Y 4–SPD A/TRANS (M30) ...	8680027	1	7.60	BUSHING, PROP SHF FRT SLIP YOKE (INSIDE DIA 1.506–1.509) (PART OF TRANS CASE) (04.104) (AC–DELCO #8680027)	5–L2,7
94–96	Y 4–SPD A/TRANS (M30) ...	24207915	1	2.76	BUSHING, PROP SHF FRT SLIP YOKE (INSIDE DIAM 1.506–1.504 (PT OF TRANS EXT) (AC–DELCO #24207915)	5–I9,76

5.586 BOLT – RETAINER, Universal Joint Bearing and Flange

84–96	Y	12338087	4	*1.07	BOLT, PROP SHF	6–H13,12
84–85	Y	14018700	4	*1.00	BOLT, PROP SHF AND UJT STRAP (5/16–24X1.344)	6–H18,21
84–96	Y	14046904	16	5.01	BOLT, RR WHL DRV UJT SHF (M8X1X19)	6–H18,3
84–96	Y	14018211	2	2.81	RETAINER, PROP SHF (05.428) .	6–H18,11
84–96	Y	14046907	8	*3.27	RETAINER, RR WHL DRV UJT SHF	6–H8,4
85–87	Y A/TRNS	14079465	2	28.75	RETAINER, RR WHL DRV UJT SHF (05.428)	6–H8,4
85–87	Y M/TRNS	14091399	1	50.24	RETAINER, RR WHL DRV UJT SHF (05.428)	6–H4,32
88	Y 3.07R (G44) (EXC 8.50 DIA RNGR G87)	14079465	2	28.75	RETAINER, RR WHL DRV UJT SHF (05.428)	6–H8,4
88–92	Y 2.73R (GU2)	14079465	2	28.75	RETAINER, RR WHL DRV UJT SHF (INCLD (14) RINGS) (05.428) ..	6–H8,4
88–96	Y 2.59R (GM1)	14079465	1	28.75	RETAINER, RR WHL DRV UJT SHF (INCLD (14) RINGS) (05.428) ..	6–H8,4
88	Y 3.07R (G44), 8.50 DIAMETER R/GR (G87)	14091399	1	50.24	RETAINER, RR WHL DRV UJT SHF (05.428)	6–H4,32
89–96	Y 3.07R (G44)	14079465	2	28.75	RETAINER, RR WHL DRV UJT SHF (INCLD (14) RINGS) (05.428) ..	6–H8,4
89–90	Y 3.33R (GT7)	14091399	1	50.24	RETAINER, RR WHL DRV UJT SHF (05.428)	6–H4,32
89–92	Y 3.54R (GH0)	14091399	1	50.24	RETAINER, RR WHL DRV UJT SHF (05.428)	6–H4,32
90–96	Y 3.45R (GM3)	14091399	1	50.24	RETAINER, RR WHL DRV UJT SHF (05.428)	6–H4,32
94	Y G95	14091399	1	50.24	RETAINER, RR WHL DRV UJT SHF (05.428)	6–H4,32

5.595 NUT – WASHER, Propellor Shaft Pinion Flange

90–91	Y 3.07R (G44), 2.59R (GM1) .	9422308	1	3.95	NUT, DIFF DRV P/GR (.750–16, GM301–M GA) (HEX LK TORQ TENS) (08.917)	
90–96	Y 3.45R (GM3)	9422310	1	*3.15	NUT, DIFF DRV P/GR (08.917) ...	6–H4,8

© 2000 GENERAL MOTORS SERVICE PARTS OPERATIONS–CHEVROLET–14Y

5.595 NUT – WASHER, Propeller Shaft Pinion Flange (Con't)

91–92	Y 3.54R (GH0)	9422310	1	*3.15	NUT, DIFF DRV P/GR (08.917) ...	6–H4,8
92–93	Y 2.73R (GU2)	9422308	1	3.95	NUT, DIFF DRV P/GR (.750–16, GM301–M GA) (HEX LK TORQ TENS) (08.917)	
92–96	Y 2.59R (GM1), 3.07R (G44) .	9422308	1	3.95	NUT, DIFF DRV P/GR (.750–16, GM301–M GA) (HEX LK TORQ TENS) (08.917)	
94	Y G95	9422308	1	3.95	NUT, DIFF DRV P/GR (.750–16, GM301–M GA) (HEX LK TORQ TENS) (08.917)	
89	Y 3.33R (GT7), 3.54R (GH0) .	9422310	1	*3.15	NUT, PINION FLG (08.917)	6–H4,8
90	Y 3.33R (GT7)	9422310	1	*3.15	NUT, PINION FLG (08.917)	6–H4,8
84–87	Y	2423517	1	.98	WASHER, DIFF DRV P/GR (05.812) (AC–DELCO #2423517)	6–H4,7
88–96	Y 2.59R (GM1), 3.07R (G44) .	15583247	1	2.65	WASHER, DIFF DRV P/GR (05.518)	6–H8,7
89–92	Y 3.54R (GH0)	3865187	1	1.45	WASHER, DIFF DRV P/GR (07.428)	6–H8,7
89–93	Y 2.73R (GU2)	15583247	1	2.65	WASHER, DIFF DRV P/GR (05.518)	6–H8,7
90–96	Y 3.45R (GM3)	3865187	1	1.45	WASHER, DIFF DRV P/GR (07.428)	6–H8,7
94	Y G95	3865187	1	1.45	WASHER, DIFF DRV P/GR (07.428)	6–H8,7

5.803 WHEEL, Front or Rear

84	Y H .D .SUSP (FE7) (EXC VB4, VD1, VT7 EXPORT) ...	14069517	LH	479.20	WHEEL, FRT (16 X 8.5) (STAMPED DY)	6–H22,1
84	Y H .D .SUSP (FE7) (EXC VB4, VD1, VT7 EXPORT) ...	14069518	RH	DISCON	WHEEL, FRT (16 X 8.5) (STAMPED DY, DZ)	
84–87	Y (EXC 6–WAY)	14046981	1	DISCON	WHEEL, 16X4 (COMPACT SPA) (STAMPED DAA)	
88	Y ALUM WHL (PY3)	10050958	1	DISCON	WHEEL, 16X4 (COMPACT SPA (STAMPED XDW)	
84–85	Y (EXC H.D. SUSP FE7)	14069517	LH	479.20	WHEEL, 16X8.5 (FRT & RR) (STAMPED DY) (QTY 02)	6–H22,1
84–85	Y (EXC H.D. SUSP FE7)	14069518	RH	DISCON	WHEEL, 16X8.5 (FRT & RR) (STAMPED DY, DZ) (QTY 02) ..	
86	Y ALUM WHL (PY3) (EXC H.D. SUSP FE7)	14094587	2	DISCON	WHEEL, 16X8.5 (LH FRT & LH RR) .	
86	Y ALUM WHL (PY3) (EXC H.D. SUSP FE7)	14094588	2	DISCON	WHEEL, 16X8.5 (RH FRT & RH RR)	
88	Y ALUM WHL (PY3)	10089683	LH	DISCON	WHEEL, 16X8.5 (ALUM) (LH FRT, LH RR) (STAMPED XRK)	
88	Y ALUM WHL (PY3)	10089684	RH	DISCON	WHEEL, 16X8.5 (ALUM) (RH FRT, RH RR) (STAMPED XRL)	
87	Y ALUM WHL (PY3)	10052092	2	DISCON	WHEEL, 16X8.50 (ALUM) (RH FRT & RH RR)	
87	Y ALUM WHL (PY3)	10067313	2	DISCON	WHEEL, 16X8.50 (ALUM) (LH FRT & LH RR)	
84	Y H .D. SUSP (FE7)	14089085	LH	DISCON	WHEEL, 16X9.5 (RR) (STAMPED FJ, FM)	
84	Y H .D. SUSP (FE7)	14089086	RH	DISCON	WHEEL, 16X9.5 (RR) (STAMPED FK, FR)	
85	Y H .D. SUSP (FE7)	14089085	AR	DISCON	WHEEL, 13X9.5 (LH FRT OR RR) (STAMPED FJ, FM)	
85	Y H .D. SUSP (FE7)	14089086	AR	DISCON	WHEEL, 16X9.5 (RH FRT OR RR) (STAMPED FR, FK)	
86	Y H .D. SUSP (FE7), ALUM WHL (PW9) (EXC EXPORT) .	14094589	2	DISCON	WHEEL, 16X9.5 (LH FRT & LH RR) .	
86	Y H .D .SUSP (FE7), ALUM WHL (PW9) (EXC EXPORT) .	14094590	2	DISCON	WHEEL, 16X9.5 (RH FRT & RH RR)	
87	Y ALUM WHL (PW9)	10067315	2	DISCON	WHEEL, 16X9.50 (ALUM) (LH FRT & LH RR) (STAMPED XDN)	

© 2000 GENERAL MOTORS SERVICE PARTS OPERATIONS–CHEVROLET–14Y

5.803 WHEEL, Front or Rear (Con't)

87	Y ALUM WHL (PW9)	10067316	2	DISCON	WHEEL, 16X9.50 (ALUM) (RH FRT & RH RR) (STAMPED XDP)	
91–92	Y SPECIAL PERFORMANCE WHL (QA2)	10174842	LH	538.40	WHEEL, 17X11 (RR) (STAMPED XYX)	6–H26,1
91–92	Y SPECIAL PERFORMANCE WHL (QA2)	10174843	RH	538.40	WHEEL, 17X11 (RR) (STAMPED XYX)	6–H26,1
93	Y SPECIAL PERFORMANCE WHL (QA2)	10180883	LH	495.50	WHEEL, 17X11 (RR) (BRIGHT SILVER)	6–H26,1
93	Y SPECIAL PERFORMANCE WHL (QA2)	10180884	RH	495.50	WHEEL, 17X11 (RR) (BRIGHT SILVER)	6–H26,1
90	Y ALUM WHL (QA2), H .D .SUSP (FE7)	10147988	LH	697.40	WHEEL, 17X11 ALUM (RR) (STAMPED XXX)	6–H25,1
90	Y ALUM WHL (QA2), H .D .SUSP (FE7)	10147989	RH	697.40	WHEEL, 17X11 ALUM (RR) (STAMPED XXY)	6–H25,1
94–95	Y SPECIAL PERFORMANCE WHL (QA2)	12512904	2	479.60	WHEEL, 17X11 RR (STAMPED AFS)	6–I2,11
96	Y SPECIAL PERFORMANCE WHL (QA2), GRAND SPORT EDITION (Z16), (41P)	12361446	2	479.60	WHEEL, 17X11 RR (STAMPED RJC)	6–I2,11
88–92	Y STYLED AL WHL (QA1) ...	10050959	1	299.90	WHEEL, 17X4 COMPACT SPA (STAMPED XDX)	7–I20,28
90–92	Y SPECIAL PERFORMANCE WHL (QA2)	10050959	1	299.90	WHEEL, 17X4 COMPACT SPA (STAMPED XDX)	7–I20,28
93–95	Y	10050959	1	299.90	WHEEL, 17X4 COMPACT SPA (STAMPED XDX)	7–I20,28
96	Y (EXC (EXC SPA TIRE)	10050959	1	299.90	WHEEL, 17X4 COMPACT SPA (STAMPED XDX)	7–I20,28
93–96	Y STYLD AL WHL (QB6)	10180880	RH	454.20	WHEEL, 17X8.5 (FRT) (BRIGHT SILVER)	6–H26,1
93–96	Y STYLD AL WHL (QB6)	12520358	LH	454.20	WHEEL, 17X8.5 (FRT) (STAMPED ACU)	6–H26,1
96	Y ALUM WHL (QD2), COLLECTORS EDITION (Z15), (17P)	9592381	2	479.60	WHEEL, 17X8.5 FRT (BRIGHT SILVER)	6–I2,11
96	Y ALUM WHL (QD2), GRAND SPORT EDITION (Z16), (41P)	12361448	2	479.60	WHEEL, 17X8.5 FRT (STAMPED RGV)	6–I2,11
88	Y 35 ANNIV (ZO1)	10121017	LH	DISCON	WHEEL, 17X9.5 (ALUM) (WHITE)	
95–96	Y STYLED WHEEL ALUM (N66)	10214046	4	479.60	WHEEL, 17X9.5 (FRT & RR) (BRIGHT SILVER)	6–I2,11
90	Y	10119548	RH	485.00	WHEEL, 17X9.5 ALUM (FRT) (STAMPED XXU)	6–H25,1
90	Y	10119548	RH	485.00	WHEEL, 17X9.5 ALUM (STAMPED XXU) (FRT, RR)	6–H25,1
90	Y ALUM WHL (QA2), H .D .SUSP (FE7)	10147990	LH	485.00	WHEEL, 17X9.5 ALUM (FRT) (STAMPED XXUOR 10119547) .	6–H25,1
90	Y ALUM WHL (QA1)	10147990	LH	485.00	WHEEL, 17X9.5 ALUM (STAMPED XXU OR 10119547) (FRT, RR) ..	6–H25,1
91–92	Y SPECIAL PERFORMANCE WHL (QA2)	10137823	LH	468.80	WHEEL, 17X9.5 FRT (STAMPED XYU)	6–H26,1
91–92	Y STYLED AL WHL (QA1) ...	10137823	LH	468.80	WHEEL, 17X9.5 FRT (STAMPED XYU)	6–H26,1
91–92	Y SPECIAL PERFORMANCE WHL (QA2)	10137824	RH	468.80	WHEEL, 17X9.5 FRT	6–H26,1
91–92	Y STYLED AL WHL (QA1) ...	10137824	RH	468.80	WHEEL, 17X9.5 FRT	6–H26,1
93	Y SPECIAL PERFORMANCE WHL (QA2)	10180881	LH	454.20	WHEEL, 17X9.5 FRT (BRIGHT SILVER)	6–H26,1
93–96	Y STYLED AL WHL (QA1) ...	10180881	LH	454.20	WHEEL, 17X9.5 FRT (BRIGHT SILVER)	6–H26,1
93	Y SPECIAL PERFORMANCE WHL (QA2)	10180882	RH	454.20	WHEEL, 17X9.5 FRT (BRIGHT SILVER)	6–H26,1

© 2000 GENERAL MOTORS SERVICE PARTS OPERATIONS–CHEVROLET–14Y

5.803 WHEEL, Front or Rear (Con't)

93–96	Y STYLED AL WHL (QA1) ...	10180882	RH	454.20	WHEEL, 17X9.5 FRT (BRIGHT SILVER)	6–H26,1
94–95	Y SPECIAL PERFORMANCE WHL (QA2)	10214046	2	479.60	WHEEL, 17X9.5 FRT (BRIGHT SILVER)	6–I2,11
96	Y SPECIAL PERFORMANCE WHL (QA2), GRAND SPORT EDITION (Z16), (41P)	12361447	2	479.60	WHEEL, 17X9.5 FRT (STAMPED RGW)	6–I2,11
91–92	Y STYLED AL WHL (QA1) ...	10137823	LH	468.80	WHEEL, 17X9.5 RR (STAMPED XYU)	6–H26,1
91–92	Y STYLED AL WHL (QA1) ...	10137824	RH	468.80	WHEEL, 17X9.5 RR	6–H26,1
93–96	Y STYLED AL WHL (QA1), STYLD AL WHL (QB6)	10180881	LH	454.20	WHEEL, 17X9.5 RR (BRIGHT SILVER)	6–H26,1
93–96	Y STYLED AL WHL (QA1), STYLD AL WHL (QB6)	10180882	RH	454.20	WHEEL, 17X9.5 RR (BRIGHT SILVER)	6–H26,1
96	Y ALUM WHL (QD2), COLLECTORS EDITION (Z15), (17P)	10214046	2	479.60	WHEEL, 17X9.5 RR (BRIGHT SILVER)	6–I2,11
96	Y ALUM WHL (QD2), GRAND SPORT EDITION (Z16), (41P)	12361447	2	479.60	WHEEL, 17X9.5 RR (STAMPED RGW)	6–I2,11
88	Y	10047635	LH	DISCON	WHEEL, 17X9.5, ALUM (FRT & RR) (STAMPED XNS)	6–H23,11
88	Y	10047636	RH	DISCON	WHEEL, 17X9.5, ALUM (FRT & RR) (STAMPED XNT)	6–H23,11
89	Y	10047635	LH	DISCON	WHEEL, 17X9.5, ALUM (FRT & RR) (STAMPED XNS)	6–H23,11
89	Y	10047636	RH	DISCON	WHEEL, 17X9.5, ALUM (FRT & RR) (STAMPED XNT)	6–H23,11
	*EXPORT**********EXPORT**********EXPORT**********EXPORT**********EXPORT*					
86	Y H .D. SUSP (FE7), EXPORT	14094587	2	DISCON	WHEEL, LH FRT & LH RR (16 X 8.5)	
84–85	Y H .D. SUSP (FE7), VB4, VD1, VE1, VT7 (EXPORT) ...	14069517	LH	479.20	WHEEL, 16X8.5 (FRT & RR) (STAMPED DY) (QTY 02)	6–H22,1
84–85	Y H .D. SUSP (FE7), VB4, VD1, VE1, VT7 (EXPORT) ...	14069518	RH	DISCON	WHEEL, 16X8.5 (FRT & RR) (STAMPED DY, DZ) (QTY 02) ..	
86	Y H .D. SUSP (FE7), EXPORT	14094588	2	DISCON	WHEEL, 16X8.5 (RH FRT & RH RR)	
95–96	Y STYLED ALUM WHL (QA0)	10180880	RH	454.20	WHEEL, 17X8.5 (BRIGHT SILVER) .	6–H26,1
95–96	Y STYLED ALUM WHL (QA0)	12520358	LH	454.20	WHEEL, 17X8.5 (STAMPED ACU)	6–H26,1

5.805 WEIGHT, Wheel Balance

84	Y	9591361	AR	*1.50	WEIGHT, WHL BAL (1.0 OZ) (ALUM WHL) (CODE "AW" FOR OLDER STYLE WHEEL FLANGE)	
84	Y	9591363	AR	*1.50	WEIGHT, WHL BAL (1.5 OZ) (ALUM WHL)	
84	Y	9591365	AR	*2.00	WEIGHT, WHL BAL (2.0 OZ) (ALUM WHL)	
84	Y	9591368	AR	2.20	WEIGHT, WHL BAL (2.75 OZ) (ALUM WHL)	
84–88	Y	9591583	AR	1.30	WEIGHT, WHL BAL (0.75 OZ) (ALUM WHL)	
84	Y	9591822	AR	*1.30	WEIGHT, WHL BAL (1 OZ)	
84	Y	9591822	AR	*1.30	WEIGHT, WHL BAL (1.0 OZ) (STEEL WHL) (USED ON CURVED RIM FLG)	
84	Y	9591830	AR	2.00	WEIGHT, WHL BAL (3.0 OZ) (STEEL WHL) (USED ON CURVED RIM FLG)	
84–88	Y	12337893	AR	*1.10	WEIGHT, WHL BAL (0.5 OZ) (ALUM WHL)	

© 2000 GENERAL MOTORS SERVICE PARTS OPERATIONS–CHEVROLET–14Y

5.805 WEIGHT, Wheel Balance (Con't)

84–91	Y	14080297	AR	DISCON	WEIGHT, WHL BAL (3.0 OZ) (ADHESIVE BACKED) (CUT AS REQUIRED)
86–88	Y	9591361	AR	*1.50	WEIGHT, WHL BAL (1.0 OZ) (ALUM WHL) (CODE "AW" FOR OLDER STYLE WHEEL FLANGE)
86–96	Y	9591362	AR	*1.50	WEIGHT, WHL BAL (1.25 OZ) (MT ON I/S ONLY)
86–88	Y	9591363	AR	*1.50	WEIGHT, WHL BAL (1.5 OZ) (ALUM WHL)
86–88	Y	9591365	AR	*2.00	WEIGHT, WHL BAL (2.0 OZ) (ALUM WHL)
86–88	Y	9591367	AR	*2.00	WEIGHT, WHL BAL (2.5 OZ) (ALUM WHL)
86–88	Y	9591368	AR	2.20	WEIGHT, WHL BAL (2.75 OZ) (ALUM WHL)
86–89	Y	9591639	AR	*1.45	WEIGHT, WHL BAL (0.25 OZ) (ALUM WHL)
86–88	Y	12338029	AR	2.00	WEIGHT, WHL BAL (2.25 OZ) (ALUM WHL)
88	Y (EXC 35 ANNIVERSARY (Z01)	9591378	AR	*1.80	WEIGHT, WHL BAL (1.25 OZ) (ALUM WHL)
88	Y (EXC 35 ANNIVERSARY (Z01)	9591379	AR	*1.60	WEIGHT, WHL BAL (1.5 OZ) (ALUM WHL)
88	Y (EXC 35 ANNIVERSARY (Z01)	9591380	AR	1.80	WEIGHT, WHL BAL (1.75 OZ) (ALUM WHL)
88	Y (EXC 35 ANNIVERSARY (Z01)	9591381	AR	*2.00	WEIGHT, WHL BAL (2.0 OZ) (ALUM WHL)
88	Y (EXC 35 ANNIVERSARY (Z01)	9591382	AR	2.30	WEIGHT, WHL BAL (2.25 OZ) (ALUM WHL)
88	Y (EXC 35 ANNIVERSARY (Z01)	9591382	AR	2.30	WEIGHT, WHL BAL (2.25 OZ) (ALUM WHL)
88	Y (EXC 35 ANNIVERSARY (Z01)	9591383	AR	*2.00	WEIGHT, WHL BAL (2.5 OZ) (ALUM WHL)
88	Y (EXC 35 ANNIVERSARY (Z01)	9591383	AR	*2.00	WEIGHT, WHL BAL (2.5 OZ) (ALUM WHL)
88	Y (EXC 35 ANNIVERSARY (Z01)	9591384	AR	1.85	WEIGHT, WHL BAL (2.75 OZ) (ALUM WHL) (05.808)
88	Y (EXC 35 ANNIVERSARY (Z01)	9591385	AR	*2.00	WEIGHT, WHL BAL (3.0 OZ) (ALUM WHL)
88	Y (EXC 35 ANNIVERSARY (Z01)	9591584	AR	*1.20	WEIGHT, WHL BAL (0.5 OZ) (ALUM WHL)
88	Y (EXC 35 ANNIVERSARY (Z01)	9591585	AR	*1.20	WEIGHT, WHL BAL (0.75 OZ) (ALUM WHL)
88	Y (EXC 35 ANNIVERSARY (Z01)	9591670	AR	*1.30	WEIGHT, WHL BAL (0.25 OZ) (ALUM WHL)
88	Y ALUM WHL (QA1), 35 ANNIV (Z01)	10098224	AR	DISCON	WEIGHT, WHL BAL (.25 OZ)
88	Y ALUM WHL (QA1), 35 ANNIV (Z01)	10098225	AR	DISCON	WEIGHT, WHL BAL (.50 OZ)
88	Y ALUM WHL (QA1), 35 ANNIV (Z01)	10098226	AR	DISCON	WEIGHT, WHL BAL (.75 OZ)
88	Y ALUM WHL (QA1), 35 ANNIV (Z01)	10098227	AR	DISCON	WEIGHT, WHL BAL (1.0 OZ)
88	Y ALUM WHL (QA1), 35 ANNIV (Z01)	10098228	AR	DISCON	WEIGHT, WHL BAL (1.25 OZ)
88	Y ALUM WHL (QA1), 35 ANNIV (Z01)	10098229	AR	DISCON	WEIGHT, WHL BAL (1.50 OZ)
88	Y ALUM WHL (QA1), 35 ANNIV (Z01)	10098230	AR	DISCON	WEIGHT, WHL BAL (1.75 OZ)

© 2000 GENERAL MOTORS SERVICE PARTS OPERATIONS–CHEVROLET–14Y

5.805 WEIGHT, Wheel Balance (Con't)

88	Y ALUM WHL (QA1), 35 ANNIV (Z01)	10098231	AR	DISCON	WEIGHT, WHL BAL (2.00 OZ) ....
88	Y ALUM WHL (QA1), 35 ANNIV (Z01)	10098232	AR	DISCON	WEIGHT, WHL BAL (2.25 OZ) ....
88	Y ALUM WHL (QA1), 35 ANNIV (Z01)	10098233	AR	DISCON	WEIGHT, WHL BAL (2.50 OZ) ....
88	Y ALUM WHL (QA1), 35 ANNIV (Z01)	10098234	AR	DISCON	WEIGHT, WHL BAL (2.75 OZ) ....
88	Y ALUM WHL (QA1), 35 ANNIV (Z01)	10098235	AR	DISCON	WEIGHT, WHL BAL (3.00 OZ) ....
88	Y (EXC 35 ANNIVERSARY (Z01)	12338160	AR	*1.50	WEIGHT, WHL BAL (1.0 OZ) (ALUM WHL) .....
89–90	Y	9591379	AR	*1.60	WEIGHT, WHL BAL (1.5 OZ) (ALUM WHL) .....
89–90	Y	9591380	AR	1.80	WEIGHT, WHL BAL (1.75 OZ) (ALUM WHL) .....
89–90	Y	9591381	AR	*2.00	WEIGHT, WHL BAL (2.0 OZ) (ALUM WHL) .....
89–90	Y	9591382	AR	2.30	WEIGHT, WHL BAL (2.25 OZ) (ALUM WHL) .....
89–90	Y	9591382	AR	2.30	WEIGHT, WHL BAL (2.25 OZ) (ALUM WHL) .....
89–90	Y	9591383	AR	*2.00	WEIGHT, WHL BAL (2.5 OZ) (ALUM WHL) .....
89–90	Y	9591383	AR	*2.00	WEIGHT, WHL BAL (2.5 OZ) (ALUM WHL) .....
89–90	Y	9591384	AR	1.85	WEIGHT, WHL BAL (2.75 OZ) (ALUM WHL) (05.808) .....
89–90	Y	9591385	AR	*2.00	WEIGHT, WHL BAL (3.0 OZ) (ALUM WHL) .....
89–90	Y	9591584	AR	*1.20	WEIGHT, WHL BAL (0.5 OZ) (ALUM WHL) .....
89–90	Y	9591585	AR	*1.20	WEIGHT, WHL BAL (0.75 OZ) (ALUM WHL) .....
89–90	Y	9591670	AR	*1.30	WEIGHT, WHL BAL (0.25 OZ) (ALUM WHL) .....
89–90	Y	12338160	AR	*1.50	WEIGHT, WHL BAL (1.0 OZ) (ALUM WHL) .....
91–96	Y	9591361	AR	*1.50	WEIGHT, WHL BAL (1.0 OZ) (CODE–AW FOR OLDER STYLE WHL FLG) (MT ON I/S ONLY) ..
91–96	Y	9591363	AR	*1.50	WEIGHT, WHL BAL (1.5 OZ) (MT ON I/S ONLY) .....
91–96	Y	9591364	AR	*1.50	WEIGHT, WHL BAL (1.75 OZ) (MT ON I/S ONLY) .....
91–96	Y	9591365	AR	*2.00	WEIGHT, WHL BAL (2.0 OZ) (MT ON I/S ONLY) .....
91–93	Y	9591367	AR	*2.00	WEIGHT, WHL BAL (2.5 OZ) (MT ON I/S ONLY) .....
91–96	Y	9591368	AR	2.20	WEIGHT, WHL BAL (2.75 OZ) (ALUM WHL) .....
91–93	Y	9591369	AR	*2.00	WEIGHT, WHL BAL (3.0 OZ) (ALUM WHL) .....
91–96	Y	9591583	AR	1.30	WEIGHT, WHL BAL (0.75 OZ) (ALUM WHL) .....
91–96	Y	9591669	AR	*1.45	WEIGHT, WHL BAL (0.25 OZ) ....
91–96	Y	12337893	AR	*1.10	WEIGHT, WHL BAL (0.5 OZ) (MT ON I/S ONLY) .....
91–93	Y	12338029	AR	2.00	WEIGHT, WHL BAL (2.25 OZ) (MT ON I/S ONLY) .....

© 2000 GENERAL MOTORS SERVICE PARTS OPERATIONS–CHEVROLET–14Y

5.805 WEIGHT, Wheel Balance (Con't)

96	Y	9591367	AR	*2.00	WEIGHT, WHL BAL (2.5 OZ) (ALUM WHL) (MT ON I/S ONLY)	
96	Y	12338029	AR	2.00	WEIGHT, WHL BAL (2.25 OZ) (MT ON I/S ONLY)	

5.806 HUB – KNUCKLE – NUT – RETAINER – SPINDLE – WASHER, Rear Wheel

84–96	Y	7470501	2	396.94	HUB, RR WHL (AC–DELCO #20–45)	6–G11,4
88–96	Y	10270126	LH	503.88	KNUCKLE, RR SUSP	6–E11,11
88–96	Y	10270127	RH	503.88	KNUCKLE, RR SUSP	6–E11,11
84–96	Y	15653460	2	2.31	NUT, RR WHL SPDL (HEX, M24X1.5X14.5, GM510M (5), PLAIN) (06.056) (AC–DELCO #36–4123)	6–G11,9
84–96	Y	562248	2	3.01	RETAINER, RR WHL SPDL NUT (06.056)	6–G11,7
84–85	Y	14055941	2	208.08	SPINDLE, RR WHL	6–H18,4
86–87	Y	14087673	2	DISCON	SPINDLE, RR WHL	
88–96	Y	10052216	2	208.08	SPINDLE, RR WHL (W/RELUCTOR RING)	6–H18,4
84–96	Y	562249	2	2.25	WASHER, RR WHL SPDL (45MM OD FLAT) (OUTBOARD OF KNUCKLE) (06.056)	6–G11,6
84–96	Y	14076924	2	4.85	WASHER, RR WHL SPDL (58MM OD 33.5MM FLANGED ID) (INBOARD OF KNUCKLE)	6–G11,1

5.809 ROTOR, Front and Rear Wheel Brake

84–87	Y	14084142	2	112.75	ROTOR, FRT BRK (ROTOR, FRT BRK) (REPLACE IN AXLE SETS ONLY TO PREVENT BRAKE LEAD) (AC–DELCO #177–673)	7–E4,13
84–87	Y STINGRAY) (VENTED	18027729	AR	107.18	ROTOR, FRT BRK (5–4 3/4 HOLES & BOLT CIRCLE) (2 33/64 HEIGHT) (11 1/2 DIAMETER) (AC–DELCO #18A129) (DURASTOP)	
88	Y HVY DUTY SUSP (FE7)	10052203	LH	152.15	ROTOR, FRT BRK (ROTOR, FRT BRK) (AC–DELCO #177–678)	6–E22,47
88	Y HVY DUTY SUSP (FE7)	10052204	RH	152.15	ROTOR, FRT BRK (ROTOR, FRT BRK) (AC–DELCO #177–679)	6–E22,47
88	Y AL WHL (PY3), (EXC HVY DUTY SUSP (FE7)	10097654	2	91.85	ROTOR, FRT BRK (AC–DELCO #177–684)	6–E18,44
88–95	Y STINGRAY) (EXCEPT HEAVY DUTY POWER BRAKES) (VENTED	18027889	AR	105.30	ROTOR, FRT BRK (5–4 3/16 HOLES & BOLT CIRCLE) (2 5/64 HEIGHT) (12 DIAMETER) (AC–DELCO #18A289) (DURASTOP)	6–E18,44
88–96	Y STINGRAY) (HEAVY DUTY POWER BRAKES) (VENTED	18028284	LH	177.28	ROTOR, FRT BRK (5–4 3/4 HOLES & BOLT CIRCLE) (2 13/64 HEIGHT) (13 DIAMETER) (AC–DELCO #18A684) (DURASTOP)	
88–96	Y STINGRAY) (HEAVY DUTY POWER BRAKES) (VENTED	18028285	RH	177.28	ROTOR, FRT BRK (5–4 3/4 HOLES & BOLT CIRCLE) (2 13/64 HEIGHT) (13 DIAMETER) (AC–DELCO #18A685) (DURASTOP)	

© 2000 GENERAL MOTORS SERVICE PARTS OPERATIONS–CHEVROLET–14Y

5.809 ROTOR, Front and Rear Wheel Brake (Con't)

89–95	Y HVY DUTY PWR BRK (J55)	10052203	LH	152.15	ROTOR, FRT BRK (AC–DELCO #177–678)	6–E22,47
89–95	Y HVY DUTY PWR BRK (J55)	10052204	RH	152.15	ROTOR, FRT BRK (AC–DELCO #177–679)	6–E22,47
89–94	Y ANTILOCK DISC BRK (JL9)	10097654	2	91.85	ROTOR, FRT BRK (AC–DELCO #177–684)	6–E18,44
96	Y HVY DUTY PWR BRK (J55), (EXC PROTECTOR (VE2) (EXPORT), COLLECTORS EDITION (Z15), GRAND SPORT EDITION (Z16)	10052203	LH	152.15	ROTOR, FRT BRK (AC–DELCO #177–678)	6–E22,47
96	Y HVY DUTY PWR BRK (J55), (EXC PROTECTOR (VE2) (EXPORT), COLLECTORS EDITION (Z15), GRAND SPORT EDITION (Z16)	10052204	RH	152.15	ROTOR, FRT BRK (AC–DELCO #177–679)	6–E22,47
96	Y HVY DUTY PWR BRK (J55), COLLECTORS EDITION (Z15), GRAND SPORT EDITION (Z16)	10257631	LH	152.04	ROTOR, FRT BRK (AC–DELCO #177–780)	6–E22,47
96	Y HVY DUTY PWR BRK (J55), COLLECTORS EDITION (Z15), GRAND SPORT EDITION (Z16)	10257632	RH	152.04	ROTOR, FRT BRK (AC–DELCO #177–781)	6–E22,47
84–87	Y	14084143	2	125.79	ROTOR, RR BRK (ROTOR, RR BRK) (REPLACE IN AXLE SETS ONLY TO PREVENT BRAKE LEAD) (AC–DELCO #177–674)	6–G6,13
84–87	Y STINGRAY) (VENTED	18027740	AR	107.38	ROTOR, RR BRK (5–4 3/4 HOLES & BOLT CIRCLE) (2 1/2 HEIGHT) (11 1/2 DIAMETER) (AC–DELCO #18A140) (DURASTOP)	
88–95	Y	10097655	2	93.50	ROTOR, RR BRK (AC–DELCO #177–685)	6–G11,5
88–95	Y STINGRAY) (VENTED	18027888	AR	107.18	ROTOR, RR BRK (5–4 3/4 HOLES & BOLT CIRCLE) (1 31/32 HEIGHT) (12 DIAMETER) (AC–DELCO #18A288) (DURASTOP)	
88–96	Y	18039636	LH	155.58	ROTOR, RR BRK (AC–DELCO #18A1052) (DURASTOP)	6–G11,5
88–96	Y	18039637	RH	155.58	ROTOR, RR BRK (AC–DELCO #18A1053) (DURASTOP)	6–G11,5
88–95	Y	18039646	LH	258.18	ROTOR, RR BRK (AC–DELCO #18A1062) (DURASTOP)	6–G11,5
88–95	Y	18039647	RH	258.18	ROTOR, RR BRK (AC–DELCO #18A1063) (DURASTOP)	6–G11,5
96	Y HVY DUTY PWR BRK (J55), (EXC PROTECTOR (VE2) (EXPORT), COLLECTORS EDITION (Z15), GRAND SPORT EDITION (Z16)	10097655	2	93.50	ROTOR, RR BRK (AC–DELCO #177–685)	6–G11,5
96	Y HVY DUTY PWR BRK (J55), COLLECTORS EDITION (Z15), GRAND SPORT EDITION (Z16)	10257721	2	152.88	ROTOR, RR BRK (AC–DELCO #177–782)	6–G11,5
96	Y STINGRAY) (HEAVY DUTY POWER BRAKES) (VENTED	18027888	AR	107.18	ROTOR, RR BRK (5–4 3/4 HOLES & BOLT CIRCLE) (1 31/32 HEIGHT) (12 DIAMETER) (AC–DELCO #18A288) (DURASTOP)	

© 2000 GENERAL MOTORS SERVICE PARTS OPERATIONS–CHEVROLET–14Y

5.809 ROTOR, Front and Rear Wheel Brake (Con't)

*EXPORT****************EXPORT****************EXPORT****************EXPORT****************EXPORT*

96	Y HVY DUTY PWR BRK (J55), PROTECTOR (VE2) (EXPORT), (EXC COLLECTORS EDITION (Z15), GRAND SPORT EDITION (Z16)	10257631	LH	152.04	ROTOR, FRT BRK (AC–DELCO #177–780)	6–E22,47
96	Y HVY DUTY PWR BRK (J55), PROTECTOR (VE2) (EXPORT), (EXC COLLECTORS EDITION (Z15), GRAND SPORT EDITION (Z16)	10257632	RH	152.04	ROTOR, FRT BRK (AC–DELCO #177–781)	6–E22,47
96	Y HVY DUTY PWR BRK (J55), PROTECTOR (VE2) (EXPORT), (EXC COLLECTORS EDITION (Z15), GRAND SPORT EDITION (Z16)	10257721	2	152.88	ROTOR, RR BRK (AC–DELCO #177–782)	6–G11,5

5.812 BOLT – WASHER, Hub or Drum, Front and Rear Wheel

84–93	Y	9592032	10	2.80	BOLT, FRT WHL (12X1.5X44, 16 OD, 9.2 DIA DOG PT, 10.9, PL) (SILVER) (PHOSPHATE ZINC ORGANIC–FLAKE FINISH) ...	6–G11,4
94–96	Y	9592032	10	2.80	BOLT, FRT WHL (SILVER) (PHOSPHATE ZINC ORGANIC–FLAKE FINISH) ...	6–G11,4
86–96	Y	12338086	8	*.94	BOLT, FRT WHL HUB (HEX M10X1.5X70 36 THDTHD 10.9 PZOR) (M10X1.5X70, 36 THD) (HEX) (08.900)	7–E4,9
84–96	Y	9592032	10	2.80	BOLT, RR WHL (12X1.5X44, 16 OD, 9.2 DIA DOG PT, 10.9, PL) (SILVER) (PHOSPHATE ZINC ORGANIC–FLAKE FINISH) ...	6–G11,4
84–87	Y	14046943	6	5.20	BOLT, RR WHL HUB	6–G6,30
84–96	Y	14046942	6	.73	WASHER, RR WHL HUB (M13X24X2) (05.383)	6–G11,26
84–96	Y	14055822	6	.31	WASHER, RR WHL HUB (24X22.50) (08.929)	6–G11,26

5.813 BOLT – CAP – HOLDER – NUT – NUT KIT – RETAINER, Hub Front and Rear

84–86	Y	11508039	8	*2.95	BOLT, FRT WHL HUB (HEX, M10X1.5X65, 10.9, POR) (08.900)	
84–86	Y	10029867	4	6.50	CAP, WHL LK (BLACK PLASTIC) (HAS 28MM INTERNAL THDS) .	6–H22,5
85	Y	10028614	20	*1.50	CAP, WHL NUT (BLACK) (HAS 24MM INTERNAL THDS)	6–H22,7
86–87	Y	14102345	AR	*1.30	CAP, WHL NUT (GRAY)	6–H22,7
88	Y AL WHL (PY3), (12P)	12337914	1	*2.00	CAP, WHL NUT (SILVER MET) ...	6–H23,4
88–90	Y STYLED SPOKE WHL (PF8)	14102345	AR	*1.30	CAP, WHL NUT (GRAY)	6–H22,7
90–95	Y	12337914	20	*2.00	CAP, WHL NUT (SILVER MET) ...	6–H23,4
96	Y GRAND SPORT EDITION (Z16)	10028614	20	*1.50	CAP, WHL NUT (BLACK) (HAS 24MM INTERNAL THDS) (BLACK) (M24X2 INT THD 29. OL)	6–H22,7
96	Y (EXC GRAND SPORT EDITION (Z16)	12337914	20	*2.00	CAP, WHL NUT (SILVER MET) ...	6–H23,4

© 2000 GENERAL MOTORS SERVICE PARTS OPERATIONS–CHEVROLET–14Y

5.813 BOLT – CAP – HOLDER – NUT – NUT KIT – RETAINER, Hub Front and Rear (Con't)

86–87	Y	10064306	1	10.50	HOLDER, SPL SECURITY WHL LK KEY	6–H26,9
88	Y ALUM WHL (PY3)	10064306	1	10.50	HOLDER, SPL SECURITY WHL LK KEY	6–H26,9
84–85	Y	14091982	1	109.30	NUT KIT, WHL LK (W/KEY)	6–H22,8
84–96	Y	11506101	8	*.46	NUT, FRT WHL HUB (M10X1.5 PC HEX FLG) (08.917)	6–H22,3
84	Y	9591700	20	*7.00	NUT, WHL (M12X1.5 W/PLSTC CTD SS/CAP) (09591700–DOME TOP CAP, 09591664–FLAT TOP CAP, MAY NEED TO REPL ALL WHL NUTS W/SIMILAR TYPE)	6–H22,3
85–96	Y	10028615	20	*1.10	NUT, WHL (BLACK) (M12X1.5 W/M24X2.0 OTR THD)	6–H22,3
89	Y QA1	14092873	20	*5.00	NUT, WHL	6–H23,12
85–86	Y	14090626	1	DISCON	RETAINER, SPL SECURITY WHL LK NUT WRENCH	
90–96	Y	10064306	1	10.50	RETAINER, SPL SECURITY WHL LK NUT WRENCH (39.0MM) (ALLOW LENGTH OF SLEEVE TO BE 31.75MM +/– 2.5MM INSTEAD OF 41.3MM +/– 2.5MM)	6–H26,9

5.816 BOLT, Rear Axle Shaft Bearing

88–96	Y	10052214	6	4.70	BOLT, RR WHL HUB (M12X1.75X86, TORX) (05 812)	6–G11,32

5.822 SEAL, Rear Axle Shaft Bearing or Hub

92–93	Y 2.73R (GU2)	14079467	2	8.95	SEAL, R/AXL SHF (05.430)	6–H8,10
92–96	Y 2.59R (GM1), 3.07R (G44)	14079467	2	8.95	SEAL, R/AXL SHF (05.430)	6–H8,10
92	Y 3.54R (GH0)	14091422	2	9.35	SEAL, R/AXL SHF (05.430)	6–H4,10
92–96	Y 3.45R (GM3)	14091422	2	9.35	SEAL, R/AXL SHF (05.430)	6–H4,10
94	Y G95	14091422	2	9.35	SEAL, R/AXL SHF (05.430)	6–H4,10
85–92	Y W/A .T.	14079467	2	8.95	SEAL, R/AXL SHF BRG (05.430)	6–H8,10
85–92	Y W/M .T.	14091422	2	9.35	SEAL, R/AXL SHF BRG (05.430)	6–H4,10
84–85	Y	14046941	2	7.34	SEAL, RR WHL HUB BRG	7–H18,21

5.830 BOLT, Rear Axle

84–86	Y	11508540	1	*.72	BOLT, RR WHL SPDL ROD (08.900)	

5.858 CAP, Wheel Trim

84–85	Y	14046926	4	25.10	CAP, HUB	6–H22,2
86	Y	14055969	4	25.10	CAP, HUB	6–H22,2
87	Y	10052096	4	23.50	CAP, HUB	6–H22,2
88	Y ALUM WHL (QA1) (EXC 35TH ANNIV ZO1)	10055340	1	108.20	CAP, HUB	6–H23,14
88	Y 35 ANNIV (ZO1)	10097595	AR	DISCON	CAP, HUB (WHITE)	
88	Y ALUM WHL (PY3)	14055969	4	25.10	CAP, HUB	6–H22,2
89	Y	10055340	1	108.20	CAP, HUB (17X9.5)	6–H23,14
90	Y SOFT RIDE SUSP (FE1), H .D .SUSP (FE7)	14055969	4	25.10	CAP, HUB	6–H22,2
91–92	Y STYLED AL WHL (QA1)	10137865	4	31.40	CAP, HUB	6–H26,2
91–94	Y SPECIAL PERFORMANCE WHL (QA2)	10137865	4	31.40	CAP, HUB	6–H26,2
93	Y 40TH ANNIV (Z25)	10180886	4	32.50	CAP, HUB	6–H26,2
93	Y (EXC 40TH ANNIV (Z25)	10194327	4	29.40	CAP, HUB	6–H26,2

© 2000 GENERAL MOTORS SERVICE PARTS OPERATIONS–CHEVROLET–14Y

5.858 CAP, Wheel Trim (Con't)

94–96	Y STYLED AL WHL (QA1), STYLD AL WHL (QB6), STYLED ALUM WHL (QA0) .	10194327	4	29.40	CAP, HUB	6–H26,2
95	Y SPECIAL PERFORMANCE WHL (QA2), STYLED WHEEL ALUM (N66)	10137J65	4	31.40	CAP, HUB	6–H26,2
96	Y ALUM WHL (QD2), COLLECTORS EDITION (Z15), (17P)	9592378	4	17.60	CAP, HUB	6–I2,2
96	Y STYLED WHEEL ALUM (N66)	9592378	4	17.60	CAP, HUB	6–I2,2
96	Y SPECIAL PERFORMANCE WHL (QA2), ALUM WHL (QD2), GRAND SPORT EDITION (Z16), (41P)	9592388	4	17.60	CAP, HUB	6–I2,2

5.864 SEAL, Wheel Cap or Cover

88	Y ALUM WHL (QA1)	10097592	4	8.70	SEAL, HUB CAP EMB (O–RING)	6–H23,13
89	Y	10097592	4	8.70	SEAL, HUB CAP EMB (O–RING)	6–H23,13

5.871 EMBLEM, Wheel Cover Appearance

88	Y ALUM WHL (QA1) (EXC 35 ANNIV Z01)	10055342	4	19.70	EMBLEM, HUB CAP	6–H23,16
89	Y	10055342	4	19.70	EMBLEM, HUB CAP	6–H23,16

5.875 CAP – EXTENSION – LOCKING KIT – NUT – STEM – WASHER, Tire Valve and Cover Lock

88	Y (2ND DES)	9591607	4	8.60	CAP, TIRE VLV STEM (CHROME) .	6–H23,7
88–93	Y	9591607	4	8.60	CAP, TIRE VLV STEM (CHROME) .	6–H23,7
84	Y	9422872	AR	*1.20	EXTENSION, TIRE VLV STEM (1 1/2 O.L.)	
88–89	Y ALUM WHL (QA1)	10097588	1	103.70	LOCKING KIT, WHL TR CVR (INCLS KEY WRENCH & 4 LOCKING BOLTS)	6–H23,15
84–88	Y	14060898	4	DISCON	NUT, VLV STEM	
84–96	Y	274288	4	*2.00	STEM, TIRE VLV (.453 HOLE, 1.25 LONG) (NON–CHROME)	6–H22,9
84–87	Y	14060893	4	8.60	STEM, TIRE VLV	6–H23,10
88–93	Y	9591741	4	8.60	STEM, TIRE VLV (CHROME PLATED SNAP–IN TYPE)	6–H23,10
88	Y (1ST DES)	14060893	4	8.60	STEM, TIRE VLV (BLACK CLAMP–IN TYPE)	6–H23,10
84–88	Y	14060897	4	DISCON	WASHER, VLV STEM	

5.890 CONNECTOR – GAGE – INSULATOR – MODULE – SENSOR, Tire Pressure

90–95	Y	12126014	1	14.48	CONNECTOR, MDL–LOW TIRE PRESS IND (3–WAY M) (W/LEADS) (02.530) (AC–DELCO #PT645)	
88–96	Y LOW TIRE PRESSURE IND (UJ6)	10055260	1	24.37	GAGE, TIRE PRESS (CHROME) .	6–H23,15
93–96	Y LOW TIRE PRESSURE IND (UJ6)	3999572	3	4.98	INSULATOR, LOW TIRE PRESS IND MDL LEAD (09.260)	6–I4,7
89	Y LOW TIRE PRESSURE IND (UJ6)	14093187	1	DISCON	MODULE, LOW TIRE PRESS IND	
90–92	Y LOW TIRE PRESSURE IND (UJ6)	10143565	1	170.52	MODULE, LOW TIRE PRESS IND	6–I4,2

© 2000 GENERAL MOTORS SERVICE PARTS OPERATIONS–CHEVROLET–14Y

5.890 CONNECTOR – GAGE – INSULATOR – MODULE – SENSOR, Tire Pressure (Con't)

93–96	Y LOW TIRE PRESSURE IND (UJ6)	10161858	1	170.52	MODULE, LOW TIRE PRESS IND	6–I4,2
89–92	Y LOW TIRE PRESSURE IND (UJ6)	10098494	1	162.40	SENSOR, TIRE PRESS IND (BLUE) (RIGHT FRONT)	6–I4,1
89–92	Y LOW TIRE PRESSURE IND (UJ6)	10098495	1	162.40	SENSOR, TIRE PRESS IND (GREEN) (LEFT FRONT)	6–I4,1
89–92	Y LOW TIRE PRESSURE IND (UJ6)	10098496	1	162.40	SENSOR, TIRE PRESS IND (ORANGE) (RIGHT REAR)	6–I4,1
89–92	Y LOW TIRE PRESSURE IND (UJ6)	10098497	1	162.40	SENSOR, TIRE PRESS IND (YELLOW) (LEFT REAR)	6–I4,1
93–96	Y LOW TIRE PRESSURE IND (UJ6)	10161854	1	162.40	SENSOR, TIRE PRESS IND (LEFT REAR)	6–I4,1
93–96	Y LOW TIRE PRESSURE IND (UJ6)	10161855	1	162.40	SENSOR, TIRE PRESS IND (RIGHT FRONT)	6–I4,1
93–96	Y LOW TIRE PRESSURE IND (UJ6)	10161856	1	DISCON	SENSOR, TIRE PRESS IND (LEFT FRONT)	
93–96	Y LOW TIRE PRESSURE IND (UJ6)	10161857	1	162.40	SENSOR, TIRE PRESS IND (RIGHT REAR)	6–I4,1

© 2000 GENERAL MOTORS SERVICE PARTS OPERATIONS–CHEVROLET–14Y

MICROFICHE INDEX

GROUPS 4.000 THRU 5.000

FICHE 6 OF 11

GROUP	DESCRIPTION	STARTING GRID LOCATION PARTS	ILLUSTRATIONS
–	GENERAL INFORMATION	1–A2	1–G2
–	ALPHABETICAL INDEX	1–B13	N.A.
4.000	BRAKES	6–A2	6–E2
5.000	BRAKES – REAR AXLE – PROPELLER SHAFT – WHEELS	6–C2	6–H2
–	OUT OF FICHE CALLS	N.A.	6–M22

6–E1

ILLUSTRATION INDEX

	TITLE	GRID
1986–1991	Y BRAKE SYSTEM/ANTILOCK	6–E4
1992	Y BRAKE ELECTRICAL SYSTEM/ANTILOCK	6–E7
1993–1995	Y BRAKE ELECTRICAL SYSTEM/ANTILOCK	6–E9
1996	Y BRAKE ELECTRICAL SYSTEM/ANTILOCK	6–E11
1984–1985	Y BRAKE HOSES & PIPES	6–E15
1986–1991	Y BRAKE HOSES & PIPES	6–E16
1992–1995	Y BRAKE HOSES & PIPES	6–E18
1996	Y BRAKE HOSES & PIPES	6–E22
1989–1991	Y BRAKE BOOSTER/SINGLE DIAPHRAM(L98,JL9)	6–E27
1990–1991	Y BRAKE BOOSTER/DUAL DIAPHRAM (W/LT5,ML9,ZR1)(J55)	6–E28
1992–1995	Y BRAKE BOOSTER/DUAL DIAPHRAM(LT5,J55)	6–F2
1992–1996	Y BRAKE BOOSTER/SINGLE DIAPHRAM(LT1,J55)	6–F4
1984–1985	Y BRAKE MASTER CYLINDER W/BOOSTER	6–F6
1986–1987	Y BRAKE MASTER CYLINDER W/BOOSTER	6–F8
1988–1991	Y BRAKE MASTER CYLINDER (JL9)	6–F10
1992–1996	Y BRAKE MASTER CYLINDER	6–F12
1984–1987	Y BRAKE CALIPER/FRONT & REAR DISC	6–F15
1988	Y BRAKE CALIPER/FRONT	6–F16
1989–1996	Y BRAKE CALIPER/FRONT	6–F18
1988	Y BRAKE CALIPER/REAR	6–F21
1989–1996	Y BRAKE CALIPER/REAR	6–F23
1984–1989	Y BRAKE PEDAL & MASTER CYLINDER MOUNTING	6–F26
1990–1991	Y BRAKE PEDAL & MASTER CYLINDER MOUNTING	6–G2
1992–1996	Y BRAKE PEDAL & MASTER CYLINDER MOUNTING	6–G4
1984–1987	Y PARKING BRAKE SYSTEM	6–G6
1988	Y PARKING BRAKE SYSTEM	6–G8
1989–1996	Y PARKING BRAKE SYSTEM	6–G11

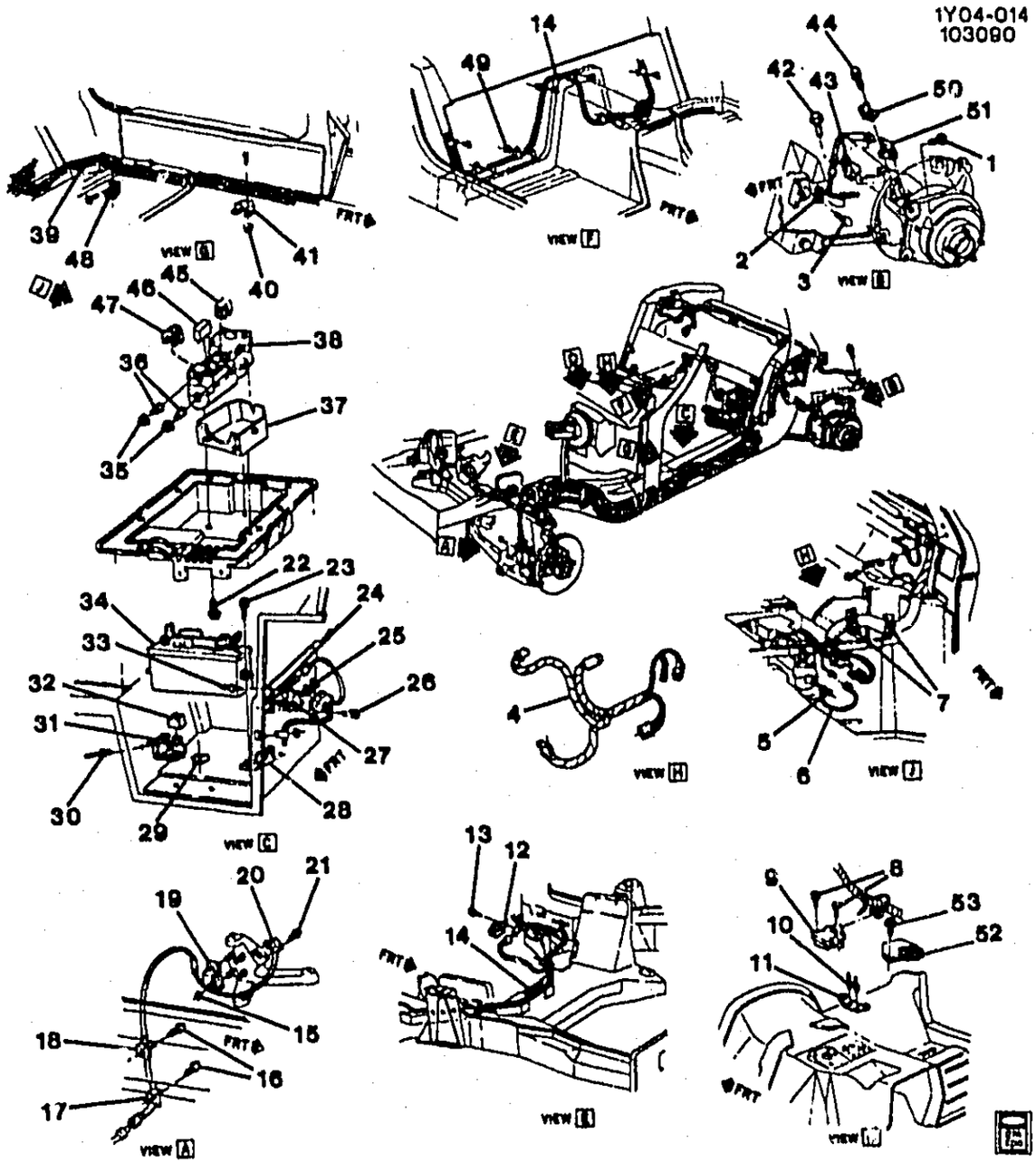

1Y04-014

1986-1991 Y BRAKE SYSTEM/ANTILOCK

1.		8.900	BOLT/SCREW (AR) (AC-DELCO #11509225)	11509225
2.	6-A23	4.710	BRACKET, SPD SEN	14091259
3.		8.977	SCREW, HEX W/FL WA TAP 6.3X1.81X16 17- OD AB-POINT PZOR BLK (AR)	11509371
4.		DISCON	HARNESS, PRESS MOD VLV WRG (1986) (1ST DESIGN 1986 - IDENT BY 2 CONNECTORS FOR WHEEL SPEED SENSOR HARNESS.)	12048801
		DISCON	HARNESS, PRESS MOD VLV WRG (1986) (2ND DESIGN 1986 - IDENT BY 3 CONNECTORS FOR WHEEL SPEED SENSOR HARNESS.)	12046596
		DISCON	HARNESS, PRESS MOD VLV WRG (1987)	12067433
		DISCON	HARNESS, PRESS MOD VLV WRG (1988)	12083507
		DISCON	HARNESS, PRESS MOD VLV WRG (1989)	12083507
		DISCON	HARNESS, PRESS MOD VLV WRG (1990 FX3)	12080845

© 2000 GENERAL MOTORS SERVICE PARTS OPERATIONS-CHEVROLET-14Y

		DISCON	HARNESS, PRESS MOD VLV WRG (1990 EXC FX3)	12080844
		DISCON	HARNESS, PRESS MOD VLV WRG (1991 FX3)	12112466
		DISCON	HARNESS, PRESS MOD VLV WRG (1991 EXC FX3)	12112465
5.		8.915	NUT, M5X.8, 5 THK, 9M, PEOR (AR)	11509203
6.		DISCON	HARNESS, PRESS MOD VLV WRG HARN GRD	12055840
7.		N.S.	TAPE, WIRE HARN	
8.		8.977	SCREW, HWH TAP (M4.2X1.41X16) ZE (1986-89)	11509135
9.	6-A23	4.710	SWITCH, ELEK CONT LATL ACCELEROMETER (1986-89) (AC-DELCO #14093144)	14093144
10.		N.S.	RIVET, BLIND-CLOSED END	
11.		DISCON	BRACKET, LATL ACCEL SWITCH	14093145
12.	6-A25	4.720	CLIP, SPD SEN WRG HARNESS	12052881
13.		8.977	SCREW (M4.2-1.41X10)	11503617
14.		DISCON	HARNESS, SPD SEN WRG (1986 Y07) (1ST DESIGN 1986 - IDENT BY 2 CONNECTORS FOR WHEEL SPEED SENSOR HARNESS.)	12048802
		DISCON	HARNESS, SPD SEN WRG (1986 Y67) (1ST DESIGN 1986 - IDENT BY 2 CONNECTORS FOR WHEEL SPEED SENSOR HARNESS.)	12048803
		DISCON	HARNESS, SPD SEN WRG (1986 Y07) (2ND DESIGN 1986 - IDENT BY 3 CONNECTORS FOR WHEEL SPEED SENSOR HARNESS.)	12055921
		DISCON	HARNESS, SPD SEN WRG (1986 Y67) (2ND DESIGN 1986 - IDENT BY 3 CONNECTORS FOR WHEEL SPEED SENSOR HARNESS.)	12055922
		DISCON	HARNESS, SPD SEN WRG (1987 Y07) (EXC Z51/Z52)	12046597
		DISCON	HARNESS, SPD SEN WRG (1987 Y07) (Z51/Z52)	12067499
		DISCON	HARNESS, SPD SEN WRG (1987 Y67)	12046598
	6-A25	4.720	HARNESS, SPD SEN WRG (1988)	12073404
	6-A25	4.720	HARNESS, SPD SEN WRG (1989-90)	12073494
	6-A25	4.720	HARNESS, SPD SEN WRG (1991 EXC FX3)	12090313
	6-A25	4.720	HARNESS, SPD SEN WRG (1991 FX3)	12090314
15.		8.921	NUT, STMP, TYPE R, 10X1.5X3.78, 6NOTCH, SPRSTL, PZOR (AR)	11509576
16.		8.977	BOLT, SEMS HEX W/FL WA (M6.3X1.81X20) ZE (UPR & LWR)	12337628
		8.900	BOLT, HEX W/CON WA, M6X1X20 (AR) (POS 8)	11514623
		8.977	SCREW, HWH TAP M6.3X1.81X16 POR (AR) (POS 7)	11504689
17.		DISCON	BRACKET, SPD SEN (LWR FRT) (1986-88)	14091268
	6-N11	2.559	BRACKET, SPD SEN WRG HARN CLIP (POS 8)	14062552
18.		DISCON	BRACKET, SPD SEN (UPR FRT) (1986-88)	14091237
	6-A23	4.710	BRACKET, SPD SEN (LH POS 7) (1989-91)	10087787
	6-A23	4.710	BRACKET, SPD SEN (RH POS 7) (1989-91)	10087788
19.		DISCON	BRACKET, KNU SPD SEN MT-LH (1986-87)	14091235
		DISCON	BRACKET, KNU SPD SEN MT-RH (1986-87)	14091236
		DISCON	BRACKET, SPD SEN-LH (1988-90)	10087789
		DISCON	BRACKET, SPD SEN-RH (1988-90)	10087790
	6-A23	4.710	BRACKET, SPD SEN (POS 4) (1991)	14091259
20.	6-A23	4.710	SENSOR, SPD FRT-LH (1986-87) (WITHOUT O-RING IN STEERING KNUCKLE.) (AC-DELCO #14084077)	14084077
	6-A23	4.710	SENSOR, SPD FRT-RH (1986-87) (WITHOUT O-RING IN STEERING KNUCKLE.) (AC-DELCO #14084078)	14084078
	6-A23	4.710	SENSOR, SPD FRT-LH (1986-87) (WITH O-RING IN STEERING KNUCKLE.) (AC-DELCO #10052261)	10052261
	6-A23	4.710	SENSOR, SPD FRT-RH (1986-87) (WITH O-RING IN STEERING KNUCKLE) (AC-DELCO #10052262)	10052262
	6-A23	4.710	SENSOR, SPD FRT-LH (1988) (AC-DELCO #10052275)	10052275
	6-A23	4.710	SENSOR, SPD FRT-RH (1988) (AC-DELCO #10052276)	10052276
	6-A23	4.710	SENSOR, SPD FRT-LH (1989-90) (AC-DELCO #14104821)	14104821
	6-A23	4.710	SENSOR, SPD FRT-RH (1989-90) (AC-DELCO #14104822)	14104822
		N.S.	SENSOR, SPD FRT- (1991) (PART OF STRG KNUCKLE) (SEE 6.000 GROUP FOR SPEED SENSOR (INTEGRAL PART OF WHEEL HUB) .)	
	6-A25	4.720	HARNESS, EXTENSION SPD SEN WRG (1991)	12090339
21.		8.900	BOLT, HFH (M6X1X12) 9.8, PE (1986-90) (AC-DELCO #11514149)	11514149

© 2000 GENERAL MOTORS SERVICE PARTS OPERATIONS-CHEVROLET-14Y

22.		8.900	BOLT, HFH M6X1X16 9.8 POR (AR)	11508805
23.		8.977	SCREW, HEX TAP M4.2X1.41X16 W/FL WA POR (AR)	11504446
24.		DISCON	PLATE, ELEK BRK CONT WRG HARN CLIP TAP (U-SHAPE)	14091012
25.	6-A25	4.720	CLIP, SPD SEN WRG HARNESS	12052881
26.		8.977	SCREW, ASM-FL WA & METRIC HIGH-HEX WA HD D (AR)	11513801
27.		N.S.	RIVET, BLIND-CLOSED END	
28.		DISCON	BRACKET, ELEK CONT MDL (RR)	14088443
29.		8.921	NUT, U SHAPE (M4.2X1.41X.065) ZO (AC-DELCO #15650655)	15650655
30.		N.S.	RIVET, BLIND-CLOSED END	
31.		DISCON	BRACKET, ELEK CONT MDL (FRT)	14088444
32.	6-A25	4.720	RELAY, ELEK CONT (AC-DELCO #1636973)	1636973
33.		N.S.	RIVET, BLIND-CLOSED END	
34.	6-A25	4.720	MODULE, ELEK CONT (1986-89) (AC-DELCO #14103343)	14103343
	6-A25	4.720	MODULE, ELEK CONT (1990-91) (AC-DELCO #10223326)	10223326
35.		8.917	NUT, HFH M6X1X6.5 ZOR 9 (AR)	3530297
36.	6-B4	4.730	INSULATOR, PRESS MOD VLV	14087680
37.		DISCON	BRACKET, PRESS MOD VLV	14087612
38.	6-B4	4.730	VALVE, PRESS MOD (1986-91) (AC-DELCO #12506759)	12506759
39.		3.965	RETAINER, PLASTIC 7" ADJ STRAP	3816659
40.		8.917	NUT, HFH M6X1X6.5 ZOR 9 (AR)	
41.		DISCON	RETAINER, SPD SEN WRG HARN	14091267
42.		8.977	SCREW, HEX W/FL WA TAP 6.3X1.81X16 17- OD AB-POINT PZOR BLK (AR)	11509371
43.		DISCON	BRACKET, SPD SEN MT-RH (1986-87)	14091258
		DISCON	BRACKET, SPD SEN MT-LH (1986-87)	14091257
	6-A23	4.710	BRACKET, SPD SEN MT (1988-91)	10052288
44.		8.977	SCREW, HEX W/FL WA TAP 6.3X1.81X16 17- OD AB-POINT PZOR BLK (AR)	
45.	6-B4	4.730	RELAY, PRESS MOD VLV SOLENOID (AC-DELCO #14105967)	14105967
46.	6-B4	4.730	RELAY, PRESS MOD VLV PUMP MTR (AC-DELCO #12513302)	12513302
47.		DISCON	RETAINER, PRESS MOD VLV	14093182
48.	6-N11	2.559	BRACKET, ECM WRG HAR	14062552
		8.977	SCREW, SEMS HEX W/FLA WA (M6.3X1.81X20) ZE	12337828
49.		8.917	NUT, HFH M6X1X6.5 ZOR 9 (AR)	3530297
50.	6-A23	4.710	BRACKET, SPD SEN	10052289
51.	6-A23	4.710	SENSOR, SPD RR-LH (1986-87) (AC-DELCO #14084079)	14084079
	6-A23	4.710	SENSOR, SPD RR-RH (1986-87) (AC-DELCO #14084080)	14084080
	6-A23	4.710	SENSOR, SPD RR-LH (1988-91) (AC-DELCO #10052273)	10052273
	6-A23	4.710	SENSOR, SPD RR-RH (1988-91) (AC-DELCO #10052274)	10052274
52.	6-N19	7.440	ACCELEROMETER KIT, VEH LATL (LOCATED IN I.P. BEHIND HEATER CONT) (1990-91)	12524328
53.		8.977	SCREW, PAN HD TORX W/WA, M4.2X1.41X20, T15, 6 LOB, ZN (AR) (1990-91)	11513849

© 2000 GENERAL MOTORS SERVICE PARTS OPERATIONS-CHEVROLET-14Y

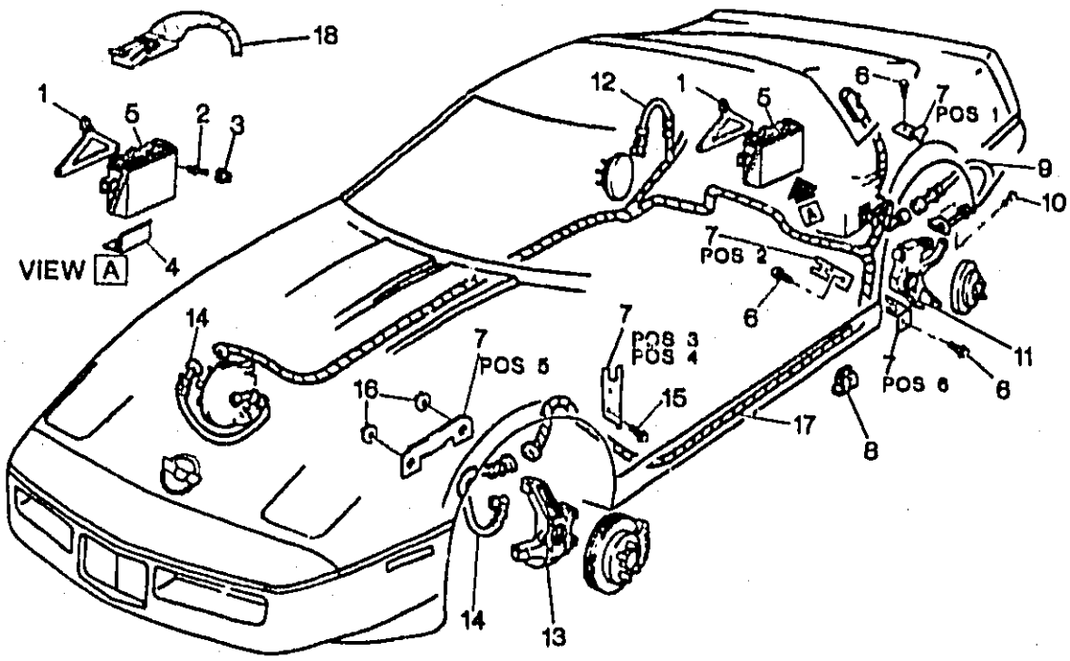

1Y04-048

1992 Y BRAKE ELECTRICAL SYSTEM/ANTILOCK

1.	6-A25	4.720	BRACKET, ELEK BRK & TRACT CONT MDL	92	Y	1	10143546
2.		8.967	RIVET, POP, .188 SHANK DIA, .43 LEN, .625 OD, .188-.25 GRIP, ALUM, BA (ELEK BRK & TRACT CONT MDL)	92	.....	2	9439559
3.		8.917	NUT, HEX FLGD PREV TORQ M6X1 9 CAD (ELEK BRK & TRACT CONT MDL BRKT)	92	.....	1	11503750
4.	6-A25	4.720	SUPPORT, ELEK BRK & TRACT CONT MDL	92	Y	1	10143547
5.	6-A25	4.720	MODULE, ELEK BRK & TRACT CONT (AC-DELCO #10241014) .	92	Y	1	10241014
6.		8.977	SCREW, HEX W/FL WA TAP 6.3X1.81X16 17- OD AB-POINT PZOR BLK (WHL SPD SEN BRKT) (POSN #2)	92	.....	6	11509371
7.	6-A23	4.710	BRACKET, WHL SPD SEN (POSN #1)	92	Y	2	10052288
	6-A23	4.710	BRACKET, WHL SPD SEN (POSN #2)	92	Y	2	10052289
	6-A23	4.710	BRACKET, WHL SPD SEN (POSN #3)	92	Y	LH	10087787
	6-A23	4.710	BRACKET, WHL SPD SEN (POSN #4)	92	Y	RH	10087788
	6-A23	4.710	BRACKET, WHL SPD SEN (POSN #5)	92	Y	2	10158005
	6-A23	4.710	BRACKET, WHL SPD SEN (POSN #6)	92	Y	2	14091259
8.	6-A25	4.720	CLIP, RR WHL SPD SEN WFG HARN	92	Y	1	12052881
9.	6-A23	4.710	SENSOR, WHL SPD (RR) (AC-DELCO #10052273)	92	Y	LH	10052273

© 2000 GENERAL MOTORS SERVICE PARTS OPERATIONS-CHEVROLET-14Y

								1Y04-048
10.		8.900	BOLT, M6X1X12, 10 THD, 11.6 OD, 9.8 GM500-M, POR, MACH (WHL SPD SEN) (AC-DELCO #11514149)	92	.....	2		11514149
11.	6-D11	5.806	KNUCKLE, RR SUSP	92	Y	LH		10270126
	6-D11	5.806	KNUCKLE, RR SUSP	92	Y	RH		10270127
12.	6-A23	4.710	SENSOR, WHL SPD (RR) (AC-DELCO #10052274)	92	Y	RH		10052274
13.	6-N19	6.020	KNUCKLE, STRG	92	Y	RH		10098164
14.	6-A25	4.720	HARNESS, WHL SPD SEN WRG HARN EXTN	92	Y	2		12090339
15.		8.977	SCREW, HEX W/FLAT WA (WHL SPD SEN BRKT) (POSN #1)	92	.....	2		12337828
16.		8.921	NUT, STMP, TYPE R, 10X1.5X3.78, 6NOTCH, SPRSTL, PZOR (WHL SPD SEN BRKT)	92	.....	4		11509576
17.	6-A25	4.720	HARNESS, ELEK BRK CONT & ELEC TRACT CONT WRG (FRT & RR WHL SENS TO CONT HARN) .	92	Y	1		12106546
		DISCON	HARNESS, ELEK BRK CONT & ELEK SUSP & TRACTION CONT WRG (FRT & RR WHL SENS TO CONT HARN)	92	Y	1		12106548
18.	6-A25	4.720	HARNESS, ELEK BRK CONT & ELEC TRACT CONT WRG (CONT MDL TO WHL SENS HARN)	92	Y	1		12106545
		DISCON	HARNESS, ELEK BRK CONT & ELEK SUSP & TRACTION CONT WRG (CONT MDL TO WHL SENS HARN)	92	Y	1		12106547

© 2000 GENERAL MOTORS SERVICE PARTS OPERATIONS-CHEVROLET-14Y

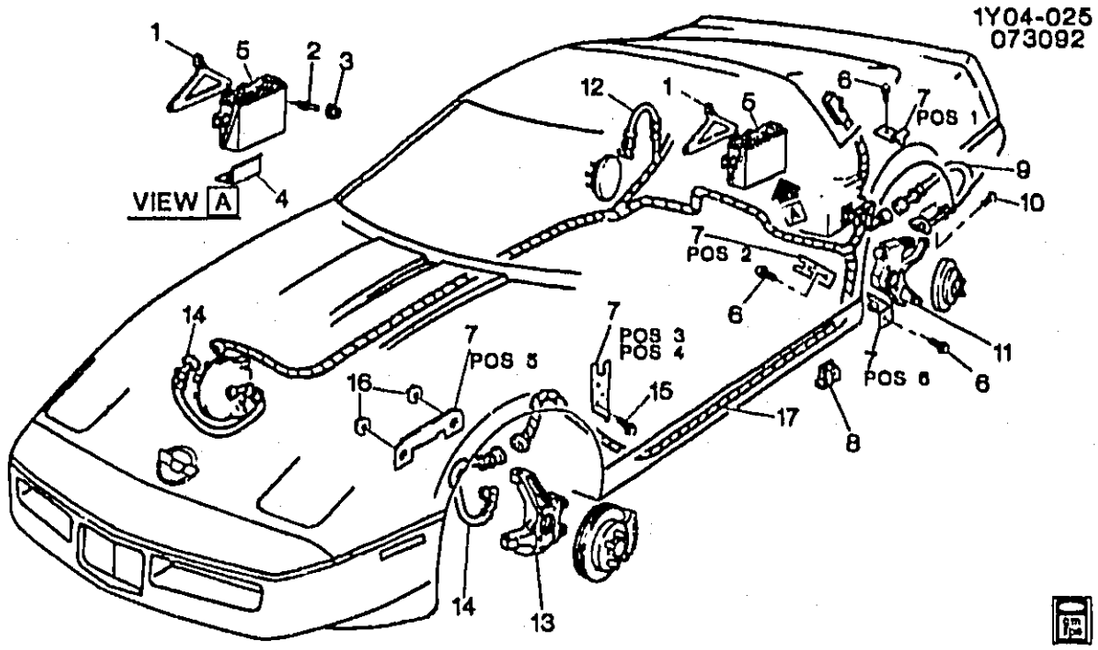

1Y04-025

1993-1995 Y BRAKE ELECTRICAL SYSTEM/ANTILOCK

1.	6-A25	4.720	BRACKET, ELEK BRK & TRACT CONT MDL	93-94	Y	1	10143546
	6-A25	4.720	BRACKET, ELEK BRK & TRACT CONT MDL	95	Y (LT5)	1	10143546
2.		8.967	RIVET, POP, .188 SHANK DIA, .43 LEN, .625 OD, .188- 25 GRIP, ALUM, BA (ELEK BRK & TRACT CONT MDL)	93-95		2	9439559
3.		8.917	NUT, HFH 6X1X7 SELF LK 14.2-OD (9) 7111M ALL MET PREV TORQ (ELEK BRK & TRACT CONT MDL BRKT)	93-95		1	11516075
4.	6-A25	4.720	SUPPORT, ELEK BRK & TRACT CONT MDL	93-94	Y	1	10143547
	6-A25	4.720	SUPPORT, ELEK BRK & TRACT CONT MDL	95	Y (LT5)	1	10143547
5.	6-A25	4.720	MODULE, ELEK BRK & TRACT CONT (AC-DELCO #10241014)	93-94	Y	1	10241014
	6-A25	4.720	MODULE, ELEK BRK & TRACT CONT (AC-DELCO #10241014)	95	Y (LT5)	1	10241014
	6-A25	4.720	MODULE, ELEK BRK CONT (& TRACT CONT)	95	Y (LT1)	1	12521972
6.		8.977	SCREW, HEX W/FL WA TAP 6.3X1.81X16 17- OD AB-POINT PZOR BLK (WHL SPD SEN BRKT) (POSN #2)	93-95		6	11509371
7.	6-A23	4.710	BRACKET, WHL SPD SEN (POSN #1)	93-95	Y	2	10052288
	6-A23	4.710	BRACKET, WHL SPD SEN (POSN #2)	93-95	Y	2	10052289
	6-A23	4.710	BRACKET, WHL SPD SEN (POSN #3)	93-95	Y	LH	10087787
	6-A23	4.710	BRACKET, WHL SPD SEN (POSN #4)	93-95	Y	RH	10087788

© 2000 GENERAL MOTORS SERVICE PARTS OPERATIONS-CHEVROLET-14Y

								1Y04-025
	6-A23	4.710	BRACKET, WHL SPD SEN (POSN #5)	93-95	Y	2	10158005
	6-A23	4.710	BRACKET, WHL SPD SEN (POSN #6)	93-95	Y	2	14091259
8.	6-A25	4.720	CLIP, RR WHL SPD SEN WRG HARN	93-94	Y	1	12052881
	6-A25	4.720	CLIP, RR WHL SPD SEN WRG HARN	95	Y (LT1)	2	10243066
	6-A25	4.720	CLIP, RR WHL SPD SEN WRG HARN	95	Y (LT5)	2	12052881
9.	6-A23	4.710	SENSOR, WHL SPD (AC-DELCO #10052273)	93-94	Y	LH	10052273
	6-A23	4.710	SENSOR, WHL SPD (AC-DELCO #10052273)	95	Y (LT5)	LH	10052273
	6-A23	4.710	SENSOR, WHL SPD (RR)	95	Y (LT1)	LH	10235294
10.		8.900	BOLT, M6X1X12, 10 THD, 11.6 OD, 9.8 GM500-M, POR, MACH (WHL SPD SEN) (AC-DELCO #11514149)	93-95		2	11514149
11.	6-D11	5.806	KNUCKLE, RR SUSP	93-95	Y	LH	10270126
	6-D11	5.806	KNUCKLE, RR SUSP	93-95	Y	RH	10270127
12.	6-A23	4.710	SENSOR, WHL SPD (AC-DELCO #10052274)	93-94	Y	RH	10052274
	6-A23	4.710	SENSOR, WHL SPD (AC-DELCO #10052274)	95	Y (LT5)	RH	10052274
	6-A23	4.710	SENSOR, WHL SPD (RR)	95	Y (LT1)	RH	10235293
13.	6-N19	6.020	KNUCKLE, STRG	93	Y	RH	10098164
	6-N19	6.020	KNUCKLE, STRG	94-95	Y	LH	18019572
	6-N19	6.020	KNUCKLE, STRG	94-95	Y	RH	18019573
14.	6-A25	4.720	HARNESS, WHL SPD SEN WRG HARN EXTN	93-95	Y	2	12090339
15.		8.977	SCREW, HEX W/FLAT WA (WHL SPD SEN BRKT) (POSN #1)	93-95		2	12337828
16.		8.921	NUT, STMP, TYPE R, 10X1.5X3.78, 6NOTCH, SPRSTL, PZOR (WHL SPD SEN BRKT)	93-95		4	11509576
17.	6-A25	4.720	HARNESS, ELEK BRK CONT & ELEC TRACT CONT WRG	93-94	Y (FX3)	1	12130313
	6-A25	4.720	HARNESS, ELEK BRK CONT & ELEC TRACT CONT WRG	93-94	Y (EXC FX3)	1	12130314
	6-A25	4.720	HARNESS, ELEK BRK CONT & ELEC TRACT CONT WRG	95	Y (LT5)	1	12130313
	6-A25	4.720	HARNESS, ELEK BRK CONT & ELEC TRACT CONT WRG	95	Y (LT1)	1	12130367

RPO DEFINITIONS
FX3 – RIDE AND HANDLING,ELECTRONIC CONTROLLED
LT1 – ENGINE-GAS, 8 CYL, 5.7L(5.7P),MFI,HO
LT5 – ENGINE,5.7L(5.7J),TPI

© 2000 GENERAL MOTORS SERVICE PARTS OPERATIONS-CHEVROLET-14Y

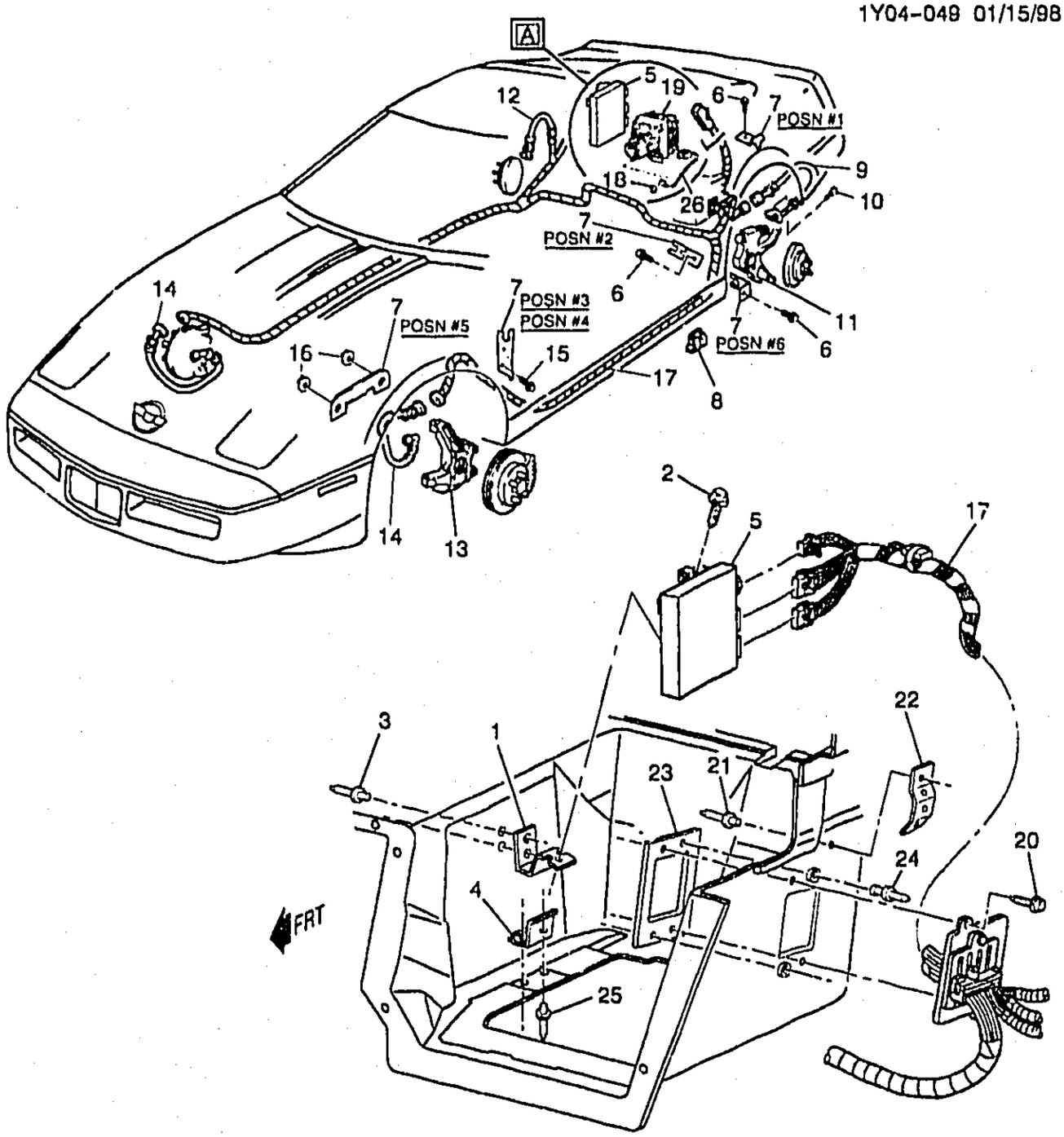

1Y04-049

1996 Y BRAKE ELECTRICAL SYSTEM/ANTILOCK

1.	6-N19	7.450	BRACKET, ELEK SUSP CONT MDL	96 Y (F45)	1	10274869
2.		8.977	SCREW, ASM-FL WA & METRIC HIGH-HEX WA HD D (ELEK SUSP CONT MDL BRKT)	96	1	11513801
3.		N.S.	RIVET, ELEK SUSP CONT MDL STUD PLT	.....		

© 2000 GENERAL MOTORS SERVICE PARTS OPERATIONS-CHEVROLET-14Y

							1Y04-049
4.	6-N19	7.450	RETAINER, ELEK SUSP CONT MDL	96	Y (F45)	1	10257543
5.	6-N19	7.450	MODULE, ELEK SUSP CONT (MUST BE PROGRAMMED AT DEALER)	96	Y (F45)	1	16205661
6.		8.977	SCREW, HEX W/FLAT WA (WHL SPD SEN BRKT) (POSN #1)	96		2	12337828
		8.977	SCREW, HEX W/FL WA TAP 6.3X1.81X16 17- OD AB-POINT PZOR BLK (WHL SPD SEN BRKT) (POSN #2)	96		6	11509371
7.	6-A23	4.710	BRACKET, WHL SPD SEN (POSN #1)	96	Y	2	10052288
	6-A23	4.710	BRACKET, WHL SPD SEN (POSN #2)	96	Y	2	10052289
	6-A23	4.710	BRACKET, WHL SPD SEN (POSN #3)	96	Y	LH	10087787
	6-A23	4.710	BRACKET, WHL SPD SEN (POSN #4)	96	Y	RH	10087788
	6-A23	4.710	BRACKET, WHL SPD SEN (POSN #5)	96	Y	2	10158005
	6-A23	4.710	BRACKET, WHL SPD SEN (POSN #6)	96	Y	2	14091259
	6-A23	4.710	BRACKET, WHL SPD SEN (POSN #7)	96	Y (F45)	LH	10260107
	6-A23	4.710	BRACKET, WHL SPD SEN (POSN #8)	96	Y (F45)	RH	10260108
8.	6-A25	4.720	CLIP, RR WHL SPD SEN WRG HARN	96	Y (EXC F45)	2	10243066
	6-A25	4.720	CLIP, RR WHL SPD SEN WRG HARN (W/RR COMBO SENSOR & DAMPER CONNS)	96	Y	2	10258144
9.	6-A23	4.710	SENSOR, WHL SPD (RR WHL)	96	Y	LH	10254373
10.		8.900	BOLT, M6X1X12, 10 THD, 11.6 OD, 9.8 GM500-M, POR, MACH (WHL SPD SEN) (AC-DELCO #11514149)	96		2	11514149
11.	6-D11	5.806	KNUCKLE, RR SUSP	96	Y	LH	10270126
	6-D11	5.806	KNUCKLE, RR SUSP	96	Y	RH	10270127
12.	6-A23	4.710	SENSOR, WHL SPD (RR WHL)	96	Y	RH	10254374
13.	6-N19	6.020	KNUCKLE, STRG	96	Y	LH	18019572
	6-N19	6.020	KNUCKLE, STRG	96	Y	RH	18019573
14.	6-A25	4.720	HARNESS, WHL SPD SEN WRG HARN EXTN	96	Y	2	12090339
15.		8.977	SCREW, HEX W/FLAT WA (WHL SPD SEN BRKT) (POSN #1)	96		2	12337828
16.		8.921	NUT, STMP, TYPE R, 10X1.5X3.78, 6NOTCH, SPRSTL, PZOR (WHL SPD SEN BRKT)	96		4	11509576
17.	6-A25	4.720	HARNESS, ELEK BRK CONT & ELEC TRACT CONT WRG	96	Y (F45)	1	12130459
	6-A25	4.720	HARNESS, ELEK BRK CONT & ELEC TRACT CONT WRG	96	Y (EXC F45)	1	12130496
	6-A25	4.720	CONNECTOR, INLINE-TO WHL SPD SEN (GRAY) (2-WAY F) (W/LEADS) (2.535) (AC-DELCO #PT419)	96	Y	4	12116958

© 2000 GENERAL MOTORS SERVICE PARTS OPERATIONS-CHEVROLET-14Y

							1Y04-049
	6-N6	2.530	**CONNECTOR**, INLINE-TO ELEK SUSP POSN SEN (BLACK) (3-WAY F) (W/LEADS) (2.383) (AC-DELCO #PT420)	96	Y (F45)	4	12117025
	6-N25	13.100	**CONNECTOR**, INLINE-TO BODY HARN (10-WAY F) (W/LEADS) (2.535) (AC-DELCO #PT150)	96	Y	1	12101762
	6-N25	13.100	**CONNECTOR**, INLINE-TO BODY HARN (BLUE) (10-WAY F, W/LEADS) (2.535) (AC-DELCO #PT224)	96	Y	1	12101832
	6-N25	13.100	**CONNECTOR**, INLINE-TO BODY HARN (1-WAY F) (W/LEADS) (9.778) (AC-DELCO #PT377)	96	Y	1	12102750
	6-N25	13.100	**CONNECTOR**, INLINE-TO BODY HARN (GRAY) (6-WAY F) (W/LEADS) (4.663)	96	Y	1	12125665
	6-N25	13.100	**CONNECTOR**, INLINE-TO BODY HARN (2-WAY M, W/LEADS) (2.535) (AC-DELCO #PT228)	96	Y (UY5)	1	12101836
	6-N25	13.100	**CONNECTOR**, INLINE-TO BODY HARN (BLUE) (10-WAY M, W/O LEADS) (2.530)	96	Y67 (EXC T90)	1	12103188
	6-N25	13.100	**CONNECTOR**, INLINE-TO BODY HARN (GRAY) (6-WAY M) (W/LEADS) (2.535) (AC-DELCO #PT267)	96	Y	1	12101876
	6-N19	7.450	**CONNECTOR**, INLINE-TO ELEK SUSP MDL (2-WAY F) (W/LEADS) (HAS INDEX TAB @ OUTER EDGE OF CAVITY B) (2.535) (AC-DELCO #PT146) ...	96	Y	1	12085535
	6-A25	4.720	**CONNECTOR**, MDL-ELEK BRK CONT (CONTAINS 40-WAY F CONN, SEAL & 8 TERMINALS) ..	96	Y	1	12166317
18.		8.915	**NUT**, M5X.8, 5 THK, 9M, PEOR (BRK PRESS MOD VLV WRG HARN GND)	96	.....	1	11509203
19.	6-A25	4.720	**MODULE**, ELEK BRK CONT	96	Y	1	12525023
20.		8.977	**BOLT**, SCR HEX W/FLAT WA 12 DIA TYPE AB (ELEK BRK CONT WRG HARN GROM MT PLT)	96	.....	2	11509374
21.		N.S.	**RIVET**, WHL SPD SEN WRG HARN CLIP		.....	2	
22.	6-A25	4.720	**CLIP**, RR WHL SPD SEN WRG HARN	96	Y (EXC F45)	2	10243066
	6-A25	4.720	**CLIP**, RR WHL SPD SEN WRG HARN (W/RR COMBO SENSOR & DAMPER CONNS)	96	Y	2	10258144
23.	6-A25	4.720	**PLATE**, ELEK BRK CONT WRG HARN GROM TAP (3.675)	96	Y	1	14090618
24.		N.S.	**RIVET**, ELEK BRK CONT WRG HARN GROM TAP PLT		.....		

© 2000 GENERAL MOTORS SERVICE PARTS OPERATIONS-CHEVROLET

							1Y04-049
25.		N.S.	RIVET, ELEK SUSP CONT MDL RET		.....		
26.	6-A25	4.720	WIRE, BRK PRESS MOD VLV WRG HARN GND	96	Y	1	12080879

RPO DEFINITIONS
F45 – CHASSIS CONTINUOUS VALVE REAL TIME DAMPING
T90 – LAMP,SIGNALING AND MARKER(EXPORT)
UY5 – SPEAKER SYSTEM 4, DUAL FRT FLR SILL, DUAL EXT RANGE QTR MTD

© 2000 GENERAL MOTORS SERVICE PARTS OPERATIONS-CHEVROLET-14Y

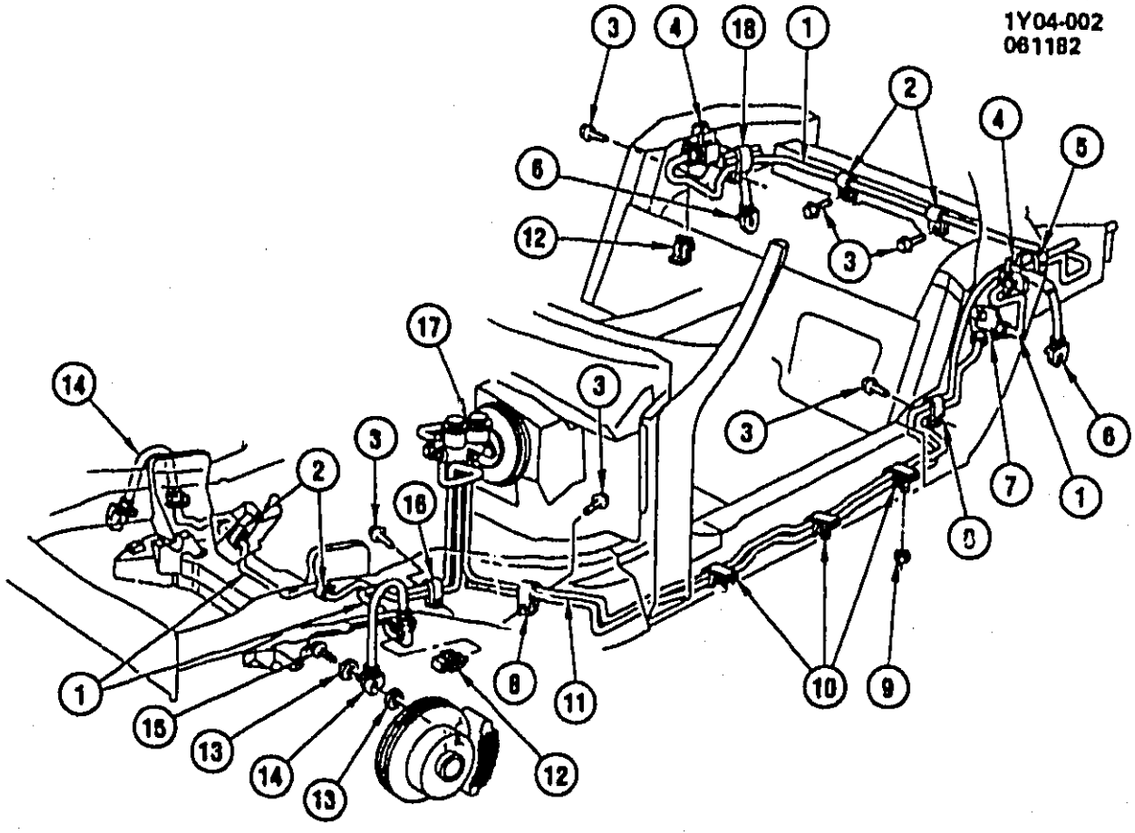

1Y04-002

1984-1985 Y BRAKE HOSES & PIPES

1.		8.964	TUBING, BULK (3/16" OD)	
	6-A21	4.686	NUT, FRT & RR BRK PIPES (USED W/3/16" TUBING)	14076114
2.		8.950	CLIP, CLOSED LOOP M5 DIA	
3.		8.977	SCREW, HEX WA HD TAP (M6.3 X 1.81 X 20)	
4.		DISCON	BRACKET, RR BRK HOSE-LH	14084003
		DISCON	BRACKET, RR BRK HOSE-RH	14084004
5.		DISCON	CLIP, RR BRK C/OVR PIPE	14084006
6.		DISCON	HOSE, RR BRK	14091293
7.		DISCON	FITTING, RR BRK PIPE	14050005
8.	6-N15	3.162	CLIP, FUEL VPR PIPE	14050054
9.		8.917	NUT, HEX FLG HD (M6 X 1 X 6.5)	
10.	6-A21	4.686	CLIP, FRT BRK PIPE	14050051
11.		8.964	TUBING, BRK PIPE-BULK (6MM OD)	
	6-A21	4.686	NUT, RR BRK FRT PIPE (USED W/6MM TUBING)	11516405
12.	6-A21	4.681	RETAINER, FRT, RR BRK HOSE	14084005
13.		8.929	WASHER, FL (M10.3 ID 17 OD 1.3 THK) (COPPER)	
14.	6-A20	4.680	HOSE, FRT BRK	14076178
15.	6-A21	4.681	BOLT, FRT, RR BRK HOSE	10286122
16.	6-A21	4.686	CLIP, FRT BRK C/OVR PIPE	14050050
17.	6-A9	4.650	CYLINDER, BRK MASTER (SEE GROUP 4.000 "BRAKE MASTER CYLINDER W/BOOSTER" FOR DETAIL ILLUSTRATED VIEW.) (AC-DELCO #174-836)	14046850
18.	6-A21	4.686	CLIP, RR BRK PIPE	14076130

© 2000 GENERAL MOTORS SERVICE PARTS OPERATIONS-CHEVROLET-14Y

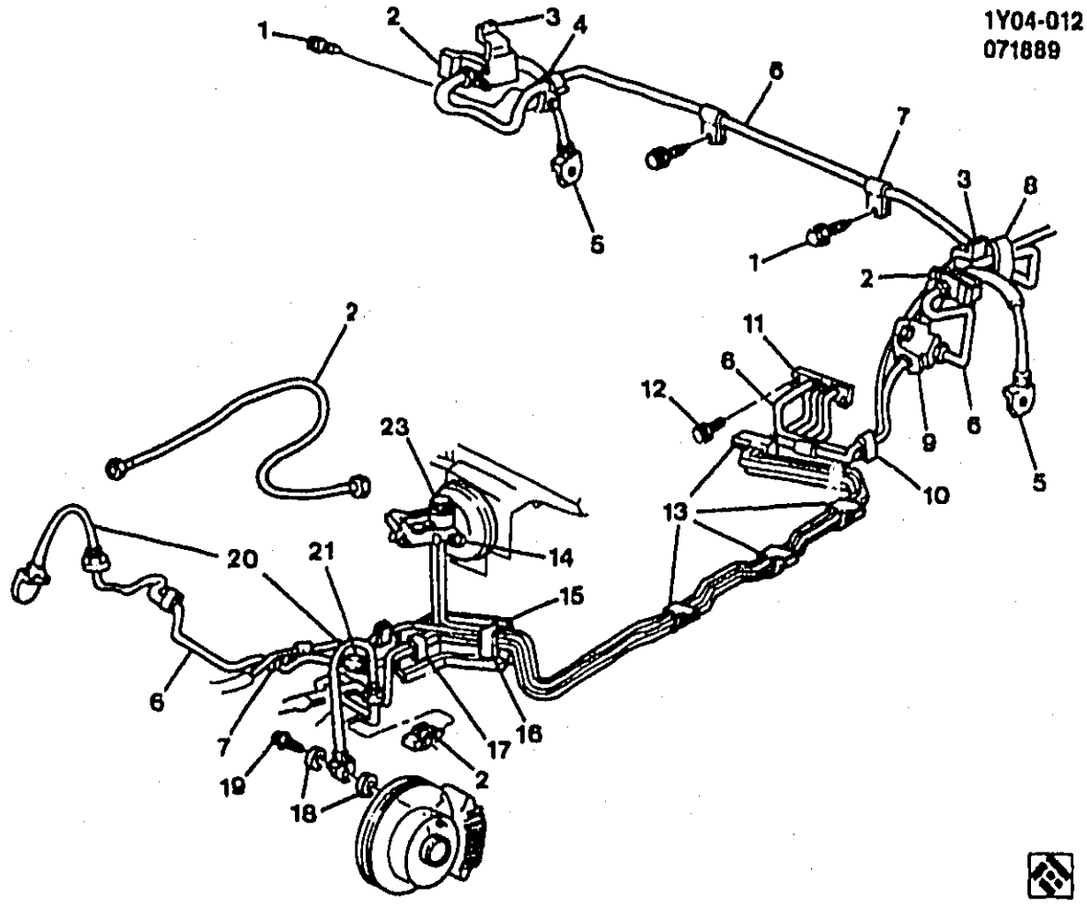

1Y04-012

1986-1991 Y BRAKE HOSES & PIPES

1.		8.977	SCREW, HEX W/FLAT WA (AR)	12337828
2.	6-A21	4.681	RETAINER	14084005
3.		DISCON	BRACKET, RR-RH (1986-87)	14084004
		DISCON	BRACKET, RR-LH (1986-87)	14084003
	6-A21	4.681	BRACKET, RR-RH (1988-91)	10221949
	6-A21	4.681	BRACKET, RR-LH (1988-91)	10052263
		8.977	SCREW, HWH TAP M8X2.12X16 POR (AR)	11508055
4.	6-A21	4.686	CLIP, RR PIPE	14076130
		8.900	BOLT, PZOR 9.8 (AR) (AC-DELCO #11507087)	11507087
5.		DISCON	HOSE, RR (1986-87)	14091293
	6-A20	4.680	HOSE, RR-RH (1988-91)	10097650
	6-A20	4.680	HOSE, RR-LH (1988-91)	10097649
	6-A21	4.681	BOLT, FRT FGT	10286122
	6-A21	4.686	GASKET, FRT FTG	14076[illegible]
6.		8.964	TUBING, BULK (3/16X25')	12547207
	6-A21	4.686	NUT, FRT & RR PIPES (HEX 5MM TUBE M10X1)	14076114
		8.963	NUT, M12X1X17.6, LCS, ZE, 4.75 TUBE OD, 35 DEG (FRT & RR BRK PIPE FITTING) (AR)	11516404
	6-A21	4.685	PIPE, RR FRT (1990-91)	10254388
		DISCON	CLIP, RR C/OVR PIPE (1986-90)	14084006
	6-A21	4.686	CLIP, FRT PIPE (1988-90) (3.162)	14050054
	6-A21	4.686	CLIP, PIPE (1989-91) (3.162)	10052169
		DISCON	CLIP, FRT C/OVR PIPE (1986-88)	14092703
7.		8.950	CLIP, CLOSED LOOP (M5-DIA)	22518436
8.	6-A21	4.686	CLIP, RR C/OVER PIPE	14076130

© 2000 GENERAL MOTORS SERVICE PARTS OPERATIONS-CHEVROLET-14Y

				1Y04-012
		8.977	SCREW, MET HEX HD (M6.3X1.81) (AR)	11502707
9.	6-A21	4.686	FITTING, RR PIPE	14087637
10.		8.950	CLIP, CLOSED LOOP M5 DIA ZP	22518436
		8.977	SCREW, HEX W/FLAT WA (AR)	12337828
		DISCON	SPACER, FRT BRK & FUEL VPR PIPE CLIP	14100346
11.		DISCON	RETAINER	14094289
12.		8.977	BOLT-HFH, M4.2X1.4X13, 11.6THD, 8.5OD, GM6010-M, POR, TAP (AR) (AC-DELCO #11508256)	11508256
13.	6-A21	4.686	CLIP, FRT BRK & FUEL VPR PIPE (1986-90)	14084086
		DISCON	CLIP, FRT BRK & FUEL VPR PIPE (1991)	10098178
		8.917	NUT, HFH M6X1X6.5 ZOR 9 (AR)	3530297
		8.977	SCREW, HEX W/FLAT WA (AR)	12337828
14.		8.917	NUT (BRK M/CYL) (AR)	11516071
15.	6-N14	3.145	SHIELD, BRK & FUEL VPR PIPE (1989-91)	14104690
16.	6-A21	4.686	CLIP, FRT BRK & FUEL VPR PIPE	14084085
	6-A21	4.686	CLIP, FRT C/OVR PIPE	14050050
		8.977	SCREW, HEX W/FLAT WA (AR)	12337828
17.	6-A21	4.686	CLIP, FRT C/OVR PIPE	14050050
		8.977	SCREW, HWH TAP M6.3X1.81X16 POR (AR)	11504689
18.	6-A21	4.683	GASKET, FRT FTG	14076180
19.	6-A21	4.681	BOLT, FRT & RR HOSE	10286122
	6-A20	4.671	GASKET, BRAKE HOSE (AC-DELCO #10139097)	10139097
20.	6-A20	4.680	HOSE, FRT (1986-87)	14076178
	6-A20	4.680	HOSE, FRT-RH (1988-91)	10097648
	6-A20	4.680	HOSE, FRT-LH (1988-91)	10097647
21.	6-A21	4.686	FITTING, FRT C/OVR PIPE	14084084
22.	6-A20	4.680	HOSE, FRT PIPE (TO M/CYL) (1990-91)	10222294
		DISCON	PIPE, FRT (M/CYL) (1990-91)	14104683
23.	6-A9	4.650	CYLINDER, MASTER (1986-87) (CPS) (SEE GROUP 4.000 "BRAKE MASTER CYLINDER W/BOOSTER" FOR DETAIL ILLUSTRATED VIEW.) (AC-DELCO #174-830)	10052280
	6-A9	4.650	CYLINDER, MASTER (1988) (CPS) (SEE GROUP 4.000 "BRAKE MASTER CYLINDER (B.C.I.A.) " FOR DETAIL ILLUSTRATED VIEW.) (AC-DELCO #174-831)	10097905
	6-A9	4.650	CYLINDER, MASTER (1989-90) (CPS) (SEE GROUP 4.000 "BRAKE MASTER CYLINDER (B.C.I.A.) " FOR DETAIL ILLUSTRATED VIEW.) (AC-DELCO #174-820)	10157996
	6-A9	4.650	CYLINDER, MASTER (1991) (CPS) (SEE GROUP 4.000 "BRAKE MASTER CYLINDER (B.C.I.A.) " FOR DETAIL ILLUSTRATED VIEW.) (AC-DELCO #174-820)	10157996

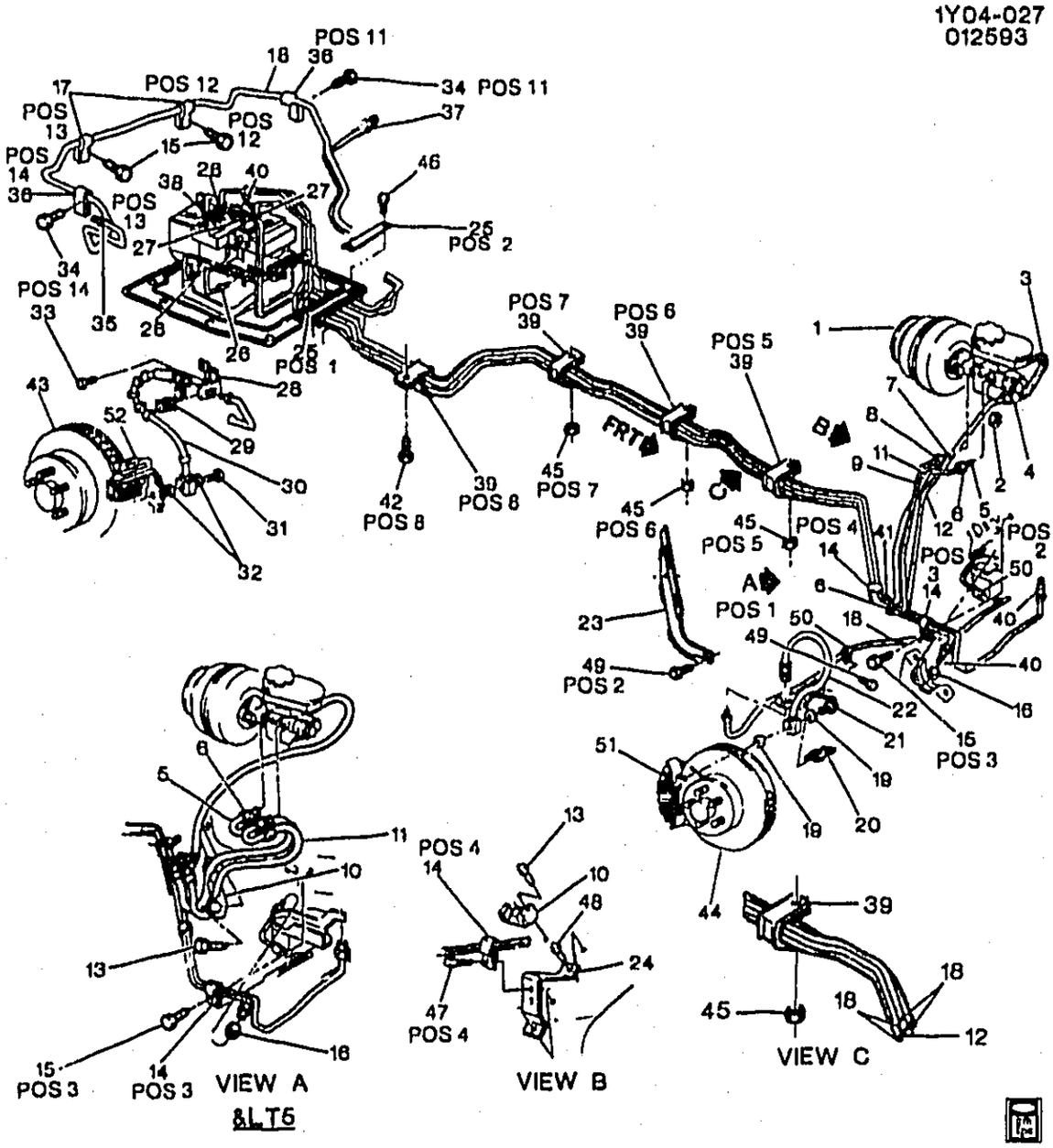

1Y04-027

1992-1995 Y BRAKE HOSES & PIPES

1.	6-A9	4.650	**CYLINDER**, BRK MAS (SEE GROUP 4.000 "BRAKE MASTER CYLINDER (B.C.I.A.) " FOR DETAIL ILLUSTRATED VIEW.) (AC-DELCO #174-828)	92-95	Y	1	10281466
2.		8.917	**NUT** (BRK M/CYL)	92-95	.....	2	11516071
3.	6-A14	4.651	**HOSE**, BRK M/CYL RSVR (PART OF 12)	92-95	Y (LT5)	1	10208515
4.		8.948	**CLAMP**, 1/4X5/8, .320 WIDE BAND, WORM GEAR HEX (PART OF 12) (AC-DELCO #1648216) .	92-95	.....	1	1648216
5.	6-A21	4.685	**PIPE**, BRK PRESS MOD VLV FRT (INCL 6)	92-95	Y	1	10254385

© 2000 GENERAL MOTORS SERVICE PARTS OPERATIONS-CHEVROLET-14Y

							1Y04-027
6.		8.963	NUT, FLRD TUBE, M10X1X17.3, 4.75 TUBE, 7113M (BRK PRESS MOD VLV FRT PIPE) (PART OF 5)	92-95		2	11516402
7.	6-A21	4.685	PIPE, RR BRK FRT (INCLS 8)	92-95	Y (LT5)	1	10254388
	6-A21	4.685	PIPE, BRK PRESS MOD VLV FRT (INCLS 8)	95	Y	1	10254388
8.		8.963	NUT, M12X1X17.6, LCS, ZE, 4.75 TUBE OD, 35 DEG (BRK PRESS MOD VLV FRT PIPE) (PART OF 7) (8.924)	92-95		1	11516404
9.	6-A20	4.680	HOSE, BRK PRESS MOD VLV (INTER FRT) (10MMX1.0) (4.685)	92-95	Y (LT5)	1	10222295
	6-A20	4.680	HOSE, BRK PRESS MOD VLV (INTER RR) (12MMX1.0) (4.685)	92-95	Y (LT5)	2	10222294
10.	6-A21	4.686	CLIP, BRK PIPE (3.162)	92	Y	2	10052169
	6-A21	4.686	CLIP, BRK PIPE (3.162)	93-95	Y (LT5)	1	10052169
	6-A21	4.686	CLIP, BRK PIPE	95	Y (LT1)	4	10255421
11.	6-A20	4.680	HOSE, BRK PRESS MOD VLV (INTER FRT) (10MMX1.0) (4.685)	92-95	Y (LT5)	1	10222295
	6-A20	4.680	HOSE, BRK PRESS MOD VLV (INTER RR) (12MMX1.0) (4.685)	92-95	Y (LT5)	2	10222294
12.	6-A21	4.685	PIPE, BRK PRESS MOD VLV (W/HOSE) (INCLS 4)	92-94	Y (LT1)	1	10208421
	6-A21	4.685	PIPE, BRK PRESS MOD VLV (INCLS 3, 27)	92-94	Y (LT5)	1	10158070
	6-A21	4.685	PIPE, BRK PRESS MOD VLV (INCLS 3, 27)	95	Y (LT5)	1	10254392
		8.965	TUBING, BULK (STEEL) 3/16X20 FT ROLL (1995 PIPE WILL BE REPLACED BY STD TUBING) (8.964)	95		AR	12547207
		8.964	PIPE, 6.0M X 0.7M, 25' ROLL, CTL (1995 PIPE WILL BE REPLACED BY STD TUBING)	95		AR	12300088
13.		8.977	BOLT-HEX W/FLAT WA, M6.3X1.8X30, 17 OD, 6010M, PO, TAP-AB PT (BRK PIPE CLIP)	92-95		1	11505332
14.	6-A21	4.686	CLIP, FRT BRK PIPE (POSN #3) (8.950)	92-95	Y (LT1)	1	14050050
	6-A21	4.686	CLIP, FRT BRK PIPE (POSN #3, 4) (8.950)	92-95	Y (LT5)	2	14050050
	6-A21	4.686	CLIP, FRT BRK PIPE (POSN #4) (37.8MM)	92-95	Y (LT1)	1	14084085
15.		8.977	SCREW, HEX W/FLAT WA (RR BRK C/OVR PIPE) (POSN #3, #12, #13)	92-95		2	12337828
16.	6-A21	4.686	FITTING, FRT BRK C/OVR PIPE (ALUM FITTING)	92-95	Y	1	14084084
17.		8.950	CLIP, CLOSED LOOP M5 DIA ZP (RR BRK C/OVR PIPE) (POS #12 & 13)	92-95		2	22518436
18.		8.965	TUBING, BULK (STEEL) 3/16X20 FT ROLL (8.964)	92-95		AR	12547207
19.	6-A21	4.686	GASKET, FRT BRK HOSE FTG (4.671)	92	Y	4	14076180
	6-A21	4.686	GASKET, FRT BRK HOSE FTG (COPPER) (AC-DELCO #10139097)	93-95	Y	4	10139097
20.	6-A21	4.681	RETAINER, FRT BRK HOSE	92-95	Y	2	14084005

© 2000 GENERAL MOTORS SERVICE PARTS OPERATIONS-CHEVROLET-14Y

							1Y04-027
21.	6-A21	4.686	FITTING, FRT BRK HOSE (M10 X 1.0-6G THD 8)	92-95	Y	2	10286122
22.	6-A20	4.680	HOSE, FRT BRK (AC-DELCO #18J1043)	93	Y	2	18032754
	6-A20	4.680	HOSE, FRT BRK	94-95	Y	LH	17999661
	6-A20	4.680	HOSE, FRT BRK	94-95	Y	RH	17999662
	6-A20	4.680	HOSE, FRT BRK (TO CALIPER)	92	Y	LH	10097647
	6-A20	4.680	HOSE, FRT BRK (TO CALIPER)	92	Y	RH	10097648
23.	6-A21	4.685	SHIELD, BRK & EVAP EMIS PIPE (3.145)	92-95	Y	1	14104690
24.	6-A21	4.686	BRACKET, BRK PIPE (3.145)	92-95	Y	1	14097701
25.	6-A21	4.686	RETAINER, BRK PIPE	92-95	Y	1	10218188
26.	6-A21	4.686	NUT, BRK PRESS MOD VLV RR PIPE (HEX 4.75 TUBE M10X1) (4.685)	92-94	Y	1	14076114
27.	6-A21	4.686	NUT, BRK PRESS MOD VLV RR PIPE (PART OF 12) (M12X1, 6MMTUBE STL, ZE) (8.924)	92-94	Y	1	11516405
28.	6-A21	4.681	BRACKET, RR BRK HOSE	92-95	Y	LH	10052263
	6-A21	4.681	BRACKET, RR BRK HOSE	92-95	Y	RH	10221949
29.	6-A21	4.681	RETAINER, RR BRK HOSE	92-95	Y	2	14084005
30.	6-A20	4.680	HOSE, RR BRK	92	Y	LH	10097649
	6-A20	4.680	HOSE, RR BRK	92	Y	RH	10097650
	6-A20	4.680	HOSE, RR BRK	93-95	Y	2	17999558
31.	6-A20	4.671	FITTING, RR BRK HOSE (M10 X 1.0-6G THD 8) (4.686)	92-95	Y	2	10286122
32.	6-A21	4.681	GASKET, RR BRK HOSE FTG (4.671)	92	Y	4	14076180
	6-A21	4.681	GASKET, RR BRK HOSE FTG (COPPER) (4.686) (AC-DELCO #10139097)	93-95	Y	4	10139097
33.		8.977	SCREW, HWH TAP M8X2.12X20 17.2-OD AB PTPOR (RR BRK HOSE BRKT)	92-95		2	11509189
34.		8.977	SCREW, MET HEX HD (M6.3X1.81) (RR BRK C/OVR PIPE) (POSN #11, #14)	92-95		2	11502707
35.		8.963	NUT, M12X1X17.6, LCS, ZE, 4.75 TUBE OD, 35 DEG (RR BRK PIPE) (8.924)	92-95		1	11516404
36.	6-A21	4.686	CLIP, RR BRK C/OVR PIPE (POSN #11, #14)	92-95	Y	2	14076130
	6-A21	4.686	CLIP, RR BRK C/OVR PIPE (POSN #12, #13) (8.950)	94-95	Y	2	22518436
37.	6-A21	4.686	NUT, RR BRK PIPE (HEX 4.75 TUBE M10X1) (4.685)	92-94	Y	1	14076114
38.	6-B4	4.730	VALVE, BRK PRESS MOD (ABS/ASR) (AC-DELCO #12516323)	92-94	Y	1	12516323
	6-B4	4.730	VALVE, BRK PRESS MOD (ABS/ASR) (AC-DELCO #12516323)	95	Y (LT5)	1	12516323
	6-B4	4.730	VALVE, BRK PRESS MOD (& TRACT CONT) (ABS/ASR)	95	Y (LT1)	1	12521971
39.	6-A21	4.686	CLIP, BRK PRESS MOD VLV INTER PIPE (POSN #5, #6, #7, #8)	92-94	Y	1	10158060

							1Y04-027
	6-A21	4.686	CLIP, BRK PRESS MOD VLV INTER PIPE (POSN #5, #6, #7, #8)	95	Y (LT5)	4	10158060
40.	6-A21	4.686	NUT, FRT BRK PIPE (HEX 4.75 TUBE M10X1; (4.685)	92-93	Y	1	14076114
41.		8.963	NUT, M12X1X17.6, LCS, ZE, 4.75 TUBE OD, 35 DEG (FRT BRK PIPE) (8.924)	92-95		1	11516404
42.		8.977	SCREW, HEX W/FLAT WA (RR BRK PIPE CLIP) (POSN #8)	92-95		1	12337828
43.	6-D11	5.809	ROTOR, RR BRK (AC-DELCO #177-685)	92-95	Y	2	10097655
	6-D11	5.809	ROTOR, RR BRK (AC-DELCO #18A1052)	92-95	Y	LH	18039636
	6-D11	5.809	ROTOR, RR BRK (AC-DELCO #18A1053)	92-95	Y	RH	18039637
	6-D11	5.809	ROTOR, RR BRK (AC-DELCO #18A1062)	92-95	Y	LH	18039646
	6-D11	5.809	ROTOR, RR BRK (AC-DELCO #18A1063)	92-95	Y	RH	18039647
44.	6-D11	5.809	ROTOR, FRT BRK (AC-DELCO #177-678)	92-95	Y (J55)	LH	10052203
	6-D11	5.809	ROTOR, FRT BRK (AC-DELCO #177-679)	92-95	Y (J55)	RH	10052204
	6-D11	5.809	ROTOR, FRT BRK (AC-DELCO #177-684)	92-94	Y (JL9)	2	10097654
	6-D11	5.809	ROTOR, FRT BRK (5-4 3/16 HOLES & BOLT CIRCLE) (2 5/64 HEIGHT) (12 DIAMETER) (AC-DELCO #18A289)	92-95	Y (STINGRAY) (EXCEPT HEAVY DUTY POWER BRAKES) (VENTED)	AR	18027889
45.		8.917	NUT, HFH 6X1X7 SELF LK 14.2-OD (9) 7111M ALL MET PREV TORQ (BRK PIPE CLIP) (POSN #5, #6, #7)	92-95		3	11516075
46.	6-A21	4.686	BOLT, BRK PIPE RET (10.685)	92-95	Y	2	11515397
47.		8.977	SCREW, HEX W/FLAT WA (FRT BRK PIPE CLIP) (POSN #4)	92-95		2	12337828
48.		8.977	SCREW, HEX W/FLAT WA (BRK & EVAP PIPE BRKT)	92-95		2	12337828
49.		8.977	SCREW, HEX W/FLAT WA (FRT BRK C/OVR PIPE) (POSN #1, #2)	92-95		2	12337828
50.		8.950	CLIP, CLOSED LOOP M5 DIA ZP (FRT BRK C/OVR PIPE) (POSN #1, 2)	92-95		2	22518436
51.		N.S.	CALIPER, FRT BRK (SEE GROUP 4.000 "BRAKE CALIPER/FRONT" FOR DETAILED ILLUSTRATED VIEW.)				
52.		N.S.	CALIPER, RR BRK (SEE GROUP 4.000 "BRAKE CALIPER/REAR" FOR DETAILED ILLUSTRATED VIEW.)				

RPO DEFINITIONS

JL9 – BRAKE SYSTEM,POWER,FRONT AND REAR DISC,ANTILOCK
J55 – BRAKE SYSTEM,HEAVY DUTY POWER
LT1 – ENGINE-GAS, 8 CYL, 5.7L(5.7P),MFI,HO
LT5 – ENGINE,5.7L(5.7J),TPI

© 2000 GENERAL MOTORS SERVICE PARTS OPERATIONS-CHEVROLET-14Y

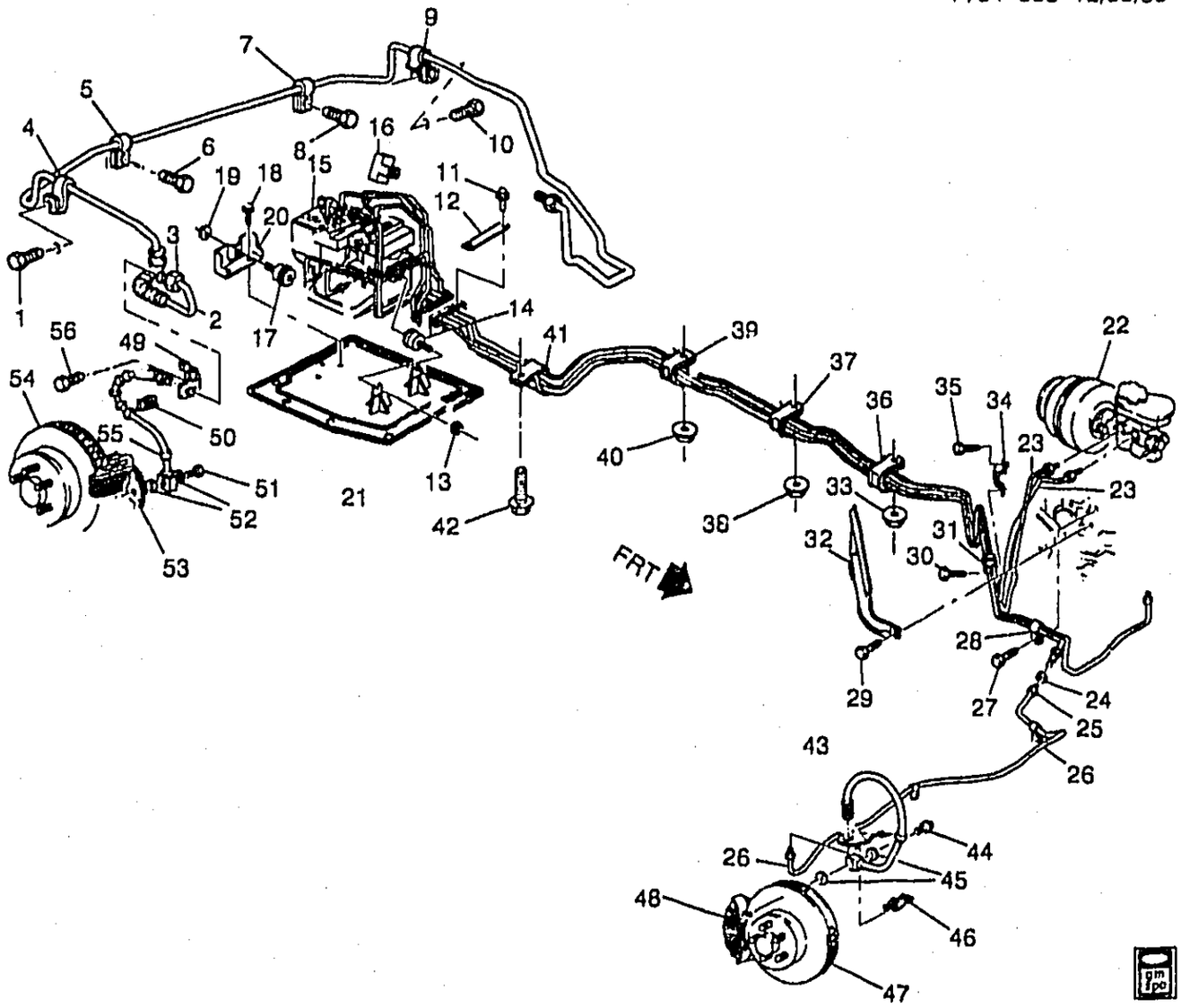

1Y04-033

1996 Y BRAKE HOSES & PIPES

1.		8.977	SCREW, MET HEX HD (M6.3X1.81) (POSN #14)	96	2	11502707
2.		8.965	TUBING, BULK (STEEL) 3/16X20 FT ROLL (RR BRK) (8.964)	96	1	12547207
3.		8.963	NUT , FLRD TUBE, M10X1X17.3, 4.75 TUBE, 7113M (RR BRK PIPE)	96	2	11516402
4.	6-A21	4.686	CLIP, RR BRK C/OVR PIPE (POSN #11, #14)	96 Y	2	14076130
	6-A21	4.686	CLIP, RR BRK C/OVR PIPE (POSN #12, #13) (8.950)	96 Y	2	22518436
5.		8.950	CLIP, CLOSED LOOP M5 DIA ZP (RR BRK C/OVR PIPE)	96	2	22518436
6.		8.977	SCREW, HEX W/FLAT WA (POSN #13)	96	2	12337828
7.	6-A21	4.686	CLIP, RR BRK C/OVR PIPE (POSN #11, #14)	96 Y	2	14076130

© 2000 GENERAL MOTORS SERVICE PARTS OPERATIONS-CHEVROLET-14Y

	6-A21	4.686	CLIP, RR BRK C/OVR PIPE (POSN #12, #13) (8.950)	96	Y	2	22518436
8.		8.977	SCREW, HEX W/FLAT WA (RR BRK C/OVR PIPE CLIP)	96		2	12337828
9.		8.950	CLIP, CLOSED LOOP M5 DIA ZP (RR BRK C/OVR PIPE)	96		2	22518436
10.		8.977	SCREW, MET HEX HD (M6.3X1.81) (RR BRK C/OVR PIPE CLIP)	96		2	11502707
11.	6-A21	4.686	BOLT, BRK PIPE RET (10.685)	96	Y	2	11515397
12.	6-A21	4.686	RETAINER, BRK PIPE	96	Y	1	10218188
13.		8.917	NUT, HEX W/CON WA M6X1X5.5 (9) 7111M 16-OD (BRK PRESS MOD VLV BRKT)	96		3	11516793
14.	6-B4	4.730	INSULATOR, BRK PRESS MOD VLV	96	Y	3	14087680
15.		N.S.	VALVE, BRK PRESS MOD (W/ELEK BRK & TRACT CONT MDL) (CPS)				
	6-A25	4.720	MODULE, ELEK BRK CONT	96	Y	1	12525023
	6-B4	4.730	VALVE, BRK PRESS MOD	96	Y	1	12525062
	6-B4	4.730	VALVE, BRK PRESS MOD DAMPING (& TRACT CONT) (W/BOLT & O-RINGS)	96	Y	1	12525660
16.	6-B4	4.730	VALVE, BRK PRESS MOD DAMPING (& TRACT CONT) (W/BOLT & O-RINGS)	96	Y	1	12525660
17.	6-B4	4.730	INSULATOR, BRK PRESS MOD VLV	96	Y	3	14087680
18.		8.900	BOLT, HEX W/CON WA, M6X1X20 (BRK PRESS MOD VLV BRKT)	96		2	11514623
19.		8.917	NUT, HEX W/CON WA M6X1X5.5 (9) 7111M 16-OD (BRK PRESS MOD VLV BRKT)	96		3	11516793
20.	6-B4	4.730	BRACKET, BRK PRESS MOD VLV	96	Y	1	10218185
21.	6-A25	4.720	COVER, ELEK BRK CONT MDL	96	Y	1	10225919
22.	6-A9	4.650	CYLINDER, BRK MAS (AC-DELCO #174-828)	96	Y	1	10281466
23.		N.S.	PIPE, BRK PRESS MOD VLV (CPS)				
		8.965	TUBING, BULK (STEEL) 3/16X20 FT ROLL (BRK PRESS MOD VLV FRT) (8.964)	96		1	12547207
		8.964	PIPE, 6.0M X 0.7M, 25' ROLL, CTL (BRK PRESS MOD VLV RR)	96		1	12300088
24.	6-A21	4.686	FITTING, FRT BRK C/OVR PIPE (ALUM FITTING)	96	Y	1	14084084
25.		8.963	NUT, FLRD TUBE, M10X1X17.3, 4.75 TUBE, 7113M (FRT BRK C/OVR PIPE)	96		2	11516402
26.		8.965	TUBING, BULK (STEEL) 3/16X20 FT ROLL (FRT BRK C/OVR) (8.964)	96		1	12547207
27.		8.977	SCREW, HEX W/FLAT WA (POSN #3)	96		2	12337828
28.	6-A21	4.686	CLIP, FRT BRK PIPE (POSN #3) (8.950)	96	Y	1	14050050

© 2000 GENERAL MOTORS SERVICE PARTS OPERATIONS-CHEVROLET-14Y

							1Y04-033
	6-A21	4.686	CLIP, FRT BRK PIPE (POSN #4) (37.8MM)	96	Y	1	14084085
29.		8.977	SCREW, HEX W/FLAT WA (BRK PIPE SHLD)	96		2	12337828
30.		8.977	SCREW, HEX W/FLAT WA (POSN #4)	96		2	12337828
31.	6-A21	4.686	CLIP, FRT BRK PIPE (POSN #3) (8.950)	96	Y	1	14050050
	6-A21	4.686	CLIP, FRT BRK PIPE (POSN #4) (37.8MM)	96	Y	1	14084085
32.	6-N14	3.145	SHIELD, BRK & EVAP EMIS PIPE	96	Y	1	14104690
	6-A21	4.685	SHIELD, BRK & EVAP EMIS PIPE (3.145)	96	Y	1	14104690
33.		8.917	NUT, HFH 6X1X7 SELF LK 14.2-OD (9) 7111M ALL MET PREV TORQ (POSN #5)	96		3	11516075
34.	6-A21	4.686	BRACKET, BRK PIPE (3.145)	96	Y	1	14092701
35.		8.977	SCREW, HEX W/FLAT WA (BRK & EVAP EMIS PIPE BRKT)	96		2	12337828
36.	6-A21	4.686	CLIP, BRK PIPE (POSN #5)	96	Y	4	10255421
37.	6-A21	4.686	CLIP, BRK PIPE (POSN #6)	96	Y	4	10255421
38.		8.917	NUT, HFH 6X1X7 SELF LK 14.2-OD (9) 7111M ALL MET PREV TORQ (POSN #6)	96		3	11516075
39.	6-A21	4.686	CLIP, BRK PIPE (POSN #7)	96	Y	4	10255421
40.		8.917	NUT, HFH 6X1X7 SELF LK 14.2-OD (9) 7111M ALL MET PREV TORQ (POSN #7)	96		3	11516075
41.	6-A21	4.686	CLIP, BRK PIPE (POSN #8)	96	Y	4	10255421
42.		8.977	SCREW, HEX W/FLAT WA (RR BRK PIPE CLIP)	96		1	12337828
43.	6-A20	4.680	HOSE, FRT BRK	96	Y	LH	17999661
	6-A20	4.680	HOSE, FRT BRK	96	Y	RH	17999662
44.	6-A21	4.686	FITTING, FRT BRK HOSE (M10 X 1.0-6G THD 8)	96	Y	2	10286122
45.	6-A21	4.686	GASKET, FRT BRK HOSE FTG (COPPER) (AC-DELCO #10139097)	96	Y	4	10139097
46.	6-A21	4.681	RETAINER, FRT BRK HOSE	96	Y	2	14084005
47.	6-D11	5.809	ROTOR, FRT BRK (AC-DELCO #177-678)	96	Y (J55) (EXC VE2, Z15, Z16)	LH	10052203
	6-D11	5.809	ROTOR, FRT BRK (AC-DELCO #177-679)	96	Y (J55) (EXC VE2, Z15, Z16)	RH	10052204
	6-D11	5.809	ROTOR, FRT BRK (AC-DELCO #177-780)	96	Y (J55, Z15, Z16)	LH	10257631
	6-D11	5.809	ROTOR, FRT BRK (AC-DELCO #177-781)	96	Y (J55, Z15, Z16)	RH	10257632
	6-D11	5.809	ROTOR, FRT BRK (AC-DELCO #177-780)	96	Y (J55, VE2) (EXC Z15, Z16) (EXPORT)	LH	10257631
	6-D11	5.809	ROTOR, FRT BRK (AC-DELCO #177-781)	96	Y (J55, VE2) (EXC Z15, Z16) (EXPORT)	RH	10257632
48.	6-A16	4.665	CALIPER, FRT BRK (CONSISTS OF CALIPER, CLIP, WASHER & PIN) (AC-DELCO #172-2141)	96	Y (J55) (EXC Z15, Z16)	LH	12520231
	6-A16	4.665	CALIPER, FRT BRK (AC-DELCO #172-2142)	96	Y (J55) (EXC Z15, Z16)	RH	12520232
	6-A16	4.665	CALIPER, FRT BRK (AC-DELCO #172-2121)	96	Y (J55, Z15, Z16)	LH	12528689

							1Y04-033
	6-A16	4.665	CALIPER, FRT BRK (AC-DELCO #172-2122)	96	Y (J55, Z15, Z16)	RH	12528690
	6-A16	4.665	CALIPER, FRT BRK (AC-DELCO #18R715)	96	Y (STINGRAY) (COLLECTORS OR GRAND SPORT EDITION) (LOADED) ...	RH	18035904
	6-A16	4.665	CALIPER, FRT BRK (AC-DELCO #18R715)	96	Y (STINGRAY) (HEAVY DUTY) (LOADED)	RH	18035904
	6-A16	4.665	CALIPER, FRT BRK (AC-DELCO #18R716)	96	Y (STINGRAY) (COLLECTORS OR GRAND SPORT EDITION) (LOADED) ...	LH	18035905
	6-A16	4.665	CALIPER, FRT BRK (AC-DELCO #18R716)	96	Y (STINGRAY) (HEAVY DUTY) (LOADED)	LH	18035905
49.	6-A21	4.681	BRACKET, RR BRK HOSE	96	Y	LH	10052263
	6-A21	4.681	BRACKET, RR BRK HOSE	96	Y	RH	10221949
50.	6-A21	4.681	RETAINER, RR BRK HOSE	96	Y	2	14084005
51.	6-A20	4.671	FITTING, RR BRK HOSE (M10 X 1.0-6G THD 8) (4.686)	96	Y	2	10286122
52.	6-A21	4.681	GASKET, RR BRK HOSE FTG (COPPER) (4.686) (AC-DELCO #10139097)	96	Y	4	10139097
53.	6-A16	4.665	CALIPER, RR BRK (AC-DELCO #18R759) (CALIPER CAN MOUNT TO THE FRONT OR REAR OF THE AXLE. IF THE CALIPER MOUNTS TO THE FRONT OF AXLE, REVERSE CATALOG LISTINGS WHEN ORDERING.)	96	Y (STINGRAY) (LOADED)	RH	18035948
	6-A16	4.665	CALIPER, RR BRK (AC-DELCO #18R760) (CALIPER CAN MOUNT TO THE FRONT OR REAR OF THE AXLE. IF THE CALIPER MOUNTS TO THE FRONT OF AXLE, REVERSE CATALOG LISTINGS WHEN ORDERING.)	96	Y (STINGRAY) (LOADED)	LH	18035949
	6-A16	4.665	CALIPER, RR BRK (AC-DELCO #18S386)	96	Y (STINGRAY) (UNLOADED)	RH	18036693
	6-A16	4.665	CALIPER, RR BRK (AC-DELCO #18S387)	96	Y (STINGRAY) (UNLOADED)	LH	18036694
	6-A16	4.665	CALIPER, RR BRK (AC-DELCO #172-2024)	96	Y (J55) (EXC Z15, Z16) .	LH	10132839
	6-A16	4.665	CALIPER, RR BRK (AC-DELCO #172-2025)	96	Y (J55) (EXC Z15, Z16) .	RH	10132840
	6-A16	4.665	CALIPER, RR BRK (AC-DELCO #18R715)	96	Y (STINGRAY) (COLLECTORS OR GRAND SPORT EDITION) (LOADED) ...	RH	18035904
	6-A16	4.665	CALIPER, RR BRK (AC-DELCO #18R716)	96	Y (STINGRAY) (COLLECTORS OR GRAND SPORT EDITION) (LOADED) ...	LH	18035905
54.	6-D11	5.809	ROTOR, RR BRK (AC-DELCO #18A1052)	96	Y	LH	18039636
	6-D11	5.809	ROTOR, RR BRK (AC-DELCO #18A1053)	96	Y	RH	18039637
	6-D11	5.809	ROTOR, RR BRK (AC-DELCO #177-685)	96	Y (J55) (EXC VE2, Z15, Z16)	2	10097655

© 2000 GENERAL MOTORS SERVICE PARTS OPERATIONS-CHEVROLET-14Y

							1Y04-033
	6-D11	5.809	ROTOR, RR BRK (AC-DELCO #177-782)	96	Y (J55, Z15, Z16)	2	10257721
	6-D11	5.809	ROTOR, RR BRK (AC-DELCO #177-782)	96	Y (J55, VE2) (EXC Z15, Z16) (EXPORT)	2	10257721
55.	6-A20	4.680	HOSE, RR BRK	96	Y	2	17999558
56.		8.977	SCREW, HWH TAP M6.3X1.81X16 POR (RR BRK HOSE BRKT)	96	.....	2	11504689

RPO DEFINITIONS
J55 – BRAKE SYSTEM,HEAVY DUTY POWER
VE2 – PROTECTOR SOURCE APPLIED
Z15 – APPEARANCE PACKAGE,COLLECTORS EDITION
Z16 – APPEARANCE PACKAGE,GRAND SPORT EDITION

1Y04-021
021789

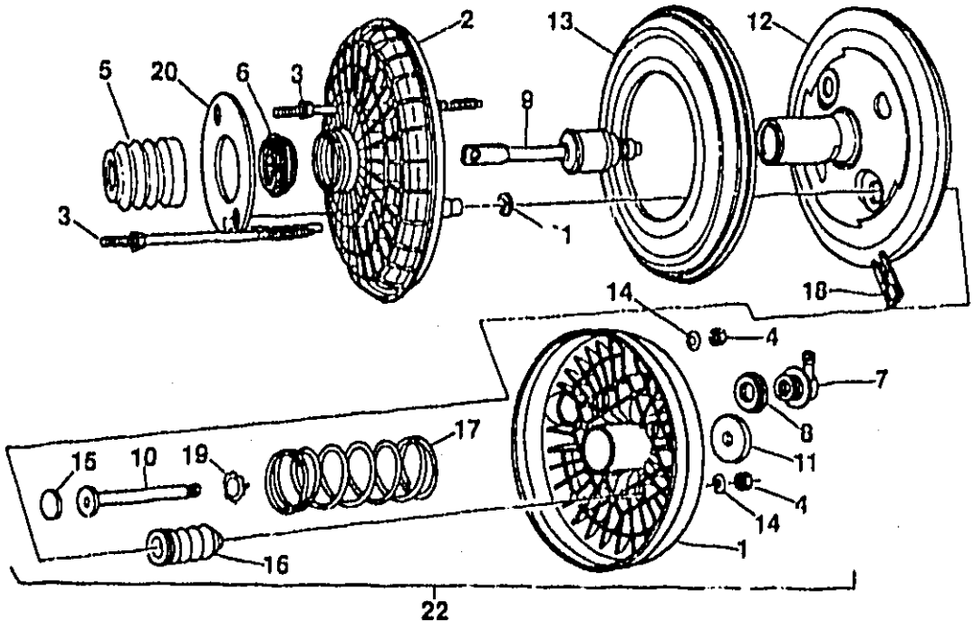

1Y04-021

1989-1991 Y BRAKE BOOSTER/SINGLE DIAPHRAM(L98,JL9)

1.		N.S.	SHELL ASM, FRT	
2.		N.S.	SHELL ASM, RR	
3.		DISCON	ROD KIT, SHELL ROD TIE (INCLS ROD, NUT, SPR)	10159586
4.		4.910	NUT, BOOS TO BRK PED BRKT @ DA (0.334) (AC-DELCO #12337995)	12337995
5.	6-B14	4.940	BOOT, VAC PWR BRK BOOS CONT VLV (*1, 2)	14085873
6.	6-B13	4.924	SEAL, PWR BRK BOOS VAC PSTN (*1, 2)	10132845
7.	6-B15	4.955	VALVE, PWR BRK BOOS VAC CHECK (AC-DELCO #179-981)	12521454
8.	6-B15	4.955	GROMMET, PWR BRK BOOS VAC CHECK VLV (*1, 2)	14067550
9.	6-B14	4.940	VALVE, VAC PWR BRK BOOS CONT (1989) (*1)	14085875
		DISCON	VALVE, VAC PWR BRK BOOS CONT (1990-91) (*2)	10159581
10.		N.S.	PUSHROD, OUTPUT	
11.	6-B13	4.924	SEAL, PWR BRK BOOS OUTPUT ROD	14067551
12.		N.S.	PISTON, VACUUM	
13.	6-B12	4.922	DIAPHRAM, P/B BOOS VAC PISTON (*1, 2)	10132846
14.	6-B12	4.906	WASHER, TIE ROD CONICAL SPRING (*1, 2)	14085877
15.	6-B14	4.934	DISC, VAC PWR BRK BOOS CONT VLV REACT (*1, 2)	14089149
16.	6-B12	4.906	BOOT, VAC PWR BRK BOOS TIE ROD (*1, 2)	14085879
17.	6-B13	4.924	SPRING, VAC PWR BRK BOOS PSTN RTN	14085880
18.	6-B14	4.934	PLATE, VAC PWR BRK BOOS PSTN STOP (*1, 2)	14085881
19.		4.935	RETAINER, PWR BOOS OUTPUT ROD SPRAG (*1, 2)	14085882
20.	6-B12	4.910	SEAL, PWR BRK BOOS	14089147
21.		N.S.	WASHER, STEEL (*1, 2)	
22.	6-B8	4.901	BOOSTER, POWER (1989) (AC-DELCO #178-509)	10097670
	6-B8	4.901	BOOSTER, POWER (1990-91) (AC-DELCO #178-515)	10097674

NOTE 1: GROUP 4.898 REPAIR KIT 10132847 (1989)(INCLS 5,6,8,9,13,14, 15,16,18,19,21)
NOTE 2: GROUP 4.898 REPAIR KIT 10159585 (1990-91)(INCLS 5,6,8,9,13,14.15,16,18,19,21)

RPO DEFINITIONS
JL9 - BRAKE SYSTEM,POWER,FRONT AND REAR DISC,ANTILOCK
L98 - ENGINE, 5.7L, (5.7-8) 350 CID, V8, TPI

© 2000 GENERAL MOTORS SERVICE PARTS OPERATIONS-CHEVROLET-14Y

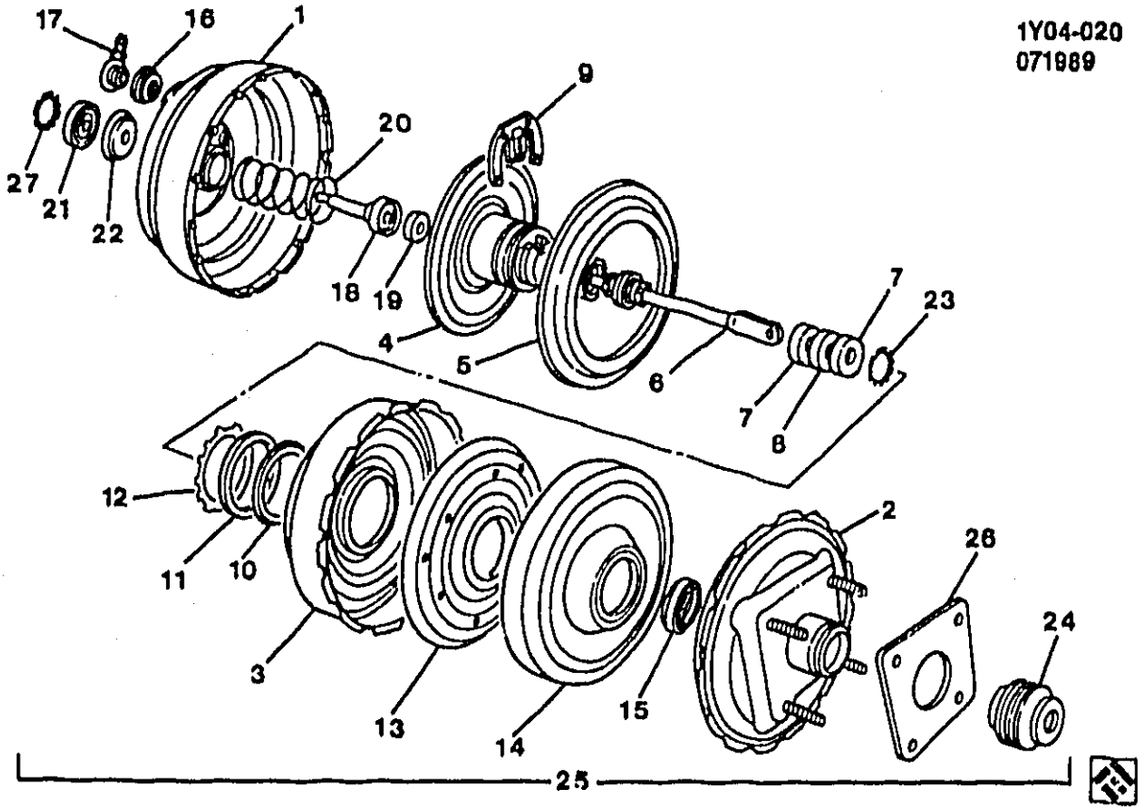

1990-1991 Y BRAKE BOOSTER/DUAL DIAPHRAM (W/LT5,M'_9,ZR1)(J55)

1.		N.S.	SHELL ASM, FRT	
2.		N.S.	SHELL ASM, REAR	
3.		N.S.	PLATE, CENTER	
4.		DISCON	VALVE BODY (1989-91)	10132859
5.	6-B15	4.942	DIAPHRAM, FRT (*1)	10132860
6.		DISCON	PUSH ROD, INPUT (*1)	10132861
7.	6-B12	4.913	FILTER (*1)	10132862
8.		4.913	SILENCER (*1)	10132863
9.	6-B14	4.935	RETAINER, KEY	10132864
10.	6-B13	4.924	BEARING, RING (*1)	10132865
11.	6-B6	4.854	SEAL, CTR PLT (*1)	10132866
12.	6-B14	4.935	RETAINER, BRK M/CYL SEAL	10140680
13.		N.S.	PLATE, PRESSURE	
14.	6-B15	4.942	DIAPHRAM, RR (*1)	10132868
15.	6-B7	4.868	SEAL, PWR BOOS RR (*1)	10132869
16.	6-B15	4.955	GROMMET, PWR BRK BOOS VAC CHECK VLV	14067550
17.	6-B15	4.955	VALVE, PWR BRK BOOS VAC CHECK (AC-DELCO #179-981)	12521454
18.		N.S.	PUSHROD, OUTPUT	
19.		DISCON	DISC, VAC P/B BOOS CONT VLV REACT (*1)	10132870
20.	6-B13	4.924	SPRING, RTN	10132871
21.	6-B7	4.868	SEAL, FRT (*1)	10132872
22.	6-B6	4.854	PLATE, VAC B/BOOS PS'N STOP (*1)	10132873
23.		4.935	RETAINER, FLTR (*1)	10132874
24.	6-B6	4.815	BOOT (*1)	10132875
25.		DISCON	BOOSTER, PWR BRK	10097697
26.		4.910	GASKET, TO FIREWALL	10159582
27.		4.910	RETAINER, FRT SEAL	10159583

NOTE 1: GROUP 4.898 REPAIR KIT 10132876 (INCLS 5,6,7,8,10,11,14,15,19,21,22,23 & 24)

© 2000 GENERAL MOTORS SERVICE PARTS OPERATIONS-CHEVROLET-14Y

MICROFICHE INDEX

GROUPS 4.000 THRU 5.000

FICHE 6 OF 11

GROUP	DESCRIPTION	STARTING GRID LOCATION PARTS	ILLUSTRATIONS
–	GENERAL INFORMATION	1–A2	1–G2
–	ALPHABETICAL INDEX	1–B13	N.A.
4.000	BRAKES	6–A2	6–E2
5.000	BRAKES – REAR AXLE – PROPELLER SHAFT – WHEELS	6–C2	6–H2
–	OUT OF FICHE CALLS	N.A.	6–M22

6–F1

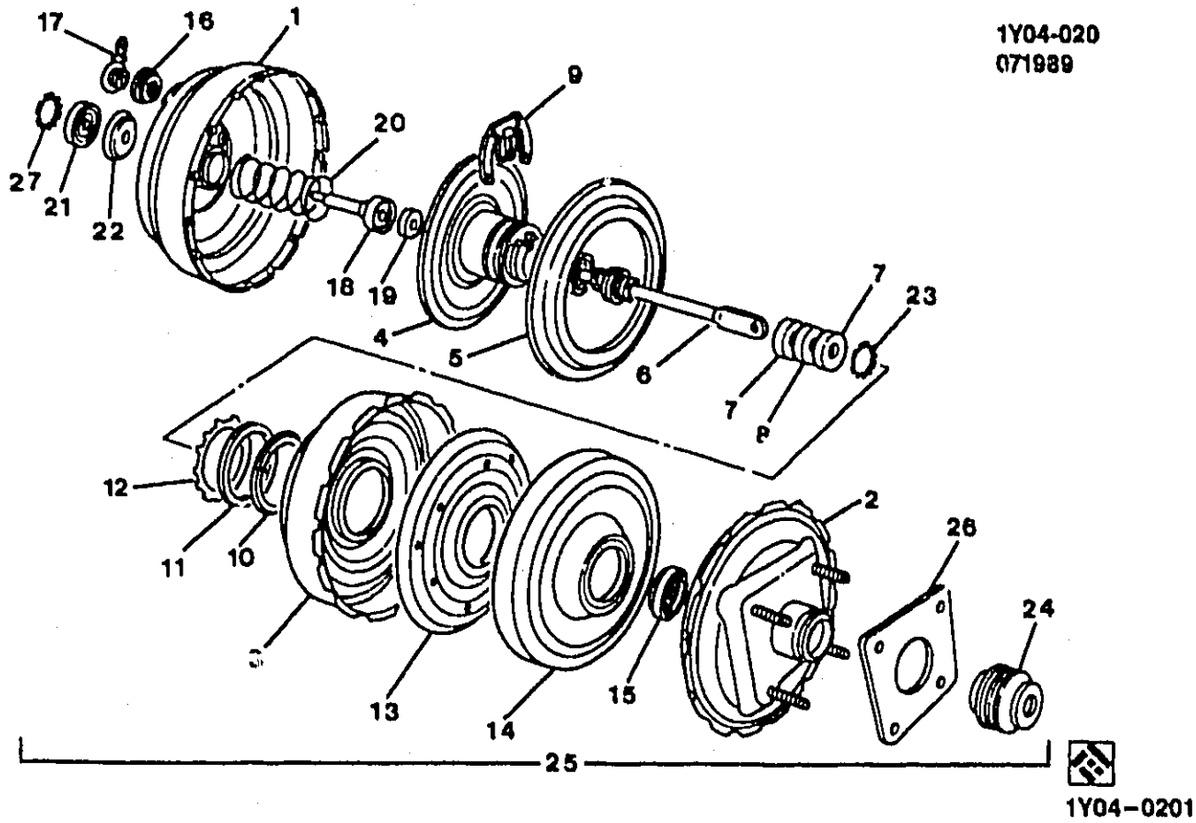

1992–1995 Y BRAKE BOOSTER/DUAL DIAPHRAM(LT5,J55)

1.		N.S.	SHELL ASM, FRT				
2.		N.S.	SHELL ASM, REAR				
3.		N.S.	PLATE, CENTER				
4.	6–B14	4.940	BODY, P/B BOOS VLV (4.902)	92–95	Y (LT5)	1	12509988
5.	6–B15	4.942	DIAPHRAGM, P/B BOOS SECD (*KIT1)	92–95	Y (LT5)	1	10132860
6.	6–A15	4.658	ROD, P/B BOOS PUSH (INPUT) (*KIT1)	92–95	Y (LT5)	1	12509989
7.	6–B12	4.913	FILTER, P/B BOOS AIR (*KIT1)	92–95	Y (LT5)	2	10132862
8.	6–B12	4.906	SILENCER, P/B BOOS AIR (4.913)	92–95	Y (LT5)	1	10132863
9.	6–B14	4.935	RETAINER, P/B BOOS PWR PSTN REACTION	92–95	Y (LT5)	1	10132864
10.	6–B13	4.924	BEARING, P/B BOOS PWR PSTN SECD (*KIT1)	92–95	Y (LT5)	1	10132865
11.	6–B6	4.854	SEAL, P/B BOOS PWR PSTN (*KIT1)	92–95	Y (LT5)	1	10132866
12.	6–B14	4.935	RETAINER, BRK M/CYL SEAL	92–95	Y (LT5)	1	10140680
13.		N.S.	PLATE, PRESSURE				
14.	6–B15	4.942	DIAPHRAGM, P/B BOOS RR (*KIT1)	92–95	Y (LT5)	1	10132868
15.	6–B7	4.868	SEAL, P/B BOOS OUTPUT ROD (*KIT1)	92–95	Y (LT5)	1	10132869
16.	6–B15	4.955	GROMMET, P/B BOOS VAC CHK VLV	92–95	Y	1	14067550
17.	6–B15	4.955	VALVE, P/B BOOS VAC CHK (AC–DELCO #179–981)	92–95	Y	1	12521454
18.		N.S.	ROD, P/B PUSH OUTPUT				
19.	6–B13	4.924	DISC, P/B BOOS PWR PSTN REACTION (*KIT1)	92–95	Y (LT5)	1	12509991

© 2000 GENERAL MOTORS SERVICE PARTS OPERATIONS–CHEVROLET–14Y

							1Y04-0201
20.	6-B13	4.924	SPRING, P/B BOOS PWR PSTN RTN (4.864)	92-95	Y (LT5)	1	10132871
21.	6-B6	4.805	SEAL, P/B BOOS (*KIT1) (4.868)	92-95	Y (LT5)		10132872
22.	6-B6	4.854	STOP, P/B BOOS PWR PSTN (*KIT1) (USED TO SERVICE BOOSTER 10242104)	92-94	Y (LT5)	1	10132873
	6-B6	4.854	STOP, P/B BOOS PWR PSTN (*KIT1)	95	Y	1	10132873
23.	6-A15	4.658	RETAINER, P/B BOOS PUSH ROD (4.935)	92-95	Y (LT5)	1	10132874
24.	6-B6	4.815	BOOT, P/B BOOS TIE ROD (*KIT1)	92-95	Y (LT5)	1	10132875
25.	6-B6	4.901	BOOSTER, P/B (AC-DELCO #178-523)	92-95	Y (LT5)	1	10165315
26.	6-B6	4.805	GASKET, P/B BOOS (4.910)	92-95	Y (LT5)	1	10159582
27.	6-B14	4.935	RETAINER, BRK M/CYL SEAL ...	92-95	Y (LT5)	1	10140680

SERVICE KITS

1.	6-B7	4.890	BOOSTER KIT, P/B RPR (INCLS 5, 6, 7, 10, 11, 14, 15, 19, 21, 22, 24, 27)	92-95	Y (LT5)	1	12509990

RPO DEFINITIONS
J55 – BRAKE SYSTEM,HEAVY DUTY POWER
LT5 – ENGINE,5.7L(5.7J),TPI

1Y04-021
021789

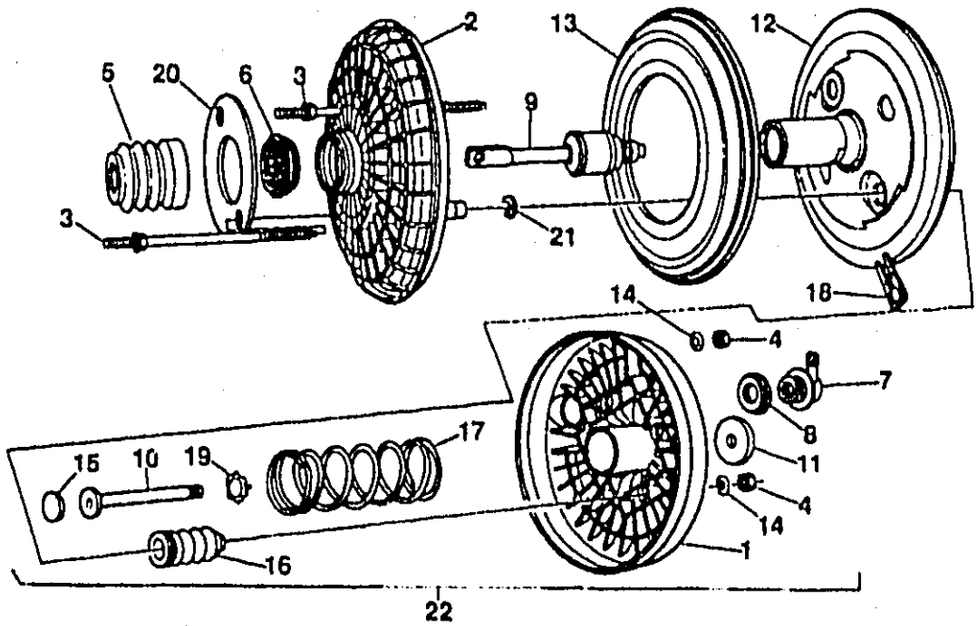

1Y04-0211

1992-1996 Y BRAKE BOOSTER/SINGLE DIAPHRAM(LT1,J55)

1.		N.S.	SHELL, FRT				
2.		N.S.	SHELL, REAR				
3.		N.S.	ROD,				
4.		8.915	NUT (P/B BOOS) (0.334) (AC-DELCO #12337995)	92-96		AR	12337995
5.	6-B14	4.940	BOOT, VAC BRK BOOS CONT VLV (*KIT1) (USE TO SERVICE BOOSTER 10253643)	92-94	Y (LT1)	1	14085873
6.	6-B13	4.924	SEAL, P/B BOOS VAC PSTN (*KIT1)	92-94	Y	1	14105943
	6-B13	4.924	SEAL, P/B BOOS VAC PSTN	92-94	Y	1	10132845
7.	6-B15	4.955	VALVE, P/B BOOS VAC CHK (AC-DELCO #179-981)	92-96	Y	1	12521454
8.	6-B15	4.955	GROMMET, P/B BOOS VAC CHK VLV (*KIT2)	92-95	Y	1	14067550
9.	6-B15	4.955	VALVE, P/B BOOS VAC CHK (*KIT1) (4.902) (USE TO SERVICE BOOSTER 10253643)	92-94	Y (LT1)	1	12509992
10.		N.S.	PUSHROD				
11.	6-B7	4.868	SEAL, P/B BOOS OUTPUT ROD (*KIT1) (4.924)	92-94	Y (LT1)	1	14067551
12.		N.S.	PISTON, VACUUM				
13.	6-B12	4.922	DIAPHRAGM, P/B BOOS (*KIT1, KIT2)	92-95	Y (LT1)	1	10132846
	6-B12	4.922	DIAPHRAGM, P/B BOOS (*KIT1, KIT2)	96	Y	1	10132846
14.	6-B12	4.906	WASHER, P/B BOOS TIE ROD SPR (*KIT1)	92-94	Y (LT1)	2	14085877
15.	6-B14	4.934	DISC, P/B BOOS CONT VLV REACTION (*KIT1)	92-94	Y	1	14089149

© 2000 GENERAL MOTORS SERVICE PARTS OPERATIONS-CHEVROLET-14Y

							1Y04-0211
	6-B14	4.934	DISC, P/B BOOS CONT VLV REACTION (*KIT2)	95-96	Y	1	12524161
16.	6-B6	4.815	BOOT, P/B BOOS TIE ROD (*KIT1) (4.906)	92-94	Y	2	14085879
	6-B6	4.815	BOOT, P/B BOOS TIE ROD (*KIT2)	92-94	Y	2	12524164
17.	6-B13	4.924	SPRING, P/B BOOS PWR PSTN RTN	92-95	Y (LT1)	1	14085880
	6-B13	4.924	SPRING, P/B BOOS PWR PSTN RTN	96	Y	1	14085880
18.	6-B6	4.854	STOP, P/B BOOS PWR PSTN (*KIT1, KIT2) (4.934)	92-94	Y	1	14085881
	6-B6	4.854	STOP, P/B BOOS PWR PSTN (*KIT2)	92-94	Y	1	10132873
19.	6-A15	4.658	RETAINER, P/B BOOS PUSH ROD (*KIT1, KIT2) (4.926)	92-95	Y (LT1)	1	14085882
	6-A15	4.658	RETAINER, P/B BOOS PUSH ROD (*KIT1, KIT2) (4.926)	96	Y	1	14085882
20.	6-B6	4.805	SEAL, P/B BOOS (ECM BRKT TO BOOS) (4.910)	92-94	Y	1	14089147
	6-B6	4.805	SEAL, P/B BOOS (ECM BRKT TO BOOS) (*KIT2) (4.868)	95-96	Y	1	10132872
21.		N.S.	WASHER		.....		
22.	6-B8	4.901	BOOSTER, P/B (AC-DELCO #178-534)	92-95	Y (LT1)	1	10242104
	6-B8	4.901	BOOSTER, P/B (AC-DELCO #178-534)	96	Y	1	10242104

SERVICE KITS

1.	6-B7	4.898	BOOSTER KIT, P/B RPR (INCLS 5, 6, 9, 11, 13, 14, 15, 16, 18, 19) .	92-94	Y	1	12509993
2.	6-B7	4.898	BOOSTER KIT, P/B RPR (INCLS 8, 13, 15, 16, 18, 19, 20)	95-96	Y	1	12524166

RPO DEFINITIONS
J55 – BRAKE SYSTEM,HEAVY DUTY POWER
LT1 – ENGINE-GAS, 8 CYL, 5.7L(5.7P),MFI,HO

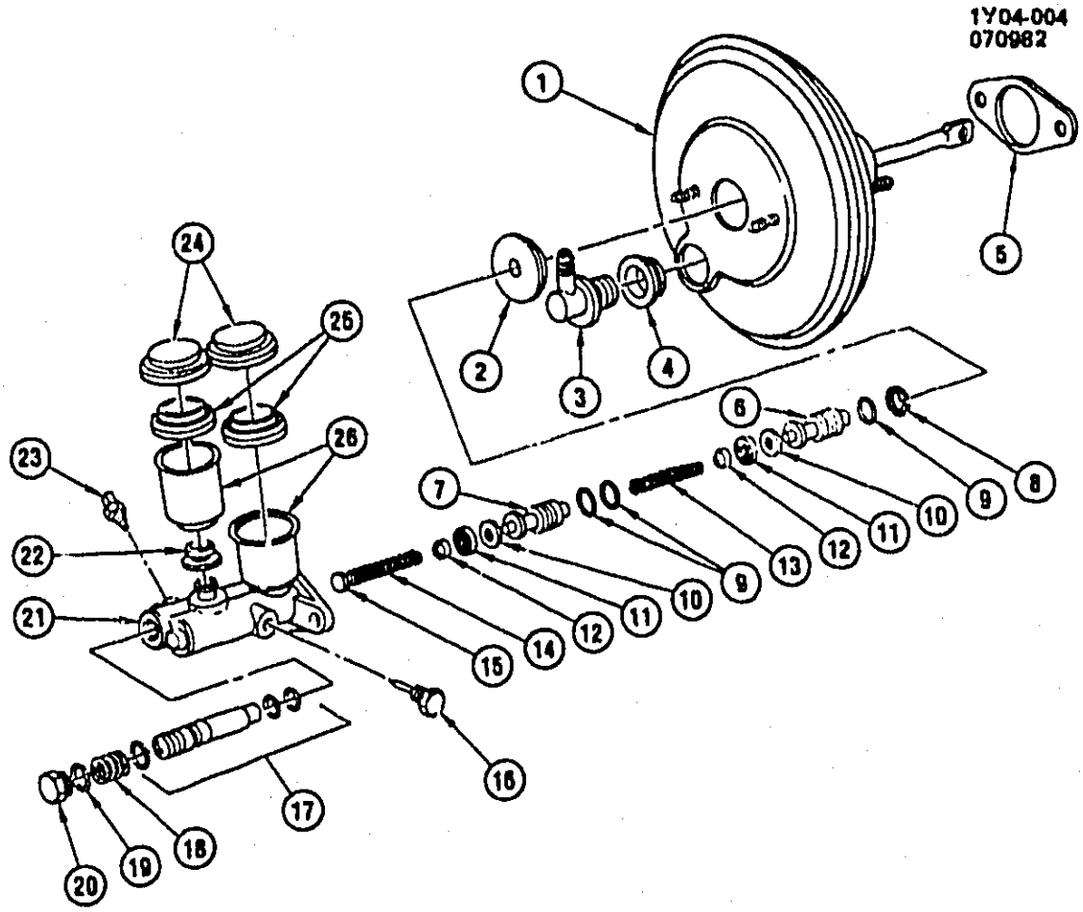

1Y04-004

1984-1985 Y BRAKE MASTER CYLINDER W/BOOSTER

1.		DISCON	BOOSTER, VAC PWR BRK (1984) (INCLS 1-4)	14046849
	6-B8	4.901	BOOSTER, VAC PWR BRK (1985) (INCLS #1 THRU #4) (AC-DELCO #178-509)	10097670
2.	6-B13	4.924	SEAL, PWR BRK BOOS OUTPUT ROD	14067551
3.	6-B15	4.955	VALVE, PWR BRK BOOS VAC CHECK (AC-DELCO #179-981)	12521454
4.	6-B15	4.955	GROMMET, PWR BRK BOOS VAC CHECK VLV	14067550
5.		DISCON	GASKET, PWR BRK BOOS	14046899
6.		DISCON	PISTON, BRK M/CYL PRIM (1984)	14067541
		DISCON	PISTON, BRK M/CYL PRIM (1985)	14085865
7.		DISCON	PISTON, BRK M/CYL SECD (1984)	14067539
		DISCON	PISTON, BRK M/CYL SECD (1985)	14085863
8.		DISCON	RING, BRK M/CYL PRIM PSTN RET (1984)	14067542
		DISCON	RING, BRK M/CYL PRIM PSTN RET (1985)	14085866
9.		N.S.	SEAL, L-TYPE (*1)	
10.		N.S.	WASHER, PISTON (*1)	
11.		N.S.	MAIN SEAL, PISTON (*1)	
12.		N.S.	SEAL RETAINER, MAIN SEAL (*1)	
13.		DISCON	SPRING, BRK M/CYL PRIM PSTN RTN (1984)	14067540
		DISCON	SPRING, BRK M/CYL PRIM PSTN RTN (1985)	14085864
14.		DISCON	SPRING, BRK M/CYL SECD PSTN RTN (1984)	14067538
		DISCON	SPRING, BRK M/CYL SECD PSTN RTN (1985)	14085862
15.		DISCON	PIN, BRK M/CYL SECD PSTN LOC (1984)	14067537
		DISCON	PIN, BRK M/CYL SECD PSTN LOC (1985)	14067537
16.		DISCON	BOLT, M/CYL PISTON STOP	14070274

© 2000 GENERAL MOTORS SERVICE PARTS OPERATIONS-CHEVROLET-14Y

				1Y04-004
17.		DISCON	VALVE, BRK M/CYL COMB (*1)	14067544
18.		DISCON	SPRING, BRK M/CYL COMB VLV GROUND	14067545
19.	6-A14	4.652	SEAL, BRK M/CYL COMB VLV END PLUG O-RING (*1)	14067546
20.		DISCON	PLUG, BRK M/CYL COMB VLV END (SILVER) (1984)	14085867
21.	6-A9	4.650	CYLINDER, BRK MASTER (INCLS 6-26) (1984) (AC-DELCO #174-836)	14046850
	6-A9	4.650	CYLINDER, BRK MASTER (INCLS #6 THRU #26) (1985) (AC-DELCO #174-840)	14080223
22.	6-A14	4.651	GROMMET, M/CYL RESVR MTG	14067532
23.	6-A16	4.663	SWITCH, BRK M/CYL WARN	10074131
24.	6-A14	4.651	CAP, BRK M/CYL RSVR	10159584
25.	6-A14	4.651	DIAPHRAGM, BRK M/CYL RESVR (*1)	14067535
26.	6-A14	4.651	RESERVOIR, BRK M/CYL	14067534

NOTE 1: THESE PARTS ARE INCLUDED IN BRK M/CYL REPAIR KIT #14067548, GROUP 4.649.

© 2000 GENERAL MOTORS SERVICE PARTS OPERATIONS-CHEVROLET-14Y

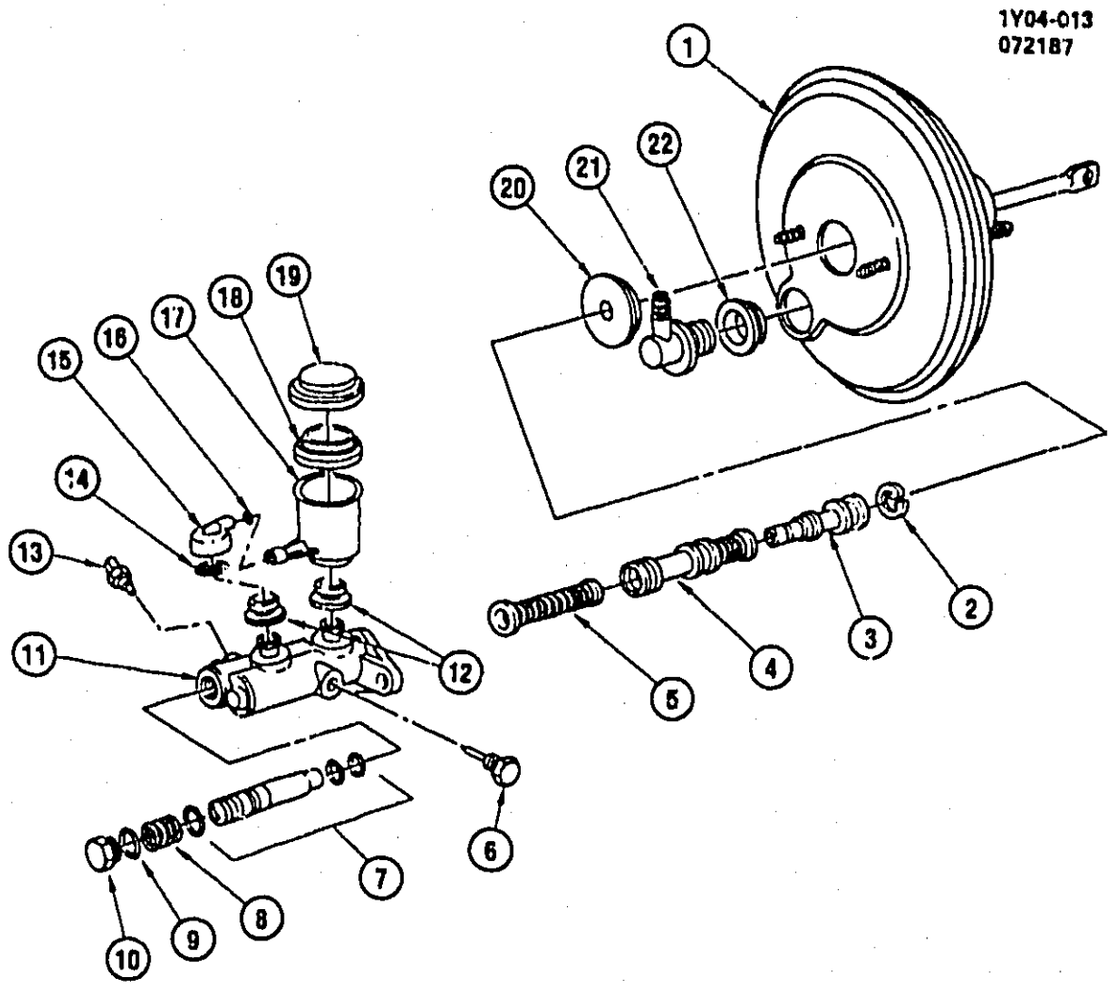

1Y04–013

1986–1987 Y BRAKE MASTER CYLINDER W/BOOSTER

1.	6–B8	4.901	BOOSTER, VAC PWR BRK (AC–DELCO #178–509)	10097670
2.		DISCON	RING, M/CYL PRIM PSTN RET (*1)	14085866
3.		DISCON	PISTON, M/CYL PRIM (EXC SEALS)	14105962
4.		DISCON	PISTON, M/CYL SECD (1986) (EXC SEALS)	10052271
		DISCON	PISTON, M/CYL SECD (1987) (EXC SEALS)	10074130
5.		DISCON	VALVE, M/CYL SECD PSTN CTR	10140683
6.		DISCON	BOLT, M/CYL PSTN STOP	14070274
7.	6–A23	4.690	VALVE, M/CYL BRK PROPN (*1) (AC–DELCO #172–2183)	14089148
8.		DISCON	SPRING, BRK M/CYL COMB VLV GROUND (*1)	14067545
9.	6–A14	4.652	SEAL, BRK M/CYL COMB VLV END PLUG O–RING (*1)	14067546
10.		DISCON	PLUG, BRK COMB VLV END	14085867
11.	6–A9	4.650	CYLINDER, BRK MASTER (AC–DELCO #174–830)	10052280
12.	6–A14	4.651	GROMMET, M/CYL RESVR MTG	14067532
13.	6–A16	4.663	SWITCH, BRK M/CYL WARN	10074131
14.		DISCON	STRAINER, BRK M/CYL RESVR ADAPTOR	10074132
15.		DISCON	ADAPTER, M/CYL RESVR	10074128
16.		DISCON	SEAL, M/CYL RESVR ADAPTOR O–RING (*1)	14105957
17.		DISCON	RESERVOIR, BRK M/CYL	14105958
18.	6–A14	4.651	DIAPHRAGM, BRK M/CYL (*1)	14105959
19.	6–A14	4.651	CAP, BRK M/CYL RSVR	10159584
20.	6–B13	4.924	SEAL, PWR BRK BOOS OUTPUT ROD	14067551

© 2000 GENERAL MOTORS SERVICE PARTS OPERATIONS–CHEVROLET–14Y

				1Y04-013
21.	6-B15	4.955	VALVE, PWR BRK BOOS VAC CHECK (AC-DELCO #179-981)	12521454
22.	6-B15	4.955	GROMMET, PWR BRK BOOS VAC CHECK VLV	14067550

NOTE 1: BRK M/CYL REPAIR KIT #14105963, GROUP: 4.649 CONTAIN ITEMS #2,7,8,9,16,18, (1986).

© 2000 GENERAL MOTORS SERVICE PARTS OPERATIONS-CHEVROLET-14Y

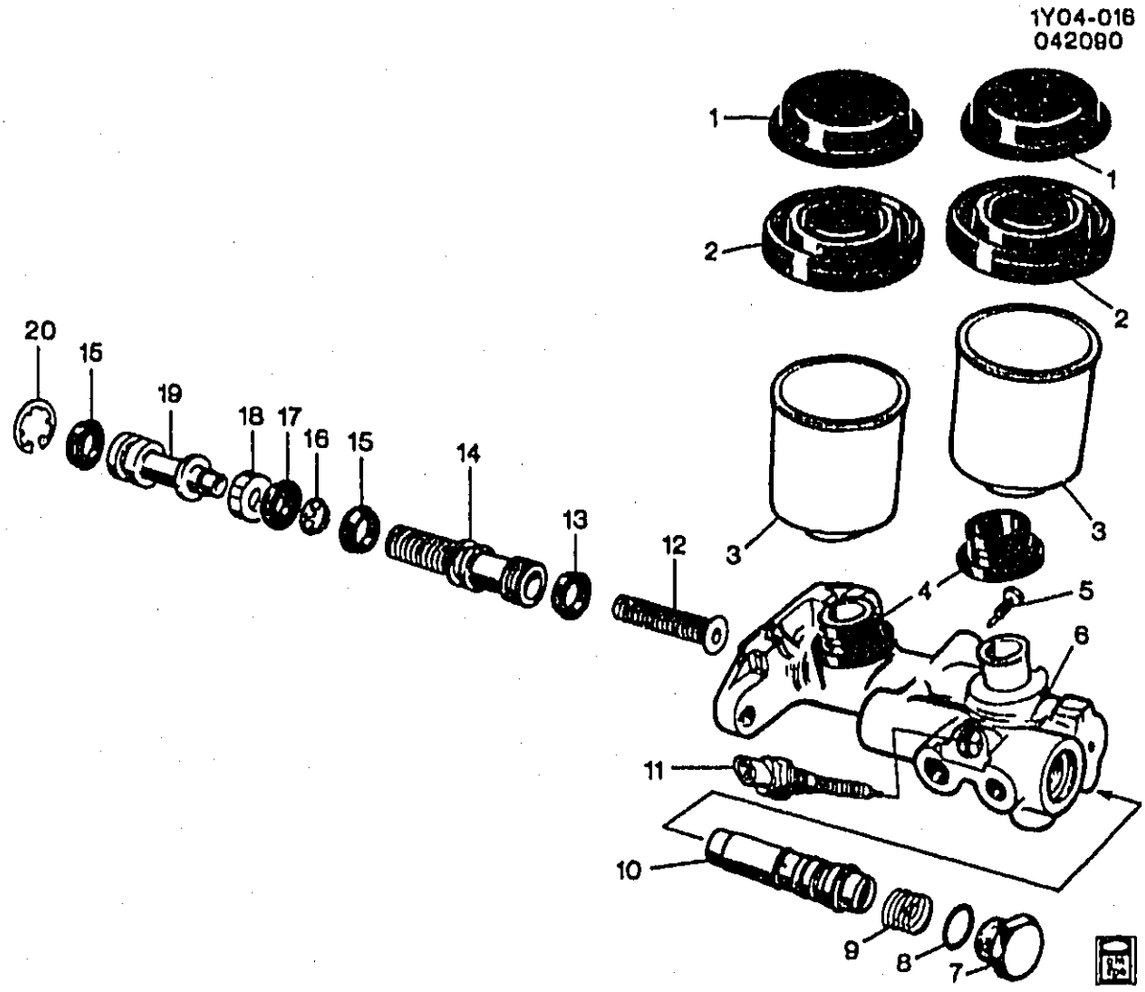

1988–1991 Y BRAKE MASTER CYLINDER (JL9)

NOTE: B.C.I.A. MASTER CYLINDER 10157996 CHARTED IN GROUP 4.650.

1.	6–A14	4.651	CAP, BRK M/CYL RSVR	10159584
2.	6–A14	4.651	DIAPHRAGM, RSVR (*KIT1)	14105959
3.	6–A14	4.651	RESERVOIR	14067534
4.	6–A14	4.651	GROMMET, RSVR	14067532
5.		DISCON	BOLT, PSTN STOPPER	14070274
6.		N.S.	BODY CYL	
7.		DISCON	PLUG, BODY	14085867
8.	6–A14	4.652	SEAL, PROPN VLV (O RING) (*KIT1)	14067546
9.		DISCON	SPRING, PROPN VLV GRD (*KIT1)	14067545
10.		DISCON	PLUG, BRK COMB VLV END	14085867
11.	6–A16	4.663	SWITCH, BRK PRESSURE WARNING	10074131
12.		DISCON	VALVE, SEC PISTON CENTERING (*KIT1)	10140683
13.		N.S.	SEAL, PRIMARY (*KIT1)	
14.		DISCON	PISTON, SECD	10074130
15.		N.S.	SEAL, SECONDARY (*KIT1)	
16.	6–A14	4.652	SEAL, PROPN VLV (O RING)	14067546
17.		N.S.	SEAL, PRIMARY (*KIT1)	
18.		N.S.	GUIDE, RECUPERATING (*KIT1)	
19.		DISCON	PISTON, SECD	10074130
20.		DISCON	RING, PRIM PSTN RET (*KIT1)	14085866

© 2000 GENERAL MOTORS SERVICE PARTS OPERATIONS--CHEVROLET–14Y

SERVICE KITS

1.	6–A8	4.649	CYLINDER KIT, BRK MAS (INCLS 2, 8, 9, 10, 12, 13.15, 17, 20) (AC–DELCO #175–619)	10181304

RPO DEFINITIONS

JL9 – BRAKE SYSTEM,POWER,FRONT AND REAR DISC,ANTILOCK

© 2000 GENERAL MOTORS SERVICE PARTS OPERATIONS–CHEVROLET–14Y

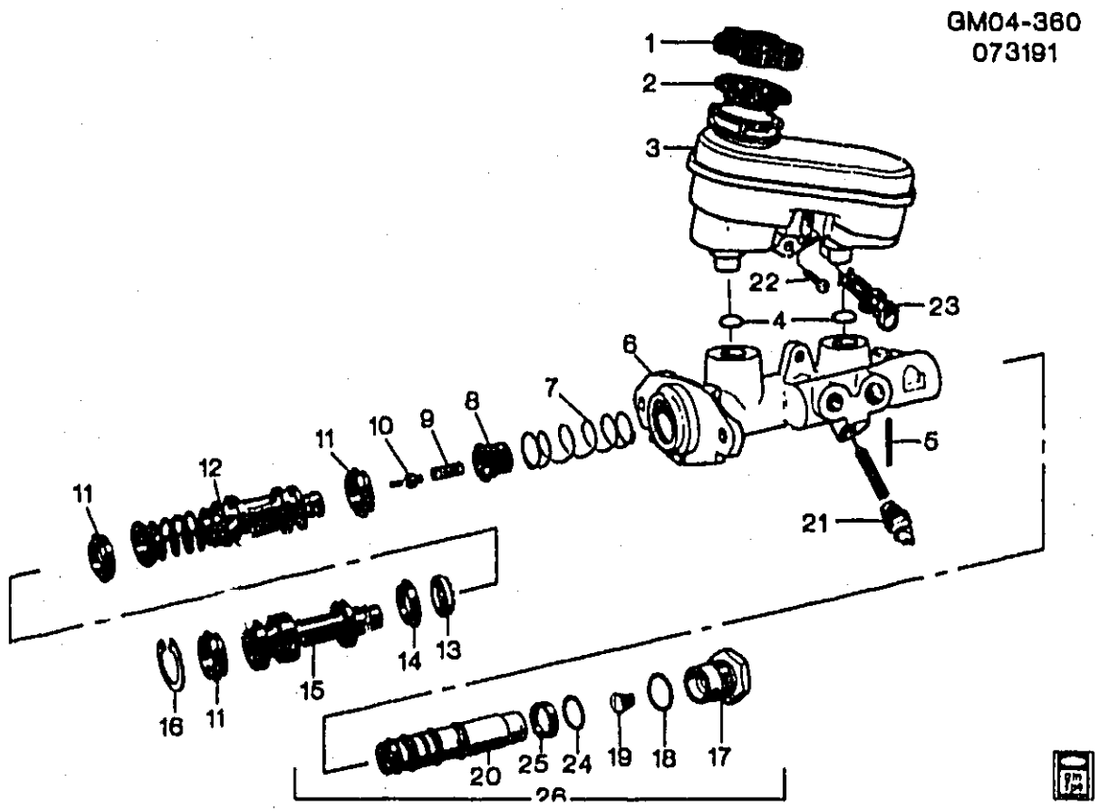

GM04-360

1992-1996 Y BRAKE MASTER CYLINDER

1.	6-A14	4.651	CAP, BRK M/CYL RSVR (W/DIAPH)	92-96	Y	1	18021306
2.	6-A14	4.651	DIAPHRAGM, BRK M/CYL RSVR (*KIT1)	92-96	Y	1	12509975
3.	6-A14	4.651	RESERVOIR, BRK M/CYL	95	Y (LT1)	1	12524134
	6-A14	4.651	RESERVOIR, BRK M/CYL	96	Y	1	12524134
	6-A14	4.651	RESERVOIR, BRK M/CYL	92-94	Y	1	12512995
	6-A14	4.651	RESERVOIR, BRK M/CYL	95	Y (LT5)	1	12512995
4.	6-A14	4.651	SEAL, BRK M/CYL RSVR (*KIT1)	92-94	Y	1	12509976
	6-A14	4.651	SEAL, BRK M/CYL RSVR (*KIT1)	95	Y (LT5)	1	12509976
5.	6-A15	4.653	PIN, BRK M/CYL SECD PSTN STOP	92-96	Y	1	12509977
6.		N.S.	BODY CYL				
7.	6-A15	4.655	SPRING, BRK M/CYL SECD PSTN	92-94	Y	1	12509978
	6-A15	4.655	SPRING, BRK M/CYL SECD PSTN	95	Y (LT5)	1	12509978
	6-A15	4.655	SPRING, BRK M/CYL SECD PSTN	95	Y (LT1)	1	12524135
	6-A15	4.655	SPRING, BRK M/CYL SECD PSTN	96	Y	1	12524135
8.		N.S.	RETAINER SPRING SEC				
9.		N.S.	SPRING CTR VALVE				
10.		N.S.	PLUNGER, CENTER VALVE				
11.		N.S.	SEAL, BRK M/CYL SECD PSTN PRIM (*KIT1)				
12.	6-A15	4.653	PISTON, BRK M/CYL SECD (*KIT1)	92-94	Y	1	12509979

© 2000 GENERAL MOTORS SERVICE PARTS OPERATIONS-CHEVROLET-14Y

	6-A15	4.653	PISTON, BRK M/CYL SECD (*KIT1)	95	Y (LT5)	1	12509979
	6-A15	4.653	PISTON, BRK M/CYL SECD (*KIT1)	95	Y (LT1)	1	12524136
	6-A15	4.653	PISTON, BRK M/CYL SECD (*KIT1)	96	Y	1	12524136
13.		N.S.	RETAINER RING, PRI CUP				
14.		N.S.	SEAL, M/CYL PRIM PSTN (*KIT1)				
15.	6-A15	4.653	PISTON, BRK M/CYL PRIM	92-96	Y	1	12515320
16.	6-A15	4.654	RING, BRK M/CYL PRIM PSTN RET (*KIT1)	92-96	Y	1	12509981
17.	6-A8	4.648	PLUG, BRK M/CYL BODY	92-94	Y	1	12509982
	6-A8	4.648	PLUG, BRK M/CYL BODY	95	Y (LT5)	1	12509982
	6-A14	4.652	PLUG, HEIGHT SEN & BRAKE PROPN C/VLV	96	Y	1	12524138
18.	6-A14	4.652	SEAL, BRK M/CYL PROPN VLV (O RING) (*KIT1)	92-94	Y	1	12509983
	6-A14	4.652	SEAL, BRK M/CYL PROPN VLV (O RING) (*KIT1)	95	Y (LT5)	1	12509983
19.	6-A23	4.690	SPRING, BRK M/CYL PROPN VLV GRD (*KIT1)	92-94	Y	1	12509984
	6-A23	4.690	SPRING, BRK M/CYL PROPN VLV GRD (*KIT1)	95	Y (LT5)	1	12509984
20.	6-A14	4.652	VALVE, BRK M/CYL PROPN (DO NOT DISASSEMBLE) (*KIT1)	92-94	Y	1	12509985
	6-A14	4.652	VALVE, BRK M/CYL PROPN (DO NOT DISASSEMBLE) (*KIT1)	95	Y (LT5)	1	12509985
	6-A14	4.652	VALVE, BRK M/CYL PROPN (DO NOT DISASSEMBLE) (*KIT1)	95	Y (LT1)	1	12524137
	6-A14	4.652	VALVE, BRK M/CYL PROPN (DO NOT DISASSEMBLE) (*KIT1)	96	Y	1	12524137
21.	6-A16	4.663	SWITCH, BRK PRESS WRNG (DIFFERENTIAL WARNING) (DO NOT DISASSEMBLE)	92-94	Y	1	10074131
	6-A16	4.663	SWITCH, BRK PRESS WRNG (DIFFERENTIAL WARNING) (DO NOT DISASSEMBLE)	95	Y (LT5)	1	10074131
22.	6-A14	4.651	BOLT, BRK M/CYL RSVR	92-96	Y	1	12509986
23.	6-A14	4.651	SENSOR, BRK FLUID LVL IND	92-94	Y	1	18029973
	6-A14	4.651	SENSOR, BRK FLUID LVL IND	95	Y (LT5)	1	18029973
24.		N.S.	SEAL, BRK M/CYL PROPN VLV (O RING)				
25.		N.S.	SPACER, PROPN VLV				
26.	6-A9	4.650	CYLINDER, BRK MAS (AC-DELCO #174-828)	92-96	Y	1	10281466

SERVICE KITS

1.	6-A8	4.649	CYLINDER KIT, BRK MAS (INCLS 2, 4, 11, 12, 14, 16, 18, 19, 20, 24) (AC-DELCO #175-260)	92-94	Y	1	12509987
	6-A8	4.649	CYLINDER KIT, BRK MAS (INCLS 2, 4, 11, 12, 14, 16, 18, 19, 20, 24) (AC-DELCO #175-260)	95	Y (LT5)	1	12509987

© 2000 GENERAL MOTORS SERVICE PARTS OPERATIONS-CHEVROLET-14Y

6–A8	4.649	CYLINDER KIT, BRK MAS (INCLS 2, 4, 11, 12, 14, 16, 18, 19, 20, 24) (AC–DELCO #175–621)	95 Y (LT1)	1	12524140
6–A8	4.649	CYLINDER KIT, BRK MAS (INCLS 2, 4, 11, 12, 14, 16, 18, 19, 20, 24) (AC–DELCO #175–621)	96 Y	1	12524140

RPO DEFINITIONS
LT1 – ENGINE–GAS, 8 CYL, 5.7L(5.7P),MFI,HO
LT5 – ENGINE,5.7L(5.7J),TPI

© 2000 GENERAL MOTORS SERVICE PARTS OPERATIONS–CHEVROLET–14Y

1Y04-005
010290

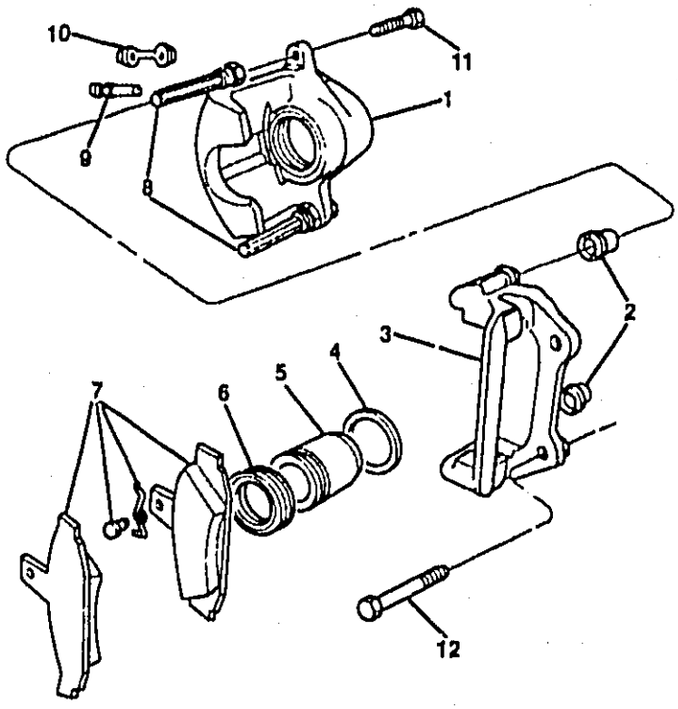

1Y04-005

1984-1987 Y BRAKE CALIPER/FRONT & REAR DISC

1.	6-A16	4.665	CALIPER, FRT BRK W/PSTN-LH (AC-DELCO #172-2143)	14105945
	6-A16	4.665	CALIPER, FRT BRK W/PSTN-RH (AC-DELCO #172-2144)	14105946
		DISCON	CALIPER, RR BRK W/PSTN-LH	14105947
		DISCON	CALIPER, RR BRK W/PSTN-RH	14105948
2.	6-A16	4.665	BOOT, BRK CLPR GUIDE PIN (*1, 2)	14067552
3.		DISCON	PLATE, FRT BRK CLPR MTG (1985-87)	14085886
		DISCON	PLATE, RR BRK CLPR MTG (1985-87)	14085887
		DISCON	PLATE, FRT BRK CLPR MTG (1984)	14067557
		DISCON	PLATE, RR BRK CLPR MTG (1984)	14067558
4.		4.667	SEAL, FRT BRK CLPR PISTON (*1) (AC-DELCO #173-513)	14067584
		DISCON	SEAL, RR BRK CLPR PISTON (*2)	14067562
5.		DISCON	PISTON, FRT BRK CLPR	14105944
		DISCON	PISTON, RR BRK CLPR	14105955
6.		4.667	BOOT, FRT BRK CLPR PSTN (*1) (AC-DELCO #173-513)	14067584
		4.667	BOOT, RR BRK CLPR PSTN (*2) (AC-DELCO #173-514)	14067585
7.	6-C12	5.017	PAD KIT, W/FACING, FRT DISC BRK (AC-DELCO #171-733)	14091367
	6-C12	5.017	PAD KIT, W/FACING, RR DISC BRK (AC-DELCO #14091368)	14091368
8.	6-A16	4.665	PIN, BRK CLPR GUIDE	18022147
9.	6-A20	4.666	VALVE, FRT BRK CLPR BLEDR	14071826
10.	6-A20	4.666	CAP, BRK CLPR BLEEDER SCREW	14089150
11.	6-A16	4.665	BOLT, RR BRK CLPR (*1, 2)	14067559
	6-A16	4.665	BOLT, FRT BRK CLPR GDE PIN (*1, 2)	14067559
12.	6-A16	4.665	BOLT, FRT BRK CLPR	14084051
	6-C13	5.075	WASHER, FRT BRK CLPR MTG PLT (28MM OD X 15.75MM ID)	14080254

NOTE 1: PART OF 14067584, REPAIR KIT, FRT CLPR
NOTE 2: PART OF 14067585, REPAIR KIT, RR CLPR

© 2000 GENERAL MOTORS SERVICE PARTS OPERATIONS-CHEVROLET-14Y

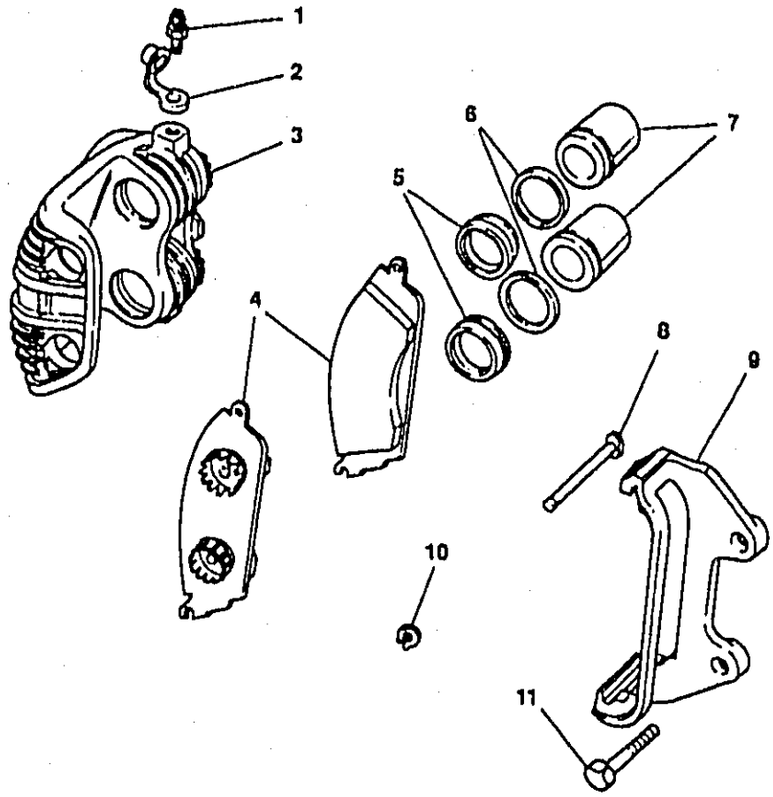

1Y04-017
010290

1Y04-017

1988 Y BRAKE CALIPER/FRONT

1.	6-A20	4.666	VALVE, FRT BRK CLPR BLEDR	14071826
2.	6-A20	4.666	CAP, BRK CLPR BLEEDER SCR (SEAL KIT 10104486, GROUP 4.667, INCLS 1, 2, 5, 6, 7.)	14089150
3.	6-A16	4.665	CALIPER, FRT BRK-LH (FE7) (AC-DELCO #172-2141)	12520231
	6-A16	4.665	CALIPER, FRT BRK-RH (FE7) (AC-DELCO #172-2142)	12520232
	6-A16	4.665	CALIPER, FRT BRK W/PSTN-LH (EXC FE7) (AC-DELCO #172-2139)	12520229
	6-A16	4.665	CALIPER, FRT BRK W/PSTN-RH (EXC FE7) (AC-DELCO #172-2140)	12520230
4.	6-C12	5.017	PAD KIT, FRT DISC BRK (AC-DELCO #171-735)	12518935
5.		N.S.	SEAL, PSTN (SEAL KIT 10104486, GROUP 4.667, INCLS 1, 2, 5, 6, 7)	
6.		N.S.	BOOT, PSTN (PART OF 3) (SEAL KIT 10104486, GROUP 4.667, INCLS 1, 2, 5, 6, 7)	
7.	6-A20	4.668	PISTON, BRK CLPR (AC-DELCO #179-986)	10104482
8.	6-A16	4.665	PIN, BRK CLPR RET (FE7) (AC-DELCO #179-949)	10140666
	6-A16	4.665	PIN, BRK CLPR RET (EXC FE7) (AC-DELCO #179-952)	10140586
9.	6-A16	4.665	PLATE, ANCHOR-LH (FE7)	10181207
	6-A16	4.665	PLATE, ANCHOR-RH (FE7)	10181208
	6-A16	4.665	PLATE, ANCHOR-RH (EXC FE7)	10181206
	6-A16	4.665	PLATE, ANCHOR-LH (EXC FE7)	10181205
10.	6-A16	4.665	CLIP, RET (E-RING) (AC-DELCO #179-950)	10132842
11.	6-A16	4.665	BOLT, FRT BRK CLPR	14084051

SERVICE KITS

1.	4.667	SEAL KIT, FRT BRK CLPR PSTN (INCLS 1, 2, 5, 6, 7)

© 2000 GENERAL MOTORS SERVICE PARTS OPERATIONS-CHEVROLET-14Y

FE7 – SUSPENSION SYSTEM,FRONT AND REAR,HEAVY DUTY(USED WITH PERFORMANCE HANDLING PACKAGE Z51)

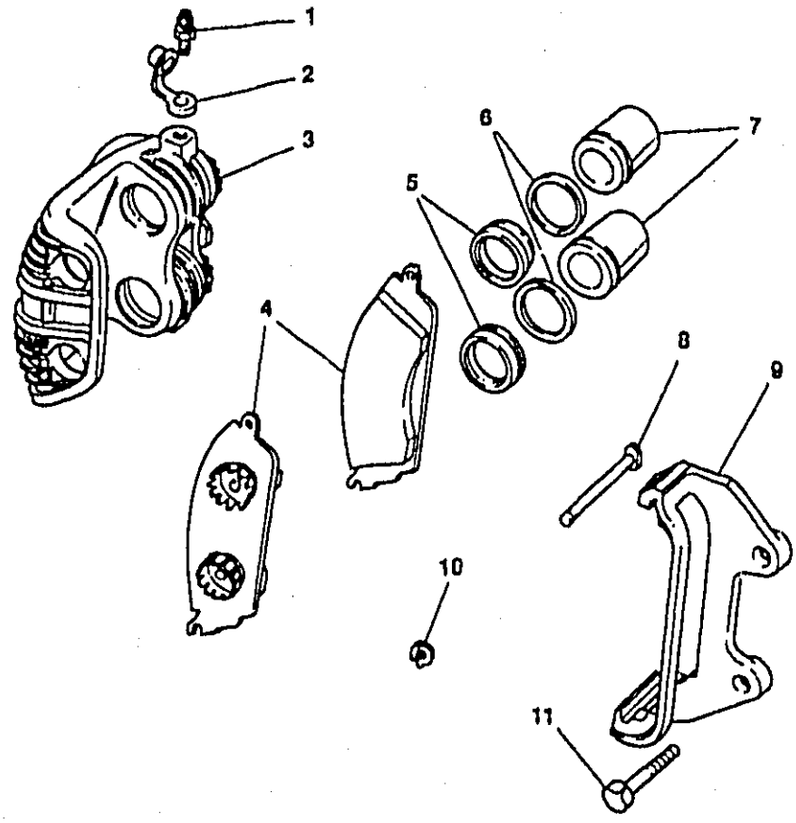

1Y04-017
010290

1Y04-0171

1989-1996 Y BRAKE CALIPER/FRONT

1.	6-A20	4.666	VALVE, FRT BRK CLPR BLEDR (*KIT1)	89-96	Y	4	14071826
2.	6-A20	4.666	CAP, FRT BRK CLPR BLEDR VLV (REPCO LTD) (STMPD WITH A DOT OF ORANGE PAINT) (*KIT1)	89-96	Y	4	14089150
3.	6-A16	4.665	CALIPER, FRT BRK (CONSISTS OF CALIPER, CLIP, WASHER & PIN) (AC-DELCO #172-2141)	89-95	Y (J55)	LH	12520231
	6-A16	4.665	CALIPER, FRT BRK (AC-DELCO #18R715)	89-95	Y (STINGRAY) (ANTILOCK BRAKES, EXCEPT HEAVY DUTY FRONT) (LOADED)	RH	18035904
	6-A16	4.665	CALIPER, FRT BRK (AC-DELCO #18R716)	89-95	Y (STINGRAY) (ANTILOCK BRAKES, EXCEPT HEAVY DUTY FRONT) (LOADED)	LH	18035905
	6-A16	4.665	CALIPER, FRT BRK (AC-DELCO #18S281)	89-95	Y (STINGRAY) (ANTILOCK BRAKES, EXCEPT HEAVY DUTY FRONT) (UNLOADED)	RH	18036588
	6-A16	4.665	CALIPER, FRT BRK (AC-DELCO #18S282)	89-95	Y (STINGRAY) (ANTILOCK BRAKES, EXCEPT HEAVY DUTY FRONT) (UNLOADED)	LH	18036589
	6-A16	4.665	CALIPER, FRT BRK (CONSISTS OF CALIPER, CLIP, WASHER & PIN) (AC-DELCO #172-2141)	96	Y (J55) (EXC Z15, Z16)	LH	12520231
	6-A16	4.665	CALIPER, FRT BRK (AC-DELCO #172-2142)	96	Y (J55) (EXC Z15, Z16)	RH	12520232

© 2000 GENERAL MOTORS SERVICE PARTS OPERATIONS-CHEVROLET-14Y

							1Y04-0171
	6-A16	4.665	CALIPER, FRT BRK (AC-DELCO #172-2121)	96	Y (J55, Z15, Z16)	LH	12528689
	6-A16	4.665	CALIPER, FRT BRK (AC-DELCO #172-2122)	96	Y (J55, Z15, Z16)	RH	12528690
	6-A16	4.665	CALIPER, FRT BRK (AC-DELCO #18R715)	96	Y (STINGRAY) (COLLECTORS OR GRAND SPORT EDITION) (LOADED) ...	RH	18035904
	6-A16	4.665	CALIPER, FRT BRK (AC-DELCO #18R715)	96	Y (STINGRAY) (HEAVY DUTY) (LOADED)	RH	18035904
	6-A16	4.665	CALIPER, FRT BRK (AC-DELCO #18R716)	96	Y (STINGRAY) (COLLECTORS OR GRAND SPORT EDITION) (LOADED) ...	LH	18035905
	6-A16	4.665	CALIPER, FRT BRK (AC-DELCO #18R716)	96	Y (STINGRAY) (HEAVY DUTY) (LOADED)	LH	18035905
	6-A16	4.665	CALIPER, FRT BRK (CONSISTS OF CALIPER, CLIP, WASHER & PIN) (CONSISTS OF CALIPER, CLIP, WASHER & PIN) (AC-DELCO #172-2139)	89-94	Y (JL9)	LH	12520229
	6-A16	4.665	CALIPER, FRT BRK (CONSISTS OF CALIPER, CLIP, WASHER & PIN) (CONSISTS OF CALIPER, CLIP, WASHER & PIN) (AC-DELCO #172-2140)	89-94	Y (JL9)	RH	12520230
	6-A16	4.665	CALIPER, FRT BRK (CONSISTS OF CALIPER, CLIP, WASHER & PIN) (AC-DELCO #172-2142) ..	89-95	Y (J55)	RH	12520232
4.	6-C12	5.017	PAD KIT, FRT DISC BRK (AC-DELCO #171-735)	89-95	Y	1	12518935
	6-C12	5.017	PAD KIT, FRT DISC BRK (AC-DELCO #17D412M) (VEHICLES ORIGINALLY EQUIPPED WITH SEMI-METALLIC DISC BRAKE PADS)	89-96	Y (STINGRAY)	AR	18028995
	6-C12	5.017	PAD KIT, FRT DISC BRK (AC-DELCO #17D412MHP) (RECOMMENDED REPLACEMENT WITH SEMI-METALLIC DISC BRAKE PADS)	89-92	YY	AR	18037564
	6-C12	5.017	PAD KIT, FRT DISC BRK (AC-DELCO #171-735)	96	Y (J55) (EXC Z15, Z16) .	1	12518935
	6-C12	5.017	PAD KIT, FRT DISC BRK (AC-DELCO #171-759)	96	Y (J55, Z15, Z16)	1	12528691
5.		N.S.	SEAL (*KIT1)		.....		
6.		N.S.	BOOT (*KIT1)		.....		
7.	6-A20	4.668	PISTON, FRT BRK CLPR (*KIT1) (AC-DELCO #179-986)	89-96	Y	4	10104482
8.	6-A16	4.665	PIN, FRT DISC BRK PAD (AC-DELCO #179-952)	89-94	Y (JL9)	2	10140586
	6-A16	4.665	PIN, FRT DISC BRK PAD (AC-DELCO #179-949)	89-96	Y (J55)	2	10140666
9.	6-A16	4.665	PLATE, FRT BRK CLPR MTG	89-94	Y (JL9)	LH	10181205
	6-A16	4.665	PLATE, FRT BRK CLPR MTG	89-94	Y (JL9)	RH	10181206
	6-A16	4.665	PLATE, FRT BRK CLPR MTG	89-96	Y (J55)	LH	10181207
	6-A16	4.665	PLATE, FRT BRK CLPR MTG	89-96	Y (J55)	RH	10181208

							1Y04-0171
10.	6-A16	4.665	CLIP, FRT BRK CLPR DPNR ("E") (E-RING) (AC-DELCO #179-950)	89-96	Y	2	10132842
11.	6-A16	4.665	BOLT, FRT BRK CLPR (M14X2X47)	89-96	Y	4	14084051

SERVICE KITS

1.	6-A20	4.667	SEAL KIT, FRT BRK CLPR PSTN (INCLS 1, 2, 5, 6, 7) (CONSISTS OF PSTN SEAL, PSTN BOOT, BLEDR SCREW CAP, E-CLIP) (AC-DELCO #173-511)	89-96	Y	2	10104486

RPO DEFINITIONS
JL9 – BRAKE SYSTEM,POWER,FRONT AND REAR DISC,ANTILOCK
J55 – BRAKE SYSTEM,HEAVY DUTY POWER
Z15 – APPEARANCE PACKAGE,COLLECTORS EDITION
Z16 – APPEARANCE PACKAGE,GRAND SPORT EDITION

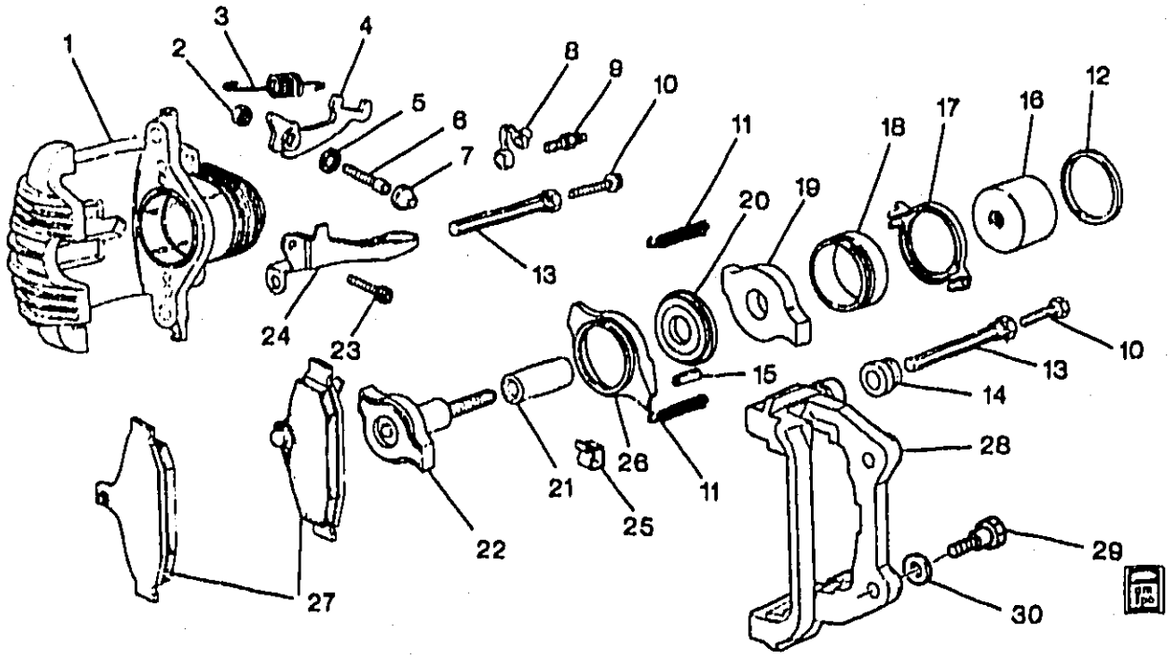

1Y04-018

1988 Y BRAKE CALIPER/REAR

1.		DISCON	CALIPER, RR BRK W/PSTN-LH (1988)	10112641
	6-A16	4.665	CALIPER, RR BRK W/PSTN-RH (1988) (AC-DELCO #172-2138)	10112642
2.	6-C14	5.158	NUT, HEX (M8X1.25X7.8) (W/CAST IRON HD) (0.334) (AC-DELCO #12337995)	12337995
3.	6-A7	4.606	SPRING, PARKING BRK LVR RETURN	10112651
4.		DISCON	LEVER, PK BRK (1988)	10112645
5.		4.665	CLIP, PARKING BRK LEVER SPRAG	10112646
6.		DISCON	PIN, RR CLPR PARK BRK LEV PIV (1988)	10112644
7.		4.665	CAP, PARKING BRK LVR PIVOT PIN	10112647
8.	6-A20	4.666	CAP, BLEEDER SCR	14089150
9.	6-A20	4.666	VALVE, FRT BRK CLPR BLEDR	14071826
10.	6-A16	4.665	BOLT, GUIDE PIN (*2)	14067559
11.	6-A16	4.665	SPRING, PRK BRK COLLAR RETURN	10112650
12.		DISCON	SEAL, PSTN (*3)	14067562
13.	6-A16	4.665	PIN, GUIDE	18022147
14.	6-A16	4.665	BOOT, GUIDE PIN	14067552
15.		N.S.	PUSHROD (*1)	
16.	6-A20	4.668	PISTON, RR BRK CLPR (AC-DELCO #179-987)	10112643
17.		N.S.	RETAINER (*1, 3)	
18.		N.S.	BOOT (*1, 3)	
19.		N.S.	ACTUATING COLLAR (*1)	
20.		N.S.	BOOT (*1, 3)	
21.		N.S.	BUSHING (*1)	
22.		N.S.	CLAMP ROD (*1)	
23.	6-A16	4.665	BOLT, ANCHOR PLATE & BRK	10112649
24.	6-B5	4.785	BRACKET, PK CBL-LH	10132843
	6-B5	4.785	BRACKET, PK CBL-RH	10132844
25.		N.S.	PRELOAD SPRING (*1, 3)	
26.		N.S.	RETAINER (*1, 3)	
27.		N.S.	PAD KIT, RR DISC BRK (*2)	
28.	6-A16	4.665	BRACKET, RR BRK CLPR	10112652

© 2000 GENERAL MOTORS SERVICE PARTS OPERATIONS-CHEVROLET-14Y

29.	6-A16	4.665	BOLT, RR BRK CLPR (1988)	14084053
30.	6-A16	4.665	WASHER, RR BRK CLPR (1988)	10268876

NOTE 1: ACTUATING COLLAR REPAIR KIT, 10112656 GROUP: 4.665 INCLUDE 15,17,18,19,20,21,22,25,26
NOTE 2: 1988 PAD REPAIR KIT, 10112657 GROUP 5.017 INCLUDE 10,27 1989-91 PAD REPAIR KIT, 10132836 GROUP 5.017 INCLUDE 10,27
NOTE 3: PARKING BRAKE REPAIR KIT, 10112655 GROUP 4.665 INCLUDE 12,17,18,20,25,26

© 2000 GENERAL MOTORS SERVICE PARTS OPERATIONS-CHEVROLET-14Y

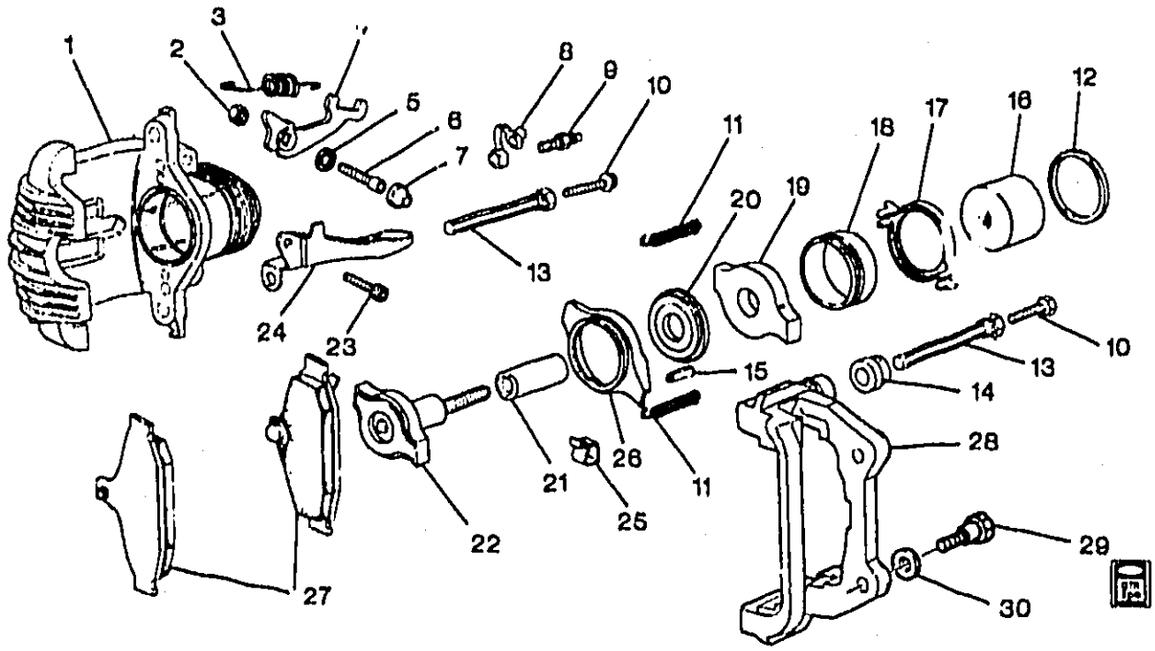

1Y04-0181

1989-1996 Y BRAKE CALIPER/REAR

1.	6-A20	4.667	CALIPER KIT, RR BRK (AC-DELCO #172-2123)	96	Y (J55, Z15, Z16)	LH	12528692
	6-A20	4.667	CALIPER KIT, RR BRK (AC-DELCO #172-2124)	96	Y (J55, Z15, Z16)	RH	12528693
	6-A20	4.667	CALIPER KIT, RR BRK (1 9/16 CYLINDER BORE) (AC-DELCO #18H86)	89-96	Y (STINGRAY)	AR	18031560
2.		8.915	NUT (RR PARK BRK ACTR LVR) (0.334) (AC-DELCO #12337995)	89-96	.....	2	123[illegible]995
3.	6-A7	4.606	SPRING, PARK BRK LVR RTN (4.665)	89-96	Y	2	10112651
4.	6-C14	5.149	LEVER, RR PARK BRK	89-96	Y	2	10132841
5.	6-C14	5.158	RING, RR PARK BRK ACTR LVR RET (4.665)	89-96	Y	2	10112646
6.	6-C14	5.158	PIN, RR PARK BRK LVR PIV (AC-DELCO #179-980)	89-96	Y	2	18020428
7.	6-C14	5.158	CAP, RR PARK BRK ACTR LVR PIV PIN (4.665)	89-96	Y	2	10112647
8.	6-A20	4.666	CAP, RR BRK BLEDR VLV (REPCO LTD) (STMPD WITH A DOT OF ORANGE PAINT)	89-96	Y	4	14089150
9.	6-A20	4.666	VALVE, RR BRK CLPR BLEDR ...	89-96	Y	2	14071826
10.	6-A16	4.665	BOLT, FRT BRK CLPR GDE PIN ..	89-96	Y	8	14067559
11.	6-A16	4.665	SPRING, RR CLPR PARK BRK COLR RTN	89-96	Y	4	10112650
12.		N.S.	SEAL, RR BRK CLPR PSTN (*KIT1)		.....		
13.	6-A16	4.665	PIN, RR BRK CLPR GDE	89-96	Y	4	18022147
14.	6-A16	4.665	BOOT, RR BRK CLPR GDE PIN (*KIT1)	89-96	Y	4	14067552
15.		N.S.	PUSHROD (*KIT2)		.....		
16.	6-A20	4.668	PISTON, RR BRK CLPR (AC-DELCO #179-987)	89-96	Y	2	10112643

© 2000 GENERAL MOTORS SERVICE PARTS OPERATIONS-CHEVROLET-14Y

17.		N.S.	RETAINER (*KIT1)				
18.		N.S.	BOOT (*KIT1)				
19.		N.S.	ACTUATING COLLAR (*KIT2)				
20.		N.S.	BOOT (*KIT1)				
21.		N.S.	BUSHING (*KIT2)				
22.		N.S.	CLAMP ROD (*KIT2)				
23.	6-A16	4.665	BOLT, RR BRK CLPR (ANCHOR PLATE & BRK)	89-96	Y	1	10112649
24.	6-B5	4.785	BRACKET, PARK BRK CBL	89-96	Y	LH	10132843
	6-B5	4.785	BRACKET, PARK BRK CBL	89-96	Y	RH	10132844
25.		N.S.	SPRING, PRELOAD (*KIT2)				
26.		N.S.	RETAINER (*KIT1)				
27.	6-C12	5.017	PAD KIT, RR DISC BRK (AC-DELCO #17D413M) (VEHICLES ORIGINALLY EQUIPPED WITH SEMI-METALLIC DISC BRAKE PADS)	89-96	Y (STINGRAY)	AR	18028996
	6-C12	5.017	PAD KIT, RR DISC BRK (AC-DELCO #17D413MHP) (RECOMMENDED REPLACEMENT WITH SEMI-METALLIC DISC BRAKE PADS)	89-92	YY	AR	18037565
	6-C12	5.017	PAD KIT, RR DISC BRK (FOA) (AC-DELCO #10132836)	89-96	Y	1	10132836
28.	6-A16	4.665	BRACKET, RR BRK CLPR	89-96	Y	2	10112652
29.	6-A16	4.665	BOLT, RR BRK CLPR	89-96	Y	4	14084053
	6-A16	4.665	BOLT, RR BRK CLPR (AC-DELCO #18K203)	89-96	Y (STINGRAY)	AR	18034577
	6-A16	4.665	BOLT, RR BRK CLPR (ANCHOR PLATE & BRK)	89-96	Y	2	10112649
	6-A16	4.665	BOLT, RR BRK CLPR (GDE PIN)	89-96	Y	8	14067559
30.	6-A16	4.665	WASHER, RR BRK CLPR	89-96	Y	4	10268876

SERVICE KITS

1.	6-A16	4.665	BRAKE KIT, RR CLPR PARK RPR (AC-DELCO #173-512)	89-96	Y	2	10112655
2.	6-A7	4.591	ACTUATOR KIT, RR PARK BRK (4.665)	89-96	Y	2	10112656
	6-A7	4.591	ACTUATOR KIT, RR PARK BRK (RPR) (4.665)	96	Y (J55)	2	18021202
3.	6-A16	4.665	CALIPER, RR BRK (AC-DELCO #18R759) (CALIPER CAN MOUNT TO THE FRONT OR REAR OF THE AXLE. IF THE CALIPER MOUNTS TO THE FRONT OF AXLE, REVERSE CATALOG LISTINGS WHEN ORDERING.)	89-96	Y (STINGRAY) (LOADED)	RH	18035948
	6-A16	4.665	CALIPER, RR BRK (AC-DELCO #18R760) (CALIPER CAN MOUNT TO THE FRONT OR REAR OF THE AXLE. IF THE CALIPER MOUNTS TO THE FRONT OF AXLE, REVERSE CATALOG LISTINGS WHEN ORDERING.)	89-96	Y (STINGRAY) (LOADED)	LH	18035949

© 2000 GENERAL MOTORS SERVICE PARTS OPERATIONS-CHEVROLET-14Y

6-A16	4.665	CALIPER, RR BRK (AC-DELCO #18S386)	89-96	Y (STINGRAY) (UNLOADED)	RH	18036693
6-A16	4.665	CALIPER, RR BRK (AC-DELCO #18S387)	89-96	Y (STINGRAY) (UNLOADED)	LH	18036694
6-A16	4.665	CALIPER, RR BRK (AC-DELCO #172-2024)	89-95	Y	LH	10132839
6-A16	4.665	CALIPER, RR BRK (AC-DELCO #172-2025)	89-95	Y	RH	10132840
6-A16	4.665	CALIPER, RR BRK (AC-DELCO #172-2024)	96	Y (J55) (EXC Z15, Z16) .	LH	10132839
6-A16	4.665	CALIPER, RR BRK (AC-DELCO #172-2025)	96	Y (J55) (EXC Z15, Z16) .	RH	10132840
6-A16	4.665	CALIPER, RR BRK (AC-DELCO #18R715)	96	Y (STINGRAY) (COLLECTORS OR GRAND SPORT EDITION) (LOADED) ...	RH	18035904
6-A16	4.665	CALIPER, RR BRK (AC-DELCO #18R716)	96	Y (STINGRAY) (COLLECTORS OR GRAND SPORT EDITION) (LOADED) ...	LH	18035905

RPO DEFINITIONS
J55 – BRAKE SYSTEM,HEAVY DUTY POWER
Z15 – APPEARANCE PACKAGE,COLLECTORS EDITION
Z16 – APPEARANCE PACKAGE,GRAND SPORT EDITION

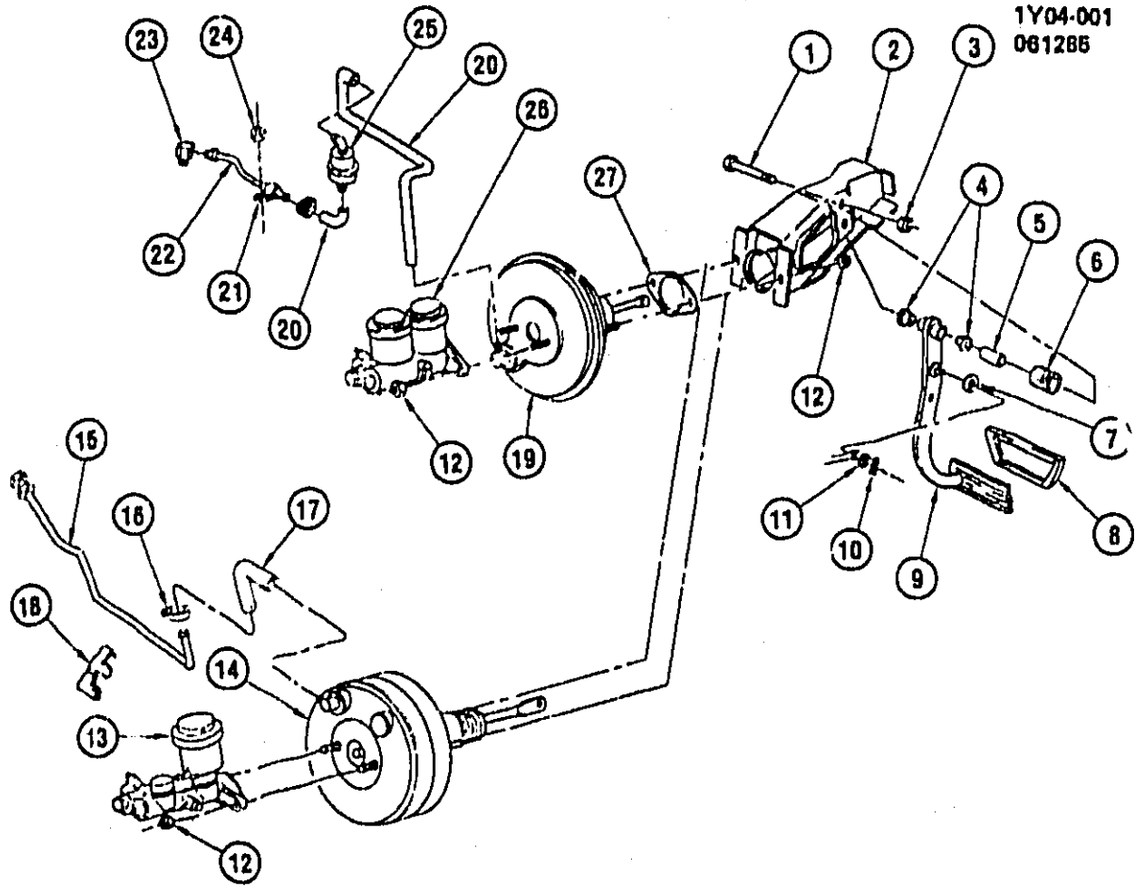

1Y04–001

1984–1989 Y BRAKE PEDAL & MASTER CYLINDER MOUNTING

1.	6–A8	4.634	BOLT, PIV (1984–85)	11508208
		8.900	BOLT, HFH, M10X1.5X65, 22.3 OD, 7114M, RED BODY, 10.9, (AR)	11516109
2.		DISCON	BRACKET	10097691
3.	6–A8	4.634	NUT, BRK PED PIV	11501033
4.	6–A8	4.626	BUSHING (0.831)	15594358
5.	6–A8	4.634	SPACER, PIV	25505362
6.		DISCON	SPRING, RTN (1984)	14084117
7.		8.928	WASHER, SPR (.453X.688X.007)	410230
8.	6–A8	4.630	COVER (1984–88 A.T.)	14053658
	6–A8	4.630	COVER (1984–88 M.T.) (1989)	14053657
9.		DISCON	PEDAL (A.T.)	14046895
		DISCON	PEDAL (M.T.)	14046894
	6–M23	2.447	BRACKET, SW	14053686
10.		8.934	RETAINER, TYPE B SPR (3/8" SHF)	12338114
11.		8.929	WASHER, FL (7/16 IDX3/4 OD)	492346
12.		8.917	NUT, HEX TORQ PREV (M8X1.25)	11515748
13.	6–A9	4.650	CYLINDER, MASTER (1984) (SEE GROUP 4.000 "BRAKE MASTER CYLINDER" FOR DETAIL ILLUSTRATED VIEW.) (AC–DELCO #174–836)	14046850
	6–A9	4.650	CYLINDER, MASTER (1985) (SEE GROUP 4.000 "BRAKE MASTER CYLINDER" FOR DETAIL ILLUSTRATED VIEW) (AC–DELCO #174–840)	14080223
	6–A9	4.650	CYLINDER, MASTER (1986–87) (SEE GROUP 4.000 "BRAKE MASTER CYLINDER" FOR DETAIL ILLUSTRATED VIEW.) (AC–DELCO #174–830)	10052280

© 2000 GENERAL MOTORS SERVICE PARTS OPERATIONS–CHEVROLET–14Y

	6-A9	4.650	CYLINDER, MASTER (1988) (SEE GROUP 4.000 "BRAKE MASTER CYLINDER" FOR DETAIL ILLUSTRATED VIEW.) (AC-DELCO #174-831)	10097905
	6-A9	4.650	CYLINDER, MASTER (1989) (SEE GROUP 4.000 "BRAKE MASTER CYLINDER" FOR DETAIL ILLUSTRATED VIEW.) (AC-DELCO #174-820)	10157996
14.		DISCON	BOOSTER, P/B (1984) (SEE GROUP 4.000 "BRAKE MASTER CYLINDER W/BOOSTER" FOR DETAIL ILLUSTRATED VIEW)	14046849
	6-B8	4.901	BOOSTER, P/B (1985-89) (SEE GROUP 4.000 "BRAKE MASTER CYLINDER W/BOOSTER" FOR DETAIL ILLUSTRATED VIEW) (AC-DELCO #178-509)	10097670
15.		DISCON	PIPE, BOOS VAC (1985-87) (1988-89 L98) (SEE PARTS SECTION FOR ADDITIONAL USAGE)	14087577
16.	6-M23	1.166	CLAMP, WORM TYPE (.56 TO 1.06 DIA)	22518665
17.		DISCON	HOSE, P/B BOOS	10097651
18.		N.S.	BRACKET	
19.		DISCON	BOOSTER, VAC (1984) (SEE GROUP 4.000 "BRAKE MASTER CYLINDER W/BOOSTER" FOR DETAIL ILLUSTRATED VIEW)	14046849
	6-B8	4.901	BOOSTER, VAC (1985-88) (SEE GROUP 4.000 "BRAKE MASTER CYLINDER W/BOOSTER" FOR DETAIL ILLUSTRATED VIEW) (AC-DELCO #178-509)	10097670
		N.S.	BOOSTER (1989) (SEE GROUP 4.000 "BRAKE MASTER CYLINDER W/BOOSTER" FOR DETAIL ILLUSTRATED VIEW)	
20.		N.S.	HOSE, VAC (11/32 ID)	
21.	6-M23	1.166	CLAMP, WORM TYPE (.56 TO 1.06 DIA)	22518665
22.		DISCON	TUBE, BOOS (1984)	14056611
23.		DISCON	FITTING, BOOS TUBE (1984)	14057031
24.		N.S.	NUT, HEX FLG (5/16-18)	
25.	6-B12	4.913	FILTER, VAC BOOS HOSE (1984) (AC-DELCO #179-983)	17070814
26.	6-A9	4.650	CYLINDER, MASTER (1984) (SEE GROUP 4.000 "BRAKE MASTER CYLINDER" FOR DETAIL ILLUSTRATED VIEW.) (AC-DELCO #174-836)	14046850
	6-A9	4.650	CYLINDER, MASTER (1985) (SEE GROUP 4.000 "BRAKE MASTER CYLINDER" FOR DETAIL ILLUSTRATED VIEW.) (AC-DELCO #174-840)	14080223
	6-A9	4.650	CYLINDER, MASTER (1986-87) (SEE GROUP 4.000 "BRAKE MASTER CYLINDER" FOR DETAIL ILLUSTRATED VIEW.) (AC-DELCO #174-830)	10052280
	6-A9	4.650	CYLINDER, MASTER (1988) (SEE GROUP 4.000 "BRAKE MASTER CYLINDER" FOR DETAIL ILLUSTRATED VIEW.) (AC-DELCO #174-831)	10097905
27.		DISCON	GASKET, BOOS (1984)	14046899
	6-B12	4.910	SEAL, BOOS (1985-89)	14089147

MICROFICHE INDEX

GROUPS 4.000 THRU 5.000

FICHE 6 OF 11

GROUP	DESCRIPTION	STARTING GRID LOCATION PARTS	ILLUSTRATIONS
–	GENERAL INFORMATION	1–A2	1–G2
–	ALPHABETICAL INDEX	1–B13	N.A.
4.000	BRAKES	6–A2	6–E2
5.000	BRAKES – REAR AXLE – PROPELLER SHAFT – WHEELS	6–C2	6–H2
–	OUT OF FICHE CALLS	N.A.	6–M22

6–G1

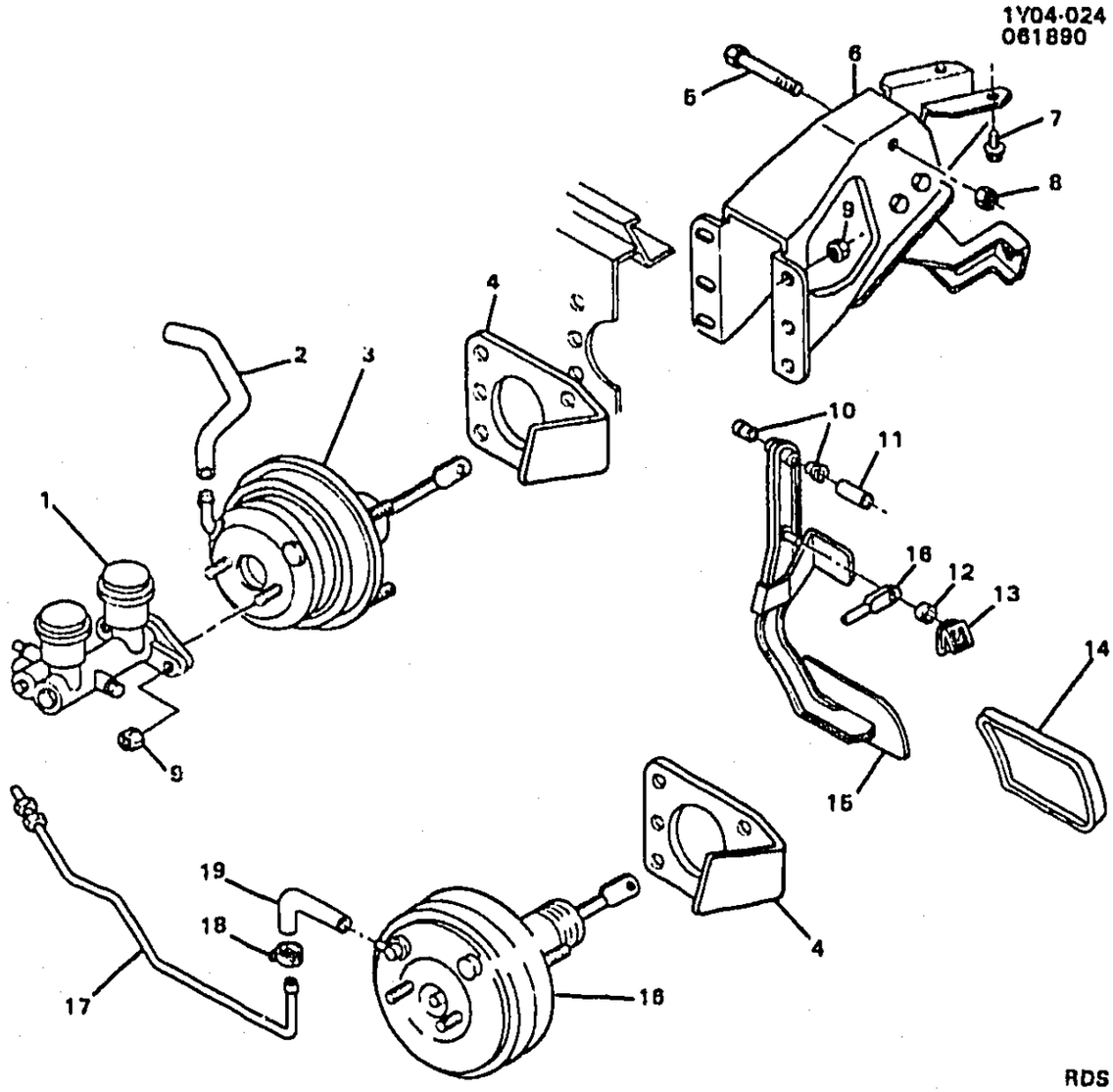

1Y04-024

1990-1991 Y BRAKE PEDAL & MASTER CYLINDER MOUNTING

1.	6-A9	4.650	CYLINDER (SEE GROUP 4.000 "BRAKE MASTER CYLINDER" FOR DETAIL ILLUSTRATED VIEW.) (AC-DELCO #174-820)	10157996
2.		8.962	HOSE, VACUUM BRAKE SYS 11/32"X25' (GM6188) ((BULK STOCK. CUT TO LENGTH AS REQUIRED)) (AR)	9438124
3.		DISCON	BOOSTER, PWR (LT5) (SEE GROUP 4.000 "BRAKE MASTER CYLINDER" FOR DETAIL ILLUSTRATED VIEW.)	10097697
4.	6-N15	3.671	BRACKET, ECM (LT5)	10086315
	6-N15	3.671	BRACKET, ECM W/SEAL (L98)	10143544
5.		8.900	BOLT, HFH, M10X1.5X65, 22.3 OD, 7114M, RED BODY, 10.9, (AR)	11516109
6.		DISCON	BRACKET, PIV (L98, ML9)	10086074
		DISCON	BRACKET, PIV (LT5, ML9)	10097656
7.		8.900	BOLT, FLG HD (M8X1.25X35) 9.8, ZOR	549791
8.		8.917	NUT, HEX PRVG TORQ M10X1.5XGR10XCAD (AR)	11501033
9.	6-B6	4.845	NUT, PWR BOOS (0.429)	24576407
10.	6-A8	4.626	BUSHING, PIV (0.831)	15594358
11.	6-A8	4.634	SPACER, PIV	25505362
12.	6-A15	4.662	WASHER, PUSH ROD	25512286

© 2000 GENERAL MOTORS SERVICE PARTS OPERATIONS-CHEVROLET-14Y

				1Y04-024
13.	6-A15	4.662	RETAINER, BRAKE PED PUSH ROD	3817880
14.	6-A8	4.630	COVER (ML9)	10150010
	6-A8	4.630	COVER (MD8)	14053657
15.		DISCON	PEDAL (ML9)	10097684
		DISCON	PEDAL (MD8)	10097683
	6-M23	2.447	BRACKET, STOP LAMP SW	10097689
16.	6-B8	4.901	BOOSTER, PWR (L98) (SEE GROUP 4.000 "BRAKE BOOSTER" FOR DETAIL ILLUSTRATED VIEW) (AC-DELCO #178-515)	10097674
17.		DISCON	PIPE, P/B BOOS VAV	14087577
18.	6-M23	1.166	CLAMP, WORM TYPE	22518665
19.		DISCON	HOSE, PWR BOOS VAC (L98)	10097651

© 2000 GENERAL MOTORS SERVICE PARTS OPERATIONS-CHEVROLET-14Y

1Y04-028 11/08/96

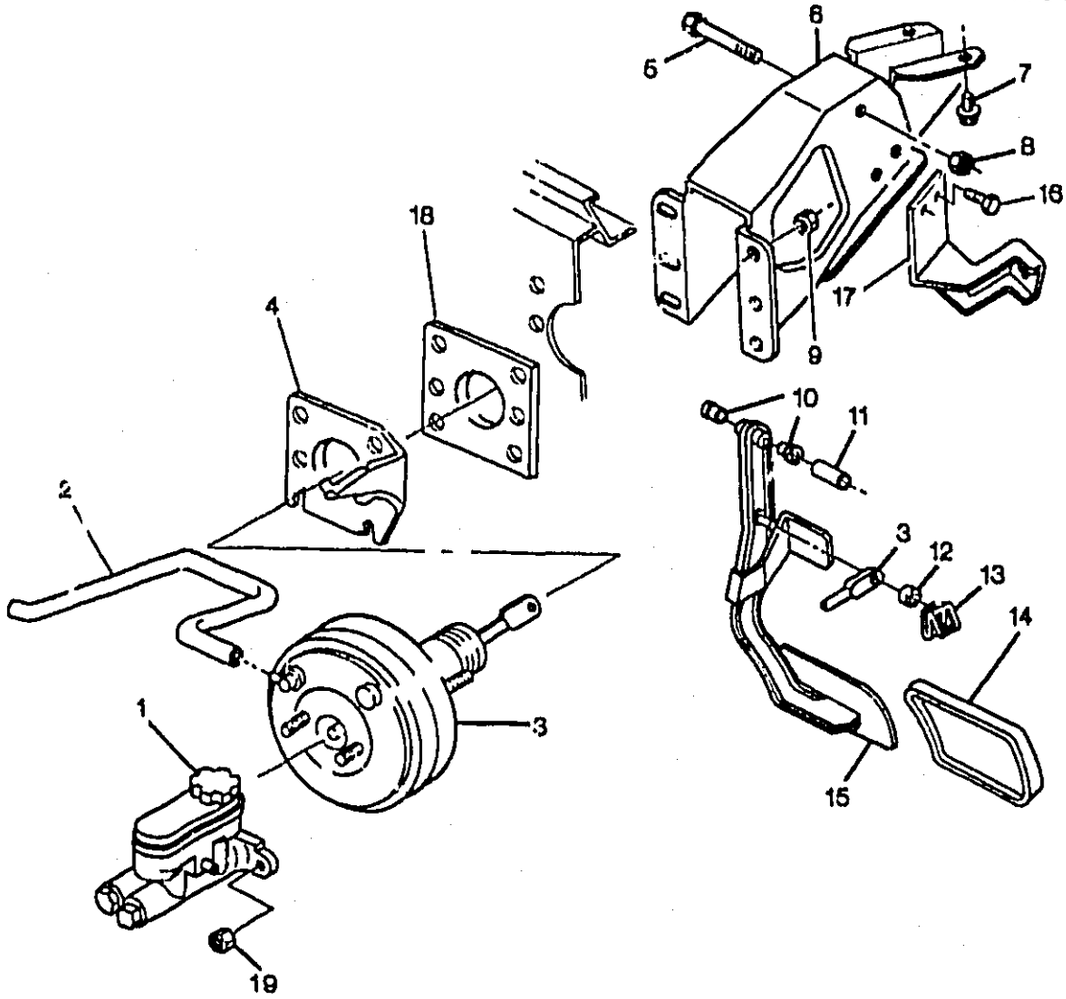

1Y04-028

1992-1996 Y BRAKE PEDAL & MASTER CYLINDER MOUNTING

1.	6-A9	4.650	CYLINDER, BRK MAS (SEE GROUP 4.000 "BRAKE MASTER CYLINDER B.C.I.A." FOR DETAILED ILLUSTRATED VIEW.) (AC-DELCO #174-828) (ON 94 & PRIOR, NEED TO TRFER FLUID RSVR, P/N 12509940, & FLUID LVL SEN , P/N 18012741, FROM OLD M/CYL ONTO NEW M/CYL)	92-96	Y	1	10281466
2.		8.962	HOSE, VACUUM BRAKE SYS 11/32"X25' (GM6188) (P/B BOOS VAC)	92-95	(LT5)	1	9438124
		DISCON	HOSE, P/B BOOS VAC (4.931) ..	92	Y (LT1)	1	10128396
	6-B14	4.931	HOSE, P/B BOOS VAC	93-95	Y (LT1)	1	10214035
	6-B14	4.931	HOSE, P/B BOOS VAC	96	Y	1	10214035
3.	6-B8	4.901	BOOSTER, P/B (SEE GROUP 4.000 "BRAKE BOOSTER" FOR DETAILED ILLUSTRATED VIEW.) (AC-DELCO #178-523)	92-95	Y (LT5)	1	10165315

© 2000 GENERAL MOTORS SERVICE PARTS OPERATIONS-CHEVROLET-14Y

							1Y04-028
	6-B8	4.901	BOOSTER, P/B (SEE GROUP 4.000 "BRAKE BOOSTER" FOR DETAILED ILLUSTRATED VIEW.) (AC-DELCO #178-534)	92-95	Y (LT1)	1	10242104
	6-B8	4.901	BOOSTER, P/B (SEE GROUP 4.000 "BRAKE BOOSTER" FOR DETAILED ILLUSTRATED VIEW.) (AC-DELCO #178-534)	96	Y	1	10242104
4.	6-N15	3.671	BRACKET, ECM (INCLS 18)	92-96	Y	1	10143544
5.		8.900	BOLT, HFH, M10X1.5X65, 22.3 OD, 7114M, RED BODY, 10.9, (BRK PED PIV)	92-96	.....	1	11516109
6.	6-A8	4.634	BRACKET, BRK PED PIV	92-96	Y	1	10165333
7.		8.900	BOLT, HEX W/CON WA, M8X1.25X25, 16.5 THD, 9.8, PO (BRK PED BRKT)	92-96	.....	2	11505326
8.		8.915	NUT, HFH, 10X1.5 6H THD, 21.3 OD, 9.8 THK 13 HEX DR, GRD 9, ZF (BRK PED PIV) (8.917)	92-96	.....	1	10255857
9.	6-B6	4.845	NUT, P/B BOOS (M8X1.25X11) (0.429)	92-94	Y	2	24576407
		8.917	NUT, PREVAILING TORQUE TENSION FLG HD (M8X1.25X17.4 OD (P/B BOOS)	95-96	Y	2	11515742
10.	6-A8	4.626	BUSHING, BRK PED PIV (0.831) .	92-96	Y	2	15594358
11.	6-A8	4.634	SPACER, BRK PED PIV	92-96	Y	1	25505362
12.	6-A15	4.662	WASHER, BRK PED PUSH ROD .	92-96	Y	1	25512286
13.	6-A15	4.662	RETAINER, BRK PED PUSH ROD	92-96	Y	1	3817880
14.	6-A8	4.630	COVER, BRK PED	92-96	Y (ML9)	1	10150010
	6-A8	4.630	COVER, BRK PED	92-93	Y (LT1, MD8)	1	14053658
	6-A8	4.630	COVER, BRK PED	94-96	Y (LT1, M30)	1	14053658
15.	6-A7	4.625	PEDAL, BRK	92-96	Y (ML9)	1	10165335
	6-A7	4.625	PEDAL, BRK	92-93	Y (LT1, MD8)	1	10165338
	6-A7	4.625	PEDAL, BRK	94-96	Y (LT1, M30)	1	10165338
16.		8.977	BOLT, HWH, TAP, M6.3X1.41X13, CAD, 13.0-OD (S/LP SW BRKT) .	92-96	.....	2	11508995
17.	6-M23	2.447	BRACKET, S/LP SW	92	Y (LT1, MD9)	1	10097689
	6-M23	2.447	BRACKET, S/LP SW	92	Y (ML9)	1	10097689
	6-M23	2.447	BRACKET, S/LP SW	93	Y (LT1, MD8)	1	10214036
	6-M23	2.447	BRACKET, S/LP SW	93-96	Y (ML9)	1	10214036
	6-M23	2.447	BRACKET, S/LP SW	94-96	Y (LT1, M30)	1	10214036
18.	6-B6	4.805	SEAL, P/B BOOS (PART OF 4) (4.845)	92-96	Y	1	10097675
19.		8.917	NUT (BRK M/CYL)	92-96	Y	2	11516071

RPO DEFINITIONS

LT1 – ENGINE-GAS, 8 CYL, 5.7L(5.7P),MFI,HO
LT5 – ENGINE,5.7L(5.7J),TPI
MD8 – TRANSMISSION,AUTOMATIC 4-SPEED(THM700R4/4L60)
MD9 – TRANSMISSION,AUTOMATIC 3-SPEED(THM125C/3T40)
ML9 – TRANSMISSION,MANUAL 6-SPEED
M30 – TRANSMISSION,AUTOMATIC 4 SPEED,4L60E,ELECTRONIC

© 2000 GENERAL MOTORS SERVICE PARTS OPERATIONS-CHEVROLET-14Y

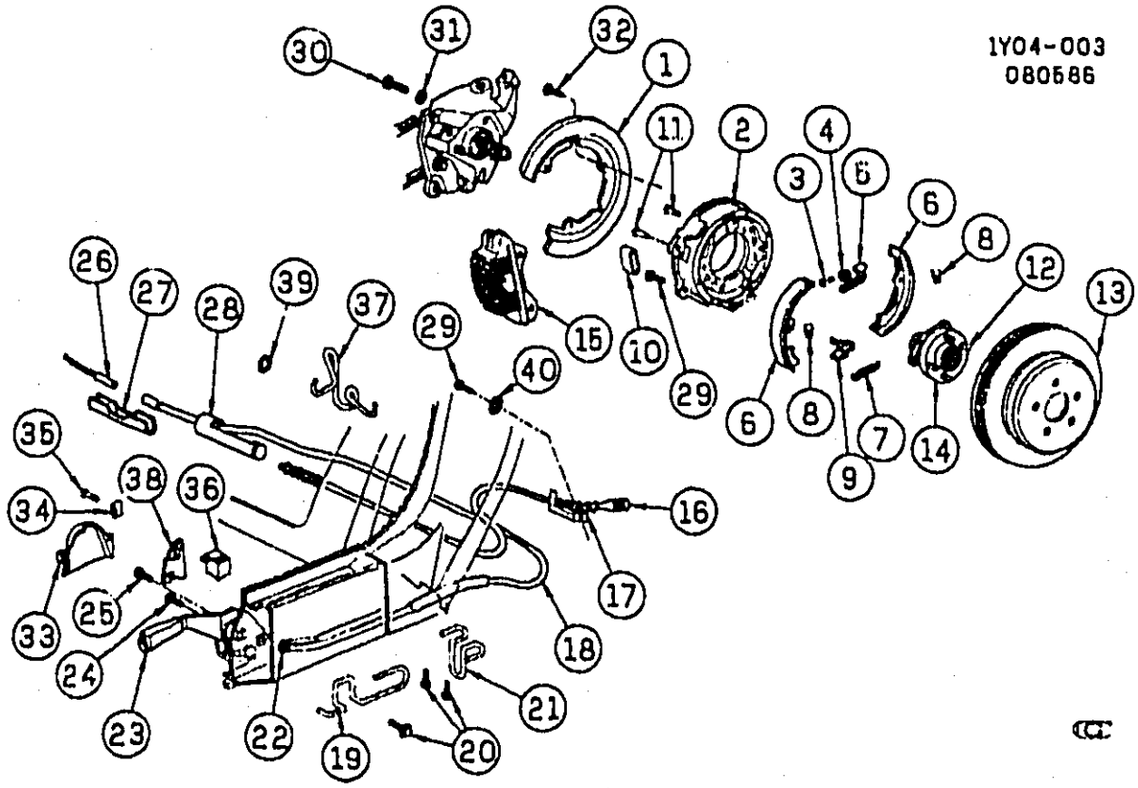

1Y04-003

1984-1987 Y PARKING BRAKE SYSTEM

1.		DISCON	SHIELD, RR BRK-LH	14055960
		DISCON	SHIELD, RR BRK-RH	14055966
2.		DISCON	PLATE KIT, RR BRK MTG (LESS SHOE & LINING)	10140515
		DISCON	PLATE KIT, RR BRK MTG (LESS & LINING	10140516
		DISCON	PLATE, BRK MTG-RH (1985-87)	14085892
		DISCON	PLATE, BRK MTG-LH (1985-87)	14085891
3.	6-C14	5.149	SCREW, PARK BRK ADJ	14067580
4.	6-C14	5.149	NUT, PARK BRK ADJ SCREW	14067579
5.	6-C13	5.111	SOCKET, BRK ADJ SCREW	14067578
6.	6-C12	5.017	PAD KIT, PARK BRK (AC-DELCO #171-736)	12514109
7.		DISCON	SPRING, PARK BRK RETURN	14067577
8.		DISCON	CLIP, PARK BRK SHOE	14067629
9.		DISCON	LEVER, W/STRUT, BRK-LH	14067575
		DISCON	LEVER, W/STRUT, BRK-RH	14067576
10.	6-C14	5.149	BOOT, PARK BRK LVR	14067574
11.	6-C13	5.043	PIN, PARK BRK SHOE HLDN	14067628
12.	6-D13	5.812	BOLT, RR WHL HUB	14046943
13.	6-D11	5.809	ROTOR, RR BRK (AC-DELCO #177-674)	14084143
14.	6-D11	5.806	HUB, RR WHL (AC-DELCO #20-45)	7470501
15.		N.S.	CALIPER ASM, RR BRK (SEE GROUP 4.000 "BRAKE CALIPER/FRONT & REAR DISC" FOR DETAIL ILLUSTRATED VIEW.)	
16.	6-B5	4.779	CABLE, PK BRK RR-LH	14048981
17.		DISCON	BRACKET, RR CBL-LH	14087657
		DISCON	BRACKET, RR CBL-RH	14087658
18.	6-B5	4.779	CABLE, PK BRK FRT	14084024
19.		DISCON	GUIDE, PK BRK FRT CBL	14048986
20.		8.977	SCREW, HEX WA TAP (M8X2.12X16) PZOR	11508154
21.		DISCON	CLIP, PK BRK FRT CBL	14048985
22.		8.917	NUT, HEX FLGD (M12X1.75)	11502813

© 2000 GENERAL MOTORS SERVICE PARTS OPERATIONS-CHEVROLET-14Y

				1Y04-003
23.		DISCON	LEVER, PK BRK	14105127
24.		8.900	BOLT, HFH (M10X1.5X40) 10.9 PS	14050422
25.		8.900	BOLT, HEX (M8X1.25X25)	11509843
26.	6-B5	4.779	CABLE, PK BRK RR-RH	14048982
27.	6-B5	4.765	CONNECTOR, PARK BRK CBL	15714661
28.	6-B5	4.785	EQUALIZER, BRK CBL EQLZR	15640543
29.		8.900	BOLT, CLPR MTG (1984)	
	6-A16	4.635	BOLT, CLPR MTG (1985)	14084053
30.	6-D13	5.812	BOLT, RR WHL HUB	14046943
31.	6-D13	5.812	WASHER, RR HUB MTG	14046942
32.		8.977	SCREW, HEX (M6.3X1.81X16)	11509371
33.		DISCON	COVER, LVR (GRAPHITE) (1984-85) (PAINT AS REQUIRED)	14058624
		DISCON	COVER, LVR (GRAPHITE) (1986-87) (PAINT AS REQUIRED)	14088497
34.		8.921	NUT, (M4.2X1.41X3.2TO3.7)	12338121
35.		8.977	SCREW, (M4.2X1.41X13)	11515037
36.	6-A7	4.589	SWITCH, PARK BRK IND	14047181
37.	6-B5	4.785	GUIDE, PK BRK FRT CBL	14076152
38.		DISCON	SHIELD, PARK BRK WIRE	14063582
39.		DISCON	INSULATOR, BRK CBL EQLZR	14087650
40.	6-A16	4.665	WASHER, RR BRK CLPR	10268876

© 2000 GENERAL MOTORS SERVICE PARTS OPERATIONS-CHEVROLET-14Y

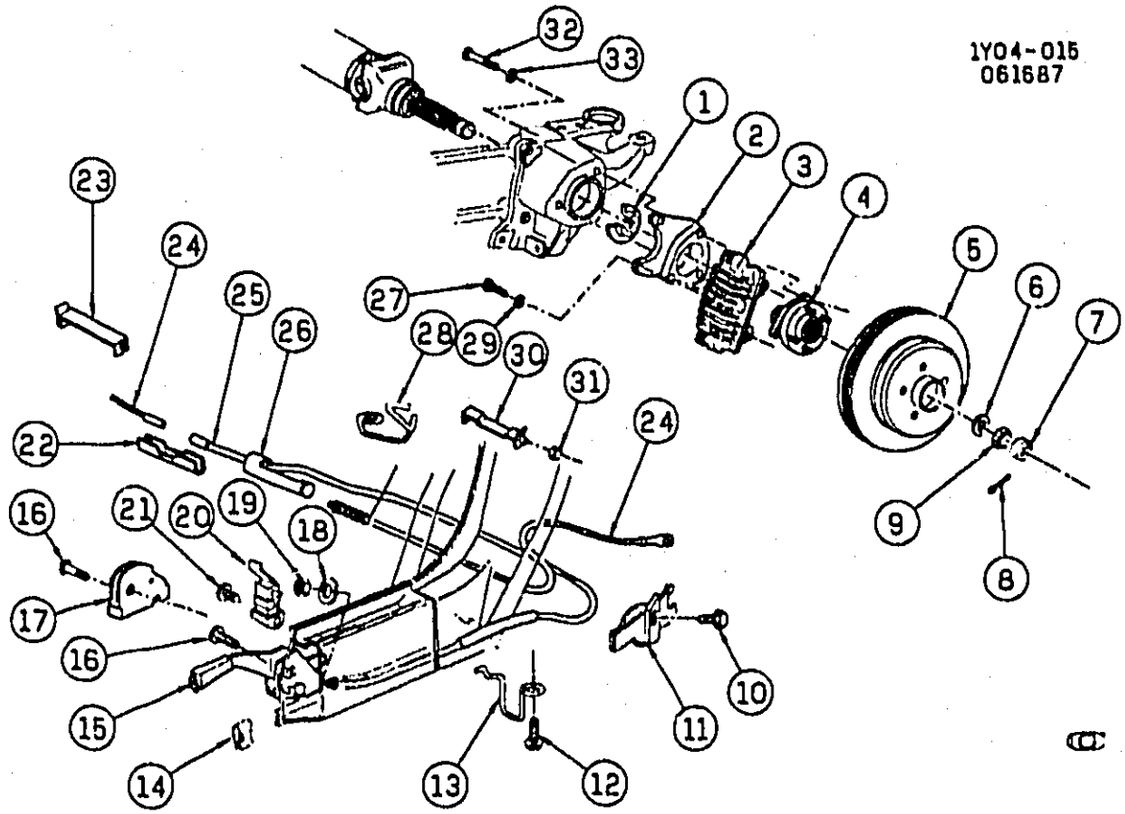

1Y04-015

1988 Y PARKING BRAKE SYSTEM

1.	6-D11	5.806	**WASHER**, RR WHL SPDL (45MM OD FLAT) (OUTBOARD OF KNUCKLE) (58MM) (6.056)	88	Y	2	562240
	6-D11	5.806	**WASHER**, RR WHL SPDL (58MM OD 33.5MM FLANGED ID) (INBOARD OF KNUCKLE) (58MM)	88	Y	2	14076924
2.	6-A16	4.665	**BRACKET**, RR BRK CLPR	88	Y	2	10112652
3.		N.S.	**CALIPER**, RR BRK ((SEE GROUP 4.000 "BRAKE CALIPER/REAR (B.C.I.A.) " FOR DETAIL ILLUSTRATED VIEW.,)		.....		
4.	6-D11	5.806	**HUB**, RR WHL (CPS) (AC-DELCO #20-45)	88	Y	2	7470501
	6-D13	5.812	**BOLT**, RR WHL (12X1.5X44, 16 OD, 9.2 DIA DOG PT, 10.9, PL) (SILVER) (PHOSPHATE ZINC ORGANIC-FLAKE FINISH)	88	Y	10	9592032
5.	6-D11	5.809	**ROTOR**, RR BRK ((WITH BLACK PAINTED AREAS FOR COSMETIC CORROSION PROTECTION)) (AC-DELCO #177-685)	88	Y	2	10097655
	6-D11	5.809	**ROTOR**, RR BRK ((WITH BLACK PAINTED AREAS FOR COSMETIC CORROSION PROTECTION)) (AC-DELCO #18A1052)	88	Y	LH	18039636

© 2000 GENERAL MOTORS SERVICE PARTS OPERATIONS-CHEVROLET-14Y

							1Y04-015
	6-D11	5.809	ROTOR, RR BRK ((WITH BLACK PAINTED AREAS FOR COSMETIC CORROSION PROTECTION)) (AC-DELCO #18A1053)	88	Y	RH	18039637
	6-D11	5.809	ROTOR, RR BRK ((WITH BLACK PAINTED AREAS FOR COSMETIC CORROSION PROTECTION)) (AC-DELCO #18A1062)	88	Y	LH	18039646
	6-D11	5.809	ROTOR, RR BRK ((WITH BLACK PAINTED AREAS FOR COSMETIC CORROSION PROTECTION)) (AC-DELCO #18A1063)	88	Y	RH	18039647
6.	6-D11	5.806	WASHER, RR WHL SPDL (45MM OD FLAT) (OUTBOARD OF KNUCKLE) (45MM) (6.056) (6.056)	88	Y	2	562249
	6-D11	5.806	WASHER, RR WHL SPDL (58MM OD 33.5MM FLANGED ID) (INBOARD OF KNUCKLE) (45MM) (6.056)	88	Y	2	14076924
7.	6-D11	5.806	RETAINER, RR WHL SPDL NUT (6.056) (6.056)	88	Y	2	562248
8.		8.938	PIN, COTTER M4X40 STL PL	88	.....	AR	11010069
9.	6-D11	5.806	NUT, RR WHL SPDL (HEX, M24X1.5X14.5, GM510M (5), PLAIN) (6.056) (AC-DELCO #36-4123)	88	Y	2	15653460
10.		8.977	SCREW, HEX WA TAP M8X2.12X16 PZOR	88	.....	AR	11508154
11.	6-B5	4.784	SPRING, PARK BRK FRT CBL RTN	88	Y	1	10077272
12.		8.977	SCREW, HEX WA TAP M8X2.12X16 PZOR	88	.....	AR	11508154
13.	6-B5	4.785	CLIP, PARK BRK FRT CBL	88	Y	1	10060199
14.		8.921	NUT, M4.2X1.4, 19.3X213.6.8.9 (AC-DELCO #15650655)	88	.....	AR	15650655
15.	6-A7	4.591	LEVER, PARK BRK	88	Y	1	12529393
16.		8.900	BOLT, HFH, 8X1.25X25, 21.8 THD LEN, 18 OD, 10.9, POR	88	.....	AR	12337974
17.	6-A7	4.612	COVER, PARK BRK LVR ((SEE PARTS SECTION FOR ADDITIONAL COLORS & TRIM COMBINATIONS)) (BLACK)	88	Y (19I)	1	10072131
		DISCON	COVER, PARK BRK LVR ((SEE PARTS SECTION FOR ADDITIONAL COLORS & TRIM COMBINATIONS)) (COGNAC) ...	88	Y (60I)	1	10072133
		DISCON	COVER, PARK BRK LVR ((SEE PARTS SECTION FOR ADDITIONAL COLORS & TRIM COMBINATIONS)) (GRAYSMOKE)	88	Y (90I)	1	10072135
		DISCON	COVER, PARK BRK LVR (BLUE) ((SEE PARTS SECTION FOR ADDITIONAL COLORS & TRIM COMBINATIONS))	88	Y (21I)	1	10079301

© 2000 GENERAL MOTORS SERVICE PARTS OPERATIONS-CHEVROLET-14Y

							1Y04-015
18.	6-B5	4.785	WASHER, PARK BRK FRT CBL (13.2X22.8X2.0, LCS, ZF) (0.002) (6.164)	88	Y	1	10267310
19.		8.917	NUT-HFH LOCK, M12X1.75X13.4, 25.6 OD, ALL NEW METAL TORQ., 510M (10) CA	88		AR	11502813
20.	6-A7	4.589	SWITCH, PARK BRK IND	88	Y	1	10136720
21.		8.977	SCREW, HWH TAP 4.2 X 1.41 X 25 (10.783)	88		AR	1640810
22.	6-B5	4.765	CONNECTOR, PARK BRK CBL	88	Y	1	15714361
23.	6-B5	4.785	BRACKET, PARK BRK RR CBL	88	Y	RH	10052232
24.	6-B5	4.779	CABLE, PARK BRK RR	88	Y	2	10284281
25.	6-B5	4.779	CABLE, PARK BRK FRT (INCLS CONNECTOR & INTERCABLE)	88	Y	1	10113015
26.		DISCON	RETAINER, PARK BRK CBL	88	Y	1	10052230
27.	6-A16	4.665	BOLT, RR BRK CLPR	88	Y	4	14084053
	6-A16	4.665	BOLT, RR BRK CLPR (AC-DELCO #18K203)	88	Y (STINGRAY)	AR	18034577
	6-A16	4.665	BOLT, RR BRK CLPR (GDE PIN)	88	Y	8	14067559
28.	6-B5	4.785	GUIDE, PARK BRK FRT CBL (ATTACH TO DRIVE LINE SUPT) (ATCH TO DRIVE LINE SUPT)	88	Y	1	14076152
29.	6-A16	4.665	WASHER, RR BRK CLPR	88	Y	4	10268876
30.	6-B5	4.785	BRACKET, PARK BRK RR CBL	88	Y	LH	10052231
31.		8.917	NUT, M8X1.25X7.1, ZC 10	88		AR	11515748
32.	6-D14	5.816	BOLT, RR WHL HUB (M12X1.75X86, TORX) (5.812)	88	Y	6	10052214
33.	6-D13	5.812	WASHER, RR WHL HUB (5.812) (M13X24X2) (5.383)	88	Y	6	14046942
	6-D13	5.812	WASHER, RR WHL HUB (5.812) (24X22.50) (8.929)	8P	Y	6	14055822

RPO DEFINITIONS
19I – INTERIOR TRIM,BLACK
21I – INTERIOR COLOR-MED BLUE
60I – INTERIOR TRIM,DARK COGNAC
90I – INTERIOR TRIM,SMOKE GRAY

© 2000 GENERAL MOTORS SERVICE PARTS OPERATIONS-CHEVROLET-14Y

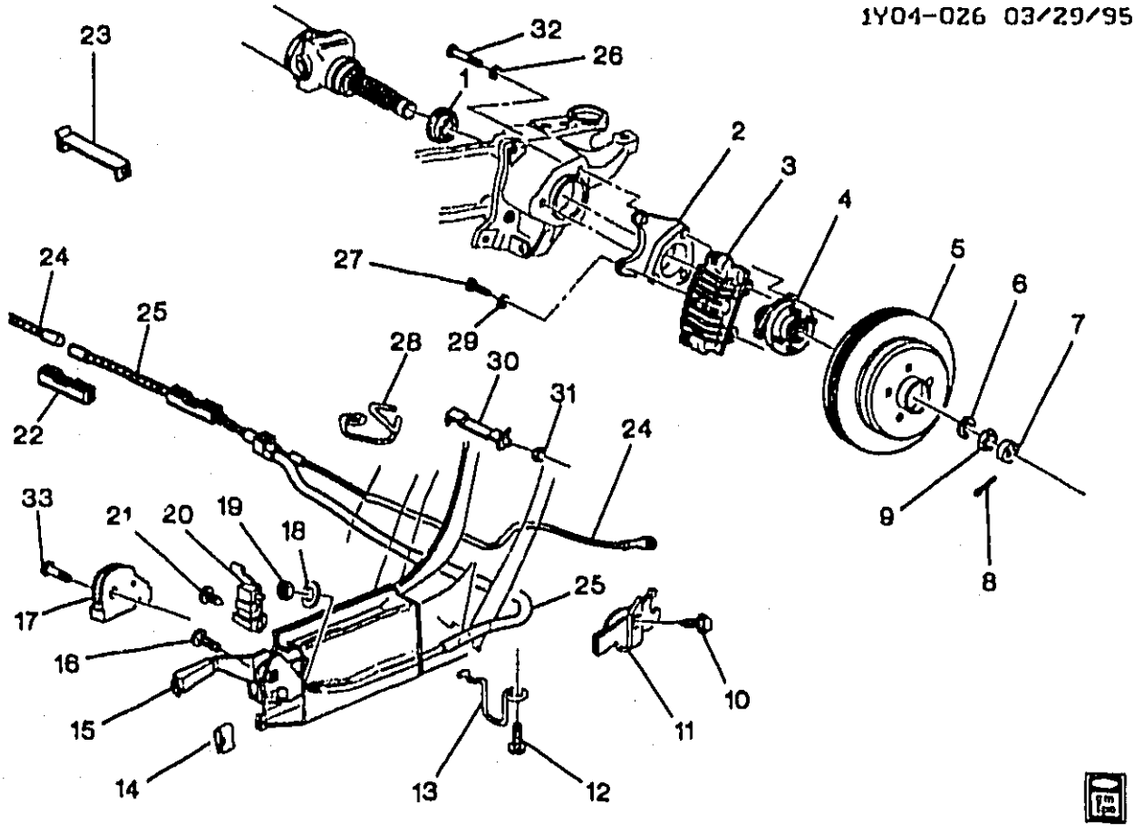

1Y04-026

1989-1996 Y PARKING BRAKE SYSTEM

1.	6-D11	5.806	WASHER, RR WHL SPDL (58MM OD 33.5MM FLANGED ID)	89-96	Y	2	14076924
2.	6-C12	5.001	PLATE, RR BRK CLPR MT	89-96	Y	LH	10052211
	6-C12	5.001	PLATE, RR BRK CLPR MT	89-96	Y	RH	10052212
3.		N.S.	CALIPER, RR BRK (SEE GROUP 5.000 "BRAKE CALIPER/REAR" FOR DETAIL ILLUSTRATED VIEW)		.....		
4.	6-D11	5.806	HUB, RR WHL (CPS) (AC-DELCO #20-45)	89-96	Y	2	7470501
	6-D13	5.812	BOLT, RR WHL (12X1.5X44, 16 OD, 9.2 DIA DOG PT, 10.9, PL) (SILVER) (PHOSPHATE ZINC ORGANIC-FLAKE FINISH)	89-96	Y	10	9592032
5.	6-D11	5.809	ROTOR, RR BRK (AC-DELCO #177-685)	89-95	Y	2	10097655
	6-D11	5.809	ROTOR, RR BRK (AC-DELCO #18A1052)	89-96	Y	LH	18039636
	6-D11	5.809	ROTOR, RR BRK (AC-DELCO #18A1053)	89-96	Y	RH	18039637
	6-D11	5.809	ROTOR, RR BRK (AC-DELCO #18A1062)	89-95	Y	LH	18039646
	6-D11	5.809	ROTOR, RR BRK (AC-DELCO #18A1063)	89-95	Y	RH	18039647
	6-D11	5.809	ROTOR, RR BRK (AC-DELCO #177-685)	96	Y (J55) (EXC VE2, Z15, Z16)	2	10097655
	6-D11	5.809	ROTOR, RR BRK (AC-DELCO #177-782)	96	Y (J55, Z15, Z16)	2	10257721

© 2000 GENERAL MOTORS SERVICE PARTS OPERATIONS-CHEVROLET-14Y

						1Y04-026	
	6-D11	5.809	ROTOR, RR BRK (AC-DELCO #177-782)	96	Y (J55, VE2) (EXC Z15, Z16) (EXPORT)	2	10257721
6.	6-D11	5.806	WASHER, RR WHL SPDL (45MM OD, 25MM ID FLAT) (6.056)	89-96	Y	2	562249
7.	6-D11	5.806	RETAINER, RR WHL SPDL NUT (6.056)	89-96	Y	2	562248
8.		0.938	PIN, COTTER M4X40 STL PL	89-96		2	11010069
9.	6-D11	5.806	NUT, RR WHL SPDL (HEX, M24X1.5X14.5, GM510M (5), PLAIN) (6.056) (AC-DELCO #36-4123)	89-96	Y	2	15653460
10.		8.977	SCREW, HEX WA TAP M8X2.12X16 PZOR (PARK BRK FRT CBL RTN SPR)	89-96		1	11508154
11.	6-B5	4.784	SPRING, PARK BRK FRT CBL RTN	89-96	Y	1	10077272
12.		8.977	SCREW, HEX WA TAP M8X2.12X16 PZOR (PARK BRK FRT CBL CLIP)	89-96		1	11508154
13.	6-B5	4.785	CLIP, PARK BRK FRT CBL	89-93	Y	1	10069199
	6-B5	4.785	CLIP, PARK BRK FRT CBL	94-96	Y07	1	10069199
14.		8.921	NUT, U TYPE, MULTI THD, PREV TORQ, M4.2X1.41TAP, 8.1REACH, 0.65-3.80 PNLS 1065 PZOR (PARK BRK LVR CVR) (AC-DELCO #11513599)	89-96		2	11513599
15.	6-A7	4.591	LEVER, PARK BRK	89-96	Y	1	12529393
16.	6-A7	4.591	BOLT, PARK BRK LVR (FWD POSN #2) (TORX HD 8X1.25X20) (8.913)	89-96	Y	1	14081021
	6-A7	4.591	BOLT, PARK BRK LVR (REARWARD POSN #1) (TORX HEAD 8X1.25X54) (3.275)	89-96	Y	1	14081017
17.	6-A7	4.612	COVER, PARK BRK LVR (BLACK)	89-96	Y (19I)	1	10072131
		DISCON	COVER, PARK BRK LVR (COGNAC)	89-91	Y (60I)	1	10072133
		DISCON	COVER, PARK BRK LVR (GRAYSMOKE)	89-91	Y (90I)	1	10072135
		DISCON	COVER, PARK BRK LVR (BLUESTEEL)	90-91	Y (22I)	1	10132969
	6-A7	4.612	COVER, PARK BRK LVR (BLACK)	92-93	Y (10I)	1	10072131
	6-A7	4.612	COVER, PARK BRK LVR (BEIGE)	92-96	Y (64I)	1	10175626
	6-A7	4.612	COVER, PARK BRK LVR (GRAY)	92-96	Y (14I)	1	10175627
	6-A7	4.612	COVER, PARK BRK LVR (RED)	93-95	Y (70I)	1	10199583
	6-A7	4.612	COVER, PARK BRK LVR (RED)	96	Y (70I) (EXC Z16)	1	10199583
		DISCON	COVER, PARK BRK LVR (BLUE)	89	Y (21I)	1	10079301
18.	6-B5	4.785	WASHER, PARK BRK FRT CBL (13.2X22.8X2.0, LCS, ZF) (6.164)	89-96	Y	1	10267310
19.		8.917	NUT (PARK BRK FRT CBL)	89-96		1	11508101
20.	6-A7	4.589	SWITCH, PARK BRK IND	89-96	Y	1	10136720
21.		8.977	SCREW, HWH TAP 4.2 X 1.41 X 25 (PARK BRK IND SW) (10.783)	89-96		1	1640810
22.	6-B5	4.765	CONNECTOR, PARK BRK CBL	89-96	Y	1	15714661
23.	6-B5	4.785	BRACKET, PARK BRK RR CBL	89-96	Y	RH	10052232
24.	6-B5	4.779	CABLE, PARK BRK RR	89-96	Y	2	10284281
25.	6-B5	4.779	CABLE, PARK BRK FRT (INCLS CONNECTOR & INTERCABLE)	89-96	Y	1	10113015

© 2000 GENERAL MOTORS SERVICE PARTS OPERATIONS-CHEVROLET-14Y

								1Y04-026
26.	6-D13	5.812	WASHER, RR WHL HUB (M13X24X2) (5.383)	89-96	Y	6	14046942
	6-D13	5.812	WASHER, RR WHL HUB (24X22.50) (8.929)	89-96	Y	6	14055822
27.	6-A16	4.665	BOLT, RR BRK CLPR	89-96	Y	4	14084053
28.	6-B5	4.785	GUIDE, PARK BRK FRT CBL (ATTACH TO DRIVE LINE SUPT) .	89-96	Y	1	14076152
29.	6-A16	4.665	WASHER, RR BRK CLPR	89-96	Y	4	10268876
30.	6-B5	4.785	BRACKET, PARK BRK RR CBL ...	89-96	Y	LH	10052231
31.		8.917	NUT, HEX M8-1.25 TORQ PRVG 10 (PARK BRK BRKT SUPT)	89-94	.....	2	11502811
		8.917	NUT, PREVAILING TORQUE TENSION FLG HD (M8X1.25X17.4 OD (PARK BRK BRKT SUPT)	95-96	.....	2	11515742
32.	6-D14	5.816	BOLT, RR WHL HUB (M12X1.75X86, TORX) (5.812) ...	89-96	Y	6	10052214
33.		8.977	SCREW, OVAL CSK TRIM HD W/WA TYPE AB (4.2X1.4X20) (PARK BRK LVR CVR) (16.682) ...	89-96	.....	2	12338093

RPO DEFINITIONS
J55 – BRAKE SYSTEM,HEAVY DUTY POWER
VE2 – PROTECTOR SOURCE APPLIED
Z15 – APPEARANCE PACKAGE,COLLECTORS EDITION
Z16 – APPEARANCE PACKAGE,GRAND SPORT EDITION
10I – INTERIOR TRIM– ARCTIC WHITE
14I – INTERIOR TRIM LT GRAY
19I – INTERIOR TRIM,BLACK
21I – INTERIOR COLOR–MED BLUE
22I – INTERIOR TRIM,DARK ROYAL BLUE
60I – INTERIOR TRIM,DARK COGNAC
64I – INTERIOR TRIM,LIGHT BEIGE
70I – INTERIOR TRIM,TORCH RED
90I – INTERIOR TRIM,SMOKE GRAY

© 2000 GENERAL MOTORS SERVICE PARTS OPERATIONS–CHEVROLET–14Y

MICROFICHE INDEX

GROUPS 4.000 THRU 5.000

FICHE 6 OF 11

GROUP	DESCRIPTION	STARTING GRID LOCATION PARTS	ILLUSTRATIONS
–	GENERAL INFORMATION	1–A2	1–G2
–	ALPHABETICAL INDEX	1–B13	N.A.
4.000	BRAKES	6–A2	6–E2
5.000	BRAKES – REAR AXLE – PROPELLER SHAFT – WHEELS	6–C2	6–H2
–	OUT OF FICHE CALLS	N.A.	6–M22

6–H1

ILLUSTRATION INDEX

	TITLE	GRID
1984–1991	Y DIFFERENTIAL CARRIER	6–H4
1992–1996	Y DIFFERENTIAL CARRIER	6–H8
1984–1991	Y PROP SHAFT WHEEL DRIVE SHAFT	6–H18
1992–1996	Y PROP SHAFT WHEEL DRIVE SHAFT	6–H20
1984–1987	Y WHEELS & WHEEL COVERS	6–H22
1988–1989	Y WHEELS & WHEEL COVERS	6–H23
1990	Y WHEELS & WHEEL COVERS	6–H25
1991–1993	Y WHEELS & WHEEL COVERS	6–H26
1994–1996	Y WHEELS & WHEEL COVERS	6–I2
1989–1996	Y SENSOR/TIRE PRESSURE (UJ6)	6–I4

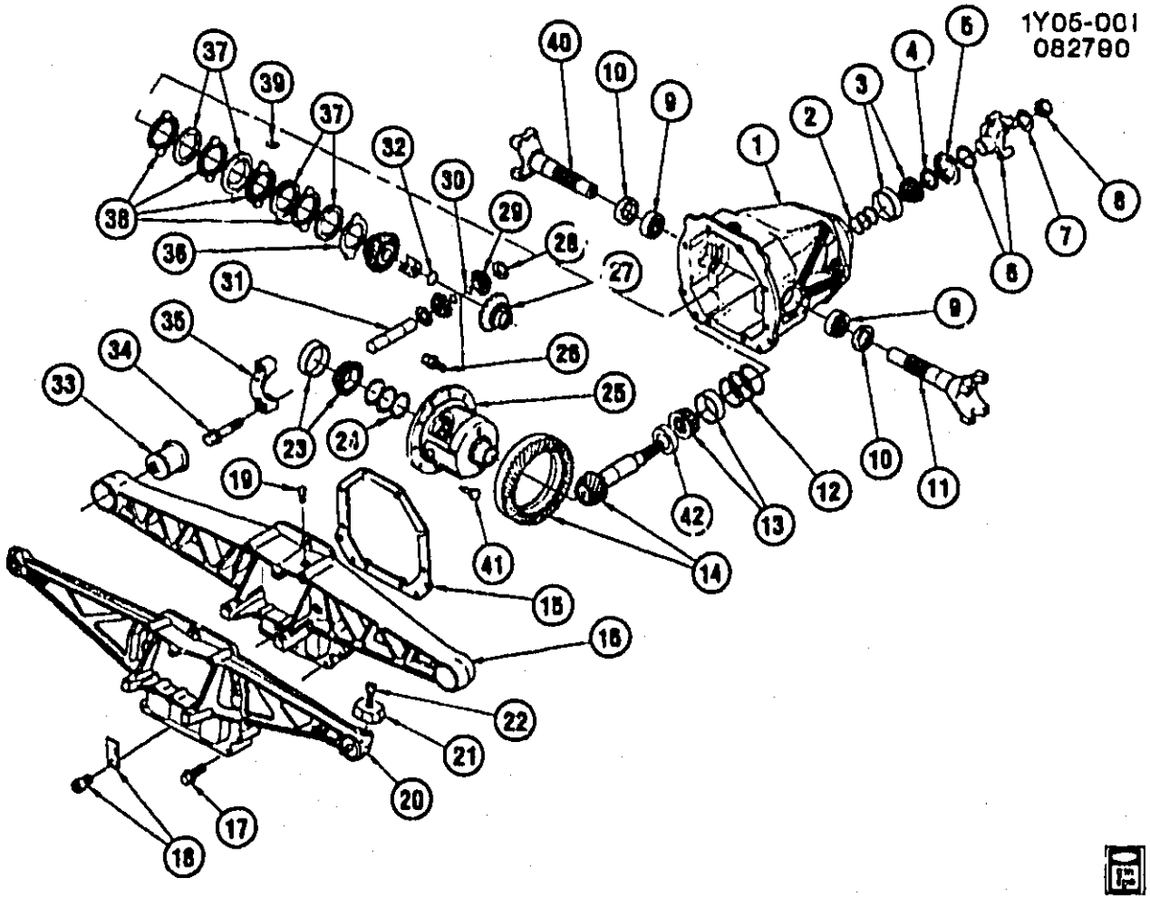

1Y05-001

1984-1991 Y DIFFERENTIAL CARRIER

1.		DISCON	CARRIER, W/CAP (1984) (1985-87 MD8)	14091330
		DISCON	CARRIER, W/CAP (1985-87 MK2) (1987 MH5)	14091393
	6-C22	5.505	CARRIER, W/CAP (1988 G44 EXC G87) (1988-91 GM1, GU2) (1989-91 G44)	10112634
		DISCON	CARRIER, W/CAP (1988 G44, G87)	10112633
	6-C22	5.505	CARRIER, W/CAP (1989 GT7 GH0) (1990 GM3 GT7) (91 GM3)	10132777
2.	6-C20	5.460	SHIM KIT, PIN BRG PRELOAD (*7)	14044895
	6-C20	5.460	SHIM KIT, PIN & BRG ADJ (FRT) (*6)	14091426
		DISCON	SHIM KIT, PIN & BRG ADJ (FRT) (1984-87)	14079448
3.	6-C19	5.447	BEARING, PIN OTR PRELOAD (*7)	9436127
	6-C22	5.484	BEARING, PIN GR OTR (*6) (AC-DELCO #S29)	9413427
4.	6-C22	5.484	SLINGER, PIN OTR (*7)	14079449
5.	6-C21	5.469	SEAL, PIN OIL (1984) (1985-87 MD8)	10046337
	6-C21	5.469	SEAL, PIN OIL OTR (1988 G44 EXC G87) (1988-91 GM1, GU2) (1989-91 G44)	10112635
	6-C21	5.469	SEAL, PIN GR OIL (*6)	15583783
6.		DISCON	YOKE, PROP SHF PIN (1984) (1985 MD8)	10140520
	6-D4	5.545	YOKE, PROP SHF PIN (UNTHREADED) (1985-87 MK2) (1987 MH5)	462859
	6-D4	5.545	YOKE, PROP SHF PIN (1986-87 MD8) (1988 G44 EXC G87) (1988-91 GM1, GU2) (1989-91 G44)	10067311
	6-D4	5.545	YOKE, PROP SHF PIN (1988 G44, G87) (1989 GT7, GH0) (1990 GM3, GT7) (1991 GM3)	10067312
7.	6-D5	5.595	WASHER, PIN FLG NUT (1984) (1985-87 MD8) (5.812) (AC-DELCO #2423517)	2423517
	6-C26	5.518	WASHER, PIN NUT (1988 G44 EXC G87) (1988-91 GM1, GU2) (1989-91 G44) (PART OF 14)	15583247

© 2000 GENERAL MOTORS SERVICE PARTS OPERATIONS-CHEVROLET-14Y

				1Y05-001
	6-D4	5.545	WASHER, PIN NUT (PART OF 14) (7.428) (*6)	3865187
8.		8.917	NUT, HEX LK TORQ TENS (.750-16) (PART OF 14) (*7)	9422308
	6-D5	5.595	NUT, PIN FLG (PART OF 14) (*6)	9422310
9.	6-C18	5.422	BEARING, YOKE SHF (*7)	455724
	6-C18	5.422	BEARING, YOKE SHF (*6)	14091433
10.	6-C19	5.430	SEAL, YOKE SHF (*7)	14079467
	6-D14	5.822	SEAL, R/AXL SHF BRG (*6)	14091422
11.		DISCON	YOKE, SHF-RH (1984) (*1)	14079464
	6-C18	5.420	SHAFT, R/AXL (RH) (*2, 5, 7)	14091459
	6-C19	5.425	YOKE, W/SHF (*6)	12529662
12.	6-C20	5.460	SHIM KIT, PIN BRG ADJ (RR) (.030-.034) (*4, 6)	14091428
13.	6-C22	5.484	BEARING, PIN GR INR (*7) (AC-DELCO #S304)	9417781
	6-C22	5.484	BEARING, PIN GR INR (CPS) (*6) (AC-DELCO #S1290)	26053758
		N.S.	CONE, DRV P/GR BRG OTR (*6)	
	6-C19	5.447	CUP, DIFF DRV P/GR BRG OTR (*6)	9418358
14.	6-C27	5.529	GEAR SET, RING & PIN (1984 G44, GW4) (1985-87 G44, MD8) (1988 G44 EXC G87) (1989-91 G44)	14085885
		DISCON	GEAR SET, RING & PIN (1985-91 GU2) (CPS)	14091462
		DISCON	GEAR SET, RING & PIN (1985-87 G44, MK2) (1987 G44, MH5) (1988 G44, G87) (CPS)	14091394
	6-C27	5.529	GEAR SET, RING & PIN (1986-91 GM1) (CPS)	14101375
	6-C27	5.529	GEAR SET, RING & PIN (1989-90 GT7) (CPS)	10140641
	6-C27	5.529	GEAR SET, RING & PIN (1990-91 GM3) (CPS)	12525532
	6-C22	5.505	BOLT KIT, DIFF R/GR (INCLS 7, 11, 26) (*7)	10117744
	6-C22	5.505	BOLT KIT, DIFF R/GR (W/PIN NUT & WA) (1989-90 GT7) (1990 GM3, GH0) (1991 GM3) (INCLS 7, 34)	10117883
	6-N19	4.337	GEAR, SPEEDO DR (42 TEETH-GREEN) (1984-90) (*3)	25513049
	6-N19		(AC-DELCO #25513049)	
	6-N16	3.682	SENSOR, VEH SPD (TRANS MT) (1984-90 W/D9B) (*3) (AC-DELCO #213-223)	25007308
15.		N.S.	GASKET (USE RTV SLR)	
16.		DISCON	COVER, W/BLUE BUSH (1984 EXC FE7) (1985-86 MD8 EXC FE7) (1987 EXC G87)	14079976
		DISCON	COVER, W/BLK BUSH (1984 FE7) (1985-87 MD8, FE7)	14079977
	6-C15	5.398	COVER, & MT MBR (1988 G44 EXC G87) (1988-91 GM1, GU2) (1989-91 G44)	14105115
17.		8.900	BOLT, HEX (M8X1.25X30) (*7)	11508353
		8.929	WASHER, FLAT (.344X.688X.065) (*7)	120393
	6-C15	5.398	BOLT, CVR (*6)	14091419
18.	6-C16	5.400	PLUG, R/AXL HSG FILL	14024358
19.	6-C15	5.387	VENT, R/AXL HSG	3738462
20.		DISCON	COVER, W/BLUE BUSH (1985-86 W/MK2, EXC FE7)	14087653
		DISCON	COVER, W/BLUE BUSH (1985-86 MK2, FE7) (1987 G87)	14084008
	6-C15	5.398	COVER (1988 G44, G87) (1989 GT7, GH0) (1990 GM3, GT7) (1991 GM3)	14105117
	6-C15	5.398	COVER, W/MT MBR, DIFF CARR (1988 G44 EXC G87) (1988-91 GM1, GU2) (1989-91 G44)	14105115
		DISCON	COVER, DIFF CARR (W/BLUE BUSHINGS) (1984 EXC FE7) (1985-86 MD8 EXC FE7) (1987 EXC G87)	14079976
		DISCON	COVER, DIFF CARR (W/BLACK BUSHINGS) (1984 FE7) (1985-87 MD8 FE7)	14079977
21.	6-D3	5.544	DAMPENER, DRIVE LINE VIB	14079979
22.	6-D3	5.544	BOLT, DRIVE LINE VIB DPNR	14079980
23.	6-C28	5.536	BEARING, SI GR (1984) (*1) (AC-DELCO #S21)	457232
	6-C28	5.536	BEARING, SI GR (*2, 7) (AC-DELCO #S13)	9420095
	6-C28	5.536	BEARING, SI (*6) (AC-DELCO #S23)	9418390
24.	6-D2	5.537	SHIM KIT, BRG PRELOAD (INCL 32) (CPS) (*7)	14079453
	6-D2	5.537	SHIM KIT, BRG ADJ (PART OF 25) (*7)	14079455

© 2000 GENERAL MOTORS SERVICE PARTS OPERATIONS-CHEVROLET-14Y

				1Y05-001
	6-C20	5.460	SHIM KIT, SI BRG SHIM, BRG ADJ (.003) (CPS) (*6)	14091423
	6-D2	5.537	SHIM, BRG ADJ (.005) (*6)	1784580
	6-D2	5.537	SHIM, BRG ADJ (.010) (*6)	1784581
	6-D2	5.537	SHIM, BRG ADJ (.030) (*6)	1784582
	6-C20	5.460	SHIM KIT, DIFF DRV P/GR BRG (1989-91 GM1, GU2, G44)	10117714
25.		N.S.	CASE (1984) (*1, 5)	
	6-C25	5.510	CASE (W/INT GR) (1984) (1985-87 MD8) (1988 G44, EXC G87) (1989 G44) (INCL 27-29, 31, 41) (*2, 5)	10181229
	6-C25	5.510	CASE (1985-87 MK2) (1987 MH5) (1988 G44, G87) (1989-90 GT7) (1990 GM3)	10181217
	6-C25	5.510	CASE, DIFF (1990 GT7) (1990-91 GM3)	10181217
	6-C25	5.510	CASE, DIFF (W/INT GEARS) (1990 GM1, GU2, G44) (1991 GM1, GU2)	10181223
	6-C25	5.510	CASE, DIFF (W/INT GEARS) (1990-91 G44)	10181229
	6-C25	5.510	CASE, DIFF (LESS INT GEARS) (1984) (1985-87 MD8) (1988 G44 EXC G87) (1989-91 G44)	14091437
	6-C25	5.510	CASE, DIFF (W/INT GEARS) (1985-89 GU2, GM1)	10181223
26.	6-C28	5.531	BOLT, RNGR TO CASE (PART OF 14, 25) (*7)	14091420
	6-C28	5.531	BOLT, RNGR TO CASE (*6)	14091420
27.	6-C27	5.528	GEAR, SI (PART OF 25) (*7)	10181226
	6-C27	5.528	GEAR, SI (1988 G44, G87) (1989 GT7, GH0)	10181220
	6-C27	5.528	GEAR, DIFF SI (FINISHED) (DANNA 44008) (1990 GT7, GM3) (1991 GM3)	10181220
	6-C27	5.528	GEAR, DIFF SI (1990-91 GM1, GU2, G44)	10181226
28.	6-D3	5.542	WASHER, PIN THR (PART OF 25) (*7)	14079458
	6-D3	5.542	WASHER, PIN OTR THR (1985-87 MK2) (1987 MH5) (1988 G44, G87)	15577321
	6-D3	5.542	WASHER, PNT THR (RR AXLE) (49/64 I.D. 21/32 O.D.) (1988 G44 G87)	2346848
	6-D3	5.542	WASHER, PINION OTR THRUST (RR AXLE) (1989 GT7, GH0) (1990-91 GM3) (1990 GT7)	15577321
29.	6-C27	5.526	PINION (1984) (1985-87 MD8) (1988 G44 EXC G87) (1988-89 GM1, GU2) (1989 G44) (PART OF 25) (*3)	14105971
	6-C27	5.526	GEAR, PIN (1988 G44, G87) (1989 GT7, GH0)	10181219
	6-C27	5.526	GEAR (DANA 44010) (1990 GT7, GM3) (1991 GM3)	10181219
	6-C27	5.526	GEAR, DIFF PINION (1990-91 GM1, GU2, G44)	14105971
30.	6-C26	5.518	RING KIT, PNG SHF SNAP (1984, 1988) (1989-90 GM1, GU2, G44)	14079451
31.		N.S.	SHAFT (1984) (*1, 5)	
	6-C26	5.517	SHAFT, PIN (PART OF 25) (*2, 7)	14091436
	6-C26	5.515	SHAFT, STD & T/L (*6)	10117854
32.	6-C19	5.428	RING, YOKE SHF SNAP (1988 G44 EXC G87) (1988-91 GM1, GU2) (PART OF 24, 25)	14079465
	6-D5	5.586	RETAINER, RR WHL DRV UJT SHF (85-87 MK2) (1987 MH5) (1988 G44, G87) (1989 GT7, G87) (1989 GT7, GH0) (1990 GT7, GM3) (1991 GM3)	14091399
33.	6-C14	5.381	BUSHING, SUPT (BLUE) (1984-87 G44, GU2 EXC FE7) (1988-91 GM1, GU2, G44)	14075762
	6-C14	5.381	BUSHING (BLK) (1984-87 FE7) (1989-90 GT7) (1990-91 GM3)	14066929
34.	6-C24	5.506	SCREW, BRG CAP, HEX FL HD (1/2-13X2.8) (PART OF 14) (*6)	14091421
35.		N.S.	CAP, BRG	
36.		N.S.	PLATE, DISHED	
37.		N.S.	DISC, CLU	
38.		N.S.	PLATE, PRESS	
39.		N.S.	RETAINER, CLU	
40.		DISCON	YOKE, SHF-LH (1984) (*1)	14079463
	6-C18	5.420	SHAFT, R/AXL (LH) (*2, 5, 7)	14091460
	6-C19	5.425	YOKE, W/SHF (*6)	12529663

© 2000 GENERAL MOTORS SERVICE PARTS OPERATIONS-CHEVROLET-14Y

				1Y05-001
41.	6-C26	5.518	PIN, PIN SHF LK (1984-91) (PART OF 25) (*2)	2402527
42.	6-C20	5.460	SHIM KIT, DIFF DRV P/GR BRG (GM1, GU2, G44)	10117714

NOTE 1: 1984 1ST DESIGN - STAMPED 14076905-6,14078553,14079973-4-5,14084062-3-4 ON UNDERSIDE OF CARRIER COVER.
NOTE 2: 1984 2ND DESIGN - STAMPED 14087675-6-7-8 ON UNDERSIDE OF CARRIER COVER.
NOTE 3: SEE SPEEDO GEAR USAGE CHARTS.
NOTE 4: SEE PARTS CATALOG FOR ADDITIONAL USAGE.
NOTE 5: WHEN REPLACING NON-SERVICED 1ST DESIGN PARTS, THE USE OF 2ND DESIGN CASE,DIFFERENTIAL, YOKE,W/SHAFT, AND SHAFT,DIFFERENTIAL IS REQUIRED.
NOTE 6: (1985-87 MK2)(1987 MH5)(1988 G44,G87)(1989 GT7,GH0)(1990 GM3,GT7)(1991 GM3)
NOTE 7: (1984)(1985-87 MD8)(1988 G44 EXC G87)(1988-91 GM1,GU2)(1989-91 G44)

© 2000 GENERAL MOTORS SERVICE PARTS OPERATIONS-CHEVROLET-14Y

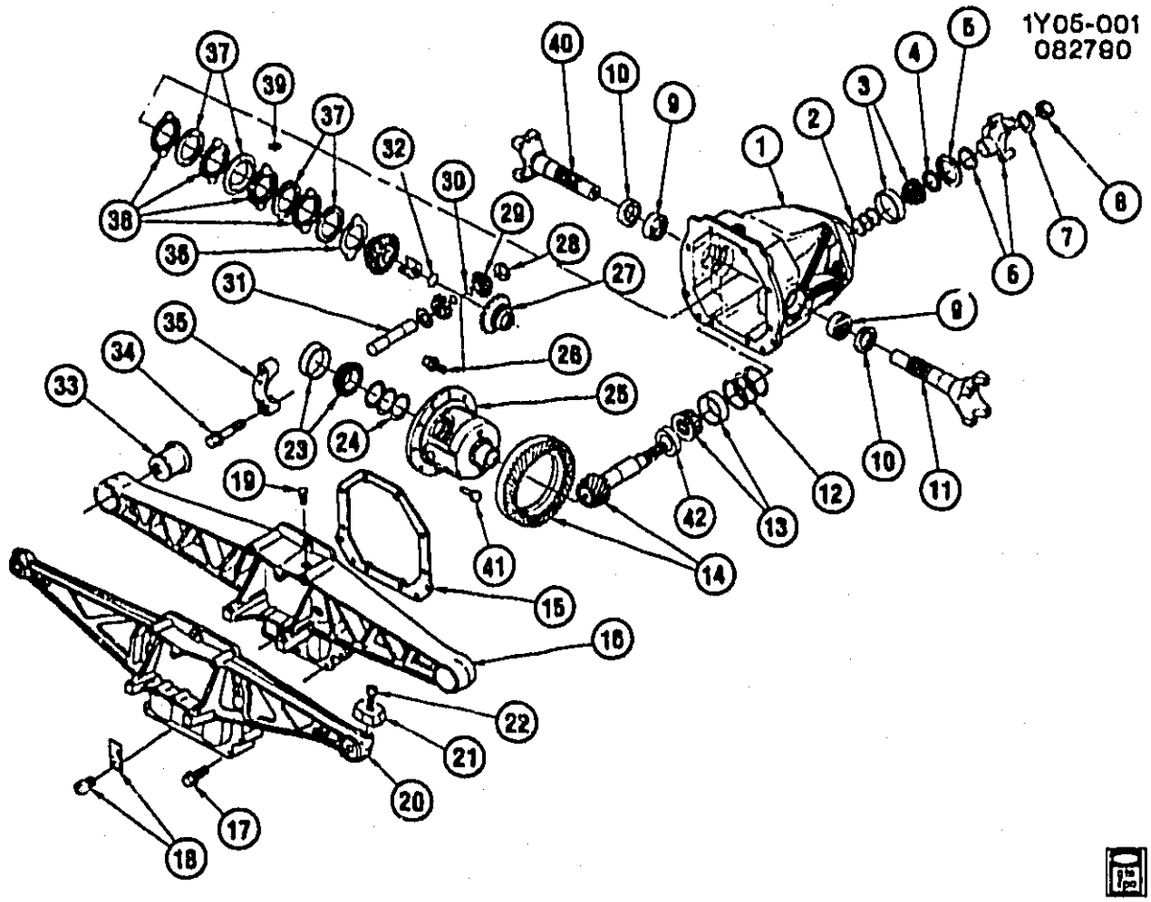

1Y05-0011

1992–1996 Y DIFFERENTIAL CARRIER

1.	6–C22	5.505	CARRIER, DIFF (W/CAP) (INCLS 34)	92–96	Y (GM1, G44)	1	10112634
	6–C22	5.505	CARRIER, DIFF (W/CAP) (INCLS 34)	92–93	Y (GU2)	1	10112634
	6–C22	5.505	CARRIER, DIFF (W/CAP) (INCLS 34)	92	Y (GH0)	1	10132777
	6–C22	5.505	CARRIER, DIFF (W/CAP) (INCLS 34)	92–96	Y (GM3)	1	10132777
	6–C22	5.505	CARRIER, DIFF (W/CAP) (INCLS 34)	94	Y (G95)	1	10132777
2.		N.S.	SHIM, DIFF DRV P/GR BRG (*KIT1)		.....		
3.	6–C19	5.447	BEARING, DIFF DRV P/GR OTR .	92–96	Y (GM1)	1	9436127
	6–C19	5.447	BEARING, DIFF DRV P/GR OTR .	92–93	Y (GU2)	1	9436127
	6–C19	5.447	BEARING, DIFF DRV P/GR OTR .	92–96	Y (G44)	1	9436127
	6–C19	5.447	BEARING, DIFF DRV P/GR OTR (INCLS CUP/CONE 1 5/8"ID X 3 1/4"OD X 1"THICK) (TIMKEN NP926068) (5.484) (AC–DELCO #S1290)	92	Y (GH0)	1	26053758
	6–C19	5.447	BEARING, DIFF DRV P/GR OTR (INCLS CUP/CONE 1 5/8"ID X 3 1/4"OD X 1"THICK) (TIMKEN NP926068) (5.484) (AC–DELCO #S1290)	92–96	Y (GM3)	AR	26053758

© 2000 GENERAL MOTORS SERVICE PARTS OPERATIONS–CHEVROLET–14Y

							1Y05-0011
	6-C19	5.447	BEARING, DIFF DRV P/GR OTR (INCLS CUP/CONE 1 5/8"ID X 3 1/4"OD X 1"THICK) (TIMKEN NP926068) (5.484) (AC-DELCO #S1290)	94	Y (G95)	AR	26053758
4.	6-C22	5.484	SLINGER, DIFF DRV P/GR OIL ..	92-96	Y (GM1, G44)	1	14079449
	6-C22	5.484	SLINGER, DIFF DRV P/GR OIL ..	92-93	Y (GU2)	1	14079449
5.	6-C21	5.469	SEAL, DIFF DRV P/GR	92-96	Y (GM1, G44)	1	10112635
	6-C21	5.469	SEAL, DIFF DRV P/GR	92-93	Y (GU2)	1	10112635
	6-C21	5.469	SEAL, DIFF DRV P/GR	92	Y (GH0)	1	15583783
	6-C21	5.469	SEAL, DIFF DRV P/GR	92-96	Y (GM3)	1	15583783
	6-C21	5.469	SEAL, DIFF DRV P/GR	94	Y (G95)	1	15583783
6.	6-D4	5.545	YOKE, DIFF DRV P/GR	92-96	Y (GM1, G44)	1	10067311
	6-D4	5.545	YOKE, DIFF DRV P/GR	92-93	Y (GU2)	1	10067311
	6-D4	5.545	YOKE, DIFF DRV P/GR	92	Y (GH0)	1	10067312
	6-D4	5.545	YOKE, DIFF DRV P/GR	92-96	Y (GM3)	1	10067312
	6-D4	5.545	YOKE, DIFF DRV P/GR	94	Y (G95)	1	10067312
7.	6-D5	5.595	WASHER, DIFF DRV P/GR (*KIT2) (5.518)	92-96	Y (GM1, G44)	1	15583247
	6-D5	5.595	WASHER, DIFF DRV P/GR (*KIT2) (7.428)	92	Y (GH0)	1	3865187
	6-D5	5.595	WASHER, DIFF DRV P/GR (*KIT2) (5.518)	92-93	Y (GU2)	1	15583247
	6-D5	5.595	WASHER, DIFF DRV P/GR (*KIT2) (7.428)	92-96	Y (GM3)	1	3865187
	6-D5	5.595	WASHER, DIFF DRV P/GR (*KIT2) (7.428)	94	Y (G95)	1	3865187
8.		8.917	NUT, HEX LK PREV TORQ 7/8-14X.75 CAD (DIFF DRV P/GR) (*KIT2)	92-96	(GM3, GH0)	1	9422310
		8.917	NUT (DIFF DRV P/GR) (*KIT2) ...	92-96	(GM1, GU2, G44)	1	9422308
9.	6-C18	5.422	BEARING, R/AXL SHF (5.428) ...	92-96	Y (GM3)	2	14091433
	6-C18	5.422	BEARING, R/AXL SHF (5.536) ...	92-96	Y (GM1, G44)	2	455724
	6-C18	5.422	BEARING, R/AXL SHF (5.536) ...	92-93	Y (GU2)	2	455724
	6-C18	5.422	BEARING, R/AXL SHF (5.428) ...	92	Y (GH0)	2	14091433
	6-C18	5.422	BEARING, R/AXL SHF (5.428) ...	94	Y (G95)	2	14091433
10.	6-D14	5.822	SEAL, R/AXL SHF (5.430)	92-96	Y (GM1, G44)	2	14079467
	6-D14	5.822	SEAL, R/AXL SHF (5.430)	92-93	Y (GU2)	2	14079467
	6-D14	5.822	SEAL, R/AXL SHF (5.430)	92	Y (GH0)	2	14091422
	6-D14	5.822	SEAL, R/AXL SHF (5.430)	92-96	Y (GM3)	2	14091422
	6-D14	5.822	SEAL, R/AXL SHF (5.430)	94	Y (G95)	2	14091422
11.	6-C18	5.420	SHAFT, R/AXL (7.27") (5.425)	92-96	Y (GM1)	RH	14091460
	6-C18	5.420	SHAFT, R/AXL (7.27") (5.425)	92-93	Y (GU2)	RH	14091460
	6-C18	5.420	SHAFT, R/AXL (5.425)	92	Y (GH0)	RH	12529662
	6-C18	5.420	SHAFT, R/AXL (5.425)	92-96	Y (GM3)	RH	12529652
	6-C18	5.420	SHAFT, R/AXL (7.27") (5.425)	92-96	Y (G44)	RH	14091460
	6-C18	5.420	SHAFT, R/AXL (5.425)	94	Y (G95)	RH	12529662
12.		N.S.	SHIM, DIFF DRV P/GR BRG (*KIT1)		.....		
13.	6-C22	5.484	BEARING, DIFF DRV P/GR INR (HM-88649-HM88610) (INCLS CUP&CONE) (1 3/8 ID X 2 27/32 OD X 1" THK) (TIMKEN) (AC-DELCO #S604)	92-96	Y (GM1)	1	9417781

© 2000 GENERAL MOTORS SERVICE PARTS OPERATIONS-CHEVROLET-14Y

							1Y05-0011
	6-C22	5.484	**BEARING**, DIFF DRV P/GR INR (HM-88649-HM88610) (INCLS CUP&CONE) (1 3/8 ID X 2 27/32 OD X 1" THK) (TIMKEN) (AC-DELCO #S604)	92-93	Y (GU2)	1	9417781
	6-C22	5.484	**BEARING**, DIFF DRV P/GR INR (HM-88649-HM88610) (INCLS CUP&CONE) (1 3/8 ID X 2 27/32 OD X 1" THK) (TIMKEN) (AC-DELCO #S604)	92-96	Y (G44)	1	9417781
	6-C22	5.484	**BEARING**, DIFF DRV P/GR INR (# M88048-M88010) (INCLS CUP & CONE) (1 5/16 ID X 2 11/16 OD X 7/8" THICK) (TIMKEN) (5.447) (AC-DELCO #S29)	92-96	Y (GM3)	AR	9413427
	6-C22	5.484	**BEARING**, DIFF DRV P/GR INR (# M88048-M88010) (INCLS CUP & CONE) (1 5/16 ID X 2 11/16 OD X 7/8" THICK) (TIMKEN) (5.447) (AC-DELCO #S29)	92	Y (GH0)	1	9413427
	6-C22	5.484	**BEARING**, DIFF DRV P/GR INR (# M88048-M88010) (INCLS CUP & CONE) (1 5/16 ID X 2 11/16 OD X 7/8" THICK) (TIMKEN) (5.447) (AC-DELCO #S29)	94	Y (G95)	1	9413427
14.		DISCON	**GEAR SET**, DIFF RING & DRV PINION (INCLS KIT 2)	92-93	Y (GU2)	1	14091462
	6-C27	5.529	**GEAR SET**, DIFF RING & DRV PINION (INCLS KIT 2)	92-96	Y (GM1)	1	14101375
	6-C27	5.529	**GEAR SET**, DIFF RING & DRV PINION (INCLS KIT 2)	92	Y (GH0)	1	10132758
	6-C27	5.529	**GEAR SET**, DIFF RING & DRV PINION (INCLS KIT 2)	92-96	Y (G44)	1	14085885
	6-C27	5.529	**GEAR SET**, DIFF RING & DRV PINION (INCLS KIT 2) (INCLS SPCR/CRUSH SLV)	92-96	Y (GM3)	1	12525532
	6-C27	5.529	**GEAR SET**, DIFF RING & DRV PINION (INCLS KIT 2)	94	Y (G95)	1	10140641
15.		N.S.	**GASKET**, DIFF CARR (USE RTV SEALER)		.....		
16.	6-C15	5.398	**COVER**, R/AXL HSG (W/MT MBR)	92-96	Y (GM1, G44)	1	14105115
	6-C15	5.398	**COVER**, R/AXL HSG (W/MT MBR)	92-93	Y (GU2)	1	14105115
17.	6-C15	5.398	**BOLT**, DIFF CARR CVR (HFH, M8X1.25X78 TRI-LOBE TAP, 17.6 OD, STL) (5.535)	92-96	Y (GM1, G44)	2	10117731
	6-C15	5.398	**BOLT**, DIFF CARR CVR (HFH, M8X1.25X78 TRI-LOBE TAP, 17.6 OD, STL) (5.535)	92-93	Y (GU2)	2	10117731
	6-C15	5.398	**BOLT**, DIFF CARR CVR (HFH, M8X1.25X30 TRI-LOBE TAP, 17.6 OD, STL) (5.535)	92-96	Y (GM1, G44)	4	10117732
	6-C15	5.398	**BOLT**, DIFF CARR CVR (HFH, M8X1.25X30 TRI-LOBE TAP, 17.6 OD, STL) (5.535)	92-93	Y (GU2)	4	10117732
	6-C15	5.398	**BOLT**, DIFF CARR CVR	92	Y (GH0)	5	14091419
	6-C15	5.398	**BOLT**, DIFF CARR CVR	92-96	Y (GM3)	5	14091419
	6-C15	5.398	**BOLT**, DIFF CARR CVR	94	Y (G95)	5	14091419

© 2000 GENERAL MOTORS SERVICE PARTS OPERATIONS-CHEVROLET-14Y

							1Y05-0011
18.	6-C16	5.400	**PLUG**, R/AXL HSG FILL	92-96	Y	1	14024358
19.	6-C15	5.387	**VENT**, R/AXL HSG	92-96	Y	1	3738462
20.	6-C15	5.398	**COVER**, R/AXL HSG (W/MT MBR)	92	Y (GH0)	1	14105117
	6-C15	5.398	**COVER**, R/AXL HSG (W/MT MBR)	92-96	Y (GM3)	1	14105117
	6-C15	5.398	**COVER**, R/AXL HSG (W/MT MBR)	94	Y (G95)	1	14105117
21.	6-D3	5.544	**DAMPENER**, DRV LINE VIB	92-96	Y	2	14079979
22.	6-D3	5.544	**BOLT**, DRV LINE VIB DPNR	92-96	Y	2	14079980
23.	6-C28	5.536	**BEARING**, DIFF (SI GEAR) (LM603049-LM603012) (8.625 R/GR) (INCLS CUP & CONE) (1 25/32 ID X 3 1/16 OD X 27/32 THK) (TIMKEN) (AC-DELCO #S23)	92	Y (GH0)	2	9418390
	6-C28	5.536	**BEARING**, DIFF (SI GEAR) (LM603049-LM603012) (8.625 R/GR) (INCLS CUP & CONE) (1 25/32 ID X 3 1/16 OD X 27/32 THK) (TIMKEN) (AC-DELCO #S23)	92-96	Y (GM3)	2	9418390
	6-C28	5.536	**BEARING**, DIFF (SI GEAR) (LM603049-LM603012) (8.625 R/GR) (INCLS CUP & CONE) (1 25/32 ID X 3 1/16 OD X 27/32 THK) (TIMKEN) (AC-DELCO #S23)	94	Y (G95)	2	9418390
	6-C28	5.536	**BEARING**, DIFF (SIDE) (LM-501349-LM-501314) (INCLS CUP&CONE) (1 5/8 ID X 2 57/64 OD X 27/32 THK) (TIMKEN) (AC-DELCO #S13)	92-96	Y (GM1, G44)	2	9420095
	6-C28	5.536	**BEARING**, DIFF (SIDE) (LM-501349-LM-501314) (INCLS CUP&CONE) (1 5/8 ID X 2 57/64 OD X 27/32 THK) (TIMKEN) (AC-DELCO #S13)	92-93	Y (GU2)	2	9420095
24.	6-D2	5.537	**SHIM**, DIFF BRG (SEE KIT 3 FOR ADDITIONAL USAGES) (.003) ...	92	Y (GH0)	AR	1784579
	6-D2	5.537	**SHIM**, DIFF BRG (SEE KIT 3 FOR ADDITIONAL USAGES) (.003) ...	92-96	Y (GM3)	AR	1784579
	6-D2	5.537	**SHIM**, DIFF BRG (SEE KIT 3 FOR ADDITIONAL USAGES) (.005) ...	92	Y (GH0)	AR	1784580
	6-D2	5.537	**SHIM**, DIFF BRG (SEE KIT 3 FOR ADDITIONAL USAGES) (.005) ...	92-96	Y (GM3)	AR	1784580
	6-D2	5.537	**SHIM**, DIFF BRG (SEE KIT 3 FOR ADDITIONAL USAGES) (.010) ...	92	Y (GH0)	AR	1784581
	6-D2	5.537	**SHIM**, DIFF BRG (SEE KIT 3 FOR ADDITIONAL USAGES) (.010) ...	92-96	Y (GM3)	AR	1784581
	6-D2	5.537	**SHIM**, DIFF BRG (SEE KIT 3 FOR ADDITIONAL USAGES) (.030) ...	92	Y (GH0)	AR	1784582
	6-D2	5.537	**SHIM**, DIFF BRG (SEE KIT 3 FOR ADDITIONAL USAGES) (.030) ...	92-96	Y (GM3)	AR	1784582
	6-D2	5.537	**SHIM**, DIFF BRG (SEE KIT 3 FOR ADDITIONAL USAGES) (.003) ...	94	Y (G95)	AR	1784579
	6-D2	5.537	**SHIM**, DIFF BRG (SEE KIT 3 FOR ADDITIONAL USAGES) (.005) ...	94	Y (G95)	AR	1784580

© 2000 GENERAL MOTORS SERVICE PARTS OPERATIONS-CHEVROLET-14Y

							1Y05-0011
	6-D2	5.537	SHIM, DIFF BRG (SEE KIT 3 FOR ADDITIONAL USAGES) (.010) ...	94	Y (G95)	AR	1784581
	6-D2	5.537	SHIM, DIFF BRG (SEE KIT 3 FOR ADDITIONAL USAGES) (.030) ...	94	Y (G95)	AR	1784582
25.	6-C25	5.510	CASE, DIFF (LESS INT GEARS) (INCLS 41) (10112639 & 14091437 INCL 26 & KITS 2, 3, 4) ; (10181217, 10181223 & 10181229 INCL 27, 28, 29, 31) ...	92-96	Y (GM1)	1	10112639
	6-C25	5.510	CASE, DIFF (LESS INT GEARS) (INCLS 41) (10112639 & 14091437 INCL 26 & KITS 2, 3, 4) ; (10181217, 10181223 & 10181229 INCL 27, 28, 29, 31) ...	92-93	Y (GU2)	1	10112639
	6-C25	5.510	CASE, DIFF (LESS INT GEARS) (INCLS 41) (10112639 & 14091437 INCL 26 & KITS 2, 3, 4) ; (10181217, 10181223 & 10181229 INCL 27, 28, 29, 31) ...	92-96	Y (G44)	1	14091437
	6-C25	5.510	CASE, DIFF (W/INT GEARS) (INCLS 41) (10112639 & 14091437 INCL 26 & KITS 2, 3, 4) ; (10181217, 10181223 & 10181229 INCL 27, 28, 29, 31) ...	92-96	Y (GM1)	1	10181223
	6-C25	5.510	CASE, DIFF (W/INT GEARS) (INCLS 41) (10112639 & 14091437 INCL 26 & KITS 2, 3, 4) ; (10181217, 10181223 & 10181229 INCL 27, 28, 29, 31) ...	92-96	Y (G44)	1	10181229
	6-C25	5.510	CASE, DIFF (W/INT GEARS) (INCLS 41) (10112639 & 14091437 INCL 26 & KITS 2, 3, 4) ; (10181217, 10181223 & 10181229 INCL 27, 28, 29, 31) ...	92	Y (GH0)	1	10181217
	6-C25	5.510	CASE, DIFF (W/INT GEARS) (INCLS 41) (10112639 & 14091437 INCL 26 & KITS 2, 3, 4) ; (10181217, 10181223 & 10181229 INCL 27, 28, 29, 31) ...	92-96	Y (GM3)	1	10181217
	6-C25	5.510	CASE, DIFF (W/INT GEARS) (INCLS 41) (10112639 & 14091437 INCL 26 & KITS 2, 3, 4) ; (10181217, 10181223 & 10181229 INCL 27, 28, 29, 31) ...	92-93	Y (GU2)	1	10181223
	6-C25	5.510	CASE, DIFF (W/INT GEARS) (INCLS 41) (10112639 & 14091437 INCL 26 & KITS 2, 3, 4) ; (10181217, 10181223 & 10181229 INCL 27, 28, 29, 31) ...	94	Y (G95)	1	10181217
26.	6-C26	5.518	BOLT, DIFF P/GR SHF LK (PART OF 10112639 & 14091437) (*KIT2, KIT5)	92-96	Y	1	2402527
27.	6-C27	5.528	GEAR, DIFF SI (PART OF 10181217, 10181223 & 10181229) (*KIT5) (5.526)	92-96	Y (GM1, GU2)	1	10181226
	6-C27	5.528	GEAR, DIFF SI (PART OF 10181217, 10181223 & 10181229) (*KIT5) (5.526)	92-96	Y (G44)	1	10181226

© 2000 GENERAL MOTORS SERVICE PARTS OPERATIONS-CHEVROLET-14Y

	6-C27	5.528	GEAR, DIFF SI (FINISHED) (DANNA 44008) (PART OF 10181217, 10181223 & 10181229) (*KIT5) (5.526)	92-96	Y (GM3)	2	10181220
28.	6-D3	5.542	WASHER, DIFF DRV P/GR THR (RR AXLE) (PART OF 10181217, 10181223 & 10181229) (*KIT5) ..	92	Y (GH0)	1	15577321
	6-D3	5.542	WASHER, DIFF DRV P/GR THR (RR AXLE) (PART OF 10181217, 10181223 & 10181229) (*KIT5) ..	92-96	Y (GM3)	1	15577321
	6-D3	5.542	WASHER, DIFF DRV P/GR THR (RR AXLE) (PART OF 10181217, 10181223 & 10181229) (*KIT5) ..	94	Y (G95)	1	15577321
	6-D3	5.542	WASHER, DIFF P/GR THR (PART OF 10181217, 10181223 & 10181229) (*KIT5)	92-95	Y (GM1, GU2)	2	14079458
	6-D3	5.542	WASHER, DIFF P/GR THR (PART OF 10181217, 10181223 & 10181229) (*KIT5)	96	Y (GM1, G44)	2	14079458
	6-D3	5.542	WASHER, DIFF P/GR THR (RR AXLE) (49/64 I.D. 21/32 O.D.) (PART OF 10181217, 10181223 & 10181229) (*KIT5)	92-94	Y (GM3)	2	2346848
29.	6-C27	5.526	GEAR, DIFF PINION (PART OF 10181217, 10181223 & 10181229) (*KIT5)	92-94	Y (GM1, GU2)	1	14105971
	6-C27	5.526	GEAR, DIFF PINION (PART OF 10181217, 10181223 & 10181229) (*KIT5)	95-96	Y (GM1, G44)	1	14105971
	6-C27	5.526	GEAR, DIFF PINION (DANA 44010) (PART OF 10181217, 10181223 & 10181229) (*KIT5) ..	92-96	Y (GM3)	2	10181219
30.		N.S.	RING KIT, PNG SHF SNAP (*KIT4, KIT5, KIT6)		.....		
31.	6-C26	5.517	SHAFT, DIFF P/GR (PART OF 10181217, 10181223 & 10181229) (*KIT5) (5.515)	92-96	Y (GM3)	1	10117854
	6-C26	5.517	SHAFT, DIFF P/GR (PART OF 10181217, 10181223 & 10181229) (*KIT5)	92-94	Y (GM1, GU2, G44)	1	14091436
	6-C26	5.517	SHAFT, DIFF P/GR (PART OF 10181217, 10181223 & 10181229) (*KIT5)	95-96	Y (GM1, G44)	1	14091436
32.	6-D5	5.586	RETAINER, RR WHL DRV UJT SHF	92-96	Y	8	14046907
	6-D5	5.586	RETAINER, RR WHL DRV UJT SHF (INCLD (14) RINGS) (5.428) .	92-96	Y (GM1)	1	14079465
	6-D5	5.586	RETAINER, RR WHL DRV UJT SHF (INCLD (14) RINGS) (5.428) .	92	Y (GU2)	2	14079465
	6-D5	5.586	RETAINER, RR WHL DRV UJT SHF (INCLD (14) RINGS) (5.428) .	92-96	Y (G44)	2	14079465
	6-D5	5.586	RETAINER, RR WHL DRV UJT SHF (5.428)	92	Y (GH0)	1	14091399
	6-D5	5.586	RETAINER, RR WHL DRV UJT SHF (5.428)	92-96	Y (GM3)	1	14091399
	6-D5	5.586	RETAINER, RR WHL DRV UJT SHF (5.428)	94	Y (G95)	1	14091399
33.	6-C14	5.381	BUSHING, DIFF CARR SUPT	92-96	Y (GM1, G44)	2	14075762
	6-C14	5.381	BUSHING, DIFF CARR SUPT	92-93	Y (GU2)	2	14075762

© 2000 GENERAL MOTORS SERVICE PARTS OPERATIONS-CHEVROLET-14Y

							1Y05-0011
	6-C14	5.381	BUSHING, DIFF CARR SUPT	92-96	Y (GM3)	2	14066929
	6-C14	5.381	BUSHING, DIFF CARR SUPT	94	Y (G95)	2	14066929
34.	6-C24	5.506	BOLT, DIFF BRG CAP (PART OF 1) (5.531)	92-96	Y (GM1, G44)	10	14091420
	6-C24	5.506	BOLT, DIFF BRG CAP (PART OF 1) (7/16-14X2.34") (OUTER) (0.293)	92-96	Y (GM1, G44)	1	25533811
	6-C24	5.506	BOLT, DIFF BRG CAP (PART OF 1) (5.531)	92	Y (GH0)	10	14091420
	6-C24	5.506	BOLT, DIFF BRG CAP (PART OF 1) (5.531)	92-96	Y (GM3)	10	14091420
	6-C24	5.506	BOLT, DIFF BRG CAP (PART OF 1) (5.531)	92-93	Y (GU2)	10	14091420
	6-C24	5.506	BOLT, DIFF BRG CAP (PART OF 1) (5.531)	94	Y (G95)	10	14091420
35.		N.S.	CAP, DIFF BRG		.....		
36.		N.S.	PLATE, DISHED		.....		
37.		N.S.	DISC, CLU (*KIT5, KIT6)		.....		
38.		N.S.	PLATE, PRESS (*KIT5, KIT6)		.....		
39.		N.S.	RETAINER, CLU (*KIT5, KIT6) ...		.....		
40.	6-C18	5.420	SHAFT, R/AXL (6.74") (5.425)	92-96	Y (GM1)	LH	14091459
	6-C18	5.420	SHAFT, R/AXL (6.74") (5.425)	92-93	Y (GU2)	LH	14091459
	6-C18	5.420	SHAFT, R/AXL (5.425)	92	Y (GH0)	LH	12529663
	6-C18	5.420	SHAFT, R/AXL (5.425)	92-96	Y (GM3)	LH	12529663
	6-C18	5.420	SHAFT, R/AXL (6.74") (5.425)	92-96	Y (G44)	LH	14091459
	6-C18	5.420	SHAFT, R/AXL (5.425)	94	Y (G95)	LH	12529663
41.	6-C26	5.518	BOLT, DIFF P/GR SHF LK (PART OF 25)	92-96	Y	1	2402527
42.		N.S.	SHIM, DIFF DRV P/GR BRG (*KIT1)		.....		

SERVICE KITS

1.	6-C20	5.460	SHIM KIT, DIFF DRV P/GR BRG (INCLS 42) (.36MM-.76MM) (PRE-LOAD) (5.453)	92-96	Y (GM1, G44)	1	14044895
	6-C20	5.460	SHIM KIT, DIFF DRV P/GR BRG (INCLS 42) (.36MM-.76MM) (PRE-LOAD) (5.453)	92-93	Y (GU2)	1	14044895
	6-C20	5.460	SHIM KIT, DIFF DRV P/GR BRG (INCLS 42) (.033-.037)	92-96	Y (GM1, G44)	AR	10117714
	6-C20	5.460	SHIM KIT, DIFF DRV P/GR BRG (INCLS 42) (.033-.037)	92-93	Y (GU2)	AR	10117714
	6-C20	5.460	SHIM KIT, DIFF DRV P/GR BRG (INCLS 42) (FRT) (OTR) (.014-.030) (5.484)	92	Y (GH0)	1	14091426
	6-C20	5.460	SHIM KIT, DIFF DRV P/GR BRG (INCLS 42) (RR) (INR) (.030-.034)	92	Y (GH0)	AR	14091428
	6-C20	5.460	SHIM KIT, DIFF DRV P/GR BRG (INCLS 42) (RR) (INR) (.035-.039)	92	Y (GH0)	AR	14091429
	6-C20	5.460	SHIM KIT, DIFF DRV P/GR BRG (INCLS 42) (RR) (.040-.044)	92	Y (GH0)	AR	14091430
	6-C20	5.460	SHIM KIT, DIFF DRV P/GR BRG (INCLS 42) (RR) (.045-.049)	92	Y (GH0)	AR	14091431
	6-C20	5.460	SHIM KIT, DIFF DRV P/GR BRG (INCLS 42) (RR) (.050-.054)	92	Y (GH0)	AR	14091432

© 2000 GENERAL MOTORS SERVICE PARTS OPERATIONS-CHEVROLET-14Y

	6-C20	5.460	SHIM KIT, DIFF DRV P/GR BRG (INCLS 42) (FRT) (OTR) (.014-.030) (5.484)	92-96	Y (GM3)	1	14091426
	6-C20	5.460	SHIM KIT, DIFF DRV P/GR BRG (INCLS 42) (RR) (INR) (.030-.034)	92-96	Y (GM3)	AR	14091428
	6-C20	5.460	SHIM KIT, DIFF DRV P/GR BRG (INCLS 42) (RR) (INR) (.035-.039)	92-96	Y (GM3)	AR	14091429
	6-C20	5.460	SHIM KIT, DIFF DRV P/GR BRG (INCLS 42) (RR) (.040-.044)	92-96	Y (GM3)	AR	14091430
	6-C20	5.460	SHIM KIT, DIFF DRV P/GR BRG (INCLS 42) (RR) (.045-.049)	92-96	Y (GM3)	AR	14091431
	6-C20	5.460	SHIM KIT, DIFF DRV P/GR BRG (INCLS 42) (RR) (.050-.054)	92-96	Y (GM3)	AR	14091432
	6-C20	5.460	SHIM KIT, DIFF DRV P/GR BRG (INCLS 42) (FRT) (OTR) (.014-.030) (5.484)	94	Y (G95)	1	14091426
	6-C20	5.460	SHIM KIT, DIFF DRV P/GR BRG (INCLS 42) (RR) (INR) (.030-.034)	94	Y (G95)	AR	14091428
	6-C20	5.460	SHIM KIT, DIFF DRV P/GR BRG (INCLS 42) (RR) (INR) (.035-.039)	94	Y (G95)	AR	14091429
	6-C20	5.460	SHIM KIT, DIFF DRV P/GR BRG (INCLS 42) (RR) (.040-.044)	94	Y (G95)	AR	14091430
	6-C20	5.460	SHIM KIT, DIFF DRV P/GR BRG (INCLS 42) (RR) (.045-.049)	94	Y (G95)	AR	14091431
	6-C20	5.460	SHIM KIT, DIFF DRV P/GR BRG (INCLS 42) (RR) (.050-.054)	94	Y (G95)	AR	14091432
2.	6-C22	5.505	BOLT KIT, DIFF R/GR (PART OF 14) (PART OF 10112639 & 14091437) (INCLS 7, 8, 26)	92-93	Y (GM1, GU2, G44)	1	10117744
	6-C22	5.505	BOLT KIT, DIFF R/GR (PART OF 14) (PART OF 10112639 & 14091437) (INCLS 7, 8, 26)	92-96	Y (GM3)	1	10117883
	6-C22	5.505	BOLT KIT, DIFF R/GR (PART OF 14) (PART OF 10112639 & 14091437) (INCLS 7, 8, 26)	94-96	Y (GM1, G44)	1	10117744
3.	6-D2	5.537	SHIM KIT, DIFF BRG (PART OF 10112639 & 14091437) (.003, .005, .010, .030, SNAP RNG, SEALER)	92-96	Y (GM1, G44)	1	14079453
	6-D2	5.537	SHIM KIT, DIFF BRG (PART OF 10112639 & 14091437) (.003, .005, .010, .030, SNAP RNG, SEALER)	92-93	Y (GU2)	1	14079453
	6-D2	5.537	SHIM KIT, DIFF BRG (PART OF 10112639 & 14091437) (.003, .005, .010, .030) (5.460)	92-96	Y (GM1)	1	14079455
	6-D2	5.537	SHIM KIT, DIFF BRG (PART OF 10112639 & 14091437) (.003, .005, .010, .030) (5.460)	92-93	Y (GU2)	1	14079455
	6-D2	5.537	SHIM KIT, DIFF BRG (ADJ SHIMS) (PART OF 10112639 & 14091437) (.003, .005, .010, .030) (5.460)	92	Y (GH0)	1	14091423

	6–D2	5.537	**SHIM KIT**, DIFF BRG (ADJ SHIMS) (PART OF 10112639 & 14091437) (.003, .005, .010, .030) (5.460)	92–96	Y (GM3)	AR	14091423
	6–D2	5.537	**SHIM KIT**, DIFF BRG (ADJ SHIMS) (PART OF 10112639 & 14091437) (.003, .005, .010, .030) (5.460)	94	Y (G95)	AR	14091423
4.	6–D5	5.586	**RETAINER**, RR WHL DRV UJT SHF (PART OF KIT 5) (PART OF 10112639 & 14091437) (INCLS 30)	92–96	Y	8	14046907
	6–D5	5.586	**RETAINER**, RR WHL DRV UJT SHF (PART OF KIT 5) (PART OF 10112639 & 14091437) (INCLS 30) (INCLD (14) RINGS) (5.428) ..	92–96	Y (GM1)	1	14079465
	6–D5	5.586	**RETAINER**, RR WHL DRV UJT SHF (PART OF KIT 5) (PART OF 10112639 & 14091437) (INCLS 30) (INCLD (14) RINGS) (5.428) ..	92	Y (GU2)	2	14079465
	6–D5	5.586	**RETAINER**, RR WHL DRV UJT SHF (PART OF KIT 5) (PART OF 10112639 & 14091437) (INCLS 30) (INCLD (14) RINGS) (5.428) ..	92–96	Y (G44)	2	14079465
	6–D5	5.586	**RETAINER**, RR WHL DRV UJT SHF (PART OF KIT 5) (PART OF 10112639 & 14091437) (INCLS 30) (5.428)	92	Y (GH0)	1	14091399
	6–D5	5.586	**RETAINER**, RR WHL DRV UJT SHF (PART OF KIT 5) (PART OF 10112639 & 14091437) (INCLS 30) (5.428)	92–96	Y (GM3)	1	14091399
	6–D5	5.586	**RETAINER**, RR WHL DRV UJT SHF (PART OF KIT 5) (PART OF 10112639 & 14091437) (INCLS 30) (5.428)	94	Y (G95)	1	14091399
5.	6–C25	5.510	**CLUTCH PACK**, DIFF (W/INT GEARS) (INCLS 26–31, 37–39 & KIT 4)	92–93	Y (GM1, GU2, G44)	1	10181224
	6–C25	5.510	**CLUTCH PACK**, DIFF (W/INT GEARS) (INCLS 26–31, 37–39 & KIT 4)	92	Y (GH0	1	10181218
	6–C25	5.510	**CLUTCH PACK**, DIFF (W/INT GEARS) (INCLS 26–31, 37–39 & KIT 4)	92–96	Y (GM3)	1	10181218
	6–C25	5.510	**CLUTCH PACK**, DIFF (W/INT GEARS) (INCLS 26–31, 37–39 & KIT 4)	94	Y (G95)	1	10181218
	6–C25	5.510	**CLUTCH PACK**, DIFF (W/INT GEARS) (INCLS 26–31, 37–39 & KIT 4)	94–96	Y (GM1, G44)	1	10181224
6.	6–C26	5.511	**DISC KIT**, L/SLIP DIFF CLU (INCLS 30, 37–39)	92	Y (GH0)	1	14091400
	6–C26	5.511	**DISC KIT**, L/SLIP DIFF CLU (INCLS 30, 37–39)	92–96	Y (GM3)	1	14091400
	6–C26	5.511	**DISC KIT**, L/SLIP DIFF CLU (INCLS 30, 37–39)	94	Y (G95)	1	14091400

RPO DEFINITIONS
GH0 – AXLE,REAR,3.54 RATIO

© 2000 GENERAL MOTORS SERVICE PARTS OPERATIONS–CHEVROLET–14Y

GM1 – AXLE,REAR,2.59 RATIO
GM3 – AXLE,REAR,3.45 RATIO
GU2 – AXLE,REAR,2.73 RATIO
G44 – AXLE,REAR,3.07 RATIO
G95 – AXLE,ECONOMY RATIO

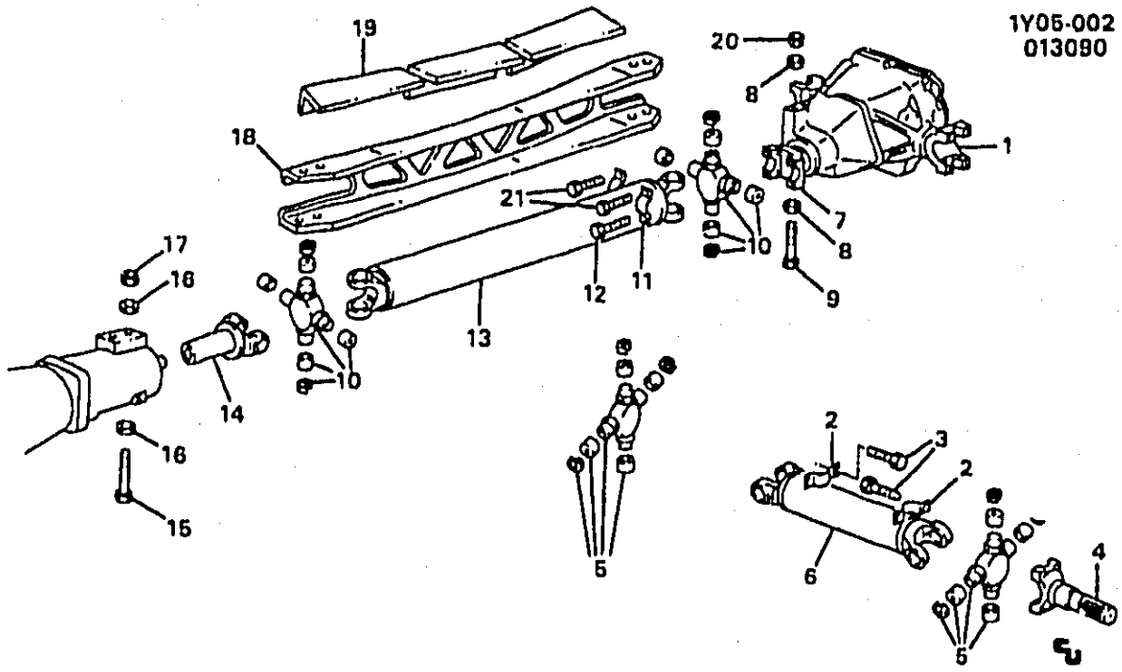

1Y05-002

1984-1991 Y PROP SHAFT WHEEL DRIVE SHAFT

1.	6-C19	5.425	YOKE, W/SHF-RH (1985-87 M.T.) (1988 G44, G87) (1989 GH0, GT7) (1990-91 GT7, GM3) (*1)	12529662
	6-C19	5.425	YOKE, W/SHF-LH (1985-87 M.T.) (1988 G44, G87) (1989 GH0, GT7) (1990-91 GT7, GM3) (*1)	12529663
2.	6-D5	5.586	RETAINER, U/JT	14046907
3.	6-D5	5.586	BOLT, U/JT	14046904
4.	6-D11	5.806	SPINDLE (1984-85)	14055941
		DISCON	SPINDLE (1986-87)	14087673
	6-D11	5.806	SPINDLE (W/RELUCTOR RING) (1988-91)	10052216
5.	6-D4	5.548	JOINT KIT, PROP SHF UNIVERSAL (PART OF 6)	12522048
6.		DISCON	SHAFT, U/JT (1984-88 A.T. EXC A42, AC3) (INCL 5) (CPS)	14046912
	6-C18	5.420	SHAFT, U/JT (1984-88 M.T., A.T. A42, AC3) (1989) (INCL 5) (CPS)	10223032
	6-C18	5.420	SHAFT, U/JT (1990-91) (INCL 5) (CPS)	10223032
7.		DISCON	YOKE, PNG (1984) (1985 A.T.)	10140520
	6-D4	5.545	YOKE, PNG (UNTHREADED) (1985-87 M.T.)	462859
		DISCON	YOKE (THREADED) (1985-87 M.T.)	10049012
	6-D4	5.545	YOKE, PNG (1986-87 A.T.) (1988 EXC G87) (1988-91 GM1, GU2, G44) (*1)	10067311
	6-D4	5.545	YOKE, PNG (UNTHREADED) (1988 G44, G87) (1989 GT7, GH0) (1990-91 GT7, GM3)	10067312
8.	6-D4	5.546	WASHER, DRIVELINE SUPT (M15X26X2) (6.178)	14047778
9.		8.900	BOLT, HEX M14X2X205 10.9 ZOR (AR)	11507025
10.	6-D4	5.548	JOINT KIT, U/JT (PART OF 13)	14067678
11.	6-D5	5.586	RETAINER (5.428)	14018211
12.	6-D5	5.586	BOLT, PROP SHF	12338087
13.	6-D3	5.544	SHAFT, PROP (1989-91 M.T.) (INCL 10, 14) (CPS) (*1)	12557618
14.		N.S.	YOKE, SLIP (PART OF 13)	
15.		8.900	BOLT, HEX M12X1.75X160 9.8 PZOR (AR)	11508593
16.	6-D4	5.546	WASHER, DRIVELINE SUPT	14046942
17.	6-D4	5.546	NUT, DRIVELINE SUPT (M12X1.75)	11515750
18.	6-D4	5.546	SUPPORT, DRIVELINE (1984) (1985 A.T.) (1986-91 EXC G87)	14091265
	6-D4	5.546	SUPPORT, DRIVELINE (1985 M.T.)	14091264

© 2000 GENERAL MOTORS SERVICE PARTS OPERATIONS-CHEVROLET-14Y

				1Y05-002
	6-D4	5.546	SUPPORT, DRIVELINE (1986-91 G87)	14091264
19.	6-D4	5.546	INSULATOR, DRIVELINE SUPT	14084033
20.		8.917	NUT, HEX M14X2X13 (DRIVELINE SUPT (M14X2)) (AR)	11516074
21.	6-D5	5.586	BOLT, U/JT STRAP (5/16X24X1.34) (1984-85)	14018700

NOTE 1: SEE PARTS CATALOG FOR ADDITIONAL USAGE.

© 2000 GENERAL MOTORS SERVICE PARTS OPERATIONS-CHEVROLET-14Y

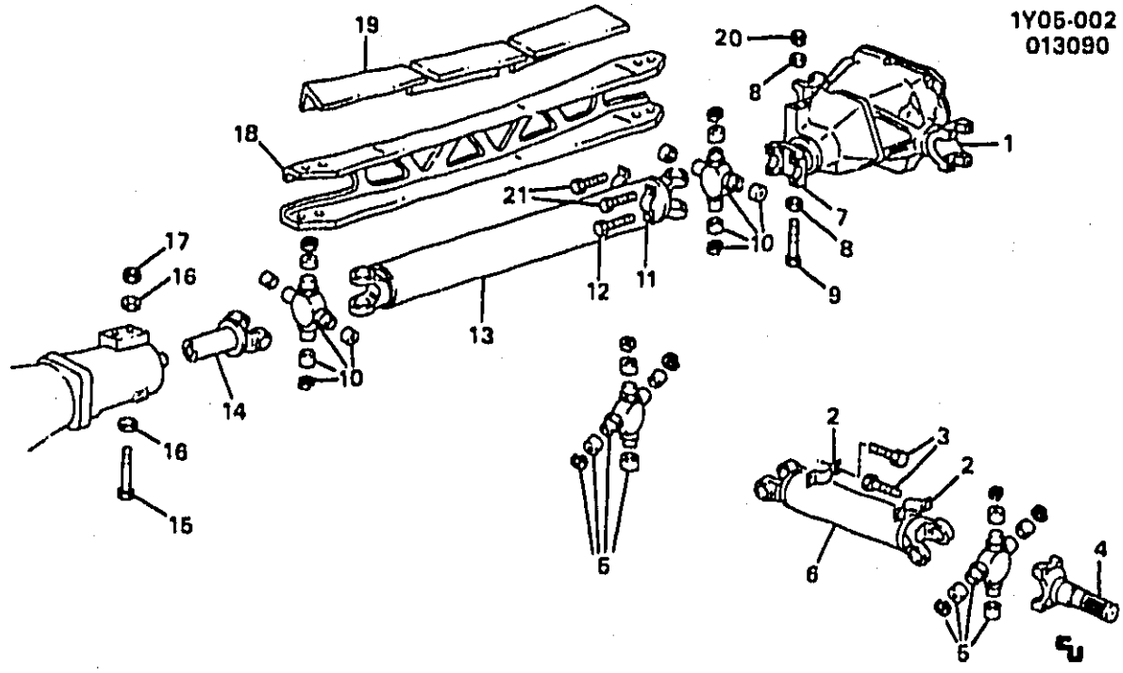

1Y05-0021

1992-1996 Y PROP SHAFT WHEEL DRIVE SHAFT

1.	6-C18	5.420	SHAFT, R/AXL (6.74") (5.425)	92-96	Y (GM1)	LH	14091459
	6-C18	5.420	SHAFT, R/AXL (6.74") (5.425)	92-93	Y (CU2)	LH	14091459
	6-C18	5.420	SHAFT, R/AXL (7.27") (5.425)	92-96	Y (GM1)	RH	14091460
	6-C18	5.420	SHAFT, R/AXL (7.27") (5.425)	92-93	Y (GU2)	RH	14091460
	6-C18	5.420	SHAFT, R/AXL (5.425)	92	Y (GH0)	RH	12529662
	6-C18	5.420	SHAFT, R/AXL (5.425)	92-96	Y (GM3)	RH	12529663
	6-C18	5.420	SHAFT, R/AXL (5.425)	92	Y (GH0)	LH	12529663
	6-C18	5.420	SHAFT, R/AXL (5.425)	92-96	Y (GM3)	LH	12529663
	6-C18	5.420	SHAFT, R/AXL (6.74") (5.425)	92-96	Y (G44)	LH	14091459
	6-C18	5.420	SHAFT, R/AXL (7.27") (5.425)	92-96	Y (G44)	RH	14091460
	6-C18	5.420	SHAFT, R/AXL (5.425)	94	Y (G95)	RH	12529662
	6-C18	5.420	SHAFT, R/AXL (5.425)	94	Y (G95)	LH	12529663
2.	6-D5	5.586	RETAINER, RR WHL DRV UJT SHF	92-96	Y	8	14046907
	6-D5	5.586	RETAINER, RR WHL DRV UJT SHF (INCLD (14) RINGS) (5.428) .	92-96	Y (GM1)	1	14079465
	6-D5	5.586	RETAINER, RR WHL DRV UJT SHF (INCLD (14) RINGS) (5.428) .	92	Y (GU2)	2	14079465
	6-D5	5.586	RETAINER, RR WHL DRV UJT SHF (INCLD (14) RINGS) (5.428) .	92-96	Y (G44)	2	14079465
	6-D5	5.586	RETAINER, RR WHL DRV UJT SHF (5.428)	92	Y (GH0)	1	14091399
	6-D5	5.586	RETAINER, RR WHL DRV UJT SHF (5.428)	92-96	Y (GM3)	1	14091399
	6-D5	5.586	RETAINER, RR WHL DRV UJT SHF (5.428)	94	Y (G95)	1	14091399
3.	6-D5	5.586	BOLT, RR WHL DRV UJT SHF (M8X1X19)	92-96	Y	16	14046904
4.	6-D11	5.806	SPINDLE, RR WHL (W/RELUCTOR RING)	92-96	Y	2	10052216
5.	6-D4	5.548	JOINT KIT, PROP SHF UNIVERSAL (PART OF 6) (DANA)	92-96	Y	2	12522048

© 2000 GENERAL MOTORS SERVICE PARTS OPERATIONS-CHEVROLET-14Y

6.	6-C18	5.420	SHAFT, RR WHL DRV UJT (INCLS 5)	92-96	Y	2	10223032
7.	6-D4	5.545	YOKE, DIFF DRV P/GR	92-96	Y (GM1, G44)	1	10067311
	6-D4	5.545	YOKE, DIFF DRV P/GR	92-93	Y (GU2)	1	10067311
	6-D4	5.545	YOKE, DIFF DRV P/GR	92	Y (GH0)	1	10067312
	6-D4	5.545	YOKE, DIFF DRV P/GR	92-96	Y (GM3)	1	10067312
	6-D4	5.545	YOKE, DIFF DRV P/GR	94	Y (G95)	1	10067312
8.	6-D4	5.546	WASHER, DRIVELINE SUPT (6.178)	92-96		2	14047778
9.	6-D4	5.546	BOLT, DRIVELINE SUPT (8.900)	92-96		1	11507025
10.	6-D4	5.548	JOINT KIT, PROP SHF FRT UNIVERSAL (PART OF 13)	92-96	Y	1	14067678
11.	6-D5	5.586	RETAINER, PROP SHF (5.428)	92-96	Y	2	14018211
12.	6-D5	5.586	BOLT, PROP SHF	92-96	Y	4	12338087
13.	6-D3	5.544	SHAFT, PROP (INCLS 10, 14)	92-93	Y (MD8)	1	10054289
	6-D3	5.544	SHAFT, PROP (INCLS 10, 14)	92-96	Y (ML9)	1	12557818
	6-D3	5.544	SHAFT, PROP (INCLS 10, 14)	94-96	Y (M30)	1	10054289
14.		N.S.	YOKE, PROP SHF SLIP (PART OF 13)				
15.	6-D4	5.546	BOLT, DRIVELINE SUPT (8.900)	92-96		1	11508593
16.	6-D4	5.546	WASHER, DRIVELINE SUPT (M13X24X2) (5.383)			2	14046942
17.		8.917	NUT, HEX FLG PREVAILING TORQ (M12X1.75X14) (ZO 10) (POSN #1)	95-96		2	11515744
		8.917	NUT (POSN #1)	92-94		2	11516073
18.	6-D4	5.546	SUPPORT, DRIVELINE	92-96	Y (ML9)	1	14091264
	6-D4	5.546	SUPPORT, DRIVELINE	92-93	Y (MD8)	1	14091265
	6-D4	5.546	SUPPORT, DRIVELINE	94-96	Y (M30)	1	14091265
19.	6-D4	5.546	INSULATOR, DRIVELINE SUPT	92-96	Y (ML9)	3	14084033
20.		8.917	NUT, HFH LK 14X2X16 19.6 OD 10 7111M (POSN #2)	95-96		2	11516382
		8.917	NUT, HEX M14X2X13 (POSN #2)	92-94		2	11516074
21.	6-D5	5.586	BOLT, PROP SHF	92-96	Y	4	12338087

RPO DEFINITIONS

GH0 – AXLE,REAR,3.54 RATIO
GM1 – AXLE,REAR,2.59 RATIO
GM3 – AXLE,REAR,3.45 RATIO
GU2 – AXLE,REAR,2.73 RATIO
G44 – AXLE,REAR,3.07 RATIO
G95 – AXLE,ECONOMY RATIO
MD8 – TRANSMISSION,AUTOMATIC 4-SPEED(THM700R4/4L60)
ML9 – TRANSMISSION,MANUAL 6-SPEED
M30 – TRANSMISSION,AUTOMATIC 4 SPEED,4L60E,ELECTRONIC

© 2000 GENERAL MOTORS SERVICE PARTS OPERATIONS-CHEVROLET-14Y

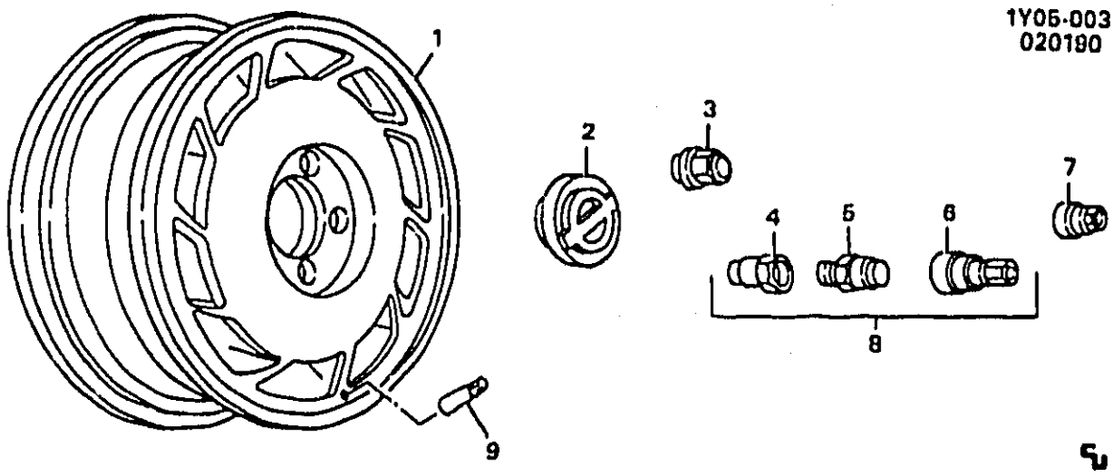

1Y05-003

1984-1987 Y WHEELS & WHEEL COVERS

1.		DISCON	WHEEL, RR-RH (16X9.5) (STMP FR, FK) (1984)	14089086
		DISCON	WHEEL, FRT & RR-RH (16X8.5) (STMP DY, DZ) (1984-85)	14069518
		DISCON	WHEEL, FRT & RR-RH (16X9.5) (STMP FR, FK) (1985)	14089086
		DISCON	WHEEL, FRT & RR-RH (16X9.5) (1986)	14094590
		DISCON	WHEEL, FRT & RR-RH (16X8.5) (1986)	14094588
		DISCON	WHEEL, FRT & RR-RH (16X9.5) (STMP XDP) (1987)	10067316
		DISCON	WHEEL, FRT & RR (RH) (16X8.5) (1987)	10052092
		DISCON	WHEEL, RR-LH (16X9.5) (STMP FJ, FM) (1984)	14089085
	6-D6	5.803	WHEEL, FRT & RR-LH (16X8.5) (STMP DY) (1984-85)	14069517
		DISCON	WHEEL, FRT & RR-LH (16X9.5) (STMP FJ, FM) (1985)	14089085
		DISCON	WHEEL, FRT & RR-LH (16X9.5) (1986)	14094589
		DISCON	WHEEL, FRT & RR-LH (16X8.5) (1986)	14094587
		DISCON	WHEEL, FRT & RR-LH (16X9.5) (STMP XDN) (1987)	10067315
		DISCON	WHEEL, FRT & RR-LH (16X8.5) (1987)	10067313
2.	6-D14	5.858	CAP, HUB (1984-85)	14046926
	6-D14	5.858	CAP, HUB (1986)	14055969
	6-D14	5.858	CAP, HUB (1987)	10052096
3.	6-D13	5.813	NUT (M12X1.5 W/PLSTC CTD SS CAP) (1984)	9591700
	6-D13	5.813	NUT (M12X1.5 THD, W/M24X2 OTR THD) (1985-87)	10028615
	6-D13	5.813	NUT, WHL HUB (M10X1.5)	11506101
4.		N.S.	KEY	
5.	6-D13	5.813	CAP, LK PLSTC (1984-86) (PART OF 8)	10029807
6.		N.S.	NUT, LK	
7.	6-D13	5.813	CAP, NUT (1984-85)	10028614
	6-D13	5.813	CAP, NUT (1986-87)	14102345
8.	6-D13	5.813	NUT KIT, WHL LK (W/KEY) (1984-85) (INCLS 5)	14091982
9.	6-D15	5.875	STEM, TIRE VLV.453 HOLE, 1 1/4 LONG	274288

© 2000 GENERAL MOTORS SERVICE PARTS OPERATIONS-CHEVROLET-14Y

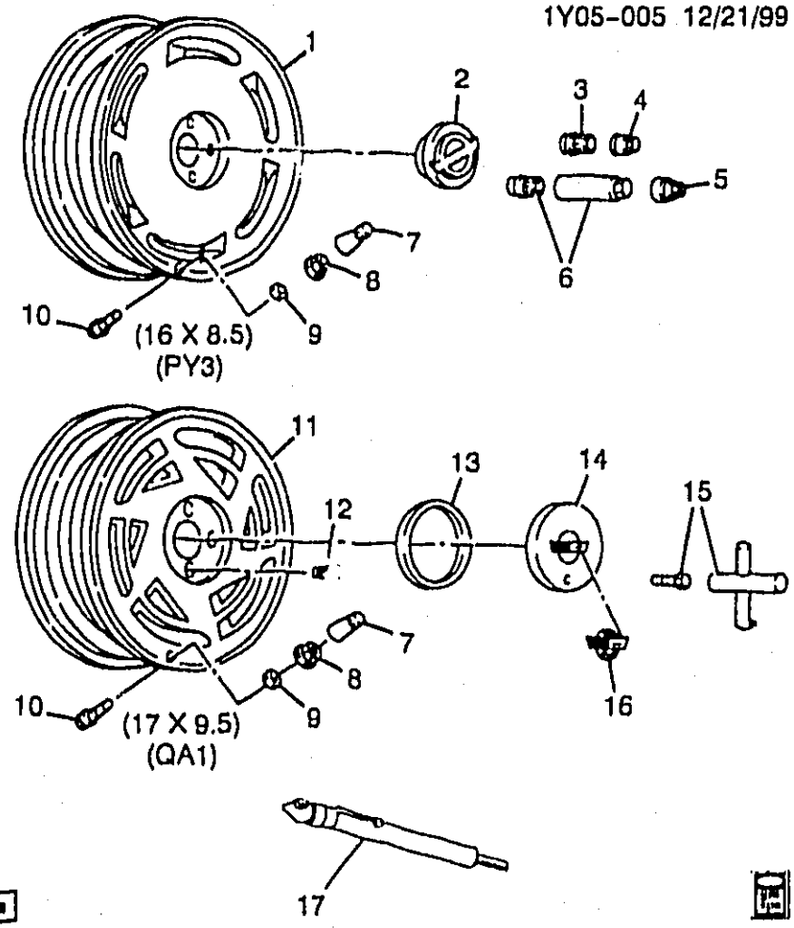

1Y05-005

1988-1989 Y WHEELS & WHEEL COVERS

1.		DISCON	WHEEL, ALUM-RH (16X8.5) (STMP XRL) (1988)	10089684
		DISCON	WHEEL, ALUM-LH (16X8.5) (STMP XRK) (1988)	10089683
2.	6-D14	5.858	CAP, HUB (1988)	14055969
3.	6-D13	5.813	NUT, WHL (OTR THD)	10028015
	6-D13	5.813	NUT, WHL HUB (M10X1.5)	11506101
4.	6-D13	5.813	CAP, NUT (1988)	12337914
5.	6-D13	5.813	CAP, NUT (PART OF 6)	14102345
6.		21.340	NUT PKG, SPL SECURITY WHL LK BLACK (EACH SECURITY NUT KIT CONTAINS 4 NUTS AND ONE MATCHING KEY.)	999057
7.	6-D15	5.875	CAP, STEM, VLV, TIRE	9591607
8.		DISCON	NUT, VLV STEM (1988) (PART OF 10) (1ST DESIGN 1988 - BLACK CLAMP IN TYPE.)	14060898
9.		DISCON	WASHER, VLV STEM (1988) (PART OF 10) (1ST DESIGN 1988 - BLACK CLAMP IN TYPE.)	14060897
10.	6-D15	5.875	STEM, TIRE VLV (1988) (INCL 8, 9) (1ST DESIGN 1988 - BLACK CLAMP IN TYPE.)	14060893
	6-D15	5.875	STEM, TIRE VLV (2ND DESIGN 1988 - NICKEL PLATED SNAP IN TYPE.)	9591741
	6-D15	5.875	STEM TIRE VALVE (.453 HOLEX1 1/4 LONG)	274288
11.		DISCON	WHEEL, ALUM-RH (17X9.5) (WHITE) (1988 Z01)	10121018
	6-D6	5.803	WHEEL, ALUM-RH (17X9.5) (STMP XNT) (EXC Z01)	10047636
		DISCON	WHEEL, ALUM-LH (17X9.5) (WHITE) (1988 Z01)	10121017
	6-D6	5.803	WHEEL, ALUM-LH (17X9.5) (STMP XNS) (EXC Z01)	10047635
12.	6-D13	5.813	NUT	14092873
13.	6-D15	5.864	SEAL, HUB CAP EMB (O-RING)	10097592
14.		DISCON	CAP, HUB (WHITE) (1988 Z01)	10097595

© 2000 GENERAL MOTORS SERVICE PARTS OPERATIONS-CHEVROLET-14Y

	6–D14	5.858	CAP, HUB (EXC Z01)	10055340
15.	6–D15	5.875	LOCKING KIT, WHL TR CVR	10097588
	6–D15	5.890	GAGE, TIRE PRESS (UJ6)	10055260
16.	6–D15	5.871	EMBLEM, HUB CAP (EXC Z01)	10055342
17.	6–D15	5.890	GAGE, TIRE PRESS (UJ6)	10055260

© 2000 GENERAL MOTORS SERVICE PARTS OPERATIONS–CHEVROLET–14Y

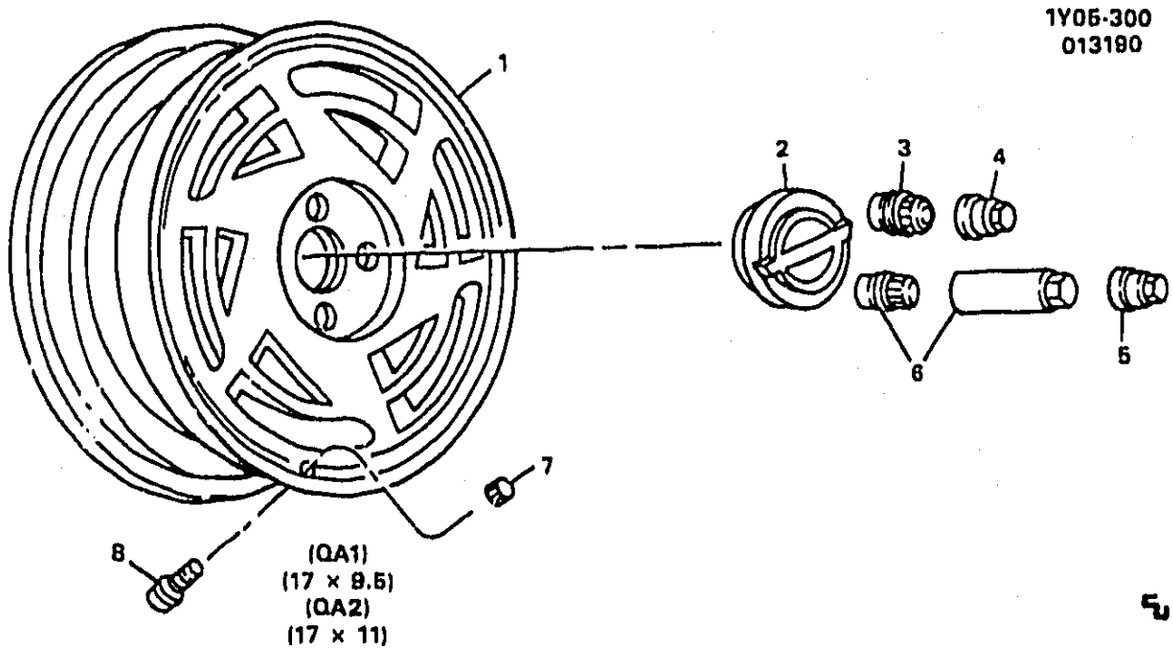

1990 Y WHEELS & WHEEL COVERS

1.	6-D6	5.803	WHEEL, ALUM FRT-RH (17X9.5) (STMP XXU) (QA1) (FRT QA2)	10119548
	6-D6	5.803	WHEEL, ALUM RR-RH (17X11) (STMP XXY) (QA2)	10147989
	6-D6	5.803	WHEEL, ALUM FRT-LH (17X9.5) (STMP XXU) (QA1) (FRT QA2)	10147990
	6-D6	5.803	WHEEL, ALUM RR-LH (17X11) (STMP XXX) (QA2)	10147988
2.	6-D14	5.858	CAP, HUB	14055969
3.	6-D13	5.813	NUT, WHL (OTR THD)	10028615
	6-D13	5.813	NUT (M10X1.5)	11506101
4.	6-D13	5.813	CAP, NUT (SILVER MET)	12337914
	6-D13	5.813	CAP, WHL NUT (GRAY)	14102345
5.	6-D13	5.813	CAP, NUT (PART OF 6)	12337914
6.		21.340	NUT PKG, SPL SECURITY WHL LK BLACK) (CAP) (INCL 5	999057
7.	6-D15	5.875	CAP, STEM, VLV, TIRE (CHR)	9591607
8.	6-D15	5.875	STEM, TIRE VLV	9591741
	6-D15	5.875	STEM, TIRE VLV.453 HOLE, 1 1/4 LONG)	274288

© 2000 GENERAL MOTORS SERVICE PARTS OPERATIONS-CHEVROLET-14Y

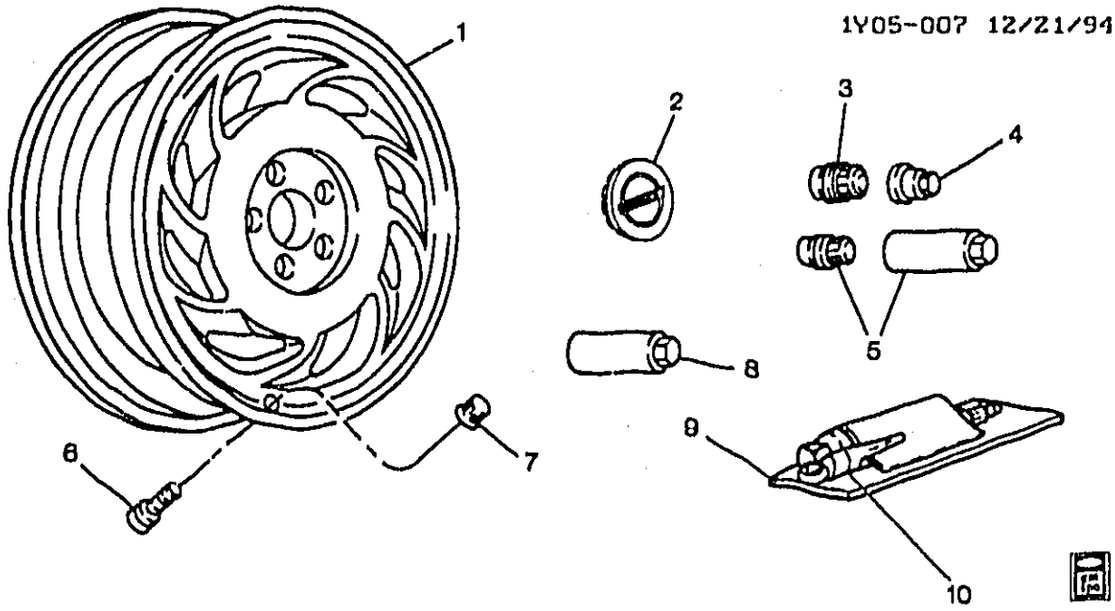

1Y05-007

1991-1993 Y WHEELS & WHEEL COVERS

1.	6-D6	5.803	WHEEL, 17X11 (RR) (STAMPED XYX)	91-92	Y (QA2)	LH	10174842
	6-D6	5.803	WHEEL, 17X11 (RR) (STAMPED XYX)	91-92	Y (QA2)	RH	10174843
	6-D6	5.803	WHEEL, 17X11 (RR) (BRIGHT SILVER)	93	Y (QA2)	LH	10180883
	6-D6	5.803	WHEEL, 17X11 (RR) (BRIGHT SILVER)	93	Y (QA2)	RH	10180884
	6-D6	5.803	WHEEL, 17X9.5 FRT (STAMPED XYU)	91-92	Y (QA1)	LH	10137823
	6-D6	5.803	WHEEL, 17X9.5 FRT (STAMPED XYU)	91-92	Y (QA2)	LH	10137823
	6-D6	5.803	WHEEL, 17X9.5 FRT	91-92	Y (QA1)	RH	10137824
	6-D6	5.803	WHEEL, 17X9.5 FRT	91-92	Y (QA2)	RH	10137824
	6-D6	5.803	WHEEL, 17X9.5 FRT (BRIGHT SILVER)	93	Y (QA1)	LH	10180881
	6-D6	5.803	WHEEL, 17X9.5 FRT (BRIGHT SILVER)	93	Y (QA2)	LH	10180881
	6-D6	5.803	WHEEL, 17X9.5 FRT (BRIGHT SILVER)	93	Y (QA1)	RH	10180882
	6-D6	5.803	WHEEL, 17X9.5 FRT (BRIGHT SILVER)	93	Y (QA2)	RH	10180882
	6-D6	5.803	WHEEL, 17X9.5 RR (STAMPED XYU)	91-92	Y (QA1)	LH	10137823
	6-D6	5.803	WHEEL, 17X9.5 RR	91-92	Y (QA1)	RH	10137824
	6-D6	5.803	WHEEL, 17X9.5 RR (BRIGHT SILVER)	93	Y (QA1, QB6)	LH	10180881
	6-D6	5.803	WHEEL, 17X9.5 RR (BRIGHT SILVER)	93	Y (QA1, QB6)	RH	10180882
	6-D6	5.803	WHEEL, 17X8.5 (FRT) (BRIGHT SILVER)	93	Y (QB6)	RH	10180880
	6-D6	5.803	WHEEL, 17X8.5 (FRT) (STAMPED ACU)	93	Y (QB6)	LH	12520358
2.	6-D14	5.858	CAP, HUB	91-92	Y (QA1)	4	10137865
	6-D14	5.858	CAP, HUB	91-93	Y (QA2)	4	10137865
	6-D14	5.858	CAP, HUB	93	Y (Z25)	4	10180886

© 2000 GENERAL MOTORS SERVICE PARTS OPERATIONS-CHEVROLET-14Y

							1Y05-007
	6-D14	5.858	CAP, HUB	93	Y (EXC Z25)	4	10194327
3.	6-D13	5.813	NUT, WHL (BLACK) (M12X1.5 W/M24X2.0 OTR THD)	91-93	Y	20	10028615
4.	6-D13	5.813	CAP, WHL NUT (SILVER MET)	91-93	Y	20	12337914
5.	6-M23	21.340 A	NUT PKG, SPL SECURITY WHL LK (M12X1.5 W/OTR TRD FOR DECOR CAP) (INCLS 4 NUTS, 1 KEY) (5.813)	91-93	Y	1	999057
6.	6-D15	5.875	STEM, TIRE VLV (.453 HOLE, 1.25 LONG) (NON-CHROME)	91-93	Y	4	274288
	6-D15	5.875	STEM, TIRE VLV (CHROME PLATED SNAP-IN TYPE)	91-93	Y	4	9591741
7.	6-D15	5.875	CAP, TIRE VLV STEM (CHROME)	91-93	Y	4	9591607
8.	6-N25	8.821	WRENCH, WHL	91-93	Y	1	10180890
9.	6-D13	5.813	RETAINER, SPL SECURITY WHL LK NUT WRENCH (39.0MM) (ALLOW LENGTH OF SLEEVE TO BE 31.75MM +/- 2.5MM INSTEAD OF 41.3MM +/- 2.5MM)	91-93	Y	1	10064306
10.	6-D15	5.890	GAGE, TIRE PRESS (CHROME)	91-93	Y (UJ6)	1	10055260

RPO DEFINITIONS
QA1 – WHEEL,17X9.5 STYLED ALUMINUM
QA2 – WHEEL,17X9.5 FRONT,17X11 REAR,STYLED(ALUMINUM)(USED WITH SPECIAL PERFORMANCE PACKAGE ZR1)
QB6 – WHEEL 17 X 8.5 FRT, 17 X 9.5 RR, ALUMINUM, STYLED
UJ6 – INDICATOR,LOW TIRE PRESS
Z25 – APPEARANCE PACKAGE 40TH ANNIVERSARY(LIMITED EDITION)

MICROFICHE INDEX

GROUPS 4.000 THRU 5.000

FICHE 6 OF 11

GROUP	DESCRIPTION	STARTING GRID LOCATION PARTS	ILLUSTRATIONS
–	GENERAL INFORMATION	1–A2	1–G2
–	ALPHABETICAL INDEX	1–B13	N.A.
4.000	BRAKES	6–A2	6–E2
5.000	BRAKES – REAR AXLE – PROPELLER SHAFT – WHEELS	6–C2	6–H2
–	OUT OF FICHE CALLS	N.A.	6–M22

6–I1

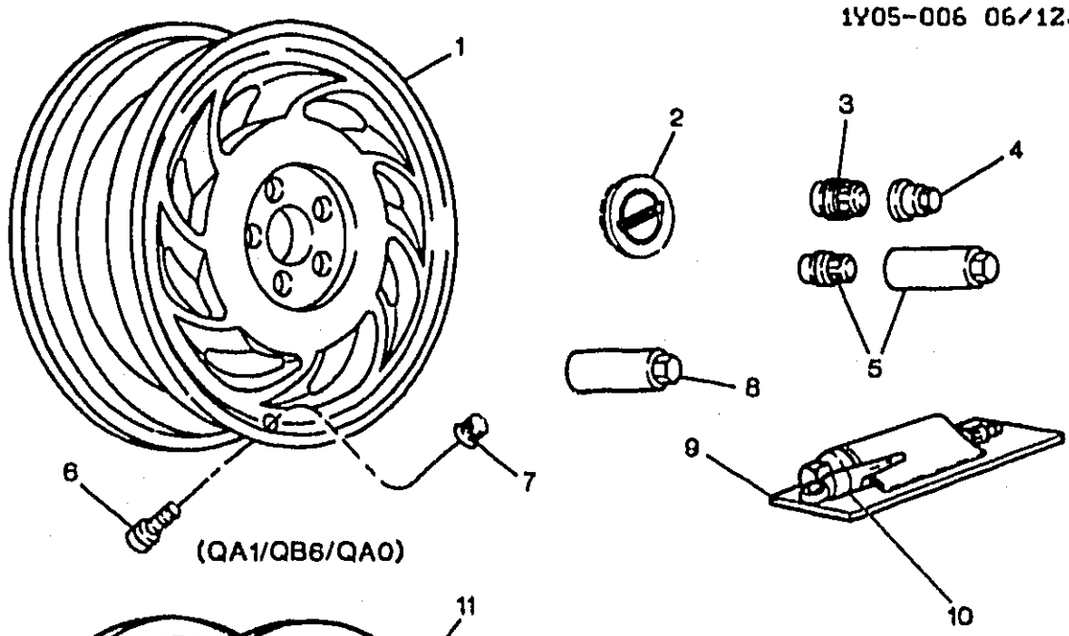

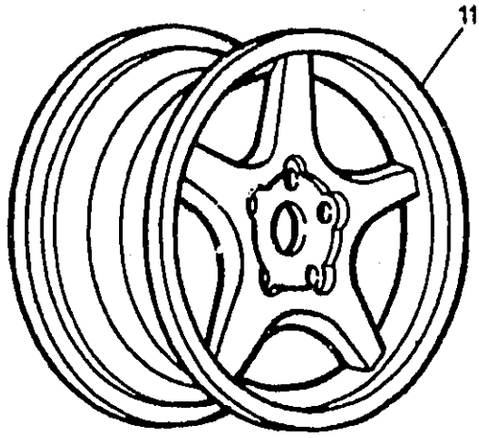

1Y05-006

1994-1996 Y WHEELS & WHEEL COVERS

1.	6-D6	5.803	WHEEL, 17X8.5 (FRT) (BRIGHT SILVER)	94-96	Y (QB6)	RH	10180880
	6-D6	5.803	WHEEL, 17X8.5 (FRT) (STAMPED ACU)	94-96	Y (QB6)	LH	12520358
	6-D6	5.803	WHEEL, 17X9.5 FRT (BRIGHT SILVER)	94-96	Y (QA1)	LH	10180881
	6-D6	5.803	WHEEL, 17X9.5 FRT (BRIGHT SILVER)	94-96	Y (QA1)	RH	10180882
	6-D6	5.803	WHEEL, 17X9.5 RR (BRIGHT SILVER)	94-96	Y (QA1, QB6)	LH	10180881
	6-D6	5.803	WHEEL, 17X9.5 RR (BRIGHT SILVER)	94-96	Y (QA1, QB6)	RH	10180882
	6-D6	5.803	WHEEL, 17X8.5 (BRIGHT SILVER)	95-96	Y (QA0) (EXPORT)	RH	10180880
	6-D6	5.803	WHEEL, 17X8.5 (STAMPED ACU)	95-96	Y (QA0) (EXPORT)	LH	12520358
2.	6-D14	5.858	CAP, HUB	94	Y (QA2)	4	10137865
	6-D14	5.858	CAP, HUB	94-96	Y (QA1, QB6, QA0)	4	10194327
	6-D14	5.858	CAP, HUB	95	Y (QA2, N66)	4	10137865
	6-D14	5.858	CAP, HUB	96	Y (N66)	4	9592378

© 2000 GENERAL MOTORS SERVICE PARTS OPERATIONS-CHEVROLET-14Y

							1Y05-006
	6-D14	5.858	CAP, HUB	96	Y (QD2, Z15, 17P)	4	9592378
	6-D14	5.858	CAP, HUB	96	Y (QA2, QD2, Z16, 41P)	4	9592388
3.	6-D13	5.813	NUT, WHL (BLACK) (M12X1.5 W/M24X2.0 OTR THD)	94-96	Y	20	10028615
4.	6-D13	5.813	CAP, WHL NUT (BLACK) (HAS 24MM INTERNAL THDS) (BLACK) (M24X2 INT THD 29. OL)	93	Y (Z16)	20	10028614
	6-D13	5.813	CAP, WHL NUT (SILVER MET)	94-95	Y	20	12337914
	6-D13	5.813	CAP, WHL NUT (SILVER MET)	96	Y (EXC Z16)	20	12337914
5.	6-M23	21.340 A	NUT PKG, SPL SECURITY WHL LK (M12X1.5 W/OTR TRD FOR DECOR CAP) (INCLS 4 NUTS, 1 KEY) (5.813)	94-96	Y	1	999057
6.	6-D15	5.875	STEM, TIRE VLV (.453 HOLE, 1.25 LONG) (NON-CHROME)	94-96	Y	4	274288
7.		N.S.	CAP, TIRE VLV STEM (PROCURE LOCALLY)				
8.	6-N25	8.821	WRENCH, WHL	94-96	Y	1	10180890
9.	6-D13	5.813	RETAINER, SPL SECURITY WHL LK NUT WRENCH (39.0MM) (ALLOW LENGTH OF SLEEVE TO BE 31.75MM +/- 2.5MM INSTEAD OF 41.3MM +/- 2.5MM)	94-96	Y	1	10064306
10.	6-D15	5.890	GAGE, TIRE PRESS (CHROME)	94-96	Y (UJ6)	1	10055260
11.	6-D6	5.803	WHEEL, 17X9.5 (FRT & RR) (BRIGHT SILVER)	95	Y (N66)	4	10214046
	6-D6	5.803	WHEEL, 17X9.5 FRT (BRIGHT SILVER)	94-95	Y (QA2)	2	10214046
	6-D6	5.803	WHEEL, 17X9.5 FRT (STAMPED RGW)	96	Y (QA2, Z16, 41P)	2	12361447
	6-D6	5.803	WHEEL, 17X11 RR (STAMPED AFS)	94-95	Y (QA2)	2	12512904
	6-D6	5.803	WHEEL, 17X11 RR (STAMPED RJC)	96	Y (QA2, Z16, 41P)	2	12361446
	6-D6	5.803	WHEEL, 17X8.5 FRT (BRIGHT SILVER)	96	Y (QD2, Z15, 17P)	2	9592381
	6-D6	5.803	WHEEL, 17X8.5 FRT (STAMPED RGV)	96	Y (QD2, Z16, 41P)	2	12361448
	6-D6	5.803	WHEEL, 17X9.5 RR (BRIGHT SILVER)	96	Y (QD2, Z15, 17P)	2	10214046
	6-D6	5.803	WHEEL, 17X9.5 RR (STAMPED RGW)	96	Y (QD2, Z16, 41P)	2	12361447

RPO DEFINITIONS

N66 – WHEEL,STYLED ALUMINUM
QA0 – WHEEL 17 X 8.5 ALUMINUM, STYLED
QA1 – WHEEL,17X9.5 STYLED ALUMINUM
QA2 – WHEEL,17X9.5 FRONT,17X11 REAR,STYLED(ALUMINUM)
QB6 – WHEEL 17 X 8.5 FRT, 17 X 9.5 RR, ALUMINUM, STYLED
QD2 – WHEEL 17 X 8.5 FRT X 9.5 RR, ALUM, STYLED, PAINTED
UJ6 – INDICATOR,LOW TIRE PRESS
Z15 – APPEARANCE PACKAGE,COLLECTORS EDITION
Z16 – APPEARANCE PACKAGE,GRAND SPORT EDITION
17P – WHEEL COLOR-SILVER
41P – WHEEL COLOR,BLACK

© 2000 GENERAL MOTORS SERVICE PARTS OPERATIONS-CHEVROLET-14Y

1Y05-004 11/08/96

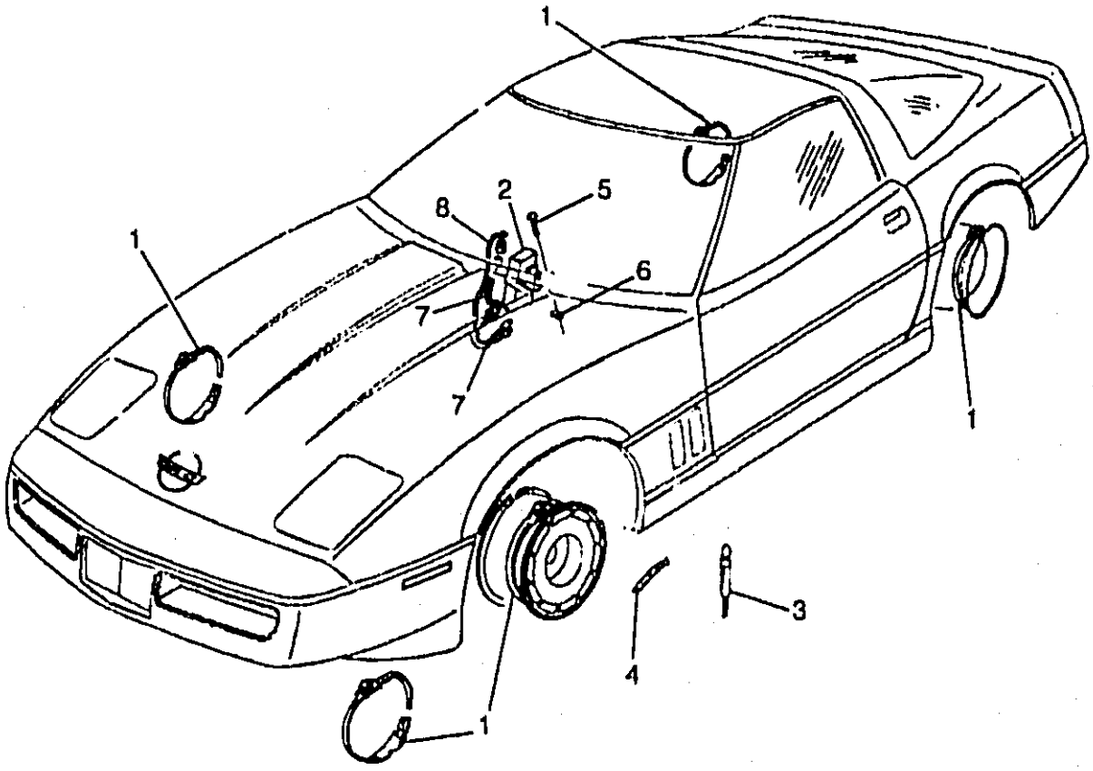

1Y05-004

1989-1996 Y SENSOR/TIRE PRESSURE (UJ6)

1.	6-D15	5.890	SENSOR, TIRE PRESS IND (BLUE) (RIGHT FRONT)	89-92	Y (UJ6)	1	10098494
	6-D15	5.890	SENSOR, TIRE PRESS IND (GREEN) (LEFT FRONT)	89-92	Y (UJ6)	1	10098495
	6-D15	5.890	SENSOR, TIRE PRESS IND (ORANGE) (RIGHT REAR)	89-92	Y (UJ6)	1	10098496
	6-D15	5.890	SENSOR, TIRE PRESS IND (YELLOW) (LEFT REAR)	89-92	Y (UJ6)	1	10098497
	6-D15	5.890	SENSOR, TIRE PRESS IND (LEFT REAR)	93-96	Y (UJ6)	1	10161854
	6-D15	5.890	SENSOR, TIRE PRESS IND (RIGHT FRONT)	93-96	Y (UJ6)	1	10161855
		DISCON	SENSOR, TIRE PRESS IND (LEFT FRONT)	93-96	Y (UJ6)	1	10161856
	6-D15	5.890	SENSOR, TIRE PRESS IND (RIGHT REAR)	93-96	Y (UJ6)	1	10161857
2.		DISCON	MODULE, LOW TIRE PRESS IND	89	Y (UJ6)	1	14093187
	6-D15	5.890	MODULE, LOW TIRE PRESS IND	90-92	Y (UJ6)	1	10143565
	6-D15	5.890	MODULE, LOW TIRE PRESS IND	93-96	Y (UJ6)	1	10161858
3.	6-D15	5.890	GAGE, TIRE PRESS (CHROME) .	89-96	Y (UJ6)	1	10055260
4.	6-N21	8.808	LABEL, TIRE PRESS IND SEN (INSTALL 90 DEGREES FROM VLV STEM ON I/S LIP OF WHL) ..	89-90	Y (UJ6)	4	10180847
	6-N21	8.808	LABEL, FRT TIRE PRESS IND SEN (INSTALL 90 DEGREES FROM VLV STEM ON I/S LIP OF WHL)	91-96	Y (UJ6)	2	10180847

© 2000 GENERAL MOTORS SERVICE PARTS OPERATIONS-CHEVROLET-14Y

							1Y05-004
	6-N21	8.808	LABEL, RR TIRE PRESS IND SEN (INSTALL 90 DEGREES FROM VLV STEM ON I/S LIP OF WHL)	91-96	Y (UJ6)	2	10180848
5.		8.977	BOLT/SCREW ASM M4.2X1.41 #18 HEX HD GM71 (LOW TIRE PRESS IND MDL)	89-96	.....	1	11515303
6.		8.921	NUT, U TYPE, MULTI THD, PREV TORQ, M4.2X1.41TAP, 8.1REACH, 0.65-3.80 PNLS 1065 PZOR (LOW TIRE PRESS IND MDL) (AC-DELCO #11513599)	89-96	.....	1	11513599
7.	6-D15	5.890	INSULATOR, LOW TIRE PRESS IND MDL LEAD (9.260)	93-96	Y (UJ6)	3	3999572
		N.S.	INSULATOR, LOW TIRE PRESS IND MDL LEAD	89-92	.....		
8.	6-M24	2.480	HARNESS, I/P WRG	90	Y M/TRNS (ML9), A/C (C60) (EXC CANADIAN T61)	1	12101432
	6-M24	2.480	HARNESS, I/P WRG	90	Y M/TRNS (ML9), A/C (C68) (EXC CANADIAN T61)	1	12101434
	6-M24	2.480	HARNESS, I/P WRG	90	Y (MD8, C60) (EXC T61)	1	12102274
	6-M24	2.480	HARNESS, I/P WRG	90	Y A/TRNS (MD8), A/C (C68) (EXC CANADIAN T61)	1	12102538
	6-M24	2.480	HARNESS, I/P WRG	91	Y (MD8, C60) (EXC T61)	1	12116436
	6-M24	2.480	HARNESS, I/P WRG	91	Y (ML9, C60) (EXC T61)	1	12116438
	6-M24	2.480	HARNESS, I/P WRG (MAY REQ 12106563 WIRE IF JMPR PRESENT AT THE PWR SEAT FEED)	91	Y (MD8, C68) (EXC T61)	1	12116500
	6-M24	2.480	HARNESS, I/P WRG	91	Y (ML9, C68) (EXC T61)	1	12116502
	6-M24	2.480	HARNESS, I/P WRG	92	Y (MD8, C60) (EXC T61)	1	12125005
	6-M24	2.480	HARNESS, I/P WRG	92	Y (ML9, C60) (EXC T61)	1	12125007
	6-M24	2.480	HARNESS, I/P WRG	92	Y (MD8, C68) (EXC T61)	1	12125813
	6-M24	2.480	HARNESS, I/P WRG	92	Y (ML9, C68) (EXC T61)	1	12125815
	6-M24	2.480	HARNESS, I/P WRG	93	Y (MD8, C60) (EXC T90)	1	12141443
	6-M24	2.480	HARNESS, I/P WRG (FOR VEH -DRL, SPLICE CAV D TO CAV E @ BLUE 8-WAY DRL MDL CONN.)	93	Y (ML9, C68) (EXC T90)	1	12141444
	6-M24	2.480	HARNESS, I/P WRG	93	Y (ML9, C60) (EXC T90)	1	12141445
	6-M24	2.480	HARNESS, I/P WRG (ON VEHS W/O DAYTIME RUNNING LPS SPLICE CAV D & E WIRES TOGETHER AT BLUE DRL MDL CONN.)	93	Y (MD8, C68) (EXC T90)	1	12141446
	6-M24	2.480	HARNESS, I/P WRG	94	Y (ML9, C60) (EXC T61, T72, T84, T85, T90)	1	12130324
	6-M24	2.480	HARNESS, I/P WRG	94	Y (ML9, C68) (EXC T61, T72, T84, T85, T90)	1	12130326
	6-M24	2.480	HARNESS, I/P WRG	94	Y (M30, C60) (EXC T61, T72, T84, T85, T90) (2ND DES)	1	12130491

© 2000 GENERAL MOTORS SERVICE PARTS OPERATIONS-CHEVROLET-14Y

						1Y05-004
6-M24	2.480	HARNESS, I/P WRG	94	Y (M30, C60, T61) (EXC T72, T84, T85, T90)	1	12130492
6-M24	2.480	HARNESS, I/P WRG	94	Y (M30, C68) (EXC T61, T72, T84, T85, T90)	1	12130493
6-M24	2.480	HARNESS, I/P WRG	94	Y (M30, C68, T61) (EXC T72, T84, T85, T90)	1	12130494
6-M24	2.480	HARNESS, I/P WRG (TAGGED 0322 OR 0323) (ON VEH W/DAYTIME RUNNING LGHTS, ADD 8-WAY BLUE CONN TO DAYTIME RUNNING LGHT, SPLICE CAV D & CAV E WIRES TOGETHER)	94	Y (M30, C60, T61) (EXC T72, T84, T85, T90) (1ST DES)	1	12141788
6-M24	2.480	HARNESS, I/P WRG	94	Y (ML9, C60, T61) (EXC T72, T84, T85, T90)	1	12141789
6-M24	2.480	HARNESS, I/P WRG	94	Y (ML9, C68, T61) (EXC T72, T84, T85, T90)	1	12141790
6-M24	2.480	HARNESS, I/P WRG	94	Y (ML9, C68) (EXC T72, T84, T85, T90)	1	12163703
6-M24	2.480	HARNESS, I/P WRG	95	Y (LT5, ML9, C68) (EXC T61)	1	12130326
6-M24	2.480	HARNESS, I/P WRG	95	Y (LT1, M30, C60, T61) (EXC T72, T84, T85, T90)	1	12130389
6-M24	2.480	HARNESS, I/P WRG (SPLICE CAV D & E WIRES @ BLUE DRL MDL CONN FOR VEH W/O DRL.)	95	Y (LT1, M30, C68, T61) (EXC T72, T84, T85, T90)	1	12130391
6-M24	2.480	HARNESS, I/P WRG	95	Y (LT5, ML9, C68, T61) .	1	12141790
6-M24	2.480	HARNESS, I/P WRG	95	Y (LT1, ML9, C60) (EXC T61, T72, T84, T85, T90)	1	12163700
6-M24	2.480	HARNESS, I/P WRG	95	Y (LT1, ML9, C68) (EXC T61, T72, T84, T85, T90)	1	12163702
6-M24	2.480	HARNESS, I/P WRG	95	Y (LT5, ML9, C68)	1	12163703
6-M24	2.480	HARNESS, I/P WRG (TAGGED 0320 OR 0321) (ON VEH W/O DRL, AT 8-WAY BLUE CONN TO DRL MDL SPLICE CAV D & CAV E LEADS TOGETHER.)	94	Y (M30, C60, T61) (EXC T72, T84, T85, T90) (1ST DES)	1	12141787
6-M24	2.480	HARNESS, I/P WRG (WHEN USE ON VEH W/O DAYTIME RUN LIGHTS, SPLICE CAV D&E TOGETHER @ BLUE 8-WAY DRL MOD CONN)	96	Y (M30, C60) (EXC T72, T84, T85, T90)	1	12130468
6-M24	2.480	HARNESS, I/P WRG (WHEN USE ON VEH W/O DAYTIME RUN LIGHTS, SPLICE CAV D&E TOGETHER @ BLUE 8-WAY DRL MOD CONN)	96	Y (M30, C68) (EXC T72, T84, T85, T90)	1	12130470
6-M24	2.480	HARNESS, I/P WRG (WHEN USE ON VEH W/O DAYTIME RUN LIGHTS, SPLICE CAV D&E TOGETHER @ BLUE 8-WAY DRL MOD CONN)	96	Y (ML9, C60) (EXC T72, T84, T85, T90)	1	12130472
6-M24	2.480	HARNESS, I/P WRG (WHEN USE ON VEH W/O DAYTIME RUN LIGHTS, SPLICE CAV D&E TOGETHER @ BLUE 8-WAY DRL MOD CONN)	96	Y (ML9, C68) (EXC T72, T84, T85, T90)	1	12130474

© 2000 GENERAL MOTORS SERVICE PARTS OPERATIONS-CHEVROLET-14Y

						1Y05-004
6-M24	2.480	HARNESS, I/P WRG (FOR ADDITIONAL 1989 HARNESSES, SEE CATALOG TEXTS.)	89	Y	1	12073507
6-M24	2.480	HARNESS, I/P WRG	90	Y M/TRNS (ML9), A/C (C60), T61 (CANADIAN) (EXPORT)	1	12101433
6-M24	2.480	HARNESS, I/P WRG	90	Y M/TRNS (ML9), A/C (C68), T61 (CANADIAN) (EXPORT)	1	12101435
6-M24	2.480	HARNESS, I/P WRG	90	Y A/TRNS (MD8), A/C (C68), T61 (CANADIAN) (EXPORT)	1	12102273
6-M24	2.480	HARNESS, I/P WRG	90	Y A/TRNS (MD8), A/C (C60), T61 (CANADIAN) (EXPORT)	1	12102537
6-M24	2.480	HARNESS, I/P WRG	91	Y (MD8, C60, T61) (EXPORT)	1	12116437
6-M24	2.480	HARNESS, I/P WRG	91	Y (ML9, C60, T61) (EXPORT)	1	12116439
6-M24	2.480	HARNESS, I/P WRG	91	Y (MD8, C68, T61) (EXPORT)	1	12116501
6-M24	2.480	HARNESS, I/P WRG	91	Y (ML9, C68, T61) (EXPORT)	1	12116503
6-M24	2.480	HARNESS, I/P WRG	92	Y (MD8, C60, T61) (EXPORT)	1	12125006
6-M24	2.480	HARNESS, I/P WRG	92	Y (ML9, C60, T61) (EXPORT)	1	12125008
6-M24	2.480	HARNESS, I/P WRG	92	Y (MD8, C68, T61) (EXPORT)	1	12125814
6-M24	2.480	HARNESS, I/P WRG	92	Y (ML9, C68, T61) (EXPORT)	1	12125816
6-M24	2.480	HARNESS, I/P WRG	93	Y (ML9, C68, T90) (EXPORT)	1	12141441
6-M24	2.480	HARNESS, I/P WRG	93	Y (MD8, C68, T90) (EXPORT)	1	12141442
6-M24	2.480	HARNESS, I/P WRG	94	Y (M30, C68, T72, T84, T85, T90) (EXPORT) ...	1	12130495
6-M24	2.480	HARNESS, I/P WRG	94	Y (ML9, C68, T72, T84, T85, T90) (EXPORT) ...	1	12141792
6-M24	2.480	HARNESS, I/P WRG	95	Y (LT1, M30, C68, T72, T84, T85, T90) (EXC T61) (EXPORT)	1	12130396
6-M24	2.480	HARNESS, I/P WRG	95	Y (LT1, ML9, C60, T61) (EXC T72, T84, T85, T90) (EXPORT)	1	12163701
6-M24	2.480	HARNESS, I/P WRG	95	Y (LT1, ML9, C68, T61) (EXC T72, T84, T85, T90) (EXPORT)	1	12163703
6-M24	2.480	HARNESS, I/P WRG	95	Y (LT1, ML9, C68, T72, T84, T85, T90) (EXC T61) (EXPORT)	1	12163704
6-M24	2.480	HARNESS, I/P WRG	96	Y (M30, C68, T72, T84, T85, T90) (EXC T61) (EXPORT)	1	12130475
6-M24	2.480	HARNESS, I/P WRG	96	Y (LT4, ML9, C68, T72, T84, T85, T90) (EXC T61) (EXPORT)	1	12163715
6-M24	2.480	HARNESS, I/P WRG (TAGGED 0328)	94	Y (M30, C68, T72, T84, T85, T90) (1ST DES) (EXPORT)	1	12141791

RPO DEFINITIONS

C60 – AIR CONDITIONER,FRONT,MANUAL CONTROLS
C68 – AIR CONDITIONER,FRONT,AUTOMATIC,ELECTRONIC CONTROLS
LT1 – ENGINE–GAS, 8 CYL, 5.7L(5.7P),MFI,HO
LT4 – ENGINE GAS, 8 CYL, 5.7L, MFI, HIGH OUTPUT
LT5 – ENGINE,5.7L(5.7J),TPI
MD8 – TRANSMISSION,AUTOMATIC 4–SPEED(THM700R4/4L60)
ML9 – TRANSMISSION,MANUAL 6–SPEED
M30 – TRANSMISSION,AUTOMATIC 4 SPEED,4L60E,ELECTRONIC
T61 – LIGHTING,DAYTIME RUNNING
T72 – HEADLAMPS,LH RULE OF THE ROAD(EXPORT)
T84 – HEADLAMPS,RH RULE OF THE ROAD,RECTANGULAR(MARKED E)(EXPORT)
T85 – HEADLAMPS,LH RULE OF THE ROAD,RECTANGULAR(MARKED E)(EXPORT)
T90 – LAMP,SIGNALING AND MARKER(EXPORT)
UJ6 – INDICATOR,LOW TIRE PRESS

© 2000 GENERAL MOTORS SERVICE PARTS OPERATIONS–CHEVROLET–14Y

MICROFICHE INDEX

GROUPS 4.000 THRU 5.000

FICHE 6 OF 11

GROUP	DESCRIPTION	STARTING GRID LOCATION PARTS	ILLUSTRATIONS
–	GENERAL INFORMATION	1–A2	1–G2
–	ALPHABETICAL INDEX	1–B13	N.A.
4.000	BRAKES	6–A2	6–E2
5.000	BRAKES – REAR AXLE – PROPELLER SHAFT – WHEELS	6–C2	6–H2
–	OUT OF FICHE CALLS	N.A.	6–M22

6–J1

MICROFICHE INDEX

GROUPS 4.000 THRU 5.000

FICHE 6 OF 11

GROUP	DESCRIPTION	STARTING GRID LOCATION PARTS	ILLUSTRATIONS
–	GENERAL INFORMATION	1–A2	1–G2
–	ALPHABETICAL INDEX	1–B13	N.A.
4.000	BRAKES	6–A2	6–E2
5.000	BRAKES – REAR AXLE – PROPELLER SHAFT – WHEELS	6–C2	6–H2
–	OUT OF FICHE CALLS	N.A.	6–M22

6–K1

MICROFICHE INDEX

GROUPS 4.000 THRU 5.000

FICHE 6 OF 11

GROUP	DESCRIPTION	STARTING GRID LOCATION PARTS	ILLUSTRATIONS
–	GENERAL INFORMATION	1–A2	1–G2
–	ALPHABETICAL INDEX	1–B13	N.A.
4.000	BRAKES	6–A2	6–E2
5.000	BRAKES – REAR AXLE – PROPELLER SHAFT – WHEELS	6–C2	6–H2
–	OUT OF FICHE CALLS	N.A.	6–M22

6–L1

MICROFICHE INDEX

GROUPS 4.000 THRU 5.000

FICHE 6 OF 11

GROUP	DESCRIPTION	STARTING GRID LOCATION PARTS	ILLUSTRATIONS
–	GENERAL INFORMATION	1–A2	1–G2
–	ALPHABETICAL INDEX	1–B13	N.A.
4.000	BRAKES	6–A2	6–E2
5.000	BRAKES – REAR AXLE – PROPELLER SHAFT – WHEELS	6–C2	6–H2
–	OUT OF FICHE CALLS	N.A.	6–M22

6–M1

21.340A NUT PKG, Wheel (Production)

84–89	Y	12341387	1	15.71	NUT PKG, SPL SECURITY WHL LK (12MM LUG) (CHROME) (05.813)
86–89	Y	00999057	1	15.71	NUT PKG, SPL SECURITY WHL LK (ALUM WHL) (INCLS WRENCH) (12MM LUG) (BLACK) (05.813)
90	Y	00999057	1	15.71	NUT PKG, SPL SECURITY WHL LK (ALUM WHL) (INCLS WRENCH) (12MM LUG) (BLACK) (CAP 12337914 MAY BE REQD) (05.813)
91–96	Y	00999057	1	15.71	NUT PKG, SPL SECURITY WHL LK (M12X1.5 W/OTR TRD FOR DECOR CAP) (INCLS 4 NUTS, 1 KEY) (05.813)

1.166 CLAMP – GUARD – SUPPORT, Hose (Radiator, Heater, A/C)

84–87	Y	02012781	1	3.70	CLAMP, A/C CMPR & CNDSR HOSE
90–95	Y 5.7J (LT5)	10157995	2	2.00	CLAMP, RAD BYPASS HOSE (08.948)
91	Y 5.7–8 (L98)	21030917	1	4.35	CLAMP, RAD INL HOSE ((37.5MM TO 44.5MM) NOMINAL SIZE 42MM, STAMPED "P") (08.948)
90–94	Y 5.7J (LT5)	10108248	5	1.85	CLAMP, RAD INL HOSE ENG (44MM) (08.948)
92–94	Y 5.7P (LT1)	21030917	1	4.35	CLAMP, RAD INL HOSE ENG ((37.5MM TO 44.5MM) NOMINAL SIZE 42MM, STAMPED "P") (08.948)
90–94	Y	21030894	1	3.05	CLAMP, RAD INL HOSE RAD (47MM)
95	Y 5.7P (LT1)	21030894	1	3.05	CLAMP, RAD INL HOSE RAD (47MM)
96	Y	21030894	1	3.05	CLAMP, RAD INL HOSE RAD (47MM)
90–91	Y 5.7–8 (L98)	21030894	1	3.05	CLAMP, RAD OTLT HOSE ENG (47MM)
91	Y	11516239	1	6.90	CLAMP, RAD OTLT HOSE ENG (LT BROWN) (08.948)
92–94	Y 5.7P (LT1)	21030917	1	4.35	CLAMP, RAD OTLT HOSE ENG ((37.5MM TO 44.5MM) NOMINAL SIZE 42MM, STAMPED "P") (08.948)
90–91	Y 5.7–8 (L98)	10158012	AR	3.05	CLAMP, RAD OTLT HOSE RAD (53MM) (08.948)
90–95	Y 5.7J (LT5)	10158012	AR	3.05	CLAMP, RAD OTLT HOSE RAD (53MM) (08.948)
92–96	Y 5.7P (LT1)	10158012	AR	3.05	CLAMP, RAD OTLT HOSE RAD (53MM) (08.948)
90–94	Y 5.7J (LT5)	11516239	2	6.90	CLAMP, RAD OTLT RR HOSE ENG (51MM) (LT BROWN) (08.948)
90–95	Y 5.7J (LT5)	10019739	1	1.10	CLAMP, SECD AIR INJN CHK VLV HOSE (31.5 TO 36MM) (01.762)
92–93	Y 5.7P (LT1)	22518665	AR	*.93	CLAMP, SECD AIR INJN CHK VLV HOSE (9/16 TO 1 1/16 DIA) (08.948)
84–91	Y	22518665	AR	*.93	CLAMP, WORM TYPE (9/16 TO 1 1/16 DIA) (08.948)

2.447 ACTUATOR – BRACKET – CONNECTOR – NUT – RETAINER – SWITCH, Stop Lamp Switch

84–89	Y	14053686	1	3.72	BRACKET, S/LP SW
90–91	Y	10097689	1	7.55	BRACKET, S/LP SW
92	Y 6–SPD M/TRANS (ML9)	10097689	1	7.55	BRACKET, S/LP SW
92	Y 5.7P (LT1), 3–SPD A/TRANS (MD9)	10097689	1	7.55	BRACKET, S/LP SW
93	Y 5.7P (LT1), 4–SPD A/TRANS (MD8)	10214036	1	7.55	BRACKET, S/LP SW
93–96	Y 6–SPD M/TRANS (ML9)	10214036	1	7.55	BRACKET, S/LP SW
94–96	Y 5.7P (LT1), 4–SPD A/TRANS (M30)	10214036	1	7.55	BRACKET, S/LP SW

© 2000 GENERAL MOTORS SERVICE PARTS OPERATIONS

2.447 ACTUATOR – BRACKET – CONNECTOR – NUT – RETAINER – SWITCH, Stop Lamp Switch(Con't)

84–87	Y	12337995	1	*.46	NUT, S/LP SW ACTR (00.334) (AC–DELCO #12337995)
93–96	Y	10211657	1	24.54	SWITCH, ELEK BRK CONT BRK PED (W/ S/LP SW) (04.710) (AC–DELCO #10211657)
84–86	Y (EXC CRCONT (K34), (M/TRNS)	25524844	1	8.22	SWITCH, S/LP (AC–DELCO #D889)
84–86	Y CRCONT (K34)	25524845	1	13.46	SWITCH, S/LP (AC–DELCO #D850A)
84–86	Y (EXC CRCONT (K34), (A/TRNS)	25524848	1	11.63	SWITCH, S/LP (AC–DELCO #D851A)
87	Y A/TRNS (EXC CRUISE CONT K34)	25529861	1	15.40	SWITCH, S/LP (AC–DELCO #D853A)
87	Y (EXC CRCONT (K34), (M/TRNS)	25529862	1	5.31	SWITCH, S/LP (AC–DELCO #D854A)
89–92	Y	25529860	1	11.69	SWITCH, S/LP (AC–DELCO #D852A)
87–88	Y 3–SPD A/TRANS (MD9), (EXC CRCONT (K34)	25523465	1	6.17	SWITCH, S/LP & TCC
87–88	Y CRUISE CONT (K34)	25523463	1	6.94	SWITCH, STOP LP

2.480 BRACKET – CONNECTOR – HARNESS – WIRE, Chassis Wiring

94	Y 4–SPD A/TRANS (M30)	15320479	1	119.63	HARNESS, A/TRNS WRG (AC–DELCO #15320479)
95	Y 4–SPD A/TRANS (M30)	15320477	1	75.73	HARNESS, A/TRNS WRG (INCLS TCC SOLENOID W/TCC DRAINDOWN FEATURE) (AC–DELCO #15320477)
96	Y 4–SPD A/TRANS (M30)	15320476	1	81.04	HARNESS, A/TRNS WRG (INCLS TCC SOL VLV) (AC–DELCO #15320476)
85	Y A/TRNS (MD8)	12048732	1	DISCON	HARNESS, E .C .M.
85	Y M/TRNS (MH5, MK2) W/FED (NA5)	12048733	1	DISCON	HARNESS, E .C .M.
84	Y A/TRNS, FED, CALIF (1ST DES)	12028754	1	DISCON	HARNESS, ELEK CONT MDL WRG (SGL WIRE OIL PRESS SW CONN)
84	Y M/TRNS, FED, CALIF (1ST DES)	12029199	1	DISCON	HARNESS, ELEK CONT MDL WRG (SGL WIRE OIL PRESS SW CONN)
84	Y M/TRNS, FED, CALIF (2ND DES)	12029216	1	DISCON	HARNESS, ELEK CONT MDL WRG (DBL WIRE OIL PRESS SW CONN)
84	Y A/TRNS, FED, CALIF (2ND DES)	12029217	1	DISCON	HARNESS, ELEK CONT MDL WRG (DBL WIRE OIL PRESS SW CONN)
89	Y (5.7–8) A/TRNS, A/C (C68)	12090323	1	1266.25	HARNESS, ENG & ECM (02.525)
86	Y M/TRNS, A/C (C60), FED (NA5) (EXC NM8 EXPORT)	12048815	1	DISCON	HARNESS, ENG & ECM WRG (02.525)
86	Y A/TRNS, A/C (C60) (EXC NM8 EXPORT)	12048817	1	DISCON	HARNESS, ENG & ECM WRG (02.525)
86	Y A/TRNS, A/C (C68) (EXC NM8 EXPORT)	12048818	1	DISCON	HARNESS, ENG & ECM WRG (02.525)
86	Y07 M/TRNS, A/C (C68), FED (NA5) (EXC NM8 EXPORT)	12048816	1	DISCON	HARNESS, ENG & ECM WRG (02.525)
87	Y M/TRNS, A/C (C60)	12067670	1	DISCON	HARNESS, ENG & ECM WRG (02.525)
87	Y M/TRNS, A/C (C68)	12067671	1	DISCON	HARNESS, ENG & ECM WRG (02.525)
87	Y A/TRNS, A/C, FED (NA5) (EXC NM8 EXPORT)	12067672	1	DISCON	HARNESS, ENG & ECM WRG (02.525)
87	Y A/TRNS, A/C (C68), FED (NA5) (EXC NM8 EXPORT)	12067673	1	DISCON	HARNESS, ENG & ECM WRG (02.525)
88	Y A/TRNS, A/C (C60)	12055808	1	DISCON	HARNESS, ENG & ECM WRG (02.525)
88	Y A/TRNS, A/C (C68)	12055809	1	DISCON	HARNESS, ENG & ECM WRG (02.525)
88	Y M/TRNS, A/C (C60)	12080840	1	DISCON	HARNESS, ENG & ECM WRG (02.525)
88	Y M/TRNS, A/C (C68)	12080841	1	DISCON	HARNESS, ENG & ECM WRG (02.525)
89	Y (5.7–8) M/TRNS, A/C (C60) (2ND DES)	12090320	1	1266.25	HARNESS, ENG & ECM WRG (02.525) (ORANGE WIRE IN B–8 CAV OF VATS MDL CONN)
89	Y (5.7–8) M/TRNS, A/C (C68)	12090321	1	1266.25	HARNESS, ENG & ECM WRG (02.525)

© 2000 GENERAL MOTORS SERVICE PARTS OPERATIONS

2.480 BRACKET – CONNECTOR – HARNESS – WIRE, Chassis Wiring(Con't)

89	Y (5.7–8) A/TRNS, A/C (C60) (2ND DES)	12090322	1	1266.25	HARNESS, ENG & ECM WRG (02.525) (ORANGE WIRE IN B–8 CAV OF VATS MDL CONN)
89	Y (5.7J)	12090324	1	1266.25	HARNESS, ENG & ECM WRG (02.525)
91	Y 5.7J (LT5)	12106549	1	25.14	HARNESS, ENG PWR SW WRG (I/P TO VALET MODE SW) (USE W/4 PIN ENG PWR SW CONN)
87–89	Y	12067418	1	DISCON	HARNESS, F/FLR CNSL
84–86	Y	12029153	1	DISCON	HARNESS, FRT FLR CNSL WRG
85	Y (EXC VB4, VD1, VE1, VT7 EXPORT)	12050645	1	DISCON	HARNESS, FWD LP
86	Y (EXC VB4, VD1, VE1, VT7 EXPORT)	12048809	1	DISCON	HARNESS, FWD LP
87	Y (EXC T72, T84 EXPORT)	12067732	1	DISCON	HARNESS, FWD LP
84	Y	12028953	1	DISCON	HARNESS, FWD LP WRG
88	Y (EXC T72, T84 EXPORT)	12073487	1	666.86	HARNESS, FWD LP WRG
89	Y (5.7–8)	12073487	1	666.86	HARNESS, FWD LP WRG
90	Y (5.7–8) (EXC CANADIAN T61)	12073776	1	666.86	HARNESS, FWD LP WRG
90	Y (5.7J) SOFT RIDE SUSP (FE1), H .D .SUSP (EXC CANADIAN T61)	12090331	1	985.50	HARNESS, FWD LP WRG
91	Y 5.7–8 (L98), (EXC DAYTIME RUNNING LGT (T61)	12080863	1	985.50	HARNESS, FWD LP WRG
91	Y 5.7J (LT5), SOFT RIDE SUSP (FE1), HVY DUTY SUSP (FE7), (EXC DAYTIME RUNNING LGT (T61)	12080864	1	666.86	HARNESS, FWD LP WRG
92	Y 5.7P (LT1), (EXC DAYTIME RUNNING LGT (T61)	12090371	1	292.85	HARNESS, FWD LP WRG
92	Y 5.7J (LT5), (EXC DAYTIME RUNNING LGT (T61)	12090372	1	315.14	HARNESS, FWD LP WRG
93	Y 5.7P (LT1), (EXC DIAGNOSTIC SYSTEM (BAK), DAYTIME RUNNING LGT (T61)	12106580	1	816.00	HARNESS, FWD LP WRG
93–94	Y 5.7J (LT5), (EXC DAYTIME RUNNING LGT (T61)	12106583	1	985.50	HARNESS, FWD LP WRG
93	Y 5.7P (LT1), DIAGNOSTIC SYSTEM (BAK), (EXC DAYTIME RUNNING LGT (T61)	12141822	1	292.85	HARNESS, FWD LP WRG
94	Y 5.7P (LT1), (EXC HDLP (T72) (EXPORT), RH RULE OF ROAD HDLP (T84) (EXPORT), LH RULE OF ROAD HDLP (T85) (EXPORT), SIG & MKR LP (T90) (EXPORT)	12130480	1	292.85	HARNESS, FWD LP WRG
94	Y 5.7J (LT5), (EXC HDLP (T72) (EXPORT), RH RULE OF ROAD HDLP (T84) (EXPORT), LH RULE OF ROAD HDLP (T85) (EXPORT), SIG & MKR LP (T90) (EXPORT)	12154336	1	292.85	HARNESS, FWD LP WRG
95	Y 5.7P (LT1), (EXC HDLP (T72) (EXPORT), RH RULE OF ROAD HDLP (T84) (EXPORT), LH RULE OF ROAD HDLP (T85) (EXPORT), SIG & MKR LP (T90) (EXPORT)	12130484	1	292.85	HARNESS, FWD LP WRG
95	Y 5.7J (LT5), (EXC HDLP (T72) (EXPORT), RH RULE OF ROAD HDLP (T84) (EXPORT), LH RULE OF ROAD HDLP (T85) (EXPORT), SIG & MKR LP (T90) (EXPORT)	12130486	1	292.85	HARNESS, FWD LP WRG

© 2000 GENERAL MOTORS SERVICE PARTS OPERATIONS

2.480 BRACKET – CONNECTOR – HARNESS – WIRE, Chassis Wiring(Con't)

96	Y (EXC HDLP (T72) (EXPORT), RH RULE OF ROAD HDLP (T84) (EXPORT), LH RULE OF ROAD HDLP (T85) (EXPORT), SIG & MKR LP (T90) (EXPORT)	12163717	1	292.85	HARNESS, FWD LP WRG .....
85	Y A/TRNS (MD8), A/C (C60)	12048741	1	DISCON	HARNESS, I/P .....
85	Y M/TRNS (MH5, MK2), A/C (C60) ..	12048742	1	DISCON	HARNESS, I/P .....
86	Y M/TRNS, A/C (C60)	12048793	1	DISCON	HARNESS, I/P .....
86	Y A/TRNS, A/C (C60)	12048794	1	DISCON	HARNESS, I/P .....
86	Y M/TRNS, A/C (C68)	12048795	1	DISCON	HARNESS, I/P .....
86	Y A/TRNS, A/C (C68)	12048796	1	DISCON	HARNESS, I/P .....
87	Y A/TRNS, A/C (C68)	12068102	1	1257.59	HARNESS, I/P .....
87	Y M/TRNS, A/C (C68)	12068103	1	1257.59	HARNESS, I/P .....
87	Y A/TRNS, A/C (C60)	12073820	1	DISCON	HARNESS, I/P .....
84	Y A/TRNS (1ST DES)	12036383	1	DISCON	HARNESS, I/P WRG (BLACK 5–WAY AC CONN W/2 DBL WIRES IN CAVS C & D) .....
84	Y M/TRNS	12043083	1	DISCON	HARNESS, I/P WRG .....
84	Y A/TRNS (2ND DES)	12043276	1	DISCON	HARNESS, I/P WRG (1 DBL WIRE IN CAV D) .....
87	Y M/TRNS (MH5, MK2), A/C (C60) ..	12073821	1	DISCON	HARNESS, I/P WRG .....
88	Y (5.7–8) M/TRNS, A/C (C60)	12073824	1	DISCON	HARNESS, I/P WRG .....
88	Y (5.7–8) A/TRNS, A/C (C60)	12073825	1	DISCON	HARNESS, I/P WRG .....
88	Y (5.7–8) M/TRNS, A/C (C68)	12073826	1	DISCON	HARNESS, I/P WRG .....
88	Y (5.7–8) A/TRNS, A/C (C68)	12073827	1	DISCON	HARNESS, I/P WRG .....
89	Y (5.7–8) ML9, A/C (C60) (1ST DES)	12073507	1	1548.75	HARNESS, I/P WRG (PINK WIRE IN B–8 CAV OF VATS MDL CONN) .....
89	Y (5.7–8) A/TRNS (MD8), A/C (C60) (1ST DES)	12073509	1	1548.75	HARNESS, I/P WRG (PINK WIRE IN B–8 CAV OF VATS MDL CONN) .....
89	Y (5.7–8) M/TRNS (ML9), A/C (C68) (1ST DES)	12073511	1	1548.75	HARNESS, I/P WRG (PINK WIRE IN B–8 CAV OF VATS MDL CONN) .....
89	Y (5.7–8) A/TRNS (MD8), A/C (C68) (1ST DES)	12073513	1	1548.75	HARNESS, I/P WRG (PINK WIRE IN B–8 CAV OF VATS MDL CONN) .....
89	Y (5.7–8) ML9, A/C (C60) (2ND DES)	12090315	1	1548.75	HARNESS, I/P WRG (ORANGE WIRE IN B–8 CAV OF VATS MDL CONN) .....
89	Y (5.7–8) A/TRNS (MD8), A/C (C60) (2ND DES)	12090316	1	1257.59	HARNESS, I/P WRG (ORANGE WIRE IN B–8 CAV OF VATS MDL CONN) .....
89	Y (5.7–8) M/TRNS (ML9), A/C (C68) (2ND DES)	12090318	1	1548.75	HARNESS, I/P WRG (ORANGE WIRE IN B–8 CAV OF VATS MDL CONN) .....
89	Y (5.7–8) A/TRNS (MD8), A/C (C68) (2ND DES)	12090319	1	1266.25	HARNESS, I/P WRG (ORANGE WIRE IN B–8 CAV OF VATS MDL CONN) .....
90	Y M/TRNS (ML9), A/C (C60) (EXC CANADIAN T61)	12101432	1	1239.00	HARNESS, I/P WRG (**VPI 1–877–846–8243) .....
90	Y M/TRNS (ML9), A/C (C68) (EXC CANADIAN T61)	12101434	1	1548.75	HARNESS, I/P WRG .....
90	Y 4–SPD A/TRANS (MD8), A/C MAN CONT (C60), (EXC DAYTIME RUNNING LGT (T61)	12102274	1	1257.59	HARNESS, I/P WRG .....
90	Y A/TRNS (MD8), A/C (C68) (EXC CANADIAN T61)	12102538	1	1257.59	HARNESS, I/P WRG .....
91	Y 4–SPD A/TRANS (MD8), A/C MAN CONT (C60), (EXC DAYTIME RUNNING LGT (T61)	12116436	1	1028.20	HARNESS, I/P WRG .....
91	Y 6–SPD M/TRANS (ML9), A/C MAN CONT (C60), (EXC DAYTIME RUNNING LGT (T61)	12116438	1	1028.20	HARNESS, I/P WRG .....
91	Y 4–SPD A/TRANS (MD8), A/C AUTO ELEC CONT (C68), (EXC DAYTIME RUNNING LGT (T61)	12116500	1	1266.25	HARNESS, I/P WRG (MAY REQ 12106563 WIRE IF JMPR PRESENT AT THE PWR SEAT FEED) .....

© 2000 GENERAL MOTORS SERVICE PARTS OPERATIONS

2.480 BRACKET – CONNECTOR – HARNESS – WIRE, Chassis Wiring(Con't)

91	Y 6–SPD M/TRANS (ML9), A/C AUTO ELEC CONT (C68), (EXC DAYTIME RUNNING LGT (T61)	12116502	1	1028.20	HARNESS, I/P WRG .....
92	Y 4–SPD A/TRANS (MD8), A/C MAN CONT (C60), (EXC DAYTIME RUNNING LGT (T61)	12125005	1	1028.20	HARNESS, I/P WRG .....
92	Y 6–SPD M/TRANS (ML9), A/C MAN CONT (C60), (EXC DAYTIME RUNNING LGT (T61)	12125007	1	1257.59	HARNESS, I/P WRG .....
92	Y 4–SPD A/TRANS (MD8), A/C AUTO ELEC CONT (C68), (EXC DAYTIME RUNNING LGT (T61)	12125813	1	881.59	HARNESS, I/P WRG .....
92	Y 6–SPD M/TRANS (ML9), A/C AUTO ELEC CONT (C68), (EXC DAYTIME RUNNING LGT (T61)	12125815	1	881.59	HARNESS, I/P WRG .....
93	Y 4–SPD A/TRANS (MD8), A/C MAN CONT (C60), (EXC SIG & MKR LP (T90) (EXPORT)	12141443	1	1257.59	HARNESS, I/P WRG .....
93	Y 6–SPD M/TRANS (ML9), A/C AUTO ELEC CONT (C68), (EXC SIG & MKR LP (T90) (EXPORT) ...	12141444	1	1257.59	HARNESS, I/P WRG (FOR VEH –DRL, SPLICE CAV D TO CAV E @ BLUE 8–WAY DRL MDL CONN.) .....
93	Y 6–SPD M/TRANS (ML9), A/C MAN CONT (C60), (EXC SIG & MKR LP (T90) (EXPORT)	12141445	1	1257.59	HARNESS, I/P WRG .....
93	Y 4–SPD A/TRANS (MD8), A/C AUTO ELEC CONT (C68), (EXC SIG & MKR LP (T90) (EXPORT) ...	12141446	1	1257.59	HARNESS, I/P WRG (ON VEHS W/O DAYTIME RUNNING LPS SPLICE CAV D & E WIRES TOGETHER AT BLUE DRL MDL CONN.) .....
94	Y 6–SPD M/TRANS (ML9), A/C MAN CONT (C60), (EXC DAYTIME RUNNING LGT (T61), HDLP (T72) (EXPORT), RH RULE OF ROAD HDLP (T84) (EXPORT), LH RULE OF ROAD HDLP (T85) (EXPORT), SIG & MKR LP (T90) (EXPORT) ...	12130324	1		HARNESS, I/P WRG .....
94	Y 6–SPD M/TRANS (ML9), A/C AUTO ELEC CONT (C68), (EXC DAYTIME RUNNING LGT (T61), HDLP (T72) (EXPORT), RH RULE OF ROAD HDLP (T84) (EXPORT), LH RULE OF ROAD HDLP (T85) (EXPORT), SIG & MKR LP (T90) (EXPORT)	12130326	1	1548.75	HARNESS, I/P WRG .....
94	Y 4–SPD A/TRANS (M30), A/C MAN CONT (C60), (EXC DAYTIME RUNNING LGT (T61), HDLP (T72) (EXPORT), RH RULE OF ROAD HDLP (T84) (EXPORT), LH RULE OF ROAD HDLP (T85) (EXPORT), SIG & MKR LP (T90) (EXPORT), (2ND DES)	12130491	1		HARNESS, I/P WRG .....
94	Y 4–SPD A/TRANS (M30), A/C MAN CONT (C60), DAYTIME RUNNING LGT (T61), (EXC HDLP (T72) (EXPORT), RH RULE OF ROAD HDLP (T84) (EXPORT), LH RULE OF ROAD HDLP (T85) (EXPORT), SIG & MKR LP (T90) (EXPORT) ...	12130492	1		HARNESS, I/P WRG .....

© 2000 GENERAL MOTORS SERVICE PARTS OPERATIONS

2.480 BRACKET – CONNECTOR – HARNESS – WIRE, Chassis Wiring(Con't)

94	Y 4–SPD A/TRANS (M30), A/C AUTO ELEC CONT (C68), (EXC DAYTIME PUNNING LGT (T61), HDLP (T72) (EXPORT), RH RULE OF ROAD HDLP (T84) (EXPORT), LH RULE OF ROAD HDLP (T85) (EXPORT), SIG & MKR LP (T90) (EXPORT)	12130493	1	1488.75	HARNESS, I/P WRG .....
94	Y 4–SPD A/TRANS (M30), A/C AUTO ELEC CONT (C68), DAYTIME RUNNING LGT (T61), (EXC HDLP (T72) (EXPORT), RH RULE OF ROAD HDLP (T84) (EXPORT), LH RULE OF ROAD HDLP (T85) (EXPORT), SIG & MKR LP (T90) (EXPORT)	12130494	1		HARNESS, I/P WRG .....
94	Y 4–SPD A/TRANS (M30), A/C MAN CONT (C60), DAYTIME RUNNING LGT (T61), (EXC HDLP (T72) (EXPORT), RH RULE OF ROAD HDLP (T84) (EXPORT), LH RULE OF ROAD HDLP (T85) (EXPORT), SIG & MKR LP (T90) (EXPORT), (1ST DES)	12141787	1		HARNESS, I/P WRG (TAGGED 0320 OR 0321) (ON VEH W/O DRL, AT 8–WAY BLUE CONN TO DRL MDL SPLICE CAV D & CAV E LEADS TOGETHER.) .....
94	Y 4–SPD A/TRANS (M30), A/C AUTO ELEC CONT (C68), DAYTIME RUNNING LGT (T61), (EXC HDLP (T72) (EXPORT), RH RULE OF ROAD HDLP (T84) (EXPORT), LH RULE OF ROAD HDLP (T85) (EXPORT), SIG & MKR LP (T90) (EXPORT), (1ST DES) ...	12141788	1		HARNESS, I/P WRG (TAGGED 0322 OR 0323) (ON VEH W/DAYTIME RUNNING LGHTS, ADD 8–WAY BLUE CONN TO DAYTIME RUNNING LGHT, SPLICE CAV D & CAV E WIRES TOGETHER) .....
94	Y 6–SPD M/TRANS (ML9), A/C MAN CONT (C60), DAYTIME RUNNING LGT (T61), (EXC HDLP (T72) (EXPORT), RH RULE OF ROAD HDLP (T84) (EXPORT), LH RULE OF ROAD HDLP (T85) (EXPORT), SIG & MKR LP (T90) (EXPORT) ...	12141789	1		HARNESS, I/P WRG .....
94	Y 6–SPD M/TRANS (ML9), A/C AUTO ELEC CONT (C68), DAYTIME RUNNING LGT (T61), (EXC HDLP (T72) (EXPORT), RH RULE OF ROAD HDLP (T84) (EXPORT), LH RULE OF ROAD HDLP (T85) (EXPORT), SIG & MKR LP (T90) (EXPORT)	12141790	1		HARNESS, I/P WRG .....
94	Y 6–SPD M/TRANS (ML9), A/C AUTO ELEC CONT (C68), (EXC HDLP (T72) (EXPORT), RH RULE OF ROAD HDLP (T84) (EXPORT), LH RULE OF ROAD HDLP (T85) (EXPORT), SIG & MKR LP (T90) (EXPORT)	12163703	1	1257.59	HARNESS, I/P WRG .....
95	Y 5.7J (LT5), 6–SPD M/TRANS (ML9), A/C AUTO ELEC CONT (C68), (EXC DAYTIME RUNNING LGT (T61)	12130326	1	1548.75	HARNESS, I/P WRG .....

© 2000 GENERAL MOTORS SERVICE PARTS OPERATIONS

MICROFICHE INDEX

GROUPS 4.000 THRU 5.000

FICHE 6 OF 11

GROUP	DESCRIPTION	STARTING GRID LOCATION PARTS	ILLUSTRATIONS
–	GENERAL INFORMATION	1–A2	1–G2
–	ALPHABETICAL INDEX	1–B13	N.A.
4.000	BRAKES	6–A2	6–E2
5.000	BRAKES – REAR AXLE – PROPELLER SHAFT – WHEELS	6–C2	6–H2
–	OUT OF FICHE CALLS	N.A.	6–M22

6–N1

95	Y 5.7P (LT1), 4-SPD A/TRANS (M30), A/C MAN CONT (C60), DAYTIME RUNNING LGT (T61), (EXC HDLP (T72) (EXPORT), RH RULE OF ROAD HDLP (T84) (EXPORT), LH RULE OF ROAD HDLP (T85) (EXPORT), SIG & MKR LP (T90) (EXPORT)	12130389	1	1424.85	HARNESS, I/P WRG .....
95	Y 5.7P (LT1), 4-SPD A/TRANS (M30), A/C AUTO ELEC CONT (C68), DAYTIME RUNNING LGT (T61), (EXC HDLP (T72) (EXPORT), RH RULE OF ROAD HDLP (T84) (EXPORT), LH RULE OF ROAD HDLP (T85) (EXPORT), SIG & MKR LP (T90) (EXPORT)	12130391	1	1424.85	HARNESS, I/P WRG (SPLICE CAV D & E WIRES @ BLUE DRL MDL CONN FOR VEH W/O DRL.) .....
95	Y 5.7J (LT5), 6-SPD M/TRANS (ML9), A/C AUTO ELEC CONT (C68), DAYTIME RUNNING LGT (T61)	12141790	1		HARNESS, I/P WRG .....
95	Y 5.7P (LT1), 6-SPD M/TRANS (ML9), A/C MAN CONT (C60), (EXC DAYTIME RUNNING LGT (T61), HDLP (T72) (EXPORT), RH RULE OF ROAD HDLP (T84) (EXPORT), LH RULE OF ROAD HDLP (T85) (EXPORT), SIG & MKR LP (T90) (EXPORT)	12163700	1	1548.75	HARNESS, I/P WRG .....
95	Y 5.7P (LT1), 6-SPD M/TRANS (ML9), A/C AUTO ELEC CONT (C68), (EXC DAYTIME RUNNING LGT (T61), HDLP (T72) (EXPORT), RH RULE OF ROAD HDLP (T84) (EXPORT), LH RULE OF ROAD HDLP (T85) (EXPORT), SIG & MKR LP (T90) (EXPORT)	12163702	1	1257.59	HARNESS, I/P WRG .....
95	Y 5.7J (LT5), 6-SPD M/TRANS (ML9), A/C AUTO ELEC CONT (C68)	12163703	1	1257.59	HARNESS, I/P WRG .....
96	Y 4-SPD A/TRANS (M30), A/C MAN CONT (C60), (EXC HDLP (T72) (EXPORT), RH RULE OF ROAD HDLP (T84) (EXPORT), LH RULE OF ROAD HDLP (T85) (EXPORT), SIG & MKR LP (T90) (EXPORT) ...	12130466	1	1548.75	HARNESS, I/P WRG (WHEN USE ON VEH W/O DAYTIME RUN LIGHTS, SPLICE CAV D&E TOGETHER @ BLUE 8-WAY DRL MOD CONN) .....
96	Y 4-SPD A/TRANS (M30), A/C AUTO ELEC CONT (C68), (EXC HDLP (T72) (EXPORT), RH RULE OF ROAD HDLP (T84) (EXPORT), LH RULE OF ROAD HDLP (T85) (EXPORT), SIG & MKR LP (T90) (EXPORT)	12130470	1	1061.69	HARNESS, I/P WRG (WHEN USE ON VEH W/O DAYTIME RUN LIGHTS, SPLICE CAV D&E TOGETHER @ BLUE 8-WAY DRL MOD CONN) .....
96	Y 6-SPD M/TRANS (ML9), A/C MAN CONT (C60), (EXC HDLP (T72) (EXPORT), RH RULE OF ROAD HDLP (T84) (EXPORT), LH RULE OF ROAD HDLP (T85) (EXPORT), SIG & MKR LP (T90) (EXPORT) ...	12130472	1	1257.59	HARNESS, I/P WRG (WHEN USE ON VEH W/O DAYTIME RUN LIGHTS, SPLICE CAV D&E TOGETHER @ BLUE 8-WAY DRL MOD CONN) .....

© 2000 GENERAL MOTORS SERVICE PARTS OPERATIONS

2.480 BRACKET – CONNECTOR – HARNESS – WIRE, Chassis Wiring(Con't)

96	Y 6-SPD M/TRANS (ML9), A/C AUTO ELEC CONT (C68), (EXC HDLP (T72) (EXPORT), RH RULE OF ROAD HDLP (T84) (EXPORT), LH RULE OF ROAD HDLP (T85) (EXPORT), SIG & MKR LP (T90) (EXPORT)	12130474	1	1257.59	HARNESS, I/P WRG (WHEN USE ON VEH W/O DAYTIME RUN LIGHTS, SPLICE CAV D&E TOGETHER @ BLUE 8-WAY DRL MOD CONN) .....
84-91	Y RECL FRT BKT ST (AQ9)	12028999	1	DISCON	HARNESS, I/P WRG HARN EXTN .....
91	Y	12126533	1	DISCON	HARNESS, I/P WRG HARN EXTN (VALET MODE) (USE W/4 PIN ENG PWR SW CONN) .....
92-93	Y RECL FRT BKT ST (AQ9)	12106560	1	47.45	HARNESS, I/P WRG HARN EXTN .....
85-91	Y	12029463	1	25.75	HARNESS, INT AIR TEMP SEN WRG ...
84-85	Y	12028667	1	DISCON	HARNESS, MIR LP WRG .....
	*EXPORT**********EXPORT**********EXPORT**********EXPORT**********EXPORT*				
84	Y NM5 (EXPORT CANADA) (2ND DES)	12029435	1	DISCON	HARNESS, ELEK CONT MDL (OIL PRESS SW HAS 3 SINGLE WIRES) ..
84	Y NM5 (EXPORT, CANADA) (1ST DES)	12029044	1	DISCON	HARNESS, ELEK CONT MDL WRG (OIL PRESS SW CONN HAS 1 DBL WIRE & 1 SGL WIRE) .....
86	Y M/TRNS, A/C (C60), (NM5) EXPORT, CANADA (EXC NM8 EXPORT)	12048815	1	DISCON	HARNESS, ENG & ECM WRG (02.525)
86	Y A/TRNS, NM8 (EXPORT)	12048819	1	DISCON	HARNESS, ENG & ECM WRG (02.525) .
86	Y07 M/TRNS, A/C (C68), (NM5) EXPORT, CANADA (EXC NM8 EXPORT)	12048816	1	DISCON	HARNESS, ENG & ECM WRG (02.525) .
87	Y A/TRNS, A/C, NM5 (EXPORT, CANADA) (EXC NM8 EXPORT)	12067672	1	DISCON	HARNESS, ENG & ECM WRG (02.525) .
87	Y A/TRNS, A/C (C68), NM5 (EXPORT, CANADA) (EXC NM8 EXPORT)	12067673	1	DISCON	HARNESS, ENG & ECM WRG (02.525) .
87	Y A/TRNS, NM8 (EXPORT)	12067674	1	DISCON	HARNESS, ENG & ECM WRG (02.525) .
84	Y VB4, VD1, VE1, VT7 (EXPORT) ...	12029218	1	DISCON	HARNESS, FWD LP .....
85	Y VB4, VD1, VE1, VT7 (EXPORT) ...	12050642	1	DISCON	HARNESS, FWD LP .....
86	Y VB4, VD1, VE1, VT7 (EXPORT) ...	12055776	1	DISCON	HARNESS, FWD LP .....
87	Y T72, T84 (EXPORT)	12067734	1	DISCON	HARNESS, FWD LP ....
88	Y T72, T84 (EXPORT)	12055815	1	DISCON	HARNESS, FWD LP WRG .....
90	Y (5.7-8) T61 (CANADIAN)	12090336	1	667.87	HARNESS, FWD LP WRG .....
90	Y (5.7J) T61 (CANADIAN)	12090337	1	987.00	HARNESS, FWD LP WRG .....
91	Y 5.7-8 (L98), DAYTIME RUNNING LGT (T61)	12090346	1	667.87	HARNESS, FWD LP WRG .....
91	Y 5.7J (LT5), DAYTIME RUNNING LGT (T61)	12090347	1	667.87	HARNESS, FWD LP WRG .....
92	Y 5.7P (LT1), DAYTIME RUNNING LGT (T61)	12090373	1	667.87	HARNESS, FWD LP WRG .....
92	Y 5.7J (LT5), DAYTIME RUNNING LGT (T61)	12090374	1	667.87	HARNESS, FWD LP WRG .....
93	Y 5.7P (LT1), DAYTIME RUNNING LGT (T61)	12106581	1	666.86	HARNESS, FWD LP WRG .....
93	Y 5.7J (LT5), DAYTIME RUNNING LGT (T61)	12106582	1	611.03	HARNESS, FWD LP WRG .....
94	Y 5.7P (LT1), HDLP (T72) (EXPORT), RH RULE OF ROAD HDLP (T84) (EXPORT), LH RULE OF ROAD HDLP (T85) (EXPORT), SIG & MKR LP (T90) (EXPORT)	12130481	1		HARNESS, FWD LP WRG .....

© 2000 GENERAL MOTORS SERVICE PARTS OPERATIONS

2.480 BRACKET – CONNECTOR – HARNESS – WIRE, Chassis Wiring(Con't)

94	Y 5.7J (LT5), HDLP (T72) (EXPORT), RH RULE OF ROAD HDLP (T84) (EXPORT), LH RULE OF ROAD HDLP (T85) (EXPORT), SIG & MKR LP (T90) (EXPORT)	12154337	1		HARNESS, FWD LP WRG .....
95	Y 5.7P (LT1), HDLP (T72) (EXPORT), RH RULE OF ROAD HDLP (T84) (EXPORT), LH RULE OF ROAD HDLP (T85) (EXPORT), SIG & MKR LP (T90) (EXPORT)	12130465	1	292.85	HARNESS, FWD LP WRG .....
96	Y HDLP (T72) (EXPORT), RH RULE OF ROAD HDLP (T84) (EXPORT), LH RULE OF ROAD HDLP (T85) (EXPORT), SIG & MKR LP (T90) (EXPORT)	12163718	1	272.58	HARNESS, FWD LP WRG .....
94–96	Y HDLP (T72) (EXPORT), RH RULE OF ROAD HDLP (T84) (EXPORT), LH RULE OF ROAD HDLP (T85) (EXPORT), SIG & MKR LP (T90) (EXPORT)	12130344	2	40.09	HARNESS, FWD LP WRG HARN EXTN .
90	Y M/TRNS (ML9), A/C (C60), T61 (CANADIAN)	12101433	1	1266.25	HARNESS, I/P WRG .....
90	Y M/TRNS (ML9), A/C (C68), T61 (CANADIAN)	12101435	1	1266.25	HARNESS, I/P WRG .....
90	Y A/TRNS (MD8), A/C (C68), T61 (CANADIAN)	12102273	1	1028.20	HARNESS, I/P WRG .....
90	Y A/TRNS (MD8), A/C (C60), T61 (CANADIAN)	12102537	1		HARNESS, I/P WRG .....
91	Y 4–SPD A/TRANS (MD8), A/C MAN CONT (C60), DAYTIME RUNNING LGT (T61)	12116437	1	1028.20	HARNESS, I/P WRG .....
91	Y 6–SPD M/TRANS (ML9), A/C MAN CONT (C60), DAYTIME RUNNING LGT (T61)	12116439	1	1028.20	HARNESS, I/P WRG .....
91	Y 4–SPD A/TRANS (MD8), A/C AUTO ELEC CONT (C68), DAYTIME RUNNING LGT (T61)	12116501	1	1028.20	HARNESS, I/P WRG .....
91	Y 6–SPD M/TRANS (ML9), A/C AUTO ELEC CONT (C68), DAYTIME RUNNING LGT (T61)	12116503	1	1028.20	HARNESS, I/P WRG .....
92	Y 4–SPD A/TRANS (MD8), A/C MAN CONT (C60), DAYTIME RUNNING LGT (T61)	12125006	1	1028.20	HARNESS, I/P WRG .....
92	Y 6–SPD M/TRANS (ML9), A/C MAN CONT (C60), DAYTIME RUNNING LGT (T61)	12125008	1	1028.20	HARNESS, I/P WRG .....
92	Y 4–SPD A/TRANS (MD8), A/C AUTO ELEC CONT (C68), DAYTIME RUNNING LGT (T61)	12125814	1	1028.20	HARNESS, I/P WRG .....
92	Y 6–SPD M/TRANS (ML9), A/C AUTO ELEC CONT (C68), DAYTIME RUNNING LGT (T61)	12125816	1	1028.20	HARNESS, I/P WRG .....
93	Y 6–SPD M/TRANS (ML9), A/C AUTO ELEC CONT (C68), SIG & MKR LP (T90) (EXPORT)	12141441	1	1547.50	HARNESS, I/P WRG .....
93	Y 4–SPD A/TRANS (MD8), A/C AUTO ELEC CONT (C68), SIG & MKR LP (T90) (EXPORT)	12141442	1	1256.57	HARNESS, I/P WRG .....

© 2000 GENERAL MOTORS SERVICE PARTS OPERATIONS

2.480 BRACKET – CONNECTOR – HARNESS – WIRE, Chassis Wiring(Con't)

94	Y 4–SPD A/TRANS (M30), A/C AUTO ELEC CONT (C68), HDLP (T72) (EXPORT), RH RULE OF ROAD HDLP (T84) (EXPORT), LH RULE OF ROAD HDLP (T85) (EXPORT), SIG & MKR LP (T90) (EXPORT)	12130495	1		HARNESS, I/P WRG .....
94	Y 4–SPD A/TRANS (M30), A/C AUTO ELEC CONT (C68), HDLP (T72) (EXPORT), RH RULE OF ROAD HDLP (T84) (EXPORT), LH RULE OF ROAD HDLP (T85) (EXPORT), SIG & MKR LP (T90) (EXPORT), (1ST DES)	12141791	1		HARNESS, I/P WRG (TAGGED 0328) ...
94	Y 6–SPD M/TRANS (ML9), A/C AUTO ELEC CONT (C68), HDLP (T72) (EXPORT), RH RULE OF ROAD HDLP (T84) (EXPORT), LH RULE OF ROAD HDLP (T85) (EXPORT), SIG & MKR LP (T90) (EXPORT)	12141792	1		HARNESS, I/P WRG .....
95	Y 5.7P (LT1), 4–SPD A/TRANS (M30), A/C AUTO ELEC CONT (C68), HDLP (T72) (EXPORT), RH RULE OF ROAD HDLP (T84) (EXPORT), LH RULE OF ROAD HDLP (T85) (EXPORT), SIG & MKR LP (T90) (EXPORT), (EXC DAYTIME RUNNING LGT (T61)	12130396	1	1257.59	HARNESS, I/P WRG .....
95	Y 5.7P (LT1), 6–SPD M/TRANS (ML9), A/C MAN CONT (C60), DAYTIME RUNNING LGT (T61), (EXC HDLP (T72) (EXPORT), RH RULE OF ROAD HDLP (T84) (EXPORT), LH RULE OF ROAD HDLP (T85) (EXPORT), SIG & MKR LP (T90) (EXPORT)	12163701	1	1257.59	HARNESS, I/P WRG .....
95	Y 5.7P (LT1), 6–SPD M/TRANS (ML9), A/C AUTO ELEC CONT (C68), DAYTIME RUNNING LGT (T61), (EXC HDLP (T72) (EXPORT), RH RULE OF ROAD HDLP (T84) (EXPORT), LH RULE OF ROAD HDLP (T85) (EXPORT), SIG & MKR LP (T90) (EXPORT)	12163703	1	1257.59	HARNESS, I/P WRG .....
95	Y 5.7P (LT1), 6–SPD M/TRANS (ML9), A/C AUTO ELEC CONT (C68), HDLP (T72) (EXPORT), RH RULE OF ROAD HDLP (T84) (EXPORT), LH RULE OF ROAD HDLP (T85) (EXPORT), SIG & MKR LP (T90) (EXPORT), (EXC DAYTIME RUNNING LGT (T61)	12163704	1	1257.59	HARNESS, I/P WRG .....

© 2000 GENERAL MOTORS SERVICE PARTS OPERATIONS

2.480 BRACKET – CONNECTOR – HARNESS – WIRE, Chassis Wiring(Con't)

96	Y 4–SPD A/TRANS (M30), A/C AUTO ELEC CONT (C68), HDLP (T72) (EXPORT), RH RULE OF ROAD HDLP (T84) (EXPORT), LH RULE OF ROAD HDLP (T85) (EXPORT), SIG & MKR LP (T90) (EXPORT), (EXC DAYTIME RUNNING LGT (T61)	12130475	1	1257.59	HARNESS, I/P WRG .....
96	Y 5.7–5 (LT4), 6–SPD M/TRANS (ML9), A/C AUTO ELEC CONT (C68), HDLP (T72) (EXPORT), RH RULE OF ROAD HDLP (T84) (EXPORT), LH RULE OF ROAD HDLP (T85) (EXPORT), SIG & MKR LP (T90) (EXPORT), (EXC DAYTIME RUNNING LGT (T61)	12163715	1	1257.59	HARNESS, I/P WRG .....

2.530 BOOT – CONDUIT – CONNECTOR – COVER – INSULATOR – LOCK – PLUG – PROTECTOR – SEAL – TERMINAL, Chassis Electrical

Note: FOR ILLUSTRATION ON TERMINALS AND CONNECTORS SEE STANDARD PARTS BOOK GRP 8.965

84–96	Y	10098907	2	12.55	CONDUIT, S/D WRG .....
87–93	Y	12101857	1	18.70	CONNECTOR, AIR DVTR VLV WRG (WHITE) (2–WAY F, W/LEADS) (02.535) (AC–DELCO #PT249) .....
93	Y 5.7P (LT1)	15306045	1	28.78	CONNECTOR, AIR SW VLV (W/LEADS) (TWO 12GA AND THREE 14GA WIRES) (08.855) (AC–DELCO #PT1205) .....
94	Y 5.7P (LT1)	12117025	1	21.82	CONNECTOR, AIR SW VLV (W/LEADS) (BLACK) (3–WAY F) (W/LEADS) (02.383) (AC–DELCO #PT420) .....
90	Y 4–SPD A/TRANS (MD8), 6–SPD M/TRANS (ML9)	12116930	1	29.89	CONNECTOR, DIODE NETWORK (W/LEADS) (02.535) (AC–DELCO #PT418) .....
90–91	Y07 STEREO CASSETTE (UM6), CASSETTE STEREO (UU8), CASSETTE/CD PLAYER (U1F)	12116930	1	29.89	CONNECTOR, DIODE NETWORK (4–WAY FEMALE EDGE BOARD) (W/LEADS) (02.535) (AC–DELCO #PT418) .....
91–95	Y	12116930	1	29.89	CONNECTOR, DIODE NETWORK (4–WAY FEMALE EDGE BOARD) (W/LEADS) (02.535) (AC–DELCO #PT418) .....
92	Y STEREO CASSETTE (UM6), CASSETTE STEREO (UU8), CASSETTE/CD PLAYER (U1F)	12116930	1	29.89	CONNECTOR, DIODE NETWORK (4–WAY FEMALE EDGE BOARD) (W/LEADS) (02.535) (AC–DELCO #PT418) .....
93	Y07	12069433	1	94.88	CONNECTOR, DIODE NETWORK (02.342) (AC–DELCO #4SW37FS) ...
90–91	Y 5.7–8 (L98)	12101910	1	35.81	CONNECTOR, DISTR (BLACK) (4–WAY F) (W/LEADS) (02.535) (AC–DELCO #PT182) .....
93	Y	15305942	1	36.08	CONNECTOR, DISTR (W/LEADS) (4–WAY F, W/LEADS) (02.383) (AC–DELCO #PT1174) .....
95–96	Y 5.7P (LT1)	12129619	1	2.79	CONNECTOR, DISTR (4–WAY F, W/O LEADS) .....
96	Y 5.7–5 (LT4)	12129619	1	2.79	CONNECTOR, DISTR (4–WAY F, W/O LEADS) .....
90–93	Y	12101918	1	27.21	CONNECTOR, I/P WRG HARN DATA LINK CONN BYPASS (12–WAY F) (W/LEADS) (02.535) (AC–DELCO #PT190) .....

2.530 BOOT – CONDUIT – CONNECTOR – COVER – INSULATOR – LOCK – PLUG – PROTECTOR – SEAL – TERMINAL, Chassis Electrical(Con't)

91	Y 5.7–8 (L98)	12126446	1	60.39	CONNECTOR, INLINE–FUSE (2–WAY F, W/LEADS & COVER) (02.535)
92–93	Y 5.7J (LT5)	12126446	1	60.39	CONNECTOR, INLINE–FUSE (2–WAY F, W/LEADS & COVER) (02.535)
92–95	Y ELEK RIDE & HANDLING (FX3)	12092249	2	2.44	CONNECTOR, INLINE–TO CHAS HARN (23–WAY F) (W/LEADS)
92	Y	12116445	1	DISCON	CONNECTOR, INLINE–TO CHAS HARN (W/LEADS)
92–95	Y 5.7J (LT5)	12117271	1	57.63	CONNECTOR, INLINE–TO CHAS HARN (WHITE) (8–WAY F) (W/LEADS) (02.535) (AC–DELCO #PT444)
93	Y	12101853	1	19.29	CONNECTOR, INLINE–TO CHAS HARN (2–WAY M, W/LEADS, USED T/W 15300591) (02.535) (AC–DELCO #PT245)
93	Y 5.7P (LT1)	12117271	1	57.63	CONNECTOR, INLINE–TO CHAS HARN (WHITE) (8–WAY F) (W/LEADS) (02.535) (AC–DELCO #PT444)
94–95	Y	12092248	1	1.73	CONNECTOR, INLINE–TO CHAS HARN (23–WAY M) (W/O LEADS)
95	Y	12101853	1	19.29	CONNECTOR, INLINE–TO CHAS HARN (2–WAY M, W/LEADS, USED T/W 15300591) (02.535) (AC–DELCO #PT245)
94–96	Y	12117363	1	17.87	CONNECTOR, INLINE–TO COP LP (3–WAY F) (02.895) (AC–DELCO #PT496)
92	Y 5.7P (LT1), 4–SPD A/TRANS (MD8), 6–SPD M/TRANS (ML9), A/C MAN CONT (C60), A/C AUTO ELEC CONT (C68)	12101854	1	43.66	CONNECTOR, INLINE–TO DISTR HARN (6–WAY F) (W/LEADS) (02.535) (AC–DELCO #PT246)
93	Y 5.7P (LT1)	12085537	2	31.88	CONNECTOR, INLINE–TO DISTR HARN (4–WAY F) (W/LEADS) (02.535) (AC–DELCO #PT147)
93–94	Y	12085537	2	31.88	CONNECTOR, INLINE–TO ELEK IGN (4–WAY F) (W/LEADS) (02.535) (AC–DELCO #PT147)
96	Y	12085537	2	31.88	CONNECTOR, INLINE–TO ELEK IGN (4–WAY F) (W/LEADS) (02.535) (AC–DELCO #PT147)
96	Y CHASSIS, REALTIME DAMPING (F45)	12117025	4	21.82	CONNECTOR, INLINE–TO ELEK SUSP POSN SEN (BLACK) (3–WAY F) (W/LEADS) (02.383) (AC–DELCO #P[illegible])
90	Y 5.7J (LT5), SOFT RIDE SUSP (FE1), HVY DUTY SUSP (FE7), (EXC DAYTIME RUNNING LGT (T61)	12085509	1	48.33	CONNECTOR, INLINE–TO ENG HARN (6–WAY [illegible] W/LEADS) (02.535) (AC–DELCO #PT130)
90	Y 4–SPD A/TRANS (MD8), 6–SPD M/TRANS (ML9)	12101762	1	68.40	CONNECTOR, INLINE–TO ENG HARN (10–WAY F, W/LEADS) (02.535) (AC–DELCO #PT150)
90–96	Y	12101823	1	49.04	CONNECTOR, INLINE–TO ENG HARN (10–WAY M) (W/LEADS) (02.535) (AC–DELCO #PT215)
90	Y 5.7–8 (L98)	12101910	1	35.81	CONNECTOR, INLINE–TO ENG HARN (4–WAY F, W/LEADS) (02.535) (AC–DELCO #PT182)

© 2000 GENERAL MOTORS SERVICE PARTS OPERATIONS

2.530 BOOT – CONDUIT – CONNECTOR – COVER – INSULATOR – LOCK – PLUG – PROTECTOR – SEAL – TERMINAL, Chassis Electrical(Con't)

90	Y 6-SPD M/TRANS (ML9), A/C MAN CONT (C60)	12125674	1	35.57	CONNECTOR, INLINE-TO ENG HARN (8-WAY M, W/LEADS) (AC-DELCO #PT586)
90	Y 6-SPD M/TRANS (ML9), A/C AUTO ELEC CONT (C68), SOFT RIDE SUSP (FE1), HVY DUTY SUSP (FE7), (EXC DAYTIME RUNNING LGT (T61)	12125674	1	35.57	CONNECTOR, INLINE-TO ENG HARN (8-WAY M, W/LEADS) (AC-DELCO #PT586)
90	Y 4-SPD A/TRANS (MD8), A/C MAN CONT (C60) A/C AUTO ELEC CONT (C68)	12125674	1	35.57	CONNECTOR, INLINE-TO ENG HARN (8-WAY M, W/LEADS) (AC-DELCO #PT586)
91	Y 6-SPD M/TRANS (ML9), A/C MAN CONT (C60), A/C AUTO ELEC CONT (C68)	12085481	1	17.55	CONNECTOR, INLINE-TO ENG HARN (BLACK) (2-WAY M) (W/LEADS) (02.535) (AC-DELCO #PT103)
91	Y 5.7J (LT5), SOFT RIDE SUSP (FE1), HVY DUTY SUSP (FE7), (EXC DAYTIME RUNNING LGT (T61)	12085509	1	48.33	CONNECTOR, INLINE-TO ENG HARN (6-WAY F) (W/LEADS) (02.535) (AC-DELCO #PT130)
91-93	Y 4-SPD A/TRANS (MD8), 6-SPD M/TRANS (ML9), A/C MAN CONT (C60), A/C AUTO ELEC CONT (C68)	12101762	1	68.40	CONNECTOR, INLINE-TO ENG HARN (10-WAY F) (W/LEADS) (02.535) (AC-DELCO #PT150)
91	Y 4-SPD A/TRANS (MD8), 6-SPD M/TRANS (ML9), A/C MAN CONT (C60), A/C AUTO ELEC CONT (C68)	12125674	1	35.57	CONNECTOR, INLINE-TO ENG HARN (8-WAY M) (W/LEADS) (AC-DELCO #PT586)
92-96	Y	12101832	1	45.10	CONNECTOR, INLINE-TO ENG HARN (BLUE) (10-WAY F, W/LEADS) (02.535) (AC-DELCO #PT224)
92-94	Y	12101854	1	43.66	CONNECTOR, INLINE-TO ENG HARN (6-WAY F) (W/LEADS) (02.535) (AC-DELCO #PT246)
92	Y	12116445	1	DISCON	CONNECTOR, INLINE-TO ENG HARN (W/LEADS)
92-96	Y	12117270	1	54.65	CONNECTOR, INLINE-TO ENG HARN (8-WAY M, W/LEADS) (AC-DELCO #PT443)
93-95	Y	12101855	1	19.95	CONNECTOR, INLINE-TO ENG HARN (2-WAY F) (W/LEADS) (W/SEAL) (02.535) (AC-DELCO #PT247)
94-96	Y 6-SPD M/TRANS (ML9)	12092248	1	1.73	CONNECTOR, INLINE-TO ENG HARN (23-WAY M) (W/O LEADS)
94-95	Y	12101853	1	19.29	CONNECTOR, INLINE-TO ENG HARN (2-WAY M, W/LEADS, USED T/W 15300591) (02.535) (AC-DELCO #PT245)
95	Y 5.7J (LT5)	12117270	1	54.65	CONNECTOR, INLINE-TO ENG HARN (8-WAY M, W/LEADS) (AC-DELCO #PT443)
95-96	Y 5.7P (LT1)	12126023	1	48.08	CONNECTOR, INLINE-TO ENG HARN (4-WAY M, W/LEADS) (AC-DELCO #PT654)
96	Y 4-SPD A/TRANS (M30)	12092248	1	1.73	CONNECTOR, INLINE-TO ENG HARN (23-WAY M) (W/O LEADS)
96	Y	12101854	1	43.66	CONNECTOR, INLINE-TO ENG HARN (6-WAY F) (W/LEADS) (02.535) (AC-DELCO #PT246)

© 2000 GENERAL MOTORS SERVICE PARTS OPERATIONS

2.530 BOOT – CONDUIT – CONNECTOR – COVER – INSULATOR – LOCK – PLUG – PROTECTOR – SEAL – TERMINAL, Chassis Electrical(Con't)

90	Y	12058688	1	DISCON	CONNECTOR, INLINE–TO ENG HARN, ECM HARN (CR MONITOR COAXIAL LEAD-IN) (32 PIN) (JUNC 2) (02.535)
90	Y 5.7J (LT5), A/C MAN CONT (C60), SOFT RIDE SUSP (FE1), HVY DUTY SUSP (FE7), A/C AUTO ELEC CONT (C68)	12085491	AR	16.87	CONNECTOR, INLINE–TO F/INJR HARN (W/LEADS) (02.535) (AC–DELCO #PT113)
90–91	Y 5.7–8 (L98), 6–SPD M/TRANS (ML9), 4–SPD A/TRANS (MD8), A/C MAN CONT (C60), A/C AUTO ELEC CONT (C68)	12085491	AR	16.87	CONNECTOR, INLINE–TO F/INJR HARN (2–WAY F) (W/LEADS) (02.535) (AC–DELCO #PT113)
90–91	Y 5.7–8 (L98), 4–SPD A/TRANS (MD8), 6–SPD M/TRANS (ML9), A/C MAN CONT (C60), A/C AUTO ELEC CONT (C68)	12085534	1	32.61	CONNECTOR, INLINE–TO FWD LP HARN (4–WAY, W/LEADS) (02.535) (AC–DELCO #PT145)
91–96	Y	02965810	2	.70	CONNECTOR, INLINE–TO FWD LP HARN (3–WAY F, W/O LEADS)
91	Y 5.7J (LT5), A/C AUTO ELEC CONT (C68), SOFT RIDE SUSP (FE1), HVY DUTY SUSP (FE7)	12101892	1	47.82	CONNECTOR, INLINE–TO FWD LP HARN (W/LEADS) (02.535) (AC–DELCO #PT162)
91–96	Y	12117367	2	24.98	CONNECTOR, INLINE–TO FWD LP HARN (3–WAY F) (W/LEADS, 59 SERIES) (AC–DELCO #PT500)
92–96	Y	12101852	1	39.24	CONNECTOR, INLINE–TO FWD LP HARN (6–WAY M) (W/LEADS) (02.535) (AC–DELCO #PT244)
94	Y	12102747	2	21.07	CONNECTOR, INLINE–TO HTD OXY SEN (BLACK) (2–WAY F) (W/LEADS) (03.670) (AC–DELCO #PT374)
90–96	Y	12101762	1	68.40	CONNECTOR, INLINE–TO I/P HARN (10–WAY F) (W/LEADS) (02.535) (AC–DELCO #PT150)
90	Y 5.7J (LT5), A/C MAN CONT (C60), A/C AUTO ELEC CONT (C68), SOFT RIDE SUSP (FE1), HVY DUTY SUSP (FE7)	12101823	1	49.04	CONNECTOR, INLINE–TO I/P HARN (10–WAY M, W/LEADS) (02.535) (AC–DELCO #PT215)
90–91	Y 5.7–8 (L98), 4–SPD A/TRANS (MD8), 6–SPD M/TRANS (ML9), A/C MAN CONT (C60), A/C AUTO ELEC CONT (C68)	12101823	1	49.04	CONNECTOR, INLINE–TO I/P HARN (10–WAY M) (W/LEADS) (02.535) (AC–DELCO #PT215)
90	Y STEREO CASSETTE (UM6), CASSETTE STEREO (UU8), CASSETTE/CD PLAYER (U1F)	12126015	1	28.45	CONNECTOR, INLINE–TO I/P HARN (4–WAY M, W/LEADS) (AC–DELCO #PT646)
90–92	Y67 STEREO CASSETTE (UM6), CASSETTE STEREO (UU8), CASSETTE/CD PLAYER (U1F)	12101823	1	49.04	CONNECTOR, INLINE–TO I/P HARN (10–WAY M) (W/LEADS) (02.535) (AC–DELCO #PT215)
91	Y 5.7J (LT5), A/C AUTO ELEC CONT (C68), SOFT RIDE SUSP (FE1), HVY DUTY SUSP (FE7)	12085535	1	17.46	CONNECTOR, INLINE–TO I/P HARN (2–WAY F) (W/LEADS) (HAS INDEX TAB @ OUTER EDGE OF CAVITY B) (02.535) (AC–DELCO #PT146)
91–95	Y	12101822	1	32.35	CONNECTOR, INLINE–TO I/P HARN (GRAY) (8–WAY F) (W/LEADS) (02.535) (AC–DELCO #PT214)
91	Y 5.7J (LT5), A/C AUTO ELEC CONT (C68), SOFT RIDE SUSP (FE1), HVY DUTY SUSP (FE7)	12101823	1	49.04	CONNECTOR, INLINE–TO I/P HARN (10–WAY M) (W/LEADS) (02.535) (AC–DELCO #PT215)
91	Y	12116926	1	61.00	CONNECTOR, INLINE–TO I/P HARN (PART OF SIR SUB HARN) (8–WAY F) (14.865) (AC–DELCO #PT415)

© 2000 GENERAL MOTORS SERVICE PARTS OPERATIONS

2.530 BOOT – CONDUIT – CONNECTOR – COVER – INSULATOR – LOCK – PLUG – PROTECTOR – SEAL – TERMINAL, Chassis Electrical(Con't)

91–92	Y07 STEREO CASSETTE (UM6), CASSETTE STEREO (UU8), CASSETTE/CD PLAYER (U1F)	12126015	1	28.45	CONNECTOR, INLINE–TO I/P HARN (4–WAY M) (W/LEADS) (AC–DELCO #PT646) .....
92–96	Y	12092249	2	2.44	CONNECTOR, INLINE–TO I/P HARN (23–WAY F) (W/LEADS) .....
93–96	Y	12092248	1	1.73	CONNECTOR, INLINE–TO I/P HARN (23–WAY M) (W/O LEADS) .....
93–96	Y	12101823	1	49.04	CONNECTOR, INLINE–TO I/P HARN (10–WAY M) (W/LEADS) (02.535) (AC–DELCO #PT215) .....
93	Y	12101836	1	17.46	CONNECTOR, INLINE–TO I/P HARN (2–WAY M, W/LEADS) (02.535) (AC–DELCO #PT228) .....
93–96	Y	12103188	1	1.82	CONNECTOR, INLINE–TO I/P HARN (BLUE) (10–WAY M, W/O LEADS) ...
94	Y	12117371	1	13.24	CONNECTOR, INLINE–TO I/P HARN (3–WAY M) (W/LEADS) (AC–DELCO #PT504) .....
95–96	Y RECL FRT BKT ST (AQ9)	12117371	1	13.24	CONNECTOR, INLINE–TO I/P HARN (3–WAY M) (W/LEADS) (AC–DELCO #PT504) .....
94	Y 6–SPD M/TRANS (ML9)	12065803	1	2.20	CONNECTOR, INLINE–TO INST CSTR (34–WAY F) (09.735) .....
90–95	Y	12085481	1	17.56	CONNECTOR, INLINE–TO STRG COL HARN (BLACK) (2–WAY M) (W/LEADS) (02.535) (AC–DELCO #PT103) .....
91–95	Y 5.7J (LT5)	12101899	1	17.95	CONNECTOR, INLINE–TO STRG COL HARN (FEM METRI–PACK, PULL TO ST) (BLACK) (2–WAY F) (W/LEADS) (02.383) (AC–DELCO #PT169) .....
90–95	Y	12102756	1	38.31	CONNECTOR, INLINE–TO T/SIG SW (TO STRG COL) (11–WAY F) (AC–DELCO #PT386) .....
93	Y 4–SPD A/TRANS (M30)	12102633	1	18.27	CONNECTOR, INLINE–TO TRANS (5–WAY F, W/LEADS) (09.652) (AC–DELCO #12102633) .....
93–94	Y 5.7P (LT1)	15306045	1	28.78	CONNECTOR, INLINE–TO TRANS (4TH & 6TH GR/RLY) (TWO 12GA AND THREE 14GA WIRES) (08.855) (AC–DELCO #PT1205) .....
94	Y	12126459	1	61.55	CONNECTOR, INLINE–TO TRANS (12–WAY F, W/LEADS) (AC–DELCO #PT729) .....
96	Y 4–SPD A/TRANS (M30)	12160492	1	5.58	CONNECTOR, INLINE–TO TRANS (12–WAY F, W/O LEADS) .....
96	Y 4–SPD A/TRANS (M30)	12160782	1	4.66	CONNECTOR, INLINE–TO TRANS (20–WAY M) .....
90	Y 5.7J (LT5), SOFT RIDE SUSP (FE1), HVY DUTY SUSP (FE7), (EXC DAYTIME RUNNING LGT (T61)	12126032	1	15.88	CONNECTOR, INLINE–TO VAC PUMP HARN (W/LEADS) (02.575) (AC–DELCO #PT663) .....
90	Y 5.7J (LT5), DAYTIME RUNNING LGT (T61)	12126032	1	15.88	CONNECTOR, INLINE–TO VAC PUMP HARN (W/LEADS) (02.575) (AC–DELCO #PT663) .....
90–94	Y	12117379	1	29.43	CONNECTOR, PARK/NEU POSN SW WRG HARN (6 CAV F) (04.054) (AC–DELCO #PT512) .....

© 2000 GENERAL MOTORS SERVICE PARTS OPERATIONS

2.530 BOOT – CONDUIT – CONNECTOR – COVER – INSULATOR – LOCK – PLUG – PROTECTOR – SEAL – TERMINAL, Chassis Electrical(Con't)

90–94	Y	12101864	1	17.62	CONNECTOR, PWR FEED HARN (BLACK) (3–WAY F) (W/LEADS) (02.535) (AC–DELCO #PT256)
96	Y	15305875	1		CONNECTOR, RLY–BLO MOT LOW SPD (5–WAY F) (W/LEADS & RELAY) (08.855) (AC–DELCO #PT1016)
96	Y	15306045	1	28.78	CONNECTOR, RLY–BLO MOT LOW SPD (TWO 12GA AND THREE 14GA WIRES) (08.855) (AC–DELCO #PT1205)
96	Y 4–SPD A/TRANS (M30)	12162201	1	.56	CONNECTOR, SOL–A SHFT VLV (NATURAL) (2–WAY F) (W/O LEADS)
90	Y	10098903	1	11.82	COVER, ENG WRG HARN ECM CONN (02.525)
91	Y 5.7J (LT5)	10098903	1	11.82	COVER, ENG WRG HARN ECM CONN (02.525)
91	Y 5.7–8 (L98)	12064802	1	10.29	COVER, ENG WRG HARN ECM CONN
92–93	Y	12064802	1	10.29	COVER, ENG WRG HARN ECM CONN
94–95	Y 5.7J (LT5)	12064802	1	10.29	COVER, ENG WRG HARN ECM CONN
84–93	Y	10054241	1	*1.82	SEAL, A/TRNS WRG CONN (O RING) (.687 I.D. X .1" THK) (04.338) (AC–DELCO #10054241)
94	Y 5.7P (LT1), 4–SPD A/TRANS (M30), 2.59R (GM1), 3.07R (G44)	10054241	1	*1.82	SEAL, A/TRNS WRG CONN (O RING) (.687 I.D. X .1" THK) (04.338) (AC–DELCO #10054241)
	*EXPORT**********EXPORT**********EXPORT**********EXPORT**********EXPORT*				
96	Y SIG & MKR LP (T90) (EXPORT)	12101823	1	49.04	CONNECTOR, INLINE–TO ELEK BRK MDL (10–WAY M) (W/LEADS) (02.535) (AC–DELCO #PT215)
90	Y 5.7J (LT5), DAYTIME RUNNING LGT (T61)	12085509	1	48.33	CONNECTOR, INLINE–TO ENG HARN (6–WAY F, W/LEADS) (02.535) (AC–DELCO #PT130)
90	Y 6–SPD M/TRANS (ML9), A/C AUTO ELEC CONT (C68), DAYTIME RUNNING LGT (T61)	12125674	1	35.57	CONNECTOR, INLINE–TO ENG HARN (8–WAY M, W/LEADS) (AC–DELCO #PT586)
91	Y 5.7J (LT5), DAYTIME RUNNING LGT (T61)	12085509	1	48.33	CONNECTOR, INLINE–TO ENG HARN (6–WAY F) (W/LEADS) (02.535) (AC–DELCO #PT130)
94–95	Y07 SIG & MKR LP (T90) (EXPORT)	12084203	1	4.74	CONNECTOR, INLINE–TO F/PMP (4–WAY M) (03.107)
94–96	Y HDLP (T72) (EXPORT), RH RULE OF ROAD HDLP (T84) (EXPORT), LH RULE OF ROAD HDLP (T85) (EXPORT), SIG & MKR LP (T90) (EXPORT)	12085537	2	31.88	CONNECTOR, INLINE–TO FWD LP HARN (4–WAY F) (W/LEADS) (02.535) (AC–DELCO #PT147)
90	Y 4–SPD A/TRANS (MD8), A/C MAN CONT (C60), DAYTIME RUNNING LGT (T61)	12167138	1	15.40	CONNECTOR, INLINE–TO I/P HARN (W/LEADS) (02.485) (AC–DELCO #LS71)

2.559 BOLT – BRACKET – CLIP – COVER – INSULATOR – PLATE – RETAINER – SHIELD – SPACER – STRAP – STUD – WASHER, Chassis/Engine Wiring Harness

84–89	Y 5.7–8	14062552	1	1.12	BRACKET, ECM WRG HARN
90–91	Y 5.7–8 (L98)	14062552	1	1.12	BRACKET, ECM WRG HARN
84	Y	14066570	2	DISCON	BRACKET, ELEC CONT MDL HARN (TO ENG HD CVR)
84	Y	14057560	1	DISCON	BRACKET, ENG WRG HARN (TO CASE)
84–91	Y	14062511	AR	2.04	BRACKET, ENG WRG HARN (R/SI RR)

© 2000 GENERAL MOTORS SERVICE PARTS OPERATIONS

2.559 BOLT – BRACKET – CLIP – COVER – INSULATOR – PLATE – RETAINER – SHIELD – SPACER – STRAP – STUD – WASHER, Chassis/Engine Wiring Harness(Con't)

84–85	Y	14062552	1	1.12	BRACKET, ENG WRG HARN (TO OIL PAN)
84–88	Y	14062599	AR	.68	BRACKET, ENG WRG HARN (ABOVE LH ENG MT)
84–88	Y	14073493	1	2.04	BRACKET, ENG WRG HARN (L/SI RR)
85–87	Y	14100810	1	DISCON	BRACKET, ENG WRG HARN (RH SI INT MANIF)
89–91	Y 5.7–8 (L98)	14062599	AR	.68	BRACKET, ENG WRG HARN (ABOVE LH ENG MT)
89–91	Y 5.7–8 (L98), 4–SPD A/TRANS (MD8)	14073493	1	2.04	BRACKET, ENG WRG HARN (L/SI RR)
89	Y M/TRNS	14104953	1	DISCON	BRACKET, ENG WRG HARN (L/SI RR)
90	Y 5.7J (LT5), A/C MAN CONT (C60), A/C AUTO ELEC CONT (C68), SOFT RIDE SUSP (FE1), HVY DUTY SUSP (FE7)	14104749	1	2.04	BRACKET, ENG WRG HARN (ALUM, LOC AT RR OF ENG)
90–91	Y 5.7J (LT5)	14104938	1	35.45	BRACKET, ENG WRG HARN (AT OXY & KNOCK SEN CABLES) (STEEL) (LWR LH SI OF BLK NEAR OIL PAN)
91–95	Y 5.7J (LT5)	14104749	1	2.04	BRACKET, ENG WRG HARN (ALUM, LOC AT RR OF ENG)
91–92	Y 5.7J (LT5)	14104941	1	12.90	BRACKET, ENG WRG HARN (TO OIL PAN) (03.682)
91	Y 5.7–8 (L98)	15664822	1	1.05	BRACKET, ENG WRG HARN (01.166)
92–95	Y 5.7J (LT5)	10098912	1	12.90	BRACKET, ENG WRG HARN (03.682)
92–95	Y 5.7P (LT1)	12553341	4	1.12	BRACKET, ENG WRG HARN
92–95	Y 5.7J (LT5)	14104938	1	35.45	BRACKET, ENG WRG HARN (STEEL) (LWR LH SI OF BLK NEAR OIL PAN)
96	Y	12553341	5	1.12	BRACKET, ENG WRG HARN (POS#RH–3, 6, 8, LH–6, 7)
89	Y A/C MAN CONT (C60), A/C AUTO ELEC CONT (C68), SOFT RIDE SUSP (FE1), HVY DUTY SUSP (FE7)	14104961	1	11.32	BRACKET, ENG WRG HARN SHLD
90–91	Y 5.7J (LT5), A/C MAN CONT (C60), A/C AUTO ELEC CONT (C68), SOFT RIDE SUSP (FE1), HVY DUTY SUSP (FE7)	14104961	1	11.32	BRACKET, ENG WRG HARN SHLD
92–95	Y 5.7J (LT5)	14104961	1	11.32	BRACKET, ENG WRG HARN SHLD
84–86	Y	14066531	LH	DISCON	BRACKET, FWD LP WRG HARN (TO FRT BPR IMPACT BAR)
84–86	Y	14066532	RH	DISCON	BRACKET, FWD LP WRG HARN (TO FRT BPR IMPACT BAR)
84–90	Y	14091207	LH	7.55	BRACKET, FWD LP WRG HARN (TO REINFORCEMENT OTR)
84–89	Y	14091208	RH	7.55	BRACKET, FWD LP WRG HARN (TO REINFORCEMENT OTR)
90	Y SOFT RIDE SUSP (FE1), H .D .SUSP (FE7)	14091208	RH	7.55	BRACKET, FWD LP WRG HARN (TO REINFORCEMENT OTR)
84–86	Y	14062523	1	DISCON	BRACKET, I/P WRG HARN
90–93	Y	10165378	1	DISCON	BRACKET, I/P WRG HARN
94–96	Y	10251214	1	6.03	BRACKET, I/P WRG HARN
84–96	Y	14066583	2	3.26	BRACKET, I/P WRG HARN DR LEAD
84–88	Y M/TRNS	14081179	1	DISCON	BRACKET, TBI HARNESS CLIP
88–89	Y A/C (C68)	09798835	1	1.20	CLIP, A .C. DA WIRE TO EVAP HSNG
84–93	Y 4–SPD A/TRANS (MD8)	08673068	2	1.82	CLIP, A/TRNS WRG HARN (04.197) (AC–DELCO #8673068)

© 2000 GENERAL MOTORS SERVICE PARTS OPERATIONS

2.559 BOLT – BRACKET – CLIP – COVER – INSULATOR – PLATE – RETAINER – SHIELD – SPACER – STRAP – STUD – WASHER, Chassis/Engine Wiring Harness(Con't)

90–91	Y 5.7J (LT5), A/C MAN CONT (C60), A/C AUTO ELEC CONT (C68), SOFT RIDE SUSP (FE1), HVY DUTY SUSP (FE7)	14104936	1	.94	CLIP, ENG WRG HARN (2 HOLES) (FRT CVR CYL CASE)
90–95	Y 5.7J (LT5)	14104937	1	.94	CLIP, ENG WRG HARN (1 HOLE) (OIL FILTER HSG)
92–95	Y 5.7J (LT5)	14104936	1	.94	CLIP, ENG WRG HARN (2 HOLES) (FRT CVR CYL CASE)
93–95	Y 5.7P (LT1)	01864022	1	.77	CLIP, ENG WRG HARN (1/2 DIA HARD STL)
93–94	Y 5.7P (LT1)	01864022	1	.77	CLIP, FWD LP WRG HARN (1/2 DIA HARD STL)
93–94	Y	03816659	AR	*.87	CLIP, FWD LP WRG HARN (7" ADJ, W/ROSEBUD FOR .25 DIA HOLE .031–.14 TH) (08.965) (STRAP)
94	Y 5.7J (LT5)	01864022	1	.77	CLIP, FWD LP WRG HARN (1/2 DIA HARD STL)
85	Y	09798835	1	1.26	CLIP, I/P WRG HARN
93–94	Y	01839906	1	*.13	CLIP, I/P WRG HARN (LARGE 3–5 WIRE) (08.965) (AC–DELCO #1839906)
93	Y	01864022	1	.77	CLIP, I/P WRG HARN (1/2 DIA HARD STL)
92–93	Y RECL FRT BKT ST (AQ9)	01864022	1	.77	CLIP, I/P WRG HARN EXTN HARN (1/2 DIA HARD STL)
94–95	Y	01864022	1	.77	CLIP, WRG HARN (BRK PRESS MOD VLV) (1/2 DIA HARD STL)
86–96	Y	14090618	1	7.05	PLATE, ECM WRG HARN GROM RET STUD (03.675)
92–96	Y	10086254	1	3.37	PLATE, ELEK BRK CONT WRG HARN GROM MT
90–96	Y	10086254	1	3.37	PLATE, ENG WRG HARN GROM BKG
84–87	Y	00480534	AR	*.84	RETAINER, PNL HOLE (DIA.250, THK .03–.30) (11.419)
93	Y 5.7P (LT1), 6–SPD M/TRANS (ML9), DIAGNOSTIC SYSTEM (BAK), A/C MAN CONT (C60)	12129021	4	1.52	RETAINER, ECM WRG HARN (BLACK) (32–WAY F)
93	Y 5.7P (LT1), 6–SPD M/TRANS (ML9), DIAGNOSTIC SYSTEM (BAK), A/C MAN CONT (C60)	12129022	4	1.52	RETAINER, ECM WRG HARN (CLEAR) (USE W/32–WAY CONN)
93	Y 5.7P (LT1), 6–SPD M/TRANS (ML9), DIAGNOSTIC SYSTEM (BAK), A/C MAN CONT (C60)	12129023	4	1.52	RETAINER, ECM WRG HARN (BLUE) (USE W/32–WAY CONN)
94	Y 5.7P (LT1)	12129021	4	1.52	RETAINER, ECM WRG HARN (BLACK) (32–WAY F)
94	Y 5.7P (LT1)	12129022	4	1.52	RETAINER, ECM WRG HARN (CLEAR) (USE W/32–WAY CONN)
94	Y 5.7P (LT1)	12129023	4	1.52	RETAINER, ECM WRG HARN (BLUE) (USE W/32–WAY CONN)
89–91	Y	12020833	1	*.73	RETAINER, ECM WRG HARN CONN (GRAY) (1" LONG) (PUSH–IN)
94–96	Y	12129030	2	2.50	RETAINER, ECM WRG HARN CONN (GRAY) (STRAIN RELIEF)
96	Y	12129021	4	1.52	RETAINER, ECM WRG HARN CONN (BLACK) (32–WAY F)
96	Y	12129022	4	1.52	RETAINER, ECM WRG HARN CONN (CLEAR) (USE W/32–WAY CONN)
96	Y	12129023	4	1.52	RETAINER, ECM WRG HARN CONN (BLUE) (USE W/32–WAY CONN)

© 2000 GENERAL MOTORS SERVICE PARTS OPERATIONS

2.559 BOLT – BRACKET – CLIP – COVER – INSULATOR – PLATE – RETAINER – SHIELD – SPACER – STRAP – STUD – WASHER, Chassis/Engine Wiring Harness(Con't)

96	Y	12129024	3	2.50	RETAINER, ECM WRG HARN CONN (RED) (USE W/32–WAY CONN)
96	Y	12129028	2	2.50	RETAINER, ECM WRG HARN CONN (GRAY) (32–WAY)
84–88	Y	14066575	1	DISCON	RETAINER, ENG WRG HARN
89–91	Y 5.7–8 (L98)	14104541	1	4.13	RETAINER, ENG WRG HARN
92–95	Y 5.7P (LT1)	14104541	1	4.13	RETAINER, ENG WRG HARN
96	Y	14104541	1	4.13	RETAINER, ENG WRG HARN
90–91	Y	12077996	1	.52	RETAINER, F/INJR WRG HARN CONN (02.535)
84	Y 5.7–8 (L83)	08917236	1	1.45	RETAINER, OXY SEN CONN
85–91	Y 5.7–8 (L98)	08917236	1	1.45	RETAINER, OXY SEN CONN
92–94	Y 5.7P (LT1), (EXC LEADED FUEL EMIS EXPORT (NM8)	08917236	1	1.45	RETAINER, OXY SEN CONN

3.145 BRACKET – CLAMP – CLIP – CONNECTOR – HARNESS – HOSE – PIPE – SHIELD – TUBE, Early Fuel Evaporation

86–89	Y67	14092701	1	7.75	BRACKET, BRK & FUEL VPR PIPE
87	Y07 1BL (PERF HDLG PKG Z51), B2B (SPORT HDLG PKG Z52)	14092701	1	7.75	BRACKET, BRK & FUEL VPR PIPE
88–89	Y07 PERF HDLG PKG (Z51), SPORT HDLG PKG (Z52)	14092701	1	7.75	BRACKET, BRK & FUEL VPR PIPE
90–91	Y	14092701	1	7.75	BRACKET, FUEL VPR PIPE
96	Y 5.7P (LT1), 5.7–5 (LT4)	12555830	1	.75	CONNECTOR, EVAP EMIS CNSTR PURGE HOSE (90 DEG ELBOW)
91–95	Y	10046084	1	.77	CONNECTOR, EVAP EMIS HOSE (03.130)
96	Y 5.7P (LT1), 5.7–5 (LT4)	10046084	1	.77	CONNECTOR, EVAP EMIS HOSE (03.130)
84–96	Y	00474793	1	13.42	CONNECTOR, EVAP EMIS INTER HOSE (THREADS MUST BE SEALED W/THREAD SEALANT 12346004.) (03.680)
85–86	Y	10496984	1	DISCON	CONNECTOR, TEE
87	Y	10046010	1	DISCON	HARNESS, FUEL VPR CNSTR
88–89	Y	10055891	1	23.36	HARNESS, FUEL VPR CNSTR
90	Y (5.7–8)	10055891	1	23.36	HARNESS, FUEL VPR CNSTR
90	Y (5.7J) SOFT RIDE SUSP (FE1), H .D .SUSP (FE7)	14104815	1	33.66	HARNESS, FUEL VPR CNSTR
91–95	Y	10105300	1	43.35	HOSE, EVAP EMIS CNSTR PURGE
96	Y 5.7P (LT1), 5.7–5 (LT4)	12552593	1	32.39	HOSE, EVAP EMIS CNSTR PURGE
92–95	Y 5.7P (LT1)	10105299	1	3.67	HOSE, EVAP EMIS CNSTR PURGE SOL VLV
96	Y 5.7P (LT1), 4–SPD A/TRANS (M30)	12551611	1	3.16	PIPE, EVAP EMIS CNSTR PURGE SOL VLV
96	Y 5.7–5 (LT4), 6–SPD M/TRANS (ML9)	12551611	1	3.16	PIPE, EVAP EMIS CNSTR PURGE SOL VLV
86–96	Y	14104690	1	18.26	SHIELD, BRK & EVAP EMIS PIPE
88–90	Y 5.7–8	10055892	1	5.41	TUBE, EVAP EMIS CNSTR PURGE
96	Y 5.7P (LT1), 4–SPD A/TRANS (M30)	12551608	1	3.25	TUBE, EVAP EMIS CNSTR PURGE
96	Y 5.7–5 (LT4), 6–SPD M/TRANS (ML9)	12551608	1	3.25	TUBE, EVAP EMIS CNSTR PURGE
87	Y	10046011	1	DISCON	TUBE, FUEL VPR CNSTR

© 2000 GENERAL MOTORS SERVICE PARTS OPERATIONS

3.162 BOLT – CLAMP – CLIP – RETAINER, Fuel Line

89–91	Y 5.7–8 (L98)	15664822	AR	1.05	CLIP, FUEL FEED & RTN FRT PIPE (01.166)
88–96	Y	10052168	AR	1.65	CLIP, FUEL FEED & RTN PIPE
88–96	Y	10052169	2	1.45	CLIP, FUEL FEED & RTN RR PIPE
92–96	Y	10052168	4	1.65	CLIP, FUEL FEED & RTN RR PIPE
84–87	Y	14050043	3	DISCON	CLIP, FUEL FEED FRT PIPE
90–93	Y 5.7J (LT5)	10158064	1	4.15	CLIP, FUEL FEED PIPE
84	Y	14076130	1	1.12	CLIP, FUEL FEED RR PIPE (RETAINS 2 PIPES) (04.686)
84–87	Y	00313442	2	1.10	CLIP, FUEL RTN FRT PIPE (2 TUBE SI BY SI)
91	Y	10098178	3	DISCON	CLIP, FUEL VPR & FRT BRK PIPE (04.686)
84	Y	02399078	1	1.30	CLIP, FUEL VPR PIPE (CLSD TYPE) (04.866)
84–87	Y	14050054	1	1.10	CLIP, FUEL VPR PIPE
88–90	Y	14050054	1	1.10	CLIP, FUEL VPR PIPE (HOLDS LPG TUBE)

3.671 ADAPTER – BOLT – BOLT KIT – BRACKET – CLAMP – CLIP – COVER – FILTER – GASKET – GROMMET – HOUSING – NUT – PLATE – RETAINER – SPACER – STUD, Emission Control System

84–93	Y	12337892	2	*1.13	BOLT, ECM BRKT (M5X.8X16 THD) (SPECIAL) (AC–DELCO #12337892)
93–95	Y 5.7J (LT5)	12337892	4	*1.13	BOLT, ECM BRKT (M5X.8X16 THD) (SPECIAL) (AC–DELCO #12337892)
92–94	Y 5.7P (LT1)	09441894	2	2.85	BOLT, EGR VLV (TO BE USED W/WASHER 11501869) (HFH, 5/16–18X1.00, 280M, PC, .65 OD) (08.900)
85–87	Y	14082472	1	DISCON	BRACKET, AIR INJ CONT VLV
85	Y FED	14082477	1	DISCON	BRACKET, AIR INJ SW VLV
86–87	Y (EXC NM8 EXPORT)	14082477	1	DISCON	BRACKET, AIR INJ SW VLV
90–91	Y (5.7J)	10086315	1	31.11	BRACKET, ECM
92–96	Y	10143544	1	31.11	BRACKET, ECM
90–91	Y (5.7–8)	10143544	1	31.11	BRACKET, ECM W/SEAL
84	Y	14057006	1	DISCON	BRACKET, EGR SOL
85	Y	14087565	1	DISCON	BRACKET, EGR SOL
85	Y	14087418	1	DISCON	BRACKET, EGR TEMP SW WIRE
85–89	Y	14080604	1	11.68	BRACKET, ELEK FUEL CONT MDL
84	Y	14062575	1	DISCON	BRACKET, ELEK FUEL CONT MDL LWR
84	Y	14062576	1	DISCON	BRACKET, ELEK FUEL CONT MDL UPR
94–95	Y 5.7P (LT1)	10211331	1	8.72	BRACKET, PCM
96	Y	10211331	1	8.72	BRACKET, PCM
90–91	Y 5.7J (LT5), SOFT RIDE SUSP (FE1), HVY DUTY SUSP (FE7)	14104359	1	7.29	BRACKET, SECD AIR INJN BYPASS VLV
94	Y 5.7P (LT1)	12129073	1	.45	BRACKET, SECD AIR INJN PUMP RLY (BLACK) (04.720) (AC–DELCO #12129073)
96	Y	12129073	1	.45	BRACKET, SECD AIR INJN PUMP RLY (BLACK) (04.720) (AC–DELCO #12129073)
84–88	Y	01985870	1	1.68	CLIP, FILTER RET
89–91	Y 5.7–8 (L98)	01985870	1	1.68	CLIP, FILTER RET
96	Y 5.7–5 (LT4), LEADED FUEL EMIS EXPORT (NM8)	10054880	1	6.22	COVER, EGR VLV OPG
85–89	Y	14080605	1	DISCON	COVER, ELEK FUEL CONT MDL HSG

© 2000 GENERAL MOTORS SERVICE PARTS OPERATIONS

3.671 ADAPTER – BOLT – BOLT KIT – BRACKET – CLAMP – CLIP – COVER – FILTER – GASKET – GROMMET – HOUSING – NUT – PLATE – RETAINER – SPACER – STUD, Emission Control System(Con't)

90–92	Y 5.7J (LT5)	01977796	1	.18	FILTER, EGR VAC REG SOL VLV (AC–DELCO #219–14)
92–96	Y 5.7P (LT1)	01977880	1	*.39	FILTER, EGR VAC REG SOL VLV (03.140) (AC–DELCO #219–15)
93–95	Y 5.7J (LT5)	10159525	1	2.47	FILTER, EGR VAC REG SOL VLV (03.670) (AC–DELCO #219–16)
90–91	Y SOFT RIDE SUSP (FE1), H .D .SUSP (FE7)	10086259	1	11.27	HOUSING, ECM
92–93	Y	10086259	1	11.27	HOUSING, ECM
94–95	Y 5.7J (LT5)	10086259	1	11.27	HOUSING, ECM
92–96	Y 5.7P (LT1)	09442958	1	*1.00	NUT, EGR VAC REG VLV SOL (3/8–16 PC, 286M) (HEX, FLANGE) (08.917)
94–96	Y 5.7P (LT1)	14080362	2	*1.65	STUD, EGR VLV (5/16 X 18 X 1 43/64) (01.428)
96	Y 5.7–5 (LT4)	14080362	2	*1.65	STUD, EGR VLV (5/16 X 18 X 1 43/64) (01.428)
	*EXPORT**********EXPORT**********EXPORT**********EXPORT**********EXPORT*				
94–96	Y 5.7P (LT1), LEADED FUEL EMIS EXPORT (NM8)	10054880	1	6.22	COVER, EGR VLV OPG

3.682 BOLT – BRACKET – BUFFER – CLAMP – CONNECTOR – COVER – MODULE – PLUG – RELAY – RETAINER – SEAL – SENSOR – SPACER, Computer Control Sensors

90–95	Y 5.7J (LT5)	11514491	2	4.75	BOLT, MAP SEN (TO BRKT) (5X.8X30, 28.4 THD, 5.9 OD, T25 TORX DR. 9.8 STL) (08.907)
90–95	Y 5.7J (LT5)	10192577	2	1.30	BOLT, MAP SEN BRKT (TO PLENUM) (M6X1.0X13.0) (METRIC TORX HD) (08.913)
92	Y 5.7J (LT5)	11516061	1	*1.10	BOLT, OXY SEN BRKT (M6X1X12, FL HD) (08.900)
90–95	Y 5.7J (LT5)	10192577	4	1.30	BOLT, SECD PORT THROT VLV BRKT (M6X1.0X13.0) (METRIC TORX HD) (08.913)
90–95	Y 5.7J (LT5)	10067781	1	8.68	BRACKET, MAP SEN
90–91	Y 5.7–8 (L98)	10096141	1	4.44	BRACKET, MAP SEN
85	Y	14080660	1	DISCON	BRACKET, MASS AIR FLOW SEN BURNOFF MDL
88–89	Y 5.7–8	14104140	1	1.88	BRACKET, MASS AIRFLOW SEN RLY (01.055)
93–95	Y 5.7J (LT5)	10168622	1	26.01	BRACKET, MDP SEN (03.671)
89	Y	14062552	1	1.12	BRACKET, OXY SEN CONN RET (02.559)
90–91	Y 5.7–8 (L98)	14062552	1	1.12	BRACKET, OXY SEN CONN RET (02.559)
90–92	Y 5.7J (LT5)	14104941	1	12.90	BRACKET, OXY SEN CONN RET
92–96	Y 5.7P (LT1)	10165388	1	2.50	BRACKET, OXY SEN CONN RET (02.559)
93–95	Y 5.7J (LT5)	10225129	1	7.75	BRACKET, OXY SEN CONN RET
96	Y 5.7–5 (LT4)	10165388	1	2.50	BRACKET, OXY SEN CONN RET (02.559)
93–95	Y 5.7J (LT5)	10168670	1	31.60	CLAMP, MDP SEN (01.750)
90–95	Y 5.7J (LT5)	10090513	1	15.44	COVER, MAP SEN (AC–DELCO #10090513)
85	Y 5.7–8 (L98)	14080620	1	882.82	MODULE, MASS AIRFLOW SEN (AC–DELCO #216–52)
92–96	Y 5.7P (LT1)	03738198	1	.71	PLUG, MAP SEN HOLE (08.153)
96	Y 5.7–5 (LT4)	03738198	1	.71	PLUG, MAP SEN HOLE (08.153)

© 2000 GENERAL MOTORS SERVICE PARTS OPERATIONS

3.682 BOLT – BRACKET – BUFFER – CLAMP – CONNECTOR – COVER – MODULE – PLUG – RELAY – RETAINER – SEAL – SENSOR – SPACER, Computer Control Sensors(Con't)

84–90	Y	12338069	1	*3.67	RETAINER, VEH SPD SEN (4338) (AC–DELCO #12338069)
86–96	Y	12146312	1	9.10	SENSOR, ENG COOL TEMP (UND PLENUM) (USED FOR CLUSTERS W/OIL GAGE & LGT COMB) (2–WAY M) (AC–DELCO #213–310)
90–91	Y 5.7J (LT5)	25176708	2	104.75	SENSOR, EXH OXY (STAMPED 10096129) (AC–DELCO #213–632) (RETAIL SENSOR)
92	Y 5.7J (LT5), (1ST DES)	25176708	2	104.75	SENSOR, EXH OXY (W/HARN THAT IS 350MM LG) (STAMPED 10096129) (AC–DELCO #213–632) (RETAIL SENSOR)
92	Y 5.7J (LT5), (2ND DES)	25176709	2	117.30	SENSOR, EXH OXY (W/HARNESS THAT IS 240MM LG) (STAMPED 10137641) (AC–DELCO #213–633)
93–95	Y 5.7J (LT5)	25176709	2	117.30	SENSOR, HTD OXY (STAMPED 10137641) (AC–DELCO #213–633)
94	Y 5.7P (LT1), (EXC LEADED FUEL EMIS EXPORT (NM8)	25312184	3	62.81	SENSOR, HTD OXY (AC–DELCO #AFS75) (OEM SENSOR)
95	Y 5.7P (LT1), (EXC LEADED FUEL EMIS EXPORT (NM8), EUROPEAN PROVISIONS (VD1) (EXPORT), VE1 (EXPORT)	25312184	3	62.81	SENSOR, HTD OXY (AC–DELCO #AFS75) (OEM SENSOR)
96	Y 5.7–5 (LT4)	25312184	4	62.81	SENSOR, HTD OXY (2–PRE CONVERTER, 2–POST CONVERTER) (AC–DELCO #AFS75) (OEM SENSOR)
96	Y 5.7P (LT1), (EXC LEADED FUEL EMIS EXPORT (NM8)	25312184	4	62.81	SENSOR, HTD OXY (2–PRE CONVERTER, 2–POST CONVERTER) (AC–DELCO #AFS75) (OEM SENSOR)
90–95	Y 5.7J (LT5)	25036751	1	33.33	SENSOR, INT AIR TEMP (2 BLADE TERM, 3/8–18 THD) (STAMPED AC12V) (AC–DELCO #213–190)
92–95	Y 5.7P (LT1)	12160244	1	14.61	SENSOR, INT AIR TEMP (AC–DELCO #213–243)
96	Y	12160244	1	14.61	SENSOR, INT AIR TEMP (AC–DELCO #213–243)
85–90	Y	12146312	1	9.10	SENSOR, MANIF AIR TEMP (AT INT MANIF) (2 BLADE TERM, 3/8–18 THD) (USED FOR CLUSTERS W/OIL GAGE & LIGHT COMB) (AC–DELCO #213–310)
85	Y (1ST DES)	25036751	1	33.33	SENSOR, MANIF AIR TEMP (2 BLADE TERM, 3/8–18 THD) (STAMPED AC12V) (HOLES IN PROBE & MATES W/SQUARE SLOTTED CONN) (AC–DELCO #213–190)
91	Y 5.7–8 (L98)	12146312	1	9.10	SENSOR, MANIF AIR TEMP (AT INT MANIF) (USED FOR CLUSTER W/OIL GAGE & LIGHT COMB) (2–WAY M) (AC–DELCO #213–310)
84	Y	16137039	1	65.40	SENSOR, MAP (1 PORT, 3 BLADE TERM, 2 BOLT HOLES) (AC–DELCO #213–185)
90	Y	16137039	1	65.40	SENSOR, MAP (1 PORT, 3 TERM, 2 BOLT HOLES) (AC–DELCO #213–185)

© 2000 GENERAL MOTORS SERVICE PARTS OPERATIONS

3.682 BOLT – BRACKET – BUFFER – CLAMP – CONNECTOR – COVER – MODULE – PLUG – RELAY – RETAINER – SEAL – SENSOR – SPACER, Computer Control Sensors(Con't)

91	Y 5.7–8 (L98)	16137039	1	65.40	SENSOR, MAP (1 PORT, 3 TERM, 2 BOLT HOLES) (AC–DELCO #213–185)
91–95	Y 5.7J (LT5)	16137039	1	65.40	SENSOR, MAP (1 PORT, 3 TERM, 2 BOLT HOLES) (AC–DELCO #213–185)
92–95	Y 5.7P (LT1)	16137039	1	65.40	SENSOR, MAP (1 PORT, 3 TERM, 2 BOLT HOLES) (AC–DELCO #213–185)
96	Y	16137039	1	65.40	SENSOR, MAP (AC–DELCO #213–185)
85	Y	14081243	1	540.26	SENSOR, MASS AIRFLOW (AC–DELCO #213–162)
86–87	Y	14094712	1	507.44	SENSOR, MASS AIRFLOW (AC–DELCO #213–163)
88	Y	10055877	1	397.22	SENSOR, MASS AIRFLOW (AC–DELCO #213–161)
89	Y 5.7–8 (L98)	10055877	1	397.22	SENSOR, MASS AIRFLOW (AC–DELCO #213–161)
94–95	Y 5.7P (LT1)	25008308	1	367.42	SENSOR, MASS AIRFLOW (INCLS SNSR & 2 CLMPS) (AC–DELCO #213–252)
94	Y 5.7P (LT1)	25099215	1	579.98	SENSOR, MASS AIRFLOW (W/INT AIR TEMP SEN) (W/DUCT) (AC–DELCO #213–238)
96	Y	25008308	1	367.42	SENSOR, MASS AIRFLOW (INCLS SNSR & 2 CLMPS) (AC–DELCO #213–252)
90–95	Y 5.7J (LT5)	16006834	1	61.77	SENSOR, MDP (AC–DELCO #16006834)
84–87	Y	25162693	1	51.12	SENSOR, OXY (1 WIRE) (AC–DELCO #AFS20) (OEM SENSOR)
87	Y (EXC LEADED FUEL EMIS EXPORT (NM8)	25166816	2	51.55	SENSOR, OXY (1 WIRE) (AC–DELCO #AFS21) (OEM SENSOR)
88–91	Y 5.7–8 (L98)	25166816	2	51.55	SENSOR, OXY (PURPLE WIRE) (18 X 1.5) (TYPE #21 MATES W/12015791) (AC–DELCO #AFS21) (OEM SENSOR)
92–93	Y 5.7P (LT1), (EXC LEADED FUEL EMIS EXPORT (NM8)	25166816	2	51.55	SENSOR, OXY (PURPLE WIRE) (18 X 1.5) (TYPE #21 MATES W/12015791) (AC–DELCO #AFS21) (OEM SENSOR)
84–90	Y D9A	25007224	1	99.55	SENSOR, VEH SPD (TRANS MTD) (USED W/AXLE RATIO 2.59, 2.73) (AC–DELCO #213–210)
84–90	Y D9B	25007308	1	98.96	SENSOR, VEH SPD (TRANS MTD) (USED W/AXLE RATIO 3.07, 3.33, 3.45) (AC–DELCO #213–223)
91–93	Y (D8I)	10456089	1	36.09	SENSOR, VEH SPD (W/ O–RING) (04.329) (AC–DELCO #213–198)
91–93	Y (D8K)	10456091	1	32.70	SENSOR, VEH SPD (NATURAL COLOR) (PART NO STAMPED ON HSG) (04.329) (AC–DELCO #213–199)
91–93	Y (D8L)	10456092	1	32.70	SENSOR, VEH SPD (BLACK COLOR) (PART NO STAMPED ON HSG) (04.329) (AC–DELCO #213–200)
94–96	Y 6–SPD M/TRANS (ML9)	10456089	1	36.09	SENSOR, VEH SPD (W/ O–RING) (04.329) (AC–DELCO #213–198)

© 2000 GENERAL MOTORS SERVICE PARTS OPERATIONS

3.682 BOLT – BRACKET – BUFFER – CLAMP – CONNECTOR – COVER – MODULE – PLUG – RELAY – RETAINER – SEAL – SENSOR – SPACER, Computer Control Sensors(Con't)

*EXPORT***************EXPORT***************EXPORT***************EXPORT****************EXPORT*

95	Y 5.7P (LT1), EUROPEAN PROVISIONS (VD1) (EXPORT), VE1 (EXPORT)	25312184	2	62.81	SENSOR, HTD OXY (AC–DELCO #AFS75) (OEM SENSOR) .....

4.337 GEAR, Speedometer Driven [6–SPEED MANUAL]

94	Y 5.7P (LT1), 6–SPD M/TRANS (ML9)	25513047	1	7.60	GEAR, SPEEDO DRVN (BLACK) (40 TEETH) (AC–DELCO #25513047) ...
94–96	Y 6–SPD M/TRANS (ML9)	25513049	1	7.60	GEAR, SPEEDO DRVN (GREEN) (42 TEETH) (AC–DELCO #25513049) ...

4.337 GEAR, Speedometer Drive [AUTOMATIC]

Note: FOR USAGE REFER TO SPEEDO GEAR CHART A.T. GRP 4.337

91–93	Y (D4L)	25513050	1	7.60	GEAR, SPEEDO DRVN (PURPLE) (43 TEETH) (AC–DELCO #25513050) ...
92	Y (D7B)	25513043	1	1.85	GEAR, SPEEDO DRVN (WHITE) (36 TEETH) .....
92	Y (D7C)	25513045	1	7.60	GEAR, SPEEDO DRVN (BLUE) (38 TEETH) (AC–DELCO #25513045) ...
92–93	Y (D3X)	25513049	1	7.60	GEAR, SPEEDO DRVN (GREEN) (42 TEETH) (AC–DELCO #25513049) ...
93	Y (D7A)	25513042	1	7.60	GEAR, SPEEDO DRVN (ORANGE) (35 TEETH) (AC–DELCO #25513042) ...
93	Y (D3W)	25513044	1	7.60	GEAR, SPEEDO DRVN (RED) (37 TEETH) (AC–DELCO #25513044) ...

6.020 KNUCKLE, Steering

84	Y	10046329	LH	DISCON	KNUCKLE, STRG .....
84	Y	10046330	RH	DISCON	KNUCKLE, STRG .....
85	Y	10046331	LH	DISCON	KNUCKLE, STRG .....
85	Y	10046332	RH	DISCON	KNUCKLE, STRG .....
86–87	Y	10052259	LH	DISCON	KNUCKLE, STRG .....
86–87	Y	10052260	RH	DISCON	KNUCKLE, STRG .....
88–90	Y	14105147	LH	326.02	KNUCKLE, STRG .....
88–90	Y	14105148	RH	326.02	KNUCKLE, STRG .....
91–93	Y	10098164	RH	317.84	KNUCKLE, STRG .....
94–96	Y	18019572	LH	326.02	KNUCKLE, STRG .....
94–96	Y	18019573	RH	326.02	KNUCKLE, STRG .....

7.440 ACCELEROMETER – ACCELEROMETER KIT – ACTUATOR – BRACKET, Hydraulic Suspension

90–93	Y	12524328	1	184.62	ACCELEROMETER KIT, VEH LATL ....
94–96	Y	10210848	1	201.97	ACCELEROMETER, VEH LATL .....
89–95	Y ELEK RIDE & HANDLING (FX3) ..	22068666	2	501.83	ACTUATOR, FRT HYD SUSP (INCLUDES SNAP RING) .....
94–96	Y	10248890	1	1.12	BRACKET, VEH LATL ACCLRM .....

7.450 BRACKET – CONNECTOR – CONTROL – HARNESS – LAMP – MODULE – NUT – RETAINER – SWITCH – TAPE, Electronic Control Suspension

91	Y ELEK RIDE & HANDLING (FX3) ..	14104798	1	DISCON	BRACKET, ELEK SUSP CONT MDL ....
96	Y CHASSIS, REALTIME DAMPING (F45)	10274869	1	.99	BRACKET, ELEK SUSP CONT MDL ....
90–93	Y ELEK RIDE & HANDLING (FX3) ..	12125665	1	28.96	CONNECTOR, ELEK SUSP STRUT HARN EXTN (GRAY) (6–WAY F) (W/LEADS) (04.663) .....

© 2000 GENERAL MOTORS SERVICE PARTS OPERATIONS

7.450 BRACKET – CONNECTOR – CONTROL – HARNESS – LAMP – MODULE – NUT – RETAINER – SWITCH – TAPE, Electronic Control Suspension(Con't)

92–93	Y	12101827	1	36.30	CONNECTOR, ELEK SUSP STRUT HARN EXTN (8–WAY M) (W/LEADS) (02.535) (AC–DELCO #PT219)
94	Y ELEK RIDE & HANDLING (FX3)	12125665	1	28.96	CONNECTOR, INLINE–TO ELEK SUSP MDL (GRAY) (6–WAY F) (W/LEADS) (04.663)
95	Y 5.7J (LT5)	12125665	1	28.96	CONNECTOR, INLINE–TO ELEK SUSP MDL (GRAY) (6–WAY F) (W/LEADS) (04.663)
96	Y	12085535	1	17.46	CONNECTOR, INLINE–TO ELEK SUSP MDL (2–WAY F) (W/LEADS) (HAS INDEX TAB @ OUTER EDGE OF CAVITY B) (02.535) (AC–DELCO #PT146)
94–95	Y	12041476	1	2.53	CONNECTOR, MDL–ELEK SUSP CONT (32–WAY FEMALE) (W/O LEADS) (02.480)
96	Y CHASSIS, REALTIME DAMPING (F45)	12110206	1	3.50	CONNECTOR, MDL–ELEK SUSP CONT (LT BLUE) (24–W F) (W/O LEADS) (03.670)
96	Y CHASSIS, REALTIME DAMPING (F45)	12129088	1	2.43	CONNECTOR, MDL–ELEK SUSP CONT (BLACK) (8–WAY F, W/O LEADS) (04.720)
91–95	Y ELEK RIDE & HANDLING (FX3)	12117350	1	22.35	CONNECTOR, SW–ELEK SUSP (4–WAY F) (W/LEADS) (09.764) (AC–DELCO #PT483)
93	Y	12125665	1	28.96	CONNECTOR, SW–ELEK SUSP (GRAY) (6–WAY F) (W/LEADS) (04.663)
94–95	Y	12101827	1	36.30	CONNECTOR, SW–ELEK SUSP (8–WAY M) (W/LEADS) (02.535) (AC–DELCO #PT219)
96	Y CHASSIS, REALTIME DAMPING (F45)	12117350	1	22.35	CONNECTOR, SW–ELEK SUSP (4–WAY F) (W/LEADS) (09.764) (AC–DELCO #PT483)
89	Y RIDE & HDLG (FX3)	10098464	1	24.78	CONTROL, ELEK SUSP
90–91	Y 6–WAY PWR D/SEAT ADJR (AC3), ELEK RIDE & HANDLING (FX3), (EXC 6–WAY PWR P/SEAT ADJR (AC1)	10098438	1	158.10	CONTROL, ELEK SUSP (W/D/SEAT ADJR SW)
90	Y 6–WAY (AC1, AC3), RIDE & HDLG (FX3)	14104668	1	DISCON	CONTROL, ELEK SUSP (W/FRT ST ADJR SW)
92–93	Y 6–WAY PWR D/SEAT ADJR (AC3), ELEK RIDE & HANDLING (FX3), (EXC 6–WAY PWR P/SEAT ADJR (AC1)	10161836	1	158.10	CONTROL, ELEK SUSP (W/D/SEAT ADJR SW)
89	Y ELEK SUSP CONT (FX3)	12080608	1	DISCON	HARNESS, ELEK SUSP STRUT WRG HARN EXTN
90–93	Y ELEK RIDE & HANDLING (FX3)	12080856	1	38.50	HARNESS, ELEK SUSP STRUT WRG HARN EXTN
94–95	Y 6–SPD M/TRANS (ML9), ELEK RIDE & HANDLING (FX3)	12130362	1	38.50	HARNESS, ELEK SUSP STRUT WRG HARN EXTN
94–95	Y 4–SPD A/TRANS (M30), ELEK RIDE & HANDLING (FX3)	12130490	1	82.62	HARNESS, ELEK SUSP STRUT WRG HARN EXTN
96	Y CHASSIS, REALTIME DAMPING (F45)	12130460	1	38.50	HARNESS, ELEK SUSP STRUT WRG HARN EXTN
90–91	Y 6–WAY PWR P/SEAT ADJR (AC1), 6–WAY PWR D/SEAT ADJR (AC3), ELEK RIDE & HANDLING (FX3)	10159560	1	1.90	LAMP, SELECTIVE RIDE SW

© 2000 GENERAL MOTORS SERVICE PARTS OPERATIONS

7.450 BRACKET – CONNECTOR – CONTROL – HARNESS – LAMP – MODULE – NUT – RETAINER – SWITCH – TAPE, Electronic Control Suspension(Con't)

92	Y ELEK RIDE & HANDLING (FX3) ..	10159560	1	1.90	LAMP, SELECTIVE RIDE SW .....
93	Y 6–WAY PWR P/SEAT ADJR (AC1), 6–WAY PWR D/SEAT ADJR (AC3), ELEK RIDE & HANDLING (FX3) ...	10159560	1	1.90	LAMP, SELECTIVE RIDE SW .....
89–91	Y ELEK RIDE & HANDLING (FX3) ..	22115156	1	1578.97	MODULE, ELEK SUSP CONT .....
92–95	Y ELEK RIDE & HANDLING (FX3) ..	22052752	1	1014.90	MODULE, ELEK SUSP CONT .....
94–95	Y 4–SPD A/TRANS (M30), ELEK RIDE & HANDLING (FX3)	12135092	1	27.53	MODULE, ELEK SUSP CONT (FILTER) (PART OF ELEK SUSP WRG HARN EXTN) .....
96	Y CHASSIS, REALTIME DAMPING (F45)	16205661	1	674.22	MODULE, ELEK SUSP CONT (MUST BE PROGRAMMED AT DEALER) .....
96	Y CHASSIS, REALTIME DAMPING (F45)	10257543	1	1.38	RETAINER, ELEK SUSP CONT MDL ...
90	Y ELEK RIDE & HANDLING (FX3), (EXC 6–WAY PWR P/SEAT ADJR (AC1), 6–WAY PWR D/SEAT ADJR (AC3)	10086226	1	54.07	SWITCH, ELEK SUSP .....
90–91	Y 6–WAY PWR D/SEAT ADJR (AC3), ELEK RIDE & HANDLING (FX3), (EXC 6–WAY PWR P/SEAT ADJR (AC1)	10086226	1	54.07	SWITCH, ELEK SUSP .....
90–91	Y 6–WAY PWR P/SEAT ADJR (AC1), 6–WAY PWR D/SEAT ADJR (AC3), ELEK RIDE & HANDLING (FX3) ...	10086226	1	54.07	SWITCH, ELEK SUSP .....
91	Y ELEK RIDE & HANDLING (FX3), (EXC 6–WAY PWR P/SEAT ADJR (AC1), 6–WAY PWR D/SEAT ADJR (AC3)	10098437	1	54.07	SWITCH, ELEK SUSP .....
92	Y ELEK RIDE & HANDLING (FX3) ..	10161838	1	54.07	SWITCH, ELEK SUSP .....
92	Y ELEK RIDE & HANDLING (FX3), (EXC 6–WAY PWR P/SEAT ADJR (AC1), 6–WAY PWR D/SEAT ADJR (AC3)	10161847	1	54.07	SWITCH, ELEK SUSP .....
93	Y ELEK RIDE & HANDLING (FX3), 6–WAY PWR D/SEAT ADJR (AC3) .	10161838	1	54.07	SWITCH, ELEK SUSP .....
94–95	Y ELEK RIDE & HANDLING (FX3) ..	10212995	1	54.07	SWITCH, ELEK SUSP .....
96	Y CHASSIS, REALTIME DAMPING (F45)	10212995	1	54.07	SWITCH, ELEK SUSP .....

8.808 LABEL, Emission, Cautionary and Informative

94–96	Y	10231210	1	N.L.	LABEL, A/C REFRIG & ENG OIL NTC ...
88–91	Y 5.7–8 (L98)	10077567	1	N.L.	LABEL, ACSRY BELT ROUTING .....
90–91	Y 5.7J (LT5), SOFT RIDE SUSP (FE1), HVY DUTY SUSP (FE7)	10105211	1	N.L.	LABEL, ACSRY BELT ROUTING .....
92–95	Y 5.7J (LT5)	10105211	1	N.L.	LABEL, ACSRY BELT ROUTING .....
92	Y 5.7P (LT1)	10186199	1	N.L.	LABEL, ACSRY BELT ROUTING .....
93	Y 5.7P (LT1), (1ST DES)	10186199	1	N.L.	LABEL, ACSRY BELT ROUTING (DUAL SIDED POLY V–BELT) .....
93	Y 5.7P (LT1), (2ND DES)	10241175	1	N.L.	LABEL, ACSRY BELT ROUTING (SINGLE SIDED POLY V–BELT) .....
94–95	Y 5.7P (LT1)	10241175	1	N.L.	LABEL, ACSRY BELT ROUTING .....
86	Y67 HAS STEP 1–STATMENT "E" INCLUDING "AND WHL LOCK KEY" (1ST DES)	14093193	1	DISCON	LABEL, AUTO JK USAGE .....
90–91	Y	10210318	1	N.L.	LABEL, ENG CLG SYS .....
92–94	Y 5.7P (LT1)	10210318	1	N.L.	LABEL, ENG CLG SYS .....

© 2000 GENERAL MOTORS SERVICE PARTS OPERATIONS

8.808 LABEL, Emission, Cautionary and Informative(Con't)

95	Y 5.7P (LT1), (1ST DES)	10210318	1	N.L.	LABEL, ENG CLG SYS (USED ON VEHICLES W/VIN OF 119804 AND PRIOR)
95	Y 5.7P (LT1), (2ND DES)	10286902	1	N.L.	LABEL, ENG CLG SYS (USED ON VEHICLES W/VIN OF 119805 AND GREATER)
96	Y 5.7P (LT1)	10286902	1	N.L.	LABEL, ENG CLG SYS
92–93	Y 5.7P (LT1)	10225998	1	N.L.	LABEL, ENG OIL RECOMMENDATIONS
93–96	Y	10236268	1	N.L.	LABEL, ENG OIL RECOMMENDATIONS ("MOBIL 1")
84	Y	14063726	1	DISCON	LABEL, FAN BLADE CAUTION
85	Y	10120010	1	N.L.	LABEL, FAN BLADE CAUTION
85	Y APPLIED TO HOOD INNER PANEL	14084390	1	DISCON	LABEL, FAN BLADE CAUTION
90–96	Y	10120010	1	N.L.	LABEL, FAN BLADE CAUTION (BLACK NYLON)
86–87	Y	14092380	1	N.L.	LABEL, FAN BLADE ROUTING (APPLY TO LEFT HAND SIDE OF TOP RAD SUPT)
91–96	Y LOW TIRE PRESSURE IND (UJ6)	10180847	2	N.L.	LABEL, FRT TIRE PRESS IND SEN (INSTALL 90 DEGREES FROM VLV STEM ON I/S LIP OF WHL)
94	Y (EXC EUROPEAN PROVISIONS (VD1) (EXPORT)	15001737	2	N.L.	LABEL, INFL RST SYS CAUTION (140.0X40.0)
95–96	Y	15001737	2	N.L.	LABEL, INFL RST SYS CAUTION (140.0X40.0)
90–94	Y	10153622	1	N.L.	LABEL, INFL RST SYS INFO
90–93	Y	26017956	1	N.L.	LABEL, INFL RST SYS SERV NTC
94–95	Y	10247726	1	N.L.	LABEL, INFL RST SYS SERV NTC (USE ON R/H SIDE)
94–96	Y F/SEAT INFL RST SYS (AK5)	26017956	1	N.L.	LABEL, INFL RST SYS SERV NTC
96	Y F/SEAT INFL RST SYS (AK5)	10247726	1	N.L.	LABEL, INFL RST SYS SERV NTC (USE ON R/H SIDE)
84–96	Y	21011879	1	N.L.	LABEL, JK CAUTION
90	Y	10153623	1	N.L.	LABEL, JK LOC INFO
92–93	Y	10153623	1	N.L.	LABEL, JK LOCATION INFO
85	Y WHL NUT KEY IS ATTACHED TO THE WHL WRENCH (1ST DES)	14084072	1	N.L.	LABEL, JK USAGE
86	Y07 SHOWS NEW JACKING LOCATION 10 INCHES FROM RR WHL OPG (2ND DES)	14093200	1	N.L.	LABEL, JK USAGE
86–89	Y67	14093194	1	N.L.	LABEL, JK USAGE (INCLS INSTRUCTIONS 5 THRU 8)
86	Y67 STEP 1 & 2 (2ND DES)	14093198	1	N.L.	LABEL, JK USAGE
86	Y67 STEPS 3 & 4; NEW JACKING LOCATION–BETWEEN DARTS & TEN INCHES FROM RR WHL OPG (2ND DES)	14093199	1	N.L.	LABEL, JK USAGE
87	Y07	14093200	1	N.L.	LABEL, JK USAGE
87	Y67 STEPS 1 & 2	14093198	1	N.L.	LABEL, JK USAGE
87	Y67 STEPS 3 & 4	14093199	1	N.L.	LABEL, JK USAGE
88–89	Y07	10075210	1	N.L.	LABEL, JK USAGE
88–89	Y67	10075208	1	N.L.	LABEL, JK USAGE (STEP 1 & 2)
88–89	Y67	10075209	1	N.L.	LABEL, JK USAGE (STEP 3 & 4)
90–92	Y SPECIAL PERFORMANCE PKG (ZR1)	10149277	1	N.L.	LABEL, JK USAGE
90–92	Y (EXC SPECIAL PERFORMANCE PKG (ZR1)	10153625	1	N.L.	LABEL, JK USAGE
93	Y	10219501	1	N.L.	LABEL, JK USAGE
94–95	Y	10224195	1	N.L.	LABEL, JK USAGE

© 2000 GENERAL MOTORS SERVICE PARTS OPERATIONS

8.808 LABEL, Emission, Cautionary and Informative(Con't)

96	Y (EXC (EXC SPA TIRE)	10276417	1	N.L.	LABEL, JK USAGE
94–96	Y	10241098	1	N.L.	LABEL, LOW TIRE PRESS CAUTION
89–96	Y	10135621	AR	N.L.	LABEL, ODOM SERV NTC (70MM SQUARE) (FOR USE WHEN ODOMETER OR CLUSTER IS SERVICED) (5621)
90–95	Y07 SPECIAL PERFORMANCE PKG (ZR1)	10149274	1	N.L.	LABEL, PASS COMPT SPA WHL STOW INSTR
96	Y07 GRAND SPORT EDITION (Z16)	10149274	1	N.L.	LABEL, PASS COMPT SPA WHL STOW INSTR
95–96	Y	10283878	1	N.L.	LABEL, RAD FIL NTC
93	Y	10233569	1	N.L.	LABEL, RDO DMG NTC
94–96	Y	10238375	1	N.L.	LABEL, RDO DMG NTC
91–96	Y LOW TIRE PRESSURE IND (UJ6)	10180848	2	N.L.	LABEL, RR TIRE PRESS IND SEN (INSTALL 90 DEGREES FROM VLV STEM ON I/S LIP OF WHL)
92	Y STYLED AL WHL (QA1), SPECIAL PERFORMANCE WHL (QA2), EUROPEAN PROVISIONS (VD1) (EXPORT)	25558496	1	N.L.	LABEL, SPA WHL CAUTION (SYMBOLS)
93	Y EUROPEAN PROVISIONS (VD1) (EXPORT)	25558496	1	N.L.	LABEL, SPA WHL CAUTION (SYMBOLS)
94–96	Y	25558496	1	N.L.	LABEL, SPA WHL CAUTION (SYMBOLS)
85–89	Y07	14084074	1	N.L.	LABEL, SPA WHL STOW INFO
89	YO7 (EXC SPL PERF PKG ZR1)	14084074	1	N.L.	LABEL, SPA WHL STOW INFO
89	Y67 (EXC SPL PERF PKG ZR1)	14093195	1	N.L.	LABEL, SPA WHL STOW INFO
86–88	Y67	14093195	1	N.L.	LABEL, SPA WHL STOWAGE INFO
94–95	Y07 5.7P (LT1)	10244479	1	N.L.	LABEL, TIRE PRESS
96	Y07	10244479	1	N.L.	LABEL, TIRE PRESS
88–90	Y LOW TIRE PRESSURE IND (UJ6)	10180847	4	N.L.	LABEL, TIRE PRESS IND SEN (INSTALL 90 DEGREES FROM VLV STEM ON I/S LIP OF WHL)
84	Y (5.7–8) MK2, FED (NA5)	14073597	1	DISCON	LABEL, VEH EMIS CONT INFO (XTW)
85	Y (5.7–8) FED (NA5), NN5	14086592	1	DISCON	LABEL, VEH EMIS CONT INFO (UNM)
86	Y (5.7–8) FED (NA5), CALIF (NB2)	14086582	1	DISCON	LABEL, VEH EMIS CONT INFO
86	Y (5.7–8) FED (NA5) (EXC NN5)	14100950	1	DISCON	LABEL, VEH EMIS CONT INFO (YDJ)
87	Y FED (NA5) (EXC NN5)	10051453	1	N.L.	LABEL, VEH EMIS CONT INFO (ZDY)
87	Y FED, NN5	10051454	1	DISCON	LABEL, VEH EMIS CONT INFO (ZDZ)
88	Y (5.7–8) FED (NA5) (EXC NN5, Z49 CANADIAN	10079619	1	DISCON	LABEL, VEH EMIS CONT INFO (CNK)
88	Y (5.7–8) FED (NA5), NN5 (EXC Z49 CANADIAN	10079621	1	N.L.	LABEL, VEH EMIS CONT INFO (CNM)
89	Y	10116659	1	DISCON	LABEL, VEH EMIS CONT INFO (DCN)
89	Y	10116660	1	DISCON	LABEL, VEH EMIS CONT INFO (DCP)
89	Y (5.7J) (EXC NN5)	10116661	1	N.L.	LABEL, VEH EMIS CONT INFO (DCX)
89	Y (5.7J) NN5	10116662	1	N.L.	LABEL, VEH EMIS CONT INFO (DCY)
90	Y (5.7J) (EXC NN5)	10136278	1	N.L.	LABEL, VEH EMIS CONT INFO (FKW)
90	Y (5.7J) NN5	10136279	1	N.L.	LABEL, VEH EMIS CONT INFO (FKX)
90	Y 5.7–8 (L98), (EXC EMIS OVERRIDE (NN5)	10165211	1	N.L.	LABEL, VEH EMIS CONT INFO (FNM)
90	Y 5.7–8 (L98), EMIS OVERRIDE (NN5)	10165212	1	N.L.	LABEL, VEH EMIS CONT INFO (FNN)
91	Y 5.7–8 (L98), (EXC EMIS OVERRIDE (NN5)	10145484	1	N.L.	LABEL, VEH EMIS CONT INFO (LBZ)
91	Y 5.7–8 (L98), EMIS OVERRIDE (NN5)	10145485	1	N.L.	LABEL, VEH EMIS CONT INFO (LCA)
91	Y 5.7J (LT5), (EXC EMIS OVERRIDE (NN5)	10145486	1	N.L.	LABEL, VEH EMIS CONT INFO (LCL)

© 2000 GENERAL MOTORS SERVICE PARTS OPERATIONS

8.808 LABEL, Emission, Cautionary and Informative(Con't)

91	Y 5.7J (LT5), EMIS OVERRIDE (NN5)	10145487	1	N.L.	LABEL, VEH EMIS CONT INFO (LCM) ..
92	Y 5.7P (LT1), (EXC LEADED FUEL EMIS EXPORT (NM8), EMIS OVERRIDE (NN5)	10165175	1	N.L.	LABEL, VEH EMIS CONT INFO (PCK) ..
92	Y 5.7P (LT1), EMIS OVERRIDE (NN5)	10165176	1	N.L.	LABEL, VEH EMIS CONT INFO (PCL) ..
92	Y 5.7J (LT5), (EXC EMIS OVERRIDE (NN5)	10165177	1	N.L.	LABEL, VEH EMIS CONT INFO (PCM) ..
92	Y 5.7J (LT5), EMIS OVERRIDE (NN5)	10165178	1	N.L.	LABEL, VEH EMIS CONT INFO (PCN) ..
93	Y 5.7P (LT1), FEDERAL EMIS (NA5), (EXC LEADED FUEL EMIS EXPORT (NM8), EMIS OVERRIDE (NN5) ...	10189453	1	N.L.	LABEL, VEH EMIS CONT INFO (RCX) ..
93	Y 5.7P (LT1), EMIS OVERRIDE (NN5)	10189454	1	N.L.	LABEL, VEH EMIS CONT INFO (RDY) ..
93	Y 5.7J (LT5), (EXC EMIS OVERRIDE (NN5)	10221625	1	N.L.	LABEL, VEH EMIS CONT INFO .....
93	Y 5.7J (LT5), EMIS OVERRIDE (NN5)	10221626	1	N.L.	LABEL, VEH EMIS CONT INFO .....
94	Y 5.7J (LT5), EMIS OVERRIDE (NN5)	10224724	1	N.L.	LABEL, VEH EMIS CONT INFO .....
94	Y 5.7P (LT1), 6-SPD M/TRANS (ML9), FEDERAL EMIS (NA5), (EXC EMIS OVERRIDE (NN5), LEADED FUEL EMIS EXPORT (NM8)	12550655	1	N.L.	LABEL, VEH EMIS CONT INFO .....
94	Y 5.7P (LT1), 6-SPD M/TRANS (ML9), EMIS OVERRIDE (NN5)	12550656	1	N.L.	LABEL, VEH EMIS CONT INFO .....
94	Y 5.7P (LT1), 4-SPD A/TRANS (M30), FEDERAL EMIS (NA5), CALIFORNIA EMIS (NB2), (EXC LEADED FUEL EMIS EXPORT (NM8)	12550703	1	N.L.	LABEL, VEH EMIS CONT INFO . .....
94	Y 5.7J (LT5), (EXC EMIS OVERRIDE (NN5)	12550754	1	N.L.	LABEL, VEH EMIS CONT INFO .....
95	Y 5.7P (LT1), 4-SPD A/TRANS (M30), FEDERAL EMIS (NA5), (EXC LEADED FUEL EMIS EXPORT (NM8)	10243019	1	N.L.	LABEL, VEH EMIS CONT INFO .....
95	Y 5.7P (LT1), 6-SPD M/TRANS (ML9), FEDERAL EMIS (NA5), (EXC LEADED FUEL EMIS EXPORT (NM8), EMIS OVERRIDE (NN5) ...	10243020	1	N.L.	LABEL, VEH EMIS CONT INFO .....
95	Y 5.7P (LT1), EMIS OVERRIDE (NN5)	10243021	1	N.L.	LABEL, VEH EMIS CONT INFO .....
95	Y 5.7P (LT1), CALIF EMIS, TIER 1 (NB6)	10243022	1	N.L.	LABEL, VEH EMIS CONT INFO .....
95	Y 5.7J (LT5), FEDERAL EMIS (NA5), (EXC EMIS OVERRIDE (NN5)	10243023	1	N.L.	LABEL, VEH EMIS CONT INFO .....
95	Y 5.7J (LT5), EMIS OVERRIDE (NN5)	10243024	1	N.L.	LABEL, VEH EMIS CONT INFO .....
96	Y 5.7P (LT1), LEADED FUEL EMIS EXPORT (NM8)	12553944	1	N.L.	LABEL, VEH EMIS CONT INFO .....
96	Y 5.7P (LT1), POWERTRAIN CONT MODULE (K29), (EXC CANADIAN (Z49)	12553944	1	N.L.	LABEL, VEH EMIS CONT INFO .....
96	Y 5.7P (LT1)	12555482	1	N.L.	LABEL, VEH EMIS CONT INFO .....
96	Y 5.7-5 (LT4)	12555483	1	N.L.	LABEL, VEH EMIS CONT INFO .....
96	Y 5.7-5 (LT4), 6-SPD M/TRANS (ML9), CALIF EMIS, TIER 1 (NB6) .	12555600	1	N.L.	LABEL, VEH EMIS CONT INFO .....
96	Y 5.7-5 (LT4), 6-SPD M/TRANS (ML9), FED EMIS SYS (NF2), (EXC POWERTRAIN CONT MODULE (K29), CANADIAN (Z49)	12555600	1	N.L.	LABEL, VEH EMIS CONT INFO .....
96	Y 5.7P (LT1), 4-SPD A/TRANS (M30), CALIF EMIS, TIER 1 (NB6) .	12555869	1	N.L.	LABEL, VEH EMIS CONT INFO . .....

© 2000 GENERAL MOTORS SERVICE PARTS OPERATIONS

8.808 LABEL, Emission, Cautionary and Informative(Con't)

96	Y 5.7P (LT1), 4-SPD A/TRANS (M30), FED EMIS SYS (NF2)	12555869	1	N.L.	LABEL, VEH EMIS CONT INFO .....
96	Y 5.7-5 (LT4), POWERTRAIN CONT MODULE (K29), (EXC CANADIAN (Z49)	12556111	1	N.L.	LABEL, VEH EMIS CONT INFO .....
	*EXPORT***************EXPORT***************EXPORT***************EXPORT***************EXPORT*				
84-87	YB VB4, VD1, VE1, VT7 (EXPORT ..	14022422	1	DISCON	LABEL, IGN & START SW .....
94-96	Y EUROPEAN PROVISIONS (VD1) (EXPORT)	15001737	LH	N.L.	LABEL, INFL RST SYS CAUTION (140.0X40.0) ....
85	Y (5.7-8) NM8 (EXPORT)	14086593	1	DISCON	LABEL, VEH EMIS C[illegible] (UNN) ..
87	Y	10051455	1	DISCON	LABEL, VEH EMIS C[illegible] (ZFA) ..
88	Y	10079620	1	DISCON	LABEL, VEH EMIS CON[illegible] (CNL) ..
92	Y 5.7P (LT1), LEADED FUEL EMIS EXPORT (NM8)	10222060	1	N.L.	LABEL, VEH EMIS CONT INFO (PPJ) ..
93	Y 5.7P (LT1), LEADED FUEL EMIS EXPORT (NM8)	10221953	1	N.L.	LABEL, VEH EMIS CONT INFO (RLC) ..
94	Y 5.7P (LT1), LEADED FUEL EMIS EXPORT (NM8)	12550704	1	N.L.	LABEL, VEH EMIS CONT INFO .....
95	Y 5.7P (LT1), LEADED FUEL EMIS EXPORT (NM8)	10243025	1	N.L.	LABEL, VEH EMIS CONT INFO .....

8.821 BAG – CLIP – HANDLE – PLATE – WRENCH, Wheel, Jack and Miscellaneous Wrench

89-96	Y67 AUX RF (CC2)	10149268	1	32.04	BAG, TOOL STOW (13.346) .....
84-96	Y	14050029	1	16.07	HANDLE, JK/WHL WRENCH (INCLUDES WRENCH FOR 84-90) (08.820) .....
91-96	Y	10180800	1	29.84	WRENCH, WHL .....

13.100 CONNECTOR, Body Wiring

90	Y 4-SPD A/TRANS (MD8), 6-SPD M/TRANS (ML9), A/C MAN CONT (C60)	12101899	2	17.95	CONNECTOR, DR AJAR WRNG LP WRG JPR (02.383) (AC-DELCO #PT169) .....
90	Y 4-SPD A/TRANS (MD8), 6-SPD M/TRANS (ML9), A/C MAN CONT (C60)	12085481	1	17.56	CONNECTOR, INLINE-TO BODY HARN (2-WAY M, W/LEADS) (02.535) (AC-DELCO #PT103) .....
90	Y	12085487	1	22.15	CONNECTOR, INLINE-TO BODY HARN (4 TERM FLAT, W/LEADS) (02.535) (AC-DELCO #PT109) .....
90-96	Y	12101762	1	68.40	CONNECTOR, INLINE-TO BODY HARN (10-WAY F) (W/LEADS) (02.535) (AC-DELCO #PT150) .....
90	Y 4-SPD A/TRANS (MD8), 6-SPD M/TRANS (ML9)	12101821	1	17.28	CONNECTOR, INLINE-TO BODY HARN (2-WAY F, W/LEADS) (02.535) (AC-DELCO #PT213) .....
90	Y 6 SPKR SYS (UX0)	12101836	1	17.46	CONNECTOR, INLINE-TO BODY HARN (2-WAY M, W/LEADS) (02.535) (AC-DELCO #PT228) .....
90	Y 6 SPKR SYS (UX0)	12112380	1	56.84	CONNECTOR, INLINE-TO BODY HARN (6 PIN M) (02.535) (AC-DELCO #PT383) .....
90-92	Y	12125673	1	22.25	CONNECTOR, INLINE-TO BODY HARN (7-WAY M) (W/LEADS) (02.530) (AC-DELCO #PT585) .....
90-92	Y	12125674	1	35.57	CONNECTOR, INLINE-TO BODY HARN (8-WAY M) (W/LEADS) (02.530) (AC-DELCO #PT586) .....
90-92	Y67 STEREO CASSETTE (UM6), CASSETTE STEREO (UU8), CASSETTE/CD PLAYER (U1F)	12085481	1	17.56	CONNECTOR, INLINE-TO BODY HARN (BLACK) (2-WAY M) (W/LEADS) (02.535) (AC-DELCO #PT103) .....

© 2000 GENERAL MOTORS SERVICE PARTS OPERATIONS

13.100 CONNECTOR, Body Wiring(Con't)

91–92	Y	12085487	1	22.15	CONNECTOR, INLINE–TO BODY HARN (4–WAY F) (W/LEADS) (02.535) (AC–DELCO #PT109)
93	Y	12085208	1	28.39	CONNECTOR, INLINE–TO BODY HARN (BLACK) (4–WAY F) (W/LEADS) (02.535) (AC–DELCO #PT1232)
93–96	Y	12101832	1	45.10	CONNECTOR, INLINE–TO BODY HARN (BLUE) (10–WAY F, W/LEADS) (02.535) (AC–DELCO #PT224)
93–96	Y	12102750	1	9.43	CONNECTOR, INLINE–TO BODY HARN (1–WAY F) (W/LEADS) (09.776) (AC–DELCO #PT377)
93–96	Y	12125665	1	28.96	CONNECTOR, INLINE–TO BODY HARN (GRAY) (6–WAY F) (W/LEADS) (04.663)
93	Y07 6 SPKR SYS (UX0)	12101836	1	17.46	CONNECTOR, INLINE–TO BODY HARN (2–WAY M, W/LEADS) (02.535) (AC–DELCO #PT228)
93–94	Y07 4 SPKR SYS (UY5)	12101836	1	17.46	CONNECTOR, INLINE–TO BODY HARN (2–WAY M, W/LEADS) (02.535) (AC–DELCO #PT228)
93	Y67	12101836	1	17.46	CONNECTOR, INLINE–TO BODY HARN (2–WAY M, W/LEADS) (02.535) (AC–DELCO #PT228)
95	Y 5.7J (LT5)	12085208	1	28.39	CONNECTOR, INLINE–TO BODY HARN (BLACK) (4–WAY F) (W/LEADS) (02.535) (AC–DELCO #PT1232)
95–96	Y 4 SPKR SYS (UY5)	12101836	1	17.46	CONNECTOR, INLINE–TO BODY HARN (2–WAY M, W/LEADS) (02.535) (AC–DELCO #PT228)
95–96	Y67 (EXC SIG & MKR LP (T90) (EXPORT)	12103188	1	1.82	CONNECTOR, INLINE–TO BODY HARN (BLUE) (10–WAY M, W/O LEADS) (02.530)
96	Y	12101876	1	26.75	CONNECTOR, INLINE–TO BODY HARN (GRAY) (6–WAY M) (W/LEADS) (02.535) (AC–DELCO #PT267)
94–96	Y	12085537	2	31.88	CONNECTOR, INLINE–TO C/LP (4–WAY F) (W/LEADS) (02.535) (AC–DELCO #PT147)
90	Y 4–SPD A/TRANS (MD8), 6–SPD M/TRANS (ML9)	12085537	1	31.88	CONNECTOR, INLINE–TO DM & RDG LP HARN (02.535) (AC–DELCO #PT147)
92–93	Y	12085537	2	31.88	CONNECTOR, INLINE–TO DR HARN (4–WAY F) (W/LEADS) (02.535) (AC–DELCO #PT147)
93	Y	12102747	1	21.07	CONNECTOR, INLINE–TO HTD O/S RR VIEW MIR (BLACK) (2–WAY F) (W/LEADS) (03.670) (AC–DELCO #PT374)
96	Y	12102747	1	21.07	CONNECTOR, INLINE–TO HTD O/S RR VIEW MIR (BLACK) (2–WAY F) (W/LEADS) (03.670) (AC–DELCO #PT374)
86–91	Y	12101866	1	17.78	CONNECTOR, INLINE–TO O/S RR VIEW MIR (3–WAY M) (W/LEADS) (02.535) (AC–DELCO #PT258)

© 2000 GENERAL MOTORS SERVICE PARTS OPERATIONS

13.100 CONNECTOR, Body Wiring(Con't)

94–95	Y	12102747	1	21.07	CONNECTOR, INLINE–TO O/S RR VIEW MIR (BLACK) (2–WAY F) (W/LEADS) (03.670) (AC–DELCO #PT374)
95–96	Y	12117025	LH	21.82	CONNECTOR, INLINE–TO O/S RR VIEW MIR (BLACK) (3–WAY F) (W/LEADS) (02.383) (AC–DELCO #PT420)
90–95	Y	12101866	1	17.78	CONNECTOR, INLINE–TO O/S RR VIEW MIR HARN (3–WAY M) (W/LEADS) (02.535) (AC–DELCO #PT258)
90	Y 4–SPD A/TRANS (MD8), 6–SPD M/TRANS (ML9), A/C MAN CONT (C60)	12102747	2	21.07	CONNECTOR, INLINE–TO O/S RR VIEW MIR HARN (03.670) (AC–DELCO #PT374)
91	Y 4–SPD A/TRANS (MD8), 6–SPD M/TRANS (ML9), A/C MAN CONT (C60), A/C AUTO ELEC CONT (C68)	12102747	2	21.07	CONNECTOR, INLINE–TO O/S RR VIEW MIR HARN (BLACK) (2–WAY F) (W/LEADS) (03.670) (AC–DELCO #PT374)
94–95	Y	12085481	1	17.56	CONNECTOR, INLINE–TO O/S RR VIEW MIR HARN (BLACK) (2–WAY M) (W/LEADS) (02.535) (AC–DELCO #PT103)
92–93	Y RECL FRT BKT ST (AQ9)	12101888	1	17.46	CONNECTOR, INLINE–TO PWR ST (BLACK) (2–WAY F) (W/LEADS) (02.535) (AC–DELCO #PT159)
94–96	Y	12085482	AR	32.10	CONNECTOR, INLINE–TO PWR ST (6–WAY M) (W/LEADS) (02.535) (AC–DELCO #PT104)
94–95	Y	12101864	1	17.62	CONNECTOR, INLINE–TO PWR ST (BLACK) (3–WAY F) (W/LEADS) (02.535) (AC–DELCO #PT256)
94–95	Y	12101900	4	34.09	CONNECTOR, INLINE–TO PWR ST (FRT) (6–WAY F) (W/LEADS) (02.535) (AC–DELCO #PT171)
96	Y RECL FRT BKT ST (AQ9)	12101900	2	34.09	CONNECTOR, INLINE–TO PWR ST (6–WAY F) (W/LEADS) (02.535) (AC–DELCO #PT171)
94–96	Y	12116958	1	20.24	CONNECTOR, INLINE–TO R/CMPT LID LAT REL SOL (GRAY) (2–WAY F) (W/LEADS) (02.535) (AC–DELCO #PT419)
96	Y	12085480	2	9.67	CONNECTOR, INLINE–TO R/CMPT LID LAT REL SOL (W/LEADS) (12.243) (AC–DELCO #PT102)
90–91	Y	12125673	1	22.25	CONNECTOR, INLINE–TO RR BODY HARN (7–WAY M) (W/LEADS (02.530) (AC–DELCO #PT585)
90–91	Y STEREO CASSETTE (UM6), CASSETTE STEREO (UU8), CASSETTE/CD PLAYER (U1F)	12125674	1	35.57	CONNECTOR, INLINE–TO RR BODY HARN (8–WAY M) (W/LEADS) (02.530) (AC–DELCO #PT586)
90	Y07 STEREO CASSETTE (UM6), CASSETTE STEREO (UU8), CASSETTE/CD PLAYER (U1F)	12085535	1	17.46	CONNECTOR, INLINE–TO RR BODY HARN (2 PIN F) (02.535) (AC–DELCO #PT146)
92	Y67	12125673	1	22.25	CONNECTOR, INLINE–TO RR BODY HARN (7–WAY M) (W/LEADS) (02.530) (AC–DELCO #PT585)
92	Y67 STEREO CASSETTE (UM6), CASSETTE STEREO (UU8), CASSETTE/CD PLAYER (U1F)	12125674	1	35.57	CONNECTOR, INLINE–TO RR BODY HARN (8–WAY M) (W/LEADS) (02.530) (AC–DELCO #PT586)

© 2000 GENERAL MOTORS SERVICE PARTS OPERATIONS

13.100 CONNECTOR, Body Wiring(Con't)

93–94	Y67	12103188	1	1.82	CONNECTOR, INLINE–TO RR BODY HARN (BLUE) (10–WAY M, W/O LEADS) (02.530) .....
94–95	Y	12101876	1	26.75	CONNECTOR, INLINE–TO RR BODY HARN (GRAY) (6–WAY M) (W/LEADS) (02.535) (AC–DELCO #PT267) .....
90–95	Y	12085481	1	17.56	CONNECTOR, INLINE–TO S/S MIR LP (BLACK) (2–WAY M) (W/LEADS) (02.535) (AC–DELCO #PT103) .....
96	Y	12085481	2	17.56	CONNECTOR, INLINE–TO S/S MIR LP (BLACK) (2–WAY M) (W/LEADS) (02.535) (AC–DELCO #PT103) .....
90–95	Y	12085481	1	17.56	CONNECTOR, INLINE–TO ST BELT CR CAR HARN (BLACK) (2–WAY M) (W/LEADS) (02.535) (AC–DELCO #PT103) .....
91–93	Y	12101821	1	17.28	CONNECTOR, INLINE–TO ST BELT CR CAR HARN (NATURAL) (2–WAY F) (W/LEADS) (02.535) (AC–DELCO #PT213) .....
96	Y	12085481	2	17.56	CONNECTOR, INLINE–TO ST BELT SW (BLACK) (2–WAY M) (W/LEADS) (02.535) (AC–DELCO #PT103) .....
90	Y 6–SPD M/TRANS (ML9), A/C AUTO ELEC CONT (C68), SOFT RIDE SUSP (FE1), HVY DUTY SUSP (FE7), (EXC DAYTIME RUNNING LGT (T61)	12126016	1	50.75	CONNECTOR, PWR ST ADJR RECL HARN (4–WAY M, W/LEADS) (11.556) .....
90	Y 4–SPD A/TRANS (MD8), A/C AUTO ELEC CONT (C68)	12126016	1	50.75	CONNECTOR, PWR ST ADJR RECL HARN (4–WAY M, W/LEADS) (11.556) .....
91	Y 4–SPD A/TRANS (MD8), 6–SPD M/TRANS (ML9), A/C MAN CONT (C60), A/C AUTO ELEC CONT (C68)	12126016	1	50.75	CONNECTOR, PWR ST ADJR RECL HARN (4–WAY M, W/LEADS) (11.556) .....
94–96	Y	12101899	1	17.95	CONNECTOR, SW–DR AJAR IND (BLACK) (2–WAY F) (W/LEADS) (02.383) (AC–DELCO #PT169) .....
	*EXPORT****************EXPORT****************EXPORT****************EXPORT****************EXPORT*				
91	Y 5.7J (LT5), 5.7–8 (L98), DAYTIME RUNNING LGT (T61)	12101917	2	20.58	CONNECTOR, PWR R/WDO CONT HARN (OVAL) (2–WAY F) (W/LEADS) (02.535) (AC–DELCO #PT189) .....
90	Y 6–SPD M/TRANS (ML9), A/C AUTO ELEC CONT (C68), DAYTIME RUNNING LGT (T61)	12126016	1	50.75	CONNECTOR, PWR ST ADJR RECL HARN (4–WAY M, W/LEADS) (11.556) .....

© 2000 GENERAL MOTORS SERVICE PARTS OPERATIONS

MICROFICHE INDEX

GROUPS 6.000 THRU 7.000

FICHE 7 OF 11

GROUP	DESCRIPTION	STARTING GRID LOCATION PARTS	ILLUSTRATIONS
–	GENERAL INFORMATION	1–A2	1–G2
–	ALPHABETICAL INDEX	1–B13	N.A.
6.000	FRONT SUSPENSION – STEERING	7–A2	7–E2
7.000	FRAMES – SPRINGS – SHOCKS – BUMPERS	7–C2	7–H2
–	OUT OF FICHE CALLS	N.A.	7–M17

7–A1

CHEVROLET
CHASSIS GROUP 6.000

FRONT SUSPENSION – STEERING

ALPHABETICAL INDEX

A

ARM, Steering Knuckle Upper & Lower Control 6.168 7–A8

B

BEARING KIT, Steering Column 6.521 7–B8
BEARING KIT, Steering Gear Shaft 6.525 7–B9
BEARING, Steering Column 6.521 7–B8
BEARING, Steering Gear Shaft 6.525 7–B9
BEARING, Steering Pump Drive Shaft Outer Bearing Retainer 6.616 7–B15
BOLT, Front Axle and Axle Center 6.008 7–A8
BOLT, Steering Column 6.514 7–A20
BOLT, Steering Column 6.758 7–B20
BOLT, Steering Gear Mounting 6.509 7–A19
BOLT, Steering Gear Shaft 6.525 7–B9
BOLT, Steering Knuckle Lower Control Arm 6.172 7–A9
BOLT, Steering Knuckle Upper Control Arm 6.178 7–A9
BOLT, Steering Pump Mounting 6.606 7–B14
BOLT, Steering 6.518 7–A21
BOOT KIT, Steering Tie Rod 6.242 7–A10
BRACE, Steering Pump Mounting 6.606 7–B14
BRACKET, Steering Column Attaching . 6.760 7–B20
BRACKET, Steering Fluid Cooler 6.602 7–B10
BRACKET, Steering Pump Mounting ... 6.606 7–B14
BRACKET, Steering Pump 6.635 7–B16
BRACKET, Steering 6.518 7–A21
BUMPER, Steering Column 6.521 7–B8
BUSHING, Steering Gear Pitman Shaft . 6.786 7–B20
BUSHING, Steering Tie Rod 6.242 7–A10

C

CAP, Steering Pump 6.635 7–B16
CAP, Steering Pump 6.655 7–B17
CAP, Steering 6.518 7–A21
CLAMP, Steering Fluid Cooler 6.602 7–B10
CLAMP, Steering Gear Mounting 6.509 7–A19
CLAMP, Steering Gear/Pump Oil 6.672 7–B19
CLAMP, Steering Tie Rod 6.242 7–A10
CLIP, Steering Gear/Pump Oil 6.672 7–B19
COLUMN, Steering 6.518 7–A21
COOLER, Power Steering Fluid 6.600 7–B10
COVER, Steering Gear Housing Side .. 6.807 7–B20
COVER, Steering 6.518 7–A21

F

FITTING, Steering Pump Control 6.624 7–B16

G

GEAR KIT, Steering 6.508 7–A12

H

HOSE, Steering Fluid Cooler 6.602 7–B10
HOSE, Steering Gear Oil Pressure 6.670 7–B18
HOSE, Steering Gear Oil Return 6.671 7–B18
HOSE, Steering Pump 6.635 7–B16
HOUSING KIT, Steering 6.518 7–A21
HOUSING, Steering Pump 6.608 7–B14
HOUSING, Steering 6.518 7–A21
HUB, Front Wheel 6.307 7–A10

I

INSULATOR, Steering Column Housing 6.500 7–A11
INSULATOR, Steering Gear Mounting .. 6.509 7–A19

J

JACKET, Steering 6.518 7–A21

K

KNUCKLE, Steering 6.020 7–A8

L

LEVER, Steering Column 6.514 7–A20
LINE KIT, Steering Gear Oil Pressure ... 6.670 7–B18

M

MAGNET, Steering Pump 6.608 7–B14
MODULE, Steering Wheel 6.512 7–A19

N

NUT, Front Axle and Axle Center 6.008 7–A8
NUT, Steering Column Attaching 6.760 7–B20
NUT, Steering Gear Adjusting 6.832 7–B20
NUT, Steering Gear Lash Adjuster 6.822 7–B20
NUT, Steering Gear Mounting 6.509 7–A19
NUT, Steering Knuckle Lower Control Arm 6.172 7–A9
NUT, Steering Knuckle Upper Control Arm 6.178 7–A9
NUT, Steering Knuckle 6.009 7–A8
NUT, Steering Pump 6.635 7–B16
NUT, Steering Tie Rod 6.234 7–A10
NUT, Steering Wheel 6.515 7–A20
NUT, Upper Control Arm Shaft 6.164 7–A8

P

PIN, Steering Column Housing 6.500 7–A11
PIN, Steering Column 6.514 7–A20
PIN, Steering Pump 6.608 7–B14
PIPE KIT, Steering Fluid Cooler 6.602 7–B10
PIPE KIT, Steering Gear Oil Pressure ... 6.670 7–B18
PIPE, Steering Gear Oil Return 6.671 7–B18
PLATE, Steering Column Housing 6.500 7–A11
PLATE, Steering Column 6.514 7–A20
PLATE, Steering Column 6.758 7–B20
PLATE, Steering Pump 6.612 7–B15
PLUG, Steering 6.518 7–A21
PROTECTOR, Steering Column 6.522 7–B8
PROTECTOR, Steering Gear Oil Pressure 6.670 7–B18
PULLEY, Steering Pump 6.655 7–B17
PUMP KIT, Power Steering 6.605 7–B10
PUMP, Power Steering 6.605 7–B10

R

REINFORCEMENT, Steering Column Attaching 6.760 7–B20
RESERVOIR, Steering Pump 6.635 7–B16
RETAINER, Steering Column 6.521 7–B8
RETAINER, Steering Wheel 6.515 7–A20
RING KIT, Steering Pump 6.610 7–B15
RING, Steering Column Housing 6.500 7–A11
RING, Steering Column 6.521 7–B8
RING, Steering Gear Hydraulic Valve ... 6.552 7–B9
RING, Steering Linkage 6.865 7–B20
RING, Steering Pump Drive Shaft Outer Bearing Retainer 6.616 7–B15
RING, Steering Pump 6.612 7–B15
ROD KIT, Steering Tie Rod Inner 6.230 7–A9
ROD KIT, Tie Rod 6.233 7–A10
ROD, Steering Column 6.521 7–B8

S

SCREW, Steering Column 6.514 7–A20
SEAL KIT, Steering Gear Hydraulic Valve 6.552 7–B9
SEAL KIT, Steering Pump 6.609 7–B14
SEAL, Front Wheel Bearing 6.326 7–A10
SEAL, Steering Column 6.758 7–B20
SEAL, Steering Fluid Cooler 6.602 7–B10
SEAL, Steering Gear 6.674 7–B19
SEAL, Steering Pump Drive Shaft 6.617 7–B16
SEAL, Steering Pump 6.635 7–B16
SEAL, Steering Tie Rod 6.242 7–A10
SEAT, Steering Column 6.521 7–B8
SHAFT KIT, Steering Pump 6.614 7–B15
SHAFT, Steering Column Intermediate . 6.526 7–B9
SHAFT, Steering Column 6.524 7–B9
SHAFT, Steering Pump 6.614 7–B15
SHIELD, Steering Gear Shaft 6.525 7–B9
SHIM, Steering Knuckle Upper Control Arm 6.178 7–A9
SHOE, Steering Column 6.514 7–A20
SHROUD, Steering 6.518 7–A21
SLEEVE, Steering Pump 6.612 7–B15
SPACER, Steering Column 6.514 7–A20
SPHERE KIT, Steering Column 6.514 7–A20
SPHERE KIT, Steering Gear Shaft 6.525 7–B9
SPRING KIT, Steering Column 6.514 7–A20
SPRING KIT, Steering Column 6.521 7–B8
SPRING, Steering Column Housing 6.500 7–A11
SPRING, Steering Column 6.514 7–A20
SPRING, Steering Column 6.521 7–B8
SPRING, Steering Pump Control 6.624 7–B16
SPRING, Steering Pump 6.612 7–B15
SPRING, Steering Wheel 6.512 7–A19
STRAP, Steering Gear/Pump Oil 6.672 7–B19
STRAP, Steering Pump 6.635 7–B16
STUD, Front Wheel Lower Control Arm . 6.174 7–A9

STUD, Upper Control Arm Shaft 6.164 7–A8
SUPPORT, Steering 6.518 7–A21

T

TUBE, Steering Gear Oil Return 6.671 7–B18

V

VALVE KIT, Steering Gear Hydraulic 6.550 7–B9
VALVE, Steering Pump Control 6.624 7–B16
VANE KIT, Steering Pump 6.610 7–B15

W

WASHER, Front Wheel Lower Control Arm 6.174 7–A9
WASHER, Steering Column Attaching .. 6.760 7–B20
WASHER, Steering Column 6.521 7–B8
WASHER, Steering Gear Mounting 6.509 7–A19
WASHER, Steering Knuckle Upper Control Arm 6.163 7–A8
WASHER, Steering Knuckle Upper Control Arm 6.178 7–A9
WASHER, Steering Knuckle 6.009 7–A8
WASHER, Upper Control Arm Shaft 6.164 7–A8
WEDGE, Steering Column 6.514 7–A20
WHEEL, Steering 6.513 7–A19

Y

YOKE, Steering Column 6.524 7–B9

CHART INDEX

GROUP 6 GRID

ILLUS INDEX (GRP 6) 7–A7
STEERING GEARS 7–A13
STEERING COLUMNS 7–A23
POWER STEERING PUMPS 7–B11

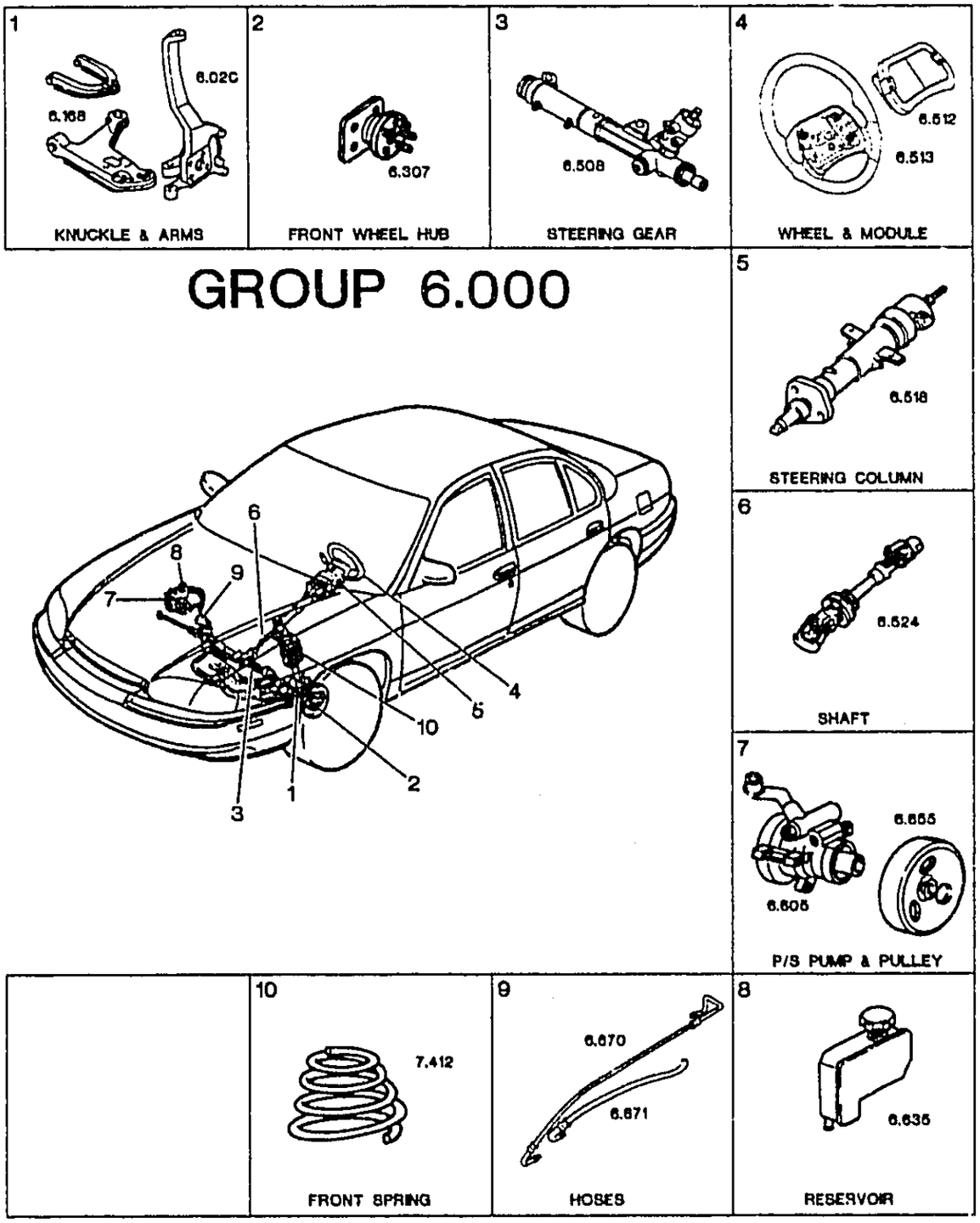

© 2000 GENERAL MOTORS SERVICE PARTS OPERATIONS–CHEVROLET–14Y

6.008 BOLT – NUT, Front Axle and Axle Center

84–90	Y	11508331	8	1.80	BOLT, DRIVETRAIN & FRT SUSP FRM (08.900)	7–E4,48
84	Y	11516150	8	*1.05	NUT, FRT SUSP (M8X1.25X0.8) (08.921)	

6.009 NUT – WASHER, Steering Knuckle

84–96	Y	10254330	2	2.25	NUT, S/KNU (14X2.0X14 SLOTTED, LWR) (07.530)	7–E4,6
84–96	Y	14050099	2	1.80	NUT, S/KNU (UPR) (HEX SLOTTED M12X1.75X13) (05.418)	7–E7,24
84–96	Y	10267310	2	*.97	WASHER, S/KNU (& HUB) (06.164)	7–E7,23
84–96	Y	14047778	2	.63	WASHER, S/KNU (M15X26X2) (06.178)	7–E4,16

6.020 KNUCKLE, Steering

84	Y	10046329	LH	DISCON	KNUCKLE, STRG	
84	Y	10046330	RH	DISCON	KNUCKLE, STRG	
85	Y	10046331	LH	DISCON	KNUCKLE, STRG	
85	Y	10046332	RH	DISCON	KNUCKLE, STRG	
86–87	Y	10052259	LH	DISCON	KNUCKLE, STRG	
86–87	Y	10052260	RH	DISCON	KNUCKLE, STRG	
88–90	Y	14105147	LH	326.02	KNUCKLE, STRG	7–E7,25
88–90	Y	14105148	RH	326.02	KNUCKLE, STRG	7–E7,25
91–93	Y	10098164	RH	317.34	KNUCKLE, STRG	7–E16,25
94–96	Y	18019572	LH	326.02	KNUCKLE, STRG	7–E16,25
94–96	Y	18019573	RH	326.02	KNUCKLE, STRG	7–E16,25

6.163 WASHER, Steering Knuckle Upper Control Arm

84–87	Y	14047733	AR	4.55	WASHER, FRT UPR CONT ARM	7–E4,43
88–96	Y	10268931	2	2.80	WASHER, FRT UPR CONT ARM (POS #1)	7–E7,8
88–96	Y	10268932	6	2.80	WASHER, FRT UPR CONT ARM (POS #2)	7–E7,8

6.164 NUT – STUD – WASHER, Upper Control Arm Shaft

84–89	Y	14060153	4	3.40	NUT, FRT UPR CONT ARM BALL STUD (M20 X 2.5–6M)	7–E4,2
90	Y SOFT RIDE SUSP (FE1), HVY DUTY SUSP (FE7)	14060153	4	3.40	NUT, FRT UPR CONT ARM BALL STUD (M20 X 2.5–6M)	7–E4,2
88–89	Y	14050089	2	1.80	NUT, STRG LNK OTR RD (HEX SLOTTED M12X1.75X13) (05.418)	7–E4,17
84–96	Y	9769596	2	113.44	STUD, FRT UPR CONT ARM BALL	7–E4,3
84–86	Y	473539	2	*.63	WASHER, STRG KNU & HUB (FL 3.50X13.2 ID) (00.002)	7–E4,4
88–96	Y	10267310	2	*.97	WASHER, STRG LNKG OTR TIE ROD (13.2X22.8X2.0, LCS, ZF)	7–E7,23

6.168 ARM, Steering Knuckle Upper & Lower Control

88–96	Y	10098153	LH	470.12	ARM, FRT LWR CONT	7–E7,34
88–96	Y	10098154	RH	470.12	ARM, FRT LWR CONT	7–E7,34
84–87	Y	14067598	RH	DISCON	ARM, FRT UPR CONT (KIT)	
88–96	Y	10258062	RH	388.36	ARM, FRT UPR CONT	7–E7,9
88–96	Y	10258063	LH	388.36	ARM, FRT UPR CONT	7–E7,9
84–87	Y	14067623	LH	DISCON	ARM, LWR (INCL WASHER, NUT & PIN)	
84–87	Y	14067624	RH	DISCON	ARM, LWR (INCL WASHER, NUT & PIN)	

© 2000 GENERAL MOTORS SERVICE PARTS OPERATIONS–CHEVROLET–14Y

6.168 ARM, Steering Knuckle Upper & Lower Control (Con't)

84–87	Y	14067597	LH	388.36	ARM, UPR (INCL WASHER, NUT & PIN)	7–E4,1
84–87	Y	14067598	RH	DISCON	ARM, UPR (INCL WASHER, NUT & PIN)	

6.172 BOLT – NUT, Steering Knuckle Lower Control Arm

84–96	Y	10273568	4	3.85	BOLT, FRT LWR CONT ARM (08.900)	7–E4,66
91–96	Y	11502813	4	4.65	NUT, FRT LWR CONT ARM (M12X1.75X13.4 25.6OD) (HEX FLGD PREV TORQ CAD) (08.917)	7–E4,61
91–93	Y	11516383	4	*1.20	NUT, FRT LWR CONT ARM (16X2X18.9 34.2OD) (08.917)	7–E16,33

6.174 STUD – WASHER, Front Wheel Lower Control Arm

84–96	Y	9769599	2	100.16	STUD, FRT LWR CONT ARM BALL	7–E4,18
84–94	Y	14046942	8	.73	WASHER, FRT LWR CONT ARM (M13X24X2) (05.383)	7–E4,65
84–95	Y	14055822	8	.31	WASHER, FRT LWR CONT ARM (24X22.50) (08.929)	7–E7,32
95–96	Y	10268936	8	.37	WASHER, FRT LWR CONT ARM (FLAT, M13X23X3.3)	7–E16,32

6.178 BOLT – NUT – SHIM – WASHER, Steering Knuckle Upper Control Arm

84–87	Y	14047781	4	5.85	BOLT, FRT UPR CONT ARM (M12X1.75X92)	7–E4,49
88–96	Y	10098208	4	5.85	BOLT, FRT UPR CONT ARM	7–E7,59
91–94	Y	11502813	4	4.65	NUT, FRT UPR CONT ARM (M12X1.75X13.4 25.6OD) (HEX FLGD PREV TORQ CAD) (08.917)	7–E4,61
91–93	Y	11516383	4	*1.20	NUT, FRT UPR CONT ARM (16X2X18.9 34.2OD) (08.917)	
91–96	Y	14060153	4	3.40	NUT, FRT UPR CONT ARM (M20X 2.5–6M) (06.164)	7–E16,10
91–96	Y	10268933	AR	*1.07	SHIM, FRT UPR CONT ARM	7–E4,44
84–90	Y	10268933	AR	*1.07	SHIM, STRG KNU UPR CONT ARM (.030MM THK)	7–E4,44
84–87	Y	14060157	2	DISCON	WASHER, FRT UPR CONT ARM	

6.230 ROD KIT, Steering Tie Rod Inner

NOTE: FOR 1986–1991 USAGE REFER TO STEERING GEAR CHARTS GRP 6.508

84–86	Y (1ST DES)	7841627	1	97.86	ROD KIT, STRG LNKG INR TIE (FEMALE THREAD ON RACK END)	7–E23,18
84–86	Y (2ND DES)	26055105	1	112.42	ROD KIT, STRG LNKG INR TIE (06.233) (MALE THREAD ON RACK END)	
87	Y FOR MDL APPL & POA INFO SEE GEAR CHART (2ND DES)	26055105	1	112.42	ROD KIT, STRG LNKG INR TIE (06.233) (MALE THREAD ON RACK END)	
92	Y	26024411	2	100.16	ROD KIT, STRG LNKG INR TIE	7–E23,18
93–96	Y	26034348	2	100.41	ROD KIT, STRG LNKG INR TIE	7–F2,12

© 2000 GENERAL MOTORS SERVICE PARTS OPERATIONS–CHEVROLET–14Y

6.233 ROD KIT, Tie Rod

NOTE: FOR 1986–1991 USAGE REFER TO STEERING GEAR CHART GRP 6.508

84	Y 5.7–8 (L83)	26050222	2	51.02	ROD KIT, STRG LNKG OTR TIE (W/BROADCAST CODES YM, YP, OR XA) (05.415) (AC–DELCO #36–9515)	7–E23,22
85	Y 5.7–8 (L98)	26050222	2	51.02	ROD KIT, STRG LNKG OTR TIE (W/BROADCAST CODES YM, YP, OR XA) (05.415) (AC–DELCO #36–9515)	7–E23,22
86	Y 5.7–8 (L98), (EXC HVY DUTY SUSP (FE7)	26050222	2	51.02	ROD KIT, STRG LNKG OTR TIE (W/BROADCAST CODES WL OR WT) (05.415) (AC–DELCO #36–9515)	7–E23,22
87–91	Y 5.7–8 (L98)	26050222	2	51.02	ROD KIT, STRG LNKG OTR TIE (FOR MDL APPL & POA INFO SEE GEAR CHART) (05.415) (AC–DELCO #36–9[illegible])	7–E23,22
92–96	Y 5.7J (LT5), 5.7P (LT1)	26050222	2	51.02	ROD KIT, STRG LNKG [illegible]R TIE (05.415) (AC–DELCO #36–9515)	7–E23,22

6.234 NUT, Steering Tie Rod

NOTE: FOR 1986–1991 USAGE REFER TO STEERING GEAR CHART GRP 6.508

92–96	Y	26017267	2	6.95	NUT, STRG LNKG INR TIE ROD (M14X1.5X11, 510M (5), ZC) (06.526)	
91–96	Y	14050089	2	1.80	NUT, STRG LNKG OTR TIE ROD (UPR) (HEX SLOTTED M12X1.75X13) (05.418)	7–E16,28

6.242 BOOT KIT – BUSHING – CLAMP – SEAL, Steering Tie Rod

NOTE: FOR 1986–1991 USAGE REFER TO STEERING GEAR CHART GRP 6.508

84–86	Y	26003998	2	34.75	BOOT KIT, RACK & PINION	7–E23,20
92	Y	26003998	2	34.75	BOOT KIT, S/GR	7–E23,20
93–96	Y	21011025	2	33.47	BOOT KIT, S/GR (INCLS BOOT, CLAMPS, GREASE)	7–F2,10
93–96	Y	26020743	1	3.57	BUSHING, S/GR BOOT RET	7–F2,10
84–86	Y	7841287	2	10.58	CLAMP, BOOT	7–E23,19
92	Y	7841287	2	10.58	CLAMP, S/GR BOOT	7–E23,19
92–96	Y	26013335	2	6.81	CLAMP, S/GR BOOT (TIE ROD END) (OTR)	7–F2,8
92	Y	7840726	1	12.62	SEAL, STRG LNKG OTR TIE ROD	7–E23,24
84–86	Y	7840726	1	12.62	SEAL, TIE ROD	7–E23,24

6.307 HUB, Front Wheel

84–90	Y	7470551	2	430.62	HUB, FRT WHL (AC–DELCO #20–44)	7–E4,14
91–96	Y	12413001	2	485.74	HUB, FRT WHL (INCL WHL SPEED SENSOR & BRG) (AC–DELCO #FW109)	7–E16,20

6.326 SEAL, Front Wheel Bearing

86–90	Y	14087633	2	9.20	SEAL, FRT WHL HUB (O–RING) .	7–E4,67

© 2000 GENERAL MOTORS SERVICE PARTS OPERATIONS–CHEVROLET–14Y

6.500 BOLT – INSULATOR – LOCK – PIN – PLATE – RING – SPRING, Steering Column Housing

NOTE: FOR 1986–1991 USAGE REFER TO STEERING COLUMN CHART GRP 6.508

92	Y (2ND DES)	26027958	1	3.99	**INSULATOR**, STRG SHF LK PLT (USE W/COLUMN ASMS LABELED 26030970 OR 26030971, NO COMPARABLE 1ST DES)	7–F13,29
93	Y	26027958	1	3.99	**INSULATOR**, STRG SHF LK PLT .	7–F13,29
84–86	Y	7840475	1	14.40	**PIN**, CABLE BACKDRIVE	7–F13,74
84–86	Y	7840476	1	13.30	**PIN**, INHIBITOR CROSS	7–F13,75
91	Y	7840475	1	14.40	**PIN**, STRG COL CBL BACKDRIVE	7–F13,74
92–93	Y 4–SPD A/TRANS (MD8) ...	7840475	1	14.40	**PIN**, STRG COL CBL BACKDRIVE	7–F13,74
94–96	Y 4–SPD A/TRANS (M30) ...	7840475	1	14.40	**PIN**, STRG COL CBL BACKDRIVE	7–F13,74
91	Y	7840476	1	13.30	**PIN**, STRG COL INHIBITOR CR ..	7–F13,75
92–93	Y 4–SPD A/TRANS (MD8) ...	7840476	1	13.30	**PIN**, STRG COL INHIBITOR CR ..	7–F13,75
94–96	Y 4–SPD A/TRANS (M30) ...	7840476	1	13.30	**PIN**, STRG COL INHIBITOR CR ..	7–F13,75
84–86	Y	7808613	1	10.25	**PIN**, STRG WHL LK	7–F13,32
91–93	Y	7808613	1	10.25	**PIN**, STRG WHL LK (TAPERED END)	7–F13,32
94–96	Y (EXC EUROPEAN PROVISIONS (VD1) (EXPORT), VE1 (EXPORT) ..	7808613	1	10.25	**PIN**, STRG WHL LK (TAPERED END)	7–F13,32
84–86	Y T&T WHL (N37)	7811995	1	13.03	**PLATE**, STRG SHAFT	
91–93	Y	26017656	1	25.81	**PLATE**, STRG SHF LK	7–F13,6
94–95	Y (EXC EUROPEAN PROVISIONS (VD1) (EXPORT), VE1 (EXPORT) ..	26017656	1	25.81	**PLATE**, STRG SHF LK	7–F13,6
96	Y 4–SPD A/TRANS (M30), (EXC EUROPEAN PROVISIONS (VD1) (EXPORT), VE1 (EXPORT) ..	26017656	1	25.81	**PLATE**, STRG SHF LK	7–F13,6
96	Y 6–SPD M/TRANS (ML9) ...	26017656	1	25.81	**PLATE**, STRG SHF LK	7–F13,6
84–86	Y	7819976	1	7.56	**RING**, STRG SHF LK PLT RET ...	
91–96	Y	5694191	1	1.74	**RING**, STRG SHF LK PLT RET (06.524)	7–F13,5
84–86	Y	7840739	1	12.10	**SPRING**, CABLE BACKDRIVE PIN .	7–F13,73
91	Y	7840739	1	12.10	**SPRING**, STRG COL CBL BACKDRIVE PIN	7–F13,73
92–93	Y 4–SPD A/TRANS (MD8) ...	7840739	1	12.10	**SPRING**, STRG COL CBL BACKDRIVE PIN	7–F13,73
94–96	Y 4–SPD A/TRANS (M30) ...	7840739	1	12.10	**SPRING**, STRG COL CBL BACKDRIVE PIN	7–F13,73
	*EXPORT**********EXPORT**********EXPORT**********EXPORT**********EXPORT*					
94	Y EUROPEAN PROVISIONS (VD1) (EXPORT), VE1 (EXPORT)	7830477	1	24.75	**PIN**, STRG WHL LK (BLUNT END)	7–F21,32
96	Y 4–SPD A/TRANS (M30), EUROPEAN PROVISIONS (VD1) (EXPORT), VE1 (EXPORT)	7830477	1	24.75	**PIN**, STRG WHL LK (BLUNT END)	7–F21,32
94–96	Y EUROPEAN PROVISIONS (VD1) (EXPORT), VE1 (EXPORT)	26036544	1	21.93	**PLATE**, STRG SHF LK	7–F21,6
94	Y 6–SPD M/TRANS (ML9), EUROPEAN PROVISIONS (VD1) (EXPORT), VE1 (EXPORT)	7840739	1	12.10	**SPRING**, STRG COL CBL BACKDRIVE PIN	7–F13,73

© 2000 GENERAL MOTORS SERVICE PARTS OPERATIONS–CHEVROLET–14Y

6.508 GEAR – GEAR KIT, Steering

NOTE: #1 TORSION BAR NON "FE7" WILL MEASURE 24MM, WITH "FE7" WILL MEASURE 25MM
NOTE: FOR 1986–1991 USAGE REFER TO STEERING GEAR CHART GRP 6.508

84	Y 5.7–8 (L83), HVY DUTY SUSP (FE7)	26044835	1	446.00	GEAR KIT, STRG (REMAN) ((REFER TO NOTE 1 IN CATALOG TEXT), MAY NEED TO ORDER REPLACEMENT PARTS BY BROADCAST CODE LOCATED ON RACK DUST COVER (CODES WT, YP)) (AC–DELCO #36–9036)	7–E4,62
84	Y 5.7–8 (L83), (EXC HVY DUTY SUSP (FE7)	26044837	1	446.00	GEAR KIT, STRG (REMAN) (IT MAY BE NECESSARY TO ORDER REPLACEMENT PARTS BY BROADCAST CODE LOCATED ON RACK DUST COVER (CODES YM, XA, WL)) (AC–DELCO #36–9038)	7–G12,10
85	Y 5.7–8 (L98), HVY DUTY SUSP (FE7)	26044835	1	446.00	GEAR KIT, STRG (REMAN) ((REFER TO NOTE 1 IN CATALOG TEXT), MAY NEED TO ORDER REPLACEMENT PARTS BY BROADCAST CODE LOCATED ON RACK DUST COVER (CODES WT, YP)) (AC–DELCO #36–9036)	7–E4,62
85	Y 5.7–8 (L98), (EXC HVY DUTY SUSP (FE7)	26044837	1	446.00	GEAR KIT, STRG (REMAN) (IT MAY BE NECESSARY TO ORDER REPLACEMENT PARTS BY BROADCAST CODE LOCATED ON RACK DUST COVER (CODES YM, XA, WL)) (AC–DELCO #36–9038)	7–G12,10
86	Y 5.7–8 (L98), HVY DUTY SUSP (FE7)	26044835	1	446.00	GEAR KIT, STRG (REMAN) (AC–DELCO #36–9036)	7–E4,62
92–95	Y 5.7P (LT1), 5.7J (LT5)	26044839	1	383.60	GEAR KIT, STRG (REMAN) (AC–DELCO #36–9040)	7–E11,30
96	Y 5.7P (LT1), 5.7–5 (LT4)	26044839	1	383.60	GEAR KIT, STRG (REMAN) (AC–DELCO #36–9040)	7–E11,30
	*EXPORT*****************EXPORT*****************EXPORT*****************EXPORT*****************EXPORT*					
84	Y 5.7–8 (L83), EXPORT (VB4), EUROPEAN PROVISIONS (VD1) (EXPORT), VE1 (EXPORT), VT7 (EXPORT)	26044837	1	446.00	GEAR KIT, STRG (REMAN) (IT MAY BE NECESSARY TO ORDER REPLACEMENT PARTS BY BROADCAST CODE LOCATED ON THE RACK DUST COVER (CODES YM, XA, WL)) (AC–DELCO #36–9038)	7–G12,10
85	Y 5.7–8 (L98), EXPORT (VB4), EUROPEAN PROVISIONS (VD1) (EXPORT), VE1 (EXPORT), VT7 (EXPORT)	26044837	1	446.00	GEAR KIT, STRG (REMAN) (IT MAY BE NECESSARY TO ORDER REPLACEMENT PARTS BY BROADCAST CODE LOCATED ON THE RACK DUST COVER (CODES YM, XA, WL)) (AC–DELCO #36–9038)	7–G12,10

© 2000 GENERAL MOTORS SERVICE PARTS OPERATIONS–CHEVROLET–14Y

1986 STEERING GEARS

NOTE: A01 PRODUCTION GEAR NUMBERS IS SHOWN FOR "REFERENCE ONLY", DO NOT ORDER..
NOTE: A02 IDENT CODE CAN BE FOUND ON GEAR ASM DUST COVER.
NOTE: A03 SEAL KIT-PINION & SHAFT IS NOW PART OF THE BEARING KIT.

PRODUCTION	DIV.	VIN CODE	USAGE	COL. NO.
07848998	1		Y W/H.D. SUSP(FE7)(EXC EXPORT VB4,VD1,VE1,VT7)	1
26002149	1		Y(EXC H.D. SUSP FE7,EXPORT VB4,VD1,VE1,VT7)	2
07849000	1	7	Y W/VB4,VD1,VE1,VT7(EXPORT)	3

GROUP	DESCRIPTION	QTY	1	2	3	4	5
6.508	GEAR,STRG(PROD.)	1	7848998	26002149	7849000	—	—
6.508	GEAR KIT,STRG(R&P)(PRTL)(SERVICE)	1	26044835	26044837	26044837	—	—
6.525	BEARING KIT,STUD SHAFT	1	26012607	26012607	26012607	—	—
6.242	BOOT KIT,RACK & PINION	2	26003998	26003998	26003998	—	—
6.786	BUSHING KIT,MTG	1	7841634	7841634	7841634	—	—
6.242	CLAMP,BOOT	1	7841287	7841287	7841287	—	—
6.324	COVER,DUST	1	[illegible]	7846884	[illegible]	—	—
6.803	HOUSING,RACK & PINION	1	DISCON	DISCON	DISCON	—	—
6.509	INSULATOR,S/GR	1	7840293	7840293	7840293	—	—
6.670	LINE KIT,CYL LH	1	26017578	26011399	26017578	—	—
6.670	LINE KIT,CYL RH	1	DISCON	26011400	DISCON	—	—
6.822	NUT,ADJUSTER PLUG LOCK	1	26011849	26011849	26011849	—	—
6.822	NUT,STRG GEAR(M14 X 1.5)	2	—	26017267	—	—	—
6.822	PLUG,ADJUSTER	1	7841283	7841283	7841283	—	—
6.552	RING,RETAINING STUB SHAFT SEAL	1	7828017	7828017	7828017	—	—
6.865	RING,SHOCK DAMPENER	1	7849530	7849530	7849530	—	—
6.230	ROD KIT,INR TIE	1	7841627	7841627	7841627	—	—
6.233	ROD KIT,OTR TIE	1	26050222	26050222	26050222	—	—
6.552	SEAL KIT,VALVE RING(SPLIT RING)	1	26010340	26010340	26010340	—	—
6.674	SEAL,O RING(4.5MM)(CYL LINE)	2	7828486	7828486	7828486	—	—
6.242	SEAL,TIE ROD	1	7840726	7840726	7840726	—	—
6.550	VALVE KIT,PINION	1	DISCON	—	—	—	—

© 2000 GENERAL MOTORS SERVICE PARTS OPERATIONS-CHEVROLET-14Y

1987 STEERING GEARS

NOTE: A01 PRODUCTION GEAR NUMBERS IS SHOWN FOR "REFERENCE ONLY", DO NOT ORDER..
NOTE: A02 IDENT CODE CAN BE FOUND ON GEAR ASM DUST COVER.
NOTE: A03 SEAL KIT-PINION & SHAFT IS NOW PART OF THE BEARING KIT.

PRODUCTION	VIN DIV.	VIN CODE	USAGE	COL. NO.
07848998	1		Y W/H.D. SUSP(FE7)(EXC EXPORT VD1)	1
07848998	1		Y W/SPORT HDLG PKG(Z52)	1
26002149	1		Y(EXC SPORT PKG Z52 ,SUSP FE7,EXPORT VB4,VJ1,VE1,VT7)	2
07849000	1	7	Y W/VB4,VD1,VE1,VT7(EXPORT)	3

GROUP	DESCRIPTION	QTY	1	2	3	4	5
6.508	GEAR,STRG(PROD.)	1	7848998	26002149	7849000	—	—
6.508	GEAR KIT,STRG(R&P)(PRTL)(SERVICE).	1	26044835	26044837	26044837	—	—
6.525	BEARING KIT,STUB SHAFT	1	26012607	26012607	26012607	—	—
6.242	BOOT KIT,RACK & PINION	2	26003998	26003998	26003998	—	—
6.786	BUSHING KIT,MTG	1	7841634	7841634	7841634	—	—
6.242	CLAMP,BOOT	1	7841287	7841287	7841287	—	—
6.824	COVER,DUST	1	7846884	7846884	7846884	—	—
6.803	HOUSING,RACK & PINION	1	DISCON	DISCON	DISCON	—	—
6.509	INSULATOR.S/GR.	1	7840293	7840293	7840293	—	—
6.670	LINE KIT,CYL LH	1	26017578	26011399	26017578	—	—
6.670	LINE KIT,CYL RH	1	DISCON	26011400	DISCON	—	—
6.822	NUT,ADJUSTER PLUG LOCK	1	26011849	26011849	26011849	—	—
6.822	NUT,STRG GEAR(M14 X 1.5)	2	—	26017267	—	—	—
6.822	PLUG,ADJUSTER	1	7841283	7841283	7841283	—	—
6.552	RING,RETAINING STUB SHAFT SEAL	1	7828017	7828017	7828017	—	—
6.865	RING,SHOCK DAMPENER	1	7849530	7849530	7849530	—	—
6.230	ROD KIT,INR TIE	1	7841627	7841627	7841627	—	—
6.233	ROD KIT,OTR TIE	1	26050222	26050222	26050222	—	—
6.552	SEAL KIT,VALVE RING(SPLIT RING)	1	26010340	26010340	26010340	—	—
6.674	SEAL,O RING(4.5MM)(CYL LINE)	2	7828486	7828486	7828486	—	—
6.242	SEAL,TIE ROD	1	7840726	7840726	7840726	—	—
6.550	VALVE KIT,PINION	1	DISCON	—	—	—	—

© 2000 GENERAL MOTORS SERVICE PARTS OPERATIONS-CHEVROLET-14Y

1988 STEERING GEARS

NOTE: A01 PRODUCTION GEAR NUMBERS IS SHOWN FOR "REFERENCE ONLY", DO NOT ORDER..
NOTE: A02 IDENT CODE CAN BE FOUND ON GEAR ASM DUST COVER.
NOTE: A03 SEAL KIT-PINION & SHAFT IS NOW PART OF THE BEARING KIT.

PRODUCTION	DIV.	VIN CODE	USAGE	COL. NO.
26003547	1	Y	(EXC PA CVR PY3)	1
26003546	1	Y	W/PA CVR(PY3)	2

GROUP	DESCRIPTION	QTY	1	2	3	4	5
6.500	GEAR,STRG(PROD.)	1	26003547	26003546	—	—	—
6.508	GEAR KIT,STRG(R&P)(PRTL)(REMAN) (SERVICE)	1	26044836	26024852	—	—	—
6.525	BEARING KIT,STUB SHAFT	1	26012607	26012607	—	—	—
6.242	BOOT KIT,RACK & PINION	2	26003998	26003998	—	—	—
6.786	BUSHING KIT,MTG	1	7841634	7841634	—	—	—
6.242	CLAMP,BOOT	2	7841287	7841287	—	—	—
6.234	CLAMP,TIE ROD END	1	7845729	7845729	—	—	—
6.803	HOUSING,RACK & PINION	1	DISCON	DISCON	—	—	—
6.509	INSULATOR,S/GR	1	7840293	7840293	—	—	—
6.670	LINE KIT,CYL LH	1	26011399	26011399	—	—	—
6.670	LINE KIT,CYL RH	1	26011400	26011400	—	—	—
6.822	NUT,ADJUSTER PLUG LOCK	1	26011849	26011849	—	—	—
6.822	NUT,STRG GEAR(M14 X 1.5)	2	26017267	26017267	—	—	—
6.822	PLUG,ADJUSTER	1	7841283	7841283	—	—	—
6.552	RING,RETAINING STUB SHAFT SEAL	1	7828017	7828017	—	—	—
6.865	RING,SHOCK DAMPENER	2	7831234	7831234	—	—	—
6.230	ROD KIT,INR TIE	1	26024411	26024411	—	—	—
6.233	ROD KIT,OTR TIE	1	26050222	26050222	—	—	—
6.674	SEAL,O RING(4.5MM)(CYL LINE)	2	7828486	7828486	—	—	—
6.242	SEAL,TIE ROD	1	7840726	7840726	—	—	—
6.550	VALVE KIT,PINION	1	DISCON	—	—	—	—

© 2000 GENERAL MOTORS SERVICE PARTS OPERATIONS-CHEVROLET-14Y

1989 STEERING GEARS

NOTE: A01 PRODUCTION GEAR NUMBERS IS SHOWN FOR "REFERENCE ONLY", DO NOT ORDER..
NOTE: A02 IDENT CODE CAN BE FOUND ON GEAR ASM DUST COVER.
NOTE: A03 SEAL KIT-PINION & SHAFT IS NOW PART OF THE BEARING KIT.

PRODUCTION	VIN DIV. CODE	USAGE	COL. NO.
26008136	1	Y W/SOFT RIDE SUSP(FE1),HVY DUTY SUSP(FE7)(SEE NOTE 1)	1
26016255	1	Y W/SOFT RIDE SUSP(FE1),HVY DUTY SUSP(FE7)(SEE NOTE 2)	2

NOTE: 001 1ST DES GEAR ASM STAMPED 'NS' ON DUST COVER.
NOTE: 002 2ND DES GEAR ASM STAMPED 'FH' ON DUST COVER.

GROUP	DESCRIPTION	QTY	1	2	3	4	5
6.508	GEAR,STRG(PROD.)	1	26008136	26016255	—	—	—
6.508	GEAR KIT,STRG(R&P)(PRTL)(SERVICE)	1	—	26044839	—	—	—
6.508	GEAR KIT,STRG(R&P)(PRTL)(REMAN) (SERVICE)	1	26044836	—	—	—	—
6.525	BEARING KIT,STUB SHAFT	1	26012607	—	—	—	—
6.242	BOOT KIT,RACK & PINION	2	26003998	26003998	—	—	—
6.786	BUSHING KIT,MTG	1	7841634	7841634	—	—	—
6.242	CLAMP,BOOT	2	7841287	7841287	—	—	—
6.234	CLAMP,TIE ROD END	2	26013335	26013335	—	—	—
8.984	FITTING,LUB	1	7842586	—	—	—	—
6.509	INSULATOR,S/GR	1	7840293	7840293	—	—	—
6.670	LINE KIT,CYL LH	1	26017578	26017578	—	—	—
6.670	LINE KIT,CYL RH	1	26011429	26011429	—	—	—
6.822	NUT,ADJUSTER PLUG LOCK	1	26011849	26011849	—	—	—
6.34	NUT,STRG GR	2	26017267	26017267	—	—	—
6.552	RING,RETAINING STUB SHAFT SEAL	1	7828017	7828017	—	—	—
6.865	RING,SHOCK DAMPENER	2	7831234	7831234	—	—	—
6.230	ROD KIT,INR TIE	2	26024411	26024411	—	—	—
6.233	ROD KIT,OTR TIE	2	26050222	26050222	—	—	—
6.674	SEAL,O RING(4.5MM)(CYL LINE)	2	7828486	7828486	—	—	—
6.242	SEAL,TIE ROD	1	7840726	7840726	—	—	—

© 2000 GENERAL MOTORS SERVICE PARTS OPERATIONS-CHEVROLET-14Y

1990 STEERING GEARS

NOTE: A01 PRODUCTION GEAR NUMBERS IS SHOWN FOR "REFERENCE ONLY", DO NOT ORDER..
NOTE: A02 IDENT CODE CAN BE FOUND ON GEAR ASM DUST COVER.
NOTE: A03 SEAL KIT-PINION & SHAFT IS NOW PART OF THE BEARING KIT.

PRODUCTION	VIN DIV. CODE	USAGE	COL. NO.
26016255	1	Y W/SOFT RIDE SUSP(FE1),HVY DUTY SUSP(FE7)	1

GROUP	DESCRIPTION	QTY	1	2	3	4	5
6.508	GEAR,STRG(PROD.)	1	26016255	—	—	—	—
6.508	GEAR KIT,STRG(R&P)(PRTL)(SERVICE).	1	26044839	—	—	—	—
6.242	BOOT KIT,RACK & PINION	2	26003998	—	—	—	—
6.786	BUSHING KIT,MTG	1	7841634	—	—	—	—
6.242	CLAMP,BOOT	2	7841287	—	—	—	—
6.234	CLAMP,TIE ROD END	2	26013335	—	—	—	—
6.509	INSULATOR,S/GR.....	1	7840293	—	—	—	—
6.670	LINE KIT,CYL LH	1	26017578	—	—	—	—
6.670	LINE KIT,CYL RH	1	26011429	—	—	—	—
6.822	NUT,ADJUSTER PLUG LOCK	1	26011849	—	—	—	—
6.234	NUT,STRG GR	2	26017267	—	—	—	—
6.552	RING,RETAINING STUB SHAFT SEAL ...	1	7828017	—	—	—	—
6.865	RING,SHOCK DAMPENER	2	7831234	—	—	—	—
6.230	ROD KIT,INR TIE	2	26024411	—	—	—	—
6.233	ROD KIT,OTR TIE	2	26050222	—	—	—	—
6.674	SEAL,O RING(4.5MM)(CYL LINE)	2	7828486	—	—	—	—
6.242	SEAL,TIE ROD	1	7840726	—	—	—	—

© 2000 GENERAL MOTORS SERVICE PARTS OPERATIONS–CHEVROLET–14Y

1991 STEERING GEARS

NOTE: A01 PRODUCTION GEAR NUMBERS IS SHOWN FOR "REFERENCE ONLY", DO NOT ORDER..
NOTE: A02 SEAL KIT-PINION & SHAFT IS NOW PART OF THE BEARING KIT.

PRODUCTION	DIV.	VIN CODE	USAGE	COL. NO.
26024191	1	Y	.....	1

GROUP	DESCRIPTION	QTY	1	2	3	4	5
6.508	GEAR,STRG(PROD.)	1	26024191	—	—	—	—
6.508	GEAR KIT,STRG(R&P)(PRTL)(REMAN) (SERVICE)	1	26044839	—	—	—	—
6.242	BOOT KIT,RACK & PINION	2	26003998	—	—	—	—
6.786	BUSHING KIT,MTG	1	7841634	—	—	—	—
6.242	CLAMP,BOOT	1	7841287	—	—	—	—
6.234	CLAMP,TIE ROD END	1	26013335	—	—	—	—
6.509	INSULATOR,S/GR.....	1	7840293	—	—	—	—
6.670	LINE KIT,CYL LH	1	26017578	—	—	—	—
6.670	LINE KIT,CYL RH	1	26017579	—	—	—	—
6.822	NUT,ADJUSTER PLUG LOCK	1	26011849	—	—	—	—
6.552	RING,RETAINING STUB SHAFT SEAL ...	1	7828017	—	—	—	—
6.865	RING,SHOCK DAMPENER	2	7831234	—	—	—	—
6.230	ROD KIT,INNER TIE	2	26024411	—	—	—	—
6.233	ROD KIT,OTR TIE	2	26050222	—	—	—	—
6.674	SEAL,O-RING(4.47 I.D.)(CYL LINE) .	1	26015539	—	—	—	—
6.242	SEAL,TIE ROD	1	7840726	—	—	—	—

© 2000 GENERAL MOTORS SERVICE PARTS OPERATIONS-CHEVROLET-14Y

6.509 BOLT – CLAMP – INSULATOR – NUT – WASHER, Steering Gear Mounting

NOTE: FOR 1986–1991 USAGE REFER TO STEERING GEAR CHART GRP 6.508

92–96	Y	11509678	1	2.65	BOLT, S/GR (M10X1.5X85, 32 THD, 22.3 OD, 10.9, POR) (08.900)	
84–96	Y	11508687	2	1.82	BOLT, S/GR CLA (HEX M8X1.25X20) (08.900) (AC–DELCO #11508687)	
84–96	Y	10207187	1	4.34	CLAMP, S/GR	7–E23,48
84–86	Y	7840293	1	19.42	INSULATOR, S/GR (AC–DELCO #36–9526)	7–E23,31
92–96	Y	7840293	1	19.42	INSULATOR, S/GR (AC–DELCO #36–9526)	7–E23,31
84–93	Y	10255857	AR	*1.75	NUT, S/GR (M10X1.5 FLANGED HEX HEAD) (08.917)	7–E25,16
84–87	Y	14050089	2	1.80	NUT, S/GR (HEX SLOTTED M12X1.75X13) (05.418)	7–E23,25
94–96	Y	10255857	1	*1.75	NUT, S/GR (M10X1.5 FLANGED HEX HEAD) (08.917)	7–E25,16
90–93	Y	24576407	2	*1.30	NUT, S/GR CLA (M8X1.25X11) (00.429)	
95–96	Y	11515742	2	*.33	NUT, S/GR CLA (PRVG TORQ M8X1.25, 17.6 OD 9.0 THK) (10) (08.917)	
84–88	Y	11516071	2	*.25	NUT, STRG GR CLA (08.917)	
84–86	Y	473539	2	*.63	WASHER, STRG GEAR (FL 3.50X13.2 ID) (00.002)	
84–88	Y	10267310	2	*.97	WASHER, STRG GR (06.164)	7–E23,51

6.512 MODULE – SPRING, Steering Wheel

90	Y	10158008	1	625.00	MODULE, STRG WHL INFL RST (IF REPLC 1990, COIL 26013854 MUST REPLC EXISTING COIL & MUST ALSO REPLC WHEEL USING 10201320) (14.865) (PROBE CONN IN OWN BOX)	7–F7,5
91–93	Y	10158008	1	625.00	MODULE, STRG WHL INFL RST (PROBE CONN IN OWN BOX) (14.865)	7–F7,5
94–96	Y F/SEAT INFL RST SYS (AK5)	16752392	1	625.00	MODULE, STRG WHL INFL RST (14.865)	7–F9,1
84–85	Y	9768535	1	DISCON	SPRING, CONTACT	

6.513 WHEEL, Steering

NOTE: FOR HORN RING SEE GROUP 2.819, FOR HORN CAP SEE GROUP 2.820.

84–85	Y	9768988	1	553.92	WHEEL, STRG (BLACK)	7–F6,5
86–87	Y	17983971	1	543.70	WHEEL, STRG	7–F6,5
88	Y (EXC B18)	17983971	1	543.70	WHEEL, STRG	7–F6,5
88	Y 35 ANNIV (Z01)	17989518	1	DISCON	WHEEL, STRG (35TH ANNV) (WHITE)	
89	Y	17983971	1	543.70	WHEEL, STRG	7–F6,5
90–91	Y	10201320	1	708.25	WHEEL, STRG (W/CONTACTS) (MAY BE NECESSARY TO REMOVE BLACK HORN BUTTONS AND REPLACE WITH GRAY HORN BUTTONS 12506007, 8)	7–F7,3
92–93	Y	10201320	1	708.25	WHEEL, STRG (W/CONTACTS)	7–F7,3
94–96	Y	16752390	1	404.71	WHEEL, STRG	7–F9,4

© 2000 GENERAL MOTORS SERVICE PARTS OPERATIONS–CHEVROLET–14Y

6.514 BOLT – CAP – LEVER – PIN – PLATE – ROD – SCREW – SHOE – SPACER – SPHERE KIT – SPRING – SPRING KIT – WEDGE, Steering Column

NOTE: FOR 1986–1991 USAGE REFER TO STEERING COLUMN CHART GRP 6.518

86	Y	7806867	4	7.45	BOLT, STRG COL HSG SUPT	7–F13,61
91–96	Y	7806867	4	7.45	BOLT, STRG COL HSG SUPT (10–32X1.25) (HFH)	7–F13,61
84–86	Y	7841965	1	14.72	LEVER, STRG COL SHOE REL	
91–96	Y	7827689	1	19.06	LEVER, STRG COL TILT LK REL (SHOE REL)	7–F13,43
84–96	Y	10231660	1	8.43	LEVER, STRG COL TILT WHL REL	7–F6,1
84–89	Y	14050012	1	DISCON	LEVER, TLSCP ADJ	
84–86	Y	9422127	1	.45	PIN, SHOE REL LVR (08.939) (AC–DELCO #9422127)	
84–86	Y	7806567	1	5.50	PIN, STRG COL TILT LK SHOE	7–F13,38
91–96	Y	7806567	1	5.50	PIN, STRG COL TILT LK SHOE	7–F13,38
91–93	Y	26015113	1	10.12	PLATE, COL HSG CVR END BASE	7–F13,24
94–96	Y	26021767	1	12.72	PLATE, COL HSG CVR END BASE	7–F21,24
84–86	Y	7804915	1	13.74	PLATE, STRG COL NEU POSN LK	
84–85	Y T&T WHL	26004261	4	5.85	SCREW, COL SUPT	
86	Y	26004261	4	5.85	SCREW, COL SUPT	
84–89	Y	3949135	1	DISCON	SCREW, STRG SHF LK KNOB	
84–86	Y	7804925	1	27.90	SHOE, STRG COL LK (3 POSITION W/O NOTCH)	
84–86	Y	7813068	1	23.25	SHOE, STRG COL LK (3 POSITION W/NOTCH AT TOP)	
91–93	Y	26017727	RH	54.93	SHOE, STRG COL TILT LK (2 POSITION)	7–F13,35
91–93	Y	26017728	LH	54.93	SHOE, STRG COL TILT LK (3 POSITION)	7–F13,34
94–96	Y	26017469	1	23.25	SHOE, STRG COL TILT LK (4 POSITION W/O NOTCH)	7–F21,34
94–96	Y	26017470	1	23.25	SHOE, STRG COL TILT LK (4 POSITION W/NOTCH)	7–F21,34
84–86	Y	7829002	1	9.65	SPACER, RETRACTED SHAFT BPR	
84–86	Y	26026564	1	5.83	SPHERE KIT, STRG COL SHAFT CTR	
86	Y	26002678	1	28.11	SPRING KIT, STRG COL TILT	7–F13,3
91	Y	26002678	1	28.11	SPRING KIT, STRG COL TILT (UPR)	7–F13,3
92	Y (1ST DES)	26002678	1	28.11	SPRING KIT, STRG COL TILT (UPR) (USE WITH COLUMN ASM LABELED 26024008)	7–F13,3
92	Y (2ND DES)	26059718	1	28.11	SPRING KIT, STRG COL TILT (USE WITH COLUMN ASM LABELED 26030970)	7–F13,3
93–96	Y	26059718	1	28.11	SPRING KIT, STRG COL TILT	7–F13,3
84–85	Y T&T WHL (N37)	7844550	1	33.73	SPRING KIT, STRG COL TILT UPR	
84–85	Y T&T WHL (N33)	7804912	2	3.65	SPRING, LK SHOE RTN	7–F13,40
86	Y	7804912	2	3.65	SPRING, LK SHOE RTN	7–F13,40
84–86	Y	5698410	1	4.15	SPRING, SHOE REL	7–F13,41
91–96	Y	5698410	1	4.15	SPRING, STRG COL TILT LK REL LVR	7–F13,41
91–96	Y	7804912	2	3.65	SPRING, STRG COL TILT LK SHOE	7–F13,40
84–86	Y	7809977	1	12.20	WEDGE, TLSCP UPR STRG SHF	

6.515 NUT – RETAINER, Steering Wheel

90–93	Y	7829221	1	4.85	NUT, STRG WHL (M14X1.5) (HEX CONE)	7–F7,3
94–96	Y	26056108	1	1.89	NUT, STRG WHL (M14X1.5) (HFH TORQ PREV)	7–F9,2

© 2000 GENERAL MOTORS SERVICE PARTS OPERATIONS–CHEVROLET–14Y

6.515 NUT – RETAINER, Steering Wheel (Con't)

84–89	Y	419454	1	*.85	RETAINER, NUT	7–F6,2
84–89	Y	419454	1	*.85	RETAINER, STRG WHL NUT	7–F6,2

6.518 BOLT – BRACKET – CAP – COLUMN – COVER – HOUSING – HOUSING KIT – JACKET – LOCK – PLUG – SHROUD – SUPPORT, Steering

NOTE: FOR 1986–1991 USAGE REFER TO STEERING COLUMN CHART GRP 6.518

84–86	Y	7830670	3	2.80	BOLT, STRG COL HSG (02.895)	7–F13,15
91–96	Y	7830670	3	2.80	BOLT, STRG COL HSG (GOLD) (1/4–20X3/4) (PAN HD C/R TAP) (02.895)	7–F13,15
84–86	Y	7841371	1	8.48	BRACKET, CABLE STRG	
84–86	Y	7841322	1	11.24	CAP, COL HSG CVR END	
91–93	Y	26015114	1	11.24	CAP, STRG COL HSG (06.514)	7–F13,25
94–96	Y	26035293	1	10.83	CAP, STRG COL HSG	7–F21,25
84	Y (EXC EXPORT)	7843501	1	DISCON	COLUMN, STRG	
85	Y	7843501	1	DISCON	COLUMN, STRG	
91	Y 4–SPD A/TRANS (MD8)	26031577	1	1354.49	COLUMN, STRG	7–F7,1
91	Y 6–SPD M/TRANS (ML9)	26031578	1	1136.00	COLUMN, STRG (**VPI 1–877–846–8243)	7–F7,1
92–93	Y 4–SPD A/TRANS (MD8)	26031577	1	1354.49	COLUMN, STRG	7–F7,1
92	Y 6–SPD M/TRANS (ML9), (2ND DES)	26031578	1	1136.00	COLUMN, STRG (USE WITH COLUMN ASM LABELED 26030971) (**VPI 1–877–846–8243)	7–F7,1
93	Y 6–SPD M/TRANS (ML9)	26031578	1	1136.00	COLUMN, STRG (**VPI 1–877–846–8243)	7–F7,1
94	Y 4–SPD A/TRANS (M30), (EXC EUROPEAN PROVISIONS (VD1) (EXPORT), VE1 (EXPORT)	26040220	1	1027.79	COLUMN, STRG (I/D CODE FLH, DZZ)	
94	Y 6–SPD M/TRANS (ML9), (EXC EUROPEAN PROVISIONS (VD1) (EXPORT), VE1 (EXPORT)	26040221	1	1027.79	COLUMN, STRG (I/D CODE FLJ, FAA)	
95–96	Y 4–SPD A/TRANS (M30), (EXC EUROPEAN PROVISIONS (VD1) (EXPORT), VE1 (EXPORT)	26040220	1	1027.79	COLUMN, STRG (I/D CODE DZZ)	
95	Y 6–SPD M/TRANS (ML9), (EXC EUROPEAN PROVISIONS (VD1) (EXPORT), VE1 (EXPORT)	26040221	1	1027.79	COLUMN, STRG (I/D CODE FAA)	
96	Y 6–SPD M/TRANS (ML9)	26040221	1	1027.79	COLUMN, STRG	
91–93	Y	26016646	1	74.61	COVER, STRG COL HSG	7–F13,19
94–96	Y (EXC EUROPEAN PROVISIONS (VD1) (EXPORT), VE1 (EXPORT)	26035681	1	74.61	COVER, STRG COL HSG	7–F21,19
86	Y	26007688	1	74.61	COVER, STRG COL LK HSG	
84–86	Y	7843689	1	175.78	HOUSING KIT	
91–93	Y	26017735	1	431.28	HOUSING, STRG COL	7–F13,30
94–96	Y (EXC EUROPEAN PROVISIONS (VD1) (EXPORT), VE1 (EXPORT)	26017468	1	175.78	HOUSING, STRG COL (INCL UPR BRG)	7–F21,30
84–85	Y	7843582	1	DISCON	JACKET, STRG COL	
86	Y07	7848003	1	DISCON	JACKET, STRG COL	
86	Y67	7849033	1	DISCON	JACKET, STRG COL	
89	Y FOR MDL APPL & POA INFO SEE COL CHART	26004825	1	DISCON	JACKET, STRG COL	
91–93	Y	26010573	1	246.30	JACKET, STRG COL	7–F13,72

© 2000 GENERAL MOTORS SERVICE PARTS OPERATIONS–CHEVROLET–14Y

6.518 BOLT – BRACKET – CAP – COLUMN – COVER – HOUSING – HOUSING KIT – JACKET – LOCK – PLUG – SHROUD – SUPPORT, Steering (Con't)

94	Y	26030664	1	246.30	JACKET, STRG COL	7–F21,72
95–96	Y	26041058	1	258.57	JACKET, STRG COL	7–F21,72
84–85	Y	7841751	1	DISCON	PLUG, JKT	
84–86	Y07	7840239	1	45.73	SHROUD, STRG COL HSG	
86	Y67	7849028	1	DISCON	SHROUD, STRG COL HSG	
87–90	Y	7849028	1	DISCON	SHROUD, STRG COL HSG	
91–93	Y	7849028	1	DISCON	SHROUD, STRG COL HSG	
94–96	Y	26048745	1	9.86	SHROUD, STRG COL HSG	7–F21,71
84–86	Y07	7845077	1	72.82	SUPPORT, STRG COL HSG	
91–93	Y	26010580	1	67.45	SUPPORT, STRG COL HSG	7–F13,62
94–96	Y	26010644	1	75.37	SUPPORT, STRG COL HSG	7–F21,62
	*EXPORT**********EXPORT**********EXPORT**********EXPORT**********EXPORT*					
84	Y EXPORT	7846325	1	DISCON	COLUMN, STRG	
94	Y 4–SPD A/TRANS (M30), EUROPEAN PROVISIONS (VD1) (EXPORT), VE1 (EXPORT)	26040222	1	1005.14	COLUMN, STRG (I.D. CODE FAB, FLK)	
94	Y 6–SPD M/TRANS (ML9), EUROPEAN PROVISIONS (VD1) (EXPORT), VE1 (EXPORT)	26040223	1	850.30	COLUMN, STRG (I.D. CODE FAC, FLM)	
95–96	Y 4–SPD A/TRANS (M30), EUROPEAN PROVISIONS (VD1) (EXPORT), VE1 (EXPORT)	26040222	1	1005.14	COLUMN, STRG (I.D. CODE FAB)	
95–96	Y 6–SPD M/TRANS (ML9), EUROPEAN PROVISIONS (VD1) (EXPORT), VE1 (EXPORT)	26040223	1	850.30	COLUMN, STRG (I.D. CODE FAC)	
94–96	Y EUROPEAN PROVISIONS (VD1) (EXPORT), VE1 (EXPORT)	26038448	1	72.56	COVER, STRG COL HSG	7–F21,19
94–96	Y EUROPEAN PROVISIONS (VD1) (EXPORT), VE1 (EXPORT)	26027137	1	174.76	HOUSING, STRG COL	7–F21,30

© 2000 GENERAL MOTORS SERVICE PARTS OPERATIONS–CHEVROLET–14Y

1986 STEERING COLUMNS

NOTE: A01 NOTE:TO DETERMINE THE VATS MODULE OR KEY NUMBER TO BE USED FOR SERVICE, USE THE INTEROGATOR KENTMOORE #J35628..
NOTE: A02 LOCK CYL DOES NOT INCLUDE RESISTOR KEY.

PRODUCTION	DIV.	VIN CODE	USAGE	COL. NO.
07845087	1	Y07	.....	1
26007587	1	Y67	.....	2

GROUP	DESCRIPTION	QTY	1	2	3	4	5
6.518	COLUMN,STRG(PROD.)	1	7845087	26007587	—	—	—
6.518	COLUMN,STRG(SERVICE)	1	7845087	26007587	—	—	—
2.459	ACTUATOR,DIMMER SWITCH ROD	1	7841321	7841321	—	—	—
2.195	ACTUATOR,IGNITION SWITCH	1	7840683	7840683	—	—	—
6.525	BEARING,STRG SHAFT	1	7832343	7832343	—	—	—
6.521	BEARING,W/ADAPER,LWR JACKET	1	7842176	7842176	—	—	—
6.500	BOLT,SHAFT LOCK	1	7808613	7808613	—	—	—
6.518	BRACKET,CABLE STRG	1	7841371	7841371	—	—	—
6.521	BUMPER,RETRACTED STRG COL	1	7843705	7843705	—	—	—
2.896	CAM,T/SIG CANCELLING	1	7849228	7849228	—	—	—
6.518	CAP,DIMMER SW HSG COVER END	1	7841322	7841322	—	—	—
2.195	CLIP,BUZZER SWITCH RET	1	7830376	7830376	—	—	—
6.518	COVER,LOCK HOUSING	1	26007688	26007688	—	—	—
2.188	CYLINDER,LK & IGN SW	1	26009609	26009609	—	—	—
6.514	HOUSING KIT,STRG COL	1	7843689	7843689	—	—	—
6.518	JACKET,STRG COL	1	DISCON	7849033	—	—	—
2.187	KEY,RESISTOR CODE #1	1	26019391	26019391	—	—	—
2.187	KEY,RESISTOR CODE #10	1	26019400	26019400	—	—	—
2.187	KEY,RESISTOR CODE #11	1	26019401	26019401	—	—	—
2.187	KEY,RESISTOR CODE #12	1	26019402	26019402	—	—	—
2.187	KEY,RESISTOR CODE #13	1	26019403	26019403	—	—	—
2.187	KEY,RESISTOR CODE #14	1	26019404	26019404	—	—	—
2.187	KEY,RESISTOR CODE #15	1	26019405	26019405	—	—	—
2.187	KEY,RESISTOR CODE #2	1	26019392	26019392	—	—	—
2.187	KEY,RESISTOR CODE #3	1	26019393	26019393	—	—	—
2.187	KEY,RESISTOR CODE #4	1	26019394	26019394	—	—	—
2.187	KEY,RESISTOR CODE #5	1	26019395	26019395	—	—	—
2.187	KEY,RESISTOR CODE #6	1	26019396	26019396	—	—	—
2.187	KEY,RESISTOR CODE #7	1	26019397	26019397	—	—	—
2.187	KEY,RESISTOR CODE #8	1	26012108	26012108	—	—	—
2.187	KEY,RESISTOR CODE #9	1	26019399	26019399	—	—	—
2.187	KEY,SQ HD(W/O RESISTOR PELLET) ...	1	—	26007687	—	—	—
6.514	LEVER,SHOE RELEASE	1	7841965	7841965	—	—	—
6.500	LOCK,SHAFT	1	7811995	7811995	—	—	—
8.915	NUT,HEXAGON AJM (M14X1.5)	1	—	7846970	—	—	—
6.500	PIN,CABLE BK DRIVE	1	7840475	7840475	—	—	—
6.500	PIN,INHIBITOR CROSS	1	7840476	7840476	—	—	—
6.514	PIN,STRG COL TILT LOCK SHOE RETURN	1	7806567	7806567	—	—	—
2.459	PIVOT,SWITCH ACTUATOR	1	7841314	7841314	—	—	—
6.514	PLATE,SUPT LOCK	1	7804915	—	—	—	—
3.887	PROTECTOR,CRUISE CONT WIRE	1	7828271	7828271	—	—	—
2.906	PROTECTOR,WIRING	1	DISCON	7849031	—	—	—
2.195	RACK KIT,W/COL SECTOR	1	7844651	7844651	—	—	—
2.195	RACK,IGN SW ACTUATOR	1	7827157	7827157	—	—	—
6.521	RETAINER,LWR SPR	1	7839359	7839359	—	—	—
6.500	RETAINER,SHAFT LOCK	1	7819976	7819976	—	—	—
2.819	RETAINER,SNAP RG HORN CNCT CARR ..	1	7808385	7808385	—	—	—
2.459	ROD,DIMMER SW	1	7840668	7840668	—	—	—
6.514	ROD,TELESCOPE LOCKING	1	7827158	7827158	—	—	—
2.195	SCREW,CYL LOCK RETAINER	1	7841678	7841678	—	—	—
2.895	SCREW,HSG CVR(1/4-20X.75)	1	7830670	7830670	—	—	—
8.977	SCREW,HWH(8-32 X .88 TAP)		—	11503389	—	—	—
2.188	SCREW,IGN SW WASH HD(10-24X.25) ..	1	7806433	7806433	—	—	—
6.514	SCREW,STRG COL SUPPORT	1	26004261	—	—	—	—
2.895	SCREW,T/SIG SWITCH MTG	1	7809128	7809128	—	—	—

© 2000 GENERAL MOTORS SERVICE PARTS OPERATIONS–CHEVROLET–14Y

GROUP	DESCRIPTION	QTY	1	2	3	4	5
6.758	SEAL,DASH	1	7840636	7840636	—	—	—
6.521	SEAT,LWR BRG	1	7839361	7839361	—	—	—
6.521	SEAT,UPR SHF UPR BRG RACE	1	7804909	7804909	—	—	—
2.195	SHAFT,IGN SWITCH SELECT DRIVE	1	7837466	7837466	—	—	—
6.524	SHAFT,STRG(COMPLETE)	1	7848002	7848002	—	—	—
6.524	SHAFT,STRG(LOWER)	1	7848024	7848024	—	—	—
6.524	SHAFT,STRG(UPPER)	1	7829047	7829047	—	—	—
6.514	SHOE,LOCK(3-POSN W/OUT NOTCH)	1	7804925	7804925	—	—	—
6.514	SHOE,LOCK(3-POSN WITH NOTCH)	1	7813068	7813068	—	—	—
6.518	SHROUD,HOUSING	1	7840239	7849028	—	—	—
6.514	SPACER,STRG SHAFT	1	7829002	7829002	—	—	—
6.514	SPHERE KIT,SHF CTR	1	26026564	26026564	—	—	—
6.521	SPRING KIT,TILT UPR	1	26002678	26002678	—	—	—
6.500	SPRING,CABLE BK DRIVE PIN	1	7840739	7840739	—	—	—
6.521	SPRING,COL SHAFT UPR BEARING	1	5695946	5695946	—	—	—
2.195	SPRING,IGN SW RACK PRELOAD	1	7804908	7804908	—	—	—
6.521	SPRING,LWR BRG	1	7839360	7839360	—	—	—
6.514	SPRING,STRG COL LOCK SHOE RETURN	1	7804912	7804912	—	—	—
6.514	SPRING,STRG COL SHOE RELEASE	1	5698410	5698410	—	—	—
2.188	STUD,DIMMER & IGN SW MTG	1	7829779	7829779	—	—	—
6.518	SUPPORT,HOUSING	1	7845077	7849032	—	—	—
2.459	SWITCH,DIMMER	1	26019660	26019660	—	—	—
2.195	SWITCH,IGN KEY WARNING ALARM	1	26022717	26022717	—	—	—
2.188	SWITCH,LOCK & IGN	1	1990116	1990116	—	—	—
2.895	SWITCH,T/SIG	1	1997984	1997984	—	—	—
6.514	WEDGE,LOCKING	1	7809977	7809977	—	—	—
6.524	YOKE,W/RACE,STRG SHF	1	7825339	7825339	—	—	—

© 2000 GENERAL MOTORS SERVICE PARTS OPERATIONS–CHEVROLET–14Y

1987 STEERING COLUMNS

NOTE: A01 NOTE;TO DETERMINE THE VATS MODULE OR KEY NUMBER TO BE USED FOR SERVICE, USE THE INTEROGATOR KENTMOORE #J35628..
NOTE: A02 LOCK CYL DOES NOT INCLUDE RESISTOR KEY.

PRODUCTION	VIN DIV. CODE	USAGE	COL. NO.
26007587	1	Y	1

GROUP	DESCRIPTION	QTY	1	2	3	4	5
6.518	COLUMN,STRG(PROD.)	1	26007587	—	—	—	—
6.518	COLUMN,STRG(SERVICE)	1	26007587	—	—	—	—
2.459	ACTUATOR,DIMMER SWITCH ROD	1	7841321	—	—	—	—
2.195	ACTUATOR,IGNITION SWITCH	1	7840683	—	—	—	—
6.525	BEARING,STRG SHAFT	1	7832343	—	—	—	—
6.521	BEARING,W/ADAPER,LWR JACKET	1	7842176	—	—	—	—
6.500	BOLT,SHAFT LOCK	1	7808613	—	—	—	—
6.518	BRACKET,CABLE STRG	1	7841371	—	—	—	—
6.521	BUMPER,RETRACTED STRG COL	1	7843705	—	—	—	—
2.896	CAM,T/SIG CANCELLING	1	7849228	—	—	—	—
6.518	CAP,DIMMER SW HSG COVER END	1	7841322	—	—	—	—
2.195	CLIP,BUZZER SWITCH RET	1	7830376	—	—	—	—
6.518	COVER,LOCK HOUSING	1	26007688	—	—	—	—
2.188	CYLINDER,LK & KGN SW	1	26009609	—	—	—	—
6.514	HOUSING KIT,STRG COL	1	7843689	—	—	—	—
6.518	JACKET,STRG COL	1	7849033	—	—	—	—
2.187	KEY,RESISTOR CODE #1	1	26019391	—	—	—	—
2.187	KEY,RESISTOR CODE #10	1	26019400	—	—	—	—
2.187	KEY,RESISTOR CODE #11	1	26019401	—	—	—	—
2.187	KEY,RESISTOR CODE #12	1	26019402	—	—	—	—
2.187	KEY,RESISTOR CODE #13	1	26019403	—	—	—	—
2.187	KEY,RESISTOR CODE #14	1	26019404	—	—	—	—
2.187	KEY,RESISTOR CODE #15	1	26012115	—	—	—	—
2.187	KEY,RESISTOR CODE #2	1	26019392	—	—	—	—
2.187	KEY,RESISTOR CODE #3	1	26019393	—	—	—	—
2.187	KEY,RESISTOR CODE #4	1	26019394	—	—	—	—
2.187	KEY,RESISTOR CODE #5	1	26019395	—	—	—	—
2.187	KEY,RESISTOR CODE #6	1	26019396	—	—	—	—
2.187	KEY,RESISTOR CODE #7	1	26019397	—	—	—	—
2.187	KEY,RESISTOR CODE #8	1	26012108	—	—	—	—
2.187	KEY,RESISTOR CODE #9	1	26019399	—	—	—	—
2.187	KEY,SQ HD(W/O RESISTOR PELLET)	1	26007687	—	—	—	—
6.514	LEVER,SHOE RELEASE	1	7841965	—	—	—	—
6.500	LOCK,SHAFT	1	7811995	—	—	—	—
8.915	NUT,HEXAGON AJM (M14X1.5)	1	7846970	—	—	—	—
6.500	PIN,CABLE BK DRIVE	1	7840475	—	—	—	—
6.500	PIN,INHIBITOR CROSS	1	7840476	—	—	—	—
6.514	PIN,STRG COL TILT LOCK SHOE RETURN	1	7806567	—	—	—	—
2.459	PIVOT,SWITCH ACTUATOR	1	7841314	—	—	—	—
3.887	PROTECTOR,CRUISE CONT WIRE	1	7828271	—	—	—	—
2.906	PROTECTOR,WIRING	1	7849031	—	—	—	—
2.195	RACK KIT,W/COL SECTOR	1	7844651	—	—	—	—
2.195	RACK,IGN SW ACTUATOR	1	7827157	—	—	—	—
6.521	RETAINER,LWR SPR	1	7839359	—	—	—	—
6.500	RETAINER,SHAFT LOCK	1	7819976	—	—	—	—
2.819	RETAINER,SNAP RG HORN CNCT CARR	1	7808385	—	—	—	—
2.459	ROD,DIMMER SW	1	7840668	—	—	—	—
6.514	ROD,TELESCOPE LOCKING	1	7827158	—	—	—	—
2.195	SCREW,C/L LOCK RETAINER	1	7841678	—	—	—	—
2.895	SCREW,HSG CVR(1/4-20X.75)	3	7830670	—	—	—	—
8.977	SCREW,HWH(8-32 X .88 TAP)		11503389	—	—	—	—
2.188	SCREW,IGN SW WASH HD(10-24X.25)	2	7806433	—	—	—	—
2.895	SCREW,T/SIG SWITCH MTG	4	7809128	—	—	—	—
6.758	SEAL,DASH	1	7840636	—	—	—	—
6.521	SEAT,LWR BRG	1	7839361	—	—	—	—
6.521	SEAT,UPR SHF UPR BRG RACE	1	7804909	—	—	—	—

© 2000 GENERAL MOTORS SERVICE PARTS OPERATIONS–CHEVROLET–14Y

GROUP	DESCRIPTION	QTY	1	2	3	4	5
2.195	SHAFT,IGN SWITCH SELECT DRIVE	1	7837466	—	—	—	—
6.524	SHAFT,STRG(COMPLETE)	1	7848002	—	—	—	—
6.524	SHAFT,STRG(LOWER)	1	7848024	—	—	—	—
6.524	SHAFT,STRG(UPPER)	1	7829047	—	—	—	—
6.514	SHOE,LOCK(3-POSN W/OUT NOTCH)	1	7804925	—	—	—	—
6.514	SHOE,LOCK(3-POSN WITH NOTCH)	1	7813068	—	—	—	—
6.518	SHROUD,HOUSING	1	7849028	—	—	—	—
6.514	SPACER,STRG SHAFT	1	7829002	—	—	—	—
6.514	SPHERE KIT,SHF CTR	1	26026564	—	—	—	—
6.521	SPRING KIT,TILT UPR	1	26002678	—	—	—	—
6.500	SPRING,CABLE BK DRIVE PIN	1	7840739	—	—	—	—
6.521	SPRING,COL SHAFT UPR BEARING	1	569594C	—	—	—	—
2.195	SPRING,IGN SW RACK PRELOAD	1	7804908	—	—	—	—
6.521	SPRING,LWR BRG	1	7839360	—	—	—	—
6.514	SPRING,STRG COL LOCK SHOE RETURN .	2	7804912	—	—	—	—
6.514	SPRING,STRG COL SHOE RELEASE	1	5698410	—	—	—	—
2.188	STUD,DIMMER & IGN SW MTG	1	7829779	—	—	—	—
6.518	SUPPORT,HOUSING	1	7849032	—	—	—	—
2.459	SWITCH,DIMMER	1	26019660	—	—	—	—
2.195	SWITCH,IGN KEY WARNING ALARM	1	26022717	—	—	—	—
2.188	SWITCH,LOCK & IGN	1	1990116	—	—	—	—
2.895	SWITCH,T/SIG	1	1997984	—	—	—	—
6.514	WEDGE,LOCKING	1	7809977	—	—	—	—
6.524	YOKE,W/RACE,STRG SHF	1	7825339	—	—	—	—

© 2000 GENERAL MOTORS SERVICE PARTS OPERATIONS–CHEVROLET–14Y

1988 STEERING COLUMNS

NOTE: A01 NOTE;TO DETERMINE THE VATS MODULE OR KEY NUMBER TO BE USED FOR SERVICE, USE THE INTEROGATOR KENTMOORE #J35628..
NOTE: A02 LOCK CYL DOES NOT INCLUDE RESISTOR KEY.

PRODUCTION	DIV.	VIN CODE	USAGE	COL. NO.
26007587	1	Y		1

GROUP	DESCRIPTION	QTY	1	2	3	4	5
6.518	COLUMN,STRG(PROD.)	1	26007587	—	—	—	—
6.518	COLUMN,STRG(SERVICE)	1	26007587	—	—	—	—
2.459	ACTUATOR,DIMMER SWITCH ROD	1	7841321	—	—	—	—
2.195	ACTUATOR,IGNITION SWITCH	1	7840683	—	—	—	—
6.525	BEARING,STRG SHAFT	1	7832343	—	—	—	—
6.521	BEARING,W/ADAPER,LWR JACKET	1	7842176	—	—	—	—
6.500	BOLT,SHAFT LOCK	1	7808613	—	—	—	—
6.518	BRACKET,CABLE STRG	1	7841371	—	—	—	—
6.521	BUMPER,RETRACTED STRG COL	1	7843705	—	—	—	—
2.896	CAM,T/SIG CANCELLING	1	7849228	—	—	—	—
6.518	CAP,DIMMER SW HSG COVER END	1	7841322	—	—	—	—
2.195	CLIP,BUZZER SWITCH RET	1	7830376	—	—	—	—
6.518	COVER,LOCK HOUSING	1	26007608	—	—	—	—
2.188	CYLINDER,LK & IGN SW	1	26009609	—	—	—	—
6.514	HOUSING KIT,STRG COL	1	7843689	—	—	—	—
6.518	JACKET,STRG COL	1	7849033	—	—	—	—
2.187	KEY,RESISTOR CODE #1	1	26019391	—	—	—	—
2.187	KEY,RESISTOR CODE #10	1	26019400	—	—	—	—
2.187	KEY,RESISTOR CODE #11	1	26019401	—	—	—	—
2.187	KEY,RESISTOR CODE #12	1	26019402	—	—	—	—
2.187	KEY,RESISTOR CODE #13	1	26019403	—	—	—	—
2.187	KEY,RESISTOR CODE #14	1	26019404	—	—	—	—
2.187	KEY,RESISTOR CODE #15	1	26019405	—	—	—	—
2.187	KEY,RESISTOR CODE #2	1	26019392	—	—	—	—
2.187	KEY,RESISTOR CODE #3	1	26019393	—	—	—	—
2.187	KEY,RESISTOR CODE #4	1	26019394	—	—	—	—
2.187	KEY,RESISTOR CODE #5	1	26019395	—	—	—	—
2.187	KEY,RESISTOR CODE #6	1	26019396	—	—	—	—
2.187	KEY,RESISTOR CODE #7	1	26019397	—	—	—	—
2.187	KEY,RESISTOR CODE #8	1	26012108	—	—	—	—
2.187	KEY,RESISTOR CODE #9	1	26019399	—	—	—	—
2.187	KEY,SQ HD(W/O RESISTOR PELLET)	1	26007687	—	—	—	—
6.514	LEVER,SHOE RELEASE	1	7841965	—	—	—	—
6.500	LOCK,SHAFT	1	7811995	—	—	—	—
8.915	NUT,HEXAGON AJM (M14X1.5)	1	7846970	—	—	—	—
6.500	PIN,CABLE BK DRIVE	1	7840475	—	—	—	—
6.500	PIN,INHIBITOR CROSS	1	7840476	—	—	—	—
6.514	PIN,STRG COL TILT LOCK SHOE RETURN	1	7806567	—	—	—	—
2.459	PIVOT,SWITCH ACTUATOR	1	7841314	—	—	—	—
3.887	PROTECTOR,CRUISE CONT WIRE	1	7828271	—	—	—	—
2.906	PROTECTOR,WIRING	1	7849031	—	—	—	—
2.195	RACK KIT,W/COL SECTOR	1	7844651	—	—	—	—
2.195	RACK,IGN SW ACTUATOR	1	7827157	—	—	—	—
6.521	RETAINER,LWR SPR	1	7839359	—	—	—	—
6.500	RETAINER,SHAFT LOCK	1	7819976	—	—	—	—
2.819	RETAINER,SNAP RG HORN CNCT CARR	1	7808385	—	—	—	—
2.459	ROD,DIMMER SW	1	7840668	—	—	—	—
6.514	ROD,TELESCOPE LOCKING	1	7827158	—	—	—	—
2.195	SCREW,CYL LOCK RETAINER	1	7841678	—	—	—	—
2.895	SCREW,HSG CVR(1/4-20X.75)	3	7830670	—	—	—	—
8.977	SCREW,HWH(8-32 X .88 TAP)		11503389	—	—	—	—
2.188	SCREW,IGN SW WASH HD(10-24X.25)	2	7806433	—	—	—	—
2.895	SCREW,T/SIG SWITCH MTG	4	7809128	—	—	—	—
6.758	SEAL,DASH	1	7840636	—	—	—	—
6.521	SEAT,LWR BRG	1	7839361	—	—	—	—
6.521	SEAT,UPR SHF UPR BRG RACE	1	7804909	—	—	—	—

© 2000 GENERAL MOTORS SERVICE PARTS OPERATIONS–CHEVROLET–14Y

GROUP	DESCRIPTION	QTY	1	2	3	4	5
2.195	SHAFT,IGN SWITCH SELECT DRIVE	1	7837466	—	—	—	—
6.524	SHAFT,STRG(COMPLETE)	1	7848002	—	—	—	—
6.524	SHAFT,STRG(LOWER)	1	7848024	—	—	—	—
6.524	SHAFT,STRG(UPPER)	1	7829047	—	—	—	—
6.51[illegible]	SHOE,LOCK(3-POSN W/OUT NOTCH)	1	7804925	—	—	—	—
6.514	SHOE,LOCK(3-POSN WITH NOTCH)	1	7813068	—	—	—	—
6.518	SHROUD,HOUSING	1	7849028	—	—	—	—
6.514	SPACER,STRG SHAFT	1	7829002	—	—	—	—
6.514	SPHERE KIT,SHF CTR	1	26026564	—	—	—	—
6.521	SPRING KIT,TILT UPR	1	26002678	—	—	—	—
6.500	SPRING,CABLE BK DRIVE PIN	1	7840739	—	—	—	—
6.521	SPRING,COL SHAFT UPR BEARING	1	5695946	—	—	—	—
2.195	SPRING,IGN SW RACK PRELOAD	1	7804908	—	—	—	—
6.521	SPRING,LWR BRG	1	7839360	—	—	—	—
6.514	SPRING,STRG COL LOCK SHOE RETURN .	2	7804912	—	—	—	—
6.514	SPRING,STRG COL SHOE RELEASE	1	5698410	—	—	—	—
2.188	STUD,DIMMER & IGN SW MTG	1	7829779	—	—	—	—
6.518	SUPPORT,HOUSING	1	7849032	—	—	—	—
2.459	SWITCH,DIMMER	1	26019660	—	—	—	—
2.195	SWITCH,IGN KEY WARNING ALARM	1	26022717	—	—	—	—
2.188	SWITCH,LOCK & IGN	1	1990116	—	—	—	—
2.895	SWITCH,T/SIG	1	1997984	—	—	—	—
6.514	WEDGE,LOCKING	1	7009977	—	—	—	—
6.524	YOKE,W/RACE,STRG SHF	1	7825339	—	—	—	—

© 2000 GENERAL MOTORS SERVICE PARTS OPERATIONS–CHEVROLET–14Y

MICROFICHE INDEX

GROUPS 6.000 THRU 7.000

FICHE 7 OF 11

GROUP	DESCRIPTION	STARTING GRID LOCATION PARTS	ILLUSTRATIONS
–	GENERAL INFORMATION	1–A2	1–G2
–	ALPHABETICAL INDEX	1–B13	N.A.
6.000	FRONT SUSPENSION – STEERING	7–A2	7–E2
7.000	FRAMES – SPRINGS – SHOCKS – BUMPERS	7–C2	7–H2
–	OUT OF FICHE CALLS	N.A.	7–M17

7–B1

1989 STEERING COLUMNS

NOTE: A01 NOTE:TO DETERMINE THE VATS MODULE OR KEY NUMBER TO BE USED FOR SERVICE, USE THE INTEROGATOR KENTMOORE #J35628..
NOTE: A02 LOCK CYL DOES NOT INCLUDE RESISTOR KEY.

PRODUCTION	VIN DIV. CODE	USAGE	COL. NO.
26009115	1	Y W/A.T.	1
26009116	1	Y W/M.T.	2

GROUP	DESCRIPTION	QTY	1	2	3	4	5
6.518	COLUMN,STRG(PROD.)	1	26009115	26009116	—	—	—
6.518	COLUMN,STRG(SERVICE)	1	26009115	DISCON	—	—	—
2.459	ACTUATOR,DIMMER SWITCH ROD	1	7841321	7841321	—	—	—
2.195	ACTUATOR,IGNITION SWITCH	1	7840683	7840683	—	—	—
6.525	BEARING,STRG SHAFT	LH	7832343	7832343	—	—	—
6.521	BEARING,W/ADAPER,LWR JACKET	1	7842176	7842176	—	—	—
6.514	BOLT,HSG SUPT	4	7806867	7806867	—	—	—
6.500	BOLT,SHAFT LOCK	1	7808613	7808613	—	—	—
6.518	BRACKET,CABLE STRG	1	7841371	—	—	—	—
6.521	BUMPER,RETRACTED STRG COL	1	7843705	7843705	—	—	—
2.896	CAM,T/SIG CANCELLING	1	7849228	7849228	—	—	—
6.518	CAP,DIMMER SW HSG COVER END	1	7841322	7841322	—	—	—
2.195	CLIP,BUZZER SWITCH RET	1	7830376	7830376	—	—	—
6.518	COVER,LOCK HOUSING	1	26007688	26007688	—	—	—
2.188	CYLINDER,LK & IGN SW	1	26009609	26033387	—	—	—
6.514	HOUSING KIT,STRG COL	1	7843689	7843689	—	—	—
6.518	JACKET,STRG COL	1	26004825	26004825	—	—	—
2.187	KEY,RESISTOR CODE #1	1	26019391	26019391	—	—	—
2.187	KEY,RESISTOR CODE #10	1	26019400	26019400	—	—	—
2.187	KEY,RESISTOR CODE #11	1	26019401	26019401	—	—	—
2.187	KEY,RESISTOR CODE #12	1	26019402	26019402	—	—	—
2.187	KEY,RESISTOR CODE #13	1	26019403	26019403	—	—	—
2.187	KEY,RESISTOR CODE #14	1	26019404	26019404	—	—	—
2.187	KEY,RESISTOR CODE #15	1	26019405	26019405	—	—	—
2.187	KEY,RESISTOR CODE #2	1	26019392	26019392	—	—	—
2.187	KEY,RESISTOR CODE #3	1	26019393	26019393	—	—	—
2.187	KEY,RESISTOR CODE #4	1	26019394	26019394	—	—	—
2.187	KEY,RESISTOR CODE #5	1	26019395	26019395	—	—	—
2.187	KEY,RESISTOR CODE #6	1	26019396	26019396	—	—	—
2.187	KEY,RESISTOR CODE #7	1	26019397	26019397	—	—	—
2.187	KEY,RESISTOR CODE #8	1	26012108	26012108	—	—	—
2.187	KEY,RESISTOR CODE #9	1	26019399	26019399	—	—	—
2.187	KEY,SQ HD(W/O RESISTOR PELLET)	1	26007687	26007687	—	—	—
6.514	LEVER,SHOE RELEASE	1	7841965	7841965	—	—	—
6.500	LOCK,SHAFT	1	7811995	7811995	—	—	—
8.915	NUT,HEXAGON AJM (M14X1.5)	1	7846970	7846970	—	—	—
6.500	PIN,CABLE BK DRIVE	1	7840475	—	—	—	—
6.500	PIN,INHIBITOR CROSS	1	7840476	—	—	—	—
6.514	PIN,STRG COL TILT LOCK SHOE RETURN	1	7806567	7806567	—	—	—
2.459	PIVOT,SWITCH ACTUATOR	1	7841314	7841314	—	—	—
3.887	PROTECTOR,CRUISE CONT WIRE	1	7828271	7828271	—	—	—
2.906	PROTECTOR,WIRING	1	7849031	7849031	—	—	—
2.195	RACK KIT,W/COL SECTOR	2	7844651	7844651	—	—	—
2.195	RACK,IGN SW ACTUATOR	1	7827157	7827157	—	—	—
6.521	RETAINER,LWR SPR	1	7839359	7839359	—	—	—
6.500	RETAINER,SHAFT LOCK	1	7819976	7819976	—	—	—
2.819	RETAINER,SNAP RG HORN CNCT CARR	1	7808385	7808385	—	—	—
2.459	ROD,DIMMER SW	1	7840668	7840668	—	—	—
6.514	ROD,TELESCOPE LOCKING	1	7827158	7827158	—	—	—
2.195	SCREW,CYL LOCK RETAINER	1	7841678	7841678	—	—	—
2.895	SCREW,HSG CVR(1/4-20X.75)	3	7830670	7830670	—	—	—
2.188	SCREW,IGN SW WASH HD(10-24X.25)	1	7806433	7806433	—	—	—
2.895	SCREW,T/SIG SWITCH MTG	4	7809128	7809128	—	—	—
6.758	SEAL,DASH	1	7840636	7840636	—	—	—
6.521	SEAT,LWR BRG	1	7839361	7839361	—	—	—
6.521	SEAT,UPR SHF UPR BRG RACE	1	7804909	7804909	—	—	—
2.195	SHAFT,IGN SWITCH SELECT DRIVE	1	7837466	7837466	—	—	—
6.524	SHAFT,STRG(COMPLETE)	1	7848002	7848002	—	—	—
6.524	SHAFT,STRG(LOWER)	1	7848024	7848024	—	—	—
6.524	SHAFT,STRG(UPPER)	1	7829047	7829047	—	—	—
2.906	SHIELD,PROTECTOR WIRE	RH	26009317	26009317	—	—	—
6.514	SHOE,LOCK(3-POSN W/OUT NOTCH)	1	7804925	7804925	—	—	—
6.514	SHOE,LOCK(3-POSN WITH NOTCH)	1	7813068	7813068	—	—	—
6.518	SHROUD,HOUSING	1	7849028	7849028	—	—	—
6.514	SPACER,STRG SHAFT	2	7829002	7829002	—	—	—
6.514	SPHERE KIT,SHF CTR	1	26026564	26026564	—	—	—

© 2000 GENERAL MOTORS SERVICE PARTS OPERATIONS–CHEVROLET–14Y

GROUP	DESCRIPTION	QTY	1	2	3	4	5
6.521	SPRING KIT,TILT UPR	1	26002678	7844650	—	—	—
6.500	SPRING,CABLE BK DRIVE PIN	1	7840739	—	—	—	—
6.521	SPRING,COL SHAFT UPR BEARING	1	5695946	5695946	—	—	—
2.195	SPRING,IGN SW RACK PRELOAD	1	7804908	7804908	—	—	—
2.896	SPRING,LANE CHANGE	1	1967685	1967685	—	—	—
6.521	SPRING,LWR BRG	1	7839360	7839360	—	—	—
6.514	SPRING,STRG COL LOCK SHOE RETURN .	2	7804912	7804912	—	—	—
6.514	SPRING,STRG COL SHOE RELEASE	1	5698410	5698410	—	—	—
2.896	SPRING,T/SIG CANCEL LH	LH	1964785	1964785	—	—	—
2.896	SPRING,T/SIG CANCEL RH	RH	1964784	1964784	—	—	—
2.188	STUD,DIMMER & IGN SW MTG	1	7829779	7829779	—	—	—
6.518	SUPPORT,HOUSING	1	7849032	7849032	—	—	—
2.459	SWITCH,DIMMER	1	26019660	26019660	—	—	—
2.195	SWITCH,IGN KEY WARNING ALARM	1	26022717	26022717	—	—	—
2.188	SWITCH,LOCK & IGN	1	1990116	1990116	—	—	—
2.895	SWITCH,T/SIG	1	1995925	1995925	—	—	—
6.514	WEDGE,LOCKING	1	7809977	7809977	—	—	—
6.524	YOKE,W/RACE,STRG SHF	1	7825339	7825339	—	—	—

© 2000 GENERAL MOTORS SERVICE PARTS OPERATIONS–CHEVROLET–14Y

1990 STEERING COLUMNS

NOTE: A01 NOTE:TO DETERMINE THE VATS MODULE OR KEY NUMBER TO BE USED FOR SERVICE, USE THE INTEROGATOR KENTMOORE #J35628..
NOTE: A02 LOCK CYL DOES NOT INCLUDE RESISTOR KEY.

PRODUCTION	VIN DIV. CODE	USAGE	COL. NO.
26010349	1	Y W/M.T.	1
26010348	1	Y W/A.T.	2

GROUP	DESCRIPTION	QTY	1	2	3	4	5
6.518	COLUMN,STRG(PROD.)	1	26010349	26010348	—	—	—
6.518	COLUMN,STRG(SERVICE)	1	26023515	26023514	—	—	—
2.459	ACTUATOR,DIMMER SWITCH ROD	1	7827028	7827028	—	—	—
2.195	ACTUATOR,IGNITION SWITCH	1	26015728	26015728	—	—	—
2.895	ACTUATOR,T/SIG SW	1	26020396	26020396	—	—	—
6.521	BEARING,W/ADAPER,LWR JACKET	1	7842176	7842176	—	—	—
6.514	BOLT,HSG SUPT	4	7806867	7806867			
6.500	BOLT,SHAFT LOCK	1	7808613	7808613	—	—	—
6.518	BRACKET,CABLE STRG	1	—	7841371	—	—	—
2.896	CAM,CIR B/D & T/SIG CANC	1	26047013	26047013	—	—	—
6.514	CAP,COL HSG COVER END	1	26015114	26015114	—	—	—
2.195	CLIP,BUZZER SWITCH RET	1	7830376	7830376	—	—	—
14.855	COIL KIT,INFL RESTRAINT	1	26013920	26013920	—	—	—
6.500	COVER,W/SLEEVE,LOCK HSG	1	26016646	26016646	—	—	—
6.500	CYLINDER,LK & IGN SW	1	26033387	—	—	—	
6.514	HOUSING,STRG COL	1	26017735	26017735	—	—	—
6.518	JACKET,STRG COL	1	26010573	26010573	—	—	—
2.187	KEY,RESISTOR CODE #10	1	26019400	26019400	—	—	—
2.187	KEY,RESISTOR CODE #11	1	26019401	26019401	—	—	—
2.187	KEY,RESISTOR CODE #12	1	26019402	26019402	—	—	—
2.187	KEY,RESISTOR CODE #13	1	26019403	26019403	—	—	—
2.187	KEY,RESISTOR CODE #14	1	26019404	26019404	—	—	—
2.187	KEY,RESISTOR CODE #15	1	26019405	26019405	—	—	—
2.187	KEY,RESISTOR CODE #2	1	26019392	26019392	—	—	—
2.187	KEY,RESISTOR CODE #3	1	26019393	26019393	—	—	—
2.187	KEY,RESISTOR CODE #4	1	26019394	26019394	—	—	—
2.187	KEY,RESISTOR CODE #5	1	26019395	26019395	—	—	—
2.187	KEY,RESISTOR CODE #6	1	26019396	26019396	—	—	—
2.187	KEY,RESISTOR CODE #7	1	26019397	26019397	—	—	—
2.187	KEY,RESISTOR CODE #8	1	26012108	26012108	—	—	—
2.187	KEY,RESISTOR CODE #9	1	26019399	26019399	—	—	—
2.187	KEY,SQ HD(W/O RESISTOR PELLET)	1	—	26007687	—	—	—
6.514	LEVER,SHOE RELEASE	1	7827689	7827689	—	—	—
6.500	LOCK,SHAFT	1	26017656	26017656	—	—	—
6.515	NUT,HEXAGON LOCKING(M14X1.5)	1	7829221	7829221	—	—	—
6.500	PIN,CABLE BK DRIVE	1	—	7840475	—	—	—
2.459	PIN,DIMMER SWITCH ACTUATOR PIVOT	1	7829787	7829787	—	—	—
6.500	PIN,INHIBITOR CROSS	1	—	7840476	—	—	—
6.514	PIN,STRG COL TILT LOCK SHOE RETURN	1	7806567	7806567	—	—	—
6.514	PLATE,COL HSG COVER END BASE	1	26015113	26015113	—	—	—
6.522	PROTECTOR,STRG COL WRG	1	26012369	26012369	—	—	—
2.195	RACK KIT,W/COL SECTOR	1	7844651	7844651	—	—	—
2.195	RACK,IGN SW ACTUATOR	1	7827157	7827157	—	—	—
6.521	RETAINER,LWR SPR	1	7839359	7839359	—	—	—
6.521	RING,STRG SHF LK PLT RET	1	5694191	5694191	—	—	—
2.459	ROD,DIMMER SW ACTR	1	26012347	26012347	—	—	—
2.195	SCREW,CYL LOCK RETAINER	1	7841678	7841678	—	—	—
2.895	SCREW,HSG CVR(1/4-20X.75)	3	7830670	7830670	—	—	—
2.188	SCREW,IGN SW WASH HD(10-24X.25)	1	7806433	7806433	—	—	—
2.895	SCREW,T/SIG SWITCH MTG	4	7809128	7809128	—	—	—

© 2000 GENERAL MOTORS SERVICE PARTS OPERATIONS–CHEVROLET–14Y

GROUP	DESCRIPTION	QTY	1	2	3	4	5
6.758	SEAL,DASH	1	7840636	7840636	—	—	—
6.521	SEAT,LWR BRG	1	7839361	7839361	—	—	—
2.195	SHAFT,IGN SWITCH SELECT DRIVE	1	7837466	7837466	—	—	—
6.524	SHAFT,STRG (LWR)	1	26010576	26010576	—	—	—
6.524	SHAFT,STRG COL(COMPL)	1	26010575	26010575	—	—	—
6.524	SHAFT,W/RACE,STRG(UPPER)	1	26017653	26017653	—	—	—
2.906	SHIELD,PROTECTOR WIRE	1	26009317	26009317	—	—	—
6.514	SHOE,TILT LK RH(2-POSITION W/NOTCH	1	26017727	26017727	—	—	—
6.514	SHOE,TILT LK LH (3-POSITION W/OUT. NOTCH)	1	26017728	26017728	—	—	—
6.518	SHROUD,HOUSING	1	7849028	7849028	—	—	—
6.514	SPHERE KIT,SHF CTR	1	26026564	26026564	—	—	—
6.521	SPRING KIT,TILT UPR	1	26002678	26002678	—	—	—
6.500	SPRING,CABLE BK DRIVE PIN	1	—	7840739	—	—	—
6.521	SPRING,COL SHAFT UPR BEARING	1	7815185	7815185	—	—	—
2.195	SPRING,IGN SW RACK PRELOAD	1	7804908	7804908	—	—	—
6.521	SPRING,LWR BRG	1	7839360	7839360	—	—	—
6.514	SPRING,STRG COL LOCK SHOE RETURN .	2	7804912	7804912	—	—	—
6.514	SPRING,STRG COL SHOE RELEASE	1	5698410	5698410	—	—	—
2.896	SPRING,T/SIG CANCEL LH	1	1964785	1964785	—	—	—
2.896	SPRING,T/SIG CANCEL RH	1	1964784	1964784	—	—	—
2.896	SPRING,T/SIG SW LANE CHANGE	1	10497876	10497876	—	—	—
2.188	STUD,DIMMER & IGN SW MTG	1	7829779	7829779	—	—	—
6.518	SUPPORT,STRG COL HSG	1	26010580	26010580	—	—	—
2.459	SWITCH,DIMMER	1	26019660	26019660	—	—	—
2.195	SWITCH,IGN KEY WARNING ALARM	1	26022717	26022717	—	—	—
2.188	SWITCH,LOCK & IGN	1	1990116	1990116	—	—	—
2.895	SWITCH,T/SIG	1	1995974	1995974	—	—	—
6.500	SWITCH,W/PIVOT,PULSE	1	26015119	26015119	—	—	—
4.419	WASHER,INFL RESTR COIL WAVE	1	26011609	26011609	—	—	—

© 2000 GENERAL MOTORS SERVICE PARTS OPERATIONS-CHEVROLET-14Y

1991 STEERING COLUMNS

NOTE: A01 NOTE:TO DETERMINE THE VATS MODULE OR KEY NUMBER TO BE USED FOR SERVICE, USE THE INTEROGATOR KENTMOORE #J35628..
NOTE: A02 LOCK CYL DOES NOT INCLUDE RESISTOR KEY.

PRODUCTION	DIV.	VIN CODE	USAGE	COL. NO.
26024008	1	Y	W/A.T.(MD8)	1
26024009	1	Y	W/M.T.(ML9)	2

GROUP	DESCRIPTION	QTY	1	2	3	4	5
6.518	COLUMN,STRG(PROD.)	1	26024008	26024009	—	—	—
6.518	COLUMN,STRG(SERVICE)	1	26031577	26025759	—	—	—
2.459	ACTUATOR,DIMMER SWITCH ROD	1	7827028	7827028	—	—	—
2.195	ACTUATOR,IGNITION SWITCH	1	26015728	26015728	—	—	—
2.895	ACTUATOR,T/SIG SW	1	26020396	26020396	—	—	—
6.525	BEARING,STRG SHAFT	1	7832343	7832343	—	—	—
6.521	BEARING,W/ADAPER,LWR JACKET	1	7842176	7842176	—	—	—
6.514	BOLT,HSG SUPT	4	7806867	7806867	—	—	—
6.500	BOLT,SHAFT LOCK	1	7808613	7808613	—	—	—
6.518	BRACKET,CABLE STRG	1	7841371	—	—	—	—
2.896	CAM,CIR B/D & T/SIG CANC	1	26047013	26047013	—	—	—
6.514	CAP,COL HSG COVER END	1	26015114	26015114	—	—	—
14.865	COIL KIT,INFL RESTRAINT	1	26013854	26013854	—	—	—
6.500	COVER,W/SLEEVE,LOCK HSG	1	26016646	26016646	—	—	—
2.188	CYLINDER,LK & IGN SW	1	26033390	26033387	—	—	—
6.514	HOUSING,STRG COL	1	26017735	26017735	—	—	—
6.518	JACKET,STRG COL	1	26010573	26010573	—	—	—
2.187	KEY,RESISTOR CODE #10	3	26019400	26019400	—	—	—
2.187	KEY,RESISTOR CODE #11	3	26019401	26019401	—	—	—
2.187	KEY,RESISTOR CODE #12	3	26019402	26019402	—	—	—
2.187	KEY,RESISTOR CODE #13	3	26019403	26019403	—	—	—
2.187	KEY,RESISTOR CODE #14	3	26019404	26019404	—	—	—
2.187	KEY,RESISTOR CODE #15	3	26019405	26019405	—	—	—
2.187	KEY,RESISTOR CODE #2	3	26019392	26019392	—	—	—
2.187	KEY,RESISTOR CODE #3	3	26019393	26019393	—	—	—
2.187	KEY,RESISTOR CODE #4	3	26019394	26019394	—	—	—
2.187	KEY,RESISTOR CODE #5	3	26019395	26019395	—	—	—
2.187	KEY,RESISTOR CODE #6	3	26019396	26019396	—	—	—
2.187	KEY,RESISTOR CODE #7	3	26019397	26019397	—	—	—
2.187	KEY,RESISTOR CODE #8	3	26012108	26012108	—	—	—
2.187	KEY,RESISTOR CODE #9	3	26019399	26019399	—	—	—
2.187	KEY,SQ HD(W/O RESISTOR PELLET)	1	26007687	26007687	—	—	—
6.514	LEVER,SHOE RELEASE	1	7827689	7827689	—	—	—
6.500	LOCK,SHAFT	1	26017656	26017656	—	—	—
6.515	NUT,HEXAGON LOCKING(M14X1.5)	1	7829221	7829221	—	—	—
6.500	PIN,CABLE BK DRIVE	1	7840475	—	—	—	—
2.459	PIN,DIMMER SWITCH ACTUATOR PIVOT	1	7829787	7829787	—	—	—
6.500	PIN,INHIBITOR CROSS	1	7840476	—	—	—	—
6.514	PIN,STRG COL TILT LOCK SHOE RETURN	1	7806567	7806567	—	—	—
6.514	PLATE,COL HSG COVER END BASE	1	26015113	26015113	—	—	—
6.522	PROTECTOR,STRG COL WRG	1	26012369	26012369	—	—	—
2.195	RACK KIT,W/COL SECTOR	1	7844651	7844651	—	—	—
2.195	RACK,IGN SW ACTUATOR	1	7827157	7827157	—	—	—
6.521	RETAINER,LWR SPR	1	7839359	7839359	—	—	—
6.521	RING,STRG SHF LK PLT RET	1	5694191	5694191	—	—	—
2.459	ROD,DIMMER SW ACTR	1	26012347	26012347	—	—	—
2.195	SCREW,CYL LOCK RETAINER	1	7841678	7841678	—	—	—
2.895	SCREW,HSG CVR(1/4-20X.75)	3	7830670	7830670	—	—	—
2.188	SCREW,IGN SW WASH HD(10-24X.25)	1	7806433	7806433	—	—	—
2.895	SCREW,T/SIG SWITCH MTG	4	7809128	7809128	—	—	—

© 2000 GENERAL MOTORS SERVICE PARTS OPERATIONS–CHEVROLET–14Y

GROUP	DESCRIPTION	QTY	1	2	3	4	5
6.758	SEAL,DASH	1	7840636	7840636	—	—	—
6.521	SEAT,LWR BRG	1	7839361	7839361	—	—	—
2.195	SHAFT,IGN SWITCH SELECT DRIVE	1	7837466	7837466	—	—	—
6.524	SHAFT,STRG (LWR)	1	26010576	26010576	—	—	—
6.524	SHAFT,STRG COL(COMPL)	1	26010575	26010575	—	—	—
6.524	SHAFT,W/RACE,STRG(UPPER)	1	26017653	26017653	—	—	—
2.906	SHIELD,PROTECTOR WIRE	1	26009317	26009317	—	—	—
6.514	SHOE,TILT LK RH(2-POSITION W/NOTCH	1	26017727	26017727	—	—	—
6.514	SHOE,TILT LK LH (3-POSITION W/OUT. NOTCH)	1	26017728	26017728	—	—	—
6.518	SHROUD,HOUSING	1	7849028	7849028	—	—	—
6.514	SPHERE KIT,SHF CTR	1	26026564	26026564	—	—	—
6.521	SPRING KIT,TILT UPR	1	26002678	26002678	—	—	—
6.500	SPRING,CABLE BK DRIVE PIN	1	7840739	—	—	—	—
6.521	SPRING,COL SHAFT UPR BEARING	1	7815185	7815185	—	—	—
2.195	SPRING,IGN SW RACK PRELOAD	1	7804908	7804908	—	—	—
6.521	SPRING,LWR BRG	1	7839360	7839360	—	—	—
6.514	SPRING,STRG COL LOCK SHOE RETURN .	2	7804912	7804912	—	—	—
6.514	SPRING,STRG COL SHOE RELEASE	1	5698410	5698410	—	—	—
2.896	SPRING,T/SIG CANCEL LH	1	1964785	1964785	—	—	—
2.896	SPRING,T/SIG CANCEL RH	1	1964784	1964784	—	—	—
2.896	SPRING,T/SIG SW LANE CHANGE	1	10497876	10497876	—	—	—
2.188	STUD,DIMMER & IGN SW MTG	1	7829779	7829779	—	—	—
6.518	SUPPORT,STRG COL HSG	1	26010580	26010580	—	—	—
2.459	SWITCH,DIMMER	1	26019660	26019660	—	—	—
2.195	SWITCH,IGN KEY WARNING ALARM	1	26022717	26022717	—	—	—
2.188	SWITCH,LOCK & IGN	1	1990116	1990116	—	—	—
2.895	SWITCH,T/SIG	1	1995974	1995974	—	—	—
6.500	SWITCH,W/PIVOT,PULSE	1	26015119	26015119	—	—	—
4.419	WASHER,INFL RESTR COIL WAVE	1	26011609	26011609	—	—	—

© 2000 GENERAL MOTORS SERVICE PARTS OPERATIONS–CHEVROLET–14Y

6.521 BEARING – BEARING KIT – BUMPER – RETAINER – RING – ROD – SEAT – SPRING – SPRING KIT – WASHER, Steering Column

NOTE: FOR 1986–1991 USAGE REFER TO STEERING COLUMN CHART GRP 6.518

93–96	Y	26001827	2	30.09	BEARING KIT, STRG SHF UPR (W/RACE)	
84	Y T&T WHL	26001827	2	30.09	BEARING KIT, W/RACE, STRG COL (UPR & LWR)	
91–96	Y	7832343	1	9.03	BEARING, STRG SHF CTR (06.525)	7–F13,93
84–86	Y	7842176	1	41.38	BEARING, STRG SHF LWR	7–F13,86
91–93	Y	7842176	1	41.38	BEARING, STRG SHF LWR	7–F13,86
94–96	Y 4–SPD A/TRANS (M30)	26025358	1	34.14	BEARING, STRG SHF LWR	7–F21,87
94–96	Y 6–SPD M/TRANS (ML9)	26025358	1	34.14	BEARING, STRG SHF LWR	7–F21,87
84–86	Y	7843705	1	DISCON	BUMPER, RETRACTED STRG COL	
94–95	Y (EXC EUROPEAN PROVISIONS (VD1) (EXPORT), VE1 (EXPORT)	26026931	1	8.23	RETAINER, STRG SHF LWR BRG ADAP	
96	Y 4–SPD A/TRANS (M30)	26026931	1	8.23	RETAINER, STRG SHF LWR BRG ADAP	
96	Y 6–SPD M/TRANS (ML9)	26026931	1	8.23	RETAINER, STRG SHF LWR BRG ADAP	
93–94	Y	7847029	1	8.23	RETAINER, STRG SHF LWR BRG SPR	7–F13,90
94–95	Y 6–SPD M/TRANS (ML9), (EXC EUROPEAN PROVISIONS (VD1) (EXPORT), VE1 (EXPORT)	7804439	1	2.91	RING, STRG SHF LWR BRG ADAP RET	
94–96	Y 4–SPD A/TRANS (M30)	7804439	1	2.91	RING, STRG SHF LWR BRG ADAP RET	
96	Y 6–SPD M/TRANS (ML9)	7804439	1	2.91	RING, STRG SHF LWR BRG ADAP RET	
84–86	Y	7827158	1	10.17	ROD, TLSCP UPR STRG SHF ADJ (06.514)	
84–86	Y	7839361	1	8.23	SEAT, LWR BRG	7–F13,88
84–86	Y	7804909	1	8.07	SEAT, UPR COL SHAFT, UPR BRG RACE	
91–96	Y	7839361	1	8.23	SEAT, STRG SHF LWR BRG	7–F13,88
94–96	Y 4–SPD A/TRANS (M30)	26059705	1	17.99	SPRING KIT, STRG SHF UPR BRG (INCL CAM T/SIG CANC, SEAT UPR BRG RACE, SPRING UPR BRG, RET BRG.)	7–F21,5
94–96	Y 6–SPD M/TRANS (ML9)	26059705	1	17.99	SPRING KIT, STRG SHF UPR BRG (INCL CAM T/SIG CANC, SEAT UPR BRG RACE, SPRING UPR BRG, RET BRG.)	7–F21,5
84–86	Y	7839360	1	9.85	SPRING, STRG SHF LWR BRG	7–F13,89
91–96	Y	7839360	1	9.85	SPRING, STRG SHF LWR BRG	7–F13,89
84–86	Y	5695946	1	6.15	SPRING, STRG SHF UPR BRG	
91–93	Y	7815185	1	10.00	SPRING, STRG SHF UPR BRG	7–F13,8
94–96	Y	26055299	1	2.50	SPRING, STRG SHF UPR BRG	
85–87	Y	3771494	2	.45	WASHER, STRG COL LWR SUPT STUD PLT (07.833)	

6.522 PROTECTOR, Steering Column

90–96	Y	26009317	1	9.04	PROTECTOR, STRG COL WRG (SHIELD)	7–F13,26
90–93	Y	26012369	1	10.42	PROTECTOR, STRG COL WRG	7–F13,26
94–96	Y	26022488	1	9.15	PROTECTOR, STRG COL WRG	7–F21,26

© 2000 GENERAL MOTORS SERVICE PARTS OPERATIONS–CHEVROLET–14Y

6.524 SHAFT – YOKE, Steering Column

NOTE: FOR 1986–1991 USAGE REFER TO STEERING COLUMN CHART GRP 6.518

84–85	Y	7843584	1	DISCON	SHAFT, LWR	
86	Y	7848024	1	DISCON	SHAFT, LWR	
91–93	Y	26010576	1	210.53	SHAFT, LWR STRG	7–F13,59
94–96	Y	26030667	1	210.53	SHAFT, LWR STRG	7–F21,59
90–91	Y 5.7–8 (L98)	26022829	1	386.32	SHAFT, S/GR CPLG	7–F13,96
90–91	Y 5.7J (LT5)	26022830	1	386.32	SHAFT, S/GR CPLG (06.526)	7–F13,96
92–94	Y	26022830	1	386.32	SHAFT, S/GR CPLG (06.526)	7–F13,96
95–96	Y	26022830	1	386.32	SHAFT, S/GR CPLG (06.526)	7–F13,96
91–93	Y	26010575	1	386.32	SHAFT, STRG (COMPL)	7–F13,55
94–96	Y	26030666	1	386.32	SHAFT, STRG	7–F21,55
84–85	Y	7843585	1	DISCON	SHAFT, STRG COL (COMPLETE)	
86	Y	7848002	1	DISCON	SHAFT, STRG COL (COMPLETE)	
86–87	Y	26022829	1	386.32	SHAFT, STRG GEAR CPLG	7–F13,96
88–89	Y (5.7–8)	26022829	1	386.32	SHAFT, STRG GEAR CPLG	7–F13,96
84–85	Y	7843500	1	DISCON	SHAFT, STRG GR CPLG	
84–86	Y	7829047	1	DISCON	SHAFT, UPR	
91–96	Y	26017653	1	126.73	SHAFT, UPR STRG	7–F13,56
84–86	Y	7825339	1	153.30	YOKE, W/RACE, SHAFT	

6.525 BEARING – BEARING KIT – BOLT – SHIELD – SPHERE KIT, Steering Gear Shaft

NOTE: FOR 1986–1991 USAGE REFER TO STEERING GEAR CHART GRP 6.508

84–86	Y	26012607	1	36.70	BEARING KIT, S/GR STUB SHF	
93	Y	26023755	1	32.27	BEARING KIT, S/GR STUB SHF	
94–96	Y	26032824	1	32.96	BEARING KIT, S/GR STUB SHF	
84–86	Y	7832343	1	9.03	BEARING, STRG SHAFT	
84–96	Y	26005756	1	1.35	BOLT, INTER STRG SHF (POSN #1) (M10X1.5X31) (HFH NYLON LOCK)	7–F13,95
86–96	Y	7847298	1	9.50	BOLT, INTER STRG SHF (POSN #2) (10X1.5X40.3)	7–F13,95
95–96	Y	26039536	2	3.19	BOLT, INTER STRG SHF	7–G22,14
90–91	Y 5.7J (LT5)	14104779	1	8.43	SHIELD, S/GR CPLG (UPR)	7–F13,97
92–96	Y	14104779	1	8.43	SHIELD, S/GR CPLG	7–F13,97
86–88	Y	10143501	1	DISCON	SHIELD, STRG GR CPLG	
84–85	Y	14047776	1	DISCON	SHIELD, STRG GR CPLG LWR	
89–90	Y (5.7–8)	10143501	1	DISCON	SHIELD, STRG GR CPLG LWR	
84–85	Y	14060185	1	DISCON	SHIELD, STRG GR CPLG UPR	
91–96	Y	26026564	1	5.83	SPHERE KIT, STRG SHF (W/CTR SPR & JT PRELOAD) (06.514)	7–F13,2

6.526 SHAFT, Steering Column Intermediate

89	Y (5.7J)	26022830	1	386.32	SHAFT, STRG GEAR CPLG	

6.550 VALVE KIT, Steering Gear Hydraulic

NOTE: FOR 1986–1991 USAGE REFER TO STEERING GEAR CHART GRP 6.508

84–85	Y (EXC H.D.SUSP, EXPORT)	7841620	1	461.94	VALVE KIT, PINION	7–E23,4

6.552 RING – SEAL KIT, Steering Gear Hydraulic Valve

NOTE: FOR 1986–1991 USAGE REFER TO STEERING GEAR CHART GRP 6.508

84–86	Y	7828017	1	3.32	RING, S/GR STUB SHF SEAL RET (R&P)	7–E23,11
92–96	Y	7828017	1	3.32	RING, S/GR STUB SHF SEAL RET (R&P)	7–E23,11
84–86	Y	26010340	1	16.15	SEAL KIT, S/GR VLV (SPLIT RING)	

© 2000 GENERAL MOTORS SERVICE PARTS OPERATIONS–CHEVROLET–14Y

6.600 COOLER, Power Steering Fluid

87	Y 1BL (PERF HDLG PKG Z51)	26004494	1	DISCON	COOLER, P/S FLUID	
88–89	Y	26027162	1	156.37	COOLER, P/S FLUID (1989 & PRIOR VEHICLES MUST ALSO USE 1–14084031 HOSE & 2–14078849 CLAMPS.)	7–G16,26
90–91	Y 5.7J (LT5)	26016988	1	156.37	COOLER, P/S FLUID	7–G20,15
90–91	Y 5.7–8 (L98)	26027162	1	156.37	COOLER, P/S FLUID	7–G16,26
92–95	Y 5.7P (LT1)	26033166	1	156.37	COOLER, P/S FLUID (W/PIPES) .	7–G22,15
92–95	Y 5.7J (LT5)	26033592	1	335.22	COOLER, P/S FLUID	7–G20,15
96	Y	26033166	1	156.37	COOLER, P/S FLUID (W/PIPES) .	7–G22,15

6.602 BRACKET – CLAMP – HOSE – PIPE KIT – SEAL, Steering Fluid Cooler

87	Y 1BL (PERF HDLG PKG Z51)	26004496	1	DISCON	BRACKET, P/S FLUID COOLER ..	
88	Y PERF HDLG PKG (Z51) ...	26004496	1	DISCON	BRACKET, P/S FLUID COOLER ..	
88–94	Y	14078849	1	*1.70	CLAMP, P/S FLUID CLG HOSE (01.745)	7–G16,26
88	Y	26027161	1	56.99	HOSE, P/S FLUID CLR OTLT	7–G16,26
89–90	Y 5.7–8 (L98), HVY DUTY SUSP (FE7)	26027161	1	56.99	HOSE, P/S FLUID CLR OTLT	7–G16,26
91	Y 5.7–8 (L98)	26027161	1	56.99	HOSE, P/S FLUID CLR OTLT	7–G16,26
84–86	Y	10080769	1	DISCON	PIPE KIT, P/S FLUID CLG	
90–95	Y 5.7J (LT5)	26001594	1	*2.45	SEAL, P/S FLUID CLG PIPE (O RING) (7.65MM IDX1.63MM THK) (06.674)	7–G20,5
91	Y 5.7–8 (L98)	26001594	1	*2.45	SEAL, P/S FLUID CLG PIPE (O RING) (7.65MM IDX1.63MM THK) (06.674)	7–G20,5

6.605 PUMP – PUMP KIT, Power Steering

NOTE: FOR 1986–1991 USAGE REFER TO POWER STEERING PUMP CHART GRP 6.605

NOTE: PARTIAL PUMPS ARE LESS RESERVOIRS WHICH ARE FOUND IN GROUP 6.635.

84–85	Y	26070251	1	136.26	PUMP KIT, P/S (REMAN) (AC–DELCO #36–8030)	
86	Y 5.7–8 (L98)	26070251	1	136.26	PUMP KIT, P/S (REMAN) (AC–DELCO #36–8030)	
87–91	Y 5.7–8 (L98)	26070251	1	136.26	PUMP KIT, P/S (REMAN) (AC–DELCO #36–8030)	
90–95	Y 5.7J (LT5)	26035646	1	162.16	PUMP KIT, P/S (REMAN) (AC–DELCO #36–8052)	
92–93	Y 5.7P (LT1)	26070254	1	109.02	PUMP KIT, P/S (REMAN) (AC–DELCO #36–8032)	
94–95	Y 5.7P (LT1)	26055953	1	190.64	PUMP KIT, P/S (REMAN) (AC–DELCO #36–8069)	
84–85	Y	26021469	1	335.22	PUMP, P/S	7–G2,15
92–95	Y 5.7J (LT5)	7849020	1	335.05	PUMP, P/S	7–G6,15
92–95	Y 5.7P (LT1)	26045659	1	335.22	PUMP, P/S	7–G8,1
96	Y	26045659	1	335.22	PUMP, P/S	7–G8,1

© 2000 GENERAL MOTORS SERVICE PARTS OPERATIONS–CHEVROLET–14Y

1986 POWER STEERING PUMPS

PRODUCTION	VIN DIV. CODE	USAGE	COL. NO.
07842277	1	Y	1
26021469	1	Y (SEE NOTE 001)	2

NOTE: 001 26021469 IS SERVICE REPLACEMENT OF 7842277.

GROUP	DESCRIPTION	QTY	1	2	3	4	5
6.605	PUMP,P.S.(PROD.)	1	7842277	26021469	—	—	—
6.605	PUMP,P.S.(SERVICE)	1	26021469	26021469	—	—	—
6.605	PUMP,P.S.(REMAN)	1	—	26035959	—	—	—
6.616	BEARING,BALL	1	26001378	26001378	—	—	—
6.624	FITTING,O-RING UNION	1	26056501	26056501	—	—	—
6.608	HOUSING,PUMP	1	7841738	7841738	—	—	—
6.608	PIN,PRESS PLT	1	7839990	7839990	—	—	—
6.608	PIN,THRUST PLT	1	7839991	7839991	—	—	—
6.612	PLATE,PRESSURE	1	26003737	26003737	—	—	—
6.612	PLATE,THRUST	1	26015197	26015197	—	—	—
6.610	RING KIT,ROTOR & VANE	1	7841845	26021987	—	—	—
6.616	RING,SHF BRG RET	1	7842662	7842662	—	—	—
6.612	RING,THRUST PLATE RET	1	7839992	7839992	—	—	—
6.609	SEAL KIT,PUMP	1	26024155	26024155	—	—	—
6.617	SEAL,DRIVE SHAFT	1	7841739	7841739	—	—	—
6.674	SEAL,O RING UNION FTG(.588-.578)	1	5688035	5688035	—	—	—
6.614	SHAFT,BEARING(RR)	1	26001374	26001374	—	—	—
6.612	SLEEVE KIT,SEAL	1	7842086	7842086	—	—	—
6.624	SPRING,FLOW CONT	1	5688037	5688037	—	—	—
6.612	SPRING,PRESSURE PLATE	1	7839989	7839989	—	—	—
6.608	TUBE,RETURN	1	7840158	7840158	—	—	—
6.624	VALVE,PUMP CONTROL	1	7841853	7841853	—	—	—
6.610	VANE KIT,HYD PUMP	1	7840569	7840569	—	—	—

1987 POWER STEERING PUMPS

PRODUCTION	VIN DIV. CODE	USAGE	COL. NO.
07842277	1	Y	1
26021469	1	Y (SEE NOTE 001)	2

NOTE: 001 26021469 IS SERVICE REPLACEMENT OF 7842277.

GROUP	DESCRIPTION	QTY	1	2	3	4	5
6.605	PUMP,P.S.(PROD.)	1	7842277	26021469	—	—	—
6.605	PUMP,P.S.(SERVICE)	1	26021469	26021469	—	—	—
6.605	PUMP,P.S.(REMAN)	1	—	26035959	—	—	—
6.616	BEARING,BALL	1	26001378	26001378	—	—	—
6.624	FITTING,O-RING UNION	1	26056501	26056501	—	—	—
6.608	HOUSING,PUMP	1	7841738	7841738	—	—	—
6.608	PIN,PRESS PLT	1	7839990	7839990	—	—	—
6.608	PIN,THRUST PLT	1	7839991	7839991	—	—	—
6.612	PLATE,PRESSURE	1	26003737	26003737	—	—	—
6.612	PLATE,THRUST	1	7841685	26015197	—	—	—
6.610	RING KIT,ROTOR & VANE	1	7841845	26021987	—	—	—
6.616	RING,SHF BRG RET	1	7842662	7842662	—	—	—
6.612	RING,THRUST PLATE RET	1	7839992	7839992	—	—	—
6.609	SEAL KIT,PUMP	1	26024155	26024155	—	—	—
6.617	SEAL,DRIVE SHAFT	1	7841739	7841739	—	—	—
6.674	SEAL,O RING UNION FTG(.588-.578)	1	5688035	5688035	—	—	—
6.614	SHAFT,BEARING(RR)	1	26001374	26001374	—	—	—
6.612	SLEEVE KIT,SEAL	1	7842086	7842086	—	—	—
6.624	SPRING,FLOW CONT	1	5688037	5688037	—	—	—
6.612	SPRING,PRESSURE PLATE	1	7839989	7839989	—	—	—
6.608	TUBE,RETURN	1	7840158	7840158	—	—	—
6.624	VALVE,PUMP CONTROL	1	7841853	7841853	—	—	—
6.610	VANE KIT,HYD PUMP	1	7840569	7840569	—	—	—

© 2000 GENERAL MOTORS SERVICE PARTS OPERATIONS-CHEVROLET-14Y

1988 POWER STEERING PUMPS

PRODUCTION	VIN DIV. CODE	USAGE	COL. NO.
07842277	1	Y	1
26021469	1	Y (SEE NOTE 001)	2

NOTE: 001 26021469 IS SERVICE REPLACEMENT OF 7842277.

GROUP	DESCRIPTION	QTY	1	2	3	4	5
6.605	PUMP,P.S.(PROD.)	1	7842277	26021469	—	—	—
6.605	PUMP,P.S.(SERVICE)	1	26021469	26021469	—	—	—
6.605	PUMP,P.S.(REMAN)	1	—	26035959	—	—	—
6.616	BEARING,BALL	1	26001378	26001378	—	—	—
6.624	FITTING,O-RING UNION	1	26056501	26056501	—	—	—
6.608	HOUSING,PUMP	1	7841738	7841738	—	—	—
6.608	PIN,PRESS PLT	1	7839990	7839990	—	—	—
6.608	PIN,THRUST PLT	1	7839991	7839991	—	—	—
6.612	PLATE,PRESSURE	1	26003737	26003737	—	—	—
6.612	PLATE,THRUST	1	7841685	26015197	—	—	—
6.610	RING KIT,ROTOR & VANE	1	7841845	26021987	—	—	—
6.616	RING,SHF BRG RET	1	7842662	7842662	—	—	—
6.612	RING,THRUST PLATE RET	1	7839992	7839992	—	—	—
6.609	SEAL KIT,PUMP	1	26024155	26024155	—	—	—
6.617	SEAL,DRIVE SHAFT	1	7841739	7841739	—	—	—
6.674	SEAL,O RING UNION FTG(.588-.578)	1	5688035	5688035	—	—	—
6.614	SHAFT,BEARING(RR)	1	26001374	26001374	—	—	—
6.612	SLEEVE KIT,SEAL	1	7842086	7842086	—	—	—
6.624	SPRING,FLOW CONT	1	5688037	5688037	—	—	—
6.612	SPRING,PRESSURE PLATE	1	7839989	7839989	—	—	—
6.608	TUBE,RETURN	1	7840158	7840158	—	—	—
6.624	VALVE,PUMP CONTROL	1	7841853	7841853	—	—	—
6.610	VANE KIT,HYD PUMP	1	7840569	7840569	—	—	—

1989 POWER STEERING PUMPS

PRODUCTION	VIN DIV. CODE	USAGE	COL. NO.
07842277	1	Y	1
26021469	1	Y (SEE NOTE 001)	2

NOTE: 001 26021469 IS SERVICE REPLACEMENT OF 7842277.

GROUP	DESCRIPTION	QTY	1	2	3	4	5
6.605	PUMP,P.S.(PROD.)	1	7842277	26021469	—	—	—
6.605	PUMP,P.S.(SERVICE)	1	26021469	26021469	—	—	—
6.605	PUMP,P.S.(REMAN)	1	—	26035959	—	—	—
6.616	BEARING,BALL	1	26001378	26001378	—	—	—
6.624	FITTING,O-RING UNION	1	26056501	26056501	—	—	—
6.608	HOUSING,PUMP	1	7841738	7841738	—	—	—
6.608	PIN,PRESS PLT	1	7839990	7839990	—	—	—
6.608	PIN,THRUST PLT	1	7839991	7839991	—	—	—
6.612	PLATE,PRESSURE	1	26003737	26003737	—	—	—
6.612	PLATE,THRUST	1	7841685	26015197	—	—	—
6.610	RING KIT,ROTOR & VANE	1	7841845	26021987	—	—	—
6.616	RING,SHF BRG RET	1	7842662	7842662	—	—	—
6.612	RING,THRUST PLATE RET	1	7839992	7839992	—	—	—
6.609	SEAL KIT,PUMP	1	26024155	26024155	—	—	—
6.617	SEAL,DRIVE SHAFT	1	7841739	7841739	—	—	—
6.674	SEAL,O RING UNION FTG(.588-.578)	1	5688035	5688035	—	—	—
6.614	SHAFT,BEARING(RR)	1	26001374	26001374	—	—	—
6.612	SLEEVE KIT,SEAL	1	7842086	7842086	—	—	—
6.624	SPRING,FLOW CONT	1	5688037	5688037	—	—	—
6.612	SPRING,PRESSURE PLATE	1	7839989	7839989	—	—	—
6.608	TUBE,RETURN	1	7840158	7840158	—	—	—
6.624	VALVE,PUMP CONTROL	1	7841853	7841853	—	—	—
6.610	VANE KIT,HYD PUMP	1	7840569	7840569	—	—	—

© 2000 GENERAL MOTORS SERVICE PARTS OPERATIONS–CHEVROLET–14Y

1990 POWER STEERING PUMPS

PRODUCTION	DIV.	VIN CODE	USAGE	COL. NO.
07842277	1	Y	(5.7-8)	1
26011335	1	Y	(5.7J)W/A.C.(C60,C68),SOFT RIDE SUSP(FE1),HVY DUTY	2
26011335	1		SUSP(FE7)	2
26021469	1	Y	(SEE NOTE 001)	3

NOTE: 001 26021469 IS SERVICE REPLACEMENT OF 7842277.

GROUP	DESCRIPTION	QTY	1	2	3	4	5
6.605	PUMP,P.S.(PROD.)	1	7842277	26011335	26021469	—	—
6.605	PUMP,P.S.(SERVICE)	1	26021469	26011335	26021469	—	—
6.605	PUMP,P.S.(REMAN)	1	—	—	26035959	—	—
6.616	BEARING,BALL	1	26001378	26001378	26001378	—	—
6.624	FITTING,O-RING UNION	1	26056501	26056501	26056501	—	—
6.608	HOUSING,PUMP	1	7841738	26029471	7841738	—	—
6.608	PIN,PRESS PLT	1	7839990	7839990	7839990	—	—
6.608	PIN,THRUST PLT	1	7839991	7839991	7839991	—	—
6.612	PLATE,PRESSURE	1	26003737	26002915	26003737	—	—
6.612	PLATE,THRUST	1	26015197	7840139	26015197	—	—
6.610	RING KIT,ROTOR & VANE	1	7841845	7841845	26021987	—	—
6.616	RING,SHF BRG RET	1	7842662	7842662	7842662	—	—
6.612	RING,THRUST PLATE RET	1	7839992	7839992	7839992	—	—
6.609	SEAL KIT,PUMP	1	26024155	—	26024155	—	—
6.617	SEAL,DRIVE SHAFT	1	7841739	26025152	7841739	—	—
6.674	SEAL,O RING UNION FTG(.588-.578)	1	5688035	5688035	5688035	—	—
6.617	SEAL,P/S PUMP SHAFT	1	—	26033537	—	—	—
6.635	SEAL,RESVR O RING(15.0 I.D.)	1	—	26023510	—	—	—
6.614	SHAFT,BEARING	1	26001374	26045548	26001374	—	—
6.612	SLEEVE KIT,SEAL	1	7842086	7842086	7842086	—	—
6.624	SPRING,FLOW CONT	1	5688037	5688037	5688037	—	—
6.612	SPRING,PRESSURE PLATE	1	7839989	7839989	7839989	—	—
6.608	TUBE,RETURN	1	7840158	26006074	7840158	—	—
6.624	VALVE,PUMP CONTROL	1	7841853	7841853	7841853	—	—
6.610	VANE KIT,HYD PUMP	1	7840569	7840569	7840569	—	—

1991 POWER STEERING PUMPS

PRODUCTION	DIV.	VIN CODE	USAGE	COL. NO.
26021470	1	Y	(5.7J)	1
26021469	1	Y	(5.7-8)	2

GROUP	DESCRIPTION	QTY	1	2	3	4	5
6.605	PUMP,P.S.(PROD.)	1	26021470	26021469	—	—	—
6.605	PUMP,P.S.(SERVICE)	1	26021470	26021469	—	—	—
6.605	PUMP,P.S.(REMAN)	1	26035946	26035959	—	—	—
6.616	BEARING,BALL	1	26001378	26001378	—	—	—
6.624	FITTING,O-RING UNION	1	26056501	26056501	—	—	—
6.608	HOUSING,PUMP	1	26029471	7841738	—	—	—
6.608	PIN,PRESS PLT	1	7839990	7839990	—	—	—
6.608	PIN,THRUST PLT	2	7839991	7839991	—	—	—
6.612	PLATE,PRESSURE	1	26002915	26003737	—	—	—
6.612	PLATE,THRUST	1	7840139	26015197	—	—	—
6.610	RING KIT,ROTOR & VANE	1	26021987	26021987	—	—	—
6.616	RING,SHF BRG RET	1	7842662	7842662	—	—	—
6.612	RING,THRUST PLATE RET	1	7839992	7839992	—	—	—
6.609	SEAL KIT,PUMP	1	26024155	26024155	—	—	—
6.617	SEAL,DRIVE SHAFT	1	26025152	7841739	—	—	—
6.674	SEAL,O RING UNION FTG(.588-.578)	1	5688035	5688035	—	—	—
6.614	SHAFT,BEARING	1	26045548	26001374	—	—	—
6.612	SLEEVE KIT,SEAL	1	7842086	7842086	—	—	—
6.624	SPRING,FLOW CONT	1	5688037	5688037	—	—	—
6.612	SPRING,PRESSURE PLATE	1	7839989	7839989	—	—	—
6.608	TUBE,RETURN	1	26006074	7840158	—	—	—
6.624	VALVE,PUMP CONTROL	1	7841853	7841853	—	—	—
6.610	VANE KIT,HYD PUMP	1	7840569	7840569	—	—	—
6.617	SEAL,P/S PUMP SHAFT	1	26033537	—	—	—	—

© 2000 GENERAL MOTORS SERVICE PARTS OPERATIONS-CHEVROLET-14Y

6.606 BOLT – BRACE – BRACKET, Steering Pump Mounting

92–95	Y 5.7P (LT1)	10130949	AR	.96	BOLT, P/S PUMP (HFH M8X1.25X75, 33.2 THD, 18 OD, 9.8, PO) (08.900) (AC–DELCO #10130949)	
90–95	Y 5.7J (LT5)	11509666	3	.86	BOLT, P/S PUMP BR (8X1.25X50, 27 THD) (08.900)	
92–95	Y 5.7P (LT1)	10130949	AR	.96	BOLT, P/S PUMP FRT BRKT (HFH M8X1.25X75, 33.2 THD, 18 OD, 9.8, PO) (08.900) (AC–DELCO #10130949)	
85–91	Y 5.7–8 (L98)	10105222	1	10.42	BRACE, P/S PUMP RR	7–G16,23
92–95	Y 5.7P (LT1)	12550052	1	77.01	BRACKET, GEN & A/C CMPR & P/S PUMP (02.277)	3–F20,10
93	Y 5.7J (LT5)	12550052	1	77.01	BRACKET, GEN & A/C CMPR & P/S PUMP (02.277)	3–F20,10
96	Y	12550052	1	77.01	BRACKET, GEN & A/C CMPR & P/S PUMP (02.277)	3–F20,10
84–90	Y	14087559	1	43.35	BRACKET, GEN & P/S PUMP (02.277)	7–G12,3
88–89	Y	26006632	1	DISCON	BRACKET, P/S FLUID COOLER	
90–95	Y 5.7J (LT5)	10067475	1	65.41	BRACKET, P/S PUMP	7–G20,18
92–95	Y 5.7P (LT1)	10105358	1	2.50	BRACKET, P/S PUMP FRT	7–G22,7
96	Y 5.7P (LT1), 5.7–5 (LT4)	10105358	1	2.50	BRACKET, P/S PUMP FRT	7–G22,7
85–91	Y 5.7–8 (L98)	10077534	1	13.08	BRACKET, P/S PUMP RR	7–G16,25

6.608 HOUSING – MAGNET – PIN – TUBE, Steering Pump

NOTE: FOR 1986–1991 USAGE REFER TO POWER STEERING PUMP CHART GRP 6.605

90	Y FOR MDL APPL & POA INFO SEE PUMP CHART	26017908	1	DISCON	HOUSING, P .S. PUMP	
84–85	Y	7841738	1	DISCON	HOUSING, P/S PUMP	
88	Y	26029471	1	277.98	HOUSING, P/S PUMP	7–G6,1
90–91	Y FOR MDL APPL & POA INFO SEE PUMP CHART	26029471	1	277.98	HOUSING, P/S PUMP	7–G6,1
92–94	Y 5.7P (LT1)	26027173	1	277.98	HOUSING, P/S PUMP	
92–95	Y 5.7J (LT5)	26029471	1	277.98	HOUSING, P/S PUMP	7–G6,1
90–95	Y 5.7J (LT5)	5692682	1	8.33	MAGNET, P/S FLUID RSVR	7–G20,10
84–85	Y	7839990	1	4.70	PIN, HYD STRG PUMP DOWEL	7–G2,3
84–85	Y	7839991	2	4.80	PIN, HYD STRG PUMP RING DOWEL	7–G2,8
84–85	Y	7839990	1	4.70	PIN, P/S PUMP PRESS PLT	7–G2,3
92–96	Y	7839990	1	4.70	PIN, P/S PUMP PRESS PLT	7–G2,3
84–85	Y	7839991	2	4.80	PIN, P/S PUMP THR PLT	7–G2,8
92–95	Y	7839991	2	4.80	PIN, P/S PUMP THR PLT	7–G2,8
96	Y	7839991	1	4.80	PIN, P/S PUMP THR PLT	7–G2,8

6.609 SEAL KIT, Steering Pump

NOTE: FOR 1986–1991 USAGE REFER TO POWER STEERING PUMP CHART GRP 6.605

84–86	Y	26024155	1	10.49	SEAL KIT, P/S PUMP	
92–95	Y 5.7P (LT1)	26027174	1	20.87	SEAL KIT, P/S PUMP (AC–DELCO #36–7158)	7–G6,1
92–95	Y 5.7J (LT5)	26027174	1	20.87	SEAL KIT, P/S PUMP (AC–DELCO #36–7158)	7–G6,1
96	Y 5.7P (LT1), 5.7–5 (LT4)	26027174	1	20.87	SEAL KIT, P/S PUMP (AC–DELCO #36–7158)	7–G6,1

© 2000 GENERAL MOTORS SERVICE PARTS OPERATIONS–CHEVROLET–14Y

6.610 RING KIT – VANE KIT, Steering Pump

NOTE: FOR 1986–1991 USAGE REFER TO POWER STEERING PUMP CHART GRP 6.605

84–85	Y	26021987	1	DISCON	RING KIT, HYD STRG PUMP ROTOR & VANE	
86–91	Y FOR MDL APPL & POA INFO SEE PUMP CHART	26021987	1	DISCON	RING KIT, P/S PUMP (W/ROTOR AND VANE)	
92–95	Y	26021987	1	DISCON	RING KIT, P/S PUMP (W/ROTOR AND VANE)	
96	Y	26046560	1	57.23	RING KIT, P/S PUMP	7–G10,3
84–85	Y	7840569	1	26.32	VANE KIT, P/S PUMP	7–G2,9
90–95	Y 5.7J (LT5)	7840569	1	26.32	VANE KIT, P/S PUMP	7–G2,9
92–94	Y 5.7P (LT1)	7840569	1	26.32	VANE KIT, P/S PUMP	7–G2,9

6.612 PLATE – RING – SLEEVE – SPRING, Steering Pump

NOTE: FOR 1986–1991 USAGE REFER TO POWER STEERING PUMP CHART GRP 6.605

84–85	Y	26003737	1	28.11	PLATE, P/S PUMP PRESS (PLATE, P/S PUMP PRESS RR)	7–G2,7
92–95	Y 5.7J (LT5)	26002915	1	42.92	PLATE, P/S PUMP PRESS	7–G2,7
92–95	Y 5.7P (LT1)	26003737	1	28.11	PLATE, P/S PUMP PRESS	7–G2,7
96	Y	26003737	1	28.11	PLATE, P/S PUMP PRESS	7–G2,7
84–85	Y	26015197	1	38.33	PLATE, P/S PUMP THR	7–G2,13
92–95	Y 5.7J (LT5)	7840139	1	27.85	PLATE, P/S PUMP THR	7–G2,13
92–95	Y 5.7P (LT1)	26015197	1	38.33	PLATE, P/S PUMP THR	7–G2,13
96	Y	26015197	1	38.33	PLATE, P/S PUMP THR	7–G2,13
84–85	Y	7839992	1	5.85	RING, P/S PUMP THR PLT RET	7–G2,14
92–96	Y	7839992	1	5.85	RING, P/S PUMP THR PLT RET	7–G2,14
84–85	Y	7842086	1	16.35	SLEEVE, P/S PUMP PRESS PLT SEAL	7–G2,2
90–94	Y	7842086	1	16.35	SLEEVE, P/S PUMP PRESS PLT SEAL	7–G2,2
95	Y 5.7J (LT5)	7842086	1	16.35	SLEEVE, P/S PUMP PRESS PLT SEAL	7–G2,2
84–85	Y	5688037	1	3.85	SPRING, FLOW CONT (1 31/32 FREE LENGTH)	
84–85	Y	7839989	1	9.30	SPRING, P/S PUMP PRESS PLT	7–G2,5
90–95	Y 5.7J (LT5)	7839989	1	9.30	SPRING, P/S PUMP PRESS PLT	7–G2,5
92–95	Y 5.7P (LT1)	7839989	1	9.30	SPRING, P/S PUMP PRESS PLT	7–G2,5
96	Y	7839989	1	9.30	SPRING, P/S PUMP PRESS PLT	7–G2,5

6.614 SHAFT – SHAFT KIT, Steering Pump

NOTE: FOR 1986–1991 USAGE REFER TO POWER STEERING PUMP CHART GRP 6.605

88–91	Y FOR MDL APPL & POA INFO SEE PUMP CHART	26086421	1		SHAFT KIT, P/S PUMP	
90–95	Y 5.7J (LT5)	26086421	1		SHAFT KIT, P/S PUMP	
84–85	Y	26001374	1	96.83	SHAFT, P/S PUMP (W/BRG)	7–G2,17
92–95	Y 5.7P (LT1)	26001374	1	96.83	SHAFT, P/S PUMP (W/BRG)	7–G2,17
96	Y	26001374	1	96.83	SHAFT, P/S PUMP (W/BRG)	7–G2,17
90	Y FOR MDL APPL & POA INFO SEE PUMP CHART	26017909	1	DISCON	SHAFT, W/BEARING, P.S. PUMP	

6.616 BEARING – RING, Steering Pump Drive Shaft Outer Bearing Retainer

NOTE: FOR 1986–1991 USAGE REFER TO POWER STEERING PUMP CHART GRP 6.605

90	Y FOR MDL APPL & POA INFO SEE PUMP CHART	26017910	1	DISCON	BEARING, P.S. PUMP SHAFT (BALL BRG)	
84–96	Y	26001378	1	32.03	BEARING, P/S PUMP SHF	7–G2,18
84–86	Y	26001378	1	32.03	BEARING, PUMP BALL	7–G2,18
84–85	Y	7842662	2	9.85	RING, P/S PUMP SHF BRG RET	7–G2,19
90–95	Y 5.7J (LT5)	7842662	1	9.85	RING, P/S PUMP SHF BRG RET	7–G2,19

© 2000 GENERAL MOTORS SERVICE PARTS OPERATIONS–CHEVROLET–14Y

6.616 BEARING – RING, Steering Pump Drive Shaft Outer Bearing Retainer (Con't)

92–95	Y 5.7P (LT1)	7842662	1	9.85	RING, P/S PUMP SHF BRG RET	7–G2,19
96	Y	7842662	1	9.85	RING, P/S PUMP SHF BRG RET	7–G2,19

6.617 SEAL, Steering Pump Drive Shaft

NOTE: FOR 1986–1991 USAGE REFER TO POWER STEERING PUMP CHART GRP 6.605

84–85	Y	7841739	1	12.98	SEAL, P/S PUMP SHF	7–G2,16
90–91	Y	26025152	1	18.80	SEAL, P/S PUMP SHF	7–G2,16
90–95	Y 5.7J (LT5)	26025152	1	18.80	SEAL, P/S PUMP SHF	7–G2,16
92–95	Y 5.7P (LT1)	26027103	1	12.98	SEAL, P/S PUMP SHF	7–G8,2
96	Y	26027103	1	12.98	SEAL, P/S PUMP SHF	7–G8,2

6.624 FITTING – SPRING – VALVE, Steering Pump Control

NOTE: FOR 1986–1991 USAGE REFER TO POWER STEERING PUMP CHART GRP 6.605

90	Y FOR MDL APPL & POA INFO SEE PUMP CHART	26056501	1	25.65	FITTING, O–RING UNION	7–G2,23
84–86	Y	26056501	1	25.65	FITTING, P/S PUMP	7–G2,23
87–91	Y FOR MDL APPL & POA INFO SEE PUMP CHART	26056501	1	25.65	FITTING, P/S PUMP	7–G2,23
92–96	Y	26056501	1	25.65	FITTING, P/S PUMP	7–G2,23
84–86	Y	5688037	1	3.85	SPRING, P/S PUMP FLOW C/VLV (06.612)	7–G2,20
90–95	Y 5.7J (LT5)	5688037	1	3.85	SPRING, P/S PUMP FLOW C/VLV (06.612)	7–G2,20
92–95	Y 5.7P (LT1)	5688037	1	3.85	SPRING, P/S PUMP FLOW C/VLV (06.612)	7–G2,20
96	Y	5688037	1	3.85	SPRING, P/S PUMP FLOW C/VLV (06.612)	7–G2,20
87	Y FOR MDL APPL & POA INFO SEE PUMP CHART	7841759	1	29.64	VALVE, P/S PUMP CONTROL	
84–85	Y	7841853	1	23.25	VALVE, P/S PUMP FLOW CONT	7–G2,21
90–95	Y 5.7J (LT5)	7841853	1	23.25	VALVE, P/S PUMP FLOW CONT	7–G2,21
92–93	Y 5.7P (LT1)	7841853	1	23.25	VALVE, P/S PUMP FLOW CONT	7–G2,21
94–95	Y 5.7P (LT1)	26045685	1	20.90	VALVE, P/S PUMP FLOW CONT	7–G8,7
96	Y	7841853	1	23.25	VALVE, P/S PUMP FLOW CONT	7–G2,21

6.635 BRACKET – CAP – HOSE – NUT – RESERVOIR – SEAL – STRAP, Steering Pump

84	Y (1ST DES)	14060187	1	DISCON	BRACKET, HYD FLUID RSVR (HAS 1 HOLE, 1 SLOT)	
85–86	Y07	14084030	1	11.34	BRACKET, HYD FLUID RSVR	7–G14,18
86–87	Y67	14092700	1	DISCON	BRACKET, HYD FLUID RSVR	
87	Y07 (EXC 1BL PERF HDLG PKG Z51, B2B SPORT HDLG PKG Z52)	14084030	1	11.34	BRACKET, HYD FLUID RSVR	7–G14,18
87	Y07 1BL (PERF HDLG PKG Z51), B2B (SPORT HDLG PKG Z52)	14092700	1	DISCON	BRACKET, HYD FLUID RSVR	
88	Y	14084030	1	11.34	BRACKET, HYD FLUID RSVR	7–G14,18
89	Y (5.7–8)	14084030	1	11.34	BRACKET, P/S FLUID RSVR	7–G14,18
90	Y (5.7–8)	10098183	1	DISCON	BRACKET, P/S FLUID RSVR	
91	Y 5.7–8 (L98)	10098163	1	DISCON	BRACKET, P/S FLUID RSVR	
92–96	Y 5.7P (LT1)	10157972	1	26.57	BRACKET, P/S FLUID RSVR	7–G22,19
96	Y 5.7–5 (LT4)	10157972	1	26.57	BRACKET, P/S FLUID RSVR	7–G22,19
84	Y	14076128	1	12.00	CAP, HYD FLUID RSVR	7–G12,20
90–95	Y 5.7J (LT5)	26002554	1	14.10	CAP, P/S FLUID RSVR (AC–DELCO #36–7145)	7–G20,8
91	Y 5.7–8 (L98)	26018748	1	19.87	CAP, P/S FLUID RSVR (AC–DELCO #36–7146)	7–G18,19

© 2000 GENERAL MOTORS SERVICE PARTS OPERATIONS–CHEVROLET–14Y

6.635 BRACKET – CAP – HOSE – NUT – RESERVOIR – SEAL – STRAP, Steering Pump (Con't)

92–95	Y 5.7P (LT1)	26022453	1	18.76	CAP, P/S FLUID RSVR (AC–DELCO #36–7140)	7–G22,23
96	Y	26022453	1	18.76	CAP, P/S FLUID RSVR (AC–DELCO #36–7140)	7–G22,23
85–88	Y	14105106	1	7.22	CAP, P/S PUMP RSVR (AC–DELCO #36–7170)	7–G14,22
89–90	Y	14105106	1	7.22	CAP, P/S PUMP RSVR (AC–DELCO #36–7170)	7–G14,22
90	Y (5.7–8)	10098143	1	17.68	HOSE, P/S FLUID RSVR (06.671)	
92–96	Y 5.7P (LT1)	9442958	1	*1.00	NUT, P/S FLUID RSVR BRKT (3/8–16 PC, 286M) (HEX, FLANGE) (08.917)	7–G22,21
96	Y 5.7–5 (LT4), 6–SPD M/TRANS (ML9)	9442958	1	*1.00	NUT, P/S FLUID RSVR BRKT (3/8–16 PC, 286M) (HEX, FLANGE) (08.917)	7–G22,21
84	Y	14076166	1	28.88	RESERVOIR, HYD FLUID	7–G12,19
90	Y	7849151	1	40.47	RESERVOIR, P/S FLUID (AC–DELCO #36–7174)	7–G18,18
90–95	Y 5.7J (LT5)	26017982	1	85.54	RESERVOIR, P/S FLUID (AC–DELCO #36–7173)	7–G20,7
91	Y 5.7–8 (L98)	7849151	1	40.47	RESERVOIR, P/S FLUID (AC–DELCO #36–7174)	7–G18,18
92–95	Y 5.7P (LT1)	26024352	1	39.96	RESERVOIR, P/S FLUID (AC–DELCO #36–7172)	7–G22,22
96	Y	26024352	1	39.96	RESERVOIR, P/S FLUID (AC–DELCO #36–7172)	7–G22,22
85–87	Y	14084029	1	27.04	RESERVOIR, P/S PUMP FLUID (AC–DELCO #36–7171)	7–G14,21
88–89	Y	14084029	1	27.04	RESERVOIR, P/S PUMP FLUID (AC–DELCO #36–7171)	7–G14,21
92–95	Y 5.7P (LT1)	26023510	1	3.20	SEAL, P/S PUMP RSVR (O RING) (06.671)	7–G8,8
96	Y	26023510	1	3.20	SEAL, P/S PUMP RSVR (O RING) (06.671)	7–G8,8
88–89	Y	26023510	1	3.20	SEAL, RSVR O–RING PUMP (06.671)	7–G8,8
84	Y	14076167	1	DISCON	STRAP, HYD FLUID RSVR	

6.655 CAP – PULLEY, Steering Pump

89–91	Y 5.7–8 (L98)	10077300	1	1.18	CAP, P/S PUMP PUL HUB	7–G22,24
90–95	Y 5.7J (LT5)	10077300	1	1.18	CAP, P/S PUMP PUL HUB	7–G22,24
92–95	Y 5.7P (LT1)	10077300	1	1.18	CAP, P/S PUMP PUL HUB	7–G22,24
96	Y	10077300	1	1.18	CAP, P/S PUMP PUL HUB	7–G22,24
84–90	Y	14055114	1	27.85	PULLEY, P/S PUMP	7–G2,15
90–95	Y 5.7J (LT5)	10067476	1	35.51	PULLEY, P/S PUMP	7–G6,15
91	Y 5.7–8 (L98)	14055114	1	27.85	PULLEY, P/S PUMP	7–G2,15
92	Y 5.7P (LT1)	10186172	1	27.85	PULLEY, P/S PUMP	7–G22,3
93	Y 5.7P (LT1), (1ST DES)	10186172	1	27.85	PULLEY, P/S PUMP (GROOVED PLASTIC)	7–G22,3
93	Y 5.7P (LT1), (2ND DES)	10227069	1	27.85	PULLEY, P/S PUMP (FLAT STEEL)	7–G22,3
93	Y 5.7P (LT1), (1ST DES)	12455795	1	195.88	PULLEY, P/S PUMP (GROOVED PLASTIC)	7–G22,3
94–95	Y 5.7P (LT1)	10227069	1	27.85	PULLEY, P/S PUMP (FLAT STEEL)	7–G22,3
96	Y 5.7P (LT1), 5.7–5 (LT4)	10227069	1	27.85	PULLEY, P/S PUMP	7–G22,3

© 2000 GENERAL MOTORS SERVICE PARTS OPERATIONS–CHEVROLET–14Y

6.670 HOSE – LINE KIT – PIPE KIT – PROTECTOR, Steering Gear Oil Pressure

NOTE: FOR 1986–1991 USAGE REFER TO STEERING GEAR CHART GRP 6.508

84–87	Y	26002387	1	99.40	HOSE, HYD GEAR INL	7–G12,12
88–90	Y (5.7–8)	26020315	1	99.40	HOSE, P/S GEAR INL	
90–91	Y 5.7J (LT5)	26025628	1	99.40	HOSE, P/S GR INL (PRESSURE LINE)	7–G20,6
91	Y 5.7–8 (L98)	26027177	1	99.40	HOSE, P/S GR INL	
92–94	Y 5.7P (LT1)	26025064	1	99.40	HOSE, P/S GR INL	7–G22,8
92–95	Y 5.7J (LT5)	26033800	1	198.27	HOSE, P/S GR INL	7–G20,6
95	Y 5.7P (LT1)	26042088	1	98.11	HOSE, P/S GR INL	7–G22,8
96	Y	26042088	1	98.11	HOSE, P/S GR INL	7–G22,8
86	Y (EXC H.D. SUSP FE7)	26011399	LH	33.22	LINE KIT, CYL	
86	Y (EXC H.D. SUSP FE7, EXPORT VB4, VD1, VE1, VT7)	26011400	RH	33.22	LINE KIT, CYL	
84–85	Y	26017578	LH	33.22	PIPE KIT, S/GR (LONG)	7–E23,37
84–85	Y	26037914	RH	38.84	PIPE KIT, S/GR (SHORT)	7–E23,38
86	Y H .D. SUSP (FE7)	26017578	LH	33.22	PIPE KIT, S/GR (LONG)	7–E23,37
86	Y H .D. SUSP (FE7)	26037914	RH	38.84	PIPE KIT, S/GR (SHORT)	7–E23,38
87	Y FOR MDL APPL & POA INFO SEE GEAR CHART	26017578	LH	33.22	PIPE KIT, S/GR (LONG)	7–E23,37
87	Y FOR MDL APPL & POA INFO SEE GEAR CHART	26037914	RH	38.84	PIPE KIT, S/GR (SHORT)	7–E23,38
89–91	Y FOR MDL APPL & POA INFO SEE GEAR CHART	26017578	LH	33.22	PIPE KIT, S/GR (LONG)	7–E23,37
89–91	Y FOR MDL APPL & POA INFO SEE GEAR CHART	26037914	RH	38.84	PIPE KIT, S/GR (SHORT)	7–E23,38
92–93	Y	26017578	LH	33.22	PIPE KIT, S/GR (LONG)	7–E23,37
92–93	Y	26017579	RH	33.22	PIPE KIT, S/GR (SHORT)	7–E25,37
92–96	Y	26037911	LH	32.45	PIPE KIT, S/GR (LONG)	7–E25,38
92–96	Y	26037914	RH	38.84	PIPE KIT, S/GR (SHORT)	7–E23,38
86	Y67	14092704	1	DISCON	PROTECTOR, P/S GEAR HOSE	

6.671 HOSE – PIPE – TUBE, Steering Gear Oil Return

84	Y	14048940	1	22.95	HOSE, P/S FLUID RESVR	7–G12,14
85–88	Y	14084032	1	22.95	HOSE, P/S FLUID RSVR	7–G14,16
89	Y (5.7–8)	14084032	1	22.95	HOSE, P/S FLUID RSVR	7–G14,16
90–95	Y 5.7J (LT5)	14104626	1	17.68	HOSE, P/S FLUID RSVR	7–G20,17
91	Y 5.7–8 (L98)	10098143	1	17.68	HOSE, P/S FLUID RSVR	7–G18,14
84	Y	14050021	1	22.95	HOSE, P/S GEAR OTLT	7–G12,8
85–88	Y	14084031	1	17.68	HOSE, P/S GEAR OTLT	7–G14,11
89	Y SOFT RIDE SUSP (FE1)	14084031	1	17.68	HOSE, P/S GEAR OTLT	7–G14,11
90–91	Y 5.7–8 (L98)	10098144	1	17.68	HOSE, P/S GR OTLT	7–G16,27
84	Y	14048934	1	DISCON	PIPE, HYD GEAR OTLT	
85	Y (1ST DES)	14048934	1	DISCON	PIPE, HYD GEAR OTLT (STRAIGHT PIPE, 2 1/4" LONG)	
85	Y (2ND DES)	14093119	1	DISCON	PIPE, HYD GEAR OTLT (BENT PIPE, 35" LONG)	
86–87	Y	14093119	1	DISCON	PIPE, HYD GEAR OTLT	
88	Y	10052268	1	10.94	PIPE, P/S FLUID CLG	7–G16,9
89	Y SOFT RIDE SUSP (FE1)	10052268	1	10.94	PIPE, P/S FLUID CLG	7–G16,9
90	Y SOFT RIDE SUSP (FE1) (EXC CALLOWAY CONVERSION Z5G)	10052268	1	10.94	PIPE, P/S FLUID CLG	7–G16,9
92–95	Y 5.7P (LT1)	26025172	1	33.22	PIPE, P/S PUMP INL	7–G22,18
96	Y	26047453	1	33.22	PIPE, P/S PUMP INL	7–G22,18
84–86	Y	7840158	1	11.24	TUBE, P/S PUMP INL	
90–95	Y 5.7J (LT5)	26006074	1	25.24	TUBE, P/S PUMP INL	

© 2000 GENERAL MOTORS SERVICE PARTS OPERATIONS–CHEVROLET–14Y

6.671 HOSE – PIPE – TUBE, Steering Gear Oil Return (Con't)

92–95	Y 5.7P (LT1)	26027015	1	24.78	TUBE, P/S PUMP INL	7–G8,23
96	Y	26027015	1	24.78	TUBE, P/S PUMP INL	7–G8,23

6.672 CLAMP – CLIP – STRAP, Steering Gear/Pump Oil

90–95	Y 5.7J (LT5)	22527587	AR	1.75	CLAMP, P/S GR OTLT HOSE (20.0 X 12.4) (WORM GEAR, 1/2–13/16) (08.948)	
85–87	Y	14093123	1	DISCON	CLAMP, P/S GR OTLT PIPE LWR	
85–87	Y	14093122	1	DISCON	CLAMP, P/S GR OTLT PIPE UPR	
95	Y 5.7P (LT1)	25526629	1	1.75	CLIP, P/S GR INL HOSE (7/16 X 5/16) (CLSD STEEL, ZC TYPE1 NAT) (03.880)	
96	Y	25526629	1	1.75	CLIP, P/S GR INL HOSE (7/16 X 5/16) (CLSD STEEL, ZC TYPE1 NAT) (03.880)	
85–89	Y	14093121	1	DISCON	CLIP, P/S GR OTLT PIPE LWR (DOUBLE PIPE)	
88–89	Y	10052270	1	DISCON	CLIP, P/S GR OTLT PIPE LWR (SINGLE PIPE)	
90	Y (5.7–8) (EXC PERF HDLG PKG Z51, CALLOWAY CONVERSION Z5G)	10052270	1	DISCON	CLIP, P/S GR OTLT PIPE LWR (SINGLE PIPE)	
90	Y (5.7–8) (EXC PERF HDLG PKG Z51, CALLOWAY CONVERSION Z5G)	14093121	1	DISCON	CLIP, P/S GR OTLT PIPE LWR (DOUBLE PIPE)	
85–89	Y	14093120	1	DISCON	CLIP, P/S GR OTLT PIPE UPR (DOUBLE PIPE)	
88–89	Y	10052269	1	DISCON	CLIP, P/S GR OTLT PIPE UPR (SINGLE PIPE)	
90	Y (5.7–8) (EXC PERF HDLG PKG Z51, CALLOWAY CONVERSION Z5G)	10052269	1	DISCON	CLIP, P/S GR OTLT PIPE UPR (SINGLE PIPE)	
90	Y (5.7–8) (EXC PERF HDLG PKG Z51, CALLOWAY CONVERSION Z5G)	14093120	1	DISCON	CLIP, P/S GR OTLT PIPE UPR (DOUBLE PIPE)	
90–91	Y 5.7–8 (L98)	10165311	1	DISCON	STRAP, P/S FLUID RSVR HOSE	
90–91	Y (5.7J)	25533564	1	DISCON	STRAP, P/S FLUID RSVR HOSE (445MM) (445 MM LONG) (09.786)	

6.674 SEAL, Steering Gear

NOTE: FOR 1986–1991 USAGE REFER TO STEERING GEAR CHART GRP 6.508

NOTE: FOR 1986–1991 USAGE REFER TO POWER STEERING PUMP CHART GRP 6.605

84–89	Y	26001594	AR	*2.45	SEAL (7.65MM I.D. X 1.63MM THICK) (ORIG TEMP SEAL)	7–G22,9
84–85	Y	5688035	1	2.91	SEAL, O–RING PUMP OUTLET FITTING (37/64 I.D.)	7–G2,22
90	Y 5.7–8 (L98)	26001594	AR	*2.45	SEAL, P/S GR INL PIPE (O RING)	7–G22,9
91–95	Y 5.7J (LT5)	26001594	AR	*2.45	SEAL, P/S GR INL PIPE (O RING) (7.65MM IDX1.63MM THK)	7–G22,9
92–95	Y 5.7P (LT1)	26001594	AR	*2.45	SEAL, P/S GR INL PIPE (O RING) (7.65MM IDX1.63MM THK)	7–G22,9
96	Y	26001594	1	*2.45	SEAL, P/S GR INL PIPE (O RING) (7.65MM IDX1.63MM THK)	7–G22,9
91	Y 5.7–3 (L98)	26001594	1	*2.45	SEAL, P/S GR OTLT PIPE (O RING) (7.65MM IDX1.63MM THK)	7–G22,9
84–87	Y FOR MDL APPL & POA INFO SEE PUMP CHART	5688035	1	2.91	SEAL, P/S PUMP FTG (O RING)	7–G2,22
84–85	Y	26015539	2	3.37	SEAL, S/GR PIPE (O RING) ((4.5MM I.D.))	7–E23,35

© 2000 GENERAL MOTORS SERVICE PARTS OPERATIONS–CHEVROLET–14Y

6.674 SEAL, Steering Gear (Con't)

92–95	Y	26015539	1	3.37	SEAL, S/GR PIPE (O RING)	7–E23,35
96	Y	26015539	2	3.37	SEAL, S/GR PIPE (O RING)	7–E23,35

6.758 BOLT – PLATE – SEAL, Steering Column

NOTE: FOR 1986–1991 USAGE REFER TO STEERING COLUMN CHART GRP 6.518

89–96	Y	12337892	2	*1.13	BOLT, STRG COL LWR SUPT (M5X.8X16 THD) (SPECIAL) (03.671) (AC–DELCO #12337892)	
84–96	Y	14104186	1	10.73	PLATE, STRG COL DA CVR STUD	7–F13,94
84–86	Y	7840636	1	13.44	SEAL, STRG COL DA	7–F13,84
91–96	Y	7840636	1	13.44	SEAL, STRG COL DA	7–F13,84

6.760 BRACKET – NUT – REINFORCEMENT – WASHER, Steering Column Attaching

90–96	Y	10086066	1	67.20	BRACKET, STRG COL UPR SUPT	10–E19,59
90–96	Y	10146441	2	2.85	NUT, STRG COL SUPT BRKT SI BRKT	10–E19,58
90–96	Y	10086084	1	12.67	REINFORCEMENT, STRG COL SUPT BRKT	8–F18,83
84–85	Y	3905569	2	.17	WASHER, STRG COL (07.347)	
91	Y	3905569	2	.17	WASHER, STRG COL DA CVR STUD PLT (07.347)	

6.786 BUSHING, Steering Gear Pitman Shaft

NOTE: FOR 1986–1991 USAGE REFER TO STEERING GEAR CHART GRP 6.508

84–86	Y	7841634	1	37.06	BUSHING, S/GR RACK (R&P) (AC–DELCO #36–9527)	7–E23,12
92	Y	7841634	1	37.06	BUSHING, S/GR RACK (R&P) (AC–DELCO #36–9527)	7–E23,12

6.807 COVER, Steering Gear Housing Side

84–86	Y	7846884	1	15.13	COVER, S/GR HSG (06.824)	7–E23,30

6.822 NUT, Steering Gear Lash Adjuster

NOTE: FOR 1986–1991 USAGE REFER TO STEERING GEAR CHART GRP 6.508

86	Y	26017267	2	6.95	NUT, STRG GEAR METRIC HEX (M14X1.5) (06.526)	7–E23,21
87–90	Y FOR MDL APPL & POA INFO SEE GEAR CHART	26017267	2	6.95	NUT, STRG GEAR METRIC HEX (M14X1.5) (06.526)	7–E23,21

6.832 NUT, Steering Gear Adjusting

84–86	Y	26011849	1	10.10	NUT, S/GR RACK ADJR (06.822)	7–E23,13
92–96	Y	26011849	1	10.10	NUT, S/GR RACK ADJR (06.822)	7–E23,16

6.865 RING, Steering Linkage

NOTE: FOR 1986–1991 USAGE REFER TO STEERING GEAR CHART GRP 6.508

92–96	Y	7831234	2	5.60	RING, S/GR SHF DPNR (R&P)	7–E23,17
86	Y	7849530	1	10.12	RING, STRG GR SHOCK DAMPENER (R&P)	7–E23,17

© 2000 GENERAL MOTORS SERVICE PARTS OPERATIONS–CHEVROLET–14Y

MICROFICHE INDEX

GROUPS 6.000 THRU 7.000

FICHE 7 OF 11

GROUP	DESCRIPTION	STARTING GRID LOCATION PARTS	ILLUSTRATIONS
–	GENERAL INFORMATION	1–A2	1–G2
–	ALPHABETICAL INDEX	1–B13	N.A.
6.000	FRONT SUSPENSION – STEERING	7–A2	7–E2
7.000	FRAMES – SPRINGS – SHOCKS – BUMPERS	7–C2	7–H2
–	OUT OF FICHE CALLS	N.A.	7–M17

7–C1

CHEVROLET
CHASSIS GROUP 7.000

FRAMES – SPRINGS – SHOCKS – BUMPERS

ALPHABETICAL INDEX

A

ABSORBER, Bumper/Fascia Energy Absorber 7.840 7–D9
ABSORBER, Shock 7.345 7–C16
ACCELEROMETER KIT, Hydraulic Suspension 7.440 7–C20
ACCELEROMETER, Hydraulic Suspension 7.440 7–C20
ACTUATOR, Air Suspension and Inflator Unit 7.460 7–C23
ACTUATOR, Hydraulic Suspension 7.440 7–C20

B

BAG, Spare Wheel 7.629 7–C25
BAR, Bumper/Fascia Face 7.831 7–C28
BAR, Bumper/Fascia 7.836 7–D9
BOLT, Air Suspension Height Sensor ... 7.477 7–C23
BOLT, Bumper/Fascia Energy Absorber 7.840 7–D9
BOLT, Bumper/Fascia Mounting 7.874 7–D10
BOLT, Bumper/Fascia 7.836 7–D9
BOLT, Frame Front Cross Member 7.039 7–C10
BOLT, Front Spring 7.425 7–C20
BOLT, Rear Spring And Axle 7.529 7–C25
BOLT, Rear Spring And Shock Absorber Anchor 7.518 7–C24
BOLT, Shock Absorber/Strut 7.347 7–C18
BOLT, Spare Wheel 7.629 7–C25
BOLT, Stabilizer Shaft 7.240 7–C12
BOLT, Stabilizer Shaft 7.242 7–C13
BOLT/SCREW KIT, Spare Wheel Mounting 7.632 7–C27
BRACE, Bumper/Fascia 7.833 7–D8
BRACE, Frame Front Cross Member ... 7.039 7–C10
BRACE, Frame Side 7.006 7–C8
BRACKET, Air Suspension Height Sensor 7.477 7–C23
BRACKET, Bumper Mounting 7.869 7–D10
BRACKET, Bumper/Fascia Face 7.831 7–C28
BRACKET, Bumper/Fascia 7.833 7–D8
BRACKET, Bumper/Fascia 7.836 7–D9
BRACKET, Electronic Control Suspension 7.450 7–C21
BRACKET, Frame Front Cross Member . 7.039 7–C10
BRACKET, Hydraulic Suspension 7.440 7–C20
BRACKET, License Plate 7.800 7–C27
BRACKET, Rear Spring 7.535 7–C25
BRACKET, Shock Absorber/Strut 7.395 7–C19
BRACKET, Shock Absorber 7.380 7–C18
BRACKET, Spare Wheel 7.629 7–C25
BRACKET, Stabilizer Shaft 7.242 7–C13
BRACKET, Towing 7.068 7–C11
BUMPER, Rear Spring 7.535 7–C25

C

CARRIER, Spare Wheel 7.629 7–C25
CLAMP, Stabilizer Shaft 7.242 7–C13
CLIP, Bumper/Fascia 7.832 7–D4
CONNECTOR, Air Suspension and Inflator Unit 7.460 7–C23
CONNECTOR, Electronic Control Suspension 7.450 7–C21
CONTROL, Electronic Control Suspension 7.450 7–C21
COVER, Bumper/Fascia Face 7.831 7–C28
COVER, Frame Front Cross Member ... 7.039 7–C10
COVER, License Plate 7.800 7–C27
CROSSMEMBER, Front Frame Cross Member 7.010 7–C9
CROSSMEMBER, Rear Frame Cross .. 7.014 7–C9

E

EMBLEM, Bumper/Fascia 7.832 7–D4
EXTENSION, Bumper/Fascia Face 7.831 7–C28

F

FASCIA, Bumper/Fascia Face 7.831 7–C28
FRAME, Chassis 7.003 7–C8

G

GUSSET, Frame Front Cross Member .. 7.039 7–C10

H

HARNESS, Electronic Control Suspension 7.450 7–C21
HOOK, Spare Wheel 7.629 7–C25
HOOK, Towing 7.068 7–C11

I

INSULATOR, Rear Spring 7.545 7–C25
INSULATOR, Shock Absorber/Strut 7.388 7–C18
INSULATOR, Stabilizer Shaft 7.243 7–C14

L

LAMP, Electronic Control Suspension .. 7.450 7–C21
LINK, Air Suspension Height Sensor ... 7.477 7–C23
LINK, Stabilizer Shaft 7.240 7–C12

M

MEMBER, Frame Side 7.006 7–C8
MEMBER, Front Frame Cross Member . 7.010 7–C9
MEMBER, Rear Frame Cross 7.014 7–C9
MODULE, Electronic Control Suspension 7.450 7–C21
MOLDING KIT, Bumper/Fascia 7.832 7–D4
MOLDING, Bumper/Fascia 7.832 7–D4

N

NUT, Bumper/Fascia Face 7.831 7–C28
NUT, Bumper/Fascia Mounting 7.874 7–D10
NUT, Electronic Control Suspension ... 7.450 7–C21
NUT, Frame Front Cross Member 7.039 7–C10
NUT, License Plate 7.800 7–C27
NUT, Rear Spring Eye 7.530 7–C25
NUT, Shock Absorber/Strut 7.347 7–C18
NUT, Shock Absorber 7.380 7–C18
NUT, Spare Wheel Carrier 7.633 7–C27
NUT, Spare Wheel 7.629 7–C25
NUT, Stabilizer Shaft 7.243 7–C14
NUT, Stabilizer Shaft 7.244 7–C16

P

PANEL, License Plate 7.800 7–C27
PLATE, Bumper/Fascia 7.832 7–D4
PLATE, Bumper/Fascia 7.836 7–D9
PLATE, Frame Front Cross Member ... 7.039 7–C10
PLATE, License Plate 7.800 7–C27
PLATE, Rear Spring And Shock Absorber Anchor 7.518 7–C24
PLATE, Spare Wheel 7.629 7–C25
PLUG, Frame Cross Member 7.009 7–C9
PROTECTOR, Front Spring 7.420 7–C20

R

RAIL, Frame Cross, Intermediate 7.012 7–C9
RAIL, Frame Side 7.006 7–C8
REINFORCEMENT, Bumper/Fascia Face 7.831 7–C28
REINFORCEMENT, Frame Front Cross Member 7.039 7–C10
REINFORCEMENT, License Plate 7.800 7–C27
RETAINER, Air Suspension Leveling Or Level Control 7.475 7–C23
RETAINER, Bumper/Fascia Face 7.831 7–C28
RETAINER, Bumper/Fascia 7.833 7–D8
RETAINER, Electronic Control Suspension 7.450 7–C21
RETAINER, Front Spring 7.425 7–C20
RETAINER, License Plate 7.800 7–C27
RETAINER, Shock Absorber/Strut 7.389 7–C19
RETAINER, Spare Wheel 7.629 7–C25
RIVET, Bumper/Fascia Face 7.831 7–C28
RIVET, License Plate 7.800 7–C27

S

SENSOR, Air Suspension Leveling Or Level Control 7.475 7–C23
SHAFT, Stabilizer 7.241 7–C12
SHIM, Bumper/Fascia Mounting 7.865 7–D10
SHIM, Bumper/Fascia 7.833 7–D8
SHIM, Frame Front Cross Member 7.039 7–C10
SHIM, Front Spring 7.425 7–C20
SILL, Front Frame Cross Member 7.010 7–C9
SPACER, Bumper/Fascia Energy Absorber 7.840 7–D9
SPACER, Bumper/Fascia Face 7.831 7–C28
SPACER, Bumper/Fascia 7.832 7–D4
SPACER, Frame Front Cross Member .. 7.039 7–C10
SPACER, Rear Spring And Shock Absorber Anchor 7.518 7–C24
SPACER, Rear Spring 7.535 7–C25
SPRING, Front Chassis 7.412 7–C19
SPRING, Rear Spring 7.503 7–C24
STIFFENER, Bumper/Fascia Face 7.831 7–C28
STRAP, Spare Wheel 7.629 7–C25
STRIPE, Bumper/Fascia 7.832 7–D4
STUD, Air Suspension Height Sensor .. 7.477 7–C23
STUD, Bumper/Fascia 7.833 7–D8
STUD, Shock Absorber/Strut 7.347 7–C18
SUPPORT, Bumper/Fascia 7.833 7–D8
SUPPORT, Bumper/Fascia 7.836 7–D9
SUPPORT, License Plate 7.800 7–C27

SUPPORT, Stabilizer Shaft 7.242 7–C13
SWITCH, Electronic Control Suspension 7.450 7–C21

T

TAPE, Bumper/Fascia 7.832 7–D4
TAPE, Electronic Control Suspension .. 7.450 7–C21

U

UNION, Air Suspension Compressor Tank 7.465 7–C23

W

WASHER, Bumper/Fascia 7.833 7–D8
WASHER, Shock Absorber/Strut 7.347 7–C18
WASHER, Shock Absorber/Strut 7.389 7–C19

© GENERAL MOTORS SERVICE PARTS OPERATIONS–CHEVROLET–14Y

CHART INDEX

GROUP 7 GRID

ILLUS INDEX (GRP 7) 7–C7

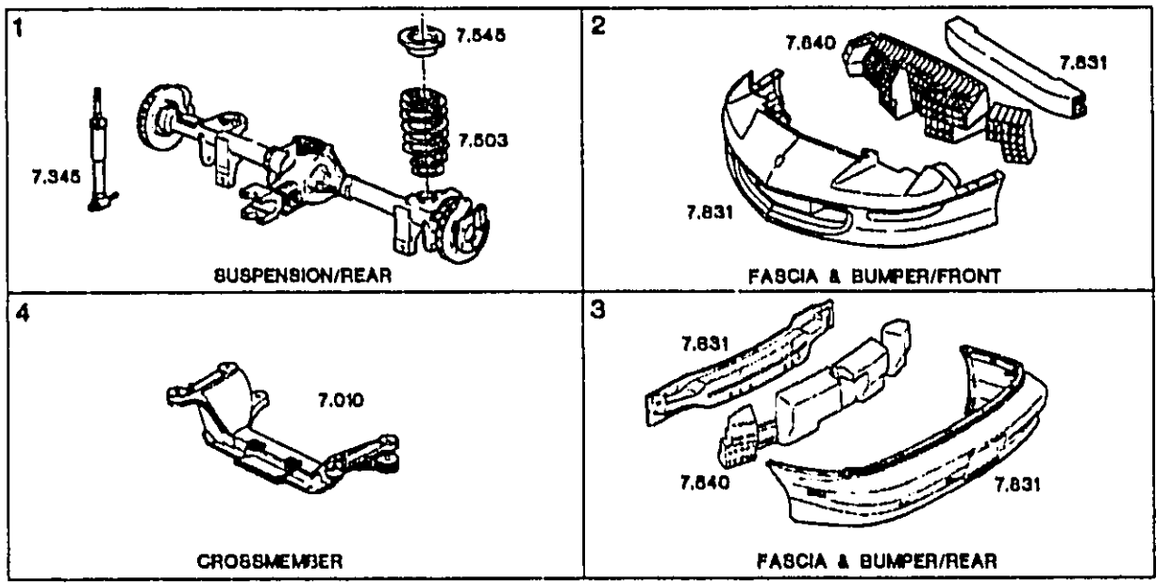

GROUP 7.000

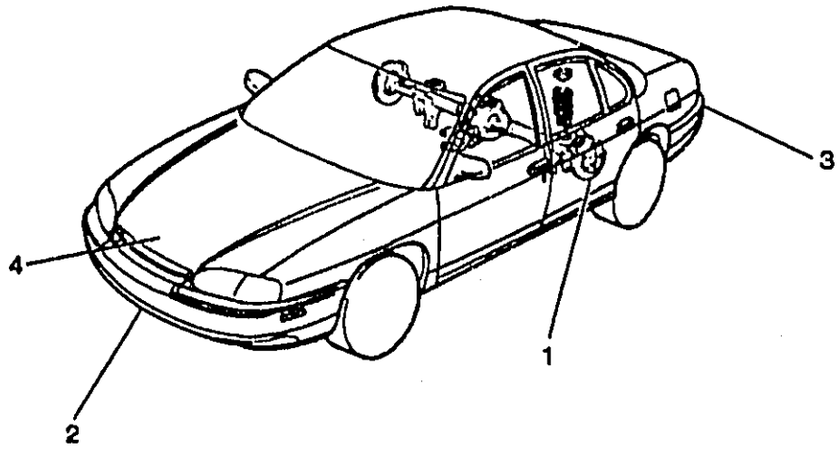

© 2000 GENERAL MOTORS SERVICE PARTS OPERATIONS-CHEVROLET-14Y

7.003 FRAME, Chassis

84–87	Y	14093126	1	DISCON	FRAME, DRIVETRAIN & FRT SUSP	
88–91	Y 5.7–8 (L98)	10080751	1	DISCON	FRAME, DRIVETRAIN & FRT SUSP	
90–91	Y 5.7J (LT5), SOFT RIDE SUSP (FE1), HVY DUTY SUSP (FE7)	10205043	1	569.40	FRAME, DRIVETRAIN & FRT SUSP	7–H7,15
92–96	Y	10205043	1	569.40	FRAME, DRIVETRAIN & FRT SUSP	7–H7,15

7.006 BRACE – MEMBER – RAIL, Frame Side

84–88	Y07	14058685	LH	DISCON	BRACE, OTR RR SI MBR	
84–88	Y07	14058686	RH	DISCON	BRACE, OTR RR SI MBR	
89–96	Y07	14104793	LH	14.20	BRACE, U/B OTR RR S/RL	7–H4,7
89–96	Y07	14104794	RH	14.20	BRACE, U/B OTR RR S/RL	7–H4,7
90–91	Y	10174972	RH	998.20	MEMBER, FRT FRM SI	7–H4,23
84	Y	14089121	LH	DISCON	MEMBER, FRT SI	
85–86	Y07	14089121	LH	DISCON	MEMBER, FRT SI	
85	Y07	14089122	RH	DISCON	MEMBER, FRT SI	
86–87	Y07 (EXC PERF HDLG PKG Z51, SPORT HDLG PKG Z52)	14089122	RH	DISCON	MEMBER, FRT SI	
86–87	Y67	10048795	LH	DISCON	MEMBER, FRT SI (ALSO REQD FOR INSTALLATION: 14105144, 14105145 T/W 10098137 (EXC FE7, F58) OR 10098138 (W/FE7, F58))	
86–87	Y67	10048796	RH	DISCON	MEMBER, FRT SI (ALSO REQD FOR INSTALLATION: 14105144, 14105145 T/W 10098137 (EXC FE7, F58) OR 10098138 (W/FE7, F58))	
87	Y07 PERF HDLG PKG (Z51), SPORT HDLG PKG (Z52)	10048795	LH	DISCON	MEMBER, FRT SI (ALSO REQD FOR INSTALLATION: 14105144, 14105145 T/W 10098137 (EXC FE7, F58) OR 10098138 (W/FE7, F58))	
87	Y07 PERF HDLG PKG (Z51), SPORT HDLG PKG (Z52)	10048796	RH	DISCON	MEMBER, FRT SI (ALSO REQD FOR INSTALLATION: 14105144, 14105145 T/W 10098137 (EXC FE7, F58) OR 10098138 (W/FE7, F58))	
87	Y07 (EXC PERF HDLG PKG Z51, SPORT HDLG PKG Z52)	14089121	LH	DISCON	MEMBER, FRT SI	
88	Y07 (EXC PERF HDLG PKG Z51, SPORT HDLG PKG Z52)	10112669	LH	DISCON	MEMBER, FRT SI (INR)	
88	Y07 (EXC PERF HDLG PKG Z51, SPORT HDLG PKG Z52)	10112670	RH	DISCON	MEMBER, FRT SI (INR)	
88	Y07 PERF HDLG PKG Z51, SPORT HDLG PKG Z52	10112671	LH	DISCON	MEMBER, FRT SI (INR)	
88	Y07 PERF HDLG PKG Z51, SPORT HDLG PKG Z52	10112672	RH	DISCON	MEMBER, FRT SI (INR)	
88	Y67	10112671	LH	DISCON	MEMBER, FRT SI	
88	Y67	10112672	RH	DISCON	MEMBER, FRT SI	
89	Y	10132713	LH	DISCON	MEMBER, FRT SI	
89	Y	10132714	RH	DISCON	MEMBER, FRT SI	
88–89	Y	10112673	LH	DISCON	MEMBER, INR INTER SI	
88–89	Y	10112674	RH	DISCON	MEMBER, INR INTER SI	
88–93	Y07	12513815	LH	333.60	MEMBER, INR RR SI	7–H4,2
88–96	Y07	12513816	RH	333.60	MEMBER, INR RR SI	7–H4,2

© 2000 GENERAL MOTORS SERVICE PARTS OPERATIONS–CHEVROLET–14Y

7.006 BRACE – MEMBER – RAIL, Frame Side (Con't)

88–96	Y67	10112677	LH	333.60	MEMBER, INR RR SI	7–H4,2
88–96	Y67	10112678	RH	333.60	MEMBER, INR RR SI	7–H4,2
94–96	Y07	12513815	LH	333.60	MEMBER, INR RR SI	7–H4,2
84–87	Y	14069825	LH	DISCON	MEMBER, INTER SI	
84–87	Y	14069826	RH	DISCON	MEMBER, INTER SI	
84–87	Y07	14069821	LH	DISCON	MEMBER, RR SI	
84–87	Y07	14069822	RH	DISCON	MEMBER, RR SI	
86–87	Y67	10048797	LH	DISCON	MEMBER, RR SI	
86–87	Y67	10048798	RH	DISCON	MEMBER, RR SI	
90–95	Y	12529345	LH	967.00	RAIL, F/CMPT SI	7–H4,15
90–95	Y	12529346	RH	967.00	RAIL, F/CMPT SI (WILL NEED TO USE SELF TAPPING SCREWS IN PLACE OF BOLTS FOR ATTACHING FRT & RR LWR W/HSE PNLS, WSWA SOLV CONT & COOLANT RECOVERY RESVR)	7–H7,22
96	Y	12529345	LH	967.00	RAIL, F/CMPT SI	7–H4,15
96	Y	12529346	RH	967.00	RAIL, F/CMPT SI	7–H7,22

7.009 PLUG, Frame Cross Member

85–88	Y	4805844	2	*1.70	PLUG, OTR RR SI MBR (12.981)	10–E11,9

7.010 CROSSMEMBER – MEMBER – SILL, Front Frame Cross Member

89–96	Y	10098200	1	95.20	CROSSMEMBER, FRT (#2)	7–H4,19
84	Y	14090674	1	DISCON	MEMBER, FRT CR	
85–86	Y07	14090674	1	DISCON	MEMBER, FRT CR	
86–87	Y67	10077390	1	DISCON	MEMBER, FRT CR	
87	Y07 1BL (PERF HDLG PKG Z51), B2B (SPORT HDLG PKG Z52)	10077390	1	DISCON	MEMBER, FRT CR	
87	Y07 (EXC 1BL PERF HDLG PKG Z51, B2B SPORTHDLG PKG Z52)	14090674	1	DISCON	MEMBER, FRT CR	
88	Y07 PERF HDLG PKG (Z51), SPORT HDLG PKG (Z52))	10077390	1	DISCON	MEMBER, FRT CR	
88	Y07 (EXC PERF HDLG PKG Z51, SPORT HDLG PKG Z52)	14090674	1	DISCON	MEMBER, FRT CR	
88	Y67	10077390	1	DISCON	MEMBER, FRT CR	
84–96	Y	14090676	1	45.90	SILL, U/B FRT CR	7–H4,16

7.012 RAIL, Frame Cross, Intermediate

90–96	Y	10148004	RH	276.50	RAIL, U/B INR INTER SI (07.006)	7–H4,1
90–96	Y	10148005	LH	276.50	RAIL, U/B INR INTER SI (07.006)	7–H4,1
90–96	Y	10148004	RH	276.50	RAIL, U/B OTR INTER SI (07.006)	7–H4,1
90–96	Y	10148005	LH	276.50	RAIL, U/B OTR INTER SI (07.006)	7–H4,1

7.014 CROSSMEMBER – MEMBER, Rear Frame Cross

88–96	Y07	12525520	1	113.30	CROSSMEMBER, U/B RR UPR (INCLS LWR MEMBER)	7–H4,5
88–94	Y67	12525521	1	111.20	CROSSMEMBER, U/B RR UPR	7–H4,5
95–96	Y67	12525521	1	111.20	CROSSMEMBER, U/B RR UPR	7–H4,5
84–87	Y07	14069823	1	DISCON	MEMBER, RR CR	
86–87	Y67	10048799	1	DISCON	MEMBER, RR CR	

© 2000 GENERAL MOTORS SERVICE PARTS OPERATIONS–CHEVROLET–14Y

7.039 BOLT – BRACE – BRACKET – COVER – GUSSET – NUT – PLATE – REINFORCEMENT – SHIM – SPACER, Frame Front Cross Member

91–96	Y	11508331	8	1.80	BOLT, DRIVETRAIN & FRT SUSP FRM (M10X1.5X45) (TO RR) (08.900)	7–E16,60
84–88	Y	14069669	2	*1.10	BOLT, FRT C/MBR (M10–1.25X21.5)	7–H4,28
89–90	Y 5.7–8 (L98)	14069669	2	*1.10	BOLT, FRT C/MBR (M10–1.25X21.5)	7–H4,28
91	Y 5.7–8 (L98)	14069669	4	*1.10	BOLT, FRT C/MBR (M10X1.5X25 13HEX)	7–H4,28
90	Y	11516186	AR	*.70	BOLT, OTR FRT SI MBR UPR BR (M8X1.25X16) (08.900)	
91–95	Y	11504611	2	2.10	BOLT, U/B FRT S/RL UPR BR (08.900)	
95–98	Y	14088310	4	*1.30	BOLT, U/B RR C/MBR GUSS (M8X1.25X24) (03.671)	
84–85	Y	14094299	LH	DISCON	BRACE, FRT C/MBR RR	
84–85	Y	14094300	RH	DISCON	BRACE, FRT C/MBR RR	
86	Y07	14094299	LH	DISCON	BRACE, FRT C/MBR RR	
86	Y07	14094300	RH	DISCON	BRACE, FRT C/MBR RR	
86–88	Y67	14092611	LH	43.20	BRACE, FRT C/MBR RR	7–H4,27
86–88	Y67	14092612	RH	43.20	BRACE, FRT C/MBR RR	7–H4,27
87	Y07 1BL (PERF HDLG PKG Z51), B2B (SPORT HDLG PKG Z52)	14092611	LH	43.20	BRACE, FRT C/MBR RR	7–H4,27
87	Y07 1BL (PERF HDLG PKG Z51), B2B (SPORT HDLG PKG Z52)	14092612	RH	43.20	BRACE, FRT C/MBR RR	7–H4,27
87–88	Y07 (EXC 1BL PERF HDLG PKG Z51, B2B SPORT HDLG PKG Z52)	14094299	LH	DISCON	BRACE, FRT C/MBR RR	
87–88	Y07 (EXC 1BL PERF HDLG PKG Z51, B2B SPORT HDLG PKG Z52)	14094300	RH	DISCON	BRACE, FRT C/MBR RR	
88	Y07 PERF HDLG PKG (Z51), SPORT HDLG PKG (Z52)	14092611	LH	43.20	BRACE, FRT C/MBR RR	7–H4,27
88	Y07 PERF HDLG PKG (Z51), SPORT HDLG PKG (Z52)	14092612	RH	43.20	BRACE, FRT C/MBR RR	7–H4,27
89–91	Y 5.7–8 (L98)	14092611	LH	43.20	BRACE, FRT C/MBR RR	7–H4,27
89–91	Y 5.7–8 (L98)	14092612	RH	43.20	BRACE, FRT C/MBR RR	7–H4,27
84–89	Y	10208440	RH	31.90	BRACE, OTR FRT S/MBR UPR	7–H4,10
84–89	Y	14081859	LH	DISCON	BRACE, OTR FRT S/MBR UPR	
90–96	Y	10208440	RH	31.90	BRACE, U/B FRT S/RL UPR	7–H4,10
90–96	Y	10208441	LH	31.90	BRACE, U/B FRT S/RL UPR	7–H4,8
84–86	Y07	14090675	2	DISCON	BRACKET, FRT C/MBR	
86–88	Y67	14092617	LH	40.80	BRACKET, FRT C/MBR (RR)	7–H4,21
86–88	Y67	14092618	RH	40.80	BRACKET, FRT C/MBR (RR)	7–H4,22
87–88	Y07 (EXC 1BL PERF HDLG PKG Z51, B2B SPORT HDLG PKG Z52)	14090675	2	DISCON	BRACKET, FRT C/MBR	
87	Y07 1BL (PERF HDLG PKG Z51), B2B (SPORT HDLG PKG Z52)	14092617	LH	40.80	BRACKET, FRT C/MBR (RR)	7–H4,21
87	Y07 1BL (PERF HDLG PKG Z51), B2B (SPORT HDLG PKG Z52)	14092618	RH	40.30	BRACKET, FRT C/MBR (RR)	7–H4,22
88	Y07 PERF HDLG PKG (Z51), SPORT HDLG PKG (Z52)	14092617	LH	40.80	BRACKET, FRT C/MBR (RR)	7–H4,21
88	Y07 PERF HDLG PKG (Z51), SPORT HDLG PKG (Z52)	14092618	RH	40.80	BRACKET, FRT C/MBR (RR)	7–H4,22

© 2000 GENERAL MOTORS SERVICE PARTS OPERATIONS–CHEVROLET–14Y

7.039 BOLT – BRACE – BRACKET – COVER – GUSSET – NUT – PLATE – REINFORCEMENT – SHIM – SPACER, Frame Front Cross Member (Con't)

89–96	Y	14092617	LH	40.80	BRACKET, FRT C/MBR (RR)	7–H4,21
89–96	Y	14092618	RH	40.80	BRACKET, FRT C/MBR (RR)	7–H4,22
84–96	Y	14078627	LH	6.60	COVER, RR SI MBR	7–H4,3
84–96	Y	14078628	RH	6.60	COVER, RR SI MBR	7–H4,3
84–96	Y	14064523	LH	11.40	GUSSET, U/B RR C/MBR	7–H4,4
84–96	Y	14064524	RH	11.40	GUSSET, U/B RR C/MBR	7–H4,4
88–94	Y	10255857	8	*1.75	NUT, DRIVETRAIN & FRT SUSP FRM (M10X1.5 FLANGED HEX HEAD) (08.917)	
96	Y	10255857	8	*1.75	NUT, DRIVETRAIN & FRT SUSP FRM (M10X1.5 FLANGED HEX HEAD) (08.917)	
84–86	Y07	14060222	2	DISCON	PLATE, FRT C/MBR BR (UPR)	
86	Y07	14100231	2	DISCON	PLATE, FRT C/MBR BR (LWR)	
87–88	Y07 (EXC 1BL PERF HDLG PKG Z51, B2B SPORT HDLG PKG Z52)	14060222	2	DISCON	PLATE, FRT C/MBR BR (UPR)	
87–88	Y07 (EXC 1BL PERF HDLG PKG Z51, B2B SPORT HDLG PKG Z52)	14100231	2	DISCON	PLATE, FRT C/MBR BR (LWR)	
84–85	Y	14100201	1	DISCON	REINFORCEMENT, FRT C/MBR (LWR)	
86	Y07	14100201	1	DISCON	REINFORCEMENT, FRT C/MBR (LWR)	
86–88	Y67	14092613	1	DISCON	REINFORCEMENT, FRT C/MBR (UPR)	
87	Y07 1BL (PERF HDLG PKG Z51), B2B (SPORT HDLG PKG Z52)	14092613	1	DISCON	REINFORCEMENT, FRT C/MBR (UPR)	
87	Y07 (EXC 1BL PERF HDLG PKG Z51, B2B SPORT HDLG PKG Z52)	14100201	1	DISCON	REINFORCEMENT, FRT C/MBR (LWR)	
88	Y PERF HDLG PKG (Z51), SPORT HDLG PKG (Z52)	14092613	1	DISCON	REINFORCEMENT, FRT C/MBR (UPR)	
88	Y07 (EXC PERF HDLG PKG Z51, SPORT HDLG PKG Z52)	14100201	1	DISCON	REINFORCEMENT, FRT C/MBR (LWR)	
89–90	Y (5.7–8)	14092613	1	DISCON	REINFORCEMENT, FRT C/MBR (UPR)	
89–90	Y (5.7–8)	14100201	1	DISCON	REINFORCEMENT, FRT C/MBR (LWR)	
90–91	Y 5.7J (LT5)	10098136	1	32.40	REINFORCEMENT, FRT C/MBR	7–H7,25
91	Y 5.7–8 (L98)	14092613	1	DISCON	REINFORCEMENT, FRT C/MBR (UPR)	
91	Y 5.7–8 (L98)	14100201	1	DISCON	REINFORCEMENT, FRT C/MBR (LWR)	
92–96	Y	10098136	1	32.40	REINFORCEMENT, FRT C/MBR	7–H7,25
84–88	Y	14060122	AR	1.60	SHIM, DRIVETRAIN AND FRT SUSP FRM	7–E7,62
84–96	Y	14044588	4	1.10	SPACER, DRIVETRAIN & FRT SUSP FRM	7–E16,68

7.068 BRACKET – HOOK, Towing

84–95	Y	10269358	RH	11.40	BRACKET, FRT TOW HOOK (WELDED TO OTR SI OF RR MBR)	7–H4,30
84–95	Y	14078681	LH	11.40	BRACKET, FRT TOW HOOK (WELDED TO OTR SI OF RR MBR)	7–H4,30

© 2000 GENERAL MOTORS SERVICE PARTS OPERATIONS–CHEVROLET–14Y

7.068 BRACKET – HOOK, Towing (Con't)

96	Y	10269357	LH	10.70	BRACKET, FRT TOW HOOK	7–H7,31
96	Y	10260358	RH	11.40	BRACKET, FRT TOW HOOK	7–H4,30
84–92	Y	10269358	RH	11.40	BRACKET, RR TIE DN (WELDED TO OTR SI OF RR MBR)	7–H4,30
84–92	Y	14078681	LH	11.40	BRACKET, RR TIE DN (WELDED TO OTR SI OF RR MBR)	7–H4,30
96	Y	10269357	LH	10.70	BRACKET, RR TIE DN	7–H7,31
	*EXPORT**********EXPORT**********EXPORT**********EXPORT**********EXPORT*					
84–87	Y V70 (EXPORT)	14078673	1	DISCON	BRACKET, RR TOW HOOK	
94–96	Y FRT TOW HOOK (V76) (EXPORT)	10224288	1	18.50	BRACKET, RR TOW HOOK	7–J25,21
84–87	Y V70 (EXPORT)	14078671	1	DISCON	HOOK, FRT TOW	
94–96	Y FRT TOW HOOK (V76) (EXPORT)	10217345	1	61.20	HOOK, FRT TOW	
84–87	Y V70 (EXPORT)	14078672	1	DISCON	HOOK, RR TOW	
94–96	Y FRT TOW HOOK (V76) (EXPORT)	10224287	1	32.40	HOOK, RR TOW	7–J25,18

7.240 BOLT – LINK, Stabilizer Shaft

84–96	Y	14060130	2	*2.00	BOLT, RR STAB SHF LINK (M10X1.25X40) (08.900)	7–H18,79
84–87	Y	14087645	2	11.93	LINK, FRT STAB SHF	7–E4,37
88–96	Y	10098150	2	11.68	LINK, FRT STAB SHF	7–E16,47
84–96	Y	10052272	2	11.68	LINK, RR STAB SHF	7–H18,76

7.241 SHAFT, Stabilizer

84	Y H .D .SUSP	14048992	1	DISCON	SHAFT, FRT STAB	
84	Y (EXC H.D.SUSP)	14060132	1	DISCON	SHAFT, FRT STAB	
85	Y (EXC H.D.SUSP FE7)	14076196	1	DISCON	SHAFT, FRT STAB	
85–86	Y H .D .SUSP (FE7)	14084067	1	DISCON	SHAFT, FRT STAB	
86	Y (EXC H.D.SUSP FE7)	14091231	1	DISCON	SHAFT, FRT STAB	
87	Y H .D .STAB (F58)	14084067	1	DISCON	SHAFT, FRT STAB	
87	Y (EXC H.D.STAB F58)	14091231	1	DISCON	SHAFT, FRT STAB	
88	Y (EXC H.D.SUSP FE7)	10165301	1	148.92	SHAFT, FRT STAB	7–E16,50
88	Y H .D .SUSP (FE7)	10165302	1	148.92	SHAFT, FRT STAB	7–E16,50
89–90	Y SOFT RIDE SUSP (FE1), HVY DUTY SUSP (FE7), ELEK RIDE & HANDLING (FX3)	10165301	1	148.92	SHAFT, FRT STAB	7–E16,50
89–90	Y H .D .SUSP (FE7) (EXC ELEK CONT RIDE & HANDLING FX3)	10165302	1	148.92	SHAFT, FRT STAB	7–E16,50
91–92	Y SOFT RIDE SUSP (FE1)	10165301	1	148.92	SHAFT, FRT STAB	7–E16,50
91–95	Y HVY DUTY SUSP (FE7)	10165302	1	148.92	SHAFT, FRT STAB	7–E16,50
93–94	Y 5.7P (LT1), SOFT RIDE SUSP (FE1)	10199744	1	96.90	SHAFT, FRT STAB	7–E16,50
95	Y INDY PACE CAR (Z4Z)	10165301	1	148.92	SHAFT, FRT STAB	7–E16,50
95	Y 5.7P (LT1), SOFT RIDE SUSP (FE1), (EXC EUROPEAN PROVISIONS (VD1) (EXPORT), INDY PACE CAR (Z4Z)	10199744	1	96.90	SHAFT, FRT STAB	7–E16,50
96	Y SOFT RIDE SUSP (FE1), (EXC EUROPEAN PROVISIONS (VD1) (EXPORT)	10199744	1	96.90	SHAFT, FRT STAB	7–E16,50
96	Y07 SPORT SUSP (FE3)	10165301	1	148.92	SHAFT, FRT STAB	7–E16,50
84–85	Y (EXC H.D.SUSP)	14060109	1	DISCON	SHAFT, RR STAB	

© 2000 GENERAL MOTORS SERVICE PARTS OPERATIONS–CHEVROLET–14Y

7.241 SHAFT, Stabilizer (Con't)

84	Y H .D .SUSP	14060110	1	DISCON	SHAFT, RR STAB	
85	Y H .D .SUSP (FE7)	14084066	1	76.25	SHAFT, RR STAB	7–H18,78
86–87	Y H .D .SUSP (FE7)	14093179	1	76.25	SHAFT, RR STAB	7–H18,78
86–87	Y07 (EXC H.D.SUSP FE7) ...	14087699	1	DISCON	SHAFT, RR STAB	
86	Y67 (EXC H.D.SUSP)	14060109	1	DISCON	SHAFT, RR STAB	
87	Y67 (EXC H.D.SUSP FE7) ...	14105121	1	DISCON	SHAFT, RR STAB	
88	Y PERF HDLG PKG (Z51) ...	14084066	1	76.25	SHAFT, RR STAB	7–H18,78
88	Y (EXC PERF HDLG PKG Z51)	14093179	1	76.25	SHAFT, RR STAB	7–H18,78
89	Y H .D .SUSP (FE7) (EXC ELEK RIDE & HDLG FX3) ...	14084066	1	76.25	SHAFT, RR STAB	7–H18,78
89	Y SOFT RIDE (FE1), H .D .SUSP (FE7), ELEC SUSP CONT (FX3)	14093179	1	76.25	SHAFT, RR STAB	7–H18,78
90	Y H .D .SUSP (FE7), SPL PERF PKG (ZR1)	14084066	1	76.25	SHAFT, RR STAB	7–H18,78
90	Y SOFT RIDE (FE1), H .D .SUSP (FE7), ELEC SUSP CONT (FX3) (EXC SPL PERF PKG ZR1)	14093179	1	76.25	SHAFT, RR STAB	7–H18,78
91	Y HVY DUTY SUSP (FE7) ...	10098181	1	74.72	SHAFT, RR STAB	7–H21,81
91–95	Y 5.7J (LT5), SOFT RIDE SUSP (FE1)	10098181	1	74.72	SHAFT, RR STAB	7–H21,81
91	Y 5.7–8 (L98), SOFT RIDE SUSP (FE1)	14084066	1	76.25	SHAFT, RR STAB	7–H18,78
92–95	Y HVY DUTY SUSP (FE7) ...	14084066	1	76.25	SHAFT, RR STAB	7–H18,78
92	Y 5.7P (LT1), SOFT RIDE SUSP (FE1)	14093179	1	76.25	SHAFT, RR STAB	7–H18,78
93–95	Y 5.7P (LT1), SOFT RIDE SUSP (FE1)	14084066	1	76.25	SHAFT, RR STAB	7–H18,78
96	Y07 GRAND SPORT EDITION (Z16)	10098181	1	74.72	SHAFT, RR STAB	7–H21,81
96	Y07 (EXC GRAND SPORT EDITION (Z16)	14084066	1	76.25	SHAFT, RR STAB	7–H18,78
96	Y67	14084066	1	76.25	SHAFT, RR STAB	7–H18,78
	*EXPORT**********EXPORT**********EXPORT**********EXPORT**********EXPORT*					
95	Y EUROPEAN PROVISIONS (VD1) (EXPORT)	10165301	1	148.92	SHAFT, FRT STAB	7–E16,50
96	Y07 SOFT RIDE SUSP (FE1), EUROPEAN PROVISIONS (VD1) (EXPORT)	10165301	1	148.92	SHAFT, FRT STAB	7–E16,50
96	Y67 SOFT RIDE SUSP (FE1), EUROPEAN PROVISIONS (VD1) (EXPORT), (EXC GRAND SPORT EDITION (Z16)	10165301	1	148.92	SHAFT, FRT STAB	7–E16,50
96	Y67 EUROPEAN PROVISIONS (VD1) (EXPORT), GRAND SPORT EDITION (Z16)	10199744	1	96.90	SHAFT, FRT STAB	7–E16,50

7.242 BOLT – BRACKET – CLAMP – SUPPORT, Stabilizer Shaft

89	Y	14050422	4	2.15	BOLT, FRT STAB SHF INSL CLA (08.900)	7–E11,51
89	Y	11508269	4	*1.00	BOLT, RR STAB SHF BRKT (08.900) (ADD THREAD LK ADHES 12345493 IF REQUIRED)	

© 2000 GENERAL MOTORS SERVICE PARTS OPERATIONS–CHEVROLET–14Y

7.242 BOLT -- BRACKET – CLAMP – SUPPORT, Stabilizer Shaft (Con't)

90–95	Y SOFT RIDE SUSP (FE1), HVY DUTY SUSP (FE7)	11508269	4	*1.00	BOLT, RR STAB SHF BRKT SUPT (M8 X 1.25 X 30, HEX) (08.900) (ADD THREAD LK ADHES 12345493 IF REQUIRED)	
96	Y	11508269	4	*1.00	BOLT, RR STAB SHF BRKT SUPT (M8 X 1.25 X 30, HEX) (08.900) (ADD THREAD LK ADHES 12345493 IF REQUIRED)	
84–87	Y	14048970	2	4.63	BRACKET, FRT STAB SHF	7–E4,41
88–96	Y	14105144	2	4.63	BRACKET, FRT STAB SHF	7–E16,54
84–87	Y	14060115	2	DISCON	BRACKET, RR STAB SHF	
88–96	Y	10052222	2	5.82	BRACKET, RR STAB SHF	7–H21,76
84–87	Y	14048971	2	DISCON	CLAMP, FRT SHF INSL	
88–96	Y	14105145	2	8.12	CLAMP, FRT STAB SHF INSL	7–E16,52
84–90	Y	3913863	2	3.83	CLAMP, RR STAB SHF INSL	7–H18,2
91	Y SOFT RIDE SUSP (FE1), HVY DUTY SUSP (FE7)	3913863	2	3.83	CLAMP, RR STAB SHF INSL	7–H18,2
92–96	Y	3913863	2	3.83	CLAMP, RR STAB SHF INSL	7–H18,2
84–96	Y	14064521	LH	25.75	SUPPORT, RR STAB SHF BRKT .	7–H18,1
84–96	Y	14064522	RH	25.75	SUPPORT, RR STAB SHF BRKT .	7–H18,1

7.243 INSULATOR – NUT, Stabilizer Shaft

84	Y	14093190	2	11.17	INSULATOR, FRT SHF	7–E4,40
85	Y (EXC H.D. SUSP FE7)	14093190	2	11.17	INSULATOR, FRT SHF	7–E4,40
85–86	Y H .D .SUSP (FE7)	14093171	2	11.68	INSULATOR, FRT STAB SHF	7–E4,40
86	Y (EXC H.D.SUSP FE7)	14093170	2	DISCON	INSULATOR, FRT STAB SHF	
87	Y (EXC H.D.STAB F58)	14093170	2	DISCON	INSULATOR, FRT STAB SHF	
87	Y H .D .STAB (F58)	14093171	2	11.68	INSULATOR, FRT STAB SHF	7–E4,40
88	Y (EXC HVY DUTY SUSP (FE7)	10098137	2	6.43	INSULATOR, FRT STAB SHF (25.5MM DIA) (RED)	7–E16,53
88–95	Y HVY DUTY SUSP (FE7) ...	10098138	2	6.43	INSULATOR, FRT STAB SHF	7–E16,53
88	Y SOFT RIDE SUSP (FE1), HVY DUTY SUSP (FE7), ELEK RIDE & HANDLING (FX3)	10098137	2	6.43	INSULATOR, FRT STAB SHF (25.5MM DIA) (RED)	7–E16,53
90	Y HVY DUTY SUSP (FE7), ELEK RIDE & HANDLING (FX3)	10098137	2	6.43	INSULATOR, FRT STAB SHF (25.5MM DIA) (RED)	7–E16,53
90	Y SOFT RIDE SUSP (FE1) ...	10098137	2	6.43	INSULATOR, FRT STAB SHF (25.5MM DIA) (RED)	7–E16,53
90–92	Y SOFT RIDE SUSP (FE1) ...	10098137	2	6.43	INSULATOR, FRT STAB SHF (RED) (25.5MM DIA)	7–E16,53
93–94	Y 5.7J (LT5), SOFT RIDE SUSP (FE1)	10098137	2	6.43	INSULATOR, FRT STAB SHF (RED) (25.5MM DIA)	7–E16,53
93–94	Y 5.7P (LT1), SOFT RIDE SUSP (FE1)	10224074	2	11.68	INSULATOR, FRT STAB SHF	7–E16,53
95	Y 5.7P (LT1), SOFT RIDE SUSP (FE1), (EXC EUROPEAN PROVISIONS (VD1) (EXPORT)	10224074	2	11.68	INSULATOR, FRT STAB SHF	7–E16,53
96	Y SOFT RIDE SUSP (FE1), (EXC EUROPEAN PROVISIONS (VD1) (EXPORT)	10224074	2	11.68	INSULATOR, FRT STAB SHF	7–E16,53
96	Y07 SPORT SUSP (FE3)	10098137	2	6.43	INSULATOR, FRT STAB SHF (RED) (25.5MM DIA)	7–E16,53
88–95	Y SOFT RIDE SUSP (FE1), HVY DUTY SUSP (FE7)	12521520	2	8.72	INSULATOR, FRT STAB SHF LINK .	7–E16,21

© 2000 GENERAL MOTORS SERVICE PARTS OPERATIONS–CHEVROLET–14Y

7.243 INSULATOR – NUT, Stabilizer Shaft (Con't)

91	Y SOFT RIDE SUSP (FE1), HVY DUTY SUSP (FE7)	14084097	2	11.68	INSULATOR, FRT STAB SHF LINK (UPR)	7–E16,49
92–96	Y	14084097	2	11.68	INSULATOR, FRT STAB SHF LINK (UPR)	7–E16,49
96	Y SOFT RIDE SUSP (FE1), SPORT SUSP (FE3)	12521520	2	8.72	INSULATOR, FRT STAB SHF LINK .	7–E16,21
84–87	Y	14084098	2	11.68	INSULATOR, FRT STAB SHF LINK LWR	7–E4,34
84–89	Y	14084097	2	11.68	INSULATOR, FRT STAB SHF LINK UPR	7–E16,49
90	Y SOFT RIDE SUSP (FE1), H .D .SUSP (FE7)	14084097	2	11.68	INSULATOR, FRT STAB SHF LINK UPR	7–E16,49
84	Y H .D .SUSP	14060112	2	DISCON	INSULATOR, RR SHF	
84–85	Y (EXC H.D.SUSP)	14105126	2	DISCON	INSULATOR, RR SHF	
86–87	Y67	14105126	2	DISCON	INSULATOR, RR SHF	
84–89	Y	14060114	2	4.70	INSULATOR, RR SHF LINK	7–H18,77
90	Y SOFT RIDE SUSP (FE1), H .D .SUSP (FE7)	14060114	2	4.70	INSULATOR, RR SHF LINK	7–H18,77
85	Y H .D .SUSP (FE7)	14084065	2	DISCON	INSULATOR, RR STAB SHF	
86–87	Y07	14105125	2	11.68	INSULATOR, RR STAB SHF	7–H18,80
88	Y PERFORMANCE HANDLING PKG (Z51)	10081630	2	11.42	INSULATOR, RR STAB SHF	7–H21,82
88	Y (EXC PERF HDLG PKG Z51)	14105125	2	11.68	INSULATOR, RR STAB SHF	7–H18,80
89	Y HVY DUTY SUSP (FE7), (EXC ELEK RIDE & HANDLING (FX3)	10081630	2	11.42	INSULATOR, RR STAB SHF	7–H21,82
89	Y SOFT RIDE (FE1), H .D .SUSP (FE7), ELEK SUSP CONT (FX3)	14105125	2	11.68	INSULATOR, RR STAB SHF	7–H18,80
90	Y HVY DUTY SUSP (FE7), SPECIAL PERFORMANCE PKG (ZR1)	10081630	2	11.42	INSULATOR, RR STAB SHF	7–H21,82
90	Y SOFT RIDE (FE1), H .D .SUSP (FE7), ELEK SUSP CONT (FX3) (EXC SPL PERF PKG ZR1)	14105125	2	11.68	INSULATOR, RR STAB SHF	7–H18,80
91	Y 5.7–8 (L98), SOFT RIDE SUSP (FE1)	10081630	2	11.42	INSULATOR, RR STAB SHF	7–H21,82
91	Y HVY DUTY SUSP (FE7) ...	10098185	2	11.42	INSULATOR, RR STAB SHF	7–H21,82
91–92	Y 5.7J (LT5), SOFT RIDE SUSP (FE1)	10098185	2	11.42	INSULATOR, RR STAB SHF	7–H21,82
92	Y HVY DUTY SUSP (FE7) ...	10081630	2	11.42	INSULATOR, RR STAB SHF	7–H21,82
92	Y 5.7P (LT1), SOFT RIDE SUSP (FE1)	14105125	2	11.68	INSULATOR, RR STAB SHF	7–H18,80
93–95	Y 5.7P (LT1)	10081630	2	11.42	INSULATOR, RR STAB SHF	7–H21,82
93–95	Y 5.7J (LT5)	10098185	2	11.42	INSULATOR, RR STAB SHF	7–H21,82
96	Y07 (EXC GRAND SPORT EDITION (Z16)	10081630	2	11.42	INSULATOR, RR STAB SHF	7–H21,82
96	Y07 GRAND SPORT EDITION (Z16)	10098185	2	11.42	INSULATOR, RR STAB SHF	7–H21,82
96	Y67	10081630	2	11.42	INSULATOR, RR STAB SHF	7–H21,82
91–96	Y	14060114	2	4.70	INSULATOR, RR STAB SHF LINK	7–H18,77
84–88	Y	6270752	AR	*1.15	INSULATOR, STAB BAR AND SHK ABS	7–H18,25
92–94	Y	14060131	2	1.25	NUT, RR STAB SHF INSL (M10X1.5) (07.245)	

© 2000 GENERAL MOTORS SERVICE PARTS OPERATIONS–CHEVROLET–14Y

7.243 INSULATOR – NUT, Stabilizer Shaft (Con't)

*EXPORT****************EXPORT****************EXPORT****************EXPORT****************EXPORT*

95	Y 5.7J (LT5), SOFT RIDE SUSP (FE1), EUROPEAN PROVISIONS (VD1) (EXPORT)	10098137	2	6.43	INSULATOR, FRT STAB SHF (RED) (25.5MM DIA)	7–E16,53
96	Y07 SOFT RIDE SUSP (FE1), EUROPEAN PROVISIONS (VD1) (EXPORT)	10098137	2	6.43	INSULATOR, FRT STAB SHF (RED) (25.5MM DIA)	7–E16,53
96	Y67 SOFT RIDE SUSP (FE1), EUROPEAN PROVISIONS (VD1) (EXPORT), (EXC GRAND SPORT EDITION (Z16)	10098137	2	6.43	INSULATOR, FRT STAB SHF (RED) (25.5MM DIA)	7–E16,53
96	Y67 EUROPEAN PROVISIONS (VD1) (EXPORT), GRAND SPORT EDITION (Z16)	10224074	2	11.68	INSULATOR, FRT STAB SHF	7–E16,53

7.244 NUT, Stabilizer Shaft

84–89	Y	14060131	2	1.25	NUT, RR STAB SHF LINK (07.245)	7–H18,75
90	Y SOFT RIDE SUSP (FE1), HVY DUTY SUSP (FE7)	14060131	2	1.25	NUT, RR STAB SHF LINK (07.245)	7–H18,75
91–96	Y	14060131	2	1.25	NUT, RR STAB SHF LINK (M10X1.5) (07.245)	7–H18,75

7.345 ABSORBER, Shock

NOTE: GOODWRENCH SHOCKS ARE NOT RELEASED TO COVER ALL APPLICATIONS, IF USAGE REQUIRED IS NOT LISTED ORDER ORIGINAL EQUIPT SHOCKS.

84	Y	22046447	2	177.48	ABSORBER, FRT	7–E4,58
84	Y (EXC H.D.SHK FG3)	22046475	2	43.36	ABSORBER, FRT	
85	Y GAS SHK (FG3), (EXC HVY DUTY SUSP (FE7)	22046447	2	177.48	ABSORBER, FRT	7–E4,58
85–87	Y H .D .SUSP (FE7), GAS SHK (FG3)	22046447	2	177.48	ABSORBER, FRT	7–E4,58
85	Y GAS SHK (FG3) (EXC H.D.SUSP FE7)	22046448	2	180.54	ABSORBER, FRT	
86–87	Y07 GAS SHK (FG3), (EXC HVY DUTY SUSP (FE7)	22046447	2	177.48	ABSORBER, FRT	7–E4,58
86–87	Y07 (EXC GAS SHK FG3) ...	22046475	2	43.36	ABSORBER, FRT	
87	Y67 GAS SHK (FG3)	22046447	2	177.48	ABSORBER, FRT	7–E4,58
88	Y GAS SHK (FG3) (EXC H.D.SUSP FE7)	22064031	2	177.48	ABSORBER, FRT	7–E7,6
88	Y H .D .SUSP (FE7), GAS SHK (FG3)	22064032	2	174.00	ABSORBER, FRT (**VPI 1–877–846–8243)	
88	Y07 (EXC GAS SHK FG3) ...	22064029	2	DISCON	ABSORBER, FRT	
88	Y67 (EXC GAS SHK FG3) ...	22064036	2	DISCON	ABSORBER, FRT	
84–86	Y	12322232	2	DISCON	ABSORBER, FRT SHK	
84	Y HVY DUTY S/ABS (F51) ...	22065210	2	37.32	ABSORBER, FRT SHK (AC–DELCO #560–130) (REACTEK)	
85–87	Y (EXC GAS SHK (FG3)	22065210	2	37.32	ABSORBER, FRT SHK (AC–DELCO #560–130) (REACTEK)	
88	Y	22064089	2	213.56	ABSORBER, FRT SHK (AC–DELCO #540–1) (REACTEK)	7–E16,62
88	Y07 (EXC GAS SHK (FG3) ...	22064035	2	DISCON	ABSORBER, FRT SHK	
89–90	Y H .D .SUSP (FE7) (EXC RIDE & HDLG FX3)	22064087	2	DISCON	ABSORBER, FRT SHK	

© 2000 GENERAL MOTORS SERVICE PARTS OPERATIONS–CHEVROLET–14Y

7.345 ABSORBER, Shock (Con't)

89-92	Y SOFT RIDE SUSP (FE1), (EXC ELEK RIDE & HANDLING (FX3)	22064089	2	213.56	ABSORBER, FRT SHK (AC-DELCO #540-1) (REACTEK)	7-E16,62
89-91	Y ELEK RIDE & HANDLING (FX3)	22064229	2	450.84	ABSORBER, FRT SHK	7-E16,7
92-95	Y ELEK RIDE & HANDLING (FX3)	22064478	2	609.02	ABSORBER, FRT SHK (AC-DELCO #540-24) (REACTEK)	7-E16,7
93-94	Y (EXC ELEK RIDE & HANDLING (FX3)	22064089	2	213.56	ABSORBER, FRT SHK (AC-DELCO #540-1) (REACTEK)	7-E16,62
95	Y07 (EXC ELEK RIDE & HANDLING (FX3)	22064089	2	213.56	ABSORBER, FRT SHK (AC-DELCO #540-1) (REACTEK)	7-E16,62
96	Y SOFT RIDE SUSP (FE1), (EXC CHASSIS, REALTIME DAMPING (F45)	22064089	2	213.56	ABSORBER, FRT SHK (AC-DELCO #540-1) (REACTEK)	7-E16,62
96	Y CHASSIS, REALTIME DAMPING (F45)	22064691	LH	388.74	ABSORBER, FRT SHK (AC-DELCO #580-111) (REACTEK)	7-E16,62
96	Y CHASSIS, REALTIME DAMPING (F45)	22064692	RH	388.74	ABSORBER, FRT SHK (AC-DELCO #580-112) (REACTEK)	7-E16,62
96	Y07 SPORT SUSP (FE3)	22064689	2	177.48	ABSORBER, FRT SHK	7-E16,62
84	Y H .D .SHK	4993595	2	DISCON	ABSORBER, RR	
85	Y (EXC GAS SHK FG3)	22046417	2	DISCON	ABSORBER, RR	
88	Y H .D .SUSP (FE7), GAS SHK (FG3)	22064034	2	DISCON	ABSORBER, RR	
88	Y67 (EXC GAS SHK FG3) ...	22064037	2	DISCON	ABSORBER, RR	
89-90	Y H .D .SUSP (FE7) (EXC RIDE & HDLG FX3)	22064034	2	DISCON	ABSORBER, RR	
84-87	Y H .D .SUSP (FE7), GAS SHK (FG3)	22046449	2	111.78	ABSORBER, RR SHK (ABSORBER, RR) (AC-DELCO #22046449) .	
84-87	Y	22065205	2	37.32	ABSORBER, RR SHK (AC-DELCO #560-152) (REACTEK)	
85	Y GAS SHK (FG3), (EXC HVY DUTY SUSP (FE7)	22064009	2	145.56	ABSORBER, RR SHK (AC-DELCO #540-3) (REACTEK)	7-H18,25
85-87	Y HVY DUTY SUSP (FE7), GAS SHK (FG3)	22064009	2	145.56	ABSORBER, RR SHK (AC-DELCO #540-3) (REACTEK)	7-H18,25
86-87	Y07 GAS SHK (FG3), (EXC HVY DUTY SUSP (FE7)	22064009	2	145.56	ABSORBER, RR SHK (AC-DELCO #540-3) (REACTEK)	7-H18,25
86-87	Y07	22064852	2	69.62	ABSORBER, RR SHK	
87	Y67 GAS SHK (FG3)	22064009	2	145.56	ABSORBER, RR SHK (AC-DELCO #540-3) (REACTEK)	7-H18,25
88	Y GAS SHK (FG3), (EXC HVY DUTY SUSP (FE7)	22064033	2	145.56	ABSORBER, RR SHK (AC-DELCO #540-13) (REACTEK)	7-H21,32
88	Y	22065211	2	37.32	ABSORBER, RR SHK (AC-DELCO #560-163) (REACTEK)	7-H21,32
89	Y SOFT RIDE SUSP (FE1) ...	22064033	2	145.56	ABSORBER, RR SHK (AC-DELCO #540-13) (REACTEK)	7-H21,32
89-91	Y ELEK RIDE & HANDLING (FX3)	22064099	2	760.92	ABSORBER, RR SHK	7-H21,32
90-92	Y SOFT RIDE SUSP (FE1), (EXC ELEK RIDE & HANDLING (FX3)	22064033	2	145.56	ABSORBER, RR SHK (AC-DELCO #540-13) (REACTEK)	7-H21,32
92-95	Y ELEK RIDE & HANDLING (FX3)	22064479	2	609.02	ABSORBER, RR SHK (AC-DELCO #540-25) (REACTEK)	7-I2,32
93-95	Y (EXC ELEK RIDE & HANDLING (FX3)	22064033	2	145.56	ABSORBER, RR SHK (AC-DELCO #540-13) (REACTEK)	7-H21,32

© 2000 GENERAL MOTORS SERVICE PARTS OPERATIONS-CHEVROLET-14Y

7.345 ABSORBER, Shock (Con't)

96	Y SOFT RIDE SUSP (FE1), (EXC CHASSIS, REALTIME DAMPING (F45)	22064033	2	145.56	ABSORBER, RR SHK (AC–DELCO #540–13) (REACTEK)	7–H21,32
96	Y CHASSIS, REALTIME DAMPING (F45)	22064693	LH	148.32	ABSORBER, RR SHK (AC–DELCO #580–113) (REACTEK)	7–I2,32
96	Y CHASSIS, REALTIME DAMPING (F45)	22064694	RH	148.32	ABSORBER, RR SHK (AC–DELCO #580–114) (REACTEK)	7–I2,32
96	Y07 SPORT SUSP (FE3)	22064690	2	165.24	ABSORBER, RR SHK	7–I2,32

7.347 BOLT – NUT – STUD – WASHER, Shock Absorber/Strut

84–88	Y	11515784	2	*.92	BOLT, RR S/ABS (M12X1.75X75) (08.900)	7–H18,26
93–95	Y (EXC ELEK RIDE & HANDLING (FX3)	11501033	2	.64	NUT, FRT S/ABS (M10X1.5, GR10, CAD) (HEX) (08.917)	
84–87	Y	15658213	4	1.30	NUT, FRT S/ABS LWR MT	7–E4,59
84–87	Y	14044582	2	DISCON	STUD, RR S/ABS	
88–96	Y	14105141	2	14.08	STUD, RR S/ABS	7–H21,35
84–96	Y	10053765	2	.63	WASHER, RR S/ABS (15.00X25.1X3.00) (15OD X 1ID X .03 THK) (05.394)	7–H18,23
84–96	Y	14047726	2	*.63	WASHER, RR S/ABS (POS 2, INBOARD) (M13X35X3)	7–H18,27
95	Y (EXC ELEK RIDE & HANDLING (FX3)	3790768	2	*1.05	WASHER, RR S/ABS (SPL STL) (15/32 ID X1 1/8 ODX1/8) (08.929)	
95–96	Y	14047778	2	.63	WASHER, RR S/ABS (M15X26X2) (POS #1–OUTBOARD) (06.178) .	7–I14,19
84–85	Y	3905569	AR	.17	WASHER, SEALING (9/32 I.D.) ..	

7.380 BRACKET – NUT, Shock Absorber

81–87	Y	14048973	LH	DISCON	BRACKET, FRT S/ABS LWR	
81–87	Y	14048974	RH	29.83	BRACKET, FRT S/ABS LWR	7–E4,32
91–96	Y	11515742	4	*.33	NUT, FRT S/ABS LWR BRKT (PRVG TORQ M8X1.25, 17.6 OD 9.0 THK) (10) (08.917)	

7.388 INSULATOR, Shock Absorber/Strut

84–88	Y	10157966	2	2.20	INSULATOR, FRT S/ABS (LWR POS)	7–E16,69
84–88	Y	10157967	2	2.20	INSULATOR, FRT S/ABS (UPR) (SMALL) (POSN #1)	7–E16,66
89–90	Y ELEK SUSP CONT (FX3) ..	10157964	2	2.20	INSULATOR, FRT S/ABS (UPR POS)	7–E16,5
89–90	Y ELEK SUSP CONT (FX3) ..	10157965	2	2.20	INSULATOR, FRT S/ABS (LWR POS)	7–E16,6
89–90	Y (EXC RIDE & HDLG FX3) ..	10157966	2	2.20	INSULATOR, FRT S/ABS (LWR POS)	7–E16,69
89–00	Y (EXC RIDE & HDLG FX3) ..	10157967	2	2.20	INSULATOR FRT S/ABS (UPR POS)	7–E16,66
91–95	Y ELEK RIDE & HANDLING (FX3)	10157964	2	2.20	INSULATOR, FRT S/ABS (UPR POS)	7–E16,5
91–95	Y ELEK RIDE & HANDLING (FX3)	10157965	2	2.20	INSULATOR, FRT S/ABS (LWR POS)	7–E16,6
91–95	Y (EXC ELEK RIDE & HANDLING (FX3)	10157966	2	2.20	INSULATOR, FRT S/ABS (LWR POS)	7–E16,69
91–95	Y (EXC ELEK RIDE & HANDLING (FX3)	10157967	2	2.20	INSULATOR, FRT S/ABS (UPR POS)	7–E16,66
96	Y CHASSIS, REALTIME DAMPING (F45)	10157964	2	2.20	INSULATOR, FRT S/ABS	7–E16,5

© 2000 GENERAL MOTORS SERVICE PARTS OPERATIONS–CHEVROLET–14Y

7.388 INSULATOR, Shock Absorber/Strut (Con't)

96	Y (EXC CHASSIS, REALTIME DAMPING (F45)	10157966	2	2.20	INSULATOR, FRT S/ABS (LWR POS)	7–E16,69
96	Y (EXC CHASSIS, REALTIME DAMPING (F45)	10157967	2	2.20	INSULATOR, FRT S/ABS (UPR POS)	7–E16,66
88	Y	14105142	2	2.20	INSULATOR, RR S/ABS LWR	7–H21,30
89–90	Y SOFT RIDE SUSP (FE1), HVY DUTY SUSP (FE7), (EXC ELEK RIDE & HANDLING (FX3)	14105142	2	2.20	INSULATOR, RR S/ABS LWR	7–H21,30
91–94	Y (EXC ELEK RIDE & HANDLING (FX3)	14105142	2	2.20	INSULATOR, RR S/ABS LWR	7–H21,30
95	Y (EXC ELEK RIDE & HANDLING (FX3)	10009135	2	.86	INSULATOR, RR S/ABS LWR (AC–DELCO #10009135)	7–I2,30
96	Y (EXC CHASSIS, REALTIME DAMPING (F45)	10009135	2	.86	INSULATOR, RR S/ABS LWR (AC–DELCO #10009135)	7–I2,30
88–96	Y	10022353	2	.86	INSULATOR, RR S/ABS UPR (MUST ORDER ABSORBER FOR FX3) (AC–DELCO #10022353)	7–H21,28

7.389 RETAINER – WASHER, Shock Absorber/Strut

84–88	Y	14093133	4	1.68	RETAINER, FRT S/ABS INSL	7–E16,65
89–95	Y ELEK RIDE & HANDLING (FX3)	10098206	2	1.68	RETAINER, FRT S/ABS INSL	7–E16,4
89–95	Y (EXC ELEK RIDE & HANDLING (FX3)	14093133	4	1.68	RETAINER, FRT S/ABS INSL	7–E16,65
96	Y	14093133	4	1.68	RETAINER, FRT S/ABS INSL	7–E16,65
88–90	Y (EXC RIDE & HDLG FX3) ..	14071397	4	1.98	RETAINER, RR S/ABS INSL	7–H21,27
91	Y SOFT RIDE SUSP (FE1), HVY DUTY SUSP (FE7), (EXC ELEK RIDE & HANDLING (FX3)	14071397	4	1.98	RETAINER, RR S/ABS UPR INSL	7–H21,27
92–95	Y (EXC ELEK RIDE & HANDLING (FX3)	14071397	4	1.98	RETAINER, RR S/ABS UPR INSL	7–H21,27
96	Y (EXC CHASSIS, REALTIME DAMPING (F45)	14071397	4	1.98	RETAINER, RR S/ABS UPR INSL	7–H21,27
85–88	Y (EXC GAS SHK (FG3)	14087610	2	DISCON	WASHER, FRT S/ABS INSL RET .	

7.395 BRACKET, Shock Absorber/Strut

89–90	Y ELEK SUSP CONT (FX3) ..	14104758	1	DISCON	BRACKET, ELEK SUSP MDL (07.450)	
88–90	Y (EXC RIDE & HDLG FX3) ..	10097836	2	6.88	BRACKET, RR S/ABS UPR	7–H21,29
91	Y SOFT RIDE SUSP (FE1), HVY DUTY SUSP (FE7), (EXC ELEK RIDE & HANDLING (FX3)	10097836	2	6.88	BRACKET, RR S/ABS UPR	7–H21,29
92–95	Y (EXC ELEK RIDE & HANDLING (FX3)	10097836	2	6.88	BRACKET, RR S/ABS UPR	7–H21,29
96	Y (EXC CHASSIS, REALTIME DAMPING (F45)	10097836	2	6.88	BRACKET, RR S/ABS UPR	7–H21,29

7.412 SPRING, Front Chassis

84	Y H .D. SUSP (FE7)	14045782	1	DISCON	SPRING, FRT (CODE BMB)	
84	Y (EXC HVY DUTY SUSP (FE7)	14106617	1	DISCON	SPRING, FRT (CODE HMZ)	
85–87	Y07 (EXC H.D. SUSP FE7) ...	14094458	1	DISCON	SPRING, FRT (CODE HKX, HMP)	
85–87	Y07 HVY DUTY SUSP (FE7) .	14106617	1	DISCON	SPRING, FRT (CODE HMZ)	
86–87	Y67	14094457	1	DISCON	SPRING, FRT (CODE HMN)	
88	Y07 (EXC HVY DUTY SUSP (FE7)	10048552	1	525.30	SPRING, FRT (CODE FHA)	7–E16,41

© 2000 GENERAL MOTORS SERVICE PARTS OPERATIONS–CHEVROLET–14Y

7.412 SPRING, Front Chassis (Con't)

88	Y07 HVY DUTY SUSP (FE7) .	10048553	1	DISCON	SPRING, FRT (CODE FHB)	
88	Y67	10048574	1	525.30	SPRING, FRT (CODE FHC)	7–E16,41
89–91	Y 5.7–8 (L98), HVY DUTY SUSP (FE7), (EXC ELEK RIDE & HANDLING (FX3) ...	10048553	1	DISCON	SPRING, FRT (CODE FHB)	
89–90	Y07 SOFT RIDE SUSP (FE1), HVY DUTY SUSP (FE7), ELEK RIDE & HANDLING (FX3)	10048552	1	525.30	SPRING, FRT (CODE FHA)	7–E16,41
89	Y67 SOFT RIDE SUSP (FE1) .	10048574	1	525.30	SPRING, FRT (CODE FHC)	7–E16,41
90	Y (5.7J) H.D. SUSP (FE7), ELEK SUSP CONT (FX3) ...	17988598	1	DISCON	SPRING, FRT (CODE AA)	
90–91	Y67 5.7–8 (L98)	10048574	1	525.30	SPRING, FRT (CODE FHC)	7–E16,41
91	Y 5.7J (LT5)	17988598	1	DISCON	SPRING, FRT (CODE AA)	
91	Y07 5.7–8 (L98), HVY DUTY SUSP (FE7), ELEK RIDE & HANDLING (FX3)	10048552	1	525.30	SPRING, FRT (CODE FHA)	7–E16,41
91	Y07 SOFT RIDE SUSP (FE1) .	10048552	1	525.30	SPRING, FRT (CODE FHA)	7–E16,41
92–95	Y07 5.7P (LT1), HVY DUTY SUSP (FE7)	17997091	1	525.30	SPRING, FRT (CODE FSK)	7–E16,41
92–95	Y07 5.7J (LT5)	17997093	1	525.30	SPRING, FRT (CODE FSM)	7–E16,41
92–93	Y07 5.7P (LT1), SOFT RIDE SUSP (FE1)	17999032	1	525.30	SPRING, FRT (CODE FSS)	7–E16,41
92	Y67 5.7P (LT1), SOFT RIDE SUSP (FE1)	17999031	1	525.30	SPRING, FRT (CODE FSR)	7–E16,41
93	Y67	17999031	1	525.30	SPRING, FRT (CODE FSR)	7–E16,41
94–95	Y07 5.7P (LT1), SOFT RIDE SUSP (FE1), (EXC ELEK RIDE & HANDLING (FX3) ...	17999032	1	525.30	SPRING, FRT (CODE FSS)	7–E16,41
94–95	Y07 5.7P (LT1), SOFT RIDE SUSP (FE1), ELEK RIDE & HANDLING (FX3)	22145203	1	525.30	SPRING, FRT (CODE HA)	7–E16,41
94–95	Y67 5.7P (LT1), SOFT RIDE SUSP (FE1), (EXC ELEK RIDE & HANDLING (FX3) ...	17999031	1	525.30	SPRING, FRT (CODE FSR)	7–E16,41
94–95	Y67 5.7P (LT1), SOFT RIDE SUSP (FE1), ELEK RIDE & HANDLING (FX3)	22145204	1	525.30	SPRING, FRT (CODE JA)	7–E16,41
95	Y67 5.7P (LT1), ELEK RIDE & HANDLING (FX3)	22173029	1	525.30	SPRING, FRT	7–E16,41
96	Y07 SPORT SUSP (FE3)	17999032	1	525.30	SPRING, FRT	7–E16,41
96	Y07 SOFT RIDE SUSP (FE1) .	22173028	1	525.30	SPRING, FRT	7–E16,41
96	Y67 SOFT RIDE SUSP (FE1) .	17999031	1	525.30	SPRING, FRT	7–E16,41

7.420 PROTECTOR, Front Spring

84–94	Y	14048914	2	31.17	PROTECTOR, FRT SPR	7–E16,38

7.425 BOLT – RETAINER – SHIM, Front Spring

84–87	Y	14050422	AR	2.15	BOLT, FRT SPR RET (08.900)	7–E4,38
91–96	Y	10157953	4	2.15	BOLT, FRT SPR RET	7–E16,58
84–87	Y	14044557	2	12.35	RETAINER, FRT SPR	7–E4,25
88–96	Y	10052283	2	10.92	RETAINER, FRT SPR	7–E16,40
84–96	Y	14047771	AR	2.75	SHIM, FRT SPR RET	7–E16,45

7.440 ACCELEROMETER – ACCELEROMETER KIT – ACTUATOR – BRACKET, Hydraulic Suspension

90–93	Y	12524328	1	184.62	ACCELEROMETER KIT, VEH LATL	6–E4,52
94–96	Y	10210848	1	201.97	ACCELEROMETER, VEH LATL ..	9–F8,4

© 2000 GENERAL MOTORS SERVICE PARTS OPERATIONS–CHEVROLET–14Y

7.440 ACCELEROMETER – ACCELEROMETER KIT – ACTUATOR – BRACKET, Hydraulic Suspension (Con't)

89–95	Y ELEK RIDE & HANDLING (FX3)	22068666	2	501.83	ACTUATOR, FRT HYD SUSP (INCLUDES SNAP RING)	7–E16,1
94–96	Y	10248890	1	1.12	BRACKET, VEH LATL ACCLRM ..	9–F8,3

7.450 BRACKET – CONNECTOR – CONTROL – HARNESS – LAMP – MODULE – NUT – RETAINER – SWITCH – TAPE, Electronic Control Suspension

91	Y ELEK RIDE & HANDLING (FX3)	14104798	1	DISCON	BRACKET, ELEK SUSP CONT MDL	
96	Y CHASSIS, REALTIME DAMPING (F45)	10274869	1	.99	BRACKET, ELEK SUSP CONT MDL	7–I14,10
90–93	Y ELEK RIDE & HANDLING (FX3)	12125665	1	28.96	CONNECTOR, ELEK SUSP STRUT HARN EXTN (GRAY) (6–WAY F) (W/LEADS) (04.663)	
92–93	Y	12101827	1	36.30	CONNECTOR, ELEK SUSP STRUT HARN EXTN (8–WAY M) (W/LEADS) (02.535) (AC–DELCO #PT219)	
94	Y ELEK RIDE & HANDLING (FX3)	12125665	1	28.96	CONNECTOR, INLINE–TO ELEK SUSP MDL (GRAY) (6–WAY F) (W/LEADS) (04.663)	
95	Y 5.7J (LT5)	12125665	1	28.96	CONNECTOR, INLINE–TO ELEK SUSP MDL (GRAY) (6–WAY F) (W/LEADS) (04.663)	
96	Y	12085535	1	17.46	CONNECTOR, INLINE–TO ELEK SUSP MDL (2–WAY F) (W/LEADS) (HAS INDEX TAB @ OUTER EDGE OF CAVITY B) (02.535) (AC–DELCO #PT146)	6–E11,17
94–95	Y	12041476	1	2.53	CONNECTOR, MDL–ELEK SUSP CONT (32–WAY FEMALE) (W/O LEADS) (02.480)	
96	Y CHASSIS, REALTIME DAMPING (F45)	12110206	1	3.50	CONNECTOR, MDL–ELEK SUSP CONT (LT BLUE) (24–W F) (W/O LEADS) (03.670)	7–I14,30
96	Y CHASSIS, REALTIME DAMPING (F45)	12129088	1	2.43	CONNECTOR, MDL–ELEK SUSP CONT (BLACK) (8–WAY F, W/O LEADS) (04.720)	7–I14,30
91–95	Y ELEK RIDE & HANDLING (FX3)	12117350	1	22.35	CONNECTOR, SW–ELEK SUSP (4–WAY F) (W/LEADS) (09.764) (AC–DELCO #PT483)	7–I14,15
93	Y	12125665	1	28.96	CONNECTOR, SW–ELEK SUSP (GRAY) (6–WAY F) (W/LEADS) (04.663)	
94–95	Y	12101827	1	36.30	CONNECTOR, SW–ELEK SUSP (8–WAY M) (W/LEADS) (02.535) (AC–DELCO #PT219)	
96	Y CHASSIS, REALTIME DAMPING (F45)	12117350	1	22.35	CONNECTOR, SW–ELEK SUSP (4–WAY F) (W/LEADS) (09.764) (AC–DELCO #PT483)	7–I14,15
89	Y RIDE & HDLG (FX3)	10098464	1	24.78	CONTROL, ELEK SUSP	7–I9,14
90–91	Y 6–WAY PWR D/SEAT ADJR (AC3), ELEK RIDE & HANDLING (FX3), (EXC 6–WAY PWR P/SEAT ADJR (AC1)	10098438	1	158.10	CONTROL, ELEK SUSP (W/D/SEAT ADJR SW)	7–I9,13
90	Y 6–WAY (AC1, AC3), RIDE & HDLG (FX3)	14104668	1	DISCON	CONTROL, ELEK SUSP (W/FRT ST ADJR SW)	

© 2000 GENERAL MOTORS SERVICE PARTS OPERATIONS–CHEVROLET–14Y

7.450 BRACKET – CONNECTOR – CONTROL – HARNESS – LAMP – MODULE – NUT – RETAINER – SWITCH – TAPE, Electronic Control Suspension (Con't)

92–93	Y 6–WAY PWR D/SEAT ADJR (AC3), ELEK RIDE & HANDLING (FX3), (EXC 6–WAY PWR P/SEAT ADJR (AC1)	10161836	1	158.10	CONTROL, ELEK SUSP (W/D/SEAT ADJR SW)	7–I10,10
89	Y ELEK SUSP CONT (FX3) ..	12080608	1	DISCON	HARNESS, ELEK SUSP STRUT WRG HARN EXTN	
90–93	Y ELEK RIDE & HANDLING (FX3)	12080856	1	38.50	HARNESS, ELEK SUSP STRUT WRG HARN EXTN	7–I9,4
94–95	Y 6–SPD M/TRANS (ML9), ELEK RIDE & HANDLING (FX3)	12130362	1	38.50	HARNESS, ELEK SUSP STRUT WRG HARN EXTN	7–I12,2
94–95	Y 4–SPD A/TRANS (M30), ELEK RIDE & HANDLING (FX3)	12130490	1	82.62	HARNESS, ELEK SUSP STRUT WRG HARN EXTN	7–I12,2
96	Y CHASSIS, REALTIME DAMPING (F45)	12130460	1	38.50	HARNESS, ELEK SUSP STRUT WRG HARN EXTN	7–I14,7
90–91	Y 6–WAY PWR P/SEAT ADJR (AC1), 6–WAY PWR D/SEAT ADJR (AC3), ELEK RIDE & HANDLING (FX3)	10159560	1	1.90	LAMP, SELECTIVE RIDE SW	7–I9,7
92	Y ELEK RIDE & HANDLING (FX3)	10159560	1	1.90	LAMP, SELECTIVE RIDE SW	7–I9,7
93	Y 6–WAY PWR P/SEAT ADJR (AC1), 6–WAY PWR D/SEAT ADJR (AC3), ELEK RIDE & HANDLING (FX3)	10159560	1	1.90	LAMP, SELECTIVE RIDE SW	7–I9,7
89–91	Y ELEK RIDE & HANDLING (FX3)	22115156	1	1578.97	MODULE, ELEK SUSP CONT ...	7–I9,1
92–95	Y ELEK RIDE & HANDLING (FX3)	22052752	1	1014.90	MODULE, ELEK SUSP CONT ...	7–I10,1
94–95	Y 4–SPD A/TRANS (M30), ELEK RIDE & HANDLING (FX3)	12135092	1	27.53	MODULE, ELEK SUSP CONT (FILTER) (PART OF ELEK SUSP WRG HARN EXTN)	7–I12,1
96	Y CHASSIS, REALTIME DAMPING (F45)	16205661	1	674.22	MODULE, ELEK SUSP CONT (MUST BE PROGRAMMED AT DEALER)	7–I14,8
89–91	Y ELEK RIDE & HANDLING (FX3)	12338025	1	*1.83	NUT, ELEK SUSP CONT MDL (02.383)	7–I9,6
96	Y CHASSIS, REALTIME DAMPING (F45)	10257543	1	1.38	RETAINER, ELEK SUSP CONT MDL	7–I14,12
90	Y ELEK RIDE & HANDLING (FX3), (EXC 6–WAY PWR P/SEAT ADJR (AC1), 6–WAY PWR D/SEAT ADJR (AC3) ..	10086226	1	54.07	SWITCH, ELEK SUSP	7–I9,9
90–91	Y 6–WAY PWR D/SEAT ADJR (AC3), ELEK RIDE & HANDLING (FX3), (EXC 6–WAY PWR P/SEAT ADJR (AC1)	10086226	1	54.07	SWITCH, ELEK SUSP	7–I9,9
90–91	Y 6–WAY PWR P/SEAT ADJR (AC1), 6–WAY PWR D/SEAT ADJR (AC3), ELEK RIDE & HANDLING (FX3)	10086226	1	54.07	SWITCH, ELEK SUSP	7–I9,9
91	Y ELEK RIDE & HANDLING (FX3), (EXC 6–WAY PWR P/SEAT ADJR (AC1), 6–WAY PWR D/SEAT ADJR (AC3) ..	10098437	1	54.07	SWITCH, ELEK SUSP	7–I9,12
92	Y ELEK RIDE & HANDLING (FX3)	10161838	1	54.07	SWITCH, ELEK SUSP	7–I10,6

© 2000 GENERAL MOTORS SERVICE PARTS OPERATIONS–CHEVROLET–14Y

7.450 BRACKET – CONNECTOR – CONTROL – HARNESS – LAMP – MODULE – NUT – RETAINER – SWITCH – TAPE, Electronic Control Suspension (Con't)

92	Y ELEK RIDE & HANDLING (FX3), (EXC 6–WAY PWR P/SEAT ADJR (AC1), 6–WAY PWR D/SEAT ADJR (AC3) ..	10161847	1	54.07	SWITCH, ELEK SUSP	7–I10,9
93	Y ELEK RIDE & HANDLING (FX3), 6–WAY PWR D/SEAT ADJR (AC3)	10161838	1	54.07	SWITCH, ELEK SUSP	7–I10,6
94–95	Y ELEK RIDE & HANDLING (FX3)	10212995	1	54.07	SWITCH, ELEK SUSP	7–I12,6
96	Y CHASSIS, REALTIME DAMPING (F45)	10212995	1	54.07	SWITCH, ELEK SUSP	7–I12,6
92–95	Y ELEK RIDE & HANDLING (FX3)	10143555	1	5.82	TAPE, ELEK SUSP CONT MDL FSTN	

7.460 ACTUATOR – CONNECTOR, Air Suspension and Inflator Unit

89–95	Y ELEK RIDE & HANDLING (FX3)	22068667	2	501.83	ACTUATOR, RR S/ABS CONT ...	7–H21,87
94	Y ELEK RIDE & HANDLING (FX3)	15305935	4	56.32	CONNECTOR, MOT–S/ABS CONT ACTR (6–WAY F) (W/LEADS) (02.530) (AC–DELCO #PT1075) .	
95	Y 5.7J (LT5)	15305935	4	56.32	CONNECTOR, MOT–S/ABS CONT ACTR (6–WAY F) (W/LEADS) (02.530) (AC–DELCO #PT1075) .	
96	Y	12085498	AR	20.62	CONNECTOR, SOL–S/ABS ELEK SUSP CONT ACTR (2–WAY F) (W/LEADS) (02.530) (AC–DELCO #PT120)	7–I14,24

7.465 UNION, Air Suspension Compressor Tank

84	Y	10005238	1	1.12	UNION, AUTO LVL CONTROL REPAIR	

7.477 RETAINER – SENSOR, Air Suspension Leveling Or Level Control

96	Y CHASSIS, REALTIME DAMPING (F45)	10267803	2	1.88	RETAINER, ELEK SUSP FRT POSN SEN LEAD (PUSH IN)	7–I14,34
96	Y CHASSIS, REALTIME DAMPING (F45)	22153240	LH	255.00	SENSOR, ELEK SUSP FRT POSN (W/FRT VERT ACCLRM)	7–I14,42
96	Y CHASSIS, REALTIME DAMPING (F45)	22153241	RH	255.00	SENSOR, ELEK SUSP FRT POSN (W/FRT VERT ACCLRM)	7–I14,42
96	Y CHASSIS, REALTIME DAMPING (F45)	22153242	LH	255.00	SENSOR, ELEK SUSP RR POSN (W/RR VERT ACCLRM)	7–I14,28
96	Y CHASSIS, REALTIME DAMPING (F45)	22153243	RH	255.00	SENSOR, ELEK SUSP RR POSN (W/RR VERT ACCLRM)	7–I14,28

7.477 BOLT – BRACKET – LINK – STUD, Air Suspension Height Sensor

96	Y CHASSIS, REALTIME DAMPING (F45)	11514623	4	*.96	BOLT, ELEK SUSP FRT POSN SEN BRKT (M6X1X20) (HEX W/CON WA) (08.900)	
96	Y CHASSIS, REALTIME DAMPING (F45)	11515397	2	.22	BOLT, ELEK SUSP FRT POSN SEN BRKT (10.685)	7–I14,39
96	Y CHASSIS, REALTIME DAMPING (F45)	11514623	4	*.96	BOLT, ELEK SUSP RR POSN SEN BRKT (M6X1X20) (HEX W/CON WA) (08.900) (2 LH & 2 RH) ...	
96	Y CHASSIS, REALTIME DAMPING (F45)	10270999	2	1.88	BRACKET, ELEK SUSP FRT POSN SEN	7–I14,38
96	Y CHASSIS, REALTIME DAMPING (F45)	22153244	2	17.80	LINK, ELEK SUSP FRT POSN SEN .	7–I14,40

© 2000 GENERAL MOTORS SERVICE PARTS OPERATIONS–CHEVROLET–14Y

7.477 BOLT – BRACKET – LINK – STUD, Air Suspension Height Sensor (Con't)

96	Y CHASSIS, REALTIME DAMPING (F45)	22153245	RH	17.80	LINK, ELEK SUSP FRT POSN SEN .	7–I14,40
96	Y CHASSIS, REALTIME DAMPING (F45)	22153246	2	18.47	LINK, ELEK SUSP RR POSN SEN	7–I14,23
96	Y CHASSIS, REALTIME DAMPING (F45)	10271003	2	1.68	STUD, ELEK SUSP POSN SEN LINK BALL	7–I14,27

7.503 SPRING, Rear Spring

84	Y (EXC H.D.SUSP FE7)	14045705	1	DISCON	SPRING, RR (CODE BMF)	
84	Y H .D .SUSP (FE7)	14045786	1	DISCON	SPRING, RR (CODE BMH)	
85–88	Y07 HVY DUTY SUSP (FE7) .	14080196	1	525.30	SPRING, RR (CODE NYU)	7–H18,43
86	Y HVY DUTY SUSP (FE7) ...	22112253	1	466.13	SPRING, RR (CODE NYR)	7–H18,43
86–88	Y67	14106787	1	525.30	SPRING, RR (CODE RCA)	7–H18,43
87–91	Y07 SOFT RIDE SUSP (FE1) .	22112253	1	466.13	SPRING, RR (CODE NYR)	7–H18,43
89–90	Y HVY DUTY SUSP (FE7), (EXC ELEK RIDE & HANDLING (FX3)	14080196	1	525.30	SPRING, RR (CODE NYU)	7–H18,43
89–90	Y07 HVY DUTY SUSP (FE7), ELEK RIDE & HANDLING (FX3)	22112253	1	466.13	SPRING, RR (CODE NYR)	7–H18,43
89–91	Y67 SOFT RIDE SUSP (FE1) .	14106787	1	525.30	SPRING, RR (CODE RCA)	7–H18,43
91	Y HVY DUTY SUSP (FE7) ...	14080196	1	525.30	SPRING, RR (CODE NYU)	7–H18,43
92–95	Y07 5.7P (LT1), HVY DUTY SUSP (FE7)	14080196	1	525.30	SPRING, RR (CODE NYU)	7–H18,43
92–95	Y07 5.7J (LT5)	17999322	1	525.30	SPRING, RR (CODE RHY)	7–I2,15
92–93	Y07 5.7P (LT1), SOFT RIDE SUSP (FE1)	22112253	1	466.13	SPRING, RR (CODE NYR)	7–H18,43
92–93	Y67 5.7P (LT1), SOFT RIDE SUSP (FE1)	14106787	1	525.30	SPRING, RR (CODE RCA)	7–H18,43
94–95	Y07 5.7P (LT1), SOFT RIDE SUSP (FE1)	22112253	1	466.13	SPRING, RR (CODE RHZ)	7–H18,43
94–95	Y67 5.7P (LT1), SOFT RIDE SUSP (FE1), (EXC ELEK RIDE & HANDLING (FX3) ...	14106787	1	525.30	SPRING, RR (CODE RCA)	7–H18,43
94–95	Y67 5.7P (LT1), SOFT RIDE SUSP (FE1), ELEK RIDE & HANDLING (FX3)	22112253	1	525.30	SPRING, RR	7–I2,15
96	Y07 SPORT SUSP (FE3)	17999322	1	525.30	SPRING, RR (CODE RHY)	7–I2,15
96	Y07 SOFT RIDE SUSP (FE1) .	22112253	1	466.13	SPRING, RR (CODE RHZ)	7–H18,43
96	Y67 SOFT RIDE SUSP (FE1) .	14106787	1	525.30	SPRING, RR (CODE RCA)	7–H18,43

7.518 BOLT – PLATE – SPACER, Rear Spring And Shock Absorber Anchor

84–96	Y	11508142	2	2.80	BOLT, RR SPR (M10X1.5X105) (POS #1)) (08.900)	7–I2,66
91–93	Y	10254328	2	10.55	BOLT, RR SPR (M14X2X225, 30 THD, 4MM HOLE)	7–H21,66
94–95	Y HVY DUTY SUSP (FE7) ...	10254328	2	10.55	BOLT, RR SPR (M14X2X225, 30 THD, 4MM HOLE)	7–H21,66
94–95	Y 5.7P (LT1), SOFT RIDE SUSP (FE1), (EXC ELEK RIDE & HANDLING (FX3) ...	10254328	2	10.55	BOLT, RR SPR (M14X2X225, 30 THD, 4MM HOLE)	7–H21,66
94–95	Y 5.7J (LT5)	10254328	2	10.55	BOLT, RR SPR (M14X2X225, 30 THD, 4MM HOLE)	7–H21,66
94–95	Y 5.7P (LT1), SOFT RIDE SUSP (FE1), ELEK RIDE & HANDLING (FX3)	10254329	2	10.55	BOLT, RR SPR	7–I2,66
96	Y SPORT SUSP (FE3)	10254328	2	10.55	BOLT, RR SPR (M14X2X225, 30 THD, 4MM HOLE)	7–H21,66

© 2000 GENERAL MOTORS SERVICE PARTS OPERATIONS–CHEVROLET–14Y

7.518 BOLT – PLATE – SPACER, Rear Spring And Shock Absorber Anchor (Con't)

96	Y SOFT RIDE SUSP (FE1), (EXC CHASSIS, REALTIME DAMPING (F45)	10254328	2	10.55	BOLT, RR SPR (M14X2X225, 30 THD, 4MM HOLE)	7–H21,66
96	Y SOFT RIDE SUSP (FE1), CHASSIS, REALTIME DAMPING (F45)	10254329	2	10.55	BOLT, RR SPR	7–I2,66
84–89	Y	14048993	2	6.27	PLATE, RR SPR ANC	7–H18,14
90–91	Y SOFT RIDE SUSP (FE1), H .D .SUSP (FE7)	14048993	2	6.27	PLATE, RR SPR ANC	7–H18,14
92–96	Y	14048993	2	6.27	PLATE, RR SPR ANC	7–H18,14
84	Y H .D. SUSP (FE7)	14044572	4	2.85	SPACER, RR SPG (5.21MM THK)	7–H18,13
84	Y (EXC H.D. SUSP FE7)	14048950	4	2.85	SPACER, RR SPG (6.11MM THK)	7–H18,13
85–88	Y (EXC H.D. SUSP FE7)	14044572	4	2.85	SPACER, RR SPG (5.21MM THK)	7–H18,13
85–88	Y07	14048950	2	2.85	SPACER, RR SPG (6.11MM THK)	7–H18,13
85–89	Y07 H .D. SUSP (FE7)	14084056	2	2.85	SPACER, RR SPG (1.72MM THK)	7–H21,8
86–89	Y67	14084056	2	2.85	SPACER, RR SPG (1.72MM THK)	7–H21,8
90–91	Y H .D .SUSP (FE7), ELEC RIDE & HANDLING (FX3) ...	14044572	4	2.85	SPACER, RR SPG (5.21MM THK)	7–H18,13
90	Y07 H .D .SUSP (FE7) (EXC ELEC RIDE & HANDLING FX3)	14084056	2	2.85	SPACER, RR SPG (1.72MM THK)	7–H21,8
86–96	Y67	14093185	2	5.20	SPACER, RR SPR (4.39MM THK)	7–H18,13
89–96	Y SOFT RIDE SUSP (FE1) ...	14044572	4	2.85	SPACER, RR SPR (5.21MM THK)	7–H18,13
89–95	Y07 HVY DUTY SUSP (FE7), SOFT RIDE SUSP (FE1)	14048950	4	2.85	SPACER, RR SPR (6.11MM THK)	7–H18,13
90–96	Y67 SOFT RIDE SUSP (FE1) .	14084056	2	2.85	SPACER, RR SPR (1.72MM THK)	7–H21,8
91–95	Y07 HVY DUTY SUSP (FE7) .	14084056	2	2.85	SPACER, RR SPR (1.72MM THK)	7–H21,8
96	. . SPORT SUSP (FE3), SOFT RIDE SUSP (FE1)	14048950	4	2.85	SPACER, RR SPR (6.11MM THK)	7–H18,13
96	Y07 SPORT SUSP (FE3)	14084056	2	2.85	SPACER, RR SPR (1.72MM THK)	7–H21,8

7.529 BOLT, Rear Spring And Axle

84–90	Y	14044578	2	10.55	BOLT, RR SPR (M14X2X225.0) ...	7–H18,70

7.530 NUT, Rear Spring Eye

84–93	Y	10254330	2	2.25	NUT, RR SPR (14X2.0X14 SLOTTED, LWR)	7–H18,40

7.535 BRACKET – BUMPER – SPACER, Rear Spring

84–88	Y	14064511	2	DISCON	BRACKET, RR SUSP JOUNCE BPR	
88–96	Y	14105140	2	8.40	BUMPER, RR SUSP JOUNCE ...	7–H21,72
84–85	Y H .D .SUSP	14060140	2	DISCON	SPACER, RR SPR INSL	

7.545 INSULATOR, Rear Spring

84–96	Y	10262518	4	6.12	INSULATOR, RR SPR (34MM LONG)	7–H18,42
84–96	Y	14076181	2	6.43	INSULATOR, RR SPR (ON SPACER)	7–H18,11

7.629 BAG – BOLT – BRACKET – CARRIER – HOOK – NUT – PLATE – RETAINER – STRAP, Spare Wheel

90–95	Y07 SPECIAL PERFORMANCE PKG (ZR1)	10153619	1	163.60	BAG, PASS COMPT SPA WHL STOW (W/CVR) (15.222)	7–J2,11
90–95	Y07 SPECIAL PERFORMANCE PKG (ZR1)	14104744	1	157.08	BAG, PASS COMPT SPA WHL STOW (W/O CVR)	7–J2,8
96	Y07 GRAND SPORT EDITION (Z16)	10153619	1	163.60	BAG, PASS COMPT SPA WHL STOW (W/CVR) (15.222)	7–J2,11

© 2000 GENERAL MOTORS SERVICE PARTS OPERATIONS–CHEVROLET–14Y

7.629 BAG – BOLT – BRACKET – CARRIER – HOOK – NUT – PLATE – RETAINER – STRAP, Spare Wheel (Con't)

96	Y07 GRAND SPORT EDITION (Z16)	14104744	1	157.08	BAG, PASS COMPT SPA WHL STOW (W/O CVR)	7–J2,8
90–95	Y SPECIAL PERFORMANCE PKG (ZR1)	25601642	2	*.54	BOLT, SPA WHL CARR HNGR (M6X1X20) (08.131)	7–J2,6
96	Y GRAND SPORT EDITION (Z16)	25601642	2	*.54	BOLT, SPA WHL CARR HNGR (M6X1X20) (08.131)	7–J2,6
84–96	Y	14051105	LH	7.80	BRACKET, SPA WHL CARR HOOK	7–I18,8
84–96	Y	14051106	RH	7.80	BRACKET, SPA WHL CARR HOOK	7–I18,8
84–93	Y	14049218	1	8.72	BRACKET, SPA WHL CARR LAT BOLT	7–I18,3
84–93	Y	14076548	1	4.03	BRACKET, SPA WHL STOW	7–I18,7
84	Y	14060243	LH	DISCON	BRACKET, SPA WHL STOW TRAY	
84	Y	14060244	RH	DISCON	BRACKET, SPA WHL STOW TRAY	
84–96	Y	14046687	1	98.93	CARRIER, SPA WHL	7–I18,12
84–96	Y	14051104	2	5.50	HOOK, SPA WHL CARR (SHAPED LIKE THREADED BOLT BENT IN HALF)	7–I18,19
90–95	Y07 SPECIAL PERFORMANCE PKG (ZR1)	14104741	2	9.59	HOOK, SPA WHL CARR (RR SI)	7–J2,3
90–95	Y07 SPECIAL PERFORMANCE PKG (ZR1)	14104743	1	3.32	HOOK, SPA WHL CARR (CTR FRT) (U–SHAPED W/BOLT HOLE ON EACH END) (07.632)	7–I26,23
96	Y07 GRAND SPORT EDITION (Z16)	14104741	2	9.59	HOOK, SPA WHL CARR	7–J2,3
96	Y07 GRAND SPORT EDITION (Z16)	14104743	1	3.32	HOOK, SPA WHL CARR (U–SHAPED W/BOLT HOLE ON EACH END) (07.632)	7–I26,23
84–90	Y	14060131	2	1.25	NUT, SPA WHL CARR LAT BOLT (M10X1.5X6) (07.245)	
90–95	Y07 SPECIAL PERFORMANCE PKG (ZR1)	14104750	2	6.27	PLATE, SPA WHL CARR	7–J2,2
96	Y07 GRAND SPORT EDITION (Z16)	14104750	2	6.27	PLATE, SPA WHL CARR	7–J2,2
84–95	Y	14051107	2	1.28	RETAINER, SPA WHL CARR HOOK	7–I18,16
96	Y (EXC (EXC SPA TIRE)	14051107	2	1.28	RETAINER, SPA WHL CARR HOOK	7–I18,16
88–89	Y67 (19I)	10135966	1	56.61	STRAP, LUGG & SPA WHL STOW (BLACK)	7–J2,1
90–91	Y SPECIAL PERFORMANCE PKG (ZR1), (60I)	10135991	1	DISCON	STRAP, SPA WHL STOW (COGNAC) (15.222)	
90–91	Y SPECIAL PERFORMANCE PKG (ZR1), (90I)	10135993	1	DISCON	STRAP, SPA WHL STOW (15.222)	
90–91	Y SPECIAL PERFORMANCE PKG (ZR1), (22I)	10135994	1	56.62	STRAP, SPA WHL STOW (STEEL BLUE)	7–J2,1
90	Y07 HVY DUTY SUSP (FE7), SPECIAL PERFORMANCE PKG (ZR1), (19I)	10135966	1	56.61	STRAP, SPA WHL STOW (BLACK)	7–J2,1
91–92	Y07 SPECIAL PERFORMANCE PKG (ZR1), (19I)	10135966	1	56.61	STRAP, SPA WHL STOW (BLACK)	7–J2,1
92–95	Y SPECIAL PERFORMANCE PKG (ZR1), (64I)	10175709	1	56.61	STRAP, SPA WHL STOW (BEIGE)	7–J2,1
92–95	Y SPECIAL PERFORMANCE PKG (ZR1), (14I)	10175710	1	56.61	STRAP, SPA WHL STOW (GRAY)	7–J2,1
93	Y07 SPECIAL PERFORMANCE PKG (ZR1), (10I), (19I)	10135966	1	56.61	STRAP, SPA WHL STOW (BLACK)	7–J2,1
93	Y07 SPECIAL PERFORMANCE PKG (ZR1), (79I)	10199545	1	56.61	STRAP, SPA WHL STOW (RED)	7–J2,1

© 2000 GENERAL MOTORS SERVICE PARTS OPERATIONS–CHEVROLET–14Y

7.629 BAG – BOLT – BRACKET – CARRIER – HOOK – NUT – PLATE – RETAINER – STRAP, Spare Wheel (Con't)

93–95	Y07 SPECIAL PERFORMANCE PKG (ZR1), (70I)	10199586	1	56.61	STRAP, SPA WHL STOW (RED) ..	7–J2,1
94–95	Y07 SPECIAL PERFORMANCE PKG (ZR1), (19I)	10135966	1	56.61	STRAP, SPA WHL STOW (BLACK)	7–J2,1
96	Y07 GRAND SPORT EDITION (Z16), (19I)	10135966	1	56.61	STRAP, SPA WHL STOW (BLACK)	7–J2,1

7.632 BOLT/SCREW KIT, Spare Wheel Mounting

84–96	Y	10089668	1	32.63	BOLT/SCREW KIT, SPA WHL STOW (07.629)	7–I18,1

7.633 NUT, Spare Wheel Carrier

85–94	Y	14060131	2	1.25	NUT, SPA WHL CARR HOOK (POSN #2) (M10X1.5) (07.245)	7–I20,24
95–96	Y (EXC (EXC SPA TIRE)	14060131	2	1.25	NUT, SPA WHL CARR HOOK (POSN #2) (M10X1.5) (07.245)	7–I20,24

7.800 BRACKET – COVER – NUT – PANEL – PLATE – REINFORCEMENT – RETAINER – RIVET – SUPPORT, License Plate

90–95	Y SPECIAL PERFORMANCE PKG (ZR1)	16509671	1	42.70	BRACKET, RR LIC PLT	7–J17,7
91–93	Y (EXC SPECIAL PERFORMANCE PKG (ZR1)	10146492	1	18.40	BRACKET, RR LIC PLT	7–J19,4
94–95	Y (EXC EUROPEAN PROVISIONS (VD1) (EXPORT), RR LIC PLT MTG PKG (VL5) (EXPORT), SPECIAL PERFORMANCE PKG (ZR1)	10146492	1	18.40	BRACKET, RR LIC PLT	7–J19,4
96	Y (EXC EUROPEAN PROVISIONS (VD1) (EXPORT), RR LIC PLT MTG PKG (VL5) (EXPORT)	10146492	1	18.40	BRACKET, RR LIC PLT	7–J19,4
84–88	Y	14076540	1	DISCON	COVER, RR LIC OPG	
84–88	Y	559547	AR	*1.35	NUT, METRIC NY ANC (1/4–14) (9.7 SQ. HOLE)	7–J5,37
91–96	Y	10285647	1	28.90	PLATE, FRT LIC PLT NA (PAINT TO MATCH)	7–J11,33
84–87	Y (EXC VD1, VE1 EXPORT) ..	14049269	1	35.90	PLATE, FRT LICENSE NAME (CORVETTE)	7–J5,38
88	Y (EXC VL4 EXPORT)	14049269	1	35.90	PLATE, FRT LICENSE NAME (CORVETTE)	7–J5,38
89–90	Y	14049269	1	35.90	PLATE, FRT LICENSE NAME (CORVETTE)	7–J5,38
	*EXPORT****************EXPORT****************EXPORT****************EXPORT****************EXPORT*					
94–96	Y FRT LIC PLT MTG PKG (VL4) (EXPORT)	10209701	1	14.80	BRACKET, FRT LIC PLT (BLACK)	7–J11,33
84–88	Y T89 (EXPORT)	14049271	1	DISCON	BRACKET, RR	
94–96	Y RR LIC PLT MTG PKG (VL5) (EXPORT)	16519807	1	49.60	BRACKET, RR LIC PLT	7–J21,28
84–87	Y VD1 (EXPORT)	14049268	1	DISCON	PANEL, FRT MT	
88	Y VL4 (EXPORT)	14049268	1	DISCON	PANEL, FRT MT	
84–88	Y VB4, VE1, VD1 VT7 (EXPORT)	14076530	1	DISCON	REINFORCEMENT, RR BPR FASCIA LIC PKT	
84–88	Y T89, T90 (EXPORT)	14049270	1	DISCON	RETAINER, RR BRKT	

© 2000 GENERAL MOTORS SERVICE PARTS OPERATIONS–CHEVROLET–14Y

7.800 BRACKET – COVER – NUT – PANEL – PLATE – REINFORCEMENT – RETAINER – RIVET – SUPPORT, License Plate (Con't)

94–96	Y RR LIC PLT MTG PKG (VL5) (EXPORT)	10125439	2	*.65	RIVET, RR LIC PLT BRKT (23.5LG 9.89 OD) (08.967)	7–J21,30
95	Y RR LIC PLT MTG PKG (VL5) (EXPORT)	10201332	2	*.70	RIVET, RR LIC PLT BRKT (12.118)	
84–88	Y T89, T90 (EXPORT)	14049273	1	DISCON	SUPPORT, RR BRKT	

7.831 BAR – BRACKET – COVER – EXTENSION – FASCIA – NUT – REINFORCEMENT – RETAINER – RIVET – SPACER – STIFFENER, Bumper/Fascia Face

84–88	Y	10135948	1	299.90	BAR, FRT BPR IMP (MAY NEED TO ORDER 101359-9 & 50 REINFORCEMENTS) (DISCARD CTR BRKT & END BRACES, NEW CTR REINFS REQ, MAY NEED TO ENLARGE BOTH THE RECT AND CIRCULAR OPENINGS TO PROPERLY INSTALL LAMPS) ..	7–J5,48
89	Y (2ND DES)	10135948	1	299.90	BAR, FRT BPR IMP (HAS 2PC REINF)	7–J5,48
89	Y (1ST DES)	10135948	1	299.90	BAR, FRT BPR IMP (HAS 1PC REINF, DICSCARD CTR BRKT & END BRACES, NEW CTR REINF'S REQ)	7–J5,48
90	Y	10135948	1	299.90	BAR, FRT BPR IMP	7–J5,48
91–96	Y	10277159	1	210.60	BAR, FRT BPR IMP	7–J11,22
84–90	Y BRACKET NOT USED ON 90 AND PAST MDL.	10153670	1	1113.90	BAR, RR BPR IMP ((W/BRKT TO MNT VAPOR CAISTER))	7–J15,19
91–92	Y	10153670	1	1113.90	BAR, RR BPR IMP	7–J15,19
93	Y (1ST DES)	10153670	1	1113.90	BAR, RR BPR IMP (W/2 RECTANGULAR OPENINGS) ..	7–J15,19
93	Y (2ND DES)	10246744	1	1078.90	BAR, RR BPR IMP (W/O RECTANGULAR OPENINGS) ..	7–J21,2
94–96	Y	10246744	1	1078.90	BAR, RR BPR IMP (W/O RECTANGULAR OPENING) ...	7–J21,2
84–88	Y	14049078	2	5.50	BRACKET, FRT BPR FACIA REINF (CTR) (ONE ON EACH END) ..	7–J5,52
93–96	Y	10216905	2	1.30	BRACKET, R/END FASCIA CTR ..	7–J25,24
84–88	Y	14078643	LH	16.30	EXTENSION, FRT BPR IMP BAR SKID PLT	7–J5,7
84–88	Y	14078644	RH	20.10	EXTENSION, FRT BPR IMP BAR SKID PLT	7–J5,7
89	Y (5.7–8)	14078643	LH	16.30	EXTENSION, FRT BPR IMP BAR SKID PLT	7–J5,7
89	Y (5.7–8)	14078644	RH	20.10	EXTENSION, FRT BPR IMP BAR SKID PLT	7–J5,7
95–96	Y (EXC SPA TIRE)	10265938	1	228.30	EXTENSION, RR BPR IMP BAR ..	7–J25,26
84–90	Y	14030201	1	399.00	FASCIA, FRT BPR	7–J5,30
91–96	Y	10285343	1	420.00	FASCIA, FRT BPR (PAINT TO MATCH)	7–J11,34
90–95	Y SPECIAL PERFORMANCE PKG (ZR1)	10153675	1	832.00	FASCIA, R/END	7–J17,6
91–93	Y (EXC SPECIAL PERFORMANCE PKG (ZR1)	10135972	1	750.60	FASCIA, R/END	7–J19,3
94–95	Y (EXC SIG & MKR LP (T90) (EXPORT), SPECIAL PERFORMANCE PKG (ZR1)	10135972	1	750.60	FASCIA, R/END	7–J19,3
96	Y	10135972	1	750.60	FASCIA, R/END	7–J19,3

© 2000 GENERAL MOTORS SERVICE PARTS OPERATIONS–CHEVROLET–14Y

MICROFICHE INDEX

GROUPS 6.000 THRU 7.000

FICHE 7 OF 11

GROUP	DESCRIPTION	STARTING GRID LOCATION PARTS	ILLUSTRATIONS
–	GENERAL INFORMATION	1–A2	1–G2
–	ALPHABETICAL INDEX	1–B13	N.A.
6.000	FRONT SUSPENSION – STEERING	7–A2	7–E2
7.000	FRAMES – SPRINGS – SHOCKS – BUMPERS	7–C2	7–H2
–	OUT OF FICHE CALLS	N.A.	7–M17

7–D1

7.831 BAR – BRACKET – COVER – EXTENSION – FASCIA – NUT – REINFORCEMENT – RETAINER – RIVET – SPACER – STIFFENER, Bumper/Fascia Face(Con't)

84–88	Y (EXC EXPORT)	14030202	1	858.90	FASCIA, RR BPR (ON 86–90 Y67, NEED TO CUT OUT OPENING FOR HI–MOUNT STOP LAMP)	7–J15,1
89	Y	14030202	1	858.90	FASCIA, RR BPR (ON 86–90 Y67, NEED TO CUT OUT OPENING FOR HI–MOUNT STOP LAMP .	7–J15,1
90	Y (EXC SPL PERF PKG ZR1) .	14030202	1	858.90	FASCIA, RR BPR (ON 86–90 Y67, NEED TO CUT OUT OPENING FOR HI–MOUNT STOP LAMP .	7–J15,1
91–96	Y	347347	8	*1.00	NUT, FRT BPR FASCIA REINF (UPLEVEL) (01.267)	7–J11,18
91–96	Y	347347	4	*1.00	NUT, FRT BPR FASCIA RET (UPLEVEL) (01.267)	7–J11,18
95–96	Y (EXC SPA TIRE)	10237960	2	.44	NUT, RR BPR IMP BAR EXTN (M6X1.0) (10.512)	7–J25,39
84–96	Y	10149203	LH	60.10	REINFORCEMENT, FRT BPR FASCIA (OTR)	7–J5,16
84–96	Y	10149204	RH	61.10	REINFORCEMENT, FRT BPR FASCIA (OTR)	7–J5,16
84–88	Y	14049010	1	91.80	REINFORCEMENT, FRT BPR FASCIA (CTR)	7–J5,53
84–90	Y	10135949	LH	20.60	REINFORCEMENT, FRT BPR FASCIA CTR	7–J8,16
84–90	Y	10135950	RH	20.60	REINFORCEMENT, FRT BPR FASCIA CTR	7–J8,16
91–96	Y	10149201	1	26.00	REINFORCEMENT, FRT BPR FASCIA CTR	7–J11,25
89–96	Y	10132965	1	3.60	REINFORCEMENT, R/END FASCIA LWR CTR	7–J15,28
90	Y SPECIAL PERFORMANCE PKG (ZR1)	14104202	2	4.90	REINFORCEMENT, R/END FASCIA SI LWR (OTR)	7–J17,11
91–96	Y	14104202	2	4.90	REINFORCEMENT, R/END FASCIA SI LWR (OTR)	7–J17,11
84–89	Y	14069614	1	9.70	REINFORCEMENT, RR BPR FASCIA (UPR)	7–J15,22
04–88	Y	14069615	LH	6.90	REINFORCEMENT, RR BPR FASCIA (LWR)	7–J15,24
84–89	Y	14069616	RH	6.90	REINFORCEMENT, RR BPR FASCIA (LWR)	7–J15,24
89–90	Y (EXC SPL PERF PKG ZR1) .	14069615	LH	6.90	REINFORCEMENT, RR BPR FASCIA (LWR)	7–J15,24
90	Y (EXC SPL PERF PKG ZR1) .	14069614	1	9.70	REINFORCEMENT, RR BPR FASCIA (UPR)	7–J15,22
90	Y (EXC SPL PERF PKG ZR1) .	14069616	RH	6.90	REINFORCEMENT, RR BPR FASCIA (LWR)	7–J15,24
84–88	Y	10149282	2	9.50	RETAINER, FRT BPR FASCIA (OTR)	7–J5,17
84–90	Y	14046637	1	16.30	RETAINER, FRT BPR FASCIA (CTR)	7–J5,44
89–90	Y	10149282	2	9.50	RETAINER, FRT BPR FASCIA ...	7–J5,17
91–96	Y	10146498	1	22.10	RETAINER, FRT BPR FASCIA (22.4" LONG) (STRAIGHT)	7–J11,9
91–96	Y	10149202	2	3.60	RETAINER, FRT BPR FASCIA (AIR DEFLECTOR) (17.8" LONG) (CURVED)	7–J11,26
84–86	Y	5973400	AR	*.70	RETAINER, PUSH IN RR BPR FASCIA (SNAP–IN PIN LOCK) (22.5MM LONG) (01.269)	7–J15,17
84–96	Y	14100248	2	9.80	RETAINER, R/END FASCIA SI CTR (M62X22 W/2 STUDS)	7–J15,9
90	Y	10149275	LH	9.40	RETAINER, R/END FASCIA SI CTR .	7–J15,2

© 2000 GENERAL MOTORS SERVICE PARTS OPERATIONS–CHEVROLET–14Y

7.831 BAR – BRACKET – COVER – EXTENSION – FASCIA – NUT – REINFORCEMENT – RETAINER – RIVET – SPACER – STIFFENER, Bumper/Fascia Face(Con't)

90	Y	10149276	RH	9.40	RETAINER, R/END FASCIA SI CTR	7–J15,2
91–93	Y (EXC SPECIAL PERFORMANCE PKG (ZR1)	10149213	LH	9.40	RETAINER, R/END FASCIA SI CTR	7–J19,8
91–93	Y (EXC SPECIAL PERFORMANCE PKG (ZR1)	10149214	RH	9.40	RETAINER, R/END FASCIA SI CTR	7–J19,8
91–95	Y SPECIAL PERFORMANCE PKG (ZR1)	10149275	LH	9.40	RETAINER, R/END FASCIA SI CTR	7–J15,2
91–95	Y SPECIAL PERFORMANCE PKG (ZR1)	10149276	RH	9.40	RETAINER, R/END FASCIA SI CTR	7–J15,2
94–95	Y (EXC SIG & MKR LP (T90) (EXPORT), SPECIAL PERFORMANCE PKG (ZR1)	10149213	LH	9.40	RETAINER, R/END FASCIA SI CTR	7–J19,8
94–95	Y (EXC SIG & MKR LP (T90) (EXPORT), SPECIAL PERFORMANCE PKG (ZR1)	10149214	RH	9.40	RETAINER, R/END FASCIA SI CTR	7–J19,8
96	Y (EXC SIG & MKR LP (T90) (EXPORT)	10149213	LH	9.40	RETAINER, R/END FASCIA SI CTR	7–J19,8
96	Y (EXC SIG & MKR LP (T90) (EXPORT)	10149214	RH	9.40	RETAINER, R/END FASCIA SI CTR	7–J19,8
90–95	Y (EXC SPECIAL PERFORMANCE PKG (ZR1)	14046629	1	27.00	RETAINER, R/END FASCIA UPR CTR	7–J15,13
90–95	Y SPECIAL PERFORMANCE PKG (ZR1)	14104190	1	14.10	RETAINER, R/END FASCIA UPR CTR	7–J17,1
96	Y	14046629	1	27.00	RETAINER, R/END FASCIA UPR CTR	7–J15,13
84–89	Y	10272907	LH	18.60	RETAINER, R/END FASCIA UPR OTR (4 STUDS)	7–J15,15
84–89	Y	10272908	RH	18.60	RETAINER, R/END FASCIA UPR OTR (4 STUDS)	7–J15,15
90–95	Y (EXC SPECIAL PERFORMANCE PKG (ZR1)	10272907	LH	18.60	RETAINER, R/END FASCIA UPR OTR (4 STUDS)	7–J15,15
90–95	Y (EXC SPECIAL PERFORMANCE PKG (ZR1)	10272908	RH	18.60	RETAINER, R/END FASCIA UPR OTR (4 STUDS)	7–J15,15
90–95	Y SPECIAL PERFORMANCE PKG (ZR1)	14104193	LH	10.20	RETAINER, R/END FASCIA UPR OTR	7–J17,16
90–95	Y SPECIAL PERFORMANCE PKG (ZR1)	14104194	RH	10.20	RETAINER, R/END FASCIA UPR OTR	7–J17,16
96	Y	10272907	LH	18.60	RETAINER, R/END FASCIA UPR OTR (4 STUDS)	7–J15,15
96	Y	10272908	RH	18.60	RETAINER, R/END FASCIA UPR OTR (4 STUDS)	7–J15,15
84–89	Y	14046629	1	27.00	RETAINER, RR BPR FASCIA (CTR)	7–J15,13
84–89	Y	14046704	2	11.80	RETAINER, RR BPR FASCIA (LWR)	7–J15,2
89–90	Y	2495701	8	*.96	RIVET, FRT BPR IMP BAR PLT (08.967)	7–J8,21
93–94	Y	10201332	16	*.70	RIVET, R/END FASCIA UPR CTR RET (12.118)	
93	Y SPECIAL PERFORMANCE PKG (ZR1)	10224097	2	DISCON	RIVET, R/END FASCIA UPR CTR RET	
95	Y SPECIAL PERFORMANCE PKG (ZR1)	10201332	2	*.70	RIVET, R/END FASCIA UPR CTR RET (12.118)	
84–93	Y	14049001	4	2.40	SPACER, R/END FASCIA	7–J15,11
94–96	Y (EXC EUROPEAN PROVISIONS (VD1) (EXPORT), RR LIC PLT MTG PKG (VL5) (EXPORT)	14049001	4	2.40	SPACER, R/END FASCIA	7–J15,11
93	Y	10193634	2	8.60	STIFFENER, FRT BPR FASCIA UPR (PAINT TO MATCH)	

© 2000 GENERAL MOTORS SERVICE PARTS OPERATIONS–CHEVROLET–14Y

7.831 BAR – BRACKET – COVER – EXTENSION – FASCIA – NUT – REINFORCEMENT – RETAINER -- RIVET – SPACER – STIFFENER, Bumper/Fascia Face(Con't)

	*EXPORT**********EXPORT*	*EXPORT**********EXPORT*		*EXPORT**********EXPORT*		*EXPORT*
84–88	Y T89 (EXPORT)	14049290	2	DISCON	COVER, RR BPR FASCIA ACC HOLE	
94	Y SIG & MKR LP (T90) (EXPORT), (EXC SPECIAL PERFORMANCE PKG (ZR1)	10204700	1	789.20	FASCIA, R/END	7–J25,3
95	Y SIG & MKR LP (T90) (EXPORT), (EXC SPECIAL PERFORMANCE PKG (ZR1)	10261523	1	832.00	FASCIA, R/END	7–J25,3
96	Y SIG & MKR LP (T90) (EXPORT)	10261523	1	832.00	FASCIA, R/END	7–J25,3
84–88	Y EXPORT	14049139	1	DISCON	FASCIA, RR BPR	
94–96	Y SIG & MKR LP (T90) (EXPORT)	10149275	LH	9.40	RETAINER, R/END FASCIA SI CTR .	7–J15,2
94–96	Y SIG & MKR LP (T90) (EXPORT)	10149276	RH	9.40	RETAINER, R/END FASCIA SI CTR .	7–J15,2

7.832 CLIP – EMBLEM – MOLDING – MOLDING KIT – PLATE – SPACER – STRIPE – TAPE, Bumper/Fascia

84–88	Y	14070266	2	DISCON	CLIP, FRT BPR FASCIA OTR MLDG	
89–90	Y	14070266	2	DISCON	CLIP, BODY SI MLDG	
90–95	Y SPECIAL PERFORMANCE PKG (ZR1), (10U)	10146443	2	25.80	EMBLEM, R/END FASCIA (WHITE) (BOWTIE, ZR1)	7–J21,19
90–92	Y SPECIAL PERFORMANCE PKG (ZR1), (75U)	10146446	1	DISCON	EMBLEM, R/END FASCIA (BOWTIE, ZR1) (COLOR CODE WA9238) (LIGHT RED)	
90–92	Y SPECIAL PERFORMANCE PKG (ZR1), (81U)	10146447	2	25.80	EMBLEM, R/END FASCIA (RED) (BOWTIE, ZR1)	7–J21,19
90–91	Y SPECIAL PERFORMANCE PKG (ZR1), (41U), (96U) ...	10146448	1	25.80	EMBLEM, R/END FASCIA (BLACK/GRAY) (BOWTIE, Z21)	7–J17,19
90	Y SPECIAL PERFORMANCE PKG (ZR1), (53U)	10153678	1	25.80	EMBLEM, R/END FASCIA (ZR1, YELLOW)	7–J21,19
90–93	Y SPECIAL PERFORMANCE PKG (ZR1), (80U)	10153679	1	DISCON	EMBLEM, R/END FASCIA (BLUE) (BOWTIE, ZR1)	
90–91	Y SPECIAL PERFORMANCE PKG (ZR1), (42U)	10153700	1	DISCON	EMBLEM, R/END FASCIA (TURQUOISE) (BOWTIE, ZR1) .	
90–91	Y SPECIAL PERFORMANCE PKG (ZR1), (25U)	10172309	1	DISCON	EMBLEM, R/END FASCIA (BLUE STEEL) (BOWTIE, ZR1)	
91	Y SPECIAL PERFORMANCE PKG (ZR1), (19U)	10146448	1	25.80	EMBLEM, R/END FASCIA (BLACK/GRAY) (BOWTIE, Z21)	7–J17,19
91–92	Y SPECIAL PERFORMANCE PKG (ZR1), (35U)	10167090	1	13.10	EMBLEM, R/END FASCIA (YELLOW) (BOWTIE, ZR1)	7–J21,19
92–95	Y SPECIAL PERFORMANCE PKG (ZR1), (43U)	10175826	1	25.80	EMBLEM, R/END FASCIA (AQUA) (BOWTIE, ZR1)	7–J21,19
92–94	Y SPECIAL PERFORMANCE PKG (ZR1), (73U)	10198747	1	10.50	EMBLEM, R/END FASCIA (BLACK ROSE) (BOWTIE, ZR1)	7–J21,19
92–95	Y SPECIAL PERFORMANCE PKG (ZR1), (41U)	10268455	1	10.50	EMBLEM, R/END FASCIA (BLACK) .	7–J21,19
92–95	Y SPECIAL PERFORMANCE PKG (ZR1), (45U)	10268456	1	10.50	EMBLEM, R/END FASCIA (MARBLEHEAD GRAY)	7–J21,19
93	Y SPECIAL PERFORMANCE PKG (ZR1), (75U), (1ST DES)	10146446	1	DISCON	EMBLEM, R/END FASCIA (BOWTIE, ZR1) (COLOR CODE WA9238) (LIGHT RED)	
93–95	Y SPECIAL PERFORMANCE PKG (ZR1), (53U)	10153678	1	25.80	EMBLEM, R/END FASCIA (YELLOW) (BOWTIE, ZR1)	7–J21,19
93–95	Y SPECIAL PERFORMANCE PKG (ZR1), (70U)	10198688	1	25.80	EMBLEM, R/END FASCIA (RED) (BOWTIE, ZR1)	7–J21,19

© 2000 GENERAL MOTORS SERVICE PARTS OPERATIONS–CHEVROLET–14Y

7.832 CLIP – EMBLEM – MOLDING – MOLDING KIT – PLATE – SPACER – STRIPE – TAPE, Bumper/Fascia (Con't)

93	Y SPECIAL PERFORMANCE PKG (ZR1), (68U), (2ND DES)	10228815	1	10.90	EMBLEM, R/END FASCIA (BOWTIE, ZR1) (COLOR CODE WA213A) (DARK RED)	7–J21,19
94–95	Y SPECIAL PERFORMANCE PKG (ZR1), (75U)	10146446	1	DISCON	EMBLEM, R/END FASCIA (BOWTIE, ZR1)	
94–95	Y SPECIAL PERFORMANCE PKG (ZR1), (28U)	10210902	1	25.80	EMBLEM, R/END FASCIA (CLOISONNE BLUE)	7–J21,19
94	Y SPECIAL PERFORMANCE PKG (ZR1), (66U)	10210905	1	DISCON	EMBLEM, R/END FASCIA (MELON)	
95	Y SPECIAL PERFORMANCE PKG (ZR1), (05U)	10233119	1	25.80	EMBLEM, R/END FASCIA (CYCLAMAN)	7–J21,19
91–95	Y SPECIAL PERFORMANCE PKG (ZR1)	10174848	LH	77.80	MOLDING KIT, RR BPR FASCIA CTR (PAINT TO MATCH)	7–J21,9
91–95	Y SPECIAL PERFORMANCE PKG (ZR1)	10174849	RH	77.80	MOLDING KIT, RR BPR FASCIA CTR (PAINT TO MATCH)	7–J21,9
88	Y 35 ANNIV (Z01)	10123015	LH	DISCON	MOLDING, FRT BPR FASCIA (OTR)	
88	Y 35 ANNIV (Z01)	10123016	RH	DISCON	MOLDING, FRT BPR FASCIA (OTR)	
88	Y 35 ANNIV (Z01), W/DLX EXTR TR (B57)	10123017	1	DISCON	MOLDING, FRT BPR FASCIA (CTR)	
84–88	Y (EXC DLX EXTR TR B57) ..	14043087	1	53.60	MOLDING, FRT BPR FASCIA CTR .	7–J5,36
89–90	Y	14043087	1	53.60	MOLDING, FRT BPR FASCIA CTR .	7–J5,36
84–88	Y (EXC DLX EXTR TR B57) ..	14043089	LH	21.90	MOLDING, FRT BPR FASCIA OTR .	7–J5,18
84–88	Y (EXC DLX EXTR TR B57) ..	14043090	RH	21.90	MOLDING, FRT BPR FASCIA OTR .	7–J5,18
89–90	Y	14043089	LH	21.90	MOLDING, FRT BPR FASCIA OTR .	7–J5,18
89–90	Y	14043090	RH	21.90	MOLDING, FRT BPR FASCIA OTR .	7–J5,18
88	Y 35 ANNIV (Z01)	10123011	LH	DISCON	MOLDING, RR BPR FASCIA (OTR) .	
88	Y 35 ANNIV (Z01)	10123012	RH	DISCON	MOLDING, RR BPR FASCIA (OTR) .	
88	Y 35 ANNIV (Z01) (EXC T89, T90 EXPORT)	10123013	LH	DISCON	MOLDING, RR BPR FASCIA (CTR) .	
88	Y 35 ANNIV (Z01) (EXC T89, T90 EXPORT)	10123014	RH	DISCON	MOLDING, RR BPR FASCIA (CTR) .	
84–86	Y (EXC VB4, VD1, VE1, VT7 EXPORT)	14043139	LH	31.10	MOLDING, RR BPR FASCIA CTR	7–J15,4
84–86	Y (EXC VB4, VD1, VE1, VT7 EXPORT)	14043140	RH	31.10	MOLDING, RR BPR FASCIA CTR	7–J15,4
87	Y (EXC T89, T90 EXPORT) ..	14043139	LH	31.10	MOLDING, RR BPR FASCIA CTR	7–J15,4
87	Y (EXC T89, T90 EXPORT) ..	14043140	RH	31.10	MOLDING, RR BPR FASCIA CTR	7–J15,4
88	Y (EXC DLX EXTR TR B57, T89, T90 EXPORT)	14043139	LH	31.10	MOLDING, RR BPR FASCIA CTR	7–J15,4
88	Y (EXC DLX EXTR TR B57, T89, T90 EXPORT)	14043140	RH	31.10	MOLDING, RR BPR FASCIA CTR	7–J15,4
89	Y	14043139	LH	31.10	MOLDING, RR BPR FASCIA CTR	7–J15,4
89	Y	14043140	RH	31.10	MOLDING, RR BPR FASCIA CTR	7–J15,4
90	Y SOFT RIDE SUSP (FE1) (EXC SPL PERF PKG ZR1) .	14043139	LH	31.10	MOLDING, RR BPR FASCIA CTR	7–J15,4
90	Y SOFT RIDE SUSP (FE1) (EXC SPL PERF PKG ZR1) .	14043140	RH	31.10	MOLDING, RR BPR FASCIA CTR	7–J15,4
90	Y H.D. SUSP (FE7), SPL PERF PKG (ZR1)	14104449	LH	51.50	MOLDING, RR BPR FASCIA CTR	7–J17,9
90	Y H.D. SUSP (FE7), SPL PERF PKG (ZR1)	14104450	RH	51.50	MOLDING, RR BPR FASCIA CTR	7–J17,9
84–87	Y	14043133	LH	17.20	MOLDING, RR BPR FASCIA OTR	7–J15,5
84–87	Y	14043134	RH	17.20	MOLDING, RR BPR FASCIA OTR	7–J15,5
88	Y (EXC DLX EXTR TR B57) ..	14043133	LH	17.20	MOLDING, RR BPR FASCIA OTR	7–J15,5
88	Y (EXC DLX EXTR TR B57) ..	14043134	RH	17.20	MOLDING, RR BPR FASCIA OTR	7–J15,5
89	Y	14043133	LH	17.20	MOLDING, RR BPR FASCIA OTR	7–J15,5
89	Y	14043134	RH	17.20	MOLDING, RR BPR FASCIA OTR	7–J15,5

© 2000 GENERAL MOTORS SERVICE PARTS OPERATIONS–CHEVROLET–14Y

7.832 CLIP – EMBLEM – MOLDING – MOLDING KIT – PLATE – SPACER – STRIPE – TAPE, Bumper/Fascia (Con't)

90	Y SOFT RIDE SUSP (FE1), HVY DUTY SUSP (FE7), (EXC SPECIAL PERFORMANCE PKG (ZR1)	14043133	LH	17.20	MOLDING, RR BPR FASCIA OTR	7–J15,5
90	Y SOFT RIDE SUSP (FE1), HVY DUTY SUSP (FE7), (EXC SPECIAL PERFORMANCE PKG (ZR1)	14043134	RH	17.20	MOLDING, RR BPR FASCIA OTR	7–J15,5
90	Y H .D. SUSP (FE7), SPL PERF PKG (ZR1)	14104451	LH	37.80	MOLDING, RR BPR FASCIA OTR	7–J17,10
90	Y H .D. SUSP (FE7), SPL PERF PKG (ZR1)	14104452	RH	37.80	MOLDING, RR BPR FASCIA OTR	7–J17,10
85–90	Y (81U)	14089662	1	28.70	PLATE, R/END FASCIA NA (CORVETTE)	10–G19,10
87–90	Y (20U)	14105571	1	28.70	PLATE, R/END FASCIA NA (CORVETTE) (NASSAU BLUE) .	10–G22,14
88–90	Y (96U)	10072149	1	28.70	PLATE, R/END FASCIA NA (CORVETTE) (SMOKE GRAY) .	10–G22,14
88–90	Y (13U), (28U), (96U)	14058697	1	30.40	PLATE, R/END FASCIA NA (CORVETTE) (BLACK W/SILVER BORDER)	7–J15,21
89–90	Y (68U)	10125923	1	28.70	PLATE, R/END FASCIA NA (CORVETTE)	10–G22,14
89–90	Y (10U)	10137293	1	DISCON	PLATE, R/END FASCIA NA (CORVETTE)	
90	Y SOFT RIDE SUSP (FE1), HVY DUTY SUSP (FE7), (41U)	10072149	1	28.70	PLATE, R/END FASCIA NA (CORVETTE) (SMOKE GRAY) .	10–G22,14
90	Y (91U)	10072149	1	28.70	PLATE, R/END FASCIA NA (CORVETTE, SMOKE GRAY) ..	10–G22,14
90	Y SPECIAL PERFORMANCE PKG (ZR1), (20U)	10146444	1	DISCON	PLATE, R/END FASCIA NA (BOWTIE) (BLUE)	
90	Y (42U)	10153697	1	DISCON	PLATE, R/END FASCIA NA (TURQUOISE)	
90	Y (53U)	10153698	1	DISCON	PLATE, R/END FASCIA NA (YELLOW)	
90	Y (80U)	10153699	1	DISCON	PLATE, R/END FASCIA NA (QUASAR BLUE)	
90	Y (25U)	10172308	1	DISCON	PLATE, R/END FASCIA NA (STEEL BLUE)	
91–93	Y SPECIAL PERFORMANCE PKG (ZR1), (35U), (53U) ...	10167089	1	18.40	PLATE, R/END FASCIA NA (CORVETTE) (YELLOW)	7–J21,8
91–95	Y SPECIAL PERFORMANCE PKG (ZR1), (10U)	10172312	1	18.40	PLATE, R/END FASCIA NA (CORVETTE) (WHITE)	7–J21,8
91	Y SPECIAL PERFORMANCE PKG (ZR1), (25U)	10172313	1	18.40	PLATE, R/END FASCIA NA (BLUE, PAINT TO MATCH) (CORVETTE) .	7–J21,8
91	Y SPECIAL PERFORMANCE PKG (ZR1), (41U), (91U), (96U)	10172314	1	DISCON	PLATE, R/END FASCIA NA (SMOKE GRAY) (CORVETTE)	
91	Y SPECIAL PERFORMANCE PKG (ZR1), (42U)	10172315	1	DISCON	PLATE, R/END FASCIA NA (TURQUOISE) (CORVETTE) ...	
91–95	Y SPECIAL PERFORMANCE PKG (ZR1), (75U)	10172317	1	18.40	PLATE, R/END FASCIA NA (RED) (CORVETTE)	7–J21,8
91–93	Y SPECIAL PERFORMANCE PKG (ZR1), (80U)	10172318	1	DISCON	PLATE, R/END FASCIA NA (QUASAR) (CORVETTE)	
91–92	Y SPECIAL PERFORMANCE PKG (ZR1), (81U)	10172319	1	DISCON	PLATE, R/END FASCIA NA (RED) (CORVETTE)	
92–95	Y SPECIAL PERFORMANCE PKG (ZR1), (43U)	10175824	1	18.40	PLATE, R/END FASCIA NA (AQUA) (CORVETTE)	7–J21,8

© 2000 GENERAL MOTORS SERVICE PARTS OPERATIONS–CHEVROLET–14Y

7.832 CLIP – EMBLEM – MOLDING – MOLDING KIT – PLATE – SPACER – STRIPE – TAPE, Bumper/Fascia (Con't)

92–95	Y SPECIAL PERFORMANCE PKG (ZR1), (45U)	10198742	1	25.10	PLATE, R/END FASCIA NA (GREEN) (CORVETTE)	7–J21,8
92–94	Y SPECIAL PERFORMANCE PKG (ZR1), (73U)	10198743	1	25.10	PLATE, R/END FASCIA NA (BLACK ROSE) (CORVETTE)	7–J21,8
92–95	Y SPECIAL PERFORMANCE PKG (ZR1), (41U)	10268451	1	25.10	PLATE, R/END FASCIA NA (BLACK)	7–J21,8
93–95	Y SPECIAL PERFORMANCE PKG (ZR1), (70U)	10198686	1	DISCON	PLATE, R/END FASCIA NA (RED)	
93	Y SPECIAL PERFORMANCE PKG (ZR1), (68U)	10228814	1	26.80	PLATE, R/END FASCIA NA (RED)	7–J21,8
94–95	Y SPECIAL PERFORMANCE PKG (ZR1), (53U)	10167089	1	18.40	PLATE, R/END FASCIA NA (YELLOW)	7–J21,8
94–95	Y SPECIAL PERFORMANCE PKG (ZR1), (28U)	10210889	1	18.40	PLATE, R/END FASCIA NA (BLUE) .	7–J21,8
94	Y SPECIAL PERFORMANCE PKG (ZR1), (66U)	10210892	1	18.40	PLATE, R/END FASCIA NA (MELON)	7–J21,8
95	Y SPECIAL PERFORMANCE PKG (ZR1), (05U)	10233113	1	18.40	PLATE, R/END FASCIA NA (CYCLAMEN)	7–J21,8
95	Y INDY PACE CAR (Z4Z)	10278422	1	DISCON	PLATE, R/END FASCIA NA (INDY MTR SPDWY, WINGS & WHL) .	
84	Y (70L), (70U)	14064531	1	27.40	PLATE, RR BPR FASCIA (SPECTRA RED)	10–D5,12
84–87	Y (13U)	14058697	1	30.40	PLATE, RR BPR FASCIA NA (CORVETTE, BLACK W/SILVER BORDER	7–J15,21
84–87	Y (40U)	14064530	1	28.70	PLATE, RR BPR FASCIA NA (CORVETTE) (WHITE)	10–D5,12
84–85	Y	14064534	1	DISCON	PLATE, RR BPR FASCIA NA (CORVETTE) (LT BLUE MET) ..	
84–85	Y	14064535	1	DISCON	PLATE, RR BPR FASCIA NA (CORVETTE) (MED BLUE MET)	
84–87	Y (18U), (41U)	14064538	1	28.70	PLATE, RR BPR FASCIA NA (CORVETTE) (GRAY	10–D5,12
84–85	Y	14064539	1	DISCON	PLATE, RR BPR FASCIA NA (CORVETTE) (LT BRONZE MET) .	
84–85	Y	14064540	1	DISCON	PLATE, RR BPR FASCIA NA (CORVETTE) (DK BRONZE MET)	
84–87	Y	14064541	1	28.70	PLATE, RR BPR FASCIA NA (CORVETTE) (GOLD MET)	10–D5,12
86–87	Y (59U)	14094259	1	DISCON	PLATE, RR BPR FASCIA NA (CORVETTE) (SILVER BEIGE) .	
86–89	Y (35U)	14094260	1	DISCON	PLATE, RR BPR FASCIA NA (CORVETTE) (YELLOW)	
86–87	Y (69U)	14094261	1	DISCON	PLATE, RR BPR FASCIA NA (CORVETTE) (DK BEIGE)	
86–88	Y	14094262	1	DISCON	PLATE, RR BPR FASCIA NA (CORVETTE) (FLAME RED) ...	
87	Y (66U)	10069884	1	DISCON	PLATE, RR BPR FASCIA NA (CORVETTE) (RUSSET)	
88	Y (28U)	10072148	1	DISCON	PLATE, RR BPR FASCIA NA (SAPPHIRE)	
88	Y (96U)	10072150	1	DISCON	PLATE, RR BPR FASCIA NA (DK GRAY SMOKE)	
88	Y 35 ANNIVERSARY (Z01), (40U)	10123020	1	DISCON	PLATE, RR BPR FASCIA NA (CORVETTE) (WHITE)	
88	Y (40U), (EXC DELUXE EXTR TR (B57)	14064530	1	28.70	PLATE, RR BPR FASCIA NA (CORVETTE) (WHITE)	10–D5,12
88–89	Y (28U), (41U), (96U)	14064538	1	28.70	PLATE, RR BPR FASCIA NA (CORVETTE) (GRAY	10–D5,12

© 2000 GENERAL MOTORS SERVICE PARTS OPERATIONS–CHEVROLET–14Y

7.832 CLIP – EMBLEM – MOLDING – MOLDING KIT – PLATE – SPACER – STRIPE – TAPE, Bumper/Fascia (Con't)

90–96	Y	101492[illegible]1	4	2.20	SPACER, FRT BPR IMP BAR SKID PLT TIE BAR	7–J8,23
96	Y GRAND SPORT EDITION (Z16)	10279777	1	15.30	STRIPE, FRT BPR FASCIA UPR	10–D19,2
96	Y GRAND SPORT EDITION (Z16), (EXC EUROPEAN PROVISIONS (VD1) (EXPORT)	10279786	1	34.70	STRIPE, RR BPR FASCIA LWR	10–D19,11
94–95	Y	10175547	LH	4.30	TAPE, FRT BPR FASCIA BLACKOUT (LP OPENING CTR) (BLACK)	7–J11,40
94–95	Y	10175348	RH	4.30	TAPE, FRT BPR FASCIA BLACKOUT (LP OPENING CTR) (BLACK)	7–J11,40
94–96	Y	10280079	LH	2.40	TAPE, FRT BPR FASCIA OTR COR BLACKOUT	7–J11,41
94–96	Y	10280080	RH	2.40	TAPE, FRT BPR FASCIA OTR COR BLACKOUT	7–J11,41
	*EXPORT**********EXPORT**********EXPORT**********EXPORT**********EXPORT*					
84–88	Y EXPORT	14049255	LH	DISCON	MOLDING, RR BPR FASCIA (CTR INR)	
84–88	Y EXPORT	14049256	RH	DISCON	MOLDING, RR BPR FASCIA (CTR INR)	
84–88	Y EXPORT	14049257	LH	DISCON	MOLDING, RR BPR FASCIA (CTR OTR)	
84–88	Y EXPORT	14049258	RH	DISCON	MOLDING, RR BPR FASCIA (CTR OTR)	
96	Y67 EUROPEAN PROVISIONS (VD1) (EXPORT), GRAND SPORT EDITION (Z16)	10279788	1	67.90	STRIPE, RR BPR FASCIA LWR	10–D19,11

7.833 BRACE – BRACKET – RETAINER – SHIM – STUD – SUPPORT – WASHER, Bumper/Fascia

84–88	Y	14076525	LH	5.80	BRACE, FRT BPR FASCIA	7–J5,50
84–88	Y	14076526	RH	5.80	BRACE, FRT BPR FASCIA	7–J5,50
84	Y	14076519	LH	DISCON	BRACKET, RR BPR FASCIA OTR	
84	Y	14076520	RH	DISCON	BRACKET, RR BPR FASCIA OTR	
84–90	Y (EXC PERFORMANCE HANDLING PKG (Z51)	14043166	2	6.90	RETAINER, FRT OTR A/DFL (LWR) (01.272)	7–J5,27
85–90	Y	14090620	AR	1.80	SHIM, FRT BPR IMP BAR (30MM DIA) (POSN #4)	7–J5,55
84–90	Y	14060237	4	3.60	STUD, FRT BPR IMP BAR	7–J5,42
87–89	Y	14100241	LH	10.90	SUPPORT, RR BPR FASCIA (07.836)	10–G16,34
87–89	Y	14100242	RH	DISCON	SUPPORT, RR BPR FASCIA (07.836)	
90	Y (EXC SPECIAL PERFORMANCE PKG (ZR1)	14100241	LH	10.90	SUPPORT, RR BPR FASCIA (TO BODY) (07.836)	10–G16,34
90	Y (EXC SPECIAL PERFORMANCE PKG (ZR1)	14100242	RH	DISCON	SUPPORT, RR BPR FASCIA (TO BODY) (07.836)	
	*EXPORT**********EXPORT**********EXPORT**********EXPORT**********EXPORT*					
84	Y VE1 (EXPORT)	3771494	1	.45	WASHER, RR BPR FASCIA	

© 2000 GENERAL MOTORS SERVICE PARTS OPERATIONS–CHEVROLET–14Y

7.836 BAR – BOLT – BRACKET – PLATE – SUPPORT, Bumper/Fascia

90–96	Y	10143525	1	378.70	BAR, FRT BPR IMP BAR SKID PLT TIE	7–J8,20
91–96	Y	10172330	4	.50	BOLT, FRT BPR IMP BAR SKID PLT (M6.3X1.81X20) (07.874)	7–J11,14
90–96	Y	14066450	4	2.80	BOLT, FRT BPR IMP BAR SKID PLT TIE BAR (M8X1.25X55) (M8X1.25–6G, 10.9, PZO) (08.900)	7–J11,12
84–88	Y	14064558	1	5.50	BRACKET, FRT BPR FASCIA REINF (CTR)	7–J5,51
84–90	Y	14078685	2	26.80	PLATE, FRT BPR IMP BAR SKID	7–J5,10
91–96	Y	10135970	2	11.70	PLATE, FRT BPR IMP BAR SKID (07.831)	7–J11,21
91–96	Y	10153659	2	3.00	PLATE, FRT BPR IMP BAR STUD	7–J11,36
84–96	Y	14060231	2	13.80	SUPPORT, FRT BPR IMP BAR SKID PLT	7–J5,5
86	Y (2ND DES)	14100241	LH	10.90	SUPPORT, RR BPR FASCIA (WELDED SPACER ON ONE END)	7–J15,27
86	Y (1ST DES)	14064519	LH	DISCON	SUPPORT, RR W/H PNL (TUBULAR SECTION 221MM LONG) (12.944)	
86	Y (1ST DES)	14064520	RH	DISCON	SUPPORT, RR W/H PNL (TUBULAR SECTION 221MM LONG) (12.944)	
86	Y	14100242	RH	DISCON	SUPPORT, RR WHL HSE PNL (WELDED SPACER ON ONE END)	

7.840 ABSORBER – BOLT – SPACER, Bumper/Fascia Energy Absorber

84–90	Y	16500755	1	144.52	ABSORBER, FRT BPR FASCIA ENGY (AC–DELCO #16500755)	7–J5,46
91–96	Y	16519011	1	140.38	ABSORBER, FRT BPR FASCIA ENGY (AC–DELCO #16519011)	7–J11,35
90–92	Y	16519012	1	128.00	ABSORBER, R/END FASCIA ENGY (SOLID FOAM) ((MAY NEED TO ELIMINATE SPARE TIRE LAMP) (IF USE IN PLC OF EGG CRATE TYPE ABSORB, REFER TO 93 SERV MANUAL, SECT 10 FOR INSTALL)) (AC–DELCO #16519012)	7–J17,15
93–96	Y	16519012	1	128.00	ABSORBER, R/END FASCIA ENGY (SOLID FOAM) ((ON SOME 1993 VEHS IN PLC OF EGG CRATE TYPE ABSORB, REFER TO 93 SERV MANUAL, SECT 10 FOR INSTALL)) (AC–DELCO #16519012)	7–J17,15
84–89	Y	16504370	1	134.18	ABSORBER, RR BPR FASCIA ENGY (WHEN USED IN PLC OF 16500257 FOR 84–86, HOLES & SLOTS WILL NEED TO BE DRILLED LARGER) (AC–DELCO #16504370)	7–J15,18
90	Y (EXC SPECIAL PERFORMANCE PKG (ZR1)	16504370	1	134.18	ABSORBER, RR BPR FASCIA ENGY (AC–DELCO #16504370)	7–J15,18
90–91	Y SOFT RIDE SUSP (FE1), H .D .SUSP (FE7)	11515758	2	*.36	BOLT, RR S/ABS UPR BRKT (M8X1.25X30, 28 THD, 18 OD, 10.9, 7114M, MACH) (08.900)	7–H21,31

© 2000 GENERAL MOTORS SERVICE PARTS OPERATIONS–CHEVROLET–14Y

7.840 ABSORBER – BOLT – SPACER, Bumper/Fascia Energy Absorber (Con't)

93–96	Y	10216906	4	.59	SPACER, FRT BPR FASCIA ENGY ABS	7–J11,38
93–96	Y	10216906	4	.59	SPACER, R/END FASCIA ENGY ABS	7–J11,38

7.865 SHIM, Bumper/Fascia Mounting

84–96	Y	14046663	AR	5.60	SHIM, FRT BPR IMP BAR (POSN #1) (53MMX177MMX0.8MM) (07.833)	7–J5,57
84–96	Y	14046664	AR	5.60	SHIM, FRT BPR IMP BAR (POSN #2) (53MMX177MMX3MM) (07.833)	7–J5,57
84–93	Y	14081864	AR	1.80	SHIM, FRT BPR IMP BAR (POSN #3) (21MMX38MM)	7–J5,56

7.869 BRACKET, Bumper Mounting

90–96	Y	10086317	LH	3.40	BRACKET, FRT BPR IMP BAR SKID PLT SUPT	7–J8,24
90–96	Y	10086318	RH	3.40	BRACKET, FRT BPR IMP BAR SKID PLT SUPT	7–J8,24

7.874 BOLT – NUT, Bumper/Fascia Mounting

91–96	Y	10172330	4	.50	BOLT, FRT BPR FASCIA CTR REINF (M6.3X1.81X20)	7–J11,14
91–93	Y	10172330	12	.50	BOLT, FRT BPR FASCIA ENGY ABS (M6.3X1.81X20)	7–J11,14
91–96	Y	10172330	6	.50	BOLT, FRT T/SIG & FOG LP BRKT (M6.3X1.81X20)	7–J11,14
93–96	Y	10237960	2	.44	NUT, RR BPR IMP BAR (M6X1.0) (10.512)	
93	Y	10242415	2	*1.90	NUT, RR BPR IMP BAR (M6X1.0, LENGTH 15.5) (12.815)	

© 2000 GENERAL MOTORS SERVICE PARTS OPERATIONS–CHEVROLET–14Y

MICROFICHE INDEX

GROUPS 6.000 THRU 7.000

FICHE 7 OF 11

GROUP	DESCRIPTION	STARTING GRID LOCATION PARTS	ILLUSTRATIONS
–	GENERAL INFORMATION	1–A2	1–G2
–	ALPHABETICAL INDEX	1–B13	N.A.
6.000	FRONT SUSPENSION – STEERING	7–A2	7–E2
7.000	FRAMES – SPRINGS – SHOCKS – BUMPERS	7–C2	7–H2
–	OUT OF FICHE CALLS	N.A.	7–M17

7–E1

CHEVROLET
CHASSIS GROUP 6.000

ILLUSTRATION INDEX

	TITLE	GRID
1984–1987	Y SUSPENSION/FRONT	7–E4
1988	Y SUSPENSION/FRONT	7–E7
1989–1990	Y SUSPENSION/FRONT	7–E11
1991–1996	Y SUSPENSION/FRONT	7–E16
1984–1988	Y STEERING ASM/RACK & PINION–POWER	7–E23
1989–1992	Y STEERING ASM/RACK & PINION–POWER	7–E25
1993	Y STEERING GEAR ASM POWER	7–F2
1994–1996	Y STEERING GEAR ASM POWER	7–F4
1984–1989	Y STEERING WHEEL & HORN PARTS	7–F6
1990–1993	Y STEERING WHEEL & HORN PARTS	7–F7
1994–1996	Y STEERING WHEEL & HORN PARTS	7–F9
1984–1989	Y STEERING COLUMN/TILT & TELESCOPE (F/S, A.T.)	7–F10
1990–1993	Y STEERING COLUMN/TILT (S.I.R. F/S, A.T., M.T)	7–F13
1994–1996	Y STEERING COLUMN/TILT (S.I.R.,PASS KEY,F/S,A/T)	7–F21
1984–1991	Y STEERING PUMP ASM	7–G2
1992–1995	Y STEERING PUMP ASM (LT5/5.7J)	7–G6
1992–1995	Y STEERING PUMP ASM (LT1/5.7P)	7–G8
1996	Y STEERING PUMP ASM (LT1/5.7P)	7–G10
1984	Y STEERING PUMP MOUNTING & HOSES(L83)	7–G12
1985–1987	Y STEERING PUMP MOUNTING & HOSES(L98)	7–G14
1988–1989	Y STEERING PUMP MOUNTING & RELATED PARTS(L99)	7–G16
1990–1991	Y STEERING PUMP MOUNTING & RELATED PARTS(L98)	7–G18
1990–1995	Y STEERING PUMP MOUNTING & RELATED PARTS(LT5)	7–G20
1992–1996	Y STEERING PUMP MOUNTING & RELATED PARTS(LT1)	7–G22
1996	Y STEERING PUMP MOUNTING & RELATED PARTS(LT4)	7–G22

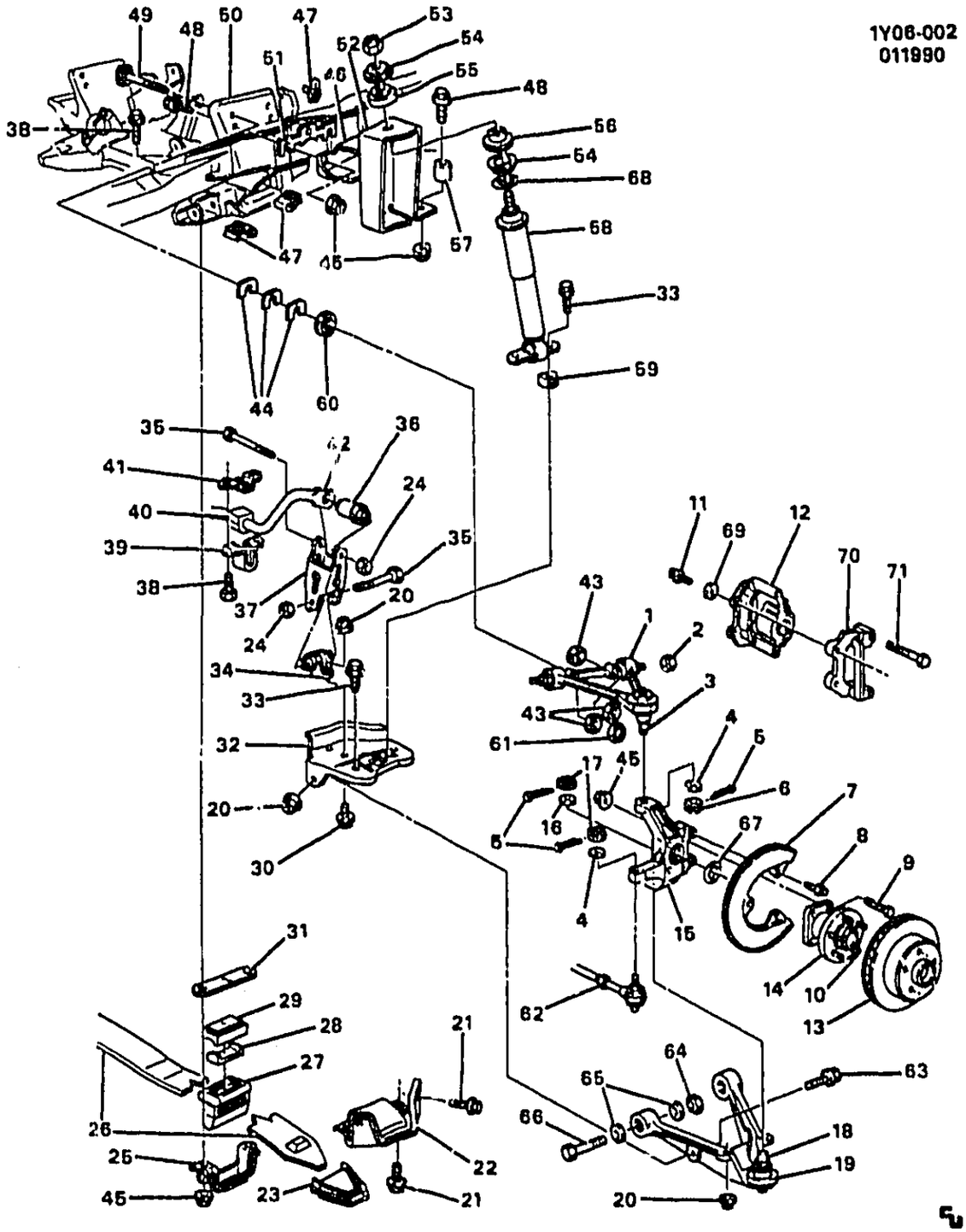

1984-1987 Y SUSPENSION/FRONT

1.		DISCON	ARM, UPR CONT-RH (INCL 4, 5, 17)	14067598
	7-A8	6.168	ARM, UPR CONT-LH (INCL 4, 5, 17)	14067597
2.	7-A8	6.164	NUT, STRG KNU UPR CONT ARM	14060153
3.	7-A8	6.164	STUD, STRG KNU UPR CONT ARM BALL	9769596
4.	7-A8	6.164	WASHER, STRG KNU & HUB (PART OF 1)	473539
5.		N.S.	PIN, COT (1/8X1 1/2) (PART OF 1, 19)	

© 2000 GENERAL MOTORS SERVICE PARTS OPERATIONS-CHEVROLET-14Y

				1Y06-002
6.	7-A8	6.009	NUT, STRG KNU (1984-86) (PART OF 19)	10254330
		8.915	NUT, SLOTTED HEX 14X2.0X14 (10) 840M POR (AR)	15529828
7.		DISCON	SHIELD, BRK (1984-85)	14046905
8.		8.977	SCREW, HEX W/FL WA TAP (6.3X1.81X16)	11509371
9.	7-N13	5.812	BOLT, WHL HUB (8.900) (PART OF 15)	12338086
10.	7-N13	5.812	BOLT, WHL (PART OF 14)	9592032
11.	7-M27	4.665	BOLT, W/WA, BRK CLPR (1984) (PART OF 15)	14079998
	7-M27	4.665	BOLT, BRK CLPR (1985-87)	14084051
12.		N.S.	CALIPER, BRK (SEE GROUP 4.000 "BRAKE CALIPER/FRONT & REAR DISC" FOR DETAIL ILLUSTRATED VIEW)	
13.	7-N12	5.809	ROTOR, BRK (REPLACE IN AXLE SETS ONLY TO PREVENT BRAKE LEAD) (AC-DELCO #177-673)	14084142
14.	7-A10	6.307	HUB, WHL (INCL 10) (AC-DELCO #20-44)	7470551
15.		DISCON	KNUCKLE, STRG KIT-RH (1984) (INCL 9, 11, 69, 70)	10046330
		DISCON	KNUCKLE, STRG KIT-RH (1985)	10046332
		DISCON	KNUCKLE, STRG-RH (1986-87)	10052260
		DISCON	KNUCKLE, STRG KIT-LH (1984) (INCL 9, 11, 69, 70)	10046329
		DISCON	KNUCKLE, STRG KIT-LH (1985)	10046331
		DISCON	KNUCKLE, STRG-LH (1986-87)	10052259
16.	7-A8	6.009	WASHER, STRG KNU (PART OF 19)	14047778
17.	7-A8	6.164	NUT, STRG KNU (5.418) (PART OF 1)	14050089
18.	7-A9	6.174	STUD, FRT LWR CONT ARM BALL	9769599
19.		DISCON	ARM, LWR CONT KIT-RH (INCL 5, 6, 16)	14067624
		DISCON	ARM, LWR CONT KIT-LH (INCL 5, 6, 16)	14067623
20.		8.917	NUT, HFH (M8X1.25X7.5) (AC-DELCO #11514596)	11514596
21.		8.900	BOLT, HFH M8X1.25X21MM, 17 OD, 10.9 (C/MBR & SI/MBR (7.039)) (AR)	12551177
22.	7-C20	7.420	PROTECTOR, SPR	14048914
23.		N.S.	PAD, SPR (PART OF 26)	
24.		8.915	NUT, HEX (M10X1.5X5)	11505989
25.	7-C20	7.425	RETAINER, SPR	14044557
26.		DISCON	SPRING, (CODE HMR) (1984 EXC FE7) (1985 FE7) (1986-87 YO7, FE7) (INCL 23, 27-29) (SEE PARTS SECTION FOR ADDITIONAL USAGE)	14106617
27.		N.S.	CUSHION, SPR (PART OF 26)	
28.		N.S.	BEARING, SPR (PART OF 26)	
29.		N.S.	SEAT, SPR (PART OF 26)	
30.		8.900	BOLT, HFH M8X1.25X21MM, 17 OD, 10.9 (AR)	12551177
31.	7-C20	7.425	SHIM, SPR RET	14047771
32.	7-C18	7.380	BRACKET, S/ABS LWR-RH	14048974
		DISCON	BRACKET, S/ABS LWR-LH	14048973
33.		8.900	BOLT, HEX FLG HD (M8X1.25X35)	24572570
34.	7-C14	7.243	INSULATOR, STAB SHF LINK LWR	14084098
35.		8.900	BOLT, HEX (M10X1.5X60)	11509265
36.	7-C14	7.243	INSULATOR, STAB SHF LINK UPR	14084097
37.	7-C12	7.240	LINK, STAB SHF	14087645
38.	7-C20	7.425	BOLT, SPR RET	14050422
39.		DISCON	CLAMP, STAB SHF INSL	14048971
40.	7-C14	7.243	INSULATOR, STAB SHF (1984) (1985 EXC FE7)	14093190
	7-C14	7.243	INSULATOR, STAB SHF (1985-86 FE7) (1987 F58)	14093171
		DISCON	INSULATOR, STAB SHF (1986 EXC FE7) (1987 EXC F58)	14093170
41.	7-C13	7.242	BRACKET, STAB SHF	14048970
42.		DISCON	SHAFT, STAB (1984 FE7)	14048992
		DISCON	SHAFT, STAB (1984 EXC FE7)	14060132
		DISCON	SHAFT, STAB (1985-86 FE7) (1987 F58)	14084067
		DISCON	SHAFT, STAB (1985 EXC FE7)	14076196
		DISCON	SHAFT, STAB (1986 EXC FE7) (1987 EXC F58)	14091231

© 2000 GENERAL MOTORS SERVICE PARTS OPERATIONS-CHEVROLET-14Y

				1Y06-002
43.	7-A8	6.163	WASHER, UPR CONT ARM	14047733
44.	7-A9	6.178	SHIM, STRG KNU UPR CONT ARM (.030 THK)	10268933
45.	7-N5	5.383	NUT, ENG TO FRT SUSP FRM	10255857
46.		N.S.	REINFORCEMENT, SHK TOWER (PART OF FRT SI MBR 7.006)	
47.		8.921	NUT-U, M8X1.25, 17 WIDE, 32 OAL, 21 CTR TO END, 8-4 PNL RANGE (6.008) (AR)	11516150
48.	7-A8	6.008	BOLT, DRIVETRAIN & FRT SUSP FRM	11508331
49.	7-A9	6.178	BOLT, UPR CONT ARM	14047781
50.		DISCON	FRAME, DRIVETRAIN	14093126
51.	7-C10	7.039	SHIM, DRIVETRAIN & FRM (1MM)	14060122
52.		N.S.	TOWER, S/ABS (PART OF FRT SI MBR 7.006)	
53.		8.917	NUT, HEX PREV TORQ (M10X1.5)	11501033
54.	7-C19	7.389	RETAINER, S/ABS INSL	14093133
55.	7-C18	7.388	INSULATOR, S/ABS UPR	10157967
56.	7-C18	7.388	INSULATOR, S/ABS (TO STUD)	10157966
57.	7-C10	7.039	SPACER, DRIVETRAIN & FRM	14044588
58.	7-C19	7.345	ABSORBER, SHK (1985-87 FE7, FG3) (SEE PARTS SECTION FOR ADDITIONAL USAGE)	22046447
59.	7-C18	7.347	NUT, S/ABS LWR MT	15658213
60.		DISCON	WASHER, UPR CONT ARM	14060157
61.	7-A9	6.178	NUT, UPR & LWR CONT ARM (8.917)	11502813
	7-A9	6.172	NUT, UPR & LWR CONT ARM (8.917)	11502813
62.	7-A12	6.508	GEAR KIT, STRG R&P (PARTIAL) (1986 FE7) (1987) (SEE GROUP 6.000 "STEERING ASM/RACK & PINION-POWER" FOR DETAIL ILLUSTRATED VIEW) (AC-DELCO #36-9036)	28044835
63.		8.900	BOLT, HEX FLG HD (M8X1.25X50)	14066450
64.		8.917	NUT-HFH LOCK, M12X1.75X13.4, 25.6 OD, ALL NEW METAL TORQ., 510M (10) CA (FIT UPR & LWR CONT ARM) (AR)	11502813
65.	7-A9	6.174	WASHER, LWR CONT ARM (5.383)	14046942
66.	7-A9	6.172	BOLT, LWR CONT ARM (5.383)	10273568
67.	7-A10	6.326	SEAL, WHL HUB (O-RING) (1986-87)	14087633
68.		DISCON	WASHER, FRT S/ABS INSL RET (1985-87)	14087619
69.	7-N5	5.075	WASHER, FRT BRK CLPR MTG PLT (PART OF 15)	14080254
70.		DISCON	PLATE, BRK CLPR ANC (PART OF 15)	14085886
71.	7-M27	4.665	BOLT, BRK CLPR GUIDE PIN	14067559

© 2000 GENERAL MOTORS SERVICE PARTS OPERATIONS-CHEVROLET-14Y

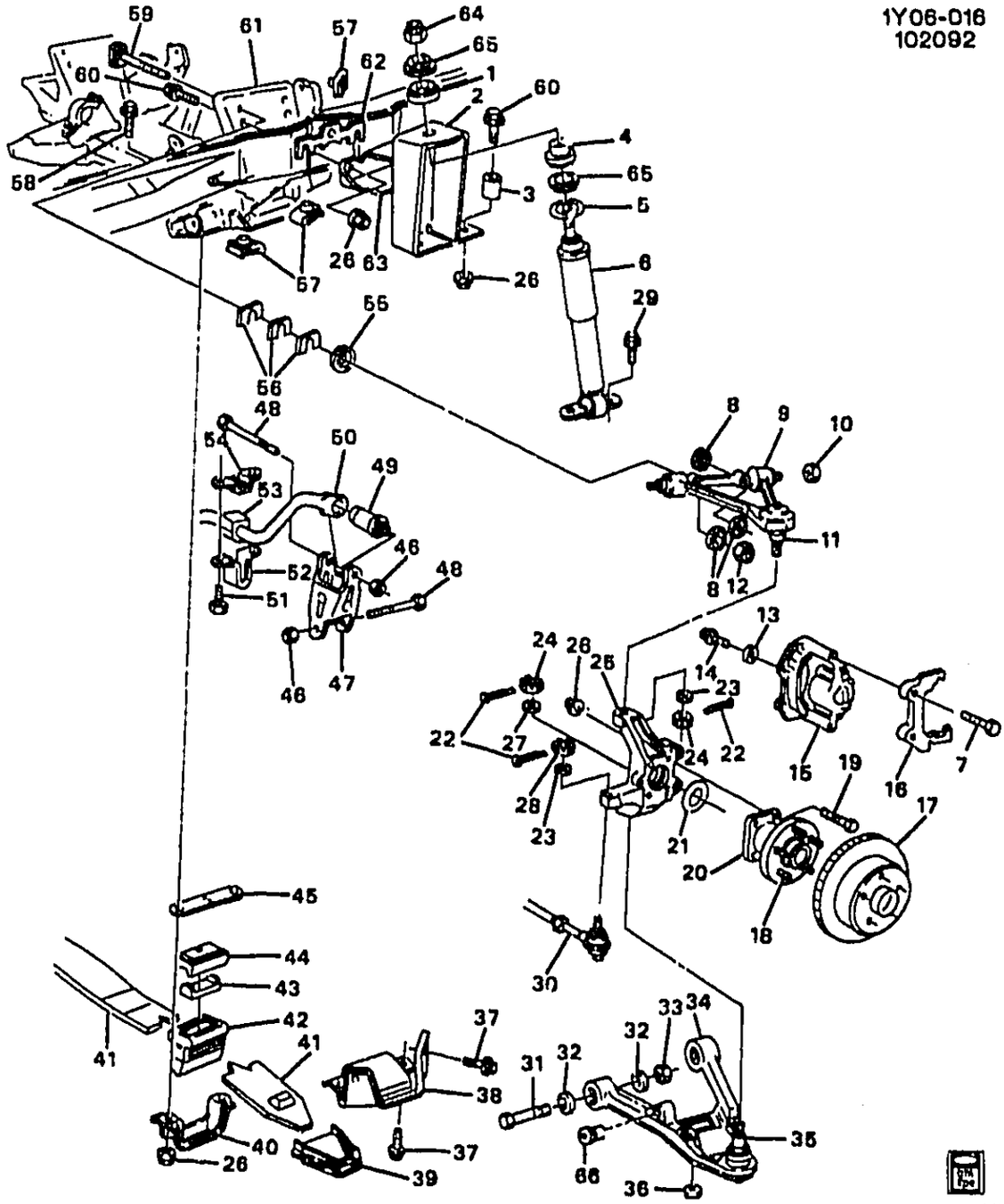

1988 Y SUSPENSION/FRONT

1.	7-C18	7.388	INSULATOR, FRT S/ABS	88	Y	2	10157967
2.		N.S.	BRACKET, FRT S/ABS UPR		.....		
3.	7-C10	7.039	SPACER, DRIVETRAIN & FRT SUSP FRM	88	Y	4	14044588
4.	7-C18	7.388	INSULATOR, FRT S/ABS (TO STUD)	88	Y	2	10157966
5.		DISCON	WASHER, FRT S/ABS INSL RET .	88	Y (EXC FG3)	2	14087619
6.		DISCON	ABSORBER, FRT SHK	88	Y (FE7, FG3)	2	22064032
		DISCON	ABSORBER, FRT SHK	88	Y07 (EXC FG3)	2	22064029
		DISCON	ABSORBER, FRT SHK	88	Y67 (EXC FG3)	2	22064036
	7-C16	7.345	ABSORBER, FRT SHK	88	Y (FG3) (EXC FE7)	2	22064031
7.	7-M27	4.665	BOLT, FRT BRK CLPR GDE PIN ..	88	Y	8	14067559

© 2000 GENERAL MOTORS SERVICE PARTS OPERATIONS-CHEVROLET-14Y

							1Y06-016
8.	7-A8	6.163	WASHER, FRT UPR CONT ARM (POS #1)	88	Y	2	10268931
	7-A8	6.163	WASHER, FRT UPR CONT ARM (POS #2)	88	Y	6	10268932
9.	7-A8	6.168	ARM, FRT UPR CONT (INCL 10, 11)	88	Y	RH	10258062
	7-A8	6.168	ARM, FRT UPR CONT (INCL 10, 11)	88	Y	LH	10258063
10.	7-A8	6.164	NUT, FRT UPR CONT ARM BALL STUD (M20 X 2.5-6M) (PART OF 9)	88	Y	4	14060153
11.	7-A8	6.164	STUD, FRT UPR CONT ARM BALL (PART OF 9)	88	Y	2	9769596
12.		8.917	NUT-HFH LOCK, M12X1.75X13.4, 25.6 OD, ALL NEW METAL TORQ., 510M (10) CA (FRT UPR CONT ARM BALL STUD)	88		4	11502813
13.	7-N5	5.075	WASHER, FRT BRK CLPR MTG PLT (28MM OD X 15.75MM ID) (4.665)	88	Y	4	14080254
14.	7-M27	4.665	BOLT, FRT BRK CLPR (M14X2X47)	88	Y	4	14084051
15.		N.S.	CALIPER, FRT BRK (SEE GRP 4.000 "BRAKE CALIPER/FRONT" FOR DETAILED ILLUSTRATED VIEW.)				
16.	7-M27	4.665	PLATE, FRT BRK CLPR ANCHOR	88	Y (FE7)	RH	10181208
	7-M27	4.665	PLATE, FRT BRK CLPR ANCHOR	88	Y (EXC FE7)	RH	10181206
	7-M27	4.665	PLATE, FRT BRK CLPR ANCHOR	88	Y (EXC FE7)	LH	10181205
	7-M27	4.665	PLATE, FRT BRK CLPR ANCHOR	88	Y (FE7)	LH	10181207
17.	7-N12	5.809	ROTOR, FRT BRK (AC-DELCO #177-679)	88	Y (FE7)	RH	10052204
	7-N12	5.809	ROTOR, FRT BRK (AC-DELCO #177-678)	88	Y (FE7)	LH	10052203
	7-N12	5.809	ROTOR, FRT BRK (AC-DELCO #177-684)	88	Y (EXC FE7)	2	10097654
18.	7-N13	5.812	BOLT, FRT WHL (12X1.5X44, 16 OD, 9.2 DIA DOG PT, 10.9, PL) (PART OF 20) (SILVER) (PHOSPHATE ZINC ORGANIC-FLAKE FINISH)	88	Y	10	9592032
19.	7-N13	5.812	BOLT, FRT WHL HUB (HEX M10X1.5X70 36 THDTHD 10.9 PZOR) (M10X1.5X70, 36 THD) (HEX) (8.900)	88	Y	8	12338086
20.	7-A10	6.307	HUB, FRT WHL (INCL 18) (AC-DELCO #20-44)	88	Y	2	7470551
21.	7-A10	6.326	SEAL, WHL HUB (O-RING)	88	Y	1	14057633
22.		8.938	PIN, COTTER M3.6 DIA 35MM LG ZC (S/KNU COT)	88		AR	94008132
23.	7-A8	6.009	WASHER, S/KNU (& HUB) (6.164)	88	Y	2	10267310
	7-A8	6.164	WASHER, STRG LNKG OTR TIE ROD (13.2X22.8X2.0, LCS, ZF)	88	Y	2	10267310
24.	7-A8	6.009	NUT, S/KNU (UPR) (HEX SLOTTED M12X1.75X13) (5.418)	88	Y	2	14050089
	7-A8	6.009	NUT, S/KNU (14X2.0X14 SLOTTED, LWR) (7.530)	88	Y	2	10254330

© 2000 GENERAL MOTORS SERVICE PARTS OPERATIONS-CHEVROLET-14Y

							1Y06-016
25.	7-A8	6.020	KNUCKLE, STRG	88	Y	RH	14105148
	7-A8	6.020	KNUCKLE, STRG	88	Y	LH	14105147
26.	7-N14	5.813	NUT, FRT WHL HUB (M10X1.5 PC HEX FLG) (8.917)	88	Y	8	11506101
27.	7-A8	6.009	WASHER, S/KNU (M15X26X2) (6.178)	88	Y	2	14047778
28.	7-A8	6.164	NUT, STRG LNK OTR RD (5.418)	88	Y	2	14050089
29.		8.900	BOLT, HFH M8X1.25X35 10.9 PZOR (0.206)	88		AR	24572579
30.	7-A12	6.508	GEAR KIT, STRG (REMAN) (SEE GRP 6.000 "STEERING ASM/RACK & PINION-POWER" FOR DETAILED ILLUSTRATED VIEW.) (AC-DELCO #36-9039)	88	Y (PY3)	1	26044838
	7-A12	6.508	GEAR KIT, STRG (REMAN) (SEE GRP 6.000 "STEERING ASM/RACK & PINION-POWER" FOR DETAILED ILLUSTRATED VIEW.) (AC-DELCO #36-9037)	88	Y (EXC PY3) (1ST DES)	1	26044836
31.	7-A9	6.172	BOLT, FRT LWR CONT ARM (8.900)	88	Y	4	10273568
32.	7-A9	6.174	WASHER, FRT LWR CONT ARM (M13X24X2) (5.383)	88	Y	8	14046942
	7-A9	6.174	WASHER, FRT LWR CONT ARM (24X22.50) (8.929)	88	Y	8	14055822
33.	7-A9	6.172	NUT, FRT LWR CONT ARM (M12X1.75X13.4 25.6OD) (HEX FLGD PREV TORQ CAD) (8.917)	88	Y	4	11502813
34.	7-A8	6.168	ARM, FRT LWR CONT (INCL 35, 66)	88	Y	LH	10098153
	7-A8	6.168	ARM, FRT LWR CONT (INCL 35, 66)	88	Y	RH	10098154
35.	7-A9	6.174	STUD, FRT LWR CONT ARM BALL (PART OF 34)	88	Y	2	9769599
36.		8.917	NUT, HFH, M8X1.25, 17.9 OD, 738 THK, 13MM HEX, 10, ZF (8.915) (AC-DELCO #11514596)	88		AR	11514596
37.		8.900	BOLT, HFH M8X1.25X21MM, 17 OD, 10.9	88		AR	12551177
38.	7-C20	7.420	PROTECTOR, FRT SPR	88	Y	2	14048914
39.		N.S.	PAD, SPR (PART OF 41)				
40.	7-C20	7.425	RETAINER, FRT SPR	88	Y	2	10052283
41.	7-C19	7.412	SPRING, FRT (CODE FHA) (INCL 39, 42-44)	88	Y07 (EXC FE7)	1	10048552
		DISCON	SPRING, FRT (CODE FHB) (INCL 39, 42-44)	88	Y07 (FE7)	1	10048553
	7-C19	7.412	SPRING, FRT (CODE FHC) (INCL 39, 42-44)	88	Y67	1	10048574
42.		N.S.	CUSHION, SPR (PART OF 41)				
43.		N.S.	BEARING, SPR (PART OF 41)				
44.		N.S.	SEAT, SPR (PART OF 41)				
45.	7-C20	7.425	SHIM, FRT SPR RET	88	Y	AR	14047771
46.		6.915	NUT, HEX M10X1.5X5 ZP 5	88		AR	11505989
47.	7-C12	7.240	LINK, FRT STAB SHF	88	Y	2	10098150
48.		8.900	BOLT	88		AR	11509265
49.	7-C14	7.243	INSULATOR, FRT STAB SHF LINK UPR	88	Y	2	14034097
50.	7-C12	7.241	SHAFT, STAB	88	Y (FE7)	1	10165302

© 2000 GENERAL MOTORS SERVICE PARTS OPERATIONS-CHEVROLET-14Y

							1Y03-016
	7-C12	7.241	SHAFT, STAB	88	Y (EXC FE7)	1	10165301
51.	7-C13	7.242	BOLT, FRT STAB SHF INSL CLA (HWH M10.0X1.50X40, 26THD, 10.9 PO) (8.900)	88	Y	4	14050422
52.	7-C13	7.242	CLAMP, FRT STAB SHF INSL	88	Y	2	14105145
53.	7-C14	7.243	INSULATOR, FRT STAB SHF	88	Y (FE7)	2	10098138
	7-C14	7.243	INSULATOR, STAB SHF (RED) (25.5MM DIA)	88	Y (EXC FE7)	2	10098137
54.	7-C13	7.242	BRACKET, FRT STAB SHF	88	Y	2	14105144
55.	7-A8	6.163	WASHER, FRT UPR CONT ARM (POS #1) (21.2 THK)	88	Y	2	10268931
	7-A8	6.163	WASHER, FRT UPR CONT ARM (POS #2) (21.2 THK)	88	Y	6	10268932
56.	7-A9	6.178	SHIM, FRT UPR CONT ARM	88	Y	AR	10268933
57.		8.921	NUT-U, M8X1.25, 17 WIDE, 32 OAL, 21 CTR TO END, 8-4 PNL RANGE	88	.....	AR	11516150
58.		8.900	BOLT, HFH M10X1.5X105 9.8 PZOR (FRT SPR RET)	88	Y	AR	11508142
59.	7-A9	6.178	BOLT, FRT UPR CONT ARM	88	Y	4	10098208
60.	7-C10	7.039	BOLT, DRIVETRAIN & FRT SUSP FRM (M10X1.5X45) (TO RR) (8.900)	88	Y	8	11508331
61.		DISCON	FRAME, DRIVETRAIN & FRT SUSP	88	Y (L98)	1	10080751
62.	7-C10	7.039	SHIM, DRIVETRAIN & FRM	88	Y	AR	14060122
63.		N.S.	REINFORCEMENT, FRT S/ABS BRKT		.....		
64.		8.917	NUT, HEX PRVG TORQ M10X1.5XGR10XCAD (FRT S/ABS)	88	Y	AR	11501033
65.	7-C12	7.389	RETAINER, FRT S/ABS INSL	88	Y	4	14093133
66.	7-C14	7.243	INSULATOR, FRT STAB SHF LINK (PART OF 34)	88	Y (FE1, FE7)	2	12521520

RPO DEFINITIONS

FE1 – SUSPENSION SYSTEM,SOFT RIDE
FE7 – SUSPENSION SYSTEM,FRONT AND REAR,HEAVY DUTY(USED WITH PERFORMANCE HANDLING PACKAGE Z51)
FG3 – SHOCK ABSORBER,FRONT AND REAR,GAS,PRELOADED
L98 – ENGINE, 5.7L, (5.7-8) 350 CID, V8, TPI
PY3 – WHEEL,16X8.5,SLOTTED PORT WINDOWS,FIVE BOLT CENTER CAP(CAST ALUMINUM)

© 2000 GENERAL MOTORS SERVICE PARTS OPERATIONS-CHEVROLET-14Y

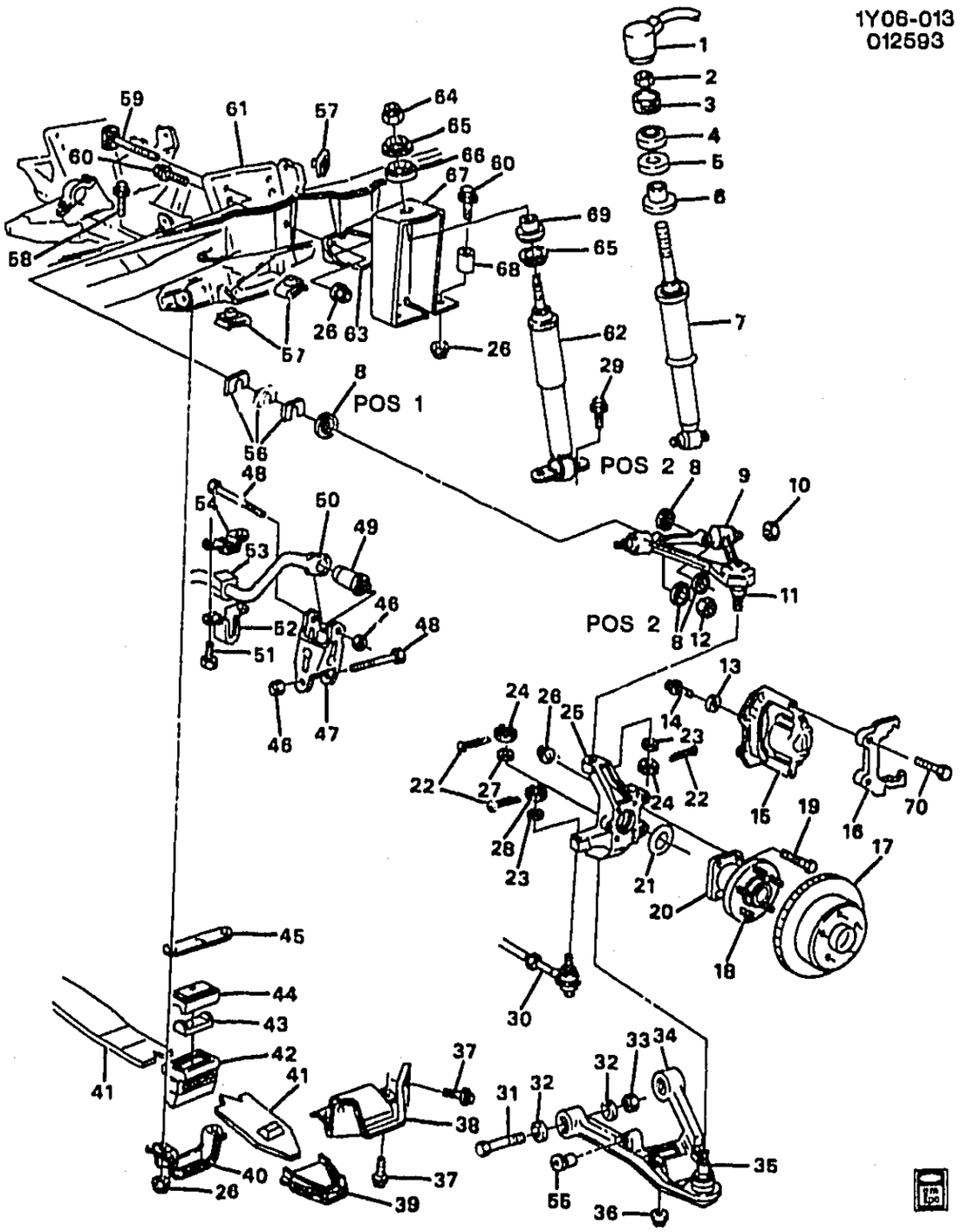

1Y06-013

1989-1990 Y SUSPENSION/FRONT

1.	7-C20	7.440	ACTUATOR, FRT HYD SUSP (INCLUDES SNAP RING)	89-90	Y (FX3)	2	22068666
2.		N.S.	NUT, FRT S/ABS		.....		
3.		N.S.	WASHER, FRT S/ABS INSL RET .		.....		
4.	7-C19	7.389	RETAINER, FRT S/ABS INSL	89-90	Y (FX3)	2	10098206
5.	7-C18	7.368	INSULATOR, FRT S/ABS (22.0 DIA HOLE)	89-90	Y (FX3)	2	10157964

© 2000 GENERAL MOTORS SERVICE PARTS OPERATIONS-CHEVROLET-14Y

							1Y06-013
6.	7-C18	7.388	INSULATOR, FRT S/ABS (15.35 DIA HOLE)	89-90	Y (FX3)	2	10157965
7.	7-C16	7.345	ABSORBER, FRT SHK	89-90	Y (FX3)	2	22064229
8.	7-A8	6.163	WASHER, FRT UPR CONT ARM (POS #1)	89-90	Y	2	10268931
	7-A8	6.163	WASHER, FRT UPR CONT ARM (POS #2)	89-90	Y	6	10268932
9.	7-A8	6.168	ARM, FRT UPR CONT (INCL 10, 11)	89-90	Y	RH	10258062
	7-A8	6.168	ARM, FRT UPR CONT (INCL 10, 11)	89-90	Y	LH	10258063
10.	7-A8	6.164	NUT, FRT UPR CONT ARM BALL STUD (PART OF 9) (M20X 2.5-6M)	89	Y	4	14060153
	7-A8	6.164	NUT, FRT UPR CONT ARM BALL STUD (PART OF 9) (M20X 2.5-6M)	90	Y (FE1, FE7)	4	14060153
11.	7-A8	6.164	STUD, FRT UPR CONT ARM BALL (PART OF 9)	89-90	Y	2	9769596
12.		8.917	NUT-HFH LOCK, M12X1.75X13.4, 25.6 OD, ALL NEW METAL TORQ., 510M (10) CA (FRT UPR CONT ARM BALL STUD)	89-90	.....	4	11502813
13.	7-N5	5.075	WASHER, FRT BRK CLPR MTG PLT (28MM OD X 15.75MM ID) (4.665)	89-90	Y	4	14080254
14.	7-M27	4.665	BOLT, FRT BRK CLPR (M14X2X47)	89-90	Y	4	14084051
15.		N.S.	CALIPER, FRT BRK (SEE GROUP 4.000 "BRAKE CALIPER/FRONT (B.C.I.A.) " FOR DETAIL ILLUSTRATED VIEW.)		.....		
16.	7-M27	4.665	PLATE, FRT BRK CLPR MTG	89-90	Y (JL9)	LH	10181205
	7-M27	4.665	PLATE, FRT BRK CLPR MTG	89-90	Y (JL9)	RH	10181206
	7-M27	4.665	PLATE, FRT BRK CLPR MTG	89-90	Y (J55)	LH	10181207
	7-M27	4.665	PLATE, FRT BRK CLPR MTG	89-90	Y (J55)	RH	10181208
17.	7-N12	5.809	ROTOR, FRT BRK (AC-DELCO #177-678)	89-90	Y (J55)	LH	10052203
	7-N12	5.809	ROTOR, FRT BRK (AC-DELCO #177-679)	89-90	Y (J55)	RH	10052204
	7-N12	5.809	ROTOR, FRT BRK (AC-DELCO #177-684)	89-90	Y (JL9)	2	10097654
	7-N12	5.809	ROTOR, FRT BRK (5-4 3/16 HOLES & BOLT CIRCLE) (2 5/64 HEIGHT) (12 DIAMETER) (AC-DELCO #18A289)	89-90	Y (STINGRAY) (EXCEPT HEAVY DUTY POWER BRAKES) (VENTED) ...	AR	18027889
18.	7-N13	5.812	BOLT, FRT WHL (12X1.5X44, 16 OD, 9.2 DIA DOG PT, 10.9, PL) (PART OF 20) (SILVER) (PHOSPHATE ZINC ORGANIC-FLAKE FINISH)	89-90	Y	10	9592032
19.	7-N13	5.812	BOLT, FRT WHL HUB (HEX M10X1.5X70 36 THDTHD 10.9 PZOR) (M10X1.5X70, 36 THD) (HEX) (8.900)	89-90	Y	8	12338086
20.	7-A10	6.307	HUB, FRT WHL (INCL 18) (AC-DELCO #20-44)	89-90	Y	2	7470551
21.	7-A10	6.326	SEAL, WHL HUB (O-RING)	89-90	Y	1	14087633

© 2000 GENERAL MOTORS SERVICE PARTS OPERATIONS-CHEVROLET-14Y

							1Y06-013
22.		8.938	PIN, COTTER M3.6 DIA 35MM LG ZC (S/KNU COT)	89-90	Y	AR	94008132
23.	7-A8	6.164	WASHER, STRG LNKG OTR TIE ROD (13.2X22.8X2.0, LCS, ZF) ...	89-90	Y	2	10257310
24.	7-A8	6.009	NUT, S/KNU (UPR) (HEX SLOTTED M12X1.75X13) (5.418) .	89-90	Y	2	14050089
	7-A8	6.009	NUT, S/KNU (14X2.0X14 SLOTTED, LWR) (7.530)	89-90	Y	2	10254330
25.	7-A8	6.020	KNUCKLE, STRG	89-90	Y	RH	14105148
	7-A8	6.020	KNUCKLE, STRG	89-90	Y	LH	14105147
26.	7-N14	5.813	NUT, FRT WHL HUB (M10X1.5 PC HEX FLG) (8.917)	89-90	Y	8	11506101
27.	7-A8	6.009	WASHER, S/KNU (M15X26X2) (6.178)	89-90	Y	2	14047778
28.	7-A8	6.164	NUT, STRG LNK OTR RD (5.418) .	89-90	Y	2	14050089
29.		8.900	BOLT, HFH M8X1.25X35 10.9 PZOR (0.206)	89-90	.....	AR	24572579
30.	7-A12	6.508	GEAR KIT, STRG (REMAN) ("NS" STAMPED ON DUST CVR) (AC-DELCO #36-9037)	89	Y (L98)	1	26044836
	7-A12	6.508	GEAR KIT, STRG (REMAN) (HAS "FH" STAMPED ON DUST CVR) (AC-DELCO #36-9040) (FOR MDL APPL. & POA INFO SEE GEAR CHART)	89	Y (L98)	1	26044839
	7-A12	6.508	GEAR KIT, STRG (REMAN) (AC-DELCO #36-9040)	90	Y (L98, LT5) (FOR MDL APPL & POA INFO SEE GEAR CHART)	1	26044839
31.	7-A9	6.172	BOLT, FRT LWR CONT ARM (8.900)	89-90	Y	4	10273568
32.	7-A9	6.174	WASHER, FRT LWR CONT ARM (M13X24X2) (5.383)	89-90	Y	8	[illegible]6942
	7-A9	6.174	WASHER, FRT LWR CONT ARM (24X22.50) (8.929)	89-90	Y	8	14055822
33.	7-A9	6.172	NUT, FRT LWR CONT ARM (M12X1.75X13.4 25.6OD) (HEX FLGD PREV TORQ CAD) (8.917)	89-90	Y	4	11502813
34.	7-A8	6.168	ARM, FRT LWR CONT (INCL 35, 55)	89-90	Y	LH	10098153
	7-A8	6.168	ARM, FRT LWR CONT (INCL 35, 55)	89-90	Y	RH	10098154
35.	7-A9	6.174	STUD, FRT LWR CONT ARM BALL (PART OF 34)	89-90	Y	2	9769599
36.		8.917	NUT, HFH, M8X1.25, 17.8 OD, 738 THK, 13MM HEX, 10, ZF (8.915) (AC-DELCO #11514596)	89-90	.....	AR	11514596
37.		8.900	BOLT, HFH M8X1.25X21MM, 17 OD, 10.9	89-90	.....	AR	12551177
38.	7-C20	7.420	PROTECTOR, FRT SPR	89-90	Y	2	14048914
39.		N.S.	PAD, SPR (PART OF 41)		.....		
40.	7-C20	7.425	RETAINER, FRT SPR	89-90	Y	2	10052283
41.		DISCON	SPRING, FRT (CODE AA) (INCL 39, 42-44)	90	Y (5.7J) H .D .SUSP (FE7), ELEK SUSP CONT (FX3)	1	17988598
	7-C19	7.412	SPRING, FRT (CODE FHA) (INCL 39, 42-44)	89-90	Y07 (FE1, FE7, FX3) ...	1	10048552
		DISCON	SPRING, FRT (CODE FHB) (INCL 39, 42-44)	89-90	Y (L98, FE7) (EXC FX3)	1	10048553

© 2000 GENERAL MOTORS SERVICE PARTS OPERATIONS-CHEVROLET-14Y

							1Y06-013
	7-C19	7.412	SPRING, FRT (CODE FHC) (INCL 39, 42-44)	89	Y67 (FE1)	1	10048574
	7-C19	7.412	SPRING, FRT (CODE FHC) (INCL 39, 42-44)	90	Y67 (L98)	1	10048574
42.		N.S.	CUSHION, SPR (PART OF 41)				
43.		N.S.	BEARING, SPR (PART OF 41)				
44.		N.S.	SEAT, SPR (PART OF 41)				
45.	7-C20	7.425	SHIM, FRT SPR RET	89-90	Y	AR	14047771
46.		8.915	NUT, HEX M10X1.5X5 ZP 5	89-90		AR	11505989
47.	7-C12	7.240	LINK, FRT STAB SHF	89-90	Y	2	10098150
48.		8.900	BOLT	89-90		AR	11509265
49.	7-C14	7.243	INSULATOR, FRT STAB SHF LINK UPR	89	Y	2	14084097
	7-C14	7.243	INSULATOR, FRT STAB SHF LINK UPR	90	Y (FE1, FE7)	2	14084097
50.	7-C12	7.241	SHAFT, FRT STAB	89-90	Y (FE1, FE7, FX3)	1	10165301
51.	7-C13	7.242	BOLT, FRT STAB SHF INSL CLA (HWH M10.0X1.50X40, 26THD, 10.9 PO) (8.900)	89	Y	4	14050422
		8.900	BOLT, HFH, M10X1.5X40, 26 THD, 10.9, POR (FRT STAB SHF INSL CLA)	90		AR	14050422
52.	7-C13	7.242	CLAMP, FRT STAB SHF INSL	89-90	Y	2	14105145
53.	7-C14	7.243	INSULATOR, FRT STAB SHF	89-90	Y (FE7)	2	10098138
	7-C14	7.243	INSULATOR, FRT STAB SHF (RED) (25.5MM DIA)	90	Y (FE1)	2	10098137
	7-C14	7.243	INSULATOR, FRT STAB SHF (25.5MM DIA) (RED)	89	Y (FE1, FE7, FX3)	2	10098137
	7-C14	7.243	INSULATOR, FRT STAB SHF (25.5MM DIA) (RED)	90	Y (FE1)	2	10098137
	7-C14	7.243	INSULATOR, FRT STAB SHF (25.5MM DIA) (RED)	90	Y (FE7, FX3)	2	10098137
54.	7-C13	7.242	BRACKET, FRT STAB SHF	89-90	Y	2	14105144
55.	7-C14	7.243	INSULATOR, FRT STAB SHF LINK (PART OF 34)	89-90	Y (FE1, FE7)	2	12521520
56.	7-A9	6.178	SHIM, STRG KNU UPR CONT ARM	89-90	Y	AR	10268933
57.		8.921	NUT-U, M8X1.25, 17 WIDE, 32 OAL, 21 CTR TO END, 8-4 PNL RANGE	89-90		AR	11518150
58.		8.900	BOLT, HFH M10X1.5X105 9.8 PZOR (FRT SPR RET)	89-90	Y	AR	11508142
59.	7-A9	6.178	BOLT, FRT UPR CONT ARM	89-90	Y	4	10098208
60.	7-A8	6.008	BOLT, DRIVETRAIN & FRT SUSP FRM (M10X1.5X45) (TO RR) (8.900)	84-90	Y	8	11508331
61.		DISCON	FRAME, DRIVETRAIN & FRT SUSP	89-90	Y (L98)	1	10080751
	7-C8	7.003	FRAME, DRIVETRAIN & FRT SUSP	90	Y (LT5, FE1, FE7)	1	10205043
62.		DISCON	ABSORBER, SHK	89-90	Y (FE7) (EXC FX3)	2	22064087
	7-C16	7.345	ABSORBER, FRT SHK (AC-DELCO #540-1)	89-90	Y (FE1) (EXC FX3)	2	22064089
63.		N.S.	REINFORCEMENT, FRT S/ABS BRKT				
64.		8.917	NUT, HEX PRVG TORQ M10X1.5XGR10XCAD (FRT S/ABS)	89-90	Y	AR	11501033

© 2000 GENERAL MOTORS SERVICE PARTS OPERATIONS-CHEVROLET-14Y

							1Y06-013
65.	7-C19	7.389	RETAINER, FRT S/ABS INSL	89-90	Y (EXC FX3)	4	14093133
66.	7-C18	7.388	INSULATOR, FRT S/ABS	89-90	Y (EXC FX3)	2	10157967
67.		N.S.	BRACKET, FRT S/ABS UPR (PART OF FRT SI MBR 7.006)) ...		.....		
68.	7-C10	7.039	SPACER, DRIVETRAIN & FRT SUSP FRM	89-90	Y	[illegible]	14044588
69.	7-C18	7.388	INSULATOR, FRT S/ABS (TO STUD)	89-90	Y (EXC FX3)	2	10157966
70.	7-M27	4.665	BOLT, FRT BRK CLPR GDE PIN ..	89-90	Y	8	14067559

RPO DEFINITIONS
FE1 – SUSPENSION SYSTEM,SOFT RIDE
FE7 – SUSPENSION SYSTEM,FRONT AND REAR,HEAVY DUTY(USED WITH PERFORMANCE HANDLING PACKAGE Z51)
FX3 – RIDE AND HANDLING,ELECTRONIC CONTROLLED
JL9 – BRAKE SYSTEM,POWER,FRONT AND REAR DISC,ANTILOCK
J55 – BRAKE SYSTEM,HEAVY DUTY POWER
LT5 – ENGINE,5.7L(5.7J),TPI
L98 – ENGINE, 5.7L, (5.7-8) 350 CID, V8, TPI

© 2000 GENERAL MOTORS SERVICE PARTS OPERATIONS-CHEVROLET-14Y

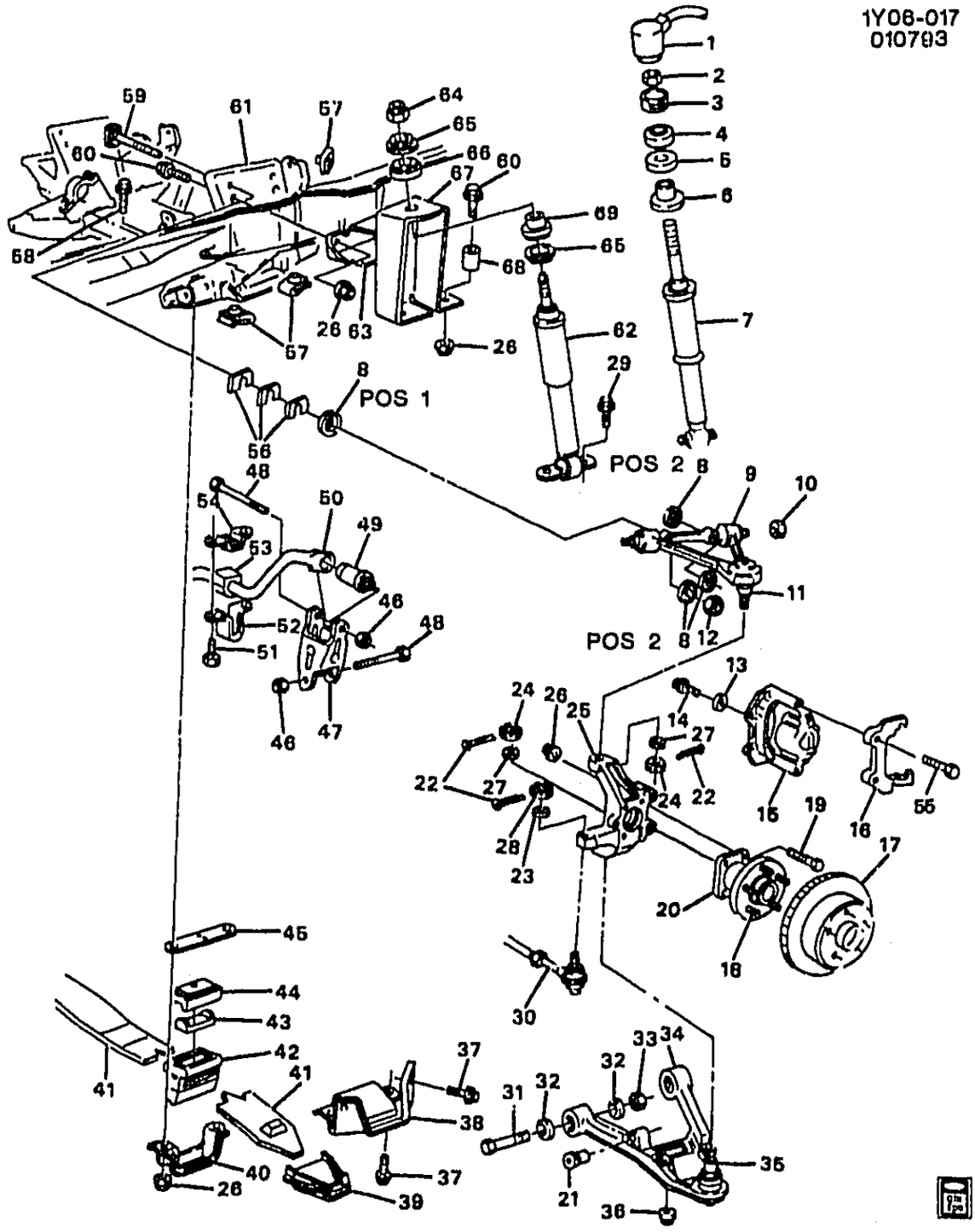

1991-1996 Y SUSPENSION/FRONT

1.	7-C20	7.440	ACTUATOR, FRT HYD SUSP (NOT USED IN 1996) (INCLUDES SNAP RING)	91-95	Y (FX3)	2	22068666
2.		N.S.	NUT, FRT S/ABS (POA ITEM #62)		.....	AR	
3.		N.S.	WASHER, FRT S/ABS INSL RET (PART OF 7) (WASHER CONTAINS RET RING)		.....		
4.	7-C19	7.389	RETAINER, FRT S/ABS INSL	91-95	Y (FX3)	2	10098206
	7-C19	7.389	RETAINER, FRT S/ABS INSL	96	Y	4	14093133

© 2000 GENERAL MOTORS SERVICE PARTS OPERATIONS-CHEVROLET-14Y

							1Y06-017
5.	7-C18	7.388	INSULATOR, FRT S/ABS (UPR POS)	91-95	Y (FX3)	2	10157964
	7-C18	7.388	INSULATOR, FRT S/ABS (UPR POS)	96	Y (F45)	2	10157964
6.	7-C18	7.383	INSULATOR, FRT S/ABS (W/SHLDR) (LWR POS)	91-95	Y (FX3)	2	10157965
		N.S.	INSULATOR, FRT S/ABS (LWR POS)	96	Y (F45)		
7.	7-C16	7.345	ABSORBER, FRT SHK (INCLS 3 - WASHER & RET RING)	91	Y (FX3)	2	22064229
	7-C16	7.345	ABSORBER, FRT SHK (INCLS 3 - WASHER & RET RING) (AC-DELCO #540-24)	92-95	Y (FX3)	2	22064478
	7-C16	7.345	ABSORBER, FRT SHK (INCLS 3 - WASHER & RET RING)	96	Y07 (FE3)	2	22064689
	7-C16	7.345	ABSORBER, FRT SHK (INCLS 3 - WASHER & RET RING) (AC-DELCO #580-111)	96	Y (F45)	LH	22064691
	7-C16	7.345	ABSORBER, FRT SHK (INCLS 3 - WASHER & RET RING) (AC-DELCO #580-112)	96	Y (F45)	RH	22064692
8.	7-A8	6.163	WASHER, FRT UPR CONT ARM (POS #1)	91-96	Y	2	10268931
	7-A8	6.163	WASHER, FRT UPR CONT ARM (POS #2)	91-96	Y	6	10268932
9.	7-A8	6.168	ARM, FRT UPR CONT (INCL 10, 11)	91-96	Y	RH	10258062
	7-A8	6.168	ARM, FRT UPR CONT (INCL 10, 11)	91-96	Y	LH	10258063
10.	7-A9	6.178	NUT, FRT UPR CONT ARM (PART OF 9) (M20X 2.5-6M) (6.164)	91-96	Y	4	14060153
11.	7-A8	6.164	STUD, FRT UPR CONT ARM BALL (PART OF 9)	91-96	Y	2	9769596
12.		8.917	NUT-HFH LOCK, M12X1.75X13.4, 25.6 OD, ALL NEW METAL TORQ., 510M (10) CA (FRT UPR CONT ARM)	91-96		4	11502813
13.	7-N5	5.075	WASHER, FRT BRK CLPR MTG PLT (28MM OD X 15.75MM ID) (4.665)	91-96	Y	4	14080254
	7-N5	5.075	WASHER, FRT BRK CLPR MTG PLT (.31X.62X.045, STL, ZC) (4.665)	93-96	Y	2	12518940
14.	7-M27	4.665	BOLT, FRT BRK CLPR (M14X2X47)	91-96	Y	4	14084051
15.		N.S.	CALIPER, FRT BRK (SEE GROUP 4.000 "BRAKE CALIPER/FRONT (B.C.I.A.) " FOR DETAIL ILLUSTRATED VIEW.)				
16.	7-M27	4.665	PLATE, FRT BRK CLPR MTG	91-94	Y (JL9)	LH	10181205
	7-M27	4.665	PLATE, FRT BRK CLPR MTG	91-94	Y (JL9)	RH	10181206
	7-M27	4.665	PLATE, FRT BRK CLPR MTG	91-96	Y (J55)	LH	10181207
	7-M27	4.665	PLATE, FRT BRK CLPR MTG	91-96	Y (J55)	RH	10181208
17.	7-N12	5.809	ROTOR, FRT BRK (AC-DELCO #177-678)	91-95	Y (J55)	LH	10052203
	7-N12	5.809	ROTOR, FRT BRK (AC-DELCO #177-679)	91-95	Y (J55)	RH	10052204
	7-N12	5.809	ROTOR, FRT BRK (AC-DELCO #177-684)	91-94	Y (JL9)	2	10097654

© 2000 GENERAL MOTORS SERVICE PARTS OPERATIONS-CHEVROLET-14Y

							1Y06-017
	7-N12	5.809	ROTOR, FRT BRK (AC-DELCO #177-678)	96	Y (J55) (EXC VE2, Z15, Z16)	LH	10052203
	7-N12	5.809	ROTOR, FRT BRK (AC-DELCO #177-679)	96	Y (J55) (EXC VE2, Z15, Z16)	RH	10052204
	7-N12	5.809	ROTOR, FRT BRK (AC-DELCO #177-780)	96	Y (J55, Z15, Z16)	LH	10257631
	7-N12	5.809	ROTOR, FRT BRK (AC-DELCO #177-781)	96	Y (J55, Z15, Z16)	RH	10257632
	7-N12	5.809	ROTOR, FRT BRK (5-4 3/16 HOLES & BOLT CIRCLE) (2 5/64 HEIGHT) (12 DIAMETER) (AC-DELCO #18A289)	91-95	Y (STINGRAY) (EXCEPT HEAVY DUTY POWER BRAKES) (VENTED) ...	AR	18027389
	7-N12	5.809	ROTOR, FRT BRK (AC-DELCO #177-780)	96	Y (J55, VE2) (EXC Z15, Z16) (EXPORT)	LH	10257631
	7-N12	5.809	ROTOR, FRT BRK (AC-DELCO #177-781)	96	Y (J55, VE2) (EXC Z15, Z16) (EXPORT)	RH	10257632
18.	7-N13	5.812	BOLT, FRT WHL (PART OF 20) (SILVER) (PHOSPHATE ZINC ORGANIC-FLAKE FINISH)	94-96	Y	10	9592032
	7-N13	5.812	BOLT, FRT WHL (12X1.5X44, 16 OD, 9.2 DIA DOG PT, 10.9, PL) (PART OF 20) (SILVER) (PHOSPHATE ZINC ORGANIC-FLAKE FINISH)	91-93	Y	10	9592032
19.	7-N13	5.812	BOLT, FRT WHL HUB (HEX M10X1.5X70 36 THDTHD 10.9 PZOR) (M10X1.5X70, 36 THD) (HEX) (8.900)	91-96	Y	8	12338086
20.	7-A10	6.307	HUB, FRT WHL (INCL WHL SPEED SENSOR & BRG) (INCL 18) (AC-DELCO #FW109)	91-96	Y	2	12413001
21.	7-C14	7.243	INSULATOR, FRT STAB SHF LINK (PART OF 34)	91-95	Y (FE1, FE7)	2	12521520
	7-C14	7.243	INSULATOR, FRT STAB SHF LINK (PART OF 34)	96	Y (FE1, FE3)	2	12521520
	7-C14	7.243	INSULATOR, FRT STAB SHF LINK (UPR) (PART OF 34)	91	Y (FE1, FE7)	2	14084097
	7-C14	7.243	INSULATOR, FRT STAB SHF LINK (UPR) (PART OF 34)	92-96	Y	2	14084097
22.		8.938	PIN, COTTER, 2.8X30MM, PS, 1010 (S/KNU COT)	91-96	.....	AR	12337997
23.	7-A8	6.164	WASHER, STRG LNKG OTR TIE ROD (13.2X22.8X2.0, LCS, ZF) ...	91-96	Y	2	10267310
24.	7-A8	6.009	NUT, S/KNU (UPR) (HEX SLOTTED M12X1.75X13) (5.418) .	91-96	Y	2	14050089
	7-A8	6.009	NUT, S/KNU (14X2.0X14 SLOTTED, LWR) (7.530)	91-96	Y	2	10254330
25.	7-A8	6.020	KNUCKLE, STRG	91-93	Y	RH	10098164
	7-A8	6.020	KNUCKLE, STRG	94-96	Y	LH	18019572
	7-A8	6.020	KNUCKLE, STRG	94-96	Y	RH	18019573
26.	7-N14	5.813	NUT, FRT WHL HUB (M10X1.5 PC HEX FLG) (8.917)	91-96	Y	8	11506101
27.	7-A8	6.009	WASHER, S/KNU (M15X26X2) (6.178)	91-96	Y	2	14047778
28.	7-A10	6.234	NUT, STRG LNKG OTR TIE ROD (UPR) (HEX SLOTTED M12X1.75X13) (5.418)	91-96	Y	2	14050089
29.		8.900	BOLT, HFH M8X1.25X50 10.9 POR (FRT S/ABS LWR BRKT)	91-96	.....	4	14066450

© 2000 GENERAL MOTORS SERVICE PARTS OPERATIONS-CHEVROLET-14Y

							1Y06-017
30.	7-A12	6.508	GEAR KIT, STRG (REMAN) (AC-DELCO #36-9040)	91	Y (L98, LT5) (FOR MDL APPL & POA INFO SEE GEAR CHART)	1	26044839
	7-A12	6.508	GEAR KIT, STRG (REMAN) (AC-DELCO #36-9040)	92-95	Y (LT1, LT5)	1	26044839
	7-A12	6.508	GEAR KIT, STRG (REMAN) (AC-DELCO #36-9040)	96	Y (LT1, LT4)	1	26044839
31.	7-A9	6.172	BOLT, FRT LWR CONT ARM (8.900)	91-96	Y	4	10273568
32.	7-A9	6.174	WASHER, FPT LWR CONT ARM (M13X24X2) (5.383)	91-94	Y	8	14046942
	7-A9	6.174	WASHER, FRT LWR CONT ARM (24X22.50) (8.029)	91-95	Y	9	14055822
	7-A9	6.174	WASHER, FRT LWR CONT ARM (FLAT, M13X23X3.3)	95-96	Y	8	10268936
33.	7-A9	6.172	NUT, FRT LWR CONT ARM (M12X1.75X13.4 25.6OD) (HEX FLGD PREV TORQ CAD) (8.917)	91-96	Y	4	11502813
	7-A9	6.172	NUT, FRT LWR CONT ARM (16X2X18.9 34.2OD) (8.917)	91-93	Y	4	11516383
34.	7-A8	6.168	ARM, FRT LWR CONT (INCL 21, 35)	91-96	Y	LH	10098153
	7-A8	6.168	ARM, FRT LWR CONT (INCL 21, 35)	91-96	Y	RH	10098154
35.	7-A9	6.174	STUD, FRT LWR CONT ARM BALL (PART OF 34)	91-96	Y	2	9769599
36.		8.917	NUT, HFH, M8X1.25, 17.9 OD, 738 THK, 13MM HEX, 10, ZF (8.915) (AC-DELCO #11514596)	91-96	.....	AR	11514596
37.		8.900	BOLT, HFH M8X1.25X21MM, 17 OD, 10.9	91-96	.....	AR	12551177
38.	7-C20	7.420	PROTECTOR, FRT SPR	91-94	Y	2	14048914
39.		N.S.	PAD, SPR (PART OF 41)		.....		
40.	7-C20	7.425	RETAINER, FRT SPR	91-96	Y	2	10052283
41.		DISCON	SPRING, FRT (INCL 39, 42-44) (CODE AA)	91	Y (LT5)	1	17988598
	7-C19	7.412	SPRING, FRT (CODE FHA) (INCL 39, 42-44)	91	Y07 (FE1)	1	10048552
	7-C19	7.412	SPRING, FRT (CODE FHA) (INCL 39, 42-44)	91	Y07 (L98, FE7, FX3) ...	1	10048552
		DISCON	SPRING, FRT (CODE FHB) (INCL 39, 42-44)	91	Y (L98, FE7) (EXC FX3)	1	10048553
	7-C19	7.412	SPRING, FRT (CODE FHC) (INCL 39, 42-44)	91	Y67 (L98)	1	10048574
	7-C19	7.412	SPRING, FRT (INCL 39, 42-44) (CODE JA)	94-95	Y67 (LT1, FE1, FX3) ...	1	22145204
	7-C19	7.412	SPRING, FRT (INCL 39, 42-44) .	95	Y67 (LT1, FX3)	1	22173029
	7-C19	7.412	SPRING, FRT (INCL 39, 42-44) .	96	Y07 (FE3)	1	17999032
	7-C19	7.412	SPRING, FRT (INCL 39, 42-44) .	96	Y07 (FE1)	1	22173028
	7-C19	7.412	SPRING, FRT (INCL 39, 42-44) .	96	Y67 (FE1)	1	17999031
	7-C19	7.412	SPRING, FRT (CODE FSK) (INCL 39, 42-44)	92-95	Y07 (LT1, FE7)	1	17997091
	7-C19	7.412	SPRING, FRT (CODE FSM) (INCL 39, 42-44)	92-95	Y07 (LT5)	1	17997093
	7-C19	7.412	SPRING, FRT (CODE FSR) (INCL 39, 42-44)	92	Y67 (LT1, FE1)	1	17999031
	7-C19	7.412	SPRING, FRT (CODE FSR) (INCL 39, 42-44)	93	Y67	1	17999031

© 2000 GENERAL MOTORS SERVICE PARTS OPERATIONS-CHEVROLET-14Y

							1Y06-017
	7-C19	7.412	SPRING, FRT (CODE FSR) (INCL 39, 42-44)	94-95	Y67 (LT1, FE1) (EXC FX3)	1	17999031
	7-C19	7.412	SPRING, FRT (CODE FSS) (INCL 39, 42-44)	92-93	Y07 (LT1, FE1)	1	17999032
	7-C19	7.412	SPRING, FRT (CODE FSS) (INCL 39, 42-44)	94-95	Y07 (LT1, FE1) (EXC FX3)	1	17999032
	7-C19	7.412	SPRING, FRT (CODE HA) (INCL 39, 42-44)	94-95	Y07 (LT1, FE1, FX3)	1	22145203
42.		N.S.	CUSHION, SPR (PART OF 41)				
43.		N.S.	BEARING, SPR (PART OF 41)				
44.		N.S.	SEAT, SPR (PART OF 41)				
45.	7-C20	7.425	SHIM, FRT SPR RET	91-96	Y	AR	14047771
46.		8.915	NUT, HEX M10X1.5X5 ZP 5	91-96		AR	11505989
47.	7-C12	7.240	LINK, FRT STAB SHF	91-96	Y	2	10098150
48.		8.900	BOLT	91-96		AR	11509265
49.	7-C14	7.243	INSULATOR, FRT STAB SHF LINK	91-95	Y (FE1, FE7)	2	12521520
	7-C14	7.243	INSULATOR, FRT STAB SHF LINK	96	Y (FE1, FE3)	2	12521520
	7-C14	7.243	INSULATOR, FRT STAB SHF LINK (UPR)	91	Y (FE1, FE7)	2	14084097
	7-C14	7.243	INSULATOR, FRT STAB SHF LINK (UPR)	92-96	Y	2	14084097
50.	7-C12	7.241	SHAFT, FRT STAB	91-92	Y (FE1)	1	10165301
	7-C12	7.241	SHAFT, FRT STAB	91-95	Y (FE7)	1	10165302
	7-C12	7.241	SHAFT, FRT STAB	93-94	Y (LT1, FE1)	1	10199744
	7-C12	7.241	SHAFT, FRT STAB	95	Y (Z4Z)	1	10165301
	7-C12	7.241	SHAFT, FRT STAB	95	Y (LT1, FE1) (EXC VD1, Z4Z)	1	10199744
	7-C12	7.241	SHAFT, FRT STAB	96	Y07 (FE3)	1	10165301
	7-C12	7.241	SHAFT, FRT STAB	96	Y (FE1) (EXC VD1)	1	10199744
	7-C12	7.241	SHAFT, FRT STAB	95	Y (VD1) (EXPORT)	1	10165301
	7-C12	7.241	SHAFT, FRT STAB	96	Y07 (FE1, VD1) (EXPORT)	1	10165301
	7-C12	7.241	SHAFT, FRT STAB	96	Y67 (FE1, VD1) (EXC Z16) (EXPORT)	1	10165301
	7-C12	7.241	SHAFT, FRT STAB	96	Y67 (VD1, Z16) (EXPORT)	1	10199744
51.		8.900	BOLT, HFH, M10X1.5X40, 26 THD, 10.9, POR (FRT STAB SHF INSL CLA)	91-96		AR	14050422
52.	7-C13	7.242	CLAMP, FRT STAB SHF INSL	91-96	Y	2	14105145
53.	7-C14	7.243	INSULATOR, FRT STAB SHF	91-95	Y (FE7)	2	10098138
	7-C14	7.243	INSULATOR, FRT STAB SHF (RED) (25.5MM DIA)	91-92	Y (FE1)	2	10098137
	7-C14	7.243	INSULATOR, FRT STAB SHF (RED) (25.5MM DIA)	93-94	Y (LT5, FE1)	2	10098137
	7-C14	7.243	INSULATOR, FRT STAB SHF	93-94	Y (LT1, FE1)	2	10224074
	7-C14	7.243	INSULATOR, FRT STAB SHF	95	Y (LT1, FE1) (EXC VD1)	2	10224074
	7-C14	7.243	INSULATOR, FRT STAB SHF (RED) (25.5MM DIA)	96	Y07 (FE3)	2	10098137
	7-C14	7.243	INSULATOR, FRT STAB SHF	96	Y (FE1) (EXC VD1)	2	10224074
	7-C14	7.243	INSULATOR, FRT STAB SHF (RED) (25.5MM DIA)	95	Y (LT5, FE1, VD1) (EXPORT)	2	10098137
	7-C14	7.243	INSULATOR, FRT STAB SHF (RED) (25.5MM DIA)	96	Y07 (FE1, VD1) (EXPORT)	2	10098137
	7-C14	7.243	INSULATOR, FRT STAB SHF (RED) (25.5MM DIA)	96	Y67 (FE1, VD1) (EXC Z16) (EXPORT)	2	10098137

© 2000 GENERAL MOTORS SERVICE PARTS OPERATIONS-CHEVROLET-14Y

							1Y06-017
	7-C14	7.243	INSULATOR, FRT STAB SHF	96	Y67 (VD1, Z16) (EXPORT)	2	10224074
54.	7-C13	7.242	BRACKET, FRT STAB SHF	91-96	Y	2	14105144
55.	7-M27	4.665	BOLT, FRT BRK CLPR GDE PIN ..	91-96	Y	8	14067559
56.	7-A9	6.178	SHIM, FRT UPR CONT ARM	91-96	Y	AR	10268933
57.		8.921	NUT-U, M8X1.25, 17 WIDE, 32 OAL, 21 CTR TO END, 8-4 PNL RANGE	91-96	.....	AR	11516150
58.	7-C20	7.425	BOLT, FRT SPR RET	91-96	Y	4	10157953
59.	7-A9	6.178	BOLT, FRT UPR CONT ARM	91-96	Y	4	10098208
60.	7-C10	7.039	BOLT, DRIVETRAIN & FRT SUSP FRM (M10X1.5X45) (TO RR) (8.900)	91-96	Y	8	11500331
61.		DISCON	FRAME, DRIVETRAIN & FRT SUSP	91	Y (L98)	1	10080751
	7-C8	7.003	FRAME, DRIVETRAIN & FRT SUSP	91	Y (LT5, FE1, FE7)	1	10205043
	7-C8	7.003	FRAME, DRIVETRAIN & FRT SUSP	92-96	Y	1	10205043
62.	7-C16	7.345	ABSORBER, FRT SHK (AC-DELCO #540-1)	91-92	Y (FE1) (EXC FX3)	2	22064089
	7-C16	7.345	ABSORBER, FRT SHK (AC-DELCO #540-1)	93-94	Y (EXC FX3)	2	22064089
	7-C16	7.345	ABSORBER, FRT SHK (AC-DELCO #540-1)	95	Y07 (EXC FX3)	2	22064089
	7-C16	7.345	ABSORBER, FRT SHK (AC-DELCO #540-1)	96	Y (FE1) (EXC F45)	2	22064089
	7-C16	7.345	ABSORBER, FRT SHK	96	Y07 (FE3)	2	22064689
	7-C16	7.345	ABSORBER, FRT SHK (AC-DELCO #580-111)	96	Y (F45)	LH	22064691
	7-C16	7.345	ABSORBER, FRT SHK (AC-DELCO #580-112)	96	Y (F45)	RH	22064692
63.		N.S.	REINFORCEMENT, FRT S/ABS BRKT (PART OF RAIL)		.....		
64.		8.917	NUT, HEX PRVL TORQ (M10X1.5X9.6) (ZO 10 (FRT S/ABS)	92-95	Y	AR	11515749
65.	7-C19	7.389	RETAINER, FRT S/ABS INSL	91-95	Y (EXC FX3)	4	14093133
	7-C19	7.389	RETAINER, FRT S/ABS INSL	96	Y	4	14093133
66.	7-C18	7.388	INSULATOR, FRT S/ABS (UPR POS)	91-95	Y (EXC FX3)	2	10157967
	7-C18	7.388	INSULATOR, FRT S/ABS (UPR POS)	96	Y (EXC F45)	2	10157967
67.		N.S.	BRACKET, FRT S/ABS UPR (PART OF RAIL)		.....		
68.	7-C10	7.039	SPACER, DRIVETRAIN & FRT SUSP FRM	91-96	Y	4	14044588
69.	7-C18	7.388	INSULATOR, FRT S/ABS (LWR POS)	91-95	Y (EXC FX3)	2	10157966
	7-C18	7.388	INSULATOR, FRT S/ABS (LWR POS)	96	Y (EXC F45)	2	10157966

RPO DEFINITIONS
FE1 – SUSPENSION SYSTEM,SOFT RIDE
FE3 – SUSPENSION SYSTEM,SPORT
FE7 – SUSPENSION SYSTEM,FRONT AND REAR,HEAVY DUTY(USED WITH PERFORMANCE HANDLING PACKAGE Z51)
FE7 – SUSPENSION SYSTEM,FRONT AND REAR,HEAVY DUTY
FX3 – RIDE AND HANDLING,ELECTRONIC CONTROLLED

© 2000 GENERAL MOTORS SERVICE PARTS OPERATIONS-CHEVROLET-14Y

F45 – CHASSIS CONTINUOUS VALVE REAL TIME DAMPING
JL9 – BRAKE SYSTEM,POWER,FRONT AND REAR DISC,ANTILOCK
J55 – BRAKE SYSTEM,HEAVY DUTY POWER
LT1 – ENGINE–GAS, 8 CYL, 5.7L(5.7P),MFI,HO
LT4 – ENGINE GAS, 8 CYL, 5.7L, MFI, HIGH OUTPUT
LT5 – ENGINE,5.7L(5.7J),TPI
L98 – ENGINE, 5.7L, (5.7–8) 350 CID, V8, TPI
VD1 – PROVISION OPTIONS,EUROPE(EXPORT)
VE2 – PROTECTOR SOURCE APPLIED
Z15 – APPEARANCE PACKAGE,COLLECTORS EDITION
Z16 – APPEARANCE PACKAGE,GRAND SPORT EDITION
Z4Z – MERCHANDISED PKG INDY PACE CAR

© 2000 GENERAL MOTORS SERVICE PARTS OPERATIONS–CHEVROLET–14Y

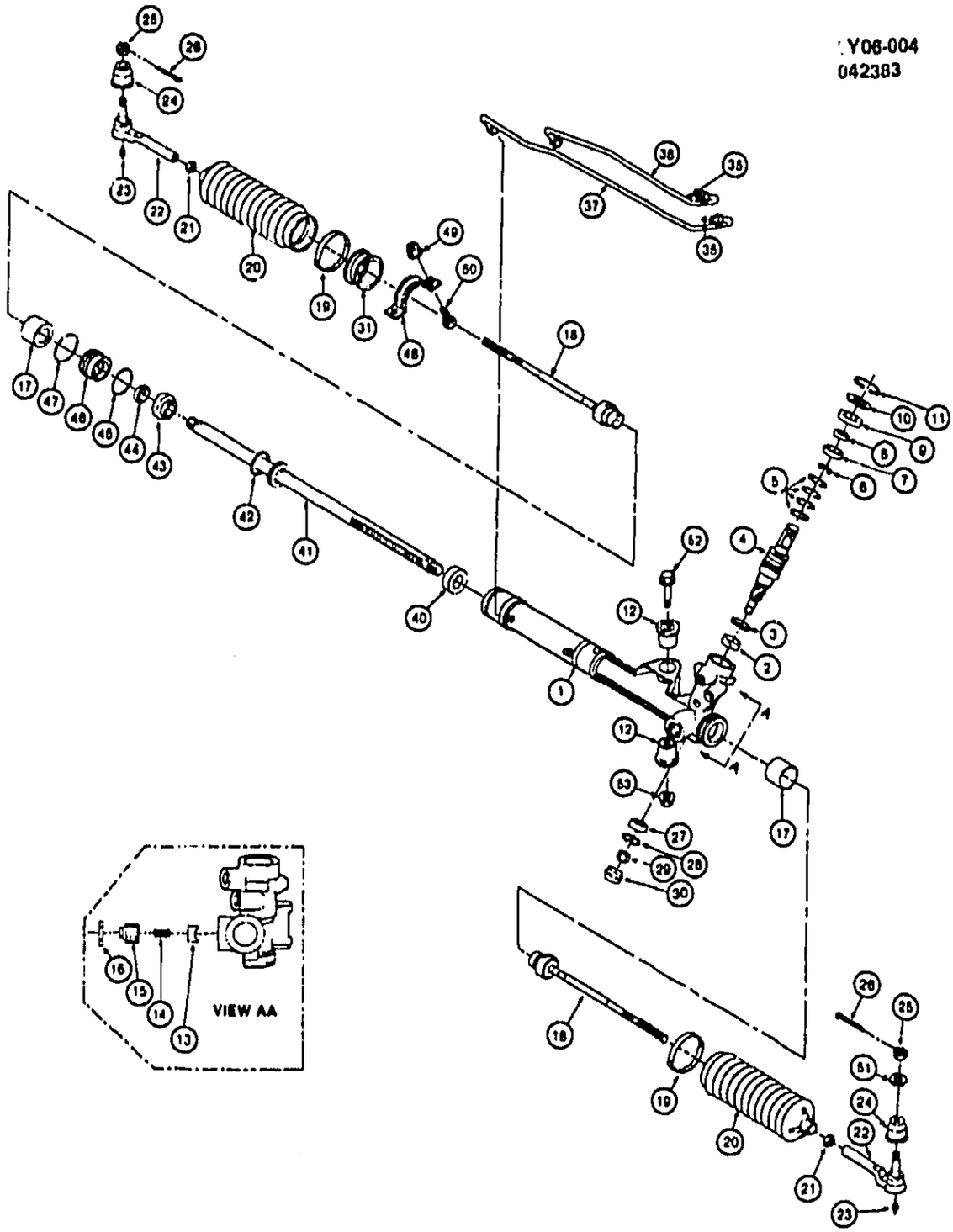

1Y06-004

1984-1988 Y STEERING ASM/RACK & PINION-POWER

NOTE: SINCE ALL REPAIR KITS ARE NO LONGER SERVICED IT IS NECESSARY TO ORDER GEAR KITS FOR SERVICE REPLACEMENT.

1.		N.S.	**HOUSING**, RACK & PINION ASM (PART OF GEAR KIT GROUP 6.508)	
2.		N.S.	**BUSHING**, UPPER PINION (PART OF #1)	
3.		N.S.	**SEAL**, PINION SHAFT (PART OF #1 & 4)	
4.	7-B9	6.550	**VALVE KIT**, PINION (1984-85) (EXC FE7)	7841620

© 2000 GENERAL MOTORS SERVICE PARTS OPERATIONS-CHEVROLET-14Y

		N.S.	VALVE, PINION ASM (PART OF #1 GEAR) (1984-88) (FE7)	
5.		N.S.	RING, VLV BDY (PART OF #4)	
6.		N.S.	RING, RET, VLV BDY RINGS	
7.		N.S.	ANNULUS, STUB SHAFT BRG	
8.		N.S.	BEARING, HYD STRG GEAR, NDL	
9.		N.S.	SEAL, STUB SHAFT (PART OF #4)	
10.		N.S.	SEAL, STUB SHAFT DUST	
11.	7-B9	6.552	RING, RET STUB SHAFT SEAL	7828017
12.	7-B20	6.786	BUSHING, S/GR RACK (R&P) (AC-DELCO #36-9527)	7841634
13.		N.S.	BEARING, RACK	
14.		N.S.	SPRING, ADJUSTER (R&P)	
15.		DISCON	ADJUSTER, S/GR RACK	7841283
16.	7-B20	6.832	NUT, ADJUSTER PLUG LOCK	26011849
17.		DISCON	RING, SHOCK DAMPENER (1984-85)	7841291
	7-B20	6.865	RING, SHOCK DAMPENER (1986-87)	7849530
	7-B20	6.865	RING, SHOCK DAMPENER (R&P) (1988)	7831234
18.	7-A9	6.230	ROD KIT, INNER TIE (INCL'S 17, 19, 21) (1984-87)	7841627
	7-A9	6.230	ROD KIT, INNER TIE (1988)	26024411
19.	7-A10	6.242	CLAMP, BOOT	7841287
20.	7-A10	6.242	BOOT KIT, (R&P) (INCL #19)	26003998
21.	7-B20	6.822	NUT, HEX (M14X1.5) (ALSO PART OF #18)	26017267
22.	7-A10	6.233	ROD KIT, OTR TIE (INCLS 23, 24, 25, 26) (1984-86) (AC-DELCO #36-9515)	26050222
	7-A10	6.233	ROD KIT, STRG GR OTR TIE (W/BROADCAST CODES WL OR WT) (1987-88) (AC-DELCO #36-9515)	26050222
23.		8.934	FITTING, LUBE (PART OF #22)	7842586
24.	7-A10	6.242	SEAL, TIE ROD	7840726
25.	7-A19	6.509	NUT, HEX SLOTTED (M12X1.25X13)	14050089
26.		8.938	PIN, COTTER (1/8" X 1 1/2")	
27.		N.S.	BEARING, PINION BALL (PART OF #1)	
28.		N.S.	RING, RETAINING (PART OF #1)	
29.		8.917	NUT, HEX LOCK (M10 X 1.5)	
30.	7-B20	6.807	COVER, S/GR HSG	7846884
31.	7-A19	6.509	INSULATOR, S/GR (AC-DELCO #36-9526)	7840293
35.	7-B19	6.674	SEAL, O-RING, CYL LINE	26015539
37.	7-B18	6.670	PIPE KIT, S/GR (LH) (INCLS 35)	26017578
38.	7-B18	6.670	PIPE KIT, S/GR (RH) (INCLS 35)	26037914
40.		N.S.	SEAL, INNER RACK	
41.		N.S.	RACK, STRG PINION (PART OF GEAR KIT LISTED IN ITEM 1)	
42.		N.S.	RING, PISTON	
43.		N.S.	BULKHEAD, CYLINDER INNER	
44.		N.S.	SEAL, OUTER RACK	
45.		N.S.	SEAL, O-RING	
46.		N.S.	BULKHEAD, CYLINDER OUTER	
47.	7-A19	6.509	RING, BULKHEAD RETAINING	
48.	7-A19	6.509	CLAMP, STRG GR TO FRAME	10207187
49.		8.917	NUT, HEX PREV TORQ (M8X1.25) (10)	
		8.929	WASHER, FLAT (M8 ID 24 OD 2.3 THK)	
50.		8.900	BOLT, HEX (M8X.25X20)	
51.	7-A19	6.509	WASHER, STRG GR (MTG)	10267310
52.		8.900	BOLT, HEX FLG HD (M10X1.5X85) (10.9)	
53.		8.917	NUT, HEX WA TORQ PREV (M10X1.5) (10)	

RPO DEFINITIONS
FE7 – SUSPENSION SYSTEM,FRONT AND REAR,HEAVY DUTY

© 2000 GENERAL MOTORS SERVICE PARTS OPERATIONS-CHEVROLET-14Y

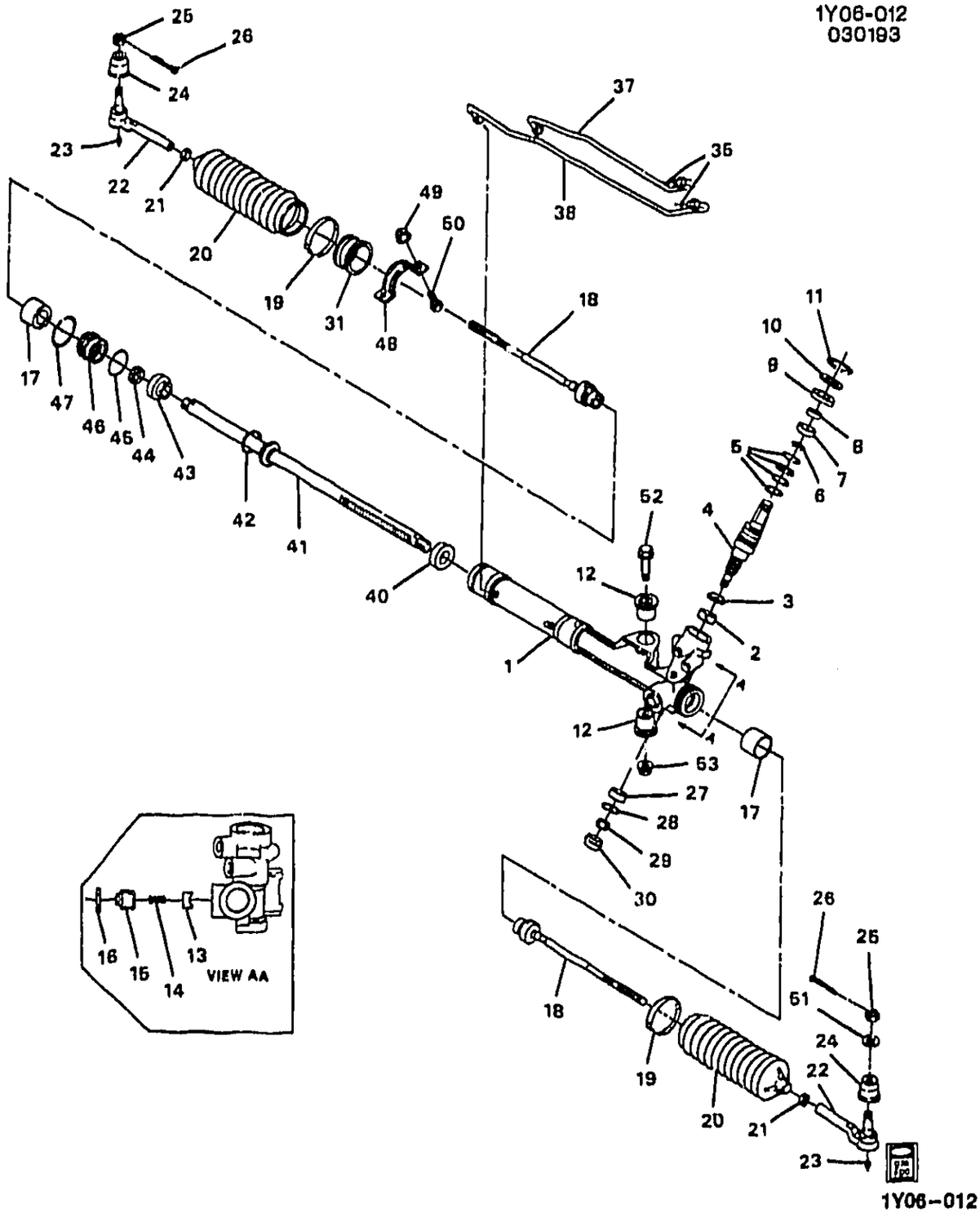

1989-1992 Y STEERING ASM/RACK & PINION-POWER

1.	N.S.	HOUSING ASM, S/GR (*KIT1) ...	.....
2.	N.S.	BUSHING, UPR PINION (*KIT1) .	.....
3.	N.S.	SEAL, PINION SHFT (*KIT1)	.....
4.	N.S.	VALVE, PINION ASM (*KIT1)	.....
5.	N.S.	RING, VLV BDY (*KIT1)	.....
6.	N.S.	RING, VLV BDY RINGS RETG (*KIT1)	.....

© 2000 GENERAL MOTORS SERVICE PARTS OPERATIONS-CHEVROLET-14Y

7.		N.S.	ANNULUS, STUB SHFT BRG (*KIT1)				
8.		N.S.	BEARING, PINION (*KIT1)				
9.		N.S.	SEAL, STUB SHFT (*KIT1)				
10.		N.S.	SEAL, STUB SHFT DUST (*KIT1)				
11.	7-B9	6.552	RING, S/GR STUB SHF SEAL RET (R&P) (*KIT1)	89-91	Y (FOR MDL APPL & POA INFO SEE GEAR CHART)	1	7828017
	7-B9	6.552	RING, S/GR STUB SHF SEAL RET (R&P) (*KIT1)	92	Y	1	7828017
12.	7-B20	6.786	BUSHING, S/GR RACK (R&P) (AC-DELCO #36-9527)	89-91	Y (FOR MDL APPL & POA INFO SEE GEAR CHART)	1	7841634
	7-B20	6.786	BUSHING, S/GR RACK (R&P) (AC-DELCO #36-9527)	92	Y	1	7841634
13.		N.S.	BEARING, RACK (*KIT1)				
14.		N.S.	SPRING, ADJUSTER (*KIT1)				
15.		N.S.	PLUG, ADJ (*KIT1)				
16.	7-A19	6.509	NUT, S/GR (M10X1.5 FLANGED HEX HEAD) (*KIT1) (8.917)	89-92	Y	AR	10255857
17.	7-B20	6.865	RING, S/GR SHF DPNR (R&P)	89-91	Y (FOR MDL APPL & POA INFO SEE GEAR CHART)	2	7831234
	7-B20	6.865	RING, S/GR SHF DPNR (R&P)	92	Y	2	7831234
18.	7-A9	6.230	ROD KIT, STRG LNKG INR TIE	89-91	Y (FOR MDL APPL & POA INFO SEE GEAR CHART)	2	26024411
	7-A9	6.230	ROD KIT, STRG LNKG INR TIE	92	Y	2	26024411
19.	7-A10	6.242	CLAMP, S/GR BOOT	89-92	Y	2	7841287
20.	7-A10	6.242	BOOT KIT, S/GR	89-92	Y	2	26003998
21.		8.915	NUT, HEX (STRG LNKG INR TIE ROD) (6.526)	89-92		AR	26017267
22.	7-A10	6.233	ROD KIT, STRG LNKG OTR TIE (5.415) (AC-DELCO #36-9515)	92	Y (LT5, LT1)	2	26050222
	7-A10	6.233	ROD KIT, STRG LNKG OTR TIE (FOR MDL APPL & POA INFO SEE GEAR CHART) (5.415) (AC-DELCO #36-9515)	89-91	Y (L98)	2	26050222
23.		8.984	FITTING, GREASE, 90 DEG, 1/4-28, CAD/ZN	89-92		AR	7842586
24.	7-A10	6.242	SEAL, STRG LNKG OTR TIE ROD	89-92	Y	1	7840726
25.	7-A10	6.234	NUT, STRG LNKG OTR TIE ROD (5.418)	89-92	Y	2	14050089
26.		8.938	PIN, COTTER 1/8 X 1 1/2	89-92		AR	103367
27.		N.S.	BEARING, PINION BALL (*KIT1)				
28.		N.S.	RING, RETG (*KIT1)				
29.		8.917	NUT, HEX PRVG TORQ M10X1.5XGR10XCAD (*KIT1)	89-92		AR	11501033
30.		N.S.	COVER, DUST (*KIT1)				
31.	7-A19	6.509	INSULATOR, S/GR (AC-DELCO #36-9526)	89-91	Y (FOR MDL APPL & POA INFO SEE GEAR CHART)	1	7840293
	7-A19	6.509	INSULATOR, S/GR (AC-DELCO #36-9526)	92	Y	1	7840293
35.	7-B19	6.674	SEAL, S/GR PIPE (O RING) (*KIT1)	89-91	Y (FOR MDL APPL & POA INFO SEE GEAR CHART)	2	26015539
	7-B19	6.674	SEAL, S/GR PIPE (O RING) (*KIT1)	92	Y	1	26015539

© 2000 GENERAL MOTORS SERVICE PARTS OPERATIONS-CHEVROLET-14Y

							1Y06-012
37.	7-B18	6.670	LINE KIT, CYL-RH (*KIT1)	89-90	Y	1	26037914
	7-B18	6.670	LINE KIT, CYL-RH (*KIT1)	91-92	Y	1	26017579
38.	7-B18	6.670	LINE KIT, CYL-LH (*KIT1)	89-92	Y	1	26037911
40.		N.S.	SEAL, INNER RACK (*KIT1)				
41.		N.S.	RACK, PSTN & STRG (*KIT1)				
42.		N.S.	RING, PISTON (*KIT1)				
43.		N.S.	BULKHEAD, CYL INNER (*KIT1)				
44.		N.S.	SEAL, OUTER RACK (*KIT1)				
45.		N.S.	SEAL, O RING (*KIT1)				
46.		N.S.	BULKHEAD, CYL OUTER (*KIT1)				
47.		N.S.	RING, BULKHEAD RETG (*KIT1)				
48.	7-A19	6.509	CLAMP, S/GR	89-92	Y	1	10207187
49.		8.917	NUT, M8X1.25X7.1, ZC 10	89-92		AR	11515748
50.		8.900	BOLT-HEX, M8X1.25X20, 16.88 THD, GM500 (10.9), PZOR, MACH (AC-DELCO #11508687)	89-92		AR	11508687
51.	7-A8	6.164	WASHER, STRG LNKG OTR TIE ROD (13.2X22.8X2.0, LCS, ZF)	89-92	Y	2	10267310
52.		8.900	BOLT, HFH. M10X1.5X85, 9.8, PO	89-92		AR	11509678
53.		8.917	NUT, HEX PRVG TORQ M10X1.5XGR10XCAD	89-92		AR	11501033

SERVICE KITS

1.	7-A12	6.508	GEAR, STRG (STMPD NS)	90	Y (FE1, FE7)	1	26016255
	7-A12	6.508	GEAR, STRG (STMPD NS)	91-92	Y	1	26024191
	7-A12	6.508	GEAR, STRG (STAMPED "FH" ON DUST CVR) (STMPD NS)	89	Y (FE1, FE7)	1	26016255
	7-A12	6.508	GEAR, STRG (STAMPED "NS" ON DUST CVR) (STMPD NS)	89	Y (FE1, FE7)	1	26008136
	7-A12	6.508	GEAR KIT, STRG (REMAN) (STMPD NS) (AC-DELCO #36-9040)	90-91	Y (L98, LT5) (FOR MDL APPL & POA INFO SEE GEAR CHART)	1	26044839
	7-A12	6.508	GEAR KIT, STRG (REMAN) (STMPD NS) (AC-DELCO #36-9040)	92	Y (LT1, LT5)	1	26044839
	7-A12	6.508	GEAR KIT, STRG (REMAN) ("NS" STAMPED ON DUST CVR) (STMPD NS) (AC-DELCO #36-9037)	89	Y (L98)	1	26044836
	7-A12	6.508	GEAR KIT, STRG (REMAN) (HAS "FH" STAMPED ON DUST CVR) (STMPD NS) (AC-DELCO #36-9040) (FOR MDL APPL. & POA INFO SEE GEAR CHART)	89	Y (L98)	1	26044839

RPO DEFINITIONS
FE1 – SUSPENSION SYSTEM,SOFT RIDE
FE7 – SUSPENSION SYSTEM,FRONT AND REAR,HEAVY DUTY(USED WITH PERFORMANCE HANDLING PACKAGE Z51)
LT1 – ENGINE-GAS, 8 CYL, 5.7L(5.7P),MFI,HO
LT5 – ENGINE,5.7L(5.7J),TPI
L98 – ENGINE, 5.7L, (5.7-8) 350 CID, V8, TPI

© 2000 GENERAL MOTORS SERVICE PARTS OPERATIONS-CHEVROLET-14Y

MICROFICHE INDEX

GROUPS 6.000 THRU 7.000

FICHE 7 OF 11

GROUP	DESCRIPTION	STARTING GRID LOCATION PARTS	ILLUSTRATIONS
–	GENERAL INFORMATION	1–A2	1–G2
–	ALPHABETICAL INDEX	1–B13	N.A.
6.000	FRONT SUSPENSION – STEERING	7–A2	7–E2
7.000	FRAMES – SPRINGS – SHOCKS – BUMPERS	7–C2	7–H2
–	OUT OF FICHE CALLS	N.A.	7–M17

7–F1

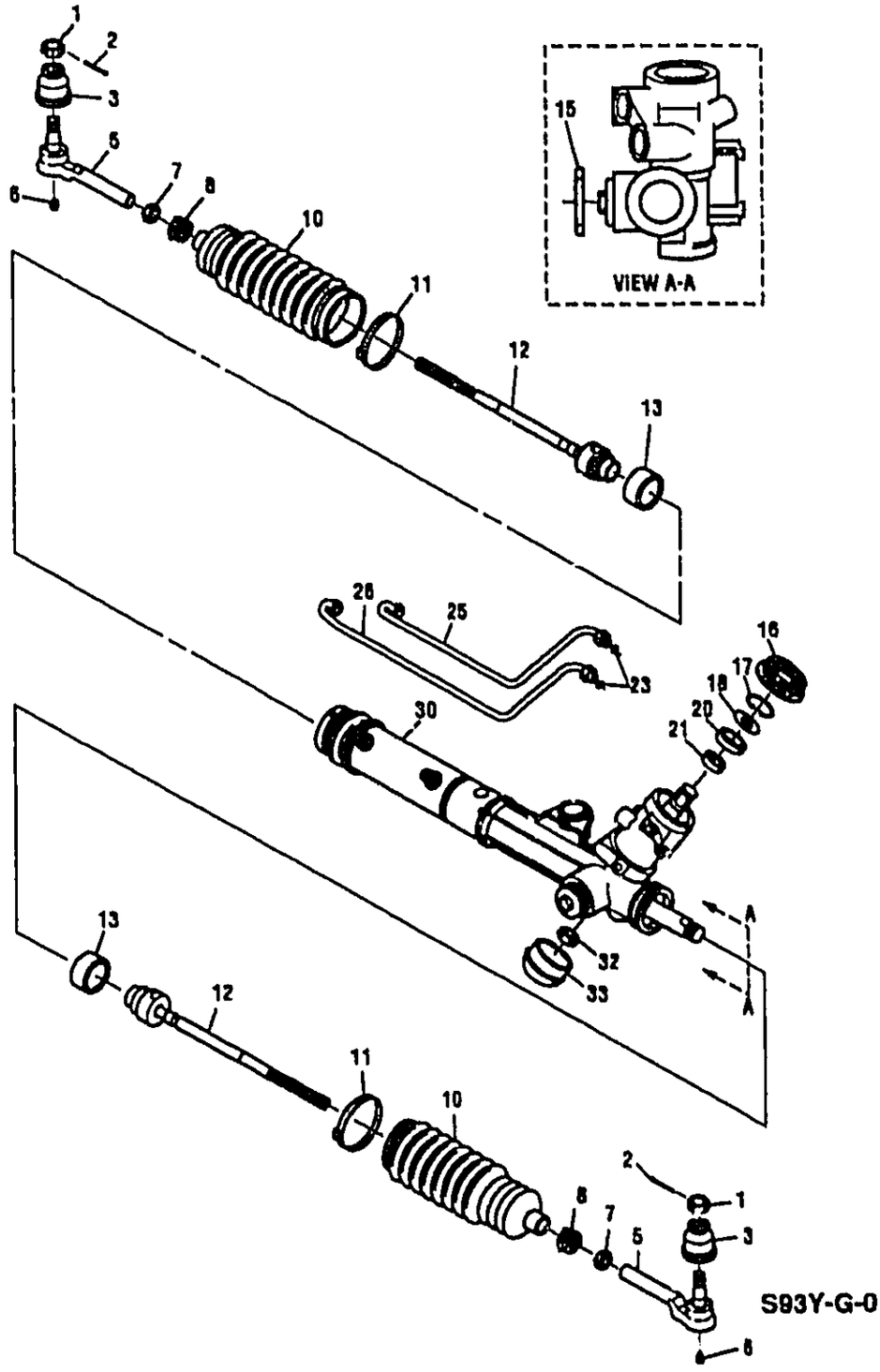

1993 Y STEERING GEAR ASM POWER

1.	7-A10	6.234	NUT, STRG LNKG OTR TIE ROD (UPR) (HEX SLOTTED M12X1.75X13) (5.418)	93 Y	2	14050089
2.		6.938	PIN, COTTER 1/8 X 1 1/2 (STRG LNKG OTR TIE ROD)	93	AR	103387
3.		N.S.	SEAL, STRG LNKG OTR TIE ROD (PART OF 5)	.....		

© 2000 GENERAL MOTORS SERVICE PARTS OPERATIONS-CHEVROLET-14Y

							GM06-137	
5.	7-A10	6.233	ROD KIT, STRG LNKG OTR TIE (INCLS 2, 5, 7) (5.415) (AC-DELCO #36-9515)	93	Y (LT5, LT1)	2	26050222
6.		8.984	FITTING, GREASE, 90 DEG, 1/4-28, CAD/ZN (STRG LNKG OTR TIE)	03	.....	AR	7842586
7.		8.915	NUT, HEX (PART OF 5, 12) (6.526)	93	.....	AR	26017267
8.	7-A10	6.242	CLAMP, S/GR BOOT (PART OF 10) (TIE ROD END) (OTR)	93	Y	2	26013335
10.	7-A10	6.242	BOOT KIT, S/GR (INCLS 8, 11) (INCLS BOOT, CLAMPS, GREASE)	93	Y	2	21011025
	7-A10	6.242	BUSHING, S/GR BOOT RET	93	Y	1	26020743
11.		N.S.	CLAMP, S/GR BOOT (PART OF 10)		.....		
12.	7-A9	6.230	ROD KIT, STRG LNKG INR TIE (INCLS 7)	93	Y	2	26034348
13.	7-B20	6.865	RING, S/GR SHF DPNR (R&P) ...	93	Y	2	7831234
15.	7-A19	6.509	NUT, S/GR (M10X1.5 FLANGED HEX HEAD) (8.917)	93	Y	AR	10255857
16.		N.S.	ADAPTER, STRG COL DA SEAL .		.....		
17.	7-B9	6.552	RING, S/GR STUB SHF SEAL RET (R&P)	93	Y	1	7828017
18.		N.S.	SEAL, STUB SHFT DUST (PART OF 30)		.....		
20.		N.S.	SEAL, STUB SHFT (PART OF 30)		.....		
21.		N.S.	BEARING, ANNULUS ASM NEEDLE (PART OF 30)		.....		
23.	7-B19	6.674	SEAL, S/GR PIPE (O RING) (PART 25, 26)	93	Y	1	26015539
25.	7-B18	6.670	PIPE KIT, S/GR (SHORT) (INCLS 23)	93	Y	RH	26017579
	7-B18	6.670	PIPE KIT, S/GR (SHORT) (INCLS 23)	93	Y	RH	26037914
26.	7-B18	6.670	PIPE KIT, S/GR (LONG) (INCLS 23)	93	Y	LH	26017578
	7-B18	6.670	PIPE KIT, S/GR (LONG) (INCLS 23)	93	Y	LH	26037911
30.	7-A12	6.508	GEAR KIT, STRG (REMAN) (AC-DELCO #36-9040)	93	Y (LT1, LT5)	1	26044839
	7-A19	6.509	INSULATOR, S/GR (AC-DELCO #36-9526)	93	Y	1	7840293
32.		8.917	NUT, HEX PRVG TORQ M10X1.5XGR10XCAD	93	.....	AR	11501033
33.		N.S.	COVER, DUST		.....		

RPO DEFINITIONS
LT1 – ENGINE-GAS, 8 CYL, 5.7L(5.7P),MFI,HO
LT5 – ENGINE,5.7L(5.7J),TPI

© 2000 GENERAL MOTORS SERVICE PARTS OPERATIONS-CHEVROLET-14Y

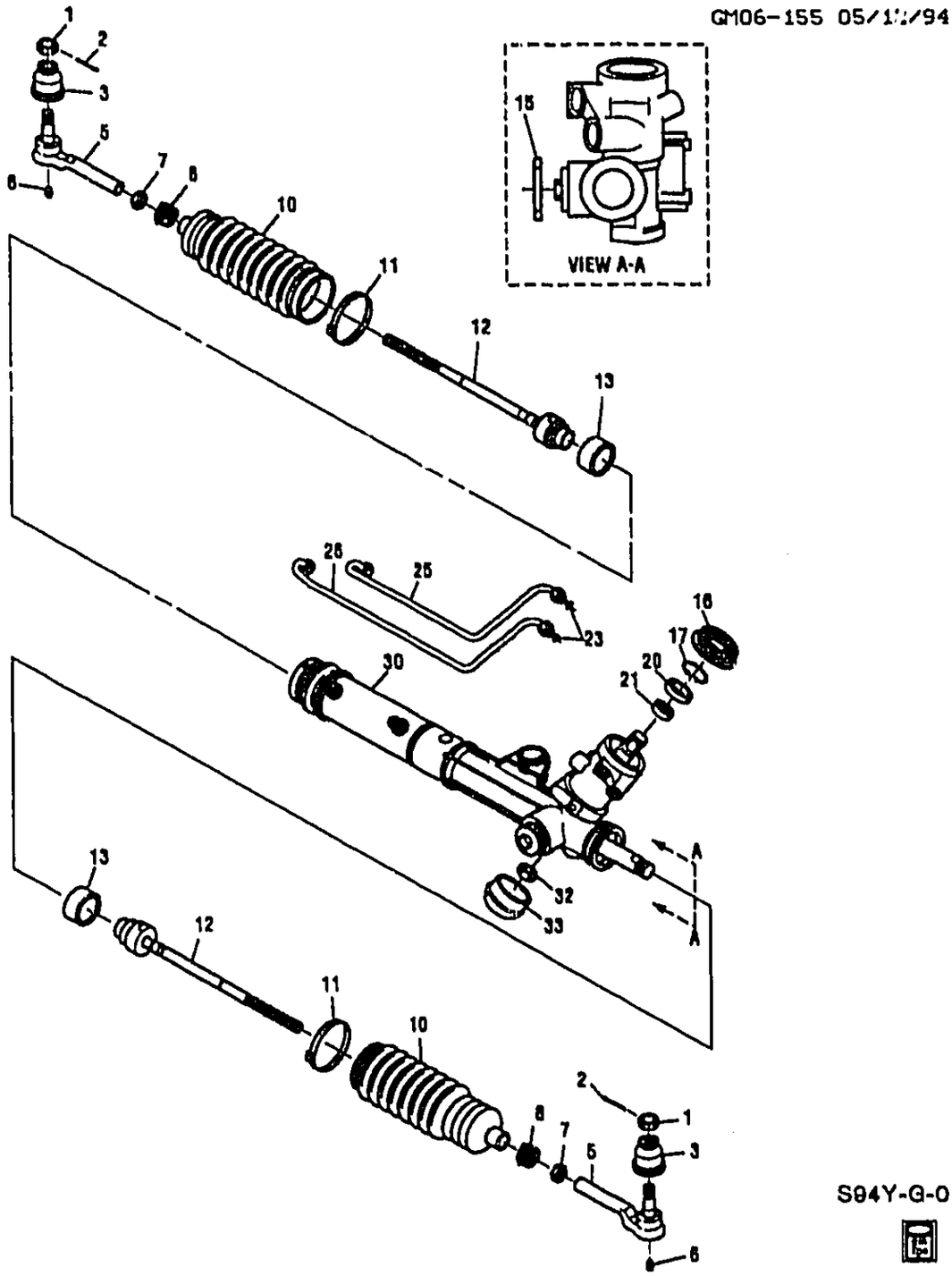

1994-1996 Y STEERING GEAR ASM POWER

1.	7-A10	6.234	NUT, STRG LNKG OTR TIE ROD (UPR) (HEX SLOTTED M12X1.75X13) (5.418)	94-96	Y	2	14050089
2.		8.938	PIN, COTTER 1/8 X 1 1/2 (STRG LNKG OTR TIE ROD)	94-96	.....	AR	103387
3.		N.S.	SEAL, STRG LNKG OTR TIE ROD (PART OF 5)		.....		

© 2000 GENERAL MOTORS SERVICE PARTS OPERATIONS-CHEVROLET-14Y

							GM06-155
5.	7-A10	6.233	ROD KIT, STRG LNKG OTR TIE (INCLS 2, 5, 7) (5.415) (AC-DELCO #36-9515)	94-96	Y (LT5, LT1)	2	26050222
6.		8.984	FITTING, GREASE, 90 DEG, 1/4-28, CAD/ZN (STRG LNKG OTR TIE)	94-96	.....	AR	7842586
7.		8.915	NUT, HEX (PART OF 5, 12) (6.526)	94-96	.....	AR	26017267
8.	7-A10	6.242	CLAMP, S/GR BOOT (PART OF 10) (TIE RCD END) (OTR)	94-96	Y	2	26013335
10.	7-A10	6.242	BOOT KIT, S/GR (INCLS 8, 11) (INCLS BOOT, CLAMPS, GREASE)	94-96	Y	2	21011025
	7-A10	6.242	BUSHING, S/GR BOOT RET	94-96	Y	1	26020743
11.		N.S.	CLAMP, S/GR BOOT (PART OF 10)		.....		
12.	7-A9	6.230	ROD KIT, STRG LNKG INR TIE (INCLS 7)	94-96	Y	2	26034348
13.	7-B20	6.865	RING, S/GR SHF DPNR (R&P) ...	94-96	Y	2	7831234
15.	7-A19	6.509	NUT, S/GR (M10X1.5 FLANGED HEX HEAD) (8.917)	94-96	Y	1	10255857
16.		N.S.	ADAPTER, STRG COL DA SEAL .		.....		
17.	7-B9	6.552	RING, S/GR STUB SHF SEAL RET (R&P)	94-96	Y	1	7828017
20.		N.S.	SEAL, STUB SHFT (PART OF 30)		.....		
21.		N.S.	BEARING, ANNULUS ASM NEEDLE (PART OF 30)		.....		
23.	7-B19	6.674	SEAL, S/GR PIPE (O RING) (PART 25, 26)	94-96	Y	1	26015539
25.	7-B18	6.670	PIPE KIT, S/GR (SHORT) (INCLS 23)	94-96	Y	RH	26037914
26.	7-B18	6.670	PIPE KIT, S/GR (LONG) (INCLS 23)	94-96	Y	LH	26037911
30.	7-A12	6.508	GEAR KIT, STRG (REMAN) (AC-DELCO #36-9040)	94-95	Y (LT1, LT5)	1	26044839
	7-A12	6.508	GEAR KIT, STRG (REMAN) (AC-DELCO #36-9040)	96	Y (LT1, LT4)	1	26044839
	7-A19	6.509	INSULATOR, S/GR (AC-DELCO #36-9526)	94-96	Y	1	7840293
32.		8.917	NUT, HEX PRVG TORQ M10X1.5XGR10XCAD	94-96	.....	AR	11501033
33.		N.S.	COVER, DUST		.....		

RPO DEFINITIONS
LT1 – ENGINE-GAS, 8 CYL, 5.7L(5.7P),MFI,HO
LT4 – ENGINE GAS, 8 CYL, 5.7L, MFI, HIGH OUTPUT
LT5 – ENGINE,5.7L(5.7J),TPI

© 2000 GENERAL MOTORS SERVICE PARTS OPERATIONS-CHEVROLET-14Y

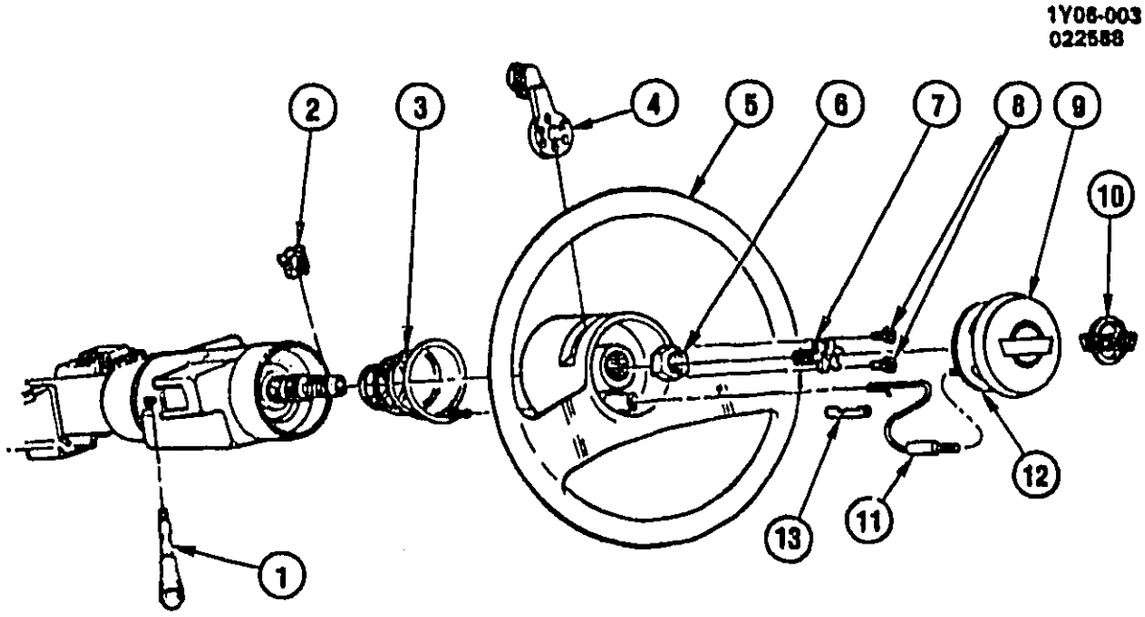

1Y06-003

1984-1989 Y STEERING WHEEL & HORN PARTS

1.	7-A20	6.514	LEVER, COL TILT WHL REL	10231660
2.	7-A20	6.515	RETAINER, STRG WHL NUT	419454
3.		DISCON	SPRING, HORN CNCT	403745
4.		DISCON	LEVER, COL TELESCOPE ADJ	14050012
5.	7-A19	6.513	WHEEL, STRG (BLACK) (1984-85)	9768988
	7-A19	6.513	WHEEL, STRG (BLACK) (1986-87) (1988 EXC B18) (1989) (INCL 13)	17983971
		DISCON	WHEEL, STRG (WHITE) (1988 W/B13) (INCL 13)	17989518
6.		8.915	NUT, HEX (M14X1.5)	7829221
7.		DISCON	SCREW, SHF LK KNOB	3949135
8.		8.908	SCREW, FL TR HD CR REC MA (#8- #10-32 X.250)	9420455
9.	7-M25	2.820	CAP, HORN (1984-85)	9768586
	7-M25	2.820	CAP, HORN (1986-87) (1988 EXC B18) (1989)	17983747
		DISCON	CAP, HORN (1988 W/B18)	17989742
		DISCON	SPRING, CNCT (1984-85)	9768535
10.	7-M25	2.820	EMBLEM, HORN CAP (1984-87) (1988 EXC B18) (1989)	9769808
		DISCON	EMBLEM, HORN CAP (1988 W/B18)	17989520
11.	7-M25	2.859	WIRE, HORN BUTN	9769448
12.	7-M24	2.819	CONTACT, HORN BLOW (1984-85)	9768584
	7-M24	2.819	CONTACT, HORN CAP (1986-89)	17982941
13.	7-M24	2.819	TOWER, HORN LEAD (PART OF 5)	9768765

© 2000 GENERAL MOTORS SERVICE PARTS OPERATIONS-CHEVROLET-14Y

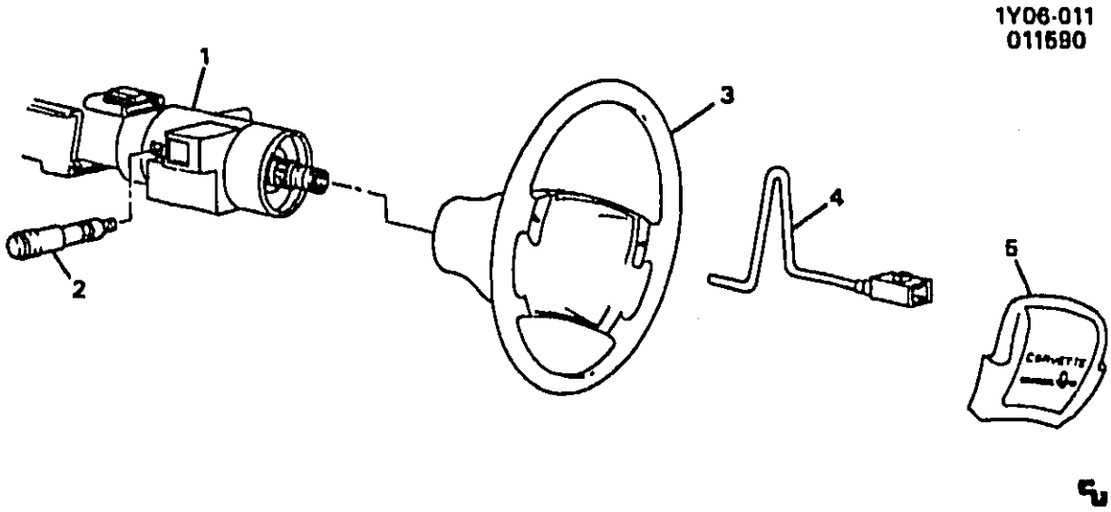

1Y06-011

1990-1993 Y STEERING WHEEL & HORN PARTS

1.	7-A21	6.518	**COLUMN**, STRG (W/ML9, MD8) (SEE GROUP 6.000 "STEERING COLUMN" FOR DETAIL ILLUSTRATED VIEW))	91	Y (MD8)	1	26024008
	7-A21	6.518	**COLUMN**, STRG (W/ML9, MD8) (SEE GROUP 6.000 "STEERING COLUMN" FOR DETAIL ILLUSTRATED VIEW))	91	Y (ML9)	1	26024009
	7-A21	6.518	**COLUMN**, STRG (W/ML9, MD8) (SEE GROUP 6.000 "STEERING COLUMN" FOR DETAIL ILLUSTRATED VIEW))	91	Y (ML9)	1	26031578
	7-A21	6.518	**COLUMN**, STRG (W/ML9, MD8) (SEE GROUP 6.000 "STEERING COLUMN" FOR DETAIL ILLUSTRATED VIEW))	91-93	Y (MD8)	1	26031577
	7-A21	6.518	**COLUMN**, STRG (W/ML9, MD8) (SEE GROUP 6.000 "STEERING COLUMN" FOR DETAIL ILLUSTRATED VIEW)) (USE WITH COLUMN ASM LABELED 26030971)	92	Y (ML9) (2ND DES)	1	26031578
	7-A21	6.518	**COLUMN**, STRG (W/ML9, MD8) (SEE GROUP 6.000 "STEERING COLUMN" FOR DETAIL ILLUSTRATED VIEW))	93	Y (ML9)	1	26031578
2.	7-A20	6.514	**LEVER**, STRG COL TILT WHL REL	90-93	Y	1	10231660
3.	7-A19	6.513	**WHEEL**, STRG (W/CONTACTS) (INCLS 4)	90-93	Y	1	10201320
	7-M24	2.319	**SWITCH**, STRG WHL HORN (PART OF WHL) (GRAY) (BUTTON ONLY)	90-91	Y	LH	12506007
	7-M24	2.819	**SWITCH**, STRG WHL HORN (PART OF WHL) (GRAY) (BUTTON ONLY)	90-91	Y	RH	12506008

© 2000 GENERAL MOTORS SERVICE PARTS OPERATIONS-CHEVROLET-14Y

							1Y06-011	
	7-M24	2.819	SWITCH, STRG WHL HORN (PART OF WHL) (BLACK) (W/O CONTACTS)	92-93	Y		LH	12518247
	7-M24	2.819	SWITCH, STRG WHL HORN (PART OF WHL) (BLACK)	92-93	Y		RH	12518248
	7-A20	6.515	NUT, STRG WHL (M14X1.5) (HEX CONE)	90-93	Y		1	7829221
4.		N.S.	CONTACT) (PART OF 3		.....			
5.	7-N26	14.865	MODULE, STRG WHL INFL RST (PROBE CONN IN OWN BOX) ...	91-93	Y		1	10158008
	7-A19	6.512	MODULE, STRG WHL INFL RST (PROBE CONN IN OWN BOX) (14 865)	91-93	Y		1	10158008
	7-N26	14.865	MODULE, STRG WHL INFL RST (IF REPLC 1990, COIL 26013854 MUST REPLC EXISTING COIL & MUST ALSO REPLC WHEEL USING 10201320) (PROBE CONN IN OWN BOX)	90	Y		1	10158008
	7-A19	6.512	MODULE, STRG WHL INFL RST (IF REPLC 1990, COIL 26013854 MUST REPLC EXISTING COIL & MUST ALSO REPLC WHEEL USING 10201320) (14.865) (PROBE CONN IN OWN BOX) ...	90	Y		1	10158008
	7-N26	14.865	BOLT, INFL RST CONT MDL BRKT LWR (M6X1X20) (HEX W/CON WA) (8.900)	90-93	Y		2	11514623
	7-N26	14.865	BOLT, INFL RST CONT MDL BRKT UPR (M6X1X20) (HEX W/CON WA) (8.900)	90-93	Y		2	11514623
	7-N26	14.865	BOLT, INFL RST DIAGN ENGY RESV MDL (M5X.8X16 THD) (SPECIAL) (3.671) (AC-DELCO #12337892)	90-93	Y		4	12337892

RPO DEFINITIONS
MD8 – TRANSMISSION,AUTOMATIC 4-SPEED(THM700R4/4L60)
ML9 – TRANSMISSION,MANUAL 6-SPEED

© 2000 GENERAL MOTORS SERVICE PARTS OPERATIONS-CHEVROLET-1 1Y

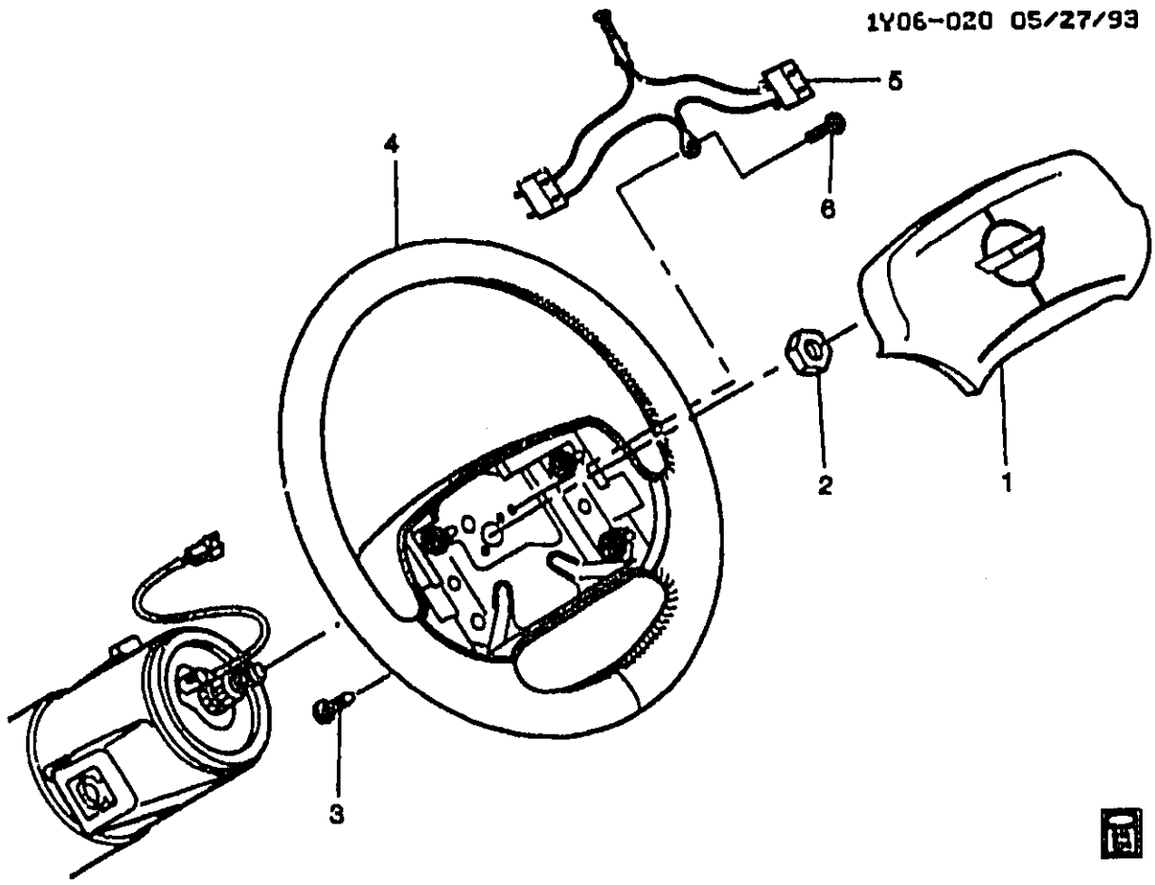

1Y06-020

1994-1996 Y STEERING WHEEL & HORN PARTS

1.	7-N26	14.865	**MODULE**, STRG WHL INFL RST	94-96	Y (AK5)	1	16752392
	7-A19	6.512	**MODULE**, STRG WHL INFL RST (14.365)	94-96	Y (AK5)	1	16752392
2.	7-A20	6.515	**NUT**, STRG WHL (PART OF 4) (M14X1.5) (HFH TORQ PREV)	94-96	Y	1	26056108
3.	7-M24	2.819	**BOLT**, HORN CNCT MTG (PART OF 4) (M6X1.0X13.0) (METRIC TORX HD) (8.913)	94-96	Y	2	10192577
4.	7-A19	6.513	**WHEEL**, STRG (INCLS 2, 3, 5, & 6)	94-96	Y	1	16752390
5.	7-M24	2.819	**SWITCH**, STRG WHL HORN (PART OF 4) (AC-DELCO #D1774A)	94-96	Y	1	17999094
6.		8.913	**SCREW**, PAN HD TORX, M4X.7X8, 7 THD, T20, CA (PART OF 4)	94-96	Y	AR	11515178

RPO DEFINITIONS
AK5 – RESTRAINT SYSTEM,FRONT SEAT,INFLATABLE,DRIVER AND PASSENGER

© 2000 GENERAL MOTORS SERVICE PARTS OPERATIONS-CHEVROLET-14Y

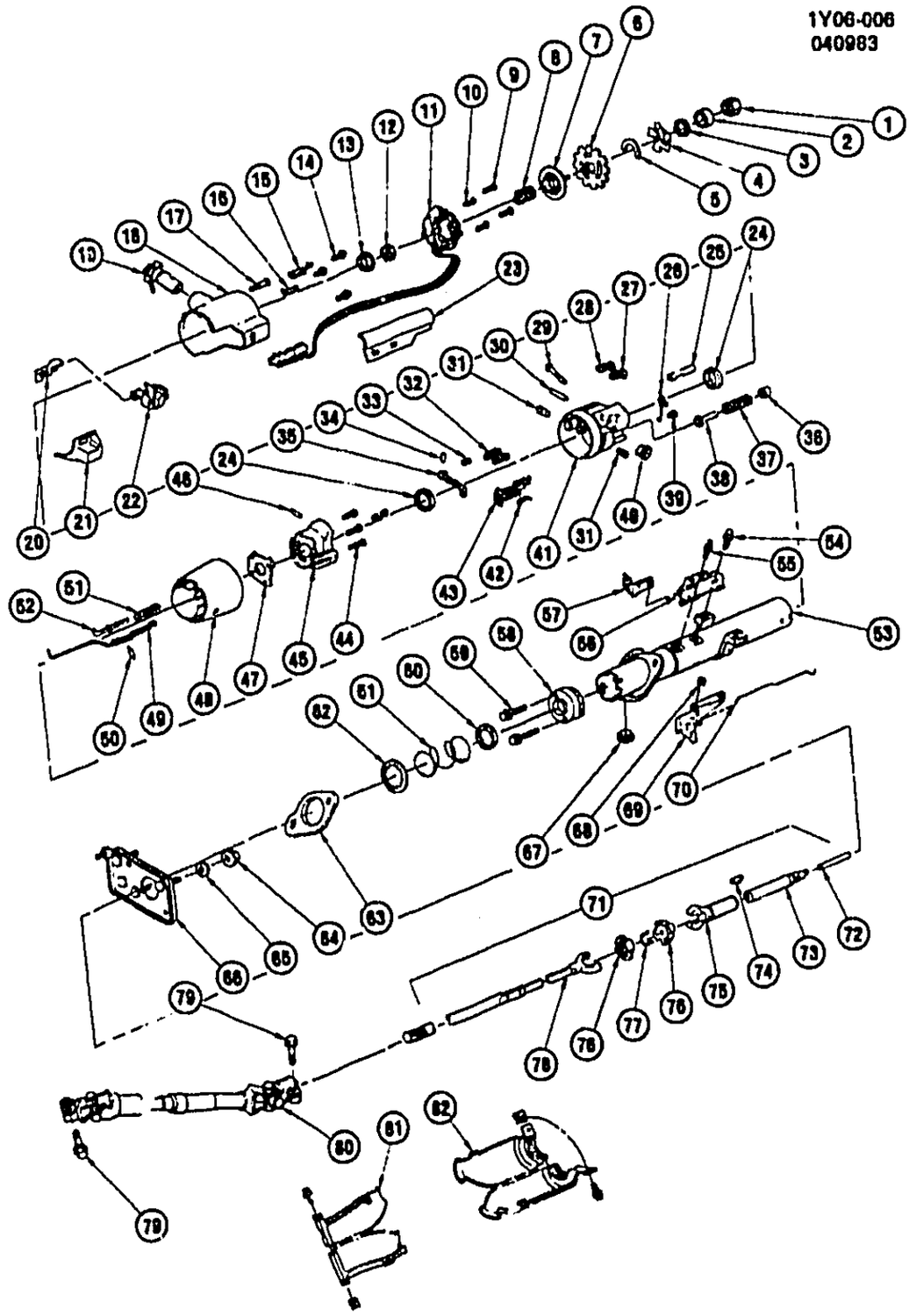

1Y06–006

1984–1989 Y STEERING COLUMN/TILT & TELESCOPE (F/S, A.T.)

NOTE: REFERENCE "STEERING COLUMN" CHART

1.		8.915	NUT, HEX (M14 X 1.5)
2.		DISCON	BUMPER, RETR STRG COL
3.	7–A20	6.514	SPACER, RETR STRG COL
4.	7–M24	2.819	RETAINER, SNAP RING HORN CNCT CARR
5.	7–A11	6.500	RETAINER, SHAFT LK

© 2000 GENERAL MOTORS SERVICE PARTS OPERATIONS–CHEVROLET–14Y

6.	7-A11	6.500	PLATE, STRG SHAFT
7.	7-M25	2.896	CAM, T/SIG CANC
8.	7-B8	6.521	SPRING, UPR BRG
9.	7-M25	2.895	SCREW, SIG SW MTG
10.		8.977	SCREW, RD HD TORX TAP (M4.2 X 1.41 X 20)
11.	7-M25	2.895	SWITCH, TURN SIG (AC-DELCO #D6223)
12.	7-B8	6.521	SEAT, UPR BRG RACE
13.		N.S.	RACE, UPR SHF UPR BRG
14.	7-M25	2.895	SCREW, HSG COVER
15.	7-M21	2.195	SWITCH, IGN KEY WARN ALARM (AC-DELCO #D1458C)
16.	7-M21	2.195	CLIP, BUZZER SW RET
17.	7-M21	2.195	SCREW, LOCK RET
18.	7-A21	6.518	COVER, LOCK HSG
19.	7-M21	2.188	LOCK ASM, IGN (CODED W/KEY) (AC-DELCO #D1403B)
20.		DISCON	ACTUATOR, DIMR SW ROD
21.	7-A21	6.518	CAP, COL HSG CVR END
22.	7-M23	2.459	PIVOT, SW ACTR
23.		DISCON	PROTECTOR, WRG
24.		N.S.	BEARING, UPR SHF (PART OF #43)
25.	7-A11	6.500	BOLT, SHAFT LK
26.		N.S.	SPRING, LK BOLT (PART OF #43)
27.	7-A20	6.514	SHOE, LOCK
28.	7-A20	6.514	SHOE, LOCK
29.	7-M21	2.195	SHAFT, IGN SW
30.	7-A20	6.514	PIN, LK SHOE RET
31.		N.S.	PIN, PIVOT-TILT (PART OF SPRING KIT, TILT UPR GROUP 6.521)
32.	7-A20	6.514	SPRING, LK SHOE RTN
33.	7-A20	6.514	SPRING, LK SHOE REL
34.	7-A20	6.514	PIN, LK SHOE REL LVR (AC-DELCO #9422127)
35.	7-A20	6.514	LEVER, LK SHOE REL
36.		N.S.	RETAINER, SPRING (PART OF SPRING KIT, TILT UPR GROUP 6.521)
37.		N.S.	SPRING, WHL TILT (PART OF SPRING KIT, TILT UPR GROUP 6.521)
38.	7-A20	6.514	SPRING KIT, STRG WHL TILT SPR
39.		N.S.	SCREW, LK BOLT SPR (PART OF #43)
40.		N.S.	SECTOR, IGN SW ACTR (PART OF #43)
41.	7-A20	6.514	HOUSING, STRG COL (INCLS #24 THRU 35.39, 40, 42, 43)
42.	7-M21	2.195	SPRING, IGN SW RACK PRELOAD
43.	7-M21	2.195	RACK KIT, IGN SW ACTR (INCLS #24, 26, 39, 40)
44.	7-A20	6.514	SCREW, COL SUPT
45.	7-A21	6.518	SUPPORT, COL HSG (INCLS #46)
46.		N.S.	PIN, DOWEL STEEL (9/64" X 1.5)
47.	7-A20	6.514	PLATE, SUPT LK
48	7-A21	6.518	SHROUD, HSG
49.		DISCON	ACTUATOR, IGN SW
50.	7-A11	6.500	PIN, INHIBITOR
51.	7-A11	6.500	SPRING, CBL BKDRV PIN
52.	7-A11	6.500	PIN, CABLE BACKDRIVE
53.		DISCON	JACKET, COL (INCLS #63, 67)
54.	7-M21	2.188	SCREW, IGN SW
55.	7-M21	2.188	STUD, DIMR & IGN SW
56.	7-M21	2.188	SWITCH, IGN (AC-DELCO #D1405B)
57.	7-A21	6.518	JACKET, CABLE
58.	7-B8	6.521	BEARING, ADAPTER
59.		8.977	SCREW, HEX WA HD TAP (M4.2 X 1.41 X 20)
60.	7-B8	6.521	SEAT, LWR BRG
61.	7-B8	6.521	SPRING, LWR BRG

© 2000 GENERAL MOTORS SERVICE PARTS OPERATIONS-CHEVROLET-14Y

62.	7-B8	6.521	RETAINER, SPRING
63.	7-B20	6.758	SEAL, DASH
64.		8.915	NUT, HEX (5/16"-18 X 1/4")
65.	7-B20	6.760	WASHER, SUPT LWR
66.	7-B20	6.758	PLATE, STRG COL LWR SUPT STUD
67.		DISCON	PLUG, JACKET
68.		8.915	NUT, HEX (#10-24)
69.	7-M23	2.459	SWITCH, DIMR (AC-DELCO #D834)
70.	7-M23	2.459	ROD, DIMR SW
71.		DISCON	SHAFT ASM, (INCLS #72 THRU 78)
72.	7-A20	6.514	ROD, TELESCOPE LK
73.		DISCON	SHAFT, UPR
74.	7-A20	6.514	WEDGE, LOCKING
75.	7-B9	6.524	YOKE, W/RACE
76.	7-A20	6.514	SPHERE KIT, STRG COL SHF CTR (INCLS 77)
77.		DISCON	SPRING, JOINT PRELOAD
78.		DISCON	SHAFT, LWR
79.	7-B9	6.525	BOLT, INTER SHAFT
80.		DISCON	SHAFT, STRG GR CPLG
81.		DISCON	SHIELD, STRG GR CPLG LWR
82.		DISCON	SHIELD, STRG GR CPLG UPR

© 2000 GENERAL MOTORS SERVICE PARTS OPERATIONS-CHEVROLET-14Y

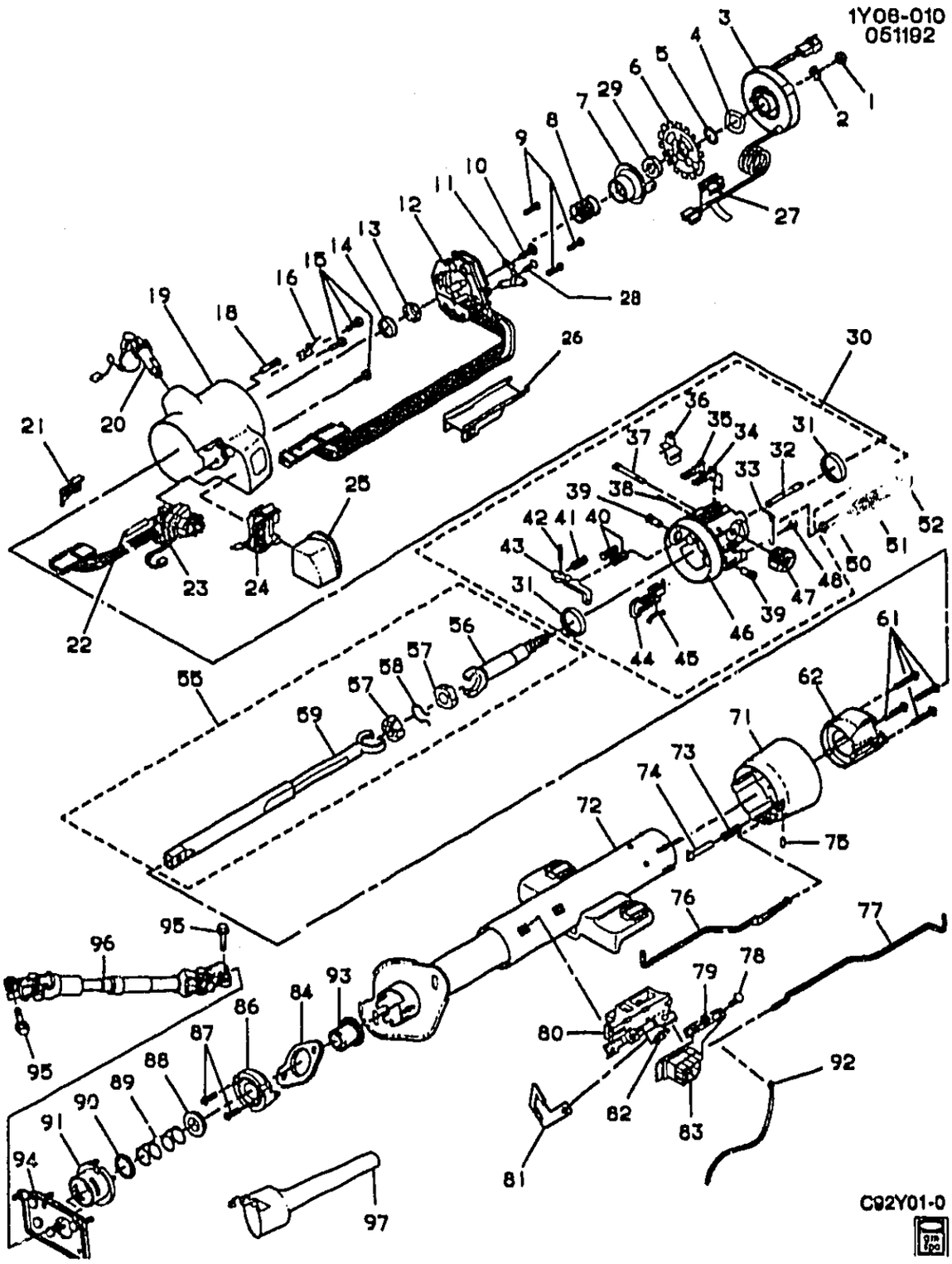

1990–1993 Y STEERING COLUMN/TILT (S.I.R. F/S, A.T., M.T)

NOTE: REFERENCE "STEERING COLUMN" CHART

1.	7–A20	6.515	NUT, STRG WHL (M14X1.5) (HEX CONE)	90–93 Y	1	7829221
2.		8.934	RING, SNAP (STL PL .750 DIA) (STRG WHL INFL RST MDL COIL RET)	90–93	AR	274414

© 2000 GENERAL MOTORS SERVICE PARTS OPERATIONS–CHEVROLET–14Y

							1Y06-010
3.	7-N26	14.865	COIL, STRG WHL INFL RST MDL	90	Y	1	26013920
		N.S.	COIL, STRG WHL INFL RST MDL (*KIT4)		.....		
4.	7-N26	14.865	WASHER, STRG WHL INFL RST MDL COIL (*KIT1)	90	Y (FOR MDL APPL & POA INFO SEE COL CHART)	1	26011609
	7-N26	14.865	WASHER, STRG WHL INFL RST MDL COIL (*KIT1)	91-93	Y	1	26011609
5.	7-A11	6.500	RING, STRG SHF LK PLT RET (6.524)	90	Y (FOR MDL APPL & POA INFO SEE COL CHART)	1	5694191
	7-A11	6.500	RING, STRG SHF LK PLT RET (6.524)	91-93	Y	1	5694191
6.	7-A11	6.500	PLATE, STRG SHF LK	90	FOR MDL APPL & POA INFO SEE COL CHART		26017656
	7-A11	6.500	PLATE, STRG SHF LK	91-93	Y	1	26017656
7.	7-M25	2.896	CAM, T/SIG CANC (AC-DELCO #26047013)	90	Y (FOR MDL APPL & POA INFO SEE COL CHART)	1	26047013
	7-M25	2.896	CAM, T/SIG CANC (AC-DELCO #26047013)	91	Y	1	26047013
	7-M25	2.896	CAM, T/SIG CANC (AC-DELCO #26047013) (USE W/COL ASM LABELED 26024008)	92	Y (1ST DES)	1	26047013
	7-M25	2.896	CAM, T/SIG CANC (AC-DELCO #26047013) (USE W/COL ASM LABELED 26030971)	92	Y (2ND DES)	1	26047013
	7-M25	2.896	CAM, T/SIG CANC (AC-DELCO #26047013)	93	Y	1	26047013
8.	7-B8	6.521	SPRING, STRG SHF UPR BRG ..	90	Y (FOR MDL APPL & POA INFO SEE COL CHART)	1	7815185
	7-B8	6.521	SPRING, STRG SHF UPR BRG ..	91-93	Y	1	7815185
9.	7-M25	2.895	BOLT, T/SIG SW (9-18X17.52) (PAN HD C/R HILO TAP)	90	Y (FOR MDL APPL & POA INFO SEE COL CHART)	3	7809128
	7-M25	2.895	BOLT, T/SIG SW (9-18X17.52) (PAN HD C/R HILO TAP)	91-93	Y	3	7809128
10.		N.S.	SCREW, C/S TAPPING		.....		
11.	7-M25	2.895	ACTUATOR, T/SIG SW	90	Y (FOR MDL APPL & POA INFO SEE COL CHART)	1	26020396
	7-M25	2.895	ACTUATOR, T/SIG SW	91-93	Y	1	26020396
12.	7-M25	2.895	SWITCH, T/SIG (AC-DELCO #D9001)	90	Y (FOR MDL APPL & POA INFO SEE COL CHART)	1	1995974
	7-M25	2.895	SWITCH, T/SIG (AC-DELCO #D9001)	90	Y (FOR MDL APPL & POA INFO SEE COL CHART)	1	1995974
	7-M25	2.895	SWITCH, T/SIG (AC-DELCO #D9001)	91-93	Y	1	1995974
13.		N.S.	SEAT, STRG SHF UPR BRG RACE (*KIT3)		.....		
14.		N.S.	RACE, STRG COL INR (*KIT1, KIT3)		.....		
15.	7-A21	6.518	BOLT, STRG COL HSG (GOLD) (1/4-20X3/4) (PAN HD C/R TAP) (2.895)	90	Y (FOR MDL APPL & POA INFO SEE COL CHART)	3	7830670

© 2000 GENERAL MOTORS SERVICE PARTS OPERATIONS-CHEVROLET-14Y

							1Y06-010
	7-A21	6.518	BOLT, STRG COL HSG (GOLD) (1/4-20X3/4) (PAN HD C/R TAP) (2.895)	91-93	Y	3	7830670
16.	7-M21	2.195	SWITCH, IGN KEY ALARM (BUZZER ONLY) (AC-DELCO #D1458C)	90	Y (FOR MDL APPL & POA INFO SEE COL CHART)	1	26022717
	7-M21	2.195	SWITCH, IGN KEY ALARM (BUZZER ONLY) (AC-DELCO #D1458C)	91-93	Y	1	26022717
18.	7-M21	2.195	BOLT, STRG COL LK & IGN SW CYL (THD SECT AT TOP OF SCREW)	90	Y (FOR MDL APPL & POA INFO SEE COL CHART)	1	7841678
	7-M21	2.195	BOLT, STRG COL LK & IGN SW CYL (THD SECT AT TOP OF SCREW)	91-93	Y	1	7841678
19.	7-A21	6.518	COVER, STRG COL HSG (6.500)	90	Y (FOR MDL APPL & POA INFO SEE COL CHART)	1	26012372
	7-A21	6.518	COVER, STRG COL HSG	90	Y (FOR MDL APPL & POA INFO SEE COL CHART)	1	26016646
	7-A21	6.518	COVER, STRG COL HSG	91-93	Y	1	26016646
20.	7-M21	2.188	CYLINDER, STRG COL LK & IGN SW (CPS) (AC-DELCO #D1453C)	90-93	Y (ML9)	1	26033387
	7-M21	2.188	CYLINDER, STRG COL LK & IGN SW (CPS) (AC-DELCO #D1458C)	90-93	Y (MD8)	1	26033390
	7-M20	2.187	KEY, IGN LK (SQUARE HD W/O RES PELLET) (GRV C)	90	Y (FOR MDL APPL & POA INFO SEE COL CHART)	1	26007687
	7-M20	2.187	KEY, IGN LK (RESISTOR CODE #2)	90	Y (FOR MDL APPL & POA INFO SEE COL CHART)	1	26019392
	7-M20	2.187	KEY, IGN LK (RESISTOR CODE #4)	90	Y (FOR MDL APPL & POA INFO SEE COL CHART)	1	26019394
	7-M20	2.187	KEY, IGN LK (RESISTOR CODE #15)	90	Y (FOR MDL APPL & POA INFO SEE COL CHART)	1	26019405
	7-M20	2.187	KEY, IGN LK (RESISTOR CODE #3)	90-93	Y	1	26019393
	7-M20	2.187	KEY, IGN LK (RESISTOR CODE #5)	90-93	Y	3	26019395
	7-M20	2.187	KEY, IGN LK (RESISTOR CODE #6)	90-93	Y	1	26019396
	7-M20	2.187	KEY, IGN LK (RESISTOR CODE #7)	90-93	Y	3	26019397
	7-M20	2.187	KEY, IGN LK (RESISTOR CODE #8)	90-93	Y	3	26019398
	7-M20	2.187	KEY, IGN LK (RESISTOR CODE #9)	90-93	Y	3	26019399
	7-M20	2.187	KEY, IGN LK (RESISTOR CODE #10)	90-93	Y	3	26019400
	7-M20	2.187	KEY, IGN LK (RESISTOR CODE #11)	90-93	Y	3	26019401
	7-M20	2.187	KEY, IGN LK (RESISTOR CODE #12)	90-93	Y	3	26019402
	7-M20	2.187	KEY, IGN LK (RESISTOR CODE #13)	90-93	Y	3	26019403

© 2000 GENERAL MOTORS SERVICE PARTS OPERATIONS-CHEVROLET-14Y

							1Y06-010
	7-M20	2.187	KEY, IGN LK (RESISTOR CODE #14)	90-93	Y	3	26019404
	7-M20	2.187	KEY, IGN LK (RESISTOR CODE #15)	90-93	Y	3	26019405
	7-M20	2.187	KEY, IGN LK (SQUARE HD W/O RES PELLET) (GRV C)	91-93	Y	1	26007687
	7-M20	2.187	KEY, IGN LK (RESISTOR CODE #2)	91-93	Y	1	26019392
	7-M20	2.187	KEY, IGN LK (RESISTOR CODE #4)	91-93	Y	3	26019394
21.	7-M23	2.459	ACTUATOR, HDLP D/SW (AC-DELCO #D844)	90	Y (FOR MDL APPL & POA INFO SEE COL CHART)	1	7827028
	7-M23	2.459	ACTUATOR, HDLP D/SW (AC-DELCO #D844)	91-93	Y	1	7827028
22.	7-M23	2.459	PIN, T/SIG LVR PIV (AC-DELCO #7829787)	90	Y (FOR MDL APPL & POA INFO SEE COL CHART)	1	7829787
	7-M23	2.459	PIN, T/SIG LVR PIV (AC-DELCO #7829787)	91-93	Y	1	7829787
23.	7-N20	10.163	SWITCH, WSW & WSWA (2.459)	90	Y (FOR MDL APPL & POA INFO SEE COL CHART)	1	26015119
	7-N20	10.103	SWITCH, WSW & WSWA (2.459)	91-93	Y	1	26015119
24.	7-A20	6.514	PLATE, COL HSG CVR END BASE	90	Y (FOR MDL APPL & POA INFO SEE COL CHART)	1	26005749
	7-A20	6.514	PLATE, COL HSG CVR END BASE	90	Y (FOR MDL APPL & POA INFO SEE COL CHART)	1	26015113
	7-A20	6.514	PLATE, COL HSG CVR END BASE	91-93	Y	1	26015113
25.	7-A21	6.518	CAP, STRG COL HSG	90	Y (FOR MDL APPL & POA INFO SEE COL CHART)	1	26005750
	7-A21	6.518	CAP, STRG COL HSG (6.514)	91-93	Y	1	26015114
26.	7-B8	6.522	PROTECTOR, STRG COL WRG (SHIELD)	90-93	Y	1	26009317
	7-B8	6.522	PROTECTOR, STRG COL WRG	90-93	Y	1	26012369
27.		N.S.	SHROUD, STRG COL CONN (*KIT4)				
28.		N.S.	SCREW, FLAT HD TAPPING				
29.	7-A11	6.500	INSULATOR, STRG SHF LK PLT				26027958
	7-A19	6.509	INSULATOR, S/GR (AC-DELCO #36-9526)	90-91	Y (FOR MDL APPL & POA INFO SEE GEAR CHART)	1	7840293
	7-A19	6.509	INSULATOR, S/GR (AC-DELCO #36-9526)	92-93	Y	1	7840293
30.	7-A21	6.518	HOUSING, STRG COL (INCL 31 THRU 38 & 40 THRU 48) (CPS)	90	Y (FOR MDL APPL & POA INFO SEE COL CHART)	1	26017735
	7-A21	6.518	HOUSING, STRG COL (INCL 31 THRU 38 & 40 THRU 46) (CPS)	91-93	Y	1	26017735
31.		N.S.	BEARING, STRG SHF UPR (PART OF 30) (*KIT1)				
32.	7-A11	6.500	PIN, STRG WHL LK (PART OF 30) (TAPERED END)	90	Y (FOR MDL APPL & POA INFO SEE COL CHART)	1	7808613
	7-A11	6.500	PIN, STRG WHL LK (PART OF 30) (TAPERED END)	91-93	Y	1	7808613

© 2000 GENERAL MOTORS SERVICE PARTS OPERATIONS-CHEVROLET-14Y

							1Y06-010
33.		N.S.	SPRING, LK BOLT (PART OF 30) (*KIT1)				
34.	7-A20	6.514	SHOE, STRG COL TILT LK (PART OF 30) (3 POSITION)			LH	26017728
35.	7-A20	6.514	SHOE, STRG COL TILT LK (PART OF 30) (2 POSITION)			RH	26017727
36.	7-B8	6.522	PROTECTOR, STRG COL WRG (PART OF 30) (SHIELD)	90-93	Y	1	26009317
	7-B8	6.522	PROTECTOR, STRG COL WRG (PART OF 30)	90-93	Y	1	26012369
37.	7-M21	2.195	SHAFT, IGN & START SW ACTR (PART OF 30)	90	Y (FOR MDL APPL & POA INFO SEE COL CHART)	1	7837466
	7-M21	2.195	SHAFT, IGN & START SW ACTR (PART OF 30)	91-93	Y	1	7837466
38.	7-A20	6.514	PIN, STRG COL TILT LK SHOE (PART OF 30)	90	Y (FOR MDL APPL & POA INFO SEE COL CHART)	1	7806567
	7-A20	6.514	PIN, STRG COL TILT LK SHOE (PART OF 30)	91-93	Y	1	7806567
39.		N.S.	PIN, STRG COL PIV (*KIT3)				
40.	7-A20	6.514	SPRING, STRG COL TILT LK SHOE (PART OF 30)	90	Y (FOR MDL APPL & POA INFO SEE COL CHART)	2	7804912
	7-A20	6.514	SPRING, STRG COL TILT LK SHOE (PART OF 30)	91-93	Y	2	7804912
41.	7-A20	6.514	SPRING, STRG COL TILT LK REL LVR (PART OF 30)	90	Y (FOR MDL APPL & POA INFO SEE COL CHART)	1	5698410
	7-A20	6.514	SPRING, STRG COL TILT LK REL LVR (PART OF 30)	91-93	Y	1	5698410
42.		8.939	PIN, 3/16X3/4, SPR COILED, PL (STRG COL TILT LK REL LVR PIV) (PART OF 30) (AC-DELCO #9422127)	90-93		1	9422127
43.	7-A20	6.514	LEVER, STRG COL TILT LK REL (PART OF 30) (SHOE REL)	90	Y (FOR MDL APPL & POA INFO SEE COL CHART)	1	7827689
	7-A20	6.514	LEVER, STRG COL TILT LK REL (PART OF 30) (SHOE REL)	91-93	Y	1	7827689
44.	7-M21	2.195	RACK, IGN & START SW (PART OF 30) (USED W/ TILT COL) (*KIT1)	90	Y (FOR MDL APPL & POA INFO SEE COL CHART)	1	7827157
	7-M21	2.195	RACK, IGN & START SW (PART OF 30) (USED W/ TILT COL) (*KIT1)	91-93	Y	1	7827157
45.	7-M21	2.195	SPRING, IGN & START SW RACK (PART OF 30)	90	Y (FOR MDL APPL & POA INFO SEE COL CHART)	1	7804908
	7-M21	2.195	SPRING, IGN & START SW RACK (PART OF 30)	91-93	Y	1	7804908
46.		N.S.	HOUSING, STRG COL (PART OF 30)				
47.		N.S.	SECTOR KIT, IGN SW ACTR (PART OF30) (*KIT1)				
48.		N.S.	BOLT, IGN SW (PART OF 30) (*KIT1)				
50.		N.S.	GUIDE, STRG COL SPR (*KIT3)				
51.		N.S.	SPRING, STRG COL TILT (*KIT3)				

© 2000 GENERAL MOTORS SERVICE PARTS OPERATIONS-CHEVROLET-14Y

52.		N.S.	RETAINER, STRG COL SPR (*KIT3)				
55.	7-B9	6.524	SHAFT, STRG (INCL 56, 57, 58, 59) (CPS) (COMPL)	91-93	Y	1	26010575
	7-B9	6.524	SHAFT, STRG (COMPL) (INCL 56, 57, 58, 59) (CPS)	90	Y (FOR MDL APPL & POA INFO SEE COL CHART)	1	26010575
56.	7-B9	6.524	SHAFT, UPR STRG (PART OF 55)	90	Y (FOR MDL APPL & POA INFO SEE COL CHART)	1	26017653
	7-B9	6.524	SHAFT, UPR STRG (PART OF 55)	90	Y (FOR MDL APPL & POA INFO SEE COL CHART)	1	26072258
	7-B9	6.524	SHAFT, UPR STRG (PART OF 55)	91-93	Y	1	26017653
	7-B9	6.524	SHAFT, UPR STRG (PART OF 55)	91-93	Y	1	26072258
57.		N.S.	SPHERE, CENTERING (PART OF 55) (*KIT2)				
58.		N.S.	SPRING, JT PRELOAD (PART OF 55) (*KIT2)				
59.	7-B9	6.524	SHAFT, LWR STRG (PART OF 55)	90	Y (FOR MDL APPL & POA INFO SEE COL CHART)	1	26010576
	7-B9	6.524	SHAFT, LWR STRG (PART OF 55)	91-93	Y	1	26010576
61.	7-A20	6.514	BOLT, STRG COL HSG SUPT	90	Y (FOR MDL APPL & POA INFO SEE COL CHART)	4	7806867
	7-A20	6.514	BOLT, STRG COL HSG SUPT (10-32X1.25) (HFH)	91-93	Y	4	7806867
62.	7-A21	6.518	SUPPORT, STRG COL HSG	90	Y (FOR MDL APPL & POA INFO SEE COL CHART)	1	26010580
	7-A21	6.518	SUPPORT, STRG COL HSG	91-93	Y	1	26010580
71.		DISCON	SHROUD, STRG COL HSG	90-93	Y	1	7849028
72.	7-A21	6.518	JACKET, STRG COL	90	Y (FOR MDL APPL & POA INFO SEE COL CHART)	1	26010573
	7-A21	6.518	JACKET, STRG COL	91-93	Y	1	26010573
73.	7-A11	6.500	SPRING, STRG COL CBL BACKDRIVE PIN	90	Y (FOR MDL APPL & POA INFO SEE COL CHART)	1	7840739
	7-A11	6.500	SPRING, STRG COL CBL BACKDRIVE PIN	91	Y	1	7840739
	7-A11	6.500	SPRING, STRG COL CBL BACKDRIVE PIN	92-93	Y (MD8)	1	7840739
74.	7-A11	6.500	PIN, STRG COL CBL BACKDRIVE	90	Y (FOR MDL APPL & POA INFO SEE COL CHART)	1	7840475
	7-A11	6.500	PIN, STRG COL CBL BACKDRIVE	91	Y	1	7840475
	7-A11	6.500	PIN, STRG COL CBL BACKDRIVE	92-93	Y (MD8)	1	7840475
75.	7-A11	6.500	PIN, STRG COL INHIBITOR CR	90	Y (FOR MDL APPL & POA INFO SEE COL CHART)	1	7840476
	7-A11	6.500	PIN, STRG COL INHIBITOR CR	91	Y	1	7840476
	7-A11	6.500	PIN, STRG COL INHIBITOR CR	92-93	Y (MD8)	1	7840476
76.	7-M21	2.195	ACTUATOR, IGN & START SW	90	Y (FOR MDL APPL & POA INFO SEE COL CHART)	1	26015728
	7-M21	2.195	ACTUATOR, IGN & START SW	91-93	Y	1	26015728

© 2000 GENERAL MOTORS SERVICE PARTS OPERATIONS-CHEVROLET-14Y

						1Y06-010	
77.	7-M23	2.459	ROD, HDLP D/SW ACTR	90	Y (FOR MDL APPL & POA INFO SEE COL CHART)	1	26012347
	7-M23	2.459	ROD, HDLP D/SW ACTR	91-93	Y	1	26012347
78.	7-M21	2.188	BOLT, IGN SW (10-24X1/4) (RD WSHR HD C/R)	90	Y (FOR MDL APPL & POA INFO SEE COL CHART)	2	7806433
	7-M21	2.188	BOLT, IGN SW (10-24X1/4) (RD WSHR HD C/R)	91-93	Y	2	7806433
79.		8.915	NUT, HEX 10-24X1/8 284M CAD/ZC (DIMR SW)	90-93	.....	1	120361
80.	7-M21	2.188	SWITCH, IGN & START (AC-DELCO #D1405B)	90	Y (FOR MDL APPL & POA INFO SEE COL CHART)	1	1990116
	7-M21	2.188	SWITCH, IGN & START (AC-DELCO #D1405B)	91-93	Y	1	1990116
	7-M21	2.188	SWITCH, IGN & START (AC-DELCO #D1405CS)	91	Y	1	12366636
81.	7-M27	4.047	BRACKET, STRG COL BACKDRIVE CBL (6.518)	90	Y (FOR MDL APPL & POA INFO SEE COL CHART)	1	7841371
	7-M27	4.047	BRACKET, STRG COL BACKDRIVE CBL (6.518)	91-93	Y (MD8)	1	7841371
82.	7-M21	2.188	STUD, IGN & START SW	90	Y (FOR MDL APPL & POA INFO SEE COL CHART)	1	7829779
	7-M21	2.188	STUD, IGN & START SW	91-93	Y	1	7829779
83.	7-M23	2.459	SWITCH, HDLP DIMR (COLUMN) (AC-DELCO #D834)	90	Y (FOR MDL APPL & POA INFO SEE COL CHART)	1	26019660
	7-M23	2.459	SWITCH, HDLP DIMR (COLUMN) (AC-DELCO #[illegible])	91	Y	1	26019660
	7-M23	2.459	SWITCH, HDLP DIMR (AC-DELCO #D8041A)	91-93	Y	1	26035239
84.	7-B20	6.758	SEAL, STRG COL DA	90	Y (FOR MDL APPL & POA INFO SEE COL CHART)	1	7840636
	7-B20	6.758	SEAL, STRG COL DA	91-93	Y	1	7840636
86.	7-B8	6.521	BEARING, STRG SHF LWR	90	Y (FOR MDL APPL & POA INFO SEE COL CHART)	1	7842176
	7-B8	6.521	BEARING, STRG SHF LWR	91-93	Y	1	7842176
87.		8.977	SCREW, M4.2-1.41X20 HWH C/R CB (STRG SHF LWR BRG) ..	90-93	.....	2	11503380
88.	7-B8	6.521	SEAT, STRG SHF LWR BRG	90	Y (FOR MDL APPL & POA INFO SEE COL CHART)	1	7839361
	7-B8	6.521	SEAT, STRG SHF LWR BRG	91-93	Y	1	7839361
89.	7-B8	6.521	SPRING, STRG SHF LWR BRG ..	90	Y (FOR MDL APPL & POA INFO SEE COL CHART)	1	7839360
	7-B8	6.521	SPRING, STRG SHF LWR BRG ..	91-93	Y	1	7839360
90.	7-B8	6.521	RETAINER, STRG SHF LWR BRG SEAL	90	Y (FOR MDL APPL & POA INFO SEE COL CHART)	1	7847029
	7-B8	6.521	RETAINER, STRG SHF LWR BRG SPR	91-93	Y	1	7847029
91.		N.S.	RETAINER, BRG & SEAL (SHIPPING PURPOSES ONLY) ...		.....		

© 2000 GENERAL MOTORS SERVICE PARTS OPERATIONS-CHEVROLET-14Y

92.		N.S.	WIRE, STRG WHL HORN SW GND				
93.	7-B8	6.521	BEARING, STRG SHF CTR (6.525)	90	Y (FOR MDL APPL & POA INFO SEE COL CHART)		7832343
	7-B8	6.521	BEARING, STRG SHF CTR (6.525)	91-93	Y	1	7832343
94.	7-B20	6.758	PLATE, STRG COL DA CVR STUD	90-93	Y	1	14104186
95.	7-B9	6.525	BOLT, INTER STRG SHF (POSN #1) (M10X1.5X31) (HFH NYLON LOCK)	90-93	Y	1	26005756
	7-B9	6.525	BOLT, INTER STRG SHF (POSN #2) (10X1.5X40.3)	90-93	Y	1	7847298
96.	7-B9	6.524	SHAFT, S/GR CPLG	90-91	Y (L98)	1	26022829
	7-B9	6.524	SHAFT, S/GR CPLG (6.526)	90-91	Y (LT5)	1	26022830
	7-B9	6.524	SHAFT, S/GR CPLG (6.526)	92-93	Y	1	26022830
97.	7-B9	6.525	SHIELD, S/GR CPLG	92-93	Y	1	14104779
	7-B9	6.525	SHIELD, S/GR CPLG (UPR)	90-91	Y (LT5)	1	14104779

SERVICE KITS

1.	7-M21	2.195	RACK KIT, IGN SW (INCL 14, 31, 33, 44, 47, 48) (W/SECTOR)	90	Y (FOR MDL APPL & POA INFO SEE COL CHART)	1	7844651
	7-M21	2.195	RACK KIT, IGN SW (INCL 14, 31, 33, 44, 47, 48) (W/SECTOR)	91-93	Y	1	7844651
2.	7-B9	6.525	SPHERE KIT, STRG SHF (INCL 57, 58) (W/CTR SPR & JT PRELOAD) (6.514)	90	Y (FOR MDL APPL & POA INFO SEE COL CHART)	1	26026564
	7-B9	6.525	SPHERE KIT, STRG SHF (INCL 57, 58) (W/CTR SPR & JT PRELOAD) (6.514)	91-93	Y	1	26026564
3.	7-A20	6.514	SPRING KIT, STRG COL TILT (INCL 13, 14, 39, 50, 51, 52)	90	Y (FOR MDL APPL & POA INFO SEE COL CHART)	1	26002678
	7-A20	6.514	SPRING KIT, STRG COL TILT (INCL 13, 14, 39, 50, 51, 52) (UPR)	91	Y	1	26002678
	7-A20	6.514	SPRING KIT, STRG COL TILT (INCL 13, 14, 39, 50, 51, 52) (UPR) (USE WITH COLUMN ASM LABELED 26024008)	92	Y (1ST DES)	1	26002678
	7-A20	6.514	SPRING KIT, STRG COL TILT (INCL 13, 14, 39, 50, 51, 52) (USE WITH COLUMN ASM LABELED 26030970)	92	Y (2ND DES)	1	26059718
	7-A20	6.514	SPRING KIT, STRG COL TILT (INCL 13, 14, 39, 50, 51, 52)	93	Y	1	26059718
4.	7-N26	14.865	COIL KIT, STRG WHL INFL RST MDL (INCL 3, 4, 27)	90	Y		26013854
	7-N26	14.865	COIL KIT, STRG WHL INFL RST MDL (INCL 3, 4, 27)	91-93	Y (MD8, ML9)	1	26013854

RPO DEFINITIONS
LT5 – ENGINE,5.7L(5.7J),TPI
L98 – ENGINE, 5.7L, (5.7-8) 350 CID, V8, TPI
MD8 – TRANSMISSION,AUTOMATIC 4-SPEED(THM700R4/4L60)
ML9 – TRANSMISSION,MANUAL 6-SPEED

© 2000 GENERAL MOTORS SERVICE PARTS OPERATIONS-CHEVROLET-14Y

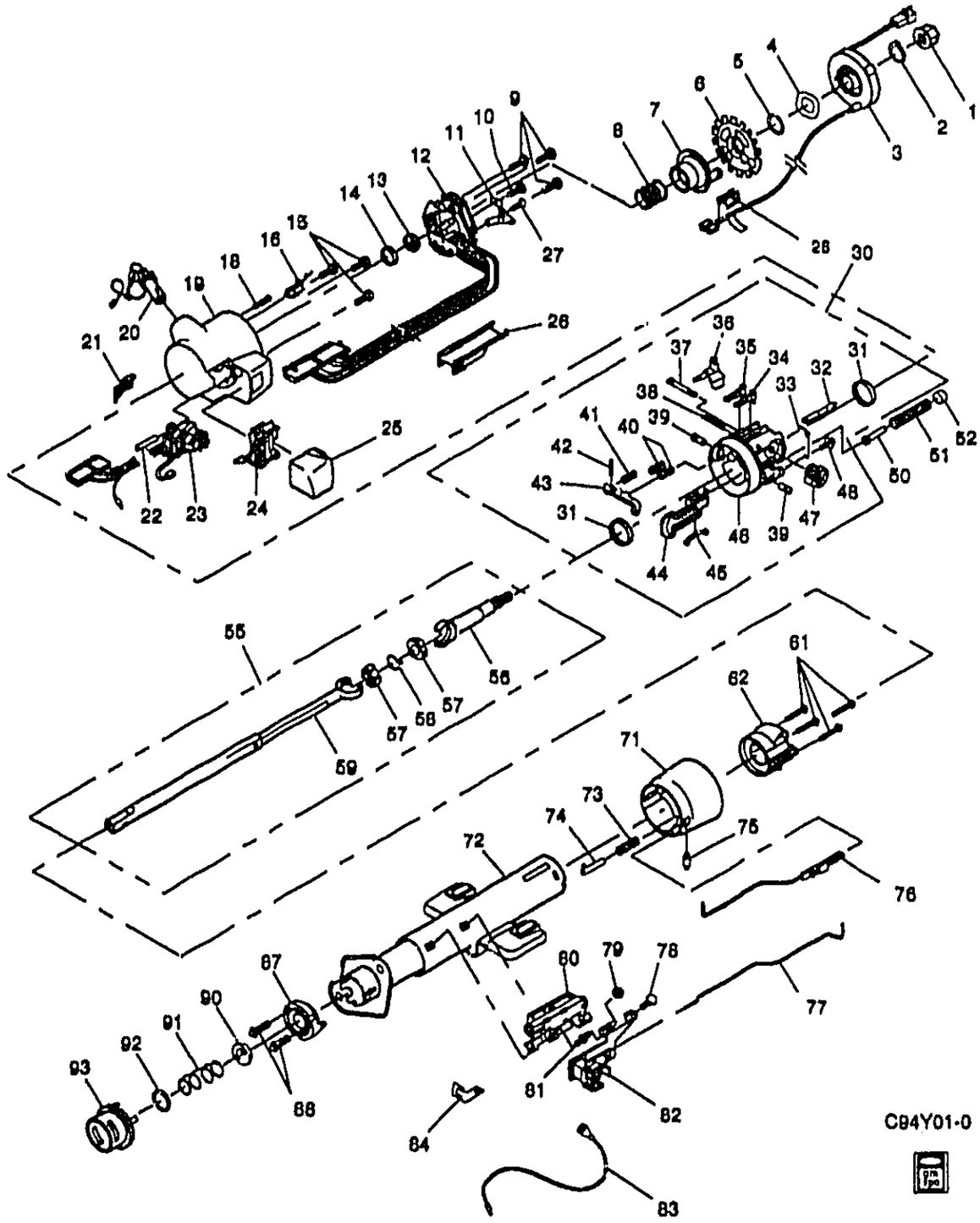

1Y06-018

1994-1996 Y STEERING COLUMN/TILT (S.I.R.,PASS KEY,F/S,A/T)

1.	7-A20	6.515	NUT, STRG WHL (M14X1.5) (HFH TORQ PREV)	94-96	Y	1	26056108
2.		8.934	RING, SNAP (STL PL .750 DIA) (STRG WHL INFL RST MDL COIL RET)	94-96	.....	AR	274414
3.		N.S.	COIL, STRG WHL INFL RST MDL (*KIT3)		Y		

© 2000 GENERAL MOTORS SERVICE PARTS OPERATIONS-CHEVROLET-14Y

							1Y06-018
4.	7-N26	14.865	WASHER, STRG WHL INFL RST MDL COIL	94-96	Y	1	26011609
5.	7-A11	6.500	RING, STRG SHF LK PLT RET (6.524)	94-96	Y	1	5694191
6.	7-A11	6.500	PLATE, STRG SHF LK	94-95	Y (EXC VD1, VE1)	1	26017656
	7-A11	6.500	PLATE, STRG SHF LK	96	Y (ML9)	1	26017656
	7-A11	6.500	PLATE, STRG SHF LK	96	Y (M30) (EXC VD1, VE1)	1	26017656
	7-A11	6.500	PLATE, STRG SHF LK	94-96	Y (VD1, VE1) (EXPORT)	1	26036544
7.	7-M25	2.896	CAM, T/SIG CANC (AC-DELCO #26047013)	94-96	Y	1	26047013
8.		N.S.	SPRING, STRG SHF UPR BRG (*KIT5)				
9.	7-M25	2.895	BOLT, T/SIG SW (9-18X17.52) (PAN HD C/R HILO TAP)	94-96	Y	3	7809128
10.		8.977	SCREW, RD LG WA HD C/R TAP M4.2X1.41X20 POR	94-96		AR	11504625
11.	7-M25	2.895	ACTUATOR, T/SIG SW	94-96	Y	1	26020396
12.	7-M25	2.895	SWITCH, T/SIG (AC-DELCO #D9001)	94-96	Y (EXC VD1, VE1)	1	1995974
	7-M25	2.896	SPRING, T/SIG SW CANC CAM	94-96	Y (EXC VD1, VE1)	RH	10476617
	7-M25	2.896	SPRING, T/SIG SW CANC CAM	94-96	Y (EXC VD1, VE1)	LH	10476618
	7-M25	2.895	SPRING, T/SIG SW LVR (AC-DELCO #10497876)	94-96	Y	1	10497876
	7-M25	2.895	SWITCH, T/SIG (AC-DELCO #D6203A)	94-96	Y (VE1, VD1) (EXPORT)	1	1995962
	7-M25	2.896	SPRING, T/SIG SW CANC CAM (AC-DELCO #1964784)	94-96	Y (VD1, VE1) (EXPORT)	RH	1964784
	7-M25	2.896	SPRING, T/SIG SW CANC CAM (AC-DELCO #1964785)	94-96	Y (VD1, VE1) (EXPORT)	LH	1964785
13.		N.S.	SEAT, STRG SHF UPR BRG RACE (*KIT2)				
14.		N.S.	RACE, STRG COL INR (*KIT1, KIT2)				
15.	7-A21	6.518	BOLT, STRG COL HSG (PAN HD SOC TAP) (GOLD) (1/4-20X3/4) (PAN HD C/R TAP) (2.895)	94-96	Y	3	7830670
16.	7-M21	2.195	SWITCH, IGN KEY ALARM (BUZZER ONLY) (AC-DELCO #D1458C)	94-96	Y	1	26022717
18.	7-M21	2.195	BOLT, STRG COL LK & IGN SW CYL (THD SECT AT TOP OF SCREW)	94-96	Y	1	7841678
19.	7-A21	6.518	COVER, STRG COL HSG	94-96	Y (EXC VD1, VE1)	1	26035681
	7-A21	6.518	COVER, STRG COL HSG	94-96	Y (VD1, VE1) (EXPORT)	1	26036448
20.	7-M21	2.188	CYLINDER, STRG COL LK & IGN SW (CPS) (AC-DELCO #D1453C)	94-96	Y (ML9)	1	26033387
	7-M21	2.188	CYLINDER, STRG COL LK & IGN SW (CPS) (AC-DELCO #D1456C)	94-96	Y (M30)	1	26033390
	7-M20	2.187	KEY, IGN LK (RESISTOR CODE #3)	94-96	Y	1	26019393
	7-M20	2.187	KEY, IGN LK (RESISTOR CODE #5)	94-96	Y	3	26019395
	7-M20	2.187	KEY, IGN LK (RESISTOR CODE #6)	94-96	Y	1	26019396
	7-M20	2.187	KEY, IGN LK (RESISTOR CODE #7)	94-96	Y	3	26019397

© 2000 GENERAL MOTORS SERVICE PARTS OPERATIONS-CHEVROLET-14Y

							1Y0C-018
	7-M20	2.187	KEY, IGN LK (RESISTOR CODE #8)	94-96	Y	3	26019398
	7-M20	2.187	KEY, IGN LK (RESISTOR CODE #9)	94-96	Y	3	26019399
	7-M20	2.187	KEY, IGN LK (RESISTOR CODE #10)	94-96	Y	3	26019400
	7-M20	2.187	KEY, IGN LK (RESISTOR CODE #11)	94-96	Y	3	26019401
	7-M20	2.187	KEY, IGN LK (RESISTOR CODE #12)	94-96	Y	3	26019402
	7-M20	2.187	KEY, IGN LK (RESISTOR CODE #13)	94-96	Y	3	26019403
	7-M20	2.187	KEY, IGN LK (RESISTOR CODE #14)	94-96	Y	3	26019404
	7-M20	2.187	KEY, IGN LK (RESISTOR CODE #15)	94-96	Y	3	26019405
	7-M20	2.187	KEY, IGN LK (RESISTOR CODE #2)	94-96	Y	1	26019392
	7-M20	2.187	KEY, IGN LK (RESISTOR CODE #4)	94-96	Y	3	26019394
	7-M20	2.187	KEY, IGN LK (SQUARE HD W/O RES PELLET) (GRV C)	94-96	Y	1	26007687
21.	7-M23	2.459	ACTUATOR, HDLP D/SW (AC-DELCO #D844)	94-96	Y	1	7827028
22.	7-M23	2.459	PIN, T/SIG LVR PIV (AC-DELCO #7829787)	94-96	Y	1	7829787
23.	7-N20	10.163	SWITCH, WSW & WSWA (AC-DELCO #D6323D)	94-96	Y	1	26036071
24.	7-A20	6.514	PLATE, COL HSG CVR END BASE	94-96	Y	1	26021767
25.	7-A21	6.518	CAP, STRG COL HSG	94-96	Y	1	26035293
26.	7-B8	6.522	PROTECTOR, STRG COL WRG (SHIELD)	94-96	Y	1	26009317
	7-B8	6.522	PROTECTOR, STRG COL WRG	94-96	Y	1	26022488
27.	7-M25	2.895	BOLT, T/SIG SW ACTR (M4.2X1.41X10) (FLATCS C/R HILO TAP)	94-96	Y	1	26019205
28.		N.S.	SHROUD, STRG COL CONN (*KIT3)				
30.	7-A21	6.518	HOUSING, STRG COL (INCL 31 THRU 38 & 40 THRU 48) (CPS) (INCL UPR BRG)	94-96	Y (EXC VD1, VE1)	1	26017468
	7-A21	6.518	HOUSING, STRG COL (INCL 31 THRU 38 & 40 THRU 48) (CPS)	94-96	Y (VD1, VE1) (EXPORT)	1	26027137
31.		N.S.	BEARING, STRG SHF UPR (PART OF 30) (*KIT1)		Y	2	
32.	7-A11	6.500	PIN, STRG WHL LK (PART OF 30) (TAPERED END)	94-96	Y (EXC VD1, VE1)	1	7808613
	7-A11	6.500	PIN, STRG WHL LK (PART OF 30) (BLUNT END)	94	Y (VD1, VE1) (EXPORT)	1	7830477
	7-A11	6.500	PIN, STRG WHL LK (PART OF 30) (BLUNT END)	96	Y (M30, VD1, VE1) (EXPORT)	1	7830477
33.		N.S.	SPRING, LK BOLT (PART OF 30) (*KIT1)				
34.	7-A20	6.514	SHOE, STRG COL TILT LK (PART OF 30) (4 POSITION W/O NOTCH)	94-96	Y	1	26017469
	7-A20	6.514	SHOE, STRG COL TILT LK (PART OF 30) (4 POSITION W/NOTCH)	94-96	Y	1	26017470

© 2000 GENERAL MOTORS SERVICE PARTS OPERATIONS-CHEVROLET-14Y

						1Y06-018	
35.	7-A20	6.514	SHOE, STRG COL TILT LK (PART OF 30) (4 POSITION W/O NOTCH)	94-96	Y	1	26017469
	7-A20	6.514	SHOE, STRG COL TILT LK (PART OF 30) (4 POSITION W/NOTCH)	94-96	Y	1	26017470
36.	7-B8	6.522	PROTECTOR, STRG COL WRG (PART OF 30) (SHIELD)	94-96	Y	1	26009317
	7-B8	6.522	PROTECTOR, STRG COL WRG (PART OF 30)	94-96	Y	1	26022488
37.	7-M21	2.195	SHAFT, IGN & START SW ACTR (PART OF 30)	94-96	Y	1	7837466
38.	7-A20	6.514	PIN, STRG COL TILT LK SHOE (PART OF 30)	94-96	Y	1	7806567
39.		N.S.	PIN, STRG COL PIV (*KIT2)			2	
40.	7-A20	6.514	SPRING, STRG COL TILT LK SHOE (PART OF 30)	94-96	Y	2	7804912
41.	7-A20	6.514	SPRING, STRG COL TILT LK REL LVR (PART OF 30)	94-96	Y	1	5698410
42.		8.939	PIN, 3/16X3/4. SPR COILED, PL (STRG COL TILT LK REL LVR PIV) (PART OF 30) (AC-DELCO #9422127)	94-96	Y	1	9422127
43.	7-A20	6.514	LEVER, STRG COL TILT LK REL (PART OF 30) (SHOE REL)	94-96	Y	1	7827689
44.	7-M21	2.195	RACK, IGN & START SW (PART OF 30) (USED W/ TILT COL) (*KIT1)	94-96	Y	1	7827157
45.	7-M21	2.195	SPRING, IGN & START SW RACK (PART OF 30)	94-96	Y	1	7804908
46.		N.S.	HOUSING, STRG COL (PART OF 30)				
47.		N.S.	SECTOR KIT, IGN SW ACTR (PART OF 30) (*KIT1)				
48.		N.S.	BOLT, IGN SW (PART OF 30) (*KIT1)				
50.		N.S.	GUIDE, STRG COL SPR (*KIT2)				
51.		N.S.	SPRING, STRG COL TILT (*KIT2)				
52.		N.S.	RETAINER, STRG COL SPR (*KIT2)				
55.	7-B9	6.524	SHAFT, STRG (INCL 56, 57, 58, 59)	94-96	Y	1	26030666
56.	7-B9	6.524	SHAFT, UPR STRG (PART OF 55)	94-96	Y	1	26017653
	7-B9	6.524	SHAFT, UPR STRG (PART OF 55)	94-96	Y	1	26072258
57.		N.S.	SPHERE, CENTERING (PART OF 55) (*KIT4)				
58.		N.S.	SPRING, JT PRELOAD (PART OF 55) (*KIT4)				
59.	7-B9	6.524	SHAFT, LWR STRG (PART OF 55)	94-96	Y	1	26030667
61.	7-A20	6.514	BOLT, STRG COL HSG SUPT (10-32X1.25) (HFH)	94-96	Y	4	7806867
62.	7-A21	6.518	SUPPORT, STRG COL HSG	94-96	Y	1	26010644
71.	7-A21	6.518	SHROUD, STRG COL HSG	94-96	Y	1	26048745
72.	7-A21	6.518	JACKET, STRG COL	94	Y	1	26030664
	7-A21	6.518	JACKET, STRG COL	95-96	Y	1	26041058
73.	7-A11	6.500	SPRING, STRG COL CBL BACKDRIVE PIN	94-96	Y (M30)	1	7840739
	7-A11	6.500	SPRING, STRG COL CBL BACKDRIVE PIN	94	Y (ML9, VD1, VE1) (EXPORT)	1	7840739

© 2000 GENERAL MOTORS SERVICE PARTS OPERATIONS-CHEVROLET-14Y

							1Y06-018
74.	7-A11	6.500	PIN, STRG COL CBL BACKDRIVE	94-96	Y (M30)	1	7840475
75.	7-A11	6.500	PIN, STRG COL INHIBITOR CR	94-96	Y (M30)	1	7840476
76.	7-M21	2.195	ACTUATOR, IGN & START SW	94-96	Y	1	26015728
77.	7-M23	2.459	ROD, HDLP D/SW ACTR	94-96	Y	1	26035679
78.	7-M21	2.188	BOLT, IGN SW (10-24X1/4) (RD WSHR HD C/R)	94-96	Y	2	7806433
79.		8.915	NUT, HEX 10-24X1/8 284M CAD/ZC (S/GR)	94-96		AR	120361
80.	7-M21	2.188	SWITCH, IGN & START (AC-DELCO #D1405B)	94-96	Y	1	1990116
81.	7-M21	2.188	STUD, IGN & START SW	94-96	Y	1	7829779
82.	7-M23	2.459	SWITCH, HDLP DIMR (AC-DELCO #D8041A)	94-96	Y	1	26035239
83.		N.S.	WIRE, STRG WHL HORN SW GND				
84.	7-M27	4.047	BRACKET, STRG COL BACKDRIVE CBL (6.518)	94-96	Y (M30)	1	7841371
87.	7-B8	6.521	BEARING, STRG SHF LWR	94-96	Y (ML9)	1	26025358
	7-B8	6.521	BEARING, STRG SHF LWR	94-96	Y (M30)	1	26025358
88.		8.977	SCREW, M4.2-1.41X20 HWH C/R CB (STRG SHF LWR BRG)	94-96		2	11503389
90.	7-B8	6.521	SEAT, STRG SHF LWR BRG	94-96	Y	1	7839361
91.	7-B8	6.521	SPRING, STRG SHF LWR BRG	94-96	Y	1	7839360
92.		N.S.	RETAINER, STRG SHF LWR BRG SPR				
93.		N.S.	RETAINER, BRG & SEAL (SHIPPING PURPOSES ONLY)				

SERVICE KITS

1.	7-M21	2.195	RACK KIT, IGN SW (INCL 14, 31, 33, 44, 47, 48) (W/SECTOR)	94-96	Y	1	7844651
	7-M21	2.195	RACK KIT, IGN SW (INCL 14, 31, 33, 44, 47, 48) (W/SECTOR)	94-96	Y	1	7844651
2.	7-A20	6.514	SPRING KIT, STRG COL TILT (INCL 13, 14, 39, 50, 51, 52)	94-96	Y	1	26059718
3.	7-N26	14.865	COIL KIT, STRG WHL INFL RST MDL (INCL 3, 4, 28)	94-96	Y (M30)	1	26041005
	7-N26	14.865	COIL KIT, STRG WHL INFL RST MDL (INCL 3, 4, 28)	94-96	Y (ML9, VD1, VE1) (EXPORT)	1	26041005
4.	7-B9	6.525	SPHERE KIT, STRG SHF (INCL 57, 58) (W/CTR SPR & JT PRELOAD) (6.514)	94-96	Y	1	26026564
5.	7-B8	6.521	SPRING KIT, STRG SHF UPR BRG (INCL 7, 8) (INCL CAM T/SIG CANC, SEAT UPR BRG RACE, SPRING UPR BRG, RET BRG.)	94-96	Y (ML9)	1	26059705
	7-B8	6.521	SPRING KIT, STRG SHF UPR BRG (INCL 7, 8) (INCL CAM T/SIG CANC, SEAT UPR BRG RACE, SPRING UPR BRG, RET BRG.)	94-96	Y (M30)	1	26059705

RPO DEFINITIONS

ML9 – TRANSMISSION,MANUAL 6-SPEED
M30 – TRANSMISSION,AUTOMATIC 4 SPEED,4L60E,ELECTRONIC
VD1 – PROVISION OPTIONS,EUROPE(EXPORT)
VE1 – PROVISION OPTIONS,JAPAN(EXPORT)

© 2000 GENERAL MOTORS SERVICE PARTS OPERATIONS-CHEVROLET-14Y

MICROFICHE INDEX

GROUPS 6.000 THRU 7.000

FICHE 7 OF 11

GROUP	DESCRIPTION	STARTING GRID LOCATION PARTS	ILLUSTRATIONS
–	GENERAL INFORMATION	1–A2	1–G2
–	ALPHABETICAL INDEX	1–B13	N.A.
6.000	FRONT SUSPENSION – STEERING	7–A2	7–E2
7.000	FRAMES – SPRINGS – SHOCKS – BUMPERS	7–C2	7–H2
–	OUT OF FICHE CALLS	N.A.	7–M17

7–G1

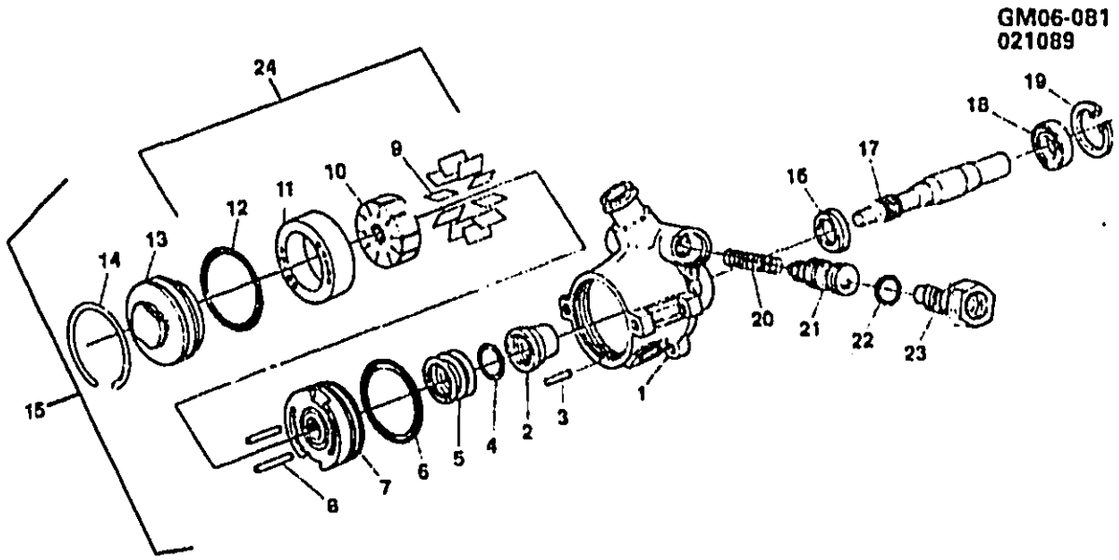

GM06-0811

1984-1991 Y STEERING PUMP ASM

1.		N.S.	HOUSING, P/S PUMP (PART OF 26021469 PUMP ASM IN GRP 6.650) (INCLS 2, 3, 4, 15, 16)		.....		
2.	7-B15	6.612	SLEEVE, P/S PUMP PRESS PLT SEAL (PART OF 26021469 PUMP ASM IN GRP 6.650) (INCLS 4) ...	84-85	Y	1	7842086
	7-B15	6.612	SLEEVE, P/S PUMP PRESS PLT SEAL (PART OF 26021469 PUMP ASM IN GRP 6.650) (INCLS 4) ...	86-89	Y (FOR MDL APPL & POA INFO SEE PUMP CHART)	1	7842086
	7-B15	6.612	SLEEVE, P/S PUMP PRESS PLT SEAL (PART OF 26021469 PUMP ASM IN GRP 6.650) (INCLS 4) ...	90-91	Y	1	7842086
3.	7-B14	6.608	PIN, P/S PUMP PRESS PLT (PART OF 26021469 PUMP ASM IN GRP 6.650)	84-85	Y	1	7839990
	7-B14	6.608	PIN, P/S PUMP PRESS PLT (PART OF 26021469 PUMP ASM IN GRP 6.650)	86-91	Y (FOR MDL APPL & POA INFO SEE PUMP CHART)	1	7839990
4.		N.S.	SEAL, SLEEVE O RING (PART OF #2) (PART OF 26021469 & 7840566		.....	1	
5.	7-B15	6.612	SPRING, P/S PUMP PRESS PLT (PART OF 26021469 PUMP ASM IN GRP 6.650)	84-85	Y	1	7839989
	7-B15	6.612	SPRING, P/S PUMP PRESS PLT (PART OF 26021469 PUMP ASM IN GRP 6.650)	86-91	Y (FOR MDL APPL & POA INFO SEE PUMP CHART)	1	7839989
	7-B15	6.612	SPRING, P/S PUMP PRESS PLT (PART OF 26021469 PUMP ASM IN GRP 6.650)	90-91	Y (LT5)	1	7839989
6.		N.S.	SEAL, PRESS PLATE O RING) (PART OF 26021469 & 7840566 ..		.....	1	
7.	7-B15	6.612	PLATE, P/S PUMP PRESS (PART OF 26021469 PUMP ASM IN GRP 6.650)	86-90	Y (FOR MDL APPL & POA INFO SEE PUMP CHART)	1	26003737

© 2000 GENERAL MOTORS SERVICE PARTS OPERATIONS-CHEVROLET-14Y

							GM06-0811
	7-B15	6.612	PLATE, P/S PUMP PRESS (PART OF 26021469 PUMP ASM IN GRP 6.650)	88-91	Y (FOR MDL APPL & POA INFO SEE PUMP CHART)	1	26002915
	7-B15	6.612	PLATE, P/S PUMP PRESS (PLATE, P/S PUMP PRESS RR) (PART OF 26021469 PUMP ASM IN GRP 6.650)	84-85	Y	1	26003737
8.	7-B14	6.608	PIN, P/S PUMP THR PLT (PART OF 26021469 PUMP ASM IN GRP 6.650)	84-85	Y	2	7839991
	7-B14	6.608	PIN, P/S PUMP THR PLT (PART OF 26021469 PUMP ASM IN GRP 6.650)	86-91	Y (FOR MDL APPL & POA INFO SEE PUMP CHART)	2	7839991
9.	7-B15	6.610	VANE KIT, P/S PUMP (PART OF 26021469 PUMP ASM IN GRP 6.650)	84-85	Y	1	7840569
	7-B15	6.610	VANE KIT, P/S PUMP (PART OF 26021469 PUMP ASM IN GRP 6.650)	86-91	Y (FOR MDL APPL & POA INFO SEE PUMP CHART)	1	7840569
	7-B15	6.610	VANE KIT, P/S PUMP (PART OF 26021469 PUMP ASM IN GRP 6.650)	90-91	Y (LT5)	1	7840569
10.		N.S.	ROTOR, (PART OF #24) (PART OF 26021469 IN GRP 6.650			1	
11.		N.S.	RING, (PART OF #24) (PART OF 26021469 IN GRP 6.650			1	
12.		N.S.	SEAL, (PART OF #24) (PART OF 26021469 & 7840566			1	
13.	7-B15	6.612	PLATE, P/S PUMP THR (PART OF 26021469 PUMP ASM IN GRP 6.650)	84-85	Y	1	26015197
	7-B15	6.612	PLATE, P/S PUMP THR (PART OF 26021469 PUMP ASM IN GRP 6.650)	86-90	Y (FOR MDL APPL & POA INFO SEE PUMP CHART)	1	26015197
	7-B15	6.612	PLATE, P/S PUMP THR (PART OF 26021469 PUMP ASM IN GRP 6.650)	90-91	Y (FOR MDL APPL & POA INFO SEE PUMP CHART)	1	7840139
14.	7-B15	6.612	RING, P/S PUMP THR PLT RET (PART OF 26021469 PUMP ASM IN GRP 6.650)	84-85	Y	1	7839992
	7-B15	6.612	RING, P/S PUMP THR PLT RET (PART OF 26021469 PUMP ASM IN GRP 6.650)	86-91	Y (FOR MDL APPL & POA INFO SEE PUMP CHART)	1	7839992
15.	7-B10	6.605	PUMP, P/S	84-85	Y	1	26021469
	7-B10	6.605	PUMP, P/S	86-91	Y (L98)	1	26021469
		DISCON	PUMP, P/S	90-91	Y (LT5, FE1, FE7)	1	7849020
	7-B17	6.655	PULLEY, P/S PUMP	84-90	Y	1	14055114
	7-B17	6.655	PULLEY, P/S PUMP	91	Y (L98)	1	14055114
16.	7-B16	6.617	SEAL, P/S PUMP SHF (PART OF 26021469 PUMP ASM IN GRP 6.650)	84-85	Y	1	7841739
	7-B16	6.617	SEAL, P/S PUMP SHF (PART OF 26021469 PUMP ASM IN GRP 6.650)	86-91	Y (FOR MDL APPL & POA INFO SEE PUMP CHART)	1	7841739
	7-B16	6.617	SEAL, P/S PUMP SHF (PART OF 26021469 PUMP ASM IN GRP 6.650)	90-91	Y	1	26025152

© 2000 GENERAL MOTORS SERVICE PARTS OPERATIONS-CHEVROLET-14Y

	7-B16	6.617	SEAL, P/S PUMP SHF (PART OF 26021469 PUMP ASM IN GRP 6.650)	90-91	Y (FOR MDL APPL & POA INFO SEE PUMP CHART)	1	26025152
	7-B16	6.617	SEAL, P/S PUMP SHF (PART OF 26021469 PUMP ASM IN GRP 6.650)	90-91	Y (LT5)	1	26025152
17.	7-B15	6.614	SHAFT, P/S PUMP (PART OF 26021469 PUMP ASM IN GRP 6.650) (INCL 18) (W/BRG)	86-91	Y (FOR MDL APPL & POA INFO SEE PUMP CHART)	1	26001374
	7-B15	6.614	SHAFT, P/S PUMP (W/BRG) (PART OF 26021469 PUMP ASM IN GRP 6.650) (INCL 18)	84-85	Y	1	26001374
18.	7-B15	6.616	BEARING, P/S PUMP SHF (PART OF 26021469 PUMP ASM IN GRP 6.650)	84-91	Y	1	26001378
19.	7-B15	6.616	RING, P/S PUMP SHF BRG RET (PART OF 26021469 PUMP ASM IN GRP 6.650)	84-85	Y	2	7842662
	7-B15	6.616	RING, P/S PUMP SHF BRG RET (PART OF 26021469 PUMP ASM IN GRP 6.650)	86-91	Y (FOR MDL APPL & POA INFO SEE PUMP CHART)	1	7842662
	7-B15	6.616	RING, P/S PUMP SHF BRG RET (PART OF 26021469 PUMP ASM IN GRP 6.650)	90-91	Y (LT5)	1	7842662
20.	7-B16	6.624	SPRING, P/S PUMP FLOW C/VLV (PART OF 26021469 PUMP ASM IN GRP 6.650) (6.612)	84-86	Y	1	5688037
	7-B16	6.624	SPRING, P/S PUMP FLOW C/VLV (PART OF 26021469 PUMP ASM IN GRP 6.650) (6.612)	86-91	Y (FOR MDL APPL & POA INFO SEE PUMP CHART)	1	5688037
	7-B16	6.624	SPRING, P/S PUMP FLOW C/VLV (PART OF 26021469 PUMP ASM IN GRP 6.650) (6.612)	90-91	Y (LT5)	1	5688037
21.	7-B16	6.624	VALVE, P/S PUMP FLOW CONT (PART OF 26021469 PUMP ASM IN GRP 6.650)	84-85	Y	1	7841853
	7-B16	6.624	VALVE, P/S PUMP FLOW CONT (PART OF 26021469 PUMP ASM IN GRP 6.650)	86-91	Y (FOR MDL APPL & POA INFO SEE PUMP CHART)	1	7841853
	7-B16	6.624	VALVE, P/S PUMP FLOW CONT (PART OF 26021469 PUMP ASM IN GRP 6.650)	90-91	Y (LT5)	1	7841853
22.	7-B19	6.674	SEAL, P/S PUMP FTG (O RING) (PART OF 26021469 PUMP ASM IN GRP 6.650)	84-87	Y (FOR MDL APPL & POA INFO SEE PUMP CHART)	1	5688035
	7-B19	6.674	SEAL, P/S PUMP FTG (O RING) (PART OF 26021469 PUMP ASM IN GRP 6.650) (.588-.578" ID) ...	86-91	Y (FOR MDL APPL & POA INFO PUMP CHART)	1	5688035
23.	7-B16	6.624	FITTING, P/S PUMP	84-86	Y	1	26056501
	7-B16	6.624	FITTING, P/S PUMP	87-91	Y (FOR MDL APPL & POA INFO SEE PUMP CHART)	1	26056501
24.		DISCON	RING KIT, PUMP RING (INCL #9, 10, 11, 12) (PART OF 26021469 PUMP IN GRP 6.650	84-91	.....	1	26021987

RPO DEFINITIONS
FE1 – SUSPENSION SYSTEM,SOFT RIDE

© 2000 GENERAL MOTORS SERVICE PARTS OPERATIONS-CHEVROLET-14Y

FE7 – SUSPENSION SYSTEM,FRONT AND REAR,HEAVY DUTY(USED WITH PERFORMANCE HANDLING PACKAGE Z51)
LT5 – ENGINE,5.7L(5.7J),TPI
L98 – ENGINE, 5.7L, (5.7–8) 350 CID, V8, TPI

© 2000 GENERAL MOTORS SERVICE PARTS OPERATIONS–CHEVROLET–14Y

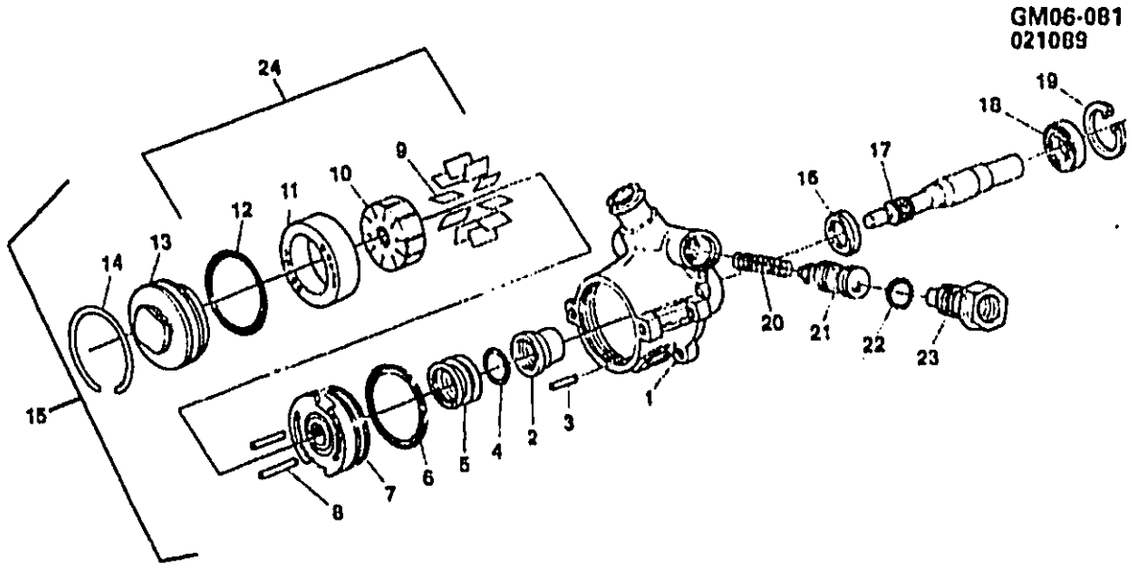

GM06-0813

1992-1995 Y STEERING PUMP ASM (LT5/5.7J)

1.	7-B14	6.608	HOUSING, P/S PUMP (INCLS 2, 3, 4, 16) PART OF 15))	92-95	Y (LT5)	1	26029471
2.	7-B15	6.612	SLEEVE, P/S PUMP PRESS PLT SEAL (INCLS 4) (PART OF 1, 15) .	92-94	Y	1	7842086
	7-B15	6.612	SLEEVE, P/S PUMP PRESS PLT SEAL (INCLS 4) (PART OF 1, 15) .	95	Y (LT5)	1	7842086
3.	7-B14	6.608	PIN, P/S PUMP PRESS PLT (PART OF 1, 15)	92-95	Y	1	7839990
4.		N.S.	SEAL, SLEEVE O RING (17.3 I.D.) (PART OF 1, 2, 15) (*KIT1) ..		.....		
5.	7-B15	6.612	SPRING, P/S PUMP PRESS PLT (PART OF 15)	92-95	Y (LT5)	1	7839989
6.		N.S.	SEAL, PRESS PLATE O RING (47.4 I.D.) (PART OF 25) (*KIT1) ..		.....		
7.	7-B15	6.612	PLATE, P/S PUMP PRESS (PART OF 15)	92-95	Y (LT5)	1	26002915
8.	7-B14	6.608	PIN, P/S PUMP THR PLT (PART OF 15)	92-95	Y	2	7839991
9.	7-B15	6.610	VANE KIT, P/S PUMP (PART OF 15, 24)	92-95	Y (LT5)	1	7840569
10.		N.S.	ROTOR, (PART OF 15, 24)		.....	1	
11.		N.S.	RING, (PART OF 15, 24)		.....	1	
12.		N.S.	SEAL, O RING (53.6 I.D.) (PART OF 15, 24) (*KIT1)		.....	1	
13.	7-B15	6.612	PLATE, P/S PUMP THR (PART OF 15)	92-95	Y (LT5)	1	7840139
14.	7-B15	6.612	RING, P/S PUMP THR PLT RET (PART OF 15)	92-95	Y	1	7839992
15.	7-B10	6.605	PUMP, P/S (INCLS 1-14, 16-24)	92-95	Y (LT5)	1	7849020
	7-B17	6.655	PULLEY, P/S PUMP	92-95	Y (LT5)	1	10067476
16.	7-B16	6.617	SEAL, P/S PUMP SHF (PART OF 1, 15)	92-95	Y (LT5)	1	26025152
17.	7-B15	6.614	SHAFT, P/S PUMP (INCL'S 18) (PART OF 15)	92-95	.....		

© 2000 GENERAL MOTORS SERVICE PARTS OPERATIONS-CHEVROLET-14Y

							GMC6-0813
18.	7-B15	6.616	BEARING, P/S PUMP SHF (PART OF 15, 18)	92-95	Y	1	26001378
19.	7-B15	6.616	RING, P/S PUMP SHF BRG RET (PART OF 15)	92-95	Y (LT5)	1	7842662
20.	7-B16	6.624	SPRING, P/S PUMP FLOW C/VLV (PART OF 15) (6.612)	92-95	Y (LT5)	1	5688037
21.	7-B16	6.624	VALVE, P/S PUMP FLOW CONT (PART OF 15)	92-95	Y (LT5)	1	7841853
22.		N.S.	SEAL, P/S PUMP FTG (O RING) ((14.5 I.D.) (PART OF 15)) (*KIT1)		.....		
23.	7-B16	6.624	FITTING, P/S PUMP (PART OF 15)	92-95	Y	1	26056501
24.		DISCON	RING KIT, P/S PUMP (INCL'S 9-12) (PART OF 15) (W/ROTOR AND VANE)	92-95	Y	1	26021957

SERVICE KITS

1.	7-B14	6.609	SEAL KIT, P/S PUMP (INCL'S 4, 6, 12, 22) (AC-DELCO #36-7158)	92-95	Y (LT5)	1	26027174

RPO DEFINITIONS
LT5 – ENGINE,5.7L(5.7J),TPI

© 2000 GENERAL MOTORS SERVICE PARTS OPERATIONS-CHEVROLET-14Y

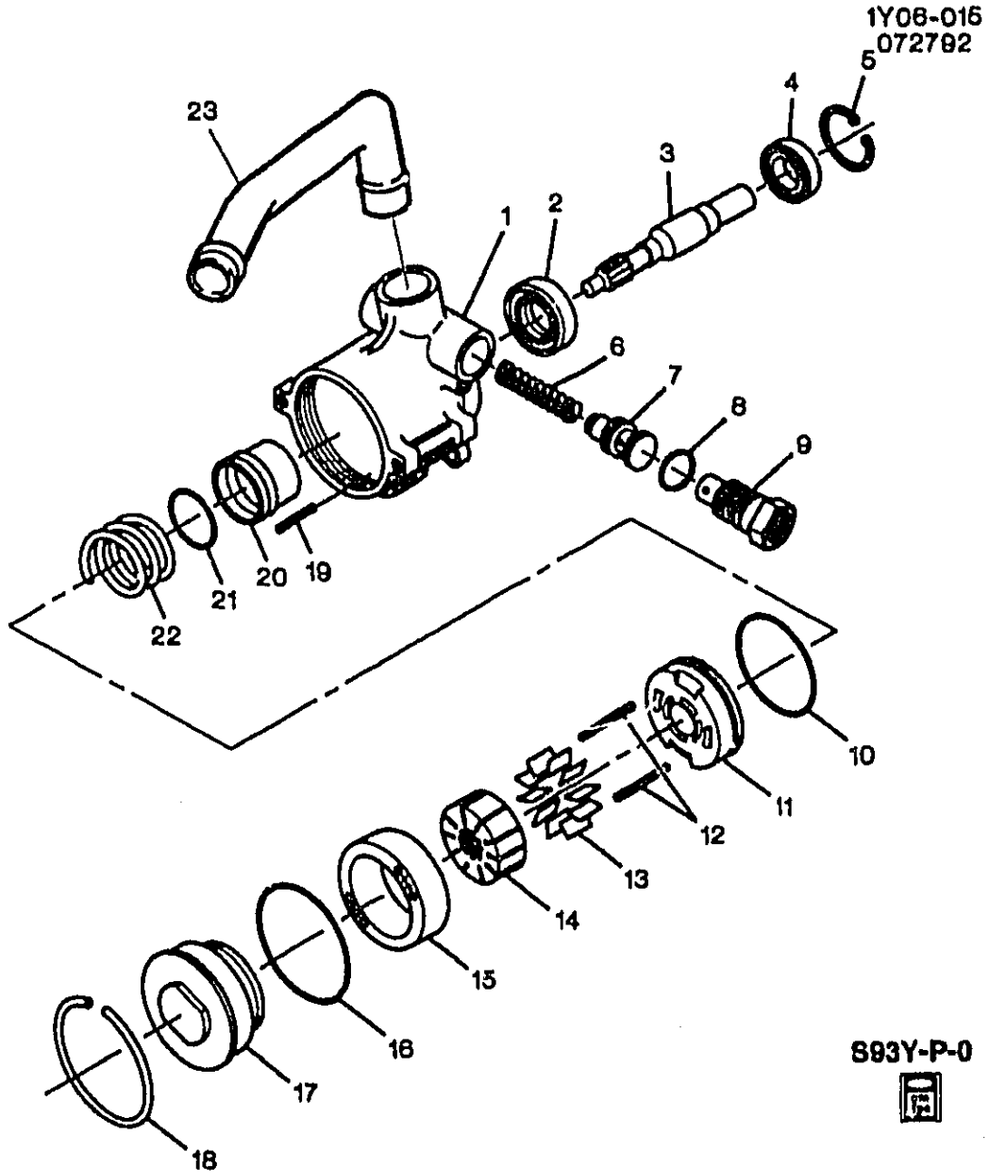

1Y06-015

1992–1995 Y STEERING PUMP ASM (LT1/5.7P)

1.		N.S.	HOUSING, P/S PUMP (*KIT1) ...		.....		
2.	7-B16	6.617	SEAL, P/S PUMP SHF (*KIT1) ...	92-95	Y (LT1)	1	26027103
3.	7-B15	6.614	SHAFT, P/S PUMP (INCL'S 4) (W/BRG) (*KIT1)	92-95	Y (LT1)	1	26001374
4.	7-B15	6.616	BEARING, P/S PUMP SHF (PART OF 3) (*KIT1)	92-95	Y	1	26001378
5.	7-B15	6.616	RING, P/S PUMP SHF BRG RET (*KIT1)	92-95	Y (LT1)	1	7842662
6.	7-B16	6.624	SPRING, P/S PUMP FLOW C/VLV (*KIT1) (6.612)	92-95	Y (LT1)	1	5688037
7.	7-B16	6.624	VALVE, P/S PUMP FLOW CONT (*KIT1)	92-93	Y (LT1)	1	7841853
	7-B16	6.624	VALVE, P/S PUMP FLOW CONT (*KIT1)	94-95	Y (LT1)	1	26045685
8.	7-B16	6.635	SEAL, P/S PUMP RSVR (O RING) (*KIT1, KIT2) (6.671)	92-95	Y (LT1)	1	26023510
9.	7-B16	6.624	FITTING, P/S PUMP (*KIT1)	92-95	Y	1	26056501

© 2000 GENERAL MOTORS SERVICE PARTS OPERATIONS–CHEVROLET–14Y

							1Y06-015
10.		N.S.	SEAL, O-RING (*KIT1, KIT2)		.....		
11.	7-B15	6.612	PLATE, P/S PUMP PRESS (*KIT1)	92-95	Y (LT1)	1	26003737
12.	7-B14	6.608	PIN, P/S PUMP THR PLT (*KIT1) .	92-95	Y	2	7839991
13.		N.S.	VANE KIT, P/S PUMP (*KIT1, KIT3)		.....		
14.		N.S.	ROTOR, PUMP (*KIT1, KIT3)		.....		
15.		N.S.	RING, PUMP (*KIT1, KIT3)		.....		
16.		N.S.	RING, O-RING (*KIT1, KIT2, KIT3)		.....		
17.	7-B15	6.612	PLATE, P/S PUMP THR (*KIT1) ..	92-95	Y (LT1)	1	26015197
18.	7-B15	6.612	RING, P/S PUMP THR PLT RET (*KIT1)	92-95	Y	1	7839992
19.	7-B14	6.608	PIN, P/S PUMP PRESS PLT (*KIT1)	92-95	Y	1	7839990
20.		N.S.	SLEEVE, P/S PUMP PRESS PLT SEAL (*KIT1)		.....		
21.		N.S.	SEAL, O-RING (*KIT1, KIT2)		.....		
22.	7-B15	6.612	SPRING, P/S PUMP PRESS PLT (*KIT1)	92-95	Y (LT1)	1	7839989
23.	7-B18	6.671	TUBE, P/S PUMP INL (*KIT1)	92-95	Y (LT1)	1	26027015

SERVICE KITS

1.	7-B10	6.605	PUMP, P/S (INCL'S 1 THRU 23) ..	92-95	Y (LT1)	1	26045659
2.	7-B14	6.609	SEAL KIT, P/S PUMP (INCL'S 8,10, 16, 21) (AC-DELCO #36-7158)	92-95	Y (LT1)	1	26027174
3.		DISCON	RING KIT, P/S PUMP (INCL'S 13-16) (W/ROTOR AND VANE) ..	92-95	Y	1	26021987

RPO DEFINITIONS
LT1 – ENGINE-GAS, 8 CYL, 5.7L(5.7P),MFI,HO

© 2000 GENERAL MOTORS SERVICE PARTS OPERATIONS-CHEVROLET-14Y

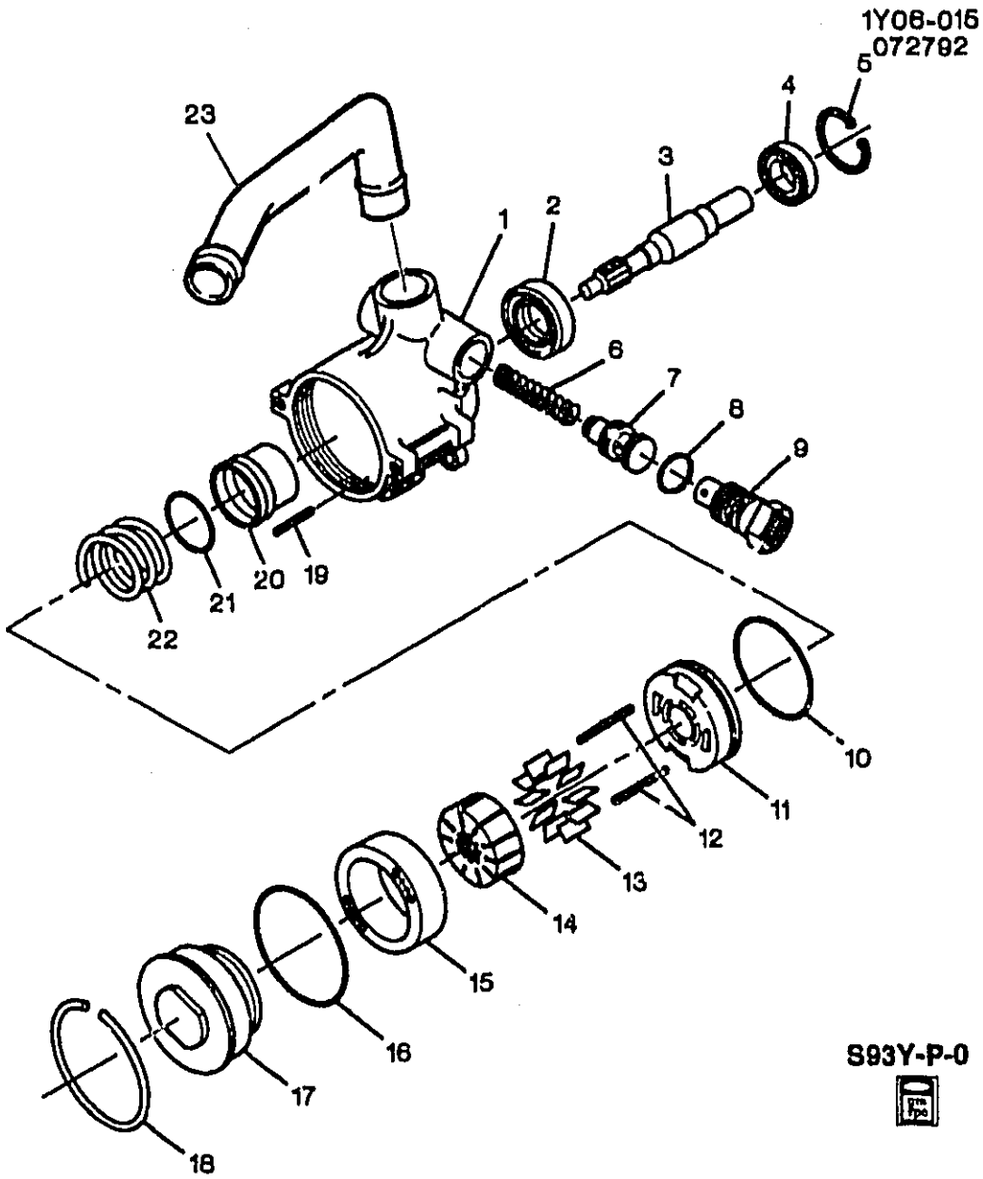

1Y06-0156

1996 Y STEERING PUMP ASM (LT1/5.7P)

1.		N.S.	HOUSING, P/S PUMP (*KIT1) ...		.....		
2.	7-B16	6.617	SEAL, P/S PUMP SHF (*KIT1) ...	96	Y	1	26027103
3.	7-B15	6.614	SHAFT, P/S PUMP (INCL'S 4) (W/BRG) (*KIT1)	96	Y	1	26001374
4.	7-B15	6.616	BEARING, P/S PUMP SHF (PART OF 3) (*KIT1)	96	Y	1	26001378
5.	7-B15	6.616	RING, P/S PUMP SHF BRG RET (*KIT1)	96	Y	1	7842662
6.	7-B16	6.624	SPRING, P/S PUMP FLOW C/VLV (*KIT1) (6.612)	96	Y	1	5688037
7.	7-B16	6.624	VALVE, P/S PUMP FLOW CONT (*KIT1)	96	Y	1	7841853
8.	7-B16	6.635	SEAL, P/S PUMP RSVR (O RING) (*KIT1, KIT2) (6.671)	96	Y	1	26023510
9.	7-B16	6.624	FITTING, P/S PUMP (*KIT1)	96	Y	1	26056501
10.		N.S.	SEAL, O-RING (*KIT1, KIT2)		.....		

© 2000 GENERAL MOTORS SERVICE PARTS OPERATIONS-CHEVROLET-14Y

							1Y06-0156
11.	7-B15	6.612	PLATE, P/S PUMP PRESS (*KIT1)	96	Y	1	26003737
12.	7-B14	6.608	PIN, P/S PUMP THR PLT (*KIT1)	96	Y	1	7839991
13.		N.S.	VANE KIT, P/S PUMP (*KIT1, KIT3)				
14.		N.S.	ROTOR, PUMP (*KIT1, KIT3)				
15.		N.S.	RING, PUMP (*KIT1, KIT3)				
16.		N.S.	RING, O-RING (*KIT1, KIT2, KIT3)				
17.	7-B15	6.612	PLATE, P/S PUMP THR (*KIT1)	96	Y	1	26015197
18.	7-B15	6.612	RING, P/S PUMP THR PLT RET (*KIT1)	96	Y	1	7839992
19.	7-B14	6.608	PIN, P/S PUMP PRESS PLT (*KIT1)	96	Y	1	7839990
20.		N.S.	SLEEVE, P/S PUMP PRESS PLT SEAL (*KIT1)				
21.		N.S.	SEAL, O-RING (*KIT1, KIT2)				
22.	7-B15	6.612	SPRING, P/S PUMP PRESS PLT (*KIT1)	96	Y	1	7839989
23.	7-B18	6.671	TUBE, P/S PUMP INL (*KIT1)	96	Y	1	26027015

SERVICE KITS

1.	7-B10	6.605	PUMP, P/S (INCL'S 1 THRU 23)	96	Y	1	26045659
2.	7-B14	6.609	SEAL KIT, P/S PUMP (INCL'S 8,10, 16, 21) (AC-DELCO #36-7158)	96	Y (LT1, LT4)	1	26027174
3.	7-B15	6.610	RING KIT, P/S PUMP (INCL'S 13-16)	96	Y	1	26046560

RPO DEFINITIONS
LT1 – ENGINE-GAS, 8 CYL, 5.7L(5.7P),MFI,HO
LT4 – ENGINE GAS, 8 CYL, 5.7L, MFI, HIGH OUTPUT

© 2000 GENERAL MOTORS SERVICE PARTS OPERATIONS-CHEVROLET-14Y

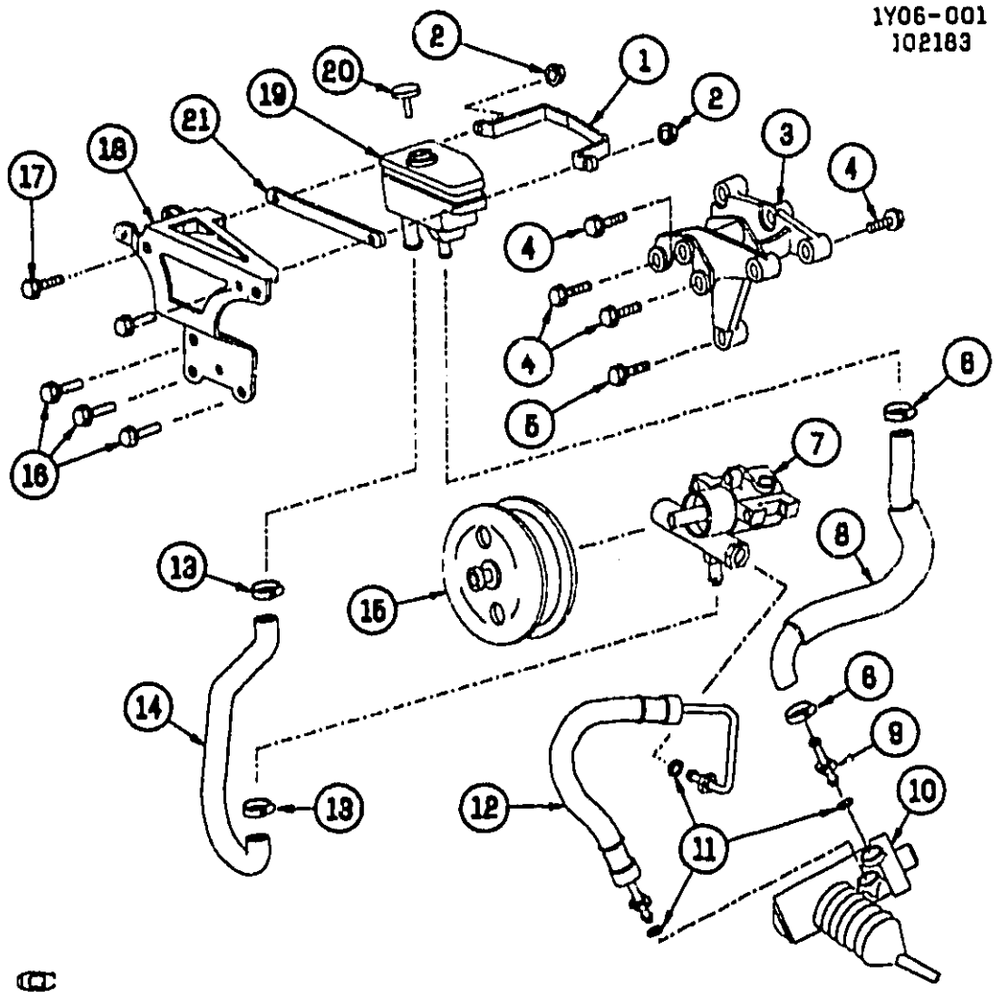

1Y06-001

1984 Y STEERING PUMP MOUNTING & HOSES(L83)

1.		DISCON	BRACKET, HYD FLUID RSVR (1ST DESIGN USED ON VEHICLES WITH MOUNTING DEPRESSION ON ONLY 3 SIDES OF RESERVOIR.)	14060187
		N.S.	BRACKET, HYD FLUID RSVR (2ND DESIGN USED ON VEHICLES WITH MOUNTING DEPRESSION ON ALL R SIDES OF RESERVOIR.)	
2.		8.917	NUT, HEX FLG HD (M6 X 1 X 6.5)	
3.	7-B14	6.606	BRACKET, GEN & P/S PUMP	14087559
4.		8.900	BOLT, HEX FLG HD (M8X1.25X25)	
5.		8.900	BOLT, HEX FLG HD (3/8"-16X1 3/8")	
6.	7-M18	1.166	CLAMP, WORM TYPE (.56"TO 1.06"DIA)	22518665
7.	7-B10	6.605	PUMP, HYD STRG (SEE GROUP 6.000 "STEERING PUMP ASM" FOR DETAIL ILLUSTRATED VIEW.)	26021469
8.	7-B18	6.671	HOSE, P/S GEAR OTLT	14050021
9.		DISCON	PIPE, P/S GEAR OTLT	14048934
10.	7-A12	6.508	GEAR KIT, STRG (REMAN) W/FE7; (SEE GROUP 6.000 "STEERING ASM/RACK & PINION-POWER" FOR DETAILED ILLUSTRATED VIEW) (AC-DELCO #36-9036)	26044035
	7-A12	6.508	GEAR KIT, STRG (REMAN) EXPORT; (SEE GROUP 6.000 "STEERING ASM/RACK & PINION-POWER" FOR DETAILED ILLUSTRATED VIEW) (AC-DELCO #36-9038)	26044837
	7-A12	6.508	GEAR KIT, STRG (REMAN) EXC FE7; (SEE GROUP 6.000 "STEERING ASM/RACK & PINION-POWER" FOR DETAILED ILLUSTRATED VIEW) (AC-DELCO #36-9038)	26044837

© 2000 GENERAL MOTORS SERVICE PARTS OPERATIONS-CHEVROLET-14Y

				1Y06-001
11.	7-N4	4.845	SEAL, HYD STRG OTLT PIPE (PART OF 12) (6.674)	26001594
12.	7-B18	6.670	HOSE, P/S GEAR INL (INCL 11)	26002387
13.		8.948	CLAMP, WORM GEAR (.62 TO 1.25)	
14.	7-B18	6.671	HOSE, P/S FLUID RSVR	14048940
15.	7-B17	6.655	PULLEY, HYD STRG PUMP	14055114
16.		8.900	BOLT, HEX FLG HD (3/8"-16X1 3/4")	
17.		8.900	BOLT, HEX (M6X1X16)	
18.		DISCON	BRACKET, GEN	14063758
19.	7-B16	6.635	RESERVOIR, HYD FLUID (1ST DESIGN USED ON VEHICLES WITH MOUNTING DEPRESSION ON ONLY 3 SIDES OF RESERVOIR.)	14076166
	7-B16	6.635	RESERVOIR, HYD FLUID (2ND DESIGN USED ON VEHICLES WITH MOUNTING DEPRESSION ON ALL R SIDES OF RESERVOIR.)	14076166
20.	7-B16	6.635	CAP, HYD FLUID RSVR	14076128
21.		DISCON	STRAP, HYD FLUID RSVR (2ND DESIGN USED ON VEHICLES WITH MOUNTING DEPRESSION ON ALL R SIDES OF RESERVOIR.)	14076167

RPO DEFINITIONS

L83 – ENGINE, 5.7L (5.7-8), V8,(CFI-CROSSFIRE)(TBI)

© 2000 GENERAL MOTORS SERVICE PARTS OPERATIONS-CHEVROLET-14Y

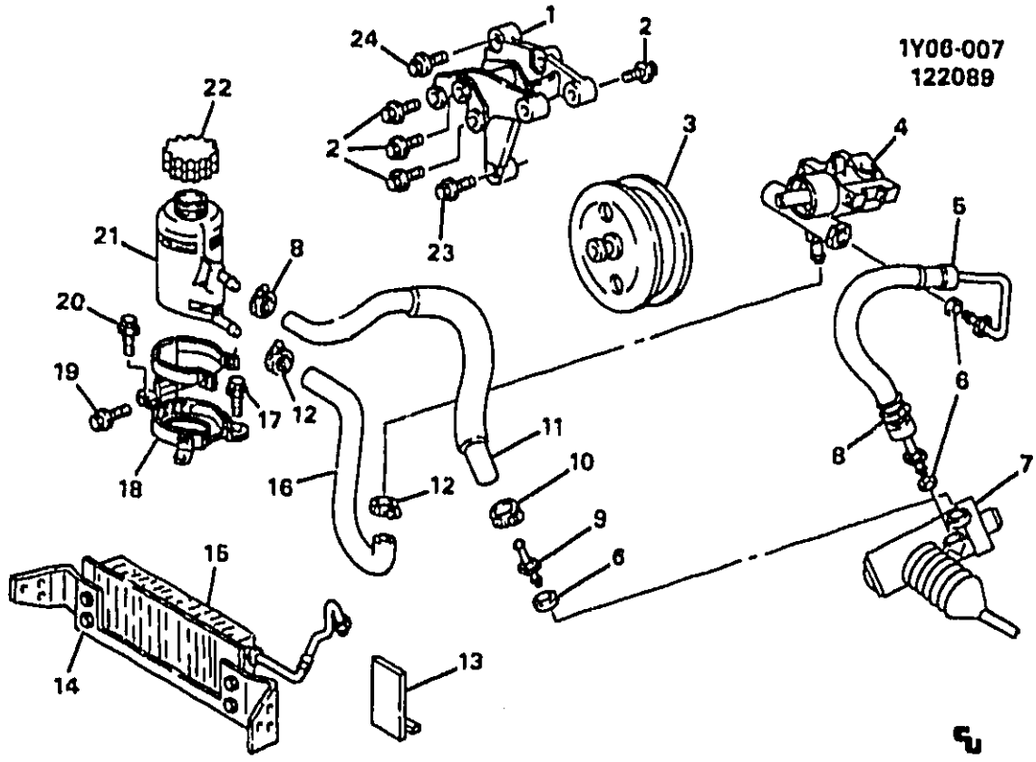

1Y06-007

1985-1987 Y STEERING PUMP MOUNTING & HOSES(L98)

1.	7-B14	6.606	BRACKET, GEN	14087559
2.		8.900	BOLT, HFH M8X1.25X21MM, 17 OD, 10.9 (AR)	12551177
3.	7-B17	6.655	PULLEY, HYD	14055114
4.	7-B10	6.605	PUMP (SEE GROUP 6.000 "STEERING PUMP MOUNTING & HOSES" FOR DETAIL ILLUSTRATED VIEW.)	26021469
5.	7-B18	6.670	HOSE, GR INL (INCL 8)	26002387
6.	7-N4	4.845	SEAL (7.65MM IDX1.63MM THK) (PART OF 5, 15) (6.674)	26001594
7.	7-A12	6.508	GEAR KIT, R & P (1985 FE7) (AC-DELCO #36-9036)	26044835
	7-A12	6.508	GEAR KIT, R & P (1986-87 FE7) (AC-DELCO #36-9036)	26044835
	7-A12	6.508	GEAR KIT, R & P (1985 EXC FE7) (AC-DELCO #36-9038)	26044837
	7-A12	6.508	GEAR KIT, R & P (1986-87 EXC FE7) (AC-DELCO #36-9038)	26044837
8.		DISCON	CLAMP, GR OTLT PIPE UPR	14093122
9.		DISCON	PIPE, GR OTLT (1985) (1ST DESIGN 1985 - 57MM LONG AND STRAIGHT.)	14048934
		DISCON	PIPE, GR OTLT (2ND DESIGN 1985 - 888MM LONG AND BENT.)	14093119
10.		DISCON	CLAMP, GR OTLT PIPE LWR	14093123
11.	7-B18	6.671	HOSE, GR OTLT	14084031
12.		8.948	CLAMP, WORM GR (.62 TO 1.25) (AC-DELCO #12337891)	12337891
13.		DISCON	PROTECTOR, GR HOSE (1986)	14092704
14.		DISCON	BRACKET, FLUID COOLER (1987) (PART OF 15)	26004496
15.		DISCON	PIPE KIT, FLUID CLG (1985-86) (CPS)	10080769
		DISCON	COOLER, FLUID (1987) (INCL 6, 14)	26004494
		8.900	SCREW, HEX (M8X1.25X35) (AC-DELCO #11514532)	11514532
		8.917	NUT, HFH (M8X1.25) (AC-DELCO #11514596)	11514596
		8.948	CLAMP, (.31 TO .75 DIA)	15620999
16.	7-B18	6.671	HOSE, FLUID RSVR	14084032
17.		8.977	BOLT, SEMS HEX W/FL WA (M8X1.25X20)	12337828
18.	7-B16	6.635	BRACKET, HYD FLUID RSVR (Y07)	14084030
		DISCON	BRACKET, FLUID RSVR (1986-87 Y67)	14092700

© 2000 GENERAL MOTORS SERVICE PARTS OPERATIONS-CHEVROLET-14Y

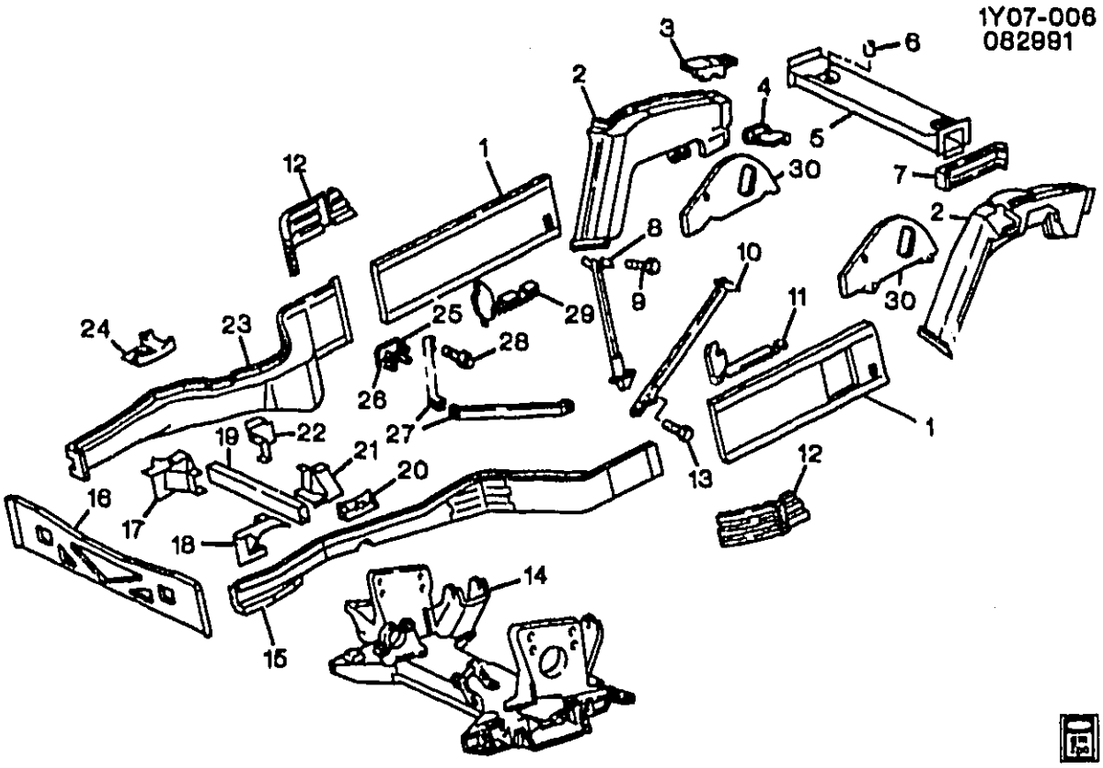

1Y07-006

1984-1989 Y FRAME
1990-1991 Y FRAME (L98)

1.		DISCON	MEMBER, INTER SI (LH) (1984-87)	14069825
		DISCON	MEMBER, INTER SI (RH) (1984-87)	14069826
		DISCON	MEMBER, INR INTER SI (LH) (1988-89)	10112673
		DISCON	MEMBER, INR INTER SI (RH) (1988-89)	10112674
	7-C9	7.012	RAIL, U/B OTR INTER SI (LH) (1990-91)	10148005
	7-C9	7.012	RAIL, U/B OTR INTER SI (RH) (1990-91)	10148004
	7-C9	7.012	RAIL, U/B INR INTER SI (LH) (1990-91)	10148005
	7-C9	7.012	RAIL, U/B INR INTER SI (RH) (1990-91)	10148004
2.		DISCON	MEMBER, RR SI-RH (1984-85 Y07)	14069822
		DISCON	MEMBER, RR SI-RH (1986-87 Y67)	10048798
	7-C8	7.006	MEMBER, RR SI-RH (1988-91 Y07)	12513816
	7-C8	7.006	MEMBER, RR SI-RH (1988-91 Y67)	10112678
		DISCON	MEMBER, RR SI-LH (1984-85 Y07)	14069821
		DISCON	MEMBER, RR SI-LH (1986-87 Y67)	10048797
	7-C8	7.006	MEMBER, RR SI-LH (1988-91 Y07)	12513815
	7-C8	7.006	MEMBER, RR SI-LH (1988-91 Y67)	10112677
3.	7-C10	7.039	COVER, RR SI MBR (RH)	14078628
	7-C10	7.039	COVER, RR SI MBR (LH)	14078627
4.	7-C10	7.039	GUSSET, U/B RR C/MBR (RH)	14064524
	7-C10	7.039	GUSSET, U/B RR C/MBR (LH)	14064523
5.		DISCON	MEMBER, RR CR (1984-87) (Y07)	14069823
		DISCON	MEMBER, RR CR (1986-87) (Y67)	10048799
	7-C9	7.014	CROSSMEMBER, U/B RR UPR (1988-91) (Y07)	12525520
	7-C9	7.014	CROSSMEMBER, U/B RR UPR (1988-91) (Y67)	12525521
		N.S.	CROSSMEMBER, U/B RR UPR (1991)	
6.	7-N24	12.981	INSULATOR, R/FLR PNL (Y67) (LWR)	14092738
	7-N23	12.980	SPACER, FLR RR PNL ADJ (8.024) (Y07)	3962891
7.		DISCON	BRACE, OTR RR S/MBR-RH (1984-88)	14058686

© 2000 GENERAL MOTORS SERVICE PARTS OPERATIONS-CHEVROLET-14Y

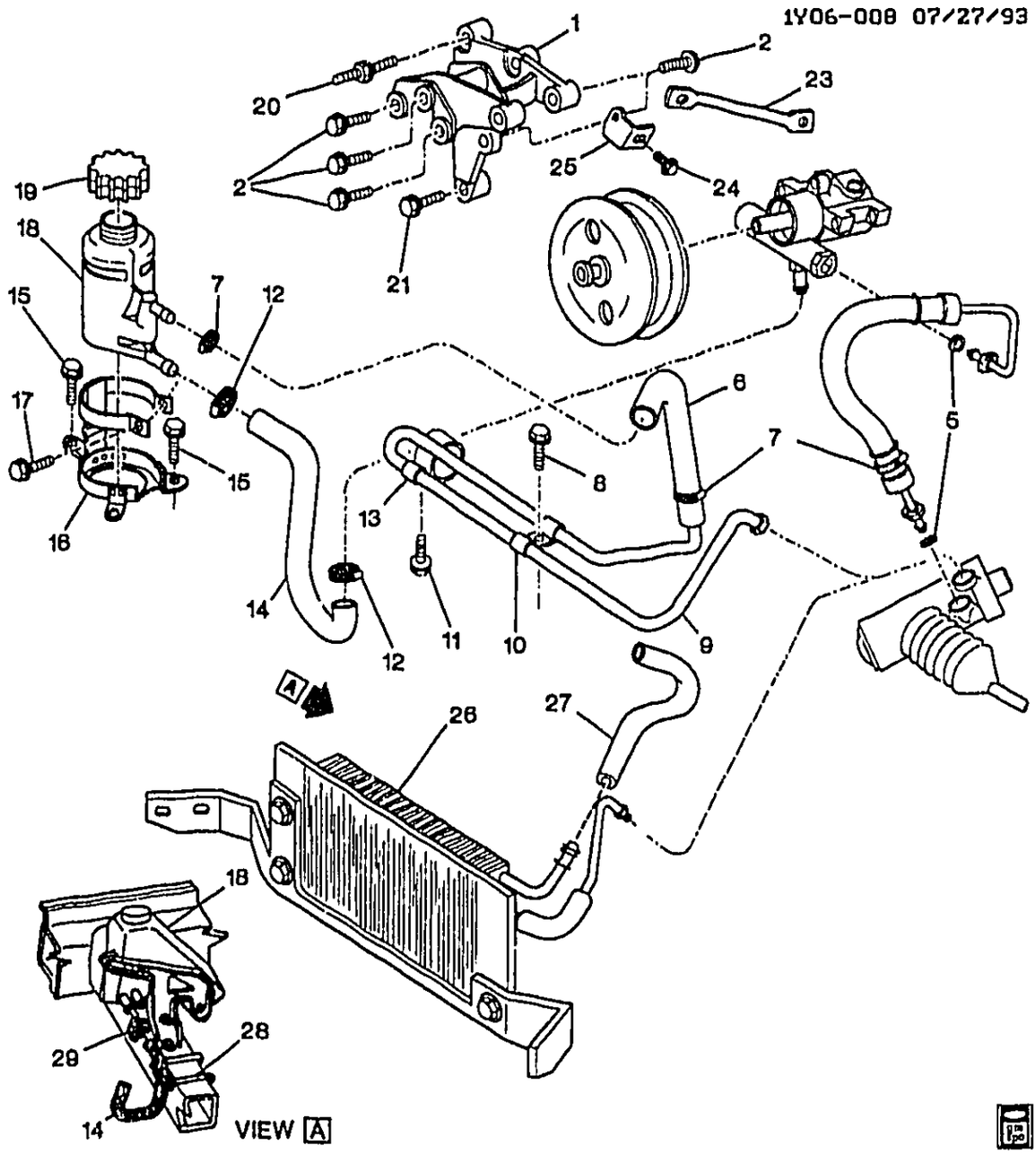

1Y06-008

1988-1989 Y STEERING PUMP MOUNTING & RELATED PARTS(L98)

1.	7-M22	2.277	BRACKET, GEN & P .S. PUMP	14087559
2.		8.900	BOLT, HFH (M8X1.25X25)	11508476
5.	7-N4	4.845	SEAL (7.65MM I.D.X1.63MM THK) (6.674) (PART OF 4, 9, 26) (HIGH TEMPERATURE SEAL)	26001594
6.	7-B18	6.671	HOSE, GR OTLT	14084031
7.		8.948	CLAMP (.31 TO .75 DIA)	15620999
8.		8.977	SCREW, HEX LG WA HD W/SLR (M4.2X1.41X10)	11503617
9.	7-B18	6.671	PIPE, P/S FLUID CLG (INCLS 5)	10052268
10.		DISCON	CLIP, GR OTLT PIPE UPR (SGL PIPE)	10052269
		DISCON	CLIP, GR OTLT PIPE LWR (SGL PIPE)	10052270
11.		8.977	BOLT, SEMS HEX W/FLAT WA (M6.3X1.81X20)	12337828
12.		8.948	CLAMP, WORM GR HSG BAND (.62 TO 1.25) (AC-DELCO #12337891)	12337891
13.		DISCON	CLIP, GR OTLT PIPE UPR (DBL PIPE)	14093120

© 2000 GENERAL MOTORS SERVICE PARTS OPERATIONS-CHEVROLET-14Y

				1Y06-008
		DISCON	CLIP, GR OTLT PIPE LWR (DBL PIPE)	14093121
14.	7-B18	6.671	HOSE, FLUID RESVR	14084032
15.		8.977	BOLT, SEMS HEX W/FLAT WA (M6.3X1.81X20)	12337828
16.	7-B16	6.635	BRACKET, FLUID RESVR	14084030
17.		8.977	SCREW, HWH DRILLER (M4.2X1.41X30)	11509541
18.	7-B16	6.635	RESERVOIR, HYD FLUID (AC-DELCO #36-7171)	14084029
19.	7-B16	6.635	CAP, FLUID RESVR (AC-DELCO #36-7170)	14105106
20.	7-M27	3.655	STUD, AIR INJ BRKT	14085701
21.		8.900	BOLT, HFH (3/8X16X1.38)	9439918
23.	7-B14	6.606	BRACE, RR	10105222
24.		8.900	BOLT, HFH (3/8X16X1)	9440071
25.	7-B14	6.606	BRACKET, RR	10077534
26.	7-B10	6.600	COOLER, P/S FLUID (INCL 5) (CPS) (1989 AND PRIOR MODELS MUST ALSO USE 1-14084031 HOSE ITEM #6, 2-14078849 CLAMPS, 1-26006632 BRACKET.))	26027162
	7-B10	6.602	HOSE, P/S FLUID CLR OTLT	26027161
		8.921	NUT, (SPRING, TYPE C, U-SHAPED, MULTI THD) (M6X1, 1060 PEOR) (AR)	12337917
	7-B10	6.602	CLAMP, FLUID	14078849
27.	7-B18	6.671	HOSE, P/S GR OTLT	10098144
28.		DISCON	STRAP, P/S FLUID RSVR HOSE (1990-91)	10165311
29.		8.948	CLAMP, WORM GEAR 15.7 TO 31.8 ALL SS (AC-DELCO #12337891)	12337891

RPO DEFINITIONS
L98 – ENGINE, 5.7L, (5.7-8) 350 CID, V8, TPI

© 2000 GENERAL MOTORS SERVICE PARTS OPERATIONS-CHEVROLET-14Y

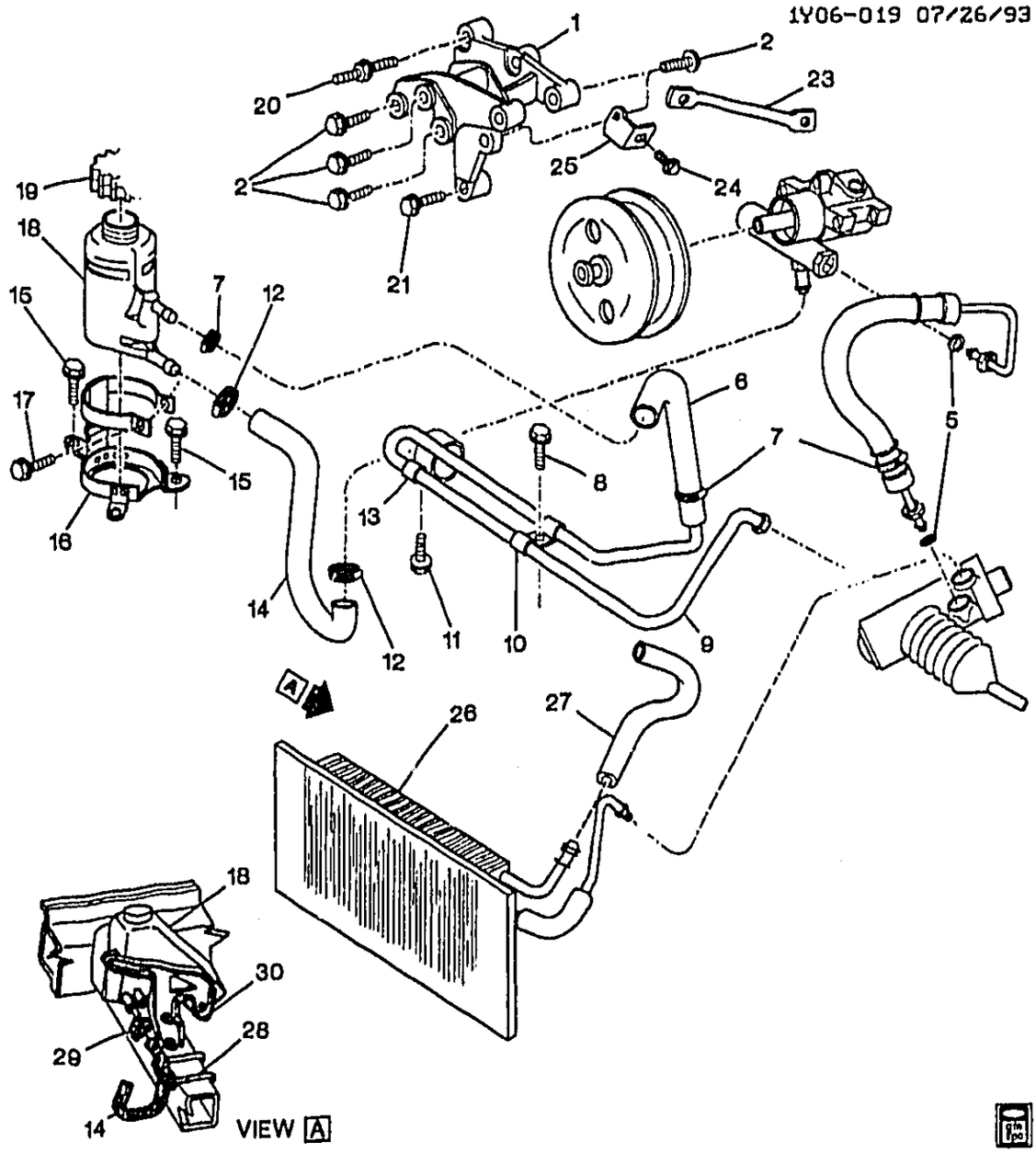

1Y06-019

1990-1991 Y STEERING PUMP MOUNTING & RELATED PARTS(L98)

1.	7-M22	2.277	BRACKET, GEN & P .S. PUMP	14087559
2.		8.900	BOLT, HFH (M8X1.25X2[illegible]	11508476
5.	7-N4	4.645	SEAL (7.65MM I.D.X1.6[illegible]MM THK) (6.674) (PART OF 4, 9, 26) (HIGH TEMPERATURE SEAL.)	26001594
6.	7-B18	6.671	HOSE, GR OTLT	10098144
7.		8.948	CLAMP (.31 TO .75 DIA)	15620099
8.		8.977	SCREW, HEX LG WA HD W/SLR (M4.2X1.41X10)	11503617
9.	7-B18	6.671	PIPE, P/S FLUID CLG (INCLS 5)	10052268
10.		DISCON	CLIP, GR OTLT PIPE UPR (SGL PIPE)	10052269
		DISCON	CLIP, GR OTLT PIPE LWR (SGL PIPE)	10052270
11.		8.977	BOLT, SEMS HEX W/FLAT WA (M6.3X1.81X20)	12337828
12.		8.948	CLAMP, WORM GR HSG BAND (.62 TO 1.25) (1990-91) (AC-DELCO #12337891)	12337891
13.		DISCON	CLIP, GR OTLT PIPE UPR (DBL PIPE)	14093120

© 2000 GENERAL MOTORS SERVICE PARTS OPERATIONS-CHEVROLET-14Y

				1Y06-019
		DISCON	CLIP, GR OTLT PIPE LWR (DBL PIPE)	14093121
14.	7-B18	6.671	HOSE, FLUID RESVR	10098143
15.		8.977	BOLT, SEMS HEX W/FLAT WA (M6.3X1.81X20)	12337828
16.	7-B16	6.635	BRACKET, FLUID RESVR	14084030
17.		8.977	SCREW, HWH DRILLER (M4.2X1.41X30)	11509541
18.	7-B16	6.635	RESERVOIR, HYD FLUID (AC-DELCO #36-7174)	7849151
19.	7-B16	6.635	CAP, FLUID RESVR (AC-DELCO #36-7146)	26018748
20.	7-M27	3.655	STUD, AIR INJ BRKT	14085701
21.		8.900	BOLT, HFH (3/8X16X1.38)	9439918
23.	7-B14	6.606	BRACE, RR	10105222
24.		8.900	BOLT, HFH (3/8X16X1)	9440071
25.	7-B14	6.606	BRACKET, RR	10077534
26.	7-B10	6.600	COOLER, P/S FLUID (INCL 5) (CPS) (1989 AND PRIOR MODELS MUST ALSO USE 1-14084031 HOSE ITEM #6, 2-14078849 CLAMPS, 1-26006632 BRACKET.))	26027162
	7-B10	6.602	HOSE, P/S FLUID CLR OTLT	26027161
		8.921	NUT, (SPRING, TYPE C, U-SHAPED, MULTI THD) (M6X1, 1060 PEOR) (AR)	12337917
	7-B10	6.602	CLAMP, FLUID	14078849
27.	7-B18	6.671	HOSE, P/S GR OTLT	10098144
28.		DISCON	STRAP, P/S FLUID RSVR HOSE (1990-91)	10165311
29.		8.948	CLAMP, WORM GEAR 15.7 TO 31.8 ALL SS (AC-DELCO #12337891)	12337891
30.		DISCON	BRACKET, P/S FLUID RSVR (1990-91)	10098183

RPO DEFINITIONS
L93 -- ENGINE, 5.7L, (5.7-8) 350 CID, V8, TPI

© 2000 GENERAL MOTORS SERVICE PARTS OPERATIONS-CHEVROLET-14Y

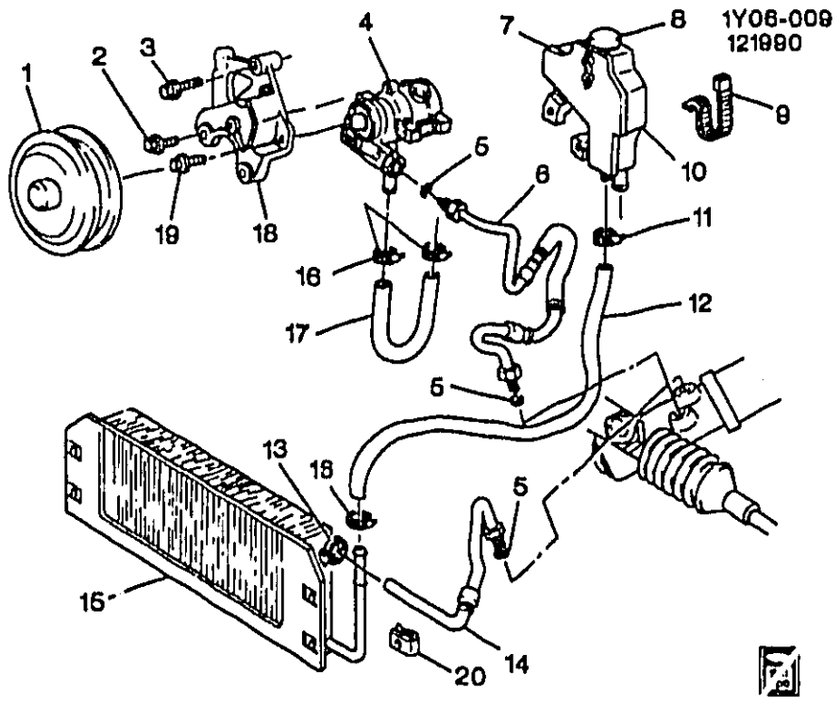

1Y06-009

1990–1995 Y STEERING PUMP MOUNTING & RELATED PARTS(LT5)

1.	7-B17	6.655	PULLEY, P/S PUMP	90–95	Y (LT5)	1	10067476
2.		8.900	BOLT, M8X1.25X25 9.8	90–95		AR	11508476
3.		8.900	BOLT, HFH M8X1.25X35 10.9 PZOR (0.206)	90–95		AR	24572579
4.		DISCON	PUMP, P/S (SEE GROUP 6.000 "STEERING PUMP MOUNTING & RELATED PARTS" FOR DETAIL ILLUSTRATED VIEW.)	90–91	Y (LT5, FE1, FE7)	1	7849020
	7-B10	6.605	PUMP, P/S (SEE GROUP 6.000 "STEERING PUMP MOUNTING & RELATED PARTS" FOR DETAIL ILLUSTRATED VIEW.)	92–95	Y (LT5)	1	7849020
5.	7-B10	6.602	SEAL, P/S FLUID CLG PIPE (O RING) (PART OF 6, 15) (7.65MM IDX1.63MM THK) (6.674)	90–95	Y (LT5)	1	26001594
6.	7-B18	6.670	HOSE, P/S GR INL (INCL 5)	92–95	Y (LT5)	1	26033800
	7-B18	6.670	HOSE, P/S GR INL (PRESSURE LINE) (INCL 5)	90–91	Y (LT5)	1	26025628
7.	7-B16	6.635	RESERVOIR, P/S FLUID (INCL 10) (AC-DELCO #36-7174)	90	Y	1	7849151
	7-B16	6.635	RESERVOIR, P/S FLUID (INCL 10) (AC-DELCO #36-7173)	90–95	Y (LT5)	1	26017982
8.	7-B16	6.635	CAP, P/S FLUID RSVR (AC-DELCO #36-7145)	90–95	Y (LT5)	1	26002554
9.		DISCON	STRAP, P/S FLUID RSVR HOSE (445MM) (445 MM LONG) (9.786)	90–91	Y (5.7J)	1	25533564
10.	7-B14	6.608	MAGNET, P/S FLUID RSVR (PART OF 7)	90–95	Y (LT5)	1	5692682
11.		8.948	CLAMP, WORM GEAR (AC-DELCO #12337891)	90–95		AR	12337891
12.		8.962	HOSE, 3/8 IDX10FT	90–95		AR	7828506
13.		8.948	CLAMP, WORM GEAR, 1/2-13/16 (PART OF 15)	90–95		1	22527587

© 2000 GENERAL MOTORS SERVICE PARTS OPERATIONS-CHEVROLET-14Y

14.		N.S.	HOSE, FLUID CLG FORMED RTN (PART OF 15)		.....		
15.	7-B10	6.600	COOLER, P/S FLUID (INCLS 5, 13, 14, 20)	90-91	Y (LT5)	1	26016988
	7-B10	6.600	COOLER, P/S FLUID (INCLS 5, 13, 14, 20)	92-95	Y (LT5)	1	26033592
16.		6.948	CLAMP, WORM GEAR, 1/2-13/16	90-95	.....	AR	22527587
17.	7-B18	6.671	HOSE, P/S FLUID RSVR	90-95	Y (LT5)	1	14104628
18.	7-B14	6.606	BRACKET, P/S PUMP	90-95	Y (LT5)	1	10067475
19.		6.977	SCREW, HEX W/FLAT WA	90-95	.....	AR	12337828
20.		6.921	NUT, (SPRING, TYPE C, U-SHAPED, MULTI THD) (M6X1, 1060 PEOR) ((PART OF 15))	90-95	.....	AR	12337917

RPO DEFINITIONS

FE1 – SUSPENSION SYSTEM,SOFT RIDE

FE7 – SUSPENSION SYSTEM,FRONT AND REAR,HEAVY DUTY(USED WITH PERFORMANCE HANDLING PACKAGE Z51)

LT5 – ENGINE,5.7L(5.7J),TPI

© 2000 GENERAL MOTORS SERVICE PARTS OPERATIONS-CHEVROLET-14Y

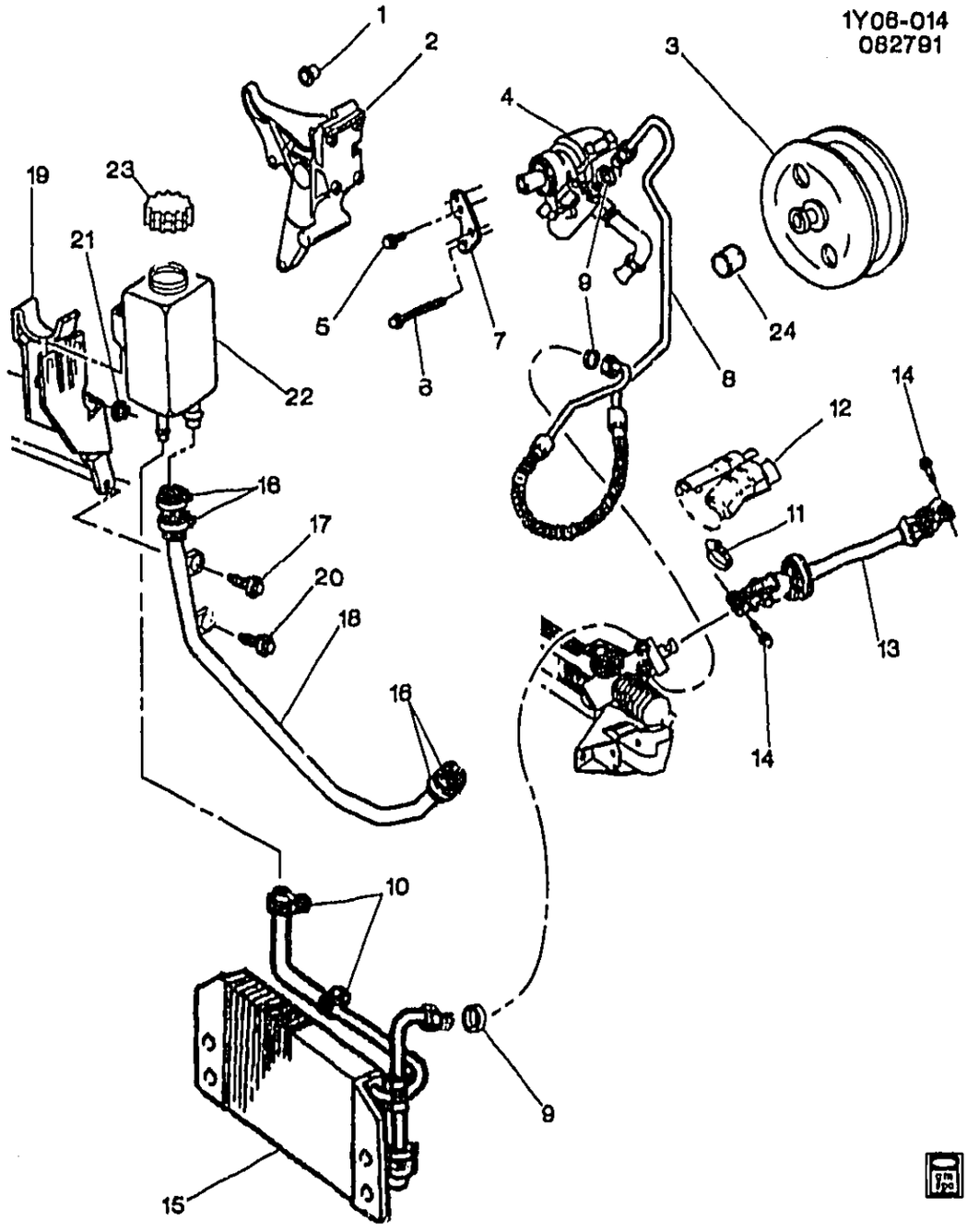

1Y06-014

1992-1996 Y STEERING PUMP MOUNTING & RELATED PARTS(LT1)
1996 Y STEERING PUMP MOUNTING & RELATED PARTS(LT4)

1.	7-M22	2.277	SPACER, GEN (PART OF 2)	92-96	Y (LT1)	1	10028767
	7-M22	2.277	SPACER, GEN (PART OF 2)	96	Y (LT4, ML9)	1	10028767
2.	7-M22	2.277	BRACKET, GEN & A/C CMPR & P/S PUMP (INCL 1)	92-95	Y (LT1)	1	12550052
	7-N19	9.171	BRACKET, GEN & A/C CMPR & P/S PUMP (INCL 1) (2.277)	92-95	Y (LT1)	1	12550052
	7-M22	2.277	BRACKET, GEN & A/C CMPR & P/S PUMP (INCL 1)	96	Y	1	12550052
	7-N19	9.171	BRACKET, GEN & A/C CMPR & P/S PUMP (INCL 1) (2.277)	96	Y	1	12550052
3.	7-B17	6.655	PULLEY, P/S PUMP	92	Y (LT1)	1	10186172

© 2000 GENERAL MOTORS SERVICE PARTS OPERATIONS-CHEVROLET-14Y

							1Y06-014
	7-B17	6.655	PULLEY, P/S PUMP	96	Y (LT1, LT4)	1	10227069
	7-B17	6.655	PULLEY, P/S PUMP (FLAT STEEL)	93	Y (LT1) (2ND DES)	1	10227069
	7-B17	6.655	PULLEY, P/S PUMP (FLAT STEEL)	94-95	Y (LT1)	1	10227069
	7-B17	6.655	PULLEY, P/S PUMP (GROOVED PLASTIC)	93	Y (LT1) (1ST DES)	1	10186172
	7-B17	6.655	PULLEY, P/S PUMP (GROOVED PLASTIC)	93	Y (LT1) (1ST DES)	1	12455795
4.	7-B10	6.605	PUMP, P/S (SEE GROUP 6.000 "STEERING PUMP MOUNTING & RELATED PARTS" FOR DETAIL ILLUSTRATED VIEW.)	92-95	Y (LT1)	1	26045659
	7-B10	6.605	PUMP, P/S (SEE GROUP 6.000 "STEERING PUMP MOUNTING & RELATED PARTS" FOR DETAIL ILLUSTRATED VIEW.)	96	Y	1	26045659
5.		8.900	BOLT, HFH M8X1.25X21MM, 17 OD, 10.9	92-96		3	12551177
		8.800	ADHESIVE KIT, THREAD LOCK 10 ML	92-96		AR	1052624
6.		8.900	BOLT, HFH M8X1.25X75, 33.2 THD, 9.8 PO (AC-DELCO #10130949)	92-96		1	10130949
7.	7-B14	6.606	BRACKET, P/S PUMP FRT	92-95	Y (LT1)	1	10105358
	7-B14	6.606	BRACKET, P/S PUMP FRT	96	Y (LT1, LT4)	1	10105358
8.	7-B18	6.670	HOSE, P/S GR INL (INCL 9)	92-94	Y (LT1)	1	26025064
	7-B18	6.670	HOSE, P/S GR INL (INCL 9)	95	Y (LT1)	1	26042088
	7-B18	6.670	HOSE, P/S GR INL (INCL 9)	96	Y	1	26042088
9.	7-B19	6.674	SEAL, P/S GR INL PIPE (O RING) (PART OF 8, 15) (7.65MM IDX1.63MM THK)	92-95	Y (LT1)	AR	26001594
	7-B19	6.674	SEAL, P/S GR INL PIPE (O RING) (PART OF 8, 15) (7.65MM IDX1.63MM THK)	96	Y	1	26001594
10.		8.948	CLAMP	92-96		AR	15620999
11.		8.948	CLAMP, 28.6-86.2 DIA WORM GEAR (AC-DELCO #12338017)	92-96		AR	12338017
12.	7-B9	6.525	SHIELD, S/GR CPLG	92-96	Y	1	14104779
13.	7-B9	6.524	SHAFT, S/GR CPLG (6.526)	92-96	Y	1	26022830
14.	7-B9	6.525	BOLT, INTER STRG SHF	95-96	Y	2	26039536
	7-B9	6.525	BOLT, INTER STRG SHF (POSN #1) (M10X1.5X31) (HFH NYLON LOCK)	92-96	Y	1	26005756
	7-B9	6.525	BOLT, INTER STRG SHF (POSN #2) (10X1.5X40.3)	92-96	Y	1	7847298
15.	7-B10	6.600	COOLER, P/S FLUID (INCL 9) (W/PIPES)	92-95	Y (LT1)	1	26033166
	7-B10	6.600	COOLER, P/S FLUID (INCL 9) (W/PIPES)	96	Y	1	26033166
16.		8.948	CLAMP, WORM GEAR (AC-DELCO #12337891)	92-96		AR	12337891
17.		8.900	BOLT, HFH 3/8-16X3/4 PZOR 7114M	92-96		AR	9442963
18.	7-B18	6.671	PIPE, P/S PUMP INL	92-95	Y (LT1)	1	26025172
	7-B18	6.671	PIPE, P/S PUMP INL	96	Y	1	26047453
19.	7-B16	6.635	BRACKET, P/S FLUID RSVR	92-96	Y (LT1)	1	10157972
	7-B16	6.635	BRACKET, P/S FLUID RSVR	96	Y (LT4)	1	10157972

© 2000 GENERAL MOTORS SERVICE PARTS OPERATIONS-CHEVROLET-14Y

							1Y06-014	
20.		6.900	BOLT, HW H, 4.2X1.41X30, 9.2 OD, 27 GRIP, 6010M, B PT, POR .	92-96	.....	AR	11509541
21.	7-B16	6.635	NUT, P/S FLUID RSVR BRKT (3/8-16 PC, 286M) (HEX, FLANGE) (8.917)	92-96	Y (LT1)	1	9442958
	7-B16	6.635	NUT, P/S FLUID RSVR BRKT (3/8-16 PC, 286M) (HEX, FLANGE) (8.917)	96	Y (LT4, ML9)	1	9442958
22.	7-B16	6.635	RESERVOIR, P/S FLUID (AC-DELCO #36-7172)	92-95	Y (LT1)	1	26024352
	7-B16	6.635	RESERVOIR, P/S FLUID (AC-DELCO #36-7172)	96	Y	1	26024352
23.	7-B16	6.635	CAP, P/S FLUID RSVR (AC-DELCO #36-7140)	92-95	Y (LT1)	1	26022453
	7-B16	6.635	CAP, P/S FLUID RSVR (AC-DELCO #36-7140)	96	Y	1	26022453
24.	7-B17	6.655	CAP, P/S PUMP PUL HUB	92-95	Y (LT1)	1	10077300
	7-B17	6.655	CAP, P/S PUMP PUL HUB	96	Y	1	10077300

RPO DEFINITIONS
LT1 – ENGINE-GAS, 8 CYL, 5.7L(5.7P),MFI,HO
LT4 – ENGINE GAS, 8 CYL, 5.7L, MFI, HIGH OUTPUT
ML9 – TRANSMISSION,MANUAL 6-SPEED

© 2000 GENERAL MOTORS SERVICE PARTS OPERATIONS-CHEVROLET-14Y

MICROFICHE INDEX

GROUPS 6.000 THRU 7.000

FICHE 7 OF 11

GROUP	DESCRIPTION	STARTING GRID LOCATION PARTS	ILLUSTRATIONS
–	GENERAL INFORMATION	1–A2	1–G2
–	ALPHABETICAL INDEX	1–B13	N.A.
6.000	FRONT SUSPENSION – STEERING	7–A2	7–E2
7.000	FRAMES – SPRINGS – SHOCKS – BUMPERS	7–C2	7–H2
–	OUT OF FICHE CALLS	N.A.	7–M17

7–H1

CHEVROLET
CHASSIS GROUP 7.000

ILLUSTRATION INDEX

	TITLE	GRID
1984–1989	Y FRAME	7–H4
1990–1991	Y FRAME (L98)	7–H4
1990–1991	Y FRAME ASSEMBLY(LT5)	7–H7
1992–1996	Y FRAME ASSEMBLY	7–H7
1986–1989	Y67 FRAME/REINFORCEMENT	7–H10
1990–1991	Y67 FRAME/REINFORCEMENT	7–H12
1992–1996	Y67 FRAME/REINFORCEMENT	7–H15
1984–1987	Y SUSPENSION/REAR	7–H18
1988–1991	Y SUSPENSION/REAR	7–H21
1992–1996	Y SUSPENSION/REAR	7–I2
1989–1991	Y SUSPENSION CONTROLS/ELECTRONIC (FX3)	7–I9
1992	Y SUSPENSION CONTROLS/ELECTRONIC (FX3)	7–I10
1993–1995	Y SUSPENSION CONTROLS/ELECTRONIC (FX3)	7–I12
1996	Y SUSPENSION CONTROLS/ELECTRONIC (F45)	7–I14
1984–1987	Y SPARE WHEEL CARRIER	7–I18
1988–1990	Y SPARE WHEEL CARRIER	7–I20
1991–1992	Y SPARE WHEEL CARRIER	7–I23
1993–1996	Y SPARE WHEEL CARRIER	7–I26
1990–1995	Y07 ROAD WHEEL STORAGE/EMERGENCY TRANSPORTING(ZR1)	7–J2
1996	Y ROAD WHEEL STORAGE EMERGENCY TRANSPORTING(Z16)	7–J2
1984–1988	Y BUMPER/FRONT	7–J5
1989–1990	Y BUMPER/FRONT	7–J8
1991–1996	Y BUMPER/FRONT	7–J11
1984–1989	Y BUMPER/REAR	7–J15
1990	Y BUMPER/REAR (EXC ZR1)	7–J15
1990	Y BUMPER/REAR (ZR1)	7–J17
1991–1992	Y BUMPER/REAR (EXC ZR1)	7–J19
1991–1995	Y BUMPER/REAR (ZR1)	7–J21
1993–1995	Y BUMPER/REAR (EXC ZR1)	7–J25
1996	Y BUMPER/REAR	7–J25

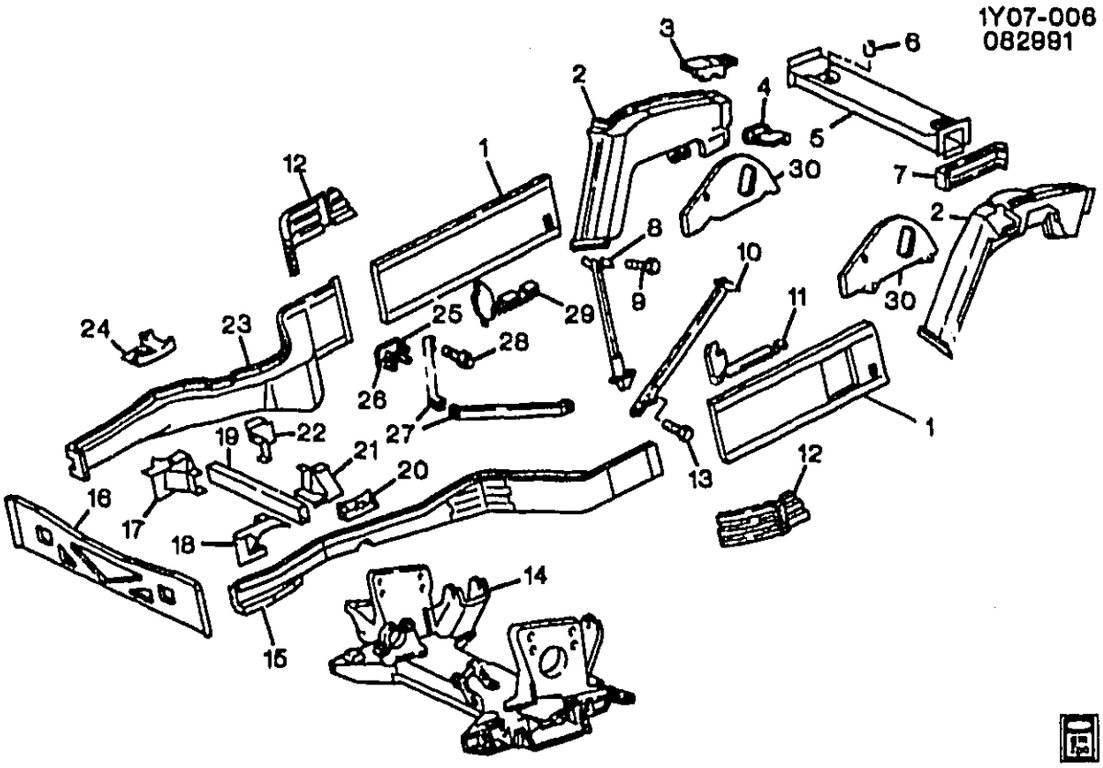

1Y07-006

1984-1989 Y FRAME
1990-1991 Y FRAME (L98)

1.		DISCON	MEMBER, INTER SI (LH) (1984-87)	14069825
		DISCON	MEMBER, INTER SI (RH) (1984-87)	14069826
		DISCON	MEMBER, INR INTER SI (LH) (1988-89)	10112673
		DISCON	MEMBER, INR INTER SI (RH) (1988-89)	10112674
	7-C9	7.012	RAIL, U/B OTR INTER SI (LH) (1990-91)	10148005
	7-C9	7.012	RAIL, U/B OTR INTER SI (RH) (1990-91)	10148004
	7-C9	7.012	RAIL, U/B INR INTER SI (LH) (1990-91)	10148005
	7-C9	7.012	RAIL, U/B INR INTER SI (RH) (1990-91)	10148004
2.		DISCON	MEMBER, RR SI-RH (1984-85 Y07)	14069822
		DISCON	MEMBER, RR SI-RH (1986-87 Y67)	10048798
	7-C8	7.006	MEMBER, RR SI-RH (1988-91 Y07)	12513816
	7-C8	7.006	MEMBER, RR SI-RH (1988-91 Y67)	10112678
		DISCON	MEMBER, RR SI-LH (1984-85 Y07)	14069821
		DISCON	MEMBER, RR SI-LH (1986-87 Y67)	10048797
	7-C8	7.006	MEMBER, RR SI-LH (1988-91 Y07)	12513815
	7-C8	7.006	MEMBER, RR SI-LH (1988-91 Y67)	10112677
3.	7-C10	7.039	COVER, RR SI MBR (RH)	14078628
	7-C10	7.039	COVER, RR SI MBR (LH)	14078627
4.	7-C10	7.039	GUSSET, U/B RR C/MBR (RH)	14064524
	7-C10	7.039	GUSSET, U/B RR C/MBR (LH)	14064523
5.		DISCON	MEMBER, RR CR (1984-87) (Y07)	14069823
		DISCON	MEMBER, RR CR (1986-87) (Y67)	10048799
	7-C9	7.014	CROSSMEMBER, U/B RR UPR (1988-91) (Y07)	12525520
	7-C9	7.014	CROSSMEMBER, U/B RR UPR (1988-91) (Y67)	12525521
		N.S.	CROSSMEMBER, U/B RR UPR (1991)	
6.	7-N24	12.981	INSULATOR, R/FLR PNL (Y67) (LWR)	14092738
	7-N23	12.980	SPACER, FLR RR PNL ADJ (8.024) (Y07)	3962891
7.		DISCON	BRACE, OTR RR S/MBR-RH (1984-88)	14058686

© 2000 GENERAL MOTORS SERVICE PARTS OPERATIONS-CHEVROLET-14Y

				1Y07-006
	7-C8	7.006	BRACE, OTR RR S/MBR-RH (1989-91)	14104794
		DISCON	BRACE, OTR RR S/MBR-LH (1984-88)	14058685
	7-C8	7.006	BRACE, OTR RR S/MBR-LH (1989-91)	14104793
8.		DISCON	BRACE, OTR FRT S/MBR UPR-LH (1984-89)	14081859
	7-C10	7.039	BRACE, OTR FRT S/MBR UPR-LH (1990-91)	10208441
9.		8.900	BOLT, HEX W/WA, M8X1.25X20, 8.8, PC (AR)	11504611
10.	7-C10	7.039	BRACE, U/B FRT S/RL UPR (RH)	10208440
11.		DISCON	SUPPORT, FLR FRT PNL-LH (1990-91) (PART OF 1)	10161819
12.		N.S.	REINFORCEMENT, FRT SI MBR INR	
13.		8.900	BOLT, HFH M8X1.25X18 (AR)	11513703
14.		DISCON	FRAME, DRIVETRAIN & FRT SUSP (1984-87)	14093126
		DISCON	FRAME, DRIVETRAIN & FRT SUSP (1988-91)	10080751
15.		DISCON	MEMBER, FRT SI-LH (1984)	14089121
		DISCON	MEMBER, FRT SI-LH (1985-86 Y07) (1987 Y07 EXC Z51, Z52)	14089121
		DISCON	MEMBER, FRT SI-LH (1986-87 Y67) (1987 Y07 Z51, Z52)	10048795
		DISCON	MEMBER, FRT SI-LH (1988 Y67) (1988 Y07 Z51, Z52)	10112671
		DISCON	MEMBER, FRT SI-LH (1988 Y07 EXC Z51, Z52)	10112669
		DISCON	MEMBER, FRT SI-LH (1989)	10132713
	7-C8	7.006	RAIL, E/CMPT SI (1990-91) (INCL 18, 20)	12529345
16.	7-C9	7.010	SILL, U/B FRT CR	14090676
17.		N.S.	BRACKET, FRT C/MBR (PART OF 23) (RH)	
18.		N.S.	BRACKET, FRT C/MBR (PART OF 15) (LH)	
19.		DISCON	MEMBER, FRT CR (1984-85) (1986 Y07) (1987-88 Y07 EXC Z51, Z52)	14090674
		DISCON	MEMBER, FRT CR (1986-87 Y67) (1987 Y07 Z51, Z52)	10077390
		DISCON	MEMBER, FRT CR (1988 Y67) (1988 Y07 Z51, Z52)	10077390
	7-C9	7.010	CROSSMEMBER, FRT #2 (1989)	10098200
	7-C9	7.010	CROSSMEMBER, FRT #2 (1990)	10098200
20.		N.S.	REINFORCEMENT, FRT S/ABS BRKT (PART OF 15) (LH)	
21.	7-C10	7.039	BRACKET, FRT CR/MBR-LH (1986-88 Y67) (1987-88 Y07 Z51, Z52) (1989-91)	14092617
		DISCON	BRACKET, FRT CR/MBR-LH (1984-86 Y07) (1987-88 Y07 EXC Z51, Z52)	14090675
22.	7-C10	7.039	BRACKET, FRT CR/MBR-RH (1986-88 Y67) (1987-88 Y07 Z51, Z52) (1989-91)	14092618
		DISCON	BRACKET, FRT CR/MBR-RH (1984-86 Y07) (1987-88 Y07 EXC Z51, Z52)	14090675
23.		DISCON	MEMBER, FRT SI-RH (1984)	14083504
		DISCON	MEMBER, FRT SI-RH (1985-86 Y07) (1987 Y07 EXC Z51, Z52)	14089122
		DISCON	MEMBER, FRT SI-RH (1986-87 Y67) (1987 Y07 Z51, Z52)	10048796
		DISCON	MEMBER, FRT SI-RH (1988 Y67) (1988 Y07 Z51, Z52)	10112672
		DISCON	MEMBER, FRT SI-RH (1988 Y07 EXC Z51, Z52)	10112670
		DISCON	MEMBER, FRT SI-RH (1989)	10132714
	7-C8	7.006	MEMBER, FRT SI-RH (1990-91) (INCL 17, 24)	10174972
24.		N.S.	REINFORCEMENT, FRT S/ABS BRKT (PART OF 23) (RH)	
25.		DISCON	REINFORCEMENT, FRT CR/MBR UPR (1986-88 Y67) (1987-88 Y07 Z51, Z52) (1989-91)	14092613
26.		DISCON	REINFORCEMENT, FRT CR/MBR LWR (1984-85) (1986 Y07) (1987-88 Y07 EXC Z51, Z52) (1989-91)	14100201
27.		DISCON	BRACE, FRT CR/MBR RR-RH (1984-85) (1986 Y07) (1987-88 Y07 EXC Z51, Z52)	14094300
	7-C10	7.039	BRACE, FRT CR/MBR RR-RH (1986-88 Y67) (1987-88 Y07 Z51, Z52) (1989-91)	14092612
		DISCON	BRACE, FRT CR/MBR RR-LH (1984-85) (1986 Y07) (1987-88 Y07 EXC Z51, Z52)	14094299
	7-C10	7.039	BRACE, FRT CR/MBR RR-LH (1986-88 Y67) (1987-88 Y07 Z51, Z52) (1989-91)	14092611
28.	7-C10	7.039	BOLT, FRT CR/MBR	14069669

© 2000 GENERAL MOTORS SERVICE PARTS OPERATIONS-CHEVROLET-14Y

				1Y07-006
29.		N.S.	SUPPORT, FLR FRT PNL (PART OF 1) (RH)	
30.	7-C11	7.068	BRACKET, FRT/RR TOW HOOK-RH	10269358
	7-C11	7.068	BRACKET, FRT/RR TOW HOOK-LH	14078681

RPO DEFINITIONS
L98 – ENGINE, 5.7L, (5.7-8) 350 CID. V8, TPI

© 2000 GENERAL MOTORS SERVICE PARTS OPERATIONS-CHEVROLET-14Y

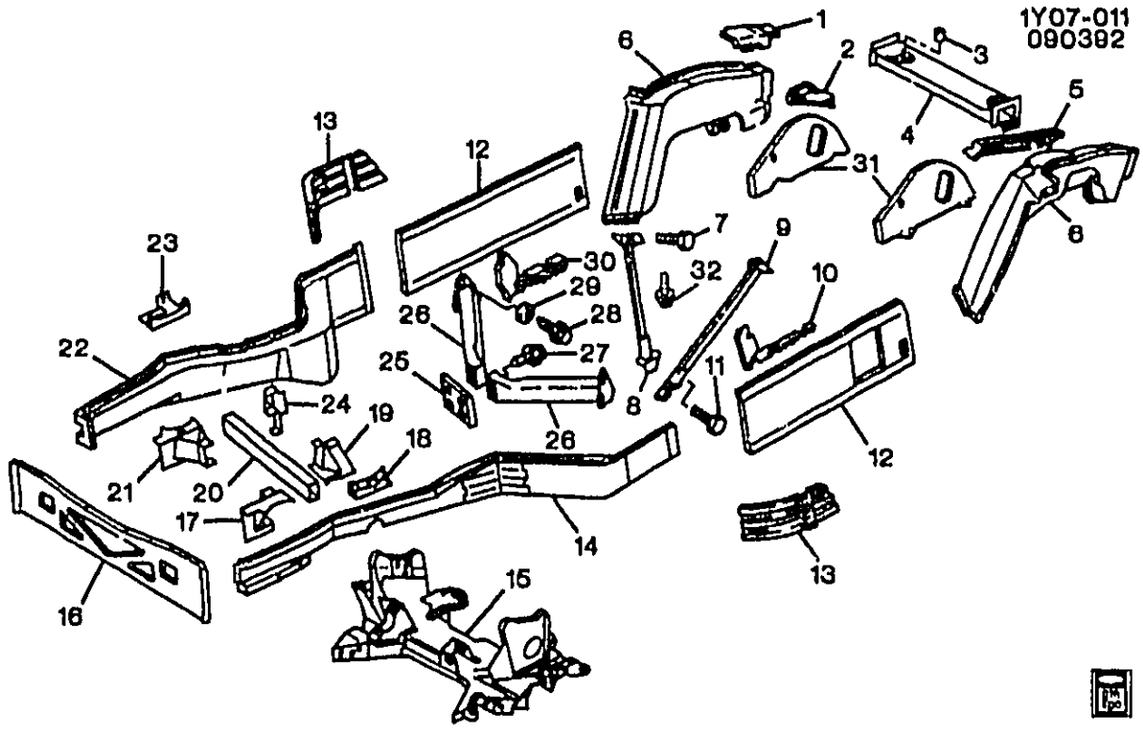

1Y07-011

1990–1991 Y FRAME ASSEMBLY(LT5)
1992–1996 Y FRAME ASSEMBLY

1.	7-C10	7.039	COVER, RR SI MBR	90-96	Y	LH	14078627
	7-C10	7.039	COVER, RR SI MBR	90-96	Y	RH	14078628
2.	7-C10	7.039	GUSSET, U/B RR C/MBR	90-96	Y	LH	14064523
	7-C10	7.039	GUSSET, U/B RR C/MBR	90-96	Y	RH	14064524
3.	7-N23	12.980	SPACER, FLR RR PNL ADJ (8.024)	90-92	Y07 (FE1, FE7)	2	3962891
	7-N23	12.980	SPACER, FLR RR PNL ADJ (8.024)	93-96	Y07	2	3962891
4.	7-C9	7.014	CROSSMEMBER, U/B RR UPR	92-96	Y67	1	12525521
	7-C9	7.014	CROSSMEMBER, U/B RR UPR (INCLS LWR MEMBER)	90-96	Y07	1	12525520
5.	7-C8	7.006	BRACE, U/B OTR RR S/RL	90-96	Y07	LH	14104793
	7-C8	7.006	BRACE, U/B OTR RR S/RL	90-96	Y07	RH	14104794
6.	7-C8	7.006	MEMBER, INR RR SI	90-96	Y07	RH	12513816
	7-C8	7.006	MEMBER, INR RR SI	92-96	Y67	LH	10112677
	7-C8	7.006	MEMBER, INR RR SI	92-96	Y67	RH	10112678
	7-C8	7.006	MEMBER, INR RR SI	90-96	Y07	LH	12513815
7.		8.900	BOLT, HFH M8X1.25X18	90-96		AR	11513703
8.	7-C10	7.039	BRACE, U/B FRT S/RL UPR	90-96	Y	LH	10208441
9.	7-C10	7.039	BRACE, U/B FRT S/RL UPR	90-96	Y	RH	10208440
10.		N.S.	SUPPORT, FLR FRT PNL (PART OF #12 RAIL ASM #10148005)			LH	
11.		8.900	BOLT, HEX W/WA, M8X1.25X20, 8.8, PC	90-96		AR	11504611
12.	7-C9	7.012	RAIL, U/B INR INTER SI (INCL 30) (7.006)	90-96	Y	RH	10148004
	7-C9	7.012	RAIL, U/B INR INTER SI (INCL 30) (7.006)	90-96	Y	LH	10148005
13.		N.S.	REINFORCEMENT, U/B FRT S/RL (PART OF 14, 22)				

© 2000 GENERAL MOTORS SERVICE PARTS OPERATIONS–CHEVROLET–14Y

							1Y07-011
14.	7-C8	7.006	RAIL, F/CMPT SI (INCL 13, 17, 18)	90-96	Y	LH	12529345
15.	7-C8	7.003	FRAME, DRIVETRAIN & FRT SUSP	90-91	Y (LT5, FE1, FE7)	1	10205043
	7-C8	7.003	FRAME, DRIVETRAIN & FRT SUSP	92-96	Y	1	10205043
16.	7-C9	7.010	SILL, U/B FRT CR	90-96	Y	1	14090676
17.		N.S.	BRACKET, FRT C/MBR (PART OF 14)			LH	
18.		N.S.	REINFORCEMENT, FRT S/ABS BRKT (PART OF 14)			LH	
19.	7-C10	7.039	BRACKET, FRT C/MBR (RR)	90-96	Y	LH	14092617
20.	7-C9	7.010	CROSSMEMBER, FRT (#2)	90-96	Y	1	10098200
21.		N.S.	BRACKET, FRT C/MBR (PART OF 22)			RH	
22.	7-C8	7.006	MEMBER, FRT FRM SI (INCL 13, 21, 23)	90-91	Y	RH	10174972
	7-C8	7.006	RAIL, F/CMPT SI (INCL 13, 21, 23)	92-96	Y	RH	12529346
23.		N.S.	REINFORCEMENT, FRT S/ABS BRKT (PART OF 22)			RH	
24.	7-C10	7.039	BRACKET, FRT C/MBR (RR)	90-96	Y	RH	14092618
25.	7-C10	7.039	REINFORCEMENT, FRT C/MBR	90-91	Y (LT5)	1	10098136
	7-C10	7.039	REINFORCEMENT, FRT C/MBR	92-96	Y	1	10098136
26.	7-M18	0.029	BRACE, ENG MT BRKT	90-91	Y (LT5)	LH	14104625
	7-M18	0.029	BRACE, ENG MT BRKT	90-91	Y (LT5)	RH	14104626
	7-M18	0.029	BRACE, ENG MT BRKT	92-96	Y	LH	14104625
	7-M18	0.029	BRACE, ENG MT BRKT	92-96	Y	RH	14104626
27.		8.900	BOLT, HFH, M12X1.75X40 10.9 PEOR 25.6-OD36-THD (POS #1)	90-96		AR	11509591
28.	7-M18	0.029	BOLT, ENG MT BRKT BR (POS #2) (M10X1.5X25 13HEX) (7.039)	90-92	Y	4	14069669
	7-M18	0.029	BOLT, ENG MT BRKT BR (POS #2) (HFH, M12X1.75X40 10.9 PEOR 25.6-OD36-THD) (8.900)	93-94	Y	4	11509591
	7-M18	0.029	BOLT, ENG MT BRKT BR (POS #2) (HFH, M12X1.75X40) (8.900)	93-96	Y	4	22651578
	7-M18	0.029	BOLT, ENG MT BRKT BR (POSN #1) (POS #2) (M10X1.5X25 13HEX) (7.039)	93-96	Y	4	14069669
29.		8.929	WASHER, M10X 2.5 THK PHOS (AC-DELCO #11500324)	90-96		AR	11500324
30.		N.S.	SUPPORT, FLR FRT PNL (PART OF 12)			RH	
31.	7-C11	7.068	BRACKET, FRT TOW HOOK	96	Y	LH	10269357
	7-C11	7.068	BRACKET, FRT TOW HOOK	96	Y	RH	10269358
	7-C11	7.068	BRACKET, FRT TOW HOOK (WELDED TO OTR SI OF RR MBR)	90-95	Y	RH	10269358
	7-C11	7.068	BRACKET, FRT TOW HOOK (WELDED TO OTR SI OF RR MBR)	90-95	Y	LH	14078681
32.		8.977	SCREW, HWH TAP M8X1.25X16 TR PT CAD (HOOD PRIM LAT BRKT)	90-96		AR	11504447

RPO DEFINITIONS
FE1 – SUSPENSION SYSTEM,SOFT RIDE

© 2000 GENERAL MOTORS SERVICE PARTS OPERATIONS-CHEVROLET-14Y

FE7 – SUSPENSION SYSTEM,FRONT AND REAR,HEAVY DUTY(USED WITH PERFORMANCE HANDLING PACKAGE Z51)
LT5 – ENGINE,5.7L(5.7J),TPI

© 2000 GENERAL MOTORS SERVICE PARTS OPERATIONS–CHEVROLET–14Y

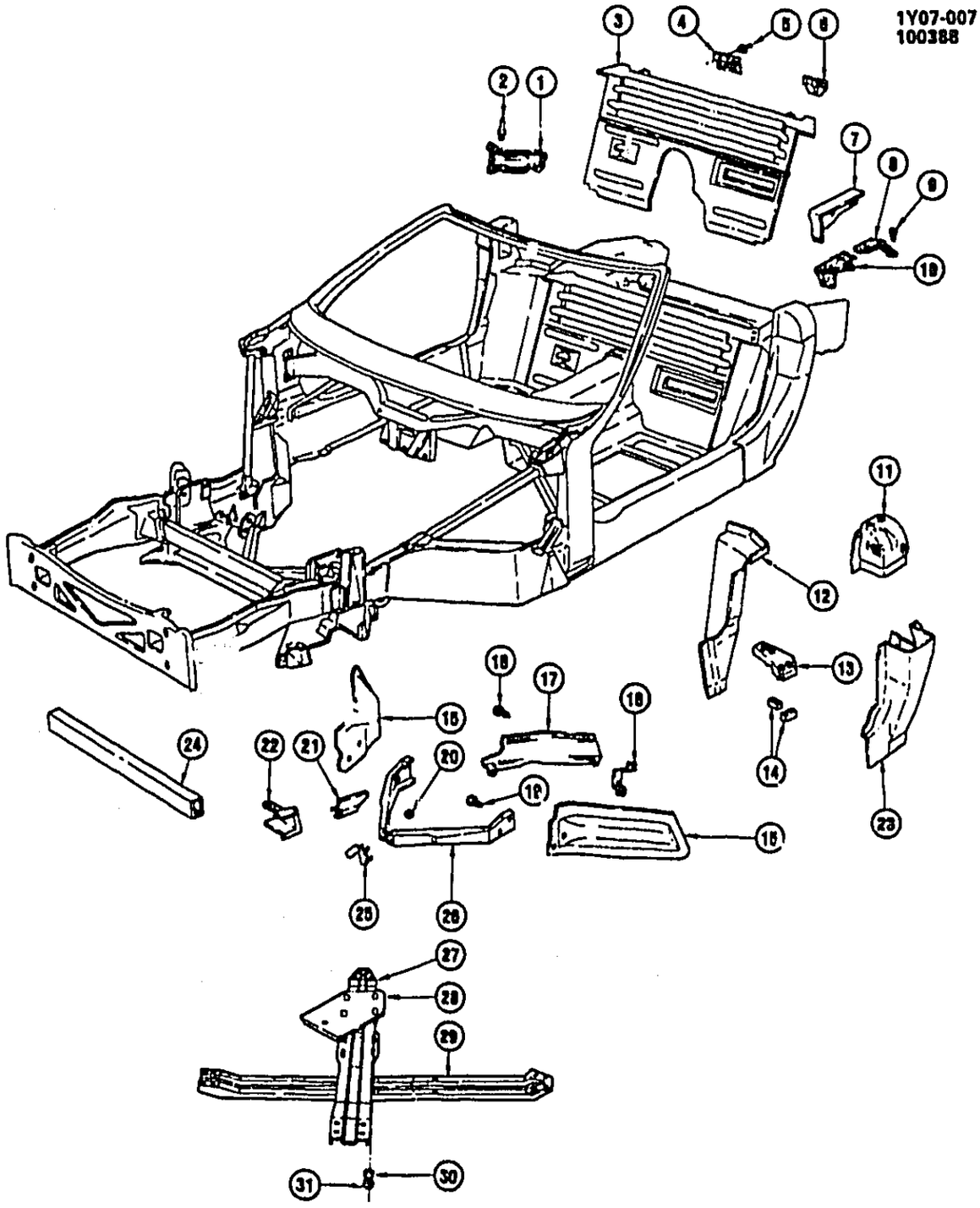

1Y07–007

1986–1989 Y67 FRAME/REINFORCEMENT

1.	7–N24	12.981	FILLER, R/FLR PNL UPR (RH)	14092724
	7–N24	12.981	FILLER, R/FLR PNL UPR (LH)	14092723
2.		N.S.	RIVET, DM HD	
3.	7–N23	12.980	EXTENSION, INTER FLR PNL	14092607
4.	7–M23	2.560	BRACKET, MULTIUSE RLY	14100353
5.		8.967	RIVET, DOME HD BLIND/P/.125X.312 AL (AR)	9424862
6.		DISCON	BRACKET, BODY WRG HARN	14100354
7.	7–N25	14.731	PANEL, BODY L/PLR UPR TR (RH)	14100368

© 2000 GENERAL MOTORS SERVICE PARTS OPERATIONS–CHEVROLET–14Y

				1Y07-007
	7-N25	14.731	PANEL, BODY L/PLR UPR TR (LH)	14100367
8.	7-N22	12.942	SEAL, FRT S/D L/PLR UPR (RR) (RH)	14100366
	7-N22	12.942	SEAL, FRT S/D L/PLR UPR (RR) (LH)	14100365
9.	7-N22	12.942	RETAINER, FRT S/D L/PLR UPR SEAL	8731909
10.	7-N22	12.942	SEAL, FRT S/D L/PLR UPR (FRT) (RH)	14092684
	7-N22	12.942	SEAL, FRT S/D L/PLR UPR (FRT) (LH)	14092683
11.		DISCON	PANEL, BODY L/PLR OTR UPR (RH)	14092638
	7-N22	12.942	PANEL, BODY L/PLR OTR UPR (LH)	14092637
12.	7-N22	12.942	PANEL, BODY L/PLR INR (RH)	10208620
	7-N22	12.942	PANEL, BODY L/PLR INR (LH)	10208621
13.	7-N22	12.942	FILLER, BODY L/PLR LWR (RH)	14092648
	7-N22	12.942	FILLER, BODY L/PLR LWR (LH)	14092647
14.	7-N25	12.986	SPACER, U/B BR	10153644
15.		N.S.	REINFORCEMENT, SI RL	
16.	7-M29	4.686	BRACKET, BRK PIPE	14092701
17.	7-M26	3.145	SHIELD, BRK & EVAP EMIS PIPE	14104690
18.		8.977	SCREW, HEX W/FLAT WA (AR)	12337828
19.	7-M18	0.029	BOLT, ENG MT BRKT BR	14069669
20.		8.917	NUT-HFH LOCK, M12X1.75X13.4, 25.6 OD, ALL NEW METAL TORQ., 510M (10) CA (AR)	11502813
21.		DISCON	SHIELD, FUEL FLTR (1) (1986-88) (Y)	14092697
22.	7-C10	7.039	BRACKET, FRT C/MBR (RH)	14092618
	7-C10	7.039	BRACKET, FRT C/MBR (LH)	14092617
23.	7-N22	12.942	PILLAR, FRT S/D LK OTR (RH)	14091024
	7-N22	12.942	PILLAR, FRT S/D LK OTR (LH)	14091023
24.		DISCON	CROSSMEMBER, FRT (1986-87)	10077390
		DISCON	CROSSMEMBER, FRT (1988)	10077390
	7-C9	7.010	CROSSMEMBER, FRT (1989)	10098200
25.		DISCON	REINFORCEMENT, FRT C/MBR (UPR)	14092613
		DISCON	REINFORCEMENT, FRT C/MBR (LWR)	14100201
26.	7-C10	7.039	BRACE, FRT C/MBR RR (LH) (1989)	14092611
	7-C10	7.039	BRACE, FRT C/MBR RR (RH) (1989)	14092612
		DISCON	BRACE, FRT C/MBR RR (LH) (1986-88) Y07)	14094299
		DISCON	BRACE, FRT C/MBR RR (RH) (1986-88) Y07)	14094300
	7-C10	7.039	BRACE, FRT C/MBR RR (LH) (1986-88) Y67)	14092611
	7-C10	7.039	BRACE, FRT C/MBR RR (RH) (1986-88) (Y67)	14092612
27.	7-N25	12.986	BRACE, U/B (UPR)	10193674
28.	7-N23	12.980	REINFORCEMENT, U/B BR	14092624
29.	7-N25	12.986	BRACE, U/B	10143533
30.	7-N25	12.986	WASHER, U/B BR	14038397
31.		8.917	NUT, HFH, M8X1.25, 17.9 OD, 738 THK, 13MM HEX, 10, ZF (AR) (AC-DELCO #11514596)	11514596

© 2000 GENERAL MOTORS SERVICE PARTS OPERATIONS-CHEVROLET-14Y

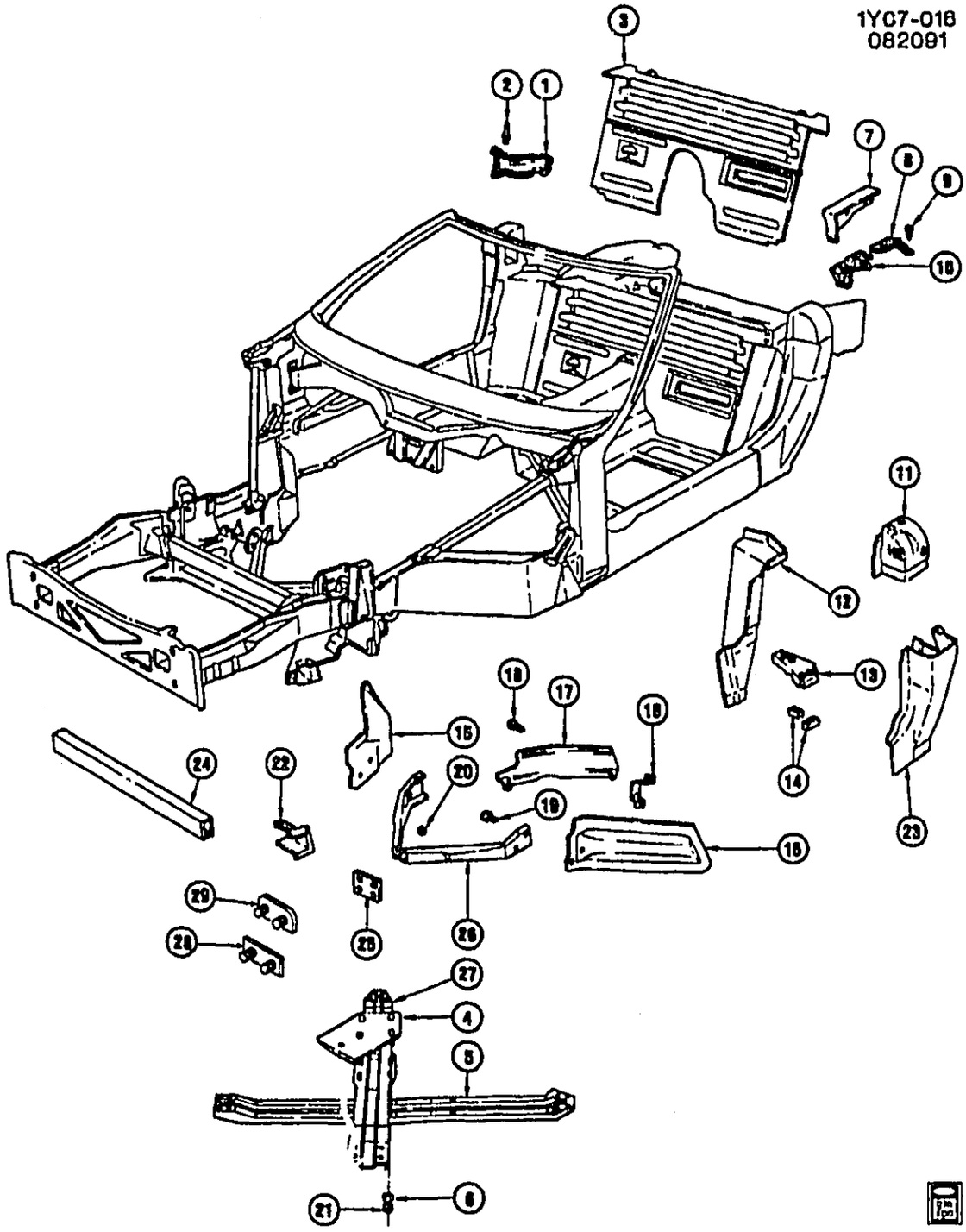

1990–1991 Y67 FRAME/REINFORCEMENT

1.	7–N24	12.981	FILLER, R/FLR PNL UPR	90–91	Y67	LH	14092723
	7–N24	12.981	FILLER, R/FLR PNL UPR	90–91	Y67	RH	14092724
2.		N.S.	RIVET, RR FLR CLOSEOUT PNL .		.....		
3.	7–N23	12.980	EXTENSION, INTER FLR PNL (12.981)	90–91	Y67	1	14092607
4.	7–N23	12.980	REINFORCEMENT, U/B BR	90–91	Y67	1	14092624
5.	7–N25	12.986	BRACE, U/B (LWR)	90–91	Y67	1	10143533
6.	7–N25	12.986	WASHER, U/B BR (M8.6X20X2.50) (8.929)	90–91	Y67	8	14038397

© 2000 GENERAL MOTORS SERVICE PARTS OPERATIONS–CHEVROLET–14Y

							1Y07-016
7.	7-N25	14.731	PANEL, BODY L/PLR UPR TR (BLACK)	90-91	Y67 (19I)	RH	10103850
	7-N25	14.731	PANEL, BODY L/PLR UPR TR (BLACK)	90-91	Y67 (19I)	LH	10103851
		DISCON	PANEL, BODY L/PLR UPR TR (BLUE)	90-91	Y67 (22I)	RH	10103852
		DISCON	PANEL, BODY L/PLR UPR TR (BLUE)	90-91	Y67 (22I)	LH	10103853
	7-N25	14.731	PANEL, BODY L/PLR UPR TR (COGNAC)	90-91	Y67 (60I)	RH	10103854
	7-N25	14.731	PANEL, BODY L/PLR UPR TR (COGNAC)	90-91	Y67 (60I)	LH	10103855
	7-N25	14.731	PANEL, BODY L/PLR UPR TR (RED)	90-91	Y67 (73I)	RH	10103856
	7-N25	14.731	PANEL, BODY L/PLR UPR TR (RED)	90-91	Y67 (73I)	LH	10103857
	7-N25	14.731	PANEL, BODY L/PLR UPR TR (GRAY)	90-91	Y67 (90I)	RH	10103858
	7-N25	14.731	PANEL, BODY L/PLR UPR TR (GRAY)	90-91	Y67 (90I)	LH	10103859
8.	7-N22	12.942	SEAL, FRT S/D L/PLR UPR (RR)	90-91	Y67	RH	14100366
	7-N22	12.942	SEAL, FRT S/D L/PLR UPR (RR)	90-91	Y67	LH	14100365
9.	7-N22	12.942	RETAINER, FRT S/D L/PLR UPR SEAL (FULL FLDG) (10.695)	90-91	Y67	AR	8731909
10.	7-N22	12.942	SEAL, FRT S/D L/PLR UPR (FRT)	90-91	Y67	RH	14092684
	7-N22	12.942	SEAL, FRT S/D L/PLR UPR (FRT)	90-91	Y67	LH	14092683
11.	7-N22	12.942	PANEL, BODY L/PLR OTR UPR	90-91	Y67	LH	14092637
		DISCON	PANEL, BODY L/PLR OTR UPR	90-91	Y67	RH	14092638
12.	7-N22	12.942	PANEL, BODY L/PLR INR	90-91	Y67	RH	10208620
	7-N22	12.942	PANEL, BODY L/PLR INR	90-91	Y67	LH	10208621
13.	7-N22	12.942	FILLER, BODY L/PLR LWR	90-91	Y67	LH	14092647
	7-N22	12.942	FILLER, BODY L/PLR LWR	90-91	Y67	RH	14092648
14.	7-N25	12.986	SPACER, U/B BR	90-91	Y67	4	10153644
15.		N.S.	REINFORCEMENT, U/B FRT S/RL				
16.	7-M28	4.686	BRACKET, BRK PIPE (3.145)	90-91	Y	1	14092701
17.	7-M26	3.145	SHIELD, BRK & EVAP EMIS PIPE	90-91	Y	1	14104690
	7-M28	4.685	SHIELD, BRK & EVAP EMIS PIPE (3.145)	90-91	Y	1	14104690
18.		8.977	SCREW, HEX W/FLAT WA	90-91		AR	12337828
19.	7-M18	0.029	BOLT, ENG MT BRKT BR (POSN #1) (M10X1.5X25 13HEX) (7.039)	90-91	Y (LT5)	4	14069669
20.		8.917	NUT-HFH LOCK, M12X1.75X13.4, 25.6 OD, ALL NEW METAL TORQ., 510M (10) CA	90-91		AR	11502813
21.		8.917	NUT, HFH, M8X1.25, 17.9 OD, 738 THK, 13MM HEX, 10, ZF (8.915) (AC-DELCO #11514596)	90-		AR	11514596
22.	7-C10	7.039	BRACKET, FRT C/MBR (RR)	90-91	Y	LH	14092617
	7-C10	7.039	BRACKET, FRT C/MBR (RR)	90-91	Y	RH	14092618
23.	7-N22	12.942	PILLAR, FRT S/D OTR LK	90-91	Y67	LH	14091023
	7-N22	12.942	PILLAR, FRT S/D OTR LK	90-91	Y67	RH	14091024
24.	7-C9	7.010	CROSSMEMBER, FRT (#2)	90-91	Y	1	10098200
25.	7-C10	7.039	REINFORCEMENT, FRT C/MBR	90-91	Y (LT5, FE1, FE7)	1	10098136
26.	7-M18	0.029	BRACE, ENG MT BRKT	90-91	Y (LT5)	LH	14104625
	7-M18	0.029	BRACE, ENG MT BRKT	90-91	Y (LT5)	RH	14104626
27.	7-N25	12.986	BRACE, U/B (UPR)	90-91	Y67	1	10193674

© 2000 GENERAL MOTORS SERVICE PARTS OPERATIONS-CHEVROLET-14Y

							1Y07-016
28.	DISCON	REINFORCEMENT, FRT C/MBR (LWR)	90-91	Y (L98)	1	14100201	
29.	DISCON	REINFORCEMENT, FRT C/MBR (UPR)	90-91	Y (L98)	1	14092613	

RPO DEFINITIONS

FE1 – SUSPENSION SYSTEM,SOFT RIDE
FE7 – SUSPENSION SYSTEM,FRONT AND REAR,HEAVY DUTY(USED WITH PERFORMANCE HANDLING PACKAGE Z51)
LT5 – ENGINE,5.7L(5.7J),TPI
L98 – ENGINE, 5.7L, (5.7-8) 350 CID, V8, TPI
19I – INTERIOR TRIM,BLACK
22I – INTERIOR TRIM,DARK ROYAL BLUE
60I – INTERIOR TRIM,DARK COGNAC
73I – INTERIOR TRIM,FLAME RED
90I – INTERIOR TRIM,SMOKE GRAY

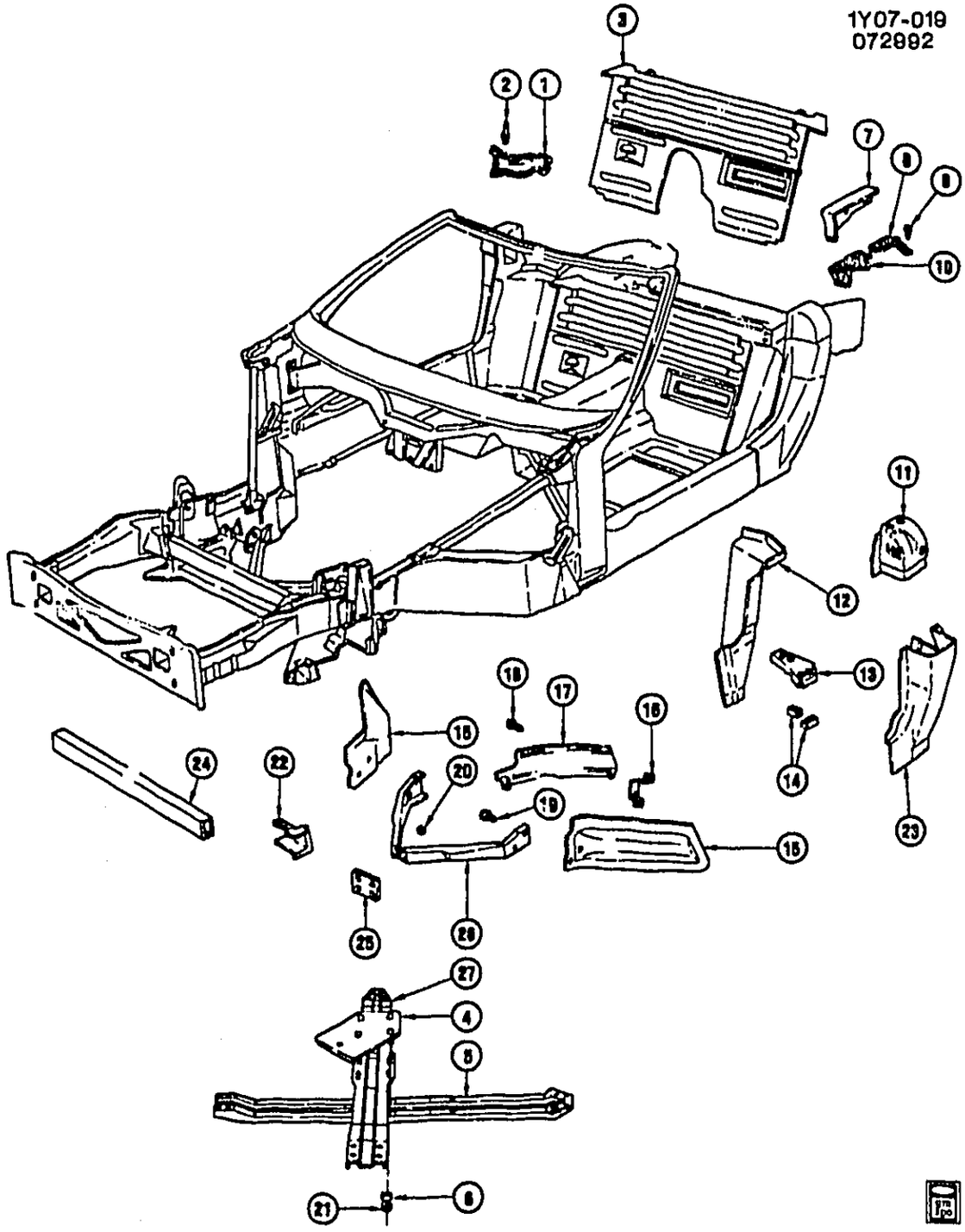

1992–1996 Y67 FRAME/REINFORCEMENT

1.	7–N24	12.981	FILLER, R/FLR PNL UPR	92–96	Y67	LH	14092723
	7–N24	12.981	FILLER, R/FLR PNL UPR	92–96	Y67	RH	14092724
2.		N.S.	RIVET, RR FLR CLOSEOUT PNL .		.....		
3.	7–N23	12.980	EXTENSION, INTER FLR PNL (12.981)	92–96	Y67	1	14092607
4.	7–N23	12.980	REINFORCEMENT, U/B BR	92–96	Y67	1	14092624
5.	7–N25	12.986	BRACE, U/B (LWR)	92–96	Y67	1	10143533
6.		8.929	WASHER, M8.9X20.4X2.5 ST CAD/ZP (7347) (U/B BR)	92–96	.....	AR	14038397

© 2000 GENERAL MOTORS SERVICE PARTS OPERATIONS–CHEVROLET–14Y

								1Y07-019
		8.915	NUT, HEX W/CON WA M8X1.25X9.5 19-OD 9 ZP (U/B BR) (8.917)	92-96			AR	11506117
7.	7-N25	14.731	PANEL, BODY L/PLR UPR TR (BLACK)	92-93	Y67	(19I)	RH	10103850
	7-N25	14.731	PANEL, BODY L/PLR UPR TR (BLACK)	92-93	Y67	(19I)	LH	10103851
	7-N25	14.731	PANEL, BODY L/PLR UPR TR (RED)	92	Y67	(73I)	RH	10103856
	7-N25	14.731	PANEL, BODY L/PLR UPR TR (RED)	92	Y67	(73I)	LH	10103857
		DISCON	PANEL, BODY L/PLR UPR TR (WHITE)	92-93	Y67	(10I)	LH	10167117
	7-N25	14.731	PANEL, BODY L/PLR UPR TR (WHITE)	92-93	Y67	(10I)	RH	10167118
	7-N25	14.731	PANEL, BODY L/PLR UPR TR (BEIGE)	92-93	Y67	(64I)	RH	10175618
	7-N25	14.731	PANEL, BODY L/PLR UPR TR (BEIGE)	92-93	Y67	(64I)	LH	10175619
		DISCON	PANEL, BODY L/PLR UPR TR (GRAY)	92-93	Y67	(14I)	RH	10175620
		DISCON	PANEL, BODY L/PLR UPR TR (GRAY)	92-93	Y67	(14I)	LH	10175621
	7-N25	14.731	PANEL, BODY L/PLR UPR TR (RED)	93	Y67	(79I)	RH	10199556
		DISCON	PANEL, BODY L/PLR UPR TR (RED)	93	Y67	(79I)	LH	10199557
		DISCON	PANEL, BODY L/PLR UPR TR (RED)	93	Y67	(70I)	RH	10199722
		DISCON	PANEL, BODY L/PLR UPR TR (RED)	93	Y67	(70I)	LH	10199723
	7-N25	14.731	PANEL, BODY L/PLR UPR TR (BLACK)	94-96	Y67	(19I)	LH	10212821
	7-N25	14.731	PANEL, BODY L/PLR UPR TR (BLACK)	94-96	Y67	(19I)	RH	10212822
	7-N25	14.731	PANEL, BODY L/PLR UPR TR (RED)	94-96	Y67	(70I)	LH	10212825
	7-N25	14.731	PANEL, BODY L/PLR UPR TR (RED)	94-96	Y67	(70I)	RH	10212826
	7-N25	14.731	PANEL, BODY L/PLR UPR TR (BEIGE)	94-96	Y67	(64I)	LH	10212827
	7-N25	14.731	PANEL, BODY L/PLR UPR TR (BEIGE)	94-96	Y67	(64I)	RH	10212828
	7-N25	14.731	PANEL, BODY L/PLR UPR TR (GRAY)	94-96	Y67	(14I)	LH	10212829
	7-N25	14.731	PANEL, BODY L/PLR UPR TR (GRAY)	94-96	Y67	(14I)	RH	10212830
8.	7-N22	12.942	SEAL, FRT S/D L/PLR UPR (RR)	92-96	Y67		RH	14100366
	7-N22	12.942	SEAL, FRT S/D L/PLR UPR (RR)	92-96	Y67		LH	14100365
9.	7-N22	12.942	RETAINER, FRT S/D L/PLR UPR SEAL (FULL FLDG) (10.695)	92-96	Y67		AR	8731909
10.	7-N22	12.942	SEAL, FRT S/D L/PLR UPR (FRT)	92-96	Y67		RH	14092684
	7-N22	12.942	SEAL, FRT S/D L/PLR UPR (FRT)	92-96	Y67		LH	14092683
11.	7-N22	12.942	PANEL, BODY L/PLR OTR UPR	92-93	Y67		LH	14092637
		DISCON	PANEL, BODY L/PLR OTR UPR	92-93	Y67		RH	14092638
	7-N22	12.942	PANEL, BODY L/PLR OTR UPR	94-96	Y67		LH	10250367
	7-N22	12.942	PANEL, BODY L/PLR OTR UPR	94-96	Y67		RH	10250368
12.	7-N22	12.942	PANEL, BODY L/PLR INR	92-96	Y67		RH	10208620
	7-N22	12.942	PANEL, BODY L/PLR INR	92-96	Y67		LH	10208621

© 2000 GENERAL MOTORS SERVICE PARTS OPERATIONS-CHEVROLET-14Y

							1Y07-019
13.	7-N22	12.942	FILLER, BODY L/PLR LWR	92-96	Y67	LH	14092647
	7-N22	12.942	FILLER, BODY L/PLR LWR	92-96	Y67	RH	14092648
14.	7-N25	12.986	SPACER, U/B BR	92-96	Y67	4	10153644
15.		N.S.	REINFORCEMENT, U/B FRT S/RL		.....		
16.	7-M28	4.686	BRACKET, BRK PIPE (3.145)	92-96	Y	1	14092701
17.	7-M26	3.145	SHIELD, BRK & EVAP EMIS PIPE	92-96	Y	1	14104690
	7-M28	4.685	SHIELD, BRK & EVAP EMIS PIPE (3.145)	92-96	Y	1	14104690
18.		8.977	SCREW, HEX W/FLAT WA	92-96	....	AR	12337828
19.	7-M18	0.029	BOLT, ENG MT BRKT BR (M10X1.5X25 13HEX) (7.039)	92	Y	4	14069669
	7-M18	0.029	BOLT, ENG MT BRKT BR (HFH, M12X1.75X40 10.9 PEOR 25.6-OD36-THD) (8.900)	93-94	Y	4	11509591
	7-M18	0.029	BOLT, ENG MT BRKT BR (HFH, M12X1.75X40) (8.900)	93-96	Y	4	22651578
	7-M18	0.029	BOLT, ENG MT BRKT BR (POSN #1) (M10X1.5X25 13HEX) (7.039)	93-96	Y	4	14069669
20.		8.917	NUT-HFH LOCK, M12X1.75X13.4, 25.6 OD, ALL NEW METAL TORQ., 510M (10) CA	92-96	.....	AR	11502813
21.		8.917	NUT, HFH, M8X1.25, 17.9 OD, 738 THK, 13MM HEX, 10, ZF (8.915) (AC-DELCO #11514596)	92-96	.....	AR	11514596
22.	7-C10	7.039	BRACKET, FRT C/MBR (RR)	92-96	Y	LH	14092617
	7-C10	7.039	BRACKET, FRT C/MBR (RR)	92-96	Y	RH	14092618
23.	7-N22	12.942	PILLAR, FRT S/D OTR LK	92-96	Y67	LH	14091023
	7-N22	12.942	PILLAR, FRT S/D OTR LK	92-96	Y67	RH	14091024
24.	7-C9	7.010	CROSSMEMBER, FRT (#2)	92-96	Y	1	10098200
25.	7-C10	7.039	REINFORCEMENT, FRT C/MBR .	92-96	Y	1	10098136
26.	7-M18	0.029	BRACE, ENG MT BRKT	92-96	Y	LH	14104625
	7-M18	0.029	BRACE, ENG MT BRKT	92-96	Y	RH	14104626
27.	7-N25	12.986	BRACE, U/B (UPR)	92-96	Y67	1	10193674

RPO DEFINITIONS

10I – INTERIOR TRIM – ARCTIC WHITE
14I – INTERIOR TRIM LT GRAY
19I – INTERIOR TRIM,BLACK
64I – INTERIOR TRIM,LIGHT BEIGE
70I – INTERIOR TRIM,TORCH RED
73I – INTERIOR TRIM,FLAME RED
79I – INTERIOR TRIM,RUBY RED

© 2000 GENERAL MOTORS SERVICE PARTS OPERATIONS-CHEVROLET-14Y

1Y07-005 01/22/97

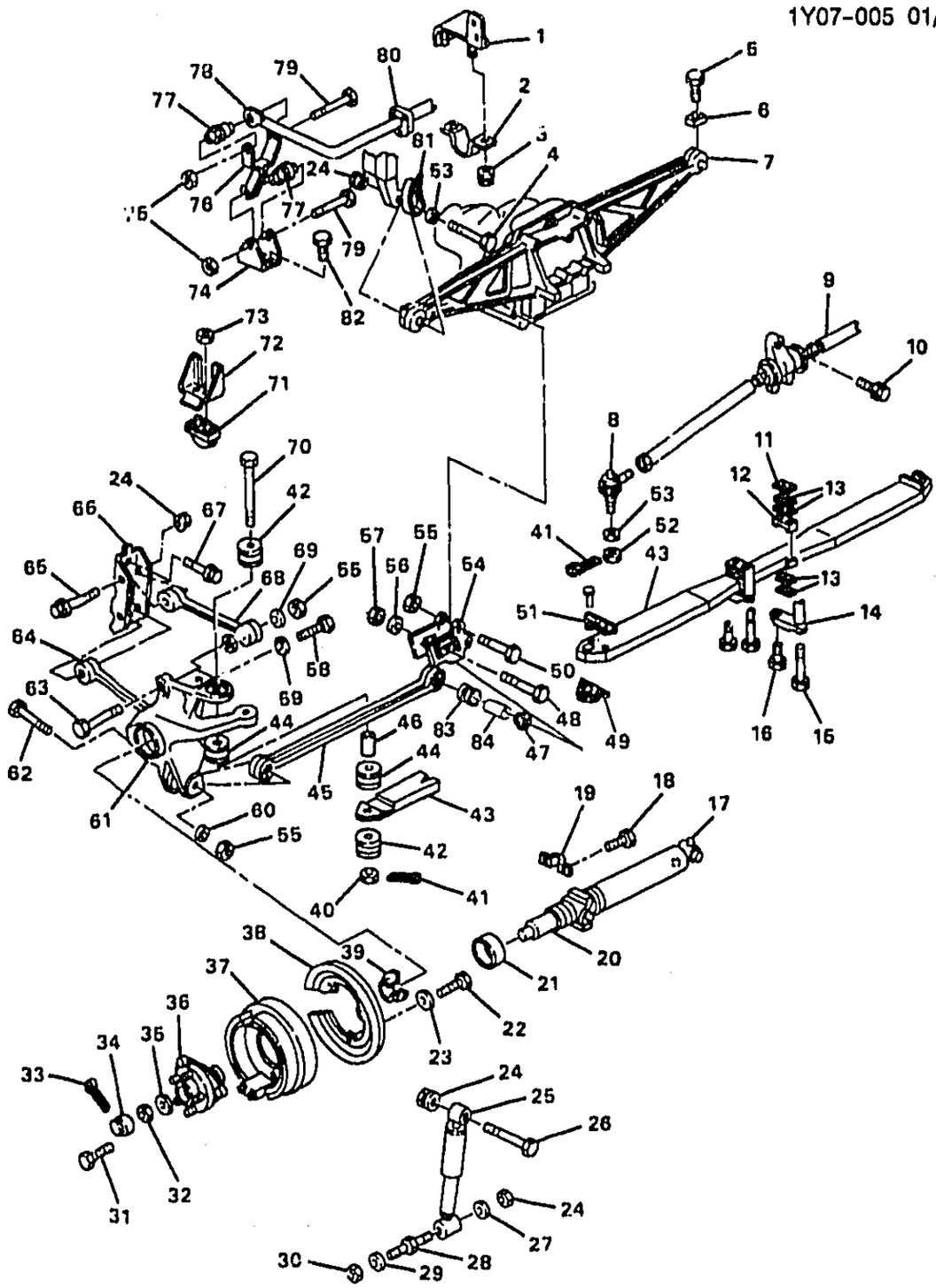

1Y07-005

1984-1987 Y SUSPENSION/REAR

1.	7-C13	7.242	SUPPORT, STAB SHF BRKT-RH	14064522
	7-C13	7.242	SUPPORT, STAB SHF BRKT-LH	14064521
2.	7-C13	7.242	CLAMP, STAB SHF INSL	3913863
3.		8.921	NUT, HFH (M8X1.25X7.5) (AC-DELCO #11514596)	11514596
4.		8.900	BOLT (DIFF CARR) (AR)	11516664
5.	7-N8	5.544	BOLT, DR LINE VIB DPNR	14079980
6.	7-N8	5.544	DAMPENER, DR LINE VIB	14079979

© 2000 GENERAL MOTORS SERVICE PARTS OPERATIONS-CHEVROLET-14Y

				1Y07-005
7.	7-N7	5.505	CARRIER, DIFF (SEE PARTS SECTION FOR ADDITIONAL USAGE) ..	
8.	7-N5	5.415	SOCKET, AXLE TOE LINK OTR	14091319
9.	7-N5	5.416	SOCKET, RR TOE ADJ W/ROD (CENTER	10181305
10.	7-N6	5.418	BOLT, AXLE TIE ROD (1984) (9.171)	14050422
11.	7-C25	7.545	INSULATOR, SPR (ON SPCR)	14076181
12.		N.S.	CUSHION, SPR (PART OF 43)	
13.	7-C24	7.518	SPACER, SPR (1984 FE7) (1985-87 EXC FE7) (5.21)	14044572
	7-C24	7.518	SPACER, SPR (1984 EXC FE7) (1985-87 Y07) (6.11)	14048950
	7-C24	7.518	SPACER, SPR (1986-87 Y67) (4.39)	14093185
14.	7-C24	7.518	PLATE, SPR ANC	14048993
15.		8.900	BOLT, HFH M10X1.5X105 9.8 PZOR (BOLT, RR SPR) (AR)	11508142
16.		8.900	BOLT, M10X1.5X30, 10.9, 7114M, 22 OD, HDR PT (BOLT, RR SPR) (AR)	11516328
17.		DISCON	SHAFT, WHL DR U/JT (MD8) (1984-86 EXC A42) (1987 EXC AC3)	14046912
	7-N7	5.420	SHAFT, WHL DR U/JT (1984-85 MK2, EXC A42) (1986 A42) (1987 MK2, MD8, AC3)	10220032
18.	7-N9	5.586	BOLT, WHL DR U/JT SHF	14046904
19.	7-N9	5.586	RETAINER, WHL DR U/JT SHF	14046907
20.	7-N11	5.806	SPINDLE, WHL (1984-85)	14055941
		DISCON	SPINDLE, WHL (1986-87)	14087673
21.	7-N14	5.822	SEAL, WHL HUB BRG (1984-85)	14046941
22.		DISCON	BOLT, BRK CLPR (1984) (PART OF 37)	14079999
	7-M27	4.665	BOLT, BRK CLPR (1985-87) (PART OF 37)	14084053
23.	7-C18	7.347	WASHER, S/ABS (15X25X3) (5.394)	10053765
24.	7-N6	5.418	NUT, HEX FLG (M12X1.75X12)	11508101
25.	7-C16	7.345	ABSORBER, SHK (1986-87 Y07 FG3, EXC FE7) (1987 Y67 FG3) (SEE PARTS SECTION FOR ADDITIONAL USAGE) (AC-DELCO #540-3)	22064009
	7-C14	7.243	INSULATOR, STAB BAR & S/ABS	6270752
26.	7-C18	7.347	BOLT, S/ABS (5.416)	11515784
27.	7-C18	7.347	WASHER, S/ABS (12X34.75X3.0)	14047726
28.		DISCON	STUD, S/ABS	14044582
29.	7-C18	7.347	WASHER, S/ABS (15X25X3) (5.394)	10053765
30.		8.917	NUT, HEX M14X2X13 (AR)	11516074
31.	7-N13	5.812	BOLT, WHL (12X1.5X44) (PART OF 36)	9592032
32.	7-N11	5.806	NUT, SPDL (AC-DELCO #36-4123)	15653460
33.		8.938	PIN, COT (M4X38)	11010069
34.	7-N11	5.806	RETAINER, WHL SPDL NUT (6.056)	562248
35.	7-N11	5.806	WASHER, SPDL (6.056)	562249
36.	7-N11	5.806	HUB, WHL (INCL 31) (AC-DELCO #20-45)	7470501
37.		DISCON	PLATE KIT, BRK MT-RH (LESS SHOE & LINING) (1984) (INCL 22) ..	10140516
		DISCON	PLATE, BRK MT-RH (1985-87) (INCL 22)	14085892
		DISCON	PLATE KIT, BRK MT-LH (LESS SHOE & LINING) (1984) (INCL 22) ..	10140515
		DISCON	PLATE, BRK MT-LH (1985-87) (INCL 22)	14085891
38.		DISCON	SHIELD, BRK-RH	14055966
		DISCON	SHIELD, BRK-LH	14055965
39.	7-N11	5.806	WASHER, WHL SPDL	14076924
40.	7-C25	7.530	NUT, RR SPR (M14X1.5X14)	10254330
41.		8.938	PIN, COT (2.8X30MM)	12337997
42.	7-C25	7.545	INSULATOR, SPR (ON KNU)	10262518
43.		DISCON	SPRING (CODE BMH) (1984 FE7) (INCL 12, 49, 51)	14045786
		DISCON	SPRING (CODE BMF) (1984 EXC FE7) (INCL 12, 49, 51)	14045785
	7-C24	7.503	SPRING (CODE NYU) (1985-87 Y07 FE7) (INCL 12, 49, 51)	14080196
	7-C24	7.503	SPRING (CODE NYR) (1985-87 Y07 EXC FE7) (INCL 12, 49, 51)	22112253
	7-C24	7.503	SPRING (CODE RCA) (1986-87 Y67) (INCL 12, 49, 51)	14106787
44.	7-C25	7.545	INSULATOR, SPR (ON KNU) (1984 W/FE7 ONLY)	10262518

© 2000 GENERAL MOTORS SERVICE PARTS OPERATIONS-CHEVROLET-14Y

				1Y07-005
45.	7-N5	5.416	ROD, WHL SPDL-RH (WHEN USING ON 1989 & PRIOR, "BUSHING-WHL SPDL ROD" IS NOT REQD & MAY BE DISCARDED)	10098132
	7-N5	5.416	ROD, WHL SPDL-LH (WHEN USING ON 1989 & PRIOR, BUSHING-WHL SPDL ROD IS NOT REQD & MAY BE DISCARDED)	10098131
46.		DISCON	SPACER, SPR INSL (1984-85)	14060140
47.	7-N6	5.417	BUSHING, WHL SPDL ROD	14060166
48.	7-N5	5.416	BOLT, WHL SPDL ROD ADJ (M14X2X95)	14060162
49.		N.S.	RETAINER, SPR LWR (PART OF 43)	
50.	7-N5	5.380	BOLT, WHL SPDL ROD (8.900)	11508540
51.		N.S.	RETAINER, SPR UPR (PART OF 43)	
52.	7-N6	5.416	NUT, AXLE TIE ROD (M12X1.75X13)	14050089
53.	7-N6	5.416	WASHER, RR AXLE TIE ROD (0.002)	473539
54.		DISCON	BRACKET, WHL SPDL ROD	14060165
55.	7-N5	5.416	NUT, RR WHL SPDL CONT ROD) (HEX) (M16 X 2 X 14.5) (8.915)	11516211
56.	7-N6	5.417	CAM, WHL SPDL ROD ADJ	14060163
57.	7-N5	5.416	NUT, WHL SPDL ROD ADJ	14060164
58.	7-N13	5.812	BOLT, WHL HUB	14046943
59.	7-N13	5.812	WASHER, WHL HUB (5.383)	14046942
60.	7-N5	5.416	WASHER, WHL SPDL ROD	14047725
61.		DISCON	KNUCKLE, SUSP-RH (1984-85)	14105904
		DISCON	KNUCKLE, SUSP-RH (1986-87)	14084094
		DISCON	KNUCKLE, SUSP-LH (1984-85)	14105903
		DISCON	KNUCKLE, SUSP-LH (1986-87)	14084093
62.	7-N5	5.416	BOLT, WHL SPDL ROD (M16X2X110) (8.900)	11507007
63.	7-N5	5.416	BOLT, WHL SPDL ROD (M16X2X100)	14048990
64.	7-N5	5.415	ROD, WHL SPDL LWR CONT	17999723
65.	7-N5	5.416	BOLT, WHL SPDL ROD	11515784
66.		DISCON	BRACKET, WHL SPDL CONT ROD	14071742
67.	7-N5	5.416	BOLT, WHL SPDL CONT ROD BRKT (8.900)	11516331
68.	7-N5	5.415	ROD, WHL SPDL UPR CONT	17999720
69.	7-N5	5.416	WASHER, SPDL ROD TO KNU	14044574
70.	7-C25	7.529	BOLT, RR SPR (M14X2X192.5)	14044578
		8.900	BOLT, HFH M10X1.5X105 9.8 PZOR (BOLT, RR SPR) (AR)	11508142
71.		DISCON	BUMPER, RR SUSP JOUNCE	14044577
72.		DISCON	BRACKET, SUSP JOUNCE BPR	14064511
73.		8.915	NUT, HEX (M10X1.5)	11501086
74.		DISCON	BRACKET, STAB SHF	14060115
75.	7-C16	7.244	NUT, STAB SHF LINK	14060131
76.	7-C12	7.240	LINK, STAB SHF (INCL 77)	10052272
77.	7-C14	7.243	INSULATOR, STAB SHF LINK (PART OF 76)	14060114
78.		DISCON	SHAFT, STAB (1984 FE7)	14060110
	7-C12	7.241	SHAFT, STAB (1985 FE7)	14084066
	7-C12	7.241	SHAFT, STAB (1986-87 FE7)	14093179
		DISCON	SHAFT, STAB (1984-85 EXC FE7) (1986 Y67 EXC FE7)	14060109
		DISCON	SHAFT, STAB (1986-87 Y07 EXC FE7)	14087699
		DISCON	SHAFT, STAB (1987 Y67 EXC FE7)	14105121
79.	7-C12	7.240	BOLT, STAB SHF LINK (8.900)	14060130
80.		DISCON	INSULATOR, STAB SHF (1984 FE7)	14060112
		DISCON	INSULATOR, STAB SHF (1985 FE7)	14084065
		DISCON	INSULATOR, STAB SHF (1984-85 EXC FE7) (1986-87 Y67)	14105126
	7-C14	7.243	INSULATOR, STAB SHF (1986-87 Y07)	14105125
81.		DISCON	MEMBER, SI OTR-RH	14069822
		DISCON	MEMBER, SI OTR-LH	14069821
82.		8.900	BOLT, HEX (M8X1.25X30)	11508353
83.		N.S.	GROMMET, RUBBER (RR WHL SPDL ROD) (NS-PART OF ROD)	
84.		N.S.	SLEEVE, RR WHL SPDL ROD (NS-PART OF ROD)	

© 2000 GENERAL MOTORS SERVICE PARTS OPERATIONS-CHEVROLET-14Y

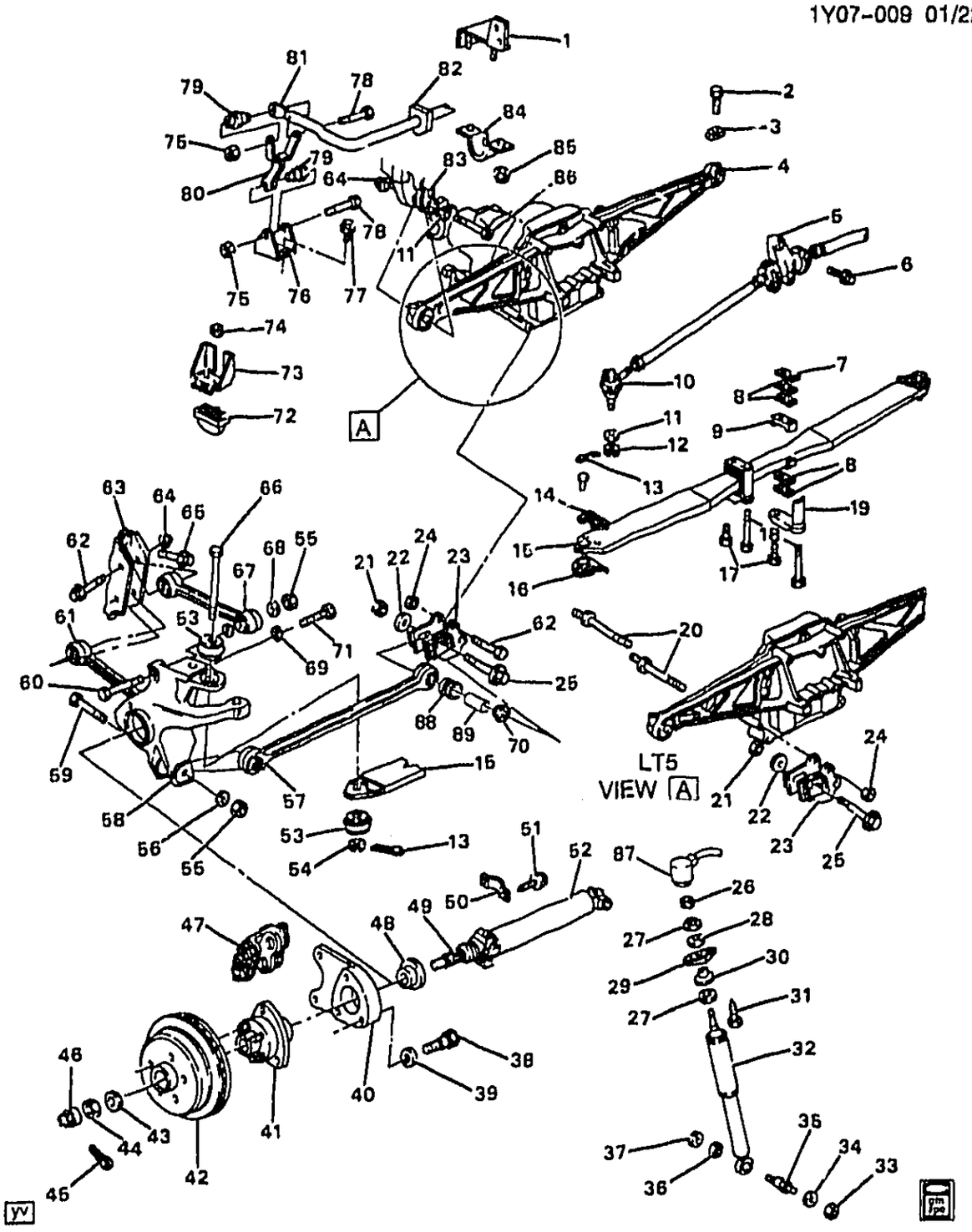

1Y07-009

1988-1991 Y SUSPENSION/REAR

1.	7-C13	7.242	SUPPORT, RR STAB SHF BRKT (RH)	14064522
	7-C13	7.242	SUPPORT, RR STAB SHF BRKT (LH)	14064521
2.	7-N8	5.544	BOLT, DRV LINE VIB DPNR	14079980
3.	7-N8	5.544	DAMPENER, DRV LINE VIB	14079979
4.		DISCON	CARRIER, DIFF (STMP 8YH) (1988 G44, G87) (SEE GROUP 5.000 "DIFFERENTIAL CARRIER" FOR DETAIL ILLUSTRATED VIEW.)	10163876
		DISCON	CARRIER, DIFF (STMP 8YB) (1988-89 GU2) (SEE GROUP 5.000 "DIFFERENTIAL CARRIER" FOR DETAIL ILLUSTRATED VIEW.)	10163875

© 2000 GENERAL MOTORS SERVICE PARTS OPERATIONS-CHEVROLET-14Y

		DISCON	CARRIER, DIFF (STMP 8YC) (1988-89 G44, EXC G87) (SEE GROUP 5.000 "DIFFERENTIAL CARRIER" FOR DETAIL ILLUSTRATED VIEW.)	10163876
		DISCON	CARRIER, DIFF (STMP 8YA) (1988-89 GM1) (SEE GROUP 5.000 "DIFFERENTIAL CARRIER" FOR DETAIL ILLUSTRATED VIEW.)	10163874
	7-N7	5.505	CARRIER, DIFF (STMP 8YW) (1989 GT7) (SEE GROUP 5.000 "DIFFERENTIAL CARRIER" FOR DETAIL ILLUSTRATED VIEW.)	10132777
		DISCON	CARRIER, DIFF (STMP 6YD) (1990-91 GM3) (SEE GROUP 5.000 "DIFFERENTIAL CARRIER" FOR DETAIL ILLUSTRATED VIEW.)	12553791
	7-N7	5.505	CARRIER, DIFF (STMP 8YW, CQP) (1990 GT7) (SEE GROUP 5.000 "DIFFERENTIAL CARRIER" FOR DETAIL ILLUSTRATED VIEW.)	10132777
		DISCON	CARRIER, DIFF (2.59 RATIO) (STMP 8YA, CQT) (1990-91 GM1) (SEE GROUP 5.000 "DIFFERENTIAL CARRIER" FOR DETAIL ILLUSTRATED VIEW.))	10163874
		DISCON	CARRIER, DIFF (2.73 RATIO) (STMP 8YB, CQU) (1990-91 GU2) (SEE GROUP 5.000 "DIFFERENTIAL CARRIER" FOR DETAIL ILLUSTRATED VIEW.))	10163875
		DISCON	CARRIER, DIFF (3.07 RATIO) (STMP 8YC, CQW) (1990-91 G44) (SEE GROUP 5.000 "DIFFERENTIAL CARRIER" FOR DETAIL ILLUSTRATED VIEW.))	10163876
5.	7-N5	5.416	SOCKET, TOE ADJ W/RODS (CTR)	10181305
6.	7-N6	5.418	BOLT, R/AXL TIE ROD (9.171)	14050422
7.	7-C25	7.545	INSULATOR, RR SPR	14076181
8.	7-C24	7.518	SPACER, RR SPR (3.11MM THK)	14040950
	7-C24	7.518	SPACER, RR SPR (1.72MM THK)	14084056
	7-C24	7.518	SPACER, RR SPR (5.21MM THK)	14044572
	7-C24	7.518	SPACER, RR SPR (4.39MM THK)	14093185
9.		N.S.	INSULATOR SPR LWR (PART OF 15)	
10.	7-N5	5.415	SOCKET, AXLE TOE LINK OTR	14091319
11.	7-N6	5.418	WASHER, R/AXL TIE ROD (.002)	473539
	7-N8	5.506	WASHER, DIFF CARR (.002)	473539
12.	7-N6	5.418	NUT, R/AXL TIE ROD	14050089
13.		8.938	PIN, COTTER, 2.8X30MM, PS, 1010 (AR)	12337997
14.		N.S.	RETAINER, SPR UPR (PART OF 15)	
15.	7-C24	7.503	SPRING, RR (CODE NYR) (1988-91 Y07 FE7) (1989-90 Y07 FE7, FX3) (INCL 9, 14, 16)	22112253
	7-C24	7.503	SPRING, RR (CODE NYU) (1988 Y07 FE7) (1989-90 FE7, EXC FX3) (INCL 9, 14, 16)	14080196
	7-C24	7.503	SPRING, RR (CODE RCA) (1988 Y67) (1989-91 Y67 FE1) (INCL 9, 14, 16)	14106787
16.		N.S.	RETAINER, SPR INS (PART OF 15)	
17.		8.900	BOLT, M10X1.5X30, 10.9, 7114M, 22 OD, HDR PT (BOLT, RR SPR) (AR)	11516328
18.		8.900	BOLT, HFH M10X1.5X105 9.8 PZOR (BOLT, RR SPR) (AR)	11508142
19.	7-C24	7.518	PLATE, RR SPR ANC	14048993
20.	7-N5	5.416	BOLT, RR WHL SPDL ROD BRKT (1990-91)	10098202
21.	7-N5	5.416	NUT, RR WHL SPDL ROD ADJ	14060164
22.	7-N6	5.417	CAM, RR WHL SPDL ROD ADJ	14060163
23.		DISCON	BRACKET, WHL SPDL ROD (1988)	14105134
	7-N5	5.380	BRACKET, RR WHL SPDL ROD (1989-91)	10097802
24.	7-N6	5.418	NUT, RR WHL SPDL ROD BRKT (M12X1.75X12) (5.917)	11508101
25.	7-N5	5.416	BOLT, RR WHL SPDL ROD ADJ	14060162
26.		8.917	NUT, HEX PRVG TORQ M10X1.5XGR10XCAD (AR)	11501033
27.	7-C19	7.389	RETAINER, RR S/ABS UPR INSL	14071397
28.	7-C18	7.388	INSULATOR, RR S/ABS UPR (AC-DELCO #10022353)	10022353
29.	7-C19	7.395	BRACKET, RR S/ABS UPR	10097836
30.	7-C18	7.388	INSULATOR, RR S/ABS LWR	14105142
31.	7-C18	7.347	BOLT, RR S/ABS (M12X1.75X75) (1988)	11515784

© 2000 GENERAL MOTORS SERVICE PARTS OPERATIONS-CHEVROLET-14Y

	7-D9	7.840	BOLT, RR S/ABS UPR BRKT (1989-91)	1151575[illegible]
32.	7-C16	7.345	ABSORBER (1988) (RELEASED FOR GM GOODWRENCH PROGRAM.) (AC-DELCO #560-163)	22065211
		DISCON	ABSORBER (1988 FE7, FG3) (1989-90 FE7, EXC FX3)	22064034
	7-C16	7.345	ABSORBER, RR SHK (1988 FG3, EXC FE7) (1989 FE1) (1990-91 FE1, EXC FX3) (AC-DELCO #540-13)	22064033
		DISCON	ABSORBER (1988 Y67 EXC FG3)	22064037
		DISCON	ABSORBER (1988 Y07 EXC FG3)	22064035
	7-C16	7.345	ABSORBER (1989-91 FX3)	22064099
33.		8.917	NUT, HEX M14X2X13 (AR)	11510074
34.	7-C18	7.347	WASHER, RR S/ABS (15X25.1X3) (5.394)	10053765
35.	7-C18	7.347	STUD, RR S/ABS	14105141
36.		8.917	NUT (AR)	11508101
37.	7-C18	7.347	WASHER, RR S/ABS (M13X35X3)	14047726
38.	7-M27	4.665	BOLT, RR BRK CLPR	14084053
39.	7-M27	4.665	WASHER, RR BRK CLPR	10268876
40.	7-N4	5.001	PLATE, RR BRK CLPR MT (RH)	
	7-N4	5.001	PLATE, RR BRK CLPR MT (LH)	10052211
41.	7-N11	5.806	HUB, RR WHL (CPS) (AC-DELCO #20-45)	7470501
	7-N13	5.812	BOLT, WHL	9592032
42.	7-N12	5.809	ROTOR, RR BRK ((WITH BLACK PAINTED AREA FOR COSMETIC CORROSION PROTECTION.)) (AC-DELCO #177-685)	10097655
43.	7-N11	5.806	WASHER, RR WHL SPDL (45MM) (6.056)	562249
44.	7-N11	5.806	NUT, RR WHL SPDL (AC-DELCO #36-4123)	15653460
45.		8.938	PIN, COTTER M4X40 STL PL (AR)	11010069
46.	7-N11	5.806	RETAINER, RR WHL SPDL NUT (6.056)	562248
47.		N.S.	CALIPER, RR BRK ((SEE GROUP 4.000 "BRAKE CALIPER/REAR (B.C.I.A) " FOR DETAIL ILLUSTRATED VIEW.))	
48.	7-N11	5.806	WASHER, RR WHL SPDL (58MM)	14076924
49.	7-N11	5.806	SPINDLE, RR WHL	10052216
50.	7-N9	5.536	RETAINER, RR WHL DRV UJT SHF	14046907
51.	7-N9	5.586	BOLT, RR WHL DRV UJT SHF	14046904
52.		DISCON	SHAFT, U/JT (1988 A.T., EXC AC3) (CPS)	14046912
	7-N7	5.420	SHAFT, U/JT (1988 M.T.) (1988 A.T., AC3) (1989) (CPS)	10223032
	7-N7	5.420	SHAFT, RR WHL DRV UJT (1990-91) (CPS)	10223032
	7-N9	5.543	JOINT KIT, PROP SHF UNIVERSAL (DANA 5-447X)	12522048
53.	7-C25	7.545	INSULATOR, RR SPR (ON KNU)	10262518
54.	7-C25	7.530	NUT, RR SPR	10254330
	7-A8	6.009	NUT, S/KNU	10254330
55.		8.915	NUT (4)	11516211
	7-N5	5.416	NUT, RR WHL SPDL CONT ROD (1991)	11516211
56.	7-N5	5.416	WASHER, RR WHL SPDL ROD (TO KNU FROM DIFF CARR)	14047725
57.	7-N5	5.416	ROD, RR WHL SPDL (RH)	10098132
	7-N5	5.416	ROD, RR WHL SPDL (LH)	10098131
58.	7-N11	5.806	KNUCKLE, RR SUSP (RH)	10270127
	7-N11	5.806	KNUCKLE, RR SUSP (LH)	10270126
59.	7-N5	5.416	BOLT, RR WHL SPDL ROD (M16X2X110) (8.900)	11507007
60.	7-N5	5.416	BOLT, RR WHL SPDL ROD (M6X2X100)	14048990
61.	7-N5	5.415	ROD, RR WHL SPDL LWR CONT	17999723
62.	7-N5	5.416	BOLT, RR WHL SPDL ROD (M12X1.75X75)	11515784
63.	7-N6	5.418	BRACKET, RR WHL SPDL CONT ROD	10181209
64.	7-N8	5.506	NUT, DIFF CARR (8.917)	11508101
	7-N5	5.416	NUT, RR WHL SPDL ROD (M12X1.75X12) (8.917)	11508101
65.	7-N5	5.416	BOLT, RR WHL SPDL CONT ROD BRKT (8.900)	11516331
66.	7-C25	7.529	BOLT, SPR (M14X2X192.5) (1988-90)	14044578
	7-C24	7.518	BOLT, RR SPR (M14X2X225) (1991)	10254328
67.	7-N5	5.415	ROD, RR WHL SPDL UPR CONT	17999720

© 2000 GENERAL MOTORS SERVICE PARTS OPERATIONS-CHEVROLET-14Y

				1Y07-009
68.		DISCON	WASHER, RR WHL SPDL ROD (TO KNU UPR & LWR ATCH TO BODY)	14019936
69.	7-N13	5.812	WASHER, RR WHL HUB (5.38[illegible])	14046942
70.	7-N6	5.417	BUSHING, WHL SPDL ROD (1988)	14060166
71.	7-N14	5.816	BOLT, RR WHL HUB	10052214
72.	7-C25	7.535	BUMPER, RR SUSP JOUNCE	14105140
73.		DISCON	BRACKET, JOUNCE BPR (1988)	14064511
		N.S.	BRACKET, RR SUSP JOUNCE BPR (1989-91)	
74.		8.917	NUT, (AR)	11501086
75.	7-C16	7.244	NUT, RR STAB SHF LINK (7.245)	14060131
76.	7-C13	7.242	BRACKET, RR STAB SHF	10052222
77.		8.900	BOLT, M8X1.25X30 10.9 PZOR (AR)	11508353
78.	7-C12	7.240	BOLT, RR STAB SHF LINK (8.900)	14060130
79.	7-C14	7.243	INSULATOR, RR STAB SHF LINK (PART OF 80)	14060114
80.	7-C12	7.240	LINK, RR STAB SHF (INCL 79)	10052272
81.	7-C12	7.241	SHAFT, RR STAB (1988 Z51) (1990 ZR1) (1991 L98)	14084066
	7-C12	7.241	SHAFT, STAB (1988 EXC Z51) (1989) (1990 EXC ZR1)	14093179
	7-C12	7.241	SHAFT, RR STAB (1991 LT5)	10098181
82.	7-C14	7.243	INSULATOR, RR STAB SHF (1988 Z51) (1990 ZR1) (1991 L98)	10081630
	7-C14	7.243	INSULATOR, STAB SHF (1983 EXC Z51) (1989) (1990 EXC ZR1)	14105125
	7-C14	7.243	INSULATOR, RR STAB SHF (1991 LT5)	10098185
83.	7-C8	7.006	MEMBER, INR RR SI (Y07) (RH)	12513816
	7-C8	7.006	MEMBER, INR RR SI (Y67) (RH)	10112678
	7-C8	7.006	MEMBER, INR RR SI (Y07) (LH)	12513815
	7-C8	7.006	MEMBER, INR RR SI (Y67) (LH)	10112677
84.	7-C13	7.242	CLAMP, RR STAB SHF INSL	3913863
85.		8.917	NUT, HFH, M8X1.25, 17.9 OD, 738 THK, 13MM HEX, 10, ZF (AR) (AC-DELCO #11514596)	11514596
86.		8.900	BOLT (DIFF CARR) (AR)	11516664
87.	7-C23	7.460	ACTUATOR, SHOCK (1988-91)	22068667
88.		N.S.	GROMMET, RUBBER (RR WHL SPDL ROD) (NS-PART OF 57)	
89.		N.S.	SLEEVE, RR WHL SPDL ROD (NS-PART OF 57)	

© 2000 GENERAL MOTORS SERVICE PARTS OPERATIONS-CHEVROLET-14Y

MICROFICHE INDEX

GROUPS 6.000 THRU 7.000

FICHE 7 OF 11

GROUP	DESCRIPTION	STARTING GRID LOCATION PARTS	ILLUSTRATIONS
–	GENERAL INFORMATION	1–A2	1–G2
–	ALPHABETICAL INDEX	1–B13	N.A.
6.000	FRONT SUSPENSION – STEERING	7–A2	7–E2
7.000	FRAMES – SPRINGS – SHOCKS – BUMPERS	7–C2	7–H2
–	OUT OF FICHE CALLS	N.A.	7–M17

7–11

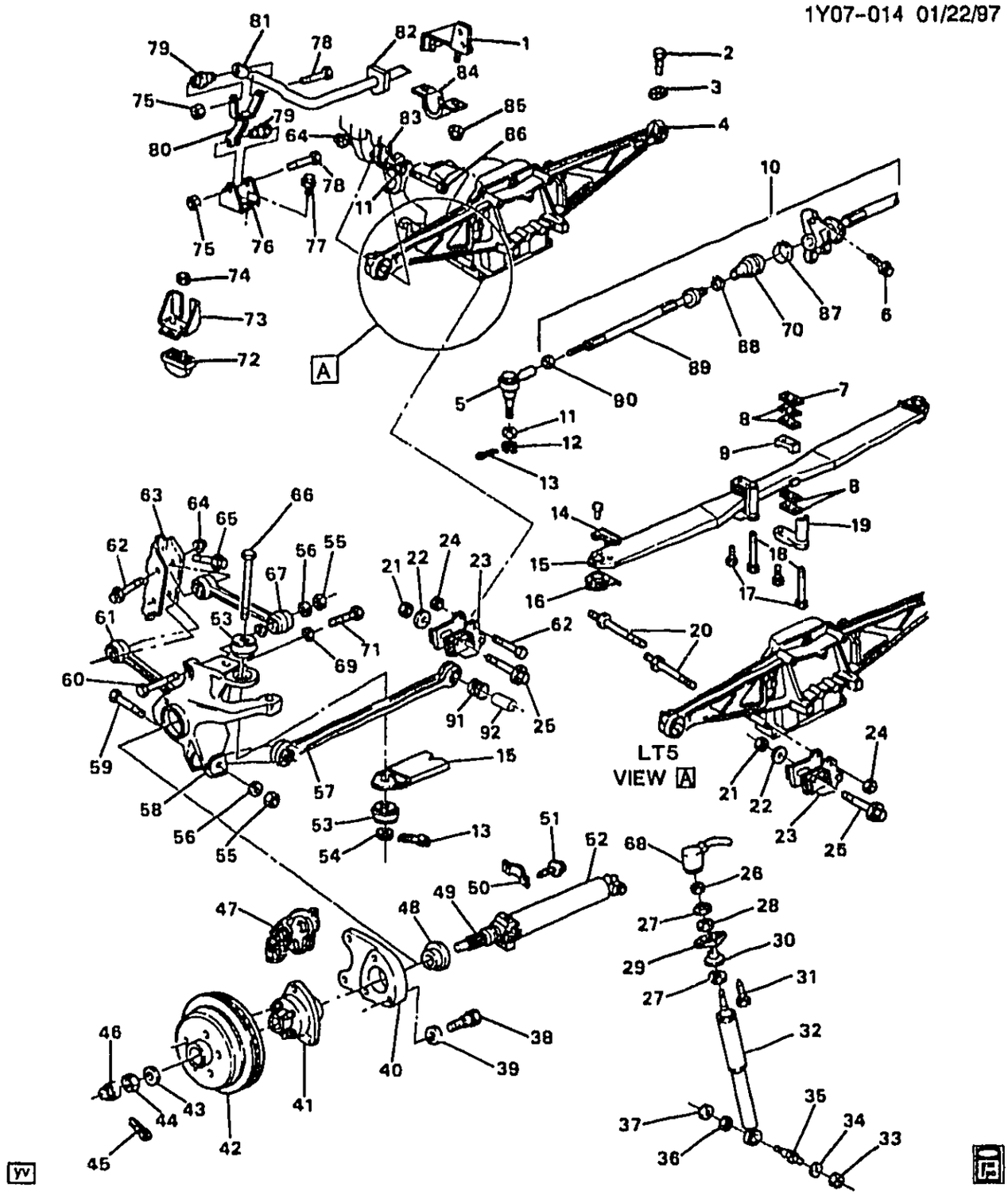

1Y07-014

1992-1996 Y SUSPENSION/REAR

1.	7-C13	7.242	SUPPORT, RR STAB SHF BRKT	92-96	Y	LH	14064521
	7-C13	7.242	SUPPORT, RR STAB SHF BRKT	92-96	Y	RH	14064522
2.	7-N8	5.544	BOLT, DRV LINE VIB DPNR	92-96	Y	2	14079980
3.	7-N8	5.544	DAMPENER, DRV LINE VIB	92-96	Y	2	14079979

© 2000 GENERAL MOTORS SERVICE PARTS OPERATIONS-CHEVROLET-14Y

							1Y07-014
4.		DISCON	**CARRIER**, DIFF (2.59 RATIO) (STAMPED CQT) (SEE GROUP 5.000 "DIFFERENTIAL CARRIER" FOR DETAIL ILLUSTRATED VIEW.) (5.505)	92-96	Y (GM1)	1	10163874
		DISCON	**CARRIER**, DIFF (2.73 RATIO) (STAMPED CQU) (SEE GROUP 5.000 "DIFFERENTIAL CARRIER" FOR DETAIL ILLUSTRATED VIEW.) (5.505)	92-93	Y (GU2)	1	10163875
		DISCON	**CARRIER**, DIFF (3.07 RATIO) (STAMPED CQW) (SEE GROUP 5.000 "DIFFERENTIAL CARRIER" FOR DETAIL ILLUSTRATED VIEW.) (5.505)	92-96	Y (G44)	1	10163876
		DISCON	**CARRIER**, DIFF (3.45 RATIO) (STAMPED CQR) (SEE GROUP 5.000 "DIFFERENTIAL CARRIER" FOR DETAIL ILLUSTRATED VIEW.) (5.505)	92-96	Y (GM3)	1	12553791
5.	7-N5	5.416	**END KIT**, RR SUSP ADJ LINK OTR (INCL #11, 12, 13) (5.415) (AC-DELCO #36-9515)	92-94	Y (LT1, LT5)	2	26050222
	7-N5	5.416	**END KIT**, RR SUSP ADJ LINK OTR (INCL #11, 12, 13) (5.415) ..	95-96	Y	1	26048449
6.	7-N6	5.418	**BOLT**, R/AXL TIE ROD (HWH M10.0X1.50X40, 26THD, 10.9 PO) (8.900)	92-96	Y	AR	14050422
7.	7-C25	7.545	**INSULATOR**, RR SPR (ON SPACER)	92-96	Y	2	14076181
8.	7-C24	7.518	**SPACER**, RR SPR (1.72MM THK)	92-96	Y67 (FE1)	2	14084056
	7-C24	7.518	**SPACER**, RR SPR (1.72MM THK)	92-95	Y07 (FE7)	2	14084056
	7-C24	7.518	**SPACER**, RR SPR (1.72MM THK)	96	Y07 (FE3)	2	14084056
	7-C24	7.518	**SPACER**, RR SPR (4.39MM THK)	92-96	Y67	2	14093183
	7-C24	7.518	**SPACER**, RR SPR (5.21MM THK)	92-96	Y (FE1)	4	14044572
	7-C24	7.518	**SPACER**, RR SPR (6.11MM THK)	92-95	Y07 (FE7, FE1)	4	14048950
	7-C24	7.518	**SPACER**, RR SPR (6.11MM THK)	96	Y07 (FE3, FE1)	4	14048950
	7-N5	5.416	**CLAMP**, RR SUSP ADJ LINK BOOT (44MM)	92-96	Y	1	26036823
9.		N.S.	**INSULATOR**, RR SPR LWR (PART OF 15)		.....		
10.	7-N5	5.416	**LINK KIT**, RR SUSP ADJ (INCL 70, 87, 88, 89, 90 (ALSO INCL LINK KIT 26033818))	92-96	Y	1	26033818
11.	7-N6	5.418	**WASHER**, R/AXL TIE ROD (ALSO PART OF #5) (6.164)	92-96	Y	2	10267310
	7-N8	5.506	**WASHER**, DIFF CARR (6.164) ...	92-96	Y	2	10267310
12.	7-N6	5.418	**NUT**, R/AXL TIE ROD (ALSO PART OF #5)	92-96	Y	2	14050089
13.		8.938	**PIN**, COTTER, 2.8X30MM, PS, 1010 (ALSO PART OF #5)	92-96	.....	AR	12337997
14.		N.S.	**RETAINER**, RR SPR INSL (PART OF 15)		.....		
15.	7-C24	7.503	**SPRING**, RR (INCL 9, 14, 16)	94-95	Y67 (LT1, FE1, FX3) ...	1	22112254
	7-C24	7.503	**SPRING**, RR (CODE NYR) (INCL 9, 14, 16)	92-93	Y07 (LT1, FE1)	1	22112253
	7-C24	7.503	**SPRING**, RR (CODE NYU) (INCL 9, 14, 16)	92-95	Y07 (LT1, FE7)	1	14080196

© 2000 GENERAL MOTORS SERVICE PARTS OPERATIONS-CHEVROLET-14Y

							1Y07-014
	7-C24	7.503	SPRING, RR (CODE RCA) (INCL 9, 14, 16)	92-93	Y67 (LT1, FE1)	1	14106787
	7-C24	7.503	SPRING, RR (CODE RCA) (INCL 9, 14, 16)	94-95	Y67 (LT1, FE1) (EXC FX3)	1	14106787
	7-C24	7.503	SPRING, RR (CODE RCA) (INCL 9, 14, 16)	96	Y67 (FE1)	1	14106787
	7-C24	7.503	SPRING, RR (CODE RHY) (INCL 9, 14, 16)	92-95	Y07 (LT5)	1	17999322
	7-C24	7.503	SPRING, RR (CODE RHY) (INCL 9, 14, 16)	96	Y07 (FE3)	1	17999322
	7-C24	7.503	SPRING, RR (CODE RHZ) (INCL 9, 14, 16)	94-95	Y07 (LT1, FE1)	1	22112253
	7-C24	7.503	SPRING, RR (CODE RHZ) (INCL 9, 14, 16)	96	Y07 (FE1)	1	22112253
16.		N.S.	RETAINER, RR SPR INSL (PART OF 15)				
17.		8.900	BOLT, HFH M10X1.5X30 10.9 FL BLK 21.5 OD 26MM THD POINTED (RR SPR)	92-96		AR	12337993
18.		8.900	BOLT, HFH M10X1.5X105 9.8 PZOR (RR SPR)	92-96		AR	11508142
19.	7-C24	7.518	PLATE, RR SPR ANC	92-96	Y	2	14048993
20.	7-N5	5.416	BOLT, RR WHL SPDL ROD BRKT (5.418)	92	Y (LT5)	2	10098202
	7-N5	5.416	BOLT, RR WHL SPDL ROD BRKT (5.418)	93-96	Y (GM3)	2	10098202
21.	7-N5	5.416	NUT, RR WHL SPDL ROD ADJ (HEX 14X2X16, PE 10) (8.915)	92-96	Y	2	14060164
22.	7-N6	5.417	CAM, RR WHL SPDL ROD ADJ	92-96	Y	2	14060163
23.	7-N5	5.380	BRACKET, RR WHL SPDL ROD	92-96	Y	2	10097802
24.	7-N6	5.418	NUT, RR WHL SPDL ROD BRKT (M12X1.75X12 (10) 1050) (8.917)	92-96	Y	4	11508101
25.	7-N5	5.416	BOLT, RR WHL SPDL ROD ADJ (M14X2X95)	92-96	Y	2	14060162
26.		8.917	NUT, HEX PRVG TORQ M10X1.5XGR10XCAD	92-96		AR	11501033
27.	7-C19	7.389	RETAINER, RR S/ABS UPR INSL	92-95	Y (EXC FX3)	4	14071397
	7-C19	7.389	RETAINER, RR S/ABS UPR INSL	96	Y (EXC F45)	4	14071397
28.	7-C18	7.388	INSULATOR, RR S/ABS UPR (MUST ORDER ABSORBER FOR FX3) (FOR FX3 MUST ORDER ABSORBER) (AC-DELCO #10022353)	92-96	Y (EXC FX3)	2	10022353
29.	7-C19	7.395	BRACKET, RR S/ABS UPR	92-95	Y (EXC FX3)	2	10097836
	7-C19	7.395	BRACKET, RR S/ABS UPR	96	Y (EXC F45)	2	10097836
30.	7-C18	7.388	INSULATOR, RR S/ABS LWR (FOR FX3 MUST ORDER ABSORBER)	92-94	Y (EXC FX3)	2	14105142
	7-C18	7.388	INSULATOR, RR S/ABS LWR (FOR FX3 MUST ORDER ABSORBER) (AC-DELCO #10009135)	95	Y (EXC FX3)	2	10009135
	7-C18	7.388	INSULATOR, RR S/ABS LWR (FOR FX3 MUST ORDER ABSORBER) (AC-DELCO #10009135)	96	Y (EXC F45)	2	10009135
31.		8.900	BOLT, HWH, M8X1.25X40, SPL FULLTHD, AC PT, 10.9 PZOR	92-96		AR	11515758

© 2000 GENERAL MOTORS SERVICE PARTS OPERATIONS-CHEVROLET-14Y

							1Y07-014
32.	7-C16	7.345	ABSORBER, RR SHK (AC-DELCO #540-13)	92	Y (FE1) (EXC FX3)	2	22064033
	7-C16	7.345	ABSORBER, RR SHK (AC-DELCO #540-25)	92-95	Y (FX3)	2	22064479
	7-C16	7.345	ABSORBER, RR SHK (AC-DELCO #540-13)	93-95	Y (EXC FX3)	2	22064033
	7-C16	7.345	ABSORBER, RR SHK (AC-DELCO #540-13)	96	Y (FE1) (EXC F45)	2	22064033
	7-C16	7.345	ABSORBER, RR SHK	96	Y07 (FE3)	2	22064690
	7-C16	7.345	ABSORBER, RR SHK (AC-DELCO #580-113)	96	Y (F45)	LH	22064693
	7-C16	7.345	ABSORBER, RR SHK (AC-DELCO #580-114)	96	Y (F45)	RH	22064694
33.		8.917	NUT, HEX M14X2X13	92-96	.....	AR	11516074
34.	7-C18	7.347	WASHER, RR S/ABS (15OD X 1ID X .03 THK) (5.394)	92-96	Y	2	10053765
35.	7-C18	7.347	STUD, RR S/ABS	92-96	Y	2	14105141
36.		8.917	NUT	92-96	.....	AR	11508101
37.	7-C18	7.347	WASHER, RR S/ABS (M13X35X3)	92-96	Y	2	14047726
38.	7-M27	4.665	BOLT, RR BRK CLPR	92-96	Y	4	14084053
	7-M27	4.665	BOLT, RR BRK CLPR (AC-DELCO #18K203)	92-96	Y (STINGRAY)	AR	18034577
	7-M27	4.665	BOLT, RR BRK CLPR (ANCHOR PLATE & BRK)	92-96	Y	2	10112649
	7-M27	4.665	BOLT, RR BRK CLPR (GDE PIN) .	92-96	Y	8	14067559
39.	7-M27	4.665	WASHER, RR BRK CLPR	92-96	Y	4	10268876
40.	7-N4	5.001	PLATE, RR BRK CLPR MT	92-96	Y	LH	10052211
	7-N4	5.001	PLATE, RR BRK CLPR MT	92-96	Y	RH	10052212
41.	7-N11	5.806	HUB, RR WHL (AC-DELCO #20-45)	92-96	Y	2	7470501
42.	7-N12	5.809	ROTOR, RR BRK (AC-DELCO #177-685)	92-95	Y	2	10097655
	7-N12	5.809	ROTOR, RR BRK (AC-DELCO #18A1052)	92-96	Y	LH	18039636
	7-N12	5.809	ROTOR, RR BRK (AC-DELCO #18A1053)	92-96	Y	RH	18039637
	7-N12	5.809	ROTOR, RR BRK (AC-DELCO #18A1062)	92-95	Y	LH	18039646
	7-N12	5.809	ROTOR, RR BRK (AC-DELCO #18A1063)	92-95	Y	RH	18039647
	7-N12	5.809	ROTOR, RR BRK (AC-DELCO #177-685)	96	Y (J55) (EXC VE2, Z15, Z16)	2	10097655
	7-N12	5.809	ROTOR, RR BRK (AC-DELCO #177-782)	96	Y (J55, Z15, Z16)	2	10257721
	7-N12	5.809	ROTOR, RR BRK (AC-DELCO #177-782)	96	Y (J55, VE2) (EXC Z15, Z16) (EXPORT)	2	10257721
43.	7-N11	5.806	WASHER, RR WHL SPDL (6.056)	92-96	Y	2	562249
44.	7-N11	5.806	NUT, RR WHL SPDL (HEX, M24X1.5X14.5, GM510M (5), PLAIN) (6.056) (AC-DELCO #36-4123)	92-96	Y	2	15653460
45.		8.938	PIN, COTTER M4X40 STL PL	92-96	.....	AR	11010069
46.	7-N11	5.806	RETAINER, RR WHL SPDL NUT (6.056)	92-96	Y	2	562248
47.		N.S.	CALIPER, RR BRK (SEE GROUP 4.000 "BRAKE CALIPER/REAR (B.C.I.A.) " FOR DETAIL ILLUSTRATED VIEW.)		.....		
48.	7-N11	5.806	WASHER, RR WHL SPDL	92-96	Y	2	14076924

© 2000 GENERAL MOTORS SERVICE PARTS OPERATIONS-CHEVROLET-14Y

							1Y07-014
49.	7-N11	5.806	SPINDLE, RR WHL (W/RELUCTOR RING)	92-96	Y	2	10052216
50.	7-N9	5.586	RETAINER, RR WHL DRV UJT SHF	92-96	Y	8	14046907
	7-N9	5.586	RETAINER, RR WHL DRV UJT SHF (INCLD (14) RINGS) (5.428)	92-96	Y (GM1)	1	14079465
	7-N9	5.586	RETAINER, RR WHL DRV UJT SHF (INCLD (14) RINGS) (5.428)	92	Y (GU2)	2	14079465
	7-N9	5.586	RETAINER, RR WHL DRV UJT SHF (INCLD (14) RINGS) (5.428)	92-96	Y (G44)	2	14079465
	7-N9	5.586	RETAINER, RR WHL DRV UJT SHF (5.428)	92	Y (GH0)	1	14091399
	7-N9	5.586	RETAINER, RR WHL DRV UJT SHF (5.428)	92-96	Y (GM3)	1	14091399
	7-N9	5.586	RETAINER, RR WHL DRV UJT SHF (5.428)	94	Y (G65)	1	14091399
51.	7-N9	5.586	BOLT, RR WHL DRV UJT SHF (M8X1X19)	92-96	Y	16	14046904
52.	7-N7	5.420	SHAFT, RR WHL DRV UJT (CPS)	92-96	Y	2	10223032
	7-N9	5.548	JOINT KIT, PROP SHF UNIVERSAL (DANA)	92-96	Y	2	12522048
53.	7-C25	7.545	INSULATOR, RR SPR (34MM LONG)	92-96	Y	4	10262518
54.	7-A8	6.009	NUT, S/KNU (UPR) (HEX SLOTTED M12X1.75X13) (5.418)	92-96	Y	2	14050089
	7-A8	6.009	NUT, S/KNU (14X2.0X14 SLOTTED, LWR) (7.530)	92-96	Y	2	10254330
55.		8.915	NUT (RR WHL SPDL CONT ROD)	92-96		AR	11516211
56.	7-N5	5.416	WASHER, RR WHL SPDL ROD (TO KNU FROM DIFF CARR)	92-96	Y	2	14047725
	7-N5	5.416	WASHER, RR WHL SPDL ROD (TO KNU UPR & LWR ATCH TO BODY)	92-96	Y	8	14044574
57.	7-N5	5.416	ROD, RR WHL SPDL	92-96	Y	LH	10098131
	7-N5	5.416	ROD, RR WHL SPDL	92-96	Y	RH	10098132
58.	7-N11	5.806	KNUCKLE, RR SUSP	92-96	Y	LH	10270126
	7-N11	5.806	KNUCKLE, RR SUSP	92-96	Y	RH	10270127
59.	7-N5	5.416	BOLT, RR WHL SPDL ROD (M16X2X110, 9.8 POR) (8.900)	92-96	Y	2	11507007
60.	7-N5	5.416	BOLT, RR WHL SPDL ROD (M16X2X100, 9.8)	92-96	Y	4	14048990
61.	7-N5	5.415	ROD, RR WHL SPDL LWR CONT	92-96	Y	2	17999723
62.		8.900	BOLT, HEX FLNG HD (12X1.75X75) (PZOR 10.9) (RR WHL SPDL ROD)	92-96		8	11515784
63.	7-N6	5.418	BRACKET, RR WHL SPDL CONT ROD	92-96	Y	2	10181209
64.	7-N8	5.506	NUT, DIFF CARR (M12X1.75X12 (10) 1050) (8.917)	92-96	Y	2	11508101
65.	7-N5	5.416	BOLT, RR WHL SPDL CONT ROD BRKT (8.900)	92-96	Y	6	11516331
66.	7-C24	7.518	BOLT, RR SPR	94-95	Y (LT1, FE1, FX3)	2	10254329
	7-C24	7.518	BOLT, RR SPR	96	Y (FE1, F45)	2	10254329
	7-C24	7.518	BOLT, RR SPR (M10X1.5X105) (POS #1)) (8.900)	92-96	Y	2	11508142
	7-C24	7.518	BOLT, RR SPR (M14X2X225, 30 THD, 4MM HOLE)	92-93	Y	2	10254328
	7-C24	7.518	BOLT, RR SPR (M14X2X225, 30 THD, 4MM HOLE)	94-95	Y (FE7)	2	10254328

© 2000 GENERAL MOTORS SERVICE PARTS OPERATIONS-CHEVROLET-14Y

							1Y07-014
	7-C24	7.518	BOLT, RR SPR (M14X2X225, 30 THD, 4MM HOLE)	94-95	Y (LT1, FE1) (EXC FX3)	2	10254328
	7-C24	7.518	BOLT, RR SPR (M14X2X225, 30 THD, 4MM HOLE)	94-95	Y (LT5)	2	10254328
	7-C24	7.518	BOLT, RR SPR (M14X2X225, 30 THD, 4MM HOLE)	96	Y (FE1) (EXC F45)	2	10254328
	7-C24	7.518	BOLT, RR SPR (M14X2X225, 30 THD, 4MM HOLE)	96	Y (FE3)	2	10254328
67.	7-N5	5.415	ROD, RR WHL SPDL UPR CONT	92-96	Y	2	17999720
68.	7-C23	7.460	ACTUATOR, RR S/ABS CONT	92-95	Y (FX3)	2	22068667
		N.S.	ACTUATOR, RR S/ABS CONT (NOT USED)	96			
69.	7-N13	5.812	WASHER, RR WHL HUB (M13X24X2) (5.383)	92-96	Y	6	14046942
	7-N13	5.812	WASHER, RR WHL HUB (24X22.50) (8.929)	92-96	Y	6	14055822
70.	7-N5	5.416	BOOT, RR SUSP ADJ LINK (RR TOE LINK SEAL) (ALSO PART OF #10)	92-96	Y	1	7844424
71.	7-N14	5.816	BOLT, RR WHL HUB (M12X1.75X86, TORX) (5.812)	92-96	Y	6	10052214
72.	7-C25	7.535	BUMPER, RR SUSP JOUNCE	92-96	Y	2	14105140
73.		N.S.	BRACKET, RR SUSP JOUNCE BPR				
74.		8.917	NUT, (8.915)	92-96		AR	11501086
75.	7-C16	7.244	NUT, RR STAB SHF LINK (M10X1.5) (7.245)	92-96	Y	2	14060131
76.	7-C13	7.242	BRACKET, RR STAB SHF	92-96	Y	2	10052222
77.		8.900	BOLT, M8X1.25X30 10.9 PZOR	92-96		AR	11508353
78.	7-C12	7.240	BOLT, RR STAB SHF LINK (M10X1.25X40) (8.900)	92-96	Y	2	14060130
79.	7-C14	7.243	INSULATOR, RR STAB SHF LINK (PART OF 80)	92-96	Y	2	14060114
80.	7-C12	7.240	LINK, RR STAB SHF (INCL 79)	92-96	Y	2	10052272
81.	7-C12	7.241	SHAFT, RR STAB	92-95	Y (LT5, FE1)	1	10098181
	7-C12	7.241	SHAFT, RR STAB	92-95	Y (FE7)	1	14084066
	7-C12	7.241	SHAFT, RR STAB	92	Y (LT1, FE1)	1	14093179
	7-C12	7.241	SHAFT, RR STAB	93-95	Y (LT1, FE1)	1	14084066
	7-C12	7.241	SHAFT, RR STAB	96	Y07 (Z16)	1	10098181
	7-C12	7.241	SHAFT, RR STAB	96	Y07 (EXC Z16)	1	14084066
	7-C12	7.241	SHAFT, RR STAB	96	Y67	1	14084066
82.	7-C14	7.243	INSULATOR, RR STAB SHF	92	Y (LT5, FE1)	2	10098185
	7-C14	7.243	INSULATOR, RR STAB SHF	92	Y (FE7)	2	10081630
	7-C14	7.243	INSULATOR, RR STAB SHF	92	Y (LT1, FE1)	2	14105125
	7-C14	7.243	INSULATOR, RR STAB SHF	93-95	Y (LT1)	2	10081630
	7-C14	7.243	INSULATOR, RR STAB SHF	93-95	Y (LT5)	2	10098185
	7-C14	7.243	INSULATOR, RR STAB SHF	96	Y07 (EXC Z16)	2	10081630
	7-C14	7.243	INSULATOR, RR STAB SHF	96	Y07 (Z16)	2	10098185
	7-C14	7.243	INSULATOR, RR STAB SHF	96	Y67	2	10081630
83.	7-C8	7.006	MEMBER, INR RR SI	92-96	Y07	RH	12513816
	7-C8	7.006	MEMBER, INR RR SI	92-96	Y67	LH	10112677
	7-C8	7.006	MEMBER, INR RR SI	92-96	Y67	RH	10112678
	7-C8	7.006	MEMBER, INR RR SI	92-96	Y07	LH	12513815
84.	7-C13	7.242	CLAMP, RR STAB SHF INSL	92-96	Y	2	3913863
85.		8.917	NUT, HFH, M8X1.25, 17.9 OD, 738 THK, 13MM HEX, 10, ZF (8.915) (AC-DELCO #11514596)	92-96		AR	11514596

© 2000 GENERAL MOTORS SERVICE PARTS OPERATIONS-CHEVROLET--14Y

							1Y07-014
86.		DISCON	BOLT, DIFF CARR (8.900) (M12X1.75X100 10.9 6183M Z BRKT)	92-96	Y	2	11508185
87.	7-N5	5.416	CLAMP, RR SUSP ADJ LINK BOOT (44MM)	92-96	Y	2	26036823
88.	7-N5	5.416	CLAMP, RR SUSP ADJ LINK BOOT (19MM)	92-96	Y	2	7844100
89.		N.S.	LINK, RR AXLE SUSP INR TOE (PART OF #10)		.....		
90.	7-N6	5.418	NUT, R/AXL TIE ROD (M14X1.5X11, 510M (5), ZC) (6.526)	92-96	Y	2	26017267
91.		N.S.	GROMMET, RR WHL SPDL ROD (RUBBER) (NS-PART OF 57) ...		.....		
92.		N.S.	SLEEVE, RR WHL SPDL ROD (NS-PART OF 57)		.....		

RPO DEFINITIONS

FE1 – SUSPENSION SYSTEM,SOFT RIDE
FE3 – SUSPENSION SYSTEM,SPORT
FE7 – SUSPENSION SYSTEM,FRONT AND REAR,HEAVY DUTY(USED WITH PERFORMANCE HANDLING PACKAGE Z51)
FE7 – SUSPENSION SYSTEM,FRONT AND REAR,HEAVY DUTY
FX3 – RIDE AND HANDLING,ELECTRONIC CONTROLLED
F45 – CHASSIS CONTINUOUS VALVE REAL TIME DAMPING
GH0 – AXLE,REAR,3.54 RATIO
GM1 – AXLE,REAR,2.59 RATIO
GM3 – AXLE,REAR,3.45 RATIO
GU2 – AXLE,REAR,2.73 RATIO
G44 – AXLE,REAR,3.07 RATIO
G95 – AXLE,ECONOMY RATIO
J55 – BRAKE SYSTEM,HEAVY DUTY POWER
LT1 – ENGINE--GAS, 8 CYL, 5.7L(5.7P),MFI,HO
LT5 – ENGINE,5.7L(5.7J),TPI
VE2 – PROTECTOR SOURCE APPLIED
Z15 – APPEARANCE PACKAGE,COLLECTORS EDITION
Z16 – APPEARANCE PACKAGE,GRAND SPORT EDITION

© 2000 GENERAL MOTORS SERVICE PARTS OPERATIONS-CHEVROLET-14Y

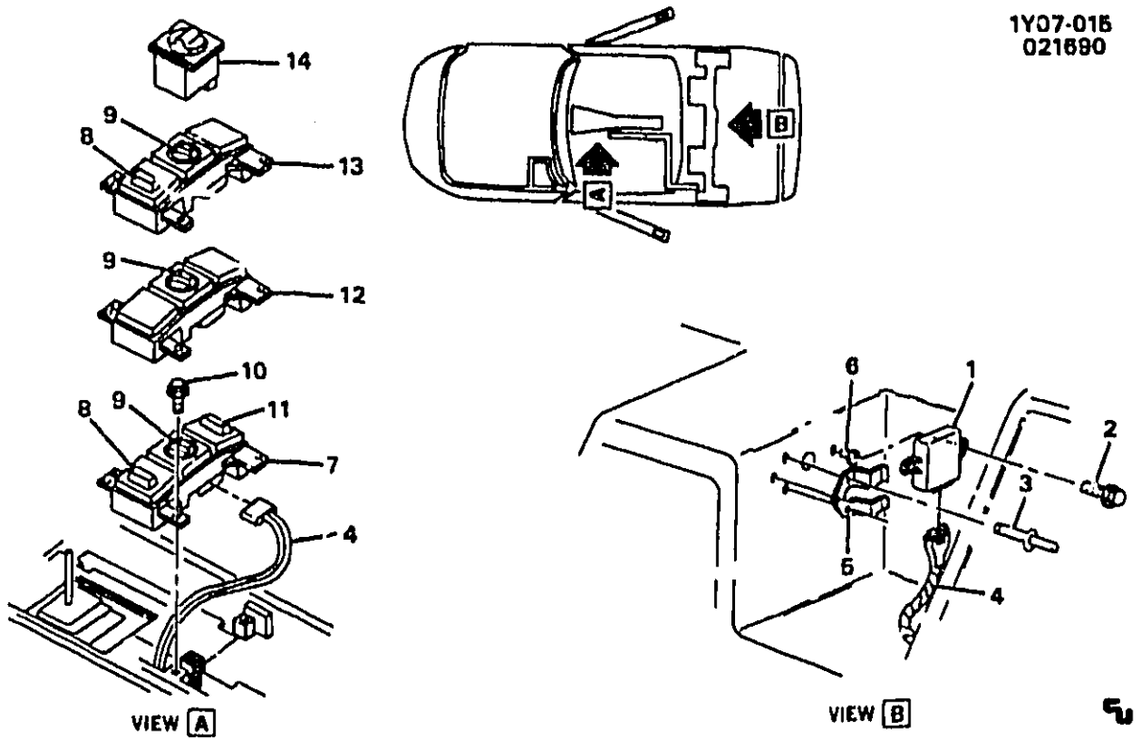

1Y07-015

1989-1991 Y SUSPENSION CONTROLS/ELECTRONIC (FX3)

1.	7-C21	7.450	MODULE	22115156
2.		8.977	BOLT, HEX W/12.5 OD WA, M4.2X1.41X16 DBL LD HI-LO 6010M (AR)	11515312
3.		N.S.	RIVET	
4.		DISCON	HARNESS, ELEK SUSP STRUT WRG HARN EXTN (1989)	12080608
	7-C21	7.450	HARNESS, ELEK SUSP STRUT WRG HARN EXTN (1990-91)	12080856
		DISCON	HARNESS, BRK PRESS MOD VLV MODULE WRG (1989)	12083507
		DISCON	HARNESS, BRK PRESS MOD VLV WRG (1990)	12080845
		DISCON	HARNESS, BRK PRESS MOD VLV WRG (1991)	12112466
5.		DISCON	BRACKET, MOD	14104798
6.	7-C21	7.450	NUT, MOD	12338025
7.		N.S.	CONTROL, ELEK SUSP (1990-91 AC3, AC1) (INCL 8, 9, 11) (SERVICED BY 8, 9, 11) (CPS)	
	7-C21	7.450	LAMP, SW SEL RIDE (1990-91)	10159560
8.	7-N21	11.558	SWITCH, D/ST ADJ (PART OF 7, 13) (1990-91)	10086227
9.	7-C21	7.450	CONTROL, ELEK SUSP (PART OF 7, 12, 13) (1990-91)	10086226
10.		8.913	SCREW-PAN HD, M5X0.8X20, 18.4 THD, 9.80 OD, AISI302-305, BLK OX, TORX (AR) (AC-DELCO #11508572)	11508572
11.	7-N21	11.558	SWITCH, P/ST ADJ (PART OF 7) (1990-91)	10086228
12.	7-C21	7.450	CONTROL, ELEK SUSP (1990-91 EXC AC3, AC1) (INCL 9)	10098437
13.	7-C21	7.450	CONTROL, ELEK SUSP (1990-91 AC3, EXC AC1) (INCL 8, 9) (CPS)	10098438
	7-N21	11.558	INSERT, D/SEAT ADJR SW PLT	12514822
14.	7-C21	7.450	CONTROL, ELEK SUSP (1989)	10098464

RPO DEFINITIONS
FX3 - RIDE AND HANDLING,ELECTRONIC CONTROLLED

© 2000 GENERAL MOTORS SERVICE PARTS OPERATIONS-CHEVROLET-14Y

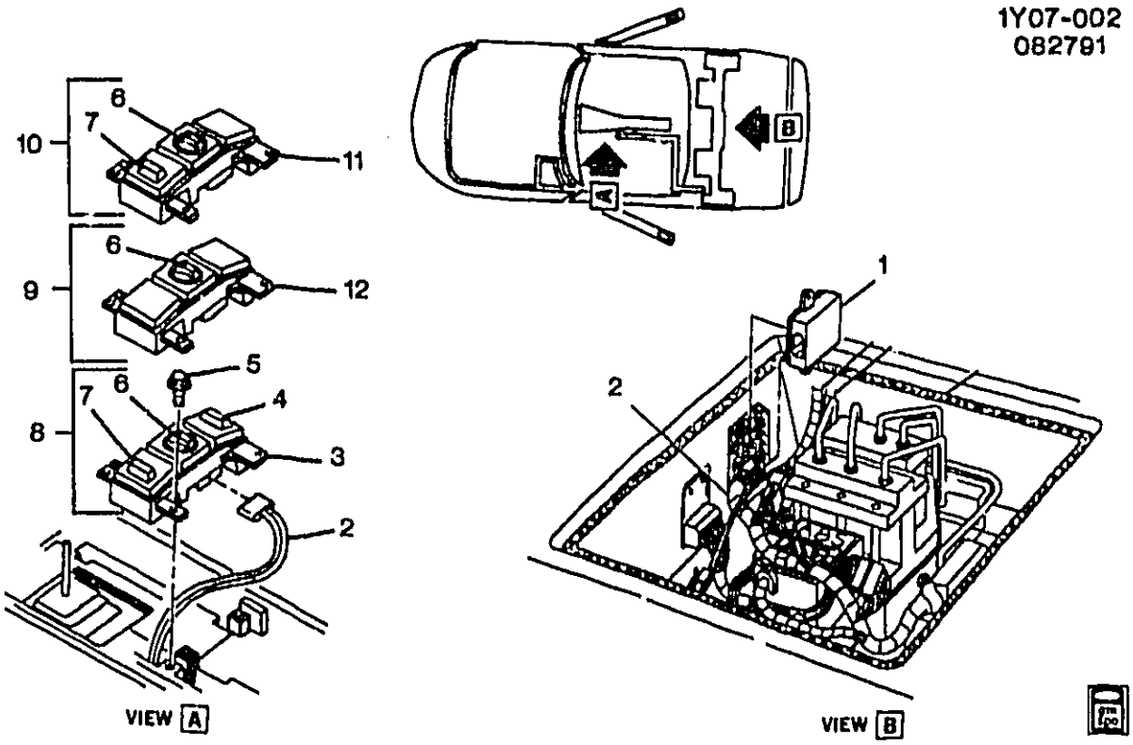

1Y07-002

1992 Y SUSPENSION CONTROLS/ELECTRONIC (FX3)

1.	7-C21	7.450	**MODULE**, ELEK SUSP CONT ...	92 Y (FX3)	1	22052752
2.	7-C21	7.450	**HARNESS**, ELEK SUSP STRUT WRG HARN EXTN	92 Y (FX3)	1	12080856
3.	7-N20	10.242	**HOUSING**, F/FLR CNSL ACSRY SW	92 Y (AC1, AC3, FX3)	1	10161846
4.	7-N21	11.558	**SWITCH**, P/SEAT ADJR (CPS) ...	92 Y (AC1, AC3)	1	10161843
	7-N21	11.558	**LAMP**, D/SEAT & P/SEAT ADJR SW	92 Y (AC3)	2	10148002
5.		8.913	**SCREW-PAN HD**, M5X0.8X20, 18.4 THD, 9.80 OD, AISI302-305, BLK OX, TORX (AC-DELCO #11508572)	92	AR	11508572
6.	7-C21	7.450	**SWITCH**, ELEK SUSP (PART OF 9, 10) (CPS)	92 Y (FX3)	1	10161838
	7-C21	7.450	**LAMP**, SELECTIVE RIDE SW	92 Y (FX3)	1	10159560
7.	7-N21	11.558	**SWITCH**, D/SEAT ADJR (PART OF 10) (CPS)	92 Y (AC1, AC3, FX3)	1	10161837
	7-N21	11.558	**LAMP**, D/SEAT & P/SEAT ADJR SW	92 Y (AC3)	2	10148002
8.		N.S.	**CONTROL**, ELEK SUSP (W/F/SEAT ADJR SW)	.....		
9.	7-C21	7.450	**SWITCH**, ELEK SUSP (INCL 6, 12)	92 Y (FX3) (EXC AC1, AC3)	1	10161847
10.	7-C21	7.450	**CONTROL**, ELEK SUSP (W/D/SEAT ADJR SW) (INCL 6, 7, 11)	92 Y (AC3, FX3) (EXC AC1)	1	10161836
11.		N.S.	**HOUSING**, F/FLR CNSL ACSRY SW (PART OF 10)	.....		
12.		N.S.	**HOUSING**, F/FLR CNSL ACSRY SW (PART OF 9)	.....		

© 2000 GENERAL MOTORS SERVICE PARTS OPERATIONS-CHEVROLET-14Y

RPO DEFINITIONS
AC1 – ADJUSTER,SEAT,6–WAY POWER,BUCKET,PASSENGER
AC3 – ADJUSTER,SEAT,6–WAY POWER,BUCKET,DRIVER
FX3 – RIDE AND HANDLING,ELECTRONIC CONTROLLED

© 2000 GENERAL MOTORS SERVICE PARTS OPERATIONS–CHEVROLET–14Y

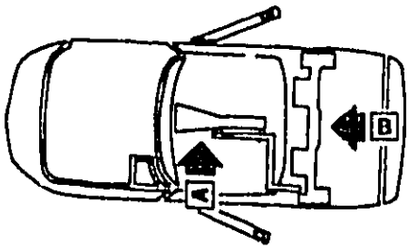

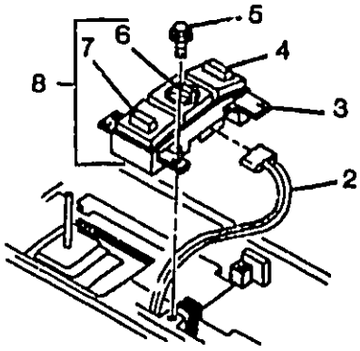

VIEW A

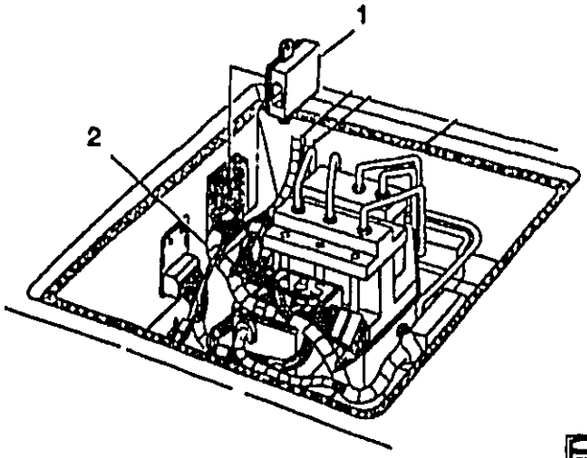

VIEW B

1Y07-020

1993-1995 Y SUSPENSION CONTROLS/ELECTRONIC (FX3)

1.	7-C21	7.450	**MODULE**, ELEK SUSP CONT ...	93-95	Y (FX3)	1	22052752
	7-C21	7.450	**MODULE**, ELEK SUSP CONT (FILTER) (PART OF ELEK SUSP WRG HARN EXTN)	94-95	Y (M30, FX3)	1	12135092
2.	7-C21	7.450	**HARNESS**, ELEK SUSP STRUT WRG HARN EXTN	93	Y (FX3)	1	12080856
	7-C21	7.450	**HARNESS**, ELEK SUSP STRUT WRG HARN EXTN	94-95	Y (ML9, FX3)	1	12130362
	7-C21	7.450	**HARNESS**, ELEK SUSP STRUT WRG HARN EXTN	94-95	Y (M30, FX3)	1	12130490
3.	7-N20	10.242	**HOUSING**, F/FLR CNSL ACSRY SW (PART OF 8)	93-94	Y (AC1, AC3, FX3)	1	10161846
	7-N20	10.242	**HOUSING**, F/FLR CNSL ACSRY SW (PART OF 8)	95	Y (AG1, AG2, AQ9, AR9, FX3)	1	10161846
4.	7-N21	11.558	**SWITCH**, P/SEAT ADJR (PART OF 8)	93	Y (AC1, AC3)	1	10161843
	7-N21	11.558	**SWITCH**, P/SEAT ADJR (PART OF 8)	94-95	Y	1	10212992
	7-N21	11.558	**LAMP**, D/SEAT & P/SEAT ADJR SW (ONLY USED IN 1993)	93	Y (AC3)	2	10148002
5.		8.913	**SCREW-PAN HD**, M5X0.8X20, 18.4 THD, 9.80 OD, AISI302-305, BLK OX, TORX (AC-DELCO #11508572)	93-95	.....	AR	11508572
6.	7-C21	7.450	**SWITCH**, ELEK SUSP (PART OF 8)	93	Y (FX3, AC3)	1	10161838
	7-C21	7.450	**SWITCH**, ELEK SUSP (PART OF 8)	94-95	Y (FX3)	1	10212995
	7-C21	7.450	**LAMP**, SELECTIVE RIDE SW (ONLY USED IN 1993)	93	Y (AC1, AC3, FX3)	1	10159560
7.	7-N21	11.558	**SWITCH**, D/SEAT ADJR (PART OF 8) (CPS)	93	Y (AC3)	1	10161837

© 2000 GENERAL MOTORS SERVICE PARTS OPERATIONS-CHEVROLET-14Y

							1Y07–020
	7–N21	11.558	**SWITCH**, D/SEAT ADJR (PART OF 8) (CPS)	94–95	Y	1	10212990
	7–N21	11.558	**LAMP**, D/SEAT & P/SEAT ADJR SW (ONLY USED IN 1993)	93	Y (AC3)	2	10148002
8.		N.S.	**CONTROL**, ELEK SUSP (W/F/SEAT ADJR SW) (INCLS 3, 4, 6, 7)		.....		

RPO DEFINITIONS

AC1 – ADJUSTER,SEAT,6–WAY POWER,BUCKET,PASSENGER
AC3 – ADJUSTER,SEAT,6–WAY POWER,BUCKET,DRIVER
AG1 – ADJUSTER,SEAT,6–WAY POWER,DRIVER(60–40)(VAR 2)
AG2 – ADJUSTER,SEAT,6–WAY POWER,SPLIT BENCH,PASSENGER
AQ9 – SEAT,FRONT BUCKET,DRIVER,PASSENGER,RECLINING
AR9 – SEAT,FRONT BUCKET,DRIVER,PASSENGER,MANUAL RECLINING(EUROPEAN STYLE)
FX3 – RIDE AND HANDLING,ELECTRONIC CONTROLLED
ML9 – TRANSMISSION,MANUAL 6–SPEED
M30 – TRANSMISSION,AUTOMATIC 4 SPEED,4L60E,ELECTRONIC

© 2000 GENERAL MOTORS SERVICE PARTS OPERATIONS–CHEVROLET–14Y

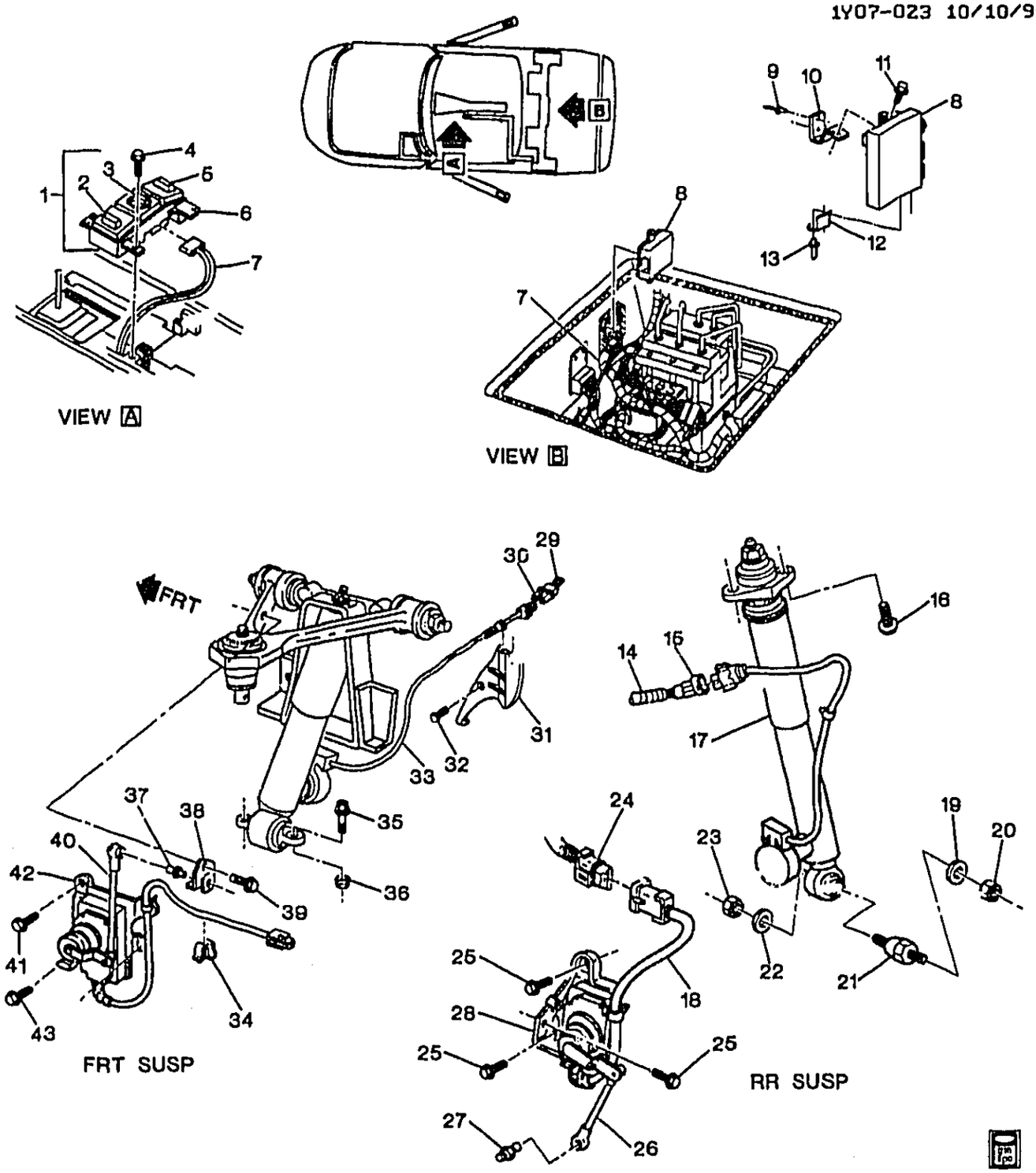

1996 Y SUSPENSION CONTROLS/ELECTRONIC (F45)

1.		N.S.	**CONTROL**, ELEK SUSP (W/F/SEAT ADJR SW) (CPS) (INCL.2, 3, 5, 6)	.....		
2.	7-N21	11.558	**SWITCH**, D/SEAT ADJR (PART OF 1)	96 Y	1	10212990
3.	7-C21	7.450	**SWITCH**, ELEK SUSP (PART OF 1)	96 Y (F45)	1	10212995

© 2000 GENERAL MOTORS SERVICE PARTS OPERATIONS-CHEVROLET-14Y

							1Y07-023
4.		8.977	**BOLT**, HEX W/12.5 CD WA, M4.2X1.41X16 DBL LD HI-LO 6010M (ELEK SUSP SW)	96	.....	4	11515312
5.	7-N21	11.558	**SWITCH**, P/SEAT ADJR (PART OF 1)	96	Y	1	10212992
6.	7-N20	10.242	**HOUSING**, F/FLR CNSL ACSRY SW (PART OF 1)	96	Y (AG1, AG2, AR9, AQ9) (EXC FX3)	1	10161844
	7-N20	10.242	**HOUSING**, F/FLR CNSL ACSRY SW (PART OF 1)	96	Y (AG1) (EXC AG2, F45)	1	10161841
7.	7-C21	7.450	**HARNESS**, ELEK SUSP STRUT WRG HARN EXTN	96	Y (F45)	1	12130460
8.	7-C21	7.450	**MODULE**, ELEK SUSP CONT (MUST BE PROGRAMMED AT DEALER)	96	Y (F45)	1	16205661
9.		N.S.	**RIVET**, ELEK SUSP CONT MDL STUD PLT		.....		
10.	7-C21	7.450	**BRACKET**, ELEK SUSP CONT MDL	96	Y (F45)	1	10274869
11.		8.977	**SCREW**, ASM-FL WA & METRIC HIGH-HEX WA HD D (ELEK SUSP MDL BRKT)	96	.....	1	11513801
12.	7-C21	7.450	**RETAINER**, ELEK SUSP CONT MDL	96	Y (F45)	1	10257543
13.		N.S.	**RIVET**, ELEK SUSP CONT MDL RET		.....		
14.	7-C21	7.450	**HARNESS**, ELEK SUSP STRUT WRG HARN EXTN	96	Y (F45)	1	12130460
15.	7-C21	7.450	**CONNECTOR**, SW-ELEK SUSP (4-WAY F) (W/LEADS) (9.764) (AC-DELCO #PT483)	96	Y (F45)	1	12117350
16.		8.900	**BOLT**, HWH, M8X1.25X40, SPL FULLTHD, AC PT, 10.9 PZOR (RR S/ABS UPR BRKT)	96	.....	4	11515758
17.	7-C16	7.345	**ABSORBER**, RR SHK (AC-DELCO #580-113)	96	Y (F45)	LH	22064693
	7-C16	7.345	**ABSORBER**, RR SHK (AC-DELCO #580-114)	96	Y (F45)	RH	22064694
18.	7-N2	4.720	**HARNESS**, WHL SPD SEN WRG HARN EXTN	96	Y	2	12090339
19.	7-C18	7.347	**WASHER**, RR S/ABS (POSN 1) (OUTBOARD) (6.178)	96	Y	2	14047778
20.		8.917	**NUT**, HFH LK 14X2X16 19.6 OD 10 7111M (POSN 1) (OUTBOARD)	96	.....	2	11516382
21.	7-C18	7.347	**STUD**, RR S/ABS	96	Y	2	14105141
22.	7-C18	7.347	**WASHER**, RR S/ABS (POSN 2) (INBOARD) (M13X35X3)	96	Y	2	14047726
23.		8.917	**NUT** (POSN 2) (INBOARD)	96	.....	2	11508101
24.	7-C23	7.460	**CONNECTOR**, SOL-S/ABS ELEK SUSP CONT ACTR (2-WAY F) (W/LEADS) (2.530) (AC-DELCO #PT120)	96	Y	AR	12085498
25.		8.900	**BOLT**, HEX W/CON WA, M6X1X20 (ELEK SUSP RR POSN SEN BRKT)	96	.....	4	11514623
26.	7-C23	7.477	**LINK**, ELEK SUSP RR POSN SEN	96	Y (F45)	2	22153246
27.	7-C23	7.477	**STUD**, ELEK SUSP POSN SEN LINK BALL	96	Y (F45)	2	10271003

© 2000 GENERAL MOTORS SERVICE PARTS OPERATIONS-CHEVROLET-14Y

							1Y07-023
28.	7-C23	7.475	SENSOR, ELEK SUSP RR POSN (W/RR VERT ACCLRM)	96	Y (F45)	LH	22153242
	7-C23	7.475	SENSOR, ELEK SUSP RR POSN (W/RR VERT ACCLRM)	96	Y (F45)	RH	22153243
29.	7-N2	4.720	HARNESS, ELEK BRK CONT & ELEC TRACT CONT WRG	96	Y (F45)	1	12130459
	7-N2	4.720	HARNESS, ELEK BRK CONT & ELEC TRACT CONT WRG	96	Y (EXC F45)	1	12130496
30.	7-C21	7.450	CONNECTOR, MDL-ELEK SUSP CONT (LT BLUE) (24-W F) (W/O LEADS) (3.670)	96	Y (F45)	1	12110206
	7-C21	7.450	CONNECTOR, MDL-ELEK SUSP CONT (BLACK) (8-WAY F, W/O LEADS) (4.720)	96	Y (F45)	1	12129088
31.	7-M28	4.710	BRACKET, WHL SPD SEN (POSN #1)	96	Y	2	10052288
	7-M28	4.710	BRACKET, WHL SPD SEN (POSN #2)	96	Y	2	10052289
	7-M28	4.710	BRACKET, WHL SPD SEN (POSN #3)	96	Y	LH	10087787
	7-M28	4.710	BRACKET, WHL SPD SEN (POSN #4)	96	Y	RH	10087788
	7-M28	4.710	BRACKET, WHL SPD SEN (POSN #5)	96	Y	2	10158005
	7-M28	4.710	BRACKET, WHL SPD SEN (POSN #6)	96	Y	2	14091259
	7-M28	4.710	BRACKET, WHL SPD SEN (POSN #7)	96	Y (F45)	LH	10260107
	7-M28	4.710	BRACKET, WHL SPD SEN (POSN #8)	96	Y (F45)	RH	10260108
32.		8.977	SCREW, HEX W/FLAT WA (WHL SPD SEN BRKT)	96	.....	2	12337828
33.	7-N2	4.720	HARNESS, WHL SPD SEN WRG HARN EXTN	96	Y	2	12090339
34.	7-C23	7.475	RETAINER, ELEK SUSP FRT POSN SEN LEAD (PUSH IN)	96	Y (F45)	2	10267803
35.		8.900	BOLT, HFH M8X1.25X50 10.9 POR (FRT S/ABS LWR BRKT)	96	.....	4	14066450
36.		8.917	NUT, PREVAILING TORQUE TENSION FLG HD (M8X1.25X17.4 OD (FRT S/ABS LWR BRKT)	96	.....	4	11515742
37.		N.S.	STUD, ELEK SUSP FRT POSN SEN BRKT		.....		
38.	7-C23	7.477	BRACKET, ELEK SUSP FRT POSN SEN	96	Y (F45)	2	10270999
39.	7-C23	7.477	BOLT, ELEK SUSP FRT POSN SEN BRKT (POSN #2) (10.685) ..	96	Y	2	11515397
40.	7-C23	7.477	LINK, ELEK SUSP FRT POSN SEN	96	Y (F45)	2	22153244
	7-C23	7.477	LINK, ELEK SUSP FRT POSN SEN	96	Y (F45)	RH	22153245
41.		8.900	BOLT, HEX W/CON WA, M6X1X20 (POSN 1)	96	.....	4	11514623
42.	7-C23	7.475	SENSOR, ELEK SUSP FRT POSN (W/FRT VERT ACCLRM) ..	96	Y (F45)	LH	22153240
	7-C23	7.475	SENSOR, ELEK SUSP FRT POSN (W/FRT VERT ACCLRM) ..	96	Y (F45)	RH	22153241
43.		8.977	SCREW, M6.3X1.8X20, TAP, 4345M (FRT W/H LWR FRT PNL) .	96	.....	4	11515986

© 2000 GENERAL MOTORS SERVICE PARTS OPERATIONS-CHEVROLET-14Y

RPO DEFINITIONS

AG1 – ADJUSTER,SEAT,6–WAY POWER,DRIVER(60–40)(VAR 2)
AG2 – ADJUSTER,SEAT,6–WAY POWER,SPLIT BENCH,PASSENGER
AQ9 – SEAT,FRONT BUCKET,DRIVER,PASSENGER,RECLINING
AR9 – SEAT,FRONT BUCKET,DRIVER,PASSENGER,MANUAL RECLINING(EUROPEAN STYLE)
FX3 – RIDE AND HANDLING,ELECTRONIC CONTROLLED
F45 – CHASSIS CONTINUOUS VALVE REAL TIME DAMPING

© 2000 GENERAL MOTORS SERVICE PARTS OPERATIONS–CHEVROLET–14Y

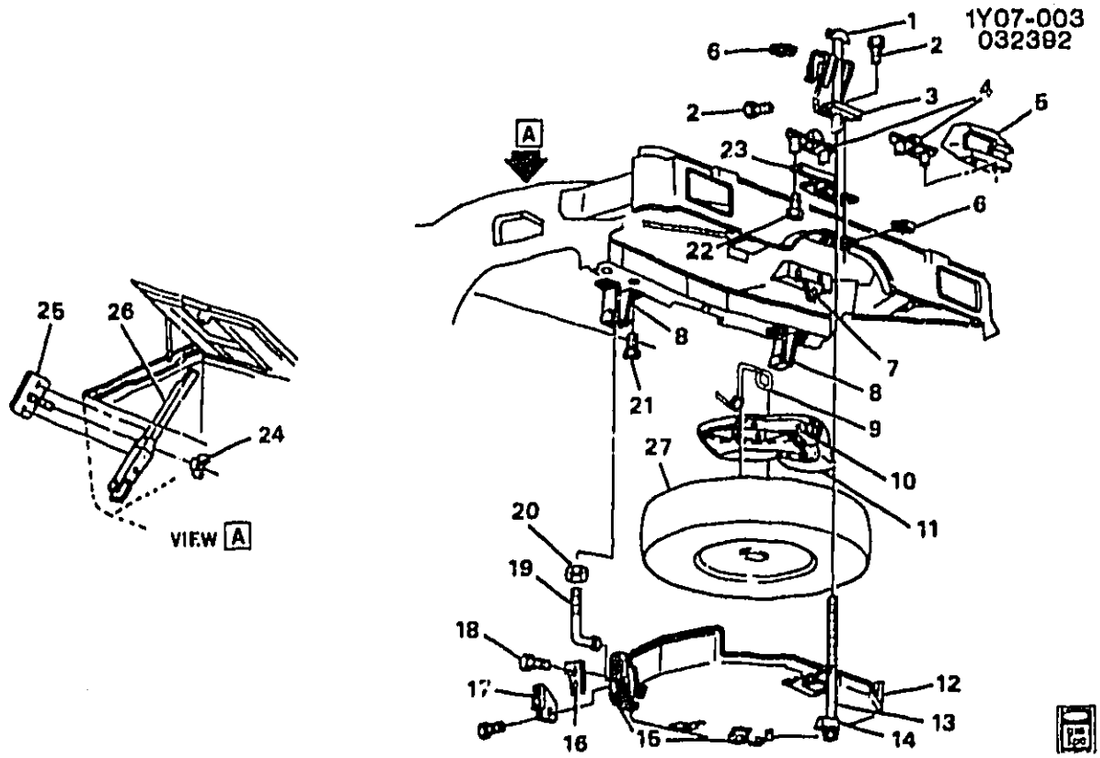

1984–1987 Y SPARE WHEEL CARRIER

1.		N.S.	NUT, SPA WHL CARR LATCH (*KIT1)	10054617
2.		8.900	BOLT, HFH (M6X1X20, 13 THD, 13.6 OD, 9.8 PO) (AR) (AC–DELCO #11517518)	11517518
3.	7–C25	7.629	BRACKET, LAT BOLT	14049218
4.	7–N20	9.988	LAMP, TIRE (2.700)	16519986
	7–M24	2.714	SOCKET, RR LIC LP (AC–DELCO #LS5)	12001470
		8.991	BULB, 194 (12V, 2CP) (AR) (AC–DELCO #L194)	9421330
5.		DISCON	SHIELD, TIRE LP (1987)	10068904
6.		8.921	NUT, U–SHAPE MULTI THRD SPG (M6X1X6.3)	12338002
7.	7–C25	7.629	BRACKET, STOW	14076548
8.	7–C25	7.629	BRACKET, HOOK–RH	14051106
	7–C25	7.629	BRACKET, HOOK–LH	14051105
9.		DISCON	RETAINER, JK STOW (1984)	14060278
	7–N19	8.820	RETAINER, JK STOW (1985–87)	14084442
10.	7–N19	8.820	JACK, (CPS)	10230427
	7–N15	8.808	LABEL, JK CAUTION	21011879
11.		N.S.	BAG, JK STOW	14091075
12.	7–C25	7.629	CARRIER (INCL 15)	14046687
13.		N.S.	BOLT, SPA WHL CARR LAT (*KIT1)	10054616
14.		N.S.	SPACER, SPA WHL CARR LAT BOLT (*KIT1)	10051900
15.		N.S.	BRACKET, SPA WHL STOW TR (PART OF 12)	14049219
		N.S.	BRACKET, SPA WHL STOW TR (PART OF 12)	14049220
16.	7–C25	7.629	RETAINER, HOOK	14051107
17.		DISCON	BRACKET, STOW TRAY–RH (1984)	14060244
		DISCON	BRACKET, STOW TRAY–LH (1984)	14060243
18.		N.S.	RIVET, DOME HD BLIND (.125X.375)	9427909
19.	7–C25	7.629	HOOK	14051104
20.		8.900	NUT, HOOK	14060131
21.		8.900	BOLT, HEX W/CON WA (M8X1.25X25)	11508269
22.		8.977	SCREW, PAN HD TORX W/FL WA TAP (M4.2X2X20)	11508777

© 2000 GENERAL MOTORS SERVICE PARTS OPERATIONS–CHEVROLET–14Y

				1V07-003
23.		DISCON	BRACKET, TIRE LP (1985-86)	14090673
24.	7-M27	3.403	NUT, WING M8X1.25 POR (AR)	14001846
25.		DISCON	PLATE, WRENCH STUD	10051842
26.	7-N19	8.821	HANDLE, JK WRENCH (INCL WHL NUT SOCKET)	14050029
27.		DISCON	WHEEL, COMPACT (STMP DAA)	14046981

SERVICE KITS

1.	7-C27	7.632	BOLT/SCREW KIT, SPA WHL STOW (INCLS 1, 13, 14)	10089668

© 2000 GENERAL MOTORS SERVICE PARTS OPERATIONS-CHEVROLET-14Y

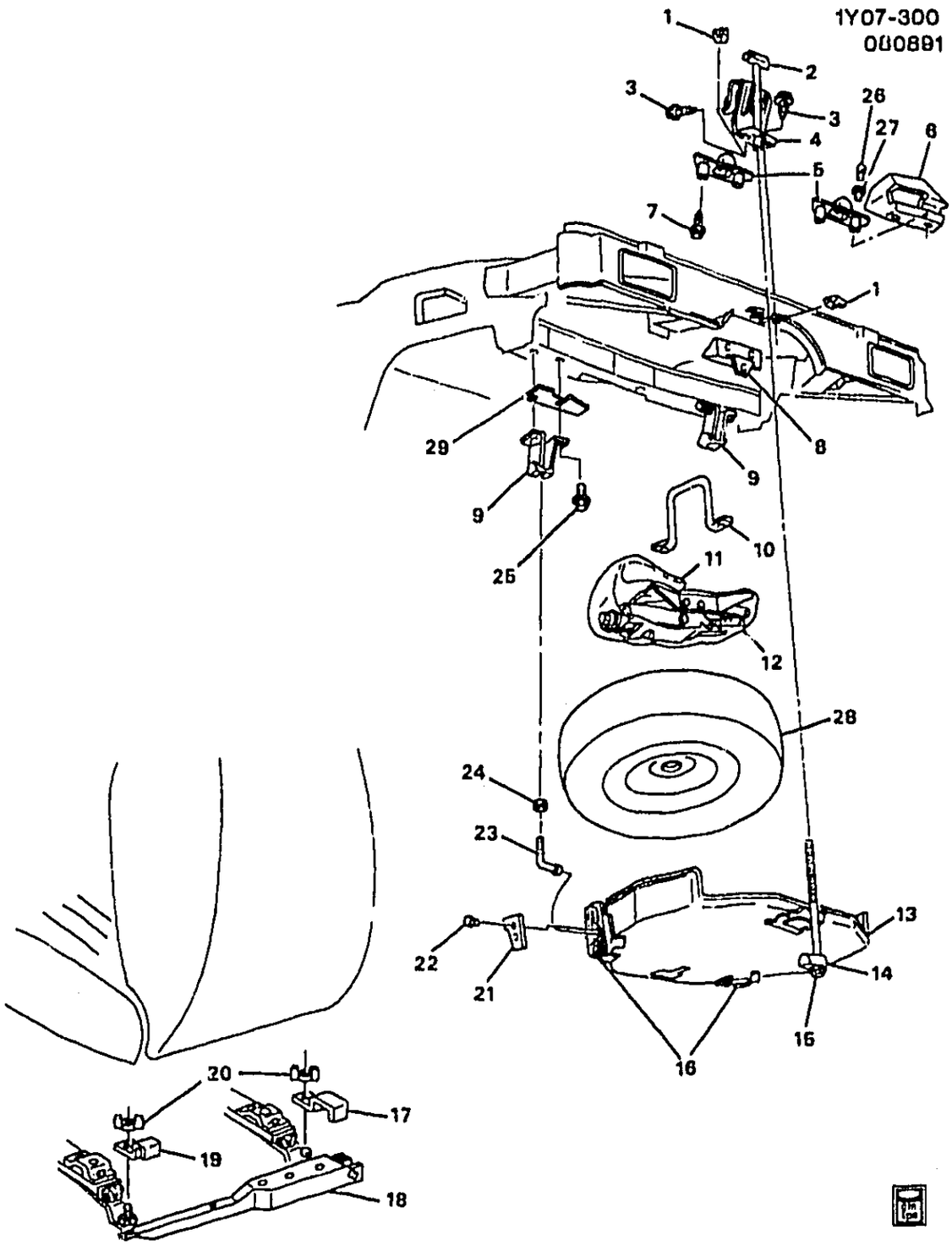

1988-1990 Y SPARE WHEEL CARRIER

1.	8.921	NUT, (SPRING, TYPE C, U-SHAPED, MULTI THD) (M6X1, 1060 PEOR)	88-90	.....	AR 12337917
2.	N.S.	NUT, SPA WHL CARR HOOK (*KIT1)		.....	
3.	8.900	BOLT, HFH (M6X1X20, 13 THD, 13.6 OD, 9.8 PO) (AC-DELCO #11517518)	88-90	.....	AR 11517518

© 2000 GENERAL MOTORS SERVICE PARTS OPERATIONS-CHEVROLET-14

							1Y07-300
4.	7-C25	7.629	BRACKET, SPA WHL CARR LAT BOLT	88-90	Y	1	14049218
5.	7-N20	9.988	LAMP, SPA TIRE (2.700)	88-90	Y	1	16509351
6.		DISCON	SHIELD, TIRE LP	88-90	Y	1	10068904
7.		8.977	SCREW, PAN HD TORX W/FL WA TAP M4.2X2.5X20 SS BLK	88-90		AR	11508777
8.	7-C25	7.629	BRACKET, SPA WHL STOW	88-90	Y	1	14076548
9.	7-C25	7.629	BRACKET, SPA WHL CARR HOOK	88-90	Y	RH	14051106
	7-C25	7.629	BRACKET, SPA WHL CARR HOOK	88-90	Y	LH	14051105
10.	7-N19	8.820	RETAINER, JK STOW	88-90	Y	1	14084442
11.		N.S.	BAG, JK STOW				
12.	7-N19	8.820	JACK, (CPS) (ON 92 & PRIOR MODELS, ALSO REPLACE JACK LABEL W/10219501)	88-90	Y	1	10230427
	7-N15	8.808	LABEL, JK USAGE (INCLS INSTRUCTIONS 5 THRU 8)	88-89	Y67	1	14093194
	7-N15	8.808	LABEL, JK USAGE	88-89	Y07	1	10075210
	7-N15	8.808	LABEL, JK USAGE	90	Y (ZR1)	1	10149277
	7-N15	8.808	LABEL, JK USAGE	90	Y (EXC ZR1)	1	10153625
	7-N15	8.808	LABEL, JK USAGE (STEP 1 & 2)	88-89	Y67	1	10075208
	7-N15	8.808	LABEL, JK USAGE (STEP 3 & 4)	88-89	Y67	1	10075209
13.	7-C25	7.629	CARRIER, SPA WHL (INCL 16)	88-90	Y	1	14046687
14.		N.S.	SPACER, SPA WHL CARR LAT BOLT (*KIT1)				
15.		N.S.	BOLT, SPA WHL CARR LAT (*KIT1)				
16.		N.S.	BRACKET, SPA WHL STOW TRAY (PART OF 13)				
17.	7-N19	8.820	RETAINER, JK/WHL WRENCH HDL INR	88-90	Y	1	10077281
18.	7-N19	8.821	HANDLE, JK/WHL WRENCH (INCLUDES WRENCH FOR 84-90) (8.820)	88-90	Y	1	14050029
19.	7-N19	8.820	RETAINER, JK/WHL WRENCH HDL OTR	88-90	Y	1	10077282
20.	7-M27	3.403	NUT, WING M8X1.25 POR	88-90		AR	14001846
21.	7-C25	7.629	RETAINER, SPA WHL CARR HOOK	88-90	Y	2	14051107
22.		8.967	RIVET, DOME HD BLIND/P/.125X.375 AL	88-90		AR	9427909
23.	7-C25	7.629	HOOK, SPA WHL CARR (SHAPED LIKE THREADED BOLT BENT IN HALF)	88-90	Y	2	14051104
24.	7-C27	7.633	NUT, SPA WHL CARR HOOK (POSN #2) (M10X1.5) (7.245)	88-90	Y	2	14060131
25.		8.900	BOLT, HEX W/CON WA (SPA WHL CARR HOOK BRKT)	88-90		AR	11508269
26.		8.991	BULB, TRADE #24 (AC-DELCO #L24)	88-90		AR	9441837
27.	7-N20	9.988	SOCKET, W/CBL, TIRE LP (2.575) (2.575) (AC-DELCO #LS13)	88-92	Y	2	12083007
28.		DISCON	WHEEL (16X4) (STMP XDW)	88	Y	1	10050958
	7-N9	5.803	WHEEL, 17X4 COMPACT SPA (STAMPED XDX)	88-90	Y (QA1)	1	10050959

© 2000 GENERAL MOTORS SERVICE PARTS OPERATIONS-CHEVROLET-14Y

							1Y07-300
	7-N9	5.803	WHEEL, 17X4 COMPACT SPA (STAMPED XDX)	90	Y (QA2)	1	10050959
29.		N.S.	RETAINER, HOOK	90	.....		

SERVICE KITS

1.	7-C27	7.632	BOLT/SCREW KIT, SPA WHL STOW (INCL #2, 14, 15) (7.629) .	88-90	Y	1	10089668

RPO DEFINITIONS
QA1 – WHEEL,17X9.5 STYLED ALUMINUM
QA2 – WHEEL,17X9.5 FRONT,17X11 REAR,STYLED(ALUMINUM)(USED WITH SPECIAL PERFORMANCE PACKAGE ZR1)
ZR1 – PACKAGE,SPECIAL PERFORMANCE COUPE(1YY07 + ZR1 == 1YZ07)

© 2000 GENERAL MOTORS SERVICE PARTS OPERATIONS-CHEVROLET-14Y

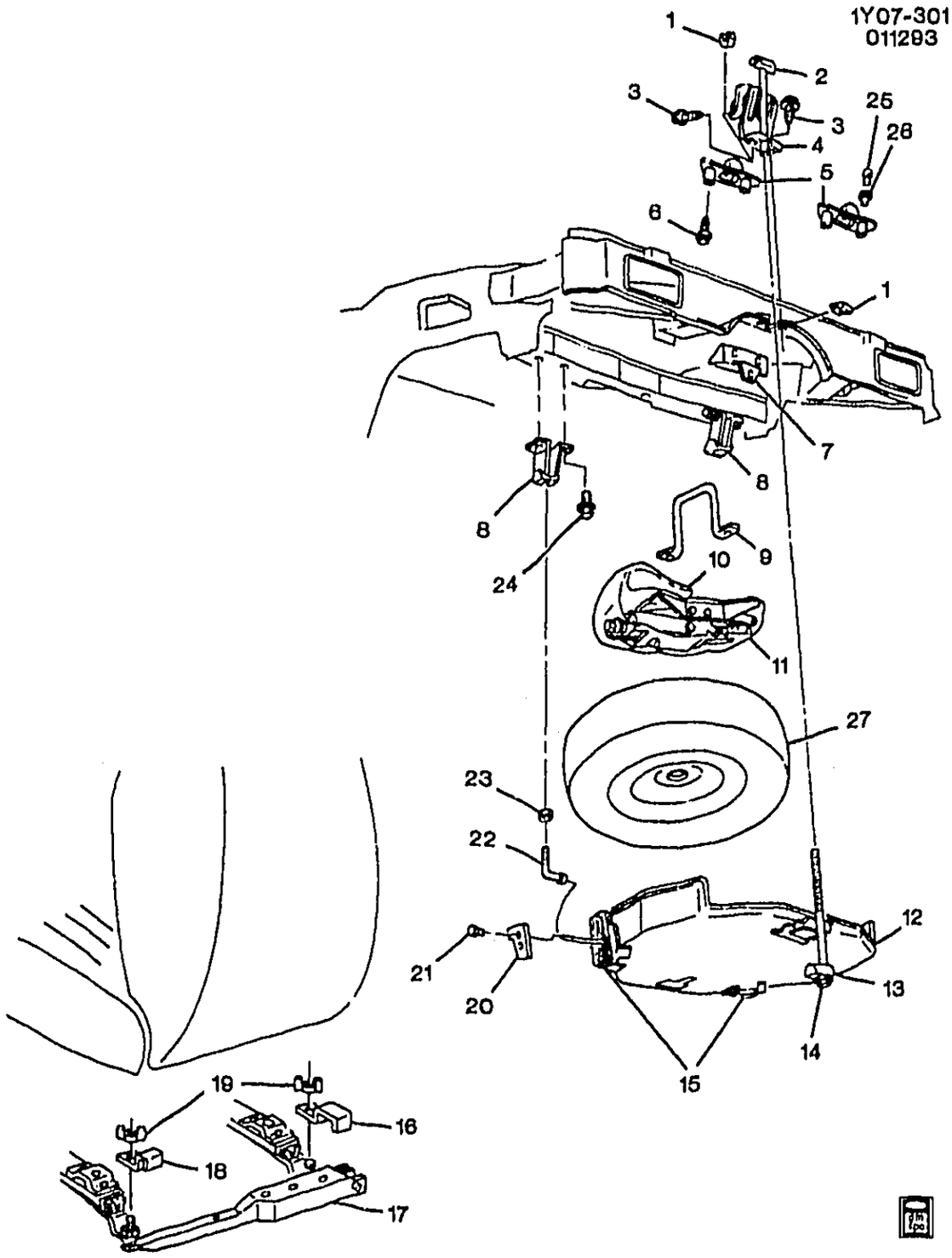

1Y07-301

1991-1992 Y SPARE WHEEL CARRIER

1.	8.921	NUT, (SPRING, TYPE C, U-SHAPED, MULTI THD) (M6X1, 1060 PEOR)	91-92	.....	AR 12337917
2.	N.S.	NUT, SPA WHL CARR HOOK (*KIT1)		.....	
3.	8.900	BOLT, HFH (M6X1X20, 13 THD, 13.6 OD, 9.8 PO) (AC-DELCO #11517518)	91-92	.....	AR 11517518

© 2000 GENERAL MOTORS SERVICE PARTS OPERATIONS-CHEVROLET-14Y

							1Y07-301
4.	7-C25	7.629	BRACKET, SPA WHL CARR LAT BOLT	91-92	Y	1	14049218
5.	7-N20	9.988	LAMP, SPA TIRE (2.700)	91-92	Y	1	16509351
6.		8.977	SCREW, PAN HD TORX W/FL WA TAP M4.2X2.5X20 SS BLK	91-92		AR	11508777
7.	7-C25	7.629	BRACKET, SPA WHL STOW	91-92	Y	1	14076548
8.	7-C25	7.629	BRACKET, SPA WHL CARR HOOK	91-92	Y	RH	14051106
	7-C25	7.629	BRACKET, SPA WHL CARR HOOK	91-92	Y	LH	14051105
9.	7-N19	8.820	RETAINER, JK STOW	91-92	Y	1	14084442
10.		N.S.	BAG, JK STOW				
11.	7-N19	8.820	JACK, (CPS) (ON 92 & PRIOR MODELS, ALSO REPLACE JACK LABEL W/10219501)	91-92	Y	1	10230427
	7-N15	8.808	LABEL, JK USAGE	91-92	Y (ZR1)	1	10149277
	7-N15	8.808	LABEL, JK USAGE	91-92	Y (EXC ZR1)	1	10153625
12.	7-C25	7.629	CARRIER, SPA WHL (INCL 15)	91-92	Y	1	14046667
13.		N.S.	SPACER, SPA WHL CARR LAT BOLT (*KIT1)				
14.		N.S.	BOLT, SPA WHL CARR LAT (*KIT1)				
15.		N.S.	BRACKET, SPA WHL STOW TRAY (PART OF 12)				
16.	7-N19	8.820	RETAINER, JK/WHL WRENCH HDL INR	91-92	Y	1	10077281
17.	7-N19	8.821	HANDLE, JK/WHL WRENCH. (INCLUDES WRENCH FOR 84-90) (8.820)	91-92	Y	1	14050029
18.	7-N19	8.820	RETAINER, JK/WHL WRENCH HDL OTR	91-92	Y	1	10077282
19.	7-M27	3.403	NUT, WING M8X1.25 POR	91-92		AR	14001846
20.	7-C25	7.629	RETAINER, SPA WHL CARR HOOK	91-92	Y	2	14051107
21.		8.667	RIVET, DOME HD BLIND/P/.125X.375 AL	91-92		AR	9427909
22.	7-C25	7.629	HOOK, SPA WHL CARR (SHAPED LIKE THREADED BOLT BENT IN HALF)	91-92	Y	2	14051104
23.	7-C27	7.633	NUT, SPA WHL CARR HOOK (POSN #2) (M10X1.5) (7.245)	91-92	Y	2	14060131
24.		8.900	BOLT, HEX W/CON WA (SPA WHL CARR HOOK BRKT)	91-92		AR	11508269
25.		8.991	BULB, TRADE #24 (AC-DELCO #L24)	91-92		AR	9441837
26.	7-N20	9.988	SOCKET, SPA TIRE LP (W, CABLE) (2.575) (AC-DELCO #LS13)	91-92	Y	1	12083007
27.	7-N9	5.803	WHEEL, 17X4 COMPACT SPA (STAMPED XDX)	91-92	Y (QA1)	1	10050959
	7-N9	5.803	WHEEL, 17X4 COMPACT SPA (STAMPED XDX)	91-92	Y (QA2)	1	10050959

SERVICE KITS

1.	7-C27	7.632	BOLT/SCREW KIT, SPA WHL STOW (INCL 2, 13, 14) (7.629)	91-92	Y	1	10089668

RPO DEFINITIONS
QA1 – WHEEL,17X9.5 STYLED ALUMINUM

© 2000 GENERAL MOTORS SERVICE PARTS OPERATIONS-CHEVROLET-14Y

QA2 – WHEEL,17X9.5 FRONT,17X11 REAR,STYLED(ALUMINUM)(USED WITH SPECIAL PERFORMANCE PACKAGE ZR1)
ZR1 – PACKAGE,SPECIAL PERFORMANCE COUPE(1YY07 + ZR1 == 1YZ07)

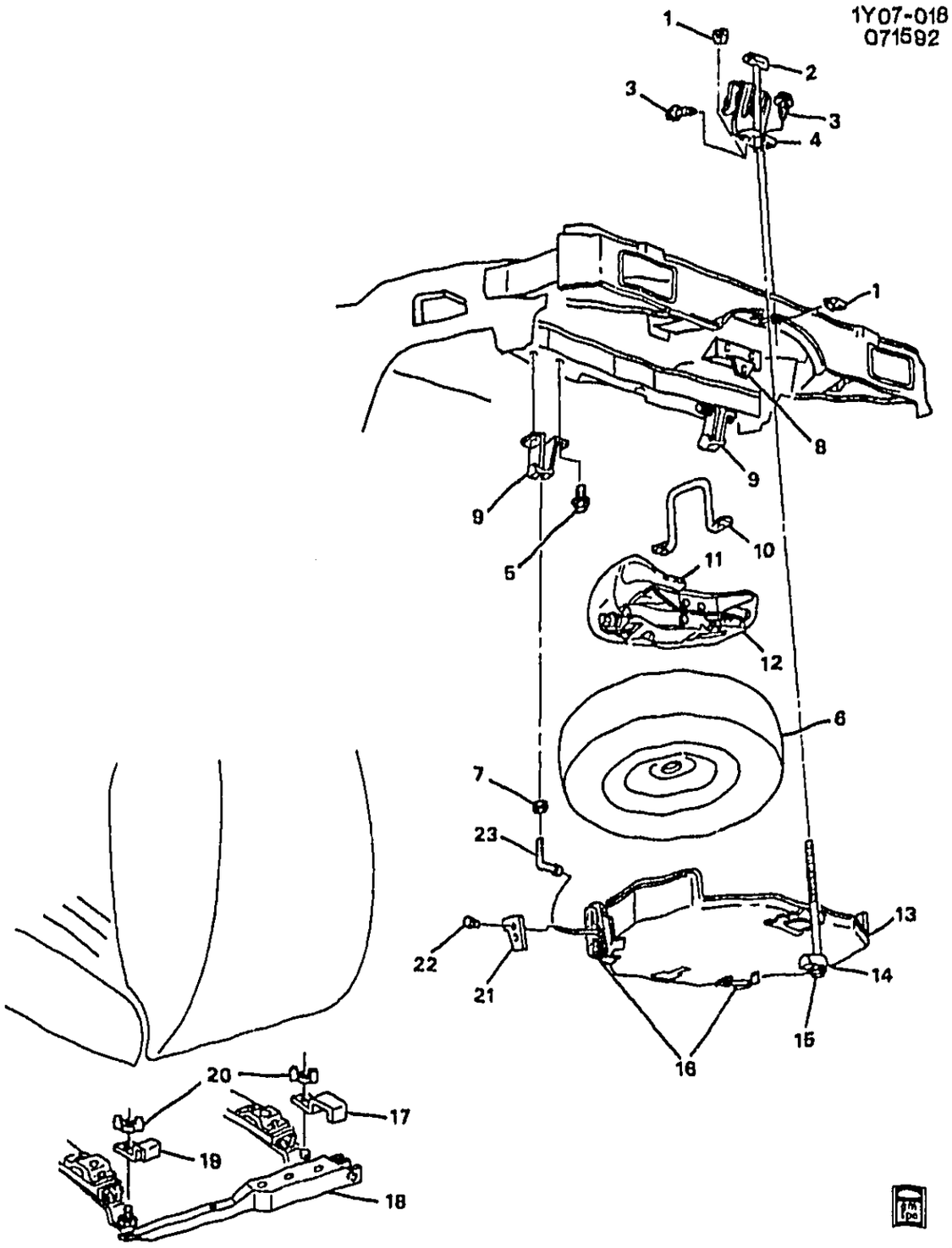

1Y07-018

1993-1996 Y SPARE WHEEL CARRIER

1.	8.921	NUT, (SPRING, TYPE C, U-SHAPED, MULTI THD) (M6X1, 1060 PEOR)	93-96	.....	AR 12337917
2.	N.S.	NUT, SPA WHL CARR HOOK (*KIT1)		.....	
3.	8.900	BOLT, HFH (M6X1X20, 13 THD, 13.6 OD, 9.8 PO) (AC-DELCO #11517518)	93-96	.....	AR 11517518

© 2000 GENERAL MOTORS SERVICE PARTS OPERATIONS-CHEVROLET-14Y

							1Y07-018
4.	7-C25	7.629	BRACKET, SPA WHL CARR LAT BOLT	93	Y	1	14049218
		N.S.	BRACKET, SPA WHL CARR LAT BOLT (POA BAR ASM IMP #10246744)	94-96			
5.		8.900	BOLT, HEX W/CON WA (SPA WHL CARR HOOK BRKT)	93-96		AR	11508269
6.	7-N9	5.803	WHEEL, 17X4 COMPACT SPA (STMP XDX) (STAMPED XDX)	93-95	Y	1	10050959
	7-N9	5.803	WHEEL, 17X4 COMPACT SPA (STMP XDX) (STAMPED XDX)	96	Y (EXC N84)	1	10050959
7.	7-C27	7.633	NUT, SPA WHL CARR HOOK (POSN #2) (M10X1.5) (7.245)	93-94	Y	2	14060131
	7-C27	7.633	NUT, SPA WHL CARR HOOK (POSN #2) (M10X1.5) (7.245)	95-96	Y (EXC N84)	2	14060131
8.	7-C25	7.629	BRACKET, SPA WHL STOW	93	Y	1	14076548
		N.S.	BRACKET, SPA WHL STOW (NOT USED IN 1994-96)	94-96			
9.	7-C25	7.629	BRACKET, SPA WHL CARR HOOK	93-96	Y	RH	14051106
	7-C25	7.629	BRACKET, SPA WHL CARR HOOK	93-96	Y	LH	14051105
10.	7-N19	8.820	RETAINER, JK STOW	93	Y	1	14084442
		N.S.	RETAINER, JK STOW (NOT USED IN 1994-96)	94-96			
11.		N.S.	BAG, JK STOW	93			
	7-N19	8.820	CONTAINER, JK STOW	94-96	Y07	1	10219041
	7-N19	8.820	CONTAINER, JK STOW	94-96	Y67	1	10219040
12.	7-N19	8.820	JACK, (CPS)	93-96	Y	1	10230427
	7-N15	8.808	LABEL, JK USAGE	93	Y	1	10219501
	7-N15	8.808	LABEL, JK USAGE	94-95	[illegible]	1	10224195
	7-N15	8.808	LABEL, JK USAGE	96	[illegible]C N84)	1	10276417
13.	7-C25	7.629	CARRIER, SPA WHL (INCL 16)	93-96	Y	1	14046687
14.		N.S.	SPACER, SPA WHL CARR LAT BOLT (*KIT1)				
15.		N.S.	BOLT, SPA WHL CARR LAT (*KIT1)				
16.		N.S.	BRACKET, SPA WHL STOW TRAY (PART OF 13)				
17.	7-N19	8.820	RETAINER, JK/WHL WRENCH HDL INR	93-96	Y	1	10077281
18	7-N19	8.821	HANDLE, JK/WHL WRENCH (INCLUDES WRENCH FOR 84-90) (8.820)	93-95	Y	1	14050029
19.	7-N19	8.820	RETAINER, JK/WHL WRENCH HDL OTR	93-96	Y	1	10077202
20.	7-M27	3.403	NUT, WING M8X1.25 POR	93-96		AR	14001846
21.	7-C25	7.629	RETAINER, SPA WHL CARR HOOK	93-95	Y	2	14051107
	7-C25	7.629	RETAINER, SPA WHL CARR HOOK	96	Y (EXC N84)	2	14051107
22.		8.967	RIVET, DOME HD BLIND/P/.125X.375 AL	93-96		AR	9427909
23.	7-C25	7.629	HOOK, SPA WHL CARR (SHAPED LIKE THREADED BOLT BENT IN HALF)	93-96	Y	2	14051104

© 2000 GENERAL MOTORS SERVICE PARTS OPERATIONS-CHEVROLET-14Y

							1Y07-018
	7-C25	7.629	HOOK, SPA WHL CARR (U-SHAPED W/BOLT HOLE ON EACH END) (7.632)	96	Y07 (Z16)	1	14104743
	7-C25	7.629	HOOK, SPA WHL CARR (CTR FRT) (U-SHAPED W/BOLT HOLE ON EACH END) (7.632)	93-95	Y07 (ZR1)	1	14104743

SERVICE KITS

1.	7-C27	7.632	BOLT/SCREW KIT, SPA WHL STOW (INCL 2, 14, 15) (7.629) ...	93-96	Y	1	10089668

RPO DEFINITIONS
N84 – SPARE TIRE(DELETE)
ZR1 – PACKAGE,SPECIAL PERFORMANCE COUPE(1YY07 + ZR1 == 1YZ07)
Z16 – APPEARANCE PACKAGE,GRAND SPORT EDITION

MICROFICHE INDEX

GROUPS 6.000 THRU 7.000

FICHE 7 OF 11

GROUP	DESCRIPTION	STARTING GRID LOCATION PARTS	ILLUSTRATIONS
–	GENERAL INFORMATION	1–A2	1–G2
–	ALPHABETICAL INDEX	1–B13	N.A.
6.000	FRONT SUSPENSION – STEERING	7–A2	7–E2
7.000	FRAMES – SPRINGS – SHOCKS – BUMPERS	7–C2	7–H2
–	OUT OF FICHE CALLS	N.A.	7–M17

7–J1

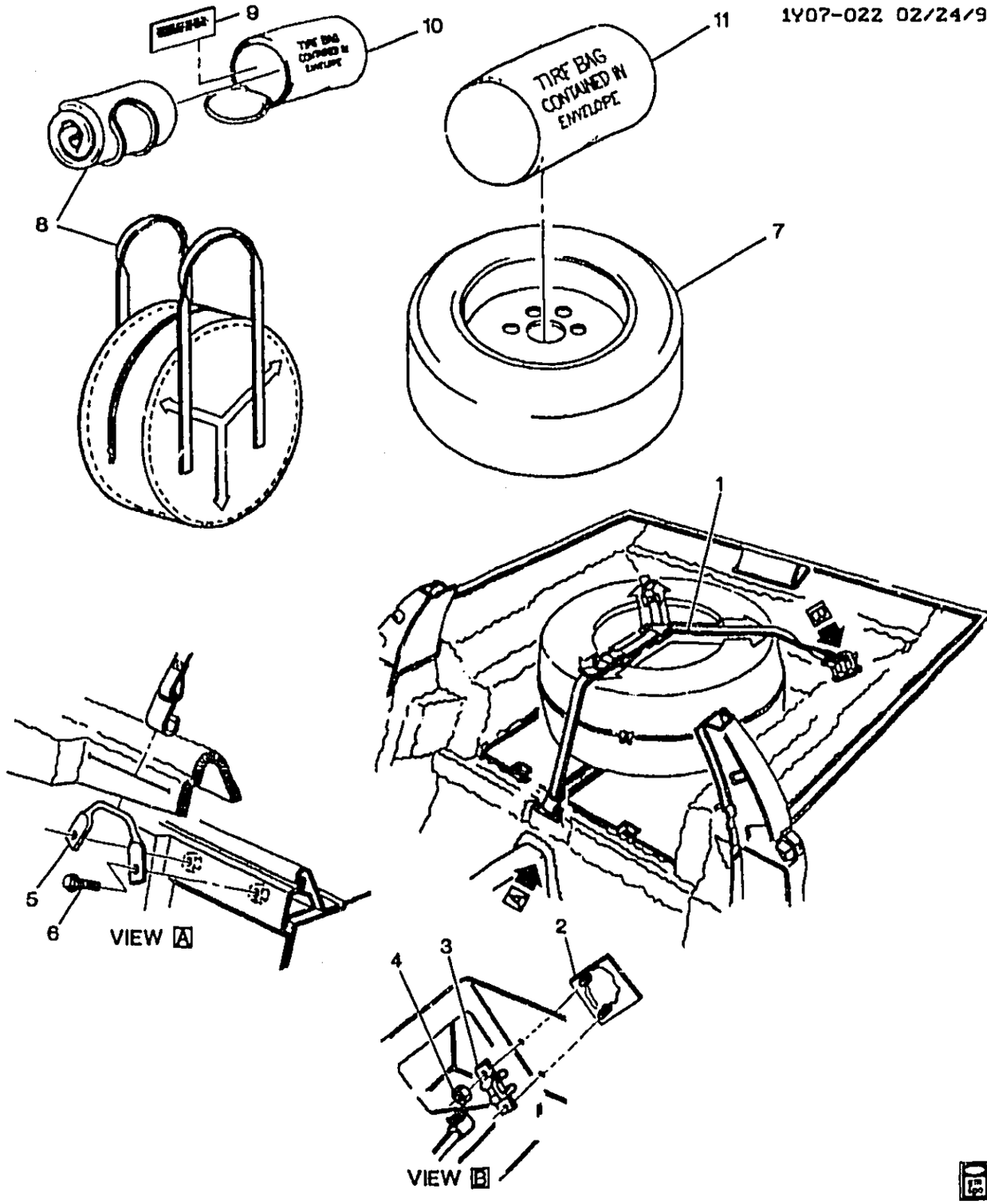

1Y07-022

1990-1995 Y07 ROAD WHEEL STORAGE/EMERGENCY TRANSPORTING(ZR1)
1996 Y ROAD WHEEL STORAGE EMERGENCY TRANSPORTING(Z16)

1.		DISCON	STRAP, SPA WHL STOW (COGNAC) (15.222)	90-91	Y (ZR1, 60I)	1	10135991
		DISCON	STRAP, SPA WHL STOW (15.222)	90-91	Y (ZR1, 90I)	1	10135993
	7-C25	7.629	STRAP, SPA WHL STOW (STEEL BLUE)	90-91	Y (ZR1, 22I)	1	10135994

© 2000 GENERAL MOTORS SERVICE PARTS OPERATIONS-CHEVROLET-14Y

							1Y07-022
	7-C25	7.629	STRAP, SPA WHL STOW (BLACK)	91-92	Y07 (ZR1, 19I)	1	10135966
	7-C25	7.629	STRAP, SPA WHL STOW (BEIGE)	92-95	Y (ZR1, 64I)	1	10175709
	7-C25	7.629	STRAP, SPA WHL STOW (GRAY)	92-95	Y (ZR1, 14I)	1	10175710
	7-C25	7.629	STRAP, SPA WHL STOW (BLACK)	93	Y07 (ZR1, 10I, 19I)	1	10135966
	7-C25	7.629	STRAP, SPA WHL STOW (RED)	93	Y07 (ZR1, 79I)	1	10199545
	7-C25	7.629	STRAP, SPA WHL STOW (RED)	93-95	Y07 (ZR1, 70I)	1	10199586
	7-C25	7.629	STRAP, SPA WHL STOW (BLACK)	94-95	Y07 (ZR1, 19I)	1	10135966
	7-C25	7.629	STRAP, SPA WHL STOW (BLACK)	96	Y07 (Z16, 19I)	1	10135966
	7-C25	7.629	STRAP, SPA WHL STOW (BLACK)	90	Y07 (FE7, ZR1, 19I)	1	10135966
2.	7-C25	7.629	PLATE, SPA WHL CARR	90-95	Y07 (ZR1)	2	14104750
	7-C25	7.629	PLATE, SPA WHL CARR	96	Y07 (Z16)	2	14104750
3.	7-C25	7.629	HOOK, SPA WHL CARR	96	Y07 (Z16)	2	14104741
	7-C25	7.629	HOOK, SPA WHL CARR (RR SI)	90-95	Y07 (ZR1)	2	14104741
4.		8.917	NUT, HFH M6X1X6.5 ZOR 9 (SPA WHL CARR HOOK)	90-96		AR	3530297
5.	7-C25	7.629	HOOK, SPA WHL CARR (U-SHAPED W/BOLT HOLE ON EACH END) (7.632)	96	Y07 (Z16)	1	14104743
	7-C25	7.629	HOOK, SPA WHL CARR (CTR FRT) (U-SHAPED W/BOLT HOLE ON EACH END) (7.632)	90-95	Y07 (ZR1)	1	14104743
6.	7-C25	7.629	BOLT, SPA WHL CARR HNGR (M6X1X20) (8.131)	90-95	Y (ZR1)	2	25601642
	7-C25	7.629	BOLT, SPA WHL CARR HNGR (M6X1X20) (8.131)	96	Y (Z16)	2	25601642
7.	7-N9	5.803	WHEEL, 17X4 COMPACT SPA (SEE GROUP 7.000 "SPARE WHEEL CARRIER" FOR DETAIL ILLUSTRATED VIEW) (STAMPED XDX)	90-92	Y (QA1)	1	10050959
	7-N9	5.803	WHEEL, 17X4 COMPACT SPA (SEE GROUP 7.000 "SPARE WHEEL CARRIER" FOR DETAIL ILLUSTRATED VIEW) (STAMPED XDX)	90-92	Y (QA2)	1	10050959
	7-N9	5.803	WHEEL, 17X4 COMPACT SPA (SEE GROUP 7.000 "SPARE WHEEL CARRIER" FOR DETAIL ILLUSTRATED VIEW) (STAMPED XDX)	93-95	Y	1	10050959
	7-N9	5.803	WHEEL, 17X4 COMPACT SPA (SEE GROUP 7.000 "SPARE WHEEL CARRIER" FOR DETAIL ILLUSTRATED VIEW) (STAMPED XDX)	96	Y (EXC N84)	1	10050959
8.	7-C25	7.629	BAG, PASS COMPT SPA WHL STOW (W/O CVR) (ALSO PART OF ITEM 11)	90-95	Y07 (ZR1)	1	14104744
	7-C25	7.629	BAG, PASS COMPT SPA WHL STOW (W/O CVR) (ALSO PART OF ITEM 11)	96	Y07 (Z16)	1	14104744

							1Y07-022
9.	7-N15	8.808	**LABEL**, PASS COMPT SPA WHL STOW INSTR (ALSO PART OF ITEM 11)	90-95	Y07 (ZR1)	1	10149274
	7-N15	8.808	**LABEL**, PASS COMPT SPA WHL STOW INSTR (ALSO PART OF ITEM 11)	96	Y07 (Z16)	1	10149274
10.		N.S.	**COVER**, ROAD WHL STOW BAG (PART OF ITEM 11)		.....		
11.	7-C25	7.629	**BAG**, PASS COMPT SPA WHL STOW (W/CVR) (INCLS ITEMS 8, 9, 10) (15.222)	90-95	Y07 (ZR1)	1	10153619
	7-C25	7.629	**BAG**, PASS COMPT SPA WHL STOW (W/CVR) (INCLS ITEMS 8, 9, 10) (15.222)	96	Y07 (Z16)	1	10153619

RPO DEFINITIONS

FE7 – SUSPENSION SYSTEM,FRONT AND REAR,HEAVY DUTY(USED WITH PERFORMANCE HANDLING PACKAGE Z51)
N84 – SPARE TIRE(DELETE)
QA1 – WHEEL,17X9.5 STYLED ALUMINUM
QA2 – WHEEL,17X9.5 FRONT,17X11 REAR,STYLED(ALUMINUM)(USED WITH SPECIAL PERFORMANCE PACKAGE ZR1)
ZR1 – PACKAGE,SPECIAL PERFORMANCE COUPE(1YY07 + ZR1 == 1YZ07)
Z16 – APPEARANCE PACKAGE,GRAND SPORT EDITION
10I – INTERIOR TRIM– ARCTIC WHITE
14I – INTERIOR TRIM LT GRAY
19I – INTERIOR TRIM,BLACK
22I – INTERIOR TRIM,DARK ROYAL BLUE
60I – INTERIOR TRIM,DARK COGNAC
64I – INTERIOR TRIM,LIGHT BEIGE
70I – INTERIOR TRIM,TORCH RED
79I – INTERIOR TRIM,RUBY RED
90I – INTERIOR TRIM,SMOKE GRAY

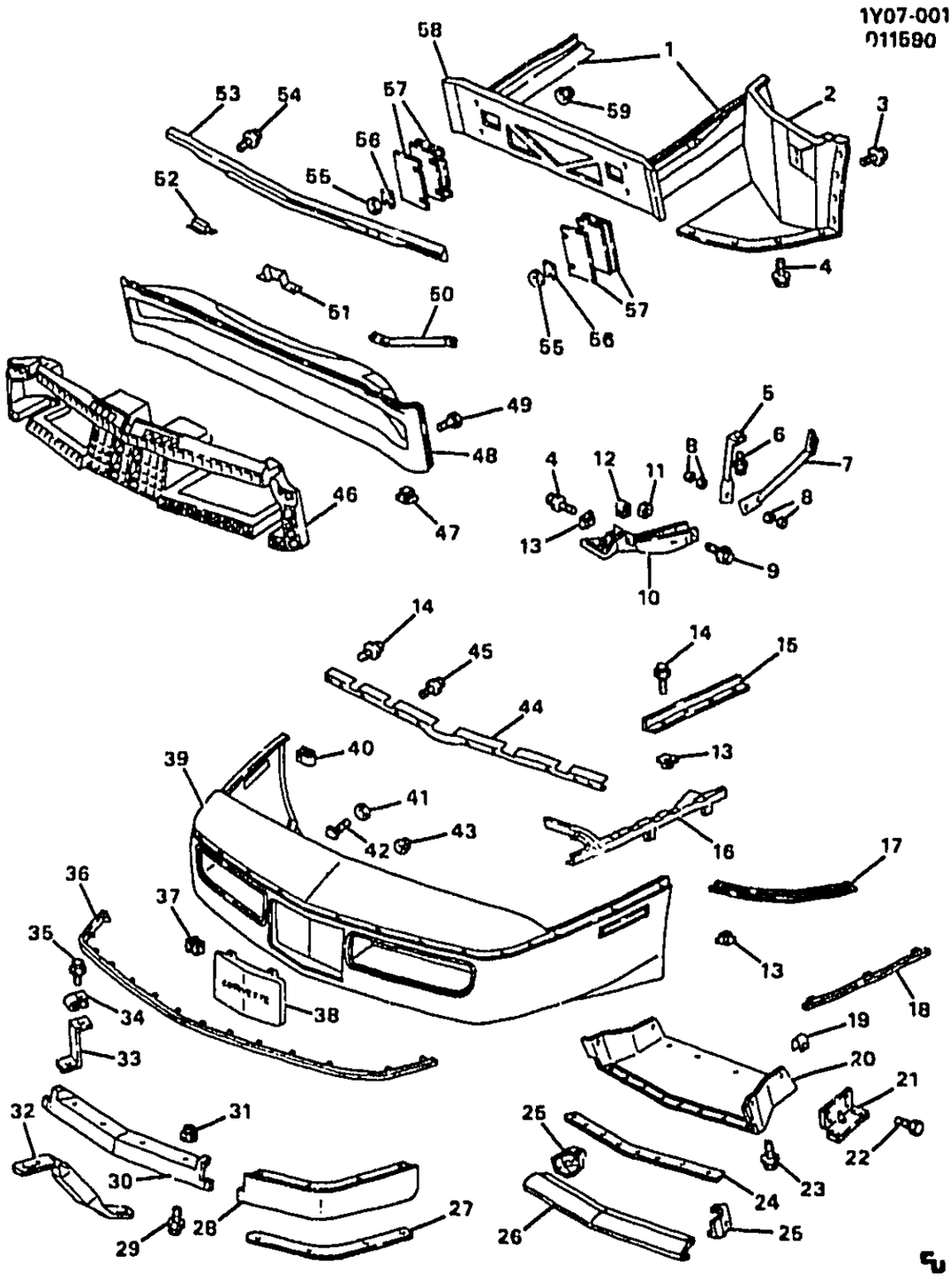

1984–1988 Y BUMPER/FRONT

1.		DISCON	**MEMBER**, SI INR–RH (1988 Y07 W/Z51, Z52) (1988 Y67) (SEE PARTS SECTION FOR ADDITIONAL USAGE.)	10112672
		DISCON	**MEMBER**, SI INR–LH (1988 Y07 W/Z51, Z52) (1988 Y67) (SEE PARTS SECTION FOR ADDITIONAL USAGE.)	10112671
2.	7–N14	8.153	**PANEL**, W/H LWR FRT–RH (1984–87) (IT MAY BE NECESSARY TO RELOCATE MOUNTING HOLE IN BRACKET AT RADIATOR LOWER BAFFLE ON 1984 MODELS.)	14081834

© 2000 GENERAL MOTORS SERVICE PARTS OPERATIONS–CHEVROLET–14Y

				1Y07-001
	7-N14	8.153	PANEL, W/H LWR FRT-RH (1988)	14104002
	7-N14	8.153	PANEL, W/H LWR FRT-LH (1984-87) (IT MAY BE NECESSARY TO RELOCATE MOUNTING HOLE IN BRACKET AT RADIATOR LOWER BAFFLE ON 1984 MODELS.)	14081833
	7-N14	8.153	PANEL, W/H LWR FRT-LH (1988)	14104001
3.		8.977	SCREW, PAN HD TORX (M6.3X1.81X25)	12338098
4.		8.977	BOLT, HWH (M4.2X1.41X25)	11508233
5.	7-D9	7.836	SUPPORT, IMP BAR SKID PLT	14060231
6.		8.900	BOLT, HEX W/CON WA (M8X1.25X30)	11508269
7.	7-C28	7.831	EXTENSION, IMP BAR SKID PLT-RH	14078644
	7-C28	7.831	EXTENSION, IMP BAR SKID PLT-LH	14078643
8.		N.S.	SHIM, IMP BAR SKID PLT	
9.		8.900	BOLT, FHH (M8X1.25X45)	11514158
10.	7-D9	7.836	PLATE, IMP BAR SKID	14078685
11.		8.917	NUT, HFH (M8X1.25X7.5) (AC-DELCO #11514596)	11514596
12.		8.921	NUT-U, M8X1.25, 17 WIDE, 32 OAL, 21 CTR TO END, 8-4 PNL RANGE (AR)	11516150
13.	7-M24	2.729	NUT, SPL ANC NY (SQ HOLE)	347347
14.		8.977	SCREW, PAN HD TORX TAP (M4.2X1.41X25)	11504662
15.	7-N14	8.153	SUPPORT, W/H PNL-RH	14064556
	7-N14	8.153	SUPPORT, W/H PNL-LH	14064555
16.	7-C28	7.831	REINFORCEMENT, FASCIA OTR-RH	10149204
	7-C28	7.831	REINFORCEMENT, FASCIA OTR-LH	10149203
17.	7-C28	7.831	RETAINER, FASCIA OTR	10149282
18.	7-D4	7.832	MOLDING, FASCIA OTR-RH (1984-87) (1988 EXC B57)	14043090
		DISCON	MOLDING, FASCIA OTR-RH (1988 W/B57)	10123016
	7-D4	7.832	MOLDING, FASCIA OTR-LH (1984-87) (1988 EXC B57)	14043089
		DISCON	MOLDING, FASCIA OTR-LH (1988 W/B57)	10123015
19.		8.921	NUT, U-TYPE (6.3X1.81)	11509582
20.	7-M19	1.272	BAFFLE, RAD AIR LWR (1984)	14030214
	7-M19	1.272	BAFFLE, RAD AIR LWR (1985-88)	14078642
21.		DISCON	BRACKET, W/H PNL-RH (1984)	14069628
		DISCON	BRACKET, W/H PNL-RH (1985-87)	14081836
		DISCON	BRACKET, W/H PNL-LH (1984)	14069627
		DISCON	BRACKET, W/H PNL-LH (1985-37)	14081835
22.		8.977	SCREW, HWH TAP W/FL WA (M6.3X1.81X25)	11505023
23.		8.977	SCREW, HEX W/WA (M4.2X1.41X16)	25512804
24.	7-M20	1.276	RETAINER, RAD AIR LWR BFL	14043167
25.	7-M18	1.267	BRACKET, RAD GRL INR-RH	14058300
	7-M18	1.267	BRACKET, RAD GRL INR-RH	14058299
26.	7-M18	1.267	PANEL, RAD GRL MT	14058670
27.	7-D8	7.833	RETAINER, AIR DEFL FASCIA LWR	14043166
28.	7-M19	1.272	DEFLECTOR, RH (1984-85) (1987-88 EXC Z51) (1ST DESIGN 1985 - WITHOUT STIFFENING RIBS ON DEFLECTOR BACK.	14043136
	7-M19	1.272	DEFLECTOR, RH (1985-86) (1987-88 W/Z51) (2ND DESIGN 1985 - STIFFENING RIBS ON DEFLECTOR BACK.)	14089636
	7-M19	1.272	DEFLECTOR, LH (1984-85) (1987-88 EXC Z51) (1ST DESIGN 1985 - WITHOUT STIFFENING RIBS ON DEFLECTOR BACK)	14043135
	7-M19	1.272	DEFLECTOR, LH (1985-86) (1987-88 W/Z51) (2ND DESIGN 1985 - WITH STIFFENING RIBS ON DEFLECTOR BACK)	14089635
29.		8.913	SCREW, PAN HD TORX W/CON WA (M6X1X16)	11509468
30.	7-M19	1.272	DEFLECTOR KIT, AIR (1984-85) (1987-88 EXC Z51) (INCL 32-35) (1ST DESIGN 1985 - WITHOUT STIFFENING RIBS ON DEFLECTOR BACK) (*1)	10107825
	7-M19	1.272	DEFLECTOR KIT, AIR (1985-86) (1987-88 W/Z51) (INCL 32-35) (2ND DESIGN 1985 - WITH STIFFENING RIBS ON DEFLECTOR BACK) (*1)	10107324

© 2000 GENERAL MOTORS SERVICE PARTS OPERATIONS-CHEVROLET-TAY

				1Y07-001
	7-M19	1.272	DEFLECTOR, CTR (SHORT) (1984-85) (1987-88 EXC Z51) (1ST DESIGN 1985 - WITHOUT STIFFENING RIBS ON DEFLECTOR BACK)	14043137
	7-M19	1.272	DEFLECTOR, CTR (LONG) (1985-86) (1987-88 W/Z51) (2ND DESIGN 1985 - WITH STIFFENING RIBS ON DEFLECTOR BACK)	14089634
31.		8.917	NUT, HEX FLG (M6.3X1)	11502876
32.	7-M19	1.272	BRACE, AIR DEFL UPR CTR (PART OF 30)	10077360
33.	7-M18	1.267	BRACKET, RAD GRL CTR (PART OF 30)	10077355
34.		8.921	NUT, U-SHAPE MULTI THRD SPR (M6X1X6.3) (PART OF 30)	11504978
35.	7-M19	1.272	SCREW, AIR DEFL PKG (PART OF 30) (AC-DELCO #11517518)	11517518
36.	7-D4	7.832	MOLDING, FASCIA CTR (1984-87) (1988 EXC B57)	14043087
		DISCON	MOLDING, FASCIA CTR (1988 W/B57)	10123017
37.	7-C27	7.800	NUT, METRIC NY ANC (1/4X14X9.7)	559547
38.	7-C27	7.800	PLATE, LIC NA "CORVETTE"	14049269
39.	7-C28	7.831	FASCIA	14030201
40.		8.921	NUT, U-SHAPE (M4.2X1.41) (AC-DELCO #15650655)	15650655
41.		3.921	NUT, PUSH-ON (M8X1.25)	10009923
42.	7-D8	7.833	STUD, IMP BAR	14060237
43.		8.917	NUT, HEX W/CON WA (M5X.8) (AC-DELCO #11504614)	11504614
44.	7-C28	7.831	RETAINER, FASCIA CTR	14046637
45.		8.977	SCREW, SEMS HEX W/FL WA (M6.3X1.81X20)	12337828
46.	7-D9	7.840	ABSORBER, FASCIA ENERGY (AC-DELCO #16500755)	16500755
47.		8.921	NUT (.370 SQ HOLE, .250 HD, .625 SQ)	3907444
48.	7-C28	7.831	BAR, IMP (USE 2-PIECE REINF) (*1)	10135948
		8.977	SCREW, HWH W/WA (M4.2X1.41X20)	11513801
49.		8.900	SCREW, HEX W/CON WA (M8X1.25X30)	11508269
50.	7-D8	7.833	BRACE, FASCIA-RH	14076526
	7-D8	7.833	BRACE, FASCIA-LH	14076525
51.	7-D9	7.836	BRACKET, FASCIA CTR REINF	14064558
52.	7-C28	7.831	BRACKET, FASCIA REINF	14049078
53.	7-C28	7.831	REINFORCEMENT, FASCIA CTR	14049010
54.		8.977	SCREW, SEMS HEX W/FL WA (M6.3X1.81X20)	12337828
55.	7-D8	7.833	SHIM, FRT BPR IMP BAR (30MM DIAM) (1985-88) (POSN #4)	14090620
56.	7-D10	7.865	SHIM, FRT BPR IMP BAR (21MMX38MM) (POSN #3)	14081864
57.	7-D10	7.865	SHIM, FRT BPR IMP BAR (53MMX177MMX.8MM) (POSN #1)	14046663
	7-D10	7.865	SHIM, FRT BPR IMP BAR (53MMX177MMX3MM) (POSN #2)	14046664
58.	7-C9	7.010	SILL, U/B FRT CR	14090676
59.		8.917	NUT, HEX W/CON WA (M8X1.25X7.8)	11506117

NOTE 1: WHEN USED TO REPLACE BAR WITH ONE PIECE REINFORCEMENT, ALSO USE (7.831) 10135949-50 REINFORCEMENTS. DISCARD CENTER BRACKET & END BRACES.

© 2000 GENERAL MOTORS SERVICE PARTS OPERATIONS-CHEVROLET-14Y

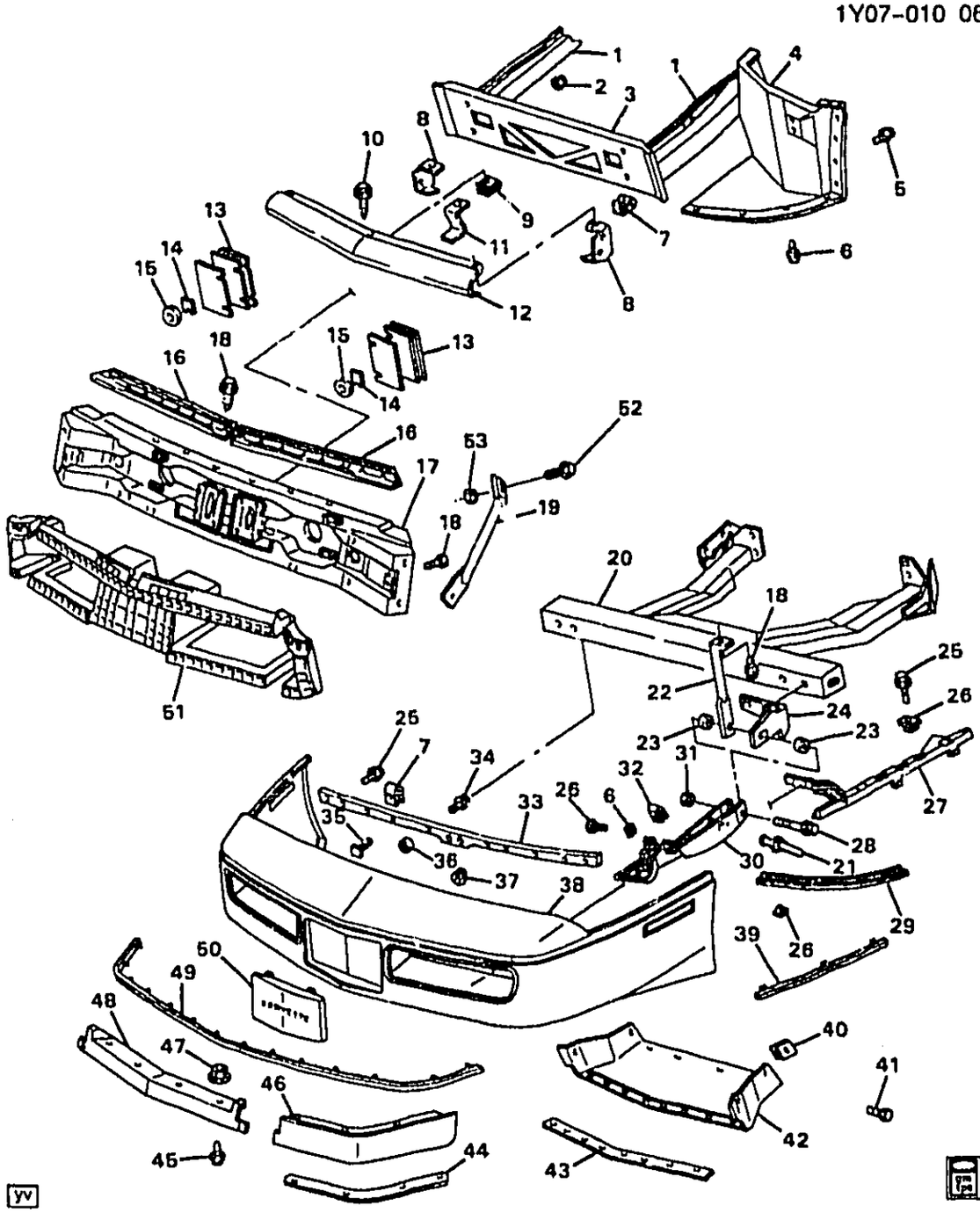

1Y07-010

1989-1990 Y BUMPER/FRONT

1.		DISCON	MEMBER, SI-RH (1989)	10132714
	7-C8	7.006	MEMBER, SI-RH (1990)	10174972
		DISCON	MEMBER, SI-LH (1989)	10132713
	7-C8	7.006	RAIL, F/CMPT SI (LH) (1990)	12529345
2.		8.917	NUT, HEX W/CON WA (M8X1.25X7.5)	11506117
3.	7-C9	7.010	SILL, U/B FRT CR	14090676
4.	7-N14	8.153	PANEL, W/H LWR-RH	14104002
	7-N14	8.153	PANEL, W/H LWR-LH	14104001
5.		8.977	SCREW, PAN HD TORX (M6.3X1.81X25)	12338098
6.		8.977	SCREW, HWH (M4.2X1.41X25)	11508233
7.		8.921	NUT, U SHAPE (M4.2X1.41) (AC-DELCO #15650655)	15650655

© 2000 GENERAL MOTORS SERVICE PARTS OPERATIONS-CHEVROLET-14Y

				1Y07-010
8.	7-M18	1.267	BRACKET, RAD GRL INR-RH (1989)	14058300
		DISCON	BRACKET, RAD GRL INR-RH (1990)	14104984
	7-M18	1.267	BRACKET, RAD GRL INR-LH (1989)	14058299
	7-M18	1.267	BRACKET, RAD GRL INR-LH (1990)	14104983
9.		8.921	NUT (M6X1)	12337917
10.		8.900	BOLT, HFH (M6X1X20, 13 THD, 13.6 OD, 9.8 PO) (HEX FLG HD) (AR) (AC-DELCO #11517518)	11517518
11.	7-M18	1.267	BRACKET, RAD GRL CTR	10077355
12.	7-M18	1.267	PANEL, GRL MT (1989)	14058670
	7-M18	1.267	PANEL, RAD GRL MT (1990)	14104982
13.	7-D10	7.865	SHIM, FRT BPR IMP BAR (53MMX177MMX.8MM) (POSN #1)	14046663
	7-D10	7.865	SHIM, FRT BPR IMP BAR (53MMX177MMX3MM) (POSN #2)	14046664
14.	7-D10	7.865	SHIM, FRT BPR IMP BAR (21MMX38MM) (POSN #3)	14081864
15.	7-D8	7.833	SHIM, IMP BAR (30MM DIA) (1989-1990) (POSN #4)	14090620
16.	7-C28	7.831	REINFORCEMENT, FASCIA CTR-RH	10135950
	7-C28	7.831	REINFORCEMENT, FASCIA CTR-LH	10135949
17.	7-C28	7.831	BAR, IMP (2-PIECE REINF) (WHEN USED TO RPLC BAR W/1 PIECE RNFRCMNT, ALSO USE CALLOUT 16. DISCARD CENTER BRACKET & END BRACES)	10135948
18.		8.900	SCREW (BOLT, HEX W/CON WA (M8X1.25X30) (FRT BPR IMP BAR SKID PLT SUPT)) (AR) (AC-DELCO #11514532)	11514532
19.	7-C28	7.831	EXTENSION, FRT BPR IMP BAR SKID PLT-RH (1989)	14078644
	7-C28	7.831	EXTENSION, FRT BPR IMP BAR SKID PLT-LH (1989)	14078643
20.	7-D9	7.836	BAR, IMP BAR SKID PLT TIE (1990)	10143525
21.	7-C28	7.831	RIVET, FRT BPR IMP BAR PLT	2495701
22.	7-D9	7.836	SUPPORT, FRT BPR IMP BAR SKID PLT	14060231
23.		N.S.	SPACER, FRT BPR IMP BAR SKID (1989)	
	7-D4	7.832	SPACER, FRT BPR IMP BAR SKID (1990)	10149281
24.	7-D10	7.869	BRACKET, IMP BAR SKID PLT SUPT-RH (1990)	10086318
	7-D10	7.869	BRACKET, IMP BAR SKID PLT SUPT-LH (1990)	10086317
25.		8.977	SCREW, PAN HD TORX TAP (M4.2X1.41X25)	11504662
26.	7-M24	2.729	NUT, SPL ANC NY SQ HOLE	347347
27.	7-C28	7.831	REINFORCEMENT, FASCIA OTR-RH	10149204
	7-C28	7.831	REINFORCEMENT, FASCIA OTR-LH	10149203
28.		8.900	BOLT, HFH (M8X1.25X45) (FRT BPR IMP BAR SKID PLT)	11514158
29.	7-C28	7.831	RETAINER, FASCIA OTR	10149282
30.	7-D9	7.836	PLATE, IMP BAR SKID	14078685
31.		8.917	NUT, HEX FLG (M8X1.25X75) (FRT BPR IMP BAR SKID PLT) (AC-DELCO #11514596)	11514596
32.		8.921	NUT-U, M8X1.25, 17 WIDE, 32 OAL, 21 CTR TO END, 8-4 PNL RANGE (AR)	11516150
33.	7-C28	7.831	RETAINER, FASCIA CTR	14046637
34.		8.977	SCREW, SEMS HEX W/FLAT WA (M6.3X1.81X20)	12337828
35.	7-D8	7.833	STUD, IMP BAR	14060237
36.		8.921	NUT, PUSH-ON (M8X1.25)	10009923
37.		8.917	NUT, HEX W/CON WA (M5X.8) (AC-DELCO #11504614)	11504614
38.	7-C28	7.831	FASCIA	14030201
39.	7-D4	7.832	MOLDING, FASCIA OTR-RH	14043090
	7-D4	7.832	MOLDING, FASCIA OTR-LH	14043089
40.		8.921	NUT, U TYPE (6.3X1.81)	11509582
41.		8.977	SCREW, HWH TAP W/FLAT WA (M6.3X1.81X25)	11505023
42.	7-M19	1.272	BAFFLE, RAD AIR LWR (1989)	14078642
43.	7-M20	1.276	RETAINER, RAD AIR BFL LWR	14043167
44.	7-D8	7.833	RETAINER, AIR DEFL FASCIA LWR	14043166
45.		8.913	SCREW, PAN HD TORX W/CON WA (M6X1X16)	11508468
46.	7-M19	1.272	DEFLECTOR, AIR-RH (Z51)	14089636
	7-M19	1.272	DEFLECTOR, AIR-RH (EXC Z51)	14043136

© 2000 GENERAL MOTORS SERVICE PARTS OPERATIONS-CHEVROLET-14Y

				1Y07-010
	7-M19	1.272	**DEFLECTOR**, AIR-LH (Z51)	14089635
	7-M19	1.272	**DEFLECTOR**, AIR-LH (EXC Z51)	14043135
47.		8.917	**NUT**, HEX FLG (M6.3X1)	11502876
48.	7-M19	1.272	**DEFLECTOR**, AIR CTR (Z51)	14089634
	7-M19	1.272	**DEFLECTOR**, AIR CTR (EXC Z51)	14043137
49.	7-D4	7.832	**MOLDING**, FASCIA CTR	14043087
50.	7-C27	7.800	**PLATE**, LIC NA "CORVETTE"	14049269
51.	7-D9	7.840	**ABSORBER**, FASCIA ENERGY (AC-DELCO #16500755)	16500755
52.		8.900	**SCREW** (FRT BPR IMP BAR SKID PLT EXTN) (1989-1990) (AR) (AC-DELCO #11514532)	11514532
53.		8.917	**NUT**, HFH, M8X1.25, 17.9 OD, 738 THK, 13MM HEX, 10, ZF (FRT BPR IMP BAR SKID PLT EXTN) (1989-1990) (AR) (AC-DELCO #11514596)	11514596

© 2000 GENERAL MOTORS SERVICE PARTS OPERATIONS-CHEVROLET-14Y

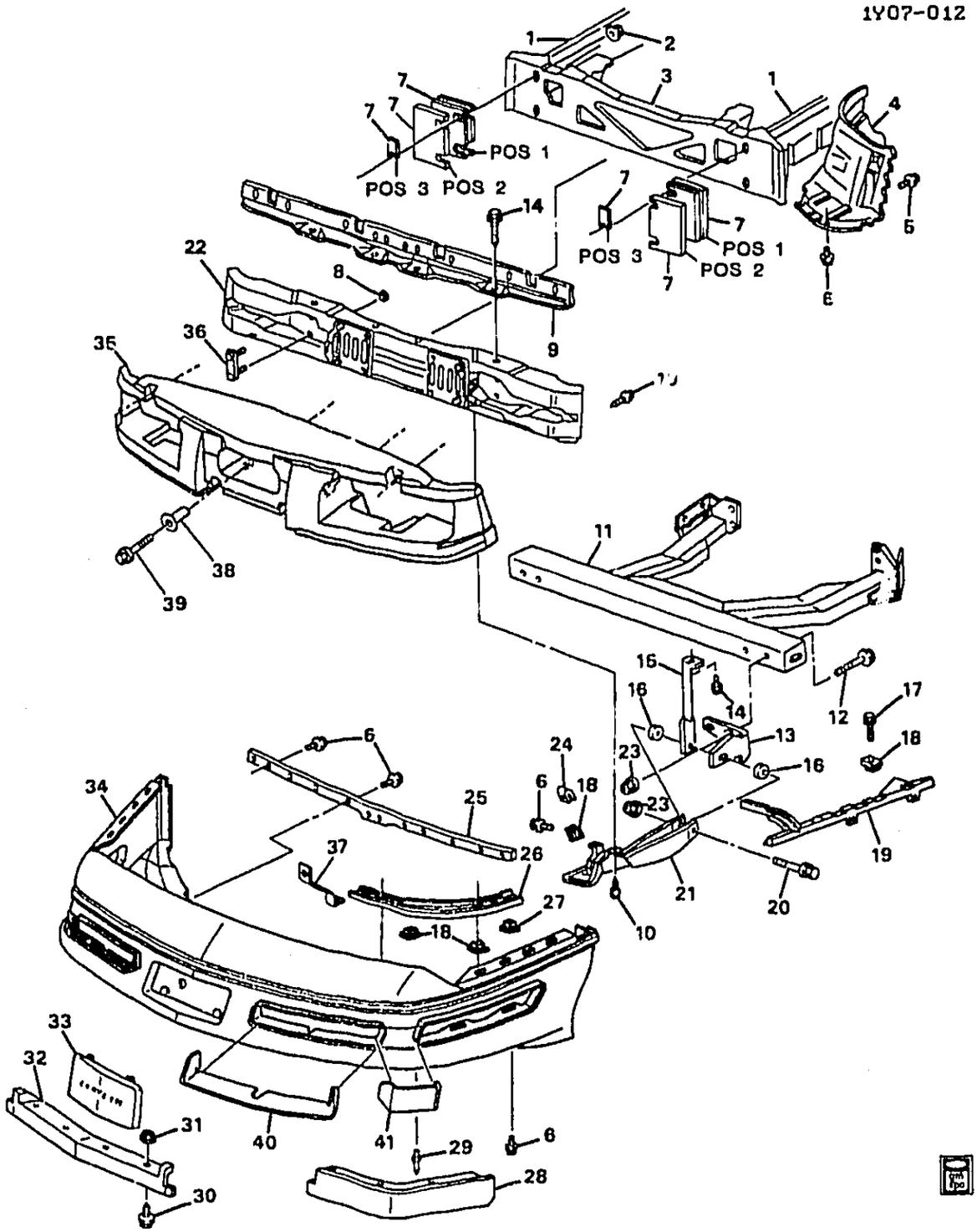

1Y07-012

1991-1996 Y BUMPER/FRONT

1.	7-C8	7.006	RAIL, F/CMPT SI	91-96	Y	LH 12529345

© 2000 GENERAL MOTORS SERVICE PARTS OPERATIONS-CHEVROLET-14Y

							1Y07-012
	7-C8	7.006	RAIL, F/CMPT SI (WILL NEED TO USE SELF TAPPING SCREWS IN PLACE OF BOLTS FOR ATTACHING FRT & RR LWR W/HSE PNLS, WSWA SOLV CONT & COOLANT RECOVERY RESVR)	91-96	Y	RH	12529346
2.		8.915	NUT, HEX W/CON WA M8X1.25X9.5 19-OD 9 ZP (8.917)	91-96		AR	11506117
3.	7-C9	7.010	SILL, U/B FRT CR	91-96	Y	1	14090676
4.	7-N14	8.153	PANEL, FRT W/H LWR FRT (MAY NEED TO DRILL HOLES TO MATCH)	91	Y (FE1, FE7)	LH	10275625
	7-N14	8.153	PANEL, FRT W/H LWR FRT (MAY NEED TO DRILL HOLES TO MATCH)	91	Y (FE1, FE7)	RH	10275626
	7-N14	8.153	PANEL, FRT W/H LWR FRT (MAY NEED TO DRILL HOLES TO MATCH)	92-96	Y	LH	10275625
	7-N14	8.153	PANEL, FRT W/H LWR FRT (MAY NEED TO DRILL HOLES TO MATCH)	92-96	Y	RH	10275626
5.		8.977	SCREW, PAN HD TORX (T-30) M6.3X1.81X25 W/FL WA SS CB	91-96		AR	12338098
6.		8.900	BOLT, HWH, 5X0.8X16, 10.5 OD, HDR PT, 4.8, PC (FRT BPR FASCIA)	91-96		AR	11501628
7.	7-D10	7.865	SHIM, FRT BPR IMP BAR (POSN #1) (53MMX177MMX0.8MM) (7.833)	91-96	Y	AR	14046663
	7-D10	7.865	SHIM, FRT BPR IMP BAR (POSN #2) (53MMX177MMX3MM) (7.833)	91-96	Y	AR	14046664
	7-D10	7.865	SHIM, FRT BPR IMP BAR (POSN #3) (21MMX38MM)	91-93	Y	AR	14081864
8.		8.921	RETAINER, PUSH-ON M8X1.25 THD ZOR	91-96		AR	10009923
9.	7-C28	7.831	RETAINER, FRT BPR FASCIA (22.4" LONG) (STRAIGHT)	91-93	Y	1	10146490
10.		8.900	BOLT, HEX W/CON WA	91-96		AR	11508269
11.	7-D9	7.836	BAR, FRT BPR IMP BAR SKID PLT TIE	91-96	Y	1	10143525
12.	7-D9	7.836	BOLT, FRT BPR IMP BAR SKID PLT TIE BAR (M8X1.25X55) (M8X1.25-6G, 10.9, PZO) (8.900)	91-96	Y	4	14066450
13.	7-D10	7.869	BRACKET, FRT BPR IMP BAR SKID PLT SUPT	91-96	Y	LH	10086317
	7-D10	7.869	BRACKET, FRT BPR IMP BAR SKID PLT SUPT	91-96	Y	RH	10086318
14.	7-D10	7.874	BOLT, FRT BPR FASCIA ENGY ABS (M6.3X1.81X20)	91	Y	12	10172330
	7-D9	7.836	BOLT, FRT BPR IMP BAR SKID PLT (M6.3X1.81X20) (7.874)	92-96	Y	4	10172330
15.	7-D9	7.836	SUPPORT, FRT BPR IMP BAR SKID PLT	91-96	Y	2	14060231
16.	7-D4	7.832	SPACER, FRT BPR IMP BAR SKID PLT TIE BAR	91-96	Y	4	10149281

© 2000 GENERAL MOTORS SERVICE PARTS OPERATIONS-CHEVROLET-14Y

							1Y07-012
17.		8.977	SCREW, PAN HD TORX TAP M4.2X1.41X25 SS BL OX	91-96		AR	11504662
18.	7-C28	7.831	NUT, FRT BPR FASCIA RET (UPLEVEL) (1.267)	91-96	Y	4	347347
	7-C28	7.831	NUT, FRT BPR FASCIA REINF (UPLEVEL) (1.267)	91-96	Y	8	347347
19.	7-C28	7.831	REINFORCEMENT, FRT BPR FASCIA (OTR)	91-96	Y	LH	10149203
	7-C28	7.831	REINFORCEMENT, FRT BPR FASCIA (OTR)	91-96	Y	RH	10149204
20.		8.900	BOLT, HFH, M8X1.25X45, 22 THD, PE, 9.8 (FRT BPR IMP BAR SKID PLT TIE BAR)	91-96		2	11514158
21.	7-D9	7.836	PLATE, FRT BPR IMP BAR SKID (7.831)	91-96	Y	2	10135970
22.	7-C28	7.831	BAR, FRT BPR IMP	91-96	Y	1	10277159
23.		8.917	NUT, HFH, M8X1.25, 17.9 OD, 738 THK, 13MM HEX, 10, ZF (FRT BPR IMP BAR SKID PLT) (8.915) (AC-DELCO #11514596)	91-96		2	11514596
24.		8.921	NUT-U, M8X1.25, 17 WIDE, 32 OAL, 21 CTR TO END, 8-4 PNL RANGE	91-96		AR	11516150
25.	7-C28	7.831	REINFORCEMENT, FRT BPR FASCIA CTR	91-96	Y	1	10149201
26.	7-C28	7.831	RETAINER, FRT BPR FASCIA (17.8" LONG) (CURVED)	91-96	Y	2	10149202
27.		8.921	NUT, .380 SQ HOLE.250 HD.625 SQ NYLON	91-96		AR	3907444
23.	7-M19	1.272	DEFLECTOR, FRT AIR	91-96	Y	LH	10149263
	7-M19	1.272	DEFLECTOR, FRT AIR	91-96	Y	RH	10149264
29.		N.S.	RIVET, FRT BPR FASCIA				
30.	7-M19	1.272	BOLT, FRT A/DFL (7.833)	91-93	Y	1	10149273
31.		8.917	NUT, HEX FLG M6.3X1 ORG GRD 9 ZC	91-96		AR	11502876
32.	7-M19	1.272	DEFLECTOR, FRT CTR AIR	91-96	Y	1	10149265
33.	7-C27	7.800	PLATE, FRT LIC PLT NA (PAINT TO MATCH)	91-96	Y	1	10285647
		N.S.	ATTACHMENT KIT, FRT LIC PLT BRKT (N-CPS)				
		N.S.	BRACKET, FRT LIC PLT	91-93			
		N.S.	INSTRUCTION, FRT LIC PLT BRKT INSTL (NCSI)				
		8.977	SCREW, PAN HD C/R TAP M6.3X1.81X11 303 CB (FRT LIC PLT)	91-96		2	11508491
		8.977	SCREW, M4.2X1.41X20 BL OX (FRT LIC PLT BRKT)	91-96		2	11504655
	7-C27	7.800	BRACKET, FRT LIC PLT (BLACK)	94-96	Y (VL4) (EXPORT)	1	10209701
34.	7-C28	7.831	FASCIA, FRT BPR (PAINT TO MATCH)	91	Y	1	10285643
	7-C28	7.831	FASCIA, FRT BPR (PAINT TO MATCH)	92-95	Y	1	10285643
35.	7-D9	7.840	ABSORBER, FRT BPR FASCIA ENGY (AC-DELCO #16519011)	91-96	Y	1	16519011
36.	7-D9	7.836	PLATE, FRT BPR IMP BAR STUD	91-96	Y	2	10153659
37.	7-M19	1.272	BRACE, FRT A/DFL UPR CTR	91-96	Y	1	10149267
38.	7-D9	7.840	SPACER, FRT BPR FASCIA ENGY ABS	93-96	Y	4	10216906

© 2000 GENERAL MOTORS SERVICE PARTS OPERATIONS-CHEVROLET-14Y

							1Y07-012	
39.		8.977	SCREW, HWH6.3X1.8X50 13.2OD 7112M (FRT BPR FASCIA ENGY ABS)	91-96	.....		4	11516054
40.	7-D4	7.832	TAPE, FRT BPR FASCIA BLACKOUT (LP OPENING CTR) (BLACK)	94-95	Y	.....	LH	10175547
	7-D4	7.832	TAPE, FRT BPR FASCIA BLACKOUT (LP OPENING CTR) (BLACK)	94-95	Y		RH	10175548
41.	7-D4	7.832	TAPE, FRT BPR FASCIA OTR COR BLACKOUT	94-96	Y		LH	10280079
	7-D4	7.832	TAPE, FRT BPR FASCIA OTR COR BLACKOUT	94-96	Y		RH	10280080

RPO DEFINITIONS
FE1 – SUSPENSION SYSTEM,SOFT RIDE
FE7 – SUSPENSION SYSTEM,FRONT AND REAR,HEAVY DUTY(USED WITH PERFORMANCE HANDLING PACKAGE Z51)
VL4 – LICENSE PLATE,FRONT MOUNTING PACKAGE(EXPORT)

© 2000 GENERAL MOTORS SERVICE PARTS OPERATIONS-CHEVROLET-14Y

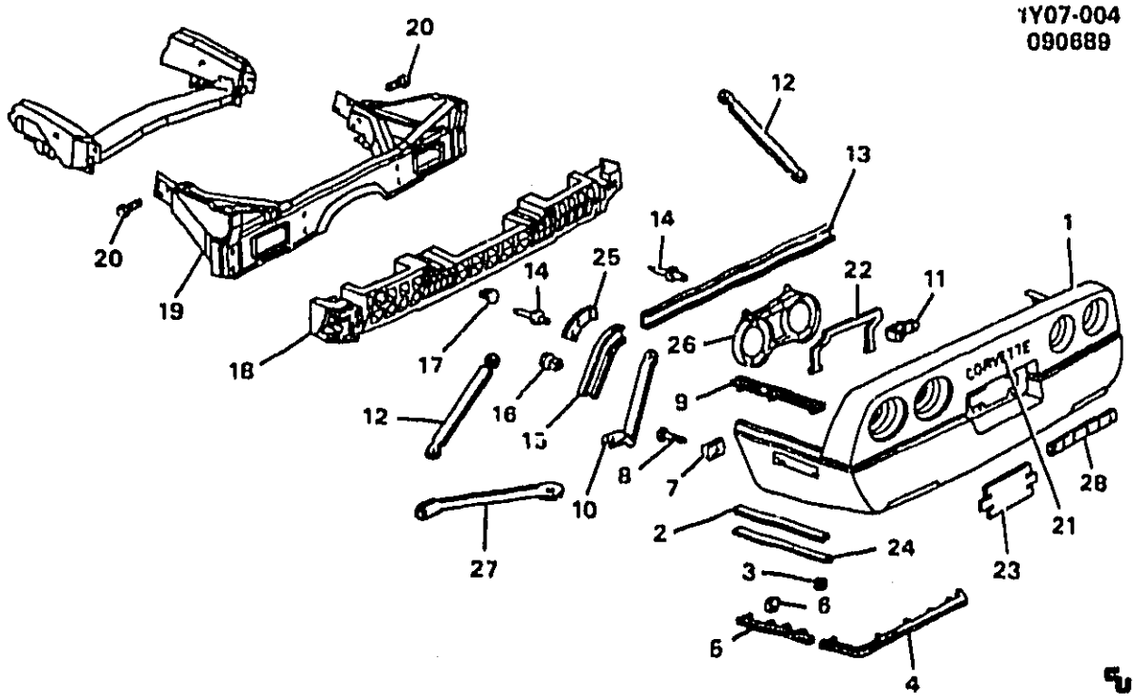

1Y07-004

1984-1989 Y BUMPER/REAR
1990 Y BUMPER/REAR (EXC ZR1)

1.	7-C28	7.831	FASCIA	14030202
2.	7-C28	7.831	RETAINER, FASCIA LWR (1984-89)	14046704
	7-C28	7.831	RETAINER, FASCIA-RH (1990)	10149276
	7-C28	7.831	RETAINER, FASCIA-LH (1990)	10149275
3.		8.917	NUT-HEX, M5X0.8X5.3, 19 OD, GM 510-M (9), POR (AR) (AC-DELCO #11504614)	11504614
4.	7-D4	7.832	MOLDING, FASCIA CTR-RH (1984-87, 1989-90) (1988 EXC B57)	14043140
		DISCON	MOLDING, FASCIA CTR-RH (1988 B57)	10123014
	7-D4	7.832	MOLDING, FASCIA CTR-LH (1984-87, 1989-90) (1988 EXC B57)	14043139
		DISCON	MOLDING, FASCIA CTR-LH (1988 B57)	10123013
5.	7-D4	7.832	MOLDING, FASCIA OTR-RH (1984-87, 1989-90) (1988 EXC B57)	14043134
		DISCON	MOLDING, FASCIA OTR-RH (1988 B57)	10123012
	7-D4	7.832	MOLDING, FASCIA OTR-LH (1984-87, 1989-90) (1988 EXC B57)	14043133
		DISCON	MOLDING, FASCIA OTR-LH (1988 B57)	10123011
6.		8.917	NUT-HEX, M5X0.8X5.3, 19 OD, GM 510-M (9), POR (AR) (AC-DELCO #11504614)	11504614
7.		8.921	NUT, U SHAPE TYPE P, M6.3X1.81, PNL RANGE.65-3.8, PEOR (AR)	11514290
8.		8.977	SCREW, PAN HD TORX W/FL WA TAP M6.3X 1.81X20 SS BLK 17 OD (AR)	11508762
9.	7-C28	7.831	RETAINER, FASCIASI	14100248
10.	7-N23	12.944	BRACE, BODY UPR PNL FRT-RH (1986-90 Y67)	10125922
	7-N23	12.944	BRACE, BODY UPR PNL FRT-LH (1986-90 Y67)	10125921
11.	7-C28	7.831	SPACER, FASCIA	14049001
12.		DISCON	BRACE, BODY UPR RR PNL-RH (1986-88 Y67)	10051844
		DISCON	BRACE, BODY UPR RR PNL-LH (1986-88 Y67)	10051843
13.	7-C28	7.831	RETAINER, FASCIA CTR	14046629
14.		N.S.	RIVET	
15.	7-C28	7.831	RETAINER, FASCIA OTR-RH	10272908

© 2000 GENERAL MOTORS SERVICE PARTS OPERATIONS-CHEVROLET-14Y

	7-C28	7.831	RETAINER, FASCIA OTR-LH	10272907
16.	7-M24	2.729	NUT, SPL ANC NY (SQ HOLE)	347347
17.	7-C28	7.831	RETAINER, PUSH IN FASCIA (1984-86) (1.269)	5973400
18.	7-D9	7.840	ABSORBER, FASCIA ENGY (AC-DELCO #16504370)	16504370
19.	7-C28	7.831	BAR, IMP (CPS)	10153670
		8.903	BOLT, RD HD SQ NK M12X1.75X230 9.8 PZOR (AR)	11508569
		8.917	NUT, HEX 12X1.75X10.5 10M PS (AR)	11508156
20.		8.900	BOLT, HFH M10X1.5X105 9.8 PZOR (AR)	11508142
		8.900	BOLT, HFH M10X1.5X130 9.8 PZOR (AR)	11508489
21.	7-D4	7.832	PLATE, FASCIA NA "CORVETTE" (BLACK W/SILVER BRDR 13U, 28U, 96U) (SEE PARTS SECTION FOR ADDITIONAL COLORS & TRIM COMBINATIONS.)	14058697
22.	7-C28	7.831	REINFORCEMENT, FASCIA UPR	14069614
23.		DISCON	COVER, LIC OPG (1984-88)	14076540
24.	7-C28	7.831	REINFORCEMENT, FASCIA LWR-RH	14069616
	7-C28	7.831	REINFORCEMENT, FASCIA LWR-LH	14069615
25.		DISCON	BRACKET, FASCIA OTR-RH (1984)	14076520
		DISCON	BRACKET, FASCIA OTR-LH (1984)	14076519
26.	7-M24	2.662	PLATE, T/LP MT-RH	14078684
	7-M24	2.662	PLATE, T/LP MT-LH	14078683
27.		DISCON	BRACE, W/H PNL-RH (1984-86) (12.944) (1ST DESIGN 1986 - TUBULAR SECTION IS 221MM LONG.)	14064520
		DISCON	SUPPORT, W/H PNL-RH (1986) (2ND DESIGN 1986 - WELDED SPACER ON ONE END.)	14100242
	7-N23	12.944	BRACE, W/H PNL-RH (1986-90) (3RD DESIGN 1986 - TUBULAR SECTION IS 267MM LONG, AND IS USED TOGETHER WITH THE 2ND DESIGN PART.)	10051888
		DISCON	BRACE, W/H PNL-LH (1984-86) (12.944) (SEE PARTS SECTION FOR ADDITIONAL COLORS & TRIM COMBINATIONS)	14064519
	7-D9	7.836	SUPPORT, W/H PNL-LH (1986) (2ND DESIGN 1986 - WELDED SPACER ON ONE END.)	14100241
	7-N23	12.944	BRACE, W/H PNL-LH (1986-90) (3RD DESIGN 1986 - TUBULAR SECTION IS 267MM LONG, AND IS USED TOGETHER WITH THE 2ND DESIGN PART.)	10051887
28.	7-C28	7.831	REINFORCEMENT, FASCIA LWR CTR (1989-90)	10132965

RPO DEFINITIONS
ZR1 - PACKAGE,SPECIAL PERFORMANCE COUPE(1YY07 + ZR1 == 1YZ07)

© 2000 GENERAL MOTORS SERVICE PARTS OPERATIONS-CHEVROLET-14Y

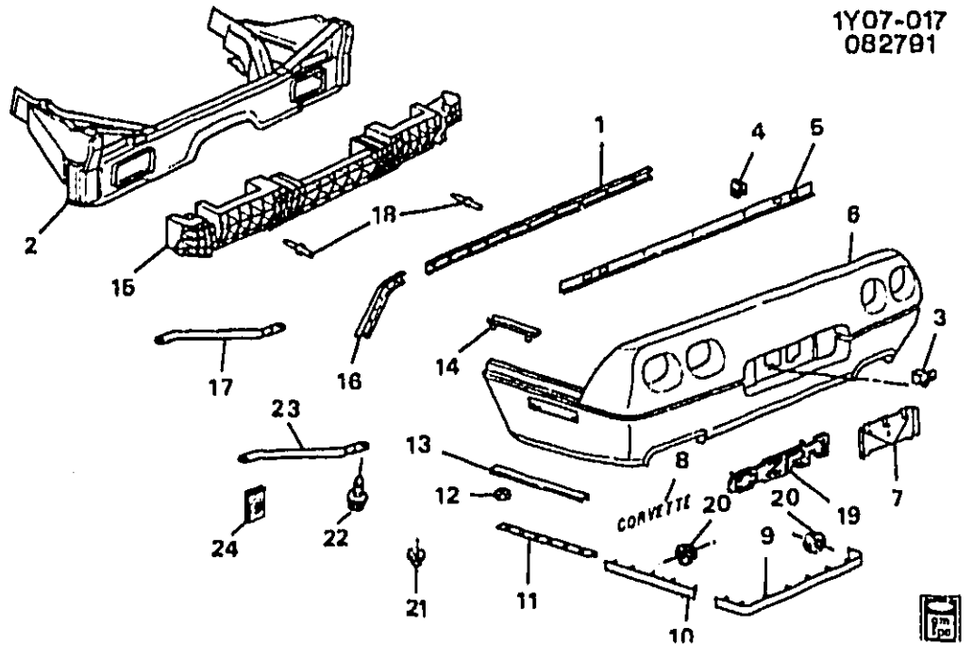

1990 Y BUMPER/REAR (ZR1)

1.	7-C28	7.831	RETAINER, R/END FASCIA UPR CTR	14104190
2.	7-C28	7.831	BAR, IMP (W/OUT BRKT TO MT VAPOR CNSTR) (C[illegible]S)	10153670
		8.903	BOLT, RD HD SQ NK M12X1.75X230 9.8 PZOR (AR)	11508569
		8.917	NUT, HEX 12X1.75X10.5 10M PS (AR)	11509156
3.	7-C28	7.831	SPACER, R/END FASCIA	14049001
4.		8.921	NUT, (SPRING, TYPE C, U-SHAPED, MULTI THD) (M6X1, 1060 PEOR) (AR)	12337917
5.	7-C28	7.831	REINFORCEMENT, R/END FASCIA LWR CTR	10132965
6.	7-C28	7.831	FASCIA, R/END	10153675
7.	7-C27	7.800	BRACKET, RR LIC	16509671
8.	7-D4	7.832	PLATE, FASCIA NA (CORVETTE) (13U, 28U, 96U) (SEE PARTS SECTION FOR ADDITIONAL COLORS & TRIM COMBINATIONS.)	14058697
9.	7-D4	7.832	MOLDING, FASCIA-RH (CTR)	14104450
	7-D4	7.832	MOLDING, FASCIA-LH (CTR)	14104449
10.	7-D4	7.832	MOLDING, FASCIA-RH (OTR)	14104452
	7-D4	7.832	MOLDING, FASCIA-LH (OTR)	14104451
11.	7-C28	7.831	REINFORCEMENT, R/END FASCIA SI LWR	14104202
12.		8.921	NUT, U-SHAPE MULTI THRD SPG M6X1-6.3 PNLS 13.5 DEEP ZOR (AR)	12338002
13.	7-C28	7.831	RETAINER, R/END FASCIA SI CTR-RH	10149276
	7-C28	7.831	RETAINER, R/END FASCIA SI CTR-LH	10149275
14.	7-C28	7.831	RETAINER, R/END FASCIA SI CTR	14100248
15.	7-D9	7.840	ABSORBER, R/END FASCIA ENGY (AC-DELCO #16519012)	16519012
16.	7-C28	7.831	RETAINER, R/END FASCIA UPR OTR-RH	14104194
	7-C28	7.831	RETAINER, R/END FASCIA UPR OTR-LH	14104193
17.	7-N25	12.986	SUPPORT, BODY UPR RR PNL (RH)	14104594
	7-N25	12.986	SUPPORT, BODY UPR RR PNL (LH)	14104593
18.		N.S.	RIVET	
19.	7-D4	7.832	EMBLEM, R/END FASCIA (BOW TIE) (41U, 91U, 96U) (SEE PARTS SECTION FOR ADDITIONAL COLORS & TRIM COMBINATIONS.)	10146448
20.		8.915	NUT, CONICAL SPR WA, M5X.8, 15OD, 9 ZF (AR)	11516066
21.		8.917	NUT, HFH M6X1X6.5 ZOR 9 (AR)	3530297
22.		8.900	SCREW, (AR)	11505209
23.	7-N23	12.944	BRACE, RR W/H PNL LNR RR-RH	14104632

© 2000 GENERAL MOTORS SERVICE PARTS OPERATIONS-CHEVROLET-14Y

				1Y07-017
	7-N23	12.944	BRACE, RR W/H PNL LNR RR-LH	14104631
24.		8.921	NUT, TYPE P-WU SPR M6.3X1.81 PHOS ORG (AR)	11504035

RPO DEFINITIONS
ZR1 – PACKAGE,SPECIAL PERFORMANCE COUPE(1YY07 + ZR1 == 1YZ07)

© 2000 GENERAL MOTORS SERVICE PARTS OPERATIONS-CHEVROLET-14Y

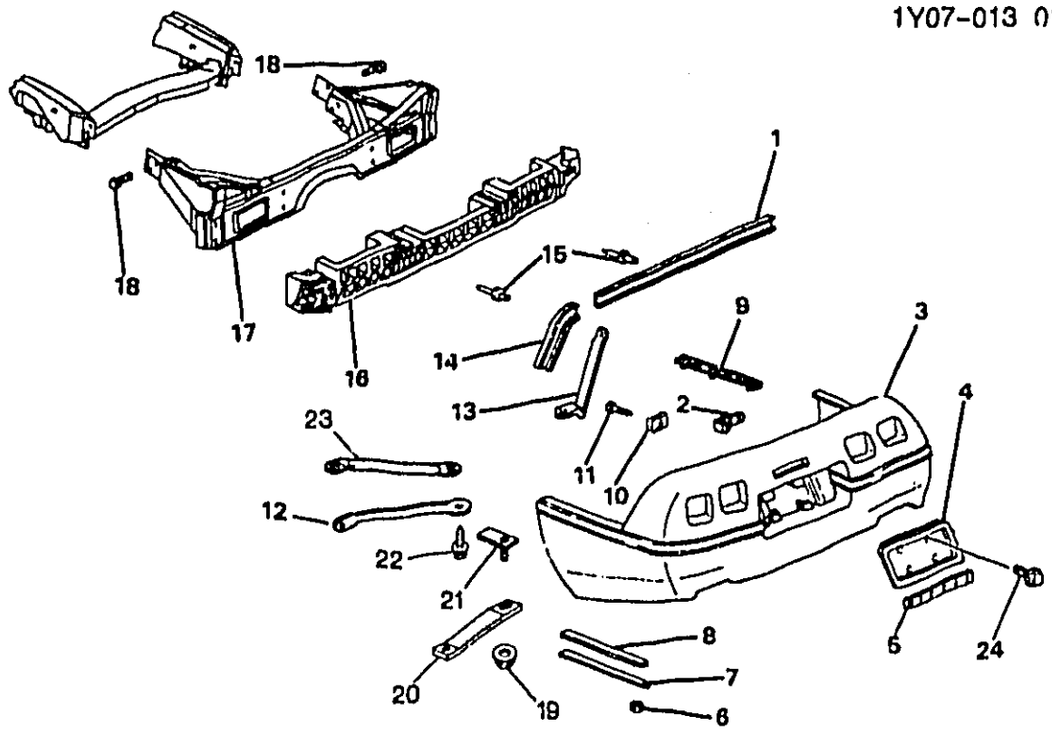

1Y07-013

1991-1992 Y BUMPER/REAR (EXC ZR1)

1.	7-C28	7.831	**RETAINER**, R/END FASCIA UPR CTR	91-92	Y (EXC ZR1)	1	14046629
2.	7-C28	7.831	**SPACER**, R/END FASCIA	91-92	Y	4	14049001
3.	7-C28	7.831	**FASCIA**, R/END	91-92	Y (EXC ZR1)	1	10135972
4.	7-C27	7.800	**BRACKET**, RR LIC PLT	91-92	Y (EXC ZR1)	1	10146492
5.	7-C28	7.831	**REINFORCEMENT**, R/END FASCIA LWR CTR	91-92	Y	1	10132965
6.		8.917	**NUT-HEX**, M5X0.8X5.3, 19 OD, GM 510-M (9), POR (AC-DELCO #11504614)	91-92		AR	11504614
7.	7-C28	7.831	**REINFORCEMENT**, R/END FASCIA SI LWR (OTR)	91-92	Y	2	14104202
8.	7-C28	7.831	**RETAINER**, R/END FASCIA SI CTR	91-92	Y (EXC ZR1)	LH	10149213
	7-C28	7.831	**RETAINER**, R/END FASCIA SI CTR	91-92	Y (EXC ZR1)	RH	10149214
9.	7-C28	7.831	**RETAINER**, R/END FASCIA SI CTR	91-92	Y (EXC ZR1)	LH	10149213
	7-C28	7.831	**RETAINER**, R/END FASCIA SI CTR	91-92	Y (EXC ZR1)	RH	10149214
10.		8.921	**NUT**, U SHAPE TYPE P, M6.3X1.81, PNL RANGE.65-3.8, PEOR	91-92		AR	11514290
11.		8.977	**SCREW**, PAN HD TORX W/FL WA TAP M6.3X 1.81X20 SS BLK 17 OD	91-92		AR	11508762
12.	7-N23	12.944	**BRACE**, RR W/H PNL LNR RR	91-92	Y (EXC ZR1)	LH	10051887
	7-N23	12.944	**BRACE**, RR W/H PNL LNR RR	91-92	Y (EXC ZR1)	RH	10051888
13.	7-N23	12.944	**BRACE**, BODY UPR RR PNL FRT (WASHER MAY BE REQ AT FACIA END)	91-92	Y67	LH	10125921

© 2000 GENERAL MOTORS SERVICE PARTS OPERATIONS-CHEVROLET-14Y

							1Y07-013
	7-N23	12.944	BRACE, BODY UPR RR PNL FRT (WASHER MAY BE REQ AT FACIA END)	91-92	Y67	RH	10125922
14.	7-C28	7.831	RETAINER, R/END FASCIA UPR OTR (4 STUDS)	91-92	Y (EXC ZR1)	LH	10272907
	7-C28	7.831	RETAINER, R/END FASCIA UPR OTR (4 STUDS)	91-92	Y (EXC ZR1)	RH	10272908
15.		N.S.	RIVET, ...		.....		
16.	7-D9	7.840	ABSORBER, R/END FASCIA ENGY (SOLID FOAM) (AC-DELCO #16519012) ((MAY NEED TO ELIMINATE SPARE TIRE LAMP) (IF USE IN PLC OF EGG CRATE TYPE ABSORB, REFER TO 93 SERV MANUAL, SECT 10 FOR INSTALL))	91-92	Y	1	16519012
	7-D9	7.840	ABSORBER, R/END FASCIA ENGY (SOLID FOAM) (AC-DELCO #16519012) ((MAY NEED TO ELIMINATE SPARE TIRE LAMP) (IF USE IN PLC OF EGG CRATE TYPE ABSORB, REFER TO 93 SERV MANUAL, SECT 10 FOR INSTALL))	92	Y	1	16519012
17.	7-C28	7.831	BAR, RR BPR IMP	91-92	Y	1	10153670
18.		8.900	BOLT, HFH M10X1.5X105 9.8 PZOR	91-92	.....	AR	11508142
19.		8.917	NUT, HFH M6X1X6.5 ZOR 9	91-92	.....	AR	3530297
20.	7-N25	12.986	SUPPORT, BODY UPR RR PNL (7.836)	91	Y (EXC ZR1)	LH	14100241
		DISCON	SUPPORT, BODY UPR RR PNL (7.836)	91	Y (EXC ZR1)	RH	14100242
	7-N25	12.986	SUPPORT, BODY UPR RR PNL ..	92	Y67	2	10198696
21.	7-N23	12.966	PLATE, BODY UPR RR PNL SUPT ANC (12.986)	92	Y	2	14058658
22.		8.900	SCREW, ...	91-92	.....	AR	11505209
23.	7-N25	12.986	SUPPORT, BODY UPR RR PNL (7.836)	91	Y (EXC ZR1)	LH	14100241
		DISCON	SUPPORT, BODY UPR RR PNL ..	91	Y (EXC ZR1)	RH	14100242
24.		8.977	SCREW, PAN HD TORX W/WA, M4.2X1.41X16, SST (RR LIC BRKT)	91-92	.....	4	11508100

RPO DEFINITIONS

ZR1 - PACKAGE,SPECIAL PERFORMANCE COUPE(1YY07 + ZR1 == 1YZ07)

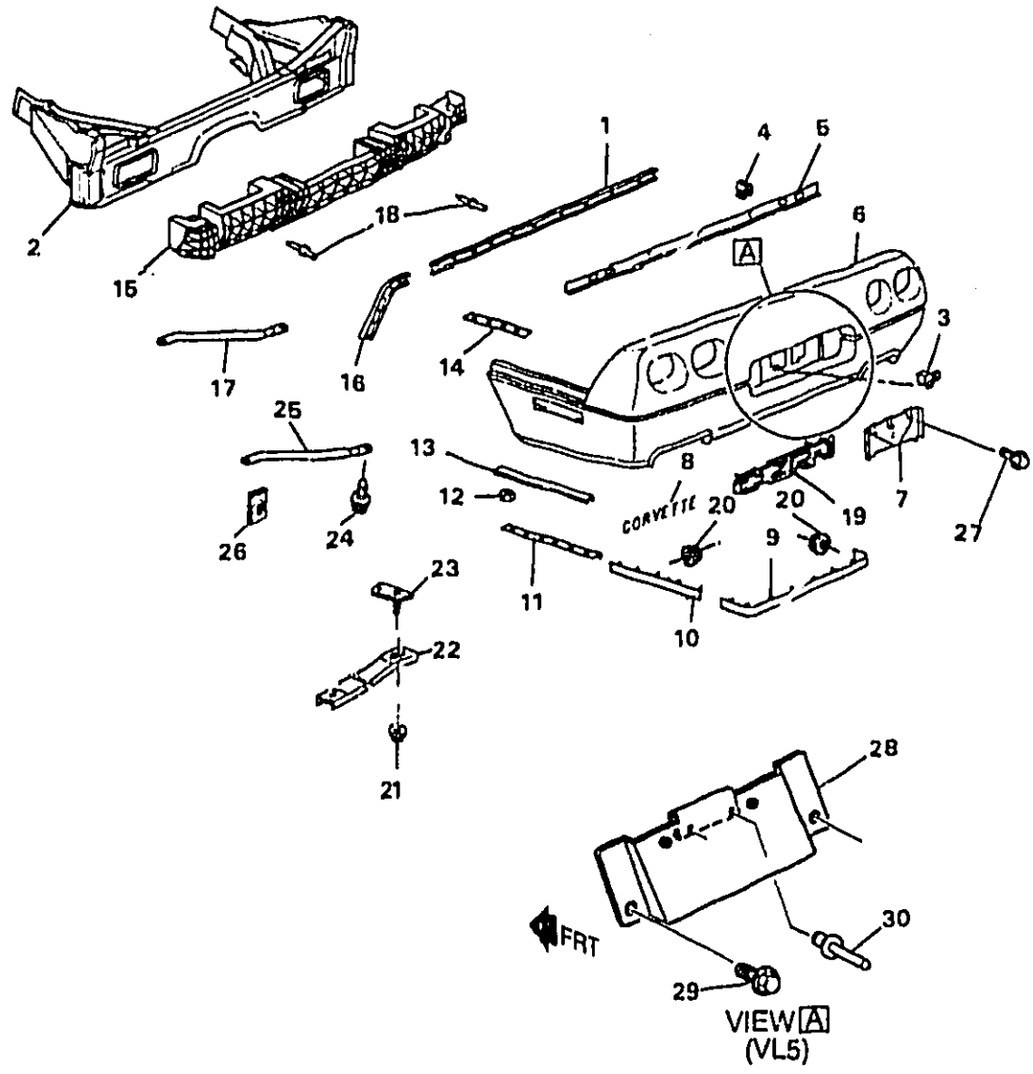

1Y07-008

1991-1995 Y BUMPER/REAR (ZR1)

1.	'-C28	7.831	RETAINER, R/END FASCIA UPR CTR	91-95	Y (ZR1)	1	14104190
2.	7-C28	7.831	BAR, RR BPR IMP (CPS)	91-92	Y	1	10153670
	7-C28	7.831	BAR, RR BPR IMP (W/O RECTANGULAR OPENINGS) (CPS)	93	Y (2ND DES)	1	10246744
	7-C28	7.831	BAR, RR BPR IMP (W/O RECTANGULAR OPENING) (CPS)	94-95	Y	1	10246744
	7-C28	7.831	BAR, RR BPR IMP (W/2 RECTANGULAR OPENINGS) (CPS)	93	Y (1ST DES)	1	10153670
		8.903	BOLT, RD HD SQ NK M12X1.75X230 9.8 PZOR	91-95		AR	11508569
		8.917	NUT, HEX 12X1.75X10.5 10M PS	91-95		AR	11508156
3.	7-C28	7.831	SPACER, R/END FASCIA	91-93	Y	4	14049001
	7-C28	7.831	SPACER, R/END FASCIA	94-95	Y (EXC VD1, VL5)	4	14049001

© 2000 GENERAL MOTORS SERVICE PARTS OPERATIONS-CHEVROLET-14Y

							1Y07-008
4.		8.921	NUT, (SPRING, TYPE C, U-SHAPED, MULTI THD) (M6X1, 1060 PEOR)	91-95		AR	12337917
5.	7-C28	7.831	REINFORCEMENT, R/END FASCIA LWR CTR	91-95	Y	1	10132965
6.	7-C28	7.831	FASCIA, R/END	91-95	Y (ZR1)	1	10153675
7.	7-C27	7.800	BRACKET, RR LIC PLT	91-95	Y (ZR1)	1	16509671
8.	7-D4	7.832	PLATE, R/END FASCIA NA (BLUE, PAINT TO MATCH) (CORVETTE)	91	Y (ZR1, 25U)	1	10172313
		DISCON	PLATE, R/END FASCIA NA (SMOKE GRAY) (CORVETTE)	91	Y (ZR1, 41U, 91U, 96U)	1	10172314
		DISCON	PLATE, R/END FASCIA NA (TURQUOISE) (CORVETTE)	91	Y (ZR1, 42U)	1	10172315
	7-D4	7.832	PLATE, R/END FASCIA NA (RED) (CORVETTE)	91-95	Y (ZR1, 75U)	1	10172317
		DISCON	PLATE, R/END FASCIA NA (QUASAR) (CORVETTE)	91-93	Y (ZR1, 80U)	1	10172318
		DISCON	PLATE, R/END FASCIA NA (RED) (CORVETTE)	91-92	Y (ZR1, 81U)	1	10172319
	7-D4	7.832	PLATE, R/END FASCIA NA (AQUA) (CORVETTE)	92-95	Y (ZR1, 43U)	1	10175824
	7-D4	7.832	PLATE, R/END FASCIA NA (GREEN) (CORVETTE)	92-95	Y (ZR1, 45U)	1	10198742
	7-D4	7.832	PLATE, R/END FASCIA NA (BLACK ROSE) (CORVETTE)	92-94	Y (ZR1, 73U)	1	10198743
	7-D4	7.832	PLATE, R/END FASCIA NA (BLACK)	92-95	Y (ZR1, 41U)	1	10268451
		DISCON	PLATE, R/END FASCIA NA (RED)	93-95	Y (ZR1, 70U)	1	10198686
	7-D4	7.832	PLATE, R/END FASCIA NA (RED)	93	Y (ZR1, 68U)	1	10228814
	7-D4	7.832	PLATE, R/END FASCIA NA (YELLOW)	94-95	Y (ZR1, 53U)	1	10167089
	7-D4	7.832	PLATE, R/END FASCIA NA (BLUE)	94-95	Y (ZR1, 28U)	1	10210839
	7-D4	7.832	PLATE, R/END FASCIA NA (MELON)	94	Y (ZR1, 66U)	1	10210892
	7-D4	7.832	PLATE, R/END FASCIA NA (CYCLAMEN)	95	Y (ZR1, 05U)	1	10233113
		DISCON	PLATE, R/END FASCIA NA (INDY MTR SPDWY, WINGS & WHL)	95	Y (Z4Z)	1	10278422
	7-D4	7.832	PLATE, R/END FASCIA NA (CORVETTE) (YELLOW)	91-93	Y (ZR1, 35U, 53U)	1	10167089
	7-D4	7.832	PLATE, R/END FASCIA NA (CORVETTE) (WHITE)	91-95	Y (ZR1, 10U)	1	10172312
9.	7-D4	7.832	MOLDING KIT, RR BPR FASCIA CTR (PAINT TO MATCH)	91-95	Y (ZR1)	LH	10174848
	7-D4	7.832	MOLDING KIT, RR BPR FASCIA CTR (PAINT TO MATCH)	91-95	Y (ZR1)	RH	10174849
10.	7-N21	12.116	MOLDING, R/Q CTR RR (MUST ORDER NUT 11516066 QTY-5)	91-95	Y (ZR1)	LH	10135981
	7-N21	12.116	MOLDING, R/Q CTR RR (MUST ORDER NUT 11516066 QTY-5)	91-95	Y (ZR1)	RH	10135982
11.	7-C28	7.831	REINFORCEMENT, R/END FASCIA SI LWR (OTR)	91-95	Y	2	14104202
12.		8.921	NUT, U-SHAPE MULTI THRD SPG M6X1-6.3 PNLS 13.5 DEEP ZOR	91-95		AR	12338002
13.	7-C28	7.831	RETAINER, R/END FASCIA SI CTR	91-95	Y (ZR1)	LH	10149275

							1Y07-008
	7-C28	7.831	RETAINER, R/END FASCIA SI CTR	91-95	Y (ZR1)	RH	10149276
	7-C28	7.831	RETAINER, R/END FASCIA SI CTR	94-95	Y (T90) (EXPORT)	LH	10149275
	7-C28	7.831	RETAINER, R/END FASCIA SI CTR	94-95	Y (T90) (EXPORT)	RH	10149276
14.	7-C28	7.831	REINFORCEMENT, R/END FASCIA SI LWR (OTR)	91-95	Y	2	14104202
15.	7-D9	7.840	ABSORBER, R/END FASCIA ENGY (SOLID FOAM) (AC-DELCO #16519012) ((ON SOME 1993 VEHS IN PLC OF EGG CRATE TYPE ABSORB, REFER TO 93 SERV MANUAL, SECT 10 FOR INSTALL))	91-95	Y	1	16519012
16.	7-C28	7.831	RETAINER, R/END FASCIA UPR OTR	91-95	Y (ZR1)	LH	14104193
	7-C28	7.831	RETAINER, R/END FASCIA UPR OTR	91-95	Y (ZR1)	RH	14104194
17.	7-N25	12.986	SUPPORT, BODY UPR RR PNL	91	Y (ZR1)	LH	14104593
	7-N25	12.936	SUPPORT, BODY UPR RR PNL	91	Y (ZR1)	RH	14104594
18.		N.S.	RIVET				
19.	7-D4	7.832	EMBLEM, R/END FASCIA (WHITE) (BOWTIE, ZR1)	91-95	Y (ZR1, 10U)	2	10146443
		DISCON	EMBLEM, R/END FASCIA (BOWTIE, ZR1) (COLOR CODE WA9238) (LIGHT RED)	91-92	Y (ZR1, 75U)	1	10146446
	7-D4	7.832	EMBLEM, R/END FASCIA (RED) (BOWTIE, ZR1)	91-92	Y (ZR1, 81U)	2	10146447
	7-D4	7.832	EMBLEM, R/END FASCIA (BLACK/GRAY) (BOWTIE, Z21)	91	Y (ZR1, 41U, 96U)	1	10146448
		DISCON	EMBLEM, R/END FASCIA (BLUE) (BOWTIE, ZR1)	91-93	Y (ZR1, 80U)	1	10153679
		DISCON	EMBLEM, R/END FASCIA (TURQUOISE) (BOWTIE, ZR1)	91	Y (ZR1, 42U)	1	10153700
		DISCON	EMBLEM, R/END FASCIA (BLUE STEEL) (BOWTIE, ZR1)	91	Y (ZR1, 25U)	1	10172309
	7-D4	7.832	EMBLEM, R/END FASCIA (BLACK/GRAY) (BOWTIE, Z21)	91	Y (ZR1, 19U)	1	10146448
	7-D4	7.832	EMBLEM, R/END FASCIA (YELLOW) (BOWTIE, ZR1)	01-92	Y (ZR1, 35U)	1	10167090
	7-D4	7.832	EMBLEM, R/END FASCIA (AQUA) (BOWTIE, ZR1)	92-95	Y (ZR1, 43U)	1	10175826
	7-D4	7.832	EMBLEM, R/END FASCIA (BLACK ROSE) (BOWTIE, ZR1)	92-94	Y (ZR1, 73U)	1	10198747
	7-D4	7.832	EMBLEM, R/END FASCIA (BLACK)	92-95	Y (ZR1, 41U)	1	10268455
	7-D4	7.832	EMBLEM, R/END FASCIA (MARBLEHEAD GRAY)	92-95	Y (ZR1, 45U)	1	10268456
		DISCON	EMBLEM, R/END FASCIA (BOWTIE, ZR1) (COLOR CODE WA9238) (LIGHT RED)	93	Y (ZR1, 75U) (1ST DES)	1	10146446
	7-D4	7.832	EMBLEM, R/END FASCIA (YELLOW) (BOWTIE, ZR1)	93-95	Y (ZR1, 53U)	1	10153678
	7-D4	7.832	EMBLEM, R/END FASCIA (RED) (BOWTIE, ZR1)	93-95	Y (ZR1, 70U)	1	10198688
	7-D4	7.832	EMBLEM, R/END FASCIA (BOWTIE, ZR1) (COLOR CODE WA213A) (DARK RED)	93	Y (ZR1, 68U) (2ND DES)	1	10228815

© 2000 GENERAL MOTORS SERVICE PARTS OPERATIONS-CHEVROLET-14Y

								1Y07-008
		DISCON	EMBLEM, R/END FASCIA (BOWTIE, ZR1)	94-95	Y (ZR1, 75U)		1	10146446
	7-D4	7.832	EMBLEM, R/END FASCIA (CLOISONNE BLUE)	94-95	Y (ZR1, 28U)		1	10210902
		DISCON	EMBLEM, R/END FASCIA (MELON)	94	Y (ZR1, 66U)		1	10210905
	7-D4	7.832	EMBLEM, R/END FASCIA (CYCLAMAN)	95	Y (ZR1, 05U)		1	10233119
20.		8.915	NUT, CONICAL SPR WA, M5X.8, 15OD, 9 ZF	91-95	.....		AR	11516066
21.		8.917	NUT, HFH M6X1X6.5 ZOR 9	91-95	.....		AR	3530297
22.	7-N25	12.986	SUPPORT, BODY UPR RR PNL ..	91	Y (ZR1)		LH	14104593
	7-N25	12.986	SUPPORT, BODY UPR RR PNL ..	91	Y (ZR1)		RH	14104594
	7-N25	12.986	SUPPORT, BODY UPR RR PNL ..	92-95	Y07		2	10172499
	7-N25	12.986	SUPPORT, BODY UPR RR PNL ..	92-95	Y67		2	10198696
23.	7-N23	12.966	PLATE, BODY UPR RR PNL SUPT ANC (12.986)	92-95	Y		2	14058658
24.		8.900	SCREW, ...	91-95	.....		AR	11505209
25.	7-N23	12.944	BRACE, RR W/H PNL LNR RR ...	91-95	Y (ZR1)		LH	14104631
	7-N23	12.944	BRACE, RR W/H PNL LNR RR ...	91-95	Y (ZR1)		RH	14104632
26.		8.921	NUT, TYPE P-WU SPR M6.3X1.81 PHOS ORG	91-95	.....		AR	11504035
27.		8.977	SCREW, PAN HD TORX W/WA, M ' 2X1.41X16. SST (RR LIC PLT BRKT)	91-95	.....		4	11508100
28.	7-C27	7.800	BRACKET, RR LIC PLT	94-95	Y (ZR1)		1	16509671
	7-C27	7.800	BRACKET, RR LIC PLT	94-95	Y (VL5) (EXPORT)		1	16519887
29.		8.977	BOLT, HWH, 4.2X2.5X20, 12.5-OD, AB PT, 6010M, BZ (RR LIC PLT BRKT)	91-95	.....		2	10272737
30.	7-C27	7.800	RIVET, RR LIC PLT BRKT (23.5LG 9.89 OD) (8.967)	94-95	Y		2	10125439

RPO DEFINITIONS

T90 – LAMP,SIGNALING AND MARKER(EXPORT)
VD1 – PROVISION OPTIONS,EUROPE(EXPORT)
VL5 – LICENSE PLATE,REAR MOUNTING PACKAGE(EXPORT)
ZR1 – PACKAGE,SPECIAL PERFORMANCE COUPE(1YY07 + ZR1 == 1YZ07)
Z4Z – MERCHANDISED PKG INDY PACE CAR
05U – PRIMARY COLOR EXTERIOR, CYCLAMEN (95)
10U – EXTERIOR COLOR,ARTIC WHITE
19U – PRIMARY COLOR,EXTERIOR,BLACK
26U – EXTERIOR COLOR,PRIMARY,STEEL BLUE METALLIC
28U – EXTERIOR COLOR,PRIMARY,DK CLOISONNE BLUE MET
35U – EXTERIOR COLOR,PRIMARY,YELLOW
41U – EXTERIOR COLOR,PRIMARY,BLACK
42U – EXTERIOR COLOR,PRIMARY,TURQUOISE MET
43U – EXTERIOR COLOR,PRIMARY,BRT AQUA METALLIC
45U – EXTERIOR COLOR–MEDIUM GREEN METALLIC
53U – EXTERIOR COLOR,PRIMARY,COMPETITION YELLOW
66U – EXTERIOR COLOR,PRIMARY,LT MELON
68U – EXTERIOR COLOR,PRIMARY,BRILLIANT RED MET
70U – EXTERIOR COLOR,TORCH RED
73U – EXTERIOR COLOR,BLACK ROSE METALLIC
75U – EXTERIOR COLOR,PRIMARY,BRILLIANT RED METALLIC
80U – EXTERIOR COLOR,PRIMARY,MED QUASAR BLUE MET
81U – EXTERIOR COLOR,PRIMARY,BRIGHT RED
91U – EXTERIOR COLOR,PRIMARY,DARK ARGENT
96U – PRIMARY COLOR– EXTERIOR,DK. SMOKE GRAY MET.

© 2000 GENERAL MOTORS SERVICE PARTS OPERATIONS–CHEVROLET–14Y

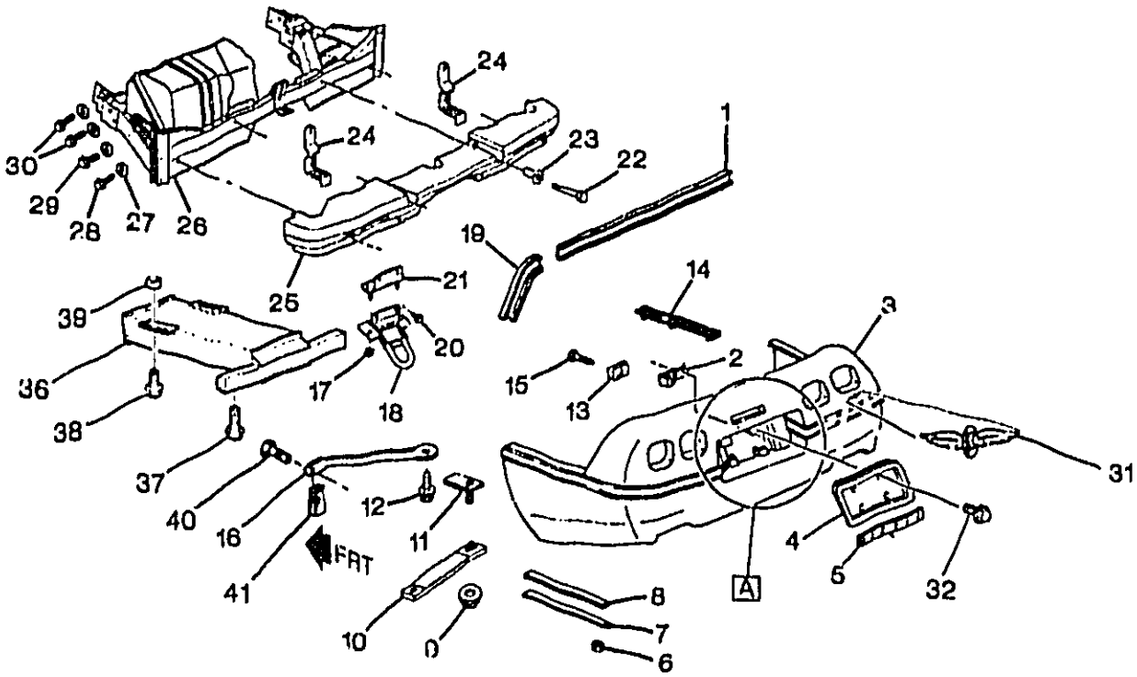

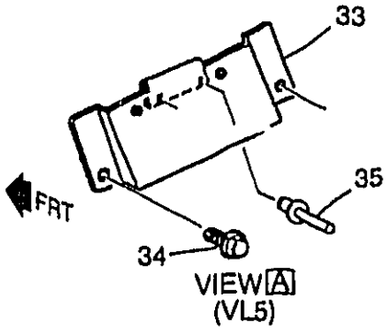

YY

1Y07-021

1993-1995 Y BUMPER/REAR (EXC ZR1)
1996 Y BUMPER/REAR

1.	7-C28	7.831	RETAINER, R/END FASCIA UPR CTR	93-95	Y (EXC ZR1)	1	14046629
	7-C28	7.831	RETAINER, R/END FASCIA UPR CTR	96	Y	1	14046629
2.	7-C28	7.831	SPACER, R/END FASCIA	93	Y	4	14049001
	7-C28	7.831	SPACER, R/END FASCIA	94-96	Y (EXC VD1, VL5)	4	14049001
3.	7-C28	7.831	FASCIA, R/END	93	Y (EXC ZR1)	1	10135972
	7-C28	7.831	FASCIA, R/END	94-95	Y (EXC T90, ZR1)	1	10135972
	7-C28	7.831	FASCIA, R/END	96	Y	1	10135972
	7-C28	7.831	FASCIA, R/END	94	Y (T90) (EXC ZR1) (EXPORT)	1	10204700
	-C28	7.831	FASCIA, R/END	95	Y (T90) (EXC ZR1) (EXPORT)	1	10261523
	7-C28	7.831	FASCIA, R/END	96	Y (T90) (EXPORT)	1	10261523
4.	7-C27	7.800	BRACKET, RR LIC PLT	93	Y (EXC ZR1)	1	10146492
	7-C27	7.800	BRACKET, RR LIC PLT	94-95	Y (EXC VD1, VL5, ZR1)	1	10146492
	7-C27	7.800	BRACKET, RR LIC PLT	96	Y (EXC VD1, VL5)	1	10146492

© 2000 GENERAL MOTORS SERVICE PARTS OPERATIONS-CHEVROLET-14Y

							1Y07-021
5.	7-C28	7.831	REINFORCEMENT, R/END FASCIA LWR CTR	93-96	Y	1	10132965
6.		8.917	NUT-HEX, M5X0.8X5.3, 19 OD, GM 510-M (9), POR (AC-DELCO #11504614)	93-96		AR	11504614
7.	7-C28	7.831	REINFORCEMENT, R/END FASCIA SI LWR (OTR)	93-96	Y	2	14104202
8.	7-C28	7.831	RETAINER, R/END FASCIA SI CTR	93	Y (EXC ZR1)	LH	10149213
	7-C28	7.831	RETAINER, R/END FASCIA SI CTR	94-95	Y (EXC T90, ZR1)	LH	10149213
	7-C28	7.831	RETAINER, R/END FASCIA SI CTR	96	Y (EXC T90)	LH	10149213
	7-C28	7.831	RETAINER, R/END FASCIA SI CTR	94-96	Y (T90) (EXPORT)	LH	10149275
9.		8.917	NUT, HFH M6X1X6.5 ZOR 9	93-96		AR	3530297
10.	7-N25	12.986	SUPPORT, BODY UPR RR PNL	93-96	Y67	2	10198696
11.	7-N23	12.966	PLATE, BODY UPR RR PNL SUPT ANC (12.983)	93-96	Y	2	14058658
12.		8.900	SCREW, (BODY UPR RR PNL SUPT)	93-96		2	11505209
13.		8.921	NUT, U SHAPE TYPE P, M6 3X1.81, PNL RANGE.65-3.8, PEOR	93-96		AR	11514290
14.	7-C28	7.831	RETAINER, R/END FASCIA SI CTR	93	Y (EXC ZR1)	RH	10149214
	7-C28	7.831	RETAINER, R/END FASCIA SI CTR	94-95	Y (EXC T90, ZR1)	RH	10149214
	7-C28	7.831	RETAINER, R/END FASCIA SI CTR	96	Y (EXC T90)	RH	10149214
	7-C28	7.831	RETAINER, R/END FASCIA SI CTR	94-96	Y (T90) (EXPORT)	RH	10149276
15.		8.977	SCREW, PAN HD TORX W/FL WA TAP M6.3X 1.81X20 SS BLK 17 OD	93-96		AR	11508762
16.	7-N23	12.944	BRACE, RR W/H PNL LNR RR	93-95	Y (EXC ZR1)	LH	10051887
	7-N23	12.944	BRACE, RR W/H PNL LNR RR	93-95	Y (EXC ZR1)	RH	10051888
	7-N23	12.944	BRACE, RR W/H PNL LNR RR	96	Y	LH	10051887
	7-N23	12.944	BRACE, RR W/H PNL LNR RR	96	Y	RH	10051888
17.		8.915	NUT, HFH, 10X1.5 6H THD, 21.3 OD, 9.8 THK 13 HEX DR, GRD 9, ZF (R/END FASCIA CTR) (8.917)	93-96		2	10255857
18.	7-C11	7.068	HOOK, RR TOW	94-96	Y (V76) (EXPORT)	1	10224287
19.	7-C28	7.831	RETAINER, R/END FASCIA UPR OTR (4 STUDS)	93-95	Y (EXC ZR1)	LH	10272907
	7-C28	7.831	RETAINER, R/END FASCIA UPR OTR (4 STUDS)	93-95	Y (EXC ZR1)	RH	10272908
	7-C28	7.831	RETAINER, R/END FASCIA UPR OTR (4 STUDS)	96	Y	LH	10272907
	7-C28	7.831	RETAINER, R/END FASCIA UPR OTR (4 STUDS)	96	Y	RH	10272908
20.		8.900	BOLT, HFH M10X1.5X30 10.9 FL BLK 21.5 OD 26MM THD POINTED (RR TOW HOOK)	93-96		2	12337993
21.	7-C11	7.068	BRACKET, RR TOW HOOK	94-96	Y (V76) (EXPORT)	1	10224288
22.	7-D9	7.840	SPACER, R/END FASCIA ENGY ABS	93-96	Y	4	10216906

							1Y07-021
23.		8.077	SCREW, HWH6.3X1.8X50 13.2OD 7112M (R/END FASCIA ENGY ABS)	93-96	.....	AR	11516054
24.	7-C28	7.831	BRACKET, R/END FASCIA CTR ..	93-96	Y	2	10216905
25.	7-D9	7.840	ABSORBER, R/END FASCIA ENGY (SOLID FOAM) (AC-DELCO #16519012) ((ON SOME 1993 VEHS IN PLC OF EGG CRATE TYPE ABSORB, REFER TO 93 SERV MANUAL, SECT 10 FOR INSTALL))	93-96	Y	1	16519012
26.	7-C28	7.831	BAR, RR BPR IMP (W/O RECTANGULAR OPENINGS)	93	Y (2ND DES)	1	10246744
	7-C28	7.831	BAR, RR BPR IMP (W/O RECTANGULAR OPENING)	94-96	Y	1	10246744
	7-C28	7.831	BAR, RR BPR IMP (W/2 RECTANGULAR OPENINGS)	93	Y (1ST DES)	1	10153670
	7-C28	7.831	EXTENSION, RR BPR IMP BAR ..	95-96	Y (N84)	1	10265938
27.		8.929	WASHER, SPL STL (15/32 ID X 1 1/8 ODX1/8) (RR BPR IMP BAR) ..	93-96	.....	8	3790768
28.		8.900	BOLT, HFH M10X1.5X145 9.8 PZOR, 21.5 OD DIM A 40MM, CONE POINT (POS #3)	93-96	.....	4	11508490
29.		8.900	BOLT, HFH M10X1.5X130 9.8 PZOR (POS #2)	93-96	.....	2	11508489
30.		8.900	BOLT, HFH M10X1.5X105 9.8 PZOR (POS #1)	93-96	.....	AR	11508142
31.		DISCON	PLATE, R/END FASCIA NA (INDY MTR SPDWY, WINGS & WHL)	95	Y (Z4Z)	1	10278422
32.		8.977	SCREW, PAN HD TORX W/WA, M4.2X1.41X16, SST (RR LIC BRKT)	93-96	.....	4	11508100
33.	7-C27	7.800	BRACKET, RR LIC PLT	93	Y (EXC ZR1)	1	10146492
	7-C27	7.800	BRACKET, RR LIC PLT	94-95	Y (EXC VD1, VL5, ZR1) .	1	10146492
	7-C27	7.800	BRACKET, RR LIC PLT	96	Y (EXC VD1, VL5)	1	10146492
	7-C27	7.800	BRACKET, RR LIC PLT	94-96	Y (VL5) (EXPORT)	1	16519887
34.		8.977	BOLT, HWH, 4.2X2.5X20, 12.5-OD, AB PT, 6010M, BZ (RR LIC PLT BRKT) (EXP)	93-96	.....	2	10272737
35.		8.977	SCREW, PAN HD TORX W/WA, M4.2X1.41X16, SST (RR LIC BRKT)	93	.....	4	11508100
	7-C27	7.800	RIVET, RR LIC PLT BRKT (EXP) (23.5LG 9.89 OD) (8.967)	94-96	Y	2	10125439
36.	7-C28	7.831	EXTENSION, RR BPR IMP BAR (INCLS 39)	95-96	Y (N84)	1	10265938
37.		8.900	SCREW, HEX HD CONICAL SPR WA, M6X1X20, 24 OD, 9.8, PZOR, 7112 (RR BPR IMP BAR EXTN) (POSN#1)	93-96	.....	2	11516060
38.		8.900	BOLT, HEX W/WA, M8X1.25X20, 8.8, PC (RR BPR IMP BAR EXTN) (POSN#2)	93-96	.....	2	11504611
39.	7-C28	7.831	NUT, RR BPR IMP BAR EXTN (PART OF 36) (M6X1.0) (10.512) .	95-96	Y (N84)	2	10237960

					1Y07-021
40.	8.977	SCREW, PAN HD TORX W/FL WA TAP M6.3X 1.81X20 SS BLK 17 OD (RR W/H PNL LNR)	93-96	2	11508762
41.	8.921	NUT, U-TYPE, 6.3X1.81, 13.5 REACH, 25.8X 16.5, 0.65-3.8 PNL RNG, PZOR (RR W/H PNL LNR)	93-96	2	11509582

RPO DEFINITIONS

N84 – SPARE TIRE(DELETE)
T90 – LAMP,SIGNALING AND MARKER(EXPORT)
VD1 – PROVISION OPTIONS,EUROPE(EXPORT)
VL5 – LICENSE PLATE,REAR MOUNTING PACKAGE(EXPORT)
V76 – HOOK,FRONT TOW(EXPORT)
ZR1 – PACKAGE,SPECIAL PERFORMANCE COUPE(1YY07 + ZR1 == 1YZ07)
Z4Z – MERCHANDISED PKG INDY PACE CAR

© 2000 GENERAL MOTORS SERVICE PARTS OPERATIONS-CHEVROLET-14Y

MICROFICHE INDEX

GROUPS 6.000 THRU 7.000

FICHE 7 OF 11

GROUP	DESCRIPTION	STARTING GRID LOCATION PARTS	ILLUSTRATIONS
–	GENERAL INFORMATION	1–A2	1–G2
–	ALPHABETICAL INDEX	1–B13	N.A.
6.000	FRONT SUSPENSION – STEERING	7–A2	7–E2
7.000	FRAMES – SPRINGS – SHOCKS – BUMPERS	7–C2	7–H2
–	OUT OF FICHE CALLS	N.A.	7–M17

7–K1

MICROFICHE INDEX

GROUPS 6.000 THRU 7.000

FICHE 7 OF 11

GROUP	DESCRIPTION	STARTING GRID LOCATION PARTS	ILLUSTRATIONS
–	GENERAL INFORMATION	1–A2	1–G2
–	ALPHABETICAL INDEX	1–B13	N.A.
6.000	FRONT SUSPENSION – STEERING	7–A2	7–E2
7.000	FRAMES – SPRINGS – SHOCKS – BUMPERS	7–C2	7–H2
–	OUT OF FICHE CALLS	N.A.	7–M17

7–L1

MICROFICHE INDEX

GROUPS 6.000 THRU 7.000

FICHE 7 OF 11

GROUP	DESCRIPTION	STARTING GRID LOCATION PARTS	ILLUSTRATIONS
–	GENERAL INFORMATION	1–A2	1–G2
–	ALPHABETICAL INDEX	1–B13	N.A.
6.000	FRONT SUSPENSION – STEERING	7–A2	7–E2
7.000	FRAMES – SPRINGS – SHOCKS – BUMPERS	7–C2	7–H2
–	OUT OF FICHE CALLS	N.A.	7–M17

7–M1

0.029 BOLT – BRACE – BRACKET – SHIELD – WASHER, Engine Mounting [8–CYLINDER]

93–94	Y 5.7J (LT5)	10187797	1	8.30	BOLT, C'L & C/CASE BR (M8X1.25X101.0, 6.12, SAE 4037 OR 1541, PC, MACH) (00.056)
90–96	Y	09442963	6	.95	BOLT, ENG MT BRKT (08.900)
90–91	Y 5.7J (LT5)	14069669	4	*1.10	BOLT, ENG MT BRKT BR (POSN #1) (M10X1.5X25 13HEX) (07.039)
92–94	Y	11509591	4	2.00	BOLT, ENG MT BRKT BR (HFH, M12X1.75X40 10.9 PEOR 25.6–OD36–THD) (08.900)
92–96	Y	14069669	4	*1.10	BOLT, ENG MT BRKT BR (POSN #1) (M10X1.5X25 13HEX) (07.039)
92–96	Y	22651578	4	2.45	BOLT, ENG MT BRKT BR (HFH, M12X1.75X40) (08.900)
90–91	Y 5.7J (LT5)	14104625	LH	37.90	BRACE, ENG MT BRKT
90–91	Y 5.7J (LT5)	14104626	RH	37.90	BRACE, ENG MT BRKT
92–96	Y	14104625	LH	37.90	BRACE, ENG MT BRKT
92–96	Y	14104626	RH	37.90	BRACE, ENG MT BRKT

1.166 CLAMP – GUARD – SUPPORT, Hose (Radiator, Heater, A/C)

84–87	Y	02012781	1	3.70	CLAMP, A/C CMPR & CNDSR HOSE
90–95	Y 5.7J (LT5)	10157995	2	2.00	CLAMP, RAD BYPASS HOSE (08.948)
91	Y 5.7–8 (L98)	21030917	1	4.35	CLAMP, RAD INL HOSE ((37.5MM TO 44.5MM) NOMINAL SIZE 42MM, STAMPED "P") (08.948)
90–94	Y 5.7J (LT5)	10108248	5	1.85	CLAMP, RAD INL HOSE ENG (44MM) (08.948)
92–94	Y 5.7P (LT1)	21030917	1	4.35	CLAMP, RAD INL HOSE ENG ((37.5MM TO 44.5MM) NOMINAL SIZE 42MM, STAMPED "P") (08.948)
90–94	Y	21030894	1	3.05	CLAMP, RAD INL HOSE RAD (47MM)
95	Y 5.7P (LT1)	21030894	1	3.05	CLAMP, RAD INL HOSE RAD (47MM)
96	Y	21030894	1	3.05	CLAMP, RAD INL HOSE RAD (47MM)
90–91	Y 5.7–8 (L98)	21030894	1	3.05	CLAMP, RAD OTLT HOSE ENG (47MM)
91	Y	11516239	1	6.90	CLAMP, RAD OTLT HOSE ENG (LT BROWN) (08.948)
92–94	Y 5.7P (LT1)	21030917	1	4.35	CLAMP, RAD OTLT HOSE ENG ((37.5MM TO 44.5MM) NOMINAL SIZE 42MM, STAMPED "P") (08.948)
90–91	Y 5.7–8 (L98)	10158012	AR	3.05	CLAMP, RAD OTLT HOSE RAD (53MM) (08.948)
90–95	Y 5.7J (LT5)	10158012	AR	3.05	CLAMP, RAD OTLT HOSE RAD (53MM) (08.948)
92–96	Y 5.7P (LT1)	10158012	AR	3.05	CLAMP, RAD OTLT HOSE RAD (53MM) (08.948)
90–94	Y 5.7J (LT5)	11516239	2	6.90	CLAMP, RAD OTLT RR HOSE ENG (51MM) (LT BROWN) (08.948)
90–95	Y 5.7J (LT5)	10019739	1	1.10	CLAMP, SECD AIR INJN CHK VLV HOSE (31.5 TO 36MM) (01.762)
92–93	Y 5.7P (LT1)	22518665	AR	*.93	CLAMP, SECD AIR INJN CHK VLV HOSE (9/16 TO 1 1/16 DIA) (08.948)
84–91	Y	22518665	AR	*.93	CLAMP, WORM TYPE (9/16 TO 1 1/16 DIA) (08.948)

1.267 BRACKET – PANEL, Radiator Grille and Front End Panel

84–89	Y	14058299	LH	7.90	BRACKET, INR
84–89	Y	14058300	RH	7.90	BRACKET, INR
84–90	Y	10077355	1	7.20	BRACKET, RAD GRL (CTR)
90	Y	14104983	LH	7.90	BRACKET, RAD GRL INR
90	Y	14104984	RH	DISCON	BRACKET, RAD GRL INR

© 2000 GENERAL MOTORS SERVICE PARTS OPERATIONS

1.267 BRACKET -- PANEL, Radiator Grille and Front End Panel(Con't)

84-88	Y	14058670	1	15.30	PANEL, GRL MT
89	Y 5.7-8 (L98)	14058670	1	15.30	PANEL, GRL MT
90	Y SOFT RIDE SUSP (FE1), HVY DUTY SUSP (FE7)	14104982	1	22.70	PANEL, RAD GRL MT

1.272 BAFFLE – BOLT – BRACE – BRACKET – DEFLECTOR – DEFLECTOR PKG – NUT – RETAINER – SCREW, Radiator Air

84	Y	14030214	1	56.18	BAFFLE, LWR
85-88	Y	14078642	1	56.18	BAFFLE, LWR
89	Y 5.7-8 (L98)	14078642	1	56.18	BAFFLE, LWR
84	Y	14049232	1	DISCON	BAFFLE, UPR
85-88	Y	14078651	1	56.18	BAFFLE, UPR
89	Y 5.7-8 (L98)	14078651	1	56.18	BAFFLE, UPR
91-96	Y	10149273	1	2.80	BOLT, FRT A/DFL (07.833)
84-90	Y	10077360	1	8.56	BRACE, FRT A/DFL UPR CTR
91-96	Y	10149267	1	8.30	BRACE, FRT A/DFL UPR CTR
84	Y	14043135	LH	23.05	DEFLECTOR, FRT
84	Y	14043136	RH	23.05	DEFLECTOR, FRT
85	Y (1ST DES)	14043135	LH	23.05	DEFLECTOR, FRT (W/O STIFFENING RIBS)
85	Y (1ST DES)	14043136	RH	23.05	DEFLECTOR, FRT (W/O STIFFENING RIBS)
85	Y (2ND DES)	14089635	LH	24.50	DEFLECTOR, FRT (W/STIFFENING RIBS)
85	Y (2ND DES)	14089636	RH	24.50	DEFLECTOR, FRT (W/STIFFENING RIBS)
86	Y	14089635	LH	24.50	DEFLECTOR, FRT
86	Y	14089636	RH	24.50	DEFLECTOR, FRT
87-90	Y (EXC PERF HDLG PKG Z51)	14043135	LH	23.05	DEFLECTOR, FRT
87-90	Y (EXC PERF HDLG PKG Z51)	14043136	RH	23.05	DEFLECTOR, FRT
87	Y07 1BL (PERF HDLG PKG Z51)	14089635	LH	24.50	DEFLECTOR, FRT
87	Y07 1BL (PERF HDLG PKG Z51)	14089636	RH	24.50	DEFLECTOR, FRT
88	Y (EXC SEO Z5G)	14043135	LH	23.05	DEFLECTOR, FRT
88	Y (EXC SEO Z5G)	14043136	RH	23.05	DEFLECTOR, FRT
88-89	Y PERF HDLG PKG (Z51)	14089635	LH	24.50	DEFLECTOR, FRT
88-89	Y PERF HDLG PKG (Z51)	14089636	RH	24.50	DEFLECTOR, FRT
91-96	Y	10149263	LH	18.45	DEFLECTOR, FRT AIR
91-96	Y	10149264	RH	18.45	DEFLECTOR, FRT AIR
84	Y	14043137	1	23.05	DEFLECTOR, FRT CTR
85	Y (1ST DES)	14043137	1	23.05	DEFLECTOR, FRT CTR (W/O STIFFENING RIBS)
85	Y (2ND DES)	14089634	1	24.50	DEFLECTOR, FRT CTR (W/STIFFENING RIBS)
86	Y	14089634	1	24.50	DEFLECTOR, FRT CTR (W/STIFFENING RIBS)
87-90	Y (EXC PERF HDLG PKG Z51)	14043137	1	23.05	DEFLECTOR, FRT CTR
87-89	Y PERF HDLG PKG (Z51)	14089634	1	24.50	DEFLECTOR, FRT CTR (W/STIFFENING RIBS)
88	Y SEO (Z5G)	14089634	1	24.50	DEFLECTOR, FRT CTR (W/STIFFENING RIBS)
90	Y CALLAWAY CONVERSION (Z5G)	14089634	1	24.50	DEFLECTOR, FRT CTR (W/STIFFENING RIBS)
90	Y PERF HDLG PKG (Z51), H .D .SUSP (FE7)	14089634	1	24.50	DEFLECTOR, FRT CTR (W/STIFFENING RIBS)
90	Y CALLAWAY CONVERSION (Z5G)	14089635	LH	24.50	DEFLECTOR, FRT CTR (LONG) (W/STIFFENING RIBS)
90	Y PERF HDLG PKG (Z51), H .D .SUSP (FE7)	14089635	LH	24.50	DEFLECTOR, FRT CTR (LONG) (W/STIFFENING RIBS)

© 2000 GENERAL MOTORS SERVICE PARTS OPERATIONS

1.272 BAFFLE – BOLT – BRACE – BRACKET – DEFLECTOR – DEFLECTOR PKG – NUT – RETAINER – SCREW, Radiator Air(Con't)

90	Y CALLAWAY CONVERSION (Z5G) .	14089636	RH	24.50	DEFLECTOR, FRT CTR (LONG) (W/STIFFENING RIBS) .....
90	Y PERF HDLG PKG (Z51), H .D .SUSP (FE7)	14089636	RH	24.50	DEFLECTOR, FRT CTR (LONG) (W/STIFFENING RIBS) .....
91–96	Y	10149265	1	18.45	DEFLECTOR, FRT CTR AIR .....
92–96	Y	10204533	LH	2.80	DEFLECTOR, RAD AIR SI .....
92–96	Y	10204534	RH	2.80	DEFLECTOR, RAD AIR SI .....
94–96	Y (EXC MODIFICATION–NOISE CONTROL (B4H) (EXPORT)	10204534	RH	2.80	DEFLECTOR, RAD AIR SI .....
87–91	Y	14104753	1	9.40	DEFLECTOR, RAD AIR UPR .....
92–96	Y	10204532	1	9.10	DEFLECTOR, RAD AIR UPR .....
84–88	Y Y (FOR FIELD FIX ONLY)	11517518	2	1.85	SCREW, FRT AIR DEFLECTOR PKG (08.900) (AC–DELCO #11517518) ...

1.276 RETAINER, Radiator Baffle and Shroud

84–96	Y	14043167	1	4.15	RETAINER, RAD AIR LWR BFL .....

2.187 KEY, Ignition and Locks

Note: FOR 1986–1991 USAGE REFER TO TO STRG COLUMN CHART GRP 6.518

84–86	Y	01154611	AR	*1.12	KEY, DR LK (UNCODED) (OVAL HD) (GRV B) .....
87–90	Y	01154605	AR	*1.17	KEY, DR LK (UNCODED) (OVAL HD) (GRV D) .....
91–96	Y	01154607	2	*1.17	KEY, DR LK (OVAL HD, GRV H, B&S 320405A, CAN USE 20364745 BOOT)
90	Y 5.7J (LT5), SOFT RIDE SUSP (FE1), HVY DUTY SUSP (FE7)	12505009	1	30.35	KEY, ENG PWR SW (CODED) .....
91–95	Y 5.7J (LT5)	12508275	1	13.57	KEY, ENG PWR SW (CODED) .....
86–96	Y	26019393	1	22.90	KEY, IGN LK (RESISTOR CODE #3) ....
86–96	Y	26019395	3	22.90	KEY, IGN LK (RESISTOR CODE #5) ....
86–96	Y	26019396	1	22.90	KEY, IGN LK (RESISTOR CODE #6) ....
86–96	Y	26019397	3	22.90	KEY, IGN LK (RESISTOR CODE #7) ....
86–96	Y	26019398	3	22.90	KEY, IGN LK (RESISTOR CODE #8) ....
86–96	Y	26019399	3	22.90	KEY, IGN LK (RESISTOR CODE #9) ....
86–96	Y	26019400	3	22.90	KEY, IGN LK (RESISTOR CODE #10) ...
86–96	Y	26019401	3	22.90	KEY, IGN LK (RESISTOR CODE #11) ...
86–96	Y	26019402	3	22.90	KEY, IGN LK (RESISTOR CODE #12) ...
86–96	Y	26019403	3	22.90	KEY, IGN LK (RESISTOR CODE #13) ...
86–96	Y	26019404	3	22.90	KEY, IGN LK (RESISTOR CODE #14) ...
86–96	Y	26019405	3	22.90	KEY, IGN LK (RESISTOR CODE #15) ...
91	Y	26007687	1	*1.12	KEY, IGN LK (SQUARE HD W/O RES PELLET) (GRV C) .....
91–96	Y	26019392	1	22.90	KEY, IGN LK (RESISTOR CODE #2) ....
91–96	Y	26019394	3	22.90	KEY, IGN LK (RESISTOR CODE #4) ....
92–96	Y	26007687	1	*1.12	KEY, IGN LK (SQUARE HD W/O RES PELLET) (GRV C) .....
84–35	Y	01154610	AR	*1.12	KEY, SQUARE HD (BLANK) (PRIM) (GRV A) .....
86	Y	26007687	1	*1.12	KEY, SQUARE HEAD WITHOUT RESISTOR PELLET .....
86–89	Y	26019391	AR	22.90	KEY, THEFT DTRNT IGN (RESISTOR CODE #1) .....
86–90	Y	26019392	AR	22.90	KEY, THEFT DTRNT IGN (RESISTOR CODE #2) .....
86–89	Y	26019394	AR	22.90	KEY, THEFT DTRNT IGN (RESISTOR CODE #4) .....

© 2000 GENERAL MOTORS SERVICE PARTS OPERATIONS

2.187 KEY, Ignition and Locks(Con't)

86–89	Y	26019398	AR	22.90	KEY, THEFT DTRNT IGN (RESISTOR CODE #8)
86–89	Y	26019405	AR	22.90	KEY, THEFT DTRNT IGN (RESISTOR CODE #15)

2.188 BOLT – CONNECTOR – CYLINDER – RETAINER – SCREW – STUD – SWITCH, Ignition Switch

Note: FOR 1986–1991 USAGE REFER TO STEERING COLUMN CHART GRP 6.518

Note: WHEN ORDERING CYLINDER/LOCK FOR VEHICLES EQUIPPED WITH "VATS" (VEHICLE ANTI–THEFT SYSTEM), YOU MUST ALSO ORDER RESISTOR KEY (GRP 2.187). REFER TO SERVICE MANUAL FOR DETAILS.

84–86	Y	07806433	2	2.40	BOLT, IGN SW
91–96	Y	07806433	2	2.40	BOLT, IGN SW (10–24X1/4) (RD WSHR HD C/R)
84–85	Y	07830380	1	25.26	CYLINDER, STRG COL LK & IGN SW (CODED W/KEY) (B&S 607872) (CHROME) (AC–DELCO #D1403B)
84–85	Y	07840574	1	29.07	CYLINDER, STRG COL LK & IGN SW (CODED W/KEY, B&S 609532) (BLACK) (AC–DELCO #D1414B)
86	Y	26033390	1	48.45	CYLINDER, STRG COL LK & IGN SW (AC–DELCO #D1456C)
89	Y M/TRANS	26033387	1	81.09	CYLINDER, STRG COL LK & IGN SW (AC–DELCO #D1453C)
90–96	Y 6–SPD M/TRANS (ML9)	26033387	1	81.09	CYLINDER, STRG COL LK & IGN SW (AC–DELCO #D1453C)
90–93	Y 4–SPD A/TRANS (MD8)	26033390	1	48.45	CYLINDER, STRG COL LK & IGN SW (AC–DELCO #D1456C)
94–96	Y 4–SPD A/TRANS (M30)	26033390	1	48.45	CYLINDER, STRG COL LK & IGN SW (AC–DELCO #D1456C)
90	Y 5.7J (LT5)	05713260	1	3.76	RETAINER, ENG PWR SW (17.198)
84–86	Y	07829779	1	3.85	STUD, DIMMER & IGN SW MTG
91–96	Y	07829779	1	3.85	STUD, IGN & START SW
90	Y 5.7J (LT5)	14104646	1	30.86	SWITCH, ENG PWR (W/KEYS)
91	Y 5.7J (LT5), SOFT RIDE SUSP (FE1), HVY DUTY SUSP (FE7)	12514730	1	180.54	SWITCH, ENG PWR (W/KEYS) (MUST USE 12126533 HARNESS)
92–95	Y 5.7J (LT5)	12514730	1	180.54	SWITCH, ENG PWR
84–85	Y T&T WHL (N37)	01990116	1	20.67	SWITCH, IGN & START (AC–DELCO #D1405B)
86	Y	01990116	1	20.67	SWITCH, IGN & START (AC–DELCO #D1405B)
91–96	Y	01990116	1	20.67	SWITCH, IGN & START (AC–DELCO #D1405B)

2.195 ACTUATOR – ALARM – BOLT – BRACKET – CLIP – CONNECTOR – MODULE – RACK – RACK KIT – RELAY – SCREW – SHAFT – SPRING – SWITCH, Ignition Switch Warning, Lock, Headlamp, Theft Deterrent or Rear/Side Object

Note: FOR 1986–1991 USAGE REFER TO STEERING COLUMN CHART GRP 6.518

91–96	Y	26015728	1	11.78	ACTUATOR, IGN & START SW
84–86	Y	07840683	1	DISCON	ACTUATOR, IGN SW
84	Y	14062571	1	42.33	ALARM, ST BELT & IGN KEY & LPS
85–89	Y	10037040	1	54.57	ALARM, ST BELT & IGN KEY & LPS
90–93	Y	25518745	1	55.34	ALARM, ST BELT & IGN KEY & LPS (W/R/CON DR LK RCVR) (09.765)
90–96	Y	25518745	1	55.34	ALARM, ST BELT & IGN KEY & LPS (09.765)
91–96	Y	07841678	1	4.15	BOLT, STRG COL LK & IGN SW CYL (THD SECT AT TOP OF SCREW)

© 2000 GENERAL MOTORS SERVICE PARTS OPERATIONS

2.195 ACTUATOR – ALARM – BOLT – BRACKET – CLIP – CONNECTOR – MODULE – RACK – RACK KIT – RELAY – SCREW – SHAFT – SPRING – SWITCH, Ignition Switch Warning, Lock, Headlamp, Theft Deterrent or Rear/Side Object(Con't)

90–92	Y	10098454	1	4.64	BRACKET, ST BELT & IGN KEY & LPS ALARM
84–89	Y	10098473	1	DISCON	BRACKET, THEFT DTRNT MDL
86	Y	14091266	1	DISCON	BRACKET, THEFT DTRNT MDL (USE W/KEY DECODER MDL)
87–88	Y	14093186	1	DISCON	BRACKET, THEFT DTRNT MDL (USE W/KEY DECODER MDL)
89	Y	14104799	1	DISCON	BRACKET, THEFT DTRNT MODULE
84–86	Y	07830376	1	5.60	CLIP, ALARM SW RET
84–89	Y	16158276	1	109.10	MODULE, THEFT DETER (FORCED ENTRY ALARM)
86–88	Y	01228548	1	262.14	MODULE, THEFT DTRNT (KEY DECODER, PASS KEY SYS) (THIS MDL ONLY AVAIL W/RANDOM SELECTION KEY CODES & A NEW KEY WILL HAVE TO BE CUT USING THE CODE PROVIDED W/NEW MDL)
89	Y	16135270	1	175.44	MODULE, THEFT DTRNT (PASS KEY SYS)
91–96	Y	07844651	1	27.29	RACK KIT, IGN SW (W/SECTOR)
84–86	Y	07844651	1	27.29	RACK KIT, W/COL SECTOR
91–96	Y	07827157	1	6.73	RACK, IGN & START SW (USED W/ TILT COL)
84–86	Y T&T WHL (N37)	07827157	1	6.73	RACK, IGN SW ACTR
84–86	Y	07841678	1	4.15	SCREW, COL LK RET
91–96	Y	07837466	1	16.93	SHAFT, IGN & START SW ACTR
84–86	Y	07837466	1	16.93	SHAFT, STRG COL IGN SW SEL DRIVE
91–96	Y	07804908	1	4.35	SPRING, IGN & START SW RACK
84–86	Y	07804908	1	4.35	SPRING, IGN SW RACK PRELOAD
91–96	Y	26022717	1	5.81	SWITCH, IGN KEY ALARM (BUZZER ONLY) (AC–DELCO #D1458C)
84–86	Y	26022717	1	5.81	SWITCH, IGN KEY WARNING ALARM (AC–DELCO #D1458C)
84–87	Y (EXC ELEC S/D LK (AU3)	14066515	LH	42.59	SWITCH, THEFT DTRNT DR LK
84–87	Y (EXC ELEC S/D LK (AU3)	14066516	RH	DISCON	SWITCH, THEFT DTRNT DR LK
	*EXPORT**********EXPORT**********EXPORT**********EXPORT**********EXPORT*				
93–96	Y EUROPEAN PROVISIONS (VD1) (EXPORT), VE1 (EXPORT)	10098454	1	4.64	BRACKET, ST BELT & IGN KEY & LPS ALARM

2.277 BOLT – BRACE – BRACKET – SHIELD – SPACER, Generator Mounting

92–95	Y 5.7P (LT1)	10105345	1	3.06	BOLT, GEN
96	Y 5.7P (LT1), 5.7–5 (LT4)	10105345	1	3.06	BOLT, GEN
90–95	Y 5.7J (LT5)	10049639	1	3.70	BOLT, GEN BRKT (M10X1.5X100 13HEX) (00.002)
90–95	Y 5.7J (LT5)	11508355	1	.95	BOLT, GEN BRKT (TOP) (M10X1.5X50 10.9 POR) (08.900)
92	Y 5.7P (LT1)	09440073	1	2.25	BOLT, GEN BRKT (HFH 3/8–16X2.00 280M POR 6174M) (08.900)
92–96	Y 5.7P (LT1)	09441560	2	*1.50	BOLT, GEN BRKT (HFH, 3/8–16X1.75, 1.12–THD LEN 0.75–OD, 300M, POR) (3/8–16X1.75, 1.12–THD) (08.900)
91	Y 5.7J (LT5)	11508687	2	1.82	BOLT, GEN BRKT BTM (HEX M8X1.25X20) (08.900) (AC–DELCO #11508687)
95–96	Y	11516523	1	DISCON	BOLT, GEN RR BR (08.900)

© 2000 GENERAL MOTORS SERVICE PARTS OPERATIONS

2.277 BOLT – BRACE – BRACKET – SHIELD – SPACER, Generator Mounting(Con't)

84	Y	14063758	1	DISCON	BRACKET, GEN
85	Y	14084384	1	19.84	BRACKET, GEN
86–89	Y	14087519	1	19.43	BRACKET, GEN
90–95	Y 5.7J (LT5)	10067545	1	51.00	BRACKET, GEN (TOP) (02.317)
90–95	Y 5.7J (LT5)	10067686	1	32.39	BRACKET, GEN (BOTTOM)
90–91	Y 5.7–8 (L98)	14087519	1	19.43	BRACKET, GEN
92–95	Y 5.7P (LT1)	12550052	1	77.01	BRACKET, GEN & A/C CMPR & P/S PUMP
93	Y 5.7J (LT5)	12550052	1	77.01	BRACKET, GEN & A/C CMPR & P/S PUMP
96	Y	12550052	1	77.01	BRACKET, GEN & A/C CMPR & P/S PUMP
85–90	Y	14087559	1	43.35	BRACKET, GEN & P/S PUMP
91	Y 5.7–8 (L98)	14087559	1	43.35	BRACKET, GEN & P/S PUMP
85	Y	14085724	1	DISCON	BRACKET, GEN SUP RR
92–96	Y 5.7P (LT1)	10028767	1	1.58	SPACER, GEN
93	Y 5.7J (LT5)	10028767	1	1.58	SPACER, GEN
96	Y 5.7–5 (LT4), 6–SPD M/TRANS (ML9)	10028767	1	1.58	SPACER, GEN

2.459 ACTUATOR – CONNECTOR – PIN – PIVOT – ROD – SPRING – SWITCH, Capsule/Headlamp Dimmer

Note: FOR 1986–1991 USAGE REFER TO STEERING COLUMN CHART GRP 6.518

84–86	Y	07841321	1	DISCON	ACTUATOR, D/SW ROD
91–96	Y	07827020	1	13.87	ACTUATOR, HDLP D/SW (AC–DELCO #D844)
91–96	Y	07829787	1	2.24	PIN, T/SIG LVR PIV (AC–DELCO #7829787)
84–86	Y	07841314	1	20.71	PIVOT, STRG COL SW ACTR
84–86	Y	07840668	1	10.46	ROD, D/SW
91–93	Y	26012347	1	10.20	ROD, HDLP D/SW ACTR
94–96	Y	26035679	1	10.20	ROD, HDLP D/SW ACTR
91	Y	26019660	1	29.07	SWITCH, HDLP DIMR (COLUMN) (AC–DELCO #D834)
92–96	Y	26035239	1	14.59	SWITCH, HDLP DIMR (AC–DELCO #D8041A)
84	Y (EXC EXPORT VB4, VD1, VE1, VT7)	26035239	1	14.59	SWITCH, STRG COL DIMR (AC–DELCO #D8041A)
85–86	Y	26035239	1	14.59	SWITCH, STRG COL DIMR (AC–DELCO #D8041A)
	*EXPORT**********EXPORT**********EXPORT**********EXPORT**********EXPORT*				
84	Y EXPORT	07829781	1	34.44	SWITCH, DIMR (AC–DELCO #D816)

2.560 BOLT – BRACKET – INSULATOR – MODULE – NUT, Body Multifunction Electric Computer

91–96	Y	12337892	4	*1.13	BOLT, BCM BRKT (POSN #2) (M5X.8X16 THD) (SPECIAL) (03.671) (AC–DELCO #12337892)
90–96	Y	10085989	1	3.37	BRACKET, BCM BRKT
86–90	Y67	14100353	1	12.80	BRACKET, MULTIUSE RLY
93–95	Y	03999572	2	4.98	INSULATOR, BCM (09.260)
96	Y	03999572	1	4.98	INSULATOR, BCM (09.260)
90	Y	16146688	1	172.55	MODULE, BODY CONT (REMAN)
91	Y	16155502	1	172.55	MODULE, BODY CONT (REMAN)
92–93	Y	16193458	1	168.00	MODULE, BODY CONT (REMAN)
94	Y	16212971	1	210.70	MODULE, BODY CONT (REMAN) (AC–DELCO #16212971)

© 2000 GENERAL MOTORS SERVICE PARTS OPERATIONS

2.560 BOLT – BRACKET – INSULATOR – MODULE – NUT, Body Multifunction Electric Computer(Con't)

95	Y	16223622	1	479.80	MODULE, BODY CONT (REMAN) (AC–DELCO #16223622)
96	Y	16230561	1	399.83	MODULE, BODY CONT
90–96	Y	10027015	2	.53	NUT, BCM (PUSH–ON) (OVERALL LENGTH 1.25") (03.671) (AC–DELCO #10027015)

2.662 BOLT – PLATE – RETAINER – SUPPORT, Tail Lamp Mounting

84–86	Y (EXC EXPORT)	14078683	LH	21.40	PLATE, TAIL LP MT
84–86	Y (EXC EXPORT)	14078684	RH	21.40	PLATE, TAIL LP MT
87–88	Y (EXC T89, T90 EXPORT)	14078683	LH	21.40	PLATE, TAIL LP MT
87–88	Y (EXC T89, T90 EXPORT)	14078684	RH	21.40	PLATE, TAIL LP MT
89	Y	14078683	LH	21.40	PLATE, TAIL LP MT
89	Y	14078684	RH	21.40	PLATE, TAIL LP MT
90	Y (EXC SPECIAL TAIL & S/LP (T93)	14078683	LH	21.40	PLATE, TAIL LP MT
90	Y (EXC SPECIAL TAIL & S/LP (T93)	14078684	RH	21.40	PLATE, TAIL LP MT
	*EXPORT**********EXPORT**********EXPORT**********EXPORT**********EXPORT*				
84–86	Y EXPORT	14046630	4	DISCON	PLATE, TAIL LP MT
87–88	Y T89, T90 (EXPORT)	14046630	4	DISCON	PLATE, TAIL LP MT

2.714 SOCKET, Rear License Lamp

Note: FOR USAGE REFER TO LAMP SOCKET CHART GRP 2.999

89–93	Y	12083007	2	11.27	SOCKET, RR LIC PLT LP (02.575) (AC–DELCO #LS13)
94–96	Y (EXC SIG & MKR LP (T90) (EXPORT)	12083007	1	11.27	SOCKET, RR LIC PLT LP (02.575) (AC–DELCO #LS13)
84	Y	12001470	1	18.50	SOCKET, SPA TIRE LP (AC–DELCO #LS5)
84–85	Y (EXC EXPORT)	12001470	1	18.50	SOCKET, W/CABLE, LIC LP (AC–DELCO #LS5)
88	Y (EXC T89, T90 EXPORT)	12083007	2	11.27	SOCKET, W/CABLE, RR LIC LP (02.575) (AC–DELCO #LS13)
84	Y	12001470	1	18.50	SOCKET, W/CABLE, SPA TIRE LP (AC–DELCO #LS5)
	*EXPORT**********EXPORT**********EXPORT**********EXPORT**********EXPORT*				
84–88	Y T89, T90 (EXPORT)	08918527	1	17.29	SOCKET, LIC PLT LP (AC–DELCO #LS9)
94	Y SIG & MKR LP (T90) (EXPORT)	08918527	1	17.29	SOCKET, RR LIC PLT LP (AC–DELCO #LS9)
94–96	Y SIG & MKR LP (T90) (EXPORT)	12141388	1	36.48	SOCKET, RR LIC PLT LP (W/LEADS) (02.596) (AC–DELCO #LS44)

2.729 INSULATOR – NUT, Capsule/Headlamp Trim

84–85	Y	14013246	AR	*1.10	NUT (M4.2 DIA SCR M7.8 DIA RND HOLE)
84–90	Y	00347347	AR	*1.00	NUT, SPL ANC (NYLON) (SQUARE HOLE) (01.267)
	*EXPORT**********EXPORT**********EXPORT**********EXPORT**********EXPORT*				
94–96	Y HDLP (T72) (EXPORT), RH RULE OF ROAD HDLP (T84) (EXPORT), LH RULE OF ROAD HDLP (T85) (EXPORT)	00347347	2	*1.00	NUT, HDLP BZL (UPLEVEL) (01.267)

2.819 BOLT – CONTACT – RETAINER – SPRING – SWITCH – TOWER, Horn Button

Note: FOR 1986–1991 USAGE REFER TO STEERING COLUMN CHART GRP 6.518

94–96	Y	10192577	2	1.30	BOLT, HORN CNCT MTG (M6X1.0X13.0) (METRIC TORX HD) (08.913)

© 2000 GENERAL MOTORS SERVICE PARTS OPERATIONS

2.819 BOLT – CONTACT – RETAINER – SPRING – SWITCH – TOWER, Horn Button(Con't)

84–85	Y	09768584	1	20.04	CONTACT, HORN BLOW
86–89	Y	17982941	1	9.23	CONTACT, STRG WHL HORN CAP
90–91	Y	12506007	LH	6.78	SWITCH, STRG WHL HORN (GRAY) (BUTTON ONLY)
90–91	Y	12506008	RH	6.78	SWITCH, STRG WHL HORN (GRAY) (BUTTON ONLY)
92–93	Y	12518247	LH	6.78	SWITCH, STRG WHL HORN (BLACK) (W/O CONTACTS)
92–93	Y	12518248	RH	6.78	SWITCH, STRG WHL HORN (BLACK)
94–96	Y	17999094	1	10.81	SWITCH, STRG WHL HORN (AC–DELCO #D1774A)
84–88	Y	09768768	1	10.97	TOWER, HORN LEAD
89	Y SPORT WHL (NK4)	09768768	1	10.97	TOWER, HORN LEAD

2.820 CAP – EMBLEM, Horn Button

84–85	Y	09768580	1	84.66	CAP, STRG WHL HORN
86–87	Y	17983747	1	58.14	CAP, STRG WHL HORN
88	Y (EXC B18)	17983747	1	58.14	CAP, STRG WHL HORN
88	Y 35 ANNIV (Z01)	17989742	1	DISCON	CAP, STRG WHL HORN
89	Y	17983747	1	58.14	CAP, STRG WHL HORN
84–87	Y	09769808	1	24.60	EMBLEM, HORN CAP
88	Y (EXC B18)	09769808	1	24.60	EMBLEM, HORN CAP
88	Y 35 ANNIV (Z01)	17989520	1	DISCON	EMBLEM, HORN CAP
89	Y	09769808	1	24.60	EMBLEM, HORN CAP

2.859 LEAD – WIRE, Horn Lead

84–89	Y	09769448	1	*2.54	WIRE, HORN SW

2.895 ACTUATOR – ARM – BOLT – SCREW – SWITCH, Turn Signal Lamp

Note: FOR 1986–1991 USAGE REFER TO STEERING COLUMN CHART GRP 6.518

91–96	Y	26020396	1	12.65	ACTUATOR, T/SIG SW
84–86	Y	07809128	3	2.65	BOLT, T/SIG SW
91–96	Y	07809128	3	2.65	BOLT, T/SIG SW (9–18X17.52) (PAN HD C/R HILO TAP)
94–96	Y	26019205	1	1.68	BOLT, T/SIG SW ACTR (M4.2X1.41X10) (FLATCS C/R HILO TAP)
84–86	Y	01997984	1	28.25	SWITCH, DIR SIG AND TRAFFIC HAZARD (AC–DELCO #D6223)
89	YY	01995974	AR	56.61	SWITCH, T/SIG (AC–DELCO #D9001)
91–93	Y	01995974	1	56.61	SWITCH, T/SIG (AC–DELCO #D9001)
94–96	Y (EXC EUROPEAN PROVISIONS (VD1) (EXPORT), VE1 (EXPORT)	01995974	1	56.61	SWITCH, T/SIG (AC–DELCO #D9001)
	*EXPORT**********EXPORT**********EXPORT**********EXPORT**********EXPORT*				
94–96	Y VE[illegible], EUROPEAN PRO[illegible]ONS (VD1) (EXPORT)	01995962	1	40.56	SWITCH, T/SIG (AC–DELCO #D6203A)

2.896 CAM – RETAINER – SPRING, Turn Signal Switch Cancelling

Note: FOR 1986–1991 USAGE REFER TO STEERING COLUMN CHART GRP 6.518

84–86	Y	07849228	1	19.43	CAM, STRG COL T/SIG CANC
91	Y	26047013	1	14.24	CAM, T/SIG CANC (AC–DELCO #26047013)
92	Y (2ND DES)	26047013	1	14.24	CAM, T/SIG CANC (USE W/COL ASM LABELED 26030971) (AC–DELCO #26047013)
93–96	Y	26047013	1	14.24	CAM, T/SIG CANC (AC–DELCO #26047013)

© 2000 GENERAL MOTORS SERVICE PARTS OPERATIONS

2.895 CAM – RETAINER – SPRING, Turn Signal Switch Cancelling(Con't)

84	Y	10499953	1	1.50	SPRING, LANE CHANGE
90	Y FOR MDL APPL & POA INFO SEE COL CHART	10499953	1	1.50	SPRING, LANE CHANGE
84	Y	01964784	RH	*.54	SPRING, T/SIG CANC (AC–DELCO #1964784)
84	Y	01964785	LH	*.54	SPRING, T/SIG CANC (AC–DELCO #1964785)
94–96	Y (EXC EUROPEAN PROVISIONS (VD1) (EXPORT), VE1 (EXPORT)	10476617	RH	2.00	SPRING, T/SIG SW CANC CAM
94–96	Y (EXC EUROPEAN PROVISIONS (VD1) (EXPORT), VE1 (EXPORT)	10476618	LH	2.00	SPRING, T/SIG SW CANC CAM
91–96	Y	10497876	1	*3.80	SPRING, T/SIG SW LVR (AC–DELCO #10497876)
	*EXPORT**********EXPORT**********EXPORT**********EXPORT**********EXPORT*				
91–96	Y EUROPEAN PROVISIONS (VD1) (EXPORT), VE1 (EXPORT)	01964784	RH	*.54	SPRING, T/SIG SW CANC CAM (AC–DELCO #1964784)
91–96	Y EUROPEAN PROVISIONS (VD1) (EXPORT), VE1 (EXPORT)	01964785	LH	*.54	SPRING, T/SIG SW CANC CAM (AC–DELCO #1964785)

3.145 BRACKET – CLAMP – CLIP – CONNECTOR – HARNESS – HOSE – PIPE – SHIELD – TUBE, Early Fuel Evaporation

86–89	Y67	14092701	1	7.75	BRACKET, BRK & FUEL VPR PIPE
87	Y07 1BL (PERF HDLG PKG Z51), B2B (SPORT HDLG PKG Z52)	14092701	1	7.75	BRACKET, BRK & FUEL VPR PIPE
88–89	Y07 PERF HDLG PKG (Z51), SPORT HDLG PKG (Z52)	14092701	1	7.75	BRACKET, BRK & FUEL VPR PIPE
90–91	Y	14092701	1	7.75	BRACKET, FUEL VPR PIPE
96	Y 5.7P (LT1), 5.7–5 (LT4)	12555830	1	.75	CONNECTOR, EVAP EMIS CNSTR PURGE HOSE (90 DEG ELBOW)
91–95	Y	10046084	1	.77	CONNECTOR, EVAP EMIS HOSE (03.130)
96	Y 5.7P (LT1), 5.7–5 (LT4)	10046084	1	.77	CONNECTOR, EVAP EMIS HOSE (03.130)
84–96	Y	00474793	1	13.42	CONNECTOR, EVAP EMIS INTER HOSE (THREADS MUST BE SEALED W/THREAD SEALANT 12346004.) (03.680)
85–86	Y	10496984	1	DISCON	CONNECTOR, TEE
87	Y	10046010	1	DISCON	HARNESS, FUEL VPR CNSTR
88–89	Y	10055891	1	23.36	HARNESS, FUEL VPR CNSTR
90	Y (5.7–8)	10055891	1	23.36	HARNESS, FUEL VPR CNSTR
90	Y (5.7J) SOFT RIDE SUSP (FE1), H .D .SUSP (FE7)	14104815	1	33.66	HARNESS, FUEL VPR CNSTR
91–95	Y	10105300	1	43.35	HOSE, EVAP EMIS CNSTR PURGE
96	Y 5.7P (LT1), 5.7–5 (LT4)	12552593	1	32.39	HOSE, EVAP EMIS CNSTR PURGE
92–95	Y 5.7P (LT1)	10105299	1	3.67	HOSE, EVAP EMIS CNSTR PURGE SOL VLV
96	Y 5.7P (LT1), 4–SPD A/TRANS (M30)	12551611	1	3.16	PIPE, EVAP EMIS CNSTR PURGE SOL VLV
96	Y 5.7–5 (LT4), 6–SPD M/TRANS (ML9)	12551611	1	3.16	PIPE, EVAP EMIS CNSTR PURGE SOL VLV
86–96	Y	14104690	1	18.26	SHIELD, BRK & EVAP EMIS PIPE
88–90	Y 5.7–8	10055892	1	5.41	TUBE, EVAP EMIS CNSTR PURGE
96	Y 5.7P (LT1), 4–SPD A/TRANS (M30)	12551608	1	3.25	TUBE, EVAP EMIS CNSTR PURGE
96	Y 5.7–5 (LT4), 6–SPD M/TRANS (ML9)	12551608	1	3.25	TUBE, EVAP EMIS CNSTR PURGE
87	Y	10046011	1	DISCON	TUBE, FUEL VPR CNSTR

© 2000 GENERAL MOTORS SERVICE PARTS OPERATIONS

3.403 NUT – SCREW – SEAL, Air Cleaner and Silencer

84–85	Y	14055160	2	DISCON	NUT, W/INSERT, A/CL RET
85–89	Y	14081888	2	3.95	SCREW, A/CL COVER
84	Y	10019632	2	4.69	SEAL, A/CL

3.655 BOLT – BRACE – BRACKET – STUD, Air Injection Reactor Pump and Multi–Function Air Compressor

85–90	Y	14085701	1	23.25	STUD, AIR INJ PUMP BRKT (3/8–16X1.75/3/8–16X.88 300M)
91	Y 5.7–8 (L98)	14085701	1	23.25	STUD, AIR INJ PUMP BRKT (3/8–16X1.75/3/8–16X.88 300M)

4.047 BRACKET – CABLE – GROMMET – PIN – RETAINER – WASHER, Transmission Shift Control Cable [AUTOMATIC]

84–93	Y	14076160	1	1.95	BRACKET, A/TRNS RANGE SEL LVR CBL
94–96	Y 4–SPD A/TRANS (M30)	14076160	1	1.95	BRACKET, A/TRNS RANGE SEL LVR CBL
91	Y 4–SPD A/TRANS (MD8)	07841371	1	8.48	BRACKET, STRG COL BACKDRIVE CBL (06.518)
92–93	Y 4–SPD A/TRANS (MD8)	07841371	1	8.48	BRACKET, STRG COL BACKDRIVE CBL (06.518)
94–96	Y 4–SPD A/TRANS (M30)	07841371	1	8.48	BRACKET, STRG COL BACKDRIVE CBL (06.518)
84	Y 4–SPD A/TRANS (MD8)	14038660	1	DISCON	BRACKET, T.V. CONT CBL
92–93	Y 4–SPD A/TRANS (MD8)	17071924	1	.60	RETAINER, A/TRNS PK LK CBL (04.060)
94–96	Y 4–SPD A/TRANS (M30)	17071924	1	.60	RETAINER, A/TRNS PK LK CBL (04.060)
84–91	Y	03974730	1	1.85	RETAINER, A/TRNS RANGE SEL LVR CBL
84–91	Y	14050024	1	1.12	RETAINER, A/TRNS RANGE SEL LVR CBL (AT BRKT) (04.006)
84–93	Y 4–SPD A/TRANS (MD8)	17071924	1	.60	RETAINER, A/TRNS RANGE SEL LVR CBL (04.060)
92–93	Y 4–SPD A/TRANS (MD8)	03974730	1	1.85	RETAINER, A/TRNS RANGE SEL LVR CBL
92–93	Y 4–SPD A/TRANS (MD8)	14050024	1	1.12	RETAINER, A/TRNS RANGE SEL LVR CBL (AT BRKT) (04.006)
94–96	Y 4–SPD A/TRANS (M30)	03974730	1	1.85	RETAINER, A/TRNS RANGE SEL LVR CBL
94–96	Y 4–SPD A/TRANS (M30)	14050024	1	1.12	RETAINER, A/TRNS RANGE SEL LVR CBL (AT BRKT) (04.006)
94–96	Y 4–SPD A/TRANS (M30)	17071924	1	.60	RETAINER, A/TRNS RANGE SEL LVR CBL (04.060)

4.665 BOLT – BOOT – BRACKET – BRAKE KIT – CALIPER – CLIP – HARDWARE KIT – LEVER – PIN – PLATE – SPRING – WASHER, Wheel Brake Cylinder/Caliper

84–87	Y STINGRAY	18034577	AR	13.12	BOLT, FRT BRK CLPR (AC–DELCO #18K203) (DURASTOP)
85–96	Y	14084051	1	4.15	BOLT, FRT BRK CLPR (M14X2X47)
84–96	Y	14067559	8	1.17	BOLT, FRT BRK CLPR GDE PIN
84–96	Y	14067559	8	1.17	BOLT, RR BRK CLPR (GDE PIN)
84–87	Y STINGRAY	18034577	AR	13.12	BOLT, RR BRK CLPR (AC–DELCO #18K203) (DURASTOP)
85–96	Y	14084053	4	4.05	BOLT, RR BRK CLPR
88–96	Y STINGRAY	18034577	AR	13.12	BOLT, RR BRK CLPR (AC–DELCO #18K203) (DURASTOP)
89–96	Y	10112649	2	2.55	BOLT, RR BRK CLPR (ANCHOR PLATE & BRK)

© 2000 GENERAL MOTORS SERVICE PARTS OPERATIONS

4.665 BOLT – BOOT – BRACKET – BRAKE KIT – CALIPER – CLIP – HARDWARE KIT – LEVER – PIN – PLATE – SPRING – WASHER, Wheel Brake Cylinder/Caliper(Con't)

88–96	Y	10112648	2	4.15	BOLT, RR PARK BRK ACTR LVR ADJ
84	Y	14079998	4	4.15	BOLT, W/WA, FRT BRK CLPR (M12 X 1.75 X 40)
84	Y	14079999	AR	DISCON	BOLT, W/WA, RR BRK CLPR (M10 X 1.5 X 32)
88	Y (EXC H.D. SUSP FE7)	10181205	LH	46.92	PLATE, FRT BRK CLPR ANCHOR
88	Y (EXC H.D. SUSP FE7)	10181206	RH	46.92	PLATE, FRT BRK CLPR ANCHOR
88	Y H.D. SUSP FE7	10181207	LH	46.92	PLATE, FRT BRK CLPR ANCHOR
88	Y HVY DUTY SUSP (FE7)	10181208	RH	46.92	PLATE, FRT BRK CLPR ANCHOR
84	Y	14067557	2	DISCON	PLATE, FRT BRK CLPR MT
85–87	Y	14085886	2	DISCON	PLATE, FRT BRK CLPR MT
89–94	Y ANTILOCK DISC BRK (JL9)	10181205	LH	46.92	PLATE, FRT BRK CLPR MTG
89–94	Y ANTILOCK DISC BRK (JL9)	10181206	RH	46.92	PLATE, FRT BRK CLPR MTG
89–96	Y HVY DUTY PWR BRK (J55)	10181207	LH	46.92	PLATE, FRT BRK CLPR MTG
89–96	Y HVY DUTY PWR BRK (J55)	10181208	RH	46.92	PLATE, FRT BRK CLPR MTG
84	Y	14067558	2	DISCON	PLATE, RR BRK CLPR MT
85–87	Y	14085887	2	DISCON	PLATE, RR BRK CLPR MT
85–96	Y	10268876	4	1.05	WASHER, RR BRK CLPR

4.685 PIPE – SHIELD, Hydraulic Brake

86–96	Y	14104690	1	18.26	SHIELD, BRK & EVAP EMIS PIPE (03.145)

4.686 BOLT – BRACKET – CLIP – FITTING – GASKET – NUT – RETAINER – SPACER, Hydraulic Brake Pipe

92–96	Y	11515397	2	.22	BOLT, BRK PIPE RET (10.685)
90–96	Y	14092701	1	7.75	BRACKET, BRK PIPE (03.145)
86–91	Y	14094289	1	DISCON	RETAINER, BRK PIPE
92–96	Y	10218188	1	2.70	RETAINER, BRK PIPE

4.710 BRACKET – CONNECTOR – SENSOR – SWITCH, Electronic Brake Control

Note: AT TIMES THE BRAKE SENSOR IS SERVICED ONLY AS PART OF THE REAR WHEEL HUB ASSEMBLY LOCATED IN GROUP 5.806

86	Y	14093145	1	DISCON	BRACKET, ELEC BRK CONT LATL ACCEL SWITCH
86–88	Y	14091268	2	DISCON	BRACKET, FRT LWR WHL SPD SEN MT (POSN #2)
86–88	Y	14091237	2	DISCON	BRACKET, FRT UPR WHL SPD SEN MT (POSN #5)
86–87	Y	14091235	LH	DISCON	BRACKET, FRT WHL KNU SPD SEN MT
86–87	Y	14091236	RH	DISCON	BRACKET, FRT WHL KNU SPD SEN MT
86–87	Y	14091257	LH	DISCON	BRACKET, RR WHL KNU SPD SEN MT
86–87	Y	14091258	RH	DISCON	BRACKET, RR WHL KNU SPD SEN MT
86–91	Y	14091259	2	.75	BRACKET, WHL SPD SEN (POSN #4)
88–91	Y	10052288	2	.77	BRACKET, WHL SPD SEN (RR WHL TO TOP OF KNUCKLE) (POSN #3)
88–91	Y	10052289	2	.77	BRACKET, WHL SPD SEN (RR WHL TO SIDE OF KNUCKLE) (POSN #1)
89	Y	10087787	LH	.85	BRACKET, WHL SPD SEN
89	Y	10087788	RH	.85	BRACKET, WHL SPD SEN
90–91	Y SOFT RIDE SUSP (FE1), HVY DUTY SUSP (FE7)	10087787	LH	.85	BRACKET, WHL SPD SEN
90–91	Y SOFT RIDE SUSP (FE1), HVY DUTY SUSP (FE7)	10087788	RH	.85	BRACKET, WHL SPD SEN
91–96	Y	10158005	2	.90	BRACKET, WHL SPD SEN (POSN #5)

© 2000 GENERAL MOTORS SERVICE PARTS OPERATIONS

MICROFICHE INDEX

GROUPS 6.000 THRU 7.000

FICHE 7 OF 11

GROUP	DESCRIPTION	STARTING GRID LOCATION PARTS	ILLUSTRATIONS
–	GENERAL INFORMATION	1–A2	1–G2
–	ALPHABETICAL INDEX	1–B13	N.A.
6.000	FRONT SUSPENSION – STEERING	7–A2	7–E2
7.000	FRAMES – SPRINGS – SHOCKS – BUMPERS	7–C2	7–H2
–	OUT OF FICHE CALLS	N.A.	7–M17

4.710 BRACKET – CONNECTOR – SENSOR – SWITCH, Electronic Brake Control(Con't)

92–96	Y	10052288	2	.77	BRACKET, WHL SPD SEN (POSN #1)
92–96	Y	10052289	2	.77	BRACKET, WHL SPD SEN (POSN #2)
92–96	Y	10087787	LH	.85	BRACKET, WHL SPD SEN (POSN #3)
92–96	Y	10087788	RH	.85	BRACKET, WHL SPD SEN (POSN #4)
92–96	Y	14091259	2	.75	BRACKET, WHL SPD SEN (POSN #6)
96	Y CHASSIS, REALTIME DAMPING (F45)	10260107	LH	.73	BRACKET, WHL SPD SEN (POSN #7)
96	Y CHASSIS, REALTIME DAMPING (F45)	10260108	RH	.73	BRACKET, WHL SPD SEN (POSN #8)
89–90	Y	10087789	LH	DISCON	BRACKET, WHL SPD SEN FRT (POSN #9)
89–90	Y	10087790	RH	DISCON	BRACKET, WHL SPD SEN FRT (POSN #9)
89–90	Y	14104969	LH	3.47	BRACKET, WHL SPD SEN FRT (POSN #8)
89–90	Y	14104970	RH	3.26	BRACKET, WHL SPD SEN FRT (POSN #8)
93–96	Y	10211657	1	24.54	SWITCH, ELEK BRK CONT BRK PED (W/ S/LP SW) (AC–DELCO #10211657)
86–89	Y	14093144	1	137.33	SWITCH, ELEK BRK CONT LATL ACCLRTN (AC–DELCO #14093144)

4.720 BOLT – BRACKET – CLIP – CONNECTOR – COVER – DIODE – GASKET – HARNESS – MODULE – PLATE – RELAY – RETAINER – SUPPORT – WIRE, Electronic Brake Control

92–94	Y	10143546	1	3.26	BRACKET, ELEK BRK & TRACT CONT MDL
95	Y 5.7J (LT5)	10143546	1	3.26	BRACKET, ELEK BRK & TRACT CONT MDL
86–91	Y	14088443	1	DISCON	BRACKET, ELEK BRK CONT MDL (RR)
86–91	Y	14088444	1	DISCON	BRACKET, ELEK BRK CONT MDL (FRT)
96	Y (EXC DAYTIME RUNNING LGT (T61), HDLP (T72) (EXPORT), RH RULE OF ROAD HDLP (T84) (EXPORT), LH RULE OF ROAD HDLP (T85) (EXPORT), SIG & MKR LP (T90) (EXPORT)	12129073	1	.45	BRACKET, ELEK BRK CONT RLY (BLACK) (AC–DELCO #12129073)
87–95	Y	14062552	2	1.12	BRACKET, WHL SPD SEN WRG HARN CLIP (02.559)
96	Y	14062552	1	1.12	BRACKET, WHL SPD SEN WRG HARN CLIP (02.559)
92–94	Y	10143537	1	21.78	COVER, ELEK BRK CONT MDL
95	Y SPECIAL PERFORMANCE PKG (ZR1)	10143537	1	21.78	COVER, ELEK BRK CONT MDL
95	Y (EXC SPECIAL PERFORMANCE PKG (ZR1)	10225919	1	23.31	COVER, ELEK BRK CONT MDL
96	Y	10225919	1	23.31	COVER, ELEK BRK CONT MDL
92–96	Y	10167107	1	4.13	GASKET, ELEK BRK CONT MDL CVR
86	Y (2ND DES)	12046596	1	DISCON	HARNESS, BRK PRESS MOD VLV WRG (HAS 3 CONNECTORS FOR WHL SPD SEN HARNESS)
86	Y (1ST DES)	12048801	1	DISCON	HARNESS, BRK PRESS MOD VLV WRG (HAS 2 CONNECTORS FOR WHL SPD SEN HARNESS)
87	Y	12067433	1	DISCON	HARNESS, BRK PRESS MOD VLV WRG

© 2000 GENERAL MOTORS SERVICE PARTS OPERATIONS

4.720 BOLT – BRACKET – CLIP – CONNECTOR – COVER – DIODE – GASKET – HARNESS – MODULE – PLATE – RELAY – RETAINER – SUPPORT – WIRE, Electronic Brake Control(Con't)

88	Y	12083507	1	DISCON	HARNESS, BRK PRESS MOD VLV WRG
89	Y	12083507	1	DISCON	HARNESS, BRK PRESS MOD VLV WRG
90	Y (EXC FX3)	12080844	1	DISCON	HARNESS, BRK PRESS MOD VLV WRG
90	Y RIDE & HDLG (FX3)	12080845	1	DISCON	HARNESS, BRK PRESS MOD VLV WRG
91	Y (EXC ELEK RIDE & HANDLING (FX3)	12112465	1	DISCON	HARNESS, BRK PRESS MOD VLV WRG
91	Y ELEK RIDE & HANDLING (FX3)	12112466	1	DISCON	HARNESS, BRK PRESS MOD VLV WRG
93	Y (EXC ELEK RIDE & HANDLING (FX3)	12106505	1	260.86	HARNESS, BRK PRESS MOD VLV WRG
93	Y ELEK RIDE & HANDLING (FX3)	12106507	1	DISCON	HARNESS, BRK PRESS MOD VLV WRG
94	Y (EXC ELEK RIDE & HANDLING (FX3)	12130360	1	260.86	HARNESS, BRK PRESS MOD VLV WRG
94	Y ELEK RIDE & HANDLING (FX3)	12130361	1	260.86	HARNESS, BRK PRESS MOD VLV WRG
95	Y 5.7J (LT5)	12130361	1	260.86	HARNESS, BRK PRESS MOD VLV WRG
86–90	Y	12055840	1	DISCON	HARNESS, BRK PRESS MOD VLV WRG HARN GRD
92	Y (EXC ELEK RIDE & HANDLING (FX3)	12106545	1	390.00	HARNESS, ELEK BRK CONT & ELEC TRACT CONT WRG (CONT MDL TO WHL SEN HARN)
92	Y (EXC ELEK RIDE & HANDLING (FX3)	12106546	1	260.86	HARNESS, ELEK BRK CONT & ELEC TRACT CONT WRG (FRT & RR WHL SEN TO CONT HARN)
93–94	Y ELEK RIDE & HANDLING (FX3)	12130313	1	522.73	HARNESS, ELEK BRK CONT & ELEC TRACT CONT WRG
93–94	Y (EXC ELEK RIDE & HANDLING (FX3)	12130314	1	260.86	HARNESS, ELEK BRK CONT & ELEC TRACT CONT WRG
95	Y 5.7J (LT5)	12130313	1	522.73	HARNESS, ELEK BRK CONT & ELEC TRACT CONT WRG
95	Y 5.7P (LT1)	12130367	1	772.50	HARNESS, ELEK BRK CONT & ELEC TRACT CONT WRG
96	Y CHASSIS, REALTIME DAMPING (F45)	12130459	1	522.73	HARNESS, ELEK BRK CONT & ELEC TRACT CONT WRG
96	Y (EXC CHASSIS, REALTIME DAMPING (F45)	12130496	1	522.73	HARNESS, ELEK BRK CONT & ELEC TRACT CONT WRG
92	Y ELEK RIDE & HANDLING (FX3)	12106547	1	DISCON	HARNESS, ELEK BRK CONT & ELEK SUSP & TRACTION CONT WRG (CONT MDL TO WHL SEN HARN)
92	Y ELEK RIDE & HANDLING (FX3)	12106548	1	DISCON	HARNESS, ELEK BRK CONT & ELEK SUSP & TRACTION CONT WRG (FRT & RR WHL SEN TO CONT HARN)
86	Y07 (1ST DES)	12048802	1	DISCON	HARNESS, WHL SPD SEN WRG (2 CONNECTORS FOR BRK MODULE HARN)
86	Y07 (2ND DES)	12055921	1	DISCON	HARNESS, WHL SPD SEN WRG (3 CONNECTORS FOR BRK MODULE HARN)
86	Y67 (1ST DES)	12048803	1	DISCON	HARNESS, WHL SPD SEN WRG (HAS 2 CONNECTORS FOR BRK MODULE HARN)

© 2000 GENERAL MOTORS SERVICE PARTS OPERATIONS

4.720 BOLT – BRACKET – CLIP – CONNECTOR – COVER – DIODE – GASKET – HARNESS – MODULE – PLATE – RELAY – RETAINER – SUPPORT – WIRE, Electronic Brake Control(Con't)

86	Y67 (2ND DES)	12055922	1	DISCON	HARNESS, WHL SPD SEN WRG (HAS 3 CONNECTORS FOR BRK MODULE HARN)
87	Y07 (EXC 1BL PERF HDLG PKG Z51, B2B SPORT HDLG PKG Z52)	12046597	1	DISCON	HARNESS, WHL SPD SEN WRG
87	Y07 1BL (PERF HDLG PKG Z51), B2B (SPORT HDLG PKG Z52)	12067499	1	DISCON	HARNESS, WHL SPD SEN WRG
87	Y67	12046598	1	DISCON	HARNESS, WHL SPD SEN WRG
88–90	Y	12073494	1	385.50	HARNESS, WHL SPD SEN WRG
91	Y (EXC ELEK RIDE & HANDLING (FX3)	12090313	1	260.86	HARNESS, WHL SPD SEN WRG
91	Y ELEK RIDE & HANDLING (FX3)	12090314	1	260.86	HARNESS, WHL SPD SEN WRG
91–96	Y	12090039	2	80.25	HARNESS, WHL SPD SEN WRG HARN EXTN
92–94	Y	10241014	1	1030.00	MODULE, ELEK BRK & TRACT CONT (AC–DELCO #10241014)
95	Y 5.7J (LT5)	10241014	1	1030.00	MODULE, ELEK BRK & TRACT CONT (AC–DELCO #10241014)
86–89	Y	14103343	1	990.05	MODULE, ELEK BRK CONT (MODULE, ELEK BRK CONT) (AC–DELCO #14103343)
90–91	Y	10223326	1	1030.00	MODULE, ELEK BRK CONT (AC–DELCO #10223326)
95	Y 5.7P (LT1)	12521972	1	643.62	MODULE, ELEK BRK CONT (& TRACT CONT)
96	Y	12525023	1	857.82	MODULE, ELEK BRK CONT
92–94	Y	14058658	2	1.68	PLATE, ELEK BRK & TRACT CONT MDL BRKT STUD (12.986)
95	Y 5.7J (LT5)	14058658	1	1.68	PLATE, ELEK BRK & TRACT CONT MDL BRKT STUD (12.986)
86–91	Y	14091012	1	DISCON	PLATE, ELEK BRK CONT WRG HARN CLIP TAP (U–SHAPE) (03.675)
92–96	Y	10045625	7	1.07	PLATE, ELEK BRK CONT WRG HARN CLIP TAP (W/STUD) (12.981)
92–96	Y	14090618	1	7.05	PLATE, ELEK BRK CONT WRG HARN GROM TAP (03.675)
92–94	Y	10143547	1	2.19	SUPPORT, ELEK BRK & TRACT CONT MDL
95	Y 5.7J (LT5)	10143547	1	2.19	SUPPORT, ELEK BRK & TRACT CONT MDL
91–96	Y	12080879	1	9.90	WIRE, BRK PRESS MOD VLV WRG HARN GND

4.845 NUT – SEAL – STUD, Hydraulic Power Brake Booster

84–90	Y	26001594	AR	*2.45	SEAL (7.65MM I.D.X 1.63MM THICK) (HI TEMP SEAL) (06.674)
85	Y	52350585	1	1.50	STUD, P/B BOOS VAC PIPE (3/8–16X1.52 LONG) (02.277)

5.001 PLATE – PLATE KIT, Brake Flange/Backing

88–96	Y	10052211	LH	50.49	PLATE, RR BRK CLPR MT
88–96	Y	10052212	RH	50.49	PLATE, RR BRK CLPR MT
85–87	Y	14085891	LH	DISCON	PLATE, RR BRK MT
85–87	Y	14085892	RH	DISCON	PLATE, RR BRK MT

© 2000 GENERAL MOTORS SERVICE PARTS OPERATIONS

5.075 WASHER, Brake Shoe Anchor

85-96	Y	14080254	4	1.10	WASHER, FRT BRK CLPR MTG PLT (28MM OD X 15.75MM ID) (04.665)
93-96	Y	12518940	2	2.00	WASHER, FRT BRK CLPR MTG PLT (.31X.62X.045, STL, ZC) (04.665)

5.380 BOLT – BRACKET – KNUCKLE, Rear Axle Control Arm

84	Y	11508540	1	*.72	BOLT, RR WHL SPDL ROD (M10X1.5X75) 10.9 PZOR (08.900)
84-87	Y	11508540	1	*.72	BOLT, RR WHL SPDL ROD (8900) (08.900)
84-87	Y	14060165	2	DISCON	BRACKET, RR WHL SPDL ROD
88	Y	14105134	2	DISCON	BRACKET, RR WHL SPDL ROD
89-96	Y	10097802	2	13.67	BRACKET, RR WHL SPDL ROD

5.383 NUT – WASHER, Rear Axle Control Arm

84-90	Y	10255857	4	*1.75	NUT, ENG TO FRT SUSP FRM (08.917)
84-90	Y	11516383	4	*1.20	NUT, FRT UPR & LWR CONT ARM (08.917)

5.415 ROD – ROD KIT – SOCKET, Rear Axle Tie

84-95	Y	17999723	2	68.34	ROD, RR WHL SPDL LWR CONT
96	Y	17999723	2	68.34	ROD, RR WHL SPDL LWR CONT
84-95	Y	17999720	2	68.34	ROD, RR WHL SPDL UPR CONT
96	Y	17999720	2	68.34	ROD, RR WHL SPDL UPR CONT
84-91	Y	14091319	2	91.04	SOCKET, RR AXLE TOE LINK OTR

5.416 BOLT – BOOT – CLAMP – END KIT – LINK KIT – NUT – ROD – SOCKET – WASHER, Rear Axle

84-96	Y	11516331	6	1.35	BOLT, RR WHL SPDL CONT ROD BRKT (08.900)
84-96	Y	11507007	2	8.10	BOLT, RR WHL SPDL ROD (M16X2X110, 9.8 POR) (08.900)
84-96	Y	11515784	8	*.92	BOLT, RR WHL SPDL ROD (12X1.75X75 10.9M) (HEX FLG HD) (08.900)
84-96	Y	14048990	4	5.87	BOLT, RR WHL SPDL ROD (M16X2X100, 9.8)
84-96	Y	14060162	2	14.25	BOLT, RR WHL SPDL ROD ADJ (M14X2X95)
92	Y 5.7J (LT5)	10098202	2	5.61	BOLT, RR WHL SPDL ROD BRKT (05.418)
93-96	Y 3.45R (GM3)	10098202	2	5.61	BOLT, RR WHL SPDL ROD BRKT (05.418)
92-96	Y	07844424	1	15.86	BOOT, RR SUSP ADJ LINK (RR TOE LINK SEAL)
92-94	Y	07841062	1	6.68	CLAMP, RR SUSP ADJ LINK BOOT (45.5 MM DIA)
92-96	Y	07844100	1	1.94	CLAMP, RR SUSP ADJ LINK BOOT (ROD BOOT, BLK OX COATING) (19MM)
95-96	Y	26036823	1	2.50	CLAMP, RR SUSP ADJ LINK BOOT (RETAINING SEAL) (44MM)
92-94	Y 5.7P (LT1), 5.7J (LT5)	26050222	2	51.02	END KIT, RR SUSP ADJ LINK OTR (05.415) (AC–DELCO #36–9515)
95-96	Y	26048449	1	95.63	END KIT, RR SUSP ADJ LINK OTR (05.415)
92-96	Y	26033818	1	230.52	LINK KIT, RR SUSP ADJ
92	Y	26017267	2	6.95	NUT, RR SUSP ADJ LINK (M14X1.5X11, 510M (5), ZC) (06.526)
84-95	Y	11516211	2	*1.10	NUT, RR WHL SPDL CONT ROD (HEX M16X2X14.5) (08.915)

© 2000 GENERAL MOTORS SERVICE PARTS OPERATIONS

5.416 BOLT – BOOT – CLAMP – END KIT – LINK KIT – NUT – ROD – SOCKET – WASHER, Rear Axle(Con't)

89	Y	10255857	4	*1.75	NUT, RR WHL SPDL CONT ROD (08.917)
84–95	Y	11516211	4	*1.10	NUT, RR WHL SPDL ROD (HEX M16X2X14.5) (08.915)
85–94	Y	11508101	4	*1.05	NUT, RR WHL SPDL ROD (M12X1.75X12 (10) 1050) (08.917)
95–96	Y	11502813	2	4.65	NUT, RR WHL SPDL ROD (M12X1.75X13.4 25.6OD) (HEX FLGD PREV TORQ CAD) (08.917)
84–96	Y	14060164	2	*1.75	NUT, RR WHL SPDL ROD ADJ (HEX 14X2X16, PE 10) (08.915)
84–89	Y	10098131	LH	70.13	ROD, RR WHL SPDL (IF USE ON 1989 & PRIOR, BUSHING–WHL SPDL ROD IS NOT REQ, MAY BE DISCARDED)
84–89	Y	10098132	RH	70.13	ROD, RR WHL SPDL (ON 1989 & PRIOR, BUSHING 14060166 IS NOT REQ, MAY BE DISCARDED)
90–96	Y	10098131	LH	70.13	ROD, RR WHL SPDL
90–96	Y	10098132	RH	70.13	ROD, RR WHL SPDL
84–91	Y	10181305	1	121.38	SOCKET, RR TOE ADJ W/RODS (CENTER)
84–96	Y	14044574	8	.85	WASHER, RR WHL SPDL ROD (TO KNU UPR & LWR ATCH TO BODY)
84–96	Y	14047725	2	.53	WASHER, RR WHL SPDL ROD (TO KNU FROM DIFF CARR)

5.417 BUSHING – CAM, Rear Axle Tracking/Tracking

84–88	Y	14060166	4	4.44	BUSHING, RR WHL SPDL ROD
84–96	Y	14060163	2	3.47	CAM, RR WHL SPDL ROD ADJ

5.418 BOLT – BRACKET – NUT – WASHER, Rear Axle Tie Rod

90–96	Y	14050422	AR	2.15	BOLT, R/AXL TIE ROD (HWH M10.0X1.50X40, 26THD, 10.9 PO) (08.900)
84	Y	14050422	AR	2.15	BOLT, RR AXLE TIE ROD (08.900)
88–96	Y	10181209	2	27.29	BRACKET, RR WHL SPDL CONT ROD
84–87	Y	14071742	2	DISCON	BRACKET, SPDL CONT ROD
84–95	Y	14050089	1	1.80	NUT, R/AXL TIE ROD (HEX SLOTTED M12X1.75X13)
92–96	Y	26017267	1	6.95	NUT, R/AXL TIE ROD (M14X1.5X11, 510M (5), ZC) (06.526)
96	Y	14050089	2	1.80	NUT, R/AXL TIE ROD (HEX SLOTTED M12X1.75X13)
84–87	Y	10255857	4	*1.75	NUT, RR WHL SPDL ROD BRKT (08.917)
89–93	Y	11508101	4	*1.05	NUT, RR WHL SPDL ROD BRKT (M12X1.75X12 (10) 1050) (08.917)
94–96	Y	11508101	2	*1.05	NUT, RR WHL SPDL ROD BRKT (M12X1.75X12 (10) 1050) (08.917)
84–96	Y	10267310	2	*.97	WASHER, R/AXL TIE ROD (06.164)
84–86	Y	00473539	2	*.63	WASHER, RR AXLE TIE ROD (FL 3.50X13.2 ID) (00.002)
89	Y	14008279	2	DISCON	WASHER, RR WHL SPDL ROD (00.831)

© 2000 GENERAL MOTORS SERVICE PARTS OPERATIONS

5.420 SHAFT, Rear Axle Drive

84	Y (2ND DES)	14091459	LH	102.20	SHAFT, R/AXL (05.425) (IDENT BY PART # STAMPED ON UNDER SI OF CARR CVR-14087675-6-7-8)
84	Y (2ND DES)	14091460	RH	104.24	SHAFT, R/AXL (05.425) (IDENT BY PART # STAMPED ON UNDER SI OF CARR CVR-14087675-6-7-8)
85-87	Y A/TRNS	14091459	LH	102.20	SHAFT, R/AXL (05.425)
85-87	Y A/TRNS	14091460	RH	104.24	SHAFT, R/AXL (05.425)
88	Y 3.07R (G44), (EXC 8.50 DIAMETER R/GR (G87)	14091459	LH	102.20	SHAFT, R/AXL (05.425)
88-93	Y 2.73R (GU2)	14091459	LH	102.20	SHAFT, R/AXL (6.74") (05.425)
88-96	Y 2.59R (GM1)	14091459	LH	102.20	SHAFT, R/AXL (6.74") (05.425)
88	Y 3.07R (G44), (EXC 8.50 DIAMETER R/GR (G87)	14091460	RH	104.24	SHAFT, R/AXL (05.425)
88-93	Y 2.73R (GU2)	14091460	RH	104.24	SHAFT, R/AXL (7.27") (05.425)
88-96	Y 2.59R (GM1)	14091460	RH	104.24	SHAFT, R/AXL (7.27") (05.425)
89-92	Y 3.54R (GH0)	12529662	RH	261.63	SHAFT, R/AXL (05.425)
89-95	Y 3.45R (GM3)	12529662	RH	261.63	SHAFT, R/AXL (05.425)
89-92	Y 3.54R (GH0)	12529663	LH	261.63	SHAFT, R/AXL (05.425)
89-96	Y 3.45R (GM3)	12529663	LH	261.63	SHAFT, R/AXL (05.425)
89-96	Y 3.07R (G44)	14091459	LH	102.20	SHAFT, R/AXL (6.7[illegible]") (05.425)
89	Y 3.33R (GT7), 3.07R (G44)	14091460	RH	104.24	SHAFT, R/AXL (05.425)
90-96	Y 3.07R (G44)	14091460	RH	104.24	SHAFT, R/AXL (7.27") (05.425)
94	Y G95	12529662	RH	261.63	SHAFT, R/AXL (05.425)
94	Y G95	12529663	LH	261.63	SHAFT, R/AXL (05.425)
84-85	Y M/TRNS (MK2) (EXC 6-WAY A42)	10223032	2	208.49	SHAFT, RR WHL DRV UJT
84-85	Y M/TRNS (EXC 6-WAY A42)	10223032	2	208.49	SHAFT, RR WHL DRV UJT
84-86	Y 6-WAY (A42)	10223032	2	208.49	SHAFT, RR WHL DRV UJT
84-86	Y A/TRNS (MD8) (EXC 6-WAY A42 OR 1BL PERF HDLG PKG Z51)	14046912	2	DISCON	SHAFT, RR WHL DRV UJT
87-88	Y A/TRNS (MD8), 6-WAY (AC3)	10223032	2	208.49	SHAFT, RR WHL DRV UJT
87-88	Y M/TRNS	10223032	2	208.49	SHAFT, RR WHL DRV UJT
87-88	Y A/TRNS (MD8) (EXC 6-WAY AC3)	14046912	2	DISCON	SHAFT, RR WHL DRV UJT
89	Y SOFT RIDE SUSP (FE1), H .D .SUSP (FE7)	10223032	2	208.49	SHAFT, RR WHL DRV UJT
90	Y	10223032	2	208.49	SHAFT, RR WHL DRV UJT
91	Y SOFT RIDE SUSP (FE1), HVY DUTY SUSP (FE7)	10223032	2	208.49	SHAFT, RR WHL DRV UJT
92-96	Y	10223032	2	208.49	SHAFT, RR WHL DRV UJT

5.505 BOLT KIT – CARRIER – NUT, Differential, with Cap

84	Y	10163876	1	DISCON	CARRIER, DIFF (3.31R) (STAMPED 4YK, 4CB, 4CK, 4CR)
84	Y H .D. SUSP (FE7)	10163876	1	DISCON	CARRIER, DIFF (3.07R, 3.31R) (STAMPED 4YJ, 4CF, 4CJ, 4CN)
84	Y (EXC H.D. SUSP FE7)	14087678	1	DISCON	CARRIER, DIFF (3.07R) (STAMPED 4CC, 4CH, 4CS, 4YL)
85	Y A/TRNS, H .D. SUSP (FE7)	10163876	1	DISCON	CARRIER, DIFF (3.07R) (STAMPED 4YJ, 4CF, 4CJ, 4CN)
85	Y M/TRNS (EXC H.D. SUSP FE7)	14084122	1	DISCON	CARRIER, DIFF (3.07R) (STAMPED 5YB)
85	Y A/TRNS (EXC H.D. SUSP FE7)	14087678	1	DISCON	CARRIER, DIFF (3.07R) (STAMPED 4CH, 4CS, 4YL)
86-87	Y A/TRNS, 1BL (PERF HDLG PKG Z51)	10163876	1	DISCON	CARRIER, DIFF (3.07R) (STAMPED 4YJ, 4CF, 4CJ, 4CN)
86	Y A/TRNS (EXC 1BL PERF HDLG PKG Z51)	14087678	1	DISCON	CARRIER, DIFF (3.07R) (STAMPED 4CH, 4CS, 4YL)
86-87	Y	14093143	1	DISCON	CARRIER, DIFF (2.59 RATIO)
86	Y07 M/TRNS (MH5), 8.50 DIA RNGR (G87)	14084122	1	DISCON	CARRIER, DIFF (3.07R) (STAMPED 5YB)

© 2000 GENERAL MOTORS SERVICE PARTS OPERATIONS

5.505 BOLT KIT – CARRIER – NUT Differential, with Cap(Con't)

86	Y67 M/TRNS (MK2), 8.50 DIA RNGR (G87)	14084122	1	DISCON	CARRIER, DIFF (3.07R) (STAMPED 5YB)
87	Y (EXC 8.50 DIA RNGR) (G87)	14087678	1	DISCON	CARRIER, DIFF (3.07R) (STAMPED 4CH, 4CS, 4YL)
88	Y 3.07R (G44), 8.50 RNGR (G87)	10046618	1	DISCON	CARRIER, DIFF (3.07R) (STAMPED 8YH)
88–93	Y 2.73R (GU2)	10112634	1	419.02	CARRIER, DIFF (W/CAP)
88–96	Y 2.59R (GM1), 3.07R (G44)	10112634	1	419.02	CARRIER, DIFF (W/CAP)
88–89	Y 2.59R (GM1)	10163874	1	DISCON	CARRIER, DIFF (2.59) (STAMPED 8YA)
88–89	Y 2.73R (GU2)	10163875	1	DISCON	CARRIER, DIFF (2.73R) (STAMPED 8YB)
88–89	Y 3.07R (G44) (EXC 8.50 RNGR)	10163876	1	DISCON	CARRIER, DIFF (3.07R) (STAMPED 8YC)
89	Y	10054298	1	DISCON	CARRIER, DIFF (3.54R) (STAMPED 8YJ)
89	Y	10192290	1	DISCON	CARRIER, DIFF (3.54R) (STAMPED 8YJ, CQX)
90–92	Y 3.54R (GH0)	10132777	1	548.05	CARRIER, DIFF (W/CAP)
90–96	Y 3.45R (GM3)	10132777	1	548.05	CARRIER, DIFF (W/CAP)
90	Y 2.59R (GM1)	10163874	1	DISCON	CARRIER, DIFF (2.59) (STAMPED 8YA, CQT)
90	Y 2.73R (GU2)	10163875	1	DISCON	CARRIER, DIFF (2.73R) (STAMPED 8YB, CQU)
90	Y 3.07R (G44)	10163876	1	DISCON	CARRIER, DIFF (3.07R) (STAMPED 8YC, CQW)
90	Y	12553791	1	DISCON	CARRIER, DIFF (3.45 RATIO) (STAMPED 6YD, CQR)
91–96	Y 2.59R (GM1)	10163874	1	DISCON	CARRIER, DIFF (2.59 RATIO) (STAMPED CQT)
91–93	Y 2.73R (GU2)	10163875	1	DISCON	CARRIER, DIFF (2.73 RATIO) (STAMPED CQU)
91–96	Y 3.07R (G44)	10163876	1	DISCON	CARRIER, DIFF (3.07 RATIO) (STAMPED CQW)
91–92	Y 3.54R (GH0)	10192290	1	DISCON	CARRIER, DIFF (3.54 RATIO) (STAMPED CQX)
91–96	Y 3.45R (GM3)	12553791	1	DISCON	CARRIER, DIFF (3.45 RATIO) (STAMPED CQR)
94	Y G95	10132777	1	548.05	CARRIER, DIFF (W/CAP)
89	Y 3.33R (GT7), 3.54R (GH0)	10132777	1	548.05	CARRIER, DIFF W/CAP
84	Y	14091330	1	DISCON	CARRIER, DIFF, W/CAP
85–87	Y A/TRNS	14091330	1	DISCON	CARRIER, DIFF, W/CAP
85–87	Y M/TRNS	14091393	1	DISCON	CARRIER, DIFF, W/CAP
88	Y 3.07R (G44), 8.50 DIA RNGR	10112633	1	DISCON	CARRIER, DIFF, W/CAP
88	Y (EXC 8.50 DIA RNGR G87)	10112634	1	419.02	CARRIER, DIFF, W/CAP
90	Y 3.33R (GT7)	10132777	1	548.05	CARRIER, DIFF, W/CAP
	*EXPORT*********EXPORT*********EXPORT*********EXPORT*********EXPORT*				
86	Y07 M/TRNS, NM5 (EXPORT, CANADA) (EXC 1BL PERF HDLG PKG Z51)	14084122	1	DISCON	CARRIER, DIFF (3.07R) (STAMPED 5YB)

5.506 BOLT – NUT – SCREW – WASHER, Differential Carrier

85–96	Y	11508101	2	*1.05	NUT, DIFF CARR (M12X1.75X12 (10) 1050) (08.917)
84–86	Y	00473539	2	*.63	WASHER, DIFF CARR (FL 3.50X13.2 ID) (00.002)
84–96	Y	10267310	2	*.97	WASHER, DIFF CARR (06.164)

5.544 BOLT – DAMPENER – SHAFT, Propeller

84–96	Y	14079980	2	2.20	BOLT, DRV LINE VIB DPNR
84–96	Y	14079979	2	12.21	DAMPENER, DRV LINE VIB

© 2000 GENERAL MOTORS SERVICE PARTS OPERATIONS

5.548 JOINT KIT, Propeller Shaft Universal Joint

84-96	Y	14067678	1	41.39	JOINT KIT, PROP SHF FRT UNIVERSAL
84-88	Y	12522048	2		JOINT KIT, PROP SHF UNIVERSAL (DANA 5-617X)
89-91	Y SOFT RIDE SUSP (FE1), HVY DUTY SUSP (FE7)	12522048	2		JOINT KIT, PROP SHF UNIVERSAL (DANA)
92-96	Y	12522048	2		JOINT KIT, PROP SHF UNIVERSAL (DANA)

5.586 BOLT - RETAINER, Universal Joint Bearing and Flange

84-96	Y	12338087	4	*1.07	BOLT, PROP SHF
84-85	Y	14018700	4	*1.00	BOLT, PROP SHF AND UJT STRAP (5/16-24X1.344)
84-96	Y	14046904	16	5.01	BOLT, RR WHL DRV UJT SHF (M8X1X19)
84-96	Y	14018211	2	2.81	RETAINER, PROP SHF (05.428)
84-96	Y	14046907	8	*3.27	RETAINER, RR WHL DRV UJT SHF
85-87	Y A/TRNS	14079465	2	28.75	RETAINER, RR WHL DRV UJT SHF (05.428)
85-87	Y M/TRNS	14091399	1	50.24	RETAINER, RR WHL DRV UJT SHF (05.428)
88	Y 3.07R (G44) (EXC 8.50 DIA RNGR G87)	14079465	2	28.75	RETAINER, RR WHL DRV UJT SHF (05.428)
88-92	Y 2.73R (GU2)	14079465	2	28.75	RETAINER, RR WHL DRV UJT SHF (INCLD (14) RINGS) (05.428)
88-96	Y 2.59R (GM1)	14079465	1	28.75	RETAINER, RR WHL DRV UJT SHF (INCLD (14) RINGS) (05.428)
88	Y 3.07R (G44), 9.50 DIAMETER R/GR (G87)	14091399	1	50.24	RETAINER, RR WHL DRV UJT SHF (05.428)
89-96	Y 3.07R (G44)	14079465	2	28.75	RETAINER, RR WHL DRV UJT SHF (INCLD (14) RINGS) (05.428)
89-90	Y 3.33R (GT7)	14091399	1	50.24	RETAINER, RR WHL DRV UJT SHF (05.428)
89-92	Y 3.54R (GH0)	14091399	1	50.24	RETAINER, RR WHL DRV UJT SHF (05.428)
90-96	Y 3.45R (GM3)	14091399	1	50.24	RETAINER, RR WHL DRV UJT SHF (05.428)
94	Y G95	14091399	1	50.24	RETAINER, RR WHL DRV UJT SHF (05.428)

5.803 WHEEL, Front or Rear

84	Y H.D.SUSP (FE7) (EXC VB4, VD1, VT7 EXPORT)	14069517	LH	479.20	WHEEL, FRT (16 X 8.5) (STAMPED DY)
84	Y H.D.SUSP (FE7) (EXC VB4, VD1, VT7 EXPORT)	14069518	RH	DISCON	WHEEL, FRT (16 X 8.5) (STAMPED DY, DZ)
84-87	Y (EXC 6-WAY)	14046981	1	DISCON	WHEEL, 16X4 (COMPACT SPA) (STAMPED DAA)
88	Y ALUM WHL (PY3)	10050958	1	DISCON	WHEEL, 16X4 (COMPACT SPA (STAMPED XDW)
84-85	Y (EXC H.D. SUSP FE7)	14069517	LH	479.20	WHEEL, 16X8.5 (FRT & RR) (STAMPED DY) (QTY 02)
84-85	Y (EXC H.D. SUSP FE7)	14069518	RH	DISCON	WHEEL, 16X8.5 (FRT & RR) (STAMPED DY, DZ) (QTY 02)
86	Y ALUM WHL (PY3) (EXC H.D. SUSP FE7)	14094587	2	DISCON	WHEEL, 16X8.5 (LH FRT & LH RR)
86	Y ALUM WHL (PY3) (EXC H.D. SUSP FE7)	14094588	2	DISCON	WHEEL, 16X8.5 (RH FRT & RH RR)
88	Y ALUM WHL (PY3)	10089683	LH	DISCON	WHEEL, 16X8.5 (ALUM) (LH FRT, LH RR) (STAMPED XRK)
88	Y ALUM WHL (PY3)	10089684	RH	DISCON	WHEEL, 16X8.5 (ALUM) (RH FRT, RH RR) (STAMPED XRL)

© 2000 GENERAL MOTORS SERVICE PARTS OPERATIONS

5.803 WHEEL, Front or Rear(Con't)

87	Y ALUM WHL (PY3)	10052092	2	DISCON	WHEEL, 16X8.50 (ALUM) (RH FRT & RH RR)
87	Y ALUM WHL (PY3)	10067313	2	DISCON	WHEEL, 16X8.50 (ALUM) (LH FRT & LH RR)
84	Y H .D. SUSP (FE7)	14089085	LH	DISCON	WHEEL, 16X9.5 (RR) (STAMPED FJ, FM)
84	Y H .D. SUSP (FE7)	14089086	RH	DISCON	WHEEL, 16X9.5 (RR) (STAMPED FK, FR)
85	Y H .D. SUSP (FE7)	14089085	AR	DISCON	WHEEL, 16X9.5 (LH FRT OR RR) (STAMPED FJ, FM)
85	Y H .D. SUSP (FE7)	14089086	AR	DISCON	WHEEL, 16X9.5 (RH FRT OR RR) (STAMPED FR, FK)
86	Y H .D. SUSP (FE7), ALUM WHL (PW9) (EXC EXPORT)	14094589	2	DISCON	WHEEL, 16X9.5 (LH FRT & LH RR)
86	Y H .D .SUSP (FE7), ALUM WHL (PW9) (EXC EXPORT)	14094590	2	DISCON	WHEEL, 16X9.5 (RH FRT & RH RR)
87	Y ALUM WHL (PW9)	10067315	2	DISCON	WHEEL, 16X9.50 (ALUM) (LH FRT & LH RR) (STAMPED XDN)
87	Y ALUM WHL (PW9)	10067316	2	DISCON	WHEEL, 16X9.50 (ALUM) (RH FRT & RH RR) (STAMPED XDP)
91–92	Y SPECIAL PERFORMANCE WHL (QA2)	10174842	LH	538.40	WHEEL, 17X11 (RR) (STAMPED XYX)
91–92	Y SPECIAL PERFORMANCE WHL (QA2)	10174843	RH	538.40	WHEEL, 17X11 (RR) (STAMPED XYX)
93	Y SPECIAL PERFORMANCE WHL (QA2)	10180883	LH	495.50	WHEEL, 17X11 (RR) (BRIGHT SILVER)
93	Y SPECIAL PERFORMANCE WHL (QA2)	10180884	RH	495.50	WHEEL, 17X11 (RR) (BRIGHT SILVER)
90	Y ALUM WHL (QA2), H .D .SUSP (FE7)	10147988	LH	697.40	WHEEL, 17X11 ALUM (RR) (STAMPED XXX)
90	Y ALUM WHL (QA2), H .D .SUSP (FE7)	10147989	RH	697.40	WHEEL, 17X11 ALUM (RR) (STAMPED XXY)
94–95	Y SPECIAL PERFORMANCE WHL (QA2)	12512904	2	479.60	WHEEL, 17X11 RR (STAMPED AFS)
96	Y SPECIAL PERFORMANCE WHL (QA2), GRAND SPORT EDITION (Z16), (41P)	12361446	2	479.60	WHEEL, 17X11 RR (STAMPED RJC)
88–92	Y STYLED AL WHL (QA1)	10050959	1	299.90	WHEEL, 17X4 COMPACT SPA (STAMPED XDX)
90–92	Y SPECIAL PERFORMANCE WHL (QA2)	10050959	1	299.90	WHEEL, 17X4 COMPACT SPA (STAMPED XDX)
93–95	Y	10050959	1	299.90	WHEEL, 17X4 COMPACT SPA (STAMPED XDX)
96	Y (EXC (EXC SPA TIRE)	10050959	1	299.90	WHEEL, 17X4 COMPACT SPA (STAMPED XDX)
93–96	Y STYLD AL WHL (QB6)	10180880	RH	454.20	WHEEL, 17X8.5 (FRT) (BRIGHT SILVER)
93–96	Y STYLD AL WHL (QB6)	12520358	LH	454.20	WHEEL, 17X8.5 (FRT) (STAMPED ACU)
96	Y ALUM WHL (QD2), COLLECTORS EDITION (Z15), (17P)	09592381	2	479.60	WHEEL, 17X8.5 FRT (BRIGHT SILVER)
96	Y ALUM WHL (QD2), GRAND SPORT EDITION (Z16), (41P)	12361448	2	479.60	WHEEL, 17X8.5 FRT (STAMPED RGV)
88	Y 35 ANNIV (ZO1)	10121017	LH	DISCON	WHEEL, 17X9.5 (ALUM) (WHITE)
95–96	Y STYLED WHEEL ALUM (N66)	10214046	4	479.60	WHEEL, 17X9.5 (FRT & RR) (BRIGHT SILVER)
90	Y	10119548	RH	485.00	WHEEL, 17X9.5 ALUM (FRT) (STAMPED XXU)
90	Y	10119548	RH	485.00	WHEEL, 17X9.5 ALUM (STAMPED XXU) (FRT, RR)
90	Y ALUM WHL (QA2), H .D .SUSP (FE7)	10147990	LH	485.00	WHEEL, 17X9.5 ALUM (FRT) (STAMPED XXUOR 10119547)

5.803 WHEEL, Front or Rear(Con't)

90	Y ALUM WHL (QA1)	10147990	LH	485.00	WHEEL, 17X9.5 ALUM (STAMPED XXU OR 10119547) (FRT, RR)
91–92	Y SPECIAL PERFORMANCE WHL (QA2)	10137823	LH	468.80	WHEEL, 17X9.5 FRT (STAMPED XYU)
91–92	Y STYLED AL WHL (QA1)	10137823	LH	468.80	WHEEL, 17X9.5 FRT (STAMPED XYU)
91–92	Y SPECIAL PERFORMANCE WHL (QA2)	10137824	RH	468.80	WHEEL, 17X9.5 FRT
91–92	Y STYLED AL WHL (QA1)	10137824	RH	468.80	WHEEL, 17X9.5 FRT
93	Y SPECIAL PERFORMANCE WHL (QA2)	10180881	LH	454.20	WHEEL, 17X9.5 FRT (BRIGHT SILVER)
93–96	Y STYLED AL WHL (QA1)	10180881	LH	454.20	WHEEL, 17X9.5 FRT (BRIGHT SILVER)
93	Y SPECIAL PERFORMANCE WHL (QA2)	10180882	RH	454.20	WHEEL, 17X9.5 FRT (BRIGHT SILVER)
93–96	Y STYLED AL WHL (QA1)	10180882	RH	454.20	WHEEL, 17X9.5 FRT (BRIGHT SILVER)
94–95	/ SPECIAL PERFORMANCE WHL (QA2)	10214046	2	479.60	WHEEL, 17X9.5 FRT (BRIGHT SILVER)
96	Y SPECIAL PERFORMANCE WHL (QA2), GRAND SPORT EDITION (Z16), (41P)	12361447	2	479.60	WHEEL, 17X9.5 FRT (STAMPED RGW)
91–92	Y STYLED AL WHL (QA1)	10137823	LH	468.80	WHEEL, 17X9.5 RR (STAMPED XYU)
91–92	Y STYLED AL WHL (QA1)	10137824	RH	468.80	WHEEL, 17X9.5 RR
93–96	Y STYLED AL WHL (QA1), STYLD AL WHL (QB6)	10180881	LH	454.20	WHEEL, 17X9.5 RR (BRIGHT SILVER)
93–96	Y STYLED AL WHL (QA1), STYLD AL WHL (QB6)	10180882	RH	454.20	WHEEL, 17X9.5 RR (BRIGHT SILVER)
96	Y ALUM WHL (QD2), COLLECTORS EDITION (Z15), (17P)	10214046	2	479.60	WHEEL, 17X9.5 RR (BRIGHT SILVER)
96	Y ALUM WHL (QD2), GRAND SPORT EDITION (Z16), (41P)	12361447	2	479.60	WHEEL, 17X9.5 RR (STAMPED RGW)
88	Y	10047635	LH	DISCON	WHEEL, 17X9.5, ALUM (FRT & RR) (STAMPED XNS)
88	Y	10047636	RH	DISCON	WHEEL, 17X9.5, ALUM (FRT & RR) (STAMPED XNT)
89	Y	10047635	LH	DISCON	WHEEL, 17X9.5, ALUM (FRT & RR) (STAMPED XNS)
89	Y	10047636	RH	DISCON	WHEEL, 17X9.5, ALUM (FRT & RR) (STAMPED XNT)
	*EXPORT*********EXPORT*********EXPORT*********EXPORT*********EXPORT*				
86	Y H.D. SUSP (FE7), EXPORT	14094587	2	DISCON	WHEEL, LH FRT & LH RR (16 X 8.5)
84–85	Y H.D. SUSP (FE7), VB4, VD1, VE1, VT7 (EXPORT)	14069517	LH	479.20	WHEEL, 16X8.5 (FRT & RR) (STAMPED DY) (QTY 02)
84–85	Y H.D. SUSP (FE7), VB4, VD1, VE1, VT7 (EXPORT)	14069518	RH	DISCON	WHEEL, 16X8.5 (FRT & RR) (STAMPED DY, DZ) (QTY 02)
86	Y H.D. SUSP (FE7), EXPORT	14094588	2	DISCON	WHEEL, 16X8.5 (RH FRT & RH RR)
95–96	Y STYLED ALUM WHL (QA0)	10180880	RH	454.20	WHEEL, 17X8.5 (BRIGHT SILVER)
95–96	Y STYLED ALUM WHL (QA0)	12520358	LH	454.20	WHEEL, 17X8.5 (STAMPED ACU)

5.806 HUB – KNUCKLE – NUT – RETAINER – SPINDLE – WASHER, Rear Wheel

84–96	Y	07470501	2	396.94	HUB, RR WHL (AC–DELCO #20–45)
88–96	Y	10270126	LH	503.88	KNUCKLE, RR SUSP
88–96	Y	10270127	RH	503.88	KNUCKLE, RR SUSP
84–96	Y	15653460	2	2.31	NUT, RR WHL SPDL (HEX, M24X1.5X14.5, GM510M (5), PLAIN) (06.056) (AC–DELCO #36–4123)
84–96	Y	00562248	2	3.01	RETAINER, RR WHL SPDL NUT (06.056)
84–85	Y	14055941	2	208.08	SPINDLE, RR WHL
86–87	Y	14087673	2	DISCON	SPINDLE, RR WHL

© 2000 GENERAL MOTORS SERVICE PARTS OPERATIONS

5.806 HUB – KNUCKLE – NUT – RETAINER – SPINDLE – WASHER, Rear Wheel(Con't)

88–96	Y	10052216	2	208.08	SPINDLE, RR WHL (W/RELUCTOR RING)
84–96	Y	00562249	2	2.25	WASHER, RR WHL SPDL (45MM OD FLAT) (OUTBOARD OF KNUCKLE) (06.056)
84–96	Y	14076924	2	4.85	WASHER, RR WHL SPDL (58MM OD 33.5MM FLANGED ID) (INBOARD OF KNUCKLE)

5.809 ROTOR, Front and Rear Wheel Brake

84–87	Y	14084142	2	112.75	ROTOR, FRT BRK (ROTOR, FRT BRK) (REPLACE IN AXLE SETS ONLY TO PREVENT BRAKE LEAD) (AC–DELCO #177–673)
84–87	Y STINGRAY) (VENTED	18027729	AR	107.18	ROTOR, FRT BRK (5–4 3/4 HOLES & BOLT CIRCLE) (2 33/64 HEIGHT) (11 1/2 DIAMETER) (AC–DELCO #18A129) (DURASTOP)
88	Y HVY DUTY SUSP (FE7)	10052203	LH	152.15	ROTOR, FRT BRK (ROTOR, FRT BRK) (AC–DELCO #177–678)
88	Y HVY DUTY SUSP (FE7)	10052204	RH	152.15	ROTOR, FRT BRK (ROTOR, FRT BRK) (AC–DELCO #177–679)
88	Y AL WHL (PY3), (EXC HVY DUTY SUSP (FE7)	10097654	2	91.85	ROTOR, FRT BRK (AC–DELCO #177–684)
88–95	Y STINGRAY) (EXCEPT HEAVY DUTY POWER BRAKES) (VENTED	18027889	AR	105.30	ROTOR, FRT BRK (5–4 3/16 HOLES & BOLT CIRCLE) (2 5/64 HEIGHT) (12 DIAMETER) (AC–DELCO #18A289) (DURASTOP)
88–96	Y STINGRAY) (HEAVY DUTY POWER BRAKES) (VENTED	18028284	LH	177.28	ROTOR, FRT BRK (5–4 3/4 HOLES & BOLT CIRCLE) (2 13/64 HEIGHT) (13 DIAMETER) (AC–DELCO #18A684) (DURASTOP)
88–96	Y STINGRAY) (HEAVY DUTY POWER BRAKES) (VENTED	18028285	RH	177.28	ROTOR, FRT BRK (5–4 3/4 HOLES & BOLT CIRCLE) (2 13/64 HEIGHT) (13 DIAMETER) (AC–DELCO #18A685) (DURASTOP)
89–95	Y HVY DUTY PWR BRK (J55)	10052203	LH	152.15	ROTOR, FRT BRK (AC–DELCO #177–678)
89–95	Y HVY DUTY PWR BRK (J55)	10052204	RH	152.15	ROTOR, FRT BRK (AC–DELCO #177–679)
89–94	Y ANTILOCK DISC BRK (JL9)	10097654	2	91.85	ROTOR, FRT BRK (AC–DELCO #177–684)
96	Y HVY DUTY PWR BRK (J55), (EXC PROTECTOR (VE2) (EXPORT), COLLECTORS EDITION (Z15), GRAND SPORT EDITION (Z16)	10052203	LH	152.15	ROTOR, FRT BRK (AC–DELCO #177–678)
96	Y HVY DUTY PWR BRK (J55), (EXC PROTECTOR (VE2) (EXPORT), COLLECTORS EDITION (Z15), GRAND SPORT EDITION (Z16)	10052204	RH	152.15	ROTOR, FRT BRK (AC–DELCO #177–679)
96	Y HVY DUTY PWR BRK (J55), COLLECTORS EDITION (Z15), GRAND SPORT EDITION (Z16)	10257631	LH	152.04	ROTOR, FRT BRK (AC–DELCO #177–780)
96	Y HVY DUTY PWR BRK (J55), COLLECTORS EDITION (Z15), GRAND SPORT EDITION (Z16)	10257632	RH	152.04	ROTOR, FRT BRK (AC–DELCO #177–781)
84–87	Y	14084143	2	125.79	ROTOR, RR BRK (ROTOR, RR BRK) (REPLACE IN AXLE SETS ONLY TO PREVENT BRAKE LEAD) (AC–DELCO #177–674)

© 2000 GENERAL MOTORS SERVICE PARTS OPERATIONS

5.809 ROTOR, Front and Rear Wheel Brake(Con't)

84–87	Y STINGRAY) (VENTED	18027740	AR	107.38	ROTOR, RR BRK (5–4 3/4 HOLES & BOLT CIRCLE) (2 1/2 HEIGHT) (11 1/2 DIAMETER) (AC–DELCO #18A140) (DURASTOP) .....
88–95	Y	10097655	2	93.50	ROTOR, RR BRK (AC–DELCO #177–685) .....
88–95	Y STINGRAY) (VENTED	18027888	AR	107.18	ROTOR, RR BRK (5–4 3/4 HOLES & BOLT CIRCLE) (1 31/32 HEIGHT) (12 DIAMETER) (AC–DELCO #18A288) (DURASTOP) .....
88–96	Y	18039636	LH	155.58	ROTOR, RR BRK (AC–DELCO #18A1052) (DURASTOP) .....
88–96	Y	19039637	RH	155.58	ROTOR, RR BRK (AC–DELCO #18A1053) (DURASTOP) .....
88–95	Y	13039646	LH	258.18	ROTOR, RR BRK (AC–DELCO #18A1062) (DURASTOP) .....
88–95	Y	18039647	RH	258.18	ROTOR, RR BRK (AC–DELCO #18A1063) (DURASTOP) .....
96	Y HVY DUTY PWR BRK (J55), (EXC PROTECTOR (VE2) (EXPORT), COLLECTORS EDITION (Z15), GRAND SPORT EDITION (Z16) ...	10097655	2	93.50	ROTOR, RR BRK (AC–DELCO #177–685) .....
96	Y HVY DUTY PWR BRK (J55), COLLECTORS EDITION (Z15), GRAND SPORT EDITION (Z16) ...	10257721	2	152.88	ROTOR, RR BRK (AC–DELCO #177–782) .....
96	Y STINGRAY) (HEAVY DUTY POWER BRAKES) (VENTED	18027888	AR	107.18	ROTOR, RR BRK (5–4 3/4 HOLES & BOLT CIRCLE) (1 31/32 HEIGHT) (12 DIAMETER) (AC–DELCO #18A288) (DURASTOP) .....
	*EXPORT***************EXPORT***************EXPORT***************EXPORT***************EXPORT*				
96	Y HVY DUTY PWR BRK (J55), PROTECTOR (VE2) (EXPORT), (EXC COLLECTORS EDITION (Z15), GRAND SPORT EDITION (Z16)	10257631	LH	152.04	ROTOR, FRT BRK (AC–DELCO #177–780) .....
96	Y HVY DUTY PWR BRK (J55), PROTECTOR (VE2) (EXPORT), (EXC COLLECTORS EDITION (Z15), GRAND SPORT EDITION (Z16)	10257632	RH	152.04	ROTOR, FRT BRK (AC–DELCO #177–781) .....
96	Y HVY DUTY PWR BRK (J55), PROTECTOR (VE2) (EXPORT), (EXC COLLECTORS EDITION (Z15), GRAND SPORT EDITION (Z16)	10257721	2	152.88	ROTOR, RR BRK (AC–DELCO #177–782) .....

5.812 BOLT – WASHER, Hub or Drum, Front and Rear Wheel

84–93	Y	09592032	10	2.80	BOLT, FRT WHL (12X1.5X44, 16 OD, 9.2 DIA DOG PT, 10.9, PL) (SILVER) (PHOSPHATE ZINC ORGANIC–FLAKE FINISH) .....
94–96	Y	09592032	10	2.80	BOLT, FRT WHL (SILVER) (PHOSPHATE ZINC ORGANIC–FLAKE FINISH) ....
86–96	Y	12338086	8	*.94	BOLT, FRT WHL HUB (HEX M10X1.5X70 36 THDTHD 10.9 PZOR) (M10X1.5X70, 36 THD) (HEX) (08.900) .....
84–96	Y	09592032	10	2.80	BOLT, RR WHL (12X1.5X44, 16 OD, 9.2 DIA DOG PT, 10.9, PL) (SILVER) (PHOSPHATE ZINC ORGANIC–FLAKE FINISH) .....
84–87	Y	14046943	6	5.20	BOLT, RR WHL HUB .....

© 2000 GENERAL MOTORS SERVICE PARTS OPERATIONS

5.812 BOLT – WASHER, Hub or Drum, Front and Rear Wheel(Con't)

84–96	Y	14046942	6	.73	WASHER, RR WHL HUB (M13X24X2) (05.383)
84–96	Y	14055822	6	.31	WASHER, RR WHL HUB (24X22.50) (08.929)

5.813 BOLT – CAP – HOLDER – NUT - NUT KIT – RETAINER, Hub Front and Rear

86–87	Y	10064306	1	10.50	HOLDER, SPL SECURITY WHL LK KEY
88	Y ALUM WHL (PY3)	10064306	1	10.50	HOLDER, SPL SECURITY WHL LK KEY
84–96	Y	11506101	8	*.46	NUT, FRT WHL HUB (M10X1.5 PC HEX FLG) (08.917)
84	Y	09591700	20	*7.00	NUT, WHL (M12X1.5 W/PLSTC CTD SS/CAP) (09591700–DOME TOP CAP, 09591664–FLAT TOP CAP, MAY NEED TO REPL ALL WHL NUTS W/SIMILAR TYPE)
85–96	Y	10028615	20	*1.10	NUT, WHL (BLACK) (M12X1.5 W/M24X2.0 OTR THD)
83	Y QA1	14092873	20	*5.00	NUT, WHL

5.816 BOLT, Rear Axle Shaft Bearing

88-96	Y	10052214	6	4.70	BOLT, RR WHL HUB (M12X1.75X86, TORX) (05.812)

5.822 SEAL, Rear Axle Shaft Bearing or Hub

92–93	Y 2.73R (GU2)	14079467	2	8.95	SEAL, R/AXL SHF (05.430)
92–96	Y 2.59R (GM1), 3.07R (G44)	14079467	2	8.95	SEAL, R/AXL SHF (05.430)
92	Y 3.54R (GH0)	14091422	2	9.35	SEAL, R/AXL SHF (05.430)
92–96	Y 3.45R (GM3)	14091422	2	9.35	SEAL, R/AXL SHF (05.430)
94	Y G95	14091422	2	9.35	SEAL, R/AXL SHF (05.430)
85–92	Y W/A .T.	14079467	2	8.95	SEAL, R/AXL SHF BRG (05.430)
85–92	Y W/M .T.	14091422	2	9.35	SEAL, R/AXL SHF BRG (05.430)
84–85	Y	14046941	2	7.34	SEAL, RR WHL HUB BRG

8.153 BOLT – BRACKET – PANEL – SHIM – SUPPORT – WASHER, Front Fender Inner Wheel House

84–87	Y	14084443	LH	29.40	PANEL, FRT W/H LWR CTR
84–87	Y	14084444	RH	DISCON	PANEL, FRT W/H LWR CTR
88	Y	10276503	LH	32.80	PANEL, FRT W/H LWR CTR (HOLES MAY HAVE TO BE DRILLED WHEN USED ON MODELS PRIOR TO 1992)
88	Y	10276504	RH	32.80	PANEL, FRT W/H LWR CTR
89–91	Y SOFT RIDE SUSP (FE1)	10276503	LH	32.80	PANEL, FRT W/H LWR CTR (HOLES MAY HAVE TO BE DRILLED WHEN USED ON MODELS PRIOR TO 1992)
89–90	Y SOFT RIDE SUSP (FE1), HVY DUTY SUSP (FE7), (EXC ELEK RIDE & HANDLING (FX3)	10276504	RH	32.80	PANEL, FRT W/H LWR CTR
89–95	Y ELEK RIDE & HANDLING (FX3)	10276504	RH	32.80	PANEL, FRT W/H LWR CTR
91–95	Y SOFT RIDE SUSP (FE1), (EXC ELEK RIDE & HANDLING (FX3)	10276504	RH	32.80	PANEL, FRT W/H LWR CTR
92–95	Y SOFT RIDE SUSP (FE1), ELEK RIDE & HANDLING (FX3)	10276503	LH	32.80	PANEL, FRT W/H LWR CTR
96	Y	10276503	LH	32.80	PANEL, FRT W/H LWR CTR
96	Y	10276504	RH	32.80	PANEL, FRT W/H LWR CTR
84–87	Y	14081833	LH	49.35	PANEL, FRT W/H LWR FRT
84–87	Y	14081834	RH	49.35	PANEL, FRT W/H LWR FRT
88–90	Y	14104001	LH	55.65	PANEL, FRT W/H LWR FRT

© 2000 GENERAL MOTORS SERVICE PARTS OPERATIONS

8.153 BOLT – BRACKET – PANEL – SHIM – SUPPORT – WASHER, Front Fender Inner Wheel House(Con't)

88–89	Y	14104002	RH	58.80	PANEL, FRT W/H LWR FRT
90	Y SOFT RIDE SUSP (FE1), HVY DUTY SUSP (FE7)	14104002	RH	58.80	PANEL, FRT W/H LWR FRT
91	Y SOFT RIDE SUSP (FE1), HVY DUTY SUSP (FE7)	10275625	LH	30.26	PANEL, FRT W/H LWR FRT (MAY NEED TO DRILL HOLES TO MATCH)
91	Y SOFT RIDE SUSP (FE1), HVY DUTY SUSP (FE7)	10275626	RH	30.26	PANEL, FRT W/H LWR FRT (MAY NEED TO DRILL HOLES TO MATCH)
92–96	Y	10275625	LH	30.26	PANEL, FRT W/H LWR FRT (MAY NEED TO DRILL HOLES TO MATCH)
92–96	Y	10275626	RH	30.26	PANEL, FRT W/H LWR FRT (MAY NEED TO DRILL HOLES TO MATCH)
84–87	Y	14049091	LH	42.53	PANEL, FRT W/H LWR RR
84–87	Y	14049092	RH	45.15	PANEL, FRT W/H LWR RR
88–89	Y	10276498	RH	43.99	PANEL, FRT W/H LWR RR
90–95	Y (EXC SPECIAL PERFORMANCE PKG (ZR1)	10276497	LH	45.26	PANEL, FRT W/H LWR RR (1992 & PRIOR VEHICLES MUST DRILL HOLES TO MOUNT RELAYS AND OTHER ELECTRICAL HARDWARE)
90–95	Y (EXC SPECIAL PERFORMANCE PKG (ZR1)	10276498	RH	43.99	PANEL, FRT W/H LWR RR (1992 & PRIOR VEHICLES MUST DRILL HOLES TO MOUNT RELAYS & OTHER ELECTRICAL HARDWARE)
90–95	Y SPECIAL PERFORMANCE PKG (ZR1)	10276499	LH	43.99	PANEL, FRT W/H LWR RR (1992 & PRIOR VEHICLES MUST DRILL HOLES TO MOUNT RELAYS & OTHER ELECTRICAL HARDWARE.)
90–94	Y SPECIAL PERFORMANCE PKG (ZR1)	10276500	RH	DISCON	PANEL, FRT W/H LWR RR (1992 & PRIOR VEHICLES MUST DRILL HOLES TO MOUNT RELAYS & OTHER ELECTRICAL HARDWARE)
95	Y SPECIAL PERFORMANCE PKG (ZR1)	10276500	RH	DISCON	PANEL, FRT W/H LWR RR
96	Y	10276497	LH	45.26	PANEL, FRT W/H LWR RR
96	Y	10276498	RH	43.99	PANEL, FRT W/H LWR RR (INCLS PNL 10279301)
84	Y	14076589	LH	31.24	PANEL, FRT W/H UPR
84	Y	14076590	RH	31.24	PANEL, FRT W/H UPR
85–87	Y	14076595	LH	31.24	PANEL, FRT W/H UPR
85–87	Y	14076596	RH	31.24	PANEL, FRT W/H UPR
88–89	Y	10231873	LH	31.78	PANEL, FRT W/H UPR
88–89	Y	10231874	RH	31.78	PANEL, FRT W/H UPR
90–91	Y SOFT RIDE SUSP (FE1), HVY DUTY SUSP (FE7)	10231873	LH	31.78	PANEL, FRT W/H UPR
90–91	Y SOFT RIDE SUSP (FE1), HVY DUTY SUSP (FE7)	10231874	RH	31.78	PANEL, FRT W/H UPR
92–96	Y	10231873	LH	31.78	PANEL, FRT W/H UPR
92–96	Y	10231874	RH	31.78	PANEL, FRT W/H UPR
84–87	Y	14078663	LH	DISCON	SUPPORT, FRT W/H LWR FRT PNL
84–87	Y	14078664	RH	12.60	SUPPORT, FRT W/H LWR FRT PNL
84–88	Y	14064555	LH	3.15	SUPPORT, FRT W/H PNL
84–88	Y	14064556	RH	2.63	SUPPORT, FRT W/H PNL

8.808 LABEL, Emission, Cautionary and Informative

94–96	Y	10231210	1	N.L.	LABEL, A/C REFRIG & ENG OIL NTC
88–91	Y 5.7–8 (L98)	10077567	1	N.L.	LABEL, ACSRY BELT ROUTING
90–91	Y 5.7J (LT5), SOFT RIDE SUSP (FE1), HVY DUTY SUSP (FE7)	10105211	1	N.L.	LABEL, ACSRY BELT ROUTING
92–95	Y 5.7J (LT5)	10105211	1	N.L.	LABEL, ACSRY BELT ROUTING
92	Y 5.7P (LT1)	10186199	1	N.L.	LABEL, ACSRY BELT ROUTING

© 2000 GENERAL MOTORS SERVICE PARTS OPERATIONS

8.808 LABEL, Emission, Cautionary and Informative(Con't)

93	Y 5.7P (LT1), (1ST DES)	10186199	1	N.L.	LABEL, ACSRY BELT ROUTING (DUAL SIDED POLY V-BELT)
93	Y 5.7P (LT1), (2ND DES)	10241175	1	N.L.	LABEL, ACSRY BELT ROUTING (SINGLE SIDED POLY V-BELT)
94-95	Y 5.7P (LT1)	10241175	1	N.L.	LABEL, ACSRY BELT ROUTING
86	Y67 HAS STEP 1-STATMENT "E" INCLUDING "AND WHL LOCK KEY" (1ST DES)	14093193	1	DISCON	LABEL, AUTO JK USAGE
90-91	Y	10210318	1	N.L.	LABEL, ENG CLG SYS
92-94	Y 5.7P (LT1)	10210318	1	N.L.	LABEL, ENG CLG SYS
95	Y 5.7P (LT1), (1ST DES)	10210318	1	N.L.	LABEL, ENG CLG SYS (USED ON VEHICLES W/VIN OF 119804 AND PRIOR)
95	Y 5.7P (LT1), (2ND DES)	10286902	1	N.L.	LABEL, ENG CLG SYS (USED ON VEHICLES W/VIN OF 119805 AND GREATER)
96	Y 5.7P (LT1)	10286902	1	N.L.	LABEL, ENG CLG SYS
92-93	Y 5.7P (LT1)	10225998	1	N.L.	LABEL, ENG OIL RECOMMENDATIONS
93-96	Y	10236268	1	N.L.	LABEL, ENG OIL RECOMMENDATIONS ("MOBIL 1")
84	Y	14063726	1	DISCON	LABEL, FAN BLADE CAUTION
85	Y	10120010	1	N.L.	LABEL, FAN BLADE CAUTION
85	Y APPLIED TO HOOD INNER PANEL	14084390	1	DISCON	LABEL, FAN BLADE CAUTION
90-96	Y	10120010	1	N.L.	LABEL, FAN BLADE CAUTION (BLACK NYLON)
86-87	Y	14092380	1	N.L.	LABEL, FAN BLADE ROUTING (APPLY TO LEFT HAND SIDE OF TOP RAD SUPT)
91-96	Y LOW TIRE PRESSURE IND (UJ6)	10180847	2	N.L.	LABEL, FRT TIRE PRESS IND SEN (INSTALL 90 DEGREES FROM VLV STEM ON I/S LIP OF WHL)
94	Y (EXC EUROPEAN PROVISIONS (VD1) (EXPORT)	15001737	2	N.L.	LABEL, INFL RST SYS CAUTION (140.0X40.0)
95-96	Y	15001737	2	N.L.	LABEL, INFL RST SYS CAUTION (140.0X40.0)
90-94	Y	10153622	1	N.L.	LABEL, INFL RST SYS INFO
90-93	Y	26017956	1	N.L.	LABEL, INFL RST SYS SERV NTC
94-95	Y	10247726	1	N.L.	LABEL, INFL RST SYS SERV NTC (USE ON R/H SIDE)
94-96	Y F/SEAT INFL RST SYS (AK5)	26017956	1	N.L.	LABEL, INFL RST SYS SERV NTC
96	Y F/SEAT INFL RST SYS (AK5)	10247726	1	N.L.	LABEL, INFL RST SYS SERV NTC (USE ON R/H SIDE)
84-96	Y	21011879	1	N.L.	LABEL, JK CAUTION
90	Y	10153623	1	N.L.	LABEL, JK LOC INFO
92-93	Y	10153623	1	N.L.	LABEL, JK LOCATION INFO
85	Y WHL NUT KEY IS ATTACHED TO THE WHL WRENCH (1ST DES)	14084072	1	N.L.	LABEL, JK USAGE
86	Y07 SHOWS NEW JACKING LOCATION 10 INCHES FROM RR WHL OPG (2ND DES)	14093200	1	N.L.	LABEL, JK USAGE
86-89	Y67	14093194	1	N.L.	LABEL, JK USAGE (INCLS INSTRUCTIONS 5 THRU 8)
86	Y67 STEP 1 & 2 (2ND DES)	14093198	1	N.L.	LABEL, JK USAGE
86	Y67 STEPS 3 & 4; NEW JACKING LOCATION-BETWEEN DARTS & TEN INCHES FROM RR WHL OPG (2ND DES)	14093199	1	N.L.	LABEL, JK USAGE
87	Y07	14093200	1	N.L.	LABEL, JK USAGE
87	Y67 STEPS 1 & 2	14093198	1	N.L.	LABEL, JK USAGE

© 2000 GENERAL MOTORS SERVICE PARTS OPERATIONS

8.808 LABEL, Emission, Cautionary and Informative(Con't)

87	Y67 STEPS 3 & 4	14093199	1	N.L.	LABEL, JK USAGE
88–89	Y07	10075210	1	N.L.	LABEL, JK USAGE
88–89	Y67	10075208	1	N.L.	LABEL, JK USAGE (STEP 1 & 2)
88–89	Y67	10075209	1	N.L.	LABEL, JK USAGE (STEP 3 & 4)
90–92	Y SPECIAL PERFORMANCE PKG (ZR1)	10149277	1	N.L.	LABEL, JK USAGE
90–92	Y (EXC SPECIAL PERFORMANCE PKG (ZR1)	10153625	1	N.L.	LABEL, JK USAGE
93	Y	10219501	1	N.L.	LABEL, JK USAGE
94–95	Y	10224195	1	N.L.	LABEL, JK USAGE
96	Y (EXC (EXC SPA TIRE)	10276417	1	N.L.	LABEL, JK USAGE
94–96	Y	10241098	1	N.L.	LABEL, LOW TIRE PRESS CAUTION
89–96	Y	10135621	AR	N.L.	LABEL, ODOM SERV NTC (70MM SQUARE) (FOR USE WHEN ODOMETER OR CLUSTER IS SERVICED) (5621)
90–95	Y07 SPECIAL PERFORMANCE PKG (ZR1)	10149274	1	N.L.	LABEL, PASS COMPT SPA WHL STOW INSTR
96	Y07 GRAND SPORT EDITION (Z16)	10149274	1	N.L.	LABEL, PASS COMPT SPA WHL STOW INSTR
95–96	Y	10283878	1	N.L.	LABEL, RAD FIL NTC
93	Y	10233569	1	N.L.	LABEL, RDO DMG NTC
94–96	Y	10238375	1	N.L.	LABEL, RDO DMG NTC
91–96	Y LOW TIRE PRESSURE IND (UJ6)	10180848	2	N.L.	LABEL, RR TIRE PRESS IND SEN (INSTALL 90 DEGREES FROM VLV STEM ON I/S LIP OF WHL)
92	Y STYLED AL WHL (QA1), SPECIAL PERFORMANCE WHL (QA2), EUROPEAN PROVISIONS (VD1) (EXPORT)	25558496	1	N.L.	LABEL, SPA WHL CAUTION (SYMBOLS)
93	Y EUROPEAN PROVISIONS (VD1) (EXPORT)	25558496	1	N.L.	LABEL, SPA WHL CAUTION (SYMBOLS)
94–96	Y	25558496	1	N.L.	LABEL, SPA WHL CAUTION (SYMBOLS)
85–89	Y07	14084074	1	N.L.	LABEL, SPA WHL STOW INFO
89	YO7 (EXC SPL PERF PKG ZR1)	14084074	1	N.L.	LABEL, SPA WHL STOW INFO
89	Y67 (EXC SPL PERF PKG ZR1)	14093195	1	N.L.	LABEL, SPA WHL STOW INFO
86–88	Y67	14093195	1	N.L.	LABEL, SPA WHL STOWAGE INFO
94–95	Y07 5.7P (LT1)	10244479	1	N.L.	LABEL, TIRE PRESS
96	Y07	10244479	1	N.L.	LABEL, TIRE PRESS
88–90	Y LOW TIRE PRESSURE IND (UJ6)	10180847	4	N.L.	LABEL, TIRE PRESS IND SEN (INSTALL 90 DEGREES FROM VLV STEM ON I/S LIP OF WHL)
84	Y (5.7–8) MK2, FED (NA5)	14073597	1	DISCON	LABEL, VEH EMIS CONT INFO (XTW)
85	Y (5.7–8) FED (NA5), NN5	14086592	1	DISCON	LABEL, VEH EMIS CONT INFO (UNM)
86	Y (5.7–8) FED (NA5), CALIF (NB2)	14086582	1	DISCON	LABEL, VEH EMIS CONT INFO
86	Y (5.7–8) FED (NA5) (EXC NN5)	14100950	1	DISCON	LABEL, VEH EMIS CONT INFO (YDJ)
87	Y FED (NA5) (EXC NN5)	10051453	1	N.L.	LABEL, VEH EMIS CONT INFO (ZDY)
87	Y FED, NN5	10051454	1	DISCON	LABEL, VEH EMIS CONT INFO (ZDZ)
88	Y (5.7–8) FED (NA5) (EXC NN5, Z49 CANADIAN	10079519	1	DISCON	LABEL, VEH EMIS CONT INFO (CNK)
88	Y (5.7–8) FED (NA5), NN5 (EXC Z49 CANADIAN	10079621	1	N.L.	LABEL, VEH EMIS CONT INFO (CNM)
89	Y	10116659	1	DISCON	LABEL, VEH EMIS CONT INFO (DCN)
89	Y	10116660	1	DISCON	LABEL, VEH EMIS CONT INFO (DCP)
89	Y (5.7J) (EXC NN5)	10116661	1	N.L.	LABEL, VEH EMIS CONT INFO (DCX)
89	Y (5.7J) NN5	10116662	1	N.L.	LABEL, VEH EMIS CONT INFO (DCY)
90	Y (5.7J) (EXC NN5)	10136278	1	N.L.	LABEL, VEH EMIS CONT INFO (FKW)
90	Y (5.7J) NN5	10136279	1	N.L.	LABEL, VEH EMIS CONT INFO (FKX)

© 2000 GENERAL MOTORS SERVICE PARTS OPERATIONS

8.808 LABEL, Emission, Cautionary and Informative(Con't)

90	Y 5.7–8 (L98), (EXC EMIS OVERRIDE (NN5)	10165211	1	N.L.	LABEL, VEH EMIS CONT INFO (FNM)
90	Y 5.7–8 (L98), EMIS OVERRIDE (NN5)	10165212	1	N.L.	LABEL, VEH EMIS CONT INFO (FNN)
91	Y 5.7–8 (L98), (EXC EMIS OVERRIDE (NN5)	10145484	1	N.L.	LABEL, VEH EMIS CONT INFO (LBZ)
91	Y 5.7–8 (L98), EMIS OVERRIDE (NN5)	10145485	1	N.L.	LABEL, VEH EMIS CONT INFO (LCA)
91	Y 5.7J (LT5), (EXC EMIS OVERRIDE (NN5)	10145486	1	N.L.	LABEL, VEH EMIS CONT INFO (LCL)
91	Y 5.7J (LT5), EMIS OVERRIDE (NN5)	10145487	1	N.L.	LABEL, VEH EMIS CONT INFO (LCM)
92	Y 5.7P (LT1), (EXC LEADED FUEL EMIS EXPORT (NM8), EMIS OVERRIDE (NN5)	10165175	1	N.L.	LABEL, VEH EMIS CONT INFO (PCK)
92	Y 5.7P (LT1), EMIS OVERRIDE (NN5)	10165176	1	N.L.	LABEL, VEH EMIS CONT INFO (PCL)
92	Y 5.7J (LT5), (EXC EMIS OVERRIDE (NN5)	10165177	1	N.L.	LABEL, VEH EMIS CONT INFO (PCM)
92	Y 5.7J (LT5), EMIS OVERRIDE (NN5)	10165178	1	N.L.	LABEL, VEH EMIS CONT INFO (PCN)
93	Y 5.7P (LT1), FEDERAL EMIS (NA5), (EXC LEADED FUEL EMIS EXPORT (NM8), EMIS OVERRIDE (NN5)	10189453	1	N.L.	LABEL, VEH EMIS CONT INFO (RCX)
93	Y 5.7P (LT1), EMIS OVERRIDE (NN5)	10189454	1	N.L.	LABEL, VEH EMIS CONT INFO (RDY)
93	Y 5.7J (LT5), (EXC EMIS OVERRIDE (NN5)	10221625	1	N.L.	LABEL, VEH EMIS CONT INFO
93	Y 5.7J (LT5), EMIS OVERRIDE (NN5)	10221626	1	N.L.	LABEL, VEH EMIS CONT INFO
94	Y 5.7J (LT5), EMIS OVERRIDE (NN5)	10224724	1	N.L.	LABEL, VEH EMIS CONT INFO
94	Y 5.7P (LT1), 6–SPD M/TRANS (ML9), FEDERAL EMIS (NA5), (EXC EMIS OVERRIDE (NN5), LEADED FUEL EMIS EXPORT (NM8)	12550655	1	N.L.	LABEL, VEH EMIS CONT INFO
94	Y 5.7P (LT1), 6–SPD M/TRANS (ML9), EMIS OVERRIDE (NN5)	12550656	1	N.L.	LABEL, VEH EMIS CONT INFO
94	Y 5.7P (LT1), 4–SPD A/TRANS (M30), FEDERAL EMIS (NA5), CALIFORNIA EMIS (NB2), (EXC LEADED FUEL EMIS EXPORT (NM8)	12550703	1	N.L.	LABEL, VEH EMIS CONT INFO
94	Y 5.7J (LT5), (EXC EMIS OVERRIDE (NN5)	12550754	1	N.L.	LABEL, VEH EMIS CONT INFO
95	Y 5.7P (LT1), 4–SPD A/TRANS (M30), FEDERAL EMIS (NA5), (EXC LEADED FUEL EMIS EXPORT (NM8)	10243019	1	N.L.	LABEL, VEH EMIS CONT INFO
05	Y 5.7P (LT1), 6–SPD M/TRANS (ML9), FEDERAL EMIS (NA5), (EXC LEADED FUEL EMIS EXPORT (NM8), EMIS OVERRIDE (NN5)	10243020	1	N.L.	LABEL, VEH EMIS CONT INFO
95	Y 5.7P (LT1), EMIS OVERRIDE (NN5)	10243021	1	N.L.	LABEL, VEH EMIS CONT INFO
95	Y 5.7P (LT1), CALIF EMIS, TIER 1 (NB6)	10243022	1	N.L.	LABEL, VEH EMIS CONT INFO
95	Y 5.7J (LT5), FEDERAL EMIS (NA5), (EXC EMIS OVERRIDE (NN5)	10243023	1	N.L.	LABEL, VEH EMIS CONT INFO
95	Y 5.7J (LT5), EMIS OVERRIDE (NN5)	10243024	1	N.L.	LABEL, VEH EMIS CONT INFO
96	Y 5.7P (LT1), LEADED FUEL EMIS EXPORT (NM8)	12553944	1	N.L.	LABEL, VEH EMIS CONT INFO
96	Y 5.7P (LT1), POWERTRAIN CONT MODULE (K29), (EXC CANADIAN (Z49)	12553944	1	N.L.	LABEL, VEH EMIS CONT INFO

© 2000 GENERAL MOTORS SERVICE PARTS OPERATIONS

8.808 LABEL, Emission, Cautionary and Informative(Con't)

96	Y 5.7P (LT1)	12555482	1	N.L.	LABEL, VEH EMIS CONT INFO
96	Y 5.7-5 (LT4)	12555483	1	N.L.	LABEL, VEH EMIS CONT INFO
96	Y 5.7-5 (LT4), 6-SPD M/TRANS (ML9), CALIF EMIS, TIER 1 (NB6)	12555600	1	N.L.	LABEL, VEH EMIS CONT INFO
96	Y 5.7-5 (LT4), 6-SPD M/TRANS (ML9), FED EMIS SYS (NF2), (EXC POWERTRAIN CONT MODULE (K29), CANADIAN (Z49)	12555600	1	N.L.	LABEL, VEH EMIS CONT INFO
96	Y 5.7P (LT1), 4-SPD A/TRANS (M30), CALIF EMIS, TIER 1 (NB6)	12555869	1	N.L.	LABEL, VEH EMIS CONT INFO
96	Y 5.7P (LT1), 4-SPD A/TRANS (M30), FED EMIS SYS (NF2)	12555869	1	N.L.	LABEL, VEH EMIS CONT INFO
96	Y 5.7-5 (LT4), POWERTRAIN CONT MODULE (K29), (EXC CANADIAN (Z49)	12556111	1	N.L.	LABEL, VEH EMIS CONT INFO
	*EXPORT***************EXPORT***************EXPORT***************EXPORT***************EXPORT*				
84-87	YB VB4, VD1, VE1, VT7 (EXPORT	14022422	1	DISCON	LABEL, IGN & START SW
94-96	Y EUROPEAN PROVISIONS (VD1) (EXPORT)	15001737	LH	N.L.	LABEL, INFL RST SYS CAUTION (140.0X40.0)
85	Y (5.7-8) NM8 (EXPORT)	14086593	1	DISCON	LABEL, VEH EMIS CONT INFO (UNN)
87	Y	10051455	1	DISCON	LABEL, VEH EMIS CONT INFO (ZFA)
88	Y	10079620	1	DISCON	LABEL, VEH EMIS CONT INFO (CNL)
92	Y 5.7P (LT1), LEADED FUEL EMIS EXPORT (NM8)	10222030	1	N.L.	LABEL, VEH EMIS CONT INFO (PPJ)
93	Y 5.7P (LT1), LEADED FUEL EMIS EXPORT (NM8)	10221953	1	N.L.	LABEL, VEH EMIS CONT INFO (RLC)
94	Y 5.7P (LT1), LEADED FUEL EMIS EXPORT (NM8)	12550704	1	N.L.	LABEL, VEH EMIS CONT INFO
95	Y 5.7P (LT1), LEADED FUEL EMIS EXPORT (NM8)	10243025	1	N.L.	LABEL, VEH EMIS CONT INFO

8.820 CONTAINER - JACK - LATCH - RETAINER, Auto

94-96	Y07	10219041	1	12.90	CONTAINER, JK STOW
94-96	Y67	10219040	1	11.99	CONTAINER, JK STOW
93-96	Y	10230427	1	56.61	JACK
84-92	Y	10230427	1	56.61	JACK, (ON 92 & PRIOR MODELS, ALSO REPLACE JACK LABEL W/10219501)
84	Y	14060278	1	DISCON	RETAINER, JK STOW
85-93	Y	14084442	1	8.21	RETAINER, JK STOW
88-96	Y	10077281	1	5.15	RETAINER, JK/WHL WRENCH HDL INR
88-96	Y	10077282	1	5.15	RETAINER, JK/WHL WRENCH HDL OTR

8.821 BAG - CLIP - HANDLE - PLATE - WRENCH, Wheel, Jack and Miscellaneous Wrench

89-96	Y67 AUX RF (CC2)	10149268	1	32.04	BAG, TOOL STOW (13.346)
84-96	Y	14050029	1	16.07	HANDLE, JK/WHL WRENCH (INCLUDES WRENCH FOR 84-90) (08.820)
91-96	Y	10180890	1	29.84	WRENCH, WHL

9.171 BRACE - BRACKET - PIN, A/C Compressor Mounting

85-87	Y	14084340	1	33.53	BRACKET, A/C CMPR
88-91	Y 5.7-8 (L98)	10105236	1	49.02	BRACKET, A/C CMPR
84	Y	14055137	1	39.62	BRACKET, CMPR
92-95	Y 5.7P (LT1)	12550052	1	77.01	BRACKET, GEN & A/C CMPR & P/S PUMP (02.277)

© 2000 GENERAL MOTORS SERVICE PARTS OPERATIONS

9.171 BRACE – BRACKET – PIN, A/C Compressor Mounting(Con't)

93	Y 5.7J (LT5)	12550052	1	77.01	BRACKET, GEN & A/C CMPR & P/S PUMP (02.277)
96	Y	12550052	1	77.01	BRACKET, GEN & A/C CMPR & P/S PUMP (02.277)

9.988 BEZEL – BRACKET – HOUSING – LAMP – SHIELD – SOCKET, Rear Compartment Lamp

84–96	Y07	16513253	LH	21.20	BEZEL, R/CMPT C/LP (W/LENS)
84–96	Y07	16513254	RH	21.20	BEZEL, R/CMPT C/LP (W/LENS)
84–96	Y07	16501567	LH	7.55	HOUSING, CARGO LP (RR)
84–96	Y07	16501568	RH	7.55	HOUSING, CARGO LP (11.927)
84–96	Y67	10199743	2	10.35	LAMP, CARGO (USED W/9433040 BULB) (11.927)
84–87	Y	16519986	1	9.33	LAMP, SPA TIRE (02.700)
88–92	Y	16509351	1	6.32	LAMP, SPA TIRE (02.700)
90–96	Y07	06298886	1	6.95	SOCKET, CARGO LP (02.575) (AC–DELCO #7434)
88–92	Y	12083007	1	11.27	SOCKET, SPA TIRE LP (W/CABLE) (02.575) (AC–DELCO #LS13)
	*EXPORT**********EXPORT**********EXPORT**********EXPORT**********EXPORT*				
94–95	Y SIG & MKR LP (T90) (EXPORT)	12083007	1	11.27	SOCKET, SPA TIRE LP (W/CABLE) (02.575) (AC–DELCO #LS13)
96	Y07 SIG & MKR LP (T90) (EXPORT)	12083007	1	11.27	SOCKET, SPA TIRE LP (02.575) (AC–DELCO #LS13)

10.163 CONNECTOR – SWITCH, Windshield Wiper Control

84–89	Y	10045832	1	40.56	SWITCH, WSW & WSWA (FOR SOME VEHICLE IT WILL BE NECESSARY TO CUT LEADS FROM BOTH SWITCHES AND SPLICE LEADS) (AC–DELCO #D6371A)
91–93	Y	26015119	1	142.80	SWITCH, WSW & WSWA (02.459)
94–96	Y	26036071	1	18.26	SWITCH, WSW & WSWA (AC–DELCO #D6323D)

10.242 BOLT – BUMPER – COVER – DOOR – HINGE – HOUSING – PIN – SPRING – TRAY, Floor Console Compartment Door

90–91	Y 6–WAY PWR P/SEAT ADJR (AC1), 6–WAY PWR D/SEAT ADJR (AC3), ELEK RIDE & HANDLING (FX3)	10086231	1	85.17	HOUSING, F/FLR CNSL ACSRY SW
90–91	Y 6–WAY PWR D/SEAT ADJR (AC3), (EXC 6–WAY PWR P/SEAT ADJR (AC1), ELEK RIDE & HANDLING (FX3)	10086232	1	DISCON	HOUSING, F/FLR CNSL ACSRY SW
90–91	Y 6–WAY PWR P/SEAT ADJR (AC1), 6–WAY PWR D/SEAT ADJR (AC3), SOFT RIDE SUSP (FE1), (EXC ELEK RIDE & HANDLING (FX3)	10086233	1	28.50	HOUSING, F/FLR CNSL ACSRY SW
92–94	Y 6–WAY PWR D/SEAT ADJR (AC3), (EXC 6–WAY PWR P/SEAT ADJR (AC1), ELEK RIDE & HANDLING (FX3)	10161841	1	26.00	HOUSING, F/FLR CNSL ACSRY SW
92–94	Y 6–WAY PWR P/SEAT ADJR (AC1), 6–WAY PWR D/SEAT ADJR (AC3), (EXC ELEK RIDE & HANDLING (FX3)	10161844	1	26.00	HOUSING, F/FLR CNSL ACSRY SW
92–94	Y 6–WAY PWR P/SEAT ADJR (AC1), 6–WAY PWR D/SEAT ADJR (AC3), ELEK RIDE & HANDLING (FX3)	10161846	1	26.00	HOUSING, F/FLR CNSL ACSRY SW

© 2000 GENERAL MOTORS SERVICE PARTS OPERATIONS

10.242 BOLT – BUMPER – COVER – DOOR – HINGE – HOUSING – PIN – SPRING – TRAY, Floor Console Compartment Door(Con't)

95	Y 6-WAY PWR D/SEAT ADJR (AG1), (EXC 6-WAY PWR P/SEAT ADJR (AG2), ELEK RIDE & HANDLING (FX3)	10161841	1	26.00	HOUSING, F/FLR CNSL ACSRY SW ....
95-96	Y 6-WAY PWR D/SEAT ADJR (AG1), 6-WAY PWR P/SEAT ADJR (AG2), MAN RECL FRT BKT ST (AR9), RECL FRT BKT ST (AQ9), (EXC ELEK RIDE & HANDLING (FX3)	10161844	1	26.00	HOUSING, F/FLR CNSL ACSRY SW ....
95-96	Y 6-WAY PWR D/SEAT ADJR (AG1), 6-WAY PWR P/SEAT ADJR (AG2), RECL FRT BKT ST (AQ9), MAN RECL FRT BKT ST (AR9), ELEK RIDE & HANDLING (FX3) ...	10161846	1	26.00	HOUSING, F/FLR CNSL ACSRY SW ....
96	Y 6-WAY PWR D/SEAT ADJR (AG1), (EXC 6-WAY PWR P/SEAT ADJR (AG2), CHASSIS, REALTIME DAMPING (F45)	10161841	1	26.00	HOUSING, F/FLR CNSL ACSRY SW ....

11.558 BRACKET – CONTROL – ESCUTCHEON – INSERT – KNOB – LAMP – RETAINER – SWITCH, Front Seat Adjuster

92-93	Y 6-WAY PWR D/SEAT ADJR (AC3), ELEK RIDE & HANDLING (FX3), (EXC 6-WAY PWR P/SEAT ADJR (AC1)	10161836	1	158.10	CONTROL, ELEK SUSP (W/D/SEAT ADJR SW) (07.450) .....
90-91	Y 6-WAY PWR D/SEAT ADJR (AC3)	12514822	1	6.53	INSERT, D/SEAT ADJR SW PLT .....
90-91	Y 6-WAY PWR P/SEAT ADJR (AC1), 6-WAY PWR D/SEAT ADJR (AC3) .	12514823	1	6.53	INSERT, P/SEAT ADJR SW PLT .....
84-86	Y 6-WAY (A42)	14057581	1	2.82	KNOB, PWR ST ADJR SW .....
87-89	Y 6-WAY PWR D/SEAT ADJR (AC3)	14057581	1	2.82	KNOB, PWR ST ADJR SW .....
90-93	Y 6-WAY PWR D/SEAT ADJR (AC3)	10148002	2	2.90	LAMP, D/SEAT & P/SEAT ADJR SW ....
84-89	Y AQ9	14079477	2	43.86	SWITCH, BACKREST CONT (BLACK) ..
90-91	Y 6-WAY PWR D/SEAT ADJR (AC3)	10086227	1	77.27	SWITCH, D/SEAT ADJR .....
92	Y 6-WAY PWR P/SEAT ADJR (AC1), 6-WAY PWR D/SEAT ADJR (AC3), ELEK RIDE & HANDLING (FX3) ...	10161837	1	97.92	SWITCH, D/SEAT ADJR .....
93	Y 6-WAY PWR D/SEAT ADJR (AC3)	10161837	1	97.92	SWITCH, D/SEAT ADJR .....
94-96	Y	10212990	1	70.72	SWITCH, D/SEAT ADJR .....
90	Y RECL FRT BKT ST (AQ9)	10174809	1	31.37	SWITCH, D/SEAT RECL (GRAY) .....
90-91	Y 6-WAY PWR P/SEAT ADJR (AC1), 6-WAY PWR D/SEAT ADJR (AC3) .	10086228	1	77.27	SWITCH, P/SEAT ADJR .....
92-93	Y 6-WAY PWR P/SEAT ADJR (AC1), 6-WAY PWR D/SEAT ADJR (AC3) .	10161843	1	97.92	SWITCH, P/SEAT ADJR .....
94-96	Y	10212992	1	70.72	SWITCH, P/SEAT ADJR .....
90	Y RECL FRT BKT ST (AQ9)	10174809	1	31.37	SWITCH, P/SEAT RECL (GRAY) .....
84-86	Y 6-WAY (A42)	14047185	1	112.20	SWITCH, PWR ST ADJR .....
87	Y 6-WAY PWR D/SEAT ADJR (AC3)	14103355	LH	DISCON	SWITCH, PWR ST ADJR .....
87	Y 6-WAY PWR P/SEAT ADJR (AC1)	14103356	RH	DISCON	SWITCH, PWR ST ADJR .....
88-89	Y 6-WAY PWR D/SEAT ADJR (AC3)	10098456	LH	77.27	SWITCH, PWR ST ADJR .....
88-89	Y 6-WAY PWR P/SEAT ADJR (AC1)	10098457	RH	77.27	SWITCH, PWR ST ADJR .....

12.116 DECAL – MOLDING – MOLDING KIT – STRIPE, Rear Quarter Panel

84-87	Y	14043099	LH	21.20	MOLDING, BODY SI RR (BLACK) .....
84-87	Y	14043100	RH	21.20	MOLDING, BODY SI RR (BLACK) .....
88	Y (EXC DELUXE EXTR TR (B57)	14043099	LH	21.20	MOLDING, BODY SI RR (BLACK) .....
88	Y (EXC DELUXE EXTR TR (B57)	14043100	RH	21.20	MOLDING, BODY SI RR (BLACK) .....

© 2000 GENERAL MOTORS SERVICE PARTS OPERATIONS

12.116 DECAL – MOLDING – MOLDING KIT – STRIPE, Rear Quarter Panel(Con't)

89	Y	14043099	LH	21.20	MOLDING, BODY SI RR (BLACK)
89	Y	14043100	RH	21.20	MOLDING, BODY SI RR (BLACK)
90	Y SOFT RIDE SUSP (FE1), HVY DUTY SUSP (FE7), (EXC SPECIAL PERFORMANCE PKG (ZR1)	14043099	LH	21.20	MOLDING, BODY SI RR (BLACK)
90	Y SOFT RIDE SUSP (FE1), HVY DUTY SUSP (FE7), (EXC SPECIAL PERFORMANCE PKG (ZR1)	14043100	RH	21.20	MOLDING, BODY SI RR (BLACK)
90	Y HVY DUTY SUSP (FE7), SPECIAL PERFORMANCE PKG (ZR1)	14104447	LH	11.60	MOLDING, BODY SI RR (FRT OF RR QTR PNL)
90	Y HVY DUTY SUSP (FE7), SPECIAL PERFORMANCE PKG (ZR1)	14104448	RH	11.60	MOLDING, BODY SI RR (FRT OF RR QTR PNL)
91–95	Y SPECIAL PERFORMANCE PKG (ZR1)	10135981	LH	47.00	MOLDING, R/Q CTR RR (MUST ORDER NUT 11516066 QTY–5)
91–95	Y SPECIAL PERFORMANCE PKG (ZR1)	10135982	RH	47.00	MOLDING, R/Q CTR RR (MUST ORDER NUT 11516066 QTY–5)
88	Y 35 ANNIVERSARY (Z01)	10123009	LH	DISCON	MOLDING, RR QTR (WHITE)
88	Y 35 ANNIVERSARY (Z01)	10123010	RH	DISCON	MOLDING, RR QTR (WHITE)

12.942 DEFLECTOR – FILLER – INSULATOR – PANEL – PILLAR – PLATE – PLUG – REINFORCEMENT – RETAINER – SEAL – VALVE, Rear Body Lock Pillar

84–91	Y07 SOFT RIDE SUSP (FE1), HVY DUTY SUSP (FE7)	14043123	LH	11.32	FILLER, BODY L/PLR LWR
84–91	Y07 SOFT RIDE SUSP (FE1), HVY DUTY SUSP (FE7)	14043124	RH	11.32	FILLER, BODY L/PLR LWR
86–96	Y67	14092647	LH	25.68	FILLER, BODY L/PLR LWR
86–96	Y67	14092648	RH	25.68	FILLER, BODY L/PLR LWR
92–96	Y07	14043123	LH	11.32	FILLER, BODY L/PLR LWR
92–96	Y07	14043124	RH	11.32	FILLER, BODY L/PLR LWR
84–96	Y07	10208618	RH	40.43	PANEL, BODY L/PLR INR
84–96	Y07	10208619	LH	40.43	PANEL, BODY L/PLR INR
86–96	Y67	10208620	RH	89.50	PANEL, BODY L/PLR INR
86–96	Y67	10208621	LH	81.11	PANEL, BODY L/PLR INR
86–93	Y67	14092637	LH	108.15	PANEL, BODY L/PLR OTR UPR
86–93	Y67	14092638	RH	DISCON	PANEL, BODY L/PLR OTR UPR
94–96	Y67	10250367	LH	96.11	PANEL, BODY L/PLR OTR UPR
94–96	Y67	10250368	RH	96.11	PANEL, BODY L/PLR OTR UPR
84–87	Y	14091023	LH	55.43	PILLAR, FRT S/D OTR LK
84–87	Y	14091024	RH	55.43	PILLAR, FRT S/D OTR LK
88–96	Y07	10051827	LH	55.43	PILLAR, FRT S/D OTR LK
88–96	Y07	10051828	RH	55.43	PILLAR, FRT S/D OTR LK
88–96	Y67	14091023	LH	55.43	PILLAR, FRT S/D OTR LK
88–96	Y67	14091024	RH	55.43	PILLAR, FRT S/D OTR LK
90–96	Y67	08731909	AR	*.40	RETAINER, FRT S/D L/PLR UPR SEAL (FULL FLDG) (10.695)
93–95	Y67	08731909	4	*.40	RETAINER, FRT S/D L/PLR UPR SEAL (FULL FLDG) (10.695)
86–96	Y67	14092683	LH	47.25	SEAL, FRT S/D L/PLR UPR (FRT)
86–96	Y67	14092684	RH	47.25	SEAL, FRT S/D L/PLR UPR (FRT)
86–96	Y67	14100365	LH	38.00	SEAL, FRT S/D L/PLR UPR (RR)
86–96	Y67	14100366	RH	41.70	SEAL, FRT S/D L/PLR UPR (RR)
88–96	Y07	10054609	2	8.54	VALVE, FRT S/D PRESS RLF

© 2000 GENERAL MOTORS SERVICE PARTS OPERATIONS

12.944 BRACE – LINER – PANEL – SUPPORT, Rear Wheelhouse

86–92	Y67	10125921	LH	25.15	BRACE, BODY UPR RR PNL FRT (WASHER MAY BE REQ AT FACIA END)
86–92	Y67	10125922	RH	25.15	BRACE, BODY UPR RR PNL FRT (WASHER MAY BE REQ AT FACIA END)
86–88	Y67	10051843	LH	DISCON	BRACE, BODY UPR RR PNL RR
86–88	Y67	10051844	RH	DISCON	BRACE, BODY UPR RR PNL RR
84–85	Y	14064519	LH	DISCON	BRACE, RR W/H PNL
84–85	Y	14064520	RH	DISCON	BRACE, RR W/H PNL
86	Y (3RD DES)	10051887	LH	9.61	BRACE, RR W/H PNL (TUBULAR SECTION 267MM LONG) (ALSO USE SUPT 14100241)
86	Y (3RD DES)	10051888	RH	9.61	BRACE, RR W/H PNL (TUBULAR SECTION 267MM LONG) (ALSO USE SUPT 14100242)
87–89	Y	10051887	LH	9.61	BRACE, RR W/H PNL
87–89	Y	10051888	RH	9.61	BRACE, RR W/H PNL
90–95	Y (EXC SPECIAL PERFORMANCE PKG (ZR1)	10051887	LH	9.61	BRACE, RR W/H PNL LNR RR
90–95	Y SPECIAL PERFORMANCE PKG (ZR1)	14104631	LH	9.61	BRACE, RR W/H PNL LNR RR
90–95	Y SPECIAL PERFORMANCE PKG (ZR1)	14104632	RH	9.61	BRACE, RR W/H PNL LNR RR
91–95	Y (EXC SPECIAL PERFORMANCE PKG (ZR1)	10051888	RH	9.61	BRACE, RR W/H PNL LNR RR
96	Y	10051887	LH	9.61	BRACE, RR W/H PNL LNR RR
96	Y	10051888	RH	9.61	BRACE, RR W/H PNL LNR RR

12.966 PLATE – PROTECTOR, Rear End

92–96	Y	14058658	2	1.68	PLATE, BODY UPR RR PNL SUPT ANC (12.986)

12.980 BOLT – BRACKET – COVER – EXTENSION – INSULATOR – PANEL – PLATE – PLUG – REINFORCEMENT – RETAINER – SPACER – STRIP – SUPPORT, Floor Pan

84–89	Y	14060212	1	14.54	BRACKET, F/FLR PNL UPR (**VPI 1–877–846–8243)
84–96	Y	14076517	1	13.78	BRACKET, FLR FRT PNL LWR
90–96	Y	10086170	1	35.09	BRACKET, FLR FRT PNL UPR
84–88	Y07	14090688	1	DISCON	EXTENSION, INTER FLR PNL (12.981)
86–96	Y67	14092607	1	265.44	EXTENSION, INTER FLR PNL (12.981)
89–96	Y07	10161896	1	83.39	EXTENSION, INTER FLR PNL (12.981)
84–85	Y	14065059	LH	DISCON	REINFORCEMENT, F/FLR PNL
84–85	Y	14065060	RH	DISCON	REINFORCEMENT, F/FLR PNL
90–96	Y67	10146450	1	20.44	REINFORCEMENT, FLR PNL #3 C/BAR
86–89	Y67	10051839	LH	DISCON	REINFORCEMENT, R/FLR PNL INR
86–89	Y67	10051840	RH	DISCON	REINFORCEMENT, R/FLR PNL INR
86–89	Y07	14105505	1	DISCON	REINFORCEMENT, R/FLR PNL OPG
86–96	Y67	10051841	2	20.44	REINFORCEMENT, R/FLR PNL OTR
86–96	Y67	14092624	1	30.76	REINFORCEMENT, U/B BR
84–89	Y07	03962891	2	2.10	SPACER, FLR RR PNL ADJ (08.024)
90–92	Y07 SOFT RIDE SUSP (FE1), HVY DUTY SUSP (FE7)	03962891	2	2.10	SPACER, FLR RR PNL ADJ (08.024)
93–96	Y07	03962891	2	2.10	SPACER, FLR RR PNL ADJ (08.024)
86–96	Y67	14092739	2	12.92	SPACER, R/FLR PNL INSL

© 2000 GENERAL MOTORS SERVICE PARTS OPERATIONS

12.981 BOLT – BRACKET – COMPARTMENT – CYLINDER – CYLINDER KIT – DOOR – DOOR & FRAME – FILLER – GASKET – HANDLE – INSULATOR – PANEL – PLATE – REINFORCEMENT – RETAINER – SPRING – STRIKER – STRIP – TRAY – TUMBLER, Rear Compartment Floor

86–96	Y07	14100206	2	2.85	BRACKET, FLR RR PNL CTR CPT
86–89	Y67	14064526	2	.70	BRACKET, FLR RR PNL CTR CPT (10.230)
90–96	Y67	14064526	3	.70	BRACKET, FLR RR PNL CTR CPT (10.230)
86–96	Y67	14092735	LH	38.75	BRACKET, R/FLR PNL UPR FRT
86–96	Y67	14092736	RH	38.75	BRACKET, R/FLR PNL UPR FRT
89–92	Y67	10123005	LH	65.85	BRACKET, R/FLR PNL UPR FRT (14.310)
86–96	Y67	14100357	LH	25.32	FILLER, R/FLR PNL INTER
86–96	Y67	14100358	RH	25.32	FILLER, R/FLR PNL INTER
86–96	Y67	14092725	LH	38.65	FILLER, R/FLR PNL LWR
86–96	Y67	14092726	RH	38.65	FILLER, R/FLR PNL LWR
86–96	Y67	14092723	LH	26.70	FILLER, R/FLR PNL UPR
86–96	Y67	14092724	RH	26.70	FILLER, R/FLR PNL UPR
84–87	Y	14064513	LH	DISCON	INSULATOR, INR INTER SI MBR
84–96	Y	14064514	RH	3.10	INSULATOR, INR INTER SI MBR
88	Y	10094902	LH	DISCON	INSULATOR, INR INTER SI MBR
89–96	Y	10137253	LH	1.05	INSULATOR, INR INTER SI MBR
86–96	Y67	14092737	1	12.92	INSULATOR, R/FLR PNL (UPR)
86–93	Y67	14092738	1	13.34	INSULATOR, R/FLR PNL (LWR)
88–95	Y07	10054603	LH	26.00	INSULATOR, R/FLR PNL (12.980)
88–96	Y07	10054604	RH	26.00	INSULATOR, R/FLR PNL (12.980)
90–96	Y67	10193758	RH	11.44	INSULATOR, R/FLR PNL
92–95	Y67	10193757	LH	11.44	INSULATOR, R/FLR PNL
93–96	Y67	11515174	2	*1.50	INSULATOR, R/FLR PNL (POSN #1) (4 1/4"X7 1/2") (TRIM AS REQ'D) (15.492)
96	Y07	10282261	LH	26.00	INSULATOR, R/FLR PNL
96	Y67	10282262	LH	11.44	INSULATOR, R/FLR PNL
86–96	Y07	10175524	1	29.24	INSULATOR, R/FLR PNL CTR
90–96	Y67	10146480	1	29.24	INSULATOR, R/FLR PNL CTR
90–96	Y67	10146449	1	13.63	PANEL, FLR RR FIL
84–87	Y	10067390	1	DISCON	PANEL, INTER FLR (DEALER TO REMOVE EXTENSION ASM WHEN INSTALLING ON Y07 (COUPE) CARS
89–96	Y	10198704	1	147.47	PANEL, INTER FLR
84–85	Y07	14104866	1	DISCON	PANEL, R/FLR (MUST ALSO ORDER (1) 14105595, (2) 14088454, (8) 2495701, (8) 11508426, (1) 14088439, (1) 14088442, (8) 1646714)
86–89	Y07	14104866	1	DISCON	PANEL, R/FLR
86–91	Y67	10193727	1	370.65	PANEL, R/FLR
92–96	Y07	10280990	1	381.38	PANEL, R/FLR
92–96	Y67	10280989	1	381.38	PANEL, R/FLR (PANEL HAS A SQUARE ARM, (DEALER TO CUT HOLE OUT ON INSIDE MARKED BY ETCHING WHEN USING ON 1992 AND PRIOR)
84–89	Y	14104991	LH	DISCON	PANEL, R/FLR CLOSEOUT
84–89	Y	14104992	RH	DISCON	PANEL, R/FLR CLOSEOUT
84–96	Y07	14043111	LH	12.87	PANEL, R/FLR PNL UPR FRT CLOSEOUT
84–96	Y07	14043112	RH	12.87	PANEL, R/FLR PNL UPR FRT CLOSEOUT

© 2000 GENERAL MOTORS SERVICE PARTS OPERATIONS

12.981 BOLT – BRACKET – COMPARTMENT – CYLINDER – CYLINDER KIT – DOOR – DOOR & FRAME – FILLER – GASKET – HANDLE – INSULATOR – PANEL – PLATE – REINFORCEMENT – RETAINER – SPRING – STRIKER – STRIP – TRAY – TUMBLER, Rear Compartment Floor(Con't)

84–89	Y07	14043113	LH	DISCON	PANEL, RR COMPT CLOSEOUT
84–89	Y07	14043114	RH	DISCON	PANEL, RR COMPT CLOSEOUT

12.986 BOLT – BRACE – EXTENSION – PLATE – SPACER – SUPPORT – WASHER, Body Rear End (Plastic Laminated)

86–96	Y67	10143533	1	144.41	BRACE, U/B (LWR)
86–96	Y67	10193674	1	166.79	BRACE, U/B (UPR)
86–89	Y67	10153644	4	10.53	SPACER, U/B BR
90–96	Y67	10153644	4	10.53	SPACER, U/B BR
90–91	Y SPECIAL PERFORMANCE PKG (ZR1)	14104593	LH	22.37	SUPPORT, BODY UPR RR PNL
90–91	Y SPECIAL PERFORMANCE PKG (ZR1)	14104594	RH	22.37	SUPPORT, BODY UPR RR PNL
91	Y (EXC SPECIAL PERFORMANCE PKG (ZR1)	14100241	LH	10.90	SUPPORT, BODY UPR RR PNL (07.836)
91	Y (EXC SPECIAL PERFORMANCE PKG (ZR1)	14100242	RH	DISCON	SUPPORT, BODY UPR RR PNL (07.836)
92–96	Y07	10172499	2	3.97	SUPPORT, BODY UPR RR PNL
92–96	Y67	10198696	2	3.97	SUPPORT, BODY UPR RR PNL
86–92	Y67	14038397	8	*1.00	WASHER, U/B BR (M8.6X20X2.50) (08.929)

14.731 BOLT – CARPET – PANEL, Lock Pillar Trim

86–87	Y67 (12I)	10051861	LH	DISCON	CARPET, FRT S/D L/PLR (GRAPHITE)
86–87	Y67 (12I)	10051862	RH	DISCON	CARPET, FRT S/D L/PLR (GRAPHITE)
86–87	Y67 (15I)	10051863	LH	DISCON	CARPET, FRT S/D L/PLR (GRAY)
86–87	Y67 (15I)	10051864	RH	DISCON	CARPET, FRT S/D L/PLR (GRAY)
86–87	Y67 (21I)	10051865	LH	DISCON	CARPET, FRT S/D L/PLR (BLUE)
86–87	Y67 (21I)	10051866	RH	DISCON	CARPET, FRT S/D L/PLR (BLUE)
86–87	Y67 (62I)	10051867	LH	DISCON	CARPET, FRT S/D L/PLR (SADDLE)
86–87	Y67 (62I)	10051868	RH	DISCON	CARPET, FRT S/D L/PLR (SADDLE)
86–87	Y67 (65I)	10051869	LH	DISCON	CARPET, FRT S/D L/PLR (BRONZE)
86–87	Y67 (65I)	10051870	RH	DISCON	CARPET, FRT S/D L/PLR (BRONZE)
86–87	Y67 (73I)	10051871	LH	DISCON	CARPET, FRT S/D L/PLR (RED)
86–87	Y67 (73I)	10051872	RH	DISCON	CARPET, FRT S/D L/PLR (RED)
88–89	Y67 (90I)	10089583	LH	12.10	CARPET, FRT S/D L/PLR (GRAY)
88–89	Y67 (90I)	10089584	RH	11.90	CARPET, FRT S/D L/PLR (GRAY)
88–89	Y67 (21I)	10137211	LH	DISCON	CARPET, FRT S/D L/PLR (BLUE)
88–89	Y67 (21I)	10137212	RH	DISCON	CARPET, FRT S/D L/PLR (BLUE)
88–91	Y67 (60I)	10137213	LH	DISCON	CARPET, FRT S/D L/PLR (COGNAC)
88–91	Y67 (60I)	10137214	RH	DISCON	CARPET, FRT S/D L/PLR (COGNAC)
88–92	Y67 (73I)	10137215	LH	DISCON	CARPET, FRT S/D L/PLR (RED)
88–92	Y67 (73I)	10137216	RH	12.10	CARPET, FRT S/D L/PLR (RED)
88–91	Y67 (90I)	10137217	LH	DISCON	CARPET, FRT S/D L/PLR (GRAY)
88–91	Y67 (90I)	10137218	RH	DISCON	CARPET, FRT S/D L/PLR (GRAY)
88–91	Y67 (19I)	10219787	LH	11.50	CARPET, FRT S/D L/PLR (BLACK)
88–91	Y67 (19I)	10219788	RH	12.10	CARPET, FRT S/D L/PLR (BLACK)
90–91	Y67 (22I)	10137251	LH	DISCON	CARPET, FRT S/D L/PLR (BLUE)
90–91	Y67 (22I)	10137252	RH	DISCON	CARPET, FRT S/D L/PLR (BLUE)
92–93	Y67 (64I)	10175681	LH	12.10	CARPET, FRT S/D L/PLR (BEIGE)
92–93	Y67 (64I)	10175682	RH	12.10	CARPET FRT S/D L/PLR (BEIGE)
92–93	Y67 (10I), (19I)	10219787	LH	11.50	CARPET, FRT S/D L/PLR (BLACK)
92–93	Y67 (10I), (19I)	10219788	RH	12.10	CARPET, FRT S/D L/PLR (BLACK)

© 2000 GENERAL MOTORS SERVICE PARTS OPERATIONS

14.731 BOLT – CARPET – PANEL, Lock Pillar Trim(Con't)

93	Y67 (79I)	10219793	LH	DISCON	CARPET, FRT S/D L/PLR (RED)
93	Y67 (79I)	10219794	RH	DISCON	CARPET, FRT S/D L/PLR (HED)
93	Y67 (70I)	10219795	LH	DISCON	CARPET, FRT S/D L/PLR (RED)
93	Y67 (70I)	10219796	RH	DISCON	CARPET, FRT S/D L/PLR (RED)
94–96	Y67 (19I)	10238599	LH	12.10	CARPET, FRT S/D L/PLR (BLACK)
94–96	Y67 (19I)	10238600	RH	12.10	CARPET, FRT S/D L/PLR (BLACK)
94–96	Y67 (64I)	10238601	LH	12.10	CARPET, FRT S/D L/PLR (BEIGE)
94–96	Y67 (64I)	10238602	RH	12.10	CARPET, FRT S/D L/PLR (BEIGE)
94–96	Y67 (14I)	10238603	LH	12.10	CARPET, FRT S/D L/PLR (GRAY)
94–96	Y67 (14I)	10238604	RH	12.10	CARPET, FRT S/D L/PLR (GRAY)
94–95	Y67 (70I)	10238605	LH	12.10	CARPET, FRT S/D L/PLR (RED)
94–95	Y67 (70I)	10238606	RH	12.10	CARPET, FRT S/D L/PLR (RED)
96	Y67 (70I), (EXC GRAND SPORT EDITION (Z16)	10238605	LH	12.10	CARPET, FRT S/D L/PLR (RED)
96	Y67 (70I), (EXC GRAND SPORT EDITION (Z16)	10238606	RH	12.10	CARPET, FRT S/D L/PLR (RED)
86–89	Y67	14100367	LH	47.20	PANEL, BODY L/PLR UPR TR
86–89	Y67	14100368	RH	47.20	PANEL, BODY L/PLR UPR TR
90–93	Y67 (19I)	10103850	RH	47.20	PANEL, BODY L/PLR UPR TR (BLACK)
90–93	Y67 (19I)	10103851	LH	47.20	PANEL, BODY L/PLR UPR TR (BLACK)
90–91	Y67 (22I)	10103852	RH	DISCON	PANEL, BODY L/PLR UPR TR (BLUE)
90–91	Y67 (22I)	10103853	LH	DISCON	PANEL, BODY L/PLR UPR TR (BLUE)
90–91	Y67 (60I)	10103854	RH	47.20	PANEL, BODY L/PLR UPR TR (COGNAC)
90–91	Y67 (60I)	10103855	LH	47.20	PANEL, BODY L/PLR UPR TR (COGNAC)
90–92	Y67 (73I)	10103856	RH	47.20	PANEL, BODY L/PLR UPR TR (RED)
90–92	Y67 (73I)	10103857	LH	47.20	PANEL, BODY L/PLR UPR TR (RED)
90–91	Y67 (90I)	10103858	RH	47.20	PANEL, BODY L/PLR UPR TR (GRAY)
90–91	Y67 (90I)	10103859	LH	47.20	PANEL, BODY L/PLR UPR TR (GRAY)
92–93	Y67 (10I)	10167117	LH	DISCON	PANEL, BODY L/PLR UPR TR (WHITE)
92–93	Y67 (10I)	10167118	RH	47.20	PANEL, BODY L/PLR UPR TR (WHITE)
92–93	Y67 (64I)	10175618	RH	47.20	PANEL, BODY L/PLR UPR TR (BEIGE)
92–93	Y67 (64I)	10175619	LH	47.20	PANEL, BODY L/PLR UPR TR (BEIGE)
92–93	Y67 (14I)	10175620	RH	DISCON	PANEL, BODY L/PLR UPR TR (GRAY)
92–93	Y67 (14I)	10175621	LH	DISCON	PANEL, BODY L/PLR UPR TR (GRAY)
93	Y67 (79I)	10199556	RH	47.20	PANEL, BODY L/PLR UPR TR (RED)
93	Y67 (79I)	10199557	LH	DISCON	PANEL, BODY L/PLR UPR TR (RED)
93	Y67 (70I)	10199722	RH	DISCON	PANEL, BODY L/PLR UPR TR (RED)
93	Y67 (70I)	10199723	LH	DISCON	PANEL, BODY L/PLR UPR TR (RED)
94–96	Y67 (19I)	10212821	LH	4.30	PANEL, BODY L/PLR UPR TR (BLACK)
94–96	Y67 (19I)	10212822	RH	4.30	PANEL, BODY L/PLR UPR TR (BLACK)
94–96	Y67 (70I)	10212825	LH	4.30	PANEL, BODY L/PLR UPR TR (RED)
94–96	Y67 (70I)	10212826	RH	4.30	PANEL, BODY L/PLR UPR TR (RED)
94–96	Y67 (64I)	10212827	LH	4.30	PANEL, BODY L/PLR UPR TR (BEIGE)
94–96	Y67 (64I)	10212828	RH	4.30	PANEL, BODY L/PLR UPR TR (BEIGE)
94–96	Y67 (14I)	10212829	LH	4.30	PANEL, BODY L/PLR UPR TR (GRAY)
94–96	Y67 (14I)	10212830	RH	4.30	PANEL, BODY L/PLR UPR TR (GRAY)

14.865 BOLT – BRACKET – CLIP – COIL – COIL KIT – CONNECTOR – HARNESS – INSULATOR – MODULE – NUT – RESISTOR – RETAINER – SENSOR – SWITCH KIT – WASHER, Inflatable Restraint System

91	Y	11507066	AR	1.00	BOLT, F/END INFL RST DISCRM SEN (8 X 1.25 X 16) (08.900) (TORQ S25.0+/–3.0 NM)
92	Y	11507066	2	1.00	BOLT, F/END INFL RST DISCRM SEN (8 X 1.25 X 16) (08.900)

© 2000 GENERAL MOTORS SERVICE PARTS OPERATIONS

14.865 BOLT – BRACKET – CLIP – COIL – COIL KIT – CONNECTOR – HARNESS – INSULATOR – MODULE – NUT – RESISTOR – RETAINER – SENSOR – SWITCH KIT – WASHER, Inflatable Restraint System(Con't)

91–94	Y	15714276	2	.30	BOLT, F/END INFL RST DISCRM SEN BRKT (4.2X1.41X16MM HEX WSR HD 12.50 DIA TAPPING) (08.977)
94–96	Y	11508948	2	.46	BOLT, I/P INFL RST MDL TR CVR HGE (08.900)
91	Y	11507066	AR	1.00	BOLT, INFL RST ARMING SEN (8 X 1.25 X 16) (08.900) (TORQ S25.0+/–3.0 NM)
90–95	Y	11514623	2	*.96	BOLT, INFL RST CONT MDL BRKT LWR (M6X1X20) (HEX W/CON WA) (08.900)
90–95	Y	11514623	2	*.96	BOLT, INFL RST CONT MDL BRKT UPR (M6X1X20) (HEX W/CON WA) (08.900)
90–93	Y	12337892	4	*1.13	BOLT, INFL RST DIAGN ENGY RESV MDL (M5X.8X16 THD) (SPECIAL) (03.671) (AC–DELCO #12337892)
90–91	Y	12506006	2	DISCON	BOLT, STRG WHL INFL RST MDL
96	Y	10192577	4	1.30	BOLT, STRG WHL INFL RST MDL (M6X1.0X13.0) (METRIC TORX HD) (08.913)
91–93	Y	14062552	1	1.12	BRACKET, F/END INFL RST DISCRM SEN (02.559)
94–96	Y F/SEAT INFL RST SYS (AK5)	10161868	1	10.00	BRACKET, F/END INFL RST DISCRM SEN
94–96	Y F/SEAT INFL RST SYS (AK5)	14062552	1	1.12	BRACKET, F/END INFL RST DISCRM SEN (02.559)
90	Y	10085936	1	DISCON	BRACKET, INFL RST CONT MDL (2 WELDED NUTS & 6 STUDS)
90–93	Y	10086086	LH	1.50	BRACKET, INFL RST CONT MDL (4 HOLES, L–SHAPED, POSN #1)
90–93	Y	10086177	RH	1.50	BRACKET, INFL RST CONT MDL (4 HOLES, L–SHAPED, POSN #1)
91–93	Y	10193723	1	DISCON	BRACKET, INFL RST CONT MDL (2 WELDED NUTS, 4 WELDED STUDS)
93	Y	10211797	1	DISCON	BRACKET, INFL RST CONT MDL (10.235)
94–96	Y F/SEAT INFL RST SYS (AK5)	10086086	LH	1.50	BRACKET, INFL RST CONT MDL
94–96	Y F/SEAT INFL RST SYS (AK5)	10086177	RH	1.50	BRACKET, INFL RST CONT MDL
91–93	Y 4–SPD A/TRANS (MD8), 6–SPD M/TRANS (ML9)	26013854	1	177.00	COIL KIT, STRG WHL INFL RST MDL
94–96	Y 4–SPD A/TRANS (M30)	26041005	1	144.00	COIL KIT, STRG WHL INFL RST MDL
89	Y 6–SPD M/TRANS (ML9), ACTIVE SUSP (Z5Z)	26013920	1	214.00	COIL, STRG WHL INFL RST MDL
90	Y	26013920	1	214.00	COIL, STRG WHL INFL RST MDL
91–92	Y	12106550	1	DISCON	HARNESS, INFL RST WRG (ELEMENT)
96	Y	12163006	1	102.00	HARNESS, INFL RST WRG
94–96	Y RECL FRT BKT ST (AQ9), IL3	10250232	1	25.22	HARNESS, INFLR AIR WRG (PASS SEAT)
94	Y 4–SPD A/TRANS (M30), A/C MAN CONT (C60), A/C AUTO ELEC CONT (C68)	12143757	1	141.00	HARNESS, INFLR AIR WRG
95	Y 5.7P (LT1), 4–SPD A/TRANS (M30), 6–SPD M/TRANS (ML9), A/C MAN CONT (C60), A/C AUTO ELEC CONT (C68)	12143757	1	141.00	HARNESS, INFLR AIR WRG
95–96	Y	14064578	1	1.45	INSULATOR, INFL RST CONT MDL (09.665)

© 2000 GENERAL MOTORS SERVICE PARTS OPERATIONS

14.865 BOLT – BRACKET – CLIP – COIL – COIL KIT – CONNECTOR – HARNESS – INSULATOR – MODULE – NUT – RESISTOR – RETAINER – SENSOR – SWITCH KIT – WASHER, Inflatable Restraint System(Con't)

91–96	Y	03999572	3	4.98	INSULATOR, INFL RST DIAGN ENGY RESV MDL (09.260)
94–96	Y F/SEAT INFL RST SYS (AK5)	10252293	1	625.00	MODULE, I/P INFL RST
91	Y	01228874	1	418.35	MODULE, INFL RST DIAGN ENGY RESV (REMAN) (DERM) (AC–DELCO #1228874)
92	Y (1ST DES)	01228874	1	418.35	MODULE, INFL RST DIAGN ENGY RESV (REMAN) (DERM) (USE ON PROD UNITS W/16081221 ON LABEL) (AC–DELCO #1228874)
92	Y (2ND DES)	16177277	1	293.13	MODULE, INFL RST DIAGN ENGY RESV (REMAN) (USE ON PROD UNITS W/16176561 ON LABEL) (AC–DELCO #16177277)
93	Y	16177277	1	293.13	MODULE, INFL RST DIAGN ENGY RESV (REMAN) (AC–DELCO #16177277)
94–96	Y F/SEAT INFL RST SYS (AK5)	16176558	1	322.00	MODULE, INFL RST DIAGN ENGY RESV (REMAN)
90	Y	10094618	1	625.00	MODULE, INFL RST RESV ENGY
90	Y	10158008	1	625.00	MODULE, STRG WHL INFL RST (IF REPLC 1990, COIL 26013854 MUST REPLC EXISTING COIL & MUST ALSO REPLC WHEEL USING 10201320) (PROBE CONN IN OWN BOX)
91–93	Y	10158008	1	625.00	MODULE, STRG WHL INFL RST (PROBE CONN IN OWN BOX)
94–96	Y F/SEAT INFL RST SYS (AK5)	16752392	1	625.00	MODULE, STRG WHL INFL RST
90	Y	10094613	2	72.25	SENSOR, F/END INFL RST DISCRM
91–93	Y	10177901	1	72.25	SENSOR, F/END INFL RST DISCRM
94–96	Y F/SEAT INFL RST SYS (AK5)	10177901	1	72.25	SENSOR, F/END INFL RST DISCRM
91–93	Y	10177902	1	72.25	SENSOR, INFL RST ARMING
94–96	Y F/SEAT INFL RST SYS (AK5)	10143543	1	72.25	SENSOR, INFL RST ARMING
91–96	Y	26011609	1	7.15	WASHER, STRG WHL INFL RST MDL COIL
	*EXPORT**********EXPORT**********EXPORT**********EXPORT**********EXPORT*				
94–96	Y 6–SPD M/TRANS (ML9), EUROPEAN PROVISIONS (VD1) (EXPORT), VE1 (EXPORT)	26041005	1	144.00	COIL KIT, STRG WHL INFL RST MDL

© 2000 GENERAL MOTORS SERVICE PARTS OPERATIONS

MICROFICHE INDEX

GROUPS 8.000 THRU 9.000

FICHE 8 OF 11

GROUP	DESCRIPTION	STARTING GRID LOCATION PARTS	ILLUSTRATIONS
–	GENERAL INFORMATION	1–A2	1–G2
–	ALPHABETICAL INDEX	1–B13	N.A.
8.000	FRONT END SHEET METAL – HEATER	8–A2	8–F2
9.000	BODY MOUNTING – AIR CONDITIONING – INSTRUMENT CLUSTER	8–C2	8–I2
–	OUT OF FICHE CALLS	N.A.	8–M27

8–A1

CHEVROLET
CHASSIS GROUP 8.000

FRONT END SHEET METAL – HEATER

ALPHABETICAL INDEX

B

BAG, Wheel, Jack and Miscellaneous Wrench 8.821 8–A22
BEZEL, Hood Latch 8.075 8–A12
BOLT, Front Fender Inner Wheel House 8.153 8–A16
BOLT, Heater 8.845 8–A23
BOLT, Hood Hinge 8.016 8–A9
BOLT, Hood Latch 8.075 8–A12
BOLT, Hood Latch 8.080 8–A13
BOLT, Hood Panel 8.015 8–A8
BRACKET KIT, Hood Panel 8.015 8–A8
BRACKET, Front Fender Inner Wheel House 8.153 8–A16
BRACKET, Heater 8.846 8–A27
BRACKET, Hood Latch 8.080 8–A13
BRACKET, Hood Latch 8.085 8–A14
BRACKET, Hood Panel 8.015 8–A8
BUMPER, Hood Latch 8.075 8–A12
BUMPER, Hood Panel Closing 8.024 8–A10
BUSHING, Hood Latch 8.080 8–A13

C

CABLE, Hood Latch 8.075 8–A12
CAP, Hood Latch 8.075 8–A12
CASE, Heater Core 8.854 8–A28
CLAMP, Heater Core 8.854 8–A28
CLAMP, Heater 8.846 8–A27
CLIP, Underhood 8.890 8–B3
CLIP, Wheel, Jack and Miscellaneous Wrench 8.821 8–A22
CONNECTOR, Heater Blower Motor ... 8.855 8–B2
CONNECTOR, Heater Control 8.852 8–A28
CONNECTOR, Heater 8.845 8–A23
CONNECTOR, Hood Latch Release Cable 8.077 8–A12
CONNECTOR, Underhood 8.890 8–B3
CONTAINER, Auto 8.820 8–A22
CORE, Heater Core 8.854 8–A28
COVER, Hood Latch 8.080 8–A13

D

DECAL, Front Fender and Body Ornamentation 8.132 8–A14

E

EMBLEM, Hood Panel Ornamentation . 8.055 8–A10

F

FENDER, Front Fender 8.130 8–A14
FITTING, Heater 8.846 8–A27

G

GASKET, Heater 8.845 8–A23

H

HANDLE, Hood Latch 8.075 8–A12
HANDLE, Wheel, Jack and Miscellaneous Wrench 8.821 8–A22
HARNESS, Heater Control 8.852 8–A28
HINGE, Hood Panel 8.015 8–A8
HOOD KIT, Panel 8.000 8–A8
HOOD, Panel 8.000 8–A8
HOSE, Heater 8.846 8–A27

I

INSULATOR, Hood Panel 8.021 8–A9

J

JACK, Auto 8.820 8–A22

K

KNOB, Heater Control 8.852 8–A28

L

LABEL, Emission, Cautionary and Informative 8.808 8–A18
LAMP, Underhood 8.890 8–B3
LATCH KIT, Hood Latch 8.080 8–A13
LATCH, Auto 8.820 8–A22
LENS, Underhood 8.890 8–B3

M

MOLDING KIT, Front Fender and Body Ornamentation 8.132 8–A14
MOLDING, Front Fender and Body Ornamentation 8.132 8–A14
MOTOR, Heater Blower Motor 8.855 8–B2

N

NIPPLE, Heater Coolant Flow 8.866 8–B2
NUT, Hood Latch 8.080 8–A13
NUT, Hood Panel Closing 8.024 8–A10
NUT, Underhood 8.890 8–B3

P

PANEL, Front Fender Inner Wheel House 8.153 8–A16
PIN, Hood Panel Closing 8.024 8–A10
PIPE, Heater 8.846 8–A27
PLATE, Compass Mounting 8.873 8–B3
PLATE, Hood Latch 8.075 8–A12
PLATE, Hood Latch 8.080 8–A13
PLATE, Wheel, Jack and Miscellaneous Wrench 8.821 8–A22
PLUG, Hood Panel 8.010 8–A8

R

REINFORCEMENT, Front Fender 8.141 8–A15
REINFORCEMENT, Rocker Panel Molding 8.309 8–A18
RESISTOR, Heater Blower Motor 8.855 8–B2
RETAINER, Auto 8.820 8–A22
RETAINER, Heater Coolant Flow 8.866 8–B2
RETAINER, Heater 8.846 8–A27
RETAINER, Hood Latch 8.075 8–A12
RETAINER, Hood Panel Closing 8.024 8–A10
RETAINER, Hood Panel 8.015 8–A8
RETAINER, Hood Upper Latch 8.083 8–A14
RIVET, Front Fender 8.143 8–A16
ROD, Hood Panel 8.015 8–A8

S

SEAL, Front Fender 8.154 8–A17
SEAL, Heater Core 8.854 8–A28
SEAL, Hood Panel 8.010 8–A8
SHIM, Front Fender Inner Wheel House 8.153 8–A16
SHIM, Front Fender 8.143 8–A16
SHIM, Hood Hinge 8.016 8–A9
SLEEVE, Heater 8.846 8–A27
SPRING, Hood Upper Latch 8.083 8–A14
STRAP, Heater Core 8.854 8–A28
STRIPE, Front Fender and Body Ornamentation 8.132 8–A14
STRIPE, Hood Panel Ornamentation ... 8.055 8–A10
STRUT, Hood Panel 8.015 8–A8
STUD, Heater Blower Motor 8.857 8–B2
STUD, Heater Core 8.854 8–A28
STUD, Hood Panel Closing 8.024 8–A10
STUD, Hood Panel 8.015 8–A8
SUPPORT, Fender Wheelhouse 8.155 8–A18
SUPPORT, Front Fender Inner Wheel House 8.153 8–A16
SUPPORT, Hood Latch 8.080 8–A13
SWITCH, Heater Control 8.852 8–A28
SWITCH, Underhood 8.890 8–B3

T

TEE, Heater 8.846 8–A27
TERMINAL, Heater Blower Motor 8.855 8–B2
TUBE, Heater Motor Cooling 8.859 8–B2

V

VALVE, Heater Coolant Flow 8.866 8–B2
VALVE, Temperature Control 8.858 8–B2

W

WASHER, Front Fender Inner Wheel House 8.153 8–A16
WASHER, Front Fender 8.141 8–A15
WASHER, Hood External Hold Down .. 8.036 8–A10
WASHER, Hood Hinge 8.016 8–A9

WASHER, Hood Panel Closing 8.024 8–A10
WRENCH, Wheel, Jack and
Miscellaneous Wrench 8.821 8–A22

CHART INDEX

GROUP 8 GRID

ILLUS INDEX (GRP 8) 8–A7
HEATER MODULE 8–A24

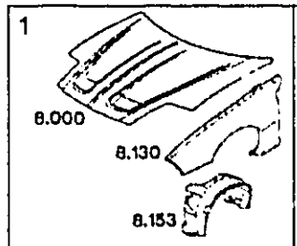

SHEET METAL/FRONT

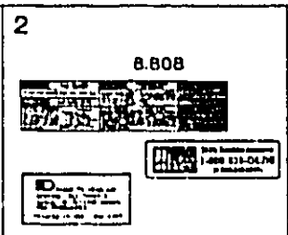

LABELS

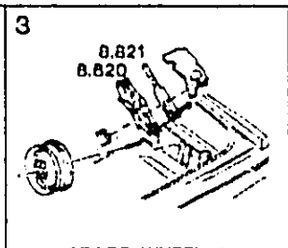

SPARE WHEEL & JACK STOWAGE

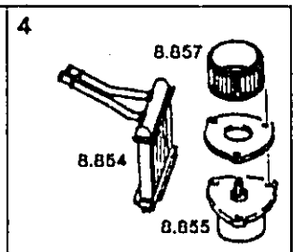

HEATER & BLOWER

GROUP 8.000

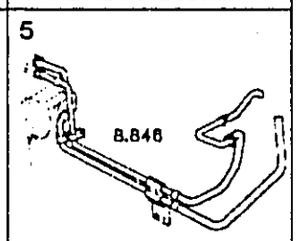

HOSES & PIPES/HEATER

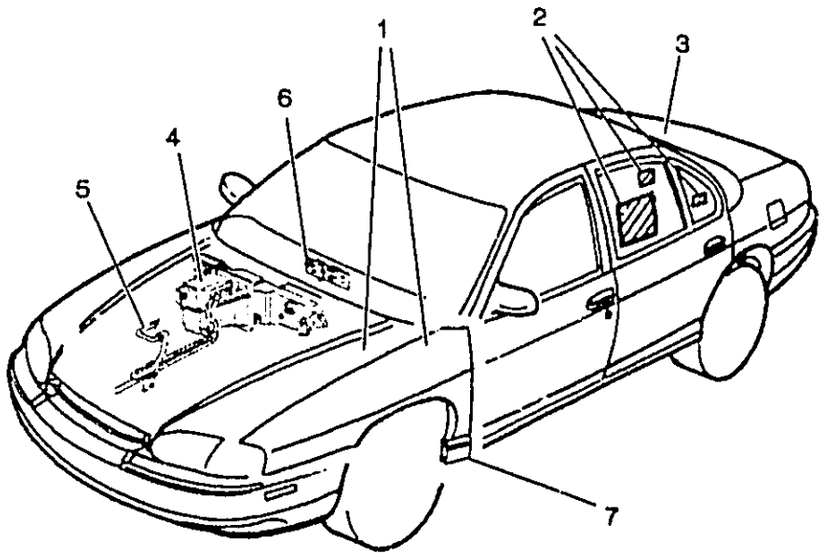

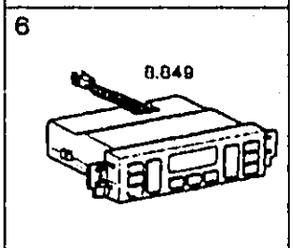

HEATER CONTROL

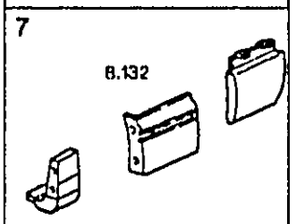

MOLDINGS/FRONT END

© 2000 GENERAL MOTORS SERVICE PARTS OPERATIONS - CHEVROLET - 14Y

8.000 HOOD – HOOD KIT, Panel

85–87	Y	12512903	1	1578.00	HOOD KIT, (W/STRUT BRKT) (ORDER WITH HOOD STRUT 10175784 & BRACKET KIT 12525137. MET HDLP HSG SUPT NO LONGER REQD)	8–F4,53
88–91	Y	12512903	1	1578.00	HOOD KIT, (W/STRUT BRKT) (UPR ASST ROD BRKT MUST BE TURNED 180 DEGREES–KIT–) (DEALER MUST READ INSTRUCTION SHEET BEFORE INSTALLATION) (MET HDLP HSG SUPT NO LONGER REQD)	8–F4,53
92–96	Y	12512903	1	1578.00	HOOD KIT, (W/STRUT BRKT) (DEALER MUST READ INSTRUCTION SHEET BEFORE INSTALLATION) (MET HDLP HSG SUPT NO LONGER REQD)	8–F4,53
84	Y	14030203	1	1514.10	HOOD, (MET HDLP HSG SUPT NO LONGER REQD)	8–F4,53

8.010 PLUG – SEAL, Hood Panel

84–87	Y	14049810	AR	3.85	PLUG, RUBBER (1 IN. HOLE SIZE) (HOOD INR PNL HOLE) (16.547)	8–F4,37
92–95	Y 5.7P (LT1), 5.7J (LT5), (EXC MODIFICATION–NOISE CONTROL (B4H) (EXPORT)	10212812	2	11.32	SEAL, HOOD BFL	2–D13,50
96	Y 5.7P (LT1), 5.7–5 (LT4), (EXC MODIFICATION–NOISE CONTROL (B4H) (EXPORT)	10212812	2	11.32	SEAL, HOOD BFL	2–D13,50
93–96	Y	10272963	1	11.88	SEAL, HOOD RR (POSN #1) (1LEFT SIDE OF HOOD REAR)	8–G2,57
93–96	Y	10272964	1	12.29	SEAL, HOOD RR (POSN #2) (RIGHT SIDE OF HOOD REAR)	8–G2,57
93–96	Y	10272962	1	4.85	SEAL, HOOD RR CTR (CENTER OF HOOD REAR)	8–G2,33
89–93	Y	10123073	LH	18.51	SEAL, HOOD RR OTR	8–F10,10
89–93	Y	10123074	RH	18.51	SEAL, HOOD RR OTR	8–F10,10
84–88	Y	14065081	LH	DISCON	SEAL, RR OTR	
84–88	Y	14065082	RH	21.88	SEAL, RR OTR	8–F4,11

8.015 BOLT – BRACKET – BRACKET KIT – HINGE – RETAINER – ROD – STRUT – STUD, Hood Panel

94–95	Y	11514623	2	*.96	BOLT, HOOD STRUT BRKT (M6X1[illegible]20) (HEX W/CON WA) (08.90[illegible]	
85–96	Y	12525137	LH	98.35	BRACKE[illegible] KIT, HOOD STRUT	
84–88	Y	14060285	LH	4.91	BRACKET, HOOD HGE	8–F4,34
84–88	Y	14060286	RH	4.91	BRACKET, HOOD HGE	8–F4,34
89–91	Y SOFT RIDE SUSP (FE1), HVY DUTY SUSP (FE7)	14060285	LH	4.91	BRACKET, HOOD HGE	8–F4,34
89–91	Y SOFT RIDE SUSP (FE1), HVY DUTY SUSP (FE7)	14060286	RH	4.91	BRACKET, HOOD HGE	8–F4,34
84–86	Y07	14084499	1	16.03	BRACKET, HOOD HOLD OPEN SUPT	8–F4,50
88	Y	10278270	LH	9.55	BRACKET, HOOD OPEN ASST ROD (UPR)	8–F7,48
88	Y	10278271	LH	8.30	BRACKET, HOOD OPEN ASST ROD (LWR)	8–F7,45

© 2000 GENERAL MOTORS SERVICE PARTS OPERATIONS–CHEVROLET–14Y

8.015 BOLT – BRACKET – BRACKET KIT – HINGE – RETAINER – ROD – STRUT – STUD, Hood Panel (Con't)

89–91	Y SOFT RIDE SUSP (FE1), HVY DUTY SUSP (FE7)	10278270	LH	9.55	**BRACKET**, HOOD OPEN ASST ROD (UPR)	8–F7,48
89–90	Y SOFT RIDE SUSP (FE1), H .D .SUSP (FE7)	10278271	LH	8.30	**BRACKET**, HOOD OPEN ASST ROD (LWR)	8–F7,45
91	Y (EXC SOFT RIDE SUSP (FE1), HVY DUTY SUSP (FE7)	10278271	LH	8.30	**BRACKET**, HOOD OPEN ASST ROD (LWR)	8–F7,45
85–87	Y	12523296	1	95.50	**BRACKET**, HOOD STRUT (BODY SI) (USED T/W GAS STRUT PROP. ROD)	
91–92	Y SOFT RIDE SUSP (FE1), HVY DUTY SUSP (FE7)	10278270	LH	9.55	**BRACKET**, HOOD STRUT	8–F7,48
91–96	Y	10278271	LH	8.30	**BRACKET**, HOOD STRUT (POSN #2)	8–F7,45
93	Y	10278270	LH	9.55	**BRACKET**, HOOD STRUT	8–F7,48
94–96	Y	10278270	LH	9.55	**BRACKET**, HOOD STRUT (POSN #1)	8–F7,48
84–96	Y	12523083	LH	52.77	**HINGE**, HOOD (ON EARLY 94 & PRIOR, MAY NEED TO REMOVE 6MM OF SHIMS FROM UPR & LWR HOOD HINGE SHIM PACKS, HORIZ HOOD HINGE MTG BOLT NOT REQ & MAY BE DISCARDED)	8–F4,42
84–96	Y	12523084	RH	52.77	**HINGE**, HOOD (ON EARLY 94 & PRIOR, MAY NEED TO REMOVE 6MM OF SHIMS FROM UPR & LWR HOOD HINGE SHIM PACKS, HORIZ HOOD HINGE MTG BOLT NOT REQ & MAY BE DISCARDED)	8–F4,42
84–90	Y	14064585	4	.65	**RETAINER**, HOOD OPEN ASST ROD	8–F4,44
84	Y	14069647	1	146.97	**ROD**, HOOD HOLD OPEN (SCISSOR TYPE FOLDING) ...	8–F4,50
84–88	Y	14043065	2	61.34	**ROD**, HOOD OPEN ASST (QTY 2 = 1 RT, 1 LT)	8–F4,43
85–87	Y	10175784	LH	60.23	**STRUT**, HOOD (ON 85–87, ALSO ORDER BRKT KIT 12525137) ..	8–F4,68
88–96	Y	10175784	LH	60.23	**STRUT**, HOOD	8–F4,68
85–95	Y	14104833	1	4.28	**STUD**, HOOD OPEN ASST ROD .	8–F18,49

8.016 BOLT – SHIM – WASHER, Hood Hinge

95	Y	11508269	4	*1.00	**BOLT**, HOOD HGE (M8 X 1.25 X 30, HEX) (08.900) (ADD THREAD LK ADHES 12345493 IF REQUIRED)	
84–86	Y	10268933	AR	*1.07	**SHIM**, HOOD HGE (.030MM THK) (06.178)	
84–96	Y	14060273	AR	*2.80	**SHIM**, HOOD HGE (U–SHAPED, TO FRT CR/MBR)	8–F4,40
84–96	Y	14064584	AR	1.50	**SHIM**, HOOD HGE (TO SI RAIL) (1MM THK) (RECT)	8–F4,31
84–93	Y	14078623	2	.73	**WASHER**, HOOD HGE (13MM I.D.) .	8–F4,41

8.021 INSULATOR, Hood Panel

*EXPORT****************EXPORT****************EXPORT****************EXPORT****************EXPORT*

91	Y 5.7–8 (L98), MODIFICATION–NOISE CONTROL (B4H) (EXPORT)	10247787	1	70.68	**INSULATOR**, HOOD (DEALER MUST DRILL HOLES AS REQ'D) .	8–G2,62

© 2000 GENERAL MOTORS SERVICE PARTS OPERATIONS–CHEVROLET–14Y

8.021 INSULATOR, Hood Panel (Con't)

92–93	Y 5.7P (LT1), MODIFICATION–NOISE CONTROL (B4H) (EXPORT)	10247787	1	70.68	INSULATOR, HOOD (DEALER MUST DRILL HOLES AS REQ'D) .	8–G2,62
94–96	Y 5.7P (LT1), MODIFICATION–NOISE CONTROL (B4H) (EXPORT)	10247787	1	70.68	INSULATOR, HOOD (DEALER MUST DRILL HOLES AS REQ'D) .	8–G2,62

8.024 BUMPER – NUT – PIN – RETAINER – STUD – WASHER, Hood Panel Closing

85–96	Y	14069250	2	*2.85	BUMPER, HOOD ADJ FRT	8–F7,52
84–88	Y	14086181	2	10.55	BUMPER, HOOD ADJ RR	8–F4,7
89–96	Y	10123075	2	4.88	BUMPER, HOOD ADJ RR	8–F10,7
90	Y	10123075	2	4.88	BUMPER, HOOD ADJ RR (SOFT RIDE SUSP–FE1, H.D.SUSP–FE7)	8–F10,7
84–88	Y	14064576	2	DISCON	NUT, HOOD ADJ RR BPR	
84–96	Y	14081865	2	2.85	PIN, HOOD GDE	8–F4,48
87–90	Y	20032850	2	*.64	RETAINER, HOOD FRT BPR (14.683)	8–F7,71
91–92	Y	20032850	AR	*.64	RETAINER, HOOD STOP BPR (PUSH IN) (14.683)	8–F7,71
85–96	Y	25526456	2	2.85	STUD, HOOD ADJ FRT BPR (25MM O.D.) (INCLS NUT)	8–F7,51
88–96	Y	14047726	AR	*.63	WASHER, HOOD ADJ RR BPR (M13X35X3) (07.347)	8–F10,6

8.036 WASHER, Hood External Hold Down

89–90	Y	14016675	3	1.10	WASHER, HOOD HOLD OPEN ROD BRKT (01.240)	

8.055 EMBLEM – STRIPE, Hood Panel Ornamentation

84–93	Y	10175789	1	22.60	EMBLEM, HOOD (UNDERSIDE) (CHEVROLET CORVETTE, BOWLING GREEN, KY)	8–F4,74
34–87	Y	14060259	1	19.70	EMBLEM, HOOD (TOPSIDE) (BOWTIE)	8–F4,49
88	Y 35 ANNIVERSARY (Z01) ...	10123018	1	48.20	EMBLEM, HOOD (TOPSIDE)	8–F7,70
88	Y (EXC DELUXE EXTR TR (B57)	14060259	1	19.70	EMBLEM, HOOD (TOPSIDE) (BOWTIE)	8–F4,49
89–90	Y	14060259	1	19.70	EMBLEM, HOOD (TOPSIDE)	8–F4,49
91	Y SOFT RIDE SUSP (FE1), HVY DUTY SUSP (FE7)	10209060	1	20.10	EMBLEM, HOOD (TOPSIDE) (BLACK) (BOWTIE)	8–F13,66
92	Y	10209060	1	20.10	EMBLEM, HOOD (TOPSIDE) (BLACK) (BOWTIE)	8–F13,66
93	Y 40TH ANNIV (Z25)	10198699	1	25.80	EMBLEM, HOOD (TOPSIDE) (CHROME) (BOWTIE)	8–G2,66
93	Y (EXC 40TH ANNIV (Z25) ...	10209060	1	20.10	EMBLEM, HOOD (TOPSIDE) (BLACK) (BOWTIE)	8–F13,66
94	Y	10209060	1	20.10	EMBLEM, HOOD (TOP SIDE) (BLACK) (BOWTIE)	8–F13,66
95	Y INDY PACE CAR (Z4Z)	10198699	1	25.80	EMBLEM, HOOD (CHROME) (BOWTIE)	8–G2,66
95	Y (EXC INDY PACE CAR (Z4Z)	10209060	1	20.10	EMBLEM, HOOD (TOPSIDE) (BLACK) (BOWTIE)	8–F13,66
96	Y GRAND SPORT EDITION (Z16)	10198699	1	25.80	EMBLEM, HOOD (CHROME) (BOWTIE)	8–G2,66
96	Y (EXC COLLECTORS EDITION (Z15), GRAND SPORT EDITION (Z16)	10209060	1	20.10	EMBLEM, HOOD (BLACK) (BOWTIE)	8–F13,66

© 2000 GENERAL MOTORS SERVICE PARTS OPERATIONS–CHEVROLET–14Y

8.055 EMBLEM – STRIPE, Hood Panel Ornamentation (Con't)

96	Y COLLECTORS EDITION (Z15)	10254346	1	25.80	EMBLEM, HOOD (COLLECTORS EDITION)	8–G8,59
88	Y 35 ANNIVERSARY (Z01)	10123021	1	DISCON	EMBLEM, HOOD SI (FLAGS/BOWTIE/35)	
92–95	Y SPECIAL PERFORMANCE PKG (ZR1), (10U)	10146443	2	25.80	EMBLEM, HOOD SI (WHITE) (BOWTIE, ZR1) (07.832)	8–F18,46
92	Y SPECIAL PERFORMANCE PKG (ZR1), (81U)	10146447	2	25.80	EMBLEM, HOOD SI (RED) (BOWTIE, ZR1) (07.832)	8–F18,46
92	Y SPECIAL PERFORMANCE PKG (ZR1), (80U)	10153679	2	DISCON	EMBLEM, HOOD SI (BLUE) (BOWTIE, ZR1) (07.832)	
92	Y SPECIAL PERFORMANCE PKG (ZR1), (35U)	10167090	2	13.10	EMBLEM, HOOD SI (YELLOW) (BOWTIE, ZR1) (07.832)	8–F18,46
92	Y SPECIAL PERFORMANCE PKG (ZR1), (43U)	10175826	2	25.80	EMBLEM, HOOD SI (AQUA) (BOWTIE, ZR1) (07.832)	8–F18,46
92	Y SPECIAL PERFORMANCE PKG (ZR1), (73U)	10198747	2	10.50	EMBLEM, HOOD SI (BLACK ROSE) (BOWTIE, ZR1) (07.832)	8–F18,46
92	Y SPECIAL PERFORMANCE PKG (ZR1), (41U)	10268455	2	10.50	EMBLEM, HOOD SI (BLACK) (07.832)	8–F18,46
92	Y SPECIAL PERFORMANCE PKG (ZR1), (45U)	10268456	2	10.50	EMBLEM, HOOD SI (MARBLEHEAD GRAY) (07.832)	8–F18,46
93	Y SPECIAL PERFORMANCE PKG (ZR1), (53U), (EXC 40TH ANNIV (Z25)	10153678	2	25.80	EMBLEM, HOOD SI (YELLOW) (BOWTIE, ZR1) (07.832)	8–G2,46
93	Y SPECIAL PERFORMANCE PKG (ZR1), (80U), (EXC 40TH ANNIV (Z25)	10153679	2	DISCON	EMBLEM, HOOD SI (BLUE) (BOWTIE, ZR1) (07.832)	
93	Y 40TH ANNIV (Z25), (EXC SPECIAL PERFORMANCE PKG (ZR1)	10172390	2	33.30	EMBLEM, HOOD SI (40–W/O ZR1)	8–G2,45
93	Y SPECIAL PERFORMANCE PKG (ZR1), (43U), (EXC 40TH ANNIV (Z25)	10175826	2	25.80	EMBLEM, HOOD SI (AQUA) (BOWTIE, ZR1) (07.832)	8–F18,46
93	Y SPECIAL PERFORMANCE PKG (ZR1), 40TH ANNIV (Z25)	10193602	2	38.90	EMBLEM, HOOD SI (40–W/ZR1)	
93	Y SPECIAL PERFORMANCE PKG (ZR1), (70U), (EXC 40TH ANNIV (Z25)	10198688	2	25.80	EMBLEM, HOOD SI (RED) (BOWTIE, ZR1) (07.832)	8–G2,46
93	Y SPECIAL PERFORMANCE PKG (ZR1), (73U), (EXC 40TH ANNIV (Z25)	10198747	2	10.50	EMBLEM, HOOD SI (BLACK ROSE) (BOWTIE, ZR1) (07.832)	8–F18,46
93	Y SPECIAL PERFORMANCE PKG (ZR1), (41U), (EXC 40TH ANNIV (Z25)	10268455	2	10.50	EMBLEM, HOOD SI (BLACK) (07.832)	8–F18,46
93	Y SPECIAL PERFORMANCE PKG (ZR1), (45U), (EXC 40TH ANNIV (Z25)	10268456	2	10.50	EMBLEM, HOOD SI (MARBLEHEAD GRAY) (07.832)	8–F18,46
94–95	Y SPECIAL PERFORMANCE PKG (ZR1), (75U)	10146446	1	DISCON	EMBLEM, HOOD SI (BOWTIE, ZR1) (07.832)	
94–95	Y SPECIAL PERFORMANCE PKG (ZR1), (53U)	10153678	2	25.80	EMBLEM, HOOD SI (YELLOW) (BOWTIE, ZR1) (07.832)	8–G2,46
94–95	Y SPECIAL PERFORMANCE PKG (ZR1), (43U)	10175826	2	25.80	EMBLEM, HOOD SI (AQUA) (BOWTIE, ZR1) (07.832)	8–F18,46
94–95	Y SPECIAL PERFORMANCE PKG (ZR1), (70U)	10198688	2	25.80	EMBLEM, HOOD SI (RED) (BOWTIE, ZR1) (07.832)	8–G2,46
94	Y SPECIAL PERFORMANCE PKG (ZR1), (73U)	10198747	2	10.50	EMBLEM, HOOD SI (BLACK ROSE) (BOWTIE, ZR1) (07.832)	8–F18,46
94–95	Y SPECIAL PERFORMANCE PKG (ZR1), (28U)	10210902	2	25.80	EMBLEM, HOOD SI (CLOISONNE BLUE) (07.832)	8–G8,22
94	Y SPECIAL PERFORMANCE PKG (ZR1), (66U)	10210905	2	DISCON	EMBLEM, HOOD SI (MELON) (07.832)	

© 2000 GENERAL MOTORS SERVICE PARTS OPERATIONS–CHEVROLET–14Y

8.055 EMBLEM – STRIPE, Hood Panel Ornamentation (Con't)

94–95	Y SPECIAL PERFORMANCE PKG (ZR1), (41U)	10268455	2	10.50	**EMBLEM**, HOOD SI (BLACK) (07.832)	8–F18,46
94–95	Y SPECIAL PERFORMANCE PKG (ZR1), (45U)	10268456	2	10.50	**EMBLEM**, HOOD SI (MARBLEHEAD GRAY) (07.832)	8–F18,46
95	Y SPECIAL PERFORMANCE PKG (ZR1), (05U)	10233119	2	25.80	**EMBLEM**, HOOD SI (CYCLAMAN) (07.832)	8–G8,22
96	Y COLLECTORS EDITION (Z15)	10254344	2	19.40	**EMBLEM**, HOOD SI (COLLECTORS EDITION)	8–G8,22
96	Y GRAND SPORT EDITION (Z16)	10254347	2	22.30	**EMBLEM**, HOOD SI (GRAND SPORT EDITION)	8- G8,22
96	Y GRAND SPORT EDITION (Z16)	10280900	RH	32.40	**STRIPE**, HOOD CTR (POSN #1) .	10–D19,1
96	Y GRAND SPORT EDITION (Z16)	10280901	LH	32.40	**STRIPE**, HOOD CTR (POSN #2) .	10–D19,1
95	Y INDY PACE CAR (Z4Z)	10278399	LH	DISCON	**STRIPE**, HOOD FRT	
95	Y INDY PACE CAR (Z4Z)	10278400	RH	32.40	**STRIPE**, HOOD FRT	10–D17,2

8.075 BEZEL – BOLT – BUMPER – CABLE – CAP – HANDLE – PLATE – RETAINER, Hood Latch

84–89	Y (12I)	14047492	1	8.36	**BEZEL**, PRIM LAT REL CBL HDL (GRAPHITE) (PAINT TO MATCH) .	8–F7,1
84–87	Y (15I)	14058618	1	DISCON	**BEZEL**, PRIM LAT REL CBL HDL (MED GRAY)	
84–85	Y (28I)	14058619	1	DISCON	**BEZEL**, PRIM LAT REL CBL HDL (BLUE)	
84–87	Y (65I)	14058620	1	DISCON	**BEZEL**, PRIM LAT REL CBL HDL (BRONZE)	
84–87	Y (62I)	14058621	1	DISCON	**BEZEL**, PRIM LAT REL CBL HDL (SADDLE)	
84–85	Y	14058622	1	DISCON	**BEZEL**, PRIM LAT REL CBL HDL (CARMINE)	
90–93	Y	11504736	1	.34	**BOLT**, HOOD PRIM LAT REL CBL (M4.2X1.4X16) (08.977)	8–F13,73
84–96	Y	10250486	1	33.42	**CABLE**, HOOD PRIM LAT REL (BLACK)	8–F4,54
84–96	Y	14070933	AR	.45	**CAP**, HOOD PRIM LAT REL CBL BOLT (08.153)	8–F18,5
90–96	Y	10286183	2	17.29	**HANDLE**, HOOD PRIM LAT REL CBL (W/CURVED HDL)	8–F4,55
84–89	Y	10286183	1	17.29	**HANDLE**, LAT REL CBL (W/CURVED HDL)	8–F4,55
90–96	Y	10086014	1	6.14	**PLATE**, HOOD PRIM LAT REL CBL BRKT NUT	8–F10,11
84–96	Y	12338122	2	*.22	**RETAINER**, HOOD PRIM LAT REL CBL	8–F7,15
	*EXPORT*********EXPORT*********EXPORT*********EXPORT*********EXPORT*					
94–96	Y HDLP (T72) (EXPORT), RH RULE OF ROAD HDLP (T84) (EXPORT), LH RULE OF ROAD HDLP (T85) (EXPORT)	16502047	2	.41	**BUMPER**, HOOD PRIM LAT REL CBL HDL	

8.077 CONNECTOR, Hood Latch Release Cable

94	Y 5.7J (LT5)	12101858	1	18.13	**CONNECTOR**, SW–HOOD AJAR IND (RED) (2–WAY F) (W/LEADS) (02.535) (AC–DELCO #PT250)	

© 2000 GENERAL MOTORS SERVICE PARTS OPERATIONS–CHEVROLET–14Y

8.080 BOLT – BRACKET – BUSHING – COVER – LATCH KIT – NUT – PLATE – SUPPORT, Hood Latch

84–93	Y	10243052	2	6.53	BOLT, HOOD PRIM LAT (TO HOOD)	8–F4,6
94–96	Y	11503800	6	*.12	BOLT, HOOD PRIM LAT (08.900)	
96	Y	11513703	AR	*.61	BOLT, HOOD PRIM LAT BRKT (M8X1.25X18) (08.900)	8–F7,4
92–95	Y	11508600	6	1.82	BOLT, HOOD PRIM LAT CTH (TO CAR) (HFH M6X1X20 9.8 PZOR) (08.900) (AC–DELCO #11508600)	8–F4,22
94–96	Y	10243052	2	6.53	BOLT, HOOD PRIM LAT CTH (TO HOOD)	8–F4,6
90–93	Y 4–SPD A/TRANS (MD8)	14088310	2	*1.30	BOLT, HOOD PRIM LAT REL CBL BRKT (M8X1.25X24) (03.671)	8–F10,2
94	Y 4–SPD A/TRANS (M30)	14088310	2	*1.30	BOLT, HOOD PRIM LAT REL CBL BRKT (M8X1.25X24) (03.671)	8–F10,2
84–96	Y	10261823	LH	4.53	BRACKET, HOOD GDE PIN BUSH	8–F4,62
84–96	Y	14043084	RH	4.53	BRACKET, HOOD GDE PIN BUSH	8–F4,62
84–89	Y	14047493	1	12.18	BRACKET, HOOD PRIM LAT REL CBL	8–F4,56
84–96	Y	14065085	1	1.72	BRACKET, HOOD PRIM LAT REL CBL (CLIP TYPE)	8–F4,58
90–96	Y	10172493	1	5.75	BRACKET, HOOD PRIM LAT REL CBL (L–SHAPED)	8–F10,3
84–96	Y	14076579	2	1.22	BUSHING, HOOD GDE PIN	8–F4,63
84–88	Y	14076545	LH	DISCON	COVER, HOOD PRIM LAT SUPT	
84–88	Y	14076546	RH	DISCON	COVER, HOOD PRIM LAT SUPT	
84–96	Y	10273994	1	99.67	LATCH KIT, HOOD PRIM	8–F4,9
84–93	Y	14043051	AR	7.63	NUT, HOOD PRIM LAT (M14X2.0)	8–F4,2
94–96	Y	14043051	AR	7.63	NUT, HOOD PRIM LAT CTH BOLT (M14X2.0)	8–F4,2
84–93	Y	10216144	RH	DISCON	PLATE, HOOD PRIM LAT STKR ANC (INCLS 2.6MM WIRE DIA POP–UP SPRING)	
84–93	Y	10242559	LH	DISCON	PLATE, HOOD PRIM LAT STKR ANC	
94–95	Y	10242559	LH	DISCON	PLATE, HOOD PRIM LAT STKR ANC	
84–87	Y	14046733	LH	14.23	SUPPORT, HOOD PRIM LAT	8–F4,10
84–87	Y	14046734	RH	DISCON	SUPPORT, HOOD PRIM LAT	
88	Y	10123071	LH	DISCON	SUPPORT, HOOD PRIM LAT (HOOD ADJR BPR IN HOOD)	
88	Y	14046733	LH	14.23	SUPPORT, HOOD PRIM LAT (HOOD ADJR BPR IN LAT)	8–F4,10
88	Y	14046734	RH	DISCON	SUPPORT, HOOD PRIM LAT (HOOD ADJR BPR IN LAT)	
89	Y	10123071	LH	DISCON	SUPPORT, HOOD PRIM LAT	
89	Y	10225268	RH	DISCON	SUPPORT, HOOD PRIM LAT	
90–91	Y SOFT RIDE SUSP (FE1), HVY DUTY SUSP (FE7)	10225267	LH	14.95	SUPPORT, HOOD PRIM LAT	8–F13,9
90–91	Y SOFT RIDE SUSP (FE1), HVY DUTY SUSP (FE7)	10225268	RH	DISCON	SUPPORT, HOOD PRIM LAT	
92–96	Y	10225267	LH	14.95	SUPPORT, HOOD PRIM LAT	8–F13,9
92–96	Y	10225268	RH	DISCON	SUPPORT, HOOD PRIM LAT	
88	Y	10225268	RH	DISCON	SUPPORT, HOOD PRIM LATCH (HOOD ADJR BPR IN HOOD)	

© 2000 GENERAL MOTORS SERVICE PARTS OPERATIONS–CHEVROLET–14Y

8.083 RETAINER – SPRING, Hood Upper Latch

84–96	Y	10261899	2	3.72	RETAINER, HOOD POP–UP SPR (USED W/4.0MM WIRE DIA SPRING)	8–F13,24
84–94	Y	14043053	2	4.64	RETAINER, HOOD POP–UP SPR (08.080) (USED W/2.6MM WIRE DIA SPRING)	8–F4,5
84–93	Y	14043052	4	2.26	SPRING, HOOD POP–UP (DIA. 2.6MM) (08.080)	8–F4,3
92	Y	10193644	2	DISCON	SPRING, HOOD POP–UP (VIN THROUGH 100919)	
94–96	Y	10258657	2	6.68	SPRING, HOOD POP–UP (DIA. 4.0MM)	8–G8,37

8.085 BRACKET, Hood Latch

84–96	Y	10217321	LH	14.54	BRACKET, HOOD PRIM LAT CTH BOLT	8–F13,20
84–96	Y	10217322	RH	14.54	BRACKET, HOOD PRIM LAT CTH BOLT	8–F13,20

8.130 FENDER, Front Fender

84–87	Y	14030217	LH	DISCON	FENDER, FRT	
84–87	Y	14030218	RH	60.90	FENDER, FRT	8–F4,20
88–90	Y	14104009	LH	47.25	FENDER, FRT	8–F7,36
88–90	Y	14104010	RH	47.25	FENDER, FRT	8–F7,36
91–93	Y	10135975	LH	45.77	FENDER, FRT (INCLUDES MLDG)	8–F13,29
91–93	Y	10135976	RH	45.77	FENDER, FRT (INCLUDES MLDG)	8–F13,29
94	Y (EXC WHL OPG MLDG EXTRA WIDE (B74) (EXPORT)	10135975	LH	45.77	FENDER, FRT	8–F13,29
94	Y (EXC WHL OPG MLDG EXTRA WIDE (B74) (EXPORT)	10135976	RH	45.77	FENDER, FRT	8–F13,29
95–96	Y	10254395	LH	59.49	FENDER, FRT	8–G8,30
95–96	Y	10254396	RH	59.49	FENDER, FRT	8–G8,30
	*EXPORT**********EXPORT**********EXPORT**********EXPORT**********EXPORT*					
94	Y WHL OPG MLDG EXTRA WIDE (B74) (EXPORT)	10222903	LH	42.71	FENDER, FRT	8–G8,30
94	Y WHL OPG MLDG EXTRA WIDE (B74) (EXPORT)	10222904	RH	42.71	FENDER, FRT	8–G8,30

8.132 DECAL – MOLDING – MOLDING KIT – STRIPE, Front Fender and Body Ornamentation

86	Y67	10050941	LH	DISCON	DECAL, FRT FDR NA (INDY 500 MAY 25, 1986–GOLD, BLUE, RED)	
86	Y67	10050942	RH	DISCON	DECAL, FRT FDR NA (INDY 500 MAY 25, 1986–GOLD, BLUE, RED)	
86	Y67	10050943	LH	DISCON	DECAL, FRT FDR NA (INDY 500 MAY 25, 1986–SILVER, BLUE, RED)	
86	Y67	10050944	RH	DISCON	DECAL, FRT FDR NA (INDY 500 MAY 25, 1986–SILVER, BLUE, RED)	
96	Y07 GRAND SPORT EDITION (Z16)	12522082	RH	112.20	MOLDING KIT, F/FDR WHL OPG (PAINT TO MATCH)	10–D14,17
96	Y07 GRAND SPORT EDITION (Z16)	12522083	LH	112.20	MOLDING KIT, F/FDR WHL OPG (PAINT TO MATCH)	10–D14,17

© 2000 GENERAL MOTORS SERVICE PARTS OPERATIONS–CHEVROLET–14Y

8.132 DECAL – MOLDING – MOLDING KIT – STRIPE, Front Fender and Body Ornamentation (Con't)

84	Y	14043095	LH	47.40	**MOLDING**, F/FDR SI (READS:CROSS–FIRE INJECTION)	10–D5,8
84	Y	14043096	RH	DISCON	**MOLDING**, F/FDR SI (READS:CROSS–FIRE INJECTION)	
85–87	Y	14084409	LH	31.70	**MOLDING**, F/FDR SI (READS:TUNED PORT INJECTION, W/GRAY LETTERING)	10–D5,8
85–87	Y	14084410	RH	31.70	**MOLDING**, F/FDR SI (READS:TUNED PORT INJECTION, W/GRAY LETTERING)	10–D5,8
88	Y 35 ANNIVERSARY (Z01)	10123037	LH	DISCON	**MOLDING**, F/FDR SI (READS:TUNED PORT INJECTION, W/WHITE LETTERING)	
88	Y 35 ANNIVERSARY (Z01)	10123038	RH	DISCON	**MOLDING**, F/FDR SI (READS:TUNED PORT INJECTION, W/WHITE LETTERING)	
88	Y (EXC DELUXE EXTR TR (B57)	14084409	LH	31.70	**MOLDING**, F/FDR SI (READS:TUNED PORT INJECTION, W/GRAY LETTERING)	10–D5,8
88	Y (EXC DELUXE EXTR TR (B57)	14084410	RH	31.70	**MOLDING**, F/FDR SI (READS:TUNED PORT INJECTION, W/GRAY LETTERING)	10–D5,8
89–90	Y SOFT RIDE SUSP (FE1), HVY DUTY SUSP (FE7)	14084409	LH	31.70	**MOLDING**, F/FDR SI (READS:TUNED PORT INJECTION, W/GRAY LETTERING)	10–D5,8
89–90	Y SOFT RIDE SUSP (FE1), HVY DUTY SUSP (FE7)	14084410	RH	31.70	**MOLDING**, F/FDR SI (READS:TUNED PORT INJECTION, W/GRAY LETTERING)	10–D5,8
95	Y INDY PACE CAR (Z4Z)	10278401	LH	99.80	**STRIPE**, BODY SI UPR (INCLUDES DOOR & FENDER COMPLETE)	10–D17,3
95	Y INDY PACE CAR (Z4Z)	10278402	RH	DISCON	**STRIPE**, BODY SI UPR (INCLUDES DOOR & FENDER COMPLETE)	
96	Y GRAND SPORT EDITION (Z16)	10279781	1	29.00	**STRIPE**, F/FDR WHL OPG	10–D19,3
	*EXPORT**********EXPORT**********EXPORT**********EXPORT**********EXPORT*					
94–96	Y WHL OPG MLDG (BLACK) (B74)	12522082	RH	112.20	**MOLDING KIT**, F/FDR WHL OPG (PAINT TO MATCH)	10–D14,17
94–96	Y WHL OPG MLDG (BLACK) (B74)	12522083	LH	112.20	**MOLDING KIT**, F/FDR WHL OPG (PAINT TO MATCH)	10–D14,17

8.141 REINFORCEMENT – WASHER, Front Fender

84–96	Y	14043025	LH	41.19	**REINFORCEMENT**, F/FDR RR	8–F4,13
84–96	Y	14043026	RH	41.19	**REINFORCEMENT**, F/FDR RR	8–F4,13
87–90	Y	14016675	4	1.10	**WASHER**, F/FDR RR REINF (01.240)	8–F4,76

© 2000 GENERAL MOTORS SERVICE PARTS OPERATIONS–CHEVROLET–14Y

8.143 RIVET – SHIM, Front Fender

93–94	Y	10125439	16	*.65	RIVET, FRT W/H UPR PNL (23.5LG 9.89 OD) (08.967)	8–G2,26
95–96	Y	10275408	16	.30	RIVET, FRT W/H UPR PNL	8–G8,18
84–93	Y	14081864	AR	1.80	SHIM, F/FDR (21MMX38MM) (07.865)	8–F7,33
86–96	Y	14049081	AR	.61	SHIM, F/FDR RR REINF (08.153)	8–F7,28
84–90	Y	10268933	AR	*1.07	SHIM, FRT FDR (.030MM THK) (06.178)	8–F7,33

8.153 BOLT – BRACKET – PANEL – SHIM – SUPPORT – WASHER, Front Fender Inner Wheel House

95–96	Y	10172329	4	*1.30	BOLT, FRT W/H LWR FRT PNL SUPT (10.474)	
84	Y	14069627	LH	DISCON	BRACKET, FRT W/H PNL	
84	Y	14069628	RH	DISCON	BRACKET, FRT W/H PNL	
85–87	Y	14081835	LH	DISCON	BRACKET, FRT W/H PNL LWR FRT	
85–87	Y	14081836	RH	DISCON	BRACKET, FRT W/H PNL LWR FRT	
88–96	Y	14104902	1	4.02	BRACKET, FRT W/H PNL SUPT	8–F7,43
84–87	Y	14084443	LH	29.40	PANEL, FRT W/H LWR CTR	8–F4,23
84–87	Y	14084444	RH	DISCON	PANEL, FRT W/H LWR CTR	
88	Y	10276503	LH	32.80	PANEL, FRT W/H LWR CTR (HOLES MAY HAVE TO BE DRILLED WHEN USED ON MODELS PRIOR TO 1992)	8–F7,39
88	Y	10276504	RH	32.80	PANEL, FRT W/H LWR CTR	8–F7,39
89–91	Y SOFT RIDE SUSP (FE1)	10276503	LH	32.80	PANEL, FRT W/H LWR CTR (HOLES MAY HAVE TO BE DRILLED WHEN USED ON MODELS PRIOR TO 1992)	8–F7,39
89–90	Y SOFT RIDE SUSP (FE1), HVY DUTY SUSP (FE7), (EXC ELEK RIDE & HANDLING (FX3)	10276504	RH	32.80	PANEL, FRT W/H LWR CTR	8–F7,39
89–95	Y ELEK RIDE & HANDLING (FX3)	10276504	RH	32.80	PANEL, FRT W/H LWR CTR	8–F7,39
91–95	Y SOFT RIDE SUSP (FE1), (EXC ELEK RIDE & HANDLING (FX3)	10276504	RH	32.80	PANEL, FRT W/H LWR CTR	8–F7,39
92–95	Y SOFT RIDE SUSP (FE1), ELEK RIDE & HANDLING (FX3)	10276503	LH	32.80	PANEL, FRT W/H LWR CTR	8–F7,39
96	Y	10276503	LH	32.80	PANEL, FRT W/H LWR CTR	8–F7,39
96	Y	10276504	RH	32.80	PANEL, FRT W/H LWR CTR	8–F7,39
84–87	Y	14081833	LH	49.35	PANEL, FRT W/H LWR FRT	8–F4,24
84–87	Y	14081834	RH	49.35	PANEL, FRT W/H LWR FRT	8–F4,24
88–90	Y	14104001	LH	55.65	PANEL, FRT W/H LWR FRT	8–F7,42
88–89	Y	14104002	RH	58.80	PANEL, FRT W/H LWR FRT	8–F7,42
90	Y SOFT RIDE SUSP (FE1), HVY DUTY SUSP (FE7)	14104002	RH	58.80	PANEL, FRT W/H LWR FRT	8–F7,42
91	Y SOFT RIDE SUSP (FE1), HVY DUTY SUSP (FE7)	10275625	LH	30.26	PANEL, FRT W/H LWR FRT (MAY NEED TO DRILL HOLES TO MATCH)	8–F13,39
91	Y SOFT RIDE SUSP (FE1), HVY DUTY SUSP (FE7)	10275626	RH	30.26	PANEL, FRT W/H LWR FRT (MAY NEED TO DRILL HOLES TO MATCH)	8–F13,39
92–96	Y	10275625	LH	30.26	PANEL, FRT W/H LWR FRT (MAY NEED TO DRILL HOLES TO MATCH)	8–F13,39

© 2000 GENERAL MOTORS SERVICE PARTS OPERATIONS–CHEVROLET–14Y

8.153 BOLT – BRACKET – PANEL – SHIM – SUPPORT – WASHER, Front Fender Inner Wheel House (Con't)

92–96	Y	10275626	RH	30.26	PANEL, FRT W/H LWR FRT (MAY NEED TO DRILL HOLES TO MATCH)	8–F13,39
84–87	Y	14049091	LH	42.53	PANEL, FRT W/H LWR RR	8–F4,21
84–87	Y	14049092	RH	45.15	PANEL, FRT W/H LWR RR	8–F4,21
88–89	Y	10276498	RH	43.99	PANEL, FRT W/H LWR RR	8–F7,37
90–95	Y (EXC SPECIAL PERFORMANCE PKG (ZR1)	10276497	LH	45.26	PANEL, FRT W/H LWR RR (1992 & PRIOR VEHICLES MUST DRILL HOLES TO MOUNT RELAYS AND OTHER ELECTRICAL HARDWARE)	8–F7,37
90–95	Y (EXC SPECIAL PERFORMANCE PKG (ZR1)	10276498	RH	43.99	PANEL, FRT W/H LWR RR (1992 & PRIOR VEHICLES MUST DRILL HOLES TO MOUNT RELAYS & OTHER ELECTRICAL HARDWARE)	8–F7,37
90–95	Y SPECIAL PERFORMANCE PKG (ZR1)	10276499	LH	43.99	PANEL, FRT W/H LWR RR (1992 & PRIOR VEHICLES MUST DRILL HOLES TO MOUNT RELAYS & OTHER ELECTRICAL HARDWARE.)	8–F10,35
90–94	Y SPECIAL PERFORMANCE PKG (ZR1)	10276500	RH	DISCON	PANEL, FRT W/H LWR RR (1992 & PRIOR VEHICLES MUST DRILL HOLES TO MOUNT RELAYS & OTHER ELECTRICAL HARDWARE)	
95	Y SPECIAL PERFORMANCE PKG (ZR1)	10276500	RH	DISCON	PANEL, FRT W/H LWR RR	
96	Y	10276497	LH	45.26	PANEL, FRT W/H LWR RR	8–F7,37
96	Y	10276498	RH	43.99	PANEL, FRT W/H LWR RR (INCLS PNL 10279301)	8–F7,37
84	Y	14076589	LH	31.24	PANEL, FRT W/H UPR	8–F4,16
84	Y	14076590	RH	31.24	PANEL, FRT W/H UPR	8–F4,16
85–87	Y	14076595	LH	31.24	PANEL, FRT W/H UPR	8–F4,16
85–87	Y	14076596	RH	31.24	PANEL, FRT W/H UPR	8–F4,16
88–89	Y	10231873	LH	31.78	PANEL, FRT W/H UPR	8–F7,30
88–89	Y	10231874	RH	31.78	PANEL, FRT W/H UPR	8–F7,30
90–91	Y SOFT RIDE SUSP (FE1), HVY DUTY SUSP (FE7)	10231873	LH	31.78	PANEL, FRT W/H UPR	8–F7,30
90–91	Y SOFT RIDE SUSP (FE1), HVY DUTY SUSP (FE7)	10231874	RH	31.78	PANEL, FRT W/H UPR	8–F7,30
92–96	Y	10231873	LH	31.78	PANEL, FRT W/H UPR	8–F7,30
92–96	Y	10231874	RH	31.78	PANEL, FRT W/H UPR	8–F7,30
84–87	Y	14049081	AR	.61	SHIM, W/H PNL	8–F4,29
84–87	Y	14078663	LH	DISCON	SUPPORT, FRT W/H LWR FRT PNL	
84–87	Y	14078664	RH	12.60	SUPPORT, FRT W/H LWR FRT PNL	8–F4,28
84–88	Y	14064555	LH	3.15	SUPPORT, FRT W/H PNL	7–J5,15
84–88	Y	14064556	RH	2.63	SUPPORT, FRT W/H PNL	7–J5,15
87–90	Y	14016675	4	1.10	WASHER, FRT W/H LWR CTR PNL (01.240)	8–F4,76

8.154 SEAL, Front Fender

84–87	Y	14064553	2	59.93	SEAL, FRT W/H PNL	8–F4,17
88–89	Y	14104943	2	22.75	SEAL, FRT W/H PNL	8–F7,32
90–91	Y SOFT RIDE SUSP (FE1), HVY DUTY SUSP (FE7)	14104943	2	22.75	SEAL, FRT W/H PNL	8–F7,32
92–96	Y	14104943	2	22.75	SEAL, FRT W/H PNL	8–F7,32

© 2000 GENERAL MOTORS SERVICE PARTS OPERATIONS–CHEVROLET–14Y

8.155 SUPPORT, Fender Wheelhouse

88–96	Y	14104035	LH	12.20	SUPPORT, FRT W/H LWR FRT PNL	8–F7,49
88–96	Y	14104036	RH	12.20	SUPPORT, FRT W/H LWR FRT PNL	8–F7,49

8.309 REINFORCEMENT, Rocker Panel Molding

85	Y SPORT PKG (YF3)	14093470	2	19.80	REINFORCEMENT, RKR PNL MLDG	

8.808 LABEL, Emission, Cautionary and Informative

94–96	Y	10231210	1	N.L.	LABEL, A/C REFRIG & ENG OIL NTC	
88–91	Y 5.7–8 (L98)	10077567	1	N.L.	LABEL, ACSRY BELT ROUTING	
90–91	Y 5.7J (LT5), SOFT RIDE SUSP (FE1), HVY DUTY SUSP (FE7)	10105211	1	N.L.	LABEL, ACSRY BELT ROUTING	
92–95	Y 5.7J (LT5)	10105211	1	N.L.	LABEL, ACSRY BELT ROUTING	
92	Y 5.7P (LT1)	10186199	1	N.L.	LABEL, ACSRY BELT ROUTING	
93	Y 5.7P (LT1), (1ST DES)	10186199	1	N.L.	LABEL, ACSRY BELT ROUTING (DUAL SIDED POLY V–BELT)	
93	Y 5.7P (LT1), (2ND DES)	10241175	1	N.L.	LABEL, ACSRY BELT ROUTING (SINGLE SIDED POLY V–BELT)	
94–95	Y 5.7P (LT1)	10241175	1	N.L.	LABEL, ACSRY BELT ROUTING	
86	Y67 HAS STEP 1–STATMENT "E" INCLUDING "AND WHL LOCK KEY" (1ST DES)	14093193	1	DISCON	LABEL, AUTO JK USAGE	
90–91	Y	10210318	1	N.L.	LABEL, ENG CLG SYS	
92–94	Y 5.7P (LT1)	10210318	1	N.L.	LABEL, ENG CLG SYS	
95	Y 5.7P (LT1), (1ST DES)	10210318	1	N.L.	LABEL, ENG CLG SYS (USED ON VEHICLES W/VIN OF 119804 AND PRIOR)	
95	Y 5.7P (LT1), (2ND DES)	10286902	1	N.L.	LABEL, ENG CLG SYS (USED ON VEHICLES W/VIN OF 119805 AND GREATER)	
96	Y 5.7P (LT1)	10286902	1	N.L.	LABEL, ENG CLG SYS	
92–93	Y 5.7P (LT1)	10225998	1	N.L.	LABEL, ENG OIL RECOMMENDATIONS	
93–96	Y	10236268	1	N.L.	LABEL, ENG OIL RECOMMENDATIONS ("MOBIL 1")	
84	Y	14063726	1	DISCON	LABEL, FAN BLADE CAUTION	
85	Y	10120010	1	N.L.	LABEL, FAN BLADE CAUTION	2–C8,5
85	Y APPLIED TO HOOD INNER PANEL	14084390	1	DISCON	LABEL, FAN BLADE CAUTION	
90–96	Y	10120010	1	N.L.	LABEL, FAN BLADE CAUTION (BLACK NYLON)	2–C8,5
86–87	Y	14092380	1	N.L.	LABEL, FAN BLADE ROUTING (APPLY TO LEFT HAND SIDE OF TOP RAD SUPT)	
91–96	Y LOW TIRE PRESSURE IND (UJ6)	10180847	2	N.L.	LABEL, FRT TIRE PRESS IND SEN (INSTALL 90 DEGREES FROM VLV STEM ON I/S LIP OF WHL)	6–I4,4
94	Y (EXC EUROPEAN PROVISIONS (VD1) (EXPORT)	15001737	2	N.L.	LABEL, INFL RST SYS CAUTION (140.0X40.0)	
95–96	Y	15001737	2	N.L.	LABEL, INFL RST SYS CAUTION (140.0X40.0)	
90–94	Y	10153622	1	N.L.	LABEL, INFL RST SYS INFO	
90–93	Y	26017956	1	N.L.	LABEL, INFL RST SYS SERV NTC	
94–95	Y	10247726	1	N.L.	LABEL, INFL RST SYS SERV NTC (USE ON R/H SIDE)	

© 2000 GENERAL MOTORS SERVICE PARTS OPERATIONS–CHEVROLET–14Y

8.808 LABEL, Emission, Cautionary and Informative (Con't)

94–96	Y F/SEAT INFL RST SYS (AK5)	26017956	1	N.L.	LABEL, INFL RST SYS SERV NTC	
96	Y F/SEAT INFL RST SYS (AK5)	10247726	1	N.L.	LABEL, INFL RST SYS SERV NTC (USE ON R/H SIDE)	
84–96	Y	21011879	1	N.L.	LABEL, JK CAUTION	7–I18,10
90	Y	10153623	1	N.L.	LABEL, JK LOC INFO	
92–93	Y	10153623	1	N.L.	LABEL, JK LOCATION INFO	
85	Y WHL NUT KEY IS ATTACHED TO THE WHL WRENCH (1ST DES)	14084072	1	N.L.	LABEL, JK USAGE	
86	Y07 SHOWS NEW JACKING LOCATION 10 INCHES FROM RR WHL OPG (2ND DES)	14093200	1	N.L.	LABEL, JK USAGE	
86–89	Y67	14093194	1	N.L.	LABEL, JK USAGE (INCLS INSTRUCTIONS 5 THRU 8)	7–I20,12
86	Y67 STEP 1 & 2 (2ND DES)	14093198	1	N.L.	LABEL, JK USAGE	
86	Y67 STEPS 3 & 4; NEW JACKING LOCATION–BETWEEN DARTS & TEN INCHES FROM RR WHL OPG (2ND DES)	14093199	1	N.L.	LABEL, JK USAGE	
87	Y07	14093200	1	N.L.	LABEL, JK USAGE	
87	Y67 STEPS 1 & 2	14093198	1	N.L.	LABEL, JK USAGE	
87	Y67 STEPS 3 & 4	14093199	1	N.L.	LABEL, JK USAGE	
88–89	Y07	10075210	1	N.L.	LABEL, JK USAGE	7–I20,12
88–89	Y67	10075208	1	N.L.	LABEL, JK USAGE (STEP 1 & 2)	7–I20,12
88–89	Y67	10075209	1	N.L.	LABEL, JK USAGE (STEP 3 & 4)	7–I20,12
90–92	Y SPECIAL PERFORMANCE PKG (ZR1)	10149277	1	N.L.	LABEL, JK USAGE	7–I23,11
90–92	Y (EXC SPECIAL PERFORMANCE PKG (ZR1)	10153625	1	N.L.	LABEL, JK USAGE	7–I23,11
93	Y	10219501	1	N.L.	LABEL, JK USAGE	7–I26,12
94–95	Y	10224195	1	N.L.	LABEL, JK USAGE	7–I26,12
96	Y (EXC (EXC SPA TIRE)	10276417	1	N.L.	LABEL, JK USAGE	7–I26,12
94–96	Y	10241098	1	N.L.	LABEL, LOW TIRE PRESS CAUTION	
89–96	Y	10135621	AR	N.L.	LABEL, ODOM SERV NTC (70MM SQUARE) (FOR USE WHEN ODOMETER OR CLUSTER IS SERVICED) (5621)	
90–95	Y07 SPECIAL PERFORMANCE PKG (ZR1)	10149274	1	N.L.	LABEL, PASS COMPT SPA WHL STOW INSTR	7–J2,9
96	Y07 GRAND SPORT EDITION (Z16)	10149274	1	N.L.	LABEL, PASS COMPT SPA WHL STOW INSTR	7–J2,9
95–96	Y	10283878	1	N.L.	LABEL, RAD FIL NTC	
93	Y	10233569	1	N.L.	LABEL, RDO DMG NTC	
94–96	Y	10238375	1	N.L.	LABEL, RDO DMG NTC	
91–96	Y LOW TIRE PRESSURE IND (UJ6)	10180848	2	N.L.	LABEL, RR TIRE PRESS IND SEN (INSTALL 90 DEGREES FROM VLV STEM ON I/S LIP OF WHL)	6–I4,4
92	Y STYLED AL WHL (QA1), SPECIAL PERFORMANCE WHL (QA2), EUROPEAN PROVISIONS (VD1) (EXPORT)	25558496	1	N.L.	LABEL, SPA WHL CAUTION (SYMBOLS)	
93	Y EUROPEAN PROVISIONS (VD1) (EXPORT)	25558496	1	N.L.	LABEL, SPA WHL CAUTION (SYMBOLS)	

© 2000 GENERAL MOTORS SERVICE PARTS OPERATIONS–CHEVROLET–14Y

8.808 LABEL, Emission, Cautionary and Informative (Con't)

94–96	Y	25558496	1	N.L.	LABEL, SPA WHL CAUTION (SYMBOLS)	
85–89	Y07	14084074	1	N.L.	LABEL, SPA WHL STOW INFO	
89	YO7 (EXC SPL PERF PKG ZR1)	14084074	1	N.L.	LABEL, SPA WHL STOW INFO	
89	Y67 (EXC SPL PERF PKG ZR1)	14093195	1	N.L.	LABEL, SPA WHL STOW INFO	
86–88	Y67	14093195	1	N.L.	LABEL, SPA WHL STOWAGE INFO	
94–95	Y07 5.7P (LT1)	10244479	1	N.L.	LABEL, TIRE PRESS	
96	Y07	10244479	1	N.L.	LABEL, TIRE PRESS	
88–90	Y LOW TIRE PRESSURE IND (UJ6)	10180847	4	N.L.	LABEL, TIRE PRESS IND SEN (INSTALL 90 DEGREES FROM VLV STEM ON I/S LIP OF WHL)	6–I4,4
84	Y (5.7–8) MK2, FED (NA5)	14073597	1	DISCON	LABEL, VEH EMIS CONT INFO (XTW)	
85	Y (5.7–8) FED (NA5), NN5	14086592	1	DISCON	LABEL, VEH EMIS CONT INFO (UNM)	
86	Y (5.7–8) FED (NA5), CALIF (NB2)	14086582	1	DISCON	LABEL, VEH EMIS CONT INFO	
86	Y (5.7–8) FED (NA5) (EXC NN5)	14100950	1	DISCON	LABEL, VEH EMIS CONT INFO (YDJ)	
87	Y FED (NA5) (EXC NN5)	10051453	1	N.L.	LABEL, VEH EMIS CONT INFO (ZDY)	
87	Y FED, NN5	10051454	1	DISCON	LABEL, VEH EMIS CONT INFO (ZDZ)	
88	Y (5.7–8) FED (NA5) (EXC NN5, Z49 CANADIAN	10079619	1	DISCON	LABEL, VEH EMIS CONT INFO (CNK)	
88	Y (5.7–8) FED (NA5), NN5 (EXC Z49 CANADIAN	10079621	1	N.L.	LABEL, VEH EMIS CONT INFO (CNM)	
89	Y	10116659	1	DISCON	LABEL, VEH EMIS CONT INFO (DCN)	
89	Y	10116660	1	DISCON	LABEL, VEH EMIS CONT INFO (DCP)	
89	Y (5.7J) (EXC NN5)	10116661	1	N.L.	LABEL, VEH EMIS CONT INFO (DCX)	
89	Y (5.7J) NN5	10116662	1	N.L.	LABEL, VEH EMIS CONT INFO (DCY)	
90	Y (5.7J) (EXC NN5)	10136278	1	N.L.	LABEL, VEH EMIS CONT INFO (FKW)	
90	Y (5.7J) NN5	10136279	1	N.L.	LABEL, VEH EMIS CONT INFO (FKX)	
90	Y 5.7–8 (L98), (EXC EMIS OVERRIDE (NN5)	10165211	1	N.L.	LABEL, VEH EMIS CONT INFO (FNM)	
90	Y 5.7–8 (L98), EMIS OVERRIDE (NN5)	10165212	1	N.L.	LABEL, VEH EMIS CONT INFO (FNN)	
91	Y 5.7–8 (L98), (EXC EMIS OVERRIDE (NN5)	10145484	1	N.L.	LABEL, VEH EMIS CONT INFO (LBZ)	
91	Y 5.7–8 (L98), EMIS OVERRIDE (NN5)	10145485	1	N.L.	LABEL, VEH EMIS CONT INFO (LCA)	
91	Y 5.7J (LT5), (EXC EMIS OVERRIDE (NN5)	10145486	1	N.L.	LABEL, VEH EMIS CONT INFO (LCL)	
91	Y 5.7J (LT5), EMIS OVERRIDE (NN5)	10145487	1	N.L.	LABEL, VEH EMIS CONT INFO (LCM)	
92	Y 5.7P (LT1), (EXC LEADED FUEL EMIS EXPORT (NM8), EMIS OVERRIDE (NN5)	10165175	1	N.L.	LABEL, VEH EMIS CONT INFO (PCK)	
92	Y 5.7P (LT1), EMIS OVERRIDE (NN5)	10165176	1	N.L.	LABEL, VEH EMIS CONT INFO (PCL)	
92	Y 5.7J (LT5), (EXC EMIS OVERRIDE (NN5)	10165177	1	N.L.	LABEL, VEH EMIS CONT INFO (PCM)	

© 2000 GENERAL MOTORS SERVICE PARTS OPERATIONS–CHEVROLET–14Y

8.808 LABEL, Emission, Cautionary and Informative (Con't)

92	Y 5.7J (LT5), EMIS OVERRIDE (NN5)	10165178	1	N.L.	LABEL, VEH EMIS CONT INFO (PCN) .....
93	Y 5.7P (LT1), FEDERAL EMIS (NA5), (EXC LEADED FUEL EMIS EXPORT (NM8), EMIS OVERRIDE (NN5)	10189453	1	N.L.	LABEL, VEH EMIS CONT INFO (RCX) .....
93	Y 5.7P (LT1), EMIS OVERRIDE (NN5)	10189454	1	N.L.	LABEL, VEH EMIS CONT INFO (RDY) .....
93	Y 5.7J (LT5), (EXC EMIS OVERRIDE (NN5)	10221625	1	N.L.	LABEL, VEH EMIS CONT INFO ..
93	Y 5.7J (LT5), EMIS OVERRIDE (NN5)	10221626	1	N.L.	LABEL, VEH EMIS CONT INFO ..
94	Y 5.7J (LT5), EMIS OVERRIDE (NN5)	10224724	1	N.L.	LABEL, VEH EMIS CONT INFO ..
94	Y 5.7P (LT1), 6–SPD M/TRANS (ML9), FEDERAL EMIS (NA5), (EXC EMIS OVERRIDE (NN5), LEADED FUEL EMIS EXPORT (NM8) .	12550655	1	N.L.	LABEL, VEH EMIS CONT INFO ..
94	Y 5.7P (LT1), 6–SPD M/TRANS (ML9), EMIS OVERRIDE (NN5)	12550656	1	N.L.	LABEL, VEH EMIS CONT INFO ..
94	Y 5.7P (LT1), 4–SPD A/TRANS (M30), FEDERAL EMIS (NA5), CALIFORNIA EMIS (NB2), (EXC LEADED FUEL EMIS EXPORT (NM8) .	12550703	1	N.L.	LABEL, VEH EMIS CONT INFO ..
94	Y 5.7J (LT5), (EXC EMIS OVERRIDE (NN5)	12550754	1	N.L.	LABEL, VEH EMIS CONT INFO ..
95	Y 5.7P (LT1), 4–SPD A/TRANS (M30), FEDERAL EMIS (NA5), (EXC LEADED FUEL EMIS EXPORT (NM8) .	10243019	1	N.L.	LABEL, VEH EMIS CONT INFO ..
95	Y 5.7P (LT1), 6–SPD M/TRANS (ML9), FEDERAL EMIS (NA5), (EXC LEADED FUEL EMIS EXPORT (NM8), EMIS OVERRIDE (NN5)	10243020	1	N.L.	LABEL, VEH EMIS CONT INFO ..
95	Y 5.7P (LT1), EMIS OVERRIDE (NN5)	10243021	1	N.L.	LABEL, VEH EMIS CONT INFO ..
95	Y 5.7P (LT1), CALIF EMIS, TIER 1 (NB6)	10243022	1	N.L.	LABEL, VEH EMIS CONT INFO ..
95	Y 5.7J (LT5), FEDERAL EMIS (NA5), (EXC EMIS OVERRIDE (NN5)	10243023	1	N.L.	LABEL, VEH EMIS CONT INFO ..
95	Y 5.7J (LT5), EMIS OVERRIDE (NN5)	10243024	1	N.L.	LABEL, VEH EMIS CONT INFO ..
96	Y 5.7P (LT1), LEADED FUEL EMIS EXPORT (NM8)	12553944	1	N.L.	LABEL, VEH EMIS CONT INFO ..
96	Y 5.7P (LT1), POWERTRAIN CONT MODULE (K29), (EXC CANADIAN (Z49)	12553944	1	N.L.	LABEL, VEH EMIS CONT INFO ..
96	Y 5.7P (LT1)	12555482	1	N.L.	LABEL, VEH EMIS CONT INFO ..
96	Y 5.7–5 (LT4)	12555483	1	N.L.	LABEL, VEH EMIS CONT INFO ..
96	Y 5.7–5 (LT4), 6–SPD M/TRANS (ML9), CALIF EMIS, TIER 1 (NB6)	12555600	1	N.L.	LABEL, VEH EMIS CONT INFO ..

8.808 LABEL, Emission, Cautionary and Informative (Con't)

96	Y 5.7–5 (LT4), 6–SPD M/TRANS (ML9), FED EMIS SYS (NF2), (EXC POWERTRAIN CONT MODULE (K29), CANADIAN (Z49)	12555600	1	N.L.	LABEL, VEH EMIS CONT INFO ..	
96	Y 5.7P (LT1), 4–SPD A/TRANS (M30), CALIF EMIS, TIER 1 (NB6)	12555869	1	N.L.	LABEL, VEH EMIS CONT INFO ..	
96	Y 5.7P (LT1), 4–SPD A/TRANS (M30), FED EMIS SYS (NF2)	12555869	1	N.L.	LABEL, VEH EMIS CONT INFO ..	
96	Y 5.7–5 (LT4), POWERTRAIN CONT MODULE (K29), (EXC CANADIAN (Z49)	12556111	1	N.L.	LABEL, VEH EMIS CONT INFO ..	
	*EXPORT**********EXPORT**********EXPORT**********EXPORT**********EXPORT*					
84–87	YB VB4, VD1, VE1, VT7 (EXPORT	14022422	1	DISCON	LABEL, IGN & START SW	
94–96	Y EUROPEAN PROVISIONS (VD1) (EXPORT)	15001737	LH	N.L.	LABEL, INFL RST SYS CAUTION (140.0X40.0)	
85	Y (5.7–8) NM8 (EXPORT) ...	14086593	1	DISCON	LABEL, VEH EMIS CONT INFO (UNN)	
87	Y	10051455	1	DISCON	LABEL, VEH EMIS CONT INFO (ZFA)	
88	Y	10079620	1	DISCON	LABEL, VEH EMIS CONT INFO (CNL)	
92	Y 5.7P (LT1), LEADED FUEL EMIS EXPORT (NM8)	10222060	1	N.L.	LABEL, VEH EMIS CONT INFO (PPJ)	
93	Y 5.7P (LT1), LEADED FUEL EMIS EXPORT (NM8)	10221953	1	N.L.	LABEL, VEH EMIS CONT INFO (RLC)	
94	Y 5.7P (LT1), LEADED FUEL EMIS EXPORT (NM8)	12350704	1	N.L.	LABEL, VEH EMIS CONT INFO ..	
95	Y 5.7P (LT1), LEADED FUEL EMIS EXPORT (NM8)	10243025	1	N.L.	LABEL, VEH EMIS CONT INFO ..	

8.820 CONTAINER – JACK – LATCH – RETAINER, Auto

94–96	Y07	10219041	1	12.90	CONTAINER, JK STOW	7–I26,11
94–96	Y67	10219040	1	11.99	CONTAINER, JK STOW	7–I26,11
93–96	Y	10230427	1	56.61	JACK	7–I26,12
84–92	Y	10230427	1	56.61	JACK, (ON 92 & PRIOR MODELS, ALSO REPLACE JACK LABEL W/10219501)	7–I26,12
84–85	Y	14079469	1	DISCON	LATCH, JK HDL STOW	
84	Y	14060278	1	DISCON	RETAINER, JK STOW	
85–93	Y	14084442	1	8.21	RETAINER, JK STOW	7–I26,10
88–96	Y	10077281	1	5.15	RETAINER, JK/WHL WRENCH HDL INR	7–I26,17
88–96	Y	10077282	1	5.15	RETAINER, JK/WHL WRENCH HDL OTR	7–I26,19

8.821 BAG – CLIP – HANDLE – PLATE – WRENCH, Wheel, Jack and Miscellaneous Wrench

89–96	Y67 AUX RF (CC2)	10149268	1	32.04	BAG, TOOL STOW (13.346)	10–D24,9
89–90	Y	10086147	1	DISCON	CLIP, WHL WRENCH SOC	
84–96	Y	14050029	1	16.07	HANDLE, JK/WHL WRENCH (INCLUDES WRENCH FOR 84–90) (08.820)	7–I26,18
85–87	Y	10051842	1	DISCON	PLATE, WHL WRENCH STUD ...	
91–96	Y	10180890	1	29.84	WRENCH, WHL	6–I2,8

© 2000 GENERAL MOTORS SERVICE PARTS OPERATIONS–CHEVROLET–14Y

8.845 BOLT – CONNECTOR – GASKET – HEATER – MODULE, Heater

NOTE: FOR 1986–1991 USAGE REFER TO HEATER/AIR CONDITIONIONG MODULE CHART GRP 8.845/9.169

90–96	Y	14069200	2	1.55	BOLT, HTR (M6.5X1.69X40) (W/WA) (09.211)	8–J15,5
86–88	Y	20007898	1	1.80	CONNECTOR, HTR (09.786)	
84–86	Y	10273603	1	1.58	GASKET, HTR (CASE & CORE)	8–G15,16
86–89	Y FOR MOD APPL & POA SEE MOD CHT	10273603	1	1.58	GASKET, HTR (CASE & CORE)	8–G15,16
90–96	Y	10273603	1	1.58	GASKET, HTR (CASE & CORE)	8–G15,16

© 2000 GENERAL MOTORS SERVICE PARTS OPERATIONS–CHEVROLET–14Y

1986 HEATER MODULE

NOTE: A01 FOR BLOWER DETAILS SEE A/C EVAPORATOR & BLOWER MODULE CHARTS IN GROUP 9.215.

PRODUCTION	VIN DIV. CODE	USAGE	COL. NO.
03056803	1	Y W/A.C(C68)	1
03050979	1	Y W/A.C(C60)	2

GROUP	DESCRIPTION	QTY	1	2	3	4	5
9.169	HEATER ASM	1	3056803	3050979	—	—	—
9.787	BRACKET,ADJ CBL	1	—	3053377	—	—	—
8.854	CASE,HTR CORE	1	—	3052455	—	—	—
8.854	CASE,W/FTG CVR HTR	1	3052963	3052963	—	—	—
8.854	CLAMP,CORE MT(IN-OUT TANK)	1	3022734	3022734	—	—	—
9.281	CLIP,ACTR & BRKT	1	9798835	—	—	—	—
9.786	CONNECTOR,LINK ADJ(PLAS)	1	—	1224062	—	—	—
9.786	CONNECTOR,LINK(PLAS)	1	20007898	20007898	—	—	—
8.854	CORE,HTR	1	3052870	3052870	—	—	—
9.211	GASKET,EVAP & BLO MOD	1	3052533	—	—	—	—
8.854	GASKET,HTR CASE & CORE	1	3052531	—	—	—	—
9.786	LINK,DVTR VLV	1	3038869	3038869	—	—	—
8.977	SCREW,HWH(M4.2X1.4X13)POR HILO	1	11508256	—	—	—	—
9.211	SEAL,(4.0 X 6.0 X 200.0)	1	3052253	3052253	—	—	—
9.786	SEAL,LINK OPG	1	3041107	3041107	—	—	—
8.854	SEAL,TUBE	1	3052514	3052514	—	—	—
9.786	SHAFT,W/LVR TEMP	1	—	3053383	—	—	—
8.854	STRAP,CORE MT	1	3052961	3052961	—	—	—
9.786	VALVE,TEMP	1	3053419	3053419	—	—	—

1987 HEATER MODULE

NOTE: A01 FOR BLOWER DETAILS SEE A/C EVAPORATOR & BLOWER MODULE CHARTS IN GROUP 9.215.

PRODUCTION	VIN DIV. CODE	USAGE	COL. NO.
03056803	1	Y W/A.C(C68)	1
03050979	1	Y W/A.C(C60)	2

GROUP	DESCRIPTION	QTY	1	2	3	4	5
9.169	HEATER ASM	1	3056803	3050979	—	—	—
9.787	BRACKET,ADJ CBL	1	—	3053377	—	—	—
8.854	CASE,HTR CORE	1	—	3052455	—	—	—
8.854	CASE,W/FTG CVR HTR	1	3052963	3052963	—	—	—
8.854	CLAMP,CORE MT(IN-OUT TANK)	1	3022734	3022734	—	—	—
9.281	CLIP,ACTR & BRKT	1	9798835	—	—	—	—
9.786	CONNECTOR,LINK ADJ(PLAS)	1	—	1224062	—	—	—
9.786	CONNECTOR,LINK(PLAS)	1	20007898	20007898	—	—	—
8.854	CORE,HTR	1	3052870	3052870	—	—	—
9.211	GASKET,EVAP & BLO MOD	1	3052533	—	—	—	—
8.854	GASKET,HTR CASE & CORE	1	3052531	—	—	—	—
9.786	LINK,DVTR VLV	1	3038869	3038869	—	—	—
8.977	SCREW,HWH(M4.2X1.4X13)POR HILO	1	11508256	—	—	—	—
9.211	SEAL,(4.0 X 6.0 X 200.0)	1	3052253	3052253	—	—	—
9.786	SEAL,LINK OPG	1	3041107	3041107	—	—	—
8.854	SEAL,TUBE	1	3052514	3052514	—	—	—
9.786	SHAFT,W/LVR TEMP	1	—	3053383	—	—	—
8.854	STRAP,CORE MT	1	3052961	3052961	—	—	—
9.786	VALVE,TEMP	1	3053419	3053419	—	—	—

1988 HEATER MODULE

NOTE: A01 FOR BLOWER DETAILS SEE A/C EVAPORATOR & BLOWER MODULE CHARTS IN GROUP 9.215.

PRODUCTION	DIV.	VIN CODE	USAGE	COL. NO.
03056803	1	Y	W/A.C(C68)	1
03050979	1	Y	W/A.C(C60)	2

GROUP	DESCRIPTION	QTY	1	2	3	4	5
9.169	HEATER ASM	1	3056803	3050979	—	—	—
9.787	BRACKET,ADJ CBL	1	—	3053377	—	—	—
8.854	CASE,HTR CORE	1	—	3052455	—	—	—
8.854	CASE,W/FTG CVR HTR	1	3052963	3052963	—	—	—
8.854	CLAMP,CORE MT(IN-OUT TANK)	1	3022734	3022734	—	—	—
9.281	CLIP,ACTR & BRKT	1	9798835	—	—	—	—
9.786	CONNECTOR,LINK ADJ(PLAS)	1	—	1224062	—	—	—
9.786	CONNECTOR,LINK(PLAS)	1	20007898	20007898	—	—	—
8.854	CORE,HTR	1	3052870	3052870	—	—	—
9.211	GASKET,EVAP & BLO MOD	1	3052533	—	—	—	—
8.854	GASKET,HTR CASE & CORE	1	3052531	—	—	—	—
9.786	LINK,DVTR VLV	1	3038869	3038869	—	—	—
8.977	SCREW,HWH(M4.2X1.4X13)POR HILO	1	11508256	—	—	—	—
9.211	SEAL,(4.0 X 6.0 X 200.0)	1	3052253	3052253	—	—	—
9.786	SEAL,LINK OPG	1	3041107	3041107	—	—	—
8.854	SEAL,TUBE	1	3052514	3052514	—	—	—
9.786	SHAFT,W/LVR TEMP	1	—	3053383	—	—	—
8.854	STRAP,CORE MT	1	3052961	3052961	—	—	—
9.786	VALVE,TEMP	1	3053419	3053419	—	—	—

1989 HEATER MODULE

NOTE: A01 FOR BLOWER DETAILS SEE A/C EVAPORATOR & BLOWER MODULE CHARTS IN GROUP 9.215.

PRODUCTION	DIV.	VIN CODE	USAGE	COL. NO.
03056803	1	Y	W/A.C(C68)	1
03050979	1	Y	W/A.C(C60)	2

GROUP	DESCRIPTION	QTY	1	2	3	4	5
9.169	HEATER ASM	1	3056803	3050979	—	—	—
9.787	BRACKET,ADJ CBL	1	—	3053377	—	—	—
8.854	CASE,HTR CORE	1	—	3052455	—	—	—
8.854	CASE,W/FTG CVR HTR	1	3052963	3052963	—	—	—
8.854	CLAMP,CORE MT(IN-OUT TANK)	1	3022734	3022734	—	—	—
9.281	CLIP,ACTR & BRKT	1	9798835	—	—	—	—
9.786	CONNECTOR,LINK ADJ(PLAS)	1	—	1224062	—	—	—
9.786	CONNECTOR,LINK(PLAS)	1	20007898	20007898	—	—	—
8.854	CORE,HTR	1	3052870	3052870	—	—	—
9.211	GASKET,EVAP & BLO MOD	1	3052533	—	—	—	—
8.854	GASKET,HTR CASE & CORE	1	3052531	—	—	—	—
9.786	LINK,DVTR VLV	1	3038869	3038869	—	—	—
8.977	SCREW,HWH(M4.2X1.4X13)POR HILO	1	11508256	—	—	—	—
9.211	SEAL,(4.0 X 6.0 X 200.0)	1	3052253	3052253	—	—	—
9.786	SEAL,LINK OPG	1	3041107	3041107	—	—	—
8.854	SEAL,TUBE	1	3052514	3052514	—	—	—
9.786	SHAFT,W/LVR TEMP	1	—	3053383	—	—	—
8.854	STRAP,CORE MT	1	3052961	3052961	—	—	—
9.786	VALVE,TEMP	1	3053419	3053419	—	—	—

1990 HEATER MODULE

NOTE: A01 FOR BLOWER DETAILS SEE A/C EVAPORATOR & BLOWER MODULE CHARTS IN GROUP 9.215.

PRODUCTION	VIN DIV. CODE	USAGE	COL. NO.
52452066	1	Y W/A.C(C60)	1
52455840	1	Y W/A.C(C68)	2

GROUP	DESCRIPTION	QTY	1	2	3	4	5
9.169	HEATER ASM	1	52452066	52455840	—	—	—
9.280	ACTUATOR,TEMP/DEFR/A/C VLV(ELEC)	1	—	16145772	—	—	—
9.786	ADAPTER,VALVE(TEMP)	1	—	52452753	—	—	—
8.854	CASE,HTR	1	52452744	52452752	—	—	—
8.854	CASE,W/FTG CVR HTR	1	52452757	52455909	—	—	—
8.854	CLAMP,CORE MT(IN-OUT TANK)	1	3022734	3022734	—	—	—
9.786	CONNECTOR,LINK ADJ(PLAS)	1	14089386	—	—	—	—
8.854	CORE,HTR	1	3052870	3052870	—	—	—
8.852	HARNESS,HTR CONT WRG	1	—	12080858	—	—	—
9.786	LEVER,TEMP VLV(PLASTIC)	1	52452748	—	—	—	—
9.786	LEVER,W/PIN(SLAVE)	1	52452746	—	—	—	—
9.786	LINK,ROD(FORMED)	1	52452747	—	—	—	—
9.211	SEAL,HTR CORE MT	2	3048951	3048951	—	—	—
8.854	SEAL,TUBE	1	3052514	3052514	—	—	—
8.854	STRAP,CORE MT	1	—	3052961	—	—	—
9.786	VALVE,TEMP	1	52452751	52452751	—	—	—

1991 HEATER MODULE

NOTE: A01 FOR BLOWER DETAILS SEE A/C EVAPORATOR & BLOWER MODULE CHARTS IN GROUP 9.215.

PRODUCTION	VIN DIV. CODE	USAGE	COL. NO.
52452066	1	Y W/A.C(C60)	1
52457368	1	Y W/A.C(C68)(NOTE 1)	2

NOTE 1: 52457368 REPLACES 52455840 FOR 1991. ALL SERVICED COMPONENTS ARE SAME PART NUMBERS FOR BOTH ASSEMBLIES.

GROUP	DESCRIPTION	QTY	1	2	3	4	5
9.169	HEATER ASM	1	52452066	52457368	—	—	—
9.280	ACTUATOR,TEMP/DEFR/A/C VLV(ELEC)	1	—	16145772	—	—	—
9.786	ADAPTER,VALVE(TEMP)	1	—	52452753	—	—	—
8.854	CASE,HTR	1	52452744	52452752	—	—	—
8.854	CASE,W/FTG CVR HTR	1	52452757	52455909	—	—	—
8.854	CLAMP,CORE MT(IN-OUT TANK)	1	3022734	3022734	—	—	—
9.786	CONNECTOR,LINK ADJ(PLAS)	1	14089386	—	—	—	—
8.854	CORE,HTR	1	3052870	3052870	—	—	—
8.852	HARNESS,HTR CONT WRG	1	—	12080858	—	—	—
9.786	LEVER,TEMP VLV(PLASTIC)	1	52452748	—	—	—	—
9.786	LEVER,W/PIN(SLAVE)	1	52452746	—	—	—	—
9.786	LINK,ROD(FORMED)	1	52452747	—	—	—	—
9.211	SEAL,HTR CORE MT	2	3048951	3048951	—	—	—
8.854	SEAL,TUBE	1	3052514	3052514	—	—	—
8.854	STRAP,CORE MT	1	—	3052961	—	—	—
9.786	VALVE,TEMP	1	52452751	52452751	—	—	—

8.846 BRACKET – CLAMP – FITTING – HOSE – PIPE – RETAINER – SLEEVE – TEE, Heater

93–95	Y 5.7P (LT1)	10214145	1	2.48	BRACKET, HTR INL & OTLT PIPE	8–G26,16
96	Y	10214145	1	2.48	BRACKET, HTR INL & OTLT PIPE	8–G26,16
93–96	Y 5.7P (LT1)	10108255	1	3.75	CLAMP, HTR INL HOSE ENG (BLACK) (08.948)	8–G25,2
96	Y	10289579	1	3.75	CLAMP, HTR INL HOSE ENG (08.948)	
92–95	Y 5.7P (LT1)	10108255	2	3.75	CLAMP, HTR OTLT HOSE (BLACK) (08.948)	8–G25,2
91–93	Y	25665982	1	1.99	CLAMP, HTR OTLT HOSE ENG (08.948)	8–G26,2
92–93	Y 5.7P (LT1)	25665982	1	1.99	CLAMP, HTR OTLT HOSE ENG (08.948)	8–G26,2
93	Y 5.7P (LT1)	10108255	1	3.75	CLAMP, HTR OTLT HOSE ENG (BLACK) (08.948)	8–G25,2
88–91	Y 5.7–8 (L98), FEDERAL EMIS (NA5)	10088196	1	4.32	FITTING, HTR HOSE	8–G22,3
93–94	Y 5.7P (LT1)	10157918	1	19.67	FITTING, HTR OTLT HOSE	8–G26,9
86–88	Y A/C	14093180	1	DISCON	HOSE, HTR & A/C CONT VAC	
89	Y (5.7–8)	14093180	1	DISCON	HOSE, HTR & A/C CONT VAC	
84	Y	14046044	1	12.90	HOSE, HTR INL	8–G18,3
85–87	Y	14081348	1	12.90	HOSE, HTR INL	8–G19,1
88–91	Y 5.7–8 (L98), FEDERAL EMIS (NA5)	10108510	1	14.32	HOSE, HTR INL	8–G21,1
92	Y 5.7P (LT1)	10213634	1	26.92	HOSE, HTR INL	8–G25,1
93–95	Y 5.7P (LT1)	10157913	1	40.90	HOSE, HTR INL	8–G26,6
96	Y	10157913	1	40.90	HOSE, HTR INL	8–G26,6
89	Y (5.7J)	10135629	1	161.54	HOSE, HTR INL & OTLT	8–G23,5
90–92	Y 5.7J (LT5), SOFT RIDE SUSP (FE1), HVY DUTY SUSP (FE7)	10135629	1	161.54	HOSE, HTR INL & OTLT	8–G23,5
93–95	Y 5.7J (LT5), SOFT RIDE SUSP (FE1)	10135629	1	161.54	HOSE, HTR INL & OTLT	8–G23,5
84	Y	14052406	1	DISCON	HOSE, HTR OTLT	
85–87	Y A/C MAN CONT (C60), A/C AUTO ELEC CONT (C68), (EXC ENG OIL CLG (KC4)	14081349	1	10.36	HOSE, HTR OTLT	8–G19,3
85	Y ENG OIL CLG (KC4)	14091278	1	40.00	HOSE, HTR OTLT (MOLDED FITTING) (01.540)	
88	Y ENG OIL CLG (KC4)	10158081	1	97.30	HOSE, HTR OTLT	8–G21,3
88–89	Y A/C MAN CONT (C60), A/C AUTO ELEC CONT (C68), (EXC ENG OIL CLG (KC4)	10158082	1	DISCON	HOSE, HTR OTLT	
89	Y 5.7–8 (L98), ENG OIL CLG (KC4)	10158081	1	97.30	HOSE, HTR OTLT	8–G21,3
90	Y 5.7–8 (L98), (EXC ENG OIL CLG (KC4)	10135656	1	17.06	HOSE, HTR OTLT	8–G22,4
90–91	Y 5.7–8 (L98), ENG OIL CLG (KC4)	10135657	1	40.90	HOSE, HTR OTLT	8–G22,6
91	Y 5.7–8 (L98), (EXC ENG OIL CLG (KC4)	10135656	1	17.06	HOSE, HTR OTLT	8–G22,4
92	Y 5.7P (LT1)	10135697	1	21.50	HOSE, HTR OTLT	8–G25,4
93–94	Y 5.7P (LT1)	10157915	1	18.66	HOSE, HTR OTLT (FROM RAD SURGE TK TO TEE)	8–G26,11
93–94	Y 5.7P (LT1)	10157916	1	18.66	HOSE, HTR OTLT (FROM W/PMP TO TEE)	8–G26,7
93–94	Y 5.7P (LT1)	10157917	1	18.66	HOSE, HTR OTLT (FROM THROT BODY TO TEE)	8–G26,1
95	Y 5.7P (LT1)	10262505	1	28.96	HOSE, HTR OTLT	8–H2,5
96	Y	10262505	1	28.96	HOSE, HTR OTLT	8–H2,5

© 2000 GENERAL MOTORS SERVICE PARTS OPERATIONS–CHEVROLET–14Y

8.846 BRACKET – CLAMP – FITTING – HOSE – PIPE – RETAINER – SLEEVE – TEE, Heater (Con't)

84	Y	14046020	1	DISCON	PIPE, HTR OTLT	
90–92	Y 5.7J (LT5)	10089613	1	*1.07	RETAINER, HTR PIPE (BLACK)	2–D9,66
90–95	Y 5.7J (LT5)	10089613	1	*1.07	RETAINER, HTR WAT FLOW C/VLV HOSE (BLACK)	2–D9,66
84	Y	554853	AR	DISCON	SLEEVE, HTR HOSE (1" X 4")	
92–94	Y 5.7P (LT1)	10157956	1	12.55	TEE, HTR WAT BYPASS VLV OTLT HOSE	2–D6,38

8.852 CONNECTOR – HARNESS – KNOB – SWITCH, Heater Control

NOTE: FOR 1986–1991 USAGE REFER TO HEATER MODULE CHART GRP 8.845

90	Y 5.7J (LT5)	12101901	1	16.87	CONNECTOR, SW–BLO MOT (2–WAY F, W/LEADS) (02.535) (AC–DELCO #PT172)	
92–93	Y	12085503	1	16.87	CONNECTOR, SW–BLO MOT (BLACK) (2–WAY F) (W/LEADS) (02.535) (STANDARD) (AC–DELCO #PT124)	
93–95	Y 5.7J (LT5)	12085503	1	16.87	CONNECTOR, SW–BLO MOT (BLACK) (2–WAY F) (W/LEADS) (02.535) (AC–DELCO #PT124)	
92–93	Y A/C AUTO ELEC CONT (C68)	12080858	1	82.50	HARNESS, HTR CONT WRG	8–G17,8
94–96	Y A/C AUTO ELEC CONT (C68)	12163192	1	21.18	HARNESS, HTR CONT WRG (09.276)	8–G17,8
92–93	Y A/C MAN CONT (C60)	16162468	1	DISCON	KNOB, HTR CONT TEMP	
94–96	Y A/C MAN CONT (C60)	16188464	1	13.88	KNOB, HTR CONT TEMP	
84	Y	2724279	1	22.44	SWITCH, BLO MOT (09.172) (AC–DELCO #15–2235)	

8.854 CASE – CLAMP – CORE – SEAL – STRAP – STUD, Heater Core

NOTE: FOR 1986–1991 USAGE REFER TO HEATER MODULE CHART GRP 8.845
NOTE: FOR 1986–1991 USAGE REFER TO AIR CONDITIONING CHART GRP 9.169
NOTE: FOR 1986–1991 USAGE REFER TO HEATER BLOWER CHART GRP 8.857

92–95	Y 5.7P (LT1)	3094161	1	23.17	CASE, BLO (09.211)	8–I5,13
92–95	Y 5.7J (LT5)	52453155	1	42.93	CASE, BLO (09.211)	8–I8,11
96	Y	3094161	1	23.17	CASE, BLO (09.211)	8–I5,13
92–96	Y A/C MAN CONT (C60)	52452744	1	22.15	CASE, HTR	8–G16,11
92–93	Y A/C AUTO ELEC CONT (C68)	52452752	1	22.15	CASE, HTR	8–G17,10
92–96	Y A/C MAN CONT (C60), (CVR)	52452757	1	61.72	CASE, HTR (W/FITTINGS)	8–G16,5
94–96	Y A/C AUTO ELEC CONT (C68)	52461983	1	21.28	CASE, HTR	8–G17,10
84–86	Y	3052455	1	DISCON	CASE, HTR CORE	
84	Y	3094724	1	DISCON	CASE, HTR RR (09.211)	
92–96	Y A/C AUTO ELEC CONT (C68)	52455909	1	48.52	CASE, HTR RR (W/FTG)	8–G17,5
92–95	Y 5.7P (LT1)	52457755	1	49.53	CASE, HTR RR (09.211)	8–I10,4
96	Y	52457755	1	49.53	CASE, HTR RR (09.211)	8–I10,4
84–86	Y	3052963	1	DISCON	CASE, W/FTG, HTR CVR	
84–86	Y	3022734	1	.65	CLAMP, CORE MT (IN–OUT TANK)	8–G15,2
92–96	Y	3022734	1	.65	CLAMP, HTR CORE (IN–OUT TANK)	8–G15,2
84–96	Y	52479882	1	110.30	CORE, HTR (AC–DELCO #15–60039)	8–G15,11
84–86	Y	3052514	1	3.35	SEAL, CORE TUBE	8–G15,1
90–96	Y	3052533	1	7.80	SEAL, HTR (09.211)	8–G16,6

MICROFICHE INDEX

GROUPS 8.000 THRU 9.000

FICHE 8 OF 11

GROUP	DESCRIPTION	STARTING GRID LOCATION PARTS	ILLUSTRATIONS
–	GENERAL INFORMATION	1–A2	1–G2
–	ALPHABETICAL INDEX	1–B13	N.A.
8.000	FRONT END SHEET METAL – HEATER	8–A2	8–F2
9.000	BODY MOUNTING – AIR CONDITIONING – INSTRUMENT CLUSTER	8–C2	8–I2
–	OUT OF FICHE CALLS	N.A.	8–M27

8–B1

8.854 CASE – CLAMP – CORE – SEAL – STRAP – STUD, Heater Core(Con't)

84–86	Y	3052253	2	1.57	SEAL, HTR CORE (09.211)	8–G15,17
90–96	Y	3048951	2	.75	SEAL, HTR CORE	8–G16,12
84	Y	3052705	1	1.57	SEAL, HTR CORE PIPE	8–G15,1
85–86	Y A/C MAN CONT (C60), A/C AUTO ELEC CONT (C68)	3052705	1	1.57	SEAL, HTR CORE PIPE	8–G15,1
87–96	Y	3052705	1	1.57	SEAL, HTR CORE PIPE	8–G15,1
92–96	Y	3052514	1	3.35	SEAL, HTR CORE TUBE	8–G15,1
94–95	Y 5.7J (LT5)	3052705	1	1.57	SEAL, HTR CORE TUBE	8–G15,1
84–86	Y	3052961	1	6.45	STRAP, CORE MT	8–G15,3
92–96	Y A/C AUTO ELEC CONT (C68)	3052961	1	6.45	STRAP, HTR CORE	8–G15,3
90–96	Y	3049441	2	.63	STUD, HTR CASE	8–G16,14

8.855 CONNECTOR – MOTOR – RESISTOR – TERMINAL, Heater Blower Motor

NOTE: FOR 1986–1991 USAGE REFER TO AIR CONDITIONING BLOWER CHART GRP 9.215

NOTE: FOR ADDITIONAL INFORMATION, SEE BLOWER MOTOR AND IMPELLER APPLICATION CHARTS IN THE REFERENCE CATALOG (CODE 88R).

90	Y 5.7J (LT5)	15306002	AR	41.69	CONNECTOR, RLY–BLO MOT (5–WAY F, M/P MXD, W/LEADS) (AC–DELCO #PT1115)	
90–91	Y 5.7–8 (L98)	15306002	AR	41.69	CONNECTOR, RLY–BLO MOT (5–WAY F) (W/LEADS) (M/P MXD) (AC–DELCO #PT1115)	
92	Y 5.7P (LT1)	15306002	AR	41.69	CONNECTOR, RLY–BLO MOT (5–WAY F) (W/LEADS) (M/P MXD) (AC–DELCO #PT1115)	
84–86	Y	52469795	1	77.20	MOTOR, BLO (W/IMPLR) (PRESS–ON TYPE) (AC–DELCO #15–8583)	8–I5,14
87–96	Y	52466080	1	93.20	MOTOR, BLO (W/IMPLR) (09.215) (AC–DELCO #15–8547)	8–I8,9
84	Y	526897	1	9.62	RESISTOR, BLO MOT (09.275) (AC–DELCO #15–71968)	8–I5,3
85–96	Y A/C MAN CONT (C60)	14093106	1	11.58	RESISTOR, BLO MOT (09.275)	8–I5,3
84–85	Y	3033932	1	2.30	TERMINAL, BLO GRD (02.530)	

8.857 BLOWER – STUD, Heater Blower Motor

92–95	Y 5.7P (LT1)	52452664	1	1.32	STUD, BLO (09.211)	8–I5,13
96	Y	52452664	1	1.32	STUD, BLO (09.211)	8–I5,13

8.858 VALVE, Temperature Control

NOTE: FOR 1989–1991 USAGE REFER TO HEATER MODULE CHART GROUP 8.845

92–93	Y	52452751	1	21.33	VALVE, TEMP (09.786)	8–G16,10
94–96	Y A/C MAN CONT (C60)	52452751	1	21.33	VALVE, TEMP (09.786)	8–G16,10
94–96	Y A/C AUTO ELEC CONT (C68)	52461984	1	32.06	VALVE, TEMP (AC–DELCO #15–5448)	8–G17,11

8.859 TUBE, Heater Motor Cooling

92–96	Y	3053502	1	7.38	TUBE, BLO MOT CLG (09.218)	8–I8,8

8.866 NIPPLE – RETAINER – VALVE, Heater Coolant Flow

84–85	Y	3771940	1		NIPPLE, HTR HOSE OTLT (08.963)	
84–85	Y	6272959	1	5.18	NIPPLE, HTR HOSE OTLT	

© 2000 GENERAL MOTORS SERVICE PARTS OPERATIONS–CHEVROLET–14Y

8.866 NIPPLE – RETAINER – VALVE, Heater Coolant Flow (Con't)

90–95	Y 5.7J (LT5)	24503681	1	9.20	NIPPLE, HTR WAT ENG INL (USE T/W 1052080 SEALER) (W/O–RING & RET) (1/2 THD, 59.5 TL) (OLD PART MAY APPEAR LARGER DUE TO HEAT EXPANSION)	2–D9,65
92	Y 5.7P (LT1)	1985088	1	*1.00	RETAINER, HTR WAT FLOW C/VLV (03.671)	
84–87	Y	22532158	1	9.62	VALVE, HTR WAT FLOW CONT (AC–DELCO #15–5372)	8–G18,4
88–91	Y 5.7–8 (L98)	22532158	1	9.62	VALVE, HTR WAT FLOW CONT (16 MM) (AC–DELCO #15–5372) .	8–G18,4
92–95	Y 5.7P (LT1)	10157988	1	17.64	VALVE, HTR WAT FLOW CONT (W/O HOSE) (AC–DELCO #15–5423)	8–G25,7
96	Y	10157988	1	17.64	VALVE, HTR WAT FLOW CONT (W/O HOSE) (AC–DELCO #15–5423)	8–G25,7

8.873 PLATE, Compass Mounting

84–88	Y	3975375	1	6.20	PLATE, COMPASS MOUNTING (FOR ACC 21.100)	

8.890 CLIP – CONNECTOR – LAMP – LENS – NUT – SWITCH, Underhood

84–90	Y	8917236	16	1.45	CLIP, U/HOOD LP (02.559)	8–F4,61
91–95	Y	8917236	8	1.45	CLIP, U/HOOD LP (02.559)	8–F4,61
96	Y	8917236	8	1.45	CLIP, U/HOOD LP (02.559)	8–F4,61
93–94	Y	12085524	1	21.23	CONNECTOR, INLINE–TO U/HOOD LP (BLACK) (2–WAY M) (W/LEADS) (02.535) (AC–DELCO #PT134)	
93	Y	12126446	1	60.39	CONNECTOR, INLINE–TO U/HOOD LP (2–WAY F, W/LEADS & COVER) (02.535)	
96	Y	12085524	1	21.23	CONNECTOR, INLINE–TO U/HOOD LP (BLACK) (2–WAY M) (W/LEADS) (02.535) (AC–DELCO #PT134)	
93	Y	12085524	1	21.23	CONNECTOR, LP–U/HOOD (BLACK) (2–WAY M) (W/LEADS) (02.535) (AC–DELCO #PT134)	
93–94	Y	12126446	1	60.39	CONNECTOR, LP–U/HOOD (2–WAY F, W/LEADS & COVER) (02.535)	
84–89	Y	5974960	2	50.00	LAMP, U/HOOD	8–F4,61
90	Y SOFT RIDE SUSP (FE1), H .D .SUSP (FE7)	5974960	2	50.00	LAMP, U/HOOD	8–F4,61
91	Y SOFT RIDE SUSP (FE1), HVY DUTY SUSP (FE7)	16515968	2	50.00	LAMP, U/HOOD	8–F13,70
92–93	Y	16515968	2	50.00	LAMP, U/HOOD	8–F13,70
94–96	Y	16515968	2	50.00	LAMP, U/HOOD	8–F13,70
84–89	Y	16506291	1	7.96	LENS, U/HOOD LP	8–F10,70
90	Y SOFT RIDE SUSP (FE1), H .D. SUSP (FE7)	16506291	1	7.96	LENS, U/HOOD LP	8–F10,70
91	Y SOFT RIDE SUSP (FE1), HVY DUTY SUSP (FE7)	16506291	1	7.96	LENS, U/HOOD LP	8–F10,70
92–93	Y	16506291	1	7.96	LENS, U/HOOD LP	8–F10,70
94–96	Y	16506291	1	7.96	LENS, U/HOOD LP	8–F10,70
84–93	Y	12338025	4	*1.83	NUT, U/HOOD LP (02.383)	8–F7,75
94–95	Y	12338025	4	*1.83	NUT, U/HOOD LP (02.383)	8–F7,75

© 2000 GENERAL MOTORS SERVICE PARTS OPERATIONS–CHEVROLET–14Y

8.890 CLIP – CONNECTOR – LAMP – LENS – NUT – SWITCH, Underhood (Con't)

84–93	Y	16518071	2	8.93	SWITCH, U/HOOD LP	8–F10,70
94–96	Y	16518071	1	8.93	SWITCH, U/HOOD LP	8–F10,70

© 2000 GENERAL MOTORS SERVICE PARTS OPERATIONS–CHEVROLET–14Y

MICROFICHE INDEX

GROUPS 8.000 THRU 9.000

FICHE 8 OF 11

GROUP	DESCRIPTION	STARTING GRID LOCATION PARTS	ILLUSTRATIONS
–	GENERAL INFORMATION	1–A2	1–G2
–	ALPHABETICAL INDEX	1–B13	N.A.
8.000	FRONT END SHEET METAL – HEATER	8–A2	8–F2
9.000	BODY MOUNTING – AIR CONDITIONING – INSTRUMENT CLUSTER	8–C2	8–I2
–	OUT OF FICHE CALLS	N.A.	8–M27

8–C1

CHEVROLET
CHASSIS GROUP 9.000

BODY MOUNTING – AIR CONDITIONING – INSTRUMENT CLUSTER

ALPHABETICAL INDEX

A

ACCUMULATOR, A/C Refrigerant 9.195 8–C16
ACTUATOR, A/C Control 9.280 8–D5
ALARM, Instrument Cluster Warning ... 9.765 8–E9
ALARM, Speed Indicator 9.762 8–E8
AMPLIFIER, Radio Receiver 9.650 8–D14
AMPLIFIER, Speed Indicator 9.762 8–E8
ANTENNA PKG, Power Radio Antenna . 9.645 8–D7
ANTENNA, Power Radio Antenna 9.645 8–D7
APPLIQUE, A/C Control 9.279 8–D4
APPLIQUE, Driver Information Display . 9.768 8–E10
ARMATURE KIT, Radio Antenna 9.647 8–D11
ASPIRATOR, A/C Electric Control 9.275 8–C27

B

BACKPLATE, Instrument Cluster 9.748 8–E7
BAFFLE, Air Distributor 9.786 8–E12
BEARING, A/C Compressor Pulley 9.181 8–C15
BEZEL, Instrument Cluster 9.743 8–E6
BEZEL, Radio Antenna 9.647 8–D11
BEZEL, Rear Compartment Lamp 9.988 8–E13
BEZEL, Side Window Defroster 9.780 8–E11
BOARD, Instrument Cluster Warning ... 9.765 8–E9
BOLT KIT, Radio Antenna 9.647 8–D11
BOLT, A/C Compressor Clutch 9.188 8–C16
BOLT, A/C Compressor Mounting 9.173 8–C14
BOLT, A/C Evaporator 9.211 8–C17
BOLT, A/C Refrigerant 9.196 8–C16
BOLT, A/C Vacuum and Temperature ... 9.281 8–D7
BOLT, Driver Information Display 9.768 8–E10
BOLT, Instrument Cluster Warning 9.765 8–E9
BOLT, Radio Antenna 9.647 8–D11
BOLT, Radio Mounting 9.667 8–D24
BOLT, Side Window Defroster 9.780 8–E11
BRACE, A/C Compressor Mounting 9.171 8–C13
BRACKET, A/C Compressor Mounting . 9.171 8–C13
BRACKET, A/C Control 9.280 8–D5
BRACKET, A/C Electric Control 9.275 8–C27
BRACKET, A/C Electrical 9.277 8–D3
BRACKET, A/C Evaporator 9.211 8–C17
BRACKET, A/C Refrigerant 9.196 8–C16
BRACKET, A/C Wiring 9.276 8–D2
BRACKET, Instrument Cluster Warning . 9.765 8–E9
BRACKET, Outside Air Control 9.787 8–E13
BRACKET, Radio Antenna 9.647 8–D11
BRACKET, Radio Auxiliary Speakers ... 9.665 8–D22
BRACKET, Radio Mounting 9.667 8–D24
BRACKET, Radio Speaker 9.655 8–D17
BRACKET, Rear Compartment Lamp ... 9.988 8–E13
BULB, A/C Control 9.279 8–D4
BULB, Driver Information Display 9.768 8–E10
BULB, Radio Tuner 9.652 8–D17
BULB, Vehicle Navigation 9.769 8–E10
BUTTON, Radio Tuner 9.652 8–D17

C

CABLE, Outside Air Control 9.787 8–E13
CABLE, Radio Antenna 9.647 8–D11
CAP, A/C Compressor 9.177 8–C14
CAP, A/C Compressor 9.226 8–C23
CAP, Heater Water Temperature Control 9.795 8–E13
CAPACITOR, Radio Static Suppression 9.663 8–D22
CAPACITOR, Radio 9.654 8–D17
CARRIER, Instrument Cluster 9.743 8–E6
CASE, A/C Evaporator 9.211 8–C17
CASE, Air Distributor 9.786 8–E12
CASE, Instrument Cluster 9.743 8–E6
CIRCUIT, Instrument Cluster 9.744 8–E6
CLAMP, A/C Compressor 9.242 8–C24
CLAMP, A/C Vacuum and Temperature . 9.281 8–D7
CLIP, A/C Compressor 9.242 8–C24
CLIP, A/C Vacuum and Temperature ... 9.281 8–D7
CLIP, Driver Information Display 9.768 8–E10
CLIP, Instrument Cluster 9.744 8–E6
CLIP, Rear Window Defogger 9.778 8–E11
CLUSTER, Instrument Panel Gage 9.735 8–D25
CLUTCH KIT, A/C Compressor Clutch .. 9.188 8–C16
CLUTCH, A/C Compressor Clutch 9.188 8–C16
COIL, A/C Compressor Clutch Actuating 9.186 8–C15
COMPRESSOR, A/C Compressor 9.170 8–C9
CONDENSER, A/C Condenser 9.190 8–C16
CONNECTOR, A/C Compressor (Internal Parts) 9.172 8–C13
CONNECTOR, A/C Compressor Clutch Actuating 9.186 8–C15
CONNECTOR, A/C Compressor 9.170 8–C9

CONNECTOR, A/C Control 9.280 8–D5
CONNECTOR, A/C Electric Control 9.275 8–C27
CONNECTOR, A/C Electrical 9.277 8–D3
CONNECTOR, A/C Evaporator Blower . 9.215 8–C18
CONNECTOR, A/C Evaporator 9.210 8–C17
CONNECTOR, A/C Wiring 9.276 8–D2
CONNECTOR, Accessory Switch (Multi–Function) 9.764 8–E9
CONNECTOR, Air Distributor 9.786 8–E12
CONNECTOR, Ambient Outside Air Temperature 9.770 8–E10
CONNECTOR, Cigarette Lighter 9.709 8–D25
CONNECTOR, Driver Information Display 9.768 8–E10
CONNECTOR, Heater and A/C Control . 9.273 8–C25
CONNECTOR, Instrument Cluster Warning 9.765 8–E9
CONNECTOR, Instrument Panel Gage . 9.735 8–D25
CONNECTOR, Radio and Speaker 9.656 8–D20
CONNECTOR, Radio Antenna 9.647 8–D11
CONNECTOR, Radio Receiver 9.650 8–D14
CONNECTOR, Rear Window Defogger . 9.778 8–E11
CONNECTOR, Tachometer 9.750 8–E8
CONTROL, Heater and A/C Control 9.273 8–C25
CONTROL, Radio Receiver 9.650 8–D14
CORE, A/C Compressor 9.177 8–C14
COUPLING, Air Distributor 9.786 8–E12
COVER, Air Distributor 9.786 8–E12
CYLINDER, A/C Compressor 9.170 8–C9

D

DEFLECTOR, Air Outlet 9.264 8–C25
DIAL KIT, A/C Control 9.279 8–D4
DIAL PKG, A/C Control 9.279 8–D4
DIAL, A/C Control 9.279 8–D4
DISPLAY, Driver Information Display ... 9.768 8–E10
DUCT, A/C Electric Control 9.275 8–C27
DUCT, Air Distributor 9.262 8–C24
DUCT, Air Distributor 9.786 8–E12
DUCT, Side Window Defroster 9.780 8–E11

E

ESCUTCHEON, Radio Receiver 9.650 8–D14
EVAPORATOR, A/C Evaporator 9.210 8–C17

F

FILTER, A/C Control 9.279 8–D4
FILTER, A/C Evaporator 9.210 8–C17
FILTER, A/C Refrigerant 9.195 8–C16
FILTER, Instrument Cluster 9.748 8–E7
FILTER, Speedometer 9.761 8–E8
FILTER, Tachometer 9.750 8–E8
FINIAL, Radio Antenna 9.647 8–D11
FITTING, A/C Compressor 9.226 8–C23

G

GASKET KIT, A/C Compressor Pressure Relief 9.178 8–C15
GASKET, A/C Evaporator Blower 9.216 8–C22
GASKET, A/C Evaporator 9.211 8–C17
GASKET, Air Duct 9.782 8–E12
GASKET, Instrument Cluster 9.744 8–E6
GASKET, Radio Auxiliary Speakers 9.665 8–D22
GRILLE, A/C Electric Control 9.275 8–C27
GRILLE, Air Outlet 9.264 8–C25
GRILLE, Radio Auxiliary Speakers 9.665 8–D22
GRILLE, Radio Receiver 9.650 8–D14
GRILLE, Radio Speaker 9.655 8–D17
GRILLE, Side Window Defroster 9.780 8–E11
GRILLE, Windshield Defroster 9.779 8–E11
GROMMET, A/C Compressor 9.242 8–C24

H

HARNESS, A/C Vacuum and Temperature 9.281 8–D7
HARNESS, A/C Wiring 9.276 8–D2
HARNESS, Radio and Speaker 9.656 8–D20
HARNESS, Tachometer 9.750 8–E8
HEATER, Cigarette Lighter 9.709 8–D25
HOSE ASM, A/C Compressor 9.226 8–C23
HOSE, A/C Electric Control 9.275 8–C27
HOSE, A/C Refrigerant (All Metal) 9.220 8–C22
HOSE, A/C Refrigerant (Metal and Rubber Sections) 9.225 8–C23
HOSE, A/C Vacuum and Temperature .. 9.281 8–D7
HOUSING, Cigarette Lighter 9.709 8–D25
HOUSING, Engine Vacuum (Fuel Economy) 9.755 8–E8
HOUSING, Instrument Cluster Warning . 9.765 8–E9
HOUSING, Radio Auxiliary Speakers ... 9.665 8–D22
HOUSING, Rear Compartment Lamp .. 9.988 8–E13

I

IMPELLER, A/C Evaporator Blower 9.216 8–C22
INLET, Air Duct 9.782 8–E12
INSULATOR, Air Distributor 9.262 8–C24
INSULATOR, Air Distributor 9.786 8–E12
INSULATOR, Heater and A/C Control .. 9.273 8–C25
INSULATOR, Radio Antenna 9.647 8–D11
INSULATOR, Radio Auxiliary Speakers . 9.665 8–D22
INSULATOR, Radio Mounting 9.667 8–D24
INSULATOR, Side Window Defroster ... 9.780 8–E11

K

KEY, A/C Compressor Clutch 9.188 8–C16
KNOB KIT, Radio Control 9.649 8–D12

KNOB, A/C Control 9.278 8-D4
KNOB, A/C Electric Control 9.275 8-C27
KNOB, Radio Control 9.649 8-D12
KNOB, Rear Window Defogger 9.778 8-E11

L

LAMP, A/C Control 9.279 8-D4
LAMP, A/C Wiring 9.276 8-D2
LAMP, Instrument Cluster Warning 9.765 8-E9
LAMP, Rear Compartment Lamp 9.988 8-E13
LENS, Instrument Cluster 9.748 8-E7
LEVER, Air Distributor 9.786 8-E12
LIGHTER, Cigarette Lighter 9.709 8-D25
LIGHTPIPE, Radio Tuner 9.652 8-D17
LINK, Air Distributor 9.786 8-E12

M

MICROPHONE, Radio Receiver 9.650 8-D14
MODULE, A/C Electric Control 9.275 8-C27
MODULE, Air Conditioner, (Complete) . 9.169 8-C9
MOTOR, A/C Evaporator Blower 9.215 8-C18
MOTOR, Speedometer 9.761 8-E8
MUFFLER, A/C Electric Control 9.275 8-C27

N

NUT, A/C Evaporator 9.211 8-C17
NUT, Radio Antenna 9.647 8-D11
NUT, Radio Auxiliary Speakers 9.665 8-D22
NUT, Radio Control 9.649 8-D12
NUT, Radio Mounting 9.667 8-D24
NUT, Speed Indicator 9.762 8-E8

O

ODOMETER, Speedometer 9.761 8-E8
ORIFICE, A/C Expansion Refrigerant ... 9.213 8-C18
OUTLET, Air Distributor 9.262 8-C24
OUTLET, Air Distributor 9.786 8-E12
OUTLET, Air Outlet 9.264 8-C25

P

PIN, A/C Compressor Mounting 9.171 8-C13
PIPE, Instrument Cluster 9.748 8-E7
PLATE, A/C Evaporator Blower 9.216 8-C22
PLATE, A/C Evaporator 9.211 8-C17
PLATE, A/C Wiring 9.276 8-D2
PLATE, Air Distributor 9.786 8-E12
PLATE, Instrument Cluster 9.743 8-E6
PLATE, Radio Antenna 9.647 8-D11
PLATE, Radio Auxiliary Speakers 9.665 8-D22
PLATE, Radio Speaker 9.655 8-D17
PLUG, Instrument Cluster Warning 9.765 8-E9
PLUG, Instrument Cluster 9.744 8-E6
PROGRAMMER, A/C Electric Control .. 9.275 8-C27
PULLEY, A/C Compressor Drive/Idler ... 9.180 8-C15
PUSHBUTTON, Radio Control 9.649 8-D12
PUSHBUTTON, Radio Tuner 9.652 8-D17

R

RADIO, Radio Receiver 9.650 8-D14
RECEIVER, Radio Receiver 9.650 8-D14
REINFORCEMENT, Radio Auxiliary Speakers 9.665 8-D22
RELAY, A/C Electrical 9.277 8-D3
RELAY, Radio Antenna 9.647 8-D11
RELAY, Radio Receiver 9.650 8-D14
RELAY, Rear Window Defogger 9.778 8-E11
RESISTOR, A/C Evaporator Blower 9.215 8-C18
RETAINER, A/C Compressor (Internal Parts) 9.172 8-C13
RETAINER, Air Distributor 9.262 8-C24
RETAINER, Air Distributor 9.786 8-E12
RETAINER, Cigarette Lighter 9.709 8-D25
RETAINER, Driver Information Display .. 9.768 8-E10
RETAINER, Instrument Cluster 9.744 8-E6
RETAINER, Instrument Cluster 9.748 8-E7
RETAINER, Radio Mounting 9.667 8-D24
RETAINER, Side Window Defroster 9.780 8-E11
RING, A/C Compressor Clutch 9.188 8-C16
RING, A/C Compressor Pulley 9.181 8-C15
RING, A/C Compressor 9.175 8-C14

S

SEAL KIT, A/C Compressor 9.175 8-C14
SEAL KIT, A/C Refrigerant Lines 9.222 8-C22
SEAL, A/C Evaporator 9.211 8-C17
SEAL, A/C Refrigerant Lines 9.222 8-C22
SEAL, Air Distributor 9.262 8-C24
SEAL, Air Distributor 9.786 8-E12
SEAL, Air Duct 9.782 8-E12
SEAL, Air Outlet 9.260 8-C24
SEAL, Radio and Speaker 9.656 8-D20
SEAL, Radio Auxiliary Speakers 9.665 8-D22
SEAL, Side Window Defroster 9.780 8-E11
SENSOR, A/C Electric Control 9.275 8-C27
SENSOR, Ambient Outside Air Temperature 9.770 8-E10
SHAFT, Air Distributor 9.786 8-E12
SHIELD, Radio Static Suppression 9.663 8-D22
SHIELD, Rear Compartment Lamp 9.988 8-E13
SHIM KIT, A/C Compressor Clutch 9.188 8-C16
SOCKET, A/C Control 9.279 8-D4
SOCKET, A/C Wiring 9.276 8-D2
SOCKET, Instrument Cluster 9.744 8-E6
SOCKET, Rear Compartment Lamp 9.988 8-E13
SOLENOID, A/C Electric Control 9.275 8-C27

SPACER, Radio Control 9.649 8–D12
SPACER, Speedometer 9.761 8–E8
SPEAKER, Radio Auxiliary Speakers ... 9.665 8–D22
SPEAKER, Radio Receiver 9.650 8–D14
SPLITTER, Radio Antenna 9.647 8–D11
SPRING, A/C Control 9.279 8–D4
SPRING, A/C Electric Control 9.275 8–C27
SPRING, Rear Window Defogger 9.778 8–E11
STRAP, A/C Compressor 9.242 8–C24
STRAP, Air Distributor 9.786 8–E12
STRAP, Radio Antenna 9.647 8–D11
STRAP, Radio Static Suppression 9.663 8–D22
STUD, A/C Evaporator 9.211 8–C17
SWITCH PLATE, Instrument Cluster 9.744 8–E6
SWITCH, A/C Compressor (Internal Parts) 9.172 8–C13
SWITCH, A/C Electric Control 9.275 8–C27
SWITCH, Driver Information Display ... 9.768 8–E10
SWITCH, Instrument Cluster 9.744 8–E6
SWITCH, Rear Window Defogger 9.778 8–E11

T

TANK, A/C Vacuum and Temperature .. 9.281 8–D7
TAPE, Radio and Speaker 9.656 8–D20
TAPE, Radio Mounting 9.667 8–D24
TELLTALE, Instrument Cluster Warning . 9.765 8–E9
TERMINAL, A/C Evaporator Blower 9.215 8–C18
TUBE, A/C Blower Motor Cooling 9.218 8–C22
TUBE, A/C Refrigerant (All Metal) 9.220 8–C22

V

VALVE, A/C Compressor (Internal Parts) 9.172 8–C13
VALVE, A/C Compressor 9.177 8–C14
VALVE, A/C Control 9.280 8–D5
VALVE, Air Distributor 9.786 8–E12
VALVE, Air Inlet 9.784 8–E12
VALVE, Heater Water Temperature Control 9.795 8–E13
VALVE, Windshield Defroster 9.779 8–E11

W

WASHER KIT, A/C Compressor 9.170 8–C9
WASHER, A/C Condenser 9.190 8–C16
WASHER, Instrument Cluster Warning . 9.765 8–E9
WIRE, Radio and Speaker 9.656 8–D20
WIRE, Rear Window Defogger 9.778 8–E11

CHART INDEX

GROUP 9 GRID

ILLUS INDEX (GRP 9) 8–C8
A.C. COMPRESSORS 8–C10
A.C. EVAP & BLOWER MODULE 8–C19
ELECTRIC ANTENNA 8–D8
INSTRUMENT CLUSTER 8–D27

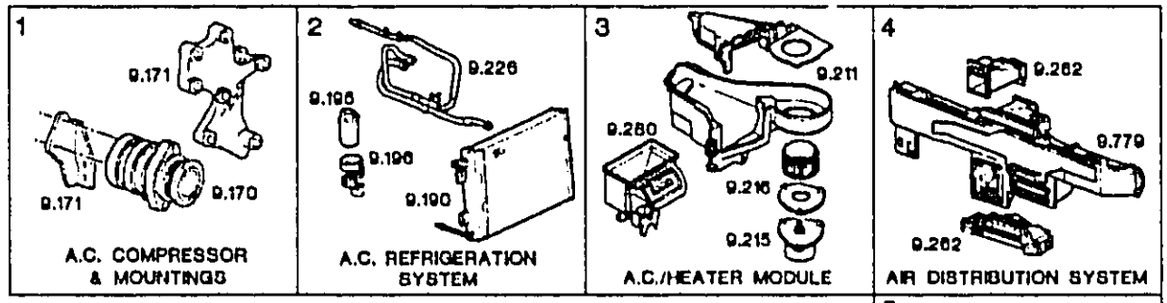

GROUP 9.000

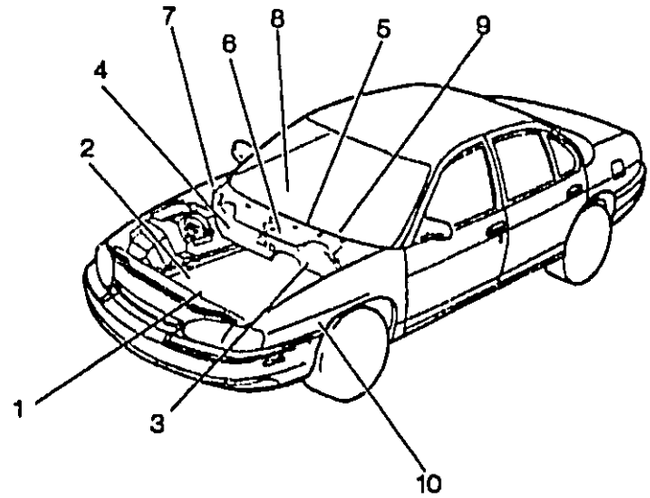

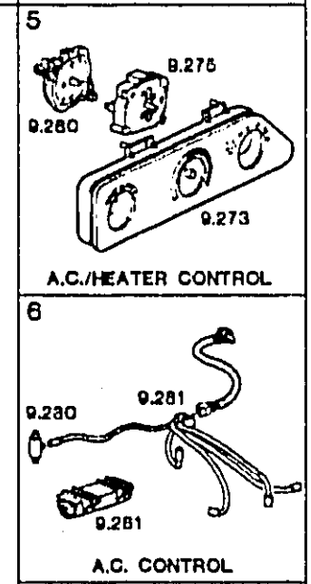

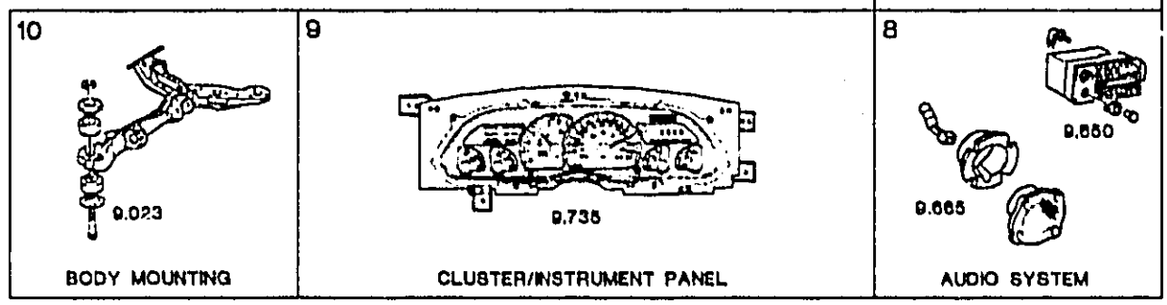

© 2000 GENERAL MOTORS SERVICE PARTS OPERATIONS–CHEVROLET–14Y

9.169 MODULE, Air Conditioner, (Complete)

NOTE: FOR 1986–1991 USAGE REFER TO HEATER MODULE CHART GRP 8.845

NOTE: FOR 1986–1991 USAGE REFER TO AIR CONDITIONING MODULE CHART GRP 9.169

92–93	Y 5.7J (LT5)	52459611	1		**MODULE**, A/C EVPR & BLO	

9.170 COMPRESSOR – CONNECTOR – CYLINDER – WASHER KIT, A/C Compressor

NOTE: FOR 1986–1991 USAGE REFER TO AIR CONDITIONING COMPRESSOR CHART GRP 9.170

84	Y	1134346	1	434.54	**COMPRESSOR**, A/C (R4 W/CLUTCH (R134A RETR FIT) (CONTAINS SEAL WASH R KIT) (AC–DELCO #15–201[illegible])	8–I24,1
85–87	Y	1134351	1	434.54	**COMPRESSOR**, A/C (R4 W/CLUTCH) (AC–DELCO #15–20227)	8–I25,1
86–87	Y FOR MOD APPL & POA SEE COMPRESSOR CHT ..	1134351	1	434.54	**COMPRESSOR**, A/C (AC–DELCO #15–20227)	8–I25,1
88–91	Y 5.7–8 (L98)	10243781	1	799.86	**COMPRESSOR**, A/C (W/O CLU) (USE W/HFC–134A REFRIGERANT) (IS NECESARY TO TRFER OLD CMPR MANIF ONTO NEW CMPR PRIOR TO INSTAL) (AC–DELCO #15–2913)	8–I20,1
90–95	Y 5.7J (LT5)	10243783	1	799.86	**COMPRESSOR**, A/C (W/O CLU) (USE W/R–134A) (AC–DELCO #15–2914)	8–I18,1
92–93	Y 5.7J (LT5)	10157911	1	949.20	**COMPRESSOR**, A/C (W/O CLU) (USE W/R12 REFRIGERANT) (AC–DELCO #15–2684)	8–I18,1
92–95	Y 5.7P (LT1)	10243781	1	799.86	**COMPRESSOR**, A/C (W/O CLU) (USE W/HFC–134A REFRIGERANT) (AC–DELCO #15–2913)	8–I20,1
92–93	Y 5.7P (LT1)	10243782	1	799.86	**COMPRESSOR**, A/C (W/O CLU) (USE W/R12 REFRIGERANT) (AC–DELCO #15–2893)	8–I20,1
96	Y	10243781	1	799.86	**COMPRESSOR**, A/C (W/O CLU) (USE W/HFC–134A REFRIGERANT) (AC–DELCO #15–2913)	8–I20,1
93–94	Y	12102748	1	23.24	**CONNECTOR**, SEN–A/C REFRIG PRESS (BLACK) (3–WAY F) (W/LEADS) (02.535) (AC–DELCO #PT375)	
94–95	Y	12085535	1	17.46	**CONNECTOR**, SEN–A/C REFRIG TEMP (2–WAY F) (W/LEADS) (HAS INDEX TAB @ OUTER EDGE OF CAVITY B) (02.535) (AC–DELCO #PT146)	
84–85	Y	2724400	1	379.74	**CYLINDER**, A/C CMPR (W/SHF) (RADIAL) (AC–DELCO #2724400)	
84–86	Y	9956685	1	12.84	**WASHER KIT** (2 THRUST & 1 BELLEVILLE) (AC–DELCO #15–2104)	

© 2000 GENERAL MOTORS SERVICE PARTS OPERATIONS–CHEVROLET–14Y

1986 AIR CONDITIONING COMPRESSORS

PRODUCTION	VIN DIV. CODE	USAGE	COL. NO.
01131616	1	Y	1

GROUP	DESCRIPTION	QTY	1	2	3	4	5
9.170	COMPRESSOR(PRODUCTION)	1	1131616	—	—	—	—
9.170	COMPRESSOR(LESS PULLEY)	1	1134326	—	—	—	—
9.170	COMPRESSOR(SERVICE)	1	2724586	—	—	—	—
9.172	BEARING,FRT MAIN	1	DISCON	—	—	—	—
9.181	BEARING,PULLEY	1	6559469	—	—	—	—
9.188	CLUTCH,DR ASM	1	6580056	—	—	—	—
9.186	COIL,W/HSG	1	6551997	—	—	—	—
9.174	HEAD,W/BRG FRT	1	3091989	—	—	—	—
9.188	KEY,CLU HUB	1	6555320	—	—	—	—
9.181	NUT,DR SHAFT(NON-FLG TYPE)	1	DISCON	—	—	—	—
9.178	O-RING HPRV	1	52452548	—	—	—	—
9.170	O/RING KIT,CMPR	1	DISCON	—	—	—	—
9.172	O/RING,CYL TO SHELL	2	DISCON	—	—	—	—
9.172	O/RING KIT,PRESS SW	1	2724656	—	—	—	—
9.172	PLATE,VLV	4	6552643	—	—	—	—
9.180	PULLEY,W/ROTOR & BRG(5.0 DIA)	1	6580044	—	—	—	—
9.181	RING,PULLEY BRG TO FRT HEAD	1	6555329	—	—	—	—
9.175	RING,SEAL SEAT RET	1	DISCON	—	—	—	—
9.172	RING,VLV PLT	4	6556589	—	—	—	—
8.900	SCREW,FRT HEAD	4	9424069	—	—	—	—
9.170	SEAL KIT,SHAFT	1	2724319	—	—	—	—
9.172	SEAL,FRT HD TO CYL	1	DISCON	—	—	—	—
9.226	SEAL,SUC/DISCHARGE PORTS	2	2724674	—	—	—	—
9.170	SHELL,COMPR	1	2724158	—	—	—	—
9.178	VALVE,PRESS RLF	1	6552743	—	—	—	—
9.170	WASHER,(2 THRUST;1 BELLEVILLE)	1	9956685	—	—	—	—

1987 AIR CONDITIONING COMPRESSORS

PRODUCTION	VIN DIV. CODE	USAGE	COL. NO.
01131616	1	Y	1

GROUP	DESCRIPTION	QTY	1	2	3	4	5
9.170	COMPRESSOR(PRODUCTION)	1	1131616	—	—	—	—
9.170	COMPRESSOR(LESS PULLEY)	1	1134326	—	—	—	—
9.170	COMPRESSOR(SERVICE)	1	2724586	—	—	—	—
9.172	BEARING,FRT MAIN	1	DISCON	—	—	—	—
9.181	BEARING,PULLEY	1	6559469	—	—	—	—
9.188	CLUTCH,DR ASM	1	6580056	—	—	—	—
9.186	COIL,W/HSG	1	6551997	—	—	—	—
9.174	HEAD,W/BRG FRT	1	3091989	—	—	—	—
9.188	KEY,CLU HUB	1	6555320	—	—	—	—
9.181	NUT,DR SHAFT(NON-FLG TYPE)	1	DISCON	—	—	—	—
9.178	O-RING HPRV	1	52450548	—	—	—	—
9.170	O/RING KIT,CMPR	1	DISCON	—	—	—	—
9.172	O/RING,CYL TO SHELL	2	DISCON	—	—	—	—
9.172	O/RING KIT,PRESS SW	1	2724656	—	—	—	—
9.172	PLATE,VLV	4	6552643	—	—	—	—
9.180	PULLEY,W/ROTOR & BRG(5.0 DIA)	1	6580044	—	—	—	—
9.181	RING,PULLEY BRG TO FRT HEAD	1	6555329	—	—	—	—
9.175	RING,SEAL SEAT RET	1	DISCON	—	—	—	—
9.172	RING,VLV PLT	4	6556589	—	—	—	—
8.900	SCREW,FRT HEAD	4	9424069	—	—	—	—
9.170	SEAL KIT,SHAFT	1	2724319	—	—	—	—
9.172	SEAL,FRT HD TO CYL	1	DISCON	—	—	—	—
9.226	SEAL,SUC/DISCHARGE PORTS	2	2724674	—	—	—	—
9.170	SHELL,COMPR	1	2724158	—	—	—	—
9.178	VALVE,PRESS RLF	1	6552743	—	—	—	—
9.170	WASHER,(2 THRUST;1 BELLEVILLE)	1	9956685	—	—	—	—

© 2000 GENERAL MOTORS SERVICE PARTS OPERATIONS–CHEVROLET–14Y

1988 AIR CONDITIONING COMPRESSORS

PRODUCTION	VIN DIV. CODE	USAGE	COL. NO.
10077278	1	Y(5.7-8)	1

GROUP	DESCRIPTION	QTY	1	2	3	4	5
9.170	COMPRESSOR(PRODUCTION)	1	10077278	—	—	—	—
9.170	COMPRESSOR(LESS CLUTCH)(SEE NOTE)	1	10158032	—	—	—	—
9.188	BOLT,CMPR CLUTCH	1	10135606	—	—	—	—
9.188	BOLT,CMPR MANIFOLD	1	10135611	—	—	—	—
9.186	CLUTCH,MAGNETIC	1	10135602	—	—	—	—
9.186	COIL,MAGNETIC CLUTCH	1	10135603	—	—	—	—
9.170	COLLAR,SHAFT	1	10135612	—	—	—	—
9.170	GASKET KIT	1	10135616	—	—	—	—
9.186	HUB,MAGNETIC CLUTCH	1	10135605	—	—	—	—
9.186	KIT,MAGNETIC CLUTCH OVERHAUL	1	10135609	—	—	—	—
9.170	MANIFOLD	1	10158033	—	—	—	—
9.180	PULLEY,MAGNETIC CLUTCH	1	DISCON	—	—	—	—
9.170	RING,SNAP	1	10135615	—	—	—	—
9.170	SEAL,SHAFT	1	10135610	—	—	—	—

NOTE: USE W/R12 REFRIGERANT

1989 AIR CONDITIONING COMPRESSORS

PRODUCTION	VIN DIV. CODE	USAGE	COL. NO.
10077278	1	Y(5.7-8)	1

GROUP	DESCRIPTION	QTY	1	2	3	4	5
9.170	COMPRESSOR(PRODUCTION)	1	10077278	—	—	—	—
9.170	COMPRESSOR(LESS CLUTCH)(SEE NOTE)	1	10158032	—	—	—	—
9.188	BOLT,CMPR CLUTCH	1	10135606	—	—	—	—
9.188	BOLT,CMPR MANIFOLD	1	10135611	—	—	—	—
9.186	CLUTCH,MAGNETIC	1	10135602	—	—	—	—
9.186	COIL,MAGNETIC CLUTCH	1	10135603	—	—	—	—
9.170	COLLAR,SHAFT	1	10135612	—	—	—	—
9.170	GASKET KIT	1	10135616	—	—	—	—
9.186	HUB,MAGNETIC CLUTCH	1	10135605	—	—	—	—
9.186	KIT,MAGNETIC CLUTCH OVERHAUL	1	10135609	—	—	—	—
9.170	MANIFOLD	1	10158033	—	—	—	—
9.180	PULLEY,MAGNETIC CLUTCH	1	DISCON	—	—	—	—
9.170	RING,SNAP	1	10135615	—	—	—	—
9.170	SEAL,SHAFT	1	10135610	—	—	—	—
9.174	SEAL KIT,A/C COM PORT(O-RING)	4	02724674	—	—	—	—

NOTE: USE W/R12 REFRIGERANT

© 2000 GENERAL MOTORS SERVICE PARTS OPERATIONS–CHEVROLET–14Y

1990 AIR CONDITIONING COMPRESSORS

PRODUCTION	VIN DIV.	CODE	USAGE	COL. NO.
10090565	1	Y(5.7J)		1
10135688	1	Y(5.7-8)		2

GROUP	DESCRIPTION	QTY	1	2	3	4	5
9.170	COMPRESSOR(PRODUCTION)	1	10090565	10135688	—	—	—
9.170	COMPRESSOR(LESS CLUTCH)(SEE NOTE)	1	10158038	10158032	—	—	—
9.188	BOLT,CMPR CLUTCH	1	10135606	10135606	—	—	—
9.175	BOLT,CMPR HD	AR	10158041	—	—	—	—
9.188	BOLT,CMPR MANIFOLD	1	10135611	10135611	—	—	—
9.188	CLAMP,A/C CMPR MAGNETIC CLU	AR	10135608	10135608	—	—	—
9.188	CLUTCH,MAGNETIC	1	10158044	10158036	—	—	—
9.186	COIL,MAGNETIC CLUTCH	1	10158043	10158035	—	—	—
9.170	COLLAR,SHAFT	1	10135612	10135612	—	—	—
9.276	CONNECTOR,CMPR COIL LEAD	1	—	12052648	—	—	—
9.178	GASKET KIT	1	10158039	10135616	—	—	—
9.186	HUB,MAGNETIC CLUTCH	1	10135605	10135605	—	—	—
9.186	KIT,MAGNETIC CLUTCH OVERHAUL	1	10135609	10135609	—	—	—
9.170	MANIFOLD	1	10158040	10158033	—	—	—
9.172	PIN,SHAFT ASM	1	94842777	94842777	—	—	—
9.180	PULLEY,MAGNETIC CLUTCH	1	10158042	DISCON	—	—	—
9.170	RING,SNAP	1	10135615	10135615	—	—	—
9.170	SEAL,SHAFT	1	10135610	10135610	—	—	—
9.226	SEAL,SUC/DISCHARGE PORTS	AR	2724674	2724674	—	—	—

NOTE: USE W/R12 REFRIGERANT

1991 AIR CONDITIONING COMPRESSORS

PRODUCTION	VIN DIV.	CODE	USAGE	COL. NO.
10135688	1	Y(5.7-8)		1
10158100	1	Y(5.7J)		2

GROUP	DESCRIPTION	QTY	1	2	3	4	5
9.170	COMPRESSOR(PRODUCTION)	1	10135688	10158100	—	—	—
9.170	COMPRESSOR(LESS CLUTCH)(SEE NOTE)	1	10158032	10158038	—	—	—
9.188	BOLT,CMPR CLUTCH	1	10135606	10135606	—	—	—
9.175	BOLT,CMPR HD	1	—	10158041	—	—	—
9.188	BOLT,CMPR MANIFOLD	1	10135611	10135611	—	—	—
9.188	CLAMP,A/C CMPR MAGNETIC CLU	1	10135608	10135608	—	—	—
9.188	CLUTCH,MAGNETIC	1	10158036	10243785	—	—	—
9.186	COIL,MAGNETIC CLUTCH	1	10158035	10157969	—	—	—
9.170	COLLAR,SHAFT	1	10135612	10135612	—	—	—
9.276	CONNECTOR,CMPR COIL LEAD	1	10158034	12052648	—	—	—
9.170	GASKET KIT	1	10135616	10158039	—	—	—
9.186	HUB,MAGNETIC CLUTCH	1	10135605	10135605	—	—	—
9.186	KIT,MAGNETIC CLUTCH OVERHAUL	1	10135609	10135609	—	—	—
9.170	MANIFOLD	1	10158033	10158040	—	—	—
9.172	PIN,SHAFT ASM	1	94842777	94842777	—	—	—
9.180	PULLEY,MAGNETIC CLUTCH	1	DISCON	10158042	—	—	—
9.170	RING,SNAP	1	10135615	10135615	—	—	—
9.170	SEAL,SHAFT	1	10135610	10135610	—	—	—
9.226	SEAL,SUC/DISCHARGE PORTS	1	2724674	2724674	—	—	—

NOTE: USE W/R12 REFRIGERANT

9.171 BRACE – BRACKET – PIN, A/C Compressor Mounting

88–91	Y 5.7–8 (L98)	10055753	1	9.20	BRACE, A/C CMPR (RR)	8–I26,9
92–95	Y 5.7P (LT1)	10128423	1	9.20	BRACE, A/C CMPR	8–I27,6
96	Y 5.7P (LT1), 5.7–5 (LT4)	10128423	1	9.20	BRACE, A/C CMPR	8–I27,6
89–91	Y 5.7–8 (L98)	10105224	1	12.20	BRACE, A/C CMPR BRKT (FRT UPR)	8–I26,5
89–91	Y 5.7–8 (L98)	10105223	1	DISCON	BRACE, A/C CMPR BRKT LWR	
84	Y	14055113	1	DISCON	BRACE, A/C CMPR RR (TO EXH MANIF)	
85–87	Y	14084315	1	DISCON	BRACE, A/C CMPR RR LWR	
92–95	Y 5.7P (LT1)	10105400	1	6.55	BRACE, A/C CMPR RR LWR	8–I27,8
96	Y 5.7P (LT1), 5.7–5 (LT4)	10105400	1	6.55	BRACE, A/C CMPR RR LWR	8–I27,8
[illegible]–87	Y	14084340	1	33.53	BRACKET, A/C CMPR	8–I25,2
[illegible]–91	Y 5.7–8 (L98)	10105236	1	49.02	BRACKET, A/C CMPR	8–I26,1
84	Y	14055137	1	39.62	BRACKET, CMPR	8–I24,3
92–95	Y 5.7P (LT1)	12550052	1	77.01	BRACKET, GEN & A/C CMPR & P/S PUMP (02.277)	8–I27,1
93	Y 5.7J (LT5)	12550052	1	77.01	BRACKET, GEN & A/C CMPR & P/S PUMP (02.277)	8–I27,1
96	Y	12550052	1	77.01	BRACKET, GEN & A/C CMPR & P/S PUMP (02.277)	8–I27,1
92–93	Y 5.7P (LT1), 5.7J (LT5)	94842777	1	.85	PIN, A/C CMPR FRT HD LOC	8–I18,1

9.172 CONNECTOR – RETAINER – SWITCH – VALVE, A/C Compressor (Internal Parts)

NOTE: FOR 1986–1991 USAGE REFER TO AIR CONDITIONING COMPRESSOR CHART GRP 9.170

90–92	Y	12102485	1	10.29	CONNECTOR, A/C SOL (6–WAY F) (W/LEADS) (09.276) (AC–DELCO #PT276)
91	Y 5.7–8 (L98)	12101901	1	16.87	CONNECTOR, SW–A/C CMPR HIGH PRESS CUTOFF (2–WAY F) (W/LEADS) (02.535) (AC–DELCO #PT172)
91–94	Y 5.7J (LT5)	12101901	1	16.87	CONNECTOR, SW–A/C CMPR HIGH PRESS CUTOFF (2–WAY F) (W/LEADS) (02.535) (AC–DELCO #PT172)
96	Y	12102748	1	23.24	CONNECTOR, SW–A/C CMPR REFRIG PRESS (BLACK) (3–WAY F) (W/LEADS) (02.535) (AC–DELCO #PT375)
85–89	Y	12085503	1	16.87	CONNECTOR, SW–A/C CYCLING SW (2–WAY F, LOW, W/LEADS) (02.535) (AC–DELCO #PT124)
90	Y 5.7J (LT5)	12101901	1	16.87	CONNECTOR, SW–A/C CYCLING SW (2–WAY F, W/LEADS) (02.535) (AC–DELCO #PT172)
90–91	Y 5.7–8 (L98)	12101901	1	16.87	CONNECTOR, SW–A/C CYCLING SW (2–WAY F) (W/LEADS) (02.535) (AC–DELCO #PT172)
91–96	Y	12085503	1	16.87	CONNECTOR, SW–A/C CYCLING SW (BLACK) (2–WAY F) (W/LEADS) (02.535) (STANDARD) (AC–DELCO #PT124)
93	Y 5.7P (LT1)	12117385	1	9.33	CONNECTOR, SW–A/C CYCLING SW (TYPE 7 FEM) (1–WAY F) (W/LEADS) (03.682) (AC–DELCO #PT517)
84	Y	6556408	AR	2.98	RETAINER, FAN SW (AC–DELCO #15–253)

© 2000 GENERAL MOTORS SERVICE PARTS OPERATIONS–CHEVROLET–14Y

9.172 CONNECTOR – RETAINER – SWITCH – VALVE, A/C Compressor (Internal Parts) (Con't)

85–86	Y	3041596	1	34.44	SWITCH, A/C CMPR LOW PRESS CUTOFF (W/O RING) (09.275) (AC–DELCO #15–1122)	
84–00	Y	10007057	1	34.44	SWITCH, A/C CYCLING (09.275) (AC–DELCO #15–2352)	8–J2,14
91	Y SOFT RIDE SUSP (FE1), HVY DUTY SUSP (FE7)	10007057	1	34.44	SWITCH, A/C CYCLING (09.275) (AC–DELCO #15–2352)	8–J2,14
92–93	Y 5.7J (LT5)	10007057	1	34.44	SWITCH, A/C CYCLING (09.275) (AC–DELCO #15–2352)	8–J2,14
94–95	Y 5.7J (LT5)	10223908	1	22.44	SWITCH, A/C CYCLING (09.275) (AC–DELCO #15–2877)	8–J10,19
84–86	Y	6552643	4	22.44	VALVE, A/C CMPR CYL (AC–DELCO #15–256)	
84–86	Y	6552743	1	22.44	VALVE, A/C CMPR PRESS RLF (09.178) (AC–DELCO #15–5415)	

9.173 BOLT, A/C Compressor Mounting

88–91	Y 5.7–8 (L98)	10105215	3	1.17	BOLT, A/C CMPR (M8X1.25X95)	8–I26,10
89–91	Y 5.7–8 (L98)	10105293	1	1.52	BOLT, A/C CMPR (M8X1.25X115)	8–I26,8
92–95	Y 5.7P (LT1)	10105215	1	1.17	BOLT, A/C CMPR (POS #2) (M8X1.25X95)	8–I26,10
93–95	Y 5.7J (LT5)	3522444	3	.63	BOLT, A/C CMPR (8X1.25X55, 22 THD, 18 OD, 9.8, PZOR, MACH) (01.840)	
96	Y 5.7P (LT1), 5.7–5 (LT4)	10105215	1	1.17	BOLT, A/C CMPR (POS #2) (M8X1.25X95)	8–I26,10
90–94	Y 5.7J (LT5)	14056165	6	5.15	BOLT, A/C CMPR ADJ (M10X1.5X33 6G) (08.900)	
88–90	Y	14084400	2	2.80	BOLT, A/C CMPR BRKT (HFH 3/8–16X2.50, 1.12 THD, 280M, .75 OD) (03.655)	8–I26,3
91	Y 5.7–8 (L98)	14084400	2	2.80	BOLT, A/C CMPR BRKT (HFH 3/8–16X2.50, 1.12 THD, 280M, .75 OD) (03.655)	8–I26,3

9.175 RING – SEAL KIT, A/C Compressor

NOTE: FOR 1986–1991 USAGE REFER TO AIR CONDITIONING COMPRESSOR CHART GRP 9.170

92–93	Y	10135615	1	2.06	RING, A/C CMPR SHF SEAL RET (09.170) (AC–DELCO #15–2555)	8–I16,17
84–86	Y	2724656	1	5.80	SEAL KIT, COMPR (O RING) (09.170) (AC–DELCO #15–2784)	
85–86	Y	2724319	1	20.84	SEAL KIT, A/C CMPR SHF (09.170) (AC–DELCO #15–2292)	
84	Y	6599114	1	25.40	SEAL KIT, SHF	

9.177 CAP – CORE – VALVE, A/C Compressor

84–86	Y	52451233	1	5.13	CAP, A/C REFRIG CHRG VLV (3/8–24)	8–J2,17
94–95	Y	52458768	1	.48	CAP, A/C REFRIG CHRG VLV (16.6MM I.S. DIA) (HIGH SIDE CHARGE PORT)	
94–95	Y	52471377	1	*.48	CAP, A/C REFRIG CHRG VLV (8MM X 1.0) (LOW SIDE SERVICE PORT)	

© 2000 GENERAL MOTORS SERVICE PARTS OPERATIONS–CHEVROLET–14Y

9.177 CAP – CORE – VALVE, A/C Ccmpressor (Con't)

84–86	Y	6551640	1	3.20	CAP, A/C REFRIG SERV VLV FTG (AC–DELCO #15–5234)	8–J2,5
84–88	Y	3041827	1	1.62	CORE, A/C REFRIG SERV VLV (W/O O–RING) (AC–DELCO #15–1119)	8–J2,5
94	Y	3041827	1	1.62	CORE, A/C REFRIG SERV VLV (W/O O–RING) (AC–DELCO #15–1119)	8–J2,5
94–95	Y 5.7P (LT1), 5.7J (LT5)	3041827	1	1.62	CORE, A/C REFRIG SERV VLV (W/O O–RING) (AC–DELCO #15–1119)	8–J2,5
96	Y	3041827	1	1.62	CORE, A/C REFRIG SERV VLV (W/O O–RING) (AC–DELCO #15–1119)	8–J2,5
92–93	Y	52456273	1	8.02	VALVE, A/C REFRIG SERV (OCTAGON–8 SIDED BASE) (AC–DELCO #15–5414)	
94–96	Y	52458184	1	8.02	VALVE, A/C REFRIG SERV (INCLS FITTING & SEAL) (AC–DELCO #15–5438)	

9.176 GASKET KIT, A/C Compressor Pressure Relief

NOTE: FOR 1986–1991 USAGE REFER TO AIR CONDITIONING COMPRESSOR CHART GRP 9.170

91–94	Y 5.7J (LT5)	10158039	1	92.50	GASKET KIT, A/C CMPR (AC–DELCO #15–2638)

9.180 PULLEY, A/C Compressor Drive/Idler

NOTE: FOR 1986–1991 USAGE REFER TO AIR CONDITIONING COMPRESSOR CHART GRP 9.170

84	Y	6580037	1	160.26	PULLEY, A/C CMPR (W/ROTOR & BRG) (AC–DELCO #15–20038)
85–86	Y	6580044	1	161.22	PULLEY, A/C CMPR (W/ROTOR & BRG) (AC–DELCO #15–4615)

9.181 BEARING – RING, A/C Compressor Pulley

NOTE: FOR 1986–1987 USAGE REFER TO AIR CONDITIONING COMPRESSOR CHART GRP 9.170

84–86	Y	6559469	1	32.06	BEARING, A/C CMPR PUL (09.188) (AC–DELCO #15–2802)
86–87	Y FOR MOD APPL & POA SEE COMPRESSOR CHT	6559469	1	32.06	BEARING, A/C CMPR PUL (09.188) (AC–DELCO #15–2802)
84	Y	6556734	1	3.20	RING, A/C CMPR PUL BRG RET (AC–DELCO #15–269)

9.186 CLUTCH – COIL – CONNECTOR, A/C Compressor Clutch Actuating

NOTE: FOR 1986–1991 USAGE REFER TO AIR CONDITIONING COMPRESSOR CHART GRP 9.170

84–86	Y	6551997	1	76.92	COIL, A/C CLU (W/HSG) (AC–DELCO #15–2307)
92–94	Y	12116958	1	20.24	CONNECTOR, COIL–A/C CLU (GRAY) (2–WAY F) (W/LEADS) (02.535) (AC–DELCO #PT419)
92–95	Y 5.7J (LT5)	12116958	1	20.24	CONNECTOR, COIL–A/C CLU (GRAY) (2–WAY F) (W/LEADS) (02.535) (AC–DELCO #PT419)
96	Y	12116958	1	20.24	CONNECTOR, COIL–A/C CLU (GRAY) (2–WAY F) (W/LEADS) (02.535) (AC–DELCO #PT419)

© 2000 GENERAL MOTORS SERVICE PARTS OPERATIONS–CHEVROLET–14Y

9.188 BOLT – CLUTCH – CLUTCH KIT – KEY – RING – SHIM KIT, A/C Compressor Clutch

NOTE: FOR 1986–1991 USAGE REFER TO AIR CONDITIONING COMPRESSOR CHART GRP 9.170

92–96	Y	10135606	1	1.90	BOLT, A/C CLU (HFH, M6X1X16, 14 THD, 14 OD, STL, NYLOC) (09.170)	8–I18,31
92–95	Y 5.7P (LT1)	10243784	1	320.56	CLUTCH KIT, A/C (AC–DELCO #15–4623)	8–I20,8
92–95	Y 5.7J (LT5)	10243785	1	359.02	CLUTCH KIT, A/C (AC–DELCO #15–4601)	8–I18,34
96	Y	10243784	1	320.56	CLUTCH KIT, A/C (AC–DELCO #15–4623)	8–I20,8
84–85	Y	6551838	1	51.28	CLUTCH, A/C (CLUTCH DRIVER) (AC–DELCO #15–2239)	
84–86	Y	6555320	1	3.20	KEY, A/C CLU (AC–DELCO #15–46)	
85–86	Y	6555329	1	3.20	RING, A/C CLU ROT BRG RET (AC–DELCO #15–4267)	
92–96	Y	10135609	1	12.84	SHIM KIT, A/C CLU (AC–DELCO #15–2546)	8–I16,29

9.190 CONDENSER – WASHER, A/C Condenser

84–87	Y	3056639	1	239.86	CONDENSER, A/C (AC–DELCO #15–6543)	8–J2,3
88	Y	3096179	1	213.20	CONDENSER, A/C (AC–DELCO #15–6591)	8–J4,7
89	Y 5.7–8 (L98), 4–SPD A/TRANS (MD8)	3056639	1	239.86	CONDENSER, A/C (AC–DELCO #15–6543)	8–J2,3
90–93	Y	52456459	1	213.20	CONDENSER, A/C (AC–DELCO #15–6688)	8–J4,7
94–96	Y	52463706	1	253.20	CONDENSER, A/C (AC–DELCO #15–6726)	8–J7,7
94	Y	14082779	1	.78	WASHER, A/C CNDSR FAN (FLAT WA) (04.461)	

9.195 ACCUMULATOR – FILTER, A/C Refrigerant

84–87	Y	2724797	1	93.20	ACCUMULATOR, A/C (AC–DELCO #15–1430)	8–J2,5
88–92	Y	2724802	1	93.20	ACCUMULATOR, A/C (DEHYDR) (AC–DELCO #15–1645)	8–J4,4
93	Y	2724681	1	106.54	ACCUMULATOR, A/C (AC–DELCO #15–1587)	8–J7,4
94–96	Y	2724830	1	93.20	ACCUMULATOR, A/C (AC–DELCO #15–1624)	8–J7,4
84–88	Y	52450767	1	35.26	FILTER, A/C (IN LINE LESS ORIFICE) (USED ON VEH W/PROD ORIFICE LOC IN EVAP) (08.800) (AC–DELCO #15–1491)	8–J2,22

9.196 BOLT – BRACKET, A/C Refrigerant

92–95	Y	1635219	2	*1.80	BOLT, A/C ACCUM BRKT (M6X1X30) (08.900)	
84	Y	14052397	1	DISCON	BRACKET, A/C ACCUM	
85–86	Y07	14091039	1	DISCON	BRACKET, A/C ACCUM	
86–87	Y67	14092716	1	DISCON	BRACKET, A/C ACCUM	
87	Y07 (EXC 1BL PERF HDLG PKG Z51, B2B SPORT HDLG PKG Z52)	14091039	1	DISCON	BRACKET, A/C ACCUM	

© 2000 GENERAL MOTORS SERVICE PARTS OPERATIONS–CHEVROLET–14Y

9.196 BOLT – BRACKET, A/C Refrigerant (Con't)

87	Y07 1BL (PERF HDLG PKG Z51), B2B (SPORT HDLG PKG Z52)	14092716	1	DISCON	BRACKET, A/C ACCUM	
88	Y A/C	10120043	1	DISCON	BRACKET, A/C ACCUM	
89	Y (5.7–8) A/C	10120043	1	DISCON	BRACKET, A/C ACCUM	
90–96	Y	10158061	1	14.88	BRACKET, A/C ACCUM	8–J4,5

9.210 CONNECTOR – CORE – EVAPORATOR – FILTER, A/C Evaporator

NOTE: FOR 1986–1991 USAGE REFER TO AIR CONDITIONING BLOWER CHART GRP 9.215

90–93	Y	12125665	1	28.96	CONNECTOR, HTR & A/C EVAP & BLO MDL (GRAY) (6–WAY F) (W/LEADS) (04.663)	
91	Y	12085486	1	51.51	CONNECTOR, HTR & A/C EVAP & BLO MDL (BLACK) (10–WAY F) (W/LEADS) (02.535) (AC–DELCO #PT108)	
91–94	Y	12101931	1	51.51	CONNECTOR, HTR & A/C EVAP & BLO MDL (4–WAY F, W/LEADS) (02.535) (AC–DELCO #PT203)	
92–94	Y	12101932	1	20.02	CONNECTOR, HTR & A/C EVAP & BLO MDL (2–WAY F, W/LEADS) (02.535) (AC–DELCO #PT204)	
84	Y	3052790	1	279.86	EVAPORATOR, A/C (W/CASE) (AC–DELCO #15–6386)	8–I5,10
85–86	Y	3057733	1	279.86	EVAPORATOR, A/C (W/CASE) (AC–DELCO #15–6515)	8–I5,10
92–93	Y 5.7P (LT1)	52452950	1	335.86	EVAPORATOR, A/C (W/CASE) (AC–DELCO #15–6660)	8–I5,10
92–93	Y 5.7J (LT5)	52452951	1	335.86	EVAPORATOR, A/C (W/CASE) (AC–DELCO #15–6648)	8–I7,4
94–95	Y 5.7P (LT1)	52463785	1	335.86	EVAPORATOR, A/C (W/CASE) (AC–DELCO #15–6792)	8–I10,1
94–95	Y 5.7J (LT5)	52463787	1	335.86	EVAPORATOR, A/C (W/CASE) (AC–DELCO #15–6793)	8–I8,4
96	Y	52463785	1	335.86	EVAPORATOR, A/C (W/CASE) (AC–DELCO #15–6792)	8–I10,1
84–88	Y	52450924	1	48.08	FILTER, A/C (IN LINE W/ORIFICE) (USED ON VEHICLES W/PROD ORIFICE LOCATED NEAR CONDENSER) (08.800) (AC–DELCO #15–1492)	8–J2,22
85–86	Y	3052786	1	13.42	FILTER, A/C EVPR AIR	8–I5,10
92–95	Y 5.7P (LT1)	3052786	1	13.42	FILTER, A/C EVPR AIR	8–I5,10
92–95	Y 5.7J (LT5)	3095748	1	13.42	FILTER, A/C EVPR AIR	8–I7,7
96	Y	3052786	1	13.42	FILTER, A/C EVPR AIR	8–I5,10

9.211 BOLT – BRACKET – CASE – GASKET – NUT – PLATE – SEAL – STUD, A/C Evaporator

NOTE: FOR 1986–1991 USAGE REFER TO HEATER MODULE CHART GRP 8.857
NOTE: FOR 1986–1991 USAGE REFER TO AIR CONDITIONING MODULE CHART GRP 9.169
NOTE: FOR 1986–1991 USAGE REFER TO AIR CONDITIONING BLOWER CHART GRP 9.215

84–96	Y	14069200	2	1.55	BOLT, A/C EVPR & BLO MDL (M6.5X1.69X40) (W/WA)	8–I5,21
84	Y	3052776	1	DISCON	BRACKET, EVAP INL SUPT	
92–95	Y 5.7J (LT5)	52450735	1	49.78	CASE, A/C EVPR LWR	8–I7,1
92–95	Y 5.7J (LT5)	52452599	1	36.32	CASE, A/C EVPR UPR	8–I7,2
85–86	Y	52457755	1	49.53	CASE, EVAP OTLT	8–I5,5
84–86	Y	3057960	1	DISCON	CASE, W/STUD, INLET	

© 2000 GENERAL MOTORS SERVICE PARTS OPERATIONS–CHEVROLET–14Y

9.211 BOLT – BRACKET – CASE – GASKET – NUT – PLATE – SEAL – STUD, A/C Evaporator (Con't)

84–86	Y	3052533	1	7.80	GASKET, HTR & A/C EVPR & BLO MDL	8–J13,1
94–95	Y 5.7J (LT5)	52453897	1	*.80	NUT, A/C EVPR CASE (09.214)	
84–96	Y	14046766	1	2.22	PLATE, A/C EVPR & BLO MDL STUD (09.262)	10–E8,42
84	Y	3022672	1	14.12	PLATE, EVAP CASE BACKUP	8–I5,9
84–86	Y	3039873	1	4.22	SEAL, (5.0" X 4.0" X .38")	8–I5,11
84–86	Y	3052755	1	9.70	SEAL, A/C EVPR	8–I5,11
92–95	Y 5.7P (LT1)	3052755	1	9.70	SEAL, A/C EVPR	8–I5,11
92–95	Y 5.7J (LT5)	3095717	1	7.17	SEAL, A/C EVPR	8–I7,6
96	Y	3052755	1	9.70	SEAL, A/C EVPR	8–I5,11
92–93	Y 5.7J (LT5)	3094134	1	.65	STUD, A/C EVPR & BLO MDL (08.854)	8–I7,12
94–96	Y	3094134	1	.65	STUD, A/C EVPR & BLO MDL (08.854)	8–I7,12

9.213 ORIFICE, A/C Expansion Refrigerant

NOTE: FOR 1986–1991 USAGE REFER TO AIR CONDITIONING BLOWER CHART GRP 9.215

84–86	Y	3033879	1	9.62	ORIFICE, A/C EVPR TUBE (AC–DELCO #15–5151)	8–I5,4
90–96	Y	3033879	1	9.62	ORIFICE, A/C EVPR TUBE (W/GASKET) (AC–DELCO #15–5151)	8–I5,4

9.215 CONNECTOR – MOTOR – RESISTOR – TERMINAL, A/C Evaporator Blower

NOTE: FOR 1986–1991 USAGE REFER TO AIR CONDITIONING BLOWER CHART GRP 9.215

NOTE: BLOWER MOTORS MAY BE REPLACED BY ONE THAT REQUIRES A PRESS–ON TYPE IMPELLER

NOTE: FOR ADDITIONAL INFORMATION, SEE BLOWER MOTOR AND IMPELLER APPLICATION CHARTS IN THE REFERENCE CATALOG (CODE 88R).

90–91	Y 5.7J (LT5), 5.7–8 (L98)	12101917	1	20.58	CONNECTOR, MOT–BLO (OVAL) (2–WAY F) (W/LEADS) (02.535) (AC–DELCO #PT189)	
90	Y 5.7J (LT5), 5.7–8 (L98)	12101931	1	51.51	CONNECTOR, MOT–BLO (4–WAY F, W/LEADS) (02.535) (AC–DELCO #PT203)	
92–96	Y	12101917	1	20.58	CONNECTOR, MOT–BLO (OVAL) (2–WAY F) (W/LEADS) (02.535) (AC–DELCO #PT189)	
93–96	Y	12126446	1	60.39	CONNECTOR, MOT–BLO (2–WAY F, W/LEADS & COVER) (02.535)	
93	Y 5.7P (LT1), 6–SPD M/TRANS (ML9), A/C MAN CONT (C60)	12102675	1	22.25	CONNECTOR, RES–BLO MOT (02.530) (AC–DELCO #PT342)	
96	Y	12102675	1	22.25	CONNECTOR, RES–BLO MOT (02.530) (AC–DELCO #PT342)	
84–86	Y	52469795	1	77.20	MOTOR, BLO (W/IMPLR) (PRESS–ON TYPE) (08.855) (AC–DELCO #15–8583)	
87–96	Y	52466080	1	93.20	MOTOR, BLO (W/IMPLR) (AC–DELCO #15–8547)	8–I5,14
84	Y	526897	1	9.62	RESISTOR, BLO MOT (09.275) (AC–DELCO #15–71968)	8–I5,3
85–96	Y A/C MAN CONT (C60)	14093106	1	11.58	RESISTOR, BLO MOT (09.275)	8–I5,3
84–85	Y	3033932	1	2.30	TERMINAL, BLO GRD (02.530)	8–I5,19

1986 AIR CONDITIONER EVAPORATOR & BLOWER MODULE ASMS

NOTE: A01 IMPELLERS MAYBE REPLACED BY A PRESS-ON TYPE IMPELLER THAT REQUIRES A NEW CORRESPONDING BLOWER MOTOR.
NOTE: A02 BLOWER MOTORS MAYBE REPLACED BY ONE THAT REQUIRES A PRESS-ON TYPE IMPELLER.
NOTE: A03 FOR HEATER DETAILS SEE HEATER ASSEMBLY CHARTS IN GROUP 8.845.

PRODUCTION	VIN DIV. CODE	USAGE	COL. NO.
03058613	1	Y W/A.C	1

GROUP	DESCRIPTION	QTY	1	2	3	4	5
9.215	MODULE, A/C EVAP & BLO	1	3058613	—	—	—	—
9.211	CASE,OTLT EVAP	1	3057710	—	—	—	—
9.211	CASE,W/STUD INLT	1	3057960	—	—	—	—
9.211	CLAMP,EVAP TUBE	1	3031728	—	—	—	—
8.965	CONNECTOR,B+	1	6288704	—	—	—	—
2.535	CONNECTOR,ELEC WRG REPAIR ENG CONT	1	12076260	—	—	—	—
8.965	CONNECTOR,GRD	1	8911256	—	—	—	—
9.210	CORE,EVAP	1	3057733	—	—	—	—
9.210	FILTER,WATER CORE	1	3052786	—	—	—	—
9.216	IMPELLER (BOLT ON)	1	52451060	—	—	—	—
9.215	MOTOR (BOLT ON)	1	22098837	—	—	—	—
9.213	ORIFICE,W/GSKT	1	3033879	—	—	—	—
8.977	SCREW,(M4.7 X 1.59 X 13ZP)	1	22506732	—	—	—	—
8.977	SCREW,HWH(M4.2X1.4X13)POR HILO	1	11508256	—	—	—	—
9.211	SEAL,EVAP CORE	1	3052755	—	—	—	—
9.211	SEAL,FOAM(15.0 X 4.0 X.38)	1	3039873	—	—	—	—
9.275	SWITCH,EVAP BLO LOW PRESS CYCLING CUTOFF	1	3041596	—	—	—	—
8.855	TERMINAL,BLO MTR GRD	1	3033932	—	—	—	—
9.218	TUBE,MOTOR COOLING	1	3053502	—	—	—	—

1987 AIR CONDITIONER EVAPORATOR & BLOWER MODULE ASMS

NOTE: A01 IMPELLERS MAYBE REPLACED BY A PRESS-ON TYPE IMPELLER THAT REQUIRES A NEW CORRESPONDING BLOWER MOTOR.
NOTE: A02 BLOWER MOTORS MAYBE REPLACED BY ONE THAT REQUIRES A PRESS-ON TYPE IMPELLER.
NOTE: A03 FOR HEATER DETAILS SEE HEATER ASSEMBLY CHARTS IN GROUP 8.845.

PRODUCTION	VIN DIV. CODE	USAGE	COL. NO.
03091144	1	Y W/A.C.(C60,68)	1

GROUP	DESCRIPTION	QTY	1	2	3	4	5
9.215	MODULE, A/C EVAP & BLO	1	3091144	—	—	—	—
9.211	CASE,OTLT EVAP	1	3057710	—	—	—	—
8.854	CASE,W/STUD	1	3094162	—	—	—	—
9.211	CLAMP,EVAP TUBE	1	3031728	—	—	—	—
9.210	CORE,EVAP	1	3057733	—	—	—	—
9.210	FILTER,WATER CORE	1	3052786	—	—	—	—
9.216	IMPELLER (BOLT ON)	1	52451060	—	—	—	—
9.215	MOTOR (BOLT ON)	1	22098837	—	—	—	—
9.213	ORIFICE,W/GSKT	1	3033879	—	—	—	—
8.977	SCREW,HWH TAP(M6.3X1.81X30)12.50D AB PT PZOR	6	11508905	—	—	—	—
8.977	SCREW,HWH(M4.2X1.4X13)POR HILO	6	11508256	—	—	—	—
9.211	SEAL,EVAP CORE	1	3052755	—	—	—	—
9.211	SEAL,FOAM(15.0 X 4.0 X.38)	2	3039873	—	—	—	—
9.275	SWITCH,EVAP BLO LOW PRESS CYCLING CUTOFF	1	3041596	—	—	—	—
9.218	TUBE,MOTOR COOLING	1	3053502	—	—	—	—

1988 AIR CONDITIONER EVAPORATOR & BLOWER MODULE ASMS

NOTE: A01 IMPELLERS MAYBE REPLACED BY A PRESS-ON TYPE IMPELLER THAT REQUIRES A NEW CORRESPONDING BLOWER MOTOR.
NOTE: A02 BLOWER MOTORS MAYBE REPLACED BY ONE THAT REQUIRES A PRESS-ON TYPE IMPELLER.
NOTE: A03 FOR HEATER DETAILS SEE HEATER ASSEMBLY CHARTS IN GROUP 8.845.

PRODUCTION	VIN DIV. CODE	USAGE	COL. NO.
03091144	1	Y(5.7-8)	1

GROUP	DESCRIPTION	QTY	1	2	3	4	5
9.215	MODULE, A/C EVAP & BLO	1	3091144	—	—	—	—
9.211	CASE,OTLT EVAP	1	3057710	—	—	—	—
8.854	CASE,W/STUD	1	3094162	—	—	—	—
9.211	CLAMP,EVAP TUBE	1	3031728	—	—	—	—
9.210	CORE,EVAP	1	3057733	—	—	—	—
9.210	FILTER,WATER CORE	1	3052786	—	—	—	—
9.216	IMPELLER (BOLT ON)	1	52451060	—	—	—	—
9.215	MOTOR (BOLT ON)	1	22098837	—	—	—	—
9.213	ORIFICE,W/GSKT	1	3033879	—	—	—	—
8.977	SCREW,HWH TAP(M6.3X1.81X30)12.50D AB PT PZOR	6	11508905	—	—	—	—
8.977	SCREW,HWH(M4.2X1.4X13)POR HILO	6	11508256	—	—	—	—
9.211	SEAL,EVAP CORE	1	3052755	—	—	—	—
9.211	SEAL,FOAM(15.0 X 4.0 X.38)	2	3039873	—	—	—	—
9.275	SWITCH,EVAP BLO LOW PRESS CYCLING CUTOFF	1	3041596	—	—	—	—
9.218	TUBE,MOTOR COOLING	1	3053502	—	—	—	—

1989 AIR CONDITIONER EVAPORATOR & BLOWER MODULE ASMS

NOTE: A01 IMPELLERS MAYBE REPLACED BY A PRESS-ON TYPE IMPELLER THAT REQUIRES A NEW CORRESPONDING BLOWER MOTOR.
NOTE: A02 BLOWER MOTORS MAYBE REPLACED BY ONE THAT REQUIRES A PRESS-ON TYPE IMPELLER.
NOTE: A03 FOR HEATER DETAILS SEE HEATER ASSEMBLY CHARTS IN GROUP 8.845.

PRODUCTION	VIN DIV. CODE	USAGE	COL. NO.
52452700	1	Y(5.7-8)	1
52453122	1	Y(5.7J)	2

GROUP	DESCRIPTION	QTY	1	2	3	4	5
9.215	MODULE, A/C EVAP & BLO	1	52452700	52453122	—	—	—
9.211	CASE,EVAP INLET	1	3094161	52453155	—	—	—
9.211	CASE,EVAP OTLT LWR	1	—	52450785	—	—	—
9.211	CASE,OTLT EVAP	1	52452593	—	—	—	—
9.211	CASE,OUTLET EVAP UPR	1	—	52452599	—	—	—
9.211	CLAMP,EVAP TUBE	1	3031728	3093494	—	—	—
9.210	CORE,EVAP	1	3057733	52450970	—	—	—
9.210	FILTER,WATER CORE	1	3052786	3095748	—	—	—
9.216	IMPELLER (BOLT ON)	1	52451060	52451060	—	—	—
9.215	MOTOR (BOLT ON)	1	22098837	22098837	—	—	—
9.213	ORIFICE,W/GSKT	1	3033879	3033879	—	—	—
9.211	SEAL,EVAP CORE	1	3052755	3095717	—	—	—
9.211	SEAL,FOAM(15.0 X 4.0 X.38)	AR	3039873	—	—	—	—
9.211	STUD	1	52452664	—	—	—	—
9.275	SWITCH,EVAP BLO LOW PRESS CYCLING CUTOFF	1	3041596	3041596	—	—	—
9.218	TUBE,MOTOR COOLING	1	3053502	3053502	—	—	—

1990 AIR CONDITIONER EVAPORATOR & BLOWER MODULE ASMS

NOTE: A01 IMPELLERS MAYBE REPLACED BY A PRESS-ON TYPE IMPELLER THAT REQUIRES A NEW CORRESPONDING BLOWER MOTOR.
NOTE: A02 BLOWER MOTORS MAYBE REPLACED BY ONE THAT REQUIRES A PRESS-ON TYPE IMPELLER.
NOTE: A03 FOR HEATER DETAILS SEE HEATER ASSEMBLY CHARTS IN GROUP 8.845.

PRODUCTION	VIN DIV. CODE	USAGE	COL. NO.
52452176	1	Y(5.7-8)	1
52454542	1	Y(5.7J)	2

GROUP	DESCRIPTION	QTY	1	2	3	4	5
9.215	MODULE, A/C EVAP & BLO	1	52452176	52454542	—	—	—
9.211	BRACKET,RESERVOIR MOUNT	1	52452924	—	—	—	—
9.211	CASE,EVAP INLET	1	3094161	52453155	—	—	—
9.211	CASE,EVAP OTLT LWR	1	—	52450785	—	—	—
9.211	CASE,EVAP OTLT UPR	1	—	52452599	—	—	—
9.211	CASE,OTLT EVAP	1	52452593	—	—	—	—
9.211	CLAMP,EVAP TUBE	1	3031728	3093494	—	—	—
9.210	CORE,EVAP	1	52452950	52452951	—	—	—
9.210	FILTER,WATER CORE	1	3052786	3095748	—	—	—
9.216	IMPELLER (BOLT ON)	1	52451060	52451060	—	—	—
9.215	MOTOR (BOLT ON)	1	22098837	22098837	—	—	—
9.213	ORIFICE,W/GSKT	1	3033879	3033879	—	—	—
9.211	SEAL,EVAP CORE	1	3052755	3095717	—	—	—
9.211	STUD	1	52452664	—	—	—	—
9.275	SWITCH,EVAP BLO LOW PRESS CYCLING CUTOFF	1	3041596	3041596	—	—	—
9.218	TUBE,MOTOR COOLING	1	3053502	3053502	—	—	—

1991 AIR CONDITIONER EVAPORATOR & BLOWER MODULE ASMS

NOTE: A01 IMPELLERS MAYBE REPLACED BY A PRESS-ON TYPE IMPELLER THAT REQUIRES A NEW CORRESPONDING BLOWER MOTOR.
NOTE: A02 BLOWER MOTORS MAYBE REPLACED BY ONE THAT REQUIRES A PRESS-ON TYPE IMPELLER.
NOTE: A03 FOR HEATER DETAILS SEE HEATER ASSEMBLY CHARTS IN GROUP 8.845.

PRODUCTION	VIN DIV. CODE	USAGE	COL. NO.
52452176	1	Y(5.7-8)	1
52454542	1	Y(5.7J)	2

GROUP	DESCRIPTION	QTY	1	2	3	4	5
9.215	MODULE, A/C EVAP & BLO	1	52452176	52454542	—	—	—
9.211	BRACKET,RESERVOIR MOUNT	1	52452924	—	—	—	—
9.211	CASE,EVAP INLET	1	3094161	52453155	—	—	—
9.211	CASE,EVAP OTLT LWR	1	—	52450785	—	—	—
9.211	CASE,EVAP OTLT UPR	1	—	52452599	—	—	—
9.211	CASE,OTLT EVAP	1	52452593	—	—	—	—
9.211	CLAMP,EVAP TUBE	1	3031728	3093494	—	—	—
9.210	CORE,EVAP	1	52452950	52452951	—	—	—
9.210	FILTER,WATER CORE	1	3052786	3095748	—	—	—
9.216	IMPELLER (BOLT ON)	1	52451060	52451060	—	—	—
9.215	MOTOR (BOLT ON)	1	22098837	22098837	—	—	—
9.213	ORIFICE,W/GSKT	1	3033879	3033879	—	—	—
9.211	SEAL,EVAP CORE	1	3052755	3095717	—	—	—
9.211	STUD	1	52452664	—	—	—	—
9.275	SWITCH,EVAP BLO LOW PRESS CYCLING CUTOFF	1	3041596	3041596	—	—	—
9.218	TUBE,MOTOR COOLING	1	3053502	3053502	—	—	—

9.216 GASKET – IMPELLER – PLATE, A/C Evaporator Blower

NOTE: FOR 1986–1991 USAGE REFER TO AIR CONDITIONING BLOWER CHART GRP 9.215

NOTE: IMPELLERS MAY BE REPLACED BY A PRESS–ON TYPE IMPELLER THAT REQUIRES A NEW CORRESPONDING MOTOR

NOTE: FOR ADDITIONAL INFORMATION, SEE BLOWER MOTOR AND IMPELLER APPLICATION CHARTS IN THE REFERENCE CATALOG (CODE 88R).

84–96	Y	3052701	1	4.79	GASKET, BLO	8–I5,1
84–86	Y	52451060	1	32.48	IMPELLER, HTR & A/C BLO (BOLT–ON TYPE) (AC–DELCO #15–875)	8–I5,20
84–85	Y	52460704	1	27.06	IMPELLER, HTR & A/C BLO (AC–DELCO #15–8418)	8–I5,14
92–96	Y	52460704	1	27.06	IMPELLER, HTR & A/C BLO (PRESS–ON TYPE) (AC–DELCO #15–8418)	8–I5,14
90–96	Y	14046786	2	.82	PLATE, A/C EVPR & BLO MDL TAP (09.786)	10–E15,26

9.218 TUBE, A/C Blower Motor Cooling

NOTE: FOR 1986–1991 USAGE REFER TO AIR CONDITIONING BLOWER CHART GRP 9.215

84–86	Y	3053502	1	7.38	TUBE, BLO MOT CLG	8–I5,16
92–96	Y	3053502	1	7.38	TUBE, BLO MOT CLG	8–I5,16

9.220 HOSE – TUBE, A/C Refrigerant (All Metal)

90	Y (5.7J) SOFT RIDE SUSP (FE1), H .D .SUSP (FE7)	10157992	1	50.66	HOSE, A .C ACCUM (09.225) (AC–DELCO #15–30077)	
85–87	Y	14081366	1	53.34	TUBE, A/C EVAP	8–J2,9
88	Y	10077229	1	DISCON	TUBE, A/C EVAP	
89	Y 5.7–8 (L96)	10120068	1	40.14	TUBE, A/C EVAP	8–J4,11
90–91	Y 5.7–8 (L98)	10086202	1	40.14	TUBE, A/C EVPR	–J4,11
90–91	Y 5.7J (LT5)	14104967	1	52.32	TUBE, A/C EVPR	8–J5,16
92	Y 5.7P (LT1)	10135694	1	40.14	TUBE, A/C EVPR	8–J7,11
92	Y 5.7J (LT5)	10135695	1	61.98	TUBE, A/C EVPR	8–J10,16
93	Y 5.7J (LT5)	10211890	1	51.82	TUBE, A/C EVPR	8–J10,16
93	Y 5.7P (LT1)	10211892	1	38.60	TUBE, A/C EVPR	8–J7,11
94–95	Y 5.7P (LT1)	10219091	1	42.42	TUBE, A/C EVPR	8–J7,11
94–95	Y 5.7J (LT5)	10219092	1	56.38	TUBE, A/C EVPR	8–J10,16
96	Y	10219091	1	42.42	TUBE, A/C EVPR	8–J7,11
84	Y	14044430	1	DISCON	TUBE, EVAP INLET	

9.222 SEAL – SEAL KIT, A/C Refrigerant Lines

NOTE: FOR 1986–1991 USAGE REFER TO AIR CONDITIONING COMPRESSOR CHART GRP 9.170

NOTE: HOSE BLK SEAL WASHER KIT #2724575 SERVICES 1991 & PRIOR VEHICLES WITH NEW DESIGN COMPRESSOR (W/HOSE BLOCK CONNECTION)

84–86	Y	2724575	1	11.22	SEAL KIT, A/C CMPR & CNDSR HOSE MANIF (15MM X 3.0MM) (AC–DELCO #15–2720)	
92–96	Y	2724577	1	7.22	SEAL KIT, A/C CMPR & CNDSR HOSE MANIF (CONTAINS 2 SEALS 5/8") (AC–DELCO #15–2722)	8–J10,8
84–93	Y	2724674	2	1.28	SEAL, A/C CMPR PORT (O RING) (AC–DELCO #15–30169)	8–I16,9
84–86	Y	3094216	AR	*.96	SEAL, A/C CMPR TUBE (O RING) (O–RING, .676"IDX.07"THK) (08.927) (AC–DELCO #15–3615)	

© 2000 GENERAL MOTORS SERVICE PARTS OPERATIONS–CHEVROLET–14Y

9.222 SEAL – SEAL KIT, A/C Refrigerant Lines (Con't)

94	Y	52458183	1	1.62	SEAL, A/C EVPR FTG (O RING) (BLACK) (RUBBER) (AC–DELCO #15–30572)	
96	Y	52458183	1	1.62	SEAL, A/C EVPR FTG (O RING) (BLACK) (RUBBER) (AC–DELCO #15–30572)	

9.225 HOSE, A/C Refrigerant (Metal and Rubber Sections)

84	Y	14052403	1	38.60	HOSE, A/C ACCUM	8–J2,18
85–87	Y	14081325	1	38.60	HOSE, A/C ACCUM	8–J2,18
88–89	Y	10077230	1	38.60	HOSE, A/C ACCUM	8–J4,15
90–91	Y 5.7–8 (L98)	10086203	1	40.14	HOSE, A/C ACCUM (AC–DELCO #15–3930)	8–J4,15
90–92	Y 5.7J (LT5)	10157992	1	50.66	HOSE, A/C ACCUM (AC–DELCO #15–30077)	8–J5,12
92	Y 5.7P (LT1)	10135696	1	40.14	HOSE, A/C ACCUM (AC–DELCO #15–30076)	8–J7,15
93	Y 5.7P (LT1)	10232059	1	40.10	HOSE, A/C ACCUM (AC–DELCO #15–30234)	8–J7,15
93–94	Y 5.7J (LT5)	10232060	1	40.10	HOSE, A/C ACCUM (AC–DELCO #15–30235)	8–J10,12
94–95	Y 5.7J (LT5)	10232062	1	40.10	HOSE, A/C ACCUM (AC–DELCO #15–30249)	
94–95	Y 5.7P (LT1)	10254451	1	54.14	HOSE, A/C ACCUM (AC–DELCO #15–30248)	8–J7,15
96	Y	10254451	1	54.14	HOSE, A/C ACCUM (AC–DELCO #15–30248)	8–J7,15

9.226 CAP – FITTING – HOSE ASM, A/C Compressor

NOTE: FOR 1986–1991 USAGE REFER TO AIR CONDITIONING COMPRESSOR CHART GRP 9.170

92–93	Y	52451233	1	5.13	CAP, A/C EVPR TUBE FTG (09.177)	8–J10,15
94–95	Y	52458768	1	.48	CAP, A/C EVPR TUBE FTG (16.6MM I.S. DIA) (HIGH SIDE CHARGE PORT) (09.177)	8–J10,15
94–95	Y	52471377	1	*.48	CAP, A/C EVPR TUBE FTG (8MM X 1.0) (LOW SIDE SERVICE PORT) (09.177)	8–J10,15
92	Y 5.7P (LT1)	52458781	1	DISCON	FITTING, A/C CMPR & CNDSR HOSE (AC–DELCO #15–30101)	
84	Y	14046042	1	68.72	HOSE ASM, A/C CMPR & CNDSR (AC–DELCO #15–3417)	8–J2,1
85–87	Y	14081324	1	100.58	HOSE ASM, A/C CMPR & CNDSR	8–J2,1
88	Y	10135634	1	135.34	HOSE ASM, A/C CMPR & CNDSR (AC–DELCO #15–3907)	8–J4,2
89	Y 5.7–8 (L98)	10135635	1	81.20	HOSE ASM, A/C CMPR & CNDSR (AC–DELCO #15–3908)	8–J4,2
90–91	Y 5.7–8 (L98)	10086201	1	81.20	HOSE ASM, A/C CMPR & CNDSR (AC–DELCO #15–3932)	8–J4,2
90–93	Y 5.7J (LT5)	10229061	1	67.68	HOSE ASM, A/C CMPR & CNDSR (AC–DELCO #15–30221)	8–J5,1
92	Y 5.7P (LT1)	10135693	1	81.20	HOSE ASM, A/C CMPR & CNDSR (AC–DELCO #15–[illegible]080)	8–J7,2
93	Y 5.7P (LT1)	10211891	1	101.60	HOSE ASM, A/C CMPR & CNDSR	8–J7,2
94–95	Y 5.7P (LT1)	10219089	1	81.20	HOSE ASM, A/C CMPR & CNDSR (AC–DELCO #15–30287)	8–J7,2
94–95	Y 5.7J (LT5)	10219090	1	81.20	HOSE ASM, A/C CMPR & CNDSR (AC–DELCO #15–30288)	8–J10,1
96	Y	10219089	1	81.20	HOSE ASM, A/C CMPR & CNDSR (AC–DELCO #15–30287)	8–J7,2

© 2000 GENERAL MOTORS SERVICE PARTS OPERATIONS–CHEVROLET–14Y

9.242 CLAMP – CLIP – GROMMET – STRAP, A/C Compressor

NOTE: FOR USAGE REFER TO AIR CONDITIONIONG MODULE CHART GROUP 9.169

92–95	Y 5.7P (LT1)	3031728	1	*1.07	CLAMP, A/C EVPR TUBE (12.8MM DIA) (09.211)	8–I5,6
92–95	Y 5.7J (LT5)	3093494	1	1.07	CLAMP, A/C EVPR TUBE	8–I7,3
96	Y	3031728	1	*1.07	CLAMP, A/C EVPR TUBE (12.8MM DIA) (09.211)	8–I5,6
85–86	Y	3031728	1	*1.07	CLAMP, EVAP TUBE (09.211)	8–I5,6
91	Y 5.7J (LT5)	15651150	1	1.80	CLIP, A/C CMPR & CNDSR HOSE (1/2 OPEN X 5/8 WIDE) (ELASTIC) (06.672)	
92–96	Y	15651150	1	1.80	CLIP, A/C CMPR & CNDSR HOSE (1/2 OPEN X 5/8 WIDE) (ELASTIC) (06.672)	
84	Y	14052325	1	DISCON	GROMMET, CMPR FTG AND HOSE	
84	Y	3917385	AR	.83	STRAP, A/C HOSES (PLASTIC) (08.965)	

9.260 SEAL, Air Outlet

84–91	Y	3999572	AR	4.98	SEAL, POLYURETHANE (59.50X1.25X.75)	3–H18,47

9.262 DUCT – INSULATOR – OUTLET – RETAINER – SEAL, Air Distributor

86–89	Y	14081367	1	DISCON	DUCT, A/C AIR OTLT LWR	
84–89	Y	14052301	RH	6.85	DUCT, AIR OTLT I/P OTR	8–J13,22
84–89	Y	14044411	1	DISCON	DUCT, CTR AIR OTLT	
86–89	Y	14081368	LH	DISCON	DUCT, FLOOR AIR	
90	Y	10100164	1	DISCON	DUCT, FLR AIR OTLT	
91	Y (1ST DES)	10100164	1	DISCON	DUCT, FLR AIR OTLT (W/LAP COOLER DUCTS, NO COMPARIBLE 2ND DES)	
90	Y	10086253	RH	DISCON	DUCT, LAP AIR OTLT (UPR)	
90	Y	10158009	LH	DISCON	DUCT, LAP AIR OTLT (LWR)	
91	Y (1ST DES)	10086253	RH	DISCON	DUCT, LAP AIR OTLT (UPR) (NO COMPARIBLE 2ND DES)	
91	Y (1ST DES)	10158019	LH	DISCON	DUCT, LAP AIR OTLT (LWR) (NO COMPARIBLE 2ND DES)	
84–85	Y A/C	14044412	LH	DISCON	DUCT, OTR AIR OTLT	
84–89	Y	14044438	RH	DISCON	DUCT, OTR AIR OTLT	
93–96	Y	3999572	2	4.98	INSULATOR, FLR AIR OTLT (09.260)	
84–88	Y A/C	14052309	RH	DISCON	OUTLET, FLR AIR	
84–85	Y A/C	14052317	LH	DISCON	OUTLET, FLR AIR	
89	Y	14052309	RH	DISCON	OUTLET, FLR AIR	
90–96	Y	10086100	1	22.25	OUTLET, FLR AIR	8–J15,31
90–91	Y	10199754	RH	68.07	OUTLET, I/P OTR AIR (BLACK)	9–E8,11
92–93	Y	10199754	RH	68.07	OUTLET, I/P OTR AIR (BLACK)	9–E8,11
94–96	Y (EXC EUROPEAN PROVISIONS (VD1) (EXPORT)	10263246	RH	64.27	OUTLET, I/P OTR AIR (INCL GRL & 2 DFL)	9–F2,21
85–89	Y (5.7–8)	14090619	2	.93	RETAINER, FRT AIR INT DUCT	4–K2,46
84	Y	59270	4	1.78	SEAL, A/C AIR DISTR OTLT DEFL (09.260)	
84–89	Y	14052303	1	DISCON	SEAL, A/C CTR AIR OTLT	
84–89	Y	14069129	1	DISCON	SEAL, I/P CTR AIR OTLT	
90	Y	10086125	1	DISCON	SEAL, LAP AIR OTLT DUCT	
91	Y (1ST DES)	10086125	1	DISCON	SEAL, LAP AIR OTLT DUCT (NO COMPARIBLE 2ND DES)	

© 2000 GENERAL MOTORS SERVICE PARTS OPERATIONS–CHEVROLET–14Y

9.262 DUCT – INSULATOR – OUTLET – RETAINER – SEAL, Air Distributor (Con't)

84–86	Y A/C	14069131	LH	DISCON	SEAL, OTR OTLT DUCT (TO CTR DUCT)	
84–87	Y	14069132	RH	DISCON	SEAL, OTR OTLT DUCT (TO CTR DUCT)	
88–89	Y	14069132	2	DISCON	SEAL, OTR OTLT DUCT (TO CTR DUCT)	
	*EXPORT*********EXPORT*********EXPORT*********EXPORT*********EXPORT*					
94–96	Y EUROPEAN PROVISIONS (VD1) (EXPORT)	10263248	RH	88.65	OUTLET, I/P OTR AIR	9–F2,21

9.264 DEFLECTOR – GRILLE – OUTLET, Air Outlet

84–89	Y	14046017	AR	17.07	DEFLECTOR, I/P OTR AIR OTLT	9–E2,43
84–89	Y	14046019	4	32.77	DEFLECTOR, A/C AIR CTR OTLT	9–E2,36
90–91	Y	10086046	1	27.68	DEFLECTOR, I/P CTR AIR OTLT	9–E8,13
92–96	Y	10272750	1	18.85	DEFLECTOR, I/P CTR AIR OTLT	9–E12,13
90–91	Y	10086045	LH	29.72	DEFLECTOR, I/P OTR AIR OTLT	9–E8,14
92–96	Y	10199753	LH	32.77	DEFLECTOR, I/P OTR AIR OTLT	9–E12,14
92–96	Y	10256267	RH	29.97	DEFLECTOR, I/P OTR AIR OTLT (INBOARD)	9–E12,11
92–96	Y	10263250	RH	29.97	DEFLECTOR, I/P OTR AIR OTLT (OUTBOARD)	9–E12,11
90	Y	10100163	1	13.57	DEFLECTOR, LAP AIR OTLT	9–E8,22
91	Y (1ST DES)	10100163	1	13.57	DEFLECTOR, LAP AIR OTLT (NO COMPARIBLE 2ND DES)	9–E8,22
90–91	Y	10085931	1	10.92	GRILLE, I/P CTR AIR OTLT	9–E8,17
92–93	Y	10199768	1	DISCON	GRILLE, I/P CTR AIR OTLT	
94–96	Y	10251301	1	19.87	GRILLE, I/P CTR AIR OTLT	9–F2,12
90–91	Y	10085930	LH	DISCON	GRILLE, I/P OTR AIR OTLT	
90–93	Y	10085982	RH	13.57	GRILLE, I/P OTR AIR OTLT (BLACK)	9–E8,11
92–93	Y	10199769	LH	DISCON	GRILLE, I/P OTR AIR OTLT (BLACK)	
94–96	Y	10161885	LH	13.57	GRILLE, I/P OTR AIR OTLT (BLACK)	9–F2,11
94–96	Y	10248497	RH	23.42	GRILLE, I/P OTR AIR OTLT	9–F2,21
69–93	Y	10086032	1	DISCON	GRILLE, I/P UPR TR PAD AIR VENT (BLACK) (09.789)	
84–89	Y	14046018	RH	12.13	OUTLET, I/P OTR AIR	9–E2,26

9.273 CONNECTOR – CONTROL – INSULATOR, Heater and A/C Control

94	Y	12084944	1	2.49	CONNECTOR, CONT–HTR & A/C (BLACK) (16–WAY F (W/O LEADS) (02.195)	
94–95	Y	12085486	1	5'.51	CONNECTOR, CONT–HTR & A/C (BLACK) (10–WAY F) (W/LEADS) (02.535) (AC–DELCO #PT108)	
94	Y	12102465	1	19.29	CONNECTOR, CONT–HTR & A/C (6–WAY F) (W/LEADS) (09.276) (AC–DELCO #PT276)	
94	Y	15305888	2	29.36	CONNECTOR, CONT–HTR & A/C (6–WAY F) (W/LEADS) (13.090) (AC–DELCO #PT1032)	
96	Y	12084944	1	2.49	CONNECTOR, CONT–HTR & A/C (BLACK) (16–WAY F (W/O LEADS) (02.195)	
86–87	YY07 A/C (C68) (EXC ELEC DEFG C49)	1228825	1	DISCON	CONTROL, HTR & A .C (REMAN)	
84	Y EXC. ELEC DEFG	16040101	1	80.14	CONTROL, HTR & A/C (AC–DELCO #15–71413)	8–J25,12
84–86	Y A/C MAN CONT (C60), ELEC RR WDO DEFG (C49)	16040111	1	131.44	CONTROL, HTR & A/C (AC–DELCO #15–71414)	8–J25,12

9.273 CONNECTOR – CONTROL – INSULATOR, Heater and A/C Control (Con't)

85–86	Y A/C MAN CONT (C60), (EXC ELEC RR WDO DEFG (C49)	16040101	1	80.14	CONTROL, HTR & A/C (AC–DELCO #15–71413)	8–J25,12
86	Y07 ELEC DEFG (C49), A/C (C68)	1228824	1	130.00	CONTROL, HTR & A/C (REMAN)	8–J27,1
87–88	Y A/C MAN CONT (C60), (EXC ELEC RR WDO DEFG (C49), ELEC R/CON HTD MIR (DL8)	16040101	1	80.14	CONTROL, HTR & A/C (AC–DELCO #15–71413)	8–J25,12
87	Y07 ELEC RR WDO DEFG (C49), A/C AUTO ELEC CONT (C68), ELEC R/CON HTD MIR (DL8)	1228824	1	130.00	CONTROL, HTR & A/C (REMAN)	8–J27,1
87–88	Y07 A/C MAN CONT (C60), ELEC RR WDO DEFG (C49)	16040111	1	131.44	CONTROL, HTR & A/C (AC–DELCO #15–71414)	8–J25,12
87–89	Y67 A/C (C68) (EXC ELEC HTD MIR DL8)	1228094	1	180.84	CONTROL, HTR & A/C (REMAN)	8–J27,1
87–89	Y67 A/C (C68), ELEC HTD MIR (DL8)	1228095	1	180.84	CONTROL, HTR & A/C (REMAN)	8–J27,1
87–89	Y67 A/C MAN CONT (C60), ELEC R/CON HTD MIR (DL8)	16068761	1	112.20	CONTROL, HTR & A/C (AC–DELCO #15–71576)	8–J25,12
88	Y07 ELEC DEFG (C49), A/C (C68) (2ND DES)	1228824	1	130.00	CONTROL, HTR & A/C (REMAN) (STAMPED 16087191)	8–J27,1
88	Y07 A/C (C68) (EXC ELEC DEFG C49) (2ND DES)	1228825	1	DISCON	CONTROL, HTR & A/C (REMAN) (STAMPED 16087201)	
89	Y07 A/C (C68)	1228824	1	130.00	CONTROL, HTR & A/C (REMAN) (STAMPED 16087191)	8–J27,1
89	Y07 A/C MAN CONT (C60) ..	16040111	1	131.44	CONTROL, HTR & A/C (AC–DELCO #15–71414)	8–J25,12
90–91	Y07 A/C MAN CONT (C60) ..	16085521	1	269.28	CONTROL, HTR & A/C (AC–DELCO #15–71667)	8–K2,1
90–91	Y07 A/C AUTO ELEC CONT (C68)	16152503	1	221.48	CONTROL, HTR & A/C (REMAN)	8–K4,1
90–91	Y67 A/C MAN CONT (C60), ELEC R/CON HTD MIR (DL8), (EXC AUX RF (CC2) .	16074571	1	269.28	CONTROL, HTR & A/C (AC–DELCO #15–71662)	8–K2,1
90–91	Y67 A/C MAN CONT (C60), AUX RF (CC2)	16085521	1	269.28	CONTROL, HTR & A/C (AC–DELCO #15–71667)	8–K2,1
90–91	Y67 A/C AUTO ELEC CONT (C68), ELEC R/CON HTD MIR (DL8), (EXC AUX RF (CC2)	16152502	1	207.04	CONTROL, HTR & A/C (REMAN)	8–K4,1
90–91	Y67 A/C AUTO ELEC CONT (C68), AUX RF (CC2)	16152503	1	221.48	CONTROL, HTR & A/C (REMAN)	8–K4,1
92–93	Y07 A/C AUTO ELEC CONT (C68)	16162118	1	265.18	CONTROL, HTR & A/C (REMAN)	8–K4,1
92–93	Y07 A/C MAN CONT (C60) ..	16162371	1	269.28	CONTROL, HTR & A/C (AC–DELCO #15–71929)	8–K2,1
92–93	Y67 AUX RF (CC2), A/C AUTO ELEC CONT (C68) ...	16162118	1	265.18	CONTROL, HTR & A/C (REMAN)	8–K4,1
92–93	Y67 A/C AUTO ELEC CONT (C68), ELEC R/CON HTD MIR (DL8), (EXC AUX RF (CC2)	16162120	1	265.18	CONTROL, HTR & A/C (REMAN)	8–K4,1
92–93	Y67 A/C MAN CONT (C60), ELEC R/CON HTD MIR (DL8), (EXC AUX RF (CC2) .	16162361	1	269.28	CONTROL, HTR & A/C (AC–DELCO #15–71928)	8–K2,1
92–93	Y67 AUX RF (CC2), A/C MAN CONT (C60)	16162371	1	269.28	CONTROL, HTR & A/C (AC–DELCO #15–71929)	8–K2,1
94–96	Y A/C MAN CONT (C60)	16170891	1	224.38	CONTROL, HTR & A/C (AC–DELCO #15–72065)	8–K2,1

© 2000 GENERAL MOTORS SERVICE PARTS OPERATIONS–CHEVROLET–14Y

9.273 CONNECTOR – CONTROL – INSULATOR, Heater and A/C Control (Con't)

94–96	Y A/C AUTO ELEC CONT (C68)	16192608	1	197.60	CONTROL, HTR & A/C (REMAN) (AC–DELCO #15–72077)	8–K4,1
90–96	Y	10158011	1	1.03	INSULATOR, HTR & A/C CONT ..	8–K2,5
EXPORT	*****************EXPORT****************EXPORT****************EXPORT****************EXPORT*					
90–91	Y67 A/C MAN CONT (C60), ELEC REM CONT MIR (DC7) (EXPORT), O/S ELEC R/CON PAINTED MIR (DC8) (EXPORT), (EXC AUX RF (CC2)	16085521	1	269.28	CONTROL, HTR & A/C (AC–DELCO #15–71667)	8–K2,1
90	Y67 A/C AUTO ELEC CONT (C68), ELEC REM CONT MIR (DC7) (EXPORT), (EXC AUX RF (CC2)	16152503	1	221.48	CONTROL, HTR & A/C (REMAN)	8–K4,1
91	Y67 A/C AUTO ELEC CONT (C68), ELEC REM CONT MIR (DC7) (EXPORT), O/S ELEC R/CON PAINTED MIR (DC8) (EXPORT), (EXC AUX RF (CC2)	16152503	1	221.48	CONTROL, HTR & A/C (REMAN)	8–K4,1
92–93	Y67 A/C AUTO ELEC CONT (C68), ELEC REM CONT MIR (DC7) (EXPORT), O/S ELEC R/CON PAINTED MIR (DC8) (EXPORT), (EXC AUX RF (CC2)	16162118	1	265.18	CONTROL, HTR & A/C (REMAN)	8–K4,1
92	Y67 A/C MAN CONT (C60), O/S ELEC R/CON PAINTED MIR (DC8) (EXPORT), (EXC AUX RF (CC2)	16162371	1	269.28	CONTROL, HTR & A/C (AC–DELCO #15–71929)	8–K2,1

9.275 ASPIRATOR – BRACKET – CONNECTOR – DUCT – GRILLE – HOSE – KNOB – MODULE – MUFFLER – PROGRAMMER – SENSOR – SOLENOID – SPRING – SWITCH, A/C Electric Control

89–95	Y A/C AUTO ELEC CONT (C68)	1625950	1	DISCON	ASPIRATOR, I/S AIR TEMP SEN (W/O DUCT, CONNECTOR & MUFFLER)	
89–96	Y A/C AUTO ELEC CONT (C68)	25649706	1	1.82	ASPIRATOR, I/S AIR TEMP SEN (W/O DUCT, CONNECTOR & MUFFLER)	8–J15,45
85–88	Y A/C AUTO ELEC CONT (C68)	14086765	1	DISCON	BRACKET, HTR & A/C PROGMR .	
90–96	Y	10086302	1	3.25	BRACKET, HTR & A/C PROGMR .	8–K10,22
85–88	Y A/C (C68)	14083707	3	DISCON	BRACKET, PROG BRKT (TO FIREWALL)	
90	Y 5.7J (LT5), 5.7–8 (L98)	12085503	1	16.87	CONNECTOR, A/C ECM SEN (2–WAY F, LOW, W/LEADS) (02.535) (AC–DELCO #PT124)	
93–96	Y	12041476	1	2.53	CONNECTOR, MDL–HTR, A/C PROGMR (32–WAY FEMALE) (W/O LEADS) (02.480)	
90–93	Y	12085535	1	17.43	CONNECTOR, SEN–I/S AIR TEMP (2–WAY F) (W/LEADS) (BLAS INDEX TAB @ OUTER EDGE OF CAVITY B) (02.535) (AC–DELCO #PT146)	
93–94	Y	12126452	1	24.17	CONNECTOR, SEN–I/S AIR TEMP (BLACK) (2–WAY F) (W/LEADS) (08.965) (AC–DELCO #PT723)	

9.275 ASPIRATOR – BRACKET – CONNECTOR – DUCT – GRILLE – HOSE – KNOB – MODULE – MUFFLER – PROGRAMMER – SENSOR – SOLENOID – SPRING – SWITCH, A/C Electric Control (Con't)

96	Y	12085535	1	17.46	CONNECTOR, SEN–I/S AIR TEMP (2–WAY F) (W/LEADS) (HAS INDEX TAB @ OUTER EDGE OF CAVITY B) (02.535) (AC–DELCO #PT146)	
90–93	Y	12101848	1	17.20	CONNECTOR, SEN–SUN LOAD TEMP (RED) (2–WAY F) (W/LEADS) (02.535) (AC–DELCO #PT240)	
91–92	Y	12084944	1	2.49	CONNECTOR, SW–HTR & A/C CONT SEL (BLACK) (16–WAY F (W/O LEADS) (02.195)	
90–96	Y A/C AUTO ELEC CONT (C68)	10100178	1	8.05	DUCT, I/S AIR TEMP SEN ASPIRATOR	8–J15,47
86–89	Y A/C (C68)	14083706	1	DISCON	GRILLE, I/S AIR TEMP SEN	
90–96	Y A/C AUTO ELEC CONT (C68)	10086238	1	6.30	HOSE, I/S AIR TEMP SEN ASPIRATOR MUFF	8–J15,44
84–87	Y	1228276	1	2.12	KNOB, BLO SW (09.278)	8–J25,10
90–92	Y A/C AUTO ELEC CONT (C68)	16086891	1	141.04	MODULE, BLO MOT CONT (AC–DELCO #15–71642)	8–K10,1
93–96	Y A/C AUTO ELEC CONT (C68)	16174981	1	115.40	MODULE, BLO MOT CONT (AC–DELCO #15–71970)	8–K15,1
90–96	Y A/C AUTO ELEC CONT (C68)	10086123	1	7.48	MUFFLER, I/S AIR TEMP SEN ASPIRATOR	8–J15,46
86–87	Y A/C AUTO ELEC CONT (C68)	16042981	1	211.58	PROGRAMMER, HTR & A/C (AC–DELCO #15–71508)	8–K6,17
88–89	Y A/C AUTO ELEC CONT (C68)	16069591	1	198.74	PROGRAMMER, HTR & A/C (AC–DELCO #15–71584)	8–K8,15
90–96	Y A/C MAN CONT (C60)	16088751	1	160.26	PROGRAMMER, HTR & A/C (AC–DELCO #15–71773)	8–K10,15
90	Y 5.7–8 (L98), A/C AUTO ELEC CONT (C68)	16155285	1	163.92	PROGRAMMER, HTR & A/C (AC–DELCO #16155285)	8–K10,15
91	Y 5.7–8 (L98), A/C AUTO ELEC CONT (C68)	16140190	1	204.22	PROGRAMMER, HTR & A/C (REMAN)	8–K10,15
91	Y 5.7J (LT5), A/C AUTO ELEC CONT (C68)	16151009	1	162.12	PROGRAMMER, HTR & A/C (REMAN)	8–K10,15
92–93	Y 5.7J (LT5), A/C AUTO ELEC CONT (C68)	16169796	1	159.52	PROGRAMMER, HTR & A/C (REMAN)	8–K15,15
92–93	Y 5.7P (LT1), A/C AUTO ELEC CONT (C68)	16169797	1	159.52	PROGRAMMER, HTR & A/C (REMAN)	8–K15,15
94–95	Y 5.7P (LT1), A/C AUTO ELEC CONT (C68)	16192582	1	135.34	PROGRAMMER, HTR & A/C (REMAN) (AC–DELCO #15–72093)	
94–95	Y 5.7J (LT5), (EXC EUROPEAN WDO GLAZING (A26) (EXPORT)	16192584	1	203.02	PROGRAMMER, HTR & A/C (AC–DELCO #15–72094)	8–K15,15
96	Y A/C AUTO ELEC CONT (C68)	16227376	1	320.56	PROGRAMMER, HTR & A/C (REMAN) (AC–DELCO #15–72209)	
92–93	Y 5.7P (LT1)	22599559	1	48.08	SENSOR, A/C REFRIG PRESS (W/THREE TERMINALS) (MATES W/CONNECTOR 12102748) (AC–DELCO #15–72104)	8–J7,14
94–95	Y 5.7P (LT1)	22601618	1	41.10	SENSOR, A/C REFRIG PRESS (MATES W/CONN. 12102748) (AC–DELCO #15–20310)	8–J7,14
96	Y	22601618	1	41.10	SENSOR, A/C REFRIG PRESS (MATES W/CONN. 12102748) (AC–DELCO #15–20310)	8–J7,14

MICROFICHE INDEX

GROUPS 8.000 THRU 9.000

FICHE 8 OF 11

GROUP	DESCRIPTION	STARTING GRID LOCATION PARTS	ILLUSTRATIONS
–	GENERAL INFORMATION	1–A2	1–G2
–	ALPHABETICAL INDEX	1–B13	N.A.
8.000	FRONT END SHEET METAL – HEATER	8–A2	8–F2
9.000	BODY MOUNTING – AIR CONDITIONING – INSTRUMENT CLUSTER	8–C2	8–I2
–	OUT OF FICHE CALLS	N.A.	8–M27

8–D1

9.275 ASPIRATOR – BRACKET – CONNECTOR – DUCT – GRILLE – HOSE – KNOB – MODULE – MUFFLER – PROGRAMMER – SENSOR – SOLENOID – SPRING – SWITCH, A/C Electric Control(Con't)

86–89	Y A/C (C68)	16041001	1	23.88	SENSOR, I/S AIR TEMP	
90–96	Y A/C AUTO ELEC CONT (C68)	16129011	1	32.48	SENSOR, I/S AIR TEMP (AC–DELCO #15–71650)	9–E8,28
89	Y	16123101	1	29.78	SENSOR, SUN LOAD TEMP (09.260) (AC–DELCO #15–71638)	9–E8,82
90	Y A/C AUTO ELEC CONT (C68)	16123101	1	29.78	SENSOR, SUN LOAD TEMP (09.260) (AC–DELCO #15–71638)	9–E8,82
91–96	Y A/C AUTO ELEC CONT (C68)	16137801	1	35.20	SENSOR, SUN LOAD TEMP (INCLUDES COVER) (AC–DELCO #15–71850)	9–E8,82
90	Y 5.7J (LT5), A/C AUTO ELEC CONT (C68)	16155286	1	258.06	SOLENOID, HTR & A/C PROGMR (REMAN) (09.779)	
84–90	Y	16014896	1	1.02	SPRING, BLO KNOB (08.852)	8–J25,6
85–93	Y	14078970	1	34.44	SWITCH, A/C CMPR ENG COOL TEMP (2 TERM) (AC–DELCO #15–2351)	8–J2,13
94–95	Y 5.7J (LT5)	10223909	1	17.64	SWITCH, A/C CMPR ENG COOL TEMP (AC–DELCO #15–2878)	8–J10,18
84	Y	3041336	1	34.44	SWITCH, A/C CYCLING & FAN CONT A/C REFRIG PRESS (W/O RING) (AC–DELCO #15–2151)	8–I5,12
92–93	Y	52461142	1	35.26	SWITCH, A/C CYCLING & FAN CONT A/C REFRIG PRESS (AC–DELCO #15–5427)	8–I8,5
94–96	Y	52468323	1	34.44	SWITCH, A/C CYCLING & FAN CONT A/C REFRIG PRESS (AC–DELCO #15–5705)	8–I8,5
84–89	Y	16022463	1	12.80	SWITCH, HTR & A/C CONT BLO (BLOWER) (AC–DELCO #15–71226)	8–J25,1
90–96	Y A/C MAN CONT (C60)	16064921	1	59.50	SWITCH, HTR & A/C CONT BLO (AC–DELCO #15–71587)	8–K2,4
84–88	Y	16018267	1	12.80	SWITCH, HTR & A/C CONT SEL (SEL ROTARY) (AC–DELCO #15–71152)	8–J25,3
89	Y A/C MAN CONT (C60)	16018267	1	12.80	SWITCH, HTR & A/C CONT SEL (SEL ROTARY) (AC–DELCO #15–71152)	8–J25,3
84–89	Y	14073404	1	19.20	SWITCH, INST CSTR PASS COMPT AIR TEMP	3–H18,11

9.276 BRACKET – CONNECTOR – HARNESS – LAMP – PLATE – SOCKET, A/C Wiring

84–89	Y	14062552	1	1.12	BRACKET, A/C CONT WRG HARN (02.559)	
90	Y 5.7J (LT5)	12116958	1	20.24	CONNECTOR, A/C CLU WRG (2–WAY F, W/LEADS) (02.535) (AC–DELCO #PT419)	
90–91	Y 5.7–8 (L98)	12116958	1	20.24	CONNECTOR, A/C CLU WRG (GRAY) (2–WAY F) (W/LEADS) (02.535) (AC–DELCO #PT419)	
92–94	Y 5.7J (LT5)	12162343	1	.56	CONNECTOR, A/C CLU WRG (2–WAY M) (W/O LEADS) (04.720)	8–I16,25

© 2000 GENERAL MOTORS SERVICE PARTS OPERATIONS–CHEVROLET–14Y

9.276 BRACKET – CONNECTOR – HARNESS – LAMP – PLATE – SOCKET, A/C Wiring (Con't)

93	Y	12085486	1	51.51	CONNECTOR, HTR & A/C LP (BLACK) (10–WAY F) (W/LEADS) (02.535) (AC–DELCO #PT108)	
90	Y	12084944	1	2.49	CONNECTOR, INLINE–TO A/C HARN (16–WAY F, W/LEADS) (02.195)	
90–92	Y	12085486	1	51.51	CONNECTOR, INLINE–TO A/C HARN (BLACK) (10–WAY F) (W/LEADS) (02.535) (AC–DELCO #PT108)	
90–92	Y	15305888	2	29.36	CONNECTOR, INLINE–TO A/C HARN (6–WAY F) (W/LEADS) (13.090) (AC–DELCO #PT1032)	
84–85	Y A/C (C60)	12029302	1	DISCON	HARNESS, A/C CONT WRG	
87–88	Y67 A/C (C68)	12067669	1	DISCON	HARNESS, I/S AIR TEMP SEN WRG	
90	Y07 A/C (C60)	16057072	1	3.08	LAMP, R/DEFG OUTSIDE PUSHBUTTON (TWIST SOCKET) (AC–DELCO #16057072)	
90	Y67 A/C (C60), AUX RF (CC2)	16057072	1	3.08	LAMP, R/DEFG OUTSIDE PUSHBUTTON (TWIST SOCKET) (AC–DELCO #16057072)	
84–85	Y	14064542	1	DISCON	PLATE, ELEK CONT MDL WRG HARN GROM RET	
90–96	Y A/C MAN CONT (C60)	16050935	4	3.20	SOCKET, HTR & A/C CONT LP (BI PIN) (09.279) (AC–DELCO #16050935)	8–K2,1
91	Y STEREO CASSETTE (UM6), CASSETTE STEREO (UU8)	16050896	1	3.48	SOCKET, HTR & A/C CONT LP (BI PIN) (09.279) (AC–DELCO #16050896)	
91	Y CASSETTE/CD PLAYER (U1F)	16050896	1	3.48	SOCKET, HTR & A/C CONT LP (BI PIN) (09.279) (AC–DELCO #16050896)	

9.277 BRACKET – CONNECTOR – RELAY, A/C Electrical

90–91	Y 5.7–8 (L98), A/C MAN CONT (C60)	14104140	1	1.88	BRACKET, BLO MOT RLY (STEEL) (3.0"X2.0") (76.7MMX51.0MM)) (01.055)	4–K17,23
86–87	Y	14091291	1	DISCON	BRACKET, BLO MTR RLY	
88–89	Y	14104533	10	DISCON	BRACKET, BLO MTR RLY	
84–85	Y	14062595	1	DISCON	BRACKET, MOD WIRING HARN	
92	Y 5.7J (LT5)	12102491	1	28.96	CONNECTOR, RLY–A/C CMPR (4–WAY F) (W/LEADS) (01.055) (AC–DELCO #PT282)	
93–95	Y 5.7P (LT1)	15306045	1	28.78	CONNECTOR, RLY–A/C CMPR (TWO 12GA AND THREE 14GA WIRES) (08.855) (AC–DELCO #PT1205)	
95	Y 5.7J (LT5)	15306045	1	28.78	CONNECTOR, RLY–A/C CMPR (TWO 12GA AND THREE 14GA WIRES) (08.855) (AC–DELCO #PT1205)	
96	Y	15305875	1		CONNECTOR, RLY–A/C CMPR (5–WAY F) (W/LEADS & RELAY) (08.855) (AC–DELCO #PT1016)	
96	Y	15306045	1	28.78	CONNECTOR, RLY–A/C CMPR (TWO 12GA AND THREE 14GA WIRES) (08.855) (AC–DELCO #PT1205)	

© 2000 GENERAL MOTORS SERVICE PARTS OPERATIONS–CHEVROLET–14Y

9.277 BRACKET – CONNECTOR – RELAY, A/C Electrical (Con't)

96	Y	15305875	1		CONNECTOR, RLY–BLO MOT HIGH SPD (5–WAY F) (W/LEADS & RELAY) (08.855) (AC–DELCO #PT1016)	
96	Y	15306045	1	28.78	CONNECTOR, RLY–BLO MOT HIGH SPD (TWO 12GA AND THREE 14GA WIRES) (08.855) (AC–DELCO #PT1205)	
90–91	Y	14100455	1	16.26	RELAY, A/C CMPR (BLACK) (5–WAY) (AC–DELCO #15–8426)	4–K12,63
92	Y	14089936	1	16.26	RELAY, A/C CMPR (5–PIN OVAL SHAPE) (USE W/CONN 15306002) (01.055) (AC–DELCO #15–8240)	4–K12,68
93–94	Y 5.7P (LT1), 5.7J (LT5)	12193601	1	23.44	RELAY, A/C CMPR (BLACK) (5–WAY M) (USED W/CONNECTOR 15306045) (AC–DELCO #15–8719)	3–I12,31
93–96	Y	12193603	1	20.30	RELAY, A/C CMPR (GRAY) (SPST 280 MINI) (4–WAY) (02.100) (AC–DELCO #12193603)	3–I12,31
84–87	Y	10019535	1	23.44	RELAY, BLO MOT (HIGH BLOWER) (AC–DELCO #15–8206)	8–I5,15
88–92	Y A/C MAN CONT (C60)	14[illegible]9936	1	16.26	RELAY, BLO MOT (5–PIN OVAL SHAPE) (USE W/CONN 15306002) (01.055) (AC–DELCO #15–8240)	4–K12,68
93–95	Y 5.7P (LT1), A/C MAN CONT (C60)	12193601	1	23.44	RELAY, BLO MOT (BLACK) (5–WAY M) (USED W/CONNECTOR 15306045) (AC–DELCO #15–8719)	3–I12,31
96	Y A/C MAN CONT (C60), (EXC VE1 (EXPORT)	12193601	1	23.44	RELAY, BLO MOT (BLACK) (5–WAY M) (USED W/CONNECTOR 15306045) (AC–DELCO #15–8719)	3–I12,31

9.278 KNOB – SPRING, A/C Control

84–87	Y	1228276	1	2.12	KNOB, BLOWER (W/SPRING)	
88	Y67 A/C (C60)	1228276	1	2.12	KNOB, BLOWER (W/SPRING)	
89	Y07 A/C (C60)	1228276	1	2.12	KNOB, BLOWER (W/SPRING)	
89	Y67 A/C (C60), ELEC HTD MIR (DL8)	1228276	1	2.12	KNOB, BLOWER (W/SPRING)	
84	Y	1228397	2	DISCON	KNOB, HTR & A/C CONT TEMP	
90–93	Y A/C MAN CONT (C60)	16134287	1	9.70	KNOB, HTR & A/C CONT TEMP	8–K2,2
85–86	Y	16062655	2	DISCON	KNOB, TEMP & SEL	
87–88	Y A/C (C60)	16062655	1	DISCON	KNOB, TEMP & SEL	
89	Y07 A/C (C60)	16062655	1	DISCON	KNOB, TEMP & SEL	
89	Y67 A/C (C60), ELEC HTD MIR (DL8)	16062655	1	DISCON	KNOB, TEMP & SEL	
84	Y	16036387	2	DISCON	SPRING, KNOB RET (TEMP–SEL)	

9.279 APPLIQUE – BULB – DIAL – DIAL KIT – DIAL PKG – FILTER – LAMP – SOCKET, A/C Control

87–88	Y A/C (C68)	16047592	1	DISCON	APPLIQUE, FAN	
89	Y07 A/C (C68)	16047592	1	DISCON	APPLIQUE, FAN	
89	Y67 A/C (C68), ELEC HTD MIR (DL8)	16047592	1	DISCON	APPLIQUE, FAN	

© 2000 GENERAL MOTORS SERVICE PARTS OPERATIONS–CHEVROLET–14Y

9.279 APPLIQUE – BULB – DIAL – DIAL KIT – DIAL PKG – FILTER – LAMP – SOCKET, A/C Control (Con't)

86–88	Y A/C (C68) (EXC ELEC DEFG C49, ELEC HTD MIR (DL8)	16047560	1	DISCON	APPLIQUE, MODE	
86–88	Y ELEC DEFG (C49), A/C (C68)	16047586	1	DISCON	APPLIQUE, MODE	
87–88	Y67 A/C (C68), ELEC HTD MIR (DL8)	16068843	1	DISCON	APPLIQUE, MODE	
89	Y A/C (C68)	16047586	1	DISCON	APPLIQUE, MODE	
90–95	Y A/C AUTO ELEC CONT (C68)	16051463	3	3.00	BULB, HTR & A/C CONT LP (KEYBOARD) (NEO WGE) (09.276) (AC–DELCO #16051463)	8–K2,1
90–92	Y A/C AUTO ELEC CONT (C68)	16057072	1	3.08	BULB, HTR & A/C CONT LP (TWIST SOCKET) (09.276) (AC–DELCO #16057072)	8–K2,1
90–96	Y A/C AUTO ELEC CONT (C68)	16206595	1	5.62	BULB, HTR & A/C CONT LP (MAIN BD) (NEO WGE) (NEO WEDGE) (09.276) (AC–DELCO #16206595)	8–K2,1
92–96	Y A/C MAN CONT (C60)	16134288	1	11.10	BULB, HTR & A/C CONT LP	8–K2,1
95–96	Y A/C AUTO ELEC CONT (C68)	16051463	4	3.00	BULB, HTR & A/C CONT LP (NEO WGE) (09.276) (AC–DELCO #16051463)	8–K2,1
85–87	Y A/C (C60) (EXC ELEC DEFG)	1226939	1	DISCON	DIAL KIT	
85–88	Y07 ELEC DEFG, A/C (C60) .	1226940	1	DISCON	DIAL KIT	
88	Y A/C (C60), ELEC DEFG (C49), ELEC HTD MIR (DL8)	1226939	1	DISCON	DIAL KIT	
89	Y07 A/C (C60)	1226940	1	DISCON	DIAL KIT	
84	Y	1225426	1	DISCON	DIAL KIT, (AC–DELCO #15–71222)	
87–89	Y67 ELEC HTD MIR (DL8) ...	1228317	1	DISCON	DIAL PKG	
90–91	Y A/C AUTO ELEC CONT (C68)	16125115	1	DISCON	DIAL, HTR & A/C CONT	
90–91	Y A/C MAN CONT (C60)	16125155	1	DISCON	DIAL, HTR & A/C CONT	
92–96	Y A/C AUTO ELEC CONT (C68)	16161687	1	19.10	DIAL, HTR & A/C CONT	8–K4,2
92–96	Y A/C MAN CONT (C60)	16162393	1	13.25	DIAL, HTR & A/C CONT	8–K2,3
90–91	Y A/C MAN CONT (C60)	16129802	1	DISCON	FILTER, HTR & A/C CONT LGT ..	
92–96	Y A/C AUTO ELEC CONT (C68)	16160463	1	6.15	FILTER, HTR & A/C CONT LGT ..	8–K4,1
91	Y CASSETTE/CD PLAYER (U1F)	16051492	1	.86	LAMP, BI–PIN (AC–DELCO #L7330)	
84	Y STEREO (UM6) (EXC UK1, UL2 EXPORT)	7895189	1	1.60	LAMP, CONT DIAL (AC–DELCO #7895189)	8–J27,1
87–88	Y A/C (C68)	7895189	1	1.60	LAMP, CONT DIAL (AC–DELCO #7895189)	8–J27,1
89	Y67 A/C (C68), ELEC HTD MIR (DL8) (EXC Z5Z)	7895189	1	1.60	LAMP, CONT DIAL (AC–DELCO #7895189)	8–J27,1
90–91	Y A/C MAN CONT (C60)	16071182	1	6.08	SOCKET, HTR & A/C CONT LP (W/HARN) (09.276) (AC–DELCO #16071182)	8–K2,1

9.280 ACTUATOR – BRACKET – CONNECTOR – VALVE, A/C Control

84–96	Y	1996718	1	25.64	ACTUATOR, AIR INL VLV (AC–DELCO #15–71499)	8–I13,4
84–89	Y	1996717	1	25.64	ACTUATOR, DEFR VLV (AC–DELCO #15–71498)	8–I12,7

© 2000 GENERAL MOTORS SERVICE PARTS OPERATIONS–CHEVROLET–14Y

9.280 ACTUATOR – BRACKET – CONNECTOR – VALVE, A/C Control (Con't)

90–96	Y	52461295	1	25.64	ACTUATOR, DEFR VLV (AC–DELCO #15–71938)	8–I12,7
84–96	Y	1996719	1	19.22	ACTUATOR, MODE VLV (PLST) (AC–DELCO #15–71500)	8–I12,9
84–89	Y	1996720	1	25.64	ACTUATOR, MODE VLV (AC–DELCO #15–71501)	8–I12,6
90–96	Y	1996770	1	19.22	ACTUATOR, MODE VLV (AC–DELCO #15–71645)	8–I12,9
86–89	Y A/C (C68)	16025581	1	44.45	ACTUATOR, TEMP VLV	8–K6,15
92–96	Y A/C AUTO ELEC CONT (C68)	16124952	1	70.54	ACTUATOR, TEMP VLV (AC–DELCO #15–71937)	8–G17,9
84–96	Y	3052706	1	1.75	BRACKET, MODE VLV ACTR	8–I12,8
95	Y 5.7J (LT5)	12102632	1	21.19	CONNECTOR, MOT–MODE VLV ACTR (BLACK) (6–WAY F) (W/LEADS) (09.656) (AC–DELCO #PT319)	
96	Y	12125665	1	28.96	CONNECTOR, MOT–O/S AIR VLV ACTR (GRAY) (6–WAY F) (W/LEADS) (04.663)	
90–93	Y	12102485	1	10.29	CONNECTOR, SOL–HTR & A/C CONT VAC C/VLV (6–WAY F) (W/LEADS) (09.276) (AC–DELCO #PT276)	
93	Y	12084944	1	2.49	CONNECTOR, SOL–HTR & A/C CONT VAC C/VLV (BLACK) (16–WAY F (W/O LEADS) (02.195)	
92–95	Y 5.7P (LT1)	10135692	1	6.42	VALVE, HTR & A/C CONT & CRCONT VAC CHK (AC–DELCO #15–5421)	
96	Y	10135692	1	6.42	VALVE, HTR & A/C CONT & CRCONT VAC CHK (AC–DELCO #15–5421)	
85–88	Y A/C MAN CONT (C60)	16040637	1	9.62	VALVE, HTR & A/C CONT VAC (AC–DELCO #15–71421)	8–J25,2
86–90	Y	14056648	1	2.73	VALVE, HTR & A/C CONT VAC (4.0 I.D. HOSE) (03.885) (AC–DELCO #14056648)	8–K8,24
89	Y07 A/C MAN CONT (C60)	16040637	1	9.62	VALVE, HTR & A/C CONT VAC (AC–DELCO #15–71421)	8–J25,2
89	Y67 A/C MAN CONT (C60), ELEC R/CON HTD MIR (DL8)	16040637	1	9.62	VALVE, HTR & A/C CONT VAC (AC–DELCO #15–71421)	8–J25,2
84–88	Y	14056648	1	2.73	VALVE, HTR & A/C CONT VAC TK CHK (03.885) (AC–DELCO #14056648)	8–K8,24
89–91	Y 5.7–8 (LS8)	14056648	1	2.73	VALVE, HTR & A/C CONT VAC TK CHK (STAMPED 6648) (03.885) (AC–DELCO #14056648)	8–K8,24
92–95	Y 5.7P (LT1)	14056648	1	2.73	VALVE, HTR & A/C CONT VAC TK CHK (STAMPED 6648) (03.885) (AC–DELCO #14056648)	8–K8,24
96	Y	14056648	1	2.73	VALVE, HTR & A/C CONT VAC TK CHK (STAMPED 6648) (03.885) (AC–DELCO #14056648)	8–K8,24
84	Y	16037739	1	DISCON	VALVE, VAC	

© 2000 GENERAL MOTORS SERVICE PARTS OPERATIONS–CHEVROLET–14Y

9.281 BOLT – CLAMP – CLIP – HARNESS – HOSE – TANK, A/C Vacuum and Temperature

NOTE: FOR 1986–1988 USAGE REFER TO HEATER MODULE CHART GRP 8.845
NOTE: FOR 1986–1988 USAGE REFER TO AIR CONDITIONING MODULE CHART GRP 9.169

94–96	Y	22538027	2	.59	BOLT, HTR & A/C CONT VAC TK (M6.3X1.81X25) (07.833)	
84–87	Y	22518665	1	*.93	CLAMP, WORM TYPE (.56" TO 1.06 DIA.) (08.948)	
85–86	Y A/C (C68)	9798835	1	1.20	CLIP, ACTR & BRKT (02.559)	8–G15,18
84–85	Y	14044457	1	DISCON	HARNESS, A/C VAC HOSE (MOD END)	
86–87	Y A/C (C60)	14091037	1	DISCON	HARNESS, AIR VLV ACTR VAC	
86–87	Y A/C (C68)	14091038	1	DISCON	HARNESS, AIR VLV ACTR VAC	
88–89	Y A/C (C60)	10077208	1	DISCON	HARNESS, AIR VLV ACTR VAC	
88	Y A/C (C68)	10077209	1	DISCON	HARNESS, AIR VLV ACTR VAC	
89	Y A/C (C68)	10077209	1	DISCON	HARNESS, AIR VLV ACTR VAC	
90–96	Y	10158085	1	9.65	HARNESS, AIR VLV ACTR VAC	8–K10,6
90–91	Y 5.7–8 (L98)	10158090	1	DISCON	HOSE, HTR & A/C CONT VAC SCE	
91–92	Y 5.7J (LT5)	9438381	1	1.10	HOSE, HTR & A/C CONT VAC SCE (BULK 5/32 X 25 FT) (08.962)	
84–96	Y	14056624	1	17.64	TANK, HTR & A/C CONT VAC (AC–DELCO #15–72234)	8–K8,18

9.645 ANTENNA – ANTENNA PKG, Power Radio Antenna

NOTE: FOR 1985–1991 USAGE REFER TO ELECTRIC ANTENNA CHARTS GRP 9.645

84–87	Y	22062598	1	56.27	ANTENNA PKG, RDO FIXED (COMPL) (09.647) (AC–DELCO #22062598)	8–K23,12
84	Y C .B.	12355706	1	153.20	ANTENNA PKG, RDO PWR (COMPL) (AC–DELCO #12355706)	8–K23,12
91–92	Y	16175583	1	69.18	ANTENNA, MOBILE TEL (WINDOW) (AC–DELCO #16175583)	
84–85	Y EXC C .B.	22062597	1	150.93	ANTENNA, RDO PWR (IF COMPLETE LEAD IS REQD USE 22139030) (AC–DELCO #22062597)	8–K23,12
88–89	Y	10067977	1	121.20	ANTENNA, RDO PWR (AC–DELCO #10067977)	8–K25,9
88–92	Y	12512900	1	21.73	ANTENNA, RDO PWR (WITHOUT MOTOR) (W/TUBE) (09.647) (AC–DELCO #12512900)	8–K25,9
90–92	Y	10098488	1	121.20	ANTENNA, RDO PWR (AC–DELCO #10098488)	8–K25,9
93–96	Y	10156160	1	124.60	ANTENNA, RDO PWR (AC–DELCO #10156160)	8–K25,9
93–96	Y	12525955	1	34.68	ANTENNA, RDO PWR (W/TUBE) (09.647) (AC–DELCO #12525955)	8–K25,9

© 2000 GENERAL MOTORS SERVICE PARTS OPERATIONS–CHEVROLET–14Y

1985 ELECTRIC ANTENNAS

PRODUCTION NUMBER	DIV.	USAGE	COLUMN
05049063	1	Y	1

GROUP	DESCRIPTION	QTY	1	2	3	4	5
9.645	ANTENNA(PROD)	1	5049063	—	—	—	—
9.645	ANTENNA(SERV)	1	22062597	—	—	—	—
9.647	ANTENNA,W/TUBE	1	22062598	—	—	—	—
9.647	ARMATURE KIT	1	22020274	—	—	—	—
9.647	BOLT & CLIP	1	22020281	—	—	—	—
9.647	CABLE,ANT TO RDO	1	22038895	—	—	—	—
9.647	CABLE,W/ROD KIT	1	22038195	—	—	—	—
9.647	FINIAL CAP	1	22049789	—	—	—	—
9.647	GEAR & CUP KIT	1	22030317	—	—	—	—
9.647	GROMMET KIT(TUBE TO HSG)	1	22048632	—	—	—	—
9.647	HOUSING,W/CVR	1	DISCON	—	—	—	—
9.647	MAGNET KIT	1	22020279	—	—	—	—
9.647	RETAINER,UPR	1	22038892	—	—	—	—
9.647	SWITCH	1	DISCON	—	—	—	—

1986 ELECTRIC ANTENNAS

PRODUCTION NUMBER	DIV.	USAGE	COLUMN
05049063	1	Y	1

GROUP	DESCRIPTION	QTY	1	2	3	4	5
9.645	ANTENNA(PROD)	1	5049063	—	—	—	—
9.645	ANTENNA(SERV)	1	22062597	—	—	—	—
9.647	ANTENNA,W/TUBE	1	22062598	—	—	—	—
9.647	ARMATURE KIT	1	22020274	—	—	—	—
9.647	BOLT & CLIP	1	22020281	—	—	—	—
9.647	CABLE,ANT TO RDO	1	22038895	—	—	—	—
9.647	CABLE,W/ROD KIT	1	22038195	—	—	—	—
9.647	FINIAL CAP	1	22049789	—	—	—	—
9.647	GEAR & CUP KIT	1	22030317	—	—	—	—
9.647	GROMMET KIT(TUBE TO HSG)	1	22048632	—	—	—	—
9.647	HOUSING,W/CVR	1	DISCON	—	—	—	—
9.647	MAGNET KIT	1	22020279	—	—	—	—
9.647	RETAINER,UPR	1	22038892	—	—	—	—
9.647	SWITCH	1	DISCON	—	—	—	—

© 2000 GENERAL MOTORS SERVICE PARTS OPERATIONS–CHEVROLET–14Y

1987 ELECTRIC ANTENNAS

PRODUCTION NUMBER	DIV.	USAGE	COLUMN
05049063	1	Y	1

GROUP	DESCRIPTION	QTY	1	2	3	4	5
9.645	ANTENNA(PROD)	1	5049063	—	—	—	—
9.645	ANTENNA(SERV)	1	22062597	—	—	—	—
9.647	ANTENNA,W/TUBE	1	22062598	—	—	—	—
9.647	ARMATURE KIT	1	22020274	—	—	—	—
9.647	BOLT & CLIP	1	22020281	—	—	—	—
9.647	CABLE,ANT TO ROD	1	22038895	—	—	—	—
9.647	CABLE,W/ROD KIT	1	22038195	—	—	—	—
9.647	FINIAL CAP	1	22049789	—	—	—	—
9.647	GEAR & CUP KIT	1	22030317	—	—	—	—
9.647	GROMMET KIT(TUBE TO HSG)	1	22048632	—	—	—	—
9.647	HOUSING,W/CVR	1	DISCON	—	—	—	—
9.647	MAGNET KIT	1	22020279	—	—	—	—
9.647	RETAINER,UPR	1	22038892	—	—	—	—
9.647	SWITCH	1	DISCON	—	—	—	—

1988 ELECTRIC ANTENNAS

PRODUCTION NUMBER	DIV.	USAGE	COLUMN
10067977	1	Y	1

GROUP	DESCRIPTION	QTY	1	2	3	4	5
9.645	ANTENNA(PROD)	1	10067977	—	—	—	—
9.645	ANTENNA(SERV)	1	10067977	—	—	—	—
9.647	ANTENNA,W/TUBE	1	12512900	—	—	—	—

1989 ELECTRIC ANTENNAS

PRODUCTION NUMBER	DIV.	USAGE	COLUMN
10067977	1	Y	1

GROUP	DESCRIPTION	QTY	1	2	3	4	5
9.645	ANTENNA(PROD)	1	10067977	—	—	—	—
9.645	ANTENNA(SERV)	1	10067977	—	—	—	—
9.647	ANTENNA,W/TUBE	1	12512900	—	—	—	—

1990 ELECTRIC ANTENNAS

PRODUCTION NUMBER	DIV.	USAGE	COLUMN
10098488	1	Y	1

GROUP	DESCRIPTION	QTY	1	2	3	4	5
9.645	ANTENNA(PROD)	1	10098488	—	—	—	—
9.645	ANTENNA(SERV)	1	10098488	—	—	—	—
9.647	ANTENNA,W/TUBE	1	12512900	—	—	—	—

1991 ELECTRIC ANTENNAS

PRODUCTION NUMBER	DIV.	USAGE	COLUMN
10098488	1	Y	1

GROUP	DESCRIPTION	QTY	1	2	3	4	5
9.645	ANTENNA(PROD)	1	10098488	—	—	—	—
9.645	ANTENNA(SERV)	1	10098488	—	—	—	—
9.647	ANTENNA,W/TUBE	1	12512900	—	—	—	—

9.647 ARMATURE KIT – BEZEL – BOLT – BOLT KIT – BRACKET – CABLE – CONNECTOR – FINIAL – INSULATOR – NUT – PLATE – RELAY – SPLITTER – STRAP, Radio Antenna

NOTE: FOR 1985–1991 USAGE REFER TO ELECTRIC ANTENNA CHART GRP 9.645

84–85	Y	22020274	1	19.22	ARMATURE KIT, ELEC ANT (AC–DELCO #22020274)	8–K23,19
84–87	Y	14047162	1	1.13	BEZEL, ELEC ANT (AC–DELCO #14047162)	8–K23,1
88–89	Y	10067979	1	.98	BEZEL, RDO PWR ANT (AC–DELCO #10067979)	8–K25,2
90–95	Y (EXC SPECIAL PERFORMANCE PKG (ZR1)	10067979	1	.98	BEZEL, RDO PWR ANT (AC–DELCO #10067979)	8–K25,2
90–95	Y SPECIAL PERFORMANCE PKG (ZR1)	14104620	1	.93	BEZEL, RDO PWR ANT (AC–DELCO #14104620)	8–K25,1
96	Y	10067979	1	.98	BEZEL, RDO PWR ANT (AC–DELCO #10067979)	8–K25,2
84–85	Y	22020281	1	7.28	BOLT KIT, RDO PWR ANT MOT CVR (AC–DELCO #22020281)	
88–96	Y	11514297	2	.45	BOLT, RDO PWR ANT BRKT (AC–DELCO #11514297)	8–K25,7
92–96	Y	11514297	1	.45	BOLT, RDO PWR ANT GND (AC–DELCO #11514297)	8–K25,7
86–87	Y67	14092715	1	DISCON	BRACKET, ELEC ANT	
84–87	Y	22038892	1	3.87	BRACKET, RDO PWR ANT (UPR NUT) (AC–DELCO #22038892)	8–K23,4
84–87	Y07	14072402	1	DISCON	BRACKET, RDO PWR ANT (BRACKET, ELEC ANT)	
88–89	Y	10067978	1	4.05	BRACKET, RDO PWR ANT (AC–DELCO #10067978)	3–K25,6
90–95	Y (EXC SPECIAL PERFORMANCE PKG (ZR1)	10067978	1	4.05	BRACKET, RDO PWR ANT (AC–DELCO #10067978)	8–K25,6
90–95	Y SPECIAL PERFORMANCE PKG (ZR1)	14104621	1	2.05	BRACKET, RDO PWR ANT (AC–DELCO #14104621)	8–K25,5
96	Y	10067978	1	4.05	BRACKET, RDO PWR ANT (AC–DELCO #10067978)	8–K25,6
84–85	Y	22038195	1	16.60	CABLE, RDO ANT (AC–DELCO #22038195)	8–K23,10
84	Y	22038197	1	16.60	CABLE, RDO ANT (AC–DELCO #22038197)	8–K23,10
84–87	Y	22038895	1	30.18	CABLE, RDO ANT (ANT TO CABLE EXT) (AC–DELCO #22038895)	8–K23,5
84	Y	22038900	1	25.13	CABLE, RDO ANT (ANT TO SPLITTER) (**VPI 1–877–846–8243)	
84–89	Y	14066599	1	15.12	CABLE, RDO ANT CBL EXTN (AC–DELCO #14066599)	8–K23,5
90–92	Y	10098489	1	18.05	CABLE, RDO ANT CBL EXTN (3285MM, 129IN) (REROUTE NEW CABLE ON FLR CNSL TOP EDGE WHEN SERV.LONGER CABLE) (AC–DELCO #10098489)	8–K25,14
93–96	Y	10225353	1	11.42	CABLE, RDO ANT CBL EXTN (AC–DELCO #10225353)	8–K25,14
90–91	Y	12102668	1	21.35	CONNECTOR, RLY–RDO PWR ANT (METRI–PACK) (GRAY) (3–WAY F, W/LEADS) (AC–DELCO #PT335)	
93–96	Y	12117371	1	13.24	CONNECTOR, RLY–RDO PWR ANT (3–WAY M) (W/LEADS) (02.530) (AC–DELCO #PT504)	

© 2000 GENERAL MOTORS SERVICE PARTS OPERATIONS–CHEVROLET–14Y

9.647 ARMATURE KIT – BEZEL – BOLT – BOLT KIT – BRACKET – CABLE – CONNECTOR – FINIAL – INSULATOR – NUT – PLATE – RELAY – SPLITTER – STRAP, Radio Antenna (Con't)

84–85	Y	22049789	1	2.22	FINIAL, RDO ANT (AC–DELCO #22049789)	8–K23,3
84–85	Y	14080664	1	DISCON	INSULATOR, CB XCVR SIG SPLITTER	
90–92	Y	12512902	1	*4.22	NUT, RDO PWR ANT (NUT–PUSH ON 14.0 OD, 7.0 THICKNESS, BLK CHROME PLATE FINISH) (AC–DELCO #12512902)	
93–96	Y	12512901	1	4.38	NUT, RDO PWR ANT (ANTENNA RETAINING) (AC–DELCO #12512901)	
88–96	Y07	14049163	1	.38	PLATE, BODY WRG HARN RET (AC–DELCO #14049163)	10–E5,4
84–87	Y	14049163	1	.38	PLATE, HARN RET, RR BODY WRG (AC–DELCO #14049163)	10–E5,4
84–92	Y	22535475	1	8.80	RELAY, RDO PWR ANT (AC–DELCO #22535475)	8–K25,15
84	Y	22038896	1	DISCON	SPLITTER, CB XCVR SIG	
84–96	Y	12016624	1	12.07	STRAP, RDO PWR ANT GND (02.341) (AC–DELCO #12016624)	8–K23,11

9.649 KNOB – KNOB KIT – NUT – PUSHBUTTON – SPACER, Radio Control

90–91	Y STEREO CASSETTE (UM6), CASSETTE STEREO (UU8), CASSETTE/CD PLAYER (U1F)	16170506	1	DISCON	KNOB KIT, RDO CONT (TREBLE/FADER/DUMMY)	
84	Y UQ4 (BOSE)	16026396	2	DISCON	KNOB, BASS & TREBLE CONT	
84	Y STEREO (UM7)	16020530	1	2.28	KNOB, FADER/BALANCE (AC–DELCO #16020530)	8–L2,29
84	Y STEREO (UU8)	16035456	2	1.55	KNOB, FADER/BALANCE (AC–DELCO #16035456)	8–L2,29
85–87	Y STEREO (UM7)	16019795	1	3.05	KNOB, FADER/BALANCE (AC–DELCO #16019795)	8–L2,29
85–87	Y STEREO (UM6, UU8) (EXC UK1, UL2 EXPORT)	16035456	2	1.55	KNOB, FADER/BALANCE (AC–DELCO #16035456)	8–L2,29
88–89	Y STEREO (UM6, UU8)	16035456	2	1.55	KNOB, FADER/BALANCE (AC–DELCO #16035456)	8–L2,29
94–96	Y STEREO CASSETTE (UM6), CASSETTE STEREO (UU8), CASSETTE/CD PLAYER (U1F)	16188236	2	2.88	KNOB, RDO CONT (BASS/BAL) (AC–DELCO #16188236)	8–M2,4
90–96	Y STEREO CASSETTE (UM6), CASSETTE STEREO (UU8), CASSETTE/CD PLAYER (U1F)	16161313	2	2.13	KNOB, RDO SPKR CONT (BAL) (OTR) (AC–DELCO #16161313)	8–L10,5
90–93	Y CASSETTE STEREO (UU8)	16123226	2	3.20	KNOB, RDO TONE CONT (BASS) (AC–DELCO #16123226)	8–L10,4
90–93	Y CASSETTE/CD PLAYER (U1F)	16123226	2	3.20	KNOB, RDO TONE CONT (BASS) (AC–DELCO #16123226)	8–L10,4
90–93	Y STEREO CASSETTE (UM6)	16123226	2	3.20	KNOB, RDO TONE CONT (BASS) (AC–DELCO #16123226)	8–L10,4
90–91	Y STEREO CASSETTE (UM6)	16123224	1	3.20	KNOB, RDO VOL CONT (AC–DELCO #16123224)	8–L10,1
90–93	Y CASSETTE STEREO (UU8), CASSETTE/CD PLAYER (U1F)	16123224	1	3.20	KNOB, RDO VOL CONT (AC–DELCO #16123224)	8–L10,1

© 2000 GENERAL MOTORS SERVICE PARTS OPERATIONS–CHEVROLET–14Y

9.649 KNOB – KNOB KIT – NUT – PUSHBUTTON – SPACER, Radio Control (Con't)

90–96	Y STEREO CASSETTE (UM6), CASSETTE STEREO (UU8), CASSETTE/CD PLAYER (U1F)	16161312	1	2.13	KNOB, RDO VOL CONT (OTR) (SPD CONT VOL) (AC–DELCO #16161312)	8–L10,1
94–96	Y STEREO CASSETTE (UM6), CASSETTE STEREO (UU8), CASSETTE/CD PLAYER (U1F)	16188235	1	2.88	KNOB, RDO VOL CONT (AC–DELCO #16188235)	8–M2,26
84	Y STEREO	16020297	AR	1.52	KNOB, VOLUME/TUNING (AC–DELCO #16020297)	8–L2,29
85–87	Y STEREO (EXC UK1/UL2 EXPORT)	16020297	AR	1.52	KNOB, VOLUME/TUNING (AC–DELCO #16020297)	8–L2,29
85–87	Y STEREO (UM7)	16030270	AR	1.60	KNOB, VOLUME/TUNING (AC–DELCO #16030270)	
88	Y STEREO (UU8)	16020297	AR	1.52	KNOB, VOLUME/TUNING (AC–DELCO #16020297)	8–L2,29
88–89	Y STEREO (UM6) (EXC EXPORT)	16020297	AR	1.52	KNOB, VOLUME/TUNING (AC–DELCO #16020297)	8–L2,29
84–86	Y STEREO (UM6, UM7, UU8)	14073401	1	DISCON	NUT, RDO BEZEL (PWR ANT) ...	
87	Y	14073401	1	DISCON	NUT, RDO BEZEL (PWR ANT) ...	
84	Y STEREO (UM6, UM7)	16020529	4	DISCON	PUSHBUTTON	
92–96	Y CASSETTE/CD PLAYER (U1F)	16161320	1	2.13	SPACER, RDO TUNING CONT KNOB (OTR) (AC–DELCO #16161320)	8–L16,3
	*EXPORT****************EXPORT****************EXPORT****************EXPORT****************EXPORT*					
90	Y JAPANESE RDO FREQ (UK1) (EXPORT), EUROPEAN RDO FREQ (UL2) (EXPORT), CASSETTE/CD PLAYER (U1F)	16170506	1	DISCON	KNOB KIT, RDO CONT (TREBLE/FADER/DUMMY)	
85–86	Y STEREO (UM6), UK1, UL2 (EXPORT)	16019795	1	3.05	KNOB, FADER/BALANCE (AC–DELCO #16019795)	8–L2,29
94–96	Y EUROPEAN RDO FREQ (UL2) (EXPORT), CASSETTE/CD PLAYER (U1F)	16182924	1	5.08	KNOB, RDO CONT (BASS/BAL) (AC–DELCO #16182924)	8–M2,4
90–93	Y JAPANESE RDO FREQ (UK1) (EXPORT), EUROPEAN RDO FREQ (UL2) (EXPORT), CASSETTE/CD PLAYER (U1F)	16161313	2	2.13	KNOB, RDO SPKR CONT (BAL) (OTR) (AC–DELCO #16161313) .	8–L10,5
94–96	Y EUROPEAN RDO FREQ (UL2) (EXPORT), CASSETTE/CD PLAYER (U1F)	16182925	1	5.08	KNOB, RDO SPKR CONT (BAL) (AC–DELCO #16182925)	8–M2,5
94–96	Y EUROPEAN RDO FREQ (UL2) (EXPORT), CASSETTE/CD PLAYER (U1F)	16182926	1	3.40	KNOB, RDO TONE CONT (TREBLE) (AC–DELCO #16182926)	
90–93	Y JAPANESE RDO FREQ (UK1) (EXPORT), EUROPEAN RDO FREQ (UL2) (EXPORT), CASSETTE/CD PLAYER (U1F)	16123224	1	3.20	KNOB, RDO VOL CONT (AC–DELCO #16123224)	8–L10,1

© 2000 GENERAL MOTORS SERVICE PARTS OPERATIONS–CHEVROLET–14Y

9.649 KNOB – KNOB KIT – NUT – PUSHBUTTON – SPACER, Radio Control (Con't)

90–93	Y JAPANESE RDO FREQ (UK1) (EXPORT), EUROPEAN RDO FREQ (UL2) (EXPORT), CASSETTE/CD PLAYER (U1F)	16161312	1	2.13	KNOB, RDO VOL CONT (OTR) (SPD CONT VOL) (AC–DELCO #16161312)	8–L10,1
94–96	Y EUROPEAN RDO FREQ (UL2) (EXPORT), CASSETTE/CD PLAYER (U1F)	16192674	1	3.40	KNOB, RDO VOL CONT (SPD CONT VOL) (AC–DELCO #16192674)	8–M2,26
94–96	Y EUROPEAN RDO FREQ (UL2) (EXPORT), CASSETTE/CD PLAYER (U1F)	16192675	1	5.08	KNOB, RDO VOL CONT (AC–DELCO #16192675)	8–M2,26
84–85	Y UL2 (EXPORT), STEREO (UM6)	16029996	2	DISCON	KNOB, VOLUME/TUNING	
84–85	Y UK1 (EXPORT), STEREO (UM6)	16036443	2	2.68	KNOB, VOLUME/TUNING (AC–DELCO #16036443)	
86–88	Y STEREO (UM6), UK1 (EXPORT)	16030270	AR	1.60	KNOB, VOLUME/TUNING (AC–DELCO #16030270)	
90–93	Y JAPANESE RDO FREQ (UK1) (EXPORT), EUROPEAN RDO FREQ (UL2) (EXPORT), CASSETTE/CD PLAYER (U1F)	16161320	1	2.13	SPACER, RDO TUNING CONT KNOB (OTR) (AC–DELCO #16161320)	8–L16,3

9.650 AMPLIFIER – CONNECTOR – CONTROL – ESCUTCHEON – GRILLE – MICROPHONE – RADIO – RECEIVER – RELAY – SPEAKER, Radio Receiver

NOTE: 1996 & GHEATER RADIO ASSEMBLIES ARE SERVICED ONLY THROUGH AC DELCO SERVICE CENTERS. ACCESSORY RADIOS ARE AVAILABLE IN CATALOG GROUP 21.480.

93–96	Y67 6 SPKR SYS (UX0)	16179362	2	336.33	AMPLIFIER, RDO FRT SPKR (AC–DELCO #16179362)	
84–88	Y UQ4 (BOSE)	1229242	1	DISCON	AMPLIFIER, RDO RR SPKR	
89	Y07 BOSE SPKR SYS (UQ4) .	1227906	2	203.52	AMPLIFIER, RDO RR SPKR (AC–DELCO #1227906)	8–L5,9
89	Y67 UQ4 (BOSE)	1228413	2	DISCON	AMPLIFIER, RDO RR SPKR	
90–96	Y07 6 SPKR SYS (UX0)	16179365	2	DISCON	AMPLIFIER, RDO RR SPKR	
90–96	Y67 6 SPKR SYS (UX0)	16179367	2	348.42	AMPLIFIER, RDO RR SPKR (AC–DELCO #16179367)	8–L25,14
86–88	Y UQ4 (BOSE)	1227888	2	DISCON	AMPLIFIER, SI F/D	
89	Y UQ4 (BOSE)	1227941	2	203.52	AMPLIFIER, SI F/D (AC–DELCO #1227941)	8–L5,19
84–85	Y UQ4 (BOSE)	1227804	1	DISCON	AMPLIFIER, SPKR SI F/D	
94–96	Y	12101845	1	17.46	CONNECTOR, AMPF–RDO SPKR (GRAY) (7–WAY F, W/LEADS) (02.535) (AC–DELCO #PT237)	
94–96	Y	12102629	1	42.67	CONNECTOR, AMPF–RDO SPKR (BLACK) (9–WAY F, W/LEADS) (AC–DELCO #12102629)	
90–91	Y	12102629	1	42.67	CONNECTOR, MDL–RDO CONT (BLACK) (9–WAY F, W/LEADS) (AC–DELCO #12102629)	
90–95	Y	12102778	1	45.10	CONNECTOR, MDL–RDO CONT (BLACK) (7–WAY F, W/LEADS) (02.535) (AC–DELCO #PT406)	

© 2000 GENERAL MOTORS SERVICE PARTS OPERATIONS–CHEVROLET–14Y

9.650 AMPLIFIER – CONNECTOR – CONTROL – ESCUTCHEON – GRILLE – MICROPHONE – RADIO – RECEIVER – RELAY – SPEAKER, Radio Receiver (Con't)

90–91	Y	16172721	1	1262.98	CONTROL, AM/FM STEREO & CLK & T/PLYR & CD PLYR RDO (AFS, CL, CA, CD, HPS, CDM) (AC–DELCO #16172721)	8–L16,1
91	Y CASSETTE/CD PLAYER (U1F), (EXC JAPANESE RDO FREQ (UK1) (EXPORT), EUROPEAN RDO FREQ (UL2) (EXPORT)	16144151	1		CONTROL, AM/FM STEREO & CLK & T/PLYR & CD PLYR RDO (AC–DELCO #16144151)	8–L16,1
92–94	Y CASSETTE/CD PLAYER (U1F), (EXC JAPANESE RDO FREQ (UK1) (EXPORT), EUROPEAN RDO FREQ (UL2) (EXPORT)	16172721	1	1262.98	CONTROL, AM/FM STEREO & CLK & T/PLYR & CD PLYR RDO (AC–DELCO #16172721)	8–L16,1
95–96	Y CASSETTE/CD PLAYER (U1F), (EXC JAPANESE RDO FREQ (UK1) (EXPORT), EUROPEAN RDO FREQ (UL2) (EXPORT)	16208171	1	DISCON	CONTROL, AM/FM STEREO & CLK & T/PLYR & CD PLYR RDO	
90–94	Y STEREO CASSETTE (UM6)	16172701	1	DISCON	CONTROL, AM/FM STEREO & CLK & T/PLYR RDO	
90–94	Y CASSETTE STEREO (UU8)	16208161	1	585.73	CONTROL, AM/FM STEREO & CLK & T/PLYR RDO (AC–DELCO #16208161)	8–L16,2
95–96	Y STEREO CASSETTE (UM6)	16208151	1	548.65	CONTROL, AM/FM STEREO & CLK & T/PLYR RDO (AC–DELCO #16208151)	8–M2,1
95–96	Y CASSETTE STEREO (UU8)	16208161	1	585.73	CONTROL, AM/FM STEREO & CLK & T/PLYR RDO (AC–DELCO #16208161)	8–L16,2
84	Y UQ4 (BOSE)	16024329	1	DISCON	ESCUTCHEON	
84	Y STEREO (UM7)	16025217	1	DISCON	ESCUTCHEON	
84	Y STEREO (UM6)	16013924	1	DISCON	ESCUTCHEON, RADIO	
84–89	Y (EXC UQ4 BOSE)	14047517	LH	19.00	GRILLE, RDO FRT SPKR	8–L2,26
84–89	Y (EXC UQ4 BOSE)	14047518	RH	19.00	GRILLE, RDO FRT SPKR	8–L2,26
84–89	Y UQ4 (BOSE) (EXC RDO) ..	14081837	LH	19.00	GRILLE, RDO FRT SPKR	8–L2,27
84–89	Y UQ4 (BOSE) (EXC RDO) ..	14081838	RH	19.00	GRILLE, RDO FRT SPKR	8–L2,27
84–85	Y	1224757	1	DISCON	MICROPHONE, CB RDO RCVR .	
85–87	Y	16203874	1	DISCON	RADIO, AM/FM STEREO & CLK (RECEIVER, RDO)	
93–95	Y CASSETTE STEREO (UU8), CASSETTE/CD PLAYER (U1F), (EXC JAPANESE RDO FREQ (UK1) (EXPORT), EUROPEAN RDO FREQ (UL2) (EXPORT)	16169541	1	DISCON	RADIO, AM/FM STEREO & CLK & T/PLYR	
93–95	Y STEREO CASSETTE (UM6)	16178741	1	DISCON	RADIO, AM/FM STEREO & CLK & T/PLYR	
93–95	Y EUROPEAN RDO FREQ (UL2) (EXPORT), CASSETTE/CD PLAYER (U1F)	16178751	1	364.67	RADIO, AM/FM STEREO & CLK & T/PLYR & CD PLYR (MAY REQ 1 OF THE FOLLOWING ANT ADAP:16169581, 16169591, 16169601, 16169611) (AC–DELCO #16178751)	8–M2,8
84	Y STEREO (UU8)	16021351	1		RECEIVER, RDO	8–L5,29
84	Y STEREO (UM6) (EXC UK1, UL2 EXPORT)	16029091	1	DISCON	RECEIVER, RDO	

9.650 AMPLIFIER – CONNECTOR – CONTROL – ESCUTCHEON – GRILLE – MICROPHONE – RADIO – RECEIVER – RELAY – SPEAKER, Radio Receiver (Con't)

85–88	Y STEREO (UU8)	16060393	1	DISCON	RECEIVER, RDO (WHEN USED ON 88 VEHICLES, MUST ALSO USE HARNESS 16129051.)	
89	Y STEREO (UU8)	16060393	1	DISCON	RECEIVER, RDO	
84–89	Y BOSE SPKR SYS (UQ4) ...	14078902	1	16.26	RELAY, RDO SPKR AMPF (01.055) (AC–DELCO #15–8218)	8–L5,22
90–92	Y CASSETTE STEREO (UU8), CASSETTE/CD PLAYER (U1F)	14100455	1	16.26	RELAY, RDO SPKR AMPF (BLACK) (5–WAY) (09.277) (AC–DELCO #15–8426)	3–I12,31
93–94	Y 6 SPKR SYS (UX0)	14100455	1	16.26	RELAY, RDO SPKR AMPF (BLACK) (5–WAY) (09.277) (AC–DELCO #15–8426)	3–I12,31
84–87	Y STEREO	16033662	2	27.68	SPEAKER, RDO FRT (AC–DELCO #16033662)	8–L2,25
88–89	Y (EXC BOSE SPKR SYS (UQ4)	16033662	2	27.68	SPEAKER, RDO FRT (AC–DELCO #16033662)	8–L2,25
90–92	Y (EXC 6 SPKR SYS (UX0) ..	16033662	2	27.68	SPEAKER, RDO FRT (AC–DELCO #16033662)	8–L2,25
90	Y07 6 SPKR SYS (UX0)	16141716	LH	45.40	SPEAKER, RDO FRT (LESS CLOSURE) (AC–DELCO #16141716)	8–M9,9
90–96	Y07 6 SPKR SYS (UX0)	16166471	RH	377.25	SPEAKER, RDO FRT (AC–DELCO #16166471)	8–L16,27
90–96	Y07 6 SPKR SYS (UX0)	16166481	LH	365.27	SPEAKER, RDO FRT (AC–DELCO #16166481)	8–L16,27
90–96	Y67 6 SPKR SYS (UX0)	16166491	RH	365.27	SPEAKER, RDO FRT (AC–DELCO #16166491)	8–L16,27
90–96	Y67 6 SPKR SYS (UX0)	16166501	LH	365.27	SPEAKER, RDO FRT (AC–DELCO #16166501)	8–L16,27
93–96	Y 4 SPKR SYS (UY5)	16033662	2	27.68	SPEAKER, RDO FRT (AC–DELCO #16033662)	8–L2,25
93–96	Y67 6 SPKR SYS (UX0)	16141716	2	45.40	SPEAKER, RDO FRT (LESS CLOSURE) (AC–DELCO #16141716)	8–M9,9
	*EXPORT**********EXPORT**********EXPORT**********EXPORT**********EXPORT*					
95	Y SIG & MKR LP (T90) (EXPORT)	12102485	1	19.29	CONNECTOR, AMPF–RDO SPKR (6–WAY F) (W/LEADS) (09.276) (AC–DELCO #PT276)	
94	Y JAPANESE RDO FREQ (UK1) (EXPORT), CASSETTE/CD PLAYER (U1F)	16172731	1	1395.80	CONTROL, AM/FM STEREO & CLK & T/PLYR & CD PLYR RDO (AC–DELCO #16172731)	8–M2,25
94	Y EUROPEAN RDO FREQ (UL2) (EXPORT), CASSETTE/CD PLAYER (U1F)	16172741	1	1399.08	CONTROL, AM/FM STEREO & CLK & T/PLYR & CD PLYR RDO (AC–DELCO #16172741)	8–M2,25
95–96	Y JAPANESE RDO FREQ (UK1) (EXPORT), CASSETTE/CD PLAYER (U1F)	16208181	1	DISCON	CONTROL, AM/FM STEREO & CLK & T/PLYR & CD PLYR RDO	
95–96	Y EUROPEAN RDO FREQ (UL2) (EXPORT), CASSETTE/CD PLAYER (U1F)	16208191	1	1154.67	CONTROL, AM/FM STEREO & CLK & T/PLYR & CD PLYR RDO (AC–DELCO #16208191)	8–M2,25
89	Y JAPANESE RDO FREQ (UK1) (EXPORT), CASSETTE STEREO (UU8)	16147766	1	DISCON	RADIO, AM/FM STEREO & CLK & T/PLYR	

© 2000 GENERAL MOTORS SERVICE PARTS OPERATIONS–CHEVROLET–14Y

9.650 AMPLIFIER – CONNECTOR – CONTROL – ESCUTCHEON – GRILLE – MICROPHONE – RADIO – RECEIVER – RELAY – SPEAKER, Radio Receiver (Con't)

89	Y EUROPEAN RDO FREQ (UL2) (EXPORT), CASSETTE STEREO (UU8)	16157026	1	DISCON	RADIO, AM/FM STEREO & CLK & T/PLYR	
90–96	Y JAPANESE RDO FREQ (UK1) (EXPORT), CASSETTE/CD PLAYER (U1F)	16169531	1	364.20	RADIO, AM/FM STEREO & CLK & T/PLYR & CD PLYR (MAY REQ 1 OF THE FOLLOWING ANT ADAP:16169581, 16169591, 16169601, 16169611) (AC–DELCO #16169531)	8–L10,1
84–86	Y UK1 (EXPORT), STEREO (UM6)	16027300	1	763.42	RECEIVER, RDO (AC–DELCO #16027300)	

9.652 BULB – BUTTON – LIGHTPIPE – PUSHBUTTON, Radio Tuner

90–91	Y	16005999	2	1.65	BULB, RDO DISPLAY (2700 MTR ST) (09.279) (AC–DELCO #16005999)	
84–87	Y STEREO (UM6, UM7)	16020534	2	1.15	BUTTON, CONT (AC–DELCO #16020534)	8–L2,29
88	Y STEREO (UM6) (EXC UK1/UL2 EXPORT)	16020534	2	1.15	BUTTON, CONT (AC–DELCO #16020534)	8–L2,29
89	Y STEREO (UM6)	16020534	2	1.15	BUTTON, CONT (AC–DELCO #16020534)	8–L2,29
85–87	Y STEREO (UM7)	16032477	1	1.28	BUTTON, CONT TREBLE/BASE (AC–DELCO #16032477)	8–L2,29
85–87	Y STEREO (UM7)	16032367	1	1.28	BUTTON, POWER (AC–DELCO #16032367)	8–L2,29
84	Y STEREO (UM6, UM7, UU8)	16020882	1	DISCON	LIGHTPIPE, PNTD (VOL & TUNE KNOB)	
84	Y STEREO (UM6)	16020883	1	DISCON	LIGHTPIPE, PNTD (PUSH BUTTON)	
84	Y STEREO (UM7)	16025219	1	DISCON	LIGHTPIPE, PNTD	
84	Y UQ4 (BOSE)	16025384	1	DISCON	LIGHTPIPE, PNTD	
84	Y STEREO (UU8)	16035459	2	DISCON	PUSHBUTTON, DNR/CRO2	
84–89	Y STEREO (UU8)	16033533	2	DISCON	PUSHBUTTON, SLIDE TREBLE/BASS	
	*EXPORT**********EXPORT**********EXPORT**********EXPORT**********EXPORT*					
86–88	Y STEREO (UM6), UK1 (EXPORT)	16024791	AR	.80	BUTTON, GRAPHIC EQUALIZER (AC–DELCO #16024791)	
84–85	Y UL2 (EXPORT), STEREO (UM6)	16036480	2	DISCON	PUSHBUTTON, TREBLE/BASS ..	
84–85	Y UK1 (EXPORT), STEREO (UM6)	16042812	2	DISCON	PUSHBUTTON, TREBLE/BASS ..	

9.654 CAPACITOR, Radio

84–86	Y	1227894	AR	*1.80	CAPACITOR, .47 MFD RDO SUPPRESSION (AC–DELCO #1227894)	
84–86	Y	1227895	AR	2.40	CAPACITOR, 220 MFD ELECTROLYTIC–RDO SUPPR (AC–DELCO #1227895)	

9.655 BRACKET – GRILLE – PLATE, Radio Speaker

84–89	Y07	14047437	2	DISCON	BRACKET, RDO FRT SPKR	
84–89	Y07	14047439	LH	DISCON	BRACKET, RDO RR SPKR	
84–89	Y07	14047440	RH	DISCON	BRACKET, RDO RR SPKR	
88–96	Y07	10082810	2	1.00	BRACKET, RDO RR SPKR GRL (GRL MTG)	8–L2,16

© 2000 GENERAL MOTORS SERVICE PARTS OPERATIONS–CHEVROLET–14Y

9.655 BRACKET – GRILLE – PLATE, Radio Speaker (Con't)

90	Y (22I)	10172449	LH	DISCON	GRILLE, RDO FRT SPKR (09.650) (VEH W/L98 & BEFORE VIN 116467 OR W/LT5 & BEFORE VIN 800158 MUST USE SILL PLATE 10172439, VEH W/SAME VINS & LATER DO NOT REQ PLATE) ..	
90	Y (22I)	10172450	RH	DISCON	GRILLE, RDO FRT SPKR (09.650) (VEH W/L98 & BEFORE VIN 116467 OR W/LT5 & BEFORE VIN 800158 MUST USE SILL PLATE 10172440, VEH W/SAME VINS & LATER DO NOT REQ PLATE) ..	
90	Y (60I)	10172451	LH	35.00	GRILLE, RDO FRT SPKR (09.650) (VEH W/L98 & BEFORE VIN 116467 OR W/LT5 & BEFORE VIN 800158 MUST USE SILL PLATE 10172441, VEH W/SAME VINS & LATER DO NOT REQ PLATE) ..	8–L10,26
90	Y (60I)	10172452	RH	DISCON	GRILLE, RDO FRT SPKR (09.650) (VEH W/L98 & BEFORE VIN 116467 OR W/LT5 & BEFORE VIN 800158 MUST USE SILL PLATE 10172442, VEH W/SAME VINS & LATER DO NOT REQ PLATE) ..	
90	Y (73I)	10172453	LH	DISCON	GRILLE, RDO FRT SPKR (09.650) (VEH W/L98 & BEFORE VIN 116467 OR W/LT5 & BEFORE VIN 800158 MUST USE SILL PLATE 10172443, VEH W/SAME VINS & LATER DO NOT REQ PLATE) ..	
90	Y (73I)	10172454	RH	DISCON	GRILLE, RDO FRT SPKR (09.650)	
90	Y (90I)	10172455	LH	DISCON	GRILLE, RDO FRT SPKR (09.650) (VEH W/L98 & BEFORE VIN 116467 OR W/LT5 & BEFORE VIN 800158 MUST USE SILL PLATE 10172445, VEH W/SAME VINS & LATER DO NOT REQ PLATE) ..	
90	Y (90I)	10172456	RH	DISCON	GRILLE, RDO FRT SPKR (09.650) (VEH W/L98 & BEFORE VIN 116467 OR W/LT5 & BEFORE VIN 800158 MUST USE SILL PLATE 10172446, VEH W/SAME VINS & LATER DO NOT REQ PLATE) ..	
90	Y (19I)	10220615	LH	29.75	GRILLE, RDO FRT SPKR (09.650) (VEH W/L98 & BEFORE VIN 116467 OR W/LT5 & BEFORE VIN 800158 MUST USE SILL PLATE 10172437, VEH W/SAME VINS & LATER DO NOT REQ PLATE) ..	8–L10,26
90	Y (19I)	10220616	RH	29.75	GRILLE, RDO FRT SPKR (09.650) (VEH W/L98 & BEFORE VIN 116467 OR W/LT5 & BEFORE VIN 800158 MUST USE SILL PLATE 10172438, VEH W/SAME VINS & LATER DO NOT REQ PLATE) ..	8–L10,26
91	Y (22I)	10172449	LH	DISCON	GRILLE, RDO FRT SPKR (BLUE) (09.650)	
91	Y (22I)	10172450	RH	DISCON	GRILLE, RDO FRT SPKR (BLUE) (09.650)	
91	Y (60I)	10172451	LH	35.00	GRILLE, RDO FRT SPKR (COGNAC) (09.650)	8–L10,26

© 2000 GENERAL MOTORS SERVICE PARTS OPERATIONS–CHEVROLET–14Y

9.655 BRACKET – GRILLE – PLATE, Radio Speaker (Con't)

91	Y (60I)	10172452	RH	DISCON	GRILLE, RDO FRT SPKR (COGNAC) (09.650)	
91–92	Y (73I)	10172453	LH	DISCON	GRILLE, RDO FRT SPKR (RED) (09.650)	
91–92	Y (73I)	10172454	RH	DISCON	GRILLE, RDO FRT SPKR (RED) (09.650)	
91	Y (90I)	10172455	LH	DISCON	GRILLE, RDO FRT SPKR (GRAYSMOKE) (09.650)	
91	Y (90I)	10172456	RH	DISCON	GRILLE, RDO FRT SPKR (GRAYSMOKE) (09.650)	
91–93	Y (19I)	10220615	LH	29.75	GRILLE, RDO FRT SPKR (BLACK) (09.650)	8–L10,26
91–93	Y (19I)	10220616	RH	29.75	GRILLE, RDO FRT SPKR (BLACK) (09.650)	8–L10,26
92–93	Y (10I)	10220615	LH	29.75	GRILLE, RDO FRT SPKR (BLACK) (09.650)	8–L10,26
92–93	Y (10I)	10220616	RH	29.75	GRILLE, RDO FRT SPKR (BLACK) (09.650)	8–L10,26
92–93	Y (64I)	10220617	LH	DISCON	GRILLE, RDO FRT SPKR (BEIGE) (09.650)	
92–93	Y (64I)	10220618	RH	29.75	GRILLE, RDO FRT SPKR (BEIGE) (09.650)	8–L10,26
92–93	Y (14I)	10220619	LH	21.05	GRILLE, RDO FRT SPKR (GRAY) (09.650)	8–L10,26
92–93	Y (14I)	10220620	RH	20.65	GRILLE, RDO FRT SPKR (GRAY) (09.650)	8–L10,26
93	Y (79I)	10220623	LH	21.22	GRILLE, RDO FRT SPKR (RED) (09.650) (AC–DELCO #10220623)	8–M2,11
93	Y (79I)	10220624	RH	22.00	GRILLE, RDO FRT SPKR (RED) (09.650)	8–M2,11
93	Y (70I)	10220625	LH	28.20	GRILLE, RDO FRT SPKR (RED) (09.650)	8–M2,11
93	Y (70I)	10220626	RH	28.20	GRILLE, RDO FRT SPKR (RED) (09.650)	8–M2,11
94–96	Y (19I)	10238587	LH	31.50	GRILLE, RDO FRT SPKR (BLACK) (09.650)	8–M2,11
94–96	Y (19I)	10238588	RH	31.50	GRILLE, RDO FRT SPKR (BLACK) (09.650)	8–M2,11
94–96	Y (64I)	10238589	LH	DISCON	GRILLE, RDO FRT SPKR (BEIGE) (09.650)	
94–96	Y (64I)	10238590	RH	31.50	GRILLE, RDO FRT SPKR (BEIGE) (09.650)	8–M2,11
94–96	Y (14I)	10238591	LH	31.50	GRILLE, RDO FRT SPKR (GRAY) (09.650)	8–M2,11
94–96	Y (14I)	10238592	RH	31.50	GRILLE, RDO FRT SPKR (GRAY) (09.650)	8–M2,11
94–96	Y (70I)	10238593	LH	31.50	GRILLE, RDO FRT SPKR (RED) (09.650)	8–M2,11
94–96	Y (70I)	10238594	RH	DISCON	GRILLE, RDO FRT SPKR (RED) (09.650)	
90–96	Y STEREO CASSETTE (UM6)	10098450	RH	5.55	PLATE, RDO FRT SPKR MT	8–L10,30
90–96	Y STEREO CASSETTE (UM6)	10098451	LH	5.55	PLATE, RDO FRT SPKR MT	8–L10,30
90–96	Y CASSETTE STEREO (UU8), CASSETTE/CD PLAYER (U1F)	10146468	2	5.55	PLATE, RDO SPKR NA (GOLD SERIES)	8–L10,25
90–96	Y STEREO CASSETTE (UM6)	14057530	2	8.20	PLATE, RDO SPKR NA (09.665)	8–L2,8

9.656 CONNECTOR – HARNESS – SEAL – TAPE – WIRE, Radio and Speaker

86–87	Y	12102637	1	13.38	**CONNECTOR**, FRT DR UPR SPKR (W/LEADS) (2–WAY F) (02.535) (AC–DELCO #PT324) .....
84–90	Y	12085523	1	17.20	**CONNECTOR**, INLINE–TO RDO SPKR (2–WAY F, W/LEADS) (02.535) (AC–DELCO #PT133)
90	Y STEREO CASSETTE (UM6)	12085481	1	17.56	**CONNECTOR**, INLINE–TO RDO SPKR (2–WAY M, W/LEADS) (02.535) (AC–DELCO #PT103)
90	Y CASSETTE STEREO (UU8), CASSETTE/CD PLAYER (U1F)	12101821	1	17.28	**CONNECTOR**, INLINE–TO RDO SPKR (2–WAY F, W/LEADS) (02.535) (AC–DELCO #PT213)
90–91	Y CASSETTE STEREO (UU8), CASSETTE/CD PLAYER (U1F)	12101900	1	34.09	**CONNECTOR**, INLINE–TO RDO SPKR (6–WAY F) (W/LEADS) (02.535) (AC–DELCO #PT171)
90–92	Y STEREO CASSETTE (UM6)	12102900	1	35.27	**CONNECTOR**, INLINE–TO RDO SPKR (4–WAY F) (W/LEADS) (02.535) (AC–DELCO #PT382)
91–92	Y07 CASSETTE STEREO (UU8), CASSETTE/CD PLAYER (U1F)	12101827	1	36.30	**CONNECTOR**, INLINE–TO RDO SPKR (8–WAY M) (W/LEADS) (02.535) (AC–DELCO #PT219)
91	Y67 CASSETTE STEREO (UU8), CASSETTE/CD PLAYER (U1F)	12101827	2	36.30	**CONNECTOR**, INLINE–TO RDO SPKR (8–WAY M) (W/LEADS) (02.535) (AC–DELCO #PT219)
92–93	Y	12101900	4	34.09	**CONNECTOR**, INLINE–TO RDO SPKR (FRT) (6–WAY F) (W/LEADS) (02.535) (AC–DELCO #PT171) .....
93	Y67	12085481	1	17.56	**CONNECTOR**, INLINE–TO RDO SPKR (RR) (BLACK) (2–WAY M) (W/LEADS) (02.535) (AC–DELCO #PT103) .....
93–94	Y67	12085523	2	17.20	**CONNECTOR**, INLINE–TO RDO SPKR (FRT) (BLACK) (2–WAY F) (W/LEADS) (02.535) (AC–DELCO #PT133) .....
95–96	Y	12085523	2	17.20	**CONNECTOR**, INLINE–TO RDO SPKR (FRT) (BLACK) (2–WAY F) (W/LEADS) (02.535) (AC–DELCO #PT133) .....
90–95	Y	12101845	1	17.46	**CONNECTOR**, RDO (GRAY) (7–WAY F, W/LEADS) (02.535) (AC–DELCO #PT237) .....
90–96	Y	12102485	1	19.29	**CONNECTOR**, RDO (6–WAY F) (W/LEADS) (09.276) (AC–DELCO #PT276) .....
90–96	Y	12102629	1	42.67	**CONNECTOR**, RDO (BLACK) (9–WAY F, W/LEADS) (09.650) (AC–DELCO #12102629) .....
92	Y 6 SPKR SYS (UX0)	12126030	1	21.33	**CONNECTOR**, RDO (BLUE) (4–WAY F) (W/LEADS) (AC–DELCO #PT661) .....
93–96	Y 6 SPKR SYS (UX0), 4 SPKR SYS (UY5)	12126030	1	21.33	**CONNECTOR**, RDO (BLUE) (4–WAY F) (W/LEADS) (AC–DELCO #PT661) .....
95–96	Y	12102778	1	45.10	**CONNECTOR**, RDO (BLACK) (7–WAY F, W/LEADS) (02.535) (AC–DELCO #PT406) .....

© 2000 GENERAL MOTORS SERVICE PARTS OPERATIONS–CHEVROLET–14Y

9.656 CONNECTOR – HARNESS – SEAL – TAPE – WIRE, Radio and Speaker (Con't)

91	Y STEREO CASSETTE (UM6)	12085481	2	17.56	CONNECTOR, SPKR–RDO (METRI–PACK) (BLACK) (2–WAY M) (W/LEADS) (02.535) (AC–DELCO #PT103)	
91	Y 4–SPD A/TRANS (MD8), 6–SPD M/TRANS (ML9), A/C MAN CONT (C60)	15305888	1	29.36	CONNECTOR, SPKR–RDO (6–WAY F) (W/LEADS) (13.090) (AC–DELCO #PT1032)	
92–93	Y	12101821	1	17.28	CONNECTOR, SPKR–RDO (NATURAL) (2–WAY F) (W/LEADS) (02.535) (AC–DELCO #PT213)	
93–96	Y 6 SPKR SYS (UX0), 4 SPKR SYS (UY5)	12126035	1	28.98	CONNECTOR, SPKR–RDO (NATURAL) (4–WAY F) (W/LEADS) (METRI PAC) (AC–DELCO #12126035)	
94–96	Y 4 SPKR SYS (UY5)	12085481	2	17.56	CONNECTOR, SPKR–RDO (METRI–PACK) (BLACK) (2–WAY M) (W/LEADS) (02.535) (AC–DELCO #PT103)	
94	Y	12102485	1	19.29	CONNECTOR, SPKR–RDO (6–WAY F) (W/LEADS) (09.276) (AC–DELCO #PT276)	
84–87	Y STEREO (UM6, UM7)	12016859	1	DISCON	HARNESS, FRT & RR SPKR	
88–89	Y (EXC UQ4 BOSE)	12016859	1	DISCON	HARNESS, FRT & RR SPKR	
96	Y	12163007	1	23.60	HARNESS, RDO FRT S/D SPKR WRG (AC–DELCO #12163007)	
84	Y UQ4 (BOSE)	12016893	1	DISCON	HARNESS, RDO FRT SPKR WRG	
85–86	Y UQ4 (BOSE)	12048805	1	DISCON	HARNESS, RDO FRT SPKR WRG	
87	Y STEREO (UU8)	12048805	1	DISCON	HARNESS, RDO FRT SPKR WRG	
88	Y UQ4 BOSE	12048805	1	DISCON	HARNESS, RDO FRT SPKR WRG	
89	Y UQ4 (BOSE)	12080604	1	DISCON	HARNESS, RDO FRT SPKR WRG	
90–92	Y (EXC 6 SPKR SYS (UX0) ..	12073817	1	DISCON	HARNESS, RDO FRT SPKR WRG	
90	Y 6 SPKR SYS (UX0)	12090338	1	DISCON	HARNESS, RDO FRT SPKR WRG	
91–92	Y 6 SPKR SYS (UX0)	12106518	1	DISCON	HARNESS, RDO FRT SPKR WRG	
93–96	Y 6 SPKR SYS (UX0)	12141864	1	121.80	HARNESS, RDO FRT SPKR WRG	8–M9,8
93–96	Y07 4 SPKR SYS (UY5)	12106566	1	113.68	HARNESS, RDO FRT SPKR WRG	8–M2,2
93–96	Y67 4 SPKR SYS (UY5)	12130343	1	82.22	HARNESS, RDO FRT SPKR WRG	8–M2,2
94–95	Y 4–SPD A/TRANS (M30), A/C MAN CONT (C60), A/C AUTO ELEC CONT (C68) ...	12143758	1	47.15	HARNESS, RDO SPKR AMPF WRG (AC–DELCO #12143758)	
84–85	Y C .B.	16021760	1	DISCON	HARNESS, W/RELAY, C .B.	
91	Y	3999572	AR	4.98	SEAL, FRT S/D (09.260)	8–M2,27
93–95	Y	3999572	2	4.98	TAPE, RDO FRT SPKR WRG HARN (09.260)	8–M2,27
90–92	Y (EXC 6 SPKR SYS (UX0) ..	12090388	2	29.55	WIRE, RDO FRT SPKR	8–L10,3
93–96	Y 4 SPKR SYS (UY5)	12090388	2	29.55	WIRE, RDO FRT SPKR	8–L10,3
85–87	Y STEREO (UM6, UM7)	12055834	1	31.47	WIRE, RDO RR SPKR (WHEN USED ON 84–86 VEHICLES, 8911773 CONN IS ALSO REQUIRED)	8–L2,13
88–89	Y (EXC UQ4 BOSE)	12055834	1	31.47	WIRE, RDO RR SPKR	8–L2,13
90–92	Y (EXC 6 SPKR SYS (UX0) ..	12055834	1	31.47	WIRE, RDO RR SPKR	8–L2,13
93–96	Y 4 SPKR SYS (UY5)	12055834	1	31.47	WIRE, RDO RR SPKR	8–L2,13

9.663 CAPACITOR – SHIELD – STRAP, Radio Static Suppression

92–95	Y	1224205	AR	27.95	CAPACITOR, RDO GEN I (09.650) (USE TO SUPPRESS ALTERNATOR WHINE THRU RADIO SOUND SYSTEMS;HAS 250 MICROFARAD CAPACITOR & INSTRUCTION SHEET) (AC–DELCO #1224205)	
84–88	Y STEREO (UM6, UU8)	14069650	1	DISCON	SHIELD, RDO NOISE SUPPR	
88–89	Y	10098463	1	23.60	SHIELD, RDO NOISE SUPPR (AC–DELCO #10098463)	8–K25,3
90–95	Y (EXC SPECIAL PERFORMANCE PKG (ZR1)	10098463	1	23.60	SHIELD, RDO NOISE SUPPR (AC–DELCO #10098463)	8–K25,3
90–95	Y SPECIAL PERFORMANCE PKG (ZR1)	14104619	1	7.60	SHIELD, RDO NOISE SUPPR	8–K25,3
96	Y	10098463	1	23.60	SHIELD, RDO NOISE SUPPR (AC–DELCO #10098463)	8–K25,3
84–86	Y	6286800	AR	19.61	STRAP, RDO GRD (18") (02.341)	

9.665 BRACKET – GASKET – GRILLE – HOUSING – INSULATOR – NUT – PLATE – REINFORCEMENT – SEAL – SPEAKER, Radio Auxiliary Speakers

86–88	Y67	14092664	2	DISCON	BRACKET, RDO RR SPKR	
89	Y67 UQ4 (BOSE)	14092664	2	DISCON	BRACKET, RDO RR SPKR	
84–90	Y UQ4 (BOSE)	1226368	AR	DISCON	GASKET, ENCLOSURE SPKR FRT SI DR	
84–89	Y BOSE SPKR SYS (UQ4)	1226369	2	DISCON	GASKET, ENCLOSURE SPKR RR	
84–89	Y07 UQ4 (BOSE)	1226376	2	DISCON	GASKET, SPKR (R/ST TO B/W PNL)	
84–87	Y07	14057533	LH	37.25	GRILLE, RDO RR SPKR (PAINT TO MATCH)	8–L2,10
84–87	Y07	14057534	RH	37.25	GRILLE, RDO RR SPKR (PAINT TO MATCH)	8–L2,10
86–89	Y67	14092707	2	DISCON	GRILLE, RDO RR SPKR	
88–89	Y07	10054605	LH	33.00	GRILLE, RDO RR SPKR	8–L2,7
88–89	Y07	10054606	RH	33.00	GRILLE, RDO RR SPKR	8–L2,7
90–91	Y07 (22I)	10132937	LH	DISCON	GRILLE, RDO RR SPKR (BLUE)	
90–91	Y07 (22I)	10132938	RH	DISCON	GRILLE, RDO RR SPKR (BLUE)	
90–91	Y07 (60I)	10132939	LH	DISCON	GRILLE, RDO RR SPKR (COGNAC)	
90–91	Y07 (60I)	10132940	RH	DISCON	GRILLE, RDO RR SPKR (COGNAC)	
90–92	Y07 (73I)	10132941	LH	DISCON	GRILLE, RDO RR SPKR (RED)	
90–92	Y07 (73I)	10132942	RH	22.05	GRILLE, RDO RR SPKR (RED)	8–L10,23
90–91	Y07 (90I)	10132943	LH	DISCON	GRILLE, RDO RR SPKR (GRAY)	
90–91	Y07 (90I)	10132944	RH	DISCON	GRILLE, RDO RR SPKR (GRAY)	
90–93	Y07 (10I), (19I)	10219851	LH	DISCON	GRILLE, RDO RR SPKR (BLACK)	
90–93	Y07 (10I), (19I)	10219852	RH	DISCON	GRILLE, RDO RR SPKR (BLACK)	
90–91	Y67 (22I)	10123083	2	DISCON	GRILLE, RDO RR SPKR (BLUE)	
90–91	Y67 (60I)	10123085	2	DISCON	GRILLE, RDO RR SPKR (COGNAC)	
90–92	Y67 (73I)	10123087	2	DISCON	GRILLE, RDO RR SPKR (RED)	
90–91	Y67 (90I)	10123089	2	DISCON	GRILLE, RDO RR SPKR (GRAY)	
92–93	Y07 (64I)	10219853	LH	30.00	GRILLE, RDO RR SPKR (BEIGE)	8–L10,23
92–93	Y07 (64I)	10219854	RH	24.73	GRILLE, RDO RR SPKR (BEIGE)	8–L10,23
92–93	Y07 (14I)	10219855	LH	27.68	GRILLE, RDO RR SPKR (GRAY)	8–L10,23
92–93	Y07 (14I)	10219856	RH	28.72	GRILLE, RDO RR SPKR (GRAY)	8–L10,23
92–93	Y67 (64I)	10175628	2	33.25	GRILLE, RDO RR SPKR (BEIGE)	8–L10,23
92–93	Y67 (10I), (19I)	10219863	2	DISCON	GRILLE, RDO RR SPKR (BLACK)	
92–93	Y67 (14I)	10219865	2	28.98	GRILLE, RDO RR SPKR (GRAY)	8–L10,23
93	Y07 (79I)	10219859	LH	28.20	GRILLE, RDO RR SPKR (RED)	8–M2,23
93	Y07 (79I)	10219860	RH	28.20	GRILLE, RDO RR SPKR (RED)	8–M2,23
93	Y07 (70I)	10219861	LH	DISCON	GRILLE, RDO RR SPKR (RED)	
93	Y07 (70I)	10219862	RH	28.20	GRILLE, RDO RR SPKR (RED)	8–M2,23

© 2000 GENERAL MOTORS SERVICE PARTS OPERATIONS–CHEVROLET–14Y

9.665 BRACKET – GASKET – GRILLE – HOUSING – INSULATOR – NUT – PLATE – REINFORCEMENT – SEAL – SPEAKER, Radio Auxiliary Speakers (Con't)

93	Y67 (79I)	10219866	2	23.05	GRILLE, RDO RR SPKR (RED)	8–L25,1
94–96	Y07 (19I)	10238611	LH	22.05	GRILLE, RDO RR SPKR (BLACK)	8–M2,23
94–96	Y07 (19I)	10238612	RH	28.50	GRILLE, RDO RR SPKR (BLACK)	8–M2,23
94–96	Y07 (64I)	10238613	LH	28.50	GRILLE, RDO RR SPKR (BEIGE)	8–M2,23
94–96	Y07 (64I)	10238614	RH	28.50	GRILLE, RDO RR SPKR (BEIGE)	8–M2,23
94–96	Y07 (14I)	10238615	LH	28.50	GRILLE, RDO RR SPKR (GRAY)	8–M2,23
94–96	Y07 (14I)	10238616	RH	28.50	GRILLE, RDO RR SPKR (GRAY)	8–M2,23
94–95	Y07 (70I)	10238617	LH	28.50	GRILLE, RDO RR SPKR (RED)	8–M2,23
94–95	Y07 (70I)	10238618	RH	28.50	GRILLE, RDO RR SPKR (RED)	8–M2,23
94–96	Y67 (19I)	10238620	2	28.50	GRILLE, RDO RR SPKR (BLACK)	8–L25,1
94–96	Y67 (64I)	10238621	2	28.50	GRILLE, RDO RR SPKR (BEIGE)	8–L25,1
94–96	Y67 (14I)	10238622	2	28.50	GRILLE, RDO RR SPKR (GRAY)	8–L25,1
94–95	Y67 (70I)	10238623	2	28.50	GRILLE, RDO RR SPKR (RED)	8–L25,1
96	Y07 GRAND SPORT EDITION (Z16), (70I)	10238611	LH	22.05	GRILLE, RDO RR SPKR (BLACK)	8–M2,23
96	Y07 GRAND SPORT EDITION (Z16), (70I)	10238612	RH	28.50	GRILLE, RDO RR SPKR (BLACK)	8–M2,23
96	Y07 (70I), (EXC GRAND SPORT EDITION (Z16)	10238617	LH	28.50	GRILLE, RDO RR SPKR (RED)	8–M2,23
96	Y07 (70I), (EXC GRAND SPORT EDITION (Z16)	10238618	RH	28.50	GRILLE, RDO RR SPKR (RED)	8–M2,23
96	Y67 (70I), (EXC GRAND SPORT EDITION (Z16)	10238623	2	28.50	GRILLE, RDO RR SPKR (RED)	8–L25,1
84–89	Y UQ4 (BOSE)	14049217	2	33.25	GRILLE, SI FRT DR SPKR (PAINT TO MATCH)	8–L5,20
90–96	Y07	10193609	LH	24.41	HOUSING, RDO RR SPKR (12.981)	10–I10,17
90–96	Y07	10193610	RH	24.41	HOUSING, RDO RR SPKR (12.981)	10–I10,17
90–96	Y67	10218349	1	31.68	HOUSING, RDO RR SPKR (AC–DELCO #10218349)	8–L25,2
86–89	Y67	10048873	LH	.80	INSULATOR, RDO RR SPKR OPG CVR (AC–DELCO #10048873)	8–L8,17
86–89	Y67	10048874	RH	DISCON	INSULATOR, RDO RR SPKR OPG CVR	
90–91	Y	9415253	AR	.33	NUT, RDO FRT S/D SPKR GRL	9–I24,11
93–96	Y	9415253	7	.33	NUT, RDO FRT S/D SPKR GRL	9–I24,11
84–89	Y07 STEREO CASSETTE (UM6)	10098443	1	10.95	PLATE, RDO RR SPKR MT (RT RR ON COUPE, LT RR ON CONVERTIBLE)	8–L2,15
90–96	Y STEREO CASSETTE (UM6)	10098442	1	10.95	PLATE, RDO RR SPKR MT (LT RR ON COUPE, RT RR ON CONVERTIBLE)	8–L2,15
90–96	Y STEREO CASSETTE (UM6)	10098443	1	10.95	PLATE, RDO RR SPKR MT (RT RR ON COUPE, LT RR ON CONVERTIBLE)	8–L2,15
86–89	Y67	14092667	LH	DISCON	PLATE, RDO RR SPKR MTG	
86–89	Y67	14092668	RH	DISCON	PLATE, RDO RR SPKR MTG	
84–89	Y UQ4 (BOSE)	14057531	4	8.40	PLATE, RDO SPKR GRL NA	8–L5,2
84–89	Y (EXC UQ4)	14057530	1	8.20	PLATE, RDO SPKR NA	
86–89	Y67	14092665	LH	DISCON	REINFORCEMENT, RDO RR SPKR OPG	
86–89	Y67	14092666	RH	DISCON	REINFORCEMENT, RDO RR SPKR OPG	
84–86	Y STEREO (UM6, UM7)	14064578	2	1.45	SEAL, DR RADIO SPKR OPG CVR	8–L2,22
87–89	Y (EXC UQ4 BOSE)	14064578	2	1.45	SEAL, DR RADIO SPKR OPG CVR	8–L2,22
90–92	Y (EXC 6 SPKR SYS (UX0)	16040940	2	31.18	SPEAKER, RDO RR (AC–DELCO #16040940)	8–L2,12

© 2000 GENERAL MOTORS SERVICE PARTS OPERATIONS–CHEVROLET–14Y

9.665 BRACKET – GASKET – GRILLE – HOUSING – INSULATOR – NUT – PLATE – REINFORCEMENT – SEAL – SPEAKER, Radio Auxiliary Speakers (Con't)

90–96	Y07 6 SPKR SYS (UX0)	16174481	RH	335.33	SPEAKER, RDO RR (POS #2) (INCLUDES AMPLIFIER) (AC–DELCO #16174481)	8–L16,19
90–96	Y07 6 SPKR SYS (UX0)	16174501	LH	335.33	SPEAKER, RDO RR (POS #2) (INCLUDES AMPLIFIER) (AC–DELCO #16174501)	8–L16,19
90–96	Y67 6 SPKR SYS (UX0)	16141715	2	84.08	SPEAKER, RDO RR (PART OF 16174471 AND 16174491) (6" SPKR) (AC–DELCO #16141715)	8–L16,19
90–96	Y67 6 SPKR SYS (UX0)	16174471	RH	345.32	SPEAKER, RDO RR (CONSISTS OF SPKR 16141715 & AMP 16179367) (AC–DELCO #16174471)	8–L16,19
90–96	Y67 6 SPKR SYS (UX0)	16174491	LH	345.32	SPEAKER, RDO RR (CONSISTS OF SPKR 16141715 & AMP 16179367) (AC–DELCO #16174491)	8–L16,19
93–96	Y 4 SPKR SYS (UY5)	16040940	2	31.18	SPEAKER, RDO RR (AC–DELCO #16040940)	8–L2,12
84–86	Y STEREO (UM6, UM7)	16040940	2	31.18	SPEAKER, RR (AC–DELCO #16040940)	8–L2,12
87	Y67 STEREO (UM6, UM7) ...	16177769	AR	28.93	SPEAKER, RR (AC–DELCO #16177769)	8–L8,8
88–89	Y67 (EXC UQ4 BOSE, RDO) .	16177769	AR	28.93	SPEAKER, RR (AC–DELCO #16177769)	8–L8,8
87	Y07 STEREO (UM6, UM7) ...	16040940	2	31.18	SPEAKER, RR L/WDO (AC–DELCO #16040940)	8–L2,12
88–89	Y07 (EXC UQ4 BOSE, RDO) .	16040940	2	31.18	SPEAKER, RR L/WDO (AC–DELCO #16040940)	8–L2,12
90	Y07 (EXC UX0)	16040940	2	31.18	SPEAKER, RR L/WDO (AC–DELCO #16040940)	8–L2,12
84–89	Y07 UQ4 (BOSE)	16022301	RH	260.48	SPEAKER, W/AMP, RR (AC–DELCO #16022301)	8–L5,9
84–89	Y07 UQ4 (BOSE)	16022311	LH	260.48	SPEAKER, W/AMP, RR (AC–DELCO #16022311)	8–L5,9
86–89	Y67 UQ4 (BOSE)	16052301	2	DISCON	SPEAKER, W/AMP, RR	
84–85	Y UQ4 (BOSE)	16022281	2	DISCON	SPEAKER, W/AMP, SI F/D	
86–89	Y UQ4 (BOSE)	16052371	2	267.47	SPEAKER, W/AMP, SI F/D (AC–DELCO #16052371)	8–L5,19
84–90	Y UQ4 (BOSE)	1226669	AR	90.33	SPEAKER, W/GSKT, FRT/RR (AC–DELCO #1226669)	8–L5,9

9.667 BOLT – BRACKET – INSULATOR – NUT – RETAINER – TAPE, Radio Mounting

89–92	Y	12337892	2	*1.13	BOLT, RDO (POSN #2) (M5X.8X16 THD) (SPECIAL) (03.671) (AC–DELCO #12337892)	8–L5,25
89–92	Y	12337892	1	*1.13	BOLT, RDO (POSN #1) (M5X.8X16 THD) (SPECIAL) (03.671) (AC–DELCO #12337892)	8–L5,25
90–96	Y	12337892	1	*1.13	BOLT, RDO CONT (POSN #2) (M5X.8X16 THD) (SPECIAL) (03.671) (AC–DELCO #12337892)	8–L5,25
84	Y	14047160	1	DISCON	BRACKET, C .B .RCVR	
84–89	Y W/STEREO	14047197	2	.80	BRACKET, RDO (AC–DELCO #14047197)	8–L2,31
95–96	Y	10269895	1	1.28	BRACKET, RDO CONT MDL (AC–DELCO #10269895)	

© 2000 GENERAL MOTORS SERVICE PARTS OPERATIONS–CHEVROLET–

9.667 BOLT – BRACKET – INSULATOR – NUT – RETAINER – TAPE, Radio Mounting (Con't)

94	Y CASSETTE/CD PLAYER (U1F)	10247760	1	1.30	INSULATOR, RDO CONT (FOR LONG TOP–POS #2, OR WHEN USING IN PLC OF 10247759 FOR SHORT BOTTON–POS #1 CUT IN HALF AND STACK.)	
95–96	Y CASSETTE/CD PLAYER (U1F)	10247760	1	1.30	INSULATOR, RDO CONT (FOR LONG TOP–POS #2)	
84–96	Y	10027015	1	.53	NUT, RDO CONT (PUSH–ON) (OVERALL LENGTH 1.25") (03.671) (AC–DELCO #10027015)	8–L2,34
84–90	Y	10027015	1	.53	RETAINER, RDO (PUSH–ON) (OVERALL LENGTH 1.25") (03.671) (AC–DELCO #10027015)	8–L2,34
93	Y	10143555	1	5.82	TAPE, RDO FSTN (07.450)	

9.709 CONNECTOR – HEATER – HOUSING – LIGHTER – RETAINER, Cigarette Lighter

92–96	Y	12102604	1	13.32	CONNECTOR, C/LTR (BLACK) (2–WAY F) (02.535) (AC–DELCO #PT291)	
92	Y 4–SPD A/TRANS (MD8), A/C AUTO ELEC CONT (C68), 6–SPD M/TRANS (ML9)	12102750	1	9.43	CONNECTOR, C/LTR (1–WAY F) (W/LEADS) (09.778) (AC–DELCO #PT377)	
84–96	Y	344801	1	10.10	HEATER, C/LTR (ELEMENT)	9–F17,64
84–96	Y	11516142	1	7.29	HOUSING, C/LTR (MATES W/CONN 12085504, (CASCO) 1–PIN CONN)	9–F17,63
84–96	Y	11516141	1	4.69	LIGHTER, CIG (BLACK) (SM) (CASCO)	9–F17,64
84	Y	17057195	1	DISCON	LIGHTER, CIG (W/KNOB) (ROCHESTER)	
84–96	Y	3986870	1	*2.50	RETAINER, C/LTR HSG (CASCO)	9–F17,56

9.735 BOLT – CLUSTER – CONNECTOR, Instrument Panel Gage

NOTE: FOR 1985–1991 USAGE REFER TO INSTRUMENT CLUSTER CHART GRP 9.735

NOTE: SERVICEABLE COMPONENTS FOR 1992 THRU 1995 INSTRUMENT CLUSTERS MAY BE FOUND INDIVIDUALLY IN THEIR RESPECTIVE 9.000 GROUPS OF THE CATALOG TEXT OR COLLECTIVELY IN INSTRUMENT PANEL GRAPHICS (10.000 GROUP).

NOTE: MOST COMPLETE CLUSTERS ARE SERVICED THROUGH GM PARTS FOR CASES OF CRASH, FIRE, THEFT AND FLOOD. COMPONENTS NOT LISTED ARE SERVICED BY A CLUSTER EXCHANGE THROUGH AN AC DELCO REPAIR CENTER. FOR ADDITIONAL INFORMATION REFER TO YOUR RESPECTIVE SERVICE BULLETIN.

NOTE: 1996 & GREATER CLUSTER ASSEMBLIES ARE SERVICED ONLY THROUGH AC DELCO SERVICE CENTERS.

84	Y (EXC U18, Z49 EXPORT CANADA)	25076600	1	DISCON	CLUSTER, INST	
89	Y (5.7J)	16126371	1	DISCON	CLUSTER, INST	
92–93	Y 5.7P (LT1), ELEK GA CSTR (U52), (EXC SPEEDO (U19) (EXPORT)	16158831	1	DISCON	CLUSTER, INST (LIQ CRYSTAL DISPLAY)	
94	Y 5.7P (LT1), ELEK GA CSTR (U52), (EXC SPEEDO (U19) (EXPORT)	16168021	1	529.85	CLUSTER, INST (AC–DELCO #16168021)	9–F8,20
94–95	Y 5.7J (LT5), ELEK GA CSTR (U52), (EXC SPEEDO (U19) (EXPORT)	16168031	1		CLUSTER, INST (AC–DELCO #16168031)	9–F8,20

9.735 BOLT – CLUSTER – CONNECTOR, Instrument Panel Gage (Con't)

95–96	Y 5.7P (LT1), ELEK GA CSTR (U52), (EXC SPEEDO (U19) (EXPORT)	16182831	1	DISCON	CLUSTER, INST (LAM)	
96	Y 5.7–5 (LT4), ELEK GA CSTR (U52), (EXC SPEEDO (U19) (EXPORT)	16201621	1	DISCON	CLUSTER, INST (LBJ)	
96	Y 5.7–5 (LT4), SPEEDO (U19) (EXPORT), ELEK GA CSTR (U52)	16215971	1	800.00	CLUSTER, INST (LBK) (AC–DELCO #16215971)	9–F8,20
91–95	Y	12045537	1	2.20	CONNECTOR, CSTR–INST	
92	Y 4–SPD A/TRANS (MD8), A/C MAN CONT (C60), 6–SPD M/TRANS (ML9) ...	12059591	1	DISCON	CONNECTOR, CSTR–INST (09.744)	
92–93	Y 4–SPD A/TRANS (MD8), 6–SPD M/TRANS (ML9) ...	12065803	1	2.20	CONNECTOR, CSTR–INST (34–WAY F)	
96	Y	12065803	1	2.20	CONNECTOR, CSTR–INST (34–WAY F)	
96	Y	12095486	1	51.51	CONNECTOR, CSTR–INST (BLACK) (10–WAY F) (W/LEADS) (02.535) (AC–DELCO #PT108)	
96	Y	15305888	2	29.36	CONNECTOR, CSTR–INST (6–WAY F) (W/LEADS) (13.090) (AC–DELCO #PT1032)	
96	Y 5.7P (LT1)	25059681	5		CONNECTOR, CSTR–INST (AC–DELCO #25059681)	
	*EXPORT**********EXPORT**********EXPORT**********EXPORT**********EXPORT*					
84	Y U18 (EXPORT)	25048933	1	DISCON	CLUSTER, INST	
92–93	Y 5.7P (LT1), SPEEDO (U19) (EXPORT), ELEK GA CSTR (U52)	16158851	1	DISCON	CLUSTER, INST (LIQ CRYSTAL DISPLAY)	
92	Y 5.7J (LT5), SPEEDO (U19) (EXPORT), ELEK GA CSTR (U52), (EXC MODIFICATION–NOISE CONTROL (B4H) (EXPORT)	16158861	1	DISCON	CLUSTER, INST (LIQ CRYSTAL DISPLAY)	
92	Y 5.7J (LT5), MODIFICATION–NOISE CONTROL (B4H) (EXPORT), SPEEDO (U19) (EXPORT), ELEK GA CSTR (U52)	16172481	1	DISCON	CLUSTER, INST (LIQ CRYSTAL DISPLAY)	
93	Y 5.7J (LT5), SPEEDO (U19) (EXPORT), ELEK GA CSTR (U52)	16158861	1	DISCON	CLUSTER, INST (LIQ CRYSTAL DISPLAY)	
94–95	Y 5.7P (LT1), SPEEDO (U19) (EXPORT), ELEK GA CSTR (U52)	16168041	1	443.38	CLUSTER, INST (LAX) (AC–DELCO #16168041)	9–F8,20
94–95	Y 5.7J (LT5), SPEEDO (U19) (EXPORT), ELEK GA CSTR (U52)	16168051	1	468.82	CLUSTER, INST (AC–DELCO #16168051)	9–F8,20

1985 INSTRUMENT CLUSTERS

PRODUCTION NUMBER	DIV.	USAGE	COLUMN
25079746	1	Y(EXC CRUISE CONT K34,U18 EXPORT,Z49 CANADA)(NOTE 001)	1
25078812	1	Y W/M.T(MH5,MK2)(NOTE 001)	2
25048934	1	Y W/A.T(MD8)(EXC EXPORT T72,T84)(NOTE 001)	3
25079745	1	Y W/CRUISE CONT(K34)(EX U18 EXPORT,Z49 CANADA)(NOTE 1)	4
25079748	1 7	Y W/Z49(CANADA)(EXC U18 EXPORT,CR CONT K34)(NOTE 001)	5
25051615	1 7	Y W/EXPORT(VB4,VD1,VE1,VT7)(EXC EXPORT T85)(NOTE 001)	6
25079750	1 7	Y W/U18(EXPORT)(NOTE 001)	7
25079747	1 7	Y W/CR CONT(K34),Z49(CANADA)(EXC U18 EXPORT)(NOTE 001)	8

NOTE: 001 COMPLETE CLUSTERS SERVICED OR EXCHANGED THROUGH AC DELCO REPAIR CENTER

GROUP	DESCRIPTION	QTY	1	2	3	4	5
9.735	INSTRUMENT CLUSTER	1	25079746	25078812 (CNSL)	25048934 (CNSL)	25079745	25079748
10.240	APPLIQUE,INFO CTR SWITCH PLT	1	—	25051610	25051610	—	—
9.748	BACKPLATE,TELLTALE	1	—	25050492	25050492	—	—
8.991	BULB,194	AR	—	9421330	—	—	—
9.761	BUSHING,SPEEDO MTG	1	25017001	—	—	25017001	25017001
9.743	CASE,CSTR	1	—	25083758	25083758	—	—
9.748	FILTER,HI-BEAM/TURN SIG	1	25083049	—	—	25083049	25083049
9.748	FILTER,PHOTO CELL SENSOR	1	25051131	—	—	25051131	25051131
9.748	FILTER,TELLTALE W/O.D. ENGAGED	1	—	25078813	25078813	—	—
9.748	FILTER,TRIP ODOM LIGHT	1	25049508	—	—	25049508	25049508
9.744	GASKET,INFO CTR RESET KNOB	1	—	25053247	25053247	—	—
9.744	GASKET,INFO CTR SWITCH PLT	1	—	25076945	25076945	—	—
8.991	LAMP W/SOCKET(HALOGEN)	AR	11508221	—	—	11508221	11508221
9.761	MOTOR,ODOM	1	25058583	—	—	25058048	25058583
9.761	ODOMETER	1	25058127	—	—	25058127	25058127
9.748	PIPE,TELLTALE LIGHT	1	—	25076505	25076505	—	—
9.765	PLUG,HEAT SINK	AR	25049629	—	—	25049629	25049629
9.744	PRINTED CIRCUIT	1	—	25076711	25076711	—	—
9.744	RETAINER,CNSL INFO CTR(MTL)	AR	—	25049481	25049481	—	—
9.744	RETAINER,INFO CTR(PLASTIC)	AR	—	25051613	25051613	—	—
9.748	RETAINER,TELLTALE FILTER	AR	25052493	—	—	25052493	25052493
8.961	SOCKET,LAMP(.50 X .63 X .25)	AR	—	25015169	—	—	—
9.744	SWITCH PLATE,CTR W/HARNESS	1	—	25049485	25049485	—	—

GROUP	DESCRIPTION	QTY	6	7	8	9	10
9.735	INSTRUMENT CLUSTER	1	25051615	25079750	25079747	—	—
10.240	APPLIQUE,INFO CTR SWITCH PLT	1	25051811	—	—	—	—
9.748	BACKPLATE,TELLTALE	1	25050492	—	—	—	—
8.991	BULB,194	AR	9421330	—	—	—	—
9.761	BUSHING,SPEEDO MTG	1	—	25017001	25017001	—	—
9.743	CASE,CSTR	1	25083759	—	—	—	—
9.748	FILTER,HI-BEAM/TURN SIG	1	—	25083049	25083049	—	—
9.748	FILTER,PHOTO CELL SENSOR	1	—	25051131	25051131	—	—
9.748	FILTER,TELLTALE W/O.D. ENGAGED	1	25078813	—	—	—	—
9.748	FILTER,TRIP ODOM LIGHT	1	—	25049508	25049508	—	—
9.744	GASKET,INFO CTR RESET KNOB	1	25053247	—	—	—	—
9.744	GASKET,INFO CTR SWITCH PLT	1	25076945	—	—	—	—
8.991	LAMP W/SOCKET(HALOGEN)	AR	—	11508221	11508221	—	—
9.761	MOTOR,ODOM	1	—	25058583	25058583	—	—
9.761	ODOMETER	1	—	25058127	25058127	—	—
9.765	PLUG,HEAT SINK	AR	—	25049629	25049629	—	—
9.744	PRINTED CIRCUIT	1	25076711	—	—	—	—
9.744	RETAINER,CNSL INFO CTR(MTL)	AR	25049481	—	—	—	—
9.744	RETAINER,INFO CTR(PLASTIC)	AR	25051926	—	—	—	—
9.748	RETAINER,TELLTALE FILTER	AR	—	25052493	25052493	—	—
8.961	SOCKET,LAMP(.50 X .63 X .25)	AR	25015169	—	—	—	—
9.744	SWITCH PLATE,CTR W/HARNESS	1	25051617	—	—	—	—

1986 INSTRUMENT CLUSTERS

PRODUCTION NUMBER	DIV.	USAGE	COLUMN
25080175	1	Y W/M.T(MDO,M.2)(ON CNSL)(NOTE 001)	1
25080175	1	Y W/A.T(MDB)(EXC EXPORT T72,T84)(ON CNSL)(NOTE 001)	1
25083834	1	Y(EXC CRUISE CONT K34,U18 EXPORT,Z49 CANADA)(NOTE 001)	2
25083833	1	Y W/CRUISE CONT(K34)(EXC U18 EXPORT,Z49 CANADA)(NOTE 1.	3
250C3835	1	7 Y W/CRUISE CONT(K34),Z49(CANADA)(EXC U18 EXPORT)NOTE 1	4
25078622	1	7 Y W/EXPORT(U18)(NOTE 001)	5
25080177	1	7 Y W/EXPORT(VB4,VD1,VE1,V17)(EXC T85 EXPORT)(ON CNSL)	6
25080177	1	7 (NOTE 001)	6
25083836	1	7 Y W/Z49(CANADA)(EXC CR CONT K34,U18 EXPORT)(NOTE 001)	7

NOTE: 001 COMPLETE CLUSTERS SERVICED OR EXCHANGLD THROUGH AC DELCO REPAIR CENTER

GROUP	DESCRIPTION	QTY	1	2	3	4	5
9.735	INSTRUMENT CLUSTER	1	25080175 (CNSL)	25083834	25083833	25083835	25078622
10.240	APPLIQUE,INFO CTR SWITCH PLT	1	25051610	—	—	—	—
9.748	BACKPLATE,TELLTALE	1	25050492	—	—	—	—
9.761	BUSHING,SPEEDO MTG	3	—	25017001	25017001	25017001	25017001
9.743	CASE,CSTR	1	25083758	—	—	—	25083758
9.748	FILTER,HI-BEAM/TURN SIG	1	—	25083049	25083049	25083049	25083049
9.761	FILTER,ODOM	1	—	25083048	25083048	25083048	25083048
9.748	FILTER,PHOTO CELL SENSOR	1	—	25051131	25051131	25051131	25051131
9.748	FILTER,TELLTALE LIGHT	1	25080195	—	—	—	25080195
9.744	GASKET,INFO CTR RESET KNOB	2	25053247	—	—	—	—
9.744	GASKET,INFO CTR SWITCH PLT	1	25076945	—	—	—	—
8.991	LAMP W/SOCKET(HALOGEN)	AR	—	11508221	11508221	11508221	11508221
9.761	MOTOR,ODOM	1	—	25058583	25058583	25058584	25058584
9.761	ODOMETER	1	—	25058127	25058127	25058127	25058127
9.748	PIPE,TELLTALE LIGHT	2	25076505	—	—	—	—
9.744	PLUG,HEAT SINK	AR	—	25083144	25083144	25083144	25083144
9.744	PRINTED CIRCUIT	1	25083760	—	—	—	—
9.744	RETAINER,CNSL INFO CTR(MTL)	AR	25049481	—	—	—	—
9.744	RETAINER,INFO CTR(PLASTIC)	AR	25051613	—	—	—	—
9.748	RETAINER,TELLTALE FILTER	AR	—	25052493	25052493	25052493	25052493
9.744	SWITCH,CNSL W/HARNESS	1	25080197	—	—	—	—

GROUP	DESCRIPTION	QTY	6	7	8	9	10
9.735	INSTRUMENT CLUSTER	1	25080177	25083836	—	—	—
10.240	APPLIQUE,CNSL INFO CTR SWITCH PLATE	1	25081811	—	—	—	—
9.748	BACKPLATE,TELLTALE	1	25050492	—	—	—	—
9.761	BUSHING,SPEEDO MTG	3	—	25017001	—	—	—
9.743	CASE,CSTR	1	25083758	—	—	—	—
9.748	FILTER,HI-BEAM/TURN SIG	1	—	25083049	—	—	—
9.761	FILTER,ODOM	1	—	25083048	—	—	—
9.748	FILTER,PHOTO CELL SENSOR	1	—	25051131	—	—	—
9.748	FILTER,TELLTALE LIGHT	1	25080195	—	—	—	—
9.744	GASKET,INFO CTR RESET KNOB	1	25053247	—	—	—	—
9.744	GASKET,INFO CTR SWITCH PLT	1	25076945	—	—	—	—
8.991	LAMP W/SOCKET(HALOGEN)	AR	—	11508221	—	—	—
9.761	MOTOR,ODOM	1	—	25058584	—	—	—
9.761	ODOMETER	1	—	25058127	—	—	—
9.744	PLUG,HEAT SINK	AR	—	25083144	—	—	—
9.744	PRINTED CIRCUIT	1	25083760	—	—	—	—
9.744	RETAINER,CNSL INFO CTR(MTL)	AR	25049481	—	—	—	—
9.744	RETAINER,INFO CTR(PLASTIC)	AR	25051926	—	—	—	—
9.748	RETAINER,TELLTALE FILTER	AR	—	25052493	—	—	—
9.744	SWITCH PLATE,CTR W/HARNESS	1	25051617	—	—	—	—

MICROFICHE INDEX

GROUPS 8.000 THRU 9.000

FICHE 8 OF 11

GROUP	DESCRIPTION	STARTING GRID LOCATION PARTS	ILLUSTRATIONS
–	GENERAL INFORMATION	1–A2	1–G2
–	ALPHABETICAL INDEX	1–B13	N.A.
8.000	FRONT END SHEET METAL – HEATER	8–A2	8–F2
9.000	BODY MOUNTING – AIR CONDITIONING – INSTRUMENT CLUSTER	8–C2	8–I2
–	OUT OF FICHE CALLS	N.A.	8–M27

8–E1

1987 INSTRUMENT CLUSTERS

PRODUCTION NUMBER	DIV.	USAGE	COLUMN
25083578	1	Y(EXC CRUISE CONT K34,EXPORT U18,Z49 CANADA)(NOTE 001)	1
25083577	1	Y W/CRUISE CONT(K34)(EXC EXPORT U18,Z49 CANADA)(NOTE 1	2
25083583	1	Y(EXC U18 EXPORT)(NOTE 001)	3
25083584	1 7	Y W/VB4,VD1,VE1,VT7(EXPORT)(EXC T85 EXPORT)(NOTE 001)	4
25083580	1 7	Y W/Z49(CANADA)(EXC CRUISE CONT K34)(NOTE 001)	5
25083579	1 7	Y W/CRUISE CONT(K34),Z49(CANADA)(NOTE 001)	6
25083581	1 7	Y W/U18(EXPORT)(NOTE 001)	7

NOTE: 001 COMPLETE CLUSTERS SERVICED OR EXCHANGED THROUGH AC DELCO REPAIR CENTER

GROUP	DESCRIPTION	QTY	1	2	3	4	5
9.735	INSTRUMENT CLUSTER	1	25083578	25083577	25083583 (CNSL)	25083584 (CNSL)	25083580
10.240	APPLIQUE,INFO CTR SWITCH PLT	1	—	—	25051610	25051811	—
9.748	BACKPLATE,TELLTALE	1	—	—	25050492	25050492	—
9.761	BUSHING,SPEEDO MTG	AR	25017001	25017001	—	—	25017001
9.743	CASE,CSTR	1	—	—	25083758	25083758	—
9.748	FILTER,HI-BEAM/TURN SIG	1	25083049	25083049	—	—	25083049
9.748	FILTER,LIGHT TELLTALE	1	—	—	25087391	25087391	—
9.761	FILTER,ODOM	1	25083048	25083048	—	—	25083048
9.744	GASKET,INFO CTR RESET KNOB	2	—	—	25053247	25053247	—
9.744	GASKET,INFO CTR SWITCH PLT	1	—	—	25076945	25076945	—
8.991	LAMP W/SOCKET(HALOGEN)	AR	11508221	11508221	—	—	11508221
9.761	MOTOR,ODOM	1	25058583	25058583	—	—	25058583
9.761	ODOMETER	1	25058127	25058127	—	—	25058127
9.748	PIPE,TELLTALE LIGHT	1	—	—	25076505	—	—
9.744	PLUG,HEAT SINK	AR	25083144	25083144	—	—	25083144
9.744	PRINTED CIRCUIT	1	—	—	25083760	25083760	—
9.744	RETAINER,CNSL INFO CTR(MTL)	1	—	—	25049481	25049481	—
9.744	RETAINER,INFO CTR(PLASTIC)	1	—	—	25051613	25051926	—
9.748	RETAINER,TELLTALE FILTER	6	25052493	25052493	—	—	25052493
9.744	SWITCH PLATE,CTR W/HARNESS	1	—	—	—	25051617	—
9.744	SWITCH,CNSL W/HARNESS	1	—	—	25080197	—	—

GROUP	DESCRIPTION	QTY	6	7	8	9	10
9.735	INSTRUMENT CLUSTER	1	25083579	25083581	—	—	—
9.761	BUSHING,SPEEDO MTG	AR	25017001	25017001	—	—	—
9.748	FILTER,HI-BEAM/TURN SIG	1	25083049	25083049	—	—	—
9.761	FILTER,ODOM	1	25083048	25083048	—	—	—
8.991	LAMP W/SOCKET(HALOGEN)	AR	11508221	11508221	—	—	—
9.761	MOTOR,ODOM	1	25058583	25058583	—	—	—
9.761	ODOMETER	1	25058127	25058127	—	—	—
9.744	PLUG,HEAT SINK	1	25083144	25083144	—	—	—
9.748	RETAINER,TELLTALE FILTER	6	25052493	25052493	—	—	—

1988 INSTRUMENT CLUSTERS

PRODUCTION NUMBER	DIV.	USAGE	COLUMN
25083577	1	Y(5.7-8)(EXC U18 EXPORT,Z49 CANADA)(NOTE 001)	1
25083583	1	Y(EXC U18 EXPORT)(NOTE 001)	2
25083579	1 7	Y(5.7-8)W/Z49(CANADA)(NOTE 001)	3
25083581	1 7	Y(5.7-8)W/U18(EXPORT)(NOTE 001)	4

NOTE: 001 COMPLETE CLUSTERS SERVICED OR EXCHANGED THROUGH AC DELCO REPAIR CENTER

GROUP	DESCRIPTION	QTY	1	2	3	4	5
9.735	INSTRUMENT CLUSTER	1	25083577	25083583	25083579	25083581	—
10.240	APPLIQUE,INFO CTR SWITCH PLT	1	—	25051610	—	—	—
9.748	BACKPLATE,TELLTALE	1	—	25050492	—	—	—
9.761	BUSHING,SPEEDO MTG	AR	25017001	—	25017001	25017001	—
9.743	CASE,CSTR	1	—	25083758	—	—	—
9.748	FILTER,HI-BEAM/TURN SIG	1	25083049	—	25083049	25083049	—
9.748	FILTER,LIGHT TELLTALE	1	—	25087391	—	—	—
9.761	FILTER,ODOM	1	25083048	—	25083048	25083048	—
9.744	GASKET,INFO CTR RESET KNOB	2	—	25053247	—	—	—
9.744	GASKET,INFO CTR SWITCH PLT	1	—	25076945	—	—	—
8.991	LAMP W/SOCKET(HALOGEN)	AR	1150R221	—	11508221	11508221	—
9.761	MOTOR,ODOM	1	25058583	—	25058583	25058583	—
9.761	ODOMETER	1	25058127	—	25058127	25058127	—
9.748	PIPE,TELLTALE LIGHT	1	—	25076505	—	—	—
9.744	PLUG,HEAT SINK	1	25083144	—	25083144	25083144	—
9.744	PRINTED CIRCUIT	1	—	25083760	—	—	—
9.744	RETAINER,CNSL INFO CTR(MTL)	1	—	25049481	—	—	—
9.744	RETAINER,INFO CTR(PLASTIC)	1	—	25051613	—	—	—
9.748	RETAINER,TELLTALE FILTER	6	25052493	—	25052493	25052493	—
9.744	SWITCH,CNSL W/HARNESS	1	—	25080197	—	—	—

1989 INSTRUMENT CLUSTERS

PRODUCTION NUMBER	DIV.	USAGE	COLUMN
25089614	1	Y(5.7-8)	1
25089310	1	Y(5.7J)W/DIGITAL(U52)(NOTE 001)	2
25088848	1	Y(5.7-8)W/DIGITAL(U52)(NOTE 001)	3
16126371	1	Y(5.7J)(NOTE 001)	4
25088850	1 7	Y(5.7-8)W/SPEEDO(U19)(CANADA)(NOTE 001)	5
25089313	1 7	Y(5.7J)W/SPEEDO(U19)(CANADA)(NOTE 001)	6

NOTE: 001 COMPLETE CLUSTERS SERVICED OR EXCHANGED THROUGH AC DELCO REPAIR CENTER

GROUP	DESCRIPTION	QTY	1	2	3	4	5
9.735	INSTRUMENT CLUSTER	1	25089614 (CNSL)	25089310	25088848	16126371 (CNSL)	25088850
10.240	APPLIQUE,INFO CTR SWITCH PLT	1	25051610	—	—	25051610	—
9.748	BACKPLATE,TELLTALE	1	25050492	—	—	25050492	—
8.991	BULB,ICP #161	1	—	—	—	9417561	—
8.991	BULB,194	1	—	—	—	9421330	—
9.761	BUSHING,SPEEDO MTG	AR	—	25017001	25017001	—	25017001
4.342	CABLE,ODOM	1	—	—	16128542	—	—
9.743	CASE,CSTR	1	25083758	—	—	25083758	—
9.748	FILTER,HI-BEAM/TURN SIG	1	—	25083049	25083049	—	25083049
9.761	FILTER,ODOM	1	—	25083048	25083048	—	25083048
9.748	FILTER,PHOTO CELL SENSOR	1	—	25051131	25051131	—	25051131
9.744	GASKET,INFO CTR RESET KNOB	AR	25053247	—	—	25053247	—
9.744	GASKET,INFO CTR SWITCH PLT	1	25076945	—	—	25076945	—
9.744	LAMP,W/SOCKET INST CSTR(PC160) (TELLTALE)	AR	25089349	—	—	—	—
9.744	LAMP,W/SOCKET INST CSTR(PC195) (TELLTALE)	1	25089350	—	—	—	—
8.991	LAMP W/SOCKET(HALOGEN)	AR	—	11508221	11508221	—	11508221
8.991	LAMP,FUEL ECON GAGE	1	—	9433184	9433184	—	9433184
9.761	MOTOR,STEPPER	1	—	—	25058691	—	25058692
9.761	ODOMETER	AR	—	25058127	25058127	—	25058127
9.748	PIPE,TELLTALE LIGHT	AR	25076505	—	—	25076505	—
9.744	PLUG,HEAT SINK	AR	—	25083144	25083144	—	25083144
9.744	PRINTED CIRCUIT	1	25083760	—	—	25083760	—
9.744	RETAINER,CNSL INFO CTR(MTL)	1	25049481	—	—	25049481	—
9.744	RETAINER,INFO CTR(PLASTIC)	1	25051613	—	—	25051613	—
9.748	RETAINER,TELLTALE FILTER	AR	—	25052493	25052493	—	25052493
9.743	SCREW,INST CSTR BEZEL	AR	—	25044356	25044356	—	25044356
9.748	SOCKET,LAMP CSTR(3/8 DIA)	1	—	25078397	25078397	—	25078397
8.961	SOCKET,LAMP(.50 X .63 X .25)	1	—	—	—	25015169	—
9.744	SWITCH,CNSL W/HARNESS	1	25080197	—	—	25080197	—
9.750	TACHOMETER,LCD	1	—	25086027	—	—	—

GROUP	DESCRIPTION	QTY	6	7	8	9	10
9.735	INSTRUMENT CLUSTER	1	25089313	—	—	—	—
9.761	BUSHING,SPEEDO MTG	AR	25017001	—	—	—	—
9.748	FILTER,HI-BEAM/TURN SIG	1	25083049	—	—	—	—
9.761	FILTER,ODOM	1	25083048	—	—	—	—
9.748	FILTER,PHOTO CELL SENSOR	1	25051131	—	—	—	—
8.991	LAMP W/SOCKET(HALOGEN)	AR	11508221	—	—	—	—
8.991	LAMP,FUEL ECON GAGE	1	9433184	—	—	—	—
9.761	MOTOR,STEPPER	1	25058692	—	—	—	—
9.761	ODOMETER	AR	25058127	—	—	—	—
9.744	PLUG,HEAT SINK	AR	25083144	—	—	—	—
9.748	RETAINER,TELLTALE FILTER	AR	25052493	—	—	—	—
9.743	SCREW,INST CSTR BEZEL	AR	25044356	—	—	—	—
9.748	SOCKET,LAMP CSTR(3/8 DIA)	1	25078397	—	—	—	—
9.750	TACHOMETER,LCD	1	25086027	—	—	—	—

© 2000 GENERAL MOTORS SERVICE PARTS OPERATIONS-CHEVROLET-14Y

1990 INSTRUMENT CLUSTERS

PRODUCTION NUMBER	DIV.	USAGE	COLUMN
16133431	1	Y(5.7-8)W/DIGITAL(U52)(NOTE 001)	1
25085954	1	Y (DRIVER INFO DISPLAY)	2
16133461	1	Y(5.7J)W/DIGITAL(U52)(NOTE 001)	3
16133451	1 7	Y(5.7J)W/SPEEDO(U19)(CANADA)(NOTE 001)	4
16133441	1 7	Y(5.7-8)W/SPEEDO(U19)(CANADA)(NOTE 001)	5

NOTE: 001 COMPLETE CLUSTERS SERVICED OR EXCHANGED THROUGH AC DELCO REPAIR CENTER

GROUP	DESCRIPTION	QTY	1	2	3	4	5
9.735	INSTRUMENT CLUSTER	1	16133431	2508 954	16133461	16133451	16133441
9.743	BEZEL,LENS	1	25084950	—	25084950	25084950	25084950
9.744	BULB,W/SOCKET,DRIVER INFO DISPLAY SW(BROWN BASE)	AR	—	10159597	—	—	—
9.743	CASE	1	—	25088424	—	—	—
9.748	FILTER,TELLTALE	1	—	25088427	—	—	—
9.744	LAMP,W/SOCKET	AR	25085968	—	25085968	25085968	25085968
9.744	LAMP,W/SOCKET(GREEN SOCKET)	AR	—	25086809	—	—	—
9.748	LENS,CSTR	1	25084951	—	25084951	25084951	25084951
9.744	PRINTED CIRCUIT	1	—	25088430	—	—	—
9.748	RETAINER	1	—	25088429	—	—	—
8.977	SCREW,HEX HD TAP(M3.5X1.34X19)	AR	25023918	—	25023918	25023918	25023918
9.743	SCREW,INST CSTR BEZEL	AR	25044356	—	25044356	25044356	25044356
9.768	SWITCH(INCLS PUSHBUTTONS)	1	—	25088425	—	—	—

1991 INSTRUMENT CLUSTERS

PRODUCTION NUMBER	DIV.	USAGE	COLUMN
16142541	1	Y(DRIVER INFO DISPLAY)(NOTE 001)	1
16142451	1	Y(5.7-8)W/ELEC GA CSTR(U52)(EXC SPEEDO U19 CANADA) (NOTE 001)	2
16142481	1	Y(5.7J)W/ELEK GA CSTR(U52)(EXC SPEEDO U19 CANADA) (NOTE 001)	3
16142461	1 7	Y(5.7-8)W/SPEEDO(U19)(CANADA)ELEC GA CSTR(U52)(NOTE 001)	4
16142471	1 7	Y(5.7J)W/SPEEDO(U19)(CANADA)ELEC GA CSTR(U52)(NOTE 001)	5

NOTE: 001 COMPLETE CLUSTERS SERVICED OR EXCHANGED THROUGH AC DELCO REPAIR CENTER

GROUP	DESCRIPTION	QTY	1	2	3	4	5
9.735	INSTRUMENT CLUSTER	1	16142541	16142451	16142481	16142461	16142471
9.743	APPLIQUE,DIC	1	16142524	—	—	—	—
9.743	BEZEL,LENS	1	—	25084950	25084950	25084950	25084950
9.743	CASE	1	25088424	—	—	—	—
9.744	LAMP,W/SOCKET	AR	25086809	25085968	—	25085968	—
9.744	LAMP,CSTR LP(STAMPED PC160)	AR	—	—	25089349	—	25089349
9.748	LENS,CSTR	1	—	25084951	25084951	25084951	25084951
9.744	PRINTED CIRCUIT	1	25088430	—	—	—	—
9.748	RETAINER	1	25088429	—	—	—	—
9.715	SCREW,TR HD(M3.5)	AR	25112341	—	—	—	—
9.768	SWITCH(INCLS PUSHBUTTONS)	1	25088425	—	—	—	—

© 2000 GENERAL MOTORS SERVICE PARTS OPERATIONS-CHEVROLET-14Y

9.743 BEZEL – CARRIER – CASE – PLATE – SCREW, Instrument Cluster

NOTE: FOR 1985–1991 USAGE REFER TO INSTRUMENT CLUSTER CHART GRP 9.735

90–91	Y FOR MOD APPL & POA SEE INST CSTR CHT	25084950	1	49.02	BEZEL, INST CSTR (AC–DELCO #25084950)	9–E12,40
92	Y 5.7J (LT5), ELEK GA CSTR (U52), (EXC MODIFICATION–NOISE CONTROL (B4H) (EXPORT)	25084950	1	49.02	BEZEL, INST CSTR (AC–DELCO #25084950)	9–E12,40
92–93	Y 5.7P (LT1), ELEK GA CSTR (U52)	25084950	1	49.02	BEZEL, INST CSTR (AC–DELCO #25084950)	9–E12,40
93	Y 5.7J (LT5), ELEK GA CSTR (U52)	25084950	1	49.02	BEZEL, INST CSTR (AC–DELCO #25084950)	9–E12,40
95–96	Y 5.7P (LT1), ELEK GA CSTR (U52), (EXC SPEEDO (U19) (EXPORT)	25084950	1	49.02	BEZEL, INST CSTR (AC–DELCO #25084950)	9–E12,40
96	Y 5.7–5 (LT4), ELEK GA CSTR (U52)	25084950	1	49.02	BEZEL, INST CSTR (AC–DELCO #25084950)	9–E12,40
90–92	Y	10086247	1	14.50	CARRIER, INST (UPR) (10.230) ..	3–I12,39
93–96	Y SOFT RIDE SUSP (FE1), HVY DUTY SUSP (FE7)	10086247	1	14.50	CARRIER, INST (10.230)	3–I12,39
84–85	Y	25083758	1	78.04	CASE, CSTR CNSL (**VPI 1–877–846–8243)	
86–89	Y FOR MOD APPL & POA SEE INST CSTR CHT	25083758	1	78.04	CASE, CSTR (**VPI 1–877–846–8243)	
90–91	Y	25088424	1	15.00	CASE, DRVR INFO DISPLAY (AC–DELCO #25088424)	8–M21,2
84–85	Y	14047529	1	DISCON	PLATE, CSTR TR	
86–89	Y	14078656	1	86.50	PLATE, CSTR TR	9–E5,40
90–96	Y	10253257	1	36.00	PLATE, I/P CSTR TR	9–E8,36

9.744 CIRCUIT – CLIP – GASKET – PLUG – RETAINER – SOCKET – SWITCH – SWITCH PLATE, Instrument Cluster

NOTE: FOR 1985–1991 USAGE REFER TO INSTRUMENT CLUSTER CHART GRP 9.735

84	Y	25076711	1	DISCON	CIRCUIT, PRINTED CNSL INFO CTR	
85	Y FOR MDL APPL & POA INFO SEE INST CSTR CHART	25076711	1	DISCON	CIRCUIT, PRINTED CNSL INFO CTR	
86–89	Y FOR MOD APPL & POA SEE INST CSTR CHT	25083760	1	DISCON	CIRCUIT, PRINTED INST CSTR ..	
84	Y	8986000	AR	.96	CLIP, GAGE CONN (AC–DELCO #8986000)	
84	Y	25053247	2	6.93	GASKET, CNSL INFO CTR RESET KNOB (**VPI 1–877–846–8243)	
85–89	Y FOR MOD APPL & POA SEE INST CSTR CHT	25053247	2	6.93	GASKET, CNSL INFO CTR RESET KNOB (**VPI 1–877–846–8243)	
84	Y	25076945	1	DISCON	GASKET, CNSL INFO CTR SWITCH PLT	
85–89	Y FOR MOD APPL & POA SEE INST CSTR CHT	25076945	1	DISCON	GASKET, CNSL INFO CTR SWITCH PLT	
86–89	Y FOR MOD APPL & POA SEE INST CSTR CHT	25083144	1	*4.02	PLUG, HEAT SINK (AC–DELCO #25083144)	
84	Y	25049481	1	DISCON	RETAINER, CNSL INFO CTR (METAL)	
84	Y (EXC VE1 EXPORT)	25051613	1	DISCON	RETAINER, CNSL INFO CTR (PLASTIC)	
85–89	Y FOR MOD APPL & POA SEE INST CSTR CHT	25049481	1	DISCON	RETAINER, CNSL INFO CTR (METAL)	
88–89	Y FOR MOD APPL & POA SEE INST CSTR CHT	25051613	1	DISCON	RETAINER, CNSL INFO CTR (PLASTIC)	

© 2000 GENERAL MOTORS SERVICE PARTS OPERATIONS–CHEVROLET–14Y

9.744 CIRCUIT – CLIP – GASKET – PLUG – RETAINER – SOCKET – SWITCH – SWITCH PLATE, Instrument Cluster (Con't)

84	Y	25078397	1	5.25	SOCKET, IND LP (AC–DELCO #25078397)	8–M19,1
84	Y (EXC VE1 EXPORT)	25049485	1	DISCON	SWITCH PLATE, W/HARN, CNSL INFO CTR	
86–89	Y FOR MOD APPL & POA SEE INST CSTR CHT	25080197	1	216.00	SWITCH, CNSL W/HARNESS (**VPI 1–877–846–8243)	
	*EXPORT**********EXPORT**********EXPORT**********EXPORT**********EXPORT*					
84	Y VE1 (EXPORT)	25051926	1	DISCON	RETAINER, CNSL INFO CTR (PLASTIC)	
85–87	Y FOR MOD APPL & POA SEE INST CSTR CHT	25051926	1	DISCON	RETAINER, CNSL INFO CTR (PLASTIC)	
85–87	Y FOR MOD APPL & POA SEE INST CSTR CHT	25051617	1	DISCON	SWITCH PLATE, CNSL INFO CTR W/HARN	
84	Y VE1 (EXPORT)	25051617	1	DISCON	SWITCH PLATE, W/HARN, CNSL INFO CTR	

9.748 BACKPLATE – FILTER – LENS – PIPE – RETAINER, Instrument Cluster

NOTE: FOR 1985–1991 USAGE REFER TO INSTRUMENT CLUSTER CHART GRP 9.735

84	Y	25050492	1	DISCON	BACKPLATE, CNSL TELLTALE	
85–89	Y FOR MOD APPL & POA SEE INST CSTR CHT	25050492	1	DISCON	BACKPLATE, CNSL TELLTALE	
84	Y	25051131	1	7.72	FILTER, PHOTO CELL SENSOR (AC–DELCO #25051131)	8–M19,6
84	Y	25049508	AR	5.20	FILTER, SPEEDO BRIGHT (**VPI 1–877–846–8243)	
84	Y	25078813	1	DISCON	FILTER, CNSL TELLTALE	
90	Y	25088427	1	DISCON	FILTER, DRVR INFO DISPLAY	
86–89	Y FOR MOD APPL & POA SEE INST CSTR CHT	25083049	1	DISCON	FILTER, HI BEAM/TUEN SIGNAL	
84–85	Y	25083049	AR	DISCON	FILTER, HI–BEAM AND TURN SIG	
89	Y	25089615	1	30.82	FILTER, INFO CTR TELLTALE (09.765) (**VPI 1–877–846–8243)	
87–88	Y FOR MOD APPL & POA SEE INST CSTR CHT	25087391	1	DISCON	FILTER, LIGHT TELLTALE	
84–85	Y	25051131	1	7.72	FILTER, PHOTO CELL SENSOR (AC–DELCO #25051131)	8–M19,6
86	Y FOR MOD APPL & POA SEE INST CSTR CHT	25051131	1	7.72	FILTER, PHOTO CELL SENSOR (AC–DELCO #25051131)	8–M19,6
89	Y FOR MOD APPL & POA SEE INST CSTR CHT	25051131	1	7.72	FILTER, PHOTO CELL SENSOR (AC–DELCO #25051131)	8–M19,6
86	Y FOR MOD APPL & POA SEE INST CSTR CHT	25080195	1	DISCON	FILTER, TELLTALE LIGHT	
84–85	Y	25049508	1	5.20	FILTER, TRIP ODEM (**VPI 1–877–846–8243)	
92–95	Y 5.7P (LT1), 5.7J (LT5), ELEK GA CSTR (U52)	25084951	1	33.27	LENS, INST CSTR (AC–DELCO #25084951)	8–M21,10
96	Y 5.7P (LT1), ELEK GA CSTR (U52)	25084951	1	33.27	LENS, INST CSTR (AC–DELCO #25084951)	8–M21,10
84	Y	25076505	1	DISCON	PIPE, CNSL TELLTALE LIGHT	
85–89	Y FOR MOD APPL & POA SEE INST CSTR CHT	25076505	1	DISCON	PIPE, CNSL TELLTALE LIGHT	
90–91	Y	25088429	1	6.18	RETAINER, DRVR INFO DISPLAY (AC–DELCO #25088429)	8–M21,5
34	Y	25052493	6	*4.55	RETAINER, TELLTALE FILTER (AC–DELCO #25052493)	8–M19,3
85–89	Y FOR MOD APPL & POA SEE INST CSTR CHT	25052493	6	*4.55	RETAINER, TELLTALE FILTER (AC–DELCO #25052493)	8–M19,3

9.750 CONNECTOR – FILTER – HARNESS, Tachometer

93	Y 5.7P (LT1), 6–SPD M/TRANS (ML9), A/C MAN CONT (C60), A/C AUTO ELEC CONT (C68)	12116958	1	20.24	CONNECTOR, GA–TACH (FLTR) (GRAY) (2–WAY F) (W/LEADS) (02.535) (AC–DELCO #PT419)	
84–89	Y	14093115	1	DISCON	FILTER, TACH SIG (LESS WRG CONNS & TERMS, SPLICE AS REQD)	
90	Y (5.7–8)	14093115	1	DISCON	FILTER, TACH SIG (LESS WRG CONNS & TERMS, SPLICE AS REQD)	
91	Y 5.7–8 (L98)	12088559	1	51.45	FILTER, TACH SIG (MUST USE HARNESS 12166316 WHEN SERVICING 1991 Y–CAR APPLICATIONS) (AC–DELCO #12088559)	
92–94	Y 5.7P (LT1)	12088559	1	51.45	FILTER, TACH SIG (AC–DELCO #12088559)	
91	Y 5.7–8 (L98)	12166316	1	DISCON	HARNESS, TACH WRG (MUST USE MODULE 12088559 WHEN SERVICING 1991 Y–CAR APPLICATION)	

9.755 HOUSING, Engine Vacuum (Fuel Economy)

86–89	Y	14093116	1	DISCON	HOUSING, I/P CONVENIENCE CTR	

9.761 FILTER – GEAR – MOTOR – ODOMETER – SPACER, Speedometer

NOTE: FOR 1985–1991 USAGE REFER TO INSTRUMENT CLUSTER CHART GRP 9.735

86–89	Y FOR MOD APPL & POA SEE INST CSTR CHT	25083048	1	8.33	FILTER, ODOM (AC–DELCO #25083048)	8–M19,3
84	Y (EXC Z49 CANADA)	25058048	1	79.60	MOTOR, ODOMETER (USE WITH 25058127 ODOMETER PKG) (AC–DELCO #25058048)	8–M19,4
85	Y FOR MOD APPL & POA SEE INST CSTR CHT	25058583	1	DISCON	MOTOR, ODOMETER	
85–89	Y FOR MOD APPL & POA SEE INST CSTR CHT	25058127	1	24.13	ODOMETER (AC–DELCO #25058127)	8–M19,4
84	Y	25058127	1	24.13	ODOMETER, (ALSO ORDER ODOM MOTOR) (AC–DELCO #25058127)	8–M19,4
85–89	Y FOR MOD APPL & POA SEE INST CSTR CHT	25017001	AR	DISCON	SPACER, SPEEDO	
	*EXPORT**********EXPORT**********EXPORT**********EXPORT**********EXPORT*					
84	Y Z49 (CANADIAN)	25058584	1	112.60	MOTOR, ODOMETER (USE WITH 25058127 ODOMETER PKG) (**VPI 1–877–846–8243)	
86–87	Y FOR MOD APPL & POA SEE INST CSTR CHT	25058584	1	112.60	MOTOR, ODOMETER (**VPI 1–877–846–8243)	

9.762 ALARM – AMPLIFIER – NUT, Speed Indicator

	*EXPORT**********EXPORT**********EXPORT**********EXPORT**********EXPORT*					
84–85	Y VE1, VB4 (EXPORT)	14073460	1	DISCON	ALARM, SPEED ALERT	
86–87	Y 105 ALARM (UD2) (EXPORT)	14091288	1	DISCON	ALARM, SPEED ALERT	
84–85	Y VE1 (EXPORT)	14057592	1	DISCON	AMPLIFIER, CTLTC CONV TEMP AND SPEED ALARM	
84	Y 120 ALARM (UD4) (EXPORT)	12338025	3	*1.83	NUT, CTLTC CONV TEMP & SPD ALERT SIG AM (02.383)	

© 2000 GENERAL MOTORS SERVICE PARTS OPERATIONS–CHEVROLET–14Y

9.762 ALARM – AMPLIFIER – NUT, Speed Indicator (Con't)

84–85	Y UD6 (EXPORT)	12338025	3	*1.83	NUT, CTLTC CONV TEMP & SPD ALERT SIG AM (02.383)	
84–85	Y 105 ALARM (UD2) (EXPORT)	12338025	3	*1.83	NUT, CTLTC CONV TEMP & SPD ALERT SIG AM (02.383)	

9.764 CONNECTOR, Accessory Switch (Multi–Function)

90	Y 6–SPD M/TRANS (ML9), A/C MAN CONT (C60)	12117350	1	22.35	CONNECTOR, M/FUNC CSTR SW (AC–DELCO #PT483)	
90	Y 6–SPD M/TRANS (ML9), A/C AUTO ELEC CONT (C68), SOFT RIDE SUSP (FE1), HVY DUTY SUSP (FE7)	12117350	1	22.35	CONNECTOR, M/FUNC CSTR SW (AC–DELCO #PT483)	
90	Y 4–SPD A/TRANS (MD8), A/C MAN CONT (C60), A/C AUTO ELEC CONT (C68) ...	12117350	1	22.35	CONNECTOR, M/FUNC CSTR SW (AC–DELCO #PT483)	
91–93	Y	12117350	1	22.35	CONNECTOR, M/FUNC CSTR SW (4–WAY F) (W/LEADS) (AC–DELCO #PT483)	
93–96	Y	15306083	1	54.19	CONNECTOR, M/FUNC CSTR SW (11–WAY F) (M/P 150, 280, 420) (W/LEADS) (AC–DELCO #PT1246)	

9.765 ALARM – BOARD – BOLT – BRACKET – CONNECTOR – HOUSING – LAMP – PLUG – TELLTALE – WASHER, Instrument Cluster Warning

NOTE: FOR 1985–1991 USAGE REFER TO INSTRUMENT CLUSTER CHART GRP 9.735

84	Y	14062571	1	42.33	ALARM, ST BELT & IGN KEY & LPS (02.195)	
85–89	Y	10037040	1	54.57	ALARM, ST BELT & IGN KEY & LPS (02.195)	
90–96	Y	25518745	1	55.34	ALARM, ST BELT & IGN KEY & LPS	3–I12,51
94–96	Y	16175457	1	44.15	BOARD, TELLTALE CIRC (AC–DELCO #16175457)	8–M18,4
89	Y	25023919	1	DISCON	BOLT, INFO CTR TELLTALE (09.761)	
94–96	Y	25112341	7	*3.08	BOLT, INFO CTR TELLTALE (M3.5) (09.735) (AC–DELCO #25112341)	8–M18,2
90–92	Y	10098454	1	4.64	BRACKET, ST BELT & IGN KEY & LPS ALARM (02.195)	9–E12,25
94–95	Y	12102747	1	21.07	CONNECTOR, ALARM–DR OPEN (BLACK) (2–WAY F) (W/LEADS) (03.670) (AC–DELCO #PT374)	
92–96	Y	25088424	1	15.00	HOUSING, TELLTALE (09.743) (AC–DELCO #25088424)	8–M18,5
94–96	Y	12506368	1	3.11	LAMP, TRACT CONT ACTIVE IND (02.485)	9–F8,26
84	Y	11508221	AR	22.50	LAMP, W/SOCKET, INSTR CSTR (HALOGEN) (#882) (08.991) (AC–DELCO #L882)	
84–85	Y	25083144	AR	*4.02	PLUG, HEAT SINK (09.744) (AC–DELCO #25083144)	8–M19,2
87–88	Y (EXC EXPORT U18)	25083583	1	460.00	TELLTALE, INFO CTR (**VPI 1–877–846–8243)	
89	Y	25089614	1	DISCON	TELLTALE, INFO CTR	
	*EXPORT**********EXPORT**********EXPORT**********EXPORT**********EXPORT*					
84–85	Y VE1 (EXPORT)	14073461	1	DISCON	ALARM, CTLCT CONV TEMP	

9.765 ALARM – BOARD – BOLT – BRACKET – CONNECTOR – HOUSING – LAMP – PLUG – TELLTALE – WASHER, Instrument Cluster Warning (Con't)

93–96	Y EUROPEAN PROVISIONS (VD1) (EXPORT), VE1 (EXPORT)	10098454	1	4.64	BRACKET, ST BELT & IGN KEY & LPS ALARM (02.195)	9–E12,25
84	Y VE1 (EXPORT)	3771494	1	.45	WASHER, CTLTC CONVR TEMP ALARM (07.833)	

9.768 APPLIQUE – BOLT – BULB – CLIP – CONNECTOR – DISPLAY – RETAINER – SWITCH, Driver Information Display

91	Y	16142524	1	DISCON	APPLIQUE, DRVR INFO DISPLAY (09.743)	
92–93	Y	16159248	1	16.60	APPLIQUE, DRVR INFO DISPLAY (09.743) (AC–DELCO #16159248)	9–E12,32
94–96	Y	16175454	1	16.88	APPLIQUE, DRVR INFO DISPLAY (09.743) (AC–DELCO #16175454)	8–M18,6
92–93	Y	25112341	1	*3.08	BOLT, DRVR INFO DISPLAY (M3.5) (09.735) (AC–DELCO #25112341)	9–E19,32
90	Y	10159559	1	DISCON	BULB, W/SOCKET DRIVER DISPLAY INFO SW (CLEAR W/GRAY) (02.485)	
90	Y	10038190	1	.07	CLIP, DRVR INFO DISPLAY (10.240) (AC–DELCO #10038190)	
94	Y	12101825	AR	17.46	CONNECTOR, DISPLAY–DRVR INFO (GRAY) (2–WAY F) (W/LEADS) (HAS INDEX TAB CTL BETWEEN CAVITY A & B) (02.535) (AC–DELCO #PT217)	
92–93	Y	16157161	1	DISCON	DISPLAY, DRVR INFO	
92–96	Y	25088429	1	6.18	RETAINER, DRVR INFO DISPLAY (09.748) (AC–DELCO #25088429)	8–M18,7
92–93	Y	16159512	1	93.93	SWITCH, DRVR INFO DISPLAY (INCLS RESET BUTTON) (09.765) (AC–DELCO #16159512)	9–E12,32
94–96	Y	16175456	1	102.88	SWITCH, DRVR INFO DISPLAY (AC–DELCO #16175456)	8–M18,8

9.769 BULB, Vehicle Navigation

90	Y	10159597	AR	2.25	BULB, DRVR INFO DISPLAY SW (W/SOC) (09.744) (AC–DELCO #10159597)	9–E8,32

9.770 CONNECTOR – SENSOR, Ambient Outside Air Temperature

90	Y 5.7–8 (L98), (EXC DAYTIME RUNNING LGT (T61)	12085485	1	18.11	CONNECTOR, SEN–O/S AIR TEMP (2–PIN M/F, W/LEADS) (02.535) (AC–DELCO #PT107)	
90	Y 5.7J (LT5), SOFT RIDE SUSP (FE1), HVY DUTY SUSP (FE7)	12085485	1	18.11	CONNECTOR, SEN–O/S AIR TEMP (2–PIN M/F, W/LEADS) (02.535) (AC–DELCO #PT107)	
90–96	Y A/C AUTO ELEC CONT (C68)	16123341	1	27.06	SENSOR, AMB AIR TEMP (AC–DELCO #15–71639)	
86–89	Y A/C (C68)	16040991	1	38.52	SENSOR, O/S AIR TEMP	

© 2000 GENERAL MOTORS SERVICE PARTS OPERATIONS–CHEVROLET–14Y

9.778 CLIP – CONNECTOR – KNOB – RELAY – SPRING – SWITCH – WIRE, Rear Window Defogger

89–90	Y67 AUX RF (CC2)	10137779	1	DISCON	CLIP, R/WDO DEFG WRG HARN .	
96	Y07	12102561	1	10.67	CONNECTOR, INLINE–TO R/WDO DEFG (1–WAY F, W/LEADS) (02.535) (AC–DELCO #PT230)	
90–95	Y07	12102561	1	10.67	CONNECTOR, SW–R/WDO DEFG (1–WAY F, W/LEADS) (02.535) (AC–DELCO #PT230)	
84–86	Y	1228279	1	7.00	KNOB, DEF SW (10.186)	8–J25,5
86–89	Y A/C AUTO ELEC CONT (C68)	16042336	1	16.26	RELAY, R/WDO DEFG (AC–DELCO #15–8239)	8–K6,35
90–96	Y	14100455	1	16.26	RELAY, R/WDO DEFG (BLACK) (5–WAY) (09.277) (AC–DELCO #15–8426)	9–E8,56
84–86	Y	16014896	1	1.02	SPRING, DEFG KNOB (08.852) ..	
84–88	Y	16022464	1	35.46	SWITCH, RR DEFG (AC–DELCO #D7001)	8–J25,4
89	Y07 A/C (C60)	16022464	1	35.46	SWITCH, RR DEFG (AC–DELCO #D7001)	8–J25,4
89	Y67 A/C (C60), ELEC HTD MIR (DL8)	16022464	1	35.46	SWITCH, RR DEFG (AC–DELCO #D7001)	8–J25,4
91–94	Y07	6288704	1	*.43	WIRE, R/WDO DEFG GND (1–WAY F) (01.148) (AC–DELCO #6288704)	
91–94	Y67	8917583	1	*.51	WIRE, R/WDO DEFG GND (TYPE 4 FEMALE) (1 PIN F) (08.965) ...	
94–96	Y67 CONV RF (C05)	10240941	1	20.25	WIRE, R/WDO DEFG WRG HARN EXTN	

9.779 GRILLE – VALVE, Windshield Defroster

84–89	Y	14052467	1	12.35	GRILLE, DEFR DUCT	8–J13,16
90–96	Y A/C AUTO ELEC CONT (C68)	10242848	1	14.88	GRILLE, W/S DEFR NOZ (BLACK) .	8–J15,42
90–96	Y A/C MAN CONT (C60)	10242849	1	14.88	GRILLE, W/S DEFR NOZ (BLACK) .	8–J15,42
84–89	Y	3052839	1	DISCON	VALVE, DEFR	
90–96	Y	52452586	1	32.00	VALVE, DEFR	8–I12,2

9.780 BEZEL – BOLT – DUCT – GRILLE – INSULATOR – RETAINER – SEAL, Side Window Defroster

84–88	Y	14071838	2	2.80	BEZEL, SI DR FRT DEFR DUCT ..	9–H2,18
84–89	Y	14071839	LH	1.47	BEZEL, SI WDO DEFR OTLT	9–H2,19
84–89	Y	14071840	RH	1.47	BEZEL, SI WDO DEFR OTLT	9–H2,19
90–91	Y	11515303	AR	*.38	BOLT, SI WDO DEFG OTLT GRL (08.977)	9–E8,37
90	Y	10100173	1	19.55	DUCT, SI WDO DEFG OTLT (CTR)	8–J15,26
90–96	Y	10100177	RH	11.53	DUCT, SI WDO DEFG OTLT (OTR TO I/P)	8–J15,20
90–96	Y	10158004	LH	15.44	DUCT, SI WDO DEFG OTLT (LEFT SI, CNTR TO LH)	8–J15,28
90–96	Y	10239089	RH	10.42	DUCT, SI WDO DEFG OTLT	8–J15,26
90–96	Y	10247780	1	16.35	DUCT, SI WDO DEFG OTLT (INNER CTR)	8–J15,26
84	Y	14052316	1	DISCON	DUCT, SI WDO DEFG OTLT CTR .	
84–89	Y	14052306	RH	DISCON	DUCT, SI WDO DEFR	
84–89	Y	14052318	LH	DISCON	DUCT, SI WDO DEFR	
85–87	Y A/C (C60)	14081369	1	DISCON	DUCT, SI WDO DEFR OTLT	
88–89	Y	14081369	1	DISCON	DUCT, SI WDO DEFR OTLT	
89–96	Y	10086033	1	11.68	GRILLE, SI WDO DEFG OTLT (LEFT SIDE) (BLACK)	9–E8,96

© 2000 GENERAL MOTORS SERVICE PARTS OPERATIONS–CHEVROLET–14Y

9.780 BEZEL – BOLT – DUCT – GRILLE – INSULATOR – RETAINER – SEAL, Side Window Defroster (Con't)

90–96	Y	10153626	1	11.33	GRILLE, SI WDO DEFG OTLT (RIGHT SIDE) (BLACK)	9–E8,95
91–96	Y	3999572	2	4.98	INSULATOR, SI WDO DEFG OTLT DUCT (09.260)	8–J18,45
95	Y	3999572	3	4.98	INSULATOR, SI WDO DEFG OTLT DUCT (09.260)	8–J18,45
89–96	Y	20664092	AR	*.40	RETAINER, SI WDO DEFG OTLT (PUSH–IN) (BLACK) (PUSH–IN) (01.276)	8–J15,29
84–89	Y	14052304	2	2.63	SEAL, SI WDO DEFG OTLT DUCT	8–J13,42

9.782 GASKET – INLET – SEAL, Air Duct

84–96	Y	3052305	1	4.08	GASKET, AIR INL (ROUND)	8–I13,1
84–96	Y	3052339	1	50.03	INLET, AIR (CASE & VLV) (09.786)	8–I13,3
84–96	Y	3052304	1	4.08	SEAL, AIR INL (03.406) (MT RR)	8–I13,2
84–89	Y	14052302	RH	DISCON	SEAL, I/P OTR AIR OTLT	

9.784 VALVE, Air Inlet

84–96	Y	3052302	1	23.02	VALVE, AIR INL (09.789)	8–I13,6

9.786 BAFFLE – CASE – CONNECTOR – COUPLING – COVER – DUCT – INSULATOR – LEVER – LINK – OUTLET – PLATE – RETAINER – SEAL – SHAFT – STRAP – VALVE, Air Distributor

NOTE: FOR 1986–1991 USAGE REFER TO HEATER MODULE CHART GRP 8.845
NOTE: FOR 1986–1991 USAGE REFER TO AIR CONDITIONING MODULE CHART GRP 9.169

84–89	Y	3053200	1	DISCON	BAFFLE, AIR DISTR	
90–96	Y	52452585	1	15.60	BAFFLE, AIR DISTR	8–I12,3
84–96	Y	3052458	1	27.93	CASE, AIR DISTR	8–I12,10
84–86	Y	1224062	1	4.32	CONNECTOR, LINK ADJ	8–G15,4
86–89	Y A/C (C68)	14089386	1	.73	CONNECTOR, TEMP VLV LINK	8–K6,15
92–96	Y A/C MAN CONT (C60)	14089386	1	.73	CONNECTOR, TEMP VLV LINK	8–K6,15
92–96	Y A/C AUTO ELEC CONT (C68)	52452753	1	1.22	COUPLING, TEMP VLV ACTR	8–G17,4
84–89	Y	3052457	1	DISCON	COVER, AIR DISTR CASE	
90–96	Y	52455932	1	27.93	COVER, AIR DISTR CASE	8–I12,4
90	Y	10100159	1	DISCON	DUCT, AIR DISTR	
91	Y (1ST DES)	10100159	1	DISCON	DUCT, AIR DISTR (W/LAP COOLER DUCTS)	
91	Y (2ND DES)	10157937	1	52.07	DUCT, AIR DISTR (NO LAP COOLER DUCTS)	8–J18,17
92–96	Y	10157937	1	52.07	DUCT, AIR DISTR (NO LAP COOLER DUCTS)	8–J18,17
93–96	Y	3999572	2	4.98	INSULATOR, AIR DISTR (09.260)	
94–95	Y	10077470	1	3.21	INSULATOR, AIR DISTR (12.810)	
96	Y	10077470	2	3.21	INSULATOR, AIR DISTR (12.810)	
92–96	Y A/C MAN CONT (C60)	52452746	1	2.12	LEVER, TEMP VLV (SLAVE) (W/PIN)	8–G16,4
92–96	Y A/C MAN CONT (C60)	52452748	1	2.12	LEVER, TEMP VLV (W/O SLAVE) (PLAS)	8–G16,9
84–96	Y	3052308	1	1.08	LINK, AIR INL VLV	8–I13,5
84–86	Y	3038869	1	.85	LINK, DVTR VLV	8–G15,13
92–96	Y A/C MAN CONT (C60)	52452747	1	2.70	LINK, TEMP VLV (FORMED)	8–G16,8
84–89	Y	14044437	1	DISCON	OUTLET, FLR AIR CTR	
84–96	Y	14046783	1	.92	PLATE, AIR INL TAP (LWR RR)	10–E8,34
84–96	Y	14046784	1	1.07	PLATE, AIR INL TAP (UPR RR)	10–E8,35
84–96	Y	14046785	1	1.22	PLATE, AIR INL TAP (FRT)	10–E8,36
84–90	Y	14046786	2	.82	PLATE, HTR CASE & CORE MT	10–E8,30

© 2000 GENERAL MOTORS SERVICE PARTS OPERATIONS–CHEVROLET–14Y

9.786 BAFFLE – CASE – CONNECTOR – COUPLING – COVER – DUCT – INSULATOR – LEVER – LINK – OUTLET – PLATE – RETAINER – SEAL – SHAFT – STRAP – VALVE, Air Distributor (Con't)

91–96	Y	14046786	2	.82	PLATE, HTR NUT	10–E8,30
84–86	Y	20007698	1	1.80	RETAINER, TEMP VLV LINK (PLSTC)	8–G15,14
81–96	Y	14069128	1	1.47	SEAL, AIR DISTR DUCT (09.262)	8–J13,21
84–86	Y	3041107	1	DISCON	SEAL, LINK OPG	
84–86	Y A/C (C60)	3053383	1	DISCON	SHAFT, W/LVR, TEMP	
90	Y (5.7J)	25533564	1	DISCON	STRAP, COOL RCVY RSVR	
91–92	Y	25533564	2	DISCON	STRAP, RDO FRT SPKR WIRE (445 MM LONG)	
84–86	Y	3053419	1	DISCON	VALVE, TEMP	
84–96	Y	3053243	1	15.60	VALVE, MODE (RR)	8–I12,5
84–96	Y	3053244	1	30.98	VALVE, MODE (FRT)	8–I12,1
	*EXPORT**********EXPORT**********EXPORT**********EXPORT**********EXPORT*					
89	Y A/C (C60), EXPORT (L98)	20007898	1	1.80	RETAINER, TEMP VLV LINK (PLSTC)	8–G15,14

9.787 BRACKET – CABLE, Outside Air Control

NOTE: FOR 1986–1991 USAGE REFER TO HEATER MODULE CHART GRP 8.845

NOTE: FOR 1986–1991 USAGE REFER TO AIR CONDITIONING MODULE CHART GRP 9.159

84–86	Y	3053377	1	DISCON	BRACKET, ADJ CBL	
84	Y	14044432	1	DISCON	CABLE, TEMP CONT	
85–87	Y A/C (C60)	14044432	1	DISCON	CABLE, TEMP CONT	
88–89	Y A/C (C60)	10100120	1	DISCON	CABLE, TEMP CONT	
90–96	Y A/C MAN CONT (C60)	10222823	1	7.75	CABLE, TEMP CONT	8–K10,14

9.795 CAP – VALVE, Heater Water Temperature Control

85–87	Y A/C	10120936	1	DISCON	CAP, HTR WAT VLV	
84	Y	14046043	1	153.88	VALVE, HTR WAT (AC–DELCO #15–5344)	8–K6,31
84–88	Y	16040986	1	9.62	VALVE, HTR WAT (WATER) (09.280) (AC–DELCO #15–71390)	8–J25,11
85–87	Y A/C MAN CONT (C60)	10120965	1	112.20	VALVE, HTR WAT (AC–DELCO #15–5389)	8–K6,31
92–95	Y 5.7P (LT1)	10157988	1	17.64	VALVE, HTR WAT FLOW CONT (W/O HOSE) (08.866) (AC–DELCO #15–5423)	8–H2,11
96	Y	10157988	1	17.64	VALVE, HTR WAT FLOW CONT (W/O HOSE) (08.866) (AC–DELCO #15–5423)	8–H2,11

9.988 BEZEL – BRACKET – HOUSING – LAMP – SHIELD – SOCKET, Rear Compartment Lamp

84–96	Y07	16513253	LH	21.20	BEZEL, R/CMPT C/LP (W/LENS)	9–J23,4
84–96	Y07	16513254	RH	21.20	BEZEL, R/CMPT C/LP (W/LENS)	9–J23,4
85–86	Y	14090673	1	DISCON	BRACKET, SPA TIRE LP	
84–96	Y07	16501567	LH	7.55	HOUSING, CARGO LP (RR)	9–J23,5
84–96	Y07	16501568	RH	7.55	HOUSING, CARGO LP (11.927)	9–J23,5
84–96	Y67	10199743	2	10.35	LAMP, CARGO (USED W/9433040 BULB) (11.927)	9–J24,10
84–87	Y	16519986	1	9.33	LAMP, SPA TIRE (02.700)	7–I18,4
88–92	Y	16509351	1	6.32	LAMP, SPA TIRE (02.700)	7–I23,5
87–89	Y	10068904	1	DISCON	SHIELD, SPA TIRE LP	
90	Y (EXC SPL PERF PKG ZR1)	10068904	1	DISCON	SHIELD, SPA TIRE LP	
90–96	Y07	6298886	1	6.95	SOCKET, CARGO LP (02.575) (AC–DELCO #7434)	9–J23,7

© 2000 GENERAL MOTORS SERVICE PARTS OPERATIONS–CHEVROLET–14Y

9.988 BEZEL – BRACKET – HOUSING – LAMP – SHIELD – SOCKET, Rear Compartment Lamp (Con't)

88–92	Y	12083007	1	11.27	SOCKET, SPA TIRE LP (W/CABLE) (02.575) (AC–DELCO #LS13) .	7–I23,26
	*EXPORT**********EXPORT**********EXPORT**********EXPORT**********EXPORT*					
94–95	Y SIG & MKR LP (T90) (EXPORT)	12083007	1	11.27	SOCKET, SPA TIRE LP (W/CABLE) (02.575) (AC–DELCO #LS13) .	7–I23,26
96	Y07 SIG & MKR LP (T90) (EXPORT)	12083007	1	11.27	SOCKET, SPA TIRE LP (02.575) (AC–DELCO #LS13)	7–I23,26

© 2000 GENERAL MOTORS SERVICE PARTS OPERATIONS–CHEVROLET–14Y

MICROFICHE INDEX

GROUPS 8.000 THRU 9.000

FICHE 8 OF 11

GROUP	DESCRIPTION	STARTING GRID LOCATION PARTS	ILLUSTRATIONS
–	GENERAL INFORMATION	1–A2	1–G2
–	ALPHABETICAL INDEX	1–B13	N.A.
8.000	FRONT END SHEET METAL – HEATER	8–A2	8–F2
9.000	BODY MOUNTING – AIR CONDITIONING – INSTRUMENT CLUSTER	8–C2	8–I2
–	OUT OF FICHE CALLS	N.A.	8–M27

8–F1

CHEVROLET
CHASSIS GROUP 8.000

ILLUSTRATION INDEX

	TITLE	GRID
1984–1987	Y SHEET METAL/FRONT END HOOD, FENDER & RELATED PARTS	8–F4
1989	Y SHEET METAL/FRONT END HOOD, FENDER & RELATED PARTS	8–F7
1989–1990	Y SHEET METAL/FRONT END HOOD, FENDER & RELATED PARTS	8–F10
1991	Y SHEET METAL/FRONT END–HOOD, FENDER & RELATED PARTS	8–F13
1992	Y SHEET METAL/FRONT END HOOD, FENDER & RELATED PARTS	8–F16
1993	Y SHEET METAL/FRONT END HOOD, FENDER & RELATED PARTS	8–G2
1994–1996	Y SHEET METAL/FRONT END HOOD, FENDER & RELATED PARTS	8–G8
1984–1989	Y HEATER & BLOWER ASM HEATER ASM	8–G15
1990–1996	Y HEATER & BLOWER ASM HEATER ASM(C60)	8–G16
1990–1996	Y HEATER & BLOWER ASM HEATER ASM(C68)	8–G17
1984	Y HOSES & PIPES/HEATER & WATER VALVE	8–G18
1985	Y HOSES & PIPES/HEATER & WATER VALVE	8–G19
1986–1987	Y HOSES & PIPES/HEATER & WATER VALVE	8–G20
1988–1989	Y HOSES & PIPES/HEATER (L98)	8–G21
1990–1991	Y HOSES & PIPES/HEATER (L98)	8–G22
1990–1995	Y HOSES & PIPES/HEATER (LT5)	8–G23
1992	Y HOSES & PIPES/HEATER (LT1)	8–G25
1993–1994	Y HOSES & PIPES/HEATER (LT1)	8–G26
1995	Y HOSES & PIPES/HEATER (LT1)	8–H2
1996	Y HOSES & PIPES/HEATER	8–H2

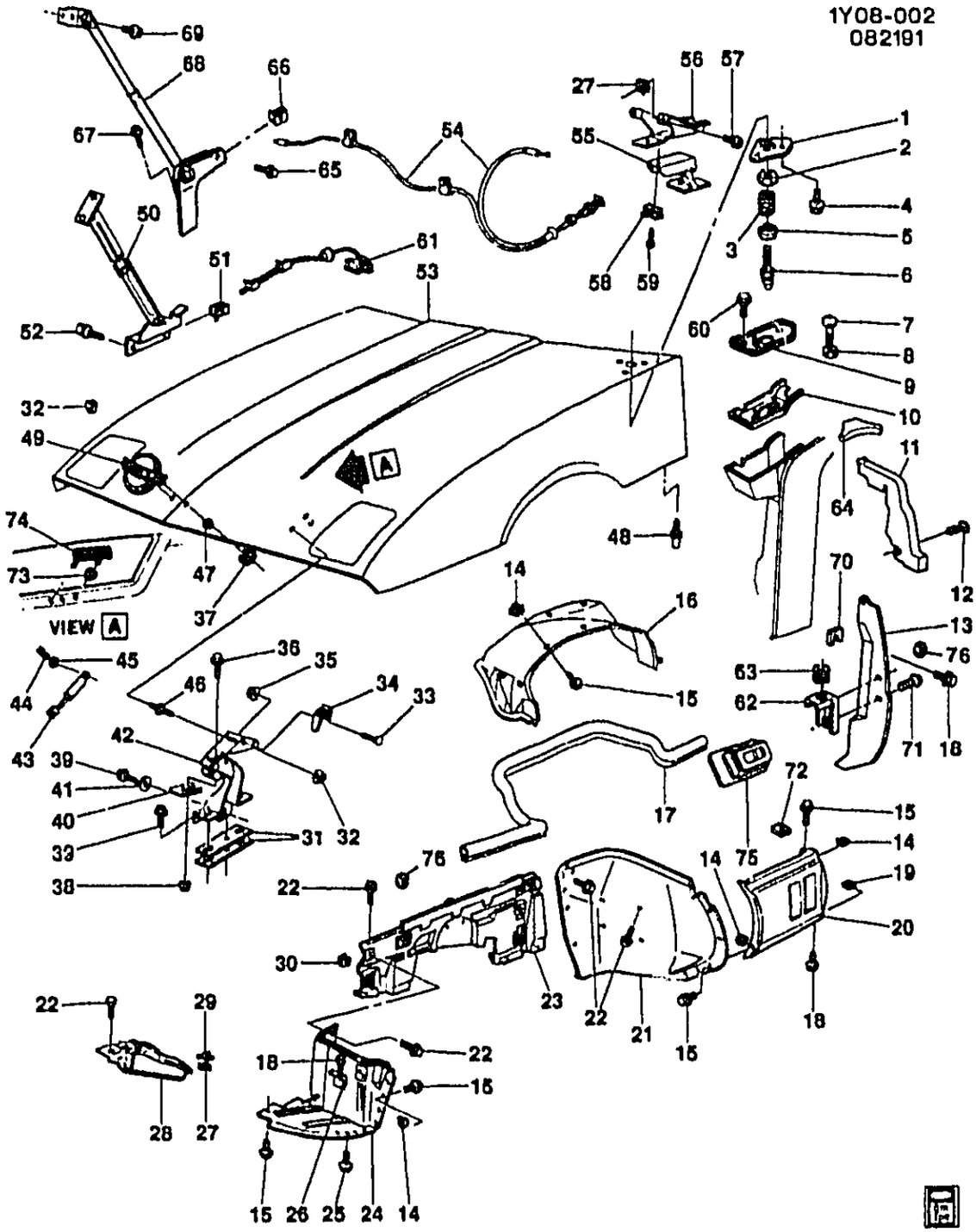

1984–1987 Y SHEET METAL/FRONT END HOOD, FENDER & RELATED PARTS

1.		N.S.	PLATE, HOOD PRIM LAT STKR (HAS 3 19MM MTG HOLES) (RH) (INCLS 2, 3, 5, 6)	
		N.S.	PLATE, HOOD PRIM LAT STKR (HAS 3 19MM MTG HOLES) (LH) (INCLS 2, 3, 5, 6)	
2.	8–A13	8.080	NUT, LAT BOLT (PART OF 1)	14043051
3.	8–A14	8.083	SPRING, HOOD POP–UP (PART OF 1)	14043052
4.		8.900	BOLT, PRIM LAT BRKT (M8X1.25X18)	11508269
5.	8–A14	8.083	RETAINER, HOOD POP–UP SPR (PART OF 1)	14043053
6.	8–A13	8.080	BOLT, LAT (PART OF 1)	10243052

© 2000 GENERAL MOTORS SERVICE PARTS OPERATIONS–CHEVROLET–14Y

				1Y08-002
7.	8-A10	8.024	BUMPER, ADJ RR	14086181
8.		DISCON	NUT, ADJ RR BPR	14064576
9.	8-A13	8.080	LATCH KIT, HOOD PRIM	10273994
10.		DISCON	SUPPORT, PRIM LAT-RH	14046734
	8-A13	8.080	SUPPORT, PRIM LAT-LH	14046733
11.	8-A8	8.010	SEAL, RR OTR-RH	14065082
		DISCON	SEAL, RR OTR-LH	14065081
12.		8.950	RETAINER, PUSH-IN (1/4 HOLE)	10121502
13.	8-A15	8.141	REINFORCEMENT, FDR RR-RH	14043026
	8-A15	8.141	REINFORCEMENT, FDR RR-LH	14043025
14.		8.921	NUT, U-SHAPE (M6.3X1.81)	11514290
15.		8.977	SCREW, PAN HD TORX W/FLAT WA (M6.3X1.81X25)	12338098
16.	8-A16	8.153	PANEL, W/H UPR-RH (1984)	14076590
	8-A16	8.153	PANEL, W/H UPR-RH (1985-87)	14076596
	8-A16	8.153	PANEL, W/H UPR-LH (1984)	14076589
	8-A16	8.153	PANEL, W/H UPR-LH (1985-87)	14076595
17.	8-A17	8.154	SEAL, W/H PNL	14064553
18.		8.900	BOLT, HEX W/CON WA (M6X1X25)	20351035
19.		8.921	NUT, U-MULTI THD SPR (M6X1.3)	11515478
20.	8-A14	8.130	FENDER, RH	14030218
		DISCON	FENDER, LH	14030217
21.	8-A16	8.153	PANEL, W/H LWR RR-RH	14049092
	8-A16	8.153	PANEL, W/H LWR RR-LH	14049091
22.	8-A13	8.080	BOLT, HFH (M6X1X20) (AC-DELCO #11508600)	11508600
23.		DISCON	PANEL, W/H LWR CTR-RH	14084444
	8-A16	8.153	PANEL, W/H LWR CTR-LH	14084443
24.	8-A16	8.153	PANEL, W/H LWR FRT-RH	14081834
	8-A16	8.153	PANEL, W/H LWR FRT-LH	14081833
25.		8.977	BOLT, HWH (M4.2X1.41X25)	11508233
26.		DISCON	BRACKET, W/H PNL SUPT-RH	14081836
		DISCON	BRACKET, W/H PNL SUPT-LH	14081835
27.		8.921	NUT, U-SHAPE MULTI THD SPR (M6X1)	12337917
		8.917	NUT, HEX W/WA (M6X1)	11516793
28.	8-A16	8.153	SUPPORT, W/H PNL-RH	14078664
		DISCON	SUPPORT, W/H PNL-LH	14078663
29.	8-A16	8.153	SHIM, W/H PNL (1MM)	14049081
30.		8.921	NUT, U-SHAPE (M6X1.20X24)	12338151
31.	8-A9	8.016	SHIM, HGE (1MM THK)	14064584
32.		8.917	NUT, HEX TORQ PREV (M8X1.25) 10 CAD	11515748
33.		8.903	BOLT, RD HD SQ NK SHORT (M8X1.25X20)	12338141
34.	8-A8	8.015	BRACKET, HGE-RH	14060286
	8-A8	8.015	BRACKET, HGE-LH	14060285
35.		8.917	NUT, HFH W/NY INS (M6X1)	11516075
36.		8.900	BOLT, HEX W/CON WA (M8X1.25X30)	11508269
37.	8-A8	8.010	PLUG, RUBBER (1 IN. HOLE SIZE) (HOOD INR PNL HOLE)	14043810
38.		8.917	NUT, HFH (M8X1.25X7.5) (AC-DELCO #11514596)	11514596
39.		8.900	BOLT, HEX W/CON WA (M8X1.25X30)	11508269
40.	8-A9	8.016	SHIM, HGE (1MM THK)	14060273
41.	8-A9	8.016	WASHER, HGE (13MM I.D.)	14078623
42.	8-A8	8.015	HINGE, RH	12523084
	8-A8	8.015	HINGE, LH	12523083
43.	8-A8	8.015	ROD, OPEN ASST	14043065
44.	8-A8	8.015	RETAINER, OPEN ASST ROD	14064585
45.		8.929	WASHER, FLAT (5MM I.D.)	11508426
46.		N.S.	STUD, FLG DDL END (PART OF 53)	
47.		8.921	NUT, HEX STMP (5MM)	11501793
48.	8-A10	8.024	PIN, GDE (1984)	14031865

© 2000 GENERAL MOTORS SERVICE PARTS OPERATIONS-CHEVROLET-14Y

				1Y08-002
	8-A10	8.024	PIN, GDE (1985-87)	14081865
49.	8-A10	8.055	EMBLEM (BOWTIE)	14060259
50.	8-A8	8.015	ROD, HOOD HOLD OPEN (SCISSORS TYPE FOLDING) (1984)	14069647
	8-A8	8.015	BRACKET, HOLD OPEN SUPT (1984)	14084499
51.		8.921	NUT, WIDE RANGE U-SHAPE MULTI THD SPR (M6X1)	
52.		8.900	BOLT, HEX W/CON WA (M6X1X25)	
53.	8-A8	8.000	HOOD (1984) (INCL 46)	14030203
	8-A8	8.000	HOOD KIT, (W/STRUT BRKT) (1985-87)	12512903
54.	8-A12	8.075	CABLE, PRIM LAT REL	10250456
		DISCON	BEZEL, PRIM LAT REL CBL HDL (DK BRONZE 65I) (SEE PARTS SECTION FOR ADDITIONAL COLORS & TRIM COMBINATIONS.)	14058620
55.	8-A12	8.075	HANDLE, PRIM LAT REL CBL	10286183
56.	8-A13	8.080	BRACKET, PRIM LAT REL CBL	14047493
57.	8-A13	8.080	BOLT, HWH (M6X1X20) (AC-DELCO #11508600)	11508600
58.	8-A13	8.080	BRACKET, PRIM LAT REL CBL (CLIP TYPE)	14065085
59.		8.977	SCREW, PAN HD C/R (M4.2X1.41X16)	11504736
60.		8.900	BOLT, HFH (M6X1X20) (AC-DELCO #11508600)	11508600
61.	8-B3	8.890	LAMP, UNDERHOOD (1984)	5974960
	8-B3	8.890	LAMP, UNDERHOOD (1985-87)	5974960
	8-B3	8.890	CLIP, UNDERHOOD LP (2.559)	8917236
62.	8-A13	8.080	BRACKET, GDE PIN-RH	14043084
	8-A13	8.080	BRACKET, GDE PIN-LH	10261823
63.	8-A13	8.080	BUSHING, GDE PIN	14076579
64.		DISCON	COVER, PRIM LAT SUPT-RH	14076546
		DISCON	COVER, PRIM LAT SUPT-LH	14076545
65.		8.900	BOLT, HEX W/CON SPR WA (M6X1X25)	20351035
66.		8.921	NUT, U-TYPE (6.3X1.81)	11509582
67.		8.977	SCREW, HWH TAP W/FL WA (M6.3X1.81X25)	11505023
68.	8-A8	8.015	STRUT, HOOD ((1985-87))	10175784
	8-A8	8.015	BRACKET, HOLD OPEN SUPT (1985-86)	14084499
69.		8.977	SCREW, HWH TAP W/FL WA (M6.3X1.81X25)	11505023
70.	8-A16	8.153	SHIM, W/H PNL	14049081
71.		8.900	BOLT, HEX W/CON WA, M6X1X20 (AR)	11514623
72.	8-N24	7.865	SHIM (21MMX38MM)	14081864
73.		8.921	NUT, BLIND PUSH (6.73)	467653
74.	8-A10	8.055	EMBLEM, UNDERSIDE	10175789
		DISCON	DECAL, F/FDR NA-RH (INDIANAPOLIS 500 MAY 2, 1986) (GOLD)	10050942
		DISCON	DECAL, F/FDR NA-RH (INDIANAPOLIS 500 MAY 2, 1986) (SILVER)	10050944
		DISCON	DECAL, F/FDR NA-LH (INDIANAPOLIS 500 MAY 2, 1986) (GOLD)	10050941
		DISCON	DECAL, F/FDR NA-LH (INDIANAPOLIS 500 MAY 2, 1986) (SILVER)	10050943
75.	8-N22	3.417	SEAL, AIR INT DUCT (1984)	14046756
76.	8-A15	8.141	WASHER, FDR RR REINF	14016675
	8-A16	8.153	WASHER, FRT W/H LWR CTR PNL	14016675

© 2000 GENERAL MOTORS SERVICE PARTS OPERATIONS-CHEVROLET-14Y

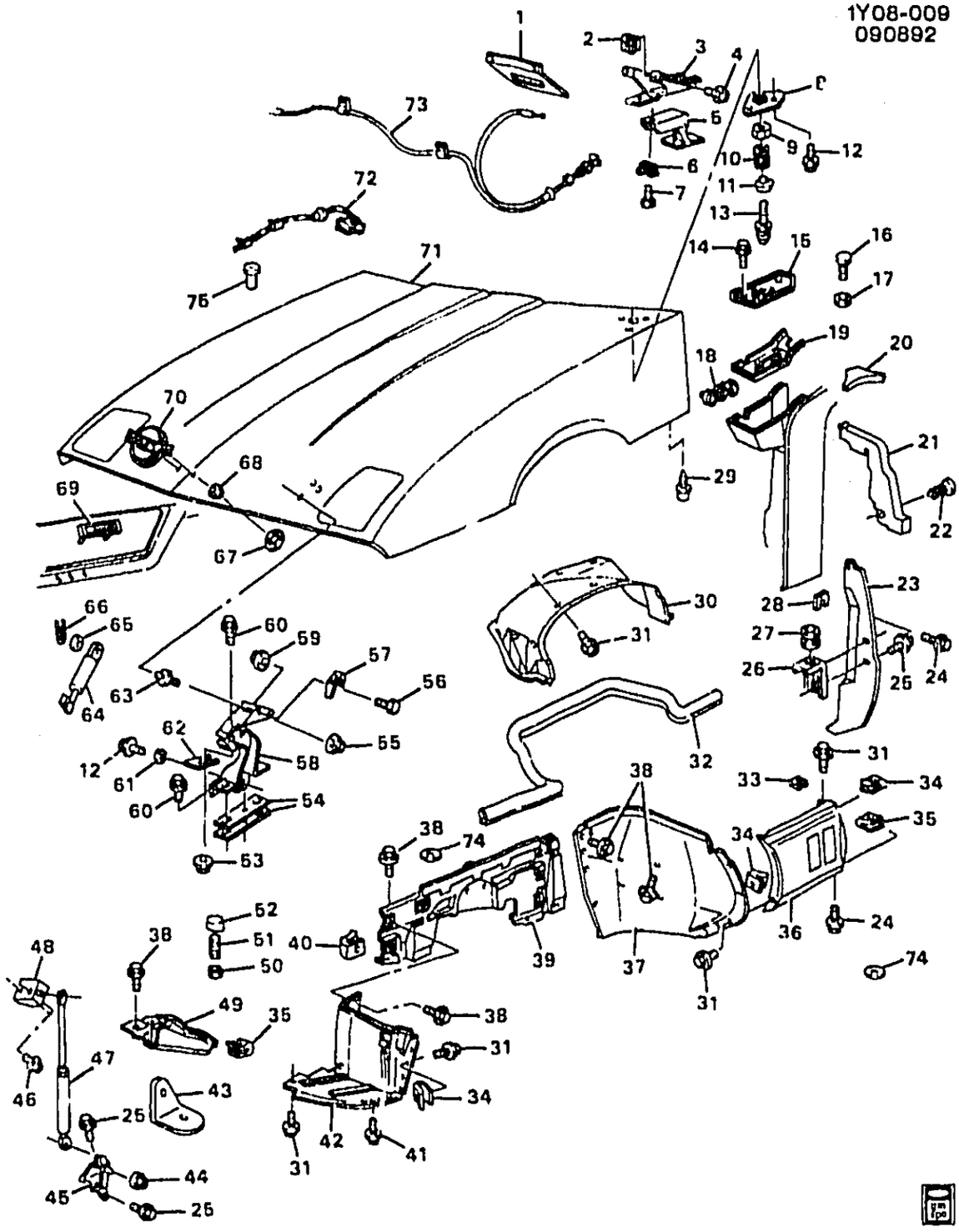

1988 Y SHEET METAL/FRONT END HOOD, FENDER & RELATED PARTS

1.	8-A12	8.075	**BEZEL**, PRIM LAT REL CBL HDL (GRAPHITE-12I) (PAINT AS REQUIRED)	14047492
2.		8.921	**NUT**, U-SHAPED MULTI THD SPR (M6X1)	12337917
3.	8-A13	8.080	**BRACKET**, PRIM LAT REL CBL	14047493
4.	8-A13	8.080	**BOLT**, PRIM LAT BRKT (M8X1.25X1)	11513703
5.	8-A12	8.075	**HANDLE**, PRIM LAT REL CBL	10286183
6.	8-A13	8.080	**BRACKET (CLIP)**, PRIM LAT REL CBL	14065085

© 2000 GENERAL MOTORS SERVICE PARTS OPERATIONS-CHEVROLET-14Y

				1Y08-009
7.		8.977	SCREW, PAN HD C/R TAP (M4.2X1.41X16)	11504736
8.		N.S.	PLATE, HOOD PRIM LAT STKR (HAS 3 19MM MTG HOLES) (RH) (INCLS 9, 10, 11, 13)	
		N.S.	PLATE, HOOD PRIM LAT STKR (INCLS 2.6MM WIRE DIA POP-UP SPRING) (LH) (INCLS 9, 10, 11, 13)	
9.	8-A13	8.080	NUT, LAT BOLT (PART OF 8)	14043051
10.	8-A14	8.083	SPRING, HOOD POP-UP (PART OF 8)	14043052
11.	8-A14	8.083	RETAINER, HOOD POP-UP SPR (PART OF 8)	14043053
12.		8.900	BOLT, HEX W/CON WA (M8X1.25X30)	11508269
13.	8-A13	8.080	BOLT, PRIM LAT (PART OF 8)	10243052
14.	8-A13	8.080	BOLT, PRIM LAT (M6X1X20) (8.900) (AC-DELCO #11508600)	11508600
15.	8-A13	8.080	LATCH KIT, HOOD PRIM (CPS)	10273994
	8-A12	8.075	RETAINER, HOOD PRIM LAT REL CBL	12338122
16.	8-A10	8.024	BUMPER, ADJ RR	14086181
17.		DISCON	NUT, ADJ RR BPR	14064576
18.		DISCON	EMBLEM, SI (FLAGS/BOWTIE/35)	10123021
19.		DISCON	SUPPORT, PRIM LAT-RH	14046734
	8-A13	8.080	SUPPORT, PRIM LAT-LH	14046733
20.		DISCON	COVER, PRIM LAT SUPT-RH	14076546
		DISCON	COVER, PRIM LAT SUPT-LH	14076545
21.	8-A8	8.010	SEAL, RR OTR-RH	14065082
		DISCON	SEAL, RR OTR-LH	14065081
22.		8.950	RETAINER, PUSH IN (.250 HOLE)	10121502
23.	8-A15	8.141	REINFORCEMENT, RR-RH	14043026
	8-A15	8.141	REINFORCEMENT, RR-LH	14043025
24.		8.900	BOLT, HEX W/CON WA (M6X1X25)	20351035
25.		8.900	BOLT, HEX W/CON WA (M6X1X20)	11514623
26.	8-A13	8.080	BRACKET, GDE PIN-RH	14043084
	8-A13	8.080	BRACKET, GDE PIN-LH	10261823
27.	8-A13	8.080	BUSHING, GDE PIN	14076579
28.	8-A16	8.143	SHIM, RR REINF (8.153)	14049081
29.	8-A10	8.024	PIN, GDE	14081865
30.	8-A16	8.153	PANEL, FRT W/H UPR-RH	10231874
	8-A16	8.153	PANEL, FRT W/H UPR-LH	10231873
31.		8.977	SCREW, PAN HD TORX W/FL WA TAP M6.3X 1.81X20 SS BLK 17 OD (AR)	11508762
32.	8-A17	8.154	SEAL, FRT W/H PNL	14104943
33.	8-A16	8.143	SHIM (38MM)	14081864
	8-A16	8.143	SHIM (30MM)	10268933
34.		8.921	NUT, U SHAPE (M6.3X1.81)	11514290
35.		8.921	NUT, U SHAPE MULTI THD SPR (M6X1)	11515478
36.	8-A14	8.130	FENDER, FRT-RH	14104010
	8-A14	8.130	FENDER, FRT-LH	14104009
37.	8-A16	8.153	PANEL, FRT W/H LWR RR-RH	10276498
	8-A16	8.153	PANEL, FRT W/H LWR RR-LH	10276497
38.		8.900	BOLT, HEX W/WA (M6X1X20)	10077321
39.	8-A16	8.153	PANEL, FRT W/H LWR CTR-RH	10276504
	8-A16	8.153	PANEL, FRT W/H LWR CTR-LH	10276503
40.		8.921	NUT, U SHAPE (M6X1)	12338151
41.		8.977	BOLT, HWH (M4.2X1.41X25)	11508233
42.	8-A16	8.153	PANEL, FRT W/H LWR FRT-RH	14104002
	8-A16	8.153	PANEL, FRT W/H LWR FRT-LH	14104001
43.	8-A16	8.153	BRACKET, FRT W/H PNL SUPT-RH	14104902
44.		8.917	NUT, HEX W/CON WA (M6X1)	11508388
45.	8-A8	8.015	BRACKET, OPEN ASST ROD LWR-LH	10278271
46.		8.900	BOLT, HEX (M6X1X20) (AC-DELCO #11507087)	11507087
47.	8-A8	8.015	STRUT, HOOD	10175784

© 2000 GENERAL MOTORS SERVICE PARTS OPERATIONS-CHEVROLET-14Y

				1Y08-009
48.	8-A8	8.015	BRACKET, OPEN ASST ROD-LH	10278270
49.	8-A18	8.155	SUPPORT, FRT W/H LWR FRT-RH	14104036
	8-A18	8.155	SUPPORT, FRT W/H LWR FRT-LH	14104035
50.		8.917	NUT, HEX W/CON WA (M8X1.25X7.8)	11506117
51.	8-A10	8.024	STUD, PNL ADJ BPR	25526456
52.	8-A10	8.024	BUMPER, PNL ADJ	14069250
53.		8.917	NUT, HFH FLG (M8X1.25X7.5) (AC-DELCO #11514596)	11514596
54.	8-A9	8.016	SHIM, HGE (1MM THK)	14064584
55.		8.917	NUT, HEX PREV TORQ (M8X1.25)	11515748
56.		8.903	BOLT (M8X1.25X20)	12338141
57.	8-A8	8.015	BRACKET, HGE-RH	14060286
	8-A8	8.015	BRACKET, HGE-LH	14060285
58.	8-A8	8.015	HINGE, RH	12523084
	8-A8	8.015	HINGE, LH	12523083
59.		8.917	NUT, HFH W/NY INS (M6X1) (8.915)	11516075
60.		8.900	BOLT, HEX W/CON WA (M8X1.25X30)	11508269
61.	8-A9	8.016	WASHER, HGE (13MM ID)	14078623
62.	8-A9	8.016	SHIM, HGE (1MM THK)	14064584
63.		N.S.	STUD, HGE UPR REINF	
64.	8-A8	8.015	ROD, OPEN ASST	14043065
65.		8.929	WASHER, FLAT (5MM)	11508426
66.	8-A8	8.015	RETAINER, OPEN ASST ROD	14064585
67.	8-A8	8.010	PLUG, RUBBER (1 IN. HOLE SIZE) (HOOD INR PNL HOLE)	14049810
68.		8.921	NUT, MET STMP (5MM ID)	11501793
69.	8-A10	8.055	EMBLEM, UND SI "CHEVROLET CORVETTE BOWLING GREEN, KY"	10175789
70.	8-A10	8.055	EMBLEM, TOP SI (BOWTIE) (W/B57)	10123018
	8-A10	8.055	EMBLEM, TOP SI (BOWTIE) (EXC B57)	14060259
71.	8-A8	8.000	HOOD KIT, (W/STRUT BRKT) (CPS)	12512903
		8.967	RIVET, POP, FLAT HD (M1/8X1/2)	9440959
		8.967	RIVET, DM HD BLIND (.125 PNL)	9423122
	8-A10	8.024	RETAINER, FRT BPR (14.683)	20032850
72.	8-B3	8.890	LAMP (COMPONENTS SERVICED)	5974960
	8-B3	8.890	CLIP, LP (2.559)	8917236
		8.991	BULB, 12CP (#211-2) (AC-DELCO #L211-2)	9431808
73.	8-A12	8.075	CABLE, PRIM LAT REL	10250486
74.	8-A15	8.141	WASHER, FNDR RR REINF	14016675
	8-A16	8.153	WASHER, FRT W/H LWR CTR PNL	14016675
75.	8-B3	8.890	NUT, U/HOOD LP	12338025

© 2000 GENERAL MOTORS SERVICE PARTS OPERATIONS-CHEVROLET-14Y

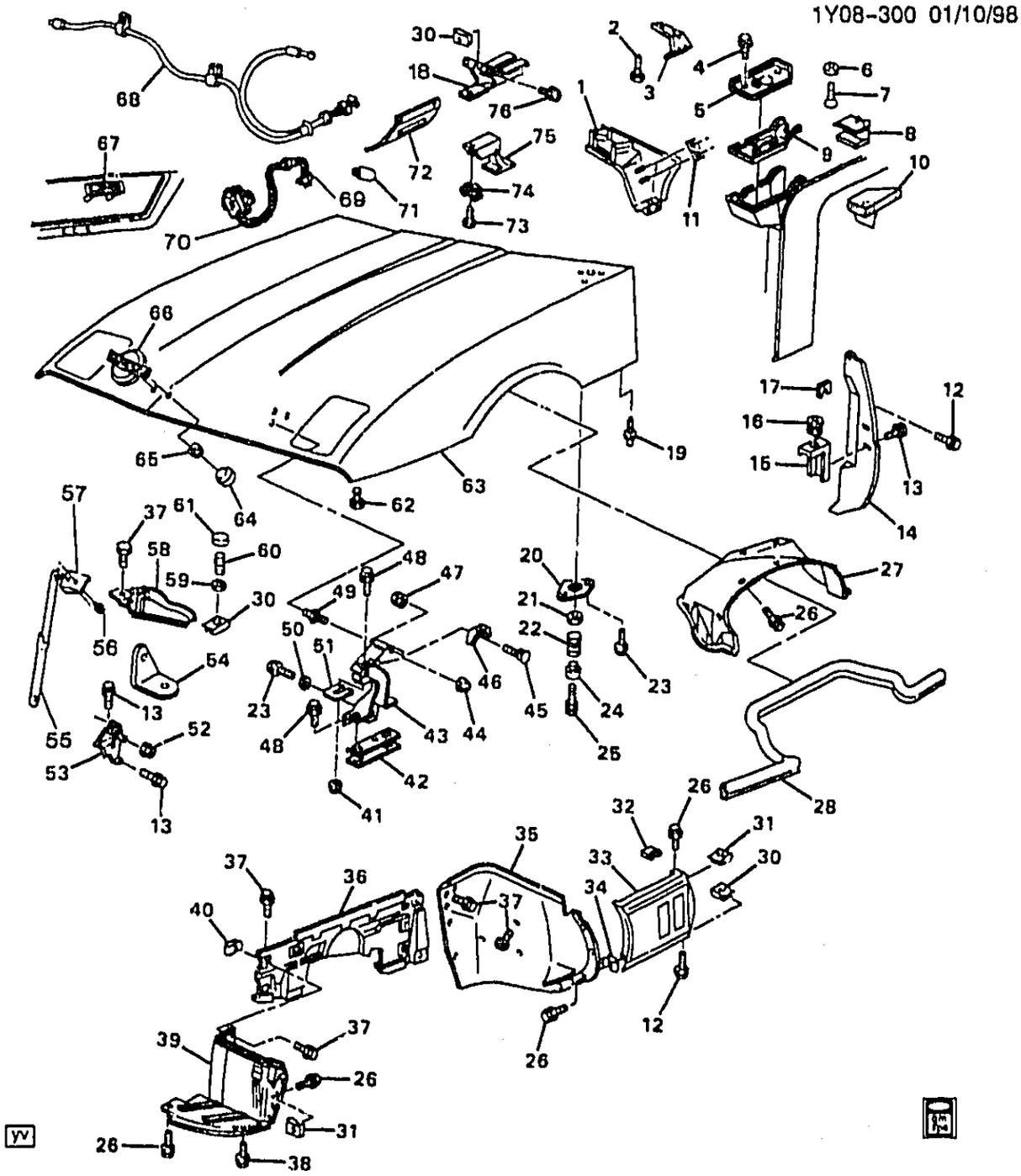

1Y08-300

1989-1990 Y SHEET METAL/FRONT END HOOD, FENDER & RELATED PARTS

1.	8-N24	12.807	REINFORCEMENT, W/S LWR FRM RR OTR (1990) (INCLS 11)	10137761
2.	8-A13	8.080	BOLT, HOOD PRIM LAT REL CBL BRKT (1990)	14088310
3.	8-A13	8.080	BRACKET, HOOD PRIM LAT REL CBL (L-SHAPED) (1990)	10172493
4.	8-A13	8.080	BOLT, HOOD PRIM LAT (AC-DELCO #11508600)	11508600
5.	8-A13	8.080	LATCH KIT, HOOD PRIM (INCLS 8)	10273994
6.	8-A10	8.024	WASHER, HOOD ADJ RR BPR	14047726
7.	8-A10	8.024	BUMPER, HOOD ADJ RR	10123075
8.	8-A12	8.075	RETAINER, HOOD PRIM LAT REL CBL (PART OF 5)	12338122
9.		N.S.	SUPPORT, HOOD PRIM LAT	
10.	8-A8	8.010	SEAL, HOOD RR OTR (RH)	10123074

© 2000 GENERAL MOTORS SERVICE PARTS OPERATIONS-CHEVROLET-14Y

				1Y08-300
	8-A8	8.010	SEAL, HOOD RR OTR (LH)	10123073
11.	8-A12	8.075	PLATE, HOOD PRIM LAT REL CBL BRKT NUT (PART OF 1)	10086014
12.		8.900	BOLT, (AR)	20351035
13.		8.900	BOLT, HEX W/CON WA, M6X1X20 (AR)	11514623
14.	8-A15	8.141	REINFORCEMENT, F/FDR RR (RH)	14043026
	8-A15	8.141	REINFORCEMENT, F/FDR RR (LH)	14043025
15.	8-A13	8.080	BRACKET, HOOD GDE PIN BUSH (RH)	14043084
	8-A13	8.080	BRACKET, HOOD GDE PIN BUSH (LH)	10261823
16.	8-A13	8.080	BUSHING, HOOD GDE PIN	14076579
17.	8-A16	8.143	SHIM, F/FDR RR REINF (8.153)	14049081
18.	8-A13	8.080	BRACKET, HOOD PRIM LAT REL CBL (1989)	14047493
19.	8-A10	8.024	PIN, HOOD GDE	14081865
20.		N.S.	PLATE, HOOD PRIM LAT STKR (RH) (INCLS 21, 22, 24, 25)	
		N.S.	PLATE, HOOD PRIM LAT STKR (INCLS 2.6MM WIRE DIA POP-UP SPRING) (LH) (INCLS 21, 22, 24, 25)	
21.	8-A13	8.080	NUT, HOOD PRIM LAT CTH BOLT (PART OF 20)	14043051
22.	8-A14	8.083	SPRING, HOOD POP-UP (PART OF 20) (8.080)	14043052
23.		8.900	BOLT, HEX W/CON WA (AR)	11508269
24.	8-A14	8.083	RETAINER, HOOD POP-UP SPR (PART OF 20) (8.080)	14043053
25.	8-A13	8.080	BOLT, HOOD PRIM LAT (PART OF 20)	10243052
26.		8.977	SCREW, PAN HD TORX (T-30) M6.3X1.81X25 W/FL WA SS CB (AR)	12338098
27.	8-A16	8.153	PANEL, FRT W/H UPR (RH)	10231874
	8-A16	8.153	PANEL, FRT W/H UPR (LH)	10231873
28.	8-A17	8.154	SEAL, FRT W/H PNL	14104943
30.		8.921	NUT, U-SHAPED MULTI THREAD SPRG (AR)	11515478
31.		8.921	NUT, U SHAPE TYPE P, M6.3X1.81, PNL RANGE.65-3.8, PEOR (AR)	11514290
32.	8-A16	8.143	SHIM, F/FDR (21MMX38MM)	14081864
33.	8-A14	8.130	FENDER, FRT (RH)	14104010
	8-A14	8.130	FENDER, FRT (LH)	14104009
34.		8.921	NUT, U SHAPE TYPE P, M6.3X1.81, PNL RANGE.65-3.8, PEOR (AR)	11514290
35.	8-A16	8.153	PANEL, FRT W/H LWR RR (RH) (1989) (1990 EXC ZR1)	10276498
		DISCON	PANEL, FRT W/H LWR RR (1990 ZR1) (RH)	10276500
	8-A16	8.153	PANEL, FRT W/H LWR RR (LH) (1989) (1990 EXC ZR1)	10276497
	8-A16	8.153	PANEL, FRT W/H LWR RR (1990 ZR1) (LH)	10276499
36.	8-A16	8.153	PANEL, FRT W/H LWR CTR (RH) (1) (1989-90) (Y) (FX3)	10276504
	8-A16	8.153	PANEL, FRT W/H LWR CTR (RH) (Y) (EXC FX3)	10276504
	8-A16	8.153	PANEL, FRT W/H LWR CTR (LH) (FX3)	10276503
	8-A16	8.153	PANEL, FRT W/H LWR CTR (LH) (1) (1989-90) (Y) (EXC FX3)	10276503
37.		8.900	BOLT, HEX W/WA (M6X1X20) (AR)	10077321
38.		8.977	BOLT, HWH M4.2X1.41X25 PZOR TAP 17 OD (AR)	11508233
39.	8-A16	8.153	PANEL, FRT W/H LWR FRT (RH)	14104002
	8-A16	8.153	PANEL, FRT W/H LWR FRT (LH)	14104001
40.		8.921	NUT, (SPRING, TYPE C, U-SHAPED, MULTI THD) (M6X1, 1060 PEOR) (AR)	12337917
41.		8.917	NUT, HFH, M8X1.25, 17.9 OD, 738 THK, 13MM HEX, 10, ZF (AR) (AC-DELCO #11514596)	11514596
42.	8-A9	8.016	SHIM, HOOD HGE (TO SI RAIL)	14064584
43.	8-A8	8.015	HINGE, HOOD (RH)	12523084
	8-A8	8.015	HINGE, HOOD (LH)	12523083
44.		8.917	NUT, M8X1.25X7.1, ZC 10 (AR)	11515748
45.		8.903	BOLT, RD HD SQ NK M8X1.25X25 PC W/SS CAP (AR)	12338141
46.	8-A8	8.015	BRACKET, HOOD HGE (RH)	14060286
	8-A8	8.015	BRACKET, HOOD HGE (LH)	14060285
47.		8.917	NUT, HFH 6X1X7 SELF LK 14.2-OD (9) 7111M ALL MET PREV TORQ (AR)	11516075
48.		8.900	BOLT, HEX W/CON WA (AR)	11508269
49.		N.S.	STUD, HGE UPR REINF	

© 2000 GENERAL MOTORS SERVICE PARTS OPERATIONS-CHEVROLET-14Y

				1Y08-300
50.	8-A9	8.016	WASHER, HOOD HGE	14078623
51.	8-A9	8.016	SHIM, HOOD HGE (TO FRT CR/MBR)	14060273
52.		8.917	NUT, HEX W/CON WA M6X1X5.5, 24-OD 9 PEOR (AR)	11508388
53.	8-A8	8.015	BRACKET, HOOD STRUT (LWR) (LH)	10278271
54.	8-A16	8.153	BRACKET, FRT W/H PNL SUPT (RH)	14104902
55.	8-A8	8.015	STRUT, HOOD (LH)	10175784
56.		8.900	BOLT, PZOR 9.8 (AR) (AC-DELCO #11507087)	11507087
57.	8-A8	8.015	BRACKET, HOOD STRUT (UPR) (LH)	10278270
58.	8-A18	8.155	SUPPORT, FRT W/H LWR FRT PNL (RH)	14104036
	8-A18	8.155	SUPPORT, FRT W/H LWR FRT PNL (LH)	14104035
59.		8.915	NUT, HEX W/CON WA M8X1.25X9.5 19-OD 9 ZP (AR)	11506117
60.	8-A10	8.024	STUD, HOOD ADJ FRT BPR	25526456
61.	8-A10	8.024	BUMPER, HOOD ADJ FRT	14069250
62.	8-A10	8.024	RETAINER, HOOD STOP BPR (PUSH IN) (PART OF 63)	20032850
63.	8-A8	8.000	HOOD KIT, (W/STRUT BRKT) (INCLS 62)	12512903
64.		8.973	PLUG, BUTTON 1.00 STL PL (AR)	14049810
65.		8.921	NUT, MET STAMPED 5 MM ID (AR)	11501793
66.	8-A10	8.055	EMBLEM, HOOD (TOPSIDE) (BOWTIE)	14060259
67.	8-A10	8.055	EMBLEM, HOOD (UNDERSIDE) (CHEVROLET BOWLING GREEN, KY)	10175789
68.	8-A12	8.075	CABLE, HOOD PRIM LAT REL	10250486
69.	8-B3	8.890	CLIP, U/HOOD LP (PART OF 70) (2.559)	8917236
70.	8-B3	8.890	LAMP, U/HOOD (INCL 69) (CPS)	5974960
	8-B3	8.890	SWITCH, U/HOOD LP	16518071
	8-B3	8.890	LENS, U/HOOD LP	16506291
	8-B3	8.890	NUT, U/HOOD LP	12338025
71.		8.991	BULB, 12CP ID 211-2 (AR) (AC-DELCO #L211-2)	9431808
72.	8-A12	8.075	BEZEL, HOOD PRIM LAT REL CBL HDL ((PAINT TO MATCH)) (1989)	14047492
73.		8.977	SCREW, PAN HD C/R TAP M4.2X1.41X16 B PTPOR (AR)	11504736
74.	8-A13	8.080	BRACKET, HOOD PRIM LAT REL CBL (CLIP TYPE)	14065085
75.	8-A12	8.075	HANDLE, HOOD PRIM LAT REL CBL	10286183
76.	8-A13	8.080	BOLT, PRIM LAT BRKT (M8X1.25X1) (1989)	11513703

RPO DEFINITIONS
FX3 - RIDE AND HANDLING,ELECTRONIC CONTROLLED

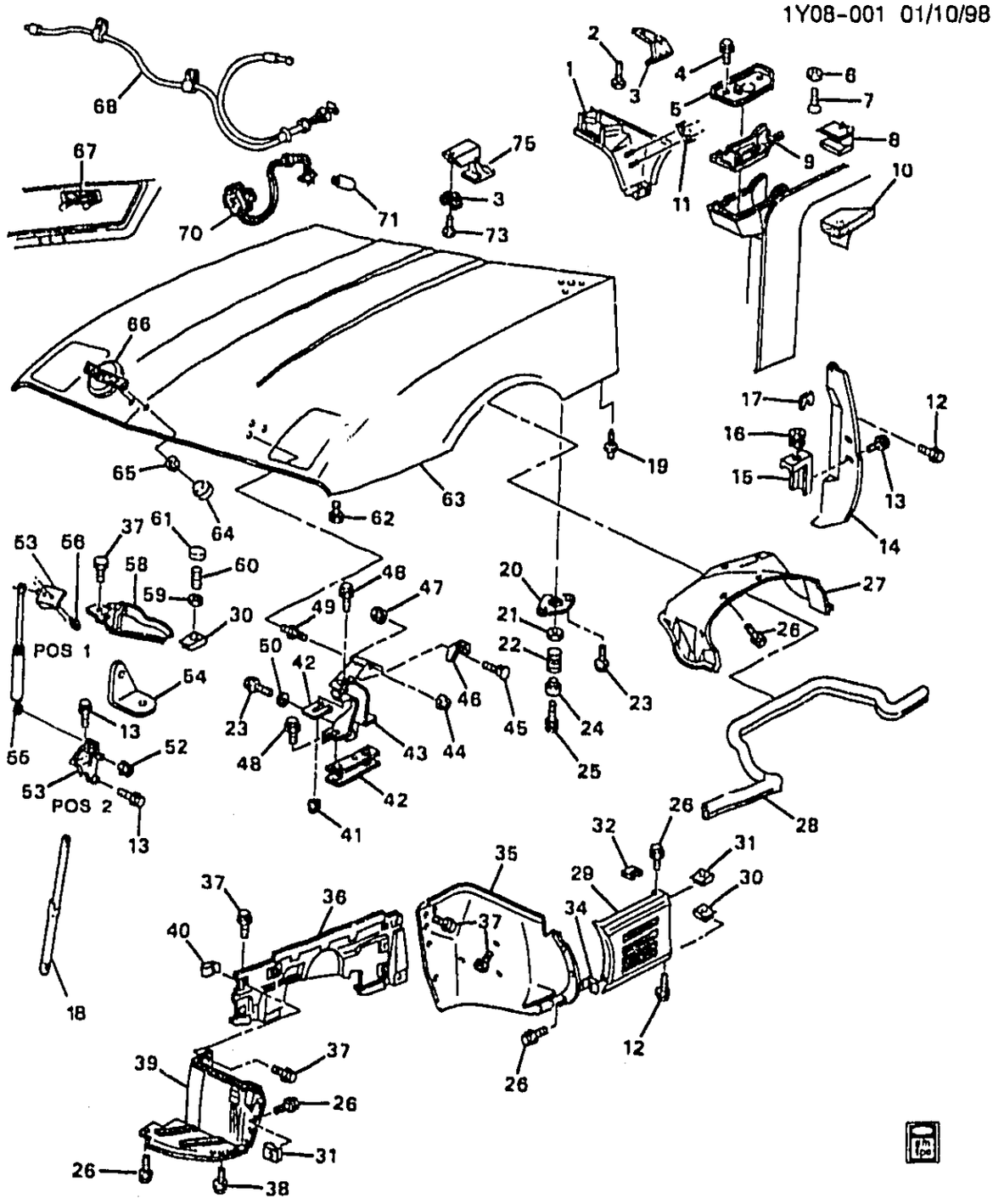

1Y08-001

1991 Y SHEET METAL/FRONT END-HOOD, FENDER & RELATED PARTS

1.	8-N24	12.807	REINFORCEMENT, W/S LWR FRM RR OTR (INCLS 11)	91	Y	1	10137761
2.	8-A13	8.080	BOLT, HOOD PRIM LAT REL CBL BRKT (M8X1.25X24) (3.671)	91	Y (MD8)	2	14088310
3.	8-A13	8.080	BRACKET, HOOD PRIM LAT REL CBL (CLIP TYPE)	91	Y	1	14065085
	8-A13	8.080	BRACKET, HOOD PRIM LAT REL CBL (L-SHAPED)	91	Y	1	10172493
4.	8-A13	8.080	BOLT, HOOD PRIM LAT (TO HOOD)	91	Y	2	10243052

© 2000 GENERAL MOTORS SERVICE PARTS OPERATIONS-CHEVROLET-14Y

5.		N.S.	LATCH, HOOD PRIM (INCL 8) (ALSO PART OF KIT)				
	8-A13	8.080	LATCH KIT, HOOD PRIM	91	Y	1	10273994
6.	8-A10	8.024	WASHER, HOOD ADJ RR BPR (M13X35X3) (7.347)	91	Y	AR	14047726
7.	8-A10	8.024	BUMPER, HOOD ADJ RR	91	Y	2	10123075
8.	8-A12	8.075	RETAINER, HOOD PRIM LAT REL CBL (PART OF 5)	91	Y	2	12338122
9.	8-A13	8.080	SUPPORT, HOOD PRIM LAT	91	Y (FE1, FE7)	LH	10225267
		DISCON	SUPPORT, HOOD PRIM LAT	91	Y (FE1, FE7)	RH	10225268
10.	8-A8	8.010	SEAL, HOOD RR OTR	91	Y	LH	10123073
	8-A8	8.010	SEAL, HOOD RR OTR	91	Y	RH	10123074
11.	8-A12	8.075	PLATE, HOOD PRIM LAT REL CBL BRKT NUT (PART OF 1)	91	Y	1	10086014
12.		8.900	BOLT,	91		AR	20351035
13.		8.900	BOLT, HEX W/CON WA, M6X1X20	91		AR	11514623
14.	8-A15	8.141	REINFORCEMENT, F/FDR RR	91	Y	LH	14043025
	8-A15	8.141	REINFORCEMENT, F/FDR RR	91	Y	RH	14043026
15.	8-A13	8.080	BRACKET, HOOD GDE PIN BUSH	91	Y	LH	10261823
	8-A13	8.080	BRACKET, HOOD GDE PIN BUSH	91	Y	RH	1404[illegible]084
16.	8-A13	8.080	BUSHING, HOOD GDE PIN	91	Y	2	14076579
17.	8-A16	8.143	SHIM, F/FDR RR REINF (8.153)	91	Y	AR	14049081
18.	8-A8	8.015	STRUT, HOOD	91	Y	LH	10175704
19.	8-A10	8.024	PIN, HOOD GDE	91	Y	2	14081865
20.	8-A14	8.085	BRACKET, HOOD PRIM LAT CTH BOLT	91	Y	LH	10217321
	8-A14	8.085	BRACKET, HOOD PRIM LAT CTH BOLT	91	Y	RH	10217322
		DISCON	PLATE, HOOD PRIM LAT STKR ANC (INCLS 2.6MM WIRE DIA POP-UP SPRING) (INCL 21) (8.080)	91	Y	RH	10216144
21.	8-A13	8.080	NUT, HOOD PRIM LAT (M14X2.0)	91	Y	AR	14043051
22.	8-A14	8.083	SPRING, HOOD POP-UP (DIA. 2.6MM) (8.080)	91	Y	4	14043052
23.		8.900	BOLT, HEX W/CON WA	91		AR	11508269
24.	8-A14	8.083	RETAINER, HOOD POP-UP SPR (USED W/4.0MM WIRE DIA SPRING)	91	Y	2	10261899
	8-A14	8.083	RETAINER, HOOD POP-UP SPR (8.080) (USED W/2.6MM WIRE DIA SPRING)	91	Y	2	14043053
25.	8-A13	8.080	BOLT, HOOD PRIM LAT (TO HOOD)	91	Y	2	10243052
26.		8.977	SCREW, PAN HD TORX (T-30) M6.3X1.81X25 W/FL WA SS CB	91		AR	12338098
27.	8-A16	8.153	PANEL, FRT W/H UPR	91	Y (FE1, FE7)	LH	10231873
	8-A16	8.153	PANEL, FRT W/H UPR	91	Y (FE1, FE7)	RH	10231874
28.	8-A17	8.154	SEAL, FRT W/H PNL	91	Y (FE1, FE7)	2	14104943
29.	8-A14	8.130	FENDER, FRT (INCLUDES MLDG)	91	Y	LH	10135975
	8-A14	8.130	FENDER, FRT (INCLUDES MLDG)	91	Y	RH	10135976

© 2000 GENERAL MOTORS SERVICE PARTS OPERATIONS-CHEVROLET-14Y

							1Y08-001
30.		8.921	NUT, (SPRING, TYPE C, U-SHAPED, MULTI THD) (M6X1, 1060 PEOR)	91		AR	12337917
31.		8.921	NUT, U SHAPE TYPE P, M6.3X1.81, PNL RANGE.65-3.8, PEOR	91		AR	11514290
32.	8-A16	8.143	SHIM, F/FDR (21MMX38MM) (7.865)	91	Y	AR	14081864
34.		8.921	NUT, U SHAPE TYPE P, M6.3X1.81, PNL RANGE.65-3.8, PEOR	91		AR	11514290
35.	8-A16	8.153	PANEL, FRT W/H LWR RR (1992 & PRIOR VEHICLES MUST DRILL HOLES TO MOUNT RELAYS AND OTHER ELECTRICAL HARDWARE)	91	Y (EXC ZR1)	LH	10276497
	8-A16	8.153	PANEL, FRT W/H LWR RR (1992 & PRIOR VEHICLES MUST DRILL HOLES TO MOUNT RELAYS & OTHER ELECTRICAL HARDWARE)	91	Y (EXC ZR1)	RH	10276498
	8-A16	8.153	PANEL, FRT W/H LWR RR (1992 & PRIOR VEHICLES MUST DRILL HOLES TO MOUNT RELAYS & OTHER ELECTRICAL HARDWARE.)	91	Y (ZR1)	LH	10276499
		DISCON	PANEL, FRT W/H LWR RR (1992 & PRIOR VEHICLES MUST DRILL HOLES TO MOUNT RELAYS & OTHER ELECTRICAL HARDWARE)	91	Y (ZR1)	RH	10276500
36.	8-A16	8.153	PANEL, FRT W/H LWR CTR (HOLES MAY HAVE TO BE DRILLED WHEN USED ON MODELS PRIOR TO 1992)	91	Y (FE1)	LH	10276503
	8-A16	8.153	PANEL, FRT W/H LWR CTR	91	Y (FX3)	RH	10276504
	8-A16	8.153	PANEL, FRT W/H LWR CTR	91	Y (FE1) (EXC FX3)	RH	10276504
37.		8.900	BOLT, HEX W/WA (M6X1X20)	91		AR	10077321
38.		8.977	BOLT, HWH M4.2X1.41X25 PZOR TAP 17 OD	91		AR	11508233
39.	8-A16	8.153	PANEL, FRT W/H LWR FRT (MAY NEED TO DRILL HOLES TO MATCH)	91	Y (FE1, FE7)	LH	10275625
	8-A16	8.153	PANEL, FRT W/H LWR FRT (MAY NEED TO DRILL HOLES TO MATCH)	91	Y (FE1, FE7)	RH	10275626
40.		8.921	NUT, (SPRING, TYPE C, U-SHAPED, MULTI THD) (M6X1, 1060 PEOR)	91		AR	12337917
41.		8.917	NUT, HFH, M8X1.25, 17.9 OD, 738 THK, 13MM HEX, 10, ZF (PART OF 63) (8.915) (AC-DELCO #11514596)	91		AR	11514596
42.	8-A9	8.016	SHIM, HOOD HGE (TO SI RAIL) (1MM THK) (RECT)	91	Y	AR	14064584
	8-A9	8.016	SHIM, HOOD HGE (U-SHAPED, TO FRT CR/MBR)	91	Y	AR	14060273

							1Y08-001
43.	8-A8	8.015	**HINGE**, HOOD (ON EARLY 94 & PRIOR, MAY NEED TO REMOVE 6MM OF SHIMS FROM UPR & LWR HOOD HINGE SHIM PACKS, HORIZ HOOD HINGE MTG BOLT NOT REQ & MAY BE DISCARDED)	91	Y	LH	12523083
	8-A8	8.015	**HINGE**, HOOD (ON EARLY 94 & PRIOR, MAY NEED TO REMOVE 6MM OF SHIMS FROM UPR & LWR HOOD HINGE SHIM PACKS, HORIZ HOOD HINGE MTG BOLT NOT REQ & MAY BE DISCARDED)	91	Y	RH	12523084
44.		8.917	**NUT**, M8X1.25X7.1, ZC 10	91	.....	AR	11515748
45.		8.903	**BOLT**, RD HD SQ NK M8X1.25X25 PC W/SS CAP	91	.....	AR	12338141
46.	8-A8	8.015	**BRACKET**, HOOD HGE	91	Y (FE1, FE7)	LH	14060285
	8-A8	8.015	**BRACKET**, HOOD HGE	91	Y (FE1, FE7)	RH	14060286
47.		8.917	**NUT**, HFH 6X1X7 SELF LK 14.2-OD (9) 7111M ALL MET PREV TORQ (PART OF 63)	91	.....	AR	11516075
48.		8.900	**BOLT**, HEX W/CON WA	91	.....	AR	11508269
49.		N.S.	**STUD**, HGE UPR REINF		.....		
50.	8-A9	8.016	**WASHER**, HOOD HGE (13MM I.D.)	91	Y	2	14078623
52.		8.917	**NUT**, HEX W/CON WA M6X1X5.5, 24-OD 9 PEOR (8.915)	91	.....	AR	11508388
53.	8-A8	8.015	**BRACKET**, HOOD STRUT (POS #2)	91	Y	LH	10278271
	8-A8	8.015	**BRACKET**, HOOD STRUT (POSN #1) (PART OF 63)	91	Y	LH	10276270
54.	8-A16	8.153	**BRACKET**, FRT W/H PNL SUPT ..	91	Y	1	14104902
55.	8-A8	8.015	**STRUT**, HOOD	91	Y	LH	10175784
56.		8.900	**BOLT**, PZOR 9.8 (AC-DELCO #11507087)	91	.....	AR	11507087
58.	8-A18	8.155	**SUPPORT**, FRT W/H LWR FRT PNL	91	Y	LH	14104035
	8-A18	8.155	**SUPPORT**, FRT W/H LWR FRT PNL	91	Y	RH	14104036
59.		8.915	**NUT**, HEX W/CON WA M8X1.25X9.5 19-OD 9 ZP (8.917)	91	.....	AR	11506117
60.	8-A10	8.024	**STUD**, HOOD ADJ FRT BPR (INCL 61) (25MM O.D.) (INCLS NUT)	91	Y	2	25526456
61.	8-A10	8.024	**BUMPER**, HOOD ADJ FRT (PART OF 60)	91	Y	2	14069250
62.	8-A10	8.024	**RETAINER**, HOOD STOP BPR (PUSH IN) (14.683)	91	Y	AR	20032850
63.	8-A8	8.000	**HOOD KIT**, (INCL 41, 53) (DEALER MUST READ INSTRUCTION SHEET BEFORE INSTALLATION)	91	Y	1	12512903
64.		8.973	**PLUG**, BUTTON 1.00 STL PL (16.547)	91	.....	AR	14049810
65.		8.921	**NUT**, MET STAMPED 5 MM ID ...	91	.....	AR	11501793
66.	8-A10	8.055	**EMBLEM**, HOOD (TOPSIDE) (BLACK) (BOWTIE)	91	Y (FE1, FE7)	1	10209060

© 2000 GENERAL MOTORS SERVICE PARTS OPERATIONS-CHEVROLET-14Y

							1Y08-001
67.	8-A10	8.055	**EMBLEM**, HOOD (UNDERSIDE) (CHEVROLET CORVETTE, BOWLING GREEN, KY)	91	Y	1	10175789
68.	8-A12	8.075	**CABLE**, HOOD PRIM LAT REL (F LACK)	91	Y	1	10250486
70.	8-B3	8.890	**LAMP**, U/HOOD (CPS)	91	Y (FE1, FE7)	2	16515968
	8-B3	8.890	**SWITCH**, U/HOOD LP	91	Y	2	16518071
	8-B3	8.890	**LENS**, U/HOOD LP	91	Y (FE1, FE7)	1	16506291
	8-B3	8.890	**NUT**, U/HOOD LP (2.383)	91	Y	4	12338025
71.		8.991	**BULB**, 12CP ID 211-2 (AC-DELCO #L211-2)	91	.....	AR	9431808
73.	8-A12	8.075	**BOLT**, HOOD PRIM LAT REL CBL (M4.2X1.4X16) (8.977)	91	Y	1	11504736
75.	8-A12	8.075	**HANDLE**, HOOD PRIM LAT REL CBL (W/CURVED HDL)	91	Y	2	10286183

RPO DEFINITIONS

FE1 – SUSPENSION SYSTEM,SOFT RIDE
FE7 – SUSPENSION SYSTEM,FRONT AND REAR,HEAVY DUTY(USED WITH FERFORMANCE HANDLING PACKAGE Z51)
FX3 – RIDE AND HANDLING,ELECTRONIC CONTROLLED
MD8 – TRANSMISSION,AUTOMATIC 4-SPEED(THM700R4/4L60)
ZR1 – PACKAGE,SPECIAL PERFORMANCE COUPE(1YY07 + ZR1 == 1YZ07)

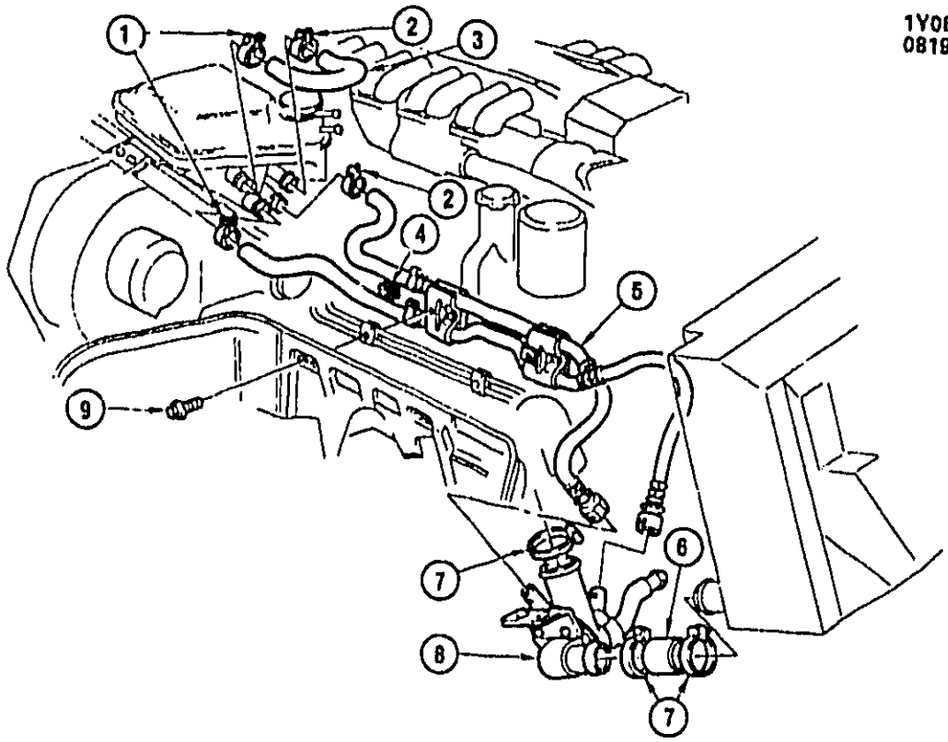

1Y08-008

1990-1995 Y HOSES & PIPES/HEATER (LT5)

1.		8.948	**CLAMP**, 28.6-86.2 DIA WORM GEAR (AC-DELCO #12338017) .	90-95	.....	AR	12338017
2.		8.948	**CLAMP**, WORM GEAR (AC-DELCO #12337891)	90-95	.....	AR	12337891
3.	8-N3	1.240	**HOSE**, RAD SURGE TK INL	90-95	Y	1	10257254
4.		8.921	**NUT**, U-SHAPE MULTI THRD SPG M6X1-6.3 PNLS 13.5 DEEP ZOR	90-95	.....	AR	12338002
5.	8-A27	8.846	**HOSE**, HTR INL & OTLT	90-92	Y (LT5, FE1, FE7)	1	10135629
	8-A27	8.846	**HOSE**, HTR INL & OTLT	93-95	Y (LT5, FE1)	1	10135629
6.	8-N3	1.173	**HOSE**, RAD OTLT (UPR)	90-95	Y (LT5)	1	10135660
7.		8.948	**CLAMP**, WORM/GEAR, 65.1-89.9 DIA, 12.7 WID, SS, BLK OX	90-95	.....	AR	14081883
8.	8-N4	1.246	**THERMOSTAT**, ENG COOL (SEE GROUP 1.000 "RADIATOR & RELATED PARTS" FOR DETAIL ILLUSTRATED VIEW) (AC-DELCO #131-51)	90-95	Y (LT5)	1	10135627
	8-N4	1.246	**THERMOSTAT**, ENG COOL (INCLS HSG (UPR/LWR), THERM, BRKT & BOLTS) (SEE GROUP 1.000 "RADIATOR & RELATED PARTS" FOR DETAIL ILLUSTRATED VIEW)	90-95	Y (LT5)	1	14104599
9.		8.900	**BOLT-HEX**, M6X1X25, 22.5 THD, GM500 (10.9) PC (AC-DELCO #11509417)	90-95	.....	AR	11509417

© 2000 GENERAL MOTORS SERVICE PARTS OPERATIONS-CHEVROLET-14Y

								1Y08-016
4.		8.900	**BOLT**, HFH (M6X1X20 9.8 PZOR (HOOD PRIM LAT) (TO CAR) (AC-DELCO #11508600)	92			6	11508600
5.	8-A13	8.080	**LATCH KIT**, HOOD PRIM (INCLS 4, 5, 8, 22, 24, 51, 69)	92	Y		1	10273994
	8-A12	8.075	**CAP**, HOOD PRIM LAT REL CBL BOLT (PART OF LATCH KIT) (8.153)	92	Y		AR	14070933
6.	8-A10	8.024	**WASHER**, HOOD ADJ RR BPR (M13X35X3) (7.347)	92	Y		AR	14047726
7.	8-A10	8.024	**BUMPER**, HOOD ADJ RR	92	Y		2	10123075
8.	8-A12	8.075	**RETAINER**, HOOD PRIM LAT REL CBL (PART OF 5)	92	Y		1	12338122
9.	8-A13	8.080	**SUPPORT**, HOOD PRIM LAT	92	Y		LH	10225267
		DISCON	**SUPPORT**, HOOD PRIM LAT	92	Y		RH	10225268
10.	8-A8	8.010	**SEAL**, HOOD RR OTR	92	Y		LH	10123073
	8-A8	8.010	**SEAL**, HOOD RR OTR	92	Y		RH	10123074
11.	8-A12	8.075	**PLATE**, HOOD PRIM LAT REL CBL BRKT NUT (PART OF 1)	92	Y		1	10086014
12.		8.900	**BOLT**, HEX W/WA (M6X1X20) (F/FDR RR REINF)	92			LH	10077321
		8.977	**BOLT**, HFH, W/FL WA, TAP, M4.2X1.41X16, 6172M, POR, 12.5MM FL WA, BSSD (F/FDR RR REINF)	92			RH	11513942
13.		8.900	**BOLT**, HEX W/CON WA, M6X1X20, FULL THD, PZOR, 12.5 OD, 9.8 (HOOD GDE PIN BUSH BRKT)	92			4	11509024
14.	8-A15	8.141	**REINFORCEMENT**, F/FDR RR ...	92	Y		LH	14043025
	8-A15	8.141	**REINFORCEMENT**, F/FDR RR ...	92	Y		RH	14043026
15.	8-A13	8.080	**BRACKET**, HOOD GDE PIN BUSH	92	Y		LH	10261823
	8-A13	8.080	**BRACKET**, HOOD GDE PIN BUSH	92	Y		RH	14043084
16.	8-A13	8.080	**BUSHING**, HOOD GDE PIN	92	Y		2	14076579
17.	8-A16	8.143	**SHIM**, F/FDR RR REINF (8.153) ..	92	Y		AR	14049081
18.	8-A8	8.015	**STRUT**, HOOD	92	Y		LH	10175784
19.	8-A10	8.024	**PIN**, HOOD GDE	92	Y		2	14081865
20.	8-A14	8.085	**BRACKET**, HOOD PRIM LAT CTH BOLT	92	Y		LH	10217321
	8-A14	8.085	**BRACKET**, HOOD PRIM LAT CTH BOLT	92	Y		RH	10217322
21.	8-A13	8.080	**NUT**, HOOD PRIM LAT (M14X2.0)	92	Y		AR	14043051
22.	8-A14	8.083	**SPRING**, HOOD POP-UP (DIA. 2.6MM) (8.080)	92	Y		4	14043052
23.		8.900	**BOLT**, HEX W/CON WA (HOOD PRIM LAT STKR)	92			4	11508269
		8.800	SEALANT	92			AR	12345493
24.	8-A14	8.083	**RETAINER**, HOOD POP-UP SPR (USED W/4.0MM WIRE DIA SPRING)	92	Y		2	10261899
	8-A14	8.083	**RETAINER**, HOOD POP-UP SPR (8.080) (USED W/2.6MM WIRE DIA SPRING)	92	Y		2	14043053
25.	8-A13	8.080	**BOLT**, HOOD PRIM LAT (TO HOOD)	92	Y		2	10243052

							1Y08-016
26.		8.900	BOLT, HEX W/WA (M6X1X20) (F/FDR)	92		4	10077321
27.	8-A18	8.153	PANEL, FRT W/H UPR	92	Y	LH	10231873
	8-A16	8.153	PANEL, FRT W/H UPR	92	Y	RH	10231874
28.	8-A17	8.154	SEAL, FRT W/H PNL	92	Y	2	14104943
29.	8-A14	8.130	FENDER, FRT (INCLUDES MLDG)	92	Y	LH	10135975
	8-A14	8.130	FENDER, FRT (INCLUDES MLDG)	92	Y	RH	10135976
30.		8.921	NUT, U-SHAPED MULTI THREAD SPRG (F/FDR RR REINF) (LWR)	92		2	11515478
31.		8.921	NUT, (SPRING, TYPE C, U-SHAPED, MULTI THD) (M6X1, 1060 PEOR) (F/FDR RR REINF) (UPR)	92		2	12337917
32.	8-A16	8.143	SHIM, F/FDR RR REINF (8.153)	92	Y	AR	14049081
33.	8-A10	8.055	EMBLEM, HOOD (UNDERSIDE) (CHEVROLET CORVETTE, BOWLING GREEN, KY)	92	Y	1	10175789
34.		8.921	NUT, TYPE P-WU SPR M6.3X1.81 PHOS ORG (FRT W/H LWR RR PNL)	92		6	11504035
35.	8-A16	8.153	PANEL, FRT W/H LWR RR (1992 & PRIOR VEHICLES MUST DRILL HOLES TO MOUNT RELAYS AND OTHER ELECTRICAL HARDWARE)	92	Y (EXC ZR1)	LH	10276497
	8-A16	8.153	PANEL, FRT W/H LWR RR (1992 & PRIOR VEHICLES MUST DRILL HOLES TO MOUNT RELAYS & OTHER ELECTRICAL HARDWARE)	92	Y (EXC ZR1)	RH	10276498
	8-A16	8.153	PANEL, FRT W/H LWR RR (1992 & PRIOR VEHICLES MUST DRILL HOLES TO MOUNT RELAYS & OTHER ELECTRICAL HARDWARE.)	92	Y (ZR1)	LH	10276499
		DISCON	PANEL, FRT W/H LWR RR (1992 & PRIOR VEHICLES MUST DRILL HOLES TO MOUNT RELAYS & OTHER ELECTRICAL HARDWARE)	92	Y (ZR1)	RH	10276500
36.	8-A16	8.153	PANEL, FRT W/H LWR CTR	92	Y (FX3)	RH	10276504
	8-A16	8.153	PANEL, FRT W/H LWR CTR	92	Y (FE1) (EXC FX3)	RH	10276504
	8-A16	8.153	PANEL, FRT W/H LWR CTR	92	Y (FE1, FX3)	LH	10276503
37.		8.900	BOLT, HEX W/WA (M6X1X20) (FRT W/H LWR RR PNL) (POSN #1)	92		8	10077321
38.		8.977	BOLT, HWH M4.2X1.41X25 PZOR TAP 17 OD (FRT W/H LWR FRT PNL) (POSN #2)	92		4	11508233
39.	8-A16	8.153	PANEL, FRT W/H LWR FRT (MAY NEED TO DRILL HOLES TO MATCH)	92	Y	LH	10275625
	8-A16	8.153	PANEL, FRT W/H LWR FRT (MAY NEED TO DRILL HOLES TO MATCH)	92	Y	RH	10275626

							1Y08-016
40.		8.921	NUT, (SPRING, TYPE C, U-SHAPED, MULTI THD) (M6X1, 1060 PEOR) (FRT W/H LWR CTR PNL)	92	.....	9	12337917
41.		8.917	NUT, HFH, M8X1.25, 17.9 OD, 738 THK, 13MM HEX, 10, ZF (HOOD HGE) (POSN #2) (8.915) (AC-DELCO #11514596)	92	.....	4	11514596
42.	8-A9	8.016	SHIM, HOOD HGE (POSN #2) (1MM THK) (RECT)	92	Y	AR	14064584
43.	8-A8	8.015	HINGE, HOOD (ON EARLY 94 & PRIOR, MAY NEED TO REMOVE 6MM OF SHIMS FROM UPR & LWR HOOD HINGE SHIM PACKS, HORIZ HOOD HINGE MTG BOLT NOT REQ & MAY BE DISCARDED)	92	Y	LH	12523083
	8-A8	8.015	HINGE, HOOD (ON EARLY 94 & PRIOR, MAY NEED TO REMOVE 6MM OF SHIMS FROM UPR & LWR HOOD HINGE SHIM PACKS, HORIZ HOOD HINGE MTG BOLT NOT REQ & MAY BE DISCARDED)	92	Y	RH	12523084
44.		8.915	NUT, HEX W/CON WA, M8X1.25, 7.32 THK, 9, ZF (HOOD HGE) (POSN #1)	92	.....	4	11514519
45.		8.903	BOLT, RD HD SQ NK M8X1.25X25 PC W/SS CAP	92	.....	AR	12338141
46.	8-A10	8.055	EMBLEM, HOOD SI (WHITE) (BOWTIE, ZR1) (7.832)	92	Y (ZR1, 10U)	2	10146443
	8-A10	8.055	EMBLEM, HOOD SI (RED) (BOWTIE, ZR1) (7.832)	92	Y (ZR1, 81U)	2	10146447
		DISCON	EMBLEM, HOOD SI (BLUE) (BOWTIE, ZR1)	92	Y (ZR1, 80U)	2	10153679
	8-A10	8.055	EMBLEM, HOOD SI (YELLOW) (BOWTIE, ZR1) (7.832)	92	Y (ZR1, 35U)	2	10167090
	8-A10	8.055	EMBLEM, HOOD SI (AQUA) (BOWTIE, ZR1) (7.832)	92	Y (ZR1, 43U)	2	10175826
	8-A10	8.055	EMBLEM, HOOD SI (BLACK ROSE) (BOWTIE, ZR1) (7.832) ...	92	Y (ZR1, 73U)	2	10198747
	8-A10	8.055	EMBLEM, HOOD SI (BLACK) (7.832)	92	Y (ZR1, 41U)	2	10266455
	8-A10	8.055	EMBLEM, HOOD SI (MARBLEHEAD GRAY) (7.832) ...	92	Y (ZR1, 45U)	2	10260456
47.		8.915	NUT, HEX W/CON WA M8X1.25X9.5 19-OD 9 ZP (HOOD HGE) (POSN #1) (8.917)	92	.....	4	11506117
48.		8.900	BOLT, HEX W/CON WA (HOOD HGE)	92	.....	10	11508269
49.	8-A8	8.015	STUD, HOOD OPEN ASST ROD .	92	Y	1	14104833
50.	8-A9	8.016	WASHER, HOOD HGE (13MM I.D.)	92	Y	2	14078623
51.	8-A12	8.075	CABLE, HOOD PRIM LAT REL (BLACK)	92	Y	1	10250486
52.		8.917	NUT, HEX W/CON WA, 24 OD, M6X1X5.6, 9M, PZOR (FRT W/H LWR FRT PNL SUPT)	92	.....	1	11514275

							1Y08-016
53.	8-A8	8.015	BRACKET, HOOD STRUT (POSN #2)	92	Y	LH	10278271
		8.917	NUT, HEX W/CON WA M6X1X5.5 (9) 7111M 16-OD (HOOD STRUT BALL)	92		1	11516783
	8-A8	8.015	BRACKET, HOOD STRUT (POSN #1)	92	Y	LH	10278270
54.	8-A16	8.153	BRACKET, FRT W/H PNL SUPT	92	Y	1	14104902
55.	8-B3	8.890	LENS, U/HOOD LP (PART OF 57)	92	Y	1	16506291
56.		8.900	BOLT, HEX W/CON WA, M6X1X20 (HOOD STRUT BRKT)	92		5	11514623
57.	8-B3	8.890	LAMP, U/HOOD (INCL 55, 70)	92	Y	2	16515968
58.	8-A18	8.155	SUPPORT, FRT W/H LWR FRT PNL	92	Y	LH	14104035
	8-A18	8.155	SUPPORT, FRT W/H LWR FRT PNL	92	Y	RH	14104036
59.		8.915	NUT, HEX W/CON WA M8X1.25X9.5 19-OD 9 ZP (8.917)	92		AR	11506117
60.	8-A10	8.024	STUD, HOOD ADJ FRT BPR (25MM O.D.) (INCLS NUT)	92	Y	2	25526456
61.	8-A10	8.024	BUMPER, HOOD ADJ FRT	92	Y	2	14069260
62.	8-A10	8.024	RETAINER, HOOD STOP BPR (PUSH IN) (14.683)	92	Y	AR	20032850
63.	8-A8	8.000	HOOD KIT, (W/STRUT BRKT) (DEALER MUST READ INSTRUCTION SHEET BEFORE INSTALLATION) (MET HDLP HSG SUPT NO LONGER REQD)	92	Y	1	12512903
64.		8.973	PLUG, BUTTON 1.00 STL PL (16.547)	92		AR	14049810
65.		8.921	NUT, MET STAMPED 5 MM ID	92		AR	11501793
66.	8-A10	8.055	EMBLEM, HOOD (TOPSIDE) (BLACK) (BOWTIE)	92	Y	1	10209060
67.		8.991	BULB, 12CP ID 211-2 (AC-DELCO #L211-2)	92		AR	9431808
68.		8.977	SCREW, PAN HD C/R TAP M4.2X1.41X16 B PTPOR (HOOD PRIM LAT REL CBL)	92		1	11504736
69.	8-A12	8.075	HANDLE, HOOD PRIM LAT REL CBL (W/CURVED HDL) (PART OF 5)	92	Y	2	10286183
70.	8-B3	8.890	SWITCH, U/HOOD LP (PART OF 57)	92	Y	2	16518071
71.	8-B3	8.890	NUT, U/HOOD LP (2.383)	92	Y	4	12338025
72.	8-N21	3.410	SEAL, A/CL HOOD	92	Y (LT1, LT5) (EXC B4H)	1	10198767
73.		8.921	NUT, TYPE P-WU SPR M6.3X1.81 PHOS ORG (FRT W/H UPR PNL)	92		15	11504035
74.		8.977	SCREW, PAN HD TORX W/FL WA TAP M6.3X 1.81X20 SS BLK 17 OD (FRT W/H UPR PNL)	92		16	11508762
75.	8-A16	8.143	SHIM, F/FDR (21MMX38MM) (7.865)	92	Y	AR	14081864
76.		8.977	SCREW, PAN HD TORX W/FL WA TAP M6.3X 1.81X20 SS BLK 17 OD (FRT W/H LWR RR PNL) (POSN #2)	92		6	11508762

								1Y08-016
77.		8.900	**BOLT**, HEX W/WA (M6X1X20) (FRT W/H LWR CTR PNL)	92		.....	10	10077321
78.		8.977	**SCREW**, PAN HD TORX W/FL WA TAP M6.3X 1.81X20 SS BLK 17 OD (FRT W/H LWR FRT PNL SUPT)	92		.....	4	11508762
79.		8.921	**NUT**, U SHAPE TYPE P, M6.3X1.81, PNL RANGE.65-3.8, PEOR (FRT W/H LWR FRT PNL SUPT)	92		.....	4	11514290
80.		8.900	**BOLT**, HEX W/WA (M6X1X20) (FRT W/H LWR FRT PNL) (POSN #3)	92		.....	6	10077321
81.		8.977	**SCREW**, PAN HD TORX W/FL WA TAP M6.3X 1.81X20 SS BLK 17 OD (FRT W/H LWR FRT PNL) (POSN #1)	92		.....	8	11508762
82.		8.921	**NUT**, U SHAPE TYPE P, M6.3X1.81, PNL RANGE.65-3.8, PEOR (FRT W/H LWR FRT PNL) .	92		.....	8	11514290
83.	8-N24	6.760	**REINFORCEMENT**, STRG COL SUPT BRKT (PART OF 1)	92	Y	.....	1	10086084
84.	8-A13	8.080	**BRACKET**, HOOD PRIM LAT REL CBL (L-SHAPED)	92	Y	.....	1	10172493
85.		8.900	**BOLT**, HEX W/CON WA, M6X1X20 (FRT W/H LWR FRT PNL SUPT)	92		.....	2	11514623
86.		8.900	**BOLT**, HEX W/CON WA, M6X1X20 (FRT W/H PNL SUPT BRKT)	92		.....	1	11514623
87.		8.900	**BOLT**, HEX W/CON WA, M6X1X20 (HOOD STRUT BRKT) .	92		.....	5	11514623
89.	8-A9	8.016	**SHIM**, HOOD HGE (POSN #1) ..	92	Y	.....	AR	14060273

RPO DEFINITIONS

B4H – MODIFICATION-NOISE CONTROL, EXPORT
FE1 – SUSPENSION SYSTEM,SOFT RIDE
FX3 – RIDE AND HANDLING,ELECTRONIC CONTROLLED
LT1 – ENGINE-GAS, 8 CYL, 5.7L(5.7P),MFI,HO
LT5 – ENGINE,5.7L(5.7J),TPI
ZR1 – PACKAGE,SPECIAL PERFORMANCE COUPE(1YY07 + ZR1 == 1YZ07)
10U – EXTERIOR COLOR,ARTIC WHITE
35U – EXTERIOR COLOR,PRIMARY,YELLOW
41U – EXTERIOR COLOR,PRIMARY,BLACK
43U – EXTERIOR COLOR,PRIMARY,LIGHT AQUA METALLIC
45U – EXTERIOR COLOR-MEDIUM GREEN METALLIC
73U – EXTERIOR COLOR,BLACK ROSE METALLIC
80U – EXTERIOR COLOR,PRIMARY,MED QUASAR BLUE MET
81U – EXTERIOR COLOR,PRIMARY,BRIGHT RED

© 2000 GENERAL MOTORS SERVICE PARTS OPERATIONS-CHEVROLET-14Y

MICROFICHE INDEX

GROUPS 8.000 THRU 9.000

FICHE 8 OF 11

GROUP	DESCRIPTION	STARTING GRID LOCATION PARTS	ILLUSTRATIONS
–	GENERAL INFORMATION	1–A2	1–G2
–	ALPHABETICAL INDEX	1–B13	N.A.
8.000	FRONT END SHEET METAL – HEATER	8–A2	8–F2
9.000	BODY MOUNTING – AIR CONDITIONING – INSTRUMENT CLUSTER	8–C2	8–I2
–	OUT OF FICHE CALLS	N.A.	8–M27

8–G1

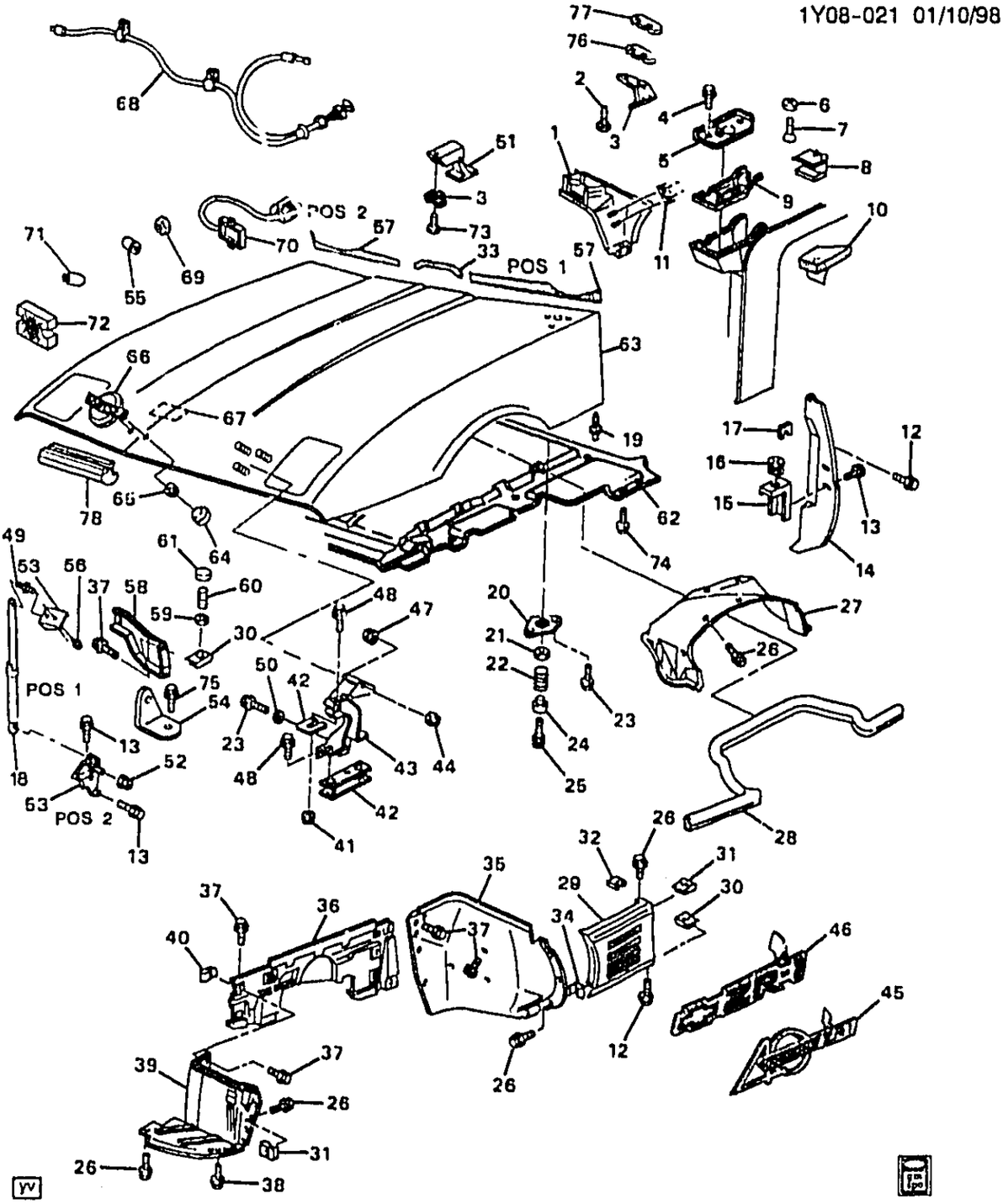

1Y08-021

1993 Y SHEET METAL/FRONT END HOOD, FENDER & RELATED PARTS

1.	8-N24	12.807	REINFORCEMENT, W/S LWR FRM RR OTR (INCLS 11)	93 Y	1	10137761
2.	8-A13	8.080	BOLT, HOOD PRIM LAT REL CBL BRKT (M8X1.25X24) (3.671)	93 Y (MD8)	2	14088310
3.	8-A13	8.080	BRACKET, HOOD PRIM LAT REL CBL (CLIP TYPE)	93 Y	1	14065085
	8-A13	8.080	BRACKET, HOOD PRIM LAT REL CBL (L-SHAPED)	93 Y	1	10172493

© 2000 GENERAL MOTORS SERVICE PARTS OPERATIONS-CHEVROLET-14Y

								1Y08-021
4.	8-A13	8.080	BOLT, HOOD PRIM LAT (TO HOOD)	93	Y		2	10243052
5.	8-A13	8.080	LATCH KIT, HOOD PRIM	93	Y		1	10273994
	8-A12	8.075	CAP, HOOD PRIM LAT REL CBL BOLT (8.153)	93	Y		AR	14070633
6.	8-A10	8.024	WASHER, HOOD ADJ RR BPR (M13X35X3) (7.347)	93	Y		AR	14047726
7.	8-A10	8.024	BUMPER, HOOD ADJ RR	93	Y		2	10123075
8.	8-A12	8.075	RETAINER, HOOD PRIM LAT REL CBL (PART OF 5)	93	Y		2	12338122
9.	8-A13	8.080	SUPPORT, HOOD PRIM LAT	93	Y		LH	10225267
		DISCON	SUPPORT, HOOD PRIM LAT	93	Y		RH	10225268
10.	8-A8	8.010	SEAL, HOOD RR OTR	93	Y		LH	10123073
	8-A8	8.010	SEAL, HOOD RR OTR	93	Y		RH	10123074
11.	8-A12	8.075	PLATE, HOOD PRIM LAT REL CBL BRKT NUT (PART OF 1)	93	Y		1	10086014
12.		8.977	BOLT, HFH, W/FL WA, TAP, M4.2X1.41X16, 6172M, POR, 12.5MM FL WA, BSSD (F/FDR RR REINF)	93			2	11513942
13.		8.900	BOLT, HEX W/WA (M6X1X20) (F/FDR RR REINF)	93			4	10077321
14.	8-A15	8.141	REINFORCEMENT, F/FDR RR	93	Y		LH	14043025
	8-A15	8.141	REINFORCEMENT, F/FDR RR	93	Y		RH	14043026
15.	8-A13	8.080	BRACKET, HOOD GDE PIN BUSH	93	Y		LH	10261823
	8-A13	8.080	BRACKET, HOOD GDE PIN BUSH	93	Y		RH	14043084
16.	8-A13	8.080	BUSHING, HOOD GDE PIN	93	Y		2	14076579
17.	8-A16	8.143	SHIM, F/FDR RR REINF (8.153)	93	Y		AR	14049081
18.	8-A8	8.015	STRUT, HOOD (PART OF 63)	93	Y		LH	101[illegible]5784
19.	8-A10	8.024	PIN, HOOD GDE	93	Y		2	140[illegible]1865
20.		DISCON	PLATE, HOOD PRIM LAT STKR ANC (INCLS 2.6MM WIRE DIA POP-UP SPRING) (INCL 21, 22, 25) (PART OF 63) (8.080)	93	Y		RH	102[illegible]6144
		DISCON	PLATE, HOOD PRIM LAT STKR ANC (INCL 21, 22, 25) (PART OF 63) (8.080)	93	Y		LH	10242559
21.	8-A13	8.080	NUT, HOOD PRIM LAT (PART OF 20) (M14X2.0)	93	Y		AR	14043051
22.	8-A14	8.083	SPRING, HOOD POP-UP (PART OF 20) (DIA. 2.6MM) (8.080)	93	Y		4	14043052
23.		8.900	BOLT, HEX W/CON WA (HOOD PRIM LAT STKR)	93			4	11508269
24.	8-A14	8.083	RETAINER, HOOD POP-UP SPR (USED W/4.0MM WIRE DIA SPRING)	93	Y		2	10261899
	8-A14	8.083	RETAINER, HOOD POP-UP SPR (8.080) (USED W/2.6MM WIRE DIA SPRING)	93	Y		2	14043053
25.		N.S.	BOLT, HOOD PRIM LAT ((TO HOOD) (PART OF 20))		Y		2	
26.	8-A16	8.143	RIVET, FRT W/H UPR PNL (F/FDR) (23.5LG 9.89 OD) (8.967)	93	Y		16	10125439
27.	8-A16	8.153	PANEL, FRT W/H UPR	93	Y		LH	10231873
	8-A16	8.153	PANEL, FRT W/H UPR	93	Y		RH	10231874
28.	8-A17	8.154	SEAL, FRT W/H PNL	93	Y		2	14104943

© 2000 GENERAL MOTORS SERVICE PARTS OPERATIONS-CHEVROLET-14Y

							1Y08-021
29.	8-A14	8.130	FENDER, FRT (INCLUDES MLDG)	93	Y	LH	10135975
	8-A14	8.130	FENDER, FRT (INCLUDES MLDG)	93	Y	RH	10135976
30.		8.921	NUT, (SPRING, TYPE C, U-SHAPED, MULTI THD) (M6X1, 1060 PEOR) (F/FDR RR REINF) (LOWER POSN)	93		2	12337917
31.		8.921	NUT, U SHAPE TYPE P, M6.3X1.81, PNL RANGE.65-3.8, PEOR (F/FDR RR REINF) (UPPER POSN)	93		2	11514290
32.	8-A16	8.143	SHIM, F/FDR (21MMX38MM) (7.865)	93	Y	AR	14081864
33.	8-A8	8.010	SEAL, HOOD RR CTR (CENTER OF HOOD REAR)	93	Y	1	10272962
34.		8.921	NUT, U SHAPE TYPE P, M6.3X1.81, PNL RANGE.65-3.8, PEOR (RKR PNL)	93		4	11514290
35.	8-A16	8.153	PANEL, FRT W/H LWR RR (1992 & PRIOR VEHICLES MUST DRILL HOLES TO MOUNT RELAYS AND OTHER ELECTRICAL HARDWARE)	93	Y (EXC ZR1)	LH	10276497
	8-A16	8.153	PANEL, FRT W/H LWR RR (1992 & PRIOR VEHICLES MUST DRILL HOLES TO MOUNT RELAYS & OTHER ELECTRICAL HARDWARE)	93	Y (EXC ZR1)	RH	10276498
	8-A16	8.153	PANEL, FRT W/H LWR RR (1992 & PRIOR VEHICLES MUST DRILL HOLES TO MOUNT RELAYS & OTHER ELECTRICAL HARDWARE.)	93	Y (ZR1)	LH	10276499
		DISCON	PANEL, FRT W/H LWR RR (1992 & PRIOR VEHICLES MUST DRILL HOLES TO MOUNT RELAYS & OTHER ELECTRICAL HARDWARE)	93	Y (ZR1)	RH	10276500
36.	8-A16	8.153	PANEL, FRT W/H LWR CTR	93	Y (FX3)	RH	10276504
	8-A16	8.153	PANEL, FRT W/H LWR CTR	93	Y (FE1) (EXC FX3)	RH	10276504
	8-A16	8.153	PANEL, FRT W/H LWR CTR	93	Y (FE1, FX3)	LH	10276503
37.		8.900	BOLT, HEX W/CON WA, M6X1X20 (FRT W/H LWR FRT PNL SUPT)	93		1	11514623
38.		8.900	BOLT, HEX W/WA (M6X1X20) (FRT W/H LWR FRT PNL) (POSN #3)	93		6	10077321
39.	8-A16	8.153	PANEL, FRT W/H LWR FRT (MAY NEED TO DRILL HOLES TO MATCH)	93	Y	LH	10275625
	8-A16	8.153	PANEL, FRT W/H LWR FRT (MAY NEED TO DRILL HOLES TO MATCH)	93	Y	RH	10275626
40.		8.921	NUT, (SPRING, TYPE C, U-SHAPED, MULTI THD) (M6X1, 1060 PEOR) (FRT W/H LWR CTR PNL)	93		9	12337917

							1Y08-021
41.		8.917	**NUT**, HFH, M8X1.25, 17.9 OD, 738 THK, 13MM HEX, 10, ZF (HOOD HGE) (POSN #2) (PART OF 63) (8.915) (AC-DELCO #11514596)	93	....	4	11514596
42.	8-A9	8.016	**SHIM**, HOOD HGE (POSN #2) (TO SI RAIL) (1MM THK) (RECT) .	93	Y	AR	14064584
43.	8-A8	8.015	**HINGE**, HOOD (ON EARLY 94 & PRIOR, MAY NEED TO REMOVE 6MM OF SHIMS FROM UPR & LWR HOOD HINGE SHIM PACKS, HORIZ HOOD HINGE MTG BOLT NOT REQ & MAY BE DISCARDED)	93	Y	LH	12523083
	8-A8	8.015	**HINGE**, HOOD (ON EARLY 94 & PRIOR, MAY NEED TO REMOVE 6MM OF SHIMS FROM UPR & LWR HOOD HINGE SHIM PACKS, HORIZ HOOD HINGE MTG BOLT NOT REQ & MAY BE DISCARDED)	93	Y	RH	12523084
44.		8.915	**NUT**, HEX W/CON WA, M8X1.25, 7.32 THK, 9, ZF (HOOD HGE) (POSN #1)	93	.....	4	11514519
45.	8-A10	8.055	**EMBLEM**, HOOD SI (40-W/O ZR1)	93	Y (Z25) (EXC ZR1)	2	10172390
46.	8-A10	8.055	**EMBLEM**, HOOD SI (WHITE) (BOWTIE, ZR1) (7.832)	93	Y (ZR1, 10U)	2	10146443
	8-A10	8.055	**EMBLEM**, HOOD SI (YELLOW) (BOWTIE, ZR1) (7.832)	93	Y (ZR1, 53U) (EXC Z25)	2	10153678
		DISCON	**EMBLEM**, HOOD SI (BLUE) (BOWTIE, ZR1)	93	Y (ZR1, 80U) (EXC Z25)	2	10153679
	8-A10	8.055	**EMBLEM**, HOOD SI (AQUA) (BOWTIE, ZR1) (7.832)	93	Y (ZR1, 43U) (EXC Z25)	2	10175826
	8-A10	8.055	**EMBLEM**, HOOD SI (RED) (BOWTIE, ZR1) (7.832)	93	Y (ZR1, 70U) (EXC Z25)	2	10198688
	8-A10	8.055	**EMBLEM**, HOOD SI (BLACK ROSE) (BOWTIE, ZR1) (7.832) ...	93	Y (ZR1, 73U) (EXC Z25)	2	10198747
	8-A10	8.055	**EMBLEM**, HOOD SI (BLACK) (7.832)	93	Y (ZR1, 41U) (EXC Z25)	2	10268455
	8-A10	8.055	**EMBLEM**, HOOD SI (MARBLEHEAD GRAY) (7.832) ...	93	Y (ZR1, 45U) (EXC Z25)	2	10268456
47.		8.917	**NUT**, HFH 6X1X7 SELF LK 14.2-OD (9) 7111M ALL MET PREV TORQ (HOOD HGE REINF) (PART OF 63)	93	.....	4	11516075
48.		8.900	**BOLT**, HEX W/CON WA (HOOD HGE)	93	.....	10	11508269
49.	8-A8	8.015	**STUD**, HOOD OPEN ASST ROD (PART OF 53)	93	Y	1	14104833
50.	8-A9	8.016	**WASHER**, HOOD HGE (13MM I.D.)	93	Y	2	14078623
51.	8-A12	8.075	**HANDLE**, HOOD PRIM LAT REL CBL (W/CURVED HDL)	93	Y	2	10286183
52.		8.917	**NUT**, HEX W/CON WA, 24 OD, M6X1X5.6, 9M, PZOR (FRT W/H LWR FRT)	93	.....	1	11514275
53.	8-A8	8.015	**BRACKET**, HOOD STRUT	93	Y	LH	10278270

© 2000 GENERAL MOTORS SERVICE PARTS OPERATIONS-CHEVROLET-14Y

							1Y08-021
	8-A8	8.015	BRACKET, HOOD STRUT (POSN #2)	93	Y	LH	10278271
54.	8-A16	8.153	BRACKET, FRT W/H PNL SUPT	93	Y	1	14104902
55.	8-B3	8.890	SWITCH, U/HOOD LP (PART OF 70)	93	Y	2	16516071
56.		8.900	BOLT, HEX W/CON WA, M6X1X20 (HOOD STRUT BRKT)	93		5	11514623
57.	8-A8	8.010	SEAL, HOOD RR (POSN #1) (1LEFT SIDE OF HOOD REAR)	93	Y	1	10272963
	8-A8	8.010	SEAL, HOOD RR (POSN #2) (RIGHT SIDE OF HOOD REAR)	93	Y	1	10272964
58.	8-A18	8.155	SUPPORT, FRT W/H LWR FRT PNL	93	Y	LH	14104035
	8-A18	8.155	SUPPORT, FRT W/H LWR FRT PNL	93	Y	RH	14104036
59.		8.915	NUT, HEX W/CON WA M8X1.25X9.5 19-OD 9 ZP (8.917)	93		AR	11506117
60.	8-A10	8.024	STUD, HOOD ADJ FRT BPR (25MM O.D.) (INCLS NUT)	93	Y	2	25526456
61.	8-A10	8.024	BUMPER, HOOD ADJ FRT	93	Y	2	14069250
62.	8-A9	8.021	INSULATOR, HOOD (DEALER MUST DRILL HOLES AS REQ'D)	93	Y (LT1, B4H) (EXPORT)	1	10247787
63.	8-A8	8.000	HOOD KIT, (W/STRUT BRKT) (INCL 18, 20, 41, 53) (DEALER MUST READ INSTRUCTION SHEET BEFORE INSTALLATION) (MET HDLP HSG SUPT NO LONGER REQD)	93	Y	1	12512903
64.		8.973	PLUG, BUTTON 1.00 STL PL (HOOD EMB) (16.547)	93		1	14049810
65.		8.921	NUT, MET STAMPED 5 MM ID	93		AR	11501793
66.	8-A10	8.055	EMBLEM, HOOD (TOPSIDE) (CHROME) (BOWTIE)	93	Y (Z25)	1	10198699
	8-A10	8.055	EMBLEM, HOOD (TOPSIDE) (BLACK) (BOWTIE)	93	Y (EXC Z25)	1	10209060
67.	8-A10	8.055	EMBLEM, HOOD (UNDERSIDE) (CHEVROLET CORVETTE, BOWLING GREEN, KY)	93	Y	1	10175789
68.	8-A12	8.075	CABLE, HOOD PRIM LAT REL (BLACK)	93	Y	1	10250486
69.	8-B3	8.890	NUT, U/HOOD LP (2.383)	93	Y	4	12338025
70.	8-B3	8.890	LAMP, U/HOOD (INCL 55, 72)	93	Y	2	16515968
71.		8.991	BULB, 12CP ID 211-2 (AC-DELCO #L211-2)	93		AR	9431808
72.	8-B3	8.890	LENS, U/HOOD LP (PART OF 70)	93	Y	1	16506291
73.	8-A12	8.075	BOLT, HOOD PRIM LAT REL CBL (M4.2X1.4X16) (8.977)	93	Y	1	11504736
74.		8.950	RETAINER, PUSH-IN 0.35-LEN 0.25 HOLE DIA 2.0 HD DIA PLASTIC (HOOD INSL) (8.021)	93		AR	20064875
75.		8.900	BOLT, HEX W/CON WA, M6X1X20 (FRT W/H PNL SUPT BRKT)	93		1	11514623
76.	8-M28	0.829	SPACER, HOOD PRIM LAT REL CBL BRKT	93	Y (MD8)	1	10126405
77.	8-M28	0.829	SPACER, HOOD PRIM LAT REL CBL BRKT	93	Y (MD8)	1	10126405
78.	8-N21	3.410	SEAL, A/CL HOOD	93	Y (LT1, LT5) (EXC B4H)	1	10198767

© 2000 GENERAL MOTORS SERVICE PARTS OPERATIONS-CHEVROLET-14Y

RPO DEFINITIONS
B4H – MODIFICATION–NOISE CONTROL, EXPORT
FE1 – SUSPENSION SYSTEM,SOFT RIDE
FX3 – RIDE AND HANDLING,ELECTRONIC CONTROLLED
LT1 – ENGINE–GAS, 8 CYL, 5.7L(5.7P),MFI,HO
LT5 – ENGINE,5.7L(5.7J),TPI
MD8 – TRANSMISSION,AUTOMATIC 4–SPEED(THM700R4/4L60)
ZR1 – PACKAGE,SPECIAL PERFORMANCE COUPE(1YY07 + ZR1 == 1YZ07)
Z25 – APPEARANCE PACKAGE 40TH ANNIVERSARY(LIMITED EDITION)
10U – EXTERIOR COLOR,ARTIC WHITE
41U – EXTERIOR COLOR,PRIMARY,BLACK
43U – EXTERIOR COLOR,PRIMARY,BRT AQUA METALLIC
45U – EXTERIOR COLOR–MEDIUM GREEN METALLIC
53U – EXTERIOR COLOR,PRIMARY,COMPETITION YELLOW
70U – EXTERIOR COLOR,TORCH RED
73U – EXTERIOR COLOR,BLACK ROSE METALLIC
80U – EXTERIOR COLOR,PRIMARY,MED QUASAR BLUE MET

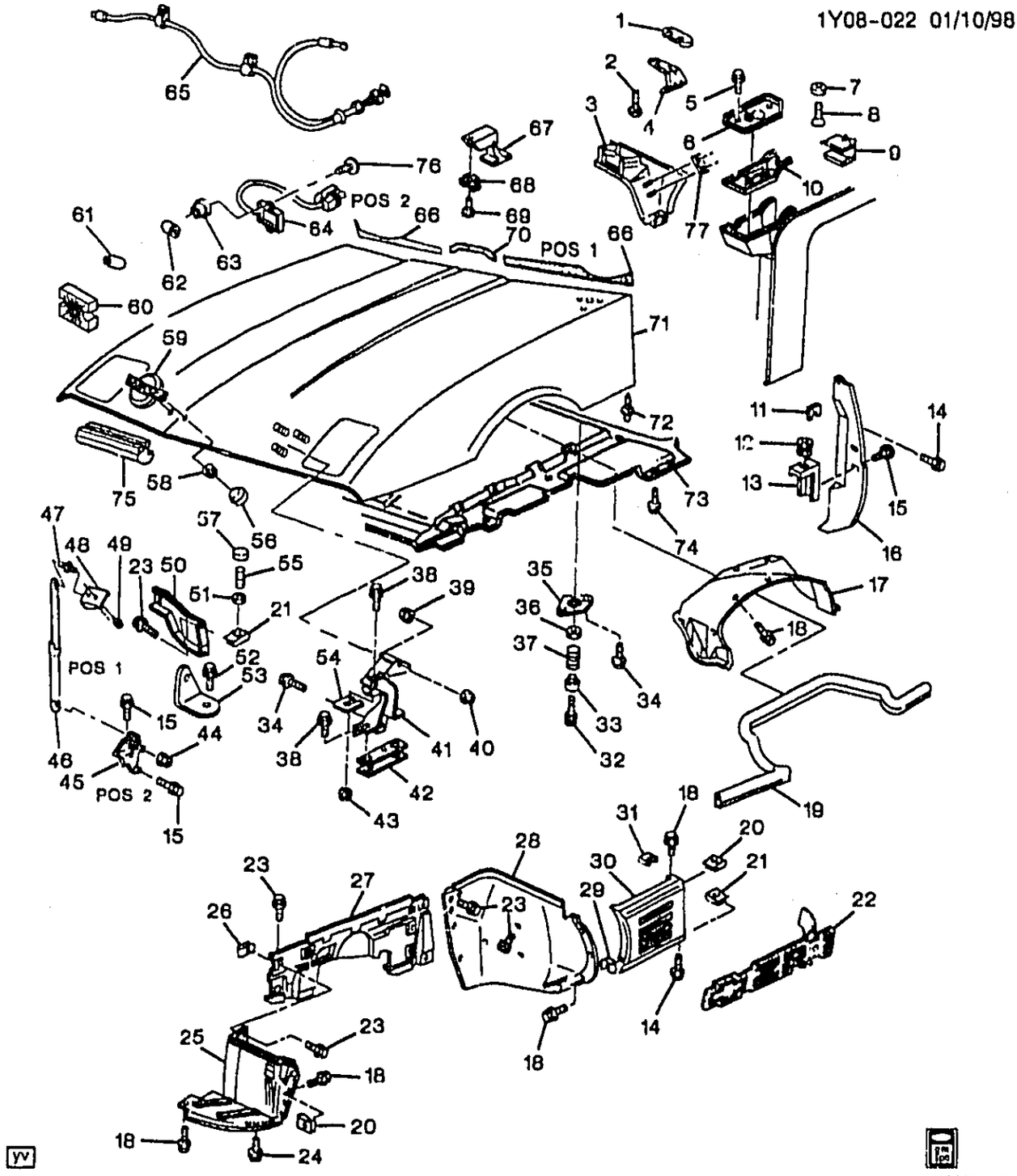

1994-1996 Y SHEET METAL/FRONT END HOOD, FENDER & RELATED PARTS

1.	8-M28	0.829	SPACER, HOOD PRIM LAT REL CBL BRKT	94-96	Y (M30)	1	10126405
2.		8.977	SCREW, HWH TAP M8X1.25X16 TR PT CAD (HOOD PRIM LAT REL CBL BRKT)	94-96	.....	AR	11504447
3.	8-N24	12.807	REINFORCEMENT, W/S LWR FRM RR OTR (INCLS 77)	94-96	Y	1	10137761
4.	8-A13	8.080	BRACKET, HOOD PRIM LAT REL CBL (CLIP TYPE)	94-96	Y	1	14065085

© 2000 GENERAL MOTORS SERVICE PARTS OPERATIONS-CHEVROLET-14Y

							1Y08-022
	8-A13	8.080	BRACKET, HOOD PRIM LAT REL CBL (L-SHAPED)	94-96	Y	1	10172493
5.		8.900	BOLT, HEX WA HD (M6X1X20) GM500 9.8 ST (TO CAR)	94-96		6	11503800
6.		N.S.	LATCH, HOOD PRIM (INCL 9) (ALSO PART OF KIT)				
	8-A13	8.080	LATCH KIT, HOOD PRIM (INCL #9, 32, 33, 37, 65, 67)	94-96	Y	1	10273994
7.	8-A10	8.024	WASHER, HOOD ADJ RR BPR (M13X35X3) (7.347)	94-96	Y	AR	14047726
8.	8-A10	8.024	BUMPER, HOOD ADJ RR	94-96	Y	2	10123075
9.	8-A12	8.075	RETAINER, HOOD PRIM LAT REL CBL (PART OF 6)	94-96	Y	2	12338122
10.	8-A13	8.080	SUPPORT, HOOD PRIM LAT	94-96	Y	LH	10225267
		DISCON	SUPPORT, HOOD PRIM LAT	94-96	Y	RH	10225268
11.	8-A16	8.143	SHIM, F/FDR RR REINF (8.163)	94-96	Y	AR	14049081
12.	8-A13	8.080	BUSHING, HOOD GDE PIN	94-96	Y	2	14076579
13.	8-A13	8.080	BRACKET, HOOD GDE PIN BUSH	94-96	Y	LH	10261823
	8-A13	8.080	BRACKET, HOOD GDE PIN BUSH	94-96	Y	RH	14043084
14.		8.977	BOLT, HFH, W/FL WA, TAP, M4.2X1.41X16, 6172M, POR, 12.5MM FL WA, BSSD (F/FDR RR REINF)	94-96		2	11513942
15.		8.900	BOLT, HEX W/WA (M6X1X20) (F/FDR RR REINF)	94-96		4	10077321
16.	8-A15	8.141	REINFORCEMENT, F/FDR RR	94-96	Y	LH	14043025
	8-A15	8.141	REINFORCEMENT, F/FDR RR	94-96	Y	RH	14043026
17.	8-A16	8.153	PANEL, FRT W/H UPR	94-96	Y	LH	10231973
	8-A16	8.153	PANEL, FRT W/H UPR	94-96	Y	RH	10231974
18.	8-A16	8.143	RIVET, FRT W/H UPR PNL (F/FDR) (23.5LG 9.89 OD) (8.967)	94	Y	16	10125439
	8-A16	8.143	RIVET, FRT W/H UPR PNL (F/FDR)	95-96	Y	16	10275408
		8.977	SCREW, PAN HD TORX W/FL WA TAP M6.3X 1.81X20 SS BLK 17 OD (F/FDR)	94-96		AR	11508762
19.	8-A17	8.154	SEAL, FRT W/H PNL	94-96	Y	2	14104943
20.		8.921	NUT, U SHAPE TYPE P, M6.3X1.81, PNL RANGE.65-3.8, PEOR (F/FDR RR REINF) (UPPER POSN)	94-96		2	11514290
21.		8.921	NUT, (SPRING, TYPE C, U-SHAPED, MULTI THD) (M6X1, 1060 PEOR) (F/FDR RR REINF) (LOWER POSN)	94-96		2	12337917
22.	8-A10	8.055	EMBLEM, HOOD SI (WHITE) (BOWTIE, ZR1) (7.832)	94-95	Y (ZR1, 10U)	2	10146443
		DISCON	EMBLEM, HOOD SI (BOWTIE, ZR1)	94-95	Y (ZR1, 75U)	1	10146446
	8-A10	8.055	EMBLEM, HOOD SI (YELLOW) (BOWTIE, ZR1) (7.832)	94-95	Y (ZR1, 53U)	2	10153678
	8-A10	8.055	EMBLEM, HOOD SI (AQUA) (BOWTIE, ZR1) (7.832)	94-95	Y (ZR1, 43U)	2	10175826
	8-A10	8.055	EMBLEM, HOOD SI (RED) (BOWTIE, ZR1) (7.832)	94-95	Y (ZR1, 70U)	2	10198688
	8-A10	8.055	EMBLEM, HOOD SI (BLACK ROSE) (BOWTIE, ZR1) (7.832)	94	Y (ZR1, 73U)	2	10198747

© 2000 GENERAL MOTORS SERVICE PARTS OPERATIONS-CHEVROLET-14Y

	8-A10	8.055	EMBLEM, HOOD SI (CLOISONNE BLUE) (7.832)	94-95	Y (ZR1, 28U)	2	10210902
		DISCON	EMBLEM, HOOD SI (MELON) ...	94	Y (ZR1, 66U)	2	10210905
	8-A10	8.055	EMBLEM, HOOD SI (BLACK) (7.832)	94-95	Y (ZR1, 41U)	2	10268455
	8-A10	8.055	EMBLEM, HOOD SI (MARBLEHEAD GRAY) (7.832) ...	94-95	Y (ZR1, 45U)	2	10268456
	8-A10	8.055	EMBLEM, HOOD SI (CYCLAMAN) (7.832)	95	Y (ZR1, 05U)	2	10233119
	8-A10	8.055	EMBLEM, HOOD SI (COLLECTORS EDITION)	96	Y (Z15)	2	10254344
	8-A10	8.055	EMBLEM, HOOD SI (GRAND SPORT EDITION)	96	Y (Z16)	2	10254347
23.		8.900	BOLT, HEX W/CON WA, M6X1X20 (FRT W/H LWR FRT PNL SUPT)	94-96	.....	1	11514623
24.		8.900	BOLT, HEX W/WA (M6X1X20) (FRT W/H LWR FRT PNL) (POSN #3)	94-96	.....	6	10077321
25.	8-A16	8.153	PANEL, FRT W/H LWR FRT (MAY NEED TO DRILL HOLES TO MATCH)	94-96	Y	LH	10275625
	8-A16	8.153	PANEL, FRT W/H LWR FRT (MAY NEED TO DRILL HOLES TO MATCH)	94-96	Y	RH	10275626
26.		8.921	NUT, (SPRING, TYPE C, U-SHAPED, MULTI THD) (M6X1, 1060 PEOR) (FRT W/H LWR CTR PNL)	94-96	.....	9	12337917
27.	8-A16	8.153	PANEL, FRT W/H LWR CTR	94-95	Y (FX3)	RH	10276504
	8-A16	8.153	PANEL, FRT W/H LWR CTR	94-95	Y (FE1) (EXC FX3)	RH	10276504
	8-A16	8.153	PANEL, FRT W/H LWR CTR	94-95	Y (FE1, FX3)	LH	10276503
	8-A16	8.153	PANEL, FRT W/H LWR CTR	96	Y	LH	10276503
	8-A16	8.153	PANEL, FRT W/H LWR CTR	96	Y	RH	10276504
28.	8-A16	8.153	PANEL, FRT W/H LWR RR (1992 & PRIOR VEHICLES MUST DRILL HOLES TO MOUNT RELAYS AND OTHER ELECTRICAL HARDWARE)	94-95	Y (EXC ZR1)	LH	10276497
	8-A16	8.153	PANEL, FRT W/H LWR RR (1992 & PRIOR VEHICLES MUST DRILL HOLES TO MOUNT RELAYS & OTHER ELECTRICAL HARDWARE)	94-95	Y (EXC ZR1)	RH	10276498
	8-A16	8.153	PANEL, FRT W/H LWR RR (1992 & PRIOR VEHICLES MUST DRILL HOLES TO MOUNT RELAYS & OTHER ELECTRICAL HARDWARE.)	94-95	Y (ZR1)	LH	10276499
		DISCON	PANEL, FRT W/H LWR RR (1992 & PRIOR VEHICLES MUST DRILL HOLES TO MOUNT RELAYS & OTHER ELECTRICAL HARDWARE)	94-95	Y (ZR1)	RH	10276500
	8-A16	8.153	PANEL, FRT W/H LWR RR	96	Y	LH	10276497
	8-A16	8.153	PANEL, FRT W/H LWR RR (INCLS PNL 10279301)	96	Y	RH	10276498

© 2000 GENERAL MOTORS SERVICE PARTS OPERATIONS-CHEVROLET-14Y

								1Y08-U22
29.		8.921	NUT, U SHAPE TYPE P, M6.3X1.81, PNL RANGE.65-3.8, PEOR (RKR PNL)	94-96			4	11514290
30.	8-A14	8.130	FENDER, FRT	94	Y (EXC B74)		LH	10135975
	8-A14	8.130	FENDER, FRT	94	Y (EXC B74)		RH	10135976
	8-A14	8.130	FENDER, FRT	95-96	Y		LH	10254395
	8-A14	8.130	FENDER, FRT	95-96	Y		RH	10254396
	8-A14	8.130	FENDER, FRT	94	Y (B74) (EXPORT)		LH	10222903
	8-A14	8.130	FENDER, FRT	94	Y (B74) (EXPORT)		RH	10222904
31.	8-A16	8.143	SHIM, F/FDR RR REINF (8.153)	94-96	Y		AR	14049081
32.	8-A13	8.080	BOLT, HOOD PRIM LAT CTH (TO CAR) (HFH M6X1X20 9.8 PZOR) (8.900) (AC-DELCO #11508600)	94-95	Y		6	11508600
	8-A13	8.080	BOLT, HOOD PRIM LAT CTH (TO HOOD)	94-96	Y		2	10243052
33.	8-A14	8.083	RETAINER, HOOD POP-UP SPR (USED W/4.0MM WIRE DIA SPRING)	94-96	Y		2	10261899
	8-A14	8.083	RETAINER, HOOD POP-UP SPR (8.080) (USED W/2.6MM WIRE DIA SPRING)	94	Y		2	14043053
34.		8.900	BOLT, HEX W/CON WA (HOOD PRIM LAT STKR)	94-96			4	11508269
35.		N.S.	PLATE, HOOD PRIM LAT STKR ANC (CPS)					
	8-A14	8.085	BRACKET, HOOD PRIM LAT CTH BOLT	94-96	Y		LH	10217321
	8-A14	8.085	BRACKET, HOOD PRIM LAT CTH BOLT	94-96	Y		RH	10217322
36.	8-A13	8.080	NUT, HOOD PRIM LAT CTH BOLT (M14X2.0)	94-96	Y		AR	14043051
37.	8-A14	8.083	SPRING, HOOD POP-UP (DIA. 4.0MM)	94-96	Y		2	10258657
38.		8.900	BOLT, HEX W/CON WA (HOOD HGE)	94-96			10	11508269
39.		8.917	NUT, HFH 6X1X7 SELF LK 14.2-OD (9) 7111M ALL MET PREV TORQ (HOOD HGE REINF)	94-96			4	11516075
40.		8.915	NUT, HEX W/CON WA, M8X1.25, 7.32 THK, 9, ZF (HOOD HGE) (POSN #1)	94-96			4	11514519
41.	8-A8	8.015	HINGE, HOOD (ON EARLY 94 & PRIOR, MAY NEED TO REMOVE 6MM OF SHIMS FROM UPR & LWR HOOD HINGE SHIM PACKS, HORIZ HOOD HINGE MTG BOLT NOT REQ & MAY BE DISCARDED)	94-96	Y		LH	12523083
	8-A8	8.015	HINGE, HOOD (ON EARLY 94 & PRIOR, MAY NEED TO REMOVE 6MM OF SHIMS FROM UPR & LWR HOOD HINGE SHIM PACKS, HORIZ HOOD HINGE MTG BOLT NOT REQ & MAY BE DISCARDED)	94-96	Y		RH	12523084
42.	8-A9	8.016	SHIM, HOOD HGE (TO SI RAIL) (1MM THK) (RECT)	94-96	Y		AR	14064584
	8-A9	8.016	SHIM, HOOD HGE (U-SHAPED, TO FRT CR/MBR)	94-96	Y		AR	14060273

© 2000 GENERAL MOTORS SERVICE PARTS OPERATIONS-CHEVROLET-14Y

							1Y08-022
43.		8.917	NUT, HFH, M8X1.25, 17.9 OD, 738 THK, 13MM HEX, 10, ZF (HOOD HGE) (POSN #2) (PART OF 71) (8.915) (AC-DELCO #11514596)	94-96		4	11514596
44.		8.917	NUT, HEX W/CON WA, 24 OD, M6X1X5.6, 9M, PZOR (FRT W/H LWR FRT)	94-96		1	11514275
45.	8-A8	8.015	BRACKET, HOOD STRUT (INCL 47)	94-96	Y	LH	10278271
46.	8-A8	8.015	STRUT, HOOD	94-96	Y	LH	10175784
47.	8-A8	8.015	STUD, HOOD OPEN ASST ROD (PART OF 45, 48, 71)	94-95	Y	1	14104833
48.	8-A8	8.015	BRACKET, HOOD STRUT (POSN #1) (INCL 47) (PART OF 71)	94-96	Y	LH	10278270
	8-A8	8.015	BRACKET, HOOD STRUT (POSN #2) (INCL 47) (PART OF 71)	94-96	Y	LH	10278271
49.		8.900	BOLT, HEX W/CON WA, M6X1X20 (HOOD STRUT BRKT)	94-96		5	11514623
50.	8-A18	8.155	SUPPORT, FRT W/H LWR FRT PNL	94-96	Y	LH	14104035
	8-A18	8.155	SUPPORT, FRT W/H LWR FRT PNL	94-96	Y	RH	14104036
51.		8.915	NUT, HEX W/CON WA M8X1.25X9.5 19-OD 9 ZP (8.917)	94-96		AR	11506117
52.		8.900	BOLT, HEX W/CON WA, M6X1X20 (FRT W/H PNL SUPT BRKT)	94-96		1	11514623
53.	8-A16	8.153	BRACKET, FRT W/H PNL SUPT	94-96	Y	1	14104902
54.	8-A9	8.016	SHIM, HOOD HGE (U-SHAPED, TO FRT CR/MBR)	94-96	Y	AR	14060273
55.	8-A10	8.024	STUD, HOOD ADJ FRT BPR (25MM O.D.) (INCLS NUT)	94-96	Y	2	25526456
56.		8.973	PLUG, BUTTON 1.00 STL PL (HOOD EMB) (16.547)	94-96		1	14049810
57.	8-A10	8.024	BUMPER, HOOD ADJ FRT	94-96	Y	2	14069250
58.		8.921	NUT, MET STAMPED 5 MM ID	94-96		AR	11501793
59.	8-A10	8.055	EMBLEM, HOOD (CHROME) (BOWTIE)	95	Y (Z4Z)	1	10198699
	8-A10	8.055	EMBLEM, HOOD (CHROME) (BOWTIE)	96	Y (Z16)	1	10198699
	8-A10	8.055	EMBLEM, HOOD (BLACK) (BOWTIE)	96	Y (EXC Z15, Z16)	1	10209060
	8-A10	8.055	EMBLEM, HOOD (COLLECTORS EDITION)	96	Y (Z15)	1	10254346
	8-A10	8.055	EMBLEM, HOOD (TOP SIDE) (BLACK) (BOWTIE)	94	Y	1	10209060
	8-A10	8.055	EMBLEM, HOOD (TOPSIDE) (BLACK) (BOWTIE)	95	Y (EXC Z4Z)	1	10209060
60.	8-B3	8.890	LENS, U/HOOD LP (PART OF 64)	94-93	Y	1	16506291
61.		8.991	BULB, 12CP ID 211-2 (PART OF 64) (AC-DELCO #L211-2)	94-96		1	9431808
62.	8-B3	8.890	SWITCH, U/HOOD LP (PART OF 64)	94-96	Y	1	16518071

						1Y08-022	
63.		8.921	NUT, U TYPE, MULTI THD, PREV TORQ, M4.2X1.41TAP, 8.1REACH, 0.65-3.80 PNLS 1065 PZOR (U/HOOD LP) (AC-DELCO #11513599)	94-96		AR	11513599
64.	8-B3	8.890	LAMP, U/HOOD (INCLS 60, 61, 62)	94-96	Y	2	16515968
	8-B3	8.890	CLIP, U/HOOD LP (2.559)	94-96	Y	8	8917236
65.	8-A12	8.075	CABLE, HOOD PRIM LAT REL (BLACK)	94-96	Y	1	10250486
66.	8-A8	8.010	SEAL, HOOD RR (POSN #1) (1LEFT SIDE OF HOOD REAR)	94-96	Y	1	10272963
	8-A8	8.010	SEAL, HOOD RR (POSN #2) (RIGHT SIDE OF HOOD REAR)	94-96	Y	1	10272964
67.	8-A12	8.075	HANDLE, HOOD PRIM LAT REL CBL (W/CURVED HDL)	94-96	Y	2	10286183
68.	8-A13	8.080	BRACKET, HOOD PRIM LAT REL CBL (CLIP TYPE)	94-96	Y	1	14065085
69.		8.977	SCREW, PAN HD C/R TAP M4.2X1.41X16 B PTPOR (HOOD PRIM LAT REL CBL)	94-96		1	11504736
70.	8-A8	8.010	SEAL, HOOD RR CTR (CENTER OF HOOD REAR)	94-96	Y	1	10272962
71.	8-A8	8.000	HOOD KIT, (W/STRUT BRKT) (INCL 43, 47, 48) (DEALER MUST READ INSTRUCTION SHEET BEFORE INSTALLATION) (MET HDLP HSG SUPT NO LONGER REQD)	94-96	Y	1	12512903
72.	8-A10	8.024	PIN, HOOD GDE	94-96	Y	2	14081865
73.	8-A9	8.021	INSULATOR, HOOD (DEALER MUST DRILL HOLES AS REQ'D)	94-96	Y (LT1, B4H) (EXPORT)	1	10247787
74.		8.950	RETAINER, PUSH-IN 0.35-LEN 0.25 HOLE DIA 2.0 HD DIA PLASTIC (HOOD INSL) (8.021)	94-96		AR	20064875
75.	8-N21	3.410	SEAL, A/CL HOOD	94-95	Y (LT1, LT5)	1	10198767
	8-N21	3.410	SEAL, A/CL HOOD	96	Y (LT1, LT4)	1	10198767
76.		8.977	BOLT, SCR HEX W/FLAT WA 12 DIA TYPE AB (U/HOOD LP)	94-96		4	11509374
77.	8-A12	8.075	PLATE, HOOD PRIM LAT REL CBL BRKT NUT (PART OF 3)	94-96	Y	[illegible]	10086014

RPO DEFINITIONS

B4H – MODIFICATION-NOISE CONTROL, EXPORT
B74 – MOLDING WHEEL OPENING EXTRA WIDE(EXPORT)
FE1 – SUSPENSION SYSTEM,SOFT RIDE
FX3 – RIDE AND HANDLING,ELECTRONIC CONTROLLED
LT1 – ENGINE-GAS, 8 CYL, 5.7L(5.7P),MFI,HO
LT4 – ENGINE GAS, 8 CYL, 5.7L, MFI, HIGH OUTPUT
LT5 – ENGINE,5.7L(5.7J),TPI
M30 – TRANSMISSION,AUTOMATIC 4 SPEED,4L60E,ELECTRONIC
ZR1 – PACKAGE,SPECIAL PERFORMANCE COUPE(1YY07 + ZR1 == 1YZ07)
Z15 – APPEARANCE PACKAGE,COLLECTORS EDITION
Z16 – APPEARANCE PACKAGE,GRAND SPORT EDITION
Z4Z – MERCHANDISED PKG INDY PACE CAR
05U – PRIMARY COLOR EXTERIOR, CYCLAMEN (95)
10U – EXTERIOR COLOR,ARTIC WHITE
28U – EXTERIOR COLOR,PRIMARY,DK CLOISONNE BLUE MET
41U – EXTERIOR COLOR,PRIMARY,BLACK
43U – EXTERIOR COLOR,PRIMARY,EMERALD GREEN MET

© 2000 GENERAL MOTORS SERVICE PARTS OPERATIONS-CHEVROLET-14Y

45U – EXTERIOR COLOR–MEDIUM GREEN METALLIC
53U – EXTERIOR COLOR,PRIMARY,COMPETITION YELLOW
66U – EXTERIOR COLOR,PRIMARY,LT MELON
70U – EXTERIOR COLOR,TORCH RED
73U – EXTERIOR COLOR,BLACK ROSE METALLIC
75U – EXTERIOR COLOR,PRIMARY,BRILLIANT RED METALLIC

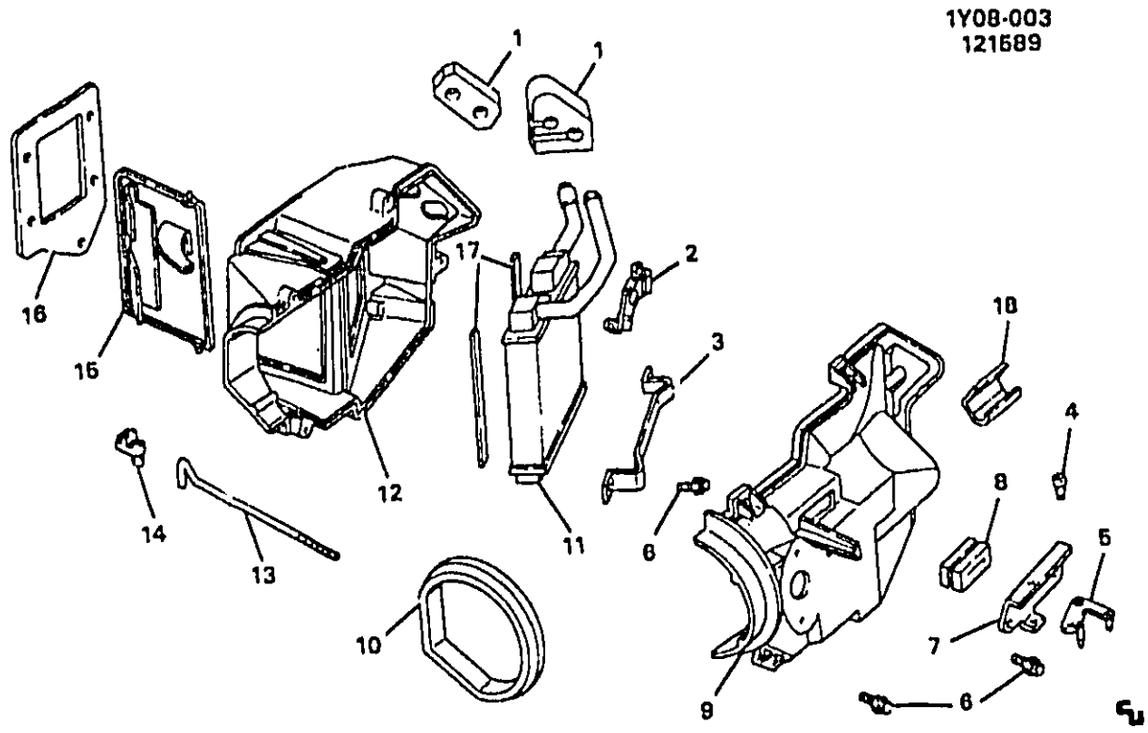

1Y08-003

1984-1989 Y HEATER & BLOWER ASM HEATER ASM

1.	8-A28	8.854	SEAL, CORE PIPE	3052705
	8-A28	8.854	SEAL, CORE TUBE	3052514
2.	8-A28	8.854	CLAMP, CORE MT (IN-OUT TANK)	3022734
3.	8-A28	8.854	STRAP, CORE MT	3052961
4.	8-E12	9.786	CONNECTOR, LINK ADJ	1224062
5.		DISCON	SHAFT, W/LVR TEMP	3053383
6.		8.977	SCREW, HWH (M4.2X1.41X13) (AC-DELCO #11508256)	11508256
7.		DISCON	BRACKET, ADJ CBL	3053377
8.		DISCON	SEAL, LINK OPG	3041107
9.		DISCON	CASE, W/FTG HTR CVR (1984-88)	3052963
		DISCON	CASE, W/FTG CVR HTR (1989) (FOR MDL APPL & POA SEE MODULE CHART)	52452755
10.	8-C17	9.211	GASKET, EVAP & BLO MOD	3052533
11.	8-A28	8.854	CORE, HTR (AC-DELCO #15-60039)	52479802
12.		DISCON	CASE, HTR CORE	3052455
13.	8-E12	9.786	LINK, DVTR VLV	3038969
14.	8-E12	9.786	RETAINER, TEMP VLV LINK (PLASTIC	20007898
15.		DISCON	VALV , TEMP	3053419
16.	8-A23	8.845	GASKET, HTR CASE & CORE	10273603
17.	8-A28	8.854	SEAL, CORE MT (1984)	3052253
	8-A28	8.854	SEAL, CORE MT (1985-89) (9.211)	3052253
18.	8-D7	9.281	CLIP, ACTR & BRKT (1985-89) (2.559)	9798835

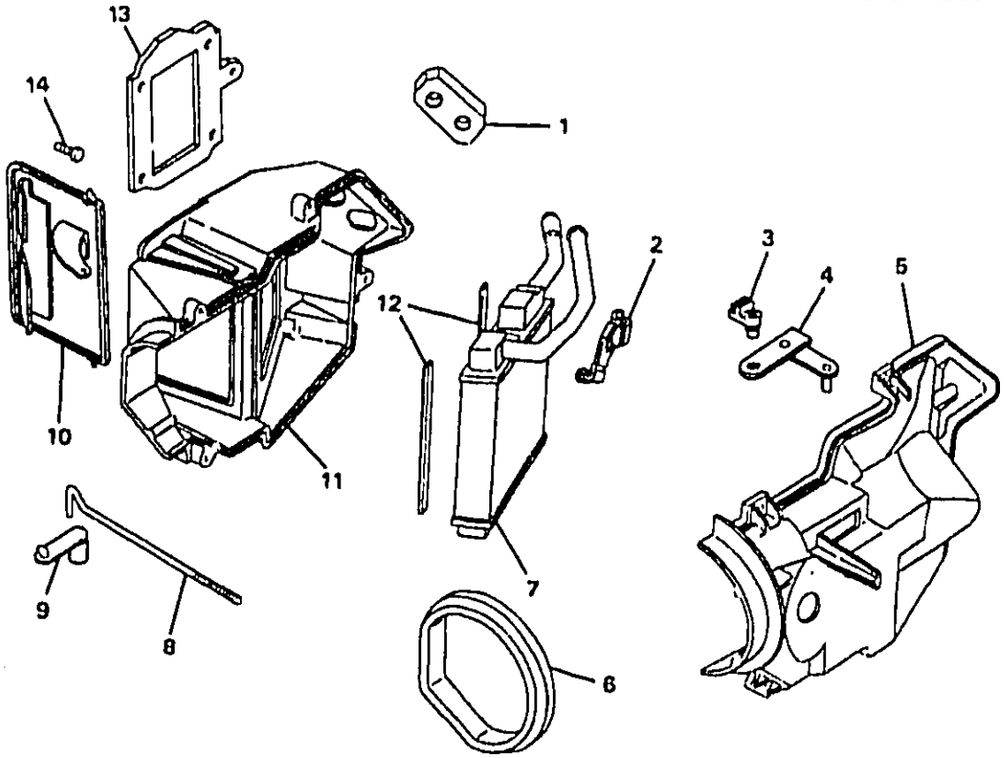

1Y08-010

1990-1996 Y HEATER & BLOWER ASM HEATER ASM(C60)

1.	8-A28	8.854	SEAL, HTR CORE TUBE	90-96	Y	1	3052514
	8-A28	8.854	SEAL, HTR CORE TUBE	94-95	Y (LT5)	1	3052705
2.	8-A28	8.854	CLAMP, HTR CORE (IN-OUT TANK)	90-96	Y	1	3022734
3.	8-E12	9.786	CONNECTOR, TEMP VLV LINK	90-96	Y (C60)	1	14089386
4.	8-E12	9.786	LEVER, TEMP VLV (SLAVE)	90-96	Y (C60)	1	52452746
5.	8-A28	8.854	CASE, HTR (W/FITTINGS)	90-96	Y (C60) (CVR)	1	52452757
6.	8-A28	8.854	SEAL, HTR (9.211)	90-96	Y	1	3052533
7.	8-A28	8.854	CORE, HTR (AC-DELCO #15-60039)	90-96	Y	1	52479882
8.	8-E12	9.786	LINK, TEMP VLV (FORMED)	90-96	Y (C60)	1	52452747
9.	8-E12	9.786	LEVER, TEMP VLV (PLASTIC) (W/O SLAVE) (PLAS)	90-96	Y (C60)	1	52452748
10.	8-B2	8.858	VALVE, TEMP (9.786)	90-93	Y	1	52452751
	8-B2	8.858	VALVE, TEMP (9.786)	94-96	Y (C60)	1	52452751
11.	8-A28	8.854	CASE, HTR	90-96	Y (C60)	1	52452744
12.	8-A28	8.854	SEAL, HTR CORE	90-96	Y	2	3048951
13.	8-A23	8.845	GASKET, HTR (CASE & CORE)	90-96	Y	1	10273603
14.	8-A28	8.854	STUD, HTR CASE	90-96	Y	2	3049441

RPO DEFINITIONS
C60 – AIR CONDITIONER,FRONT,MANUAL CONTROLS
LT5 – ENGINE,5.7L(5.7J),TPI

© 2000 GENERAL MOTORS SERVICE PARTS OPERATIONS-CHEVROLET-14Y

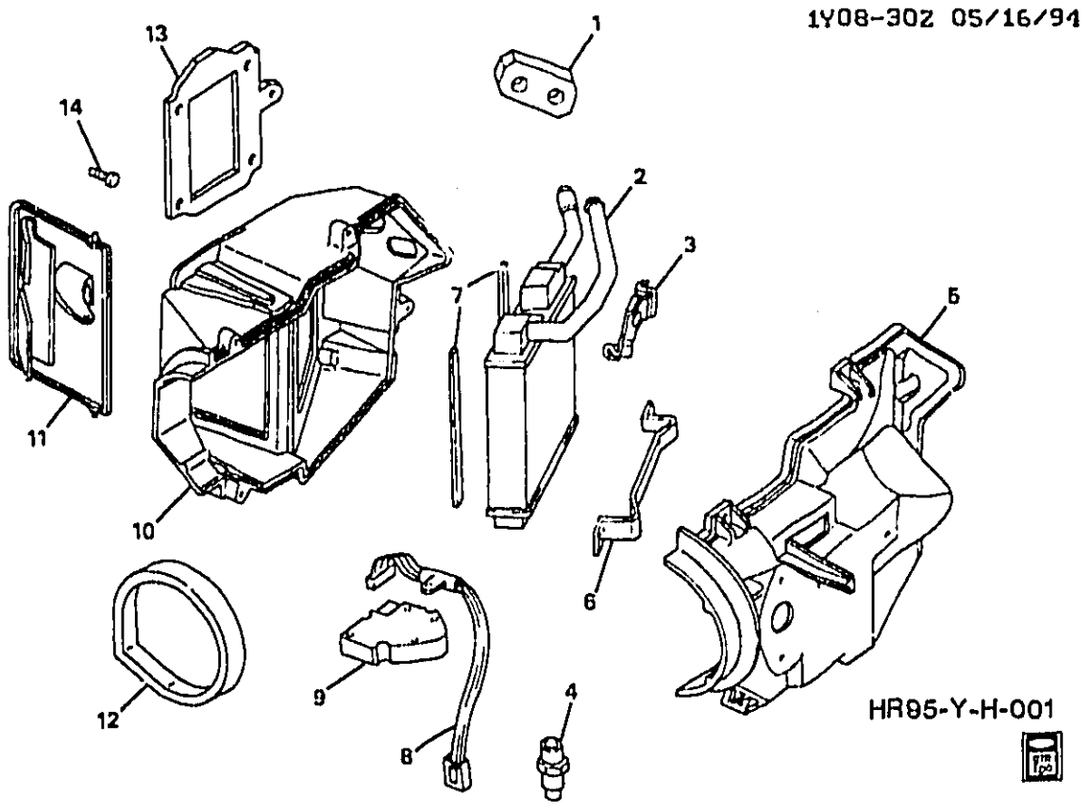

1Y08-302

1990-1996 Y HEATER & BLOWER ASM HEATER ASM(C68)

1.	8-A28	8.854	SEAL, HTR CORE TUBE	90-96	Y	1	3052514
	8-A28	8.854	SEAL, HTR CORE TUBE	94-95	Y (LT5)	1	3052705
2.	8-A28	8.854	CORE, HTR (AC-DELCO #15-60039)	90-96	Y	1	52479882
3.	8-A28	8.854	CLAMP, HTR CORE (IN-OUT TANK)	90-96	Y	1	3022734
4.	8-E12	9.786	COUPLING, TEMP VLV ACTR	90-96	Y (C68)	1	52452753
5.	8-A28	8.854	CASE, HTR RR (W/FTG)	90-96	Y (C68)	1	52455909
6.	8-A28	8.854	STRAP, HTR CORE	90-96	Y (C68)	1	3052961
7.	8-A28	8.854	SEAL, HTR CORE	90-96	Y	2	3048951
8.	8-A28	8.852	HARNESS, HTR CONT WRG	90-93	Y (C68)	1	12080858
	8-A28	8.852	HARNESS, HTR CONT WRG (9.276)	94-96	Y (C68)	1	12163192
9.	8-D5	9.280	ACTUATOR, TEMP VLV (AC-DELCO #15-71937)	90-96	Y (C68)	AR	16124952
10.	8-A28	8.854	CASE, HTR	90-93	Y (C68)	1	52452752
	8-A28	8.854	CASE, HTR	94-96	Y (C68)	1	52461983
11.	8-B2	8.858	VALVE, TEMP (9.786)	90-93	Y	1	52452751
	8-B2	8.858	VALVE, TEMP (AC-DELCO #15-54[illegible]8)	94-96	Y (C68)	1	52461984
12.	8-A28	8.854	SEAL, HTR (9.211)	90-96	Y	1	3052533
13.	8-A23	8.845	GASKET, HTR (CASE & CORE)	90-96	Y	1	10273603
14.	8-A28	8.854	STUD, HTR CASE	90-96	Y	2	3049441

RPO DEFINITIONS
C68 – AIR CONDITIONER,FRONT,AUTOMATIC,ELECTRONIC CONTROLS
LT5 – ENGINE,5.7L(5.7J),TPI

© 2000 GENERAL MOTORS SERVICE PARTS OPERATIONS-CHEVROLET-14Y

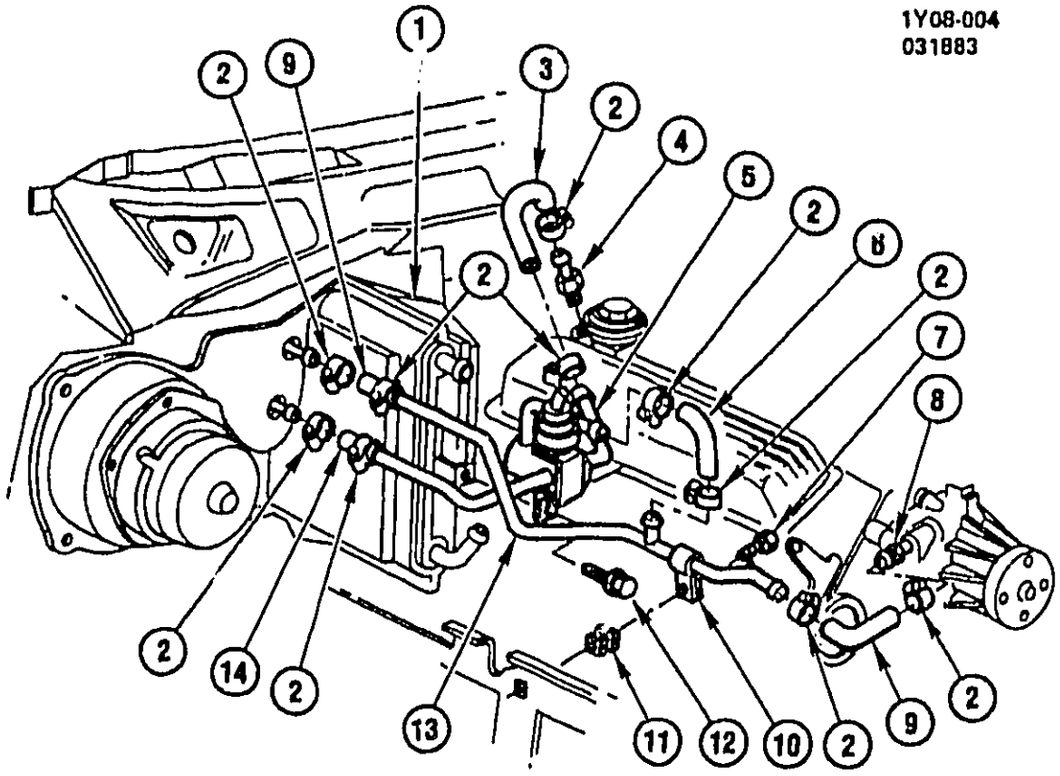

1Y08–004

1984 Y HOSES & PIPES/HEATER & WATER VALVE

1.		N.S.	**EVAPORATOR & BLOWER** ASM (SEE GROUP 9.000 "A/C EVAPORATOR & BLOWER MODULE ASM" FOR DETAIL ILLUSTRATED VIEW.)	
2.		8.948	**CLAMP**, WORM GEAR (.62 TO 1.25) (AC–DELCO #12337891)	12337891
3.	8–A27	8.846	**HOSE**, HTR INLET	14046044
4.	8–B2	8.866	**VALVE**, HTR WAT FLOW CONT (INLET) (AC–DELCO #15–5372)	22532158
5.	8–E13	9.795	**VALVE**, HTR WAT (AC–DELCO #15–5344)	14046043
6.		DISCON	**HOSE**, HTR OUTLET	14052406
7.		8.977	**SCREW**, HEX WA HD TAP (M4.2 X 1.41 X 20)	
8.		8.963	**NIPPLE**, HOSE (1/2"–14)	
9.		8.962	**HOSE**, WTR, BULK (3/4" ID)	
10.		8.950	**CLAMP**, LOOP CUSHIONED (22.2MM ID)	
11.		8.921	**NUT**, "U" SHAPE (M4.2 X 1.41)	
12.		8.977	**SCREW**, HEX WA HD TAP (M6.3 X 1.81 X 13)	
13.		DISCON	**PIPE**, HTR OUTLET	14046020
14.		8.962	**HOSE**, WTR, BULK (5/8" ID)	

© 2000 GENERAL MOTORS SERVICE PARTS OPERATIONS–CHEVROLET–14Y

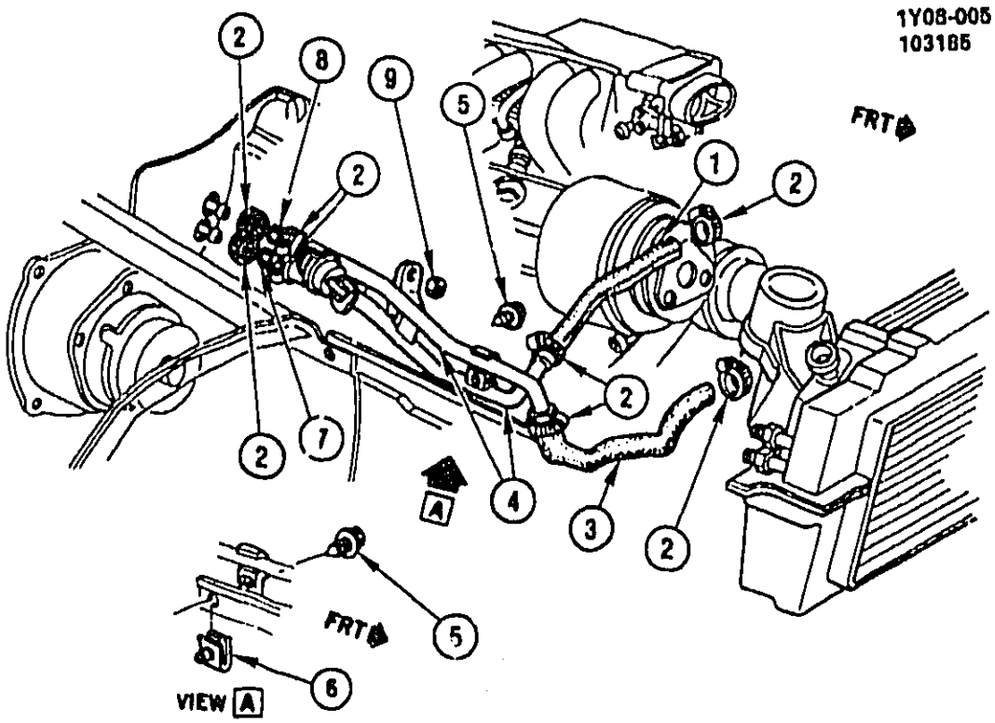

1Y08–005

1985 Y HOSES & PIPES/HEATER & WATER VALVE

1.	8–A27	8.846	HOSE, HTR INL	14081348
2.		8.948	CLAMP, WORM GEAR (.62 TO 1.25)	
3.	8–A27	8.846	HOSE, HTR OTLT	14081349
4.	8–E13	9.795	VALVE, HTR WAT SHUTOFF (AC–DELCO #15–5389)	10120965
5.		8.900	BOLT, HEX W/CON WA, M6X1X20 (AR)	11514623
6.		8.921	NUT, U–SHAPE MULTI THRD SPG (M6X1X6.3)	
7.		8.962	HOSE (5/8"IDX25') (RUBBER)	
8.		8.962	HOSE, 3/4" ID X 25 FT (WTR HTR) (AR)	12368236
9.		8.917	NUT, HEX (M5X0.8)	

© 2000 GENERAL MOTORS SERVICE PARTS OPERATIONS–CHEVROLET–14Y

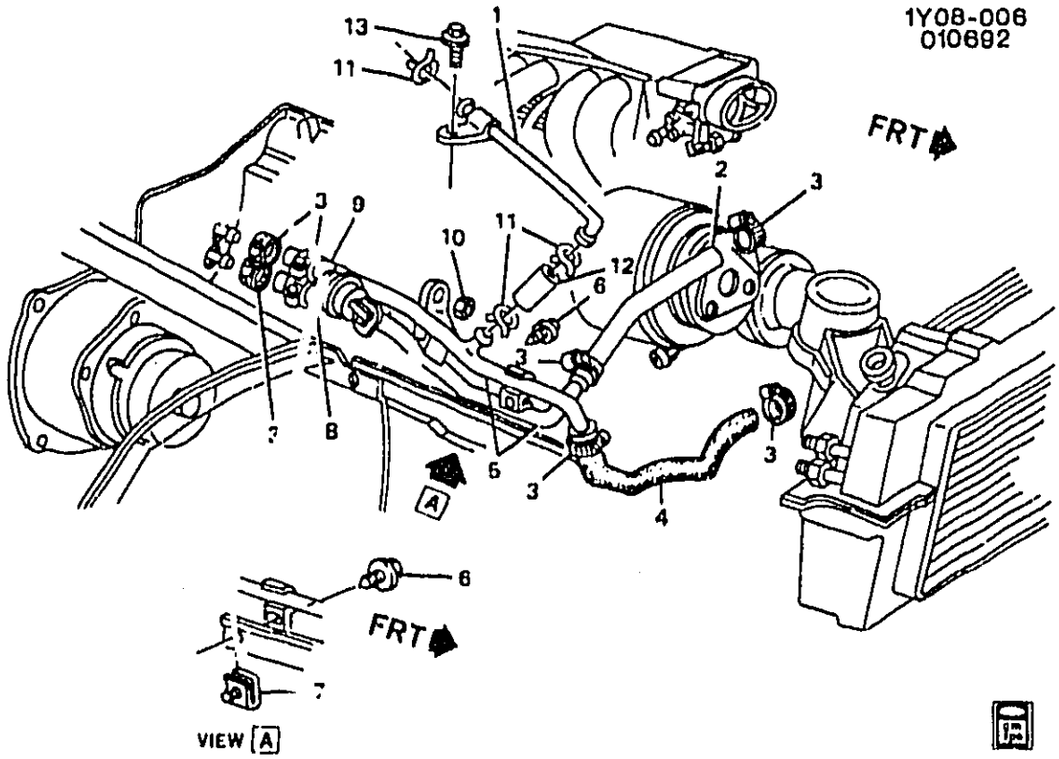

1986-1987 Y HOSES & PIPES/HEA TER & WATER VALVE

1.	8-N2	1.097	PIPE, ENG CLNT INT MANIF VA OR	14087587
2.	8-A27	8.846	HOSE, INL	14081348
3.		8.948	CLAMP, WORM GEAR (.62 TO 1.25) (AC-DELCO #12337891)	12337891
4.	8-A27	8.846	HOSE, OTLT	14081349
5.	8-E13	9.795	VALVE, W/PIPES, HTR WAT SHUTOFF (AC-DELCO #15-5389)	10120965
		8.948	CLAMP (AR)	15620999
		DISCON	CAP	10120936
6.		8.900	BOLT, HEX W/CON WA, M6X1X20 (AR)	11514623
7.		8.921	NUT, SPR TYPE-C, U-SHAPE (M6X1)	12337917
8.		8.962	HOSE (5/8 I.D.X25 FT)	12322342
9.		8.962	HOSE, 3/4" ID X 25 FT (HOSE (3/4 I.D.X25 FT)) (AR)	12368236
10.		8.917	NUT, HEX W/CON WA (M5X0.8) (AC-DELCO #11504614)	115046[illegible]4
11.		8.948	CLAMP, WORM GEAR (1/2-13/16)	2252758[illegible]
12.		8.862	HOSE, FUEL-OIL EVAP (M5/16X24)	9438[illegible]
13.		8.977	SCREW, HEX W/FL WA (M4.2X2.25X20)	115[illegible]443

1Y08-007
013092

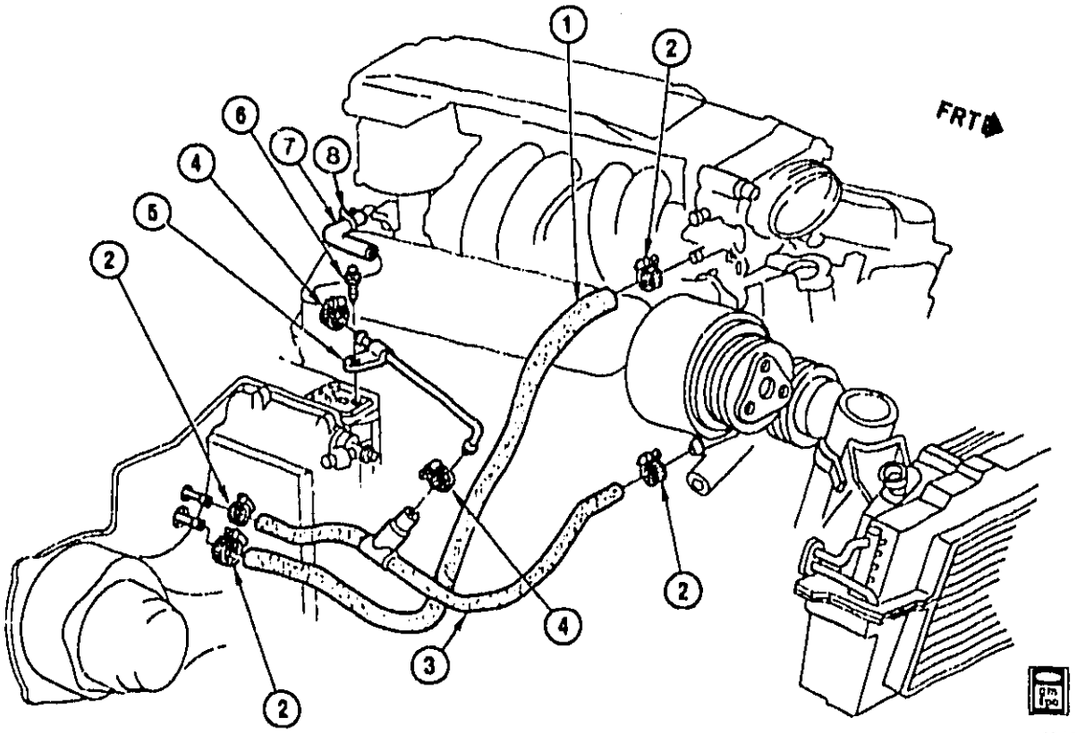

1Y08-007

1988-1989 Y HOSES & PIPES/HEATER (L98)

1.	8-A27	8.846	HOSE, INL	10108510
2.		8.948	CLAMP, WORM GEAR (15.7X31.8) (AC-DELCO #12337891)	12337891
3.	8-A27	8.846	HOSE, OTLT (W/KC4)	10158081
		DISCON	HOSE, OTLT (EXC KC4)	10158082
4.		8.948	CLAMP, WORM GEAR (1/2X13/16)	22527587
5.	8-N2	1.097	PIPE, ENG CLNT (INT MANIF VPR PIPE TO OTLT PIPE) (1988-89)	14087587
6.		8.977	SCREW, HEX W/FL WA TAP (M4.2X2.25X20) POR	11508443
7.		8.962	HOSE, 7.9 MM X 3050 MM LGTH +/- 30.48 MM, BULK, GM6260-M (AR) (AC-DELCO #12339996)	12339996
		8.964	TUBING (AR)	12541500
8.		8.948	CLAMP, WORM GEAR, 1/2-13/16 (AR)	22527587

RPO DEFINITIONS
L98 - ENGINE, 5.7L, (5.7-8) 350 CID, V8, TPI

© 2000 GENERAL MOTORS SERVICE PARTS OPERATIONS-CHEVROLET-14Y

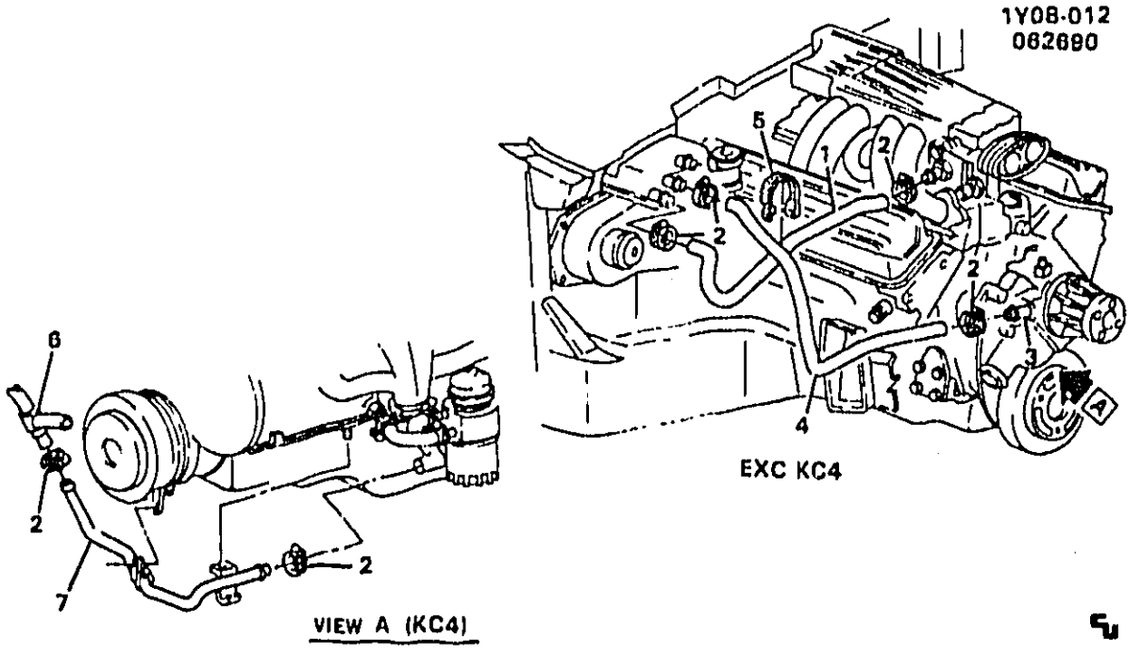

1Y08-012

1990-1991 Y HOSES & PIPES/HEATER (L98)

1.	8-A27	8.846	HOSE, INL	10108510
2.		8.948	CLAMP, WORM GR (15.7 TO 31.8) SS (AC-DELCO #12337891)	12337891
3.	8-A27	8.846	FITTING, HOSE	10088193
4.	8-A27	8.846	HOSE, OTLT (EXC KC4)	10135656
5.		8.965	STRAP, ADJ TIE 3/4X9/32X255MM (AR) (AC-DELCO #12337820)	12337820
6.	8-A27	8.846	HOSE, OTLT (KC4)	10135657
7.	8-N4	1.540	PIPE, CLR (KC4)	10077544

RPO DEFINITIONS
L98 – ENGINE, 5.7L, (5.7-8) 350 CID, V8, TPI

© 2000 GENERAL MOTORS SERVICE PARTS OPERATIONS-CHEVROLET-14Y

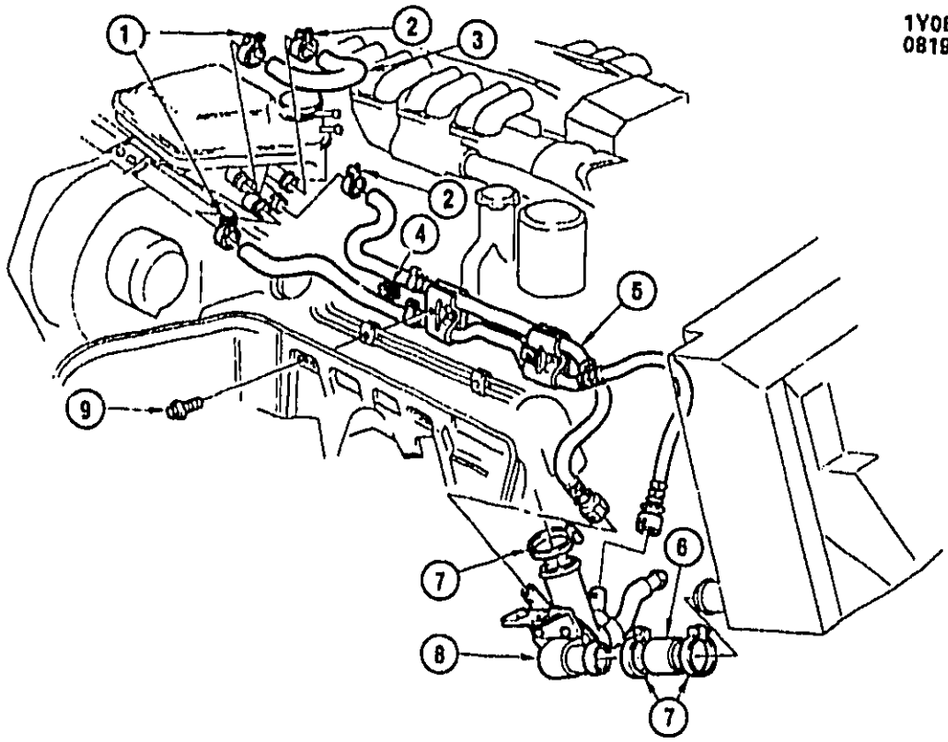

1Y08-008

1990-1995 Y HOSES & PIPES/HEATER (LT5)

1.		8.948	**CLAMP**, 28.6-86.2 DIA WORM GEAR (AC-DELCO #12338017) .	90-95	.....	AR	12338017
2.		8.948	**CLAMP**, WORM GEAR (AC-DELCO #12337891)	90-95	.....	AR	12337891
3.	8-N3	1.240	**HOSE**, RAD SURGE TK INL	90-95	Y	1	10257254
4.		8.921	**NUT**, U-SHAPE MULTI THRD SPG M6X1-6.3 PNLS 13.5 DEEP ZOR	90-95	.....	AR	12338002
5.	8-A27	8.846	**HOSE**, HTR INL & OTLT	90-92	Y (LT5, FE1, FE7)	1	10135629
	8-A27	8.846	**HOSE**, HTR INL & OTLT	93-95	Y (LT5, FE1)	1	10135629
6.	8-N3	1.173	**HOSE**, RAD OTLT (UPR)	90-95	Y (LT5)	1	10135660
7.		8.948	**CLAMP**, WORM/GEAR, 65.1-89.9 DIA, 12.7 WID, SS, BLK OX	90-95	.....	AR	14081883
8.	8-N4	1.246	**THERMOSTAT**, ENG COOL (SEE GROUP 1.000 "RADIATOR & RELATED PARTS" FOR DETAIL ILLUSTRATED VIEW) (AC-DELCO #131-51)	90-95	Y (LT5)	1	10135627
	8-N4	1.246	**THERMOSTAT**, ENG COOL (INCLS HSG (UPR/LWR), THERM, BRKT & BOLTS) (SEE GROUP 1.000 "RADIATOR & RELATED PARTS" FOR DETAIL ILLUSTRATED VIEW)	90-95	Y (LT5)	1	14104599
9.		8.900	**BOLT-HEX**, M6X1X25, 22.5 THD, GM500 (10.9) PC (AC-DELCO #11509417)	90-95	.....	AR	11509417

© 2000 GENERAL MOTORS SERVICE PARTS OPERATIONS-CHEVROLET-14Y

RPO DEFINITIONS
FE1 – SUSPENSION SYSTEM,SOFT RIDE
FE7 – SUSPENSION SYSTEM,FRONT AND REAR,HEAVY DUTY(USED WITH PERFORMANCE HANDLING PACKAGE Z51)
LT5 – ENGINE,5.7L(5.7J),TPI

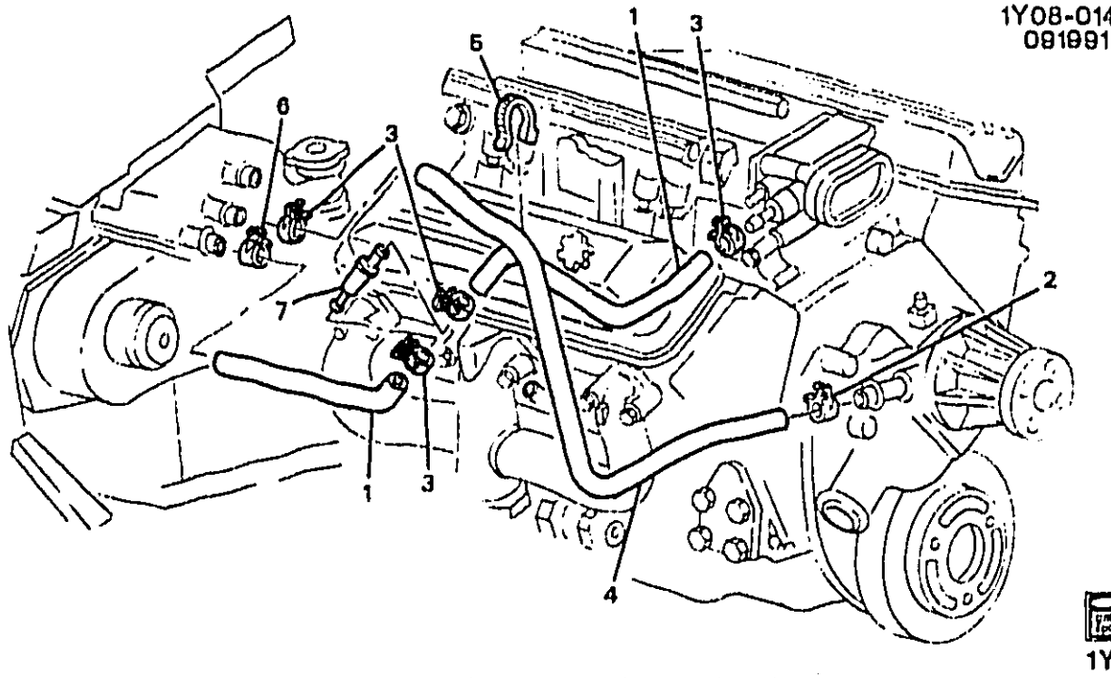

1992 Y HOSES & PIPES/HEATER (LT1)

1.	8-A27	8.846	HOSE, HTR INL (INCL 3, 7)	92	Y (LT1)	1	10213634
2.	8-A27	8.846	CLAMP, HTR OTLT HOSE (BLACK) (8.948)	92	Y (LT1)	2	10108255
3.		8.948	CLAMP, WORM GEAR (PART OF 1) (AC-DELCO #12337891)	92	.....	AR	12337891
4.	8-A27	8.846	HOSE, HTR OTLT	92	Y (LT1)	1	10135697
5.		8.965	STRAP, ADJ TIE 3/4X9/32X255MM (AC-DELCO #12337820)	92	.....	AR	12337820
6.		8.948	CLAMP, 28.6-86.2 DIA WORM GEAR (AC-DELCO #12338017) .	92	.....	AR	12338017
7.	8-B2	8.866	VALVE, HTR WAT FLOW CONT (PART OF 1) (W/O HOSE) (AC-DELCO #15-5423)	92	Y (LT1)	1	10157988
	8-E13	9.795	VALVE, HTR WAT FLOW CONT (PART OF 1) (W/O HOSE) (8.866) (AC-DELCO #15-5423)	92	Y (LT1)	1	10157988

RPO DEFINITIONS
LT1 - ENGINE-GAS, 8 CYL, 5.7L(5.7P),MFI,HO

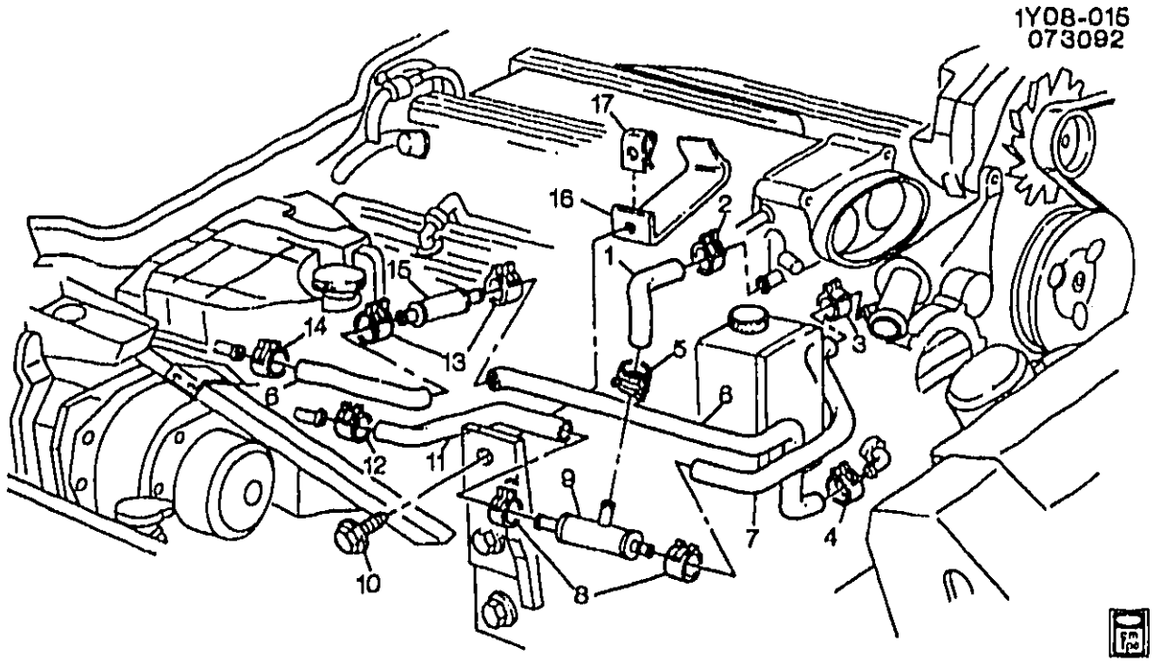

1Y08-015

1993-1994 Y HOSES & PIPES/HEATER (LT1)

1.	8-A27	8.846	HOSE, HTR OTLT (FROM THROT BODY TO TEE)	93-94		1	10157917
2.	8-A27	8.846	CLAMP, HTR OTLT HOSE ENG (8.948)	93-94	Y (LT1)	1	25665982
3.	8-A27	8.846	CLAMP, HTR OTLT HOSE ENG (BLACK) (8.948)	93-94	Y (LT1)	1	10108255
4.	8-A27	8.846	CLAMP, HTR INL HOSE ENG (BLACK) (8.948)	93-94	Y (LT1)	1	10108255
5.		8.948	CLAMP, 12 WIDE, 23 NOM DIA, 1.4 THK, SAE 1075 STL, BLACK (HTR OTLT HOSE FITTING)	93-94		1	25665982
6.	8-A27	8.846	HOSE, HTR INL (INCL 13, 15)	93-94	Y (LT1)	1	10157913
7.	8-A27	8.846	HOSE, HTR OTLT (FROM W/PMP TO TEE)	93-94		1	10157916
8.	8-A27	8.846	CLAMP, HTR OTLT HOSE (FITTING) (BLACK) (8.948)	93-94	Y (LT1)	2	10108255
9.	8-A27	8.846	FITTING, HTR OTLT HOSE	93-94	Y (LT1)	1	10157918
10.		8.900	BOLT, HEX W/WA (M6X1X20) (FRT W/H LWR CRT PNL)	93-94		10	10077321
11.	8-A27	8.846	HOSE, HTR OTLT (FROM RAD SURGE TK TO TEE)	93-94	Y (LT1)	1	10157915
12.		8.948	CLAMP, 28.6-86.2 DIA WORM GEAR (HTR OTLT HOSE) (AC-DELCO #12338017)	93-94		1	12338017
13.		8.948	CLAMP, 12 WIDE, 23 NOM DIA, 1.4 THK, SAE 1075 STL, BLACK (HTR WAT FLOW C/VLV HOSE) (PART OF 6)	93-94		2	25665982
14.		8.948	CLAMP, 12 WIDE, 23 NOM DIA, 1.4 THK, SAE 1075 STL, BLACK (HTR INL HOSE HTR)	93-94		1	25665982
15.	8-B2	8.866	VALVE, HTR WAT FLOW CONT (PART OF 6) (W/O HOSE) (AC-DELCO #15-5423)	93-94	Y (LT1)	1	10157988

© 2000 GENERAL MOTORS SERVICE PARTS OPERATIONS-CHEVROLET-14Y

							1Y08-015
	8-E13	9.795	VALVE, HTR WAT FLOW CONT (PART OF 6) (W/O HOSE) (8.866) (AC-DELCO #15-5423)	93-94	Y (LT1)	1	10157988
16.	8-A27	8.846	BRACKET, HTR INL & OTLT PIPE	93-94	Y (LT1)	1	10214145
17.		8.921	NUT, (SPRING, TYPE C, U-SHAPED, MULTI THD) (M6X1, 1060 PEOR) (FRT W/H LWR CTR PNL)	93-94	.....	9	12337917

RPO DEFINITIONS
LT1 - ENGINE-GAS, 8 CYL, 5.7L(5.7P),MFI,HO

© 2000 GENERAL MOTORS SERVICE PARTS OPERATIONS-CHEVROLET-14Y

MICROFICHE INDEX

GROUPS 8.000 THRU 9.000

FICHE 8 OF 11

GROUP	DESCRIPTION	STARTING GRID LOCATION PARTS	ILLUSTRATIONS
–	GENERAL INFORMATION	1–A2	1–G2
–	ALPHABETICAL INDEX	1–B13	N.A.
8.000	FRONT END SHEET METAL – HEATER	8–A2	8–F2
9.000	BODY MOUNTING – AIR CONDITIONING – INSTRUMENT CLUSTER	8–C2	8–I2
–	OUT OF FICHE CALLS	N.A.	8–M27

8–H1

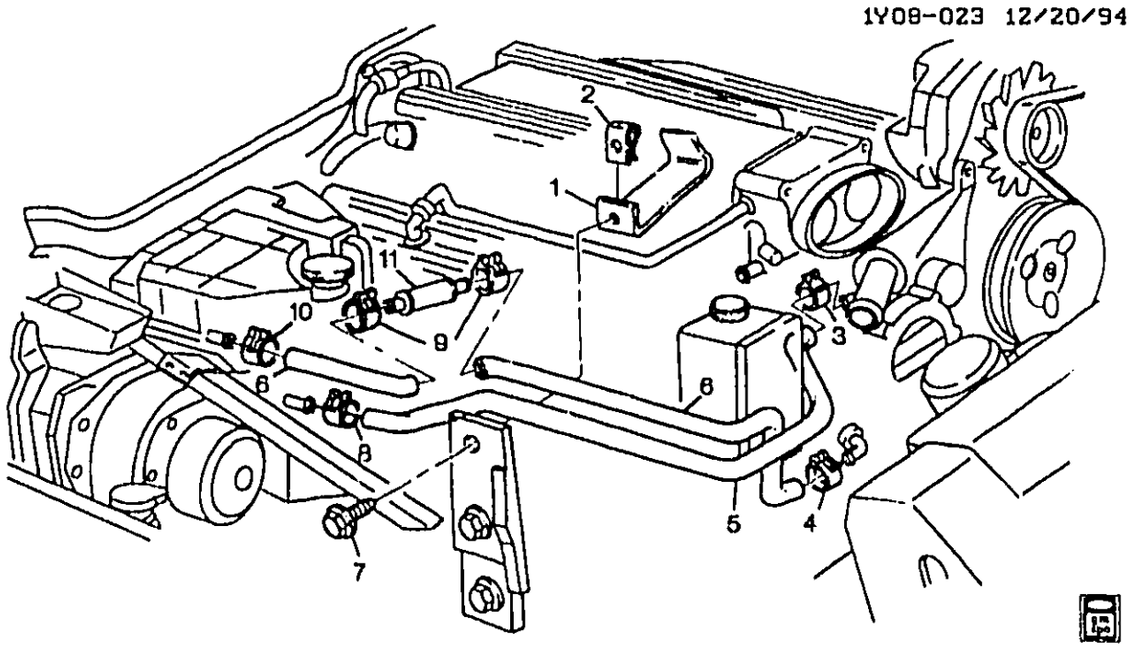

1995 Y HOSES & PIPES/HEATER (LT1)
1996 Y HOSES & PIPES/HEATER

1.	8-A27	8.846	BRACKET, HTR INL & OTLT PIPE	95	Y (LT1)	1	10214145
	8-A27	8.846	BRACKET, HTR INL & OTLT PIPE	96	Y	1	10214145
2.		8.921	NUT, (SPRING, TYPE C, U-SHAPED, MULTI THD) (M6X1, 1060 PEOR) (FRT W/H LWR CTR PNL)	95-96		AR	12337917
3.		8.948	CLAMP, SPR (25-29MM) (HTR OTLT HOSE ENG)	95-96		AR	10108255
4.		8.948	CLAMP, SPR (25-29MM) (HTR INL HOSE ENG)	95-96		AR	10108255
5.	8-A27	8.846	HOSE, HTR OTLT	95	Y (LT1)	1	10262505
	8-A27	8.846	HOSE, HTR OTLT	96	Y	1	10262505
6.	8-A27	8.846	HOSE, HTR INL (INCLS 9 & 11)	95	Y (LT1)	1	10157913
	8-A27	8.846	HOSE, HTR INL (INCLS 9 & 11)	96	Y	1	10157013
7.		8.900	BOLT, HEX W/WA (M6X1X20) (FRT W/H LWR CTR PNL)	95-96		AR	10077321
8.		8.948	CLAMP, 28.6-86.2 DIA WORM GEAR (HTR OTLT HOSE) (AC-DELCO #12338017)	95-96		AR	12338017
9.		8.948	CLAMP, 12 WIDE, 23 NOM DIA, 1.4 THK, SAE 1075 STL, BLACK (HTR WAT FLOW C/VLV HOSE) (PART OF 6)	95-96		AR	25665982
10.		8.948	CLAMP, 12 WIDE, 23 NOM DIA, 1.4 THK, SAE 1075 STL, BLACK (HTR INL HOSE HTR)	95-96		AR	25665982
11.	8-B2	8.866	VALVE, HTR WAT FLOW CONT (W/O HOSE) (AC-DELCO #15-5423)	95	Y (LT1)	1	10157988
	8-E13	9.795	VALVE, HTR WAT FLOW CONT (W/O HOSE) (8.866) (AC-DELCO #15-5423)	95	Y (LT1)	1	10157988

© 2000 GENERAL MOTORS SERVICE PARTS OPERATIONS-CHEVROLET-14Y

						1Y08-023
8-B2	8.866	VALVE, HTR WAT FLOW CONT (W/O HOSE) (AC-DELCO #15-5423)	96	Y	1	10157988
8-E13	9.795	VALVE, HTR WAT FLOW CONT (W/O HOSE) (8.866) (AC-DELCO #15-5423)	96	Y	1	10157988

RPO DEFINITIONS
LT1 – ENGINE-GAS, 8 CYL, 5.7L(5.7P),MFI,HO

MICROFICHE INDEX

GROUPS 8.000 THRU 9.000

FICHE 8 OF 11

GROUP	DESCRIPTION	STARTING GRID LOCATION PARTS	ILLUSTRATIONS
–	GENERAL INFORMATION	1–A2	1–G2
–	ALPHABETICAL INDEX	1–B13	N.A.
8.000	FRONT END SHEET METAL – HEATER	8–A2	8–F2
9.000	BODY MOUNTING – AIR CONDITIONING – INSTRUMENT CLUSTER	8–C2	8–I2
–	OUT OF FICHE CALLS	N.A.	8–M27

CHEVROLET
CHASSIS GROUP 9.000

ILLUSTRATION INDEX

	TITLE	GRID
1984–1989	Y A/C EVAPORATOR & BLOWER MODULE ASM	8–I5
1990–1991	Y A/C EVAPORATOR & BLOWER MODULE ASM (L98)	8–I5
1990–1991	Y A/C EVAPORATOR & BLOWER MODULE ASM	8–I7
1992–1995	Y A/C EVAPORATOR & BLOWER MODULE ASM (LT5)	8–I8
1992–1995	Y A/C EVAPORATOR & BLOWER MODULE ASM (LT1)	8–I10
1996	Y A/C EVAPORATOR & BLOWER MODULE ASM	8–I10
1984–1996	Y A/C DISTRIBUTOR/AIR	8–I12
1984–1996	Y A/C AIR INLET	8–I13
1984–1989	Y A/C COMPRESSOR ASM/R–4 (6 POLE TYPE)	8–I14
1990–1991	Y A/C COMPRESSOR ASM (L98)	8–I16
1992–1993	Y A/C COMPRESSOR ASM (LT5/5.7J)	8–I18
1992–1993	Y A/C COMPRESSOR ASM (LT1/5.7P)	8–I20
1994–1995	Y A/C COMPRESSOR ASM (LT5/5.7J)	8–I22
1994–1995	Y A/C COMPRESSOR ASM (LT1/5.7P)	8–I23
1996	Y A/C COMPRESSOR ASM	8–I23
1984	Y A/C COMPRESSOR MOUNTING (L83)	8–I24
1985–1987	Y A/C COMPRESSOR MOUNTING (L98)	8–I25
1988–1991	Y A/C COMPRESSOR MOUNTING (L98)	8–I26
1992–1995	Y A/C COMPRESSOR MOUNTING (LT1)	8–I27
1996	Y A/C COMPRESSOR MOUNTING	8–I27
1984	Y A/C REFRIGERATION SYSTEM (L83)	8–J2
1985–1987	Y A/C REFRIGERATION SYSTEM (L98)	8–J2
1988–1991	Y A/C REFRIGERATION SYSTEM (L98)	8–J4
1990–1991	Y A/C REFRIGERATION SYSTEM (LT5)	8–J5
1992–1995	Y A/C REFRIGERATION SYSTEM (LT1)	8–J7
1996	Y A/C REFRIGERATION SYSTEM	8–J7
1992–1995	Y A/C REFRIGERATION SYSTEM (LT5)	8–J10
1984–1989	Y A/C AIR DISTRIBUTION SYSTEM	8–J13
1990	Y A/C AIR DISTRIBUTION SYSTEM	8–J15
1991	Y A/C AIR DISTRIBUTION SYSTEM WITH LAP COOLER DUCTS(1ST DES)	8–J15
1991	Y A/C AIR DISTRIBUTION SYSTEM WITHOUT LAP COOLER DUCTS(2ND DES)	8–J18
1992–1996	Y A/C AIR DISTRIBUTION SYSTEM	8–J21
1984–1989	Y A/C & HEATER CONTROL ASM (C60)	8–J25
1986–1989	Y A/C & HEATER CONTROL ASM (C68)	8–J27
1990–1996	Y A/C & HEATER CONTROL ASM (C60)	8–K2
1990–1996	Y A/C & HEATER CONTROL ASM (C68)	8–K4
1984–1987	Y A/C CONTROL SYSTEM ELECTRICAL & VACUUM	8–K6
1988–1989	Y A/C CONTROL SYSTEM ELECTRICAL & VACUUM	8–K8
1990–1991	Y A/C CONTROL SYSTEM ELECTRICAL & VACUUM	8–K10
1992–1996	Y A/C CONTROL SYSTEM ELECTRICAL & VACUUM	8–K15
1984–1987	Y ANTENNA ASM/ELECTRIC	8–K23
1988–1996	Y ANTENNA ASM/ELECTRIC	8–K25
1984–1989	Y AUDIO SYSTEM (EXC UQ4)	8–L2
1984–1989	Y AUDIO SYSTEM (UQ4)	8–L5
1986–1989	Y67 AUDIO SYSTEM REAR	8–L8

	TITLE	GRID
1990–1992	Y AUDIO SYSTEM (EXC UX0)	8–L10
1990–1992	Y AUDIO SYSTEM (UX0)	8–L16
1990–1996	Y67 AUDIO SYSTEM REAR	8–L25
1993–1996	Y AUDIO SYSTEM (EXC UX0)	8–M2
1993–1996	Y AUDIO SYSTEM (UX0)	8–M9
1994–1996	Y ELECTRICAL CONTROLS/INSTRUMENT PANEL–INFORMATION CENTER	8–M18
1984–1989	Y CLUSTER ASM/INSTRUMENT PANEL	8–M19
1984–1989	Y CLUSTER ASM/INSTRUMENT PANEL/INFORMATION CENTER	8–M20
1990–1991	Y CLUSTER ASM/INSTRUMENT PANEL/INFORMATION CENTER	8–M21
1992–1993	Y CLUSTER ASM/INSTRUMENT PANEL (LIQ CRYSTAL DISPLAY, ELECTRONIC)(U52)	8–M23

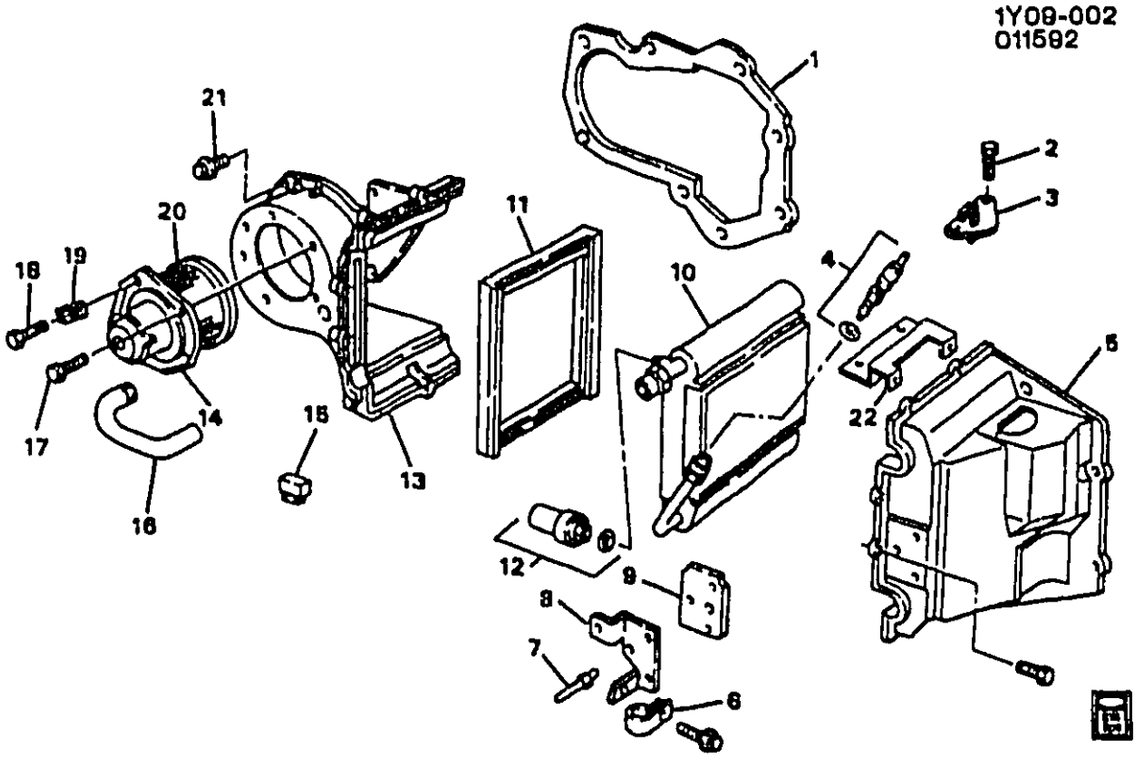

1Y09-002

1984–1989 Y A/C EVAPORATOR & BLOWER MODULE ASM
1990–1991 Y A/C EVAPORATOR & BLOWER MODULE ASM (L98)

1.	8-C22	9.216	GASKET, MOD	3052701
2.		8.977	SCREW, HEX W/FLAT WA TAP (M4.2X2.25X20)	
3.	8-C18	9.215	RESISTOR, BLO MOT (1984) (AC-DELCO #15-71968)	526897
	8-B2	8.855	RESISTOR, BLO MOT (1984) (AC-DELCO #15-71968)	526897
	8-B2	8.855	RESISTOR, MTR (1985-91)	14093106
	8-C18	9.215	RESISTOR, MTR (1985-91)	14093106
4.	8-C18	9.213	ORIFICE, W/GSKT (AC-DELCO #15-5151)	3033879
5.		DISCON	CASE, OTLT (1984)	3094724
	8-C17	9.211	CASE, OTLT (1985-88)	52457755
	8-C17	9.211	CASE, OTLT (1989-91)	52457755
6.	8-C24	9.242	CLAMP, TUBE (1985-91)	3031728
7.		N.S.	RIVET	
8.		DISCON	BRACKET, INL SUPT (1984)	3052776
9.	8-C17	9.211	PLATE, CASE BACKUP (1984)	3022672
10.	8-C17	9.210	EVAPORATOR, A/C (W/CASE) (1984) (AC-DELCO #15-6386)	3052790
	8-C17	9.210	EVAPORATOR, A/C (W/CASE (AC-DELCO #15-6515)	3057733
	8-C17	9.210	EVAPORATOR, A/C (1990-91) (AC-DELCO #15-6660)	52452950
	8-C17	9.210	FILTER, WAT, CORE (1985-91)	3052786
11.	8-C17	9.211	SEAL, CORE (FOAM)	3052755
	8-C17	9.211	SEAL, PERMAGUM (5.0"X4.0"X.38") (1984-89)	3039873
12.	8-C27	9.275	SWITCH, W/O-RING, CMPR CUTOFF (1984) (AC-DELCO #15-2151)	3041336
	8-C27	9.275	SWITCH, LOW PRESS CYCLING CUTOFF (1985-91) (AC-DELCO #15-1122)	3041596
13.		DISCON	CASE, INL W/STUD (1984-86)	3057960
	8-A28	8.854	CASE, INL W/STUD (1987-88)	3094162
	8-A28	8.854	CASE, INL W/STUD (1989-91)	3094161

© 2000 GENERAL MOTORS SERVICE PARTS OPERATIONS-CHEVROLET-14Y

				1Y09-002
	8-B2	8.857	STUD, BLO (1989-91) FOR MDL APPL & POA SEE BLOWER CHART	52452664
14.	8-B2	8.855	MOTOR, BLO (W/IMPLR) (1984-85) (AC-DELCO #15-8583)	52469795
	8-C22	9.216	IMPELLER, HTR & A/C BLO (1984-85) (AC-DELCO #15-8418)	52460704
	8-C18	9.215	MOTOR (1986-91) (AC-DELCO #15-8547)	52466080
15.	8-D3	9.277	RELAY (1984-87) (AC-DELCO #15-8206)	10019535
	8-M28	1.055	RELAY (1988-91) (AC-DELCO #15-8240)	14089936
16.	8-C22	9.218	TUBE, MTR CLG	3053502
17.		8.977	SCREW, HWH (M4.2X1.41X13) (AC-DELCO #11508256)	11508256
18.		8.977	SCREW, HEX WA HD C/R TAP (M4.2X1.41X14)	
19.	8-C18	9.215	TERMINAL, MTR GRD (1984-86) (2.530)	3033932
20.	8-C22	9.216	IMPELLER, HTR & A/C BLO (BOLT ON TYPE) (AC-DELCO #15-875)	52451060
21.	8-C17	9.211	BOLT, A/C EVAP & MDL	14069200
22.	8-N3	1.240	BRACKET, RAD SURGE TK (1990-91)	52463838
		8.977	BOLT, HWH M4.2X1.41X25 PZOR TAP 17 OD (BOLT, HWH M4.2X1.41X25 PZOR TAP 17 OD) (AR)	11508233

RPO DEFINITIONS

L98 – ENGINE, 5.7L, (5.7-8) 350 CID, V8, TPI

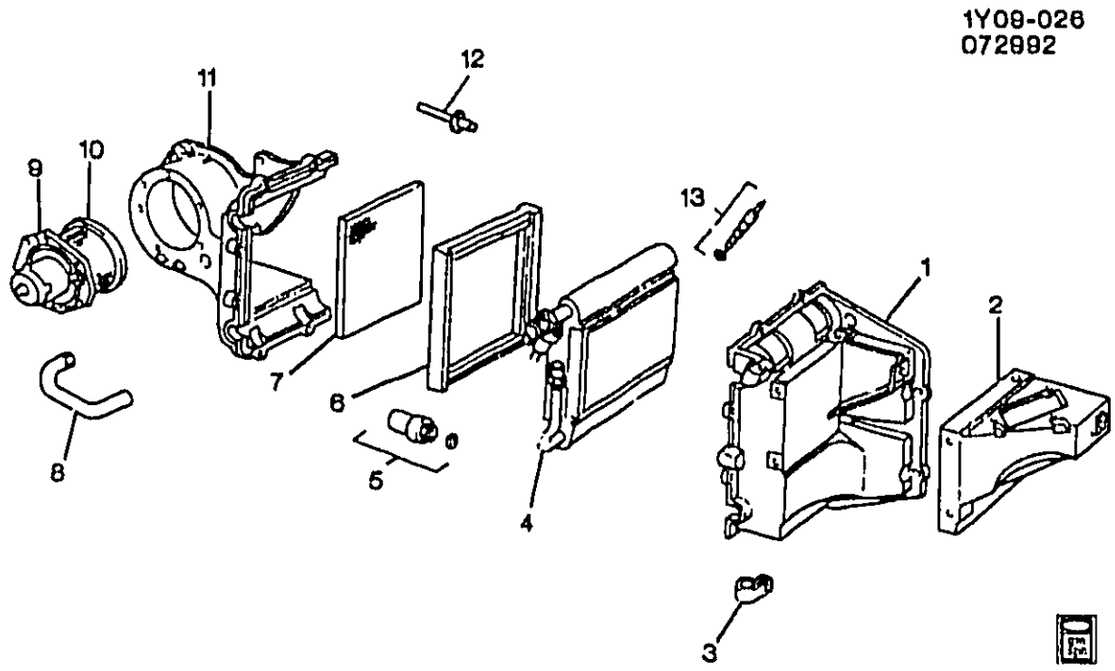

1990-1991 Y A/C EVAPORATOR & BLOWER MODULE ASM

1.	8-C17	9.211	CASE, EVAP OTLT LWR	52450785
2.	8-C17	9.211	CASE, EVAP OTLT UPR	52452599
3.	8-C24	9.242	CLAMP, EVAP TUBE	3093494
4.	8-C17	9.210	EVAPORATOR, A/C (AC-DELCO #15-6648)	52452951
5.	8-C27	9.275	SWITCH, EVAP BLO LOW PRESS (AC-DELCO #15-1122)	3041596
6.	8-C17	9.211	SEAL, EVAP CORE	3095717
7.	8-C17	9.210	FILTER, A/C MOD WAT CORE	3095748
8.	8-C22	9.218	TUBE, BLO MOT CLG	3053502
9.	8-C18	9.215	MOTOR, BLO (W/IMP) (AC-DELCO #15-8547)	52466080
10.	8-C22	9.216	IMPELLER, HTR & A/C BLO (BOLT-ON TYPE) (AC-DELCO #15-875)	52451060
	8-C22	9.216	IMPELLER, HTR & A/C BLO (PRESS-ON TYPE) (AC-DELCO #15-8418)	52460704
11.	8-C17	9.211	CASE, EVAP INL	52453155
12.	8-C17	9.211	STUD, A/C EVAP & BLO MDL	3094134
13.	8-C18	9.213	ORIFICE, A/C EVAP TUBE (AC-DELCO #15-5151)	3033879

© 2000 GENERAL MOTORS SERVICE PARTS OPERATIONS-CHEVROLET-14Y

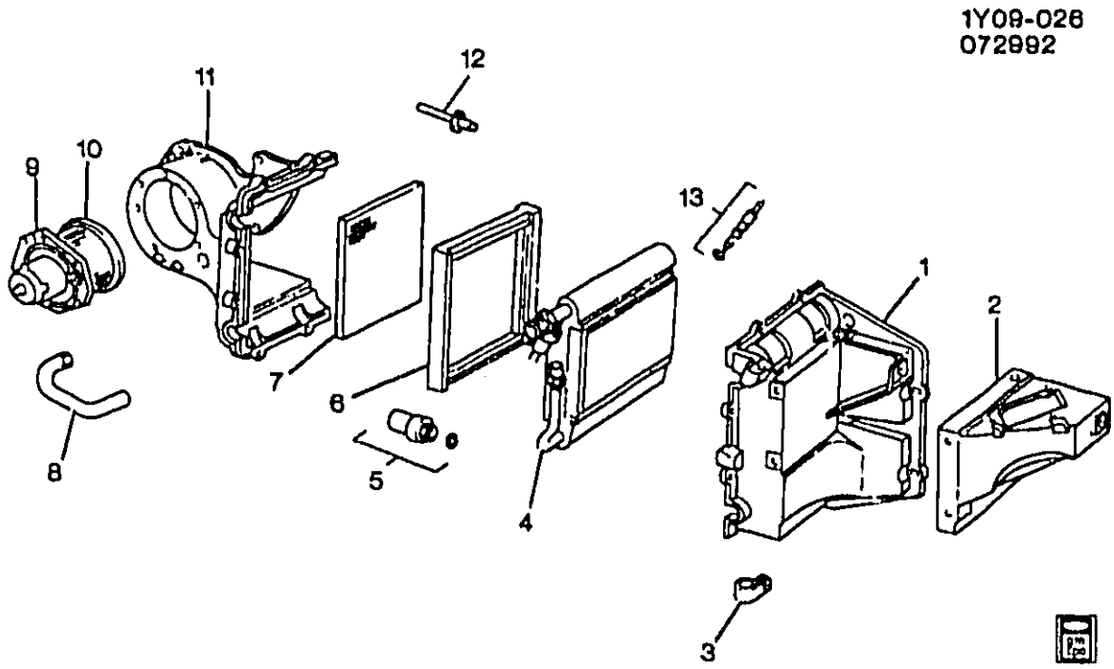

1Y09-026

1992-1995 Y A/C EVAPORATOR & BLOWER MODULE ASM (LT5)

1.	8-C17	9.211	CASE, A/C EVPR LWR	92-95	Y (LT5)	1	52450785
2.	8-C17	9.211	CASE, A/C EVPR UPR	92-95	Y (LT5)	1	52452599
3.	8-C24	9.242	CLAMP, A/C EVPR TUBE	92-95	Y (LT5)	1	3093494
4.	8-C17	9.210	EVAPORATOR, A/C (W/CASE) (AC-DELCO #15-6648)	92-93	Y (LT5)	1	52452951
	8-C17	9.210	EVAPORATOR, A/C (W/CASE) (AC-DELCO #15-6793)	94-95	Y (LT5)	1	52463787
5.	8-C27	9.275	SWITCH, A/C CYCLING & FAN CONT A/C REFRIG PRESS (AC-DELCO #15-5427)	92-93	Y	1	52461142
	8-C27	9.275	SWITCH, A/C CYCLING & FAN CONT A/C REFRIG PRESS (AC-DELCO #15-5705)	94-95	Y	1	52468323
6.	8-C17	9.211	SEAL, A/C EVPR	92-95	Y (LT5)	1	3095717
7.	8-C17	9.210	FILTER, A/C EVPR AIR	92-95	Y (LT5)	1	3095748
8.	8-C22	9.218	TUBE, BLO MOT CLG	92-95	Y	1	3053502
	8-B2	8.859	TUBE, BLO MOT CLG (9.218)	92-95	Y	1	3053502
9.	8-C18	9.215	MOTOR, BLO (W/IMPLR) (AC-DELCO #15-8547)	92-95	Y	1	52466080
	8-B2	8.855	MOTOR, BLO (W/IMPLR) (9.215) (AC-DELCO #15-8547)	92-95	Y	1	52466080
10.	8-C22	9.216	IMPELLER, HTR & A/C BLO (PRESS-ON TYPE) (AC-DELCO #15-8418)	92-95	Y	1	52460704
11.	8-A28	8.854	CASE, BLO (9.211)	92-95	Y (LT5)	1	52453155
12.	8-C17	9.211	STUD, A/C EVPR & BLO MDL (8.854)	92-93	Y (LT5)	1	3094134
	8-C17	9.211	STUD, A/C EVPR & BLO MDL (8.854)	94-95	Y	1	3094134
13.	8-C18	9.213	ORIFICE, A/C EVPR TUBE (W/GASKET) (AC-DELCO #15-5151)	92-95	Y	1	3033879

© 2000 GENERAL MOTORS SERVICE PARTS OPERATIONS-CHEVROLET-14Y

© 2000 GENERAL MOTORS SERVICE PARTS OPERATIONS–CHEVROLET–14Y

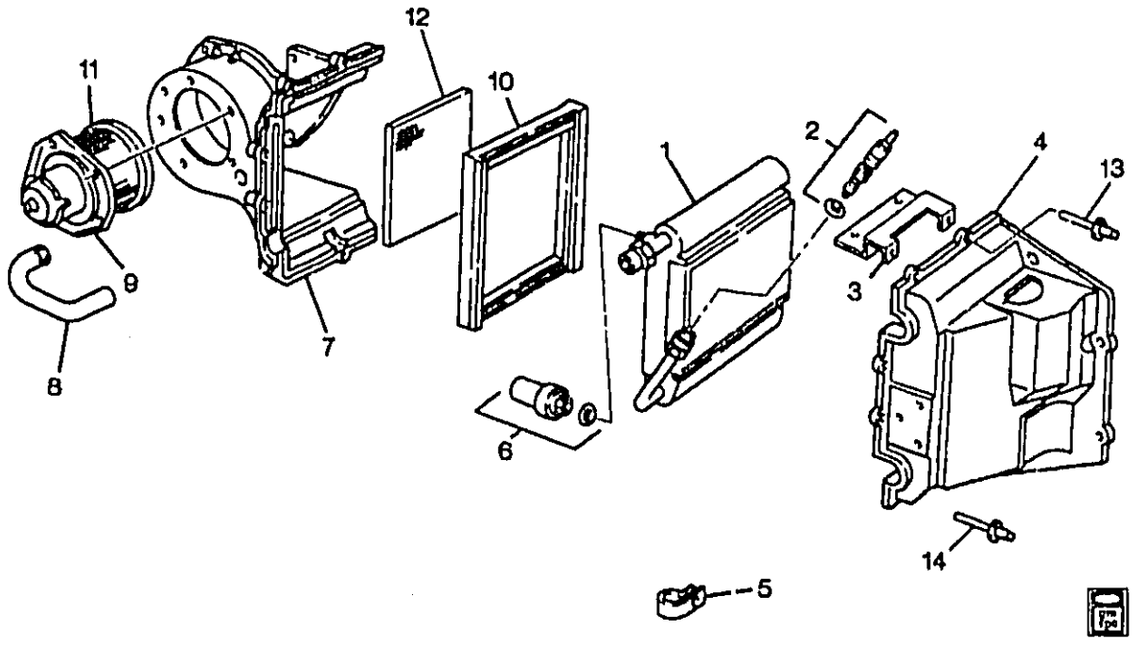

1Y09-031

1992-1995 Y A/C EVAPORATOR & BLOWER MODULE ASM (LT1)
1996 Y A/C EVAPORATOR & BLOWER MODULE ASM

1.	8-C17	9.210	EVAPORATOR, A/C (W/CASE) (AC-DELCO #15-6660)	92-93	Y (LT1)	1	52452950
	8-C17	9.210	EVAPORATOR, A/C (W/CASE) (AC-DELCO #15-6792)	94-95	Y (LT1)	1	52463785
	8-C17	9.210	EVAPORATOR, A/C (W/CASE) (AC-DELCO #15-6792)	96	Y	1	52463785
2.	8-C18	9.213	ORIFICE, A/C EVPR TUBE (W/GASKET) (AC-DELCO #15-5151)	92-96	Y	1	3033879
3.	8-N3	1.240	BRACKET, RAD SURGE TK	92-96	Y	1	10082901
	8-N3	1.240	BRACKET, RAD SURGE TK (9.211)	92-94	Y (LT1)	1	52463838
	8-N3	1.240	BRACKET, RAD SURGE TK (9.211)	96	Y (LT1)	1	52475992
	8-N3	1.240	BRACKET, RAD SURGE TK (USED ON VEHICLES W/VIN OF 119804 AND PRIOR) (9.211)	95	Y (LT1) (1ST DES)	1	52463838
	8-N3	1.240	BRACKET, RAD SURGE TK (USED ON VEHICLES W/VIN OF 119805 AND GREATER) (9.211) ..	95	Y (LT1) (2ND DES)	1	52475992
4.	8-A28	8.854	CASE, HTR RR (9.211)	92-95	Y (LT1)	1	52457755
	8-A28	8.854	CASE, HTR RR (9.211)	96	Y	1	52457755
5.	8-C24	9.242	CLAMP, A/C EVPR TUBE (12.8MM DIA) (9.211)	92-95	Y (LT1)	1	3031728
	8-C24	9.242	CLAMP, A/C EVPR TUBE (12.8MM DIA) (9.211)	96	Y	1	3031728
6.	8-C27	9.275	SWITCH A/C CYCLING & FAN CONT A/C REFRIG PRESS (AC-DELCO #15-5427)	92-93	Y	1	52461142

© 2000 GENERAL MOTORS SERVICE PARTS OPERATIONS-CHEVROLET-14Y

							1Y09-031
	8-C27	9.275	SWITCH, A/C CYCLING & FAN CONT A/C REFRIG PRESS (AC-DELCO #15-5705)	94-96	Y	1	52468323
7.	8-A28	8.854	CASE, BLO (9.211)	92-95	Y (LT1)	1	3094161
	8-A28	8.854	CASE, BLO (9.211)	96	Y	1	3094161
8.	8-C22	9.218	TUBE, BLO MOT CLG	92-96	Y	1	3053502
	8-B2	8.859	TUBE, BLO MOT CLG (9.218) ...	92-96	Y	1	3053502
9.	8-C18	9.215	MOTOR, BLO (W/IMPLR) (AC-DELCO #15-8547)	92-96	Y	1	52466080
	8-B2	8.855	MOTOR, BLO (W/IMPLR) (9.215) (AC-DELCO #15-8547)	92-96	Y	1	52466080
10.	8-C17	9.211	SEAL, A/C EVPR	92-95	Y (LT1)	1	3052755
	8-C17	9.211	SEAL, A/C EVPR	96	Y	1	3052755
11.	8-C22	9.216	IMPELLER, HTR & A/C BLO (PRESS-ON TYPE) (AC-DELCO #15-8418)	92-96	Y	1	52460704
12.	8-C17	9.210	FILTER, A/C EVPR AIR	92-95	Y (LT1)	1	3052786
	8-C17	9.210	FILTER, A/C EVPR AIR	96	Y	1	3052786
13.	8-B2	8.857	STUD, BLO (9.211)	92-95	Y (LT1)	1	52452664
	8-B2	8.857	STUD, BLO (9.211)	96	Y	1	52452664
14.	8-C17	9.211	STUD, A/C EVPR & BLO MDL (8.854)	94-95	Y	1	3094134

RPO DEFINITIONS
LT1 - ENGINE-GAS, 8 CYL, 5.7L(5.7P),MFI,HO

1Y09-042 05/27/93

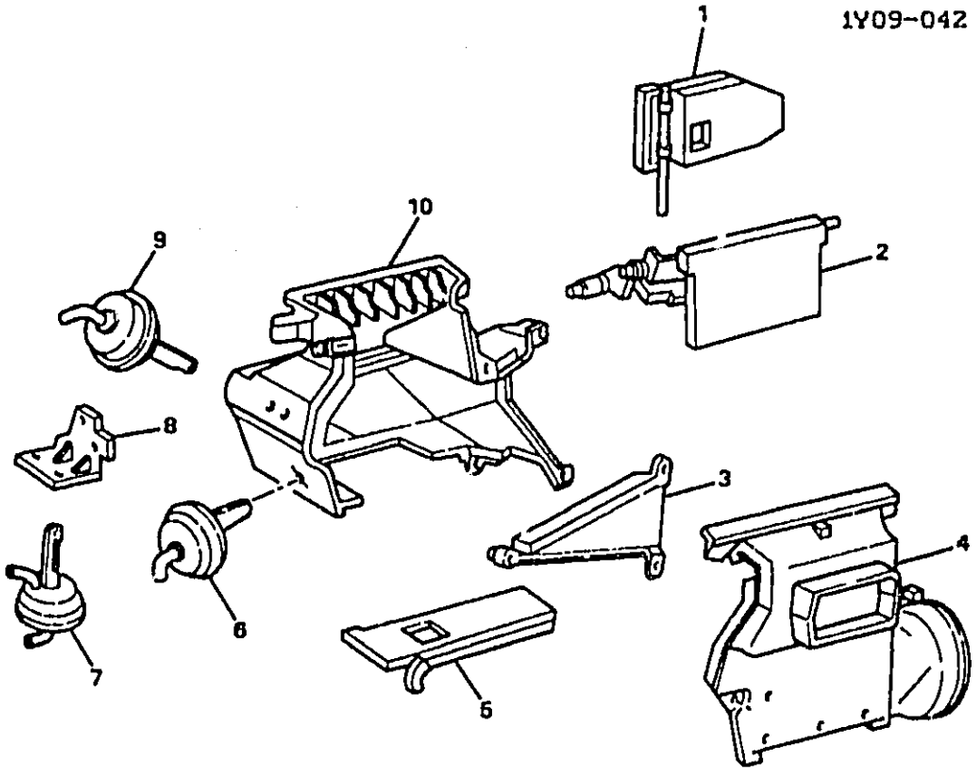

1Y09-042

1984-1996 Y A/C DISTRIBUTOR/AIR

1.	8-E12	9.786	VALVE, MODE (FT)	84-96	Y	1	3053244
2.		DISCON	VALVE, DEFR	84-89	Y	1	3052839
	8-E11	9.779	VALVE, DEFR	90-96	Y	1	52452586
3.		DISCON	BAFFLE, AIR DISTR	84-89	Y	1	3053200
	8-E12	9.786	BAFFLE, AIR DISTR	90-96	Y	1	52452585
4.		DISCON	COVER, AIR DISTR CASE	84-89	Y	1	3052457
	8-E12	9.786	COVER, AIR DISTR CASE	90-96	Y	1	52455932
5.	8-E12	9.786	VALVE, MODE (RR)	94-96	Y	1	3053243
6.	8-D5	9.280	ACTUATOR, MODE VLV (AC-DELCO #15-71501)	84-89	Y	1	1996720
	8-D5	9.280	ACTUATOR, MODE VLV (AC-DELCO #15-71645)	90-96	Y	1	1996770
	8-D5	9.280	ACTUATOR, MODE VLV (PLST) (AC-DELCO #15-71500)	84-96	Y	1	1996719
7.	8-D5	9.280	ACTUATOR, DEFR VLV (AC-DELCO #15-71498)	84-89	Y	1	1996717
	8-D5	9.280	ACTUATOR, DEFR VLV (AC-DELCO #15-71938)	90-96	Y	1	52461295
8.	8-D5	9.280	BRACKET, MODE VLV ACTR	84-96	Y	1	3052706
9.	8-D5	9.280	ACTUATOR, MODE VLV (AC-DELCO #15-71501)	84-89	Y	1	1996720
	8-D5	9.280	ACTUATOR, MODE VLV (AC-DELCO #15-71645)	90-96	Y	1	1996770
	8-D5	9.280	ACTUATOR, MODE VLV (PLST) (AC-DELCO #15-71500)	84-96	Y	1	1996719
10.	8-E12	9.786	CASE, AIR DISTR	84-96	Y	1	3052458

© 2000 GENERAL MOTORS SERVICE PARTS OPERATIONS-CHEVROLET-14Y

1Y09-041 05/27/93

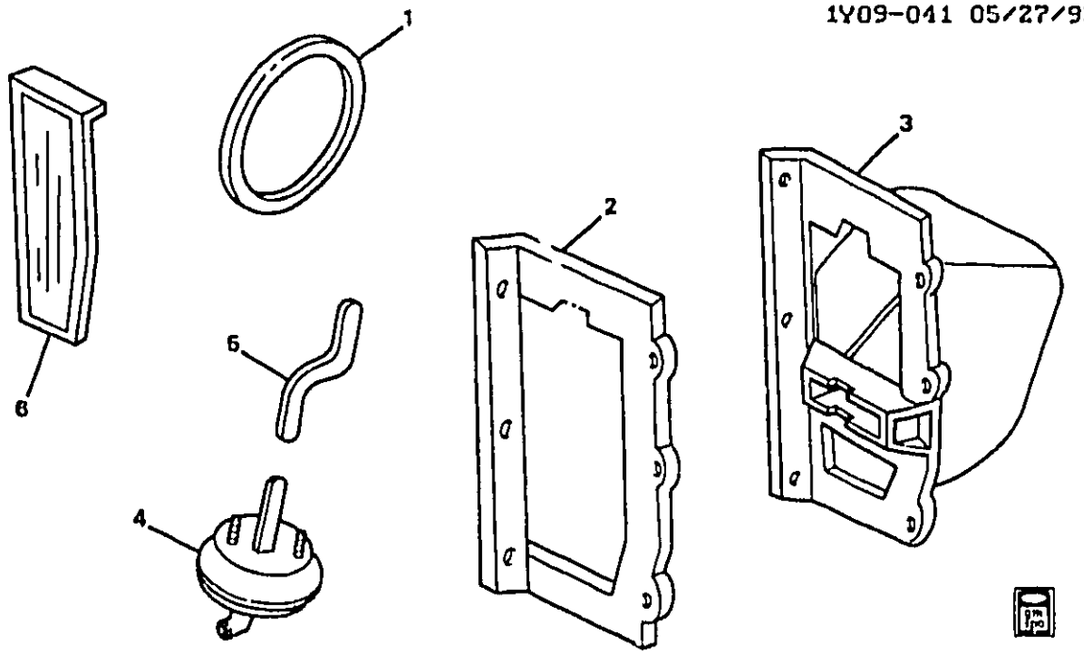

1Y09-041

1984-1996 Y A/C AIR INLET

1.	8-E12	9.782	GASKET, AIR INL (ROUND)	84-96	Y	1	3052305
2.	8-E12	9.782	SEAL, AIR INL (3.406) (MT RR) ..	84-96	Y	1	3052304
3.	8-E12	9.782	INLET, AIR (CASE & VLV) ((INCL'S DUCT)) (9.786)	84-96	Y	1	3052339
4.	8-D5	9.280	ACTUATOR, AIR INL VLV (AC-DELCO #15-71499)	84-96	Y	1	1986718
5.	8-E12	9.786	LINK, AIR INL VLV	84-96	Y	1	3052308
6.	8-E12	9.784	VALVE, AIR INL (9.789)	84-96	Y	1	3052302

© 2000 GENERAL MOTORS SERVICE PARTS OPERATIONS-CHEVROLET-14Y

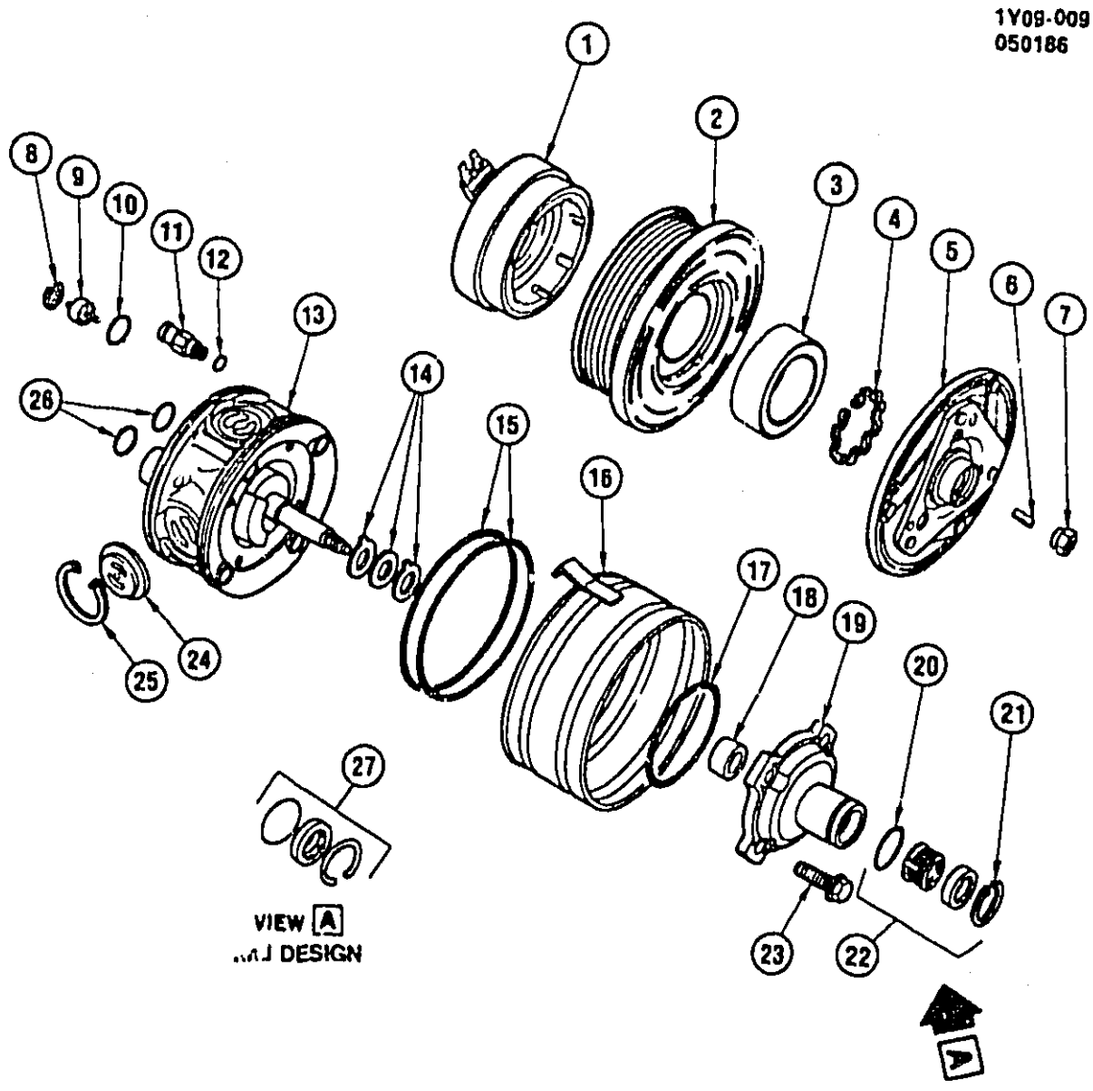

1Y09-009

1984-1989 Y A/C COMPRESSOR ASM'.1-4 (6 POLE TYPE)

NOTE: SEE PARTS CATALOG CHART FOR SPECIFIC APPLICATION .N 9.000 GROUP.

1.	8-C15	9.186	**COIL**, W/HSG (AC-DELCO #15-2307) .....
2.	8-C15	9.180	**PULLEY**, ROTOR, W/BRG (AC-DELCO #15-20038) .....
3.	8-C15	9.181	**BEARING**, PULLEY (AC-DELCO #15-2802) .....
4.	8-C15	9.181	**RING**, BRG TO HEAD RET (AC-DELCO #15-269) .....
5.	8-C16	9.188	**CLUTCH**, DRIVE (AC-DELCO #15-2239) .....
6.	8-C16	9.188	**KEY**, CLU HUB (AC-DELCO #15-46) .....
7.		DISCON	**NUT**, DRIVE SHAFT .....
8.	8-C13	9.172	**RETAINER**, FAN SWITCH (AC-DELCO #15-253) .....
9.	8-C13	9.172	**SWITCH**, FAN KIT (AC-DELCO #15-2235) .....
10.	8-C13	9.172	**O-RING**, SWITCH (PART OF 13) (ALSO PART OF 9956746 O-RING KIT, CMPR, GROUP 9.170.) (AC-DELCO #15-2784) .....
11.	8-C15	9.178	**VALVE**, PRESS RELIEF (AC-DELCO #15-5415) .....
12.		N.S.	**O-RING**, PRESS RELIEF VLV (PART OF 13) (ALSO PART OF 9956746 O-RING KIT, CMPR, GROUP 9.170.) .....
13.	8-C9	9.170	**CYLINDER**, W/SHF (AC-DELCO #2724400) .....

© 2000 GENERAL MOTORS SERVICE PARTS OPERATIONS-CHEVROLET-14Y

14.	8-C9	9.170	**WASHER KIT**, (2 THRUST & 1 BELLEVILLE) (PART OF 13) (AC-DELCO #15-2104) .....
15.		DISCON	**O-RING**, CYL TO SHELL (2 REQD) (PART OF 13) (ALSO PART OF 9956746 O-RING KIT, CMPR, GROUP 9.170.) .....
16.		DISCON	**SHELL**, CMPR .....
17.		DISCON	**SEAL**, FRONT HEAD TO CYL (PART OF 13) (ALSO PART OF 9956746 O-RING KIT, CMPR, GROUP 9.170.) .....
18.		DISCON	**BEARING**, FRT HD MAIN (PART OF 19) .....
19.		DISCON	**HEAD**, W/BRG, FRONT (INCLS #18) .....
20.		N.S.	**O-RING**, SEAL SEAT (PART OF 22) (SEAL KIT, SHAFT 6599114 GROUP 9.170 (USED THRU 1984) SEAL KIT, SHAFT 2724319 GROUP 9.170 (USED AFTER 1984)) .....
21.		DISCON	**RING**, SEAL SEAT RET (PART OF 22) .....
22.		N.S.	**SEAL KIT**, SHFT (6599114 GRP 9.170 USED THRU 1984;2724319 GRP 9.170 USED AFTER 1984) ;ONLY SERV CMPR COMPS ARE CMPR W/O CLTCH, CLTCH PKG, SHIM KIT, HUB BOLT. .....
23.		8.900	**BOLT**, HEX (7/16X14X1 1/4) .....
24.	8-C13	9.172	**PLATE**, VALVE (AC-DELCO #15-256) .....
25.		DISCON	**RING**, VLV PLT RET .....
26.		9.174	**SEAL**, A/C CMPR PORT (ALSO PART OF 9956746 O-RING KIT, CMPR, GROUP 9.170) (AC-DELCO #15-30169) .....
27.	8-C9	9.170	**SEAL KIT**, A/C CMPR SHF (SEAL KIT, SHFT 6599114 GROUP 9.170 USED THRU 1984) ; (SEAL KIT, SHFT 2724319 GROUP 9.170 USED AFTER 1984) (AC-DELCO #15-2292) .....

© 2000 GENERAL MOTORS SERVICE PARTS OPERATIONS-CHEVROLET-14Y

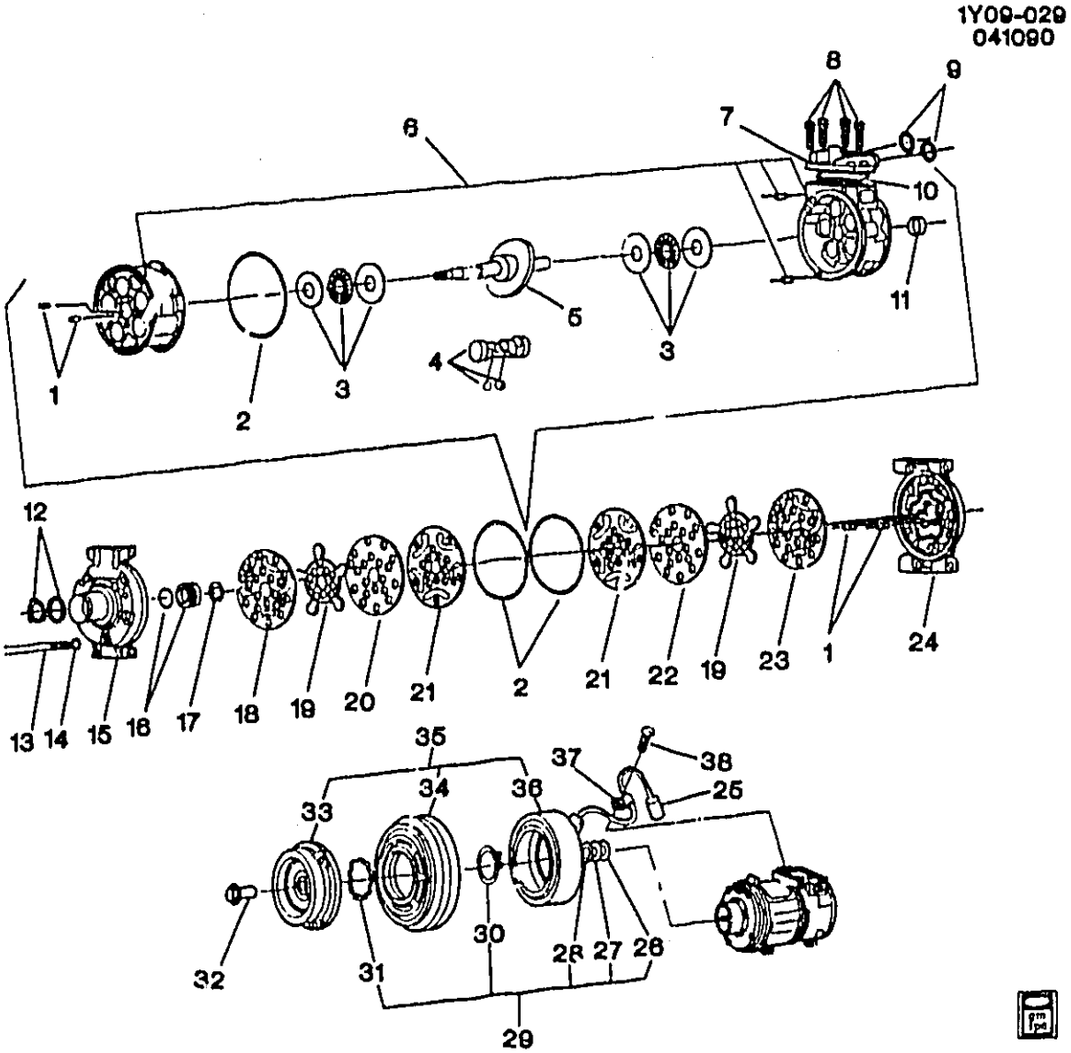

1Y09-029

1990-1991 Y A/C COMPRESSOR ASM (L98)

1.	8-C13	9.171	PIN, A/C CMPR FRT HD LOC (FOR MDL APPL & POA SEE COMPRESSOR CHART)	
2.		N.S.	O-RING (PART OF GASKET OVERHAUL KIT, PART #10135616.)	
3.		N.S.	BEARING (PART OF GASKET OVERHAUL KIT, PART #10135616.)	
4.		N.S.	PISTON (PART OF GASKET OVERHAUL KIT, PART #10135616.)	
5.		N.S.	SHAFT	
6.		N.S.	CYLINDER	
7.		DISCON	MANIFOLD	10158033
8.		9.263	BOLT (PROCURE FROM NIPPONDENSO)	
9.	8-C22	9.222	SEAL, A/C CMPR PORT (O RING) (AC-DELCO #15-30169)	2724674
10.		N.S.	O-RING (PART OF GASKET OVERHAUL KIT, PART #10135616.)	
11.		DISCON	COLLAR, COMPR SHAFT	10135612
12.		N.S.	FELT (PART OF GASKET OVERHAUL KIT, PART #10135616.)	
13.	8-C9	9.170	BOLT, CYL HEAD (PROCURE FROM NIPPONDENSO)	
14.		N.S.	SEAL, WASHER (PART OF GASKET OVERHAUL KIT, PART #10135616.)	
15.		N.S.	CYLINDER HEAD, FRT	
16.		DISCON	SEAL, COMPR SHAFT	10135610
17.	8-C14	9.175	RING, A/C CMPR SHF SEAL RET (FOR MDL APPL & POA SEE COMPRESSOR CHART) (AC-DELCO #15-2555)	10135615

© 2000 GENERAL MOTORS SERVICE PARTS OPERATIONS-CHEVROLET-14Y

18.		N.S.	GASKET, FRT (PART OF GASKET OVERHAUL KIT, PART #10135616.)	
19.		N.S.	REED, DISCHARGE	
20.		N.S.	VALVE PLATE, FRT	
21.		N.S.	REED, SUCTION	
22.		N.S.	VALVE PLATE, RR	
23.		N.S.	GASKET, RR (PART OF GASKET OVERHAUL KIT, PART #10135616.)	
24.		N.S.	CYLINDER HEAD, RR	
25.	8-D2	9.276	CONNECTOR, COIL LEAD	12162343
26.		N.S.	SHIM (0.3MM)	
27.		N.S.	SHIM (0.5MM)	
28.		N.S.	SHIM (0.1MM)	
29.	8-C16	9.188	SHIM KIT, A/C CMPR CLU (FOR MDL APPL & POA SEE COMPRESSOR CHT (AC-DELCO #15-2546)	10135609
30.		N.S.	SNAP, RING	
31.		N.S.	SNAP, RING	
32.	8-C9	9.170	BOLT, MAGNETIC CLU (PROCURE FROM NIPPONDENSO)	
33.		DISCON	HUB, MAGNETIC CLU	10135605
34.		DISCON	PULLEY, MAG CLU	10135604
35.	8-C16	9.188	CLUTCH (AC-DELCO #15-4462)	10158036
36.	8-C15	9.186	COIL, MAG CLU (AC-DELCO #15-4461)	10158035
37.		N.S.	CLAMP, MAG CLU	
38.		N.S.	SCREW, MAG CLU LEAD (PROCURE FROM NIPPONDENSO)	

RPO DEFINITIONS
L98 – ENGINE, 5.7L, (5.7-8) 350 CID, V8, TPI

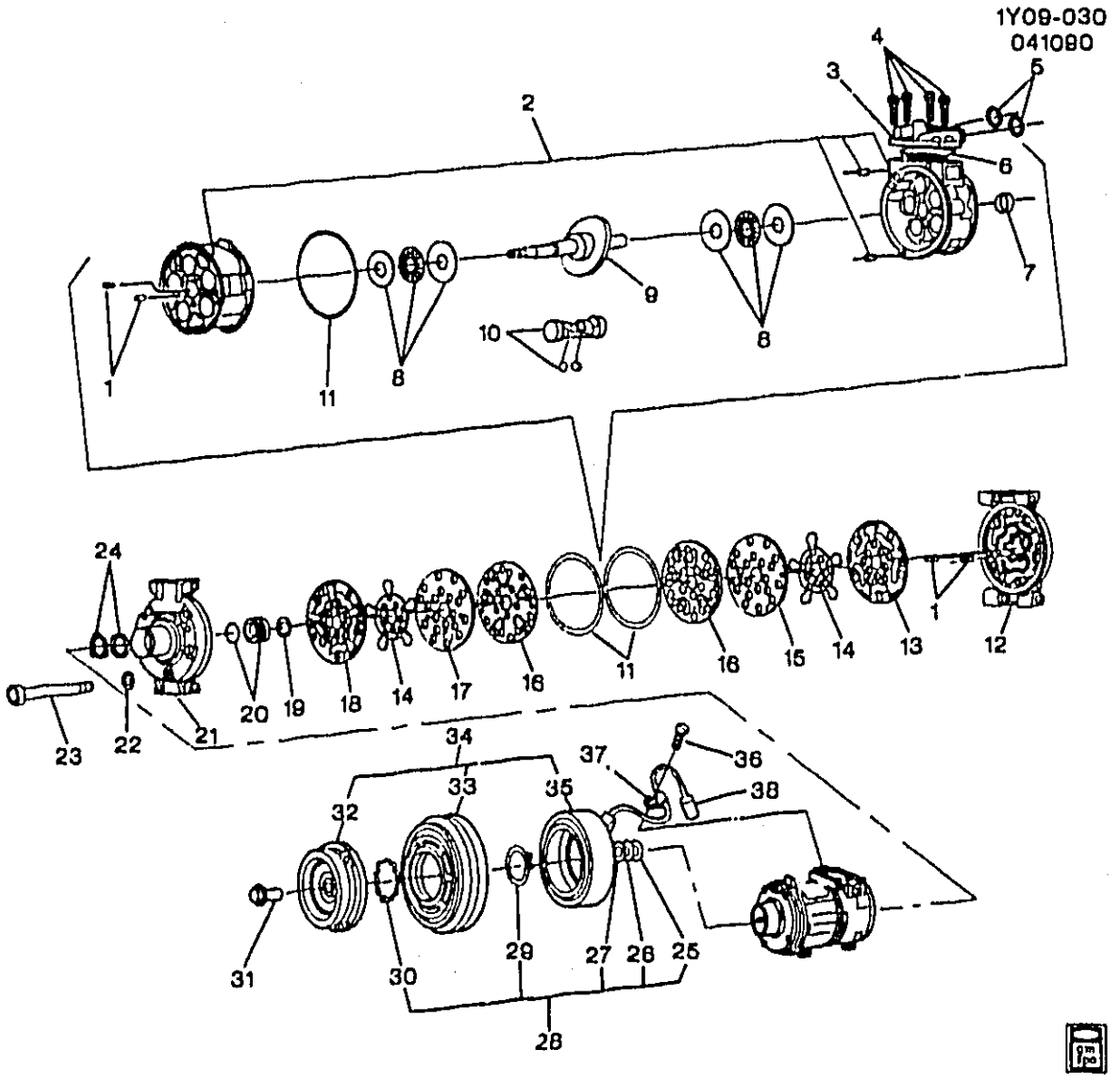

1Y09-030

1992-1993 Y A/C COMPRESSOR ASM (LT5/5.7J)

1.	8-C13	9.171	PIN, A/C CMPR FRT HD LOC	92-93	Y (LT1, LT5)	1	94842777
2.		N.S.	CYLINDER ASM				
3.		N.S.	MANIFOLD, A/C CMPR (POA COMP)				
4.		N.S.	BOLT, A/C CMPR MANIF				
5.	8-C22	9.222	SEAL, A/C CMPR PORT (O RING) (AC-DELCO #15-30169)	92-93	Y	2	2724674
6.	8-C14	9.175	RING, A/C CMPR SHF SEAL RET (*KIT2) (9.170) (AC-DELCO #15-2555)	92-93	Y	1	10135615
7.		N.S.	COLLAR, A/C CMPR SHF				
8.		N.S.	BEARING				
9.		N.S.	SHAFT				
10.		N.S.	PISTON ASM				
11.		N.S.	O-RING (*KIT2)				
12.		N.S.	CYLINDER HEAD, RR				
13.		N.S.	GASKET, RR (*KIT2)				
14.		N.S.	REED, DISCHARGE				
15.		N.S.	VALVE PLATE, RR				
16.		N.S.	REED, SUCTION				

© 2000 GENERAL MOTORS SERVICE PARTS OPERATIONS-CHEVROLET-14Y

17.		N.S.	VALVE PLATE, FRT				
18.		N.S.	GASKET, FRT (*KIT2)				
19.	8-C14	9.175	RING, A/C CMPR SHF SEAL RET (9.170) (AC-DELCO #15-2555)	92-93	Y	1	10135615
20.		N.S.	SEAL KIT, A/C CMPR SHF (POA COMP)				
21.		N.S.	CYLINDER HEAD, FRT				
22.		N.S.	WASHER, SEAL (*KIT2)				
23.		N.S.	BOLT, A/C CMPR HD				
24.		N.S.	FELT (*KIT2)				
25.		N.S.	SHIM (0.3MM) (PART OF ITEM #28)				
26.		N.S.	SHIM (0.5MM) (PART OF ITEM #28)				
27.		N.S.	SHIM (0.1MM) (PART OF ITEM #28)				
28.	8-C16	9.188	SHIM KIT, A/C CLU (INCL ITEM #25-27, 29, 30) (AC-DELCO #15-2546)	92-93	Y	1	10135609
29.		N.S.	RING, SNAP (PART OF ITEM #28)				
30.		N.S.	RING, SNAP (PART OF ITEM #28)				
31.	8-C16	9.188	BOLT, A/C CLU (HFH, M6X1X16, 14 THD, 14 OD, STL, NYLOC) (*KIT2) (9.170)	92-93	Y	1	10135606
32.		N.S.	ROTOR, A/C CLU (POA COMP)				
33.		N.S.	PULLEY, A/C CMPR				
34.	8-C16	9.188	CLUTCH KIT, A/C (INCLS 35) (AC-DELCO #15-4601)	92-93	Y (LT5)	1	10243785
35.		N.S.	COIL, A/C CLU (PART OF 34)				
36.		N.S.	BOLT, A/C CLU WRG CLIP (PROCURE FROM NIPPONDENSO)				
37.		N.S.	CLIP, A/C CLU WRG				
38.	8-D2	9.276	CONNECTOR, A/C CLU WRG (2-WAY M) (W/O LEADS) (4.720)	92-93	Y (LT5)	1	12162343

SERVICE KITS

1.	8-C9	9.170	COMPRESSOR, A/C (W/O CLU) (USE W/R-134A) (INCL ITEMS #1-24, 38) (AC-DELCO #15-2914)	92-93	Y (LT5)	1	10243783
	8-C9	9.170	COMPRESSOR, A/C (W/O CLU) (USE W/R12 REFRIGERANT) (INCL ITEMS #1-24, 38) (AC-DELCO #15-2684)	92-93	Y (LT5)	1	10157911
2.	8-C15	9.178	GASKET KIT, A/C CMPR (INCL ITEMS #6, 11, 13, 18, 22, 24, 31) (AC-DELCO #15-2638)	92-93	Y (LT5)	1	

RPO DEFINITIONS
LT1 – ENGINE-GAS, 8 CYL, 5.7L(5.7P),MFI,HO
LT5 – ENGINE,5.7L(5.7J),TPI

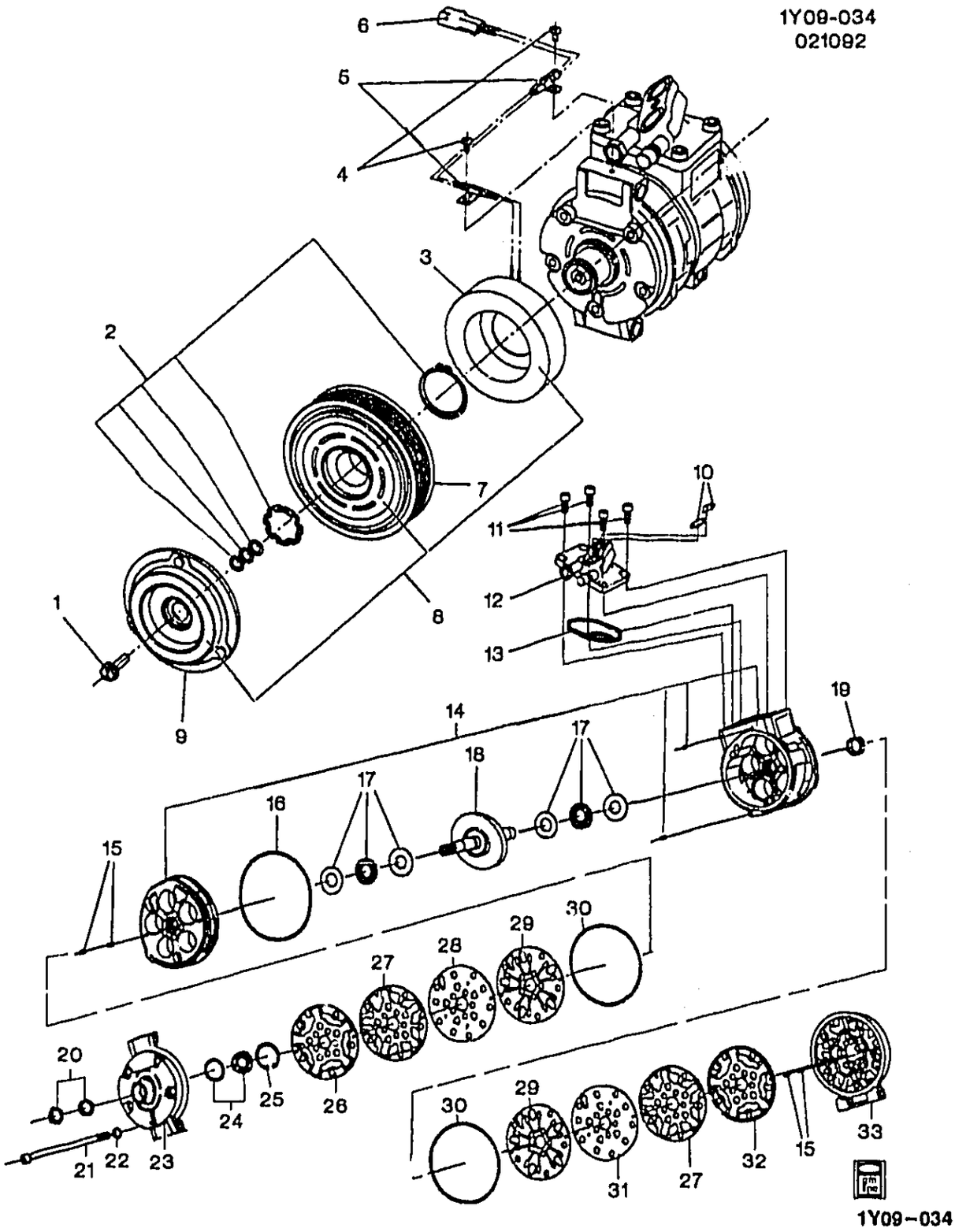

1992-1993 Y A/C COMPRESSOR ASM (LT1/5.7P)

1.	8-C16	9.188	BOLT, A/C CLU (HFH, M6X1X16, 14 THD, 14 OD, STL, NYLOC) (0.170)	92-93	Y	1	10135606
2.	8-C16	9.188	SHIM KIT, A/C CLU (AC-DELCO #15-2546)	92-93	Y	1	10135609
3.		N.S.	COIL, A/C CLU		.....		

© 2000 GENERAL MOTORS SERVICE PARTS OPERATIONS-CHEVROLET-14Y

4.		N.S.	BOLT, A/C CLU WRG CLIP (PROCURE FROM NIPPONDENSO)				
5.		N.S.	CLIP, A/C CLU WRG				
6.		N.S.	CONNECTOR, A/C CLU WRG				
7.		N.S.	PULLEY, A/C CMPR				
8.	8-C16	9.188	CLUTCH KIT, A/C (AC-DELCO #15-4623)	92-93	Y (LT1)	1	10243784
9.		N.S.	ROTOR, A/C CLU (POA COMP)				
10.	8-C22	9.222	SEAL, A/C CMPR PORT (O RING) (AC-DELCO #15-30169)	92-93	Y	2	2724674
11.		N.S.	BOLT, A/C CMPR MANIF				
12.		N.S.	MANIFOLD, A/C CMPR (POA COMP)				
13.	8-C14	9.175	RING, A/C CMPR SHF SEAL RET (9.170) (AC-DELCO #15-2555)	92-93	Y	1	10135615
14.		N.S.	CYLINDER ASM				
15.	8-C13	9.171	PIN, A/C CMPR FRT HD LOC	92-93	Y (LT1, LT5)	1	94842777
16.		N.S.	O-RING (*KIT2)				
17.		N.S.	BEARING				
18.		N.S.	SHAFT				
19.		N.S.	COLLAR, A/C CMPR SHF				
20.		N.S.	FELT (*KIT2)				
21.		N.S.	BOLT, A/C CMPR THRU (PROCURE FROM NIPPONDENSO)				
22.		N.S.	SEAL, WASHER (*KIT2)				
23.		N.S.	CYLINDER HEAD, FRT				
24.		N.S.	SEAL KIT, A/C CMPR SHF (POA COMP)				
		N.S.	SHAFT SEAL				
		N.S.	O-RING				
25.	8-C14	9.175	RING, A/C CMPR SHF SEAL RET (9.170) (AC-DELCO #15-2555)	92-93	Y	1	10135615
26.		N.S.	GASKET, FRT (*KIT2)				
27.		N.S.	REED, DISCHARGE				
28.		N.S.	VALVE PLATE, FRT				
29.		N.S.	REED, SUCTION				
30.		N.S.	O-RING (*KIT2)				
31.		N.S.	VALVE PLATE, RR				
32.		N.S.	GASKET, RR (*KIT2)				
33.		N.S.	CYLINDER HEAD, RR				

SERVICE KITS

1.	8-C9	9.170	COMPRESSOR, A/C (W/O CLU) (USE W/HFC-134A REFRIGERANT) (INCL ITEMS #4, 10-33) (AC-DELCO #15-2913)	92-93	Y (LT1)	1	10243781
	8-C9	9.170	COMPRESSOR, A/C (W/O CLU) (USE W/R12 REFRIGERANT) (INCL ITEMS #4, 10-33) (AC-DELCO #15-2893)	92-93	Y (LT1)	1	10243782
2.		DISCON	GASKET KIT, A/C CMPR (INCL ITEMS #16, 20, 22, 26, 30, 32)	92-93	Y (LT1)	1	10135616

RPO DEFINITIONS
LT1 – ENGINE-GAS, 8 CYL, 5.7L(5.7P),MFI,HO
LT5 – ENGINE,5.7L(5.7J),TPI

© 2000 GENERAL MOTORS SERVICE PARTS OPERATIONS-CHEVROLET-14Y

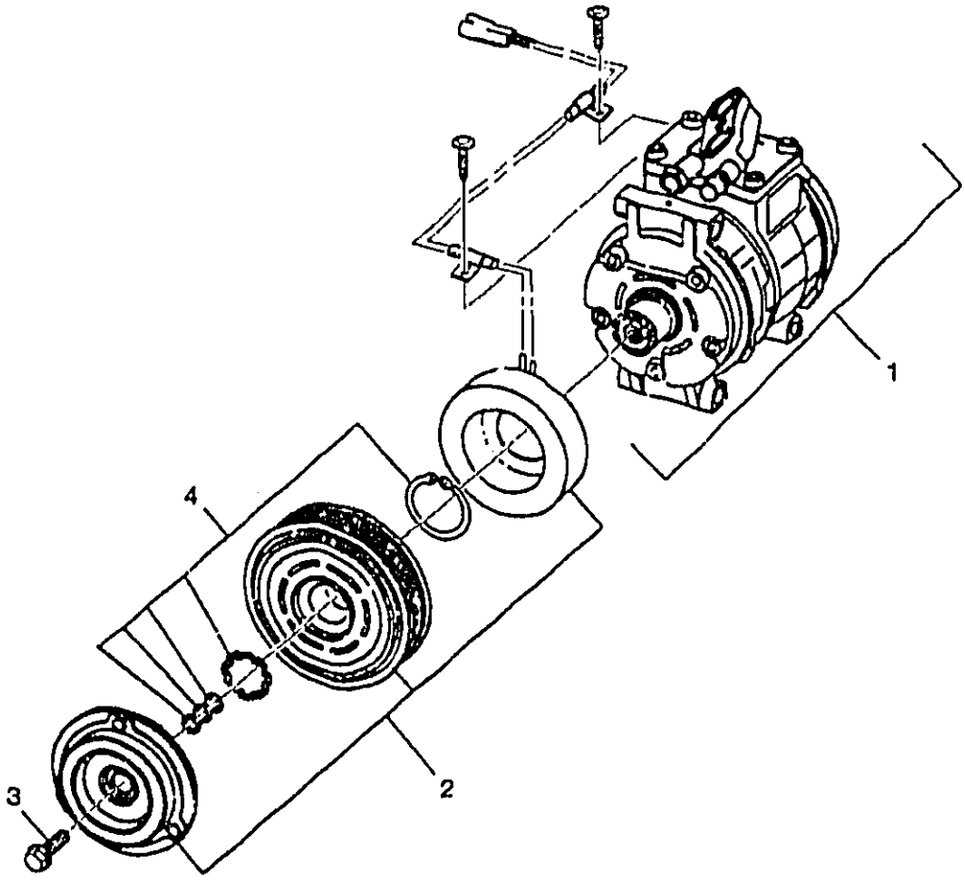

GM09-120Y

1994-1995 Y A/C COMPRESSOR ASM (LT5/5.7J)

1.	8-C9	9.170	COMPRESSOR, A/C (W/O CLU) (USE W/R-134A) (AC-DELCO #15-2914)	94-95	Y (LT5)	1	10243783
2.	8-C16	9.188	CLUTCH KIT, A/C (AC-DELCO #15-4601)	94-95	Y (LT5)	1	10243785
3.	8-C16	9.188	BOLT, A/C CLU (HFH, M6X1X16, 14 THD, 14 OD, ST., NYLOC) (9.170)	94-95	Y	1	10135606
4.	8-C16	9.188	SHIM KIT, A/C CLU (AC-DELCO #15-2546)	94-95	Y	1	10135609

RPO DEFINITIONS
LT5 – ENGINE,5.7L(5.7J),TPI

© 2000 GENERAL MOTORS SERVICE PARTS OPERATIONS-CHEVROLET-14Y

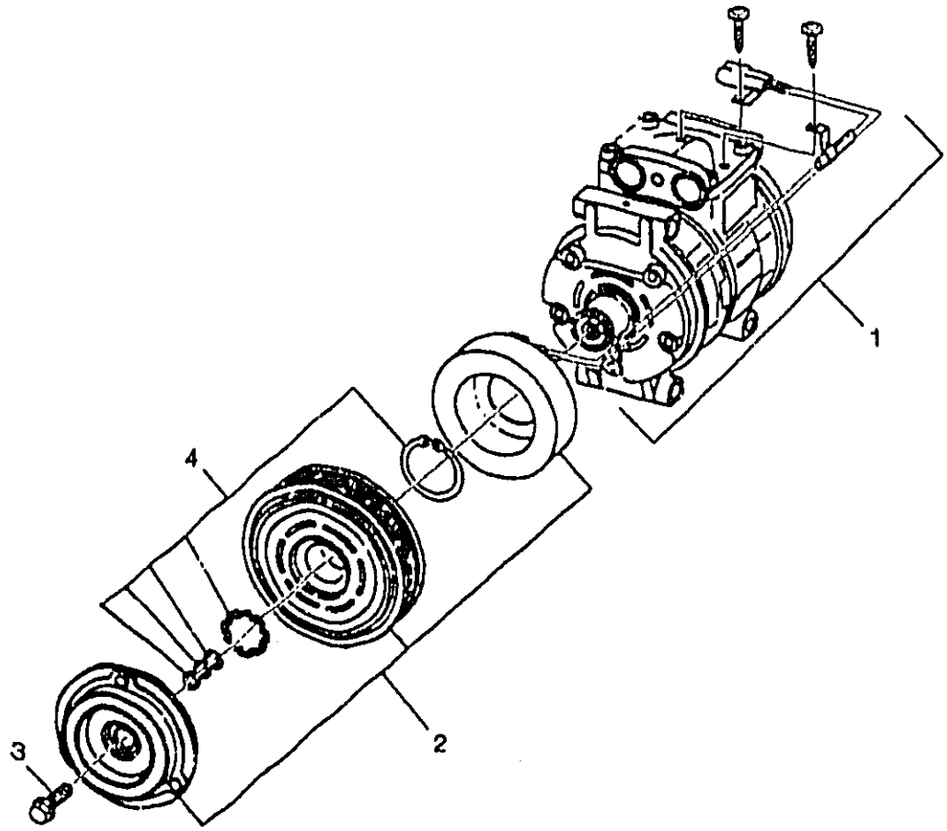

GM09-121Y

1994-1995 Y A/C COMPRESSOR ASM (LT1/5.7P)
1996 Y A/C COMPRESSOR ASM

1.	8-C9	9.170	COMPRESSOR, A/C (W/O CLU) (USE W/HFC-134A REFRIGERANT) (AC-DELCO #15-2913)	94-95	Y (LT1)	1	10243781
	8-C9	9.170	COMPRESSOR, A/C (W/O CLU) (USE W/HFC-134A REFRIGERANT) (AC-DELCO #15-2913)	96	Y	1	10243781
2.	8-C16	9.188	CLUTCH KIT, A/C (AC-DELCO #15-4623)	94-95	Y (LT1)	1	10243784
	8-C16	9.188	CLUTCH KIT, A/C (AC-DELCO #15-4623)	96	Y	1	10243784
3.	8-C16	9.188	BOLT, A/C CLU (HFH, M6X1X16, 14 THD, 14 OD, STL, NYLOC) (9.170)	94-96	Y	1	10135606
4.	8-C16	9.188	SHIM KIT, A/C CLU (AC-DELCO #15-2546)	94-96	Y	1	10135609

RPO DEFINITIONS
LT1 - ENGINE-GAS, 8 CYL, 5.7L(5.7P),MFI,HO

© 2000 GENERAL MOTORS SERVICE PARTS OPERATIONS-CHEVROLET-14Y

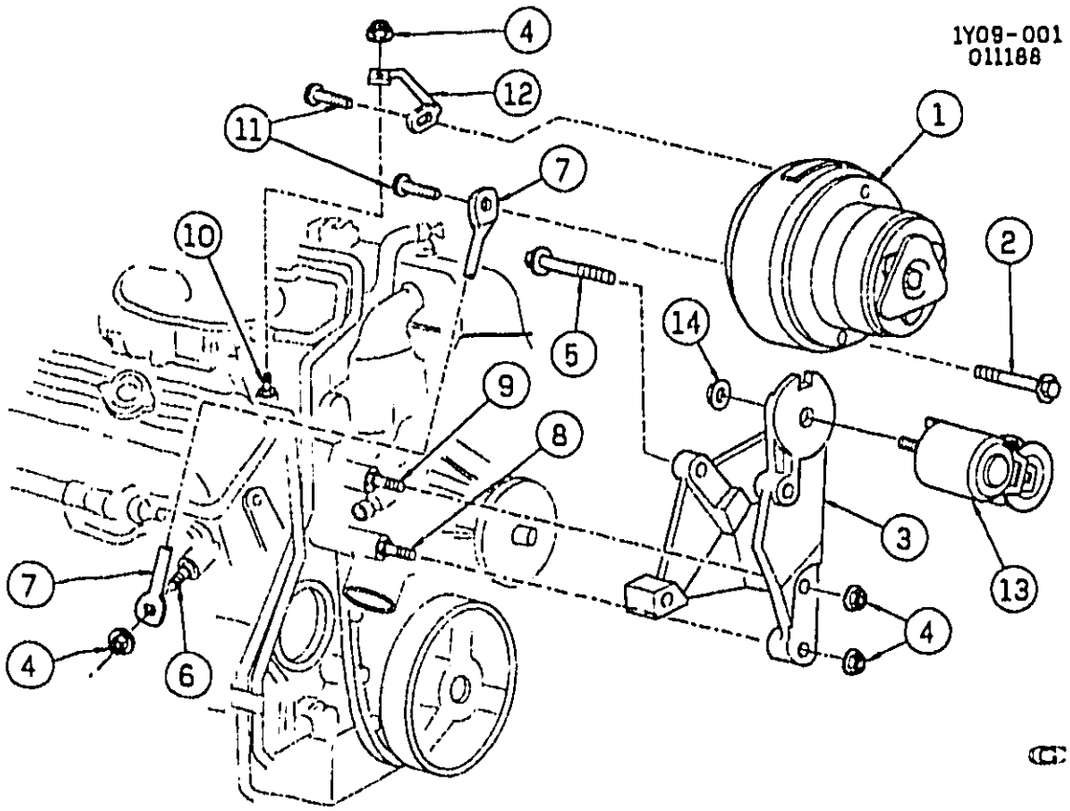

1Y09-001

1984 Y A/C COMPRESSOR MOUNTING (L83)

1.	8-C9	9.170	COMPRESSOR, RADIAL COMPL (AC-DELCO #15-20185)	1134346
2.		8.900	BOLT, A .C. COMPR, HEX FLG HD (3/8"-16 X 4 7/8")	
3.	8-C13	9.171	BRACKET, CMPR	14055137
4.		8.917	NUT, HEX FLG (3/8"-16)	
5.		8.900	BOLT, HEX FLG HD (M10 X 1.5 X 105)	
6.	8-N20	3.275	STUD, EXH MANIF	14057002
7.		DISCON	BRACE, CMPR RR (TO EXHAUST MANIFOLD)	14055119
8.	8-N2	1.073	STUD, W/PUMP TO CMPR BRKT LWR (3/8"-16 X 2 3/4" & 1 5/16")	14055139
9.	8-N2	1.073	STUD, CLNT PUMP (3/8"-16X2.19 & 1.85)	10046099
10.	8-N20	3.275	STUD, INL MANIF #1 RH, HEX (3/8"-16 X 5/8" & 1") (2.277)	12552858
11.		8.900	BOLT, HEX FLG HD (M12 X 1.5 X 25)	
12.		DISCON	BRACE, CMPR RR (TO INL MANIFOLD CVR)	14055120
13.	8-M28	1.060	TENSIONER, DR BELT	14055164
14.		8.917	NUT, HEX FLG (M12X1.75X12)	11508101

RPO DEFINITIONS
L83 – ENGINE, 5.7L (5.7-8), V8,(CFI-CROSSFIRE)(TBI)

© 2000 GENERAL MOTORS SERVICE PARTS OPERATIONS-CHEVROLET-14Y

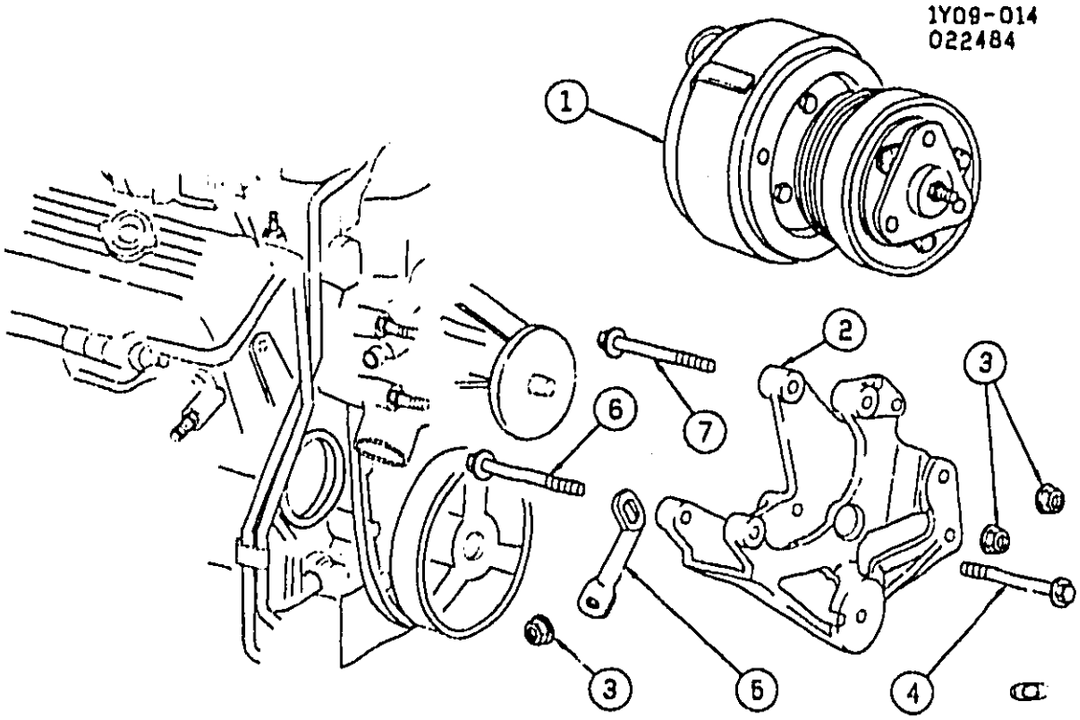

1Y09-014

1985-1987 Y A/C COMPRESSOR MOUNTING (L98)

1.	8-C9	9.170	COMPRESSOR, A .C. (1985-87) (AC-DELCO #15-20227)	1134351
2.	8-C13	9.171	BRACKET, A .C. CMPR	14084340
3.		8.917	NUT, HEX FLANG (3/8-16) PC	14057004
4.		DISCON	BOLT, A .C. CMPR	14084314
5.		DISCON	BRACE, A .C. CMPR RR LWR	14084315
6.		8.900	BOLT, HFH (M10X1.5X110) 9.8 PZOR	11509072
7.		8.900	BOLT, FLGD HEX HD (M10X1.5X105) (9.8 PZOR)	11508142

RPO DEFINITIONS
L98 - ENGINE, 5.7L, (5.7-8) 350 CID, V8, TPI

© 2000 GENERAL MOTORS SERVICE PARTS OPERATIONS-CHEVROLET-14Y

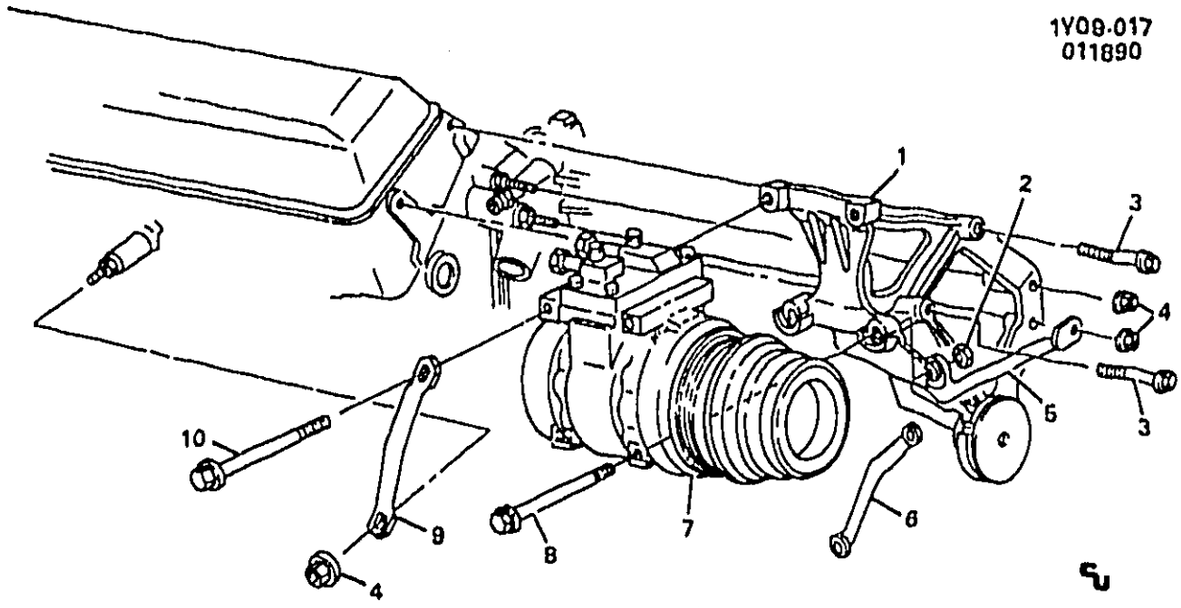

1Y09-017

1988-1991 Y A/C COMPRESSOR MOUNTING (L98)

1.	8-C13	9.171	BRACKET	10105236
2.		8.917	NUT, HFH (M8X1.25) (AC-DELCO #11514596)	11514596
3.	8-C14	9.173	BOLT, BRKT (3/8X16X2.50) (3.655)	14084400
4.		8.917	NUT, HEX FLG (3/8X16)	14057004
5.	8-C13	9.171	BRACE, BRKT (1989-91)	10105224
6.		DISCON	BRACE, BRKT LWR (1989-91)	10105223
7.	8-C9	9.170	COMPRESSOR (SEE GROUP 9.000 "A/C COMPRESSOR MOUNTING" FOR DETAIL ILLUSTRATED VIEW.) (AC-DELCO #15-2640)	10158032
8.	8-C14	9.173	BOLT (8X1.25X115) (1989-91)	10105293
9.	8-C13	9.171	BRACE	10055753
10.	8-C14	9.173	BOLT (M8X1.25X95)	10105215

RPO DEFINITIONS
L98 - ENGINE, 5.7L, (5.7-8) 350 CID, V8, TPI

© 2000 GENERAL MOTORS SERVICE PARTS OPERATIONS-CHEVROLET-14Y

1Y09-032 07/25/95

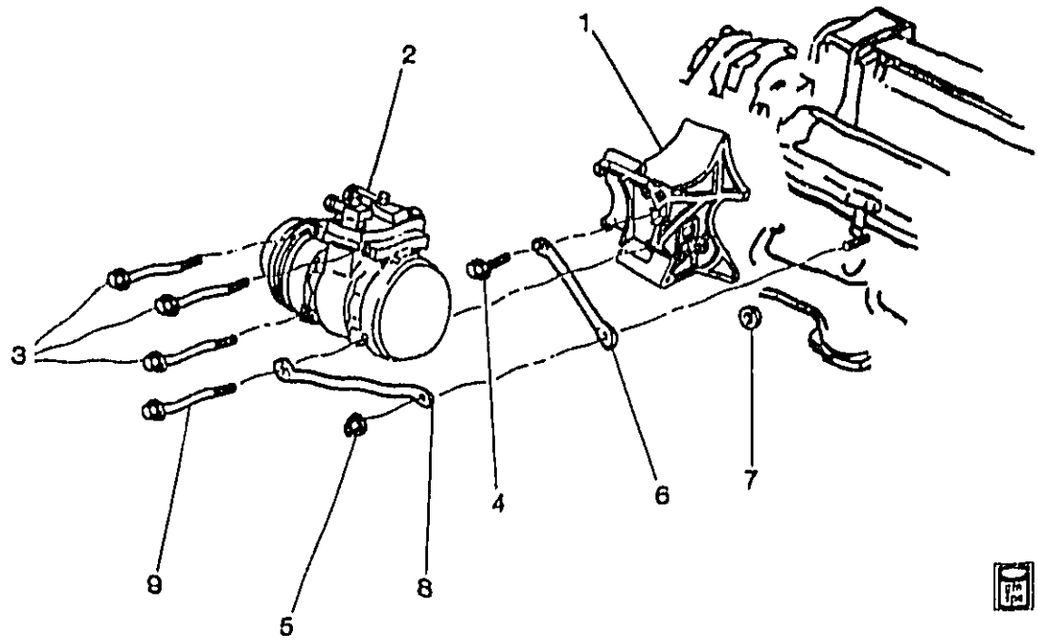

1Y09-032

1992-1995 Y A/C COMPRESSOR MOUNTING (LT1)
1996 Y A/C COMPRESSOR MOUNTING

1.	8-N5	2.277	BRACKET, GEN & A/C CMPR & P/S PUMP (INCL 7)	92-95	Y (LT1)	1	12550052
	8-C13	9.171	BRACKET, GEN & A/C CMPR & P/S PUMP (INCL 7) (2.277)	92-95	Y (LT1)	1	12550052
	8-N5	2.277	BRACKET, GEN & A/C CMPR & P/S PUMP (INCL 7)	96	Y	1	12550052
	8-C13	9.171	BRACKET, GEN & A/C CMPR & P/S PUMP (INCL 7) (2.277)	96	Y	1	12550052
2.	8-C9	9.170	COMPRESSOR, A/C (W/O CLU) (USE W/HFC-134A REFRIGERANT) (AC-DELCO #15-2913)	92-95	Y (LT1)	1	10243781
	8-C9	9.170	COMPRESSOR, A/C (W/O CLU) (USE W/HFC-134A REFRIGERANT) (AC-DELCO #15-2913)	96	Y	1	10243781
	8-C9	9.170	COMPRESSOR, A/C (W/O CLU) (USE W/R12 REFRIGERANT) (AC-DELCO #15-2893)	92-93	Y (LT1)	1	10243782
3.		8.900	BOLT-HFH, M8X1.25X85, 22 THD, 17 OD, 10.9, PO (POS #1) .	92-96	.....	3	11514485
4.		8.900	BOLT, HFH 3/8-16X1.12 280M ZP FULL THD .75-OD	92-96	.....	AR	9440071
5.		8.917	NUT	92-96	.....	AR	1405[illegible]04
6.	8-C13	9.171	BRACE, A/C CMPR	92-95	Y (LT1)	1	10128423
	8-C13	9.171	BRACE, A/C CMPR	96	Y (LT1, LT4)	1	10128423
7.	8-N5	2.277	SPACER, GEN (PART OF 1)	92-96	Y (LT1)	1	10028767
	8-N5	2.277	SPACER, GEN (PART OF 1)	96	Y (LT4, ML9)	1	10028767
8.	8-C13	9.171	BRACE, A/C CMPR RR LWR	92-95	Y (LT1)	1	10105400
	8-C13	9.171	BRACE, A/C CMPR RR LWR	96	Y (LT1, LT4)	1	10105400

© 2000 GENERAL MOTORS SERVICE PARTS OPERATIONS-CHEVROLET-14Y

								1Y09-032
9.	8-C14	9.173	BOLT, A/C CMPR (POS #2) (M8X1.25X95)	92-95	Y (LT1)	1	10105215
	8-C14	9.173	BOLT, A/C CMPR (POS #2) (M8X1.25X95)	96	Y (LT1, LT4)	1	10105215

RPO DEFINITIONS
LT1 – ENGINE-GAS, 8 CYL, 5.7L(5.7P),MFI,HO
LT4 – ENGINE GAS, 8 CYL, 5.7L, MFI, HIGH OUTPUT
ML9 – TRANSMISSION,MANUAL 6-SPEED

MICROFICHE INDEX

GROUPS 8.000 THRU 9.000

FICHE 8 OF 11

GROUP	DESCRIPTION	STARTING GRID LOCATION PARTS	ILLUSTRATIONS
–	GENERAL INFORMATION	1–A2	1–G2
–	ALPHABETICAL INDEX	1–B13	N.A.
8.000	FRONT END SHEET METAL – HEATER	8–A2	8–F2
9.000	BODY MOUNTING – AIR CONDITIONING – INSTRUMENT CLUSTER	8–C2	8–I2
–	OUT OF FICHE CALLS	N.A.	8–M27

8–J1

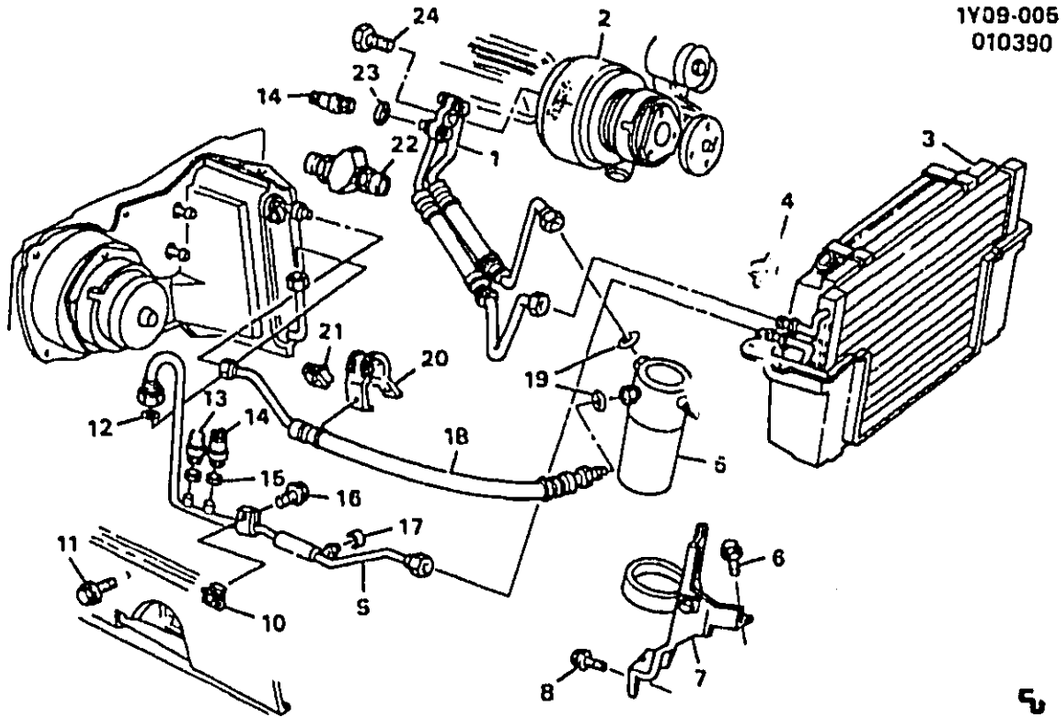

1Y09–005

1984 Y A/C REFRIGERATION SYSTEM (L83)
1985–1987 Y A/C REFRIGERATION SYSTEM (L98)

1.	8–C23	9.226	HOSE ASM, A/C CMPR & CNDSR (1984) (AC–DELCO #15–3417) ..	14046042
	8–C23	9.226	HOSE ASM, A/C CMPR & CNDSR (1985–87)	14081324
2.	8–C9	9.170	COMPRESSOR, RADIAL COMPL (1984) (SEE GROUP 9.000 "A/C COMPRESSOR MOUNTING" FOR DETAIL ILLUSTRATED VIEW.) (AC–DELCO #15–20185)	1134346
	8–C9	9.170	COMPRESSOR (1985–87) (SEE GROUP 9.000 "A/C COMPRESSOR MOUNTING" FOR DETAIL ILLUSTRATED VIEW.) (AC–DELCO #15–20227)	1134351
3.	8–C16	9.190	CONDENSER (AC–DELCO #15–6543)	3056639
4.		DISCON	GROMMET, CMPR FTG & HOSE (1984)	14052325
5.	8–C16	9.195	ACCUMULATOR, A/C (AC–DELCO #15–1430)	2724797
	8–C14	9.177	CAP, ACCUM VLV (1984–86) (AC–DELCO #15–5234)	6551640
	8–C14	9.177	VALVE, A/C REFRIG SERV (W/O O–RING (AC–DELCO #15–1119) .	3041827
6.		8.900	BOLT, HEX W/CON WA (M6X1X25)	11509363
7.		DISCON	BRACKET, ACCUM (1984)	14052397
		DISCON	BRACKET, ACCUM (1985) (1986 Y07) (1987 Y07 EXC Z51, Z52)	14091039
		DISCON	BRACKET, ACCUM (1986–87 Y67) (1987 Y07 W/Z51, Z52)	14092716
8.		8.977	BOLT, SEMS HEX W/FL WA (M6.3X1.81X20)	12337828
9.		DISCON	TUBE, EVAP INL (1984) (INCL 15)	14044430
	8–C22	9.220	TUBE, EVAP INL (1985–87) (INCL 15)	14081366
10.		8.921	NUT, U SHAPE (M4.2X1.41X.065) (AC–DELCO #15650655)	15650655
11.		8.900	BOLT, HEX W/CON WA (M6X1X25)	20351035
12.		N.S.	GASKET, O–RING (.426 ID)	
13.	8–C27	9.275	SWITCH, CMPR ENG COOL TEMP (AC–DELCO #15–2351)	14078970
14.	8–C13	9.172	SWITCH, A/C CMPR PRESS CYCLING (AC–DELCO #15–2352)	10007057
15.		N.S.	GASKET, O–RING (5/16" ID) (PART OF 9)	
16.		8.977	SCREW, HWH W/WA (M4.2X1.41X20)	11513801
17.	8–C14	9.177	CAP, A/C REFRIG CHRG VLV (3/8"–24) (1985–87) (PART OF 9, 19) .	52451233
18.	8–C23	9.225	HOSE, ACCUM (1984) (INCL 19)	14052403

© 2000 GENERAL MOTORS SERVICE PARTS OPERATIONS–CHEVROLET–14Y

				1Y09-005
	8-C23	9.225	HOSE, ACCUM (1985-87) (INCL 17, 19)	14081325
19.		N.S.	SEAL, O-RING (.676"IDX.07) (PART OF 18)	
20.	8-N2	1.166	CLAMP, CMPR & CNDSR HOSE	2012781
21.		8.921	NUT, U SHAPE (M6X1)	12338151
22.	8-C16	9.195	FILTER, A/C (IN LINE LESS ORIFICE) (USED ON VEHS W/PROD ORIFICE LOC IN EVAP) (AC-DELCO #15-1491)	52450767
	8-C17	9.210	FILTER, A/C (IN LINE W/ORIFICE) (USED ON VEHS W/PROD ORIFICE LOCATED NEAR CONDENSOR) (AC-DELCO #15-1492)	52450924
23.		8.927	O-RING (.301 I.D.X.070 THK) (AC-DELCO #15-3592)	3093509
24.		8.900	BOLT, HEX FLG HD (M10X1.5X40) (9.171)	14050422

RPO DEFINITIONS

L83 – ENGINE, 5.7L (5.7-8), V8,(CFI-CROSSFIRE)(TBI)
L98 – ENGINE, 5.7L, (5.7-8) 350 CID, V8, TPI

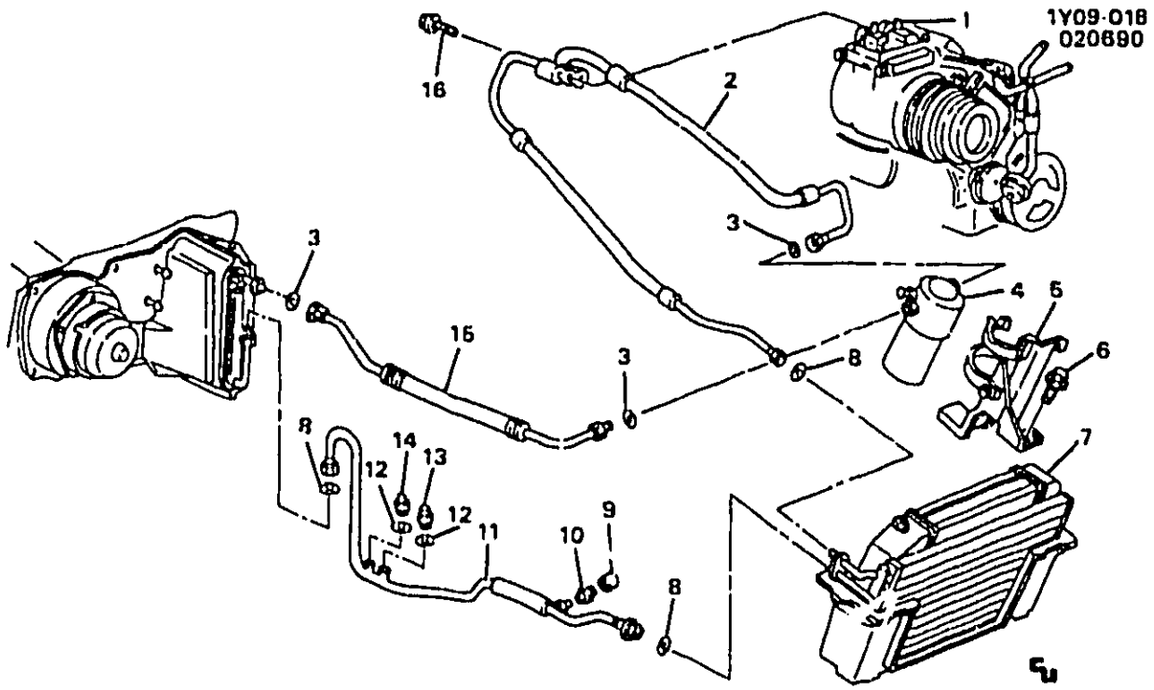

1Y09-018

1988-1991 Y A/C REFRIGERATION SYSTEM (L98)

1.	8-C9	9.170	COMPRESSOR (SEE GROUP 9.000 "A/C COMPRESSOR MOUNTING" FOR DETAIL ILLUSTRATED VIEW.) (AC-DELCO #15-2640)	10158032
2.	8-C23	9.226	HOSE ASM, A/C CMPR & CNDSR (1988) (AC-DELCO #15-3907)	10135634
	8-C23	9.226	HOSE ASM, A/C CMPR & CNDSR (1989) (AC-DELCO #15-3908)	10135635
	8-C23	9.226	HOSE ASM, A/C CMPR & CNDSR (1990-91) (AC-DELCO #15-3932)	10086201
3.		8.927	O-RING (.676 IDX.070 THK) (AC-DELCO #15-3615)	3094216
4.	8-C16	9.195	ACCUMULATOR, DEHYDR (AC-DELCO #15-1645)	2724802
5.		DISCON	BRACKET, ACCUM (1988-89)	10120043
	8-C16	9.196	BRACKET, ACCUM (1990-91)	10158061
6.		8.900	BOLT, HEX W/CON WA (M6X1X25)	11509363
7.	8-C16	9.190	CONDENSER (1988) (AC-DELCO #15-6591)	3096179
	8-C16	9.190	CONDENSER (1989) (AC-DELCO #15-6543)	3056639
	8-C16	9.190	CONDENSER (1990-91) (AC-DELCO #15-6688)	52456459
8.		8.927	O-RING (.426 IDX.070 THK) (AC-DELCO #15-3614)	3094214
9.	8-C14	9.177	CAP, REFRIG CHRG VLV (3/8X24)	
10.		N.S.	CORE, A/C REFRIG SERV VLV (PART OF #11)	
11.		DISCON	TUBE, EVAP (1988) (INCL 10, 12)	10077229
	8-C22	9.220	TUBE, EVAP (1989) (INCL 10, 12)	10120068
	8-C22	9.220	TUBE, EVAP (1990-91) (INCL 10, 12)	10086202
12.		8.927	O-RING, (.301 IDX.070 THK) (PART OF 11) (AC-DELCO #15-3592)	3093509
13.	8-C13	9.172	SWITCH, A/C CMPR PRESS CYCLING (AC-DELCO #15-2352)	10007057
14.	8-C27	9.275	SWITCH, CMPR ENG COOL TEMP (AC-DELCO #15-2351)	14078970
15.	8-C23	9.225	HOSE, ACCUM (1988-89)	10077230
	8-C23	9.225	HOSE, ACCUM (1990-91) (AC-DELCO #15-3930)	10086203
16.		8.900	BOLT, HFH (M10X1.5X40)	14050422

RPO DEFINITIONS

L98 - ENGINE, 5.7L, (5.7-8) 350 CID, V8, TPI

© 2000 GENERAL MOTORS SERVICE PARTS OPERATIONS-CHEVROLET-14Y

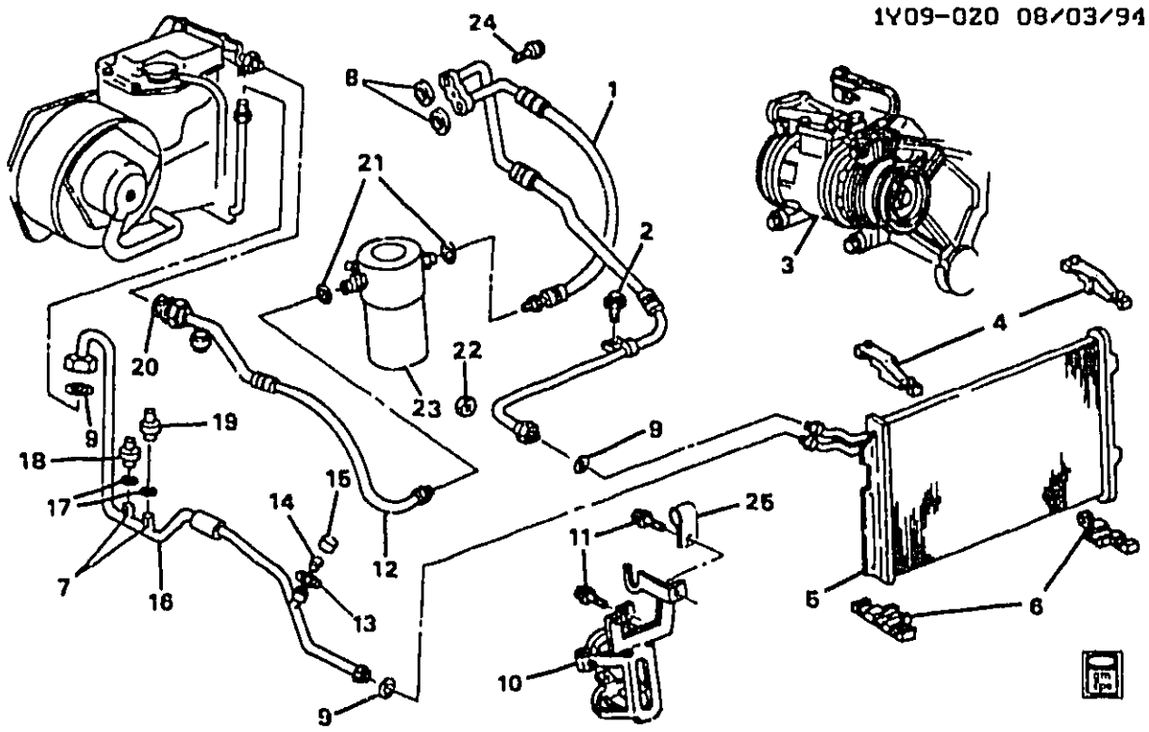

1Y09-020

1990-1991 Y A/C REFRIGERATION SYSTEM (LT5)

1.	8-C23	9.226	**HOSE ASM**, A/C CMPR & CNDSR (INCL 9, 21) (AC-DELCO #15-30221)	90-91	Y (LT5)	1	10229061
2.		8.977	**SCREW**, HWH TAP M6.3X1.81X13 13 OD PZOR	90-91	.....	AR	12338139
3.	8-C9	9.170	**COMPRESSOR**, A/C (W/O CLU) (USE W/R-134A) (SEE GROUP 9.000 "A/C REFRIGERATION SYSTEM" FOR DETAIL ILLUSTRATED VIEW.) (AC-DELCO #15-2914)	90-91	Y (LT5)	1	10243783
	8-C9	9.170	**COMPRESSOR**, A/C (W/O CLU) (USE W/R12 REFRIGERANT) (SEE GROUP 9.000 "A/C REFRIGERATION SYSTEM" FOR DETAIL ILLUSTRATED VIEW.) (AC-DELCO #15-2640)	90-91	Y (FOR MOD APPL & POA SEE AC COMPR CHT)	1	10158032
	8-C9	9.170	**COMPRESSOR**, A/C (W/O CLU) (USE W/R12 REFRIGERANT) (SEE GROUP 9.000 "A/C REFRIGERATION SYSTEM" FOR DETAIL ILLUSTRATED VIEW.) (AC-DELCO #15-2654)	90-91	Y (FOR MOD APPL & POA SEE CHT)	1	10158038
4.	8-N4	1.270	**INSULATOR**, RAD UPR	90-91	Y	LH	10082902
	8-N4	1.270	**INSULATOR**, RAD UPR	90-91	Y (LT5)	RH	10082903
5.	8-C16	9.190	**CONDENSER**, A/C (AC-DELCO #15-6688)	90-91	Y	1	52456459
6.	8-N4	1.270	**INSULATOR**, RAD LWR	90-91	Y	RH	10082904
	8-N4	1.270	**INSULATOR**, RAD LWR	90-91	Y	LH	10082905
7.		N.S.	**VALVE**, A/C REFRIG SERV (PART OF 16)		.....		

© 2000 GENERAL MOTORS SERVICE PARTS OPERATIONS-CHEVROLET-14Y

							1Y09-020
8.	8-C22	9.222	SEAL, A/C CMPR PORT (O RING) (AC-DELCO #15-30169)	90-91	Y	4	2724674
9.		8.927	O-RING, ID .426X.070 THK, MATERIAL-NEOPRENE. (PART OF 1, 16) (AC-DELCO #15-3614)	90-91		AR	3094214
10.	8-C16	9.196	BRACKET, A/C ACCUM	90-91	Y	1	10158061
11.		8.977	SCREW, HEX W/FL WA TAP 6.3X1.81X16 17- OD AB-POINT PZOR BLK	90-91		AR	11509371
12.	8-C23	9.225	HOSE, A/C ACCUM (INCL 20, 21) (AC-DELCO #15-30077)	90-91	Y (LT5)	1	10157992
13.		8.927	SEAL, A/C CMPR PRESS RLF VLV (O RING) (5/PKG) (.35 ID X .072 THK) (PART OF 16) (AC-DELCO #15-30570)	90-91		AR	52450548
14.		N.S.	VALVE, A/C REFRIG SERV (PART OF 16)				
15.		N.S.	CAP, A/C EVPR TUBE FTG (PART OF 16)				
16.	8-C22	9.220	TUBE, A/C EVPR (INCL 7, 9, 13-15, 17)	90-91	Y (LT5)	1	14104967
17.		8.927	O-RING, ID .301X.070 THK, MATERIAL-NEOPRENE. (PART OF 16) (AC-DELCO #15-3592)	90-91		AR	3093509
18.	8-C27	9.275	SWITCH, A/C CMPR ENG COOL TEMP (2 TERM) (AC-DELCO #15-2351)	90-91	Y	1	14078970
19.	8-C13	9.172	SWITCH, A/C CYCLING (9.275) (AC-DELCO #15-2352)	90	Y	1	10007057
	8-C13	9.172	SWITCH, A/C CYCLING (9.275) (AC-DELCO #15-2352)	91	Y (FE1, FE7)	1	10007057
20.		8.927	O-RING, 3/4 TUBE O .D., INSIDE DIA .549 (A), .103 (B), .005 (C), .003 (C) (PART OF 12) (AC-DELCO #15-3985)	90-91		AR	52454646
21.		8.927	O-RING, ID .676X.070 THK, MATERIAL-NEOPRENE. (PART OF 1, 12) (AC-DELCO #15-3615)	90-91		AR	3094216
22.		8.917	NUT, HFH, M8X1.25, 17.9 OD, 738 THK, 13MM HEX, 10, ZF (8.915) (AC-DELCO #11514596)	90-91		AR	11514596
23.	8-C16	9.195	ACCUMULATOR, A/C (DEHYDR) (AC-DELCO #15-1645)	90-91	Y	1	2724802
24.		8.900	BOLT, HFH, M10X1.5X40, 26 THD, 10.9, POR (A/C CMPR & CNDSR HOSE)	90-91		AR	14050422
25.		8.950	CLAMP, 1/2" STEEL LOOP CUSHIONED (A/C ACCUM HOSE)	90-91		AR	797923

RPO DEFINITIONS

FE1 – SUSPENSION SYSTEM,SOFT RIDE

FE7 – SUSPENSION SYSTEM,FRONT AND REAR,HEAVY DUTY(USED WITH PERFORMANCE HANDLING PACKAGE Z51)

LT5 – ENGINE,5.7L(5.7J),TPI

© 2000 GENERAL MOTORS SERVICE PARTS OPERATIONS-CHEVROLET-14Y

1Y09-033 08/03/94

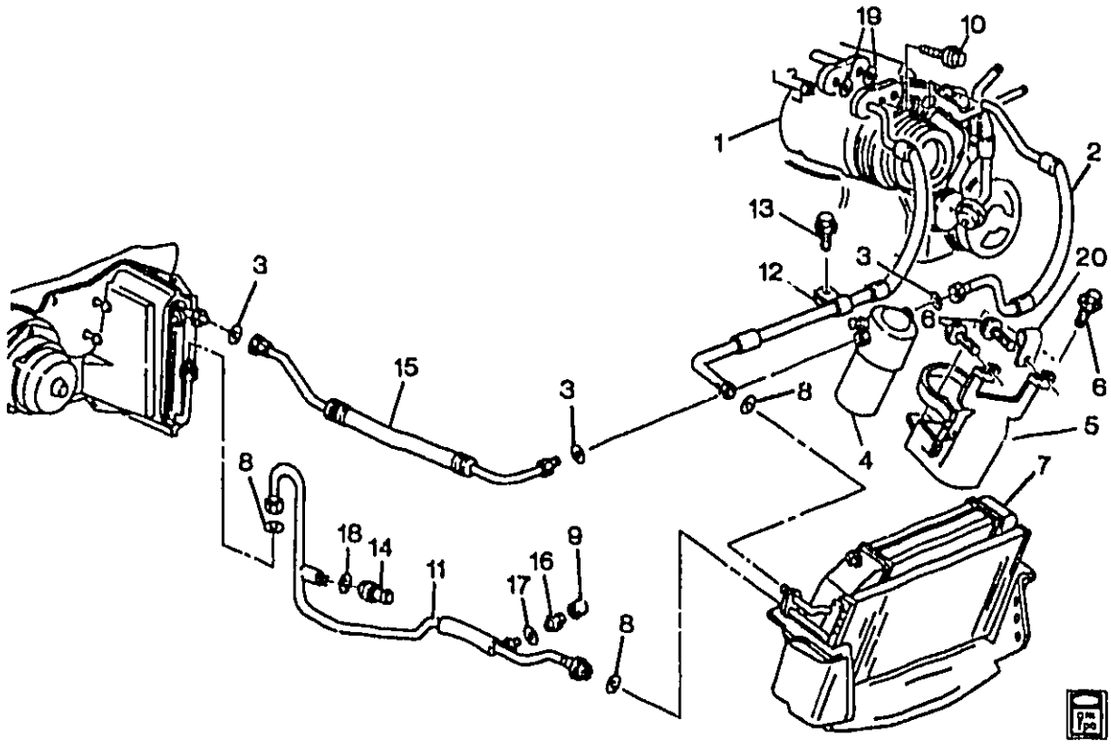

1Y09-033

1992-1995 Y A/C REFRIGERATION SYSTEM (LT1)
1996 Y A/C REFRIGERATION SYSTEM

1.	8-C9	9.170	**COMPRESSOR**, A/C (W/O CLU) (USE W/HFC-134A REFRIGERANT) (SEE GROUP 9.000 "A/C COMPRESSOR MOUNTING" FOR DETAIL ILLUSTRATED VIEW.) (AC-DELCO #15-2913)	92-95	Y (LT1)	1	10243781
	8-C9	9.170	**COMPRESSOR**, A/C (W/O CLU) (USE W/HFC-134A REFRIGERANT) (SEE GROUP 9.000 "A/C COMPRESSOR MOUNTING" FOR DETAIL ILLUSTRATED VIEW.) (AC-DELCO #15-2913)	96	Y	1	10243781
	8-C9	9.170	**COMPRESSOR**, A/C (W/O CLU) (USE W/R12 REFRIGERANT) (SEE GROUP 9.000 "A/C COMPRESSOR MOUNTING" FOR DETAIL ILLUSTRATED VIEW.) (AC-DELCO #15-2893) .	92-93	Y (LT1)	1	10243782
2.	8-C23	9.226	**HOSE ASM**, A/C CMPR & CNDSR (INCL 3, 8, 19 (ASM CONTAINS BOTH HOSES)) (AC-DELCO #15-30080)	92	Y (LT1)	1	10135693
	8-C23	9.226	**HOSE ASM**, A/C CMPR & CNDSR (INCL 3, 8, 19 (ASM CONTAINS BOTH HOSES))	93	Y (LT1)	1	10211891

© 2000 GENERAL MOTORS SERVICE PARTS OPERATIONS - CHEVROLET-14Y

							1Y09-033
	8-C23	9.226	**HOSE ASM**, A/C CMPR & CNDSR (INCL 3, 8, 19 (ASM CONTAINS BOTH HOSES)) (AC-DELCO #15-30287)	94-95	Y (LT1)	1	10219089
	8-C23	9.226	**HOSE ASM**, A/C CMPR & CNDSR (INCL 3, 8, 19 (ASM CONTAINS BOTH HOSES)) (AC-DELCO #15-30287)	96	Y	1	10219089
3.		8.927	**O-RING**, ID .676X.070 THK, MATERIAL-NEOPRENE. (PART OF 2, 15) (AC-DELCO #15-3615)	92-93	(LT5)	AR	3094216
		8.927	**O-RING**, 3/4 TUBE O .D., INSIDE DIA .549 (A), .103 (B), .005 (C), .003 (C) (PART OF 2, 15) (AC-DELCO #15-3985)	92-95	(LT1)	AR	52454646
		8.927	**O-RING**, 3/4 TUBE O .D., INSIDE DIA .549 (A), .103 (B), .005 (C), .003 (C) (PART OF 2, 15) (AC-DELCO #15-3985)	94-95	(LT5)	AR	52454646
		8.927	**O-RING**, 3/4 TUBE O .D., INSIDE DIA .549 (A), .103 (B), .005 (C), .003 (C) (PART OF 2, 15) (AC-DELCO #15-3985)	96	.....	AR	52454646
4.	8-C16	9.195	**ACCUMULATOR**, A/C (AC-DELCO #15-1587)	93	Y	1	2724681
	8-C16	9.195	**ACCUMULATOR**, A/C (AC-DELCO #15-1624)	94-96	Y	1	2724830
	8-C16	9.195	**ACCUMULATOR**, A/C (DEHYDR) (AC-DELCO #15-1645)	92	Y	1	2724802
5.	8-C16	9.196	**BRACKET**, A/C ACCUM	92-96	Y	1	10158061
6.		8.977	**SCREW**, HEX TAP M6.3X1.81X16 W/FL WA POR	92-96	.....	AR	11503890
		8.977	**SCREW**, HWH TAP W/FL WA M6.3X1.81X25 POR	92-96	.....	AR	11505023
7.	8-C16	9.190	**CONDENSER**, A/C (AC-DELCO #15-6688)	92-93	Y	1	52456459
	8-C16	9.190	**CONDENSER**, A/C (AC-DELCO #15-6726)	94-96	Y	1	52463706
8.		8.927	**O-RING**, ID .426X.070 THK, MATERIAL-NEOPRENE. (PART OF 2, 11) (AC-DELCO #15-3614)	92-96	.....	AR	3094214
		8.927	**O-RING**, 1/2 TUBE O .D., INSIDE DIA .364 (A), .094 (B), .005 (C), .003 (D) (PART OF 2, 11) (AC-DELCO #15-3984)	93-94	.....	AR	52454645
9.		N.S.	**CAP**, A/C EVPR TUBE FTG (PART OF 11)		.....		
10.		8.900	**BOLT**, HFH M10X1.5X40 9.8 PZOR (A/C CMPR & CNDSR HOSE)	92-96	.....	AR	11508205
11.	8-C22	9.220	**TUBE**, A/C EVPR (INCL 8, 9, 16-18)	92	Y (LT1)	1	10135594
	8-C22	9.220	**TUBE**, A/C EVPR (INCL 8, 9, 16-18)	93	Y (LT1)	1	10211892
	8-C22	9.220	**TUBE**, A/C EVPR (INCL 8, 9, 16-18)	94-95	Y (LT1)	1	10219091

								1Y09-033
	8-C22	9.220	**TUBE**, A/C EVPR (INCL 8, 9, 16-18)	96	Y	1	10219091
12.		8.950	**CLAMP** (A/C CMPR & CNDSR HOSE CLIP) (6.672)	92-96	.....	AR	15651150
13.		8.977	**SCREW**, HEX W/FL WA TAP 6.3X1.81X16 17- OD AB-POINT PZOR BLK (A/C CMPR & CNDSR HOSE CLIP)	92-96	.....	AR	11509371
14.	8-C27	9.275	**SENSOR**, A/C REFRIG PRESS (W/THREE TERMINALS) (MATES W/CONNECTOR 12102748) (AC-DELCO #15-72104)	92-93	Y (LT1)	1	22599559
	8-C27	9.275	**SENSOR**, A/C REFRIG PRESS (MATES W/CONN. 12102748) (AC-DELCO #15-20310)	94-95	Y (LT1)	1	22601618
	8-C27	9.275	**SENSOR**, A/C REFRIG PRESS (MATES W/CONN. 12102748) (AC-DELCO #15-20310)	96	Y	1	22601618
15.	8-C23	9.225	**HOSE**, A/C ACCUM (INCL 3) (AC-DELCO #15-30076)	92	Y (LT1)	1	10135696
	8-C23	9.225	**HOSE**, A/C ACCUM (INCL 3) (AC-DELCO #15-30234)	93	Y (LT1)	1	10232059
	8-C23	9.225	**HOSE**, A/C ACCUM (INCL 3) (AC-DELCO #15-30248)	94-95	Y (LT1)	1	10254451
	8-C23	9.225	**HOSE**, A/C ACCUM (INCL 3) (AC-DELCO #15-30248)	96	Y	1	10254451
16.		N.S.	**VALVE**, A/C REFRIG SERV (PART OF 11)		.....		
17.		8.927	**SEAL**, A/C CMPR PRESS RLF VLV (O RING) (5/PKG) (.35 ID X .072 THK) (PART OF 11) (AC-DELCO #15-30570)	92-96	.....	AR	52450548
18.		8.927	**O-RING**, ID .301X.070 THK, MATERIAL-NEOPRENE. (PART OF 11) (AC-DELCO #15-3592) .	92-96	.....	AR	3093509
19.		8.927	**O-RING**, 1/2 TUBE O .D., INSIDE DIA .364 (A), .094 (B), .005 (C), .003 (D) (PART OF 2) (AC-DELCO #15-3984)	92-96	.....	1	52454645
20.		8.950	**CLAMP**, 1/2" STEEL LOOP CUSHIONED (A/C ACCUM HOSE)	92-96	.....	AR	797923

RPO DEFINITIONS
LT1 - ENGINE-GAS, 8 CYL, 5.7L(5.7P),MFI,HO
LT5 - ENGINE,5.7L(5.7J),TPI

© 2000 GENERAL MOTORS SERVICE PARTS OPERATIONS-CHEVROLET-14Y

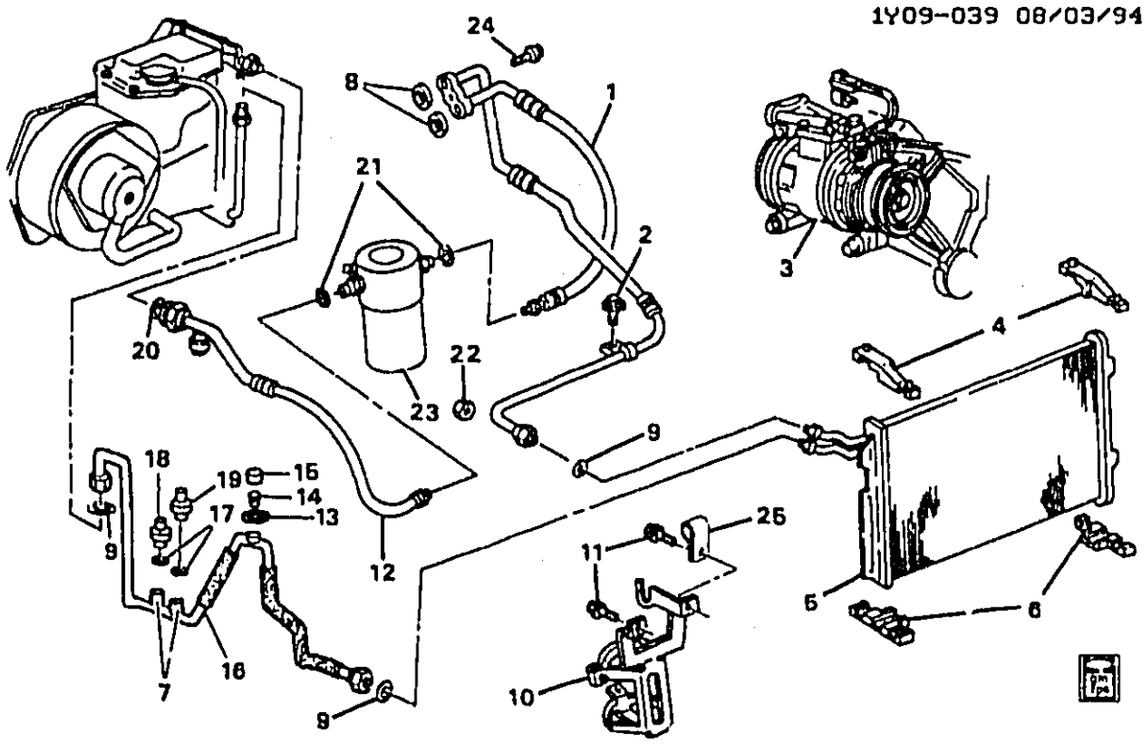

1Y09-039

1992-1995 Y A/C REFRIGERATION SYSTEM (LT5)

1.	8-C23	9.226	HOSE ASM, A/C CMPR & CNDSR (INCL 8, 9, 21) (AC-DELCO #15-30221)	92-93	Y (LT5)	1	10229061
	8-C23	9.226	HOSE ASM, A/C CMPR & CNDSR (INCL 8, 9, 21) (AC-DELCO #15-30288)	94-95	Y (LT5)	1	10219090
2.		8.977	SCREW, HWH TAP M6.3X1.81X13 13 OD PZOR	92-95	.....	AR	12338139
3.	8-C9	9.170	COMPRESSOR, A/C (W/O CLU) (USE W/R-134A) (SEE GROUP 9.000 "A/C COMPRESSOR ASM" FOR DETAIL ILLUSTRATED VIEW.) (AC-DELCO #15-2914) .	92-95	Y (LT5)	1	10243783
	8-C9	9.170	COMPRESSOR, A/C (W/O CLU) (USE W/R12 REFRIGERANT) (SEE GROUP 9.000 "A/C COMPRESSOR ASM" FOR DETAIL ILLUSTRATED VIEW.) (AC-DELCO #15-2684)	92-93	Y (LT5)	1	10157911
4.	8-N4	1.270	INSULATOR, RAD UPR	92-93	Y	LH	10082902
	8-N4	1.270	INSULATOR, RAD UPR	92-93	Y (LT5)	RH	10082903
	8-N4	1.270	INSULATOR, RAD UPR	94-95	Y	LH	10219097
	8-N4	1.270	INSULATOR, RAD UPR	94-95	Y	RH	10219098
5.	8-C16	9.190	CONDENSER, A/C (AC-DELCO #15-6688)	92-93	Y	1	52456459
	8-C16	9.190	CONDENSER, A/C (AC-DELCO #15-6726)	94-95	Y	1	52463706
6.	8-N4	1.270	INSULATOR, RAD LWR	92-93	Y	RH	10082904
	8-N4	1.270	INSULATOR, RAD LWR	92-93	Y	LH	10082905
	8-N4	1.270	INSULATOR, RAD LWR	94-95	Y	LH	10219101
	8-N4	1.270	INSULATOR, RAD LWR	94-95	Y	RH	10219102

© 2000 GENERAL MOTORS SERVICE PARTS OPERATIONS-CHEVROLET-14Y

							1Y09-039
7.		N.S.	VALVE, A/C REFRIG SERV (PART OF 16)				
8.	8-C22	9.222	SEAL KIT, A/C CMPR & CNDSR HOSE MANIF (PART OF 1) (CONTAINS 2 SEALS 5/8") (AC-DELCO #15-2722)	92-95	Y	1	2724577
9.		8.927	O-RING, ID .426X.070 THK, MATERIAL-NEOPRENE. (PART OF 1, 16) (AC-DELCO #15-3614)	92-95		AR	3094214
10.	8-C16	9.196	BRACKET, A/C ACCUM	92-95	Y	1	10158061
11.		8.977	SCREW, HEX W/FL WA TAP 6.3X1.81X16 17- OD AB-POINT PZOR BLK	92-95		AR	11509371
12.	8-C23	9.225	HOSE, A/C ACCUM (INCL 21) (AC-DELCO #15-30077)	92	Y (LT5)	1	10157992
	8-C23	9.225	HOSE, A/C ACCUM (INCL 20) (AC-DELCO #15-30235)	93	Y (LT5)	1	10232060
13.		8.927	SEAL, A/C CMPR PRESS RLF VLV (O RING) (5/PKG) (.35 ID X .072 THK) (PART OF 16) (AC-DELCO #15-30570)	92-95		AR	52450548
14.		N.S.	VALVE, A/C REFRIG SERV (PART OF 16)				
15.	8-C23	9.226	CAP, A/C EVPR TUBE FTG (PART OF 16) (9.177)	92-93	Y	1	52451233
	8-C23	9.226	CAP, A/C EVPR TUBE FTG (PART OF 16) (16.6MM I.S. DIA) (HIGH SIDE CHARGE PORT) (9.177)	94-95	Y	1	52458768
	8-C23	9.226	CAP, A/C EVPR TUBE FTG (PART OF 16) (8MM X 1.0) (LOW SIDE SERVICE PORT) (9.177)	94-95	Y	1	52471377
16.	8-C22	9.220	TUBE, A/C EVPR (INCL 7, 9, 13-15, 17)	92	Y (LT5)	1	10135695
	8-C22	9.220	TUBE, A/C EVPR (INCL 7, 9, 13-15, 17)	93	Y (LT5)	1	10211890
	8-C22	9.220	TUBE, A/C EVPR (INCL 7, 9, 13-15, 17)	94-95	Y (LT5)	1	10219092
17.		8.927	O-RING, ID .301X.070 THK, MATERIAL-NEOPRENE. (PART OF 16) (AC-DELCO #15-3592)	92-95		AR	3093509
18.	8-C27	9.275	SWITCH, A/C CMPR ENG COOL TEMP (2 TERM) (AC-DELCO #15-2351)	92-93	Y	1	14078970
	8-C27	9.275	SWITCH, A/C CMPR ENG COOL TEMP (AC-DELCO #15-2878)	94-95	Y (LT5)	1	10223909
19.	8-C13	9.172	SWITCH, A/C CYCLING (9.275) (AC-DELCO #15-2352)	92-93	Y (LT5)	1	10007057
	8-C13	9.172	SWITCH, A/C CYCLING (9.275) (AC-DELCO #15-2877)	94-95	Y (LT5)	1	10223908
20.		8.927	O-RING, 3/4 TUBE O.D., INSIDE DIA .549 (A), .103 (B), .005 (C), .003 (C) (PART OF 12) (AC-DELCO #15-3985)	92-95		AR	52454646
21.		8.927	O-RING, ID .676X.070 THK, MATERIAL-NEOPRENE. (PART OF 1, 12) (AC-DELCO #15-3615)	92-95		AR	3094216

© 2000 GENERAL MOTORS SERVICE PARTS OPERATIONS-CHEVROLET-14Y

								1Y09-039
22.		8.917	**NUT**, HFH, M8X1.25, 17.9 OD, 738 THK, 13MM HEX, 10, ZF (8.915) (AC-DELCO #1' 514596)	92-95	.....	AR	11514596
23.	8-C16	9.195	**ACCUMULATOR**, A/C (AC-DELCO #15-1587)	93	Y	1	2724681
	8-C16	9.195	**ACCUMULATOR**, A/C (AC-DELCO #15-1624)	94-95	Y	1	2724830
	8-C16	9.195	**ACCUMULATOR**, A/C (DEHYDR) (AC-DELCO #15-1645)	92	Y	1	2724802
24.		8.900	**BOLT**, HFH, M10X1.5X40, 26 THD, 10.9, POR	92-95	.....	AR	14050422
25.		8.950	**CLAMP**, 1/2" STEEL LOOP CUSHIONED (A/C ACCUM HOSE)	92-95	.....	AR	797923

RPO DEFINITIONS
LT5 – ENGINE,5.7L(5.7J),TPI

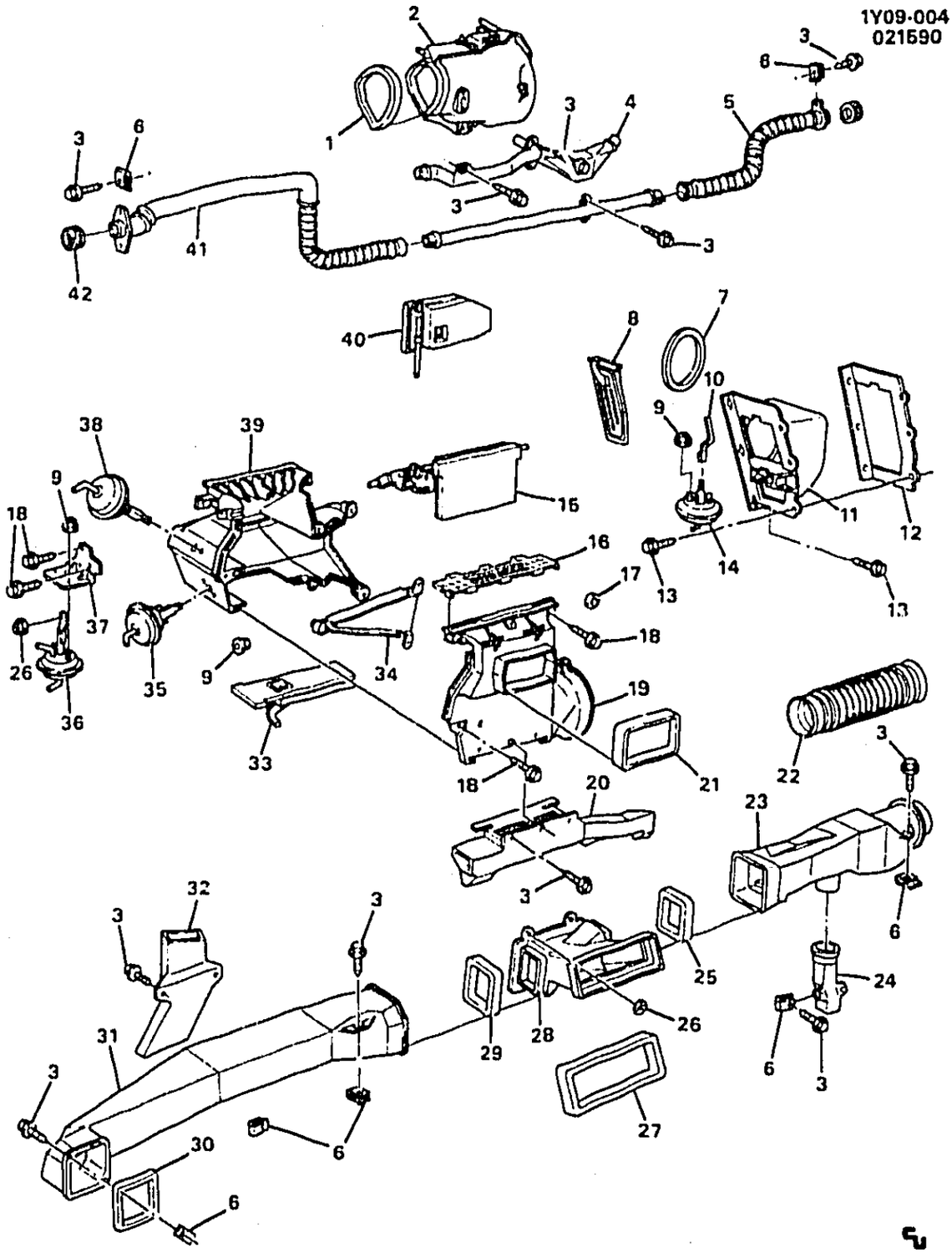

1984–1989 Y A/C AIR DISTRIBUTION SYSTEM

1.	8–C17	9.211	GASKET, EVAP & BLO MOD	3052533
2.		N.S.	CASE, HTR (W/CORE) (SEE GROUP 8.000 "HEATER ASM" FOR DETAIL ILLUSTRATED VIEW.)	
3.		8.977	SCREW, HEX W/FL WA (M4.2X2.25X20)	11508443
4.		DISCON	DUCT, SI WDO DEFG OTLT–CTR (1984)	14052316
		DISCON	DUCT, SI WDO DEFR OTLT–CTR (1985–89)	14081369

© 2000 GENERAL MOTORS SERVICE PARTS OPERATIONS–CHEVROLET–14Y

				1Y09-004
5.		DISCON	DUCT, SI WDO DEFR-RH	14052306
6.		8.921	NUT, U-TYPE (4.2X1.41)	12338121
7.	8-E12	9.782	GASKET, AIR INL ROUND	3052305
8.	8-E12	9.784	VALVE, AIR INL	3052302
9.		8.921	NUT, MET SKW FLG (M5X15) PHOS	11501047
10.	8-E12	9.786	LINK, ADJ	3052308
11.	8-E12	9.782	INLET, AIR (CASE & VLV)	3052339
12.	8-E12	9.782	SEAL, INT MT RR	3052304
13.		8.977	SCREW, HWH TAP (M4.2X1.41X30)	
14.	8-D5	9.280	ACTUATOR, VAC (AC-DELCO #15-71499)	1996718
15.		DISCON	VALVE, DEFR (W/SHF & BRKT)	3052839
16.	8-E11	9.779	GRILLE, DEFR DUCT	14052487
17.	8-D5	9.280	WASHER, FL (7/32X1/2X3/64)	
18.		8.977	SCREW, HEX TAP W/WA (M4.2X1.41X16)	25512604
19.		DISCON	CASE, DUCT RR	3052457
20.		DISCON	OUTLET, FLR CTR	14044437
21.	8-E12	9.786	SEAL, MOD DUCT	14069128
22.	8-C24	9.262	DUCT, OTLT I/P OTR-RH	14052301
23.		DISCON	DUCT, OTR OTLT-RH	14044438
24.		DISCON	OUTLET, FLR AIR-RH	14052309
25.		DISCON	SEAL, OTR OTLT DUCT-RH (TO CTR DUCT) (1984-87)	14069132
		DISCON	SEAL, OTR OTLT DUCT-RH (TO CTR DUCT) (1988-89)	14069132
26.		8.921	NUT, PUSH ON RD (M3.6X11.23) (AC-DELCO #11501937)	11501937
27.		DISCON	SEAL, CTR OTLT	14069129
28.		DISCON	DUCT, CTR OTLT	14044411
29.		DISCON	SEAL, OTR OTLT DUCT-LH (TO CTR DUCT) (1984-87)	14069131
		DISCON	SEAL, OTR OTLT DUCT-LH (TO CTR DUCT) (1988-89)	14069132
30.		DISCON	SEAL, OTR OTLT	14052302
31.		DISCON	DUCT, OTR OTLT-LH (1984-85)	14044412
		DISCON	DUCT, OTR OTLT-LH (1986-89)	14081368
32.		DISCON	OUTLET, FLR-LH (1984-85)	14052317
		DISCON	DUCT, OTLT-LH (1986-89)	14081368
33.	8-E12	9.786	VALVE, DVTR RR	3053243
34.		DISCON	BAFFLE, AIR DISTR	3053200
35.	8-D5	9.280	ACTUATOR, DVTR VLV RR (AC-DELCO #15-71501)	1996720
36.	8-D5	9.280	ACTUATOR, DEFR VLV VAC (1984-85) (AC-DELCO #15-71498)	1996717
	8-D5	9.280	ACTUATOR, DEFR VLV VAC (1986-89) (AC-DELCO #15-71498)	1996717
37.	8-D5	9.280	BRACKET, DEFR VLV ACTR MT	3052706
38.	8-D5	9.280	ACTUATOR, DVTR VLV FRT (AC-DELCO #15-71500)	1996719
39.	8-E12	9.786	CASE, DUCT FRT	3052458
40.	8-E12	9.786	VALVE, DVTR FRT	3053244
41.		DISCON	DUCT, SI WDO DEFR-LH	14052318
42.	8-E11	9.780	SEAL, SI WDO DEFR DUCT (CPS)	14052304
		N.S.	FASTENER, SI WDO DEFG DUCT SEAL	

© 2000 GENERAL MOTORS SERVICE PARTS OPERATIONS-CHEVROLET-14Y

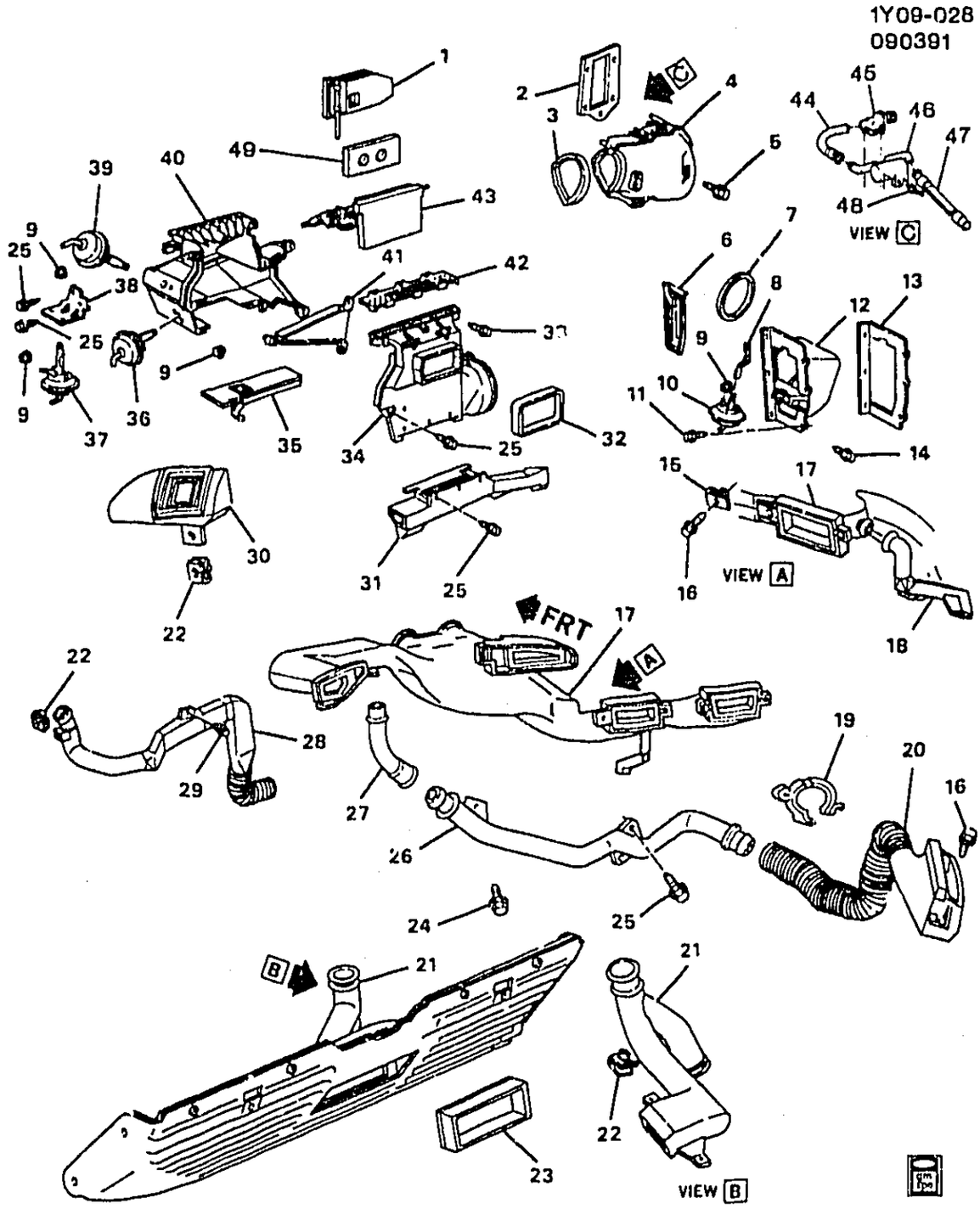

1990 Y A/C AIR DISTRIBUTION SYSTEM
1991 Y A/C AIR DISTRIBUTION SYSTEM WITH LAP COOLER DUCTS(1ST DES)

1.	8-E12	9.786	VALVE, MODE (FRT)	90-91	Y	1	3053244
2.	8-A23	8.845	GASKET, HTR (CASE & CORE) ..	90-91	Y	1	10273603
3.	8-C17	9.211	GASKET, HTR & A/C EVPR & BLO MDL	90-91	Y (FOR MOD APPL & POA SEE MODULE CHT)	1	3052533
4.		N.S.	HEATER, (SEE GROUP 8.000 "HEATER ASM" FOR DETAIL ILLUSTRATED VIEW.)		.....		

© 2000 GENERAL MOTORS SERVICE PARTS OPERATIONS-CHEVROLET-14Y

							1Y09-028
5.	8-A23	8.845	BOLT, HTR (M6.5X1.69X40) (W/WA) (9.211)	90	Y	1	14069200
	8-A23	8.845	BOLT, HTR (M6.5X1.69X40) (W/WA) (9.211)	91	Y	2	14069200
6.	8-E12	9.784	VALVE, AIR INL (9.789)	90-91	Y	1	3052302
7.	8-E12	9.782	GASKET, AIR INL (ROUND)	90-91	Y	1	3052305
8.	8-E12	9.786	LINK, AIR INL VLV	90-91	Y	1	3052308
9.		8.921	NUT, MET SKW FLG PHOS	90-91		AR	11501047
10.	8-D5	9.280	ACTUATOR, AIR INL VLV (AC-DELCO #15-71499)	90-91	Y	1	1996718
11.		8.977	SCREW, HWH TAP M4.2X1.41X16 9.2-OD DRILPT BLK PZOR	90-91		AR	11509135
12.	8-E12	9.782	INLET, AIR (CASE & VLV) (9.786)	90-91	Y	1	3052339
13.	8-E12	9.782	SEAL, AIR INL (3.406) (MT RR)	90-91	Y	1	3052304
14.		8.977	BOLT, HWH M4.2X1.41X25 PZOR TAP 17 OD	90-91		AR	11508233
15.		8.921	NUT, SPG U-SHAPED, M4.2X1.41, 17 LGTH, 13 WIDTH, POR, 1065	90-91		AR	11513715
16.		8.977	BOLT/SCREW ASM M4.2X1.41 #18 HEX HD GM71	90-91		AR	11515303
17.		DISCON	DUCT, AIR DISTR (9.786)	90	Y	1	10100159
		DISCON	DUCT, AIR DISTR (9.786) (W/LAP COOLER DUCTS)	91	Y (1ST DES)	1	10100159
18.		DISCON	DUCT, FLR AIR OTLT	90	Y	1	10100164
		DISCON	DUCT, FLR AIR OTLT (W/LAP COOLER DUCTS, NO COMPARIBLE 2ND DES)	91	Y (1ST DES)	1	10100164
19.		8.965	STRAP-TIE-7"ADJ (W/ROSEBUD FOR .25 DIA HOLE .031-.14 TH)	90-91		AR	3816059
20.	8-E11	9.780	DUCT, SI WDO DEFG OTLT (OTR TO I/P)	90-91	Y	RH	10100177
21.		DISCON	DUCT, LAP AIR OTLT (LWR)	90	Y	LH	10158009
		DISCON	DUCT, LAP AIR OTLT (LWR) (NO COMPARIBLE 2ND DES)	91	Y (1ST DES)	LH	10158009
22.		8.921	NUT, M4.2X1.4, 19.3X213.6.8.9 (AC-DELCO #15650655)	90-91		AR	15650655
23.		DISCON	SEAL, LAP AIR OTLT DUCT (9.262)	90	Y	1	10086125
		DISCON	SEAL, LAP AIR OTLT DUCT (NO COMPARIBLE 2ND DES)	91	Y (1ST DES)	1	10086125
24.		8.977	BOLT-SCREW, M4.2X1.41X13, 5.4 THD, 12.5 OD, GM6172M, GM6138M	90-91		AR	15714277
25.		8.977	SCREW, HEX W/FL WA M4.2X2.25X20 TAP POR	90-91		AR	11508443
26.	8-E11	9.780	DUCT, SI WDO DEFG OTLT	90-91	Y	RH	10239089
	8-E11	9.780	DUCT, SI WDO DEFG OTLT (CTR)	90	Y	1	10100173
	8-E11	9.780	DUCT, SI WDO DEFG OTLT (INNER CTR)	90-91	Y	1	10247780
27.		DISCON	DUCT, LAP AIR OTLT (UPR)	90	Y	RH	10086253
		DISCON	DUCT, LAP AIR OTLT (UPR) (NO COMPARIBLE 2ND DES)	91	Y (1ST DES)	RH	10086253
28.	8-E11	9.780	DUCT, SI WDO DEFG OTLT	90-91	Y	LH	10158004

© 2000 GENERAL MOTORS SERVICE PARTS OPERATIONS-CHEVROLET-14Y

							1Y09-028
29.	8-E11	9.780	RETAINER, SI WDO DEFG OTLT (PUSH-IN) (BLACK) (PUSH-IN) (1.276)	90-91	Y	AR	20664092
30.	8-E11	9.780	DUCT, SI WDO DEFG OTLT	90-91	Y	LH	10100177
31.	8-C24	9.262	OUTLET, FLR AIR	90	Y	1	10086100
	8-C24	9.262	OUTLET, FLR AIR	91	Y	1	10086100
32.	8-E12	9.786	SEAL, AIR DISTR DUCT (9.262)	90-91	Y	1	14069128
33.		8.977	BOLT, SCR HEX W/FLAT WA 12 DIA TYPE AB	90-91		AR	11509374
34.	8-E12	9.786	COVER, AIR DISTR CASE	90-91	Y	1	52455932
35.	8-E12	9.786	VALVE, MODE (RR)	90-91	Y	1	3053243
36.	8-D5	9.280	ACTUATOR, MODE VLV (AC-DELCO #15-71645)	90-91	Y	1	1996770
	8-D5	9.280	ACTUATOR, MODE VLV (PLST) (AC-DELCO #15-71500)	90-91	Y	1	1996719
37.	8-D5	9.280	ACTUATOR, DEFR VLV (AC-DELCO #15-71938)	90-91	Y	1	52461295
38.	8-D5	9.280	BRACKET, MODE VLV ACTR	90-91	Y	1	3052706
39.	8-D5	9.280	ACTUATOR, MODE VLV (AC-DELCO #15-71645)	90-91	Y	1	1996770
	8-D5	9.280	ACTUATOR, MODE VLV (PLST) (AC-DELCO #15-71500)	90-91	Y	1	1996719
40.	8-E12	9.786	CASE, AIR DISTR	90-91	Y	1	3052458
41.	8-E12	9.786	BAFFLE, AIR DISTR	90-91	Y	1	52452585
42.	8-E11	9.779	GRILLE, W/S DEFR NOZ (BLACK)	90-91	Y (C68)	1	10242848
	8-E11	9.779	GRILLE, W/S DEFR NOZ (BLACK)	90-91	Y (C60)	1	10242849
43.	8-E11	9.779	VALVE, DEFR	90-91	Y	1	52452586
44.	8-C27	9.275	HOSE, I/S AIR TEMP SEN ASPIRATOR MUFF	90-91	Y (C68)	1	10086238
45.		DISCON	ASPIRATOR, I/S AIR TEMP SEN (W/O DUCT, CONNECTOR & MUFFLER)	90-91	Y (C68)	1	1625950
	8-C27	9.275	ASPIRATOR, I/S AIR TEMP SEN (W/O DUCT, CONNECTOR & MUFFLER)	90-91	Y (C68)	1	25649706
46.	8-C27	9.275	MUFFLER, I/S AIR TEMP SEN ASPIRATOR	90-91	Y (C68)	1	10086123
47.	8-C27	9.275	DUCT, I/S AIR TEMP SEN ASPIRATOR	90-91	Y (C68)	1	10100178
48.		8.967	RIVET, POP, .188 SHANK DIA, .43 LEN, .625 OD, .188-.25 GRIP, ALUM, BA	90-91		AR	9439559
49.	8-A28	8.854	SEAL, HTR (9.211)	90-91	Y	2	3052253

RPO DEFINITIONS
C60 – AIR CONDITIONER,FRONT,MANUAL CONTROLS
C68 – AIR CONDITIONER,FRONT,AUTOMATIC,ELECTRONIC CONTROLS

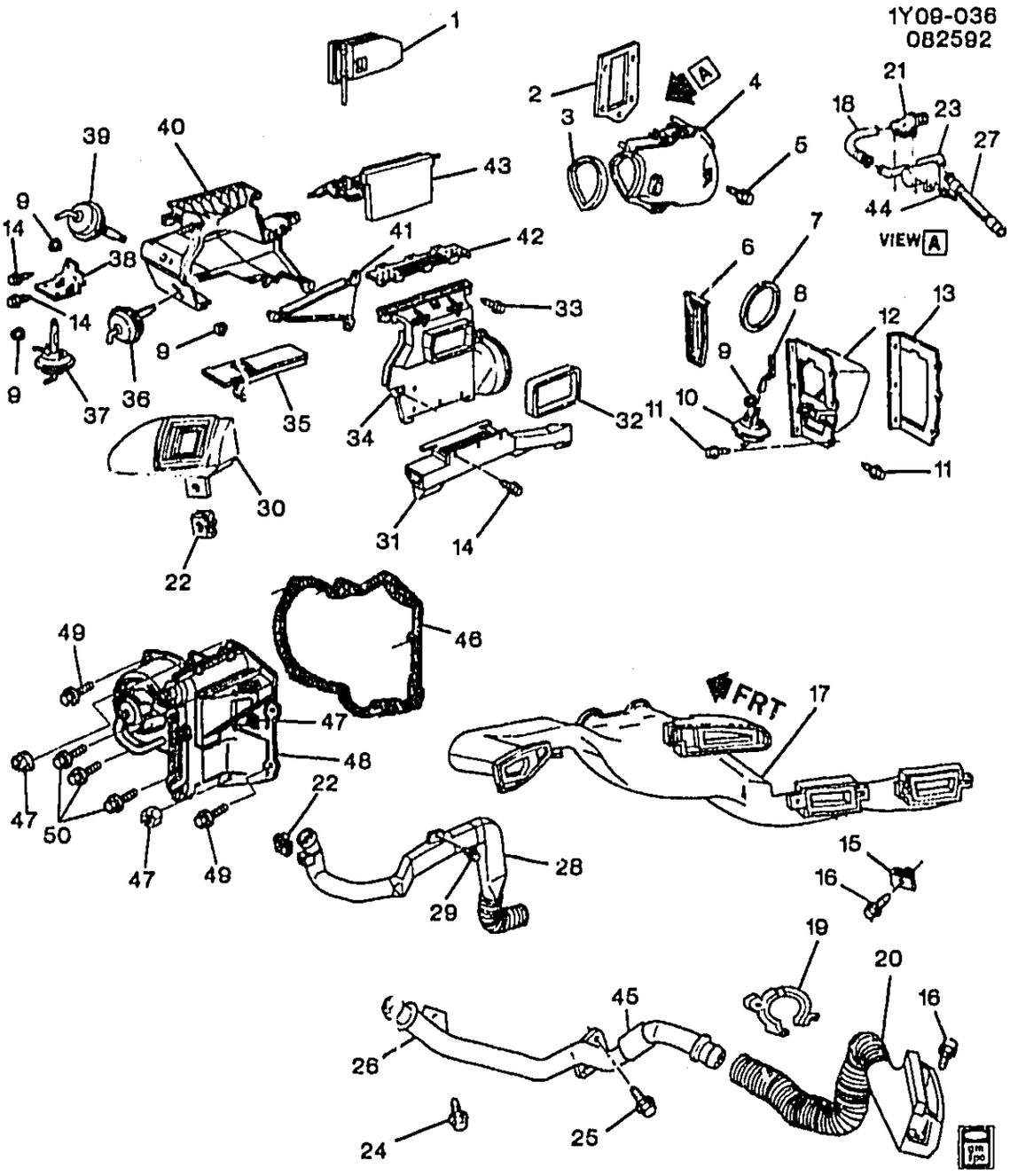

1991 Y A/C AIR DISTRIBUTION SYSTEM WITHOUT LAP COOLER DUCTS(2ND DES)

1.	8-E12	9.786	VALVE, MODE (FRT)	91	Y	1	3053244
2.	8-A23	8.845	GASKET, HTR (CASE & CORE) ..	91	Y	1	10273603
3.	8-C17	9.211	GASKET, HTR & A/C EVPR & BLO MDL	91	Y (FOR MOD APPL & POA SEE MODULE CHT)	1	3052533
4.		N.S.	HEATER, (SEE GROUP 8.000 "HEATER ASM" FOR DETAIL ILLUSTRATED VIEW.)		.....		
5.	8-A23	8.845	BOLT, HTR (M6.5X1.69X40) (W/WA) (9.211)	91	Y	2	14069200
6.	8-E12	9.784	VALVE, AIR INL (9.789)	91	Y	1	3052302
7.	8-E12	9.782	GASKET, AIR INL (ROUND)	91	Y	1	3052305

© 2000 GENERAL MOTORS SERVICE PARTS OPERATIONS-CHEVROLET-14Y

							1Y09-036
8.	8-E12	9.786	LINK, AIR INL VLV	91	Y	1	3052308
9.		8.921	NUT, MET SKW FLG PHOS	91		AR	11501047
10.	8-D5	9.280	ACTUATOR, AIR INL VLV (AC-DELCO #15-71499)	91	Y	1	1996718
11.		8.977	BOLT, HWH M4.2X1.41X25 PZOR TAP 17 OD (AIR INL)	91		AR	11508233
12.	8-E12	9.782	INLET, AIR (CASE & VLV) (9.786)	91	Y	1	3052339
13.	8-E12	9.782	SEAL, AIR INL (3.406) (MT RR)	91	Y	1	3052304
14.		8.977	SCREW, HEX W/FL WA M4.2X2.25X20 TAP POR	91		AR	11508443
15.		8.921	NUT, SPG U-SHAPED, M4.2X1.41, 17 LGTH, 13 WIDTH, POR, 1065	91		AR	11513715
16.		8.977	BOLT/SCREW ASM M4.2X1.41 #18 HEX HD GM71 (SI WDO DEFG OTLT DUCT)	91		AR	11515303
		8.977	BOLT/SCREW ASM M4.2X1.41 #18 HEX HD GM71 (I/P OTR AIR OTL DUCT)	91		AR	11515303
17.	8-E12	9.786	DUCT, AIR DISTR (NO LAP COOLER DUCTS)	91	Y (2ND DES)	1	10157937
18.	8-C27	9.275	HOSE, I/S AIR TEMP SEN ASPIRATOR MUFF	91	Y (C68)	1	10086238
19.		8.965	STRAP-TIE-7"ADJ (W/ROSEBUD FOR .25 DIA HOLE .031-.14 TH) (SI WDO DEFG OTLT DUCT)	91		1	3816659
20.	8-E11	9.780	DUCT, SI WDO DEFG OTLT (OTR TO I/P)	91	Y	RH	10100177
21.		DISCON	ASPIRATOR, I/S AIR TEMP SEN (W/O DUCT, CONNECTOR & MUFFLER)	91	Y (C68)	1	1625950
	8-C27	9.275	ASPIRATOR, I/S AIR TEMP SEN (W/O DUCT, CONNECTOR & MUFFLER)	91	Y (C68)	1	25649706
22.		8.921	NUT, U TYPE, MULTI THD, PREV TORQ, M4.2X1.41TAP, 8.1REACH, 0.65-3.80 PNLS 1065 PZOR (SI WDO DEFG OTLT DUCT) (AC-DELCO #11513599)	91		AR	11513599
23.	8-C27	9.275	MUFFLER, I/S AIR TEMP SEN ASPIRATOR	91	Y (C68)	1	10086123
24.		8.977	BOLT, SCR HEX W/FLAT WA 12 DIA TYPE AB (SI WDO DEFG OTLT DUCT)	91		AR	11509374
25.		8.977	BOLT-HFH, M4.2X1.4X13, 11.6THD, 8.5OD, GM6010-M, POR, TAP (SI WDO DEFG OTLT DUCT) (AC-DELCO #11508256)	91		AR	11508256
26.	8-E11	9.780	DUCT, SI WDO DEFG OTLT (INNER CTR) (INCL 45)	91	Y	RH	10239089
	8-E11	9.780	DUCT, SI WDO DEFG OTLT (INNER CTR) (INNER CTR) (INCL 45)	91	Y	1	10247780
27.	8-C27	9.275	DUCT, I/S AIR TEMP SEN ASPIRATOR	91	Y (C68)	1	10100178
28.	8-E11	9.780	DUCT, SI WDO DEFG OTLT	91	Y	LH	10158004

© 2000 GENERAL MOTORS SERVICE PARTS OPERATIONS-CHEVROLET-14Y

							1Y09-036
29.	8-E11	9.780	RETAINER, SI WDO DEFG OTLT (PUSH-IN) (BLACK) (PUSH-IN) (1.276)	91	Y	AR	20664092
30.	8-E11	9.780	DUCT, SI WDO DEFG OTLT (OTR TO I/P)	91	Y	LH	10100177
31.	8-C24	9.262	OUTLET, FLR AIR	91	Y	1	10086100
32.	8-E12	9.786	SEAL, AIR DISTR DUCT (9.262)	91	Y	1	14069128
33.		8.977	BOLT, SCR HEX W/FLAT WA 12 DIA TYPE AB (W/S DEFR NOZ & AIR DISTR)	91		AR	11509374
34.	8-E12	9.786	COVER, AIR DISTR CASE	91	Y	1	52455932
35.	8-E12	9.786	VALVE, MODE (RR)	91	Y	1	3053243
36.	8-D5	9.280	ACTUATOR, MODE VLV (AC-DELCO #15-71645)	91	Y	1	1996770
	8-D5	9.280	ACTUATOR, MODE VLV (PLST) (AC-DELCO #15-71500)	91	Y	1	1996719
37.	8-D5	9.280	ACTUATOR, DEFR VLV (AC-DELCO #15-71938)	91	Y	1	52461205
38.	8-D5	9.280	BRACKET, MODE VLV ACTR	91	Y	1	3052706
39.	8-D5	9.280	ACTUATOR, MODE VLV (AC-DELCO #15-71645)	91	Y	1	1996770
	8-D5	9.280	ACTUATOR, MODE VLV (PLST) (AC-DELCO #15-71500)	91	Y	1	1996719
40.	8-E12	9.786	CASE, AIR DISTR	91	Y	1	3052458
41.	8-E12	9.786	BAFFLE, AIR DISTR	91	Y	1	52452585
42.	8-E11	9.779	GRILLE, W/S DEFR NOZ (BLACK)	91	Y (C68)	1	10242848
	8-E11	9.779	GRILLE, W/S DEFR NOZ (BLACK)	91	Y (C60)	1	10242849
43.	8-E11	9.779	VALVE, DEFR	91	Y	1	52452586
44.		8.967	RIVET, POP, .188 SHANK DIA, .43 LEN, .625 OD, .188-.25 GRIP, ALUM, BA	91		AR	9439[illegible]59
45.	8-E11	9.780	INSULATOR, SI WDO DEFG OTLT DUCT (PART OF 26) (9.260)	91	Y	2	3999572
46.	8-C22	9.216	GASKET, BLO	91	Y	1	3052701
47.		8.917	NUT, HEX W/CON WA, 24 OD, M6X1X5.6, 9M, PZOR (A/C EVAP & BLO MDL)	91		3	11514275
48.		N.S.	MODULE, A/C EVPR & BLO (SEE GROUP 9.000 "A/C EVAPORATOR & BLOWER MODULE ASM" FOR DETAIL ILLUSTRATED VIEW.)				
49.		8.977	SCREW, HWH TAP M6.3X1.81X30 12.5-OD AB PT PZOR (A/C EVAP & BLO MDL)	91		3	11508905
50.	8-C17	9.211	BOLT, A/C EVPR & BLO MDL (M6.5X1.69X40) (W/WA)	91	Y	2	14069200

RPO DEFINITIONS
C60 – AIR CONDITIONER,FRONT,MANUAL CONTROLS
C68 – AIR CONDITIONER,FRONT,AUTOMATIC,ELECTRONIC CONTROLS

© 2000 GENERAL MOTORS SERVICE PARTS OPERATIONS-CHEVROLET-14Y

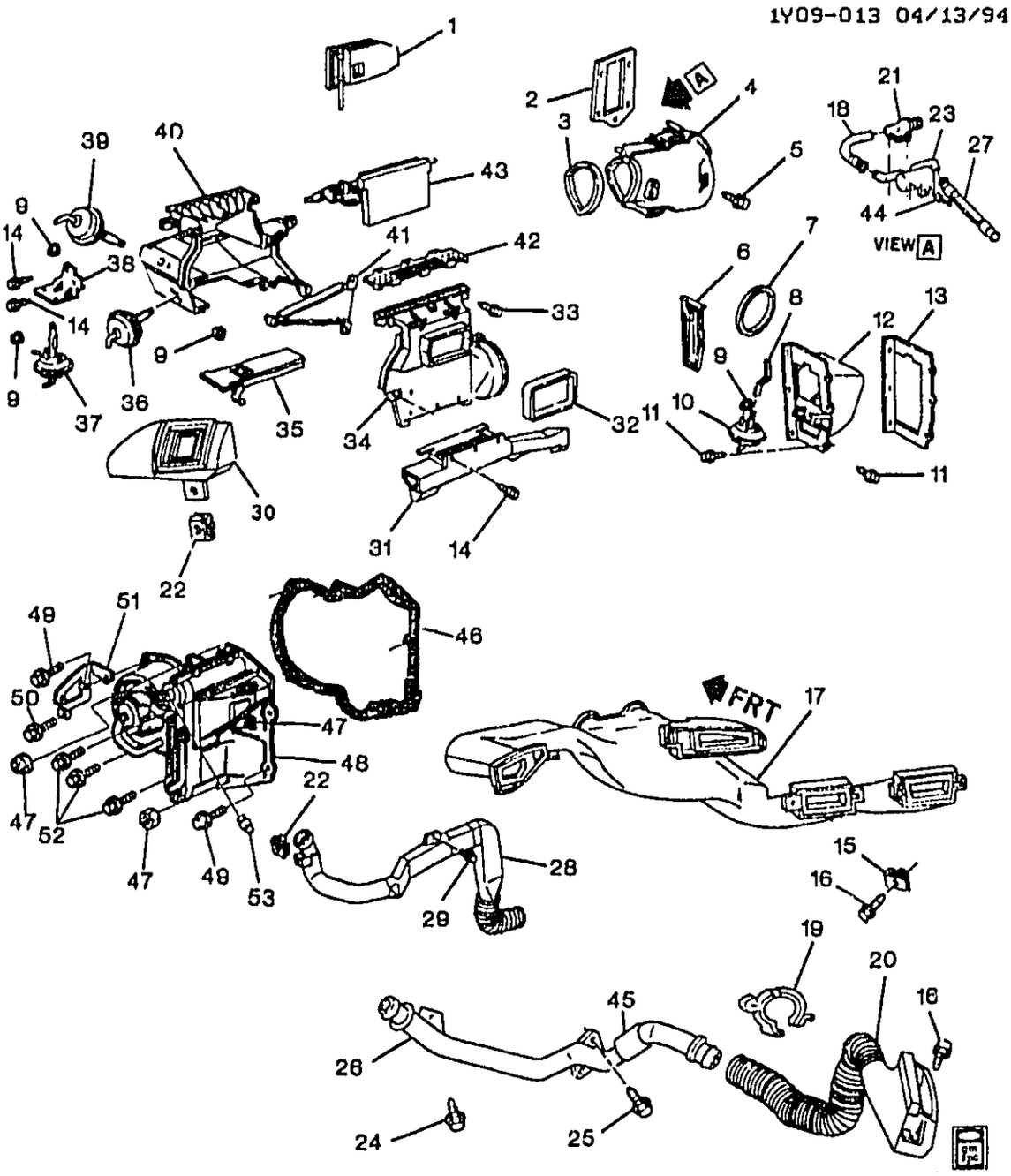

1992-1996 Y A/C AIR DISTRIBUTION SYSTEM

1.	8-E12	9.766	VALVE, MODE (FRT)	92-96	Y		3053244
2.	8-A23	8.845	GASKET, HTR (CASE & CORE) ..	92-96	"	1	10273603
3.	8-A23	8.845	GASKET, HTR (CASE & CORE) ..	92-96	Y	1	10273603
4.		N.S.	HEATER, (SEE GROUP 8.000 "HEATER ASM" FOR DETAIL ILLUSTRATED VIEW.)		.....		
5.	8-A23	8.845	BOLT, HTR (M6.5X1.69X40) (W/WA) (9.211)	92-96	Y	2	14069200
6.	8-E12	9.784	VALVE, AIR INL (9.789)	92-96	Y	1	3052302
7.	8-E12	9.782	GASKET, AIR INL (ROUND)	92-96	Y	1	3052305
8.	8-E12	9.786	LINK, AIR INL VLV	92-96	Y	1	3052308
9.		8.921	NUT, MET SKW FLG PHOS	92-96	.....	AR	11501047

© 2000 GENERAL MOTORS SERVICE PARTS OPERATIONS-CHEVROLET-14Y

							1Y09-013
10.	8-D5	9.280	**ACTUATOR**, AIR INL VLV (AC-DELCO #15-71499)	92-96	Y	1	1996718
11.		8.977	**BOLT**, HWH M4.2X1.41X25 PZOR TAP 17 OD (AIR INL)	92-96	.....	AR	11508233
12.	8-E12	9.782	**INLET**, AIR (CASE & VLV) (9.786)	92-96	Y	1	3052339
13.	8-E12	9.782	**SEAL**, AIR INL (3.406) (MT RR) ..	92-96	Y	1	3052304
14.		8.977	**SCREW**, HEX W/FL WA M4.2X2.25X20 TAP POR	92-96	.....	AR	11508443
15.		8.921	**NUT**, SPG U-SHAPED, M4.2X1.41, 17 LGTH, 13 WIDTH, POR, 1065	92-96	.....	AR	11513715
16.		8.977	**BOLT/SCREW ASM M4.2X1.41** #18 HEX HD GM71 (SI WDO DEFG OTLT DUCT)	92-96	.....	AR	11515303
		8.977	**BOLT/SCREW ASM M4.2X1.41** #18 HEX HD GM71 (I/P OTR AIR OTL DUCT)	92-96	.....	AR	11515303
17.	8-E12	9.786	**DUCT**, AIR DISTR (NO LAP COOLER DUCTS)	92-96	Y	1	10157937
18.	8-C27	9.275	**HOSE**, I/S AIR TEMP SEN ASPIRATOR MUFF	92-96	Y (C68)	1	10086238
19.		8.965	**STRAP-TIE-7"ADJ** (W/ROSEBUD FOR .25 DIA HOLE .031-.14 TH) (SI WDO DEFG OTLT DUCT)	92-96	.....	1	3816659
20.	8-E11	9.780	**DUCT**, SI WDO DEFG OTLT	92-96	Y	RH	10239089
21.		DISCON	**ASPIRATOR**, I/S AIR TEMP SEN (W/O DUCT, CONNECTOR & MUFFLER)	92-95	Y (C68)	1	1625950
	8-C27	9.275	**ASPIRATOR**, I/S AIR TEMP SEN (W/O DUCT, CONNECTOR & MUFFLER)	92-96	Y (C68)	1	25649706
22.		8.921	**NUT**, U TYPE, MULTI THD, PREV TORQ, M4.2X1.41TAP, 8.1REACH, 0.65-3.80 PNLS 1065 PZOR (SI WDO DEFG OTLT DUCT) (AC-DELCO #11513599)	92-96	.....	AR	11513599
23.	8-C27	9.275	**MUFFLER**, I/S AIR TEMP SEN ASPIRATOR	92-96	Y (C68)	1	10086123
24.		8.977	**BOLT**, SCR HEX W/FLAT WA 12 DIA TYPE AB (SI WDO DEFG OTLT DUCT)	92-96	.....	AR	11509374
25.		8.977	**BOLT-HFH**, M4.2X1.4X13, 11.6THD, 8.5OD, GM6010-M, POR, TAP (SI WDO DEFG OTLT DUCT) (AC-DELCO #11508256)	92-96	.....	AR	11508256
26.	8-E11	9.780	**DUCT**, SI WDO DEFG OTLT (INNER CTR) (INCL 45)	92-96	.....		10247780
27.	8-C27	9.275	**DUCT**, I/S AIR TEMP SEN ASPIRATOR	92-96	Y (C68)	1	101001/8
28.	8-E11	9.780	**DUCT**, SI WDO DEFG OTLT	92-96	Y	LH	10158004
29.	8-E11	9.780	**RETAINER**, SI WDO DEFG OTLT (PUSH-IN) (BLACK) (PUSH-IN) (1.276)	92-96	Y	AR	20664092
30.	8-E11	9.780	**DUCT**, SI WDO DEFG OTLT (OTR TO I/P)	92-96	Y	LH	10100177
31.	8-C24	9.262	**OUTLET**, FLR AIR	92-96	Y	1	10086100
32.	8-E12	9.786	**SEAL**, AIR DISTR DUCT (9.262) ..	92-96	Y	1	14069128

© 2000 GENERAL MOTORS SERVICE PARTS OPERATIONS-CHEVROLET-14Y

							1Y09-013
33.		8.977	BOLT, SCR HEX W/FLAT WA 12 DIA TYPE AB (W/S DEFR NOZ & AIR DISTR)	92-96		AR	11509374
34.	8-E12	9.786	COVER, AIR DISTR CASE	92-96	Y	1	52455932
35.	8-E12	9.786	VALVE, MODE (RR)	92-96	Y	1	3053243
36.	8-D5	9.280	ACTUATOR, MODE VLV (AC-DELCO #15-71645)	92-96	Y	1	1996770
	8-D5	9.280	ACTUATOR, MODE VLV (PLST) (AC-DELCO #15-71500)	92-96	Y	1	1996719
37.	8-D5	9.280	ACTUATOR, DEFR VLV (AC-DELCO #15-71938)	92-96	Y	1	52461295
38.	8-D5	9.280	BRACKET, MODE VLV ACTR	92-96		1	3052706
39.	8-D5	9.280	ACTUATOR, MODE VLV (AC-DELCO #15-71645)	92-96		1	1996770
	8-D5	9.280	ACTUATOR, MODE VLV (PLST) (AC-DELCO #15-71500)	92-96	Y	1	1996719
40.	8-E12	9.786	CASE, AIR DISTR	92-96	Y	1	3052458
41.	8-E12	9.786	BAFFLE, AIR DISTR	92-96	Y	1	52452585
42.	8-E11	9.779	GRILLE, W/S DEFR NOZ (BLACK)	92-96	Y (C68)	1	10242848
	8-E11	9.779	GRILLE, W/S DEFR NOZ (BLACK)	92-96	Y (C60)	1	10242849
43.	8-E11	9.779	VALVE, DEFR	92-96	Y	1	52452586
44.		8.967	RIVET, POP, .188 SHANK DIA, .43 LEN, .625 OD, .188-.25 GRIP, ALUM, BA	92-96		AR	9439559
45.	8-E11	9.780	INSULATOR, SI WDO DEFG OTLT DUCT (PART OF 26) (9.260)	92-96	Y	2	3999572
46.	8-C22	9.216	GASKET, BLO	92-96	Y	1	3052701
47.		8.917	NUT, HEX W/CON WA, 24 OD, M6X1X5.6, 9M, PZOR (A/C EVAP & BLO MDL)	92-96		3	11514275
48.		N.S.	MODULE, A/C EVPR & BLO (SEE GROUP 9.000 "A/C EVAPORATOR & BLOWER MODULE ASM" FOR DETAIL ILLUSTRATED VIEW.)				
49.		8.977	SCREW, HWH TAP M6.3X1.81X30 12.5-OD AB PT PZOR (A/C EVAP & BLO MDL)	92-96		3	11508905
50.		8.977	BOLT, HWH, 4.2X2.5X20, 12.5-OD, AB PT, 6010M, BZ (THROT POSN SEN INTERFACE MDL BRKT)	92-96		1	10272737
51.	8-N21	3.339	BRACKET, THROT POSN SEN INTERFACE MDL	92-94	Y	1	10143541
	8-N21	3.339	BRACKET, THROT POSN SEN INTERFACE MDL	95	Y (LT5)	1	10143541
52.	8-C17	9.211	BOLT, A/C EVPR & BLO MDL (M6.5X1.69X40) (W/WA)	92-96	Y	2	14069200
53.	8-C27	9.275	SWITCH, A/C CYCLING & FAN CONT A/C REFRIG PRESS (AC-DELCO #15-5427)	92-93	Y	1	52461142
	8-C27	9.275	SWITCH, A/C CYCLING & FAN CONT A/C REFRIG PRESS (AC-DELCO #15-5705)	94-96	Y	1	52468323

RPO DEFINITIONS
C60 – AIR CONDITIONER,FRONT,MANUAL CONTROLS

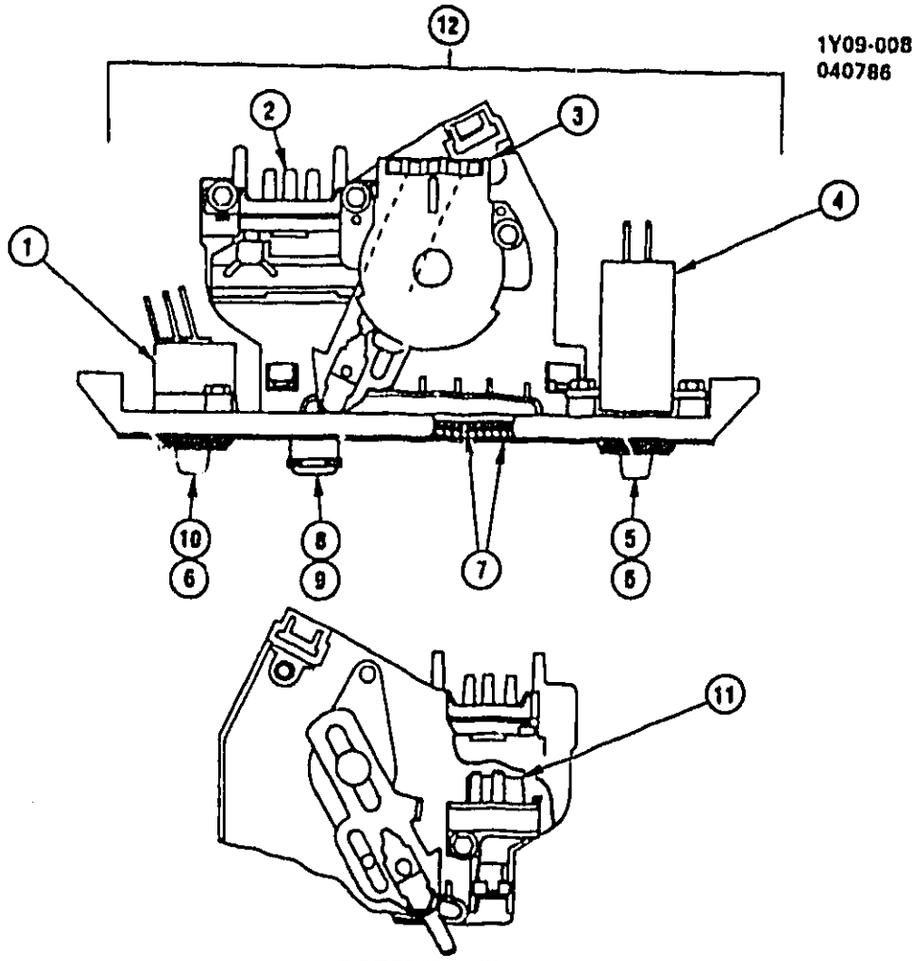

1Y09-008

1984-1989 Y A/C & HEATER CONTROL ASM (C60)

1.	8-C27	9.275	SWITCH, BLO (PART OF 12) (AC-DELCO #15-71226)	16022463
2.		DISCON	VALVE, VAC (1984) (PART OF 12)	16037739
	8-D5	9.280	VALVE, VAC (1985-89) (PART OF 12) (AC-DELCO #15-71421)	16040637
3.	8-C27	9.275	SWITCH, SEL ROTARY (PART OF 12) (AC-DELCO #15-71152)	16018267
4.	8-E11	9.778	SWITCH, ELEC DEFG (1984-89) (PART OF 12) (AC-DELCO #D7001)	16022464
5.	8-E11	9.778	KNOB, ELEC DEFG SW (1984-86) (PART OF 12)	1226279
	8-N24	10.186	KNOB, SIDE MIR (W/SPR) (1987-89) (PART OF 12)	1226279
6.	8-C27	9.275	SPRING, BLO & DEFG KNOB (8.852) (PART OF 12)	16014396
7.		DISCON	DIAL KIT (1984) (PART OF 12) (AC-DELCO #15-71222)	1226426
		DISCON	DIAL KIT (1985-87 EXC C49) (1988 W/C49, DL8) (PART OF 12)	1226939
		DISCON	DIAL KIT (1985-88 W/C49) (1989) (PART OF 12)	1226940
		DISCON	DIAL PKG	1228317
8.		DISCON	KNOB, TEMP & SEL (1984) (PART OF 12)	1228397
		DISCON	KNOB, TEMP & SEL (1985-86) (PART OF 12)	16062655
		DISCON	KNOB, TEMP & SEL (1987-89) (PART OF 12)	16062655
9.		DISCON	SPRING, KNOB RET (TEMP & SEL) (1984) (PART OF 12)	16036387
10.	8-C27	9.275	KNOB, BLO SW (1984-85) (PART OF 12)	1228276
	8-C27	9.275	KNOB, BLO SW (W/SPR) (1986-89) (PART OF 12)	1228276
11.	8-E13	9.795	VALVE, HTR WAT (PART OF 12) (AC-DELCO #15-71390)	16040986

© 2000 GENERAL MOTORS SERVICE PARTS OPERATIONS-CHEVROLET-14Y

				1Y09-008
12.	8-C25	9.273	CONTROL (1984-88 W/C49) (1989) (INCL 1-8, 10, 11) (AC-DELCO #15-71414)	16040111
	8-C25	9.273	CONTROL (1987-89 W/DL8) (INCL 1-8, 10, 11) (AC-DELCO #15-71576)	16068761
	8-C25	9.273	CONTROL (1984-88 EXC C49) (INCL 1-3, 6-8, 10, 11) (AC-DELCO #15-71413)	16040101

RPO DEFINITIONS

C60 – AIR CONDITIONER,FRONT,MANUAL CONTROLS

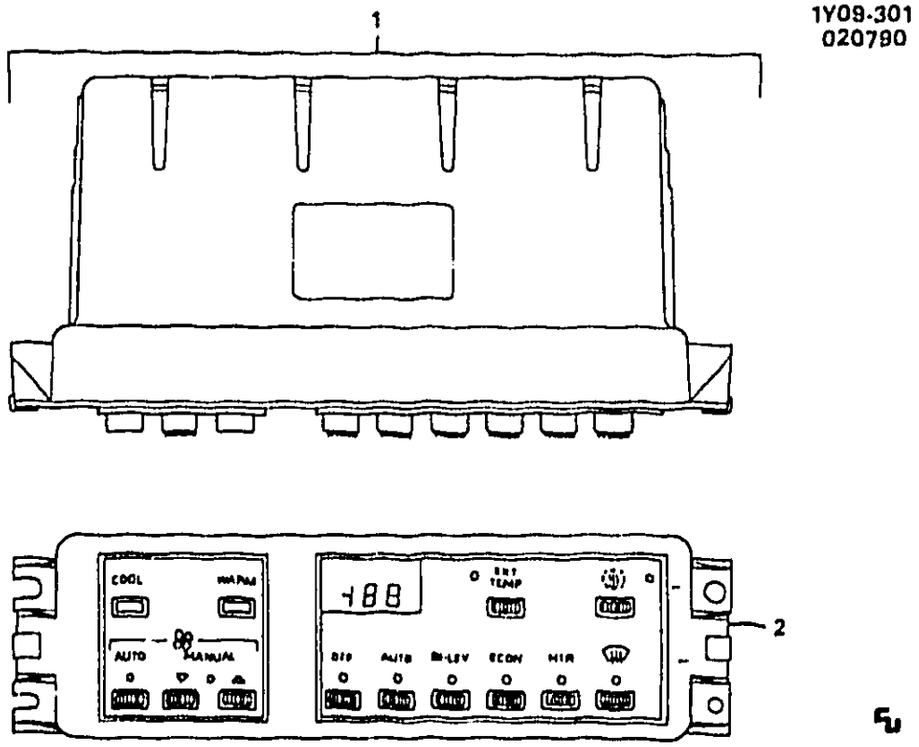

1Y09–301

1986–1989 Y A/C & HEATER CONTROL ASM (C68)

1.	8–C25	9.273	**CONTROL** (REMAN) (1987–88 W/C49) (1ST DESIGN 1988 – IDENTIFIED BY 16056491 STAMPED ON CONTROL.)	1228824
	8–C25	9.273	**CONTROL** (REMAN) (W/C49) (2ND DESIGN 1988 – IDENTIFIED BY 16087191 STAMPED ON CONTROL.)	1228824
		DISCON	**CONTROL** (REMAN) (1986–88 EXC C49) (1ST DESIGN 1988 – IDENTIFIED BY 16056501 STAMPED ON CONTROL.)	1228825
		DISCON	**CONTROL** (REMAN) (1988 EXC C49) (2ND DESIGN 1988 – IDENTIFIED BY 16087201 STAMPED ON CONTROL.)	1228825
	8–C25	9.273	**CONTROL** (REMAN) (1987–89 W/DL8)	1228095
	8–C25	9.273	**CONTROL** (REMAN) (1987–89 EXC DL8)	1228094
	8–D4	9.279	**LAMP**, DIAL (1987–89) (AC–DELCO #7895189)	7895189
2.		DISCON	**APPLIQUE**, MODE (1986–88 W/C49) (1989)	16047586
		DISCON	**APPLIQUE**, MODE (1986–88 EXC C49, DL8)	16047560
		DISCON	**APPLIQUE**, MODE (1987–88 W DL8)	16068843
		DISCON	**APPLIQUE**, FAN (1987–89)	16047592

RPO DEFINITIONS
C68 – AIR CONDITIONER,FRONT,AUTOMATIC,ELECTRONIC CONTROLS

MICROFICHE INDEX

GROUPS 8.000 THRU 9.000

FICHE 8 OF 11

GROUP	DESCRIPTION	STARTING GRID LOCATION PARTS	ILLUSTRATIONS
–	GENERAL INFORMATION	1–A2	1–G2
–	ALPHABETICAL INDEX	1–B13	N.A.
8.000	FRONT END SHEET METAL – HEATER	8–A2	8–F2
9.000	BODY MOUNTING – AIR CONDITIONING – INSTRUMENT CLUSTER	8–C2	8–I2
–	OUT OF FICHE CALLS	N.A.	8–M27

8–K1

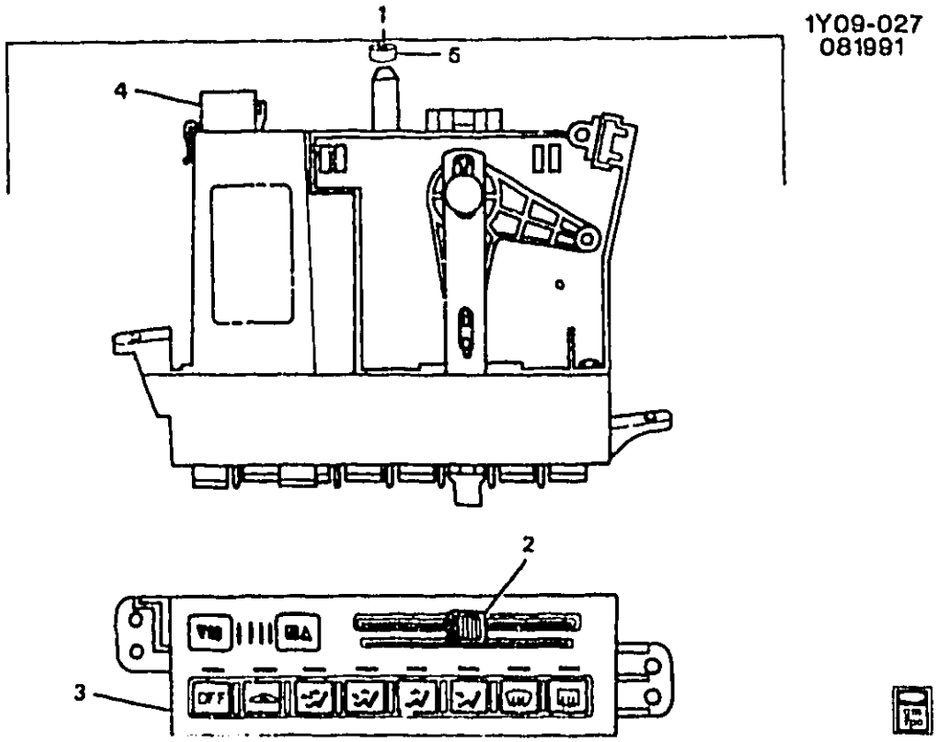

1Y09-027

1990-1996 Y A/C & HEATER CONTROL ASM (C60)

1.	8-C25	9.273	CONTROL, HTR & A/C (INCL 2-4) (CPS) (AC-DELCO #15-71667)	90-91	Y07 (C60)	1	16085521
	8-C25	9.273	CONTROL, HTR & A/C (INCL 2-4) (CPS) (AC-DELCO #15-71662)	90-91	Y67 (C60, DL8) (EXC CC2)	1	16074571
	8-C25	9.273	CONTROL, HTR & A/C (INCL 2-4) (CPS) (AC-DELCO #15-71667)	90-91	Y67 (C60, CC2)	1	16085521
	8-C25	9.273	CONTROL, HTR & A/C (INCL 2-4) (CPS) (AC-DELCO #15-71929)	92-93	Y07 (C60)	1	16162371
	8-C25	9.273	CONTROL, HTR & A/C (INCL 2-4) (CPS) (AC-DELCO #15-71928)	92-93	Y67 (C60, DL8) (EXC CC2)	1	16162361
	8-C25	9.273	CONTROL, HTR & A/C (INCL 2-4) (CPS) (AC-DELCO #15-71929)	92-93	Y67 (CC2, C60)	1	16162371
	8-C25	9.273	CONTROL, HTR & A/C (INCL 2-4) (CPS) (AC-DELCO #15-72065)	94-96	Y (C60)	1	16170891
	8-D2	9.276	SOCKET, HTR & A/C CONT LP (BI PIN) (9.279) (AC-DELCO #16050935)	92-95	Y (C60)	4	16050935
	8-D4	9.279	SOCKET, HTR & A/C CONT LP (W/HARN) (9.276) (AC-DELCO #16071182)	90-91	Y (C60)	1	16071182
	8-D4	9.279	BULB, HTR & A/C CONT LP	92-96	Y (C60)	1	16134288
	8-D4	9.279	BULB, HTR & A/C CONT LP (NEO WGE) (9.276) (AC-DELCO #16051463)	95-96	Y (C68)	4	16051463

© 2000 GENERAL MOTORS SERVICE PARTS OPERATIONS-CHEVROLET-14Y

							1Y09-027
	8-D4	9.279	BULB, HTR & A/C CONT LP (KEYBOARD) (NEO WGE) (9.276) (AC-DELCO #16051463)	92-95	Y (C68)	3	16051463
	8-D4	9.279	BULB, HTR & A/C CONT LP (MAIN BD) (NEO WGE) (NEO WEDGE) (9.276) (AC-DELCO #16206595)	92-96	Y (C68)	1	16206595
	8-D4	9.279	BULB, HTR & A/C CONT LP (TWIST SOCKET) (9.276) (AC-DELCO #16057072)	92	Y (C68)	1	16057072
		DISCON	FILTER, HTR & A/C CONT LGT ..	90-91	Y (C60)	1	16129802
		N.S.	FILTER, HTR & A/C CONT LGT ..	92-95	.....		
	8-C25	9.273	CONTROL, HTR & A/C (INCL 2-4) (CPS) (AC-DELCO #15-71667)	90-91	Y67 (C60, DC7, DC8) (EXC CC2) (EXPORT) ..	1	16085521
	8-C25	9.273	CONTROL, HTR & A/C (INCL 2-4) (CPS) (AC-DELCO #15-71929)	92	Y67 (C60, DC8) (EXC CC2) (EXPORT)	1	16162371
2.	8-D4	9.278	KNOB, HTR & A/C CONT TEMP (PART OF 1)	90-93	Y (C60)	1	161342[illegible]
		DISCON	KNOB, HTR CONT TEMP (PART OF 1)	92-93	Y (C60)	1	16162468
		N.S.	KNOB, HTR & A/C CONT TEMP (PART OF 1)	94-95	.....		
3.		DISCON	DIAL, HTR & A/C CONT (PART OF 1)	90-91	Y (C60)	1	16125155
	8-D4	9.279	DIAL, HTR & A/C CONT (PART OF 1)	92-96	Y (C60)	1	16162393
4.	8-C27	9.275	SWITCH, HTR & A/C CONT BLO (PART OF 1) (AC-DELCO #15-71587)	90-96	Y (C60)	1	16064921
5.	8-C25	9.273	INSULATOR, HTR & A/C CONT ..	90-96	Y	1	10158011

RPO DEFINITIONS

CC2 – ROOF,AUXILIARY
C60 – AIR CONDITIONER,FRONT,MANUAL CONTROLS
C68 – AIR CONDITIONER,FRONT,AUTOMATIC,ELECTRONIC CONTROLS
DC7 – MIRROR,OUTSIDE,RH AND LH,REMOTE CONTROL,ELECTRIC,BREAKAWAY(PAINTED)(50 INCH FIELD OF VIEW)
DC8 – MIRROR,OUTSIDE,RH AND LH REMOTE CONTROL ELECTRIC,BREAKAWAY(PAINTED)(55 INCH FIELD OF VIEW)
DL8 – MIRROR,OUTSIDE,RH AND LH REMOTE CONTROL,ELECTRIC,DEFOG

© 2000 GENERAL MOTORS SERVICE PARTS OPERATIONS-CHEVROLET-14Y

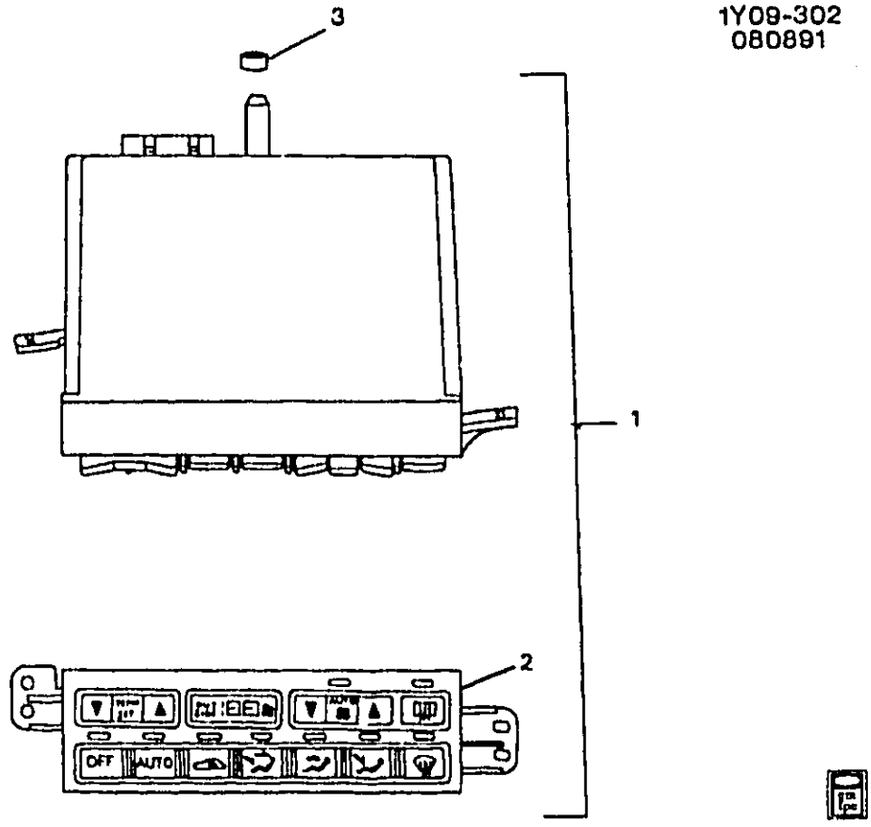

1Y09-302

1990–1996 Y A/C & HEATER CONTROL ASM (C68)

1.	8–C25	9.273	CONTROL, HTR & A/C (REMAN)	90–91	Y07 (C68)	1	16152503
	8–C25	9.273	CONTROL, HTR & A/C (REMAN)	90–91	Y67 (C68, DL8) (EXC CC2)	1	16152502
	8–C25	9.273	CONTROL, HTR & A/C (REMAN)	90–91	Y67 (C68, CC2)	1	16152503
	8–C25	9.273	CONTROL, HTR & A/C (REMAN)	92–93	Y07 (C68)	1	16162118
	8–C25	9.273	CONTROL, HTR & A/C (REMAN)	92–93	Y67 (CC2, C68)	1	16162118
	8–C25	9.273	CONTROL, HTR & A/C (REMAN)	92–93	Y67 (C68, DL8) (EXC CC2)	1	16162120
	8–C25	9.273	CONTROL, HTR & A/C (REMAN) (AC–DELCO #15–72077)	94–96	Y (C68)	1	16192608
	8–D4	9.279	BULB, HTR & A/C CONT LP (KEYBOARD) (NEO WGE) (9.276) (AC–DELCO #16051463)	90–94	Y (C68)	3	16051463
	8–D4	9.279	BULB, HTR & A/C CONT LP (MAIN BD) (NEO WGE) (NEO WEDGE) (9.276) (AC–DELCO #16206595)	90–94	Y (C68)	1	16206595
	8–D4	9.279	BULB, HTR & A/C CONT LP (TWIST SOCKET) (9.276) (AC–DELCO #16057072)	90–92	Y (C68)	1	16057072
	8–D4	9.279	BULB, HTR & A/C CONT LP (KEYBOARD) (NEO WGE) (9.276) (AC–DELCO #16051463)	90–92	Y (C68)	3	16051463
	8–D4	9.279	BULB, HTR & A/C CONT LP (MAIN BD) (NEO WGE) (NEO WEDGE) (9.276) (AC–DELCO #16206595)	90–92	Y (C68)	1	16206595

© 2000 GENERAL MOTORS SERVICE PARTS OPERATIONS–CHEVROLET–14Y

							1Y09-302
	8-D4	9.279	BULB, HTR & A/C CONT LP (TWIST SOCKET) (9.276) (AC-DELCO #16057072)	90-92	Y (C68)	1	16057072
	8-D4	9.279	FILTER, HTR & A/C CONT LGT ..	92-96	Y (C68)	1	16150493
	8-C25	9.273	CONTROL, HTR & A/C (REMAN)	90	Y67 (C68, DC7) (EXC CC2) (EXPORT)	1	16152503
	8-C25	9.273	CONTROL, HTR & A/C (REMAN)	91	Y67 (C68, DC7, DC8) (EXC CC2) (EXPORT) ..	1	16152503
	8-C25	9.273	CONTROL, HTR & A/C (REMAN)	92-93	Y67 (C68, DC7, DC8) (EXC CC2) (EXPORT) ..	1	16162118
2.		DISCON	DIAL, HTR & A/C CONT	90-91	Y (C68)	1	16125115
	8-D4	9.279	DIAL, HTR & A/C CONT	92-96	Y (C68)	1	16161687
3.	8-C25	9.273	INSULATOR, HTR & A/C CONT ..	90-96	Y	1	10158011

RPO DEFINITIONS

CC2 – ROOF,AUXILIARY

C68 – AIR CONDITIONER,FRONT,AUTOMATIC,ELECTRONIC CONTROLS

DC7 – MIRROR,OUTSIDE,RH AND LH,REMOTE CONTROL,ELECTRIC,BREAKAWAY(PAINTED)(50 INCH FIELD OF VIEW)

DC8 – MIRROR,OUTSIDE,RH AND LH REMOTE CONTROL ELECTRIC,BREAKAWAY(PAINTED)(55 INCH FIELD OF VIEW)

DL8 – MIRROR,OUTSIDE,RH AND LH REMOTE CONTROL,ELECTRIC,DEFOG

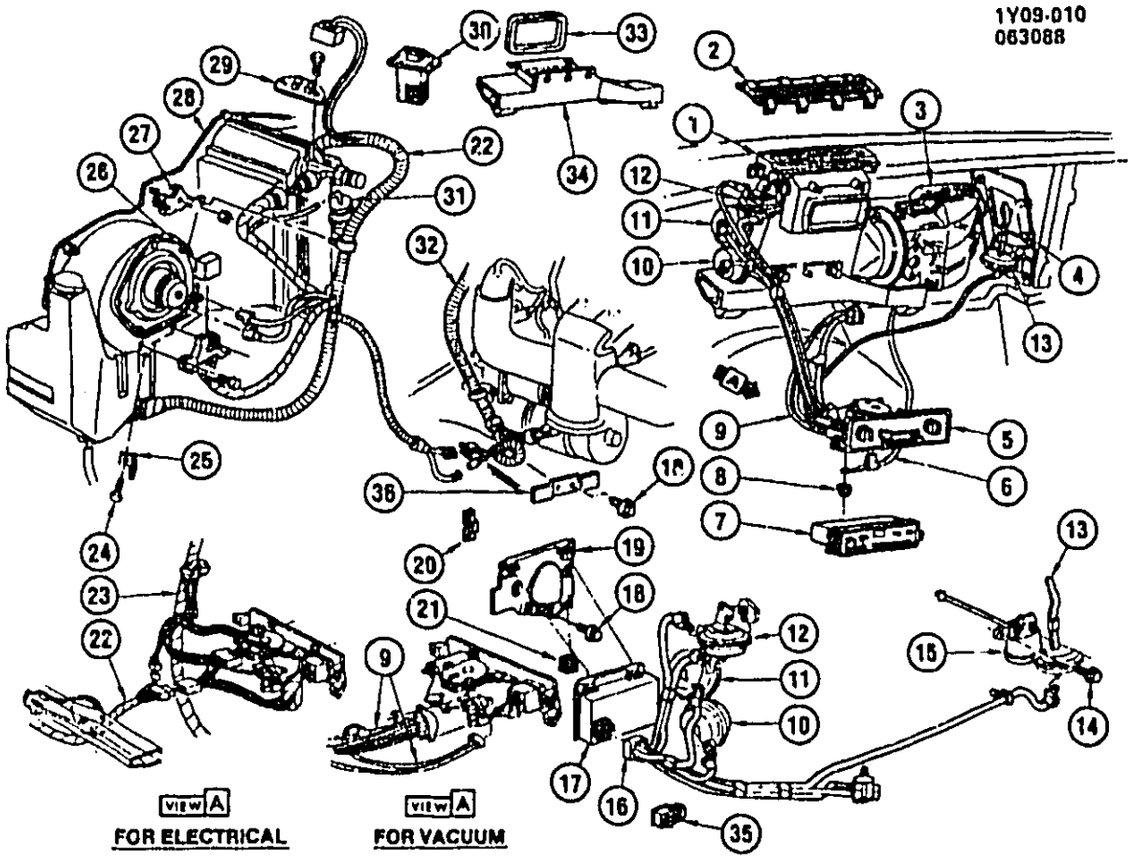

1Y09-010

1984–1987 Y A/C CONTROL SYSTEM ELECTRICAL & VACUUM

1.		N.S.	DISTRIBUTOR, W/S DEFR NOZ (SEE GROUP 9.000 "A/C DISTRIBUTOR/AIR" FOR DETAIL ILLUSTRATED VIEW.)	
2.	8–E11	9.779	GRILLE, DEFR DUCT	14052467
3.	8–C18	9.215	RESISTOR, BLO MTR (1984) (AC–DELCO #15–71968)	526897
	8–B2	6.855	RESISTOR, BLO MTR (1984) (AC–DELCO #15–71968)	526897
	8–B2	8.855	RESISTOR, BLO MOT (1985–87)	14093106
	8–C18	9.215	RESISTOR, BLO MOT (1985–87)	14093106
4.		N.S.	INLET, AIR (SEE GROUP 9.000 "A/C AIR INLET" FOR DETAIL ILLUSTRATED VIEW.)	
5.	8–C25	9.273	CONTROL (Y07 C60, C49) (SEE GROUP 9.000 "A/C & HEATER CONTROL ASM" FOR DETAIL ILLUSTRATED VIEW) (AC–DELCO #15–71414)	16040111
	8–C25	9.273	CONTROL (1984–87 C60, EXC C49) (1987 EXC DL8) (SEE GROUP 9.000 "A/C & HEATER CONTROL ASM" FOR DETAIL ILLUSTRATED VIEW) (AC–DELCO #15–71413)	16040101
	8–C25	9.273	CONTROL (1987 Y67 C60, DL8) (SEE GROUP 9.000 "A/C & HEATER CONTROL ASM" FOR DETAIL ILLUSTRATED VIEW) (AC–DELCO #15–71576)	16068761
6.		DISCON	CABLE, TEMP CONT	14044432
7.	8–C25	9.273	CONTROL (REMAN) (1986–87 Y07 C68, C49)	1228824
		DISCON	CONTROL (REMAN) (1986–87 Y07 C68, EXC C49)	1228825
	8–C25	9.273	CONTROL (REMAN) (1987 Y67 C68, DL8)	1228095
	8–C25	9.273	CONTROL (REMAN) (1987 Y67 C68, EXC DL8)	1228094
8.		8.921	NUT, RND PUSH ON (M3.6X11.23) (AC–DELCO #11501937)	11501937

© 2000 GENERAL MOTORS SERVICE PARTS OPERATIONS - CHEVROLET–14Y

				1Y09-010
9.		DISCON	HARNESS, HOSE (MOD END) (1984-85)	14044457
		DISCON	HARNESS, AIR VLV ACTR (1986-87 C60)	14091037
10.	8-D5	9.280	ACTUATOR, DVTR VLV RR (AC-DELCO #15-71501)	1996720
11.	8-D5	9.280	ACTUATOR, DVTR VLV FRT (AC-DELCO #15-71500)	1996719
12.	8-D5	9.280	ACTUATOR, DEFR VLV (1984-85) (AC-DELCO #15-71498)	1996717
	8-D5	9.280	ACTUATOR, DEFR VLV (1986-87) (AC-DELCO #15-71498)	1996717
13.	8-D5	9.280	ACTUATOR, PLSTC (AC-DELCO #15-71499)	1996718
14.		8.977	SCREW, HEX W/FL WA (M4.2X2.25X20)	11508443
15.	8-D5	9.280	ACTUATOR, TEMP VLV (1986-87) (CPS)	16025581
	8-E12	9.786	CONNECTOR, TEMP VLV LINK (1986-87)	14089386
16.		DISCON	HARNESS, AIR VLV ACTR (1986-87 C68)	14091038
17.	8-C27	9.275	PROGRAMMER (1986-87) (AC-DELCO #15-71508)	16042981
18.		8.977	SCREW, HEX W/WA (M4.2X1.41X16)	25512804
19.		DISCON	BRACKET, PROGMR (1985-87)	14086765
20.		DISCON	BRACKET, PROGMR BRKT TO FIREWALL (1985-87)	14083707
21.		8.921	NUT, U SHAPE (M4.2X1.41) (AC-DELCO #15650655)	15650655
22.		DISCON	HARNESS, CONT WRG (1984-85)	12029302
23.	8-N5	2.480	HARNESS, I/P (1987 C68, MH5, MK2) (SEE PARTS SECTION FOR ADDITIONAL USAGE)	12068103
24.		8.977	BOLT, HWH (M4.2X1.41X16)	
25.	8-N17	2.550	BRACKET, ECM WRG HARN	14062552
26.	8-D3	9.277	RELAY, HI BLO (AC-DELCO #15-8206)	10019535
27.		DISCON	BRACKET, MOD WRG HARN (1984-85)	14062595
		DISCON	BRACKET, BLO MTR RLY (1986-87)	14091291
28.		N.S.	BLOWER (SEE GROUP 9.000 "A/C EVAPORATOR & BLOWER MODULE ASM" FOR DETAIL ILLUSTRATED VIEW)	
29.	8-C18	9.215	RESISTOR, BLO MTR (1984) (AC-DELCO #15-71968)	526897
	8-B2	8.855	RESISTOR, BLO MTR (1984) (AC-DELCO #15-71968)	526897
	8-B2	8.855	RESISTOR, BLO MTR (1985-87)	14093106
	8-C18	9.215	RESISTOR, BLO MTR (1985-87)	14093106
30.	8-C27	9.275	MODULE, BLO MTR CONT (1986-87) (AC-DELCO #15-72530)	12484912
31.	8-E13	9.795	VALVE, HTR WAT (1984) (AC-DELCO #15-5344)	14046043
	8-E13	9.795	VALVE, HTR WAT (1985-87) (CPS) (AC-DELCO #15-5389)	10120965
		DISCON	CAP, HTR WAT VLV	10120936
32.		DISCON	HARNESS, ENG & ECM WRG (1987 C68, MH5, MK2) (SEE PARTS SECTION FOR ADDITIONAL USAGE)	12067671
33.	8-E12	9.786	SEAL, AIR DISTR DUCT	14069128
34.		DISCON	OUTLET, FLR AIR CTR	14044437
35.	8-E11	9.778	RELAY, RR WDO DEFG (1986-87) (AC-DELCO #15-8239)	16042336
36.		N.S.	BRACKET	

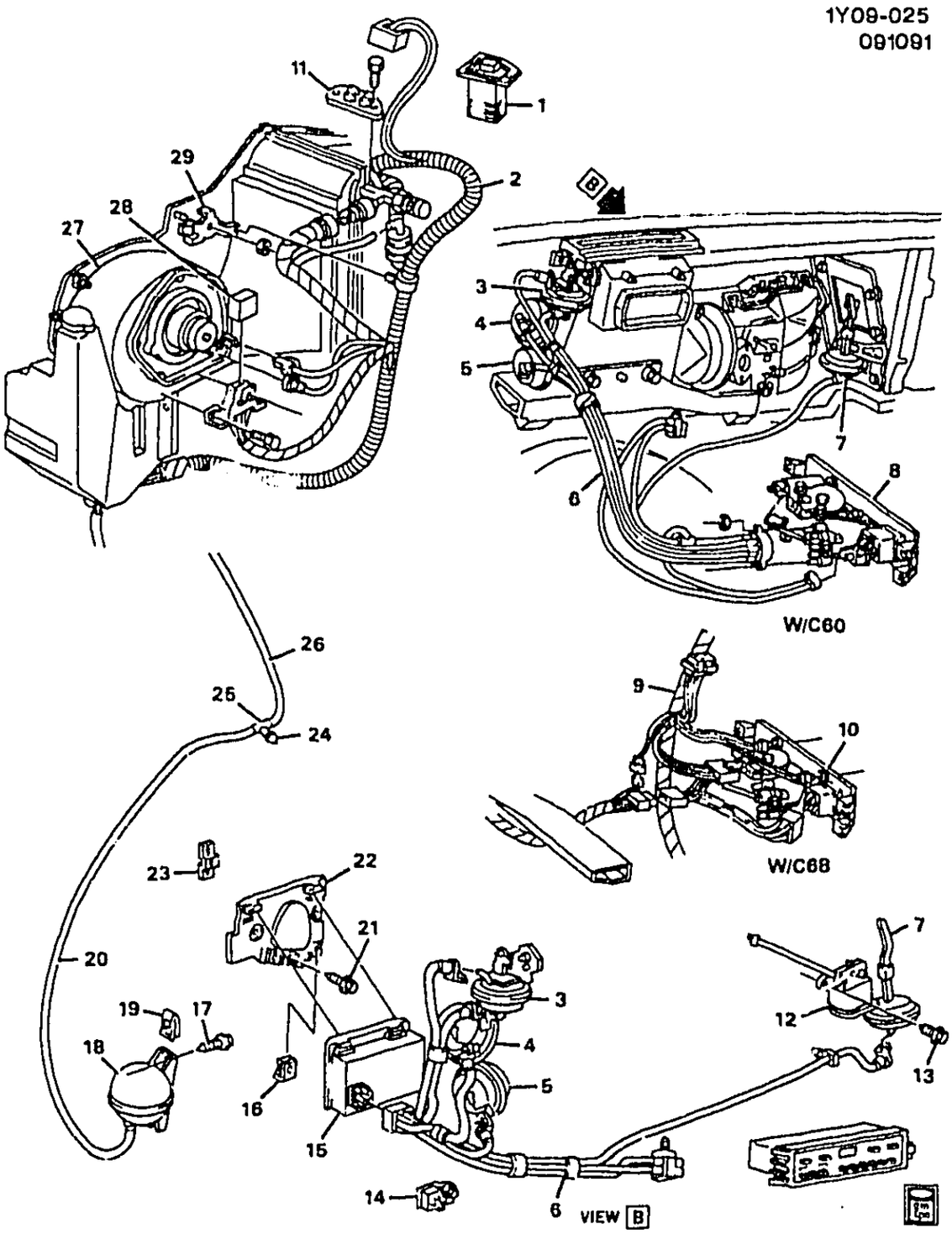

1988-1989 Y A/C CONTROL SYSTEM ELECTRICAL & VACUUM

1.	8-C27	9.275	MODULE, BLO MTR CONT (AC-DELCO #15-72530)	12484912
2.		DISCON	HARNESS, I/S AIR TEMP SEN WRG (1988 Y67)	12067669
3.	8-D5	9.280	ACTUATOR, DEFR VLV (AC-DELCO #15-71498)	1996717
4.	8-D5	9.280	ACTUATOR, MODE VLV (AC-DELCO #15-71500)	1996719
5.	8-D5	9.280	ACTUATOR, DVTR VLV RR (AC-DELCO #15-71501)	1996720
6.		DISCON	HARNESS, AIR VLV ACTR VAC (C60)	10077208
		DISCON	HARNESS, AIR VLV ACTR VAC (C68)	10077209

© 2000 GENERAL MOTORS SERVICE PARTS OPERATIONS-CHEVROLET-14Y

				1Y09-025
7.	8-D5	9.280	ACTUATOR, AIR INL VLV (AC-DELCO #15-71499)	1996718
8.	8-C25	9.273	CONTROL (1988 C60, EXC C49, DL8) (SEE GROUP 9.000 "A/C & HEATER CONTROL ASM" FOR DETAIL ILLUSTRATED VIEW) (AC-DELCO #15-71413)	16040101
	8-C25	9.273	CONTROL (1988 Y07 C60, C49) (1989 Y07 C60) (SEE GROUP 9.000 "A/C & HEATER CONTROL ASM" FOR DETAIL ILLUSTRATED VIEW) (AC-DELCO #15-71414)	16040111
	8-C25	9.273	CONTROL (Y67 C60, DL8) (SEE GROUP 9.000 "A/C & HEATER CONTROL ASM" FOR DETAIL ILLUSTRATED VIEW) (AC-DELCO #15-71576)	16068761
9.		N.S.	HARNESS, I/P WRG (SEE PARTS SECTION FOR ADDITIONAL USAGE)	
10.	8-C25	9.273	CONTROL (REMAN) (1988 Y07 C68, C49) (1ST DESIGN 1988 - 16056491 STAMPED ON PART)	1228824
		DISCON	CONTROL (REMAN) (1988 Y07 C68, EXC C49) (1ST DESIGN 1988 - 16056501 STAMPED ON PART)	1228825
		DISCON	CONTROL (REMAN) (1988 Y07 C68, EXC C49) (2ND DESIGN 1988 - 16087201 STAMPED ON PART)	1228825
	8-C25	9.273	CONTROL (REMAN) (1988 Y07 C68, C49) (1989 Y07 C68) (2ND DESIGN 1988 - 16087191 STAMPED ON PART)	1228824
	8-C25	9.273	CONTROL (REMAN) (Y67 C68, DL8)	1228095
	8-C25	9.273	CONTROL (REMAN) (Y67 C68, EXC DL8)	1228094
11.	8-C18	9.215	RESISTOR, BLO MTR	14093105
12.	8-D5	9.280	ACTUATOR, TEMP VLV (CPS)	16025581
	8-E12	9.786	CONNECTOR, TEMP VLV LINK	14089386
13.		8.977	SCREW, HEX W/FL WA M4.2X2.25X20 TAP POR (AR)	11508443
14.	8-E11	9.778	RELAY, R/WDO DEFG (AC-DELCO #15-8239)	16042336
15.	8-C27	9.275	PROGRAMMER (C68) (AC-DELCO #15-71584)	16069591
16.		8.921	NUT, M4.2X1.4, 19.3X213.6.8.9 (AR) (AC-DELCO #15650655)	15650655
17.		8.977	SCREW, HEX W/FLAT WA (AR)	12337828
18.	8-D7	9.281	TANK, HTR & A/C CONT VAC (AC-DELCO #15-72234)	14056624
19.		8.977	SCREW, M4.2-1.41X30 OV HD CSK C/R WA CR (AR)	11503423
20.		8.962	HOSE, BULK 5/32X25FT (AR)	9438381
21.		8.977	SCREW, HEX W/WA, M4.2X1.41X16, TAP, AB PT, 6010M, POR (AR)	25512804
22.		DISCON	BRACKET, PROGMR (1988)	14086765
		N.S.	BRACKET, PROGMR (1989)	
23.		DISCON	BRACKET, PROGMR BRKT TO FIREWALL (1988)	14083707
24.	8-D5	9.280	VALVE, HTR & A/C CONT VAC TK CHK (AC-DELCO #14056648)	14056648
25.		8.963	TEE, HOSE (NYL M6.3 X M6.3 X M6.3) (AR)	14004877
26.		DISCON	HOSE, HTR & A.C. CONT	14083180
27.		N.S.	MODULE (SEE GROUP 9.000 "A/C EVAPORATOR & BLOWER MODULE ASM" FOR DETAIL ILLUSTRATED VIEW.)	
28.	8-M28	1.055	RELAY, BLO MTR (1.055) (AC-DELCO #15-8240)	14089936
29.		DISCON	BRACKET, BLO MTR RLY	14104533

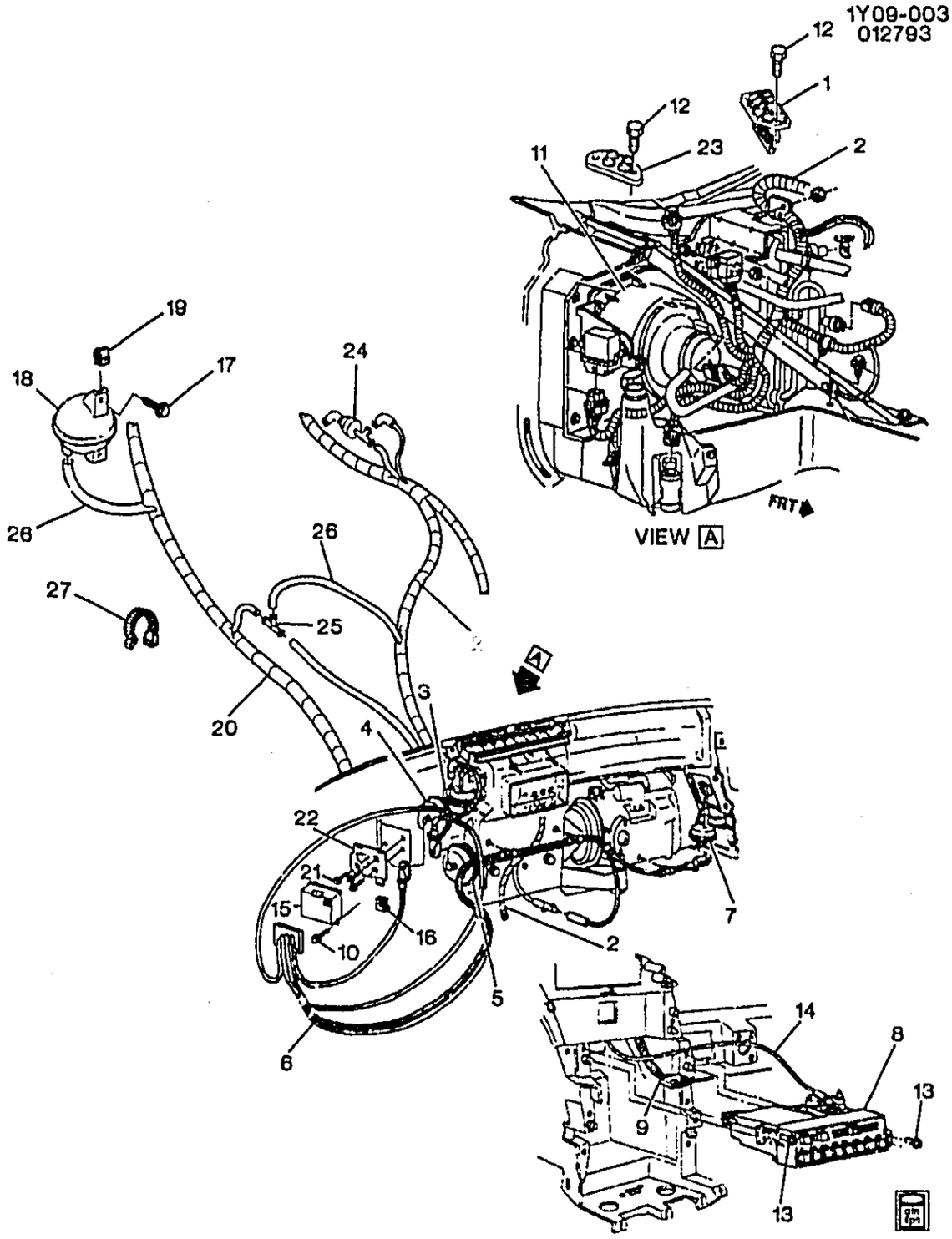

1990–1991 Y A/C CONTROL SYSTEM ELECTRICAL & VACUUM

1.	8–C27	9.275	MODULE, BLO MOT CONT (AC–DELCO #15–71642)	90–91	Y (C68)	1	16086891
2.	8–N15	2.525	HARNESS, ENG WRG	90	Y (LT5, C60, FE1, FE7) .	1	12090375
	8–N15	2.525	HARNESS, ENG WRG	90	Y (LT5, C68, FE1, FE7) .	1	12090376
	8–N15	2.525	HARNESS, ENG WRG	91	Y (L98, MD8, C60)	1	12080865
	8–N15	2.525	HARNESS, ENG WRG	91	Y (L98, ML9, C60)	1	12080866
	8–N15	2.525	HARNESS, ENG WRG	91	Y (L98, MD8, C68)	1	12080867

© 2000 GENERAL MOTORS SERVICE PARTS OPERATIONS–CHEVROLET–14Y

							1Y09-003
	8-N15	2.525	HARNESS, ENG WRG	91	Y (L98, ML9, C68)	1	12080868
	8-N15	2.525	HARNESS, ENG WRG	91	Y (LT5, C68, FE1, FE7) .	1	12080870
3.	8-D5	9.280	ACTUATOR, DEFR VLV (AC-DELCO #15-71938)	90-91	Y	1	52461295
.	8-D5	9.280	ACTUATOR, MODE VLV (AC-DELCO #15-71645)	90-91	Y	1	1996770
	8-D5	9.280	ACTUATOR, MODE VLV (PLST) (AC-DELCO #15-71500)	90-91	Y	1	1996719
5.	8-D5	9.280	ACTUATOR, MODE VLV (AC-DELCO #15-71645)	90-91	Y	1	1996770
	8-D5	9.280	ACTUATOR, MODE VLV (PLST) (AC-DELCO #15-71500)	90-91	Y	1	1996719
6.	8-D7	9.281	HARNESS, AIR VLV ACTR VAC ..	90-91	Y	1	10158085
7.	8-D5	9.280	ACTUATOR, AIR INL VLV (AC-DELCO #15-71499)	90-91	Y	1	1996718
8.	8-C25	9.273	CONTROL, HTR & A/C (SEE GROUP 9.000 "A/C & HEATER CONTROL ASM" FOR DETAIL ILLUSTRATED VIEW.) (AC-DELCO #15-71667)	90-91	Y07 (C60)	1	16085521
	8-C25	9.273	CONTROL, HTR & A/C (SEE GROUP 9.000 "A/C & HEATER CONTROL ASM" FOR DETAIL ILLUSTRATED VIEW.) (AC-DELCO #15-71662)	90-91	Y67 (C60, DL8) (EXC CC2)	1	16074571
	8-C25	9.273	CONTROL, HTR & A/C (SEE GROUP 9.000 "A/C & HEATER CONTROL ASM" FOR DETAIL ILLUSTRATED VIEW.) (AC-DELCO #15-71667)	90-91	Y67 (C60, CC2)	1	16085521
	8-C25	9.273	CONTROL, HTR & A/C (REMAN) (SEE GROUP 9.000 "A/C & HEATER CONTROL ASM" FOR DETAIL ILLUSTRATED VIEW.)	90-91	Y07 (C68)	1	16152503
	8-C25	9.273	CONTROL, HTR & A/C (REMAN) (SEE GROUP 9.000 "A/C & HEATER CONTROL ASM" FOR DETAIL ILLUSTRATED VIEW.)	90-91	Y67 (C68, DL8) (EXC CC2)	1	16152502
	8-C25	9.273	CONTROL, HTR & A/C (REMAN) (SEE GROUP 9.000 "A/C & HEATER CONTROL ASM" FOR DETAIL ILLUSTRATED VIEW.)	90-91	Y67 (C68, CC2)	1	16152503
	8-C25	9.273	CONTROL, HTR & A/C (REMAN) (SEE GROUP 9.000 "A/C & HEATER CONTROL ASM" FOR DETAIL ILLUSTRATED VIEW.)	90-91	Y07 (C68)	1	16152503
	8-C25	9.273	CONTROL, HTR & A/C (REMAN) (SEE GROUP 9.000 "A/C & HEATER CONTROL ASM" FOR DETAIL ILLUSTRATED VIEW.)	90-91	Y67 (C68, DL8) (EXC CC2)	1	16152502
	8-C25	9.273	CONTROL, HTR & A/C (REMAN) (SEE GROUP 9.000 "A/C & HEATER CONTROL ASM" FOR DETAIL ILLUSTRATED VIEW.)	90-91	Y67 (C68, CC2)	1	16152503
	8-C25	9.273	CONTROL, HTR & A/C (SEE GROUP 9.000 "A/C & HEATER CONTROL ASM" FOR DETAIL ILLUSTRATED VIEW.) (AC-DELCO #15-71667)	90-91	Y67 (C60, DC7, DC8) (EXC CC2) (EXPORT) ..	1	16085521

							1Y09-003
	8-C25	9.273	**CONTROL**, HTR & A/C (REMAN) (SEE GROUP 9.000 "A/C & HEATER CONTROL ASM" FOR DETAIL ILLUSTRATED VIEW.)	90	Y67 (C68, DC7) (EXC CC2) (EXPORT)	1	16152503
	8-C25	9.273	**CONTROL**, HTR & A/C (REMAN) (SEE GROUP 9.000 "A/C & HEATER CONTROL ASM" FOR DETAIL ILLUSTRATED VIEW.)	91	Y67 (C68, DC7, DC8) (EXC CC2) (EXPORT) ..	1	16152503
	8-C25	9.273	**CONTROL**, HTR & A/C (REMAN) (SEE GROUP 9.000 "A/C & HEATER CONTROL ASM" FOR DETAIL ILLUSTRATED VIEW.)	90	Y67 (C68, DC7) (EXC CC2) (EXPORT)	1	16152503
	8-C25	9.273	**CONTROL**, HTR & A/C (REMAN) (SEE GROUP 9.000 "A/C & HEATER CONTROL ASM" FOR DETAIL ILLUSTRATED VIEW.)	91	Y67 (C68, DC7, DC8) (EXC CC2) (EXPORT) ..	1	16152503
9.	8-N5	2.480	**HARNESS**, I/P WRG (SEE PARTS SECTION FOR ADDITIONAL USAGE)	90	Y (MD8, C60) (EXC T61)	1	12102274
	8-N5	2.480	**HARNESS**, I/P WRG	90	Y M/TRNS (ML9), A/C (C60) (EXC CANADIAN T61)	1	12101432
	8-N5	2.480	**HARNESS**, I/P WRG	90	Y M/TRNS (ML9), A/C (C68) (EXC CANADIAN T61)	1	12101434
	8-N5	2.480	**HARNESS**, I/P WRG	90	Y (MD8, C60) (EXC T61)	1	12102274
	8-N5	2.480	**HARNESS**, I/P WRG	90	Y A/TRNS (MD8), A/C (C68) (EXC CANADIAN T61)	1	12102538
	8-N5	2.480	**HARNESS**, I/P WRG	91	Y (MD8, C60) (EXC T61)	1	12116436
	8-N5	2.480	**HARNESS**, I/P WRG	91	Y (ML9, C60) (EXC T61)	1	12116438
	8-N5	2.480	**HARNESS**, I/P WRG (MAY REQ 12106563 WIRE IF JMPR PRESENT AT THE PWR SEAT FEED)	91	Y (MD8, C68) (EXC T61)	1	12116500
	8-N5	2.480	**HARNESS**, I/P WRG	91	Y (ML9, C68) (EXC T61)	1	12116502
	8-N5	2.480	**HARNESS**, I/P WRG	90	Y M/TRNS (ML9), A/C (C60), T61 (CANADIAN) (EXPORT)	1	12101433
	8-N5	2.480	**HARNESS**, I/P WRG	90	Y M/TRNS (ML9), A/C (C68), T61 (CANADIAN) (EXPORT)	1	12101435
	8-N5	2.480	**HARNESS**, I/P WRG	90	Y A/TRNS (MD8), A/C (C68), T61 (CANADIAN) (EXPORT)	1	12102273
	8-N5	2.480	**HARNESS**, I/P WRG	90	Y A/TRNS (MD8), A/C (C60), T61 (CANADIAN) (EXPORT)	1	12102537
	8-N5	2.480	**HARNESS**, I/P WRG	91	Y (MD8, C60, T61) (EXPORT)	1	12116437
	8-N5	2.480	**HARNESS**, I/P WRG	91	Y (ML9, C60, T61) (EXPORT)	1	12116439
	8-N5	2.480	**HARNESS**, I/P WRG	91	Y (MD8, C68, T61) (EXPORT)	1	12116501
	8-N5	2.480	**HARNESS**, I/P WRG	91	Y (ML9, C68, T61) (EXPORT)	1	12116503

							1Y09-003
10.		8.977	SCREW, HEX TAP M4.2X1.41X16 W/FL WA POR (HTR & A/C PROGMR)	90-91		1	11504446
11.		N.S.	MODULE, A/C EVPR & BLO (SEE GROUP 9.000 "A/C EVAPORATOR & BLOWER MODULE ASM" FOR DETAIL ILLUSTRATED VIEW.)			AR	
12.		8.977	SCREW, HEX W/FL WA M4.2X2.25X20 TAP POR	90-91		AR	11508443
13.		8.977	BOLT, HEX W/12.5 OD WA, M4.2X1.41X16 DBL LD HI-LO 6010M	90-91		AR	11515312
14.	8-E13	9.787	CABLE, TEMP CONT	90-91	Y (C60)	1	10222823
15.	8-C27	9.275	PROGRAMMER, HTR & A/C (AC-DELCO #15-71773)	90-91	Y (C60)	1	16088751
	8-C27	9.275	PROGRAMMER, HTR & A/C (AC-DELCO #15153285)	90	Y (L98, C68)	1	16155285
	8-C27	9.275	PROGRAMMER, HTR & A/C (REMAN)	91	Y (LT5, C68)	1	16151009
	8-C27	9.275	PROGRAMMER, HTR & A/C (REMAN)	91	Y (L98, C68)	1	16140190
16.		8.921	NUT, WU SHAPE SPR/P/#8-18X.585, PC (HTR & A/C PROGMR)	90-91		1	9433155
17.		8.977	SCREW, HEX W/FLAT WA (HTR & A/C CONT VAC TK)	90-91		2	12337828
18.	8-D7	9.281	TANK, HTR & A/C CONT VAC (AC-DELCO #15-72234)	90-91	Y	1	14056624
19.		8.921	NUT, TYPE P-WU SPR M6.3X1.81 PHOS ORG (HTR & A/C CONT VAC TK)	90-91		2	11504035
20.	8-N5	2.480	HARNESS, FWD LP WRG	90	Y (5.7-8) (EXC CANADIAN T61)	1	12073776
	8-N5	2.480	HARNESS, FWD LP WRG	90	Y (5.7J) SOFT RIDE SUSP (FE1), H .D .SUSP (EXC CANADIAN T61)	1	12090331
	8-N5	2.480	HARNESS, FWD LP WRG	91	Y (L98) (EXC T61)	1	12080863
	8-N5	2.480	HARNESS, FWD LP WRG	91	Y (LT5, FE1, FE7) (EXC T61)	1	12080864
	8-N5	2.480	HARNESS, FWD LP WRG	90	Y (5.7-8) T61 (CANADIAN) (EXPORT)	1	12090336
	8-N5	2.480	HARNESS, FWD LP WRG	90	Y (5.7J) T61 (CANADIAN) (EXPORT)	1	12090337
	8-N5	2.480	HARNESS, FWD LP WRG	91	Y (L98, T61) (EXPORT)	1	12090346
	8-N5	2.480	HARNESS, FWD LP WRG	91	Y (LT5, T61) (EXPORT)	1	12090347
21.		8.977	BOLT, HEX W/12.5 OD WA, M4.2X1.41X16 DBL LD HI-LO 6010M (HTR & A/C PROGMR BRKT)	90-91		3	11515312
22.	8-C27	9.275	BRACKET, HTR & A/C PROGMR	90-91	Y	1	10086302
23.	8-C18	9.215	RESISTOR, BLO MOT (9.275)	90-91	Y (C60)	1	14093106
24.	8-D5	9.280	VALVE, HTR & A/C CONT VAC TK CHK (STAMPED 6648) (3.885) (AC-DELCO #14056648)	90-91	Y (L98)	1	14056648
25.		8.963	TEE, HOSE (NYL M6.3 X M6.3 X M6.3)	90-91		AR	14004877

© 2000 GENERAL MOTORS SERVICE PARTS OPERATIONS-CHEVROLET-14Y

					1Y09-003
26.	8.962	HOSE, BULK 5/32X25FT	90-91	.....	AR 9438381
27.	8.965	STRAP, ADJ TIE 3/4X9/32X255MM (AC-DELCO #12337820)	90-91	.....	AR 12337820

RPO DEFINITIONS

CC2 – ROOF,AUXILIARY
C60 – AIR CONDITIONER,FRONT,MANUAL CONTROLS
C68 – AIR CONDITIONER,FRONT,AUTOMATIC,ELECTRONIC CONTROLS
DC7 – MIRROR,OUTSIDE,RH AND LH,REMOTE CONTROL,ELECTRIC,BREAKAWAY(PAINTED)(50 INCH FIELD OF VIEW)
DC8 – MIRROR,OUTSIDE,RH AND LH REMOTE CONTROL ELECTRIC,BREAKAWAY(PAINTED)(55 INCH FIELD OF VIEW)
DL8 – MIRROR,OUTSIDE,RH AND LH REMOTE CONTROL,ELECTRIC,DEFOG
FE1 – SUSPENSION SYSTEM,SOFT RIDE
FE7 – SUSPENSION SYSTEM,FRONT AND REAR,HEAVY DUTY(USED WITH PERFORMANCE HANDLING PACKAGE Z51)
LT5 – ENGINE,5.7L(5.7J),TPI
L98 – ENGINE, 5.7L, (5.7-8) 350 CID, V8, TPI
MD8 – TRANSMISSION,AUTOMATIC 4-SPEED(THM700R4/4L60)
ML9 – TRANSMISSION,MANUAL 6-SPEED
T61 – LIGHTING,DAYTIME RUNNING

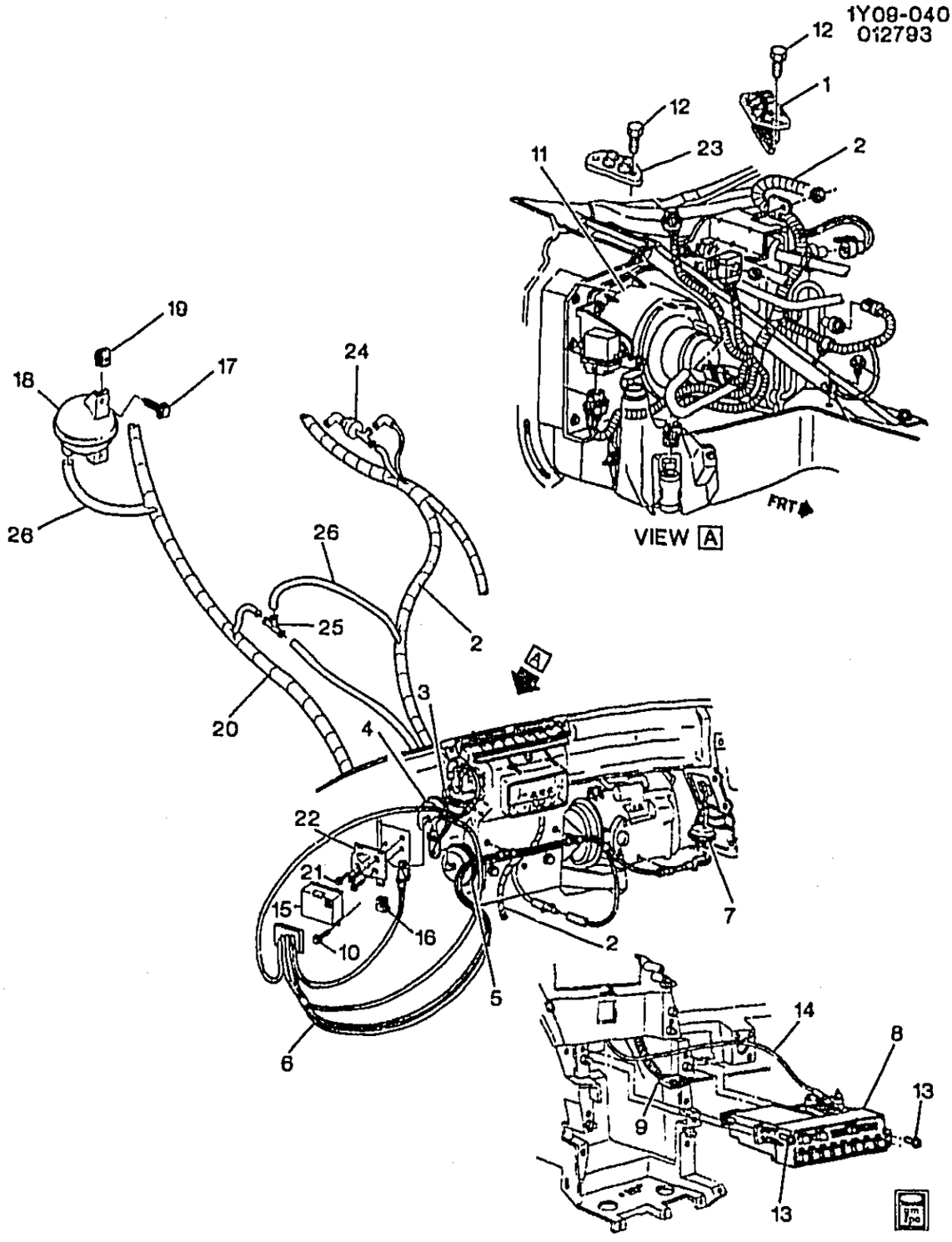

1Y09-040

1992-1996 Y A/C CONTROL SYSTEM ELECTRICAL & VACUUM

1.	8-C27	9.275	MODULE, BLO MOT CONT (AC-DELCO #15-71642)	92	Y (C68)	1	16086891
	8-C27	9.275	MODULE, BLO MOT CONT (AC-DELCO #15-71970)	93-96	Y (C68)	1	16174981
2.	8-N15	2.525	HARNESS, ENG WRG	92	Y (LT5)	1	12117829
	8-N15	2.525	HARNESS, ENG WRG	92	Y (LT1, MD8, C60)	1	12125009
	8-N15	2.525	HARNESS, ENG WRG	92	Y (LT1, ML9, C60)	1	12125010

© 2000 GENERAL MOTORS SERVICE PARTS OPERATIONS-CHEVROLET-14Y

	8-N15	2.525	HARNESS, ENG WRG	92	Y (LT1, MD8, C68)	1	12125011
	8-N15	2.525	HARNESS, ENG WRG	92	Y (LT1, ML9, C68)	1	12125012
	8-N15	2.525	HARNESS, ENG WRG	93-95	Y (LT5)	1	12141078
	8-N15	2.525	HARNESS, ENG WRG	93	Y (LT1, ML9, C60)	1	12154081
	8-N15	2.525	HARNESS, ENG WRG	93	Y (LT1, ML9, C68)	1	12154082
	8-N15	2.525	HARNESS, ENG WRG	93	Y (LT1, MD8, C60)	1	12154083
	8-N15	2.525	HARNESS, ENG WRG	93	Y (LT1, MD8, C68)	1	12154084
	8-N15	2.525	HARNESS, ENG WRG	94	Y (LT1, ML9, C60) (EXC VE1)	1	12141752
	8-N15	2.525	HARNESS, ENG WRG	94	Y (LT1, ML9, C68) (EXC VE1)	1	12141753
	8-N15	2.525	HARNESS, ENG WRG	94	Y (LT1, M30, C60) (EXC VE1)	1	12141754
	8-N15	2.525	HARNESS, ENG WRG	94	Y (LT1, M30, C68) (EXC VE1)	1	12141755
	8-N15	2.525	HARNESS, ENG WRG	95	Y (LT1, ML9, C60) (EXC VE1)	1	12130370
	8-N15	2.525	HARNESS, ENG WRG	95	Y (LT1, M30, C60) (EXC VE1)	1	12130371
	8-N15	2.525	HARNESS, ENG WRG	95	Y (LT1, ML9, C68) (EXC VE1)	1	12130372
	8-N15	2.525	HARNESS, ENG WRG	95	Y (LT1, M30, C68) (EXC VE1)	1	12130373
	8-N15	2.525	HARNESS, ENG WRG	96	Y (ML9, C60) (EXC VE1)	1	12130461
	8-N15	2.525	HARNESS, ENG WRG	96	Y (M30, C60) (EXC VE1)	1	12130462
	8-N15	2.525	HARNESS, ENG WRG	96	Y (ML9, C68) (EXC VE1)	1	12130463
	8-N15	2.525	HARNESS, ENG WRG	96	Y (M30, C68) (EXC VE1)	1	12130464
	8-N15	2.525	HARNESS, ENG WRG	94	Y (LT1, M30, C68, VE1) (EXPORT)	1	12141756
	8-N15	2.525	HARNESS, ENG WRG	94	Y (LT1, ML9, C68, VE1) (EXPORT)	1	12141757
	8-N15	2.525	HARNESS, ENG WRG	95	Y (LT1, M30, C68, VE1) (EXPORT)	1	12130374
	8-N15	2.525	HARNESS, ENG WRG	95	Y (LT1, ML9, C68, VE1) (EXPORT)	1	12130375
	8-N15	2.525	HARNESS, ENG WRG	96	Y (M30, C68, VE1) (EXPORT)	1	12130465
3.	8-D5	9.280	ACTUATOR, DEFR VLV (AC-DELCO #15-71938)	92-96	Y	1	52461295
4.	8-D5	9.280	ACTUATOR, MODE VLV (AC-DELCO #15-71645)	92-96	Y	1	1996770
	8-D5	9.280	ACTUATOR, MODE VLV (PLST) (AC-DELCO #15-71500)	92-96	Y	1	1996719
5.	8-D5	9.280	ACTUATOR, MODE VLV (AC-DELCO #15-71645)	92-96	Y	1	1996770
	8-D5	9.280	ACTUATOR, MODE VLV (PLST) (AC-DELCO #15-71500)	92-96	Y	1	1996719
6.	8-D7	9.281	HARNESS, AIR VLV ACTR VAC ..	92-96	Y	1	10158085
7.	8-D5	9.280	ACTUATOR, AIR INL VLV (AC-DELCO #15-71499)	92-96	Y	1	1996718
8.	8-C25	9.273	CONTROL, HTR & A/C (SEE GROUP 9.000 "A/C & HEATER CONTROL ASM" FOR DETAIL ILLUSTRATED VIEW.) (AC-DELCO #15-71929)	92-93	Y07 (C60)	1	16162371

© 2000 GENERAL MOTORS SERVICE PARTS OPERATIONS-CHEVROLET-14Y

							1Y09-040
	8-C25	9.273	CONTROL, HTR & A/C (SEE GROUP 9.000 "A/C & HEATER CONTROL ASM" FOR DETAIL ILLUSTRATED VIEW.) (AC-DELCO #15-71928)	92-93	Y67 (C60, DL8) (EXC CC2)	1	16162361
	8-C25	9.273	CONTROL, HTR & A/C (SEE GROUP 9.000 "A/C & HEATER CONTROL ASM" FOR DETAIL ILLUSTRATED VIEW.) (AC-DELCO #15-71929)	92-93	Y67 (CC2, C60)	1	16162371
	8-C25	9.273	CONTROL, HTR & A/C (SEE GROUP 9.000 "A/C & HEATER CONTROL ASM" FOR DETAIL ILLUSTRATED VIEW.) (AC-DELCO #15-72065)	94-96	Y (C60)	1	16170891
	8-C25	9.273	CONTROL, HTR & A/C (REMAN) (SEE GROUP 9.000 "A/C & HEATER CONTROL ASM" FOR DETAIL ILLUSTRATED VIEW.)	92-93	Y07 (C68)	1	16162118
	8-C25	9.273	CONTROL, HTR & A/C (REMAN) (SEE GROUP 9.000 "A/C & HEATER CONTROL ASM" FOR DETAIL ILLUSTRATED VIEW.)	92-93	Y67 (CC2, C68)	1	16162118
	8-C25	9.273	CONTROL, HTR & A/C (REMAN) (SEE GROUP 9.000 "A/C & HEATER CONTROL ASM" FOR DETAIL ILLUSTRATED VIEW.)	92-93	Y67 (C68, DL8) (EXC CC2)	1	16162120
	8-C25	9.273	CONTROL, HTR & A/C (REMAN) (SEE GROUP 9.000 "A/C & HEATER CONTROL ASM" FOR DETAIL ILLUSTRATED VIEW.) (AC-DELCO #15-72077)	94-96	Y (C68)	1	16192608
	8-C25	9.273	CONTROL, HTR & A/C (SEE GROUP 9.000 "A/C & HEATER CONTROL ASM" FOR DETAIL ILLUSTRATED VIEW.) (AC-DELCO #15-71929)	92	Y67 (C60, DC8) (EXC CC2) (EXPORT)	1	16162371
	8-C25	9.273	CONTROL, HTR & A/C (REMAN) (SEE GROUP 9.000 "A/C & HEATER CONTROL ASM" FOR DETAIL ILLUSTRATED VIEW.)	92-93	Y67 (C68, DC7, DC8) (EXC CC2) (EXPORT) ..	1	16162118
9.	8-N5	2.480	HARNESS, I/P WRG	92	Y (MD8, C60) (EXC T61)	1	12125005
	8-N5	2.480	HARNESS, I/P WRG	92	Y (ML9, C60) (EXC T61)	1	12125007
	8-N5	2.480	HARNESS, I/P WRG	92	Y (MD8, C68) (EXC T61)	1	12125813
	8-N5	2.480	HARNESS, I/P WRG	92	Y (ML9, C68) (EXC T61)	1	12125815
	8-N5	2.480	HARNESS, I/P WRG	93	Y (MD8, C60) (EXC T90)	1	12141443
	8-N5	2.480	HARNESS, I/P WRG (FOR VEH -DRL, SPLICE CAV D TO CAV E @ BLUE 8-WAY DRL MDL CONN.)	93	Y (ML9, C68) (EXC T90)	1	12141444
	8-N5	2.480	HARNESS, I/P WRG	93	Y (ML9, C60) (EXC T90)	1	12141445
	8-N5	2.480	HARNESS, I/P WRG (ON VEHS W/O DAYTIME RUNNING LPS SPLICE CAV D & E WIRES TOGETHER AT BLUE DRL MDL CONN.)	93	Y (MD8, C68) (EXC T90)	1	12141446

© 2000 GENERAL MOTORS SERVICE PARTS OPERATIONS-CHEVROLET-14Y

						1Y09-040
8-N5	2.480	HARNESS, I/P WRG	94	Y (ML9, C60) (EXC T61, T72, T84, T85, T90)	1	12130324
8-N5	2.480	HARNESS, I/P WRG	94	Y (ML9, C68) (EXC T61, T72, T84, T85, T90)	1	12130326
8-N5	2.480	HARNESS, I/P WRG	94	Y (M30, C60) (EXC T61, T72, T84, T85, T90) (2ND DES)	1	12130491
8-N5	2.480	HARNESS, I/P WRG	94	Y (M30, C60, T61) (EXC T72, T84, T85, T90)	1	12130492
8-N5	2.480	HARNESS, I/P WRG	94	Y (M30, C68) (EXC T61, T72, T84, T85, T90)	1	12130493
8-N5	2.480	HARNESS, I/P WRG	94	Y (M30, C68, T61) (EXC T72, T84, T85, T90)	1	12130494
8-N5	2.480	HARNESS, I/P WRG (TAGGED 0322 OR 0323) (ON VEH W/DAYTIME RUNNING LGHTS, ADD 8-WAY BLUE CONN TO DAYTIME RUNNING LGHT, SPLICE CAV D & CAV E WIRES TOGETHER)	94	Y (M30, C68, T61) (EXC T72, T84, T85, T90) (1ST DES)	1	12141788
8-N5	2.480	HARNESS, I/P WRG	94	Y (ML9, C60, T61) (EXC T72, T84, T85, T90)	1	12141789
8-N5	2.480	HARNESS, I/P WRG	94	Y (ML9, C68, T61) (EXC T72, T84, T85, T90)	1	12141790
8-N5	2.480	HARNESS, I/P WRG	94	Y (ML9, C68) (EXC T72, T84, T85, T90)	1	12163703
8-N5	2.480	HARNESS, I/P WRG	95	Y (LT5, ML9, C68) (EXC T61)	1	12130326
8-N5	2.480	HARNESS, I/P WRG	95	Y (LT1, M30, C60, T61) (EXC T72, T84, T85, T90)	1	12130389
8-N5	2.480	HARNESS, I/P WRG (SPLICE CAV D & E WIRES @ BLUE DRL MDL CONN FOR VEH W/O DRL.)	95	Y (LT1, M30, C68, T61) (EXC T72, T84, T85, T90)	1	12130391
8-N5	2.480	HARNESS, I/P WRG	95	Y (LT5, ML9, C68, T61) .	1	12141790
8-N5	2.480	HARNESS, I/P WRG	95	Y (LT1, ML9, C60) (EXC T61, T72, T84, [illegible] T90)	1	12163700
8-N5	2.480	HARNESS, I/P WRG	95	Y (LT1, ML9, C68) (EXC T61, T72, T84, T85, T90)	1	12163702
8-N5	2.480	HARNESS, I/P WRG	95	Y (LT5, ML9, C68)	1	12163703
8-N5	2.480	HARNESS, I/P WRG (TAGGED 0320 OR 0321) (ON VEH W/O DRL, AT 8-WAY BLUE CONN TO DRL MDL SPLICE CAV D & CAV E LEADS TOGETHER.)	94	Y (M30, C60, T61) (EXC T72, T84, T85, T90) (1ST DES)	1	12141787
8-N5	2.480	HARNESS, I/P WRG (WHEN USE ON VEH W/O DAYTIME RUN LIGHTS, SPLICE CAV D&E TOGETHER @ BLUE 8-WAY DRL MOD CONN)	96	Y (M30, C60) (EXC T72, T84, T85, T90)	1	12130468
8-N5	2.480	HARNESS, I/P WRG (WHEN USE ON VEH W/O DAYTIME RUN LIGHTS, SPLICE CAV D&E TOGETHER @ BLUE 8-WAY DRL MOD CONN)	96	Y (M30, C68) (EXC T72, T84, T85, T90)	1	12130470

© 2000 GENERAL MOTORS SERVICE PARTS OPERATIONS-CHEVROLET-14Y

						1Y09-040	
	8-N5	2.480	HARNESS, I/P WRG (WHEN USE ON VEH W/O DAYTIME RUN LIGHTS, SPLICE CAV D&E TOGETHER @ BLUE 8-WAY DRL MOD CONN)	96	Y (ML9, C60) (EXC T72, T84, T85, T90)	1	12130472
	8-N5	2.480	HARNESS, I/P WRG (WHEN USE ON VEH W/O DAYTIME RUN LIGHTS, SPLICE CAV D&E TOGETHER @ BLUE 8-WAY DRL MOD CONN)	96	Y (ML9, C68) (EXC T72, T84, T85, T90)	1	12130474
	8-N5	2.480	HARNESS, I/P WRG	92	Y (MD8, C60, T61) (EXPORT)	1	12125006
	8-N5	2.480	HARNESS, I/P WRG	92	Y (ML9, C60, T61) (EXPORT)	1	12125008
	8-N5	2.480	HARNESS, I/P WRG	92	Y (MD8, C68, T61) (EXPORT)	1	12125814
	8-N5	2.480	HARNESS, I/P WRG	92	Y (ML9, C68, T61) (EXPORT)	1	12125816
	8-N5	2.480	HARNESS, I/P WRG	93	Y (ML9, C68, T90) (EXPORT)	1	12141441
	8-N5	2.480	HARNESS, I/P WRG	93	Y (MD8, C68, T90) (EXPORT)	1	12141442
	8-N5	2.480	HARNESS, I/P WRG	94	Y (M30, C68, T72, T84, T85, T90) (EXPORT) ...	1	12130495
	8-N5	2.480	HARNESS, I/P WRG	94	Y (ML9, C68, T72, T84, T85, T90) (EXPORT) ...	1	12141792
	8-N5	2.480	HARNESS, I/P WRG	95	Y (LT1, M30, C68, T72, T84, T85, T90) (EXC T61) (EXPORT)	1	12130396
	8-N5	2.480	HARNESS, I/P WRG	95	Y (LT1, ML9, C60, T61) (EXC T72, T84, T85, T90) (EXPORT)	1	12163701
	8-N5	2.480	HARNESS, I/P WRG	95	Y (LT1, ML9, C68, T61) (EXC T72, T84, T85, T90) (EXPORT)	1	12163703
	8-N5	2.480	HARNESS, I/P WRG	95	Y (LT1, ML9, C68, T72, T84, T85, T90) (EXC T61) (EXPORT)	1	12163704
	8-N5	2.480	HARNESS, I/P WRG	96	Y (M30, C68, T72, T84, T85, T90) (EXC T61) (EXPORT)	1	12130475
	8-N5	2.480	HARNESS, I/P WRG	96	Y (LT4, ML9, C68, T72, T84, T85, T90) (EXC T61) (EXPORT)	1	12163715
	8-N5	2.480	HARNESS, I/P WRG (TAGGED 0328)	94	Y (M30, C68, T72, T84, T85, T90) (1ST DES) (EXPORT)	1	12141791
10.		8.977	SCREW, HEX TAP M4.2X1.41X16 W/FL WA POR (HTR & A/C PROGMR)	92-96	.....	1	11504446
11.		N.S.	MODULE, A/C EVPR & BLO (SEE GROUP 9.000 "A/C EVAPORATOR & BLOWER MODULE ASM" FOR DETAIL ILLUSTRATED VIEW.)		.....	AR	
12.		8.977	SCREW, HEX W/FL WA M4.2X2.25X20 TAP POR	92-96	.....	AR	11508443
13.		8.977	BOLT, HEX W/12.5 OD WA, M4.2X1.41X16 DBL LD HI-LO 6010M	92-96	.....	AR	11515312

© 2000 GENERAL MOTORS SERVICE PARTS OPERATIONS-CHEVROLET-14Y

							1Y09-040
14.	8-E13	9.787	CABLE, TEMP CONT	92-96	Y (C60)	1	10222823
15.	8-C27	9.275	PROGRAMMER, HTR & A/C (AC-DELCO #15-71773)	92-96	Y (C60)	1	16088751
	8-C27	9.275	PROGRAMMER, HTR & A/C (REMAN)	92-93	Y (LT5, C68)	1	16169796
	8-C27	9.275	PROGRAMMER, HTR & A/C (REMAN)	92-93	Y (LT1, C68)	1	16169797
	8-C27	9.275	PROGRAMMER, HTR & A/C (AC-DELCO #15-72094)	94-95	Y (LT5) (EXC A26)	1	16192584
16.		8.921	NUT, WU SHAPE SPR/P/#8-18X.585, PC (HTR & A/C PROGMR)	92-96	.....	1	9433155
17.		8.977	SCREW, HEX W/FLAT WA (HTR & A/C CONT VAC TK)	92-96	.....	2	12337828
18.	8-D7	9.281	TANK, HTR & A/C CONT VAC (AC-DELCO #15-72234)	92-96	Y	1	14056624
19.		8.921	NUT, TYPE P-WU SPR M6.3X1.81 PHOS ORG (HTR & A/C CONT VAC TK)	92-96	.....	2	11504035
20.	8-N5	2.480	HARNESS, I/P WRG	92	Y (MD8, C60) (EXC T61)	1	12125005
	8-N5	2.480	HARNESS, I/P WRG	92	Y (ML9, C60) (EXC T61)	1	12125007
	8-N5	2.480	HARNESS, I/P WRG	92	Y (MD8, C68) (EXC T61)	1	12125813
	8-N5	2.480	HARNESS, I/P WRG	92	Y (ML9, C68) (EXC T61)	1	12125815
	8-N5	2.480	HARNESS, I/P WRG	93	Y (MD8, C60) (EXC T90)	1	12141443
	8-N5	2.480	HARNESS, I/P WRG (FOR VEH -DRL, SPLICE CAV D TO CAV E @ BLUE 8-WAY DRL MDL CONN.)	93	Y (ML9, C68) (EXC T90)	1	12141444
	8-N5	2.480	HARNESS, I/P WRG	93	Y (ML9, C60) (EXC T90)	1	12141445
	8-N5	2.480	HARNESS, I/P WRG (ON VEHS W/O DAYTIME RUNNING LPS SPLICE CAV D & E WIRES TOGETHER AT BLUE DRL MDL CONN.)	93	Y (MD8, C68) (EXC T90)	1	12141446
	8-N5	2.480	HARNESS, I/P WRG	94	Y (ML9, C60) (EXC T61, T72, T84, T85, T90)	1	12130324
	8-N5	2.480	HARNESS, I/P WRG	94	Y (ML9, C68) (EXC T61, T72, T84, T85, T90)	1	12130326
	8-N5	2.480	HARNESS, I/P WRG	94	Y (M30, C60) (EXC T61, T72, T84, T85, T90) (2ND DES)	1	12130491
	8-N5	2.480	HARNESS, I/P WRG	94	Y (M30, C60, T61) (EXC T72, T84, T85, T90)	1	12130492
	8-N5	2.480	HARNESS, I/P WRG	94	Y (M30, C68) (EXC T61, T72, T84, T85, T90)	1	12130493
	8-N5	2.480	HARNESS, I/P WRG	94	Y (M30, C68, T61) (EXC T72, T84, T85, T90)	1	12130494
	8-N5	2.480	HARNESS, I/P WRG (TAGGED 0322 OR 0323) (ON VEH W/DAYTIME RUNNING LGHTS, ADD 8-WAY BLUE CONN TO DAYTIME RUNNING LGHT, SPLICE CAV D & CAV E WIRES TOGETHER)	94	Y (M30, C68, T61) (EXC T72, T84, T85, T90) (1ST DES)	1	12141788
	8-N5	2.480	HARNESS, I/P WRG	94	Y (ML9, C60, T61) (EXC T72, T84, T85, T90)	1	12141789

						1Y09-040
8-N5	2.480	HARNESS, I/P WRG	94	Y (ML9, C68, T61) (EXC T72, T84, T85, T90)	1	12141790
8-N5	2.480	HARNESS, I/P WRG	94	Y (ML9, C68) (EXC T72, T84, T85, T90)	1	12163703
8-N5	2.480	HARNESS, I/P WRG	95	Y (LT5, ML9, C68) (EXC T61)	1	12130326
8-N5	2.480	HARNESS, I/P WRG	95	Y (LT1, M30, C60, T61) (EXC T72, T84, T85, T90)	1	12130389
8-N5	2.480	HARNESS, I/P WRG (SPLICE CAV D & E WIRES @ BLUE DRL MDL CONN FOR VEH W/O DRL.)	95	Y (LT1, M30, C68, T61) (EXC T72, T84, T85, T90)	1	12130391
8-N5	2.480	HARNESS, I/P WRG	95	Y (LT5, ML9, C68, T61) .	1	12141790
8-N5	2.480	HARNESS, I/P WRG	95	Y (LT1, ML9, C60) (EXC T61, T72, T84, T85, T90)	1	12163700
8-N5	2.480	HARNESS, I/P WRG	95	Y (LT1, ML9, C68) (EXC T61, T72, T84, T85, T90)	1	12163702
8-N5	2.480	HARNESS, I/P WRG	95	Y (LT5, ML9, C68)	1	12163703
8-N5	2.480	HARNESS, I/P WRG (TAGGED 0320 OR 0321) (ON VEH W/O DRL, AT 8-WAY BLUE CONN TO DRL MDL SPLICE CAV D & CAV E LEADS TOGETHER.)	94	Y (M30, C60, T61) (EXC T72, T84, T85, T90) (1ST DES)	1	12141787
8-N5	2.480	HARNESS, I/P WRG (WHEN USE ON VEH W/O DAYTIME RUN LIGHTS, SPLICE CAV D&E TOGETHER @ BLUE 8-WAY DRL MOD CONN)	96	Y (M30, C60) (EXC T72, T84, T85, T90)	1	12130468
8-N5	2.480	HARNESS, I/P WRG (WHEN USE ON VEH W/O DAYTIME RUN LIGHTS, SPLICE CAV D&E TOGETHER @ BLUE 8-WAY DRL MOD CONN)	96	Y (M30, C68) (EXC T72, T84, T85, T90)	1	12130470
8-N5	2.480	HARNESS, I/P WRG (WHEN USE ON VEH W/O DAYTIME RUN LIGHTS, SPLICE CAV D&E TOGETHER @ BLUE 8-WAY DRL MOD CONN)	96	Y (ML9, C60) (EXC T72, T84, T85, T90)	1	12130472
8-N5	2.480	HARNESS, I/P WRG (WHEN USE ON VEH W/O DAYTIME RUN LIGHTS, SPLICE CAV D&E TOGETHER @ BLUE 8-WAY DRL MOD CONN)	96	Y (ML9, C68) (EXC T72, T84, T85, T90)	1	12130474
8-N5	2.480	HARNESS, I/P WRG	92	Y (MD8, C60, T61) (EXPORT)	1	12125006
8-N5	2.480	HARNESS, I/P WRG	92	Y (ML9, C60, T61) (EXPORT)	1	12125008
8-N5	2.480	HARNESS, I/P WRG	92	Y (MD8, C68, T61) (EXPORT)	1	12125814
8-N5	2.480	HARNESS, I/P WRG	92	Y (ML9, C68, T61) (EXPORT)	1	12125816
8-N5	2.480	HARNESS, I/P WRG	93	Y (ML9, C68, T90) (EXPORT)	1	12141441
8-N5	2.480	HARNESS, I/P WRG	93	Y (MD8, C68, T90) (EXPORT)	1	12141442
8-N5	2.480	HARNESS, I/P WRG	94	Y (M30, C68, T72, T84, T85, T90) (EXPORT) ...	1	12130495

							1Y09-040
	8-N5	2.480	HARNESS, I/P WRG	94	Y (ML9, C68, T72, T84, T85, T90) (EXPORT) ...	1	12141792
	8-N5	2.480	HARNESS, I/P WRG	95	Y (LT1, M30, C68, T72, T84, T85, T90) (EXC T61) (EXPORT)	1	12130396
	8-N5	2.480	HARNESS, I/P WRG	95	Y (LT1, ML9, C60, T61) (EXC T72, T84, T85, T90) (EXPORT)	1	12163701
	8-N5	2.480	HARNESS, I/P WRG	95	Y (LT1, ML9, C68, T61) (EXC T72, T84, T85, T90) (EXPORT)	1	12163703
	8-N5	2.480	HARNESS, I/P WRG	95	Y (LT1, ML9, C68, T72, T84, T85, T90) (EXC T61) (EXPORT)	1	12163704
	8-N5	2.480	HARNESS, I/P WRG	96	Y (M30, C68, T72, T84, T85, T90) (EXC T61) (EXPORT)	1	12130475
	8-N5	2.480	HARNESS, I/P WRG	96	Y (LT4, ML9, C68, T72, T84, T85, T90) (EXC T61) (EXPORT)	1	12163715
	8-N5	2.480	HARNESS, I/P WRG (TAGGED 0328)	94	Y (M30, C68, T72, T84, T85, T90) (1ST DES) (EXPORT)	1	12141791
21.		8.977	BOLT, HEX W/12.5 OD WA, M4.2X1.41X16 DBL LD HI-LO 6010M (HTR & A/C PROGMR BRKT)	92-96	.....	3	11515312
22.	8-C27	9.275	BRACKET, HTR & A/C PROGMR .	92-96	Y	1	10086302
23.	8-C18	9.215	RESISTOR, BLO MOT (9.275) ...	92-96	Y (C60)	1	14093106
24.	8-D5	9.280	VALVE, HTR & A/C CONT VAC TK CHK (STAMPED 6648) (3.885) (AC-DELCO #14056648)	92-95	Y (LT1)	1	14056648
	8-D5	9.280	VALVE, HTR & A/C CONT VAC TK CHK (STAMPED 6648) (3.885) (AC-DELCO #14056648)	96	Y	1	14056648
25.		8.963	TEE, HOSE (NYL M6.3 X M6.3 X M6.3)	92-96	.....	AR	14004877
26.		8.962	HOSE, BULK 5/32X25FT	92-96	.....	AR	9438381

RPO DEFINITIONS
A26 – WINDOW,UNITED KINGDOM AND EUROPEAN GLAZING(EXPORT)
CC2 – ROOF,AUXILIARY
C60 – AIR CONDITIONER,FRONT,MANUAL CONTROLS
C68 – AIR CONDITIONER,FRONT,AUTOMATIC,ELECTRONIC CONTROLS
DC7 – MIRROR,OUTSIDE,RH AND LH,REMOTE CONTROL,ELECTRIC,BREAKAWAY(PAINTED)(50 INCH FIELD OF VIEW)
DC8 – MIRROR,OUTSIDE,RH AND LH REMOTE CONTROL ELECTRIC,BREAKAWAY(PAINTED)(55 INCH FIELD OF VIEW)
DL8 – MIRROR,OUTSIDE,RH AND LH REMOTE CONTROL,ELECTRIC,DEFOG
LT1 – ENGINE-GAS, 8 CYL, 5.7L(5.7P),MFI,HO
LT4 – ENGINE GAS, 8 CYL, 5.7L, MFI, HIGH OUTPUT
LT5 – ENGINE,5.7L(5.7J),TPI
MD8 – TRANSMISSION,AUTOMATIC 4-SPEED(THM700R4/4L60)
ML9 – TRANSMISSION,MANUAL 6-SPEED
M30 – TRANSMISSION,AUTOMATIC 4 SPEED,4L60E,ELECTRONIC
T61 – LIGHTING,DAYTIME RUNNING
T72 – HEADLAMPS,LH RULE OF THE ROAD(EXPORT)
T84 – HEADLAMPS,RH RULE OF THE ROAD,RECTANGULAR(MARKED E)(EXPORT)
T85 – HEADLAMPS,LH RULE OF THE ROAD,RECTANGULAR(MARKED E)(EXPORT)
T90 – LAMP,SIGNALING AND MARKER(EXPORT)
VE1 – PROVISION OPTIONS,JAPAN(EXPORT)

© 2000 GENERAL MOTORS SERVICE PARTS OPERATIONS-CHEVROLET-14Y

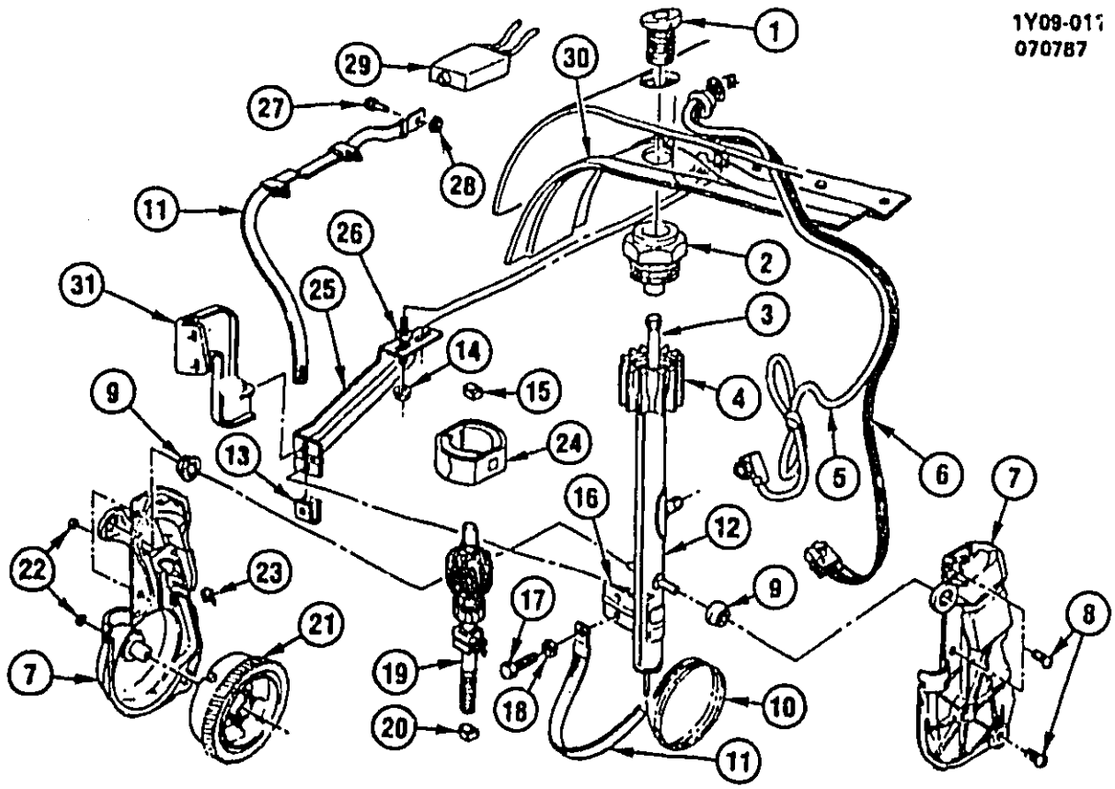

1Y09–011

1984–1987 Y ANTENNA ASM/ELECTRIC

1.	8–D11	9.647	**BEZEL** (AC–DELCO #14047162)	14047162
2.		DISCON	**NUT**, BEZEL	14073401
3.	8–D11	9.647	**FINIAL**, CAP (AC–DELCO #22049789)	22049789
4.	8–D11	9.647	**BRACKET**, RDO PWR ANT (RET PKG UPR NUT) (AC–DELCO #22038892)	22038892
5.		DISCON	**CABLE**, ANT TO SPLITTER (1984 C.B.)	22038900
	8–D11	9.647	**CABLE**, RDO EXT (1984 EXC C.B.) (1985–87) (AC–DELCO #14066599)	14066599
	8–D11	9.647	**CABLE**, ANT TO RDO (1984 EXC C.B.) (1985–87) (AC–DELCO #22038895)	22038895
6.		DISCON	SWITCH	22038894
7.		DISCON	**HOUSING**, CVR (AC–DELCO #22030932)	22030932
8.		N.S.	**BOLT**, HOUSING (PART OF BOLT & CLIP PACKAGE, SEE GROUP 9.647)	
9.		DISCON	**GROMMET KIT**, TUBE TO HSG (SERVICED BY COMPLETE SERVICE ANTENNA)	22048632
10.	8–D11	9.647	**CABLE**, RDO ANT (ROD KIT) (ELEC) (INCLS DRIVE CBL & FINIAL SECTION) (1984) (AC–DELCO #22038197)	22038197
	8–D11	9.647	**CABLE**, ROD (1984 EXC C.B.) (1985–87) (AC–DELCO #22038195)	22038195
11.	8–D11	9.647	**STRAP**, GRD (2.341) (AC–DELCO #12016624)	12016624
12.	8–D7	9.645	**ANTENNA**, RDO PWR (EXC C.B.) (1984–85) (IF COMPLETE LEAD IS REQD, USE 22139030) (AC–DELCO #22062597)	22062597
	8–D7	9.645	**ANTENNA PKG**, RDO PWR (COMPL) (W/C.B.) (1984) (AC–DELCO #12355706)	12355706
	8–D7	9.645	**ANTENNA PKG**, RDO FIXED (EXC C.B.) (1984–87) (W/TUBE) (AC–DELCO #22062598)	22062598
13.		8.921	**NUT**, U SHAPED (M6X1, 20X24)	12338151
14.		8.917	**NUT**, HEX CON WA (M6X1)	11516793

© 2000 GENERAL MOTORS SERVICE PARTS OPERATIONS–CHEVROLET–14Y

				1Y09-011
15.		N.S.	BEARING, MET	
16.		N.S.	BRACKET, LWR	
17.		8.900	BOLT, HFH (M6X1X20) (AC-DELCO #11508600)	11508600
18.		8.929	WASHER, FL (M6.3X25.2X2.5)	
19.	8-D11	9.647	ARMATURE (AC-DELCO #22020274)	22020274
20.		N.S.	BEARING, PLSTC	
21.		DISCON	GEAR, CUP (SERVICED BY COMPLETE SERVICE ANTENNA)	22030317
22.		N.S.	NUT (PART OF BOLT & CLIP PACKAGE, SEE GROUP 9.647)	
23.		N.S.	CLIP (PART OF BOLT & CLIP PACKAGE, SEE GROUP 9.647)	
24.		DISCON	MAGNET (NO LONGER SERV. SEPARATELY; SERV. W/COMPL. SERV. ANTENNA	22020279
25.		DISCON	BRACKET (Y07)	14073402
26.		3.981	STUD, FLG (M7X1.59X16 & M6X1X20)	11508509
27.		8.977	SCREW, SEMS HEX FL WA (M6.3X1.81X20)	12337828
28.		8.932	WASHER, LK (1/4 EXT TOOTH) (AC-DELCO #121753)	121753
29.		N.S.	SPLITTER, FM/CB SIGNAL	
30.		DISCON	SHIELD, RDO NOISE SUPPR	14069650
31.		DISCON	BRACKET (Y67)	14092715

© 2000 GENERAL MOTORS SERVICE PARTS OPERATIONS-CHEVROLET-14Y

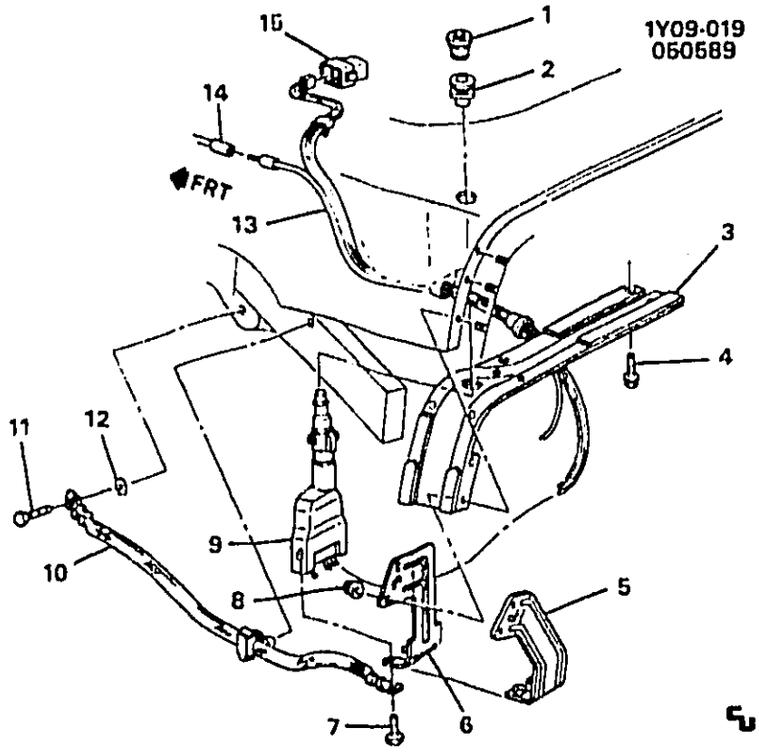

1Y09-019

1988-1996 Y ANTENNA ASM/ELECTRIC

1.	8-D11	9.647	BEZEL, RDO PWR ANT (AC-DELCO #14104620)	90-95	Y (ZR1)	1	14104620
2.	8-D11	9.647	BEZEL, RDO PWR ANT (AC-DELCO #10067979)	88-89	Y	1	10067979
	8-D11	9.647	BEZEL, RDO PWR ANT (AC-DELCO #10067979)	90-95	Y (EXC ZR1)	1	10067979
	8-D11	9.647	BEZEL, RDO PWR ANT (AC-DELCO #10067979)	96	Y	1	10067979
3.	8-D22	9.663	SHIELD, RDO NOISE SUPPR (AC-DELCO #10098463)	88-89	Y	1	10098463
	8-D22	9.663	SHIELD, RDO NOISE SUPPR (AC-DELCO #10098463)	90-95	Y (EXC ZR1)	1	10098463
	8-D22	9.663	SHIELD, RDO NOISE SUPPR	90-95	Y (ZR1)	1	14104619
	8-D22	9.663	SHIELD, RDO NOISE SUPPR (AC-DELCO #10098463)	96	Y	1	10098463
4.		8.950	RETAINER, PUSH-IN, FITS .250 HOLE, 1.01LG.700-OD NYLON BLACK	88-96	.....	AR	10121502
5.	8-D11	9.647	BRACKET, RDO PWR ANT (AC-DELCO #14104621)	90-95	Y (ZR1)	1	14104621
6.	8-D11	9.647	BRACKET, RDO PWR ANT (AC-DELCO #10067978)	88-89	Y	1	10067978
	8-D11	9.647	BRACKET, RDO PWR ANT (AC-DELCO #10067978)	90-95	Y (EXC ZR1)	1	10067978
	8-D11	9.647	BRACKET, RDO PWR ANT (AC-DELCO #10067978)	96	Y	1	10067978
7.	8-D11	9.647	BOLT, RDO PWR ANT BRKT (AC-DELCO #11514297)	88-96	Y	2	11514297

© 2000 GENERAL MOTORS SERVICE PARTS OPERATIONS-CHEVROLET-14Y

							1Y09-019	
8.		8.919	NUT, MET LOW CROWN M5-0.8 CHR	88-96			AR	11503674
9.	8-D7	9.645	ANTENNA, RDO PWR (CPS) (AC-DELCO #10067977)	88-89	Y		1	10067977
	8-D7	9.645	ANTENNA, RDO PWR (CPS) (AC-DELCO #10098488)	90-92	Y		1	10098488
	8-D7	9.645	ANTENNA, RDO PWR (CPS) (AC-DELCO #10156160)	93-96	Y		1	10156160
	8-D7	9.645	ANTENNA, RDO PWR (CPS) (W/TUBE) (9.647) (AC-DELCO #12525955)	93-96	Y		1	12525955
	8-D7	9.645	ANTENNA, RDO PWR (WITHOUT MOTOR) (CPS) (W/TUBE) (9.647) (AC-DELCO #12512900)	88-92	Y		1	12512900
	8-D7	9.645	ANTENNA, RDO PWR (AC-DELCO #10067977)	88-89	Y		1	10067977
	8-D7	9.645	ANTENNA, RDO PWR (AC-DELCO #10098488)	90-92	Y		1	10098488
	8-D7	9.645	ANTENNA, RDO PWR (AC-DELCO #10156160)	93-96	Y		1	10156160
	8-D7	9.645	ANTENNA, RDO PWR (W/TUBE) (9.647) (AC-DELCO #12525955)	93-96	Y		1	12525955
	8-D7	9.645	ANTENNA, RDO PWR (WITHOUT MOTOR) (W/TUBE) (9.647) (AC-DELCO #12512900)	88-92	Y		1	12512900
10.	8-D11	9.647	STRAP, RDO PWR ANT GND (2.341) (AC-DELCO #12016624)	88-96	Y		1	12016624
11.		8.977	SCREW, HEX W/FLAT WA	88-96			AR	12337828
12.		8.932	WASHER, EXT TOOTH LK ZN 1/4 (AC-DELCO #121753)	88-96			AR	121753
13.		N.S.	HARNESS					
14.	8-D11	9.647	CABLE, RDO ANT CBL EXTN (AC-DELCO #14066599)	88-89	Y		1	14066599
	8-D11	9.647	CABLE, RDO ANT CBL EXTN (3285MM, 129IN) (REROUTE NEW CABLE ON FLR CNSL TOP EDGE WHEN SERV.LONGER CABLE) (AC-DELCO #10098489)	90-92	Y		1	10098489
	8-D11	9.647	CABLE, RDO ANT CBL EXTN (AC-DELCO #10225353)	93-96	Y		1	10225353
15.	8-D11	9.647	RELAY, RDO PWR ANT (NOT USED 1993 FORWARD) (AC-DELCO #22535475)	90-92	Y		1	22535475

RPO DEFINITIONS

ZR1 - PACKAGE,SPECIAL PERFORMANCE COUPE(1YY07 + ZR1 == 1YZ07)

© 2000 GENERAL MOTORS SERVICE PARTS OPERATIONS-CHEVROLET-14Y

MICROFICHE INDEX

GROUPS 8.000 THRU 9.000

FICHE 8 OF 11

GROUP	DESCRIPTION	STARTING GRID LOCATION PARTS	ILLUSTRATIONS
–	GENERAL INFORMATION	1–A2	1–G2
–	ALPHABETICAL INDEX	1–B13	N.A.
8.000	FRONT END SHEET METAL – HEATER	8–A2	8–F2
9.000	BODY MOUNTING – AIR CONDITIONING – INSTRUMENT CLUSTER	8–C2	8–I2
–	OUT OF FICHE CALLS	N.A.	8–M27

8–L1

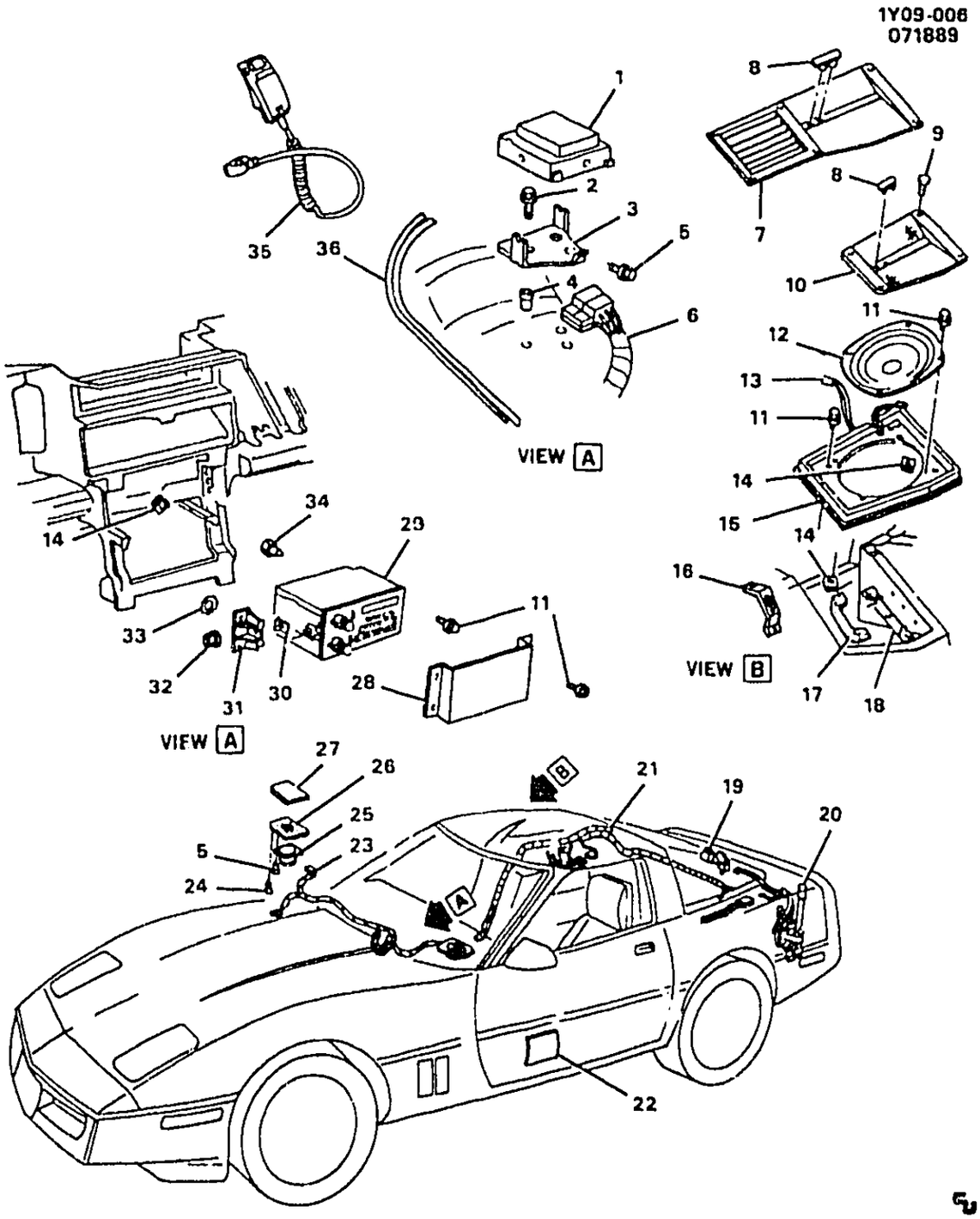

1Y09–006

1984–1989 Y AUDIO SYSTEM (EXC UQ4)

1.	DISCON	TRANSCEIVER, C .B. (1984)	1601161J
2.	8.900	BOLT, HEX W/CON WA (M5X.8X20)	11508940
3.	DISCON	BRACKET, C .B. RCVR (1984)	14047160
4.	N.S.	NUT, C .B. TRANSCEIVER	
5.	8.977	SCREW, HWH TAP (M4.2X1.41X10)	11509212
6.	DISCON	HARNESS, C .B. TRANSCEIVER W/RLY (1984)	16021760

© 2000 GENERAL MOTORS SERVICE PARTS OPERATIONS–CHEVROLET–14Y

7.	8-D22	9.665	GRILLE, RR-RH (1988-89 Y07) (FOR Y67 USAGE, SEE "RADIO REAR SPEAKERS/DETAILS" IN GROUP 9.000)	10054606
	8-D22	9.665	GRILLE, RR-LH (1988-89 Y07) (FOR Y67 USAGE, SEE "RADIO REAR SPEAKERS/DETAILS" IN GROUP 9.000)	10054605
8.	8-D17	9.655	PLATE, SPKR NA ("DELCO")	14057530
9.		8.977	SCREW, SPL OV HD M/R TAP/DRILL (M4.2X1.41X25)	20365258
10.	8-D22	9.665	GRILLE, RR-RH (1984-87 Y07) (PAINT TO MATCH) (FOR Y67 USAGE, SEE "RADIO REAR SPEAKERS/DETAILS" IN GROUP 9.000)	14057534
	8-D22	9.665	GRILLE, RR-LH (1984-87 Y07) (PAINT TO MATCH) (FOR Y37 USAGE, SEE "RADIO REAR SPEAKERS/DETAILS" IN GROUP 9.000)	14057533
11.		8.977	SCREW, HWH (M4.2X1.41X20)	16516859
12.	8-D22	9.665	SPEAKER, RR (Y07) (FOR Y67 USAGE, "RADIO REAR SPEAKERS/DETAILS" IN GROUP 9.000.) (AC-DELCO #16040940)	16040940
13.	8-D20	9.656	WIRE, RR (1984-89)	12055334
14.		8.921	NUT, U-TYPE (M.2X1.41)	12338121
15.	8-D22	9.665	PLATE, RR MT-RH (Y07) (FOR Y67 USAGE, SEE "RADIO REAR SPEAKERS/DETAILS" IN GROUP 9.000.)	10098443
	8-D22	9.665	PLATE, RR MT-LH (Y07) (FOR Y67 USAGE, SEE "RADIO REAR SPEAKERS/DETAILS" IN GROUP 9.000.)	10098442
16.	8-D17	9.655	BRACKET, RR SPKR (GRL MT) (1988-89 Y07) (FOR Y67 USAGE, SEE "RADIO REAR SPEAKERS/DETAILS" IN GROUP 9.000.)	10082810
17.		DISCON	BRACKET, RR SPKR FRT (Y07) (FOR Y67 USAGE, SEE "RADIO REAR SPEAKERS/DETAILS" IN GROUP 9.000.)	14047437
18.		DISCON	BRACKET, RR SPKR RR-RH (Y07) (FOR Y67 USAGE, SEE "RADIO REAR SPEAKERS/DETAILS" IN GROUP 9.000.)	14047440
		DISCON	BRACKET, RR SPKR RR-LH (Y07) (FOR Y67 USAGE, SEE "RADIO REAR SPEAKERS/DETAILS" IN GROUP 9.000.)	14047439
19.	8-D11	9.647	RELAY, ELEC ANT (AC-DELCO #22535475)	22535475
20.	8-D7	9.645	ANTENNA (SEE PARTS SECTION FOR USAGE) (SEE GROUP 9.000 "ANTENNA ASM/ELECTRIC" FOR DETAIL ILLUSTRATED VIEW.)	
21.		DISCON	HARNESS, BODY WRG (1984)	12036117
		DISCON	HARNESS, BODY WRG (1985)	12049882
		DISCON	HARNESS, BODY WRG (1986)	12048813
		DISCON	HARNESS, BODY WRG (1987-89)	12085453
	8-N25	13.090	MODULE, DIODE ARRAY	12088529
22.	8-D22	9.665	SEAL, DR RADIO SPKR OPG CVR	14064578
23.		DISCON	HARNESS, FRT & RR SPKR	12016859
24.		8.977	BOLT, HEX W/LG FL WA M4.2X1.41X16 TAP POR (FRT SPKR GRL (1984-86) (8.977)) (AR)	11515730
		8.977	BOLT, HEX W/LG FL WA M4.2X1.41X16 TAP POR ((1987-89)) (AR)	11515730
25.	8-D14	9.650	SPEAKER, FRT (AC-DELCO #16033662)	16033662
26.	8-D14	9.650	GRILLE, FRT-RH (EXC UL5)	14047518
	8-D14	9.650	GRILLE, FRT-LH (EXC UL5)	14047517
27.	8-D14	9.650	GRILLE, FRT-RH (W/UL5)	14081838
	8-D14	9.650	GRILLE, FRT-LH (W/UL5)	14081837
28.		DISCON	COVER, RDO OPG	14049019
29.		DISCON	RECEIVER (1984 W/UM6) (COMPONENTS SERVICED)	16029091
		DISCON	RECEIVER (1984 W/UM7) (COMPONENTS SERVICED) (AC-DELCO #16166192)	16166192
		DISCON	RADIO PKG (1985-89 W/UM6)	12344493
		DISCON	RECEIVER (1985-87 W/UM7) (COMPONENTS SERVICED)	16203874
	8-D4	9.279	LAMP, CONT DIAL (1984 W/UM6) (AC-DELCO #7895189)	7895189
		DISCON	ESCUTCHEON (1984 W/UM7)	16025217
		DISCON	ESCUTCHEON (1984 W/UM6)	16013924
		DISCON	LIGHTPIPE, PNTD (PUSH BUTTON) (1984 W/UM6)	16020883
	8-D17	9.652	BUTTON, CONT (1984 W/UM7) (AC-DELCO #16020534)	16020534
		N.S.	BUTTON, PWR (1984 W/UM7)	
	8-D17	9.652	BUTTON, PWR (1985-87 W/UM7) (AC-DELCO #16032367)	16032367

© 2000 GENERAL MOTORS SERVICE PARTS OPERATIONS-CHEVROLET-14Y

	8-D17	9.652	BUTTON, CONT BASS/TREBLE (1985-87 W/UM7) (AC-DELCO #16032477)	16032477
	8-D17	9.652	BUTTON, CONT (1985-89 W/UM6) (AC-DELCO #16020534)	16020534
	8-D4	9.279	LAMP, CONT DIAL (1984 W/UM6) (AC-DELCO #7895189)	7895189
	8-D12	9.649	KNOB, FADER/BAL (1984 W/UM7) (AC-DELCO #16020530)	16020530
	8-D12	9.649	KNOB, VOL OR TUNING CONT (1984 W/UM7) (AC-DELCO #16020297)	16020297
	8-D12	9.649	KNOB, VOL OR TUNING CONT (1985-89 W/UM6) (AC-DELCO #16020297)	16020297
	8-D12	9.649	KNOB, FADER/BAL (1985-89 W/UM6) (AC-DELCO #16035456)	16035456
	8-D12	9.649	KNOB, FADER/BAL (1985-87 W/UM7) (AC-DELCO #16019795)	16019795
30.	8-N23	3.171	BOLT, U NUT & STUD (M5X.8X10) (14.865) (AC-DELCO #12337892)	12337892
31.	8-D24	9.667	BRACKET (AC-DELCO #14047197)	14047197
32.		8.917	NUT, HEX FLG (M5X.8)	11514252
33.		8.932	WASHER, EXT LK (M8X15X1.52) (AC-DELCO #11501869)	11501869
34.	8-D24	9.667	RETAINER, RDO CONT (PUSH-ON) (AC-DELCO #10027015)	10027015
35.		DISCON	MICROPHONE, C .B. RCVR (1984)	1224757
36.		DISCON	SPLITTER, C .B. TRANSCEIVER SIG (1984)	22038896
		DISCON	INSULATOR, C .B. TRANSCEIVER SIG SPLITTER (1984)	14080664

RPO DEFINITIONS

UQ4 – SPEAKER SYSTEM,BOSE 4-SPEAKER,INCLUDES AMPLIFIER

© 2000 GENERAL MOTORS SERVICE PARTS OPERATIONS-CHEVROLET-14Y

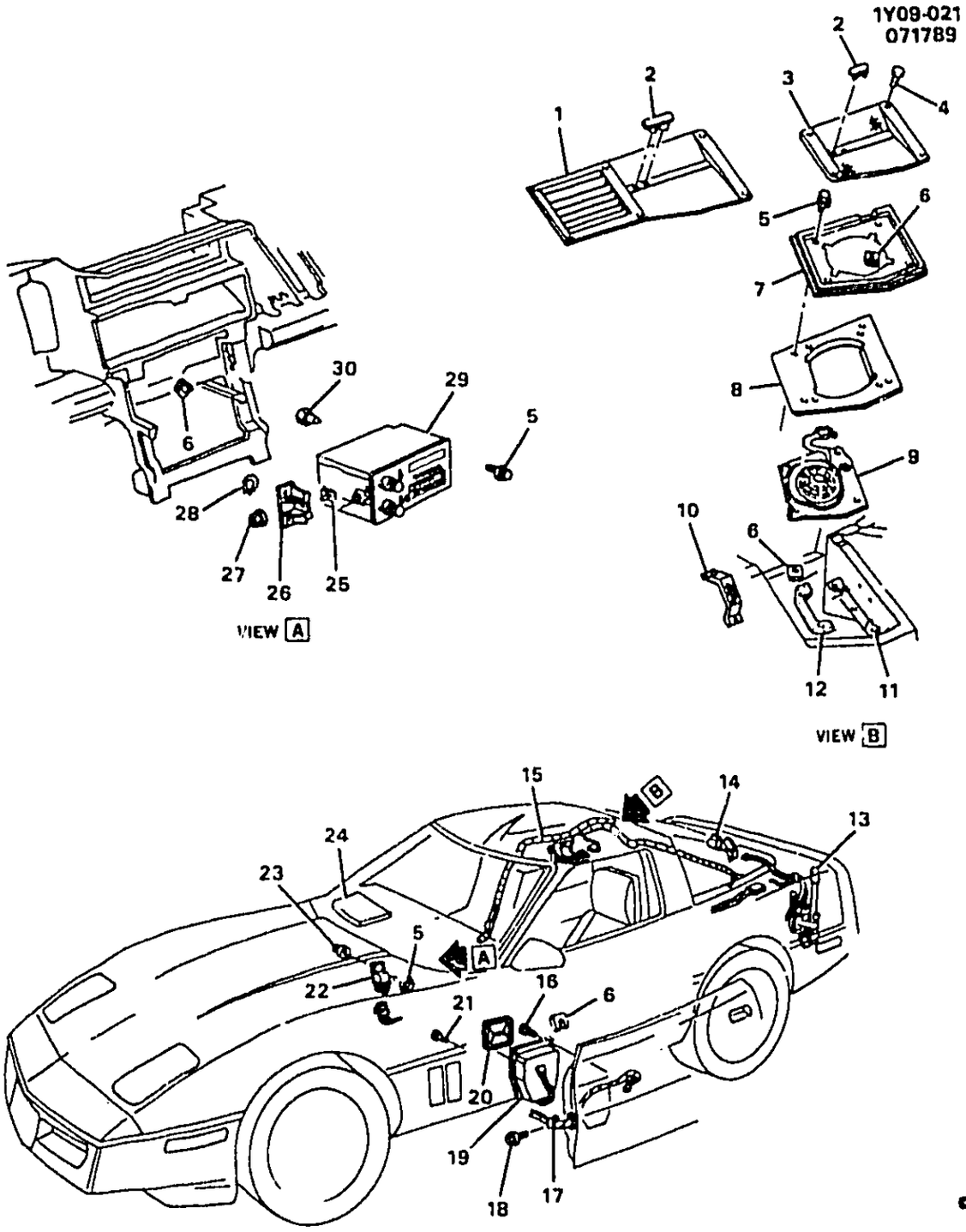

1Y09–021

1984–1989 Y AUDIO SYSTEM (UQ4)

1.	8–D22	9.665	GRILLE, RR SPKR–RH (1988 Y07) (FOR Y67 USAGE, SEE "RADIO REAR SPEAKERS/DETAILS" IN GROUP 9.000.)	10054606
	8–D22	9.665	GRILLE, RR SPKR–LH (1988 Y07) (FOR Y67 USAGE, SEE "RADIO REAR SPEAKERS/DETAILS" IN GROUP 9.000.)	10054605
2.	8–D22	9.665	PLATE, GRL NA (PART OF 20)	14057531

© 2000 GENERAL MOTORS SERVICE PARTS OPERATIONS · CHEVROLET–14Y

				1Y09-021
3.	8-D22	9.665	GRILLE, RR SPKR-RH (1984-85) (1986-87 Y07) (PAINT TO MATCH) (FOR Y67 USAGE, SEE "RADIO REAR SPEAKERS/DETAILS" IN GROUP 9.000)	14057534
	8-D22	9.665	GRILLE, RR SPKR-LH (1984-85) (1986-87 Y07) (PAINT TO MATCH) (FOR Y67 USAGE, SEE "RADIO REAR SPEAKERS/DETAILS" IN GROUP 9.000)	14057533
4.		8.977	SCREW, SPL OV HD M/R TAP/DRILL (M4.2X1.41X25)	20365258
5.		8.977	SCREW, HWH (M4.2X1.41X20)	16516859
6.		8.921	NUT, U-TYPE (4.2X1.41)	12338121
7.	8-D22	9.665	PLATE, RR SPKR MT-RH (Y07) (FOR Y67 USAGE, SEE "RADIO REAR SPEAKERS/DETAILS" IN GROUP 9.000.)	10098443
	8-D22	9.665	PLATE, RR SPKR MT-LH (Y07) (FOR Y67 USAGE, SEE "RADIO REAR SPEAKERS/DETAILS" IN GROUP 9.000.)	10098442
8.		DISCON	GASKET, FLR RR PNL PKT INSL-RH (1988-89 Y07) (FOR Y67 USAGE, SEE "RADIO REAR SPEAKERS/DETAILS" IN GROUP 9.000.)	10077238
		DISCON	GASKET, FLR RR PNL PKT INSL-LH (1988-89 Y07) (FOR Y67 USAGE, SEE "RADIO REAR SPEAKERS/DETAILS" IN GROUP 9.000.)	10077237
9.	8-D22	9.665	SPEAKER, RR-RH (1984-85) (1986-89 Y07) (FOR Y67 USAGE, SEE "AUDIO SYSTEM REAR" IN GROUP 9.000) (AC-DELCO #16022301)	16022301
	8-D22	9.665	SPEAKER, RR-LH (1984-85) (1986-89 Y07) (FOR Y67 USAGE, SEE "AUDIO SYSTEM REAR" IN GROUP 9.000) (AC-DELCO #16022311)	16022311
	8-D22	9.665	SPEAKER, W/GSKT (AC-DELCO #1226669)	1226669
		DISCON	AMPLIFIER, RR SPKR (1984-88)	1229242
	8-D14	9.650	AMPLIFIER, RR SPKR (1989 Y07) (FOR Y67 USAGE, SEE "RADIO REAR SPEAKERS/DETAILS" IN GROUP 9.000.) (AC-DELCO #1227906)	1227906
		DISCON	GASKET, SPKR (R/ST TO B/W PNL) (Y07) (FOR Y67 USAGE, SEE "RADIO REAR SPEAKERS/DETAILS" IN GROUP 9.000.)	1226376
		DISCON	GASKET, ENCL SPKR RR (1984-85) (1986-89 Y07) (FOR Y67 USAGE, SEE "RADIO REAR SPEAKERS/DETAILS" IN GROUP 9.000.)	1226369
10.	8-D17	9.655	BRACKET, RR SPKR GRL MT (1988-89 Y07) (FOR Y67 USAGE, SEE "RADIO REAR SPEAKERS/DETAILS" IN GROUP 9.000.)	10082810
11.		DISCON	BRACKET, RR SPKR RR-RH (Y07) (FOR Y67 USAGE, SEE "RADIO REAR SPEAKERS/DETAILS" IN GROUP 9.000.)	14047440
		DISCON	BRACKET, RR SPKR RR-LH (Y07) (FOR Y67 USAGE, SEE "RADIO REAR SPEAKERS/DETAILS" IN GROUP 9.000.)	14047439
12.		DISCON	BRACKET, RR SPKR FRT (Y07) (FOR Y67 USAGE, SEE "RADIO REAR SPEAKERS/DETAILS" IN GROUP 9.000.)	14047437
13.	8-D7	9.645	ANTENNA (SEE PART SECTION FOR USAGE) (SEE GROUP 9.000 "ANTENNA ASM/ELECTRIC" FOR DETAIL ILLUSTRATED VIEW.)	
14.	8-D11	9.647	RELAY, ELEC ANT (AC-DELCO #22535475)	22535475
15.		DISCON	HARNESS, BODY WRG (1984)	12036116
		DISCON	HARNESS, BODY WRG (1985)	12049881
		DISCON	HARNESS, BODY WRG (1987-88 Y07) (FOR Y67 USAGE, SEE "RADIO REAR SPEAKERS/DETAILS" IN GROUP 9.000.)	12073831
16.		8.977	SCREW, HWH (M4.2X1.41X20)	16516859
17.		DISCON	HARNESS, FRT SPKR WRG (1984)	12016893
		DISCON	HARNESS, FRT SPKR WRG (1985-88)	12048605
		DISCON	HARNESS, FRT SPKR WRG (1989)	12080604
	8-N25	13.090	MODULE, DIODE ARRAY (PART OF 13)	12088529
18.		8.977	SCREW, C/R TAP (M8X18X.875)	9423131
19.		DISCON	SPEAKER, SI F/D (1984-85) (COMPONENTS SERVICED)	16022281

© 2000 GENERAL MOTORS SERVICE PARTS OPERATIONS-CHEVROLET-14Y

	8-D22	9.665	SPEAKER, SI F/D (1986-89) (COMPONENTS SERVICED) (AC-DELCO #16052371)	16052371
	8-D22	9.665	SPEAKER, W/GSKT (AC-DELCO #1226669)	1226669
		DISCON	AMPLIFIER, SI F/D (1984-85)	1227804
		DISCON	AMPLIFIER, SI F/D (1986-88)	1227888
	8-D14	9.650	AMPLIFIER, SI F/D (1989) (AC-DELCO #1227941)	1227941
		DISCON	GASKET, ENCL SPKR SI F/D	1226368
		DISCON	GASKET, SPKR (1984-85)	1226376
20.	8-D22	9.665	GRILLE, SI F/D SPKR (INCL 2) (PAINT TO MATCH)	14049217
21.		8.977	SCREW, PAN HD C/R TAP (M4.2X1.41X25)	11515244
22.	8-D14	9.650	RELAY, RDO SPKR AMPF (2.510) (AC-DELCO #15-8218)	14078902
23.	3-N20	2.729	NUT, SPL ANC NY (SQ HOLE)	347347
24.	8-D14	9.650	GRILLE, FRT SPKR-RH	14081838
	8-D14	9.650	GRILLE, FRT SPKR-LH	14081837
25.	8-D24	9.667	BOLT, U NUT & STUD (M5X.8X10) (3.671) (AC-DELCO #12337892)	12337892
26.	8-D24	9.667	BRACKET, RDO (AC-DELCO #14047197)	14047197
27.		8.917	NUT, HEX FLG (M5X.8)	11514252
28.		8.932	WASHER, EXT LK (M8X1.5X1.52) (AC-DELCO #11501869)	11501869
29.	8-D14	9.650	RECEIVER (1984-89) (COMPONENTS SERVICED)	16021351
		DISCON	PUSHBUTTON, DNR/CRO2 (1984)	16035459
		DISCON	PUSHBUTTON, SLIDE BASE/TREBLE	16033533
		DISCON	PUSHBUTTON (1984)	16020529
	8-D12	9.649	KNOB, FADER/BAL (AC-DELCO #16035456)	16035456
	8-D12	9.649	KNOB, VOL OR TUNING CONT (AC-DELCO #16020297)	16020297
		DISCON	ESCUTCHEON, (1984)	16024329
		DISCON	LIGHTPIPE (1984)	16025384
30.	8-D24	9.667	RETAINER, RDO CONT (PUSH-ON) (AC-DELCO #10027015)	10027015

RPO DEFINITIONS
UQ4 - SPEAKER SYSTEM,BOSE 4-SPEAKER,INCLUDES AMPLIFIER

© 2000 GENERAL MOTORS SERVICE PARTS OPERATIONS-CHEVROLET-14Y

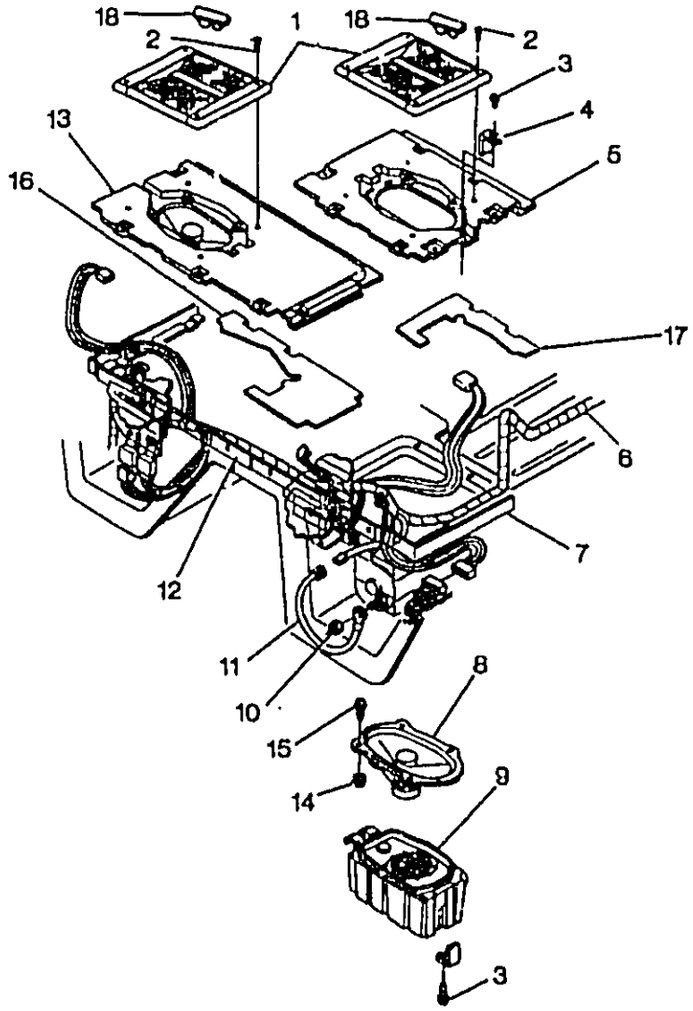

1Y09-015
073192

1Y09-015

1986-1989 Y67 AUDIO SYSTEM REAR

1.		DISCON	GRILLE	14092707
2.		8.977	SCREW, SPL OV HD M/R TAP/DRILL (M4.2X1.41X25)	20365258
3.		8.977	BOLT, HWH TAP (M4.2X1.41X16)	11513932
4.		DISCON	BRACKET	14092664
5.		DISCON	PLATE, MT-LH	14092667
6.		DISCON	HARNESS, BODY WRG (1986 UU8) (CPS)	12055601
		DISCON	HARNESS, BODY WRG (1986 EXC UU8) (CPS)	12055600
	8-N25	13.090	MODULE, DIODE ARRAY	12088529
		DISCON	HARNESS, BODY WRG (1987 UU8)	12073830
		DISCON	HARNESS, BODY WRG (1987 UM6, UM7) (1988 UM6)	12080872
		DISCON	HARNESS, BODY WRG (1988 UU8)	12073830
		DISCON	HARNESS, BODY WRG (1989)	12073839
7.		DISCON	REINFORCEMENT, OPG-LH	14092665
8.	8-D22	9.665	SPEAKER (1987 UM6, UM7) (1988-89 EXC UQ4) (AC-DELCO #16177769)	16177769
9.		DISCON	SPEAKER (UQ4)	16052301
		DISCON	AMPLIFIER (1989 UQ4)	1228413
10.		8.915	NUT (M5X.8)	11509203
11.		DISCON	HARNESS, BRK PRESS MOD VLV WRG HARN GRD (WHEN USED ON 1986 VEHICLES, USE OF CONNECTOR IS REQUIRED)	12055840
		8.965	CONNECTOR, ENG COMPT	8917052
12.		DISCON	REINFORCEMENT, OPG-RH	14092666

© 2000 GENERAL MOTORS SERVICE PARTS OPERATIONS-CHEVROLET-14Y

				1Y09-015
13.		DISCON	PLATE, MT-RH	14092668
14.		8.915	NUT (M5X.8)	11509203
15.		8.900	BOLT, HWH (M5X.8X25)	11508858
16.		DISCON	INSULATOR, OPG CVR-RH	10048874
17.	8-D22	9.665	INSULATOR, OPG CVR-LH (AC-DELCO #10048873)	10048873
18.	8-D22	9.665	PLATE, GRL NA	14057531

© 2000 GENERAL MOTORS SERVICE PARTS OPERATIONS-CHEVROLET-14Y

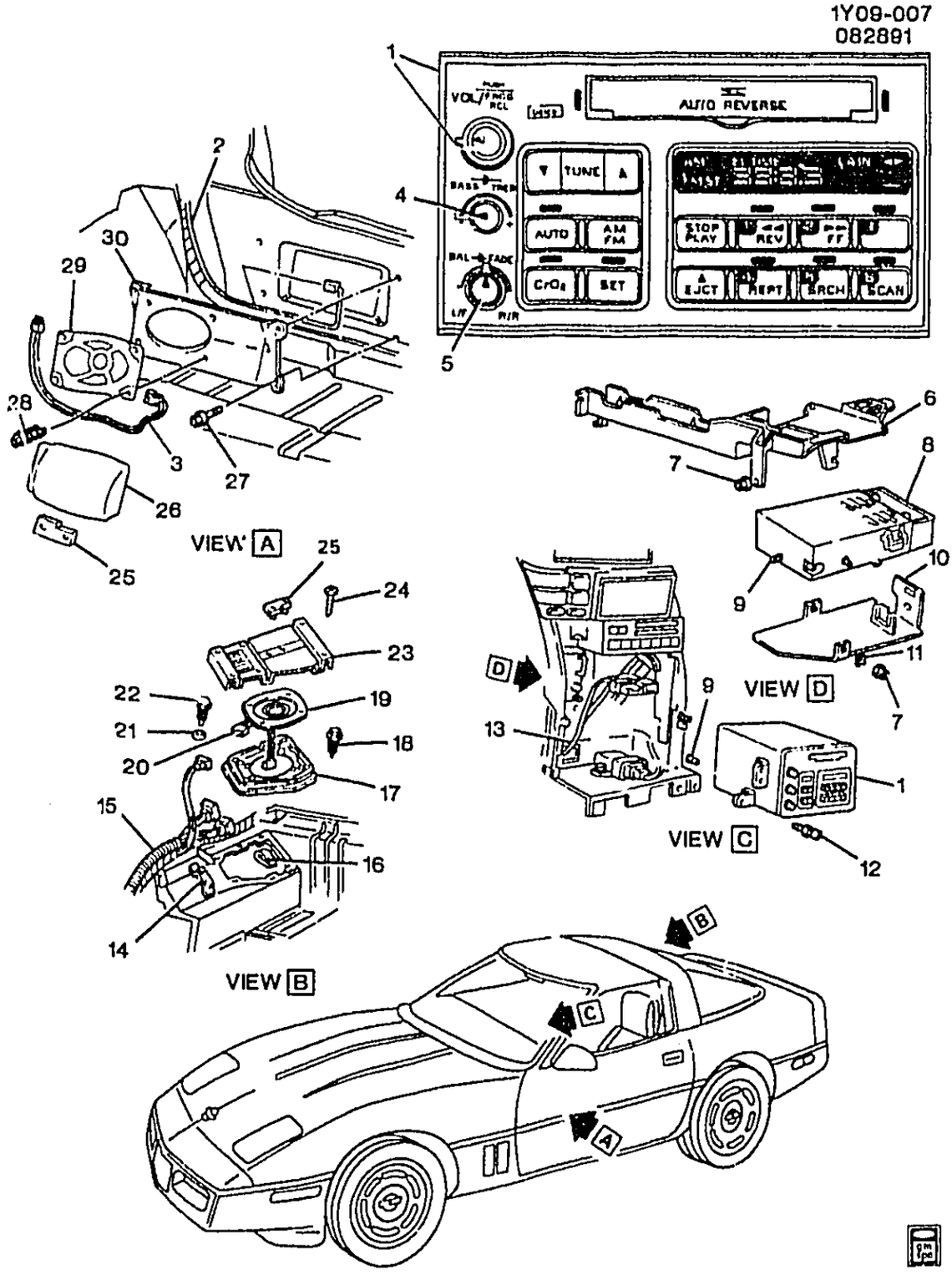

1Y09-007

1990-1992 Y AUDIO SYSTEM (EXC UX0)

1.	8-D12	9.649	KNOB, RDO VOL CONT (AC-DELCO #16123224)	90-91	Y (UM6)	1	16123224
	8-D12	9.649	KNOB, RDO VOL CONT (AC-DELCO #16123224)	90-92	Y (UU8, U1F)	1	16123224

© 2000 GENERAL MOTORS SERVICE PARTS OPERATIONS-CHEVROLET-14Y

							1Y09-007
	8-D12	9.649	KNOB, RDO VOL CONT (OTR) (SPD CONT VOL) (AC-DELCO #16161312)	90-92	Y (UM6, UU8, U1F)	1	16161312
	8-D14	9.650	RADIO, AM/FM STEREO & CLK & T/PLYR & CD PLYR (MAY REQ 1 OF THE FOLLOWING ANT ADAP:16169581, 16169591, 16169601, 16169611) (INCL 4, 5) (AC-DELCO #16169531)	90-92	Y (UK1, U1F) (EXPORT)	1	16169531
	8-D12	9.649	KNOB, RDO VOL CONT (AC-DELCO #16123224)	90-92	Y (UK1, UL2, U1F) (EXPORT)	1	16123224
	8-D12	9.649	KNOB, RDO VOL CONT (OTR) (SPD CONT VOL) (AC-DELCO #16161312)	90-92	Y (UK1, UL2, U1F) (EXPORT)	1	16161312
2.		DISCON	HARNESS, RDO FRT SPKR WRG	90-92	Y (EXC UX0)	1	12073817
3.	8-D20	9.656	WIRE, RDO FRT SPKR	90-92	Y (EXC UX0)	2	12090388
4.	8-D12	9.649	KNOB, RDO TONE CONT (PART OF 1) (BASS) (AC-DELCO #16123226)	90-92	Y (UM6)	2	16123226
	8-D12	9.649	KNOB, RDO TONE CONT (PART OF 1) (BASS) (AC-DELCO #16123226)	90-92	Y (UU8)	2	16123226
5.	8-D12	9.649	KNOB, RDO SPKR CONT (BAL) (OTR) (PART OF 1) (AC-DELCO #16161313)	90-92	Y (UM6, UU8, U1F)	2	16161313
	8-D12	9.649	KNOB, RDO SPKR CONT (BAL) (OTR) (PART OF 1) (AC-DELCO #16161313)	90-92	Y (UK1, UL2, U1F) (EXPORT)	2	16161313
6.	8-N14	2.483	BRACKET, MULTIUSE RLY (BLACK) (18.3", 465.0MM LONG) (PLASTIC)	90-92	Y	1	10240571
	8-N14	2.483	BRACKET, MULTIUSE RLY (7.4", 188.0 MM LG) (STEEL)	92	Y (LT1, ML9, C60)	1	10165350
	8-N14	2.483	BRACKET, MULTIUSE RLY (7.4", 188.0 MM LG) (STEEL)	92	Y (LT5)	1	10165350
		DISCON	BRACKET, MULTIUSE RLY (5.4", 136.0 MM LG) (STEEL)	92	Y (LT1, MD8, C60)	1	10165387
	8-N14	2.483	BRACKET, MULTIUSE RLY (5.2", 132 MM LG) (PLASTIC)	92	Y	1	10167109
	8-N14	2.483	BRACKET, MULTIUSE RLY (STEEL) (3.0"X2.0") (76.7MMX51.0MM)) (1.055)	92	Y (LT1, ML9, C68)	1	14104140
	8-N14	2.483	BRACKET, MULTIUSE RLY (LEFT BRKT) (5.2", 132.0 MM LG) (PLASTIC)	90-91	Y	LH	10175542
	8-N14	2.483	BRACKET, MULTIUSE RLY (RIGHT BRKT) (4.0", 102.0 MM LG) (PLASTIC)	90-92	Y	1	10172488
	8-N14	2.483	BRACKET, MULTIUSE RLY (STEEL) (8.7"X3.5") (220.0MM'X88.5MM)	90	Y (LT5, C60)	1	14104778
7.		8.917	NUT, HEX FLG M5X0.8 GRD 9 ZP	90-92	.....	AR	11514252
8.	8-D14	9.650	RADIO, AM/FM STEREO & CLK & T/PLYR & CD PLYR (MAY REQ 1 OF THE FOLLOWING ANT ADAP:16169581, 16169591, 16169601, 16169611) (AC-DELCO #16169531)	90-92	Y (UK1, U1F) (EXPORT)	1	16169531

© 2000 GENERAL MOTORS SERVICE PARTS OPERATIONS-CHEVROLET-14Y

							1Y09-007
9.	8-D24	9.667	BOLT, RDO (POSN #1) (M5X.8X16 THD) (SPECIAL) (3.671) (AC-DELCO #12337892)	90-92	Y	1	12337892
	8-D24	9.667	BOLT, RDO (POSN #2) (M5X.8X16 THD) (SPECIAL) (3.671) (AC-DELCO #12337892)	90-92	Y	2	12337892
10.		DISCON	BRACKET, I/P WRG HARN	90-92	Y	1	10165378
11.		8.932	WASHER, EXT LK M8X15X1.52 ZC (AC-DELCO #11501869)	90-92	.....	AR	11501869
12.		8.977	SCREW, PAN HD TORX W/WA, M4.2X1.41X20, T15, 6 LOB, ZN ..	90-92	.....	AR	11513849
13.	8-N5	2.480	HARNESS, I/P WRG	90	Y M/TRNS (ML9), A/C (C60) (EXC CANADIAN T61)	1	12101432
	8-N5	2.480	HARNESS, I/P WRG	90	Y M/TRNS (ML9), A/C (C68) (EXC CANADIAN T61)	1	12101434
	8-N5	2.480	HARNESS, I/P WRG	90	Y (MD8, C60) (EXC T61)	1	12102274
	8-N5	2.480	HARNESS, I/P WRG	90	Y A/TRNS (MD8), A/C (C68) (EXC CANADIAN T61)	1	12102538
	8-N5	2.480	HARNESS, I/P WRG	91	Y (MD8, C60) (EXC T61)	1	12116436
	8-N5	2.480	HARNESS, I/P WRG	91	Y (ML9, C60) (EXC T61)	1	12116438
	8-N5	2.480	HARNESS, I/P WRG (MAY REQ 12106563 WIRE IF JMPR PRESENT AT THE PWR SEAT FEED)	91	Y (MD8, C68) (EXC T61)	1	12116500
	8-N5	2.480	HARNESS, I/P WRG	91	Y (ML9, C68) (EXC T61)	1	12116502
	8-N5	2.480	HARNESS, I/P WRG	92	Y (MD8, C60) (EXC T61)	1	12125005
	8-N5	2.480	HARNESS, I/P WRG	92	Y (ML9, C60) (EXC T61)	1	12125007
	8-N5	2.480	HARNESS, I/P WRG	92	Y (MD8, C68) (EXC T61)	1	12125813
	8-N5	2.480	HARNESS, I/P WRG	92	Y (ML9, C68) (EXC T61)	1	12125815
	8-N5	2.480	HARNESS, I/P WRG	90	Y M/TRNS (ML9), A/C (C60), T61 (CANADIAN) (EXPORT)	1	12101433
	8-N5	2.480	HARNESS, I/P WRG	90	Y M/TRNS (ML9), A/C (C68), T61 (CANADIAN) (EXPORT)	1	12101435
	8-N5	2.480	HARNESS, I/P WRG	90	Y A/TRNS (MD8), A/C (C68), T61 (CANADIAN) (EXPORT)	1	12102273
	8-N5	2.480	HARNESS, I/P WRG	90	Y A/TRNS (MD8), A/C (C60), T61 (CANADIAN) (EXPORT)	1	12102537
	8-N5	2.480	HARNESS, I/P WRG	91	Y (MD8, C60, T61) (EXPORT)	1	12116437
	8-N5	2.480	HARNESS, I/P WRG	91	Y (ML9, C60, T61) (EXPORT)	1	12116439
	8-N5	2.480	HARNESS, I/P WRG	91	Y (MD8, C68, T61) (EXPORT)	1	12116501
	8-N5	2.480	HARNESS, I/P WRG	91	Y (ML9, C68, T61) (EXPORT)	1	12116503
	8-N5	2.460	HARNESS, I/P WRG	92	Y (MD8, C60, T61) (EXPORT)	1	12125006
	8-N5	2.480	HARNESS, I/P WRG	92	Y (ML9, C60, T61) (EXPORT)	1	12125008

© 2000 GENERAL MOTORS SERVICE PARTS OPERATIONS-CHEVROLET-14Y

							1Y09-007
	8-N5	2.480	HARNESS, I/P WRG	92	Y (MD8, C68, T61) (EXPORT)	1	12125814
	8-N5	2.480	HARNESS, I/P WRG	92	Y (ML9, C68, T61) (EXPORT)	1	12125816
14.	8-D17	9.655	BRACKET, RDO RR SPKR GRL (GRL MTG)	90-92	Y07	2	10082810
15.		DISCON	HARNESS, BODY RR WRG	00	Y07	1	12067493
		DISCON	HARNESS, BODY RR WRG	90-92	Y67	1	12073839
		DISCON	HARNESS, BODY RR WRG	91-92	Y07 (ZR1)	1	12067493
		DISCON	HARNESS, BODY RR WRG	91-92	Y07 (EXC ZR1)	1	12090341
16.		8.921	NUT, U-TYPE, 4.2X1.41, DIM A-15, DIM B-14 DIM C-8.65, 1050, PZOR	90-92		AR	12338121
17.	8-D22	9.665	PLATE, RDO RR SPKR MT (LT RR ON COUPE, RT RR ON CONVERTIBLE)	90-92	Y (UM6)	1	10098442
	8-D22	9.665	PLATE, RDO RR SPKR MT (RT RR ON COUPE, LT RR ON CONVERTIBLE)	90-92	Y (UM6)	1	10098443
18.		8.900	BOLT, HWH M5X.8X25 4.8 PEOR FULL THD	90-92		AR	11508858
19.	8-D22	9.665	SPEAKER, RDO RR (AC-DELCO #16040940)	90-92	Y (EXC UX0)	2	16040940
20.	8-D20	9.656	WIRE, RDO RR SPKR	90-92	Y (EXC UX0)	1	12055834
21.		8.929	WASHER, FL 7/32X1/2X5/8 1050 CAD HARD	90-92		AR	2077521
22.		8.977	SCREW, HWH TAP 4.2 X 1.41 X 25 (10.783)	90-92		AR	1640810
23.		DISCON	GRILLE, RDO RR SPKR (BLUE)	90-91	Y07 (22I)	LH	10132937
		DISCON	GRILLE, RDO RR SPKR (BLUE)	90-91	Y07 (22I)	RH	10132938
		DISCON	GRILLE, RDO RR SPKR (COGNAC)	90-91	Y07 (60I)	LH	10132939
		DISCON	GRILLE, RDO RR SPKR (COGNAC)	90-91	Y07 (60I)	RH	10132940
		DISCON	GRILLE, RDO RR SPKR (RED)	90-92	Y07 (73I)	LH	10132941
	8-D22	9.665	GRILLE, RDO RR SPKR (RED)	90-92	Y07 (73I)	RH	10132942
		DISCON	GRILLE, RDO RR SPKR (GRAY)	90-91	Y07 (90I)	LH	10132943
		DISCON	GRILLE, RDO RR SPKR (GRAY)	90-91	Y07 (90I)	RH	10132944
		DISCON	GRILLE, RDO RR SPKR (BLACK)	90-92	Y07 (10I, 19I)	LH	10219851
		DISCON	GRILLE, RDO RR SPKR (BLACK)	90-92	Y07 (10I, 19I)	RH	10219852
		DISCON	GRILLE, RDO RR SPKR (BLUE)	90-91	Y67 (22I)	2	10123083
		DISCON	GRILLE, RDO RR SPKR (COGNAC)	90-91	Y67 (60I)	2	10123085
		DISCON	GRILLE, RDO RR SPKR (RED)	90-92	Y67 (73I)	2	10123087
		DISCON	GRILLE, RDO RR SPKR (GRAY)	90-91	Y67 (90I)	2	10123089
	8-D22	9.665	GRILLE, RDO RR SPKR (BEIGE)	92	Y07 (64I)	LH	10219853
	8-D22	9.665	GRILLE, RDO RR SPKR (BEIGE)	92	Y07 (64I)	RH	10219854
	8-D22	9.665	GRILLE, RDO RR SPKR (GRAY)	92	Y07 (14I)	LH	10219855
	8-D22	9.665	GRILLE, RDO RR SPKR (GRAY)	92	Y07 (14I)	RH	10219856
	8-D22	9.665	GRILLE, RDO RR SPKR (BEIGE)	92	Y67 (64I)	2	10175628
		DISCON	GRILLE, RDO RR SPKR (BLACK)	92	Y67 (10I, 19I)	2	10219863
	8-D22	9.665	GRILLE, RDO RR SPKR (GRAY)	92	Y67 (14I)	2	10219865
24.		8.977	SCREW, OV TR (35) HD C/R TAP (AB) SC&WA 4.2X1.41X25 PC	90-92		AR	11500673
25.	8-D17	9.655	PLATE, RDO SPKR NA (9.665)	90-92	Y (UM6)	2	14057530
	8-D17	9.655	PLATE, RDO SPKR NA (GOLD SERIES)	90-92	Y (UU8, U1F)	2	10146468

© 2000 GENERAL MOTORS SERVICE PARTS OPERATIONS-CHEVROLET-14Y

							1Y00-007
26.		DISCON	GRILLE, RDO FRT SPKR (9.650) (VEH W/L98 & BEFORE VIN 116467 OR W/LT5 & BEFORE VIN 800158 MUST USE SILL PLATE 10172439, VEH W/SAME VINS & LATER DO NOT REQ PLATE)	90	Y (22I)	LH	10172449
		DISCON	GRILLE, RDO FRT SPKR (9.650) (VEH W/L98 & BEFORE VIN 116467 OR W/LT5 & BEFORE VIN 800158 MUST USE SILL PLATE 10172440, VEH W/SAME VINS & LATER DO NOT REQ PLATE)	90	Y (22I)	RH	10172450
	8-D17	9.655	GRILLE, RDO FRT SPKR (9.650) (VEH W/L98 & BEFORE VIN 116467 OR W/LT5 & BEFORE VIN 800158 MUST USE SILL PLATE 10172441, VEH W/SAME VINS & LATER DO NOT REQ PLATE)	90	Y (60I)	LH	10172451
		DISCON	GRILLE, RDO FRT SPKR (9.650) (VEH W/L98 & BEFORE VIN 116467 OR W/LT5 & BEFORE VIN 800158 MUST USE SILL PLATE 10172442, VEH W/SAME VINS & LATER DO NOT REQ PLATE)	90	Y (60I)	RH	10172452
		DISCON	GRILLE, RDO FRT SPKR (9.650) (VEH W/L98 & BEFORE VIN 116467 OR W/LT5 & BEFORE VIN 800158 MUST USE SILL PLATE 10172443, VEH W/SAME VINS & LATER DO NOT REQ PLATE)	90	Y (73I)	LH	10172453
		DISCON	GRILLE, RDO FRT SPKR (9.650) .	90	Y (73I)	RH	10172454
		DISCON	GRILLE, RDO FRT SPKR (9.650) (VEH W/L98 & BEFORE VIN 116467 OR W/LT5 & BEFORE VIN 800158 MUST USE SILL PLATE 10172445, VEH W/SAME VINS & LATER DO NOT REQ PLATE)	90	Y (90I)	LH	10172455
		DISCON	GRILLE, RDO FRT SPKR (9.650) (VEH W/L98 & BEFORE VIN 116467 OR W/LT5 & BEFORE VIN 800158 MUST USE SILL PLATE 10172446, VEH W/SAME VINS & LATER DO NOT REQ PLATE)	90	Y (90I)	RH	10172456
	8-D17	9.655	GRILLE, RDO FRT SPKR (9.650) (VEH W/L98 & BEFORE VIN 116467 OR W/LT5 & BEFORE VIN 800158 MUST USE SILL PLATE 10172437, VEH W/SAME VINS & LATER DO NOT REQ PLATE)	90	Y (19I)	LH	10220615
	8-D17	9.655	GRILLE, RDO FRT SPKR (9.650) (VEH W/L98 & BEFORE VIN 116467 OR W/LT5 & BEFORE VIN 800158 MUST USE SILL PLATE 10172438, VEH W/SAME VINS & LATER DO NOT REQ PLATE)	90	Y (19I)	RH	10220616
		DISCON	GRILLE, RDO FRT SPKR (BLUE) .	91	Y (22I)	LH	10172449
		DISCON	GRILLE, RDO FRT SPKR (BLUE) .	91	Y (22I)	RH	10172450
	8-D17	9.655	GRILLE, RDO FRT SPKR (COGNAC) (9.650)	91	Y (60I)	LH	10172451

								1Y09-007
		DISCON	GRILLE, RDO FRT SPKR (COGNAC)	91	Y (60I)		RH	10172452
		DISCON	GRILLE, RDO FRT SPKR (RED)	91-92	Y (73I)		LH	10172453
		DISCON	GRILLE, RDO FRT SPKR (RED)	91-92	Y (73I)		RH	10172454
		DISCON	GRILLE, RDO FRT SPKR (GRAYSMOKE)	91	Y (90I)		LH	10172455
		DISCON	GRILLE, RDO FRT SPKR (GRAYSMOKE)	91	Y (90I)		RH	10172456
	8-D17	9.655	GRILLE, RDO FRT SPKR (BLACK) (9.650)	91-92	Y (19I)		LH	10220615
	8-D17	9.655	GRILLE, RDO FRT SPKR (BLACK) (9.650)	91-92	Y (19I)		RH	10220616
	8-D17	9.655	GRILLE, RDO FRT SPKR (BLACK) (9.650)	92	Y (10I)		LH	10220615
	8-D17	9.655	GRILLE, RDO FRT SPKR (BLACK) (9.650)	92	Y (10I)		RH	10220616
		DISCON	GRILLE, RDO FRT SPKR (BEIGE) (9.650)	92	Y (C4I)		LH	10220617
	8-D17	9.655	GRILLE, RDO FRT SPKR (BEIGE) (9.650)	92	Y (64I)		RH	10220618
	8-D17	9.655	GRILLE, RDO FRT SPKR (GRAY) (9.650)	92	Y (14I)		LH	10220619
	8-D17	9.655	GRILLE, RDO FRT SPKR (GRAY) (9.650)	92	Y (14I)		RH	10220620
27.		8.900	BOLT, HEX W/WA, M4.2X1.41X16, 6010M, PC, 8 OD, HI LO THD	90-92			AR	11509713
28.		8.900	BOLT/SCREW, HWH W/FL WA M4.2X1.41X20, 6010M, 7253M, 12.5 OD, DOG PT (8.977)	90-92			AR	11509709
29.	8-D14	9.650	SPEAKER, RDO FRT (AC-DELCO #16033662)	90-92	Y (EXC UX0)		2	16033662
30.	8-D17	9.655	PLATE, RDO FRT SPKR MT	90-92	Y (UM6)		RH	10098450
	8-D17	9.655	PLATE, RDO FRT SPKR MT	90-92	Y (UM6)		LH	10098451

RPO DEFINITIONS

C60 – AIR CONDITIONER,FRONT,MANUAL CONTROLS
C68 – AIR CONDITIONER,FRONT,AUTOMATIC,ELECTRONIC CONTROLS
LT1 – ENGINE-GAS, 8 CYL, 5.7L(5.7P),MFI,HO
LT5 – ENGINE,5.7L(5.7J),TPI
MD8 – TRANSMISSION,AUTOMATIC 4-SPEED(THM700R4/4L60)
ML9 – TRANSMISSION,MANUAL 6-SPEED
T61 – LIGHTING,DAYTIME RUNNING
UK1 – RADIO FREQUENCY(JAPANESE)
UL2 – RADIO FREQUENCY(EUROPEAN)
UM6 – RADIO,AM/FM STEREO,CASSETTE,ETR,INCLUDES CLOCK
UU8 – RADIO,AM/FM STEREO,CASSETTE,ETR,DELCO/BOSE,DOLBY,INCLUDES CLOCK
UX0 – SPEAKER SYSTEM,SIX,DUAL FLOOR SILL,DUAL EXTENDED RANGE SAIL PANEL
U1F – RADIO,AM/FM STEREO,CASSETTE,C.D. PLAYER,ETR,BOSE,INCLUDES CLOCK
ZR1 – PACKAGE,SPECIAL PERFORMANCE COUPE(1YY07 + ZR1 == 1YZ07)
10I – INTERIOR TRIM – ARCTIC WHITE
14I – INTERIOR TRIM LT GRAY
19I – INTERIOR TRIM,BLACK
22I – INTERIOR TRIM,DARK ROYAL BLUE
60I – INTERIOR TRIM,DARK COGNAC
64I – INTERIOR TRIM,LIGHT BEIGE
73I – INTERIOR TRIM,FLAME RED
90I – INTERIOR TRIM,SMOKE GRAY

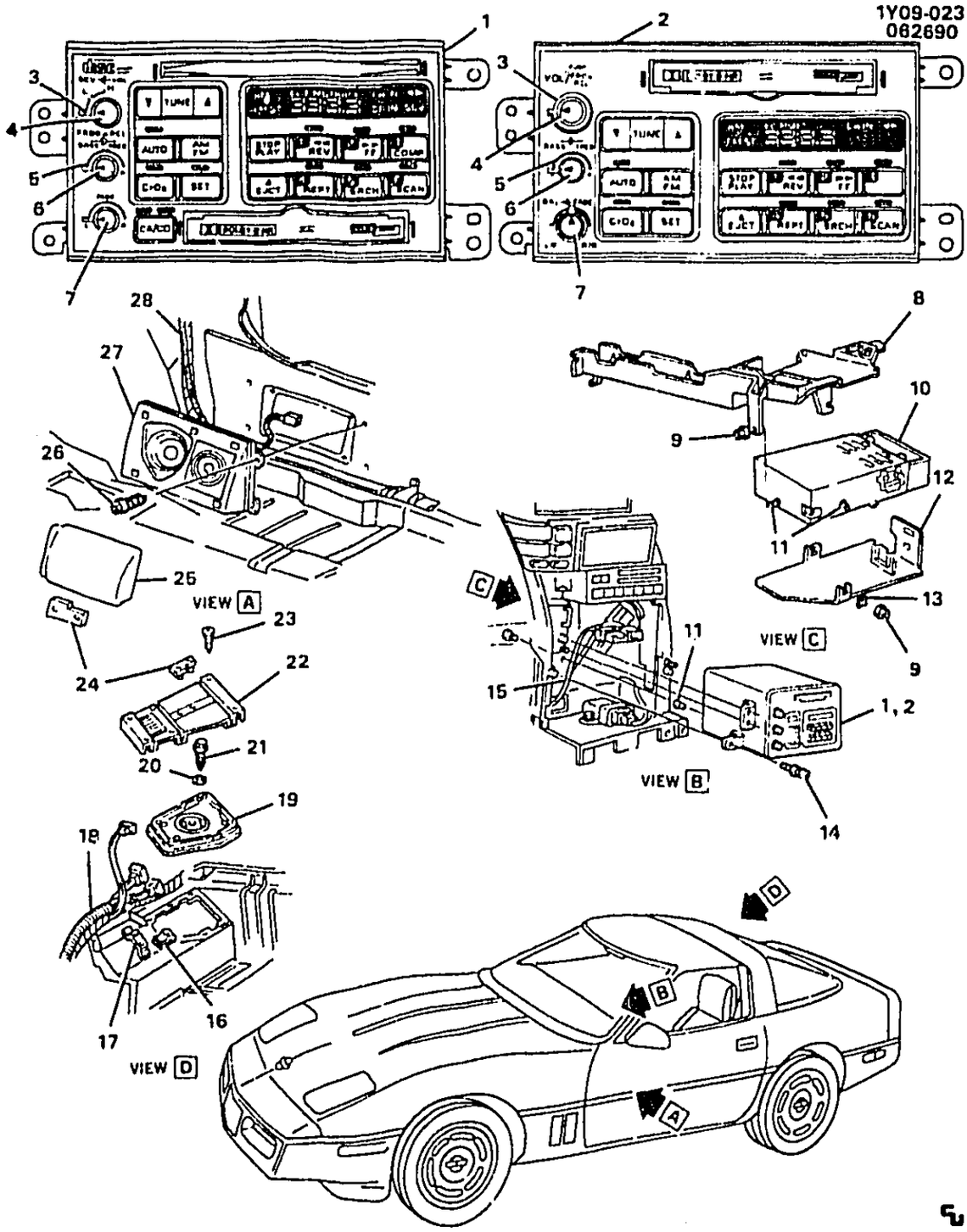

1Y09-023

1990-1992 Y AUDIO SYSTEM (UX0)

1.	8-D14	9.650	CONTROL, AM/FM STEREO & CLK & T/PLYR & CD PLYR RDO (U1F) (INCL 3-7)) (AC-DELCO #16144151)	91	Y (U1F) (EXC UK1, UL2)	1 16144151

© 2000 GENERAL MOTORS SERVICE PARTS OPERATIONS-CHEVROLET-14Y

							1Y09-023
	8-D14	9.650	**CONTROL**, AM/FM STEREO & CLK & T/PLYR & CD PLYR RDO (U1F) (INCL 3-7)) (AC-DELCO #16172721)	92	Y (U1F) (EXC UK1, UL2)	1	16172721
	8-D14	9.650	**CONTROL**, AM/FM STEREO & CLK & T/PLYR & CD PLYR RDO (AFS, CL, CA, CD, HPS, CDM) (U1F) (INCL 3-7)) (AC-DELCO #16172721)	90-91	Y	1	16172721
2.		DISCON	**CONTROL**, AM/FM STEREO & CLK & T/PLYR RDO (UM6, UU8) (INCL 3-7))	90-92	Y (UM6)	1	16172701
	8-D14	9.650	**CONTROL**, AM/FM STEREO & CLK & T/PLYR RDO (UM6, UU8) (INCL 3-7)) (AC-DELCO #16208161)	90-92	Y (UU8)	1	16208161
3.	8-D12	9.649	**SPACER**, RDO TUNING CONT KNOB (OTR) (PART OF 1, 2) (AC-DELCO #16161320)	92	Y (U1F)	1	16161320
	8-D12	9.649	**SPACER**, RDO TUNING CONT KNOB (OTR) (PART OF 1, 2) (*KIT1) (AC-DELCO #16161320)	90-91	Y (UK1, UL2, U1F) (EXPORT)	1	16161320
	8-D12	9.649	**SPACER**, RDO TUNING CONT KNOB (OTR) (PART OF 1, 2) (AC-DELCO #16161320)	90-92	Y (UK1, UL2, U1F) (EXPORT)	1	16161320
4.	8-D12	9.649	**KNOB**, RDO VOL CONT (PART OF 1, 2) (AC-DELCO #16123224)	90-91	Y (UM6)	1	16123224
	8-D12	9.649	**KNOB**, RDO VOL CONT (PART OF 1, 2) (AC-DELCO #16123224)	90-92	Y (UU8, U1F)	1	16123224
	8-D12	9.649	**KNOB**, RDO VOL CONT (OTR) (PART OF 1, 2) (SPD CONT VOL) (AC-DELCO #16161312)	90-92	Y (UM6, UU8, U1F)	1	16161312
	8-D12	9.649	**KNOB**, RDO VOL CONT (PART OF 1, 2) (AC-DELCO #16123224)	90-92	Y (UK1, UL2, U1F) (EXPORT)	1	16123224
	8-D12	9.649	**KNOB**, RDO VOL CONT (OTR) (PART OF 1, 2) (SPD CONT VOL) (AC-DELCO #16161312)	90-92	Y (UK1, UL2, U1F) (EXPORT)	1	16161312
5.	8-D12	9.649	**KNOB**, RDO TONE CONT (PART OF 1, 2) (BASS) (AC-DELCO #16123226)	90-92	Y (UM6)	2	16123226
	8-D12	9.649	**KNOB**, RDO TONE CONT (PART OF 1, 2) (BASS) (AC-DELCO #16123226)	90-92	Y (UU8)	2	16123226
	8-D12	9.649	**KNOB**, RDO TONE CONT (PART OF 1, 2) (BASS) (AC-DELCO #16123226)	90-92	Y (U1F)	2	16123226
6.		N.S.	**KNOB**, RDO TONE CONT (PART OF 1, 2) (*KIT1)	90-91	.....		
	8-D12	9.649	**SPACER**, RDO TUNING CONT KNOB (OTR) (PART OF 1, 2) (AC-DELCO #16161320)	92	Y (U1F)	1	16161320
	8-D12	9.649	**SPACER**, RDO TUNING CONT KNOB (OTR) (PART OF 1, 2) (AC-DELCO #16161320)	90-92	Y (UK1, UL2, U1F) (EXPORT)	1	16161320

© 2000 GENERAL MOTORS SERVICE PARTS OPERATIONS-CHEVROLET-14Y

							1Y09-023
7.	8-D12	9.649	KNOB, RDO SPKR CONT (BAL) (OTR) (PART OF 1, 2) (*KIT1) (AC-DELCO #16161313)	90-92	Y (UM6, UU8, U1F)	2	16161313
	8-D12	9.649	KNOB, RDO SPKR CONT (BAL) (OTR) (PART OF 1, 2) (*KIT1) (AC-DELCO #16161313)	90-92	Y (UK1, UL2, U1F) (EXPORT)	2	16161313
8.	8-N14	2.483	BRACKET, MULTIUSE RLY (BLACK) (18.3", 465.0MM LONG) (PLASTIC)	90-92	Y	1	10240571
	8-N14	2.483	BRACKET, MULTIUSE RLY (7.4", 188.0 MM LG) (STEEL)	92	Y (LT1, ML9, C60)	1	10165350
	8-N14	2.483	BRACKET, MULTIUSE RLY (7.4", 188.0 MM LG) (STEEL)	92	Y (LT5)	1	10165350
		DISCON	BRACKET, MULTIUSE RLY (5.4", 136.0 MM LG) (STEEL)	92	Y (LT1, MD8, C60)	1	10165387
	8-N14	2.483	BRACKET, MULTIUSE RLY (5.2", 132 MM LG) (PLASTIC)	92	Y	1	10167109
	8-N14	2.483	BRACKET, MULTIUSE RLY (STEEL) (3.0"X2.0") (76.7MMX51.0MM)) (1.055)	92	Y (LT1, ML9, C68)	1	14104140
	8-N14	2.483	BRACKET, MULTIUSE RLY (LEFT BRKT) (5.2", 132.0 MM LG) (PLASTIC)	90-91	Y	LH	10175542
	8-N14	2.483	BRACKET, MULTIUSE RLY (RIGHT BRKT) (4.0", 102.0 MM LG) (PLASTIC)	90-92	Y	1	10172488
	8-N14	2.483	BRACKET, MULTIUSE RLY (STEEL) (8.7"X3.5") (220.0MMX88.5MM)	90	Y (LT5, C60)	1	14104778
9.		8.917	NUT, HEX FLG M5X0.8 GRD 9 ZP	90-92	.....	AR	11514252
10.	8-D1[illegible]	9.650	RADIO, AM/FM STEREO & CLK & T/PLYR & CD PLYR (MAY REQ 1 OF THE FOLLOWING ANT ADAP:16169581, 16169591, 16169601, 16169611) (AC-DELCO #16169531)	90-92	Y (UK1, U1F) (EXPORT)	1	16169531
11.	8-D24	9.667	BOLT, RDO CONT (POSN #2) (M5X.8X16 THD) (SPECIAL) (3.671) (AC-DELCO #12337892)	90-9[illegible]	Y	1	12337892
12.		DISCON	BRACKET, I/P WRG HARN	90-92	Y	1	10165378
13.		8.932	WASHER, EXT LK M8X15X1.52 ZC (AC-DELCO #11501869)	90-92	.....	AR	11501869
14.		8.977	SCREW, PAN HD TORX W/WA, M4.2X1.41X20, T15, 6 LOB, ZN ..	90-92	.....	AR	11513849
15.	8-N5	2.480	HARNESS, I/P WRG	90	Y M/TRNS (ML9), A/C (C60) (EXC CANADIAN T61)	1	12101432
	8-N5	2.480	HARNESS, I/P WRG	90	Y M/TRNS (ML9), A/C (C68) (EXC CANADIAN T61)	1	12101434
	8-N5	2.480	HARNESS, I/P WRG	90	Y (MD8 C60) (EXC T61)	1	12102274
	8-N5	2.480	HARNESS, I/P WRG	90	Y A/TRNS (MD8), A/C (C68) (EXC CANADIAN T61)	1	12102538
	8-N5	2.480	HARNESS, I/P WRG	91	Y (MD8, C60) (EXC T61)	1	12116436
	8-N5	2.480	HARNESS, I/P WRG	91	Y (ML9, C60) (EXC T61)	1	12116438

© 2000 GENERAL MOTORS SERVICE PARTS OPERATIONS-CHEVROLET-14Y

	8-N5	2.480	HARNESS, I/P WRG (MAY REQ 12106563 WIRE IF JMPR PRESENT AT THE PWR SEAT FEED)	91	Y (MD8, C68) (EXC T61)	1	12116500
	8-N5	2.480	HARNESS, I/P WRG	91	Y (ML9, C68) (EXC T61)	1	12116502
	8-N5	2.480	HARNESS, I/P WRG	92	Y (MD8, C60) (EXC T61)	1	12125005
	8-N5	2.480	HARNESS, I/P WRG	92	Y (ML9, C60) (EXC T61)	1	12125007
	8-N5	2.480	HARNESS, I/P WRG	92	Y (MD8, C68) (EXC T61)	1	12125813
	8-N5	2.480	HARNESS, I/P WRG	92	Y (ML9, C68) (EXC T61)	1	12125815
	8-N5	2.480	HARNESS, I/P WRG	90	Y M/TRNS (ML9), A/C (C60), T61 (CANADIAN) (EXPORT)	1	12101433
	8-N5	2.480	HARNESS, I/P WRG	90	Y M/TRNS (ML9), A/C (C68), T61 (CANADIAN) (EXPORT)	1	12101435
	8-N5	2.480	HARNESS, I/P WRG	90	Y A/TRNS (MD8), A/C (C68), T61 (CANADIAN) (EXPORT)	1	12102273
	8-N5	2.480	HARNESS, I/P WRG	90	Y A/TRNS (MD8), A/C (C60), T61 (CANADIAN) (EXPORT)	1	12102537
16.		8.921	NUT, U-TYPE, 4.2X1.41, DIM A-15, DIM B-14 DIM C-8.65, 1050, PZOR	90-92	.....	AR	12338121
17.	8-D17	9.655	BRACKET, RDO RR SPKR GRL (GRL MTG) (FOR Y67 USAGE, SEE "AUDIO SYSTEMS REAR" ILLUSTRATION IN GROUP 9.000 FOR DETAILED ILLUSTRATED VIEW.)	90-92	Y07	2	10082810
18.		DISCON	HARNESS, BODY RR WRG (FOR Y67 USAGE, SEE "AUDIO SYSTEMS REAR" ILLUSTRATION IN GROUP 9.000 FOR DETAILED ILLUSTRATED VIEW.)	90	Y07	1	12067493
		DISCON	HARNESS, BODY RR WRG (FOR Y67 USAGE, SEE "AUDIO SYSTEMS REAR" ILLUSTRATION IN GROUP 9.000 FOR DETAILED ILLUSTRATED VIEW.)	91-92	Y07 (ZR1)	1	12067493
		DISCON	HARNESS, BODY RR WRG (FOR Y67 USAGE, SEE "AUDIO SYSTEMS REAR" ILLUSTRATION IN GROUP 9.000 FOR DETAILED ILLUSTRATED VIEW.)	91-92	Y07 (EXC ZR1)	1	12090341
19.	8-D22	9.665	SPEAKER, RDO RR (CONSISTS OF SPKR 16141715 & AMP 16179367) (FOR Y67 USAGE, SEE "AUDIO SYSTEMS REAR" ILLUSTRATION IN GROUP 9.000 FOR DETAILED ILLUSTRATED VIEW.) (AC-DELCO #16174471)	90-92	Y67 (UX0)	RH	16174471

© 2000 GENERAL MOTORS SERVICE PARTS OPERATIONS-CHEVROLET-14Y

8-D22	9.665	SPEAKER, RDO RR (CONSISTS OF SPKR 16141715 & AMP 16179367) (FOR Y67 USAGE, SEE "AUDIO SYSTEMS REAR" ILLUSTRATION IN GROUP 9.000 FOR DETAILED ILLUSTRATED VIEW.) (AC-DELCO #16174491)	90-92	Y67 (UX0)	LH	16174491
8-D22	9.665	SPEAKER, RDO RR (PART OF 16174471 AND 16174491) (FOR Y67 USAGE, SEE "AUDIO SYSTEMS REAR" ILLUSTRATION IN GROUP 9.000 FOR DETAILED ILLUSTRATED VIEW.) (6" SPKR) (AC-DELCO #16141715)	90-92	Y67 (UX0)	2	16141715
8-D22	9.665	SPEAKER, RDO RR (POS #2) (FOR Y67 USAGE, SEE "AUDIO SYSTEMS REAR" ILLUSTRATION IN GROUP 9.000 FOR DETAILED ILLUSTRATED VIEW.) (INCLUDES AMPLIFIER) (AC-DELCO #16174481)	90-92	Y07 (UX0)	RH	16174481
8-D22	9.665	SPEAKER, RDO RR (POS #2) (FOR Y67 USAGE, SEE "AUDIO SYSTEMS REAR" ILLUSTRATION IN GROUP 9.000 FOR DETAILED ILLUSTRATED VIEW.) (INCLUDES AMPLIFIER) (AC-DELCO #16174501)	90-92	Y07 (UX0)	LH	16174501
8-D22	9.665	SPEAKER, RDO RR (CONSISTS OF SPKR 16141715 & AMP 16179367) (FOR Y67 USAGE, SEE "AUDIO SYSTEMS REAR" ILLUSTRATION IN GROUP 9.000 FOR DETAILED ILLUSTRATED VIEW.) (AC-DELCO #16174491)	90-92	Y67 (UX0)	LH	16174491
8-D22	9.665	SPEAKER, RDO RR (POS #2) (FOR Y67 USAGE, SEE "AUDIO SYSTEMS REAR" ILLUSTRATION IN GROUP 9.000 FOR DETAILED ILLUSTRATED VIEW.) (INCLUDES AMPLIFIER) (AC-DELCO #16174501)	90-92	Y07 (UX0)	LH	16174501
8-D22	9.665	SPEAKER, RDO RR (CONSISTS OF SPKR 16141715 & AMP 16179367) (FOR Y67 USAGE, SEE "AUDIO SYSTEMS REAR" ILLUSTRATION IN GROUP 9.000 FOR DETAILED ILLUSTRATED VIEW.) (AC-DELCO #16174471)	90-92	Y67 (UX0)	RH	16174471
8-D22	9.665	SPEAKER, RDO RR (POS #2) (FOR Y67 USAGE, SEE "AUDIO SYSTEMS REAR" ILLUSTRATION IN GROUP 9.000 FOR DETAILED ILLUSTRATED VIEW.) (INCLUDES AMPLIFIER) (AC-DELCO #16174481)	90-92	Y07 (UX0)	RH	16174481
20.	8.929	WASHER, FL 7/32X1/2X5/8 1050 CAD HARD	90-92	.....	AR	2077521

© 2000 GENERAL MOTORS SERVICE PARTS OPERATIONS · CHEVROLET-14Y

								1Y09-023
21.		8.977	SCREW, HWH TAP 4.2 X 1.41 X 25 (10.783)	90-92	.....		AR	1640810
22.		DISCON	GRILLE, RDO RR SPKR (FOR Y67 USAGE, SEE "AUDIO SYSTEMS REAR" ILLUSTRATION IN GROUP 9.000 FOR DETAILED ILLUSTRATED VIEW.) (BLUE)	90-91	Y07 (22I)		LH	10132937
		DISCON	GRILLE, RDO RR SPKR (FOR Y67 USAGE, SEE "AUDIO SYSTEMS REAR" ILLUSTRATION IN GROUP 9.000 FOR DETAILED ILLUSTRATED VIEW.) (BLUE)	90-91	Y07 (22I)		RH	10132938
		DISCON	GRILLE, RDO RR SPKR (FOR Y67 USAGE, SEE "AUDIO SYSTEMS REAR" ILLUSTRATION IN GROUP 9.000 FOR DETAILED ILLUSTRATED VIEW.) (COGNAC)	90-91	Y07 (60I)		LH	10132939
		DISCON	GRILLE, RDO RR SPKR (FOR Y67 USAGE, SEE "AUDIO SYSTEMS REAR" ILLUSTRATION IN GROUP 9.000 FOR DETAILED ILLUSTRATED VIEW.) (COGNAC)	90-91	Y07 (60I)		RH	10132940
		DISCON	GRILLE, RDO RR SPKR (FOR Y67 USAGE, SEE "AUDIO SYSTEMS REAR" ILLUSTRATION IN GROUP 9.000 FOR DETAILED ILLUSTRATED VIEW.) (RED)	90-92	Y07 (73I)		LH	10132941
	8-D22	9.665	GRILLE, RDO RR SPKR (FOR Y67 USAGE, SEE "AUDIO SYSTEMS REAR" ILLUSTRATION IN GROUP 9.000 FOR DETAILED ILLUSTRATED VIEW.) (RED)	90-92	Y07 (73I)		RH	10132942
		DISCON	GRILLE, RDO RR SPKR (FOR Y67 USAGE, SEE "AUDIO SYSTEMS REAR" ILLUSTRATION IN GROUP 9.000 FOR DETAILED ILLUSTRATED VIEW.) (GRAY)	90-91	Y07 (90I)		LH	10132943
		DISCON	GRILLE, RDO RR SPKR (FOR Y67 USAGE, SEE "AUDIO SYSTEMS REAR" ILLUSTRATION IN GROUP 9.000 FOR DETAILED ILLUSTRATED VIEW.) (GRAY)	90-91	Y07 (90I)		RH	10132944
		DISCON	GRILLE, RDO RR SPKR (FOR Y67 USAGE, SEE "AUDIO SYSTEMS REAR" ILLUSTRATION IN GROUP 9.000 FOR DETAILED ILLUSTRATED VIEW.) (BLACK) ...	90-92	Y07 (10I, 19I)		LH	10219851
		DISCON	GRILLE, RDO RR SPKR (FOR Y67 USAGE, SEE "AUDIO SYSTEMS REAR" ILLUSTRATION IN GROUP 9.000 FOR DETAILED ILLUSTRATED VIEW.) (BLACK) ...	90-92	Y07 (10I, 19I)		RH	10219852
	8-D22	9.665	GRILLE, RDO RR SPKR (FOR Y67 USAGE, SEE "AUDIO SYSTEMS REAR" ILLUSTRATION IN GROUP 9.000 FOR DETAILED ILLUSTRATED VIEW.) (BEIGE) ...	92	Y07 (64I)		LH	10219853

							1Y09-023
	8-D22	9.665	GRILLE, RDO RR SPKR (FOR Y67 USAGE, SEE "AUDIO SYSTEMS REAR" ILLUSTRATION IN GROUP 9.000 FOR DETAILED ILLUSTRATED VIEW.) (BEIGE) ...	92	Y07 (64I)	RH	10219854
	8-D22	9.665	GRILLE, RDO RR SPKR (FOR Y67 USAGE, SEE "AUDIO SYSTEMS REAR" ILLUSTRATION IN GROUP 9.000 FOR DETAILED ILLUSTRATED VIEW.) (GRAY)	92	Y07 (14I)	LH	10219855
	8-D22	9.665	GRILLE, RDO RR SPKR (FOR Y67 USAGE, SEE "AUDIO SYSTEMS REAR" ILLUSTRATION IN GROUP 9.000 FOR DETAILED ILLUSTRATED VIEW.) (GRAY)	92	Y07 (14I)	RH	10219856
23.		8.977	SCREW, OV TR (35) HD C/R TAP (AB) SC&WA 4.2X1.41X25 PC ...	90-92	.....	AR	11500673
24.	8-D17	9.655	PLATE, RDO SPKR NA (GOLD SERIES)	90-92	Y (UU8, U1F)	2	10146468
25.		DISCON	GRILLE, RDO FRT SPKR (VEH W/L98 & BEFORE VIN 116467 OR W/LT5 & BEFORE VIN 800158 MUST USE SILL PLATE 10172439, VEH W/SAME VINS & LATER DO NOT REQ PLATE)	90	Y (22I)	LH	10172449
		DISCON	GRILLE, RDO FRT SPKR (VEH W/L98 & BEFORE VIN 116467 OR W/LT5 & BEFORE VIN 800158 MUST USE SILL PLATE 10172440, VEH W/SAME VINS & LATER DO NOT REQ PLATE)	90	Y (22I)	RH	10172450
	8-D17	9.655	GRILLE, RDO FRT SPKR (9.650) (VEH W/L98 & BEFORE VIN 116467 OR W/LT5 & BEFORE VIN 800158 MUST USE SILL PLATE 10172441, VEH W/SAME VINS & LATER DO NOT REQ PLATE)	90	Y (60I)	LH	10172451
		DISCON	GRILLE, RDO FRT SPKR (VEH W/L98 & BEFORE VIN 116467 OR W/LT5 & BEFORE VIN 800158 MUST USE SILL PLATE 10172442, VEH W/SAME VINS & LATER DO NOT REQ PLATE)	90	Y (60I)	RH	10172452
		DISCON	GRILLE, RDO FRT SPKR (VEH W/L98 & BEFORE VIN 116467 OR W/LT5 & BEFORE VIN 800158 MUST USE SILL PLATE 10172443, VEH W/SAME VINS & LATER DO NOT REQ PLATE)	90	Y (73I)	LH	10172453
		DISCON	GRILLE, RDO FRT SPKR	90	Y (73I)	RH	10172454
		DISCON	GRILLE, RDO FRT SPKR (VEH W/L98 & BEFORE VIN 116467 OR W/LT5 & BEFORE VIN 800158 MUST USE SILL PLATE 10172445, VEH W/SAME VINS & LATER DO NOT REQ PLATE)	90	Y (90I)	LH	10172455

		DISCON	GRILLE, RDO FRT SPKR (VEH W/L98 & BEFORE VIN 116467 OR W/LT5 & BEFORE VIN 300158 MUST USE SILL PLATE 10172446, VEH W/SAME VINS & LATER DO NOT REQ PLATE)	90	Y (90I)	RH	10172456
	8-D17	9.655	GRILLE, RDO FRT SPKR (9.650) (VEH W/L98 & BEFORE VIN 116467 OR W/LT5 & BEFORE VIN 800158 MUST USE SILL PLATE 10172437, VEH W/SAME VINS & LATER DO NOT REQ PLATE)	90	Y (19I)	LH	10220615
	8-D17	9.655	GRILLE, RDO FRT SPKR (9.650) (VEH W/L98 & BEFORE VIN 116467 OR W/LT5 & BEFORE VIN 800158 MUST USE SILL PLATE 10172438, VEH W/SAME VINS & LATER DO NOT REQ PLATE)	90	Y (19I)	RH	10220616
		DISCON	GRILLE, RDO FRT SPKR (BLUE) .	91	Y (22I)	LH	10172449
		DISCON	GRILLE, RDO FRT SPKR (BLUE) .	91	Y (22I)	RH	10172450
	8-D17	9.655	GRILLE, RDO FRT SPKR (COGNAC) (9.650)	91	Y (60I)	LH	10172451
		DISCON	GRILLE, RDO FRT SPKR (COGNAC)	91	Y (60I)	RH	10172452
		DISCON	GRILLE, RDO FRT SPKR (RED) ..	91-92	Y (73I)	LH	10172453
		DISCON	GRILLE, RDO FRT SPKR (RED) ..	91-92	Y (73I)	RH	10172454
		DISCON	GRILLE, RDO FRT SPKR (GRAYSMOKE)	91	Y (90I)	LH	10172455
		DISCON	GRILLE, RDO FRT SPKR (GRAYSMOKE)	91	Y (90I)	RH	10172456
	8-D17	9.655	GRILLE, RDO FRT SPKR (BLACK) (9.650)	91-92	Y (19I)	LH	10220615
	8-D17	9.655	GRILLE, RDO FRT SPKR (BLACK) (9.650)	91-92	Y (19I)	RH	10220616
	8-D17	9.655	GRILLE, RDO FRT SPKR (BLACK) (9.650)	92	Y (10I)	LH	10220615
	8-D17	9.655	GRILLE, RDO FRT SPKR (BLACK) (9.650)	92	Y (10I)	RH	10220616
		DISCON	GRILLE, RDO FRT SPKR (BEIGE)	92	Y (64I)	LH	10220617
	8-D17	9.655	GRILLE, RDO FRT SPKR (BEIGE) (9.650)	92	Y (64I)	RH	10220618
	8-D17	9.655	GRILLE, RDO FRT SPKR (GRAY) (9.650)	92	Y (14I)	LH	10220619
	8-D17	9.655	GRILLE, RDO FRT SPKR (GRAY) (9.650)	92	Y (14I)	RH	10220620
26.		8.900	BOLT/SCREW, HWH W/FL WA M4.2X1.41X20, 6010M, 7253M, 12.5 OD, DOG PT (8.977)	90-92	.....	AR	11509709
27.	8-D14	9.650	SPEAKER, RDO FRT (AC-DELCO #16033662)	90-92	Y (EXC UX0)	2	16033662
	8-D14	9.650	SPEAKER, RDO FRT (AC-DELCO #16166471)	90-92	Y07 (UX0)	RH	16166471
	8-D14	9.650	SPEAKER, RDO FRT (AC-DELCO #16166481)	90-92	Y07 (UX0)	LH	16166481
	8-D14	9.650	SPEAKER, RDO FRT (AC-DELCO #16166491)	90-92	Y67 (UX0)	RH	16166491
	8-D14	9.650	SPEAKER, RDO FRT (AC-DELCO #16166501)	90-92	Y67 (UX0)	LH	16166501
28.		DISCON	HARNESS, RDO FRT SPKR WRG	90-92	Y (EXC UX0)	1	12073817

© 2000 GENERAL MOTORS SERVICE PARTS OPERATIONS-CHEVROLET-14Y

						1Y09-023
	DISCON	HARNESS, RDO FRT SPKR WRG	90	Y (UX0)	1	12090338
	DISCON	HARNESS, RDO FRT SPKR WRG	91-92	Y (UX0)	1	12106518

SERVICE KITS

1.	DISCON	KNOB KIT, RDO CONT (TREBLE/FADER/DUMMY) (9.649)	90-91	Y (UM6, UU8, U1F)	1	16170506
	DISCON	KNOB KIT, RDO CONT (TREBLE/FADER/DUMMY) (9.649)	90	Y (UK1, UL2, U1F) (EXPORT)	1	16170506

RPO DEFINITIONS

C60 – AIR CONDITIONER,FRONT,MANUAL CONTROLS
C68 – AIR CONDITIONER,FRONT,AUTOMATIC,ELECTRONIC CONTROLS
LT1 – ENGINE-GAS, 8 CYL, 5.7L(5.7P),MFI,HO
LT5 – ENGINE,5.7L(5.7J),TPI
MD8 – TRANSMISSION AUTOMATIC 4-SPEED(THM700R4/4L60)
ML9 – TRANSMISSION,MANUAL 6-SPEED
T61 – LIGHTING,DAYTIME RUNNING
UK1 – RADIO FREQUENCY(JAPANESE)
UL2 – RADIO FREQUENCY(EUROPEAN)
UM6 – RADIO,AM/FM STEREO,CASSETTE,ETR,INCLUDES CLOCK
UU8 – RADIO,AM/FM STEREO,CASSETTE,ETR,DELCO/BOSE,DOLBY,INCLUDES CLOCK
UX0 – SPEAKER SYSTEM,SIX,DUAL FLOOR SILL,DUAL EXTENDED RANGE SAIL PANEL
U1F – RADIO,AM/FM STEREO,CASSETTE,C.D. PLAYER,ETR,BOSE,INCLUDES CLOCK
ZR1 – PACKAGE,SPECIAL PERFORMANCE COUPE(1YY07 + ZR1 == 1YZ07)
10I – INTERIOR TRIM – ARCTIC WHITE
14I – INTERIOR TRIM LT GRAY
19I – INTERIOR TRIM,BLACK
22I – INTERIOR TRIM,DARK ROYAL BLUE
60I – INTERIOR TRIM,DARK COGNAC
64I – INTERIOR TRIM,LIGHT BEIGE
73I – INTERIOR TRIM,FLAME RED
90I – INTERIOR TRIM,SMOKE GRAY

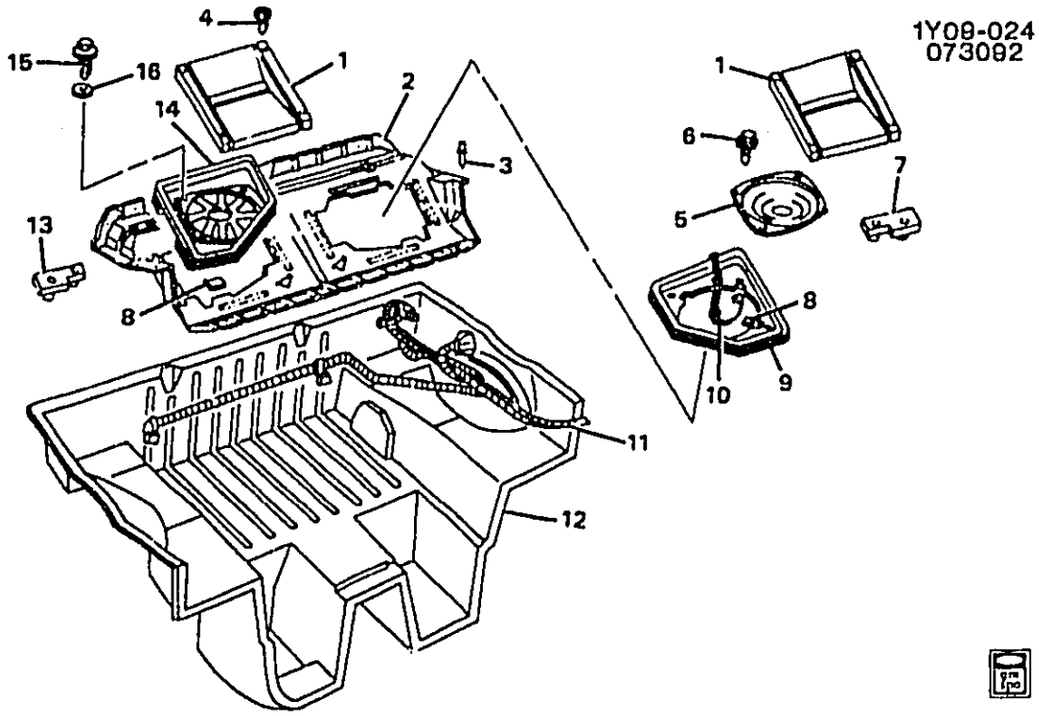

1Y09–024

1990–1996 Y67 AUDIO SYSTEM REAR

1.		DISCON	GRILLE, RDO RR SPKR (BLUE) ..	90–91	Y67 (22I)	2	10123083
		DISCON	GRILLE, RDO RR SPKR (COGNAC)	90–91	Y67 (60I)	2	10123085
		DISCON	GRILLE, RDO RR SPKR (RED) ...	90–92	Y67 (73I)	2	10123087
		DISCON	GRILLE, RDO RR SPKR (GRAY) .	90–91	Y67 (90I)	2	10123089
	8–D22	9.665	GRILLE, RDO RR SPKR (BEIGE) .	92–93	Y67 (64I)	2	10175628
		DISCON	GRILLE, RDO RR SPKR (BLACK)	92–93	Y67 (10I, 19I)	2	10219863
	8–D22	9.665	GRILLE, RDO RR SPKR (GRAY) .	92–93	Y67 (14I)	2	10219865
	8–D22	9.665	GRILLE, RDO RR SPKR (RED) ...	93	Y67 (79I)	2	10219866
	8–D22	9.665	GRILLE, RDO RR SPKR (BLACK)	94–96	Y67 (19I)	2	10238620
	8–D22	9.665	GRILLE, RDO RR SPKR (BEIGE) .	94–96	Y67 (64I)	2	10238621
	8–D22	9.665	GRILLE, RDO RR SPKR (GRAY) .	94–96	Y67 (14I)	2	10238622
	8–D22	9.665	GRILLE, RDO RR SPKR (RED) ...	94–95	Y67 (70I)	2	10238623
	8–D22	9.665	GRILLE, RDO RR SPKR (RED) ...	96	Y67 (70I) (EXC Z16) ...	2	10238623
2.	8–D22	9.665	HOUSING, RDO RR SPKR (AC–DELCO #10218349)	90–96	Y67	1	10218349
3.		N.S.	RIVET, RDO RR SPKR HSG		.....		
4.		8.977	SCREW, OV TR (35) HD C/R TAP (AB) SC&WA 4.2X1.41X25 PC ...	90–96	.....	AR	11500673
5.	8–D22	9.665	SPEAKER, RDO RR (AC–DELCO #16040940)	90–92	Y (EXC UX0)	2	16040940
	8–D22	9.665	SPEAKER, RDO RR (AC–DELCO #16040940)	93–96	Y (UY5)	2	16040940
6.		8.900	BOLT, HWH M5X.8X25 4.8 PEOR FULL THD	90–96	.....	AR	11508858
7.	8–D17	9.655	PLATE, RDO SPKR NA (9.665) ..	90–96	Y (UM6)	2	14057530
8.		8.921	NUT, U–TYPE, 4.2X1.41, DIM A–15, DIM B–14 DIM C–8.65, 1050, PZOR	90–96	.....	AR	12308121
9.	8–D22	9.665	PLATE, RDO RR SPKR MT (LT RR ON COUPE, RT RR ON CONVERTIBLE)	90–96	Y (UM6)	1	10098442

© 2000 GENERAL MOTORS SERVICE PARTS OPERATIONS–CHEVROLET–14Y

							1YG9–024
	8–D22	9.665	PLATE, RDO RR SPKR MT (RT RR ON COUPE, LT RR ON CONVERTIBLE)	90–96	Y (UM6)	1	10098443
10.	8–D20	9.656	WIRE, RDO RR SPKR	90–92	Y (EXC UX0)	1	12055834
	8–D20	9.656	WIRE, RDO RR SPKR	93–96	Y (UY5)	1	12055834
11.		DISCON	HARNESS, BODY RR WRG	90–92	Y67	1	12073839
	8–N25	13.090	HARNESS, BODY RR WRG	93	Y (EXC T90)	1	12130377
	8–N25	13.090	HARNESS, BODY RR WRG	94–96	Y67 (EXC T90)	1	12130356
	8–N25	13.090	HARNESS, BODY RR WRG	93	Y67 (T90) (EXPORT) ...	1	12130380
	8–N25	13.090	HARNESS, BODY RR WRG	94–96	Y67 (T90) (EXPORT) ...	1	12130336
12.	8–N24	12.981	PANEL, R/FLR	90–91	Y67	1	10193727
	8–N24	12.981	PANEL, R/FLR (PANEL HAS A SQUARE ARM, (DEALER TO CUT HOLE OUT ON INSIDE MARKED BY ETCHING WHEN USING ON 1992 AND PRIOR)	92–96	Y67	1	10280989
13.	8–D17	9.655	PLATE, RDO SPKR NA (GOLD SERIES)	90–96	Y (UU8, U1F)	2	10146468
14.	8–D22	9.665	SPEAKER, RDO RR (AC–DELCO #16040940)	93–96	Y (UY5)	2	16040940
	8–D22	9.665	SPEAKER, RDO RR (CONSISTS OF SPKR 16141715 & AMP 16179367) (AC–DELCO #16174471)	90–96	Y67 (UX0)	RH	16174471
	8–D22	9.665	SPEAKER, RDO RR (CONSISTS OF SPKR 16141715 & AMP 16179367) (AC–DELCO #16174491)	90–96	Y67 (UX0)	LH	16174491
	8–D22	9.665	SPEAKER, RDO RR (PART OF 16174471 AND 16174491) (6" SPKR) (AC–DELCO #16141715)	90–96	Y67 (UX0)	2	16141715
	8–D14	9.650	AMPLIFIER, RDO RR SPKR (AC–DELCO #16179367)	90–96	Y67 (UX0)	2	16179367
15.		8.977	SCREW, HWH TAP 4.2 X 1.41 X 25 (10.783)	90–96	.....	AR	1640810
16.		8.929	WASHER, FL 7/32X1/2X5/8 1050 CAD HARD	90–96	.....	AR	2077521

RPO DEFINITIONS

T90 – LAMP,SIGNALING AND MARKER(EXPORT)
UM6 – RADIO,AM/FM STEREO,CASSETTE,ETR,INCLUDES CLOCK
UU8 – RADIO,AM/FM STEREO,CASSETTE,ETR,DELCO/BOSE,DOLBY,INCLUDES CLOCK
UX0 – SPEAKER SYSTEM,SIX,DUAL FLOOR SILL,DUAL EXTENDED RANGE SAIL PANEL
UY5 – SPEAKER SYSTEM 4, DUAL FRT FLR SILL, DUAL EXT RANGE QTR MTD
U1F – RADIO,AM/FM STEREO,CASSETTE,C.D. PLAYER,ETR,BOSE,INCLUDES CLOCK
Z16 – APPEARANCE PACKAGE,GRAND SPORT EDITION
10I – INTERIOR TRIM– ARCTIC WHITE
14I – INTERIOR TRIM LT GRAY
19I – INTERIOR TRIM,BLACK
22I – INTERIOR TRIM,DARK ROYAL BLUE
60I – INTERIOR TRIM,DARK COGNAC
64I – INTERIOR TRIM,LIGHT BEIGE
70I – INTERIOR TRIM,TORCH RED
73I – INTERIOR TRIM,FLAME RED
79I – INTERIOR TRIM,RUBY RED
90I – INTERIOR TRIM,SMOKE GRAY

© 2000 GENERAL MOTORS SERVICE PARTS OPERATIONS–CHEVROLET–14Y

MICROFICHE INDEX

GROUPS 8.000 THRU 9.000

FICHE 8 OF 11

GROUP	DESCRIPTION	STARTING GRID LOCATION PARTS	ILLUSTRATIONS
–	GENERAL INFORMATION	1–A2	1–G2
–	ALPHABETICAL INDEX	1–B13	N.A.
8.000	FRONT END SHEET METAL – HEATER	8–A2	8–F2
9.000	BODY MOUNTING – AIR CONDITIONING – INSTRUMENT CLUSTER	8–C2	8–I2
–	OUT OF FICHE CALLS	N.A.	8–M27

8–M1

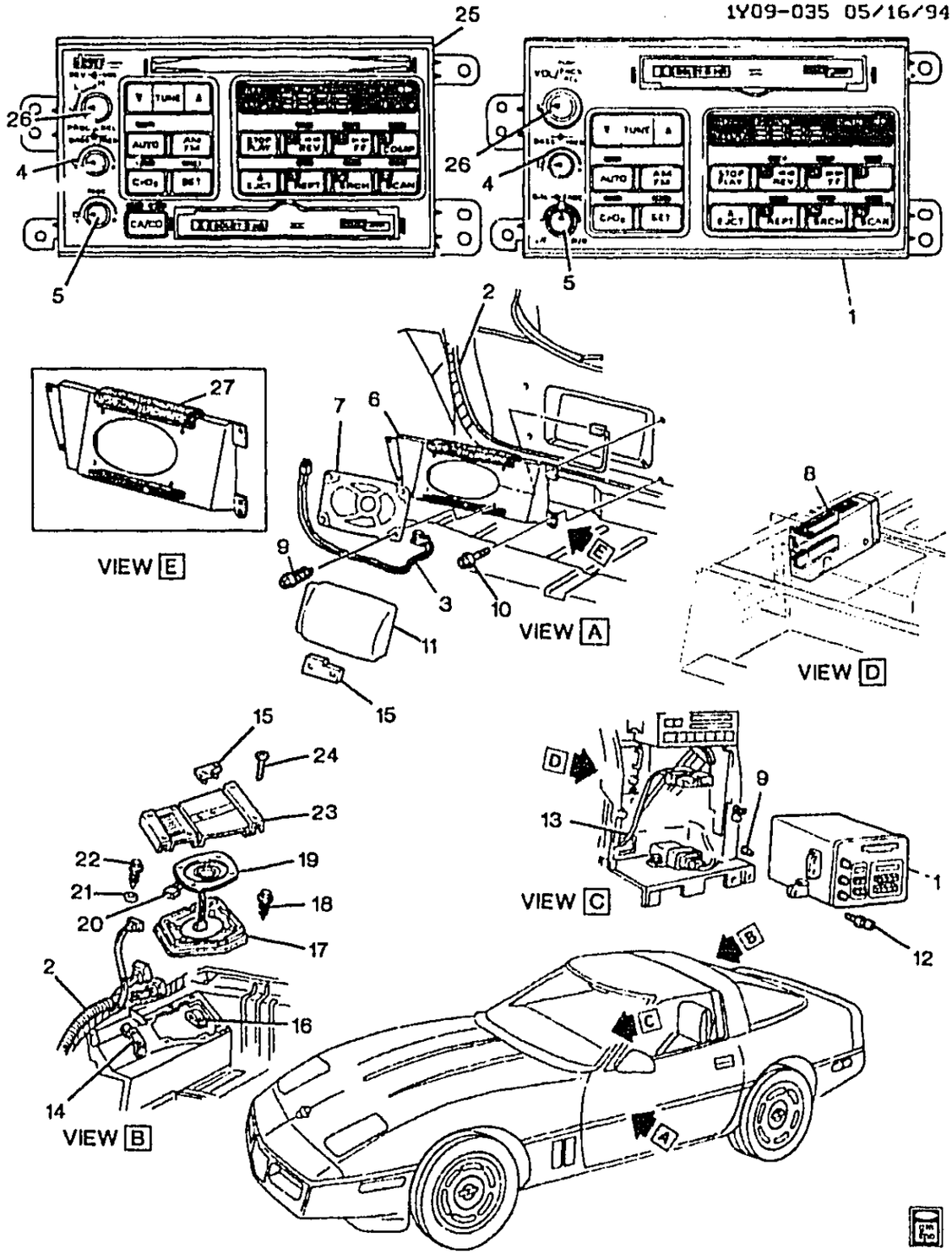

1Y09-035

1993-1996 Y AUDIO SYSTEM (EXC UX0)

1.		DISCON	CONTROL, AM/FM STEREO & CLK & T/PLYR RDO (INCLS 4, 5, 26)	93-94	Y (UM6)	1	16172701
	8-D14	9.650	CONTROL, AM/FM STEREO & CLK & T/PLYR RDO (INCLS 4, 5, 26) (AC-DELCO #16208151) ...	95-96	Y (UM6)	1	16208151

© 2000 GENERAL MOTORS SERVICE PARTS OPERATIONS-CHEVROLET-14Y

							1Y09-035
	8-D14	9.650	CONTROL, AM/FM STEREO & CLK & T/PLYR RDO (INCLS 4, 5, 26) (AC-DELCO #16208161) ...	93-96	Y (UU8)	1	16208161
2.	8-D20	9.656	HARNESS, RDO FRT SPKR WRG	93-96	Y07 (UY5)	1	12106566
	8-D20	9.656	HARNESS, RDO FRT SPKR WRG	93-96	Y67 (UY5)	1	12130343
3.	8-D20	9.656	WIRE, RDO FRT SPKR	93-96	Y (UY5)	2	12090388
4.	8-D12	9.649	KNOB, RDO TONE CONT (PART OF 1, 25) (BASS) (AC-DELCO #16123226)	93	Y (UM6)	2	16123226
	8-D12	9.649	KNOB, RDO TONE CONT (PART OF 1, 25) (BASS) (AC-DELCO #16123226)	93	Y (UU8)	2	16123226
	8-D12	9.649	KNOB, RDO TONE CONT (PART OF 1, 25) (BASS) (AC-DELCO #16123226)	93	Y (U1F)	2	16123226
	8-D12	9.649	KNOB, RDO CONT (BASS/BAL) (PART OF 1, 25) (AC-DELCO #16188236)	94-96	Y (UM6, UU8, U1F)	2	16188236
	8-D12	9.649	KNOB, RDO CONT (BASS/BAL) (PART OF 1, 25) (AC-DELCO #16182924)	94-96	Y (UL2, U1F) (EXPORT)	1	16182924
5.	8-D12	9.649	KNOB, RDO SPKR CONT (BAL) (OTR) (PART OF 1, 25) (AC-DELCO #16161313)	93-96	Y (UM6, UU8, U1F)	2	16161313
	8-D12	9.649	KNOB, RDO SPKR CONT (BAL) (PART OF 1, 25) (AC-DELCO #16182925)	94-96	Y (UL2, U1F) (EXPORT)	1	16182925
	8-D12	9.649	KNOB, RDO SPKR CONT (BAL) (OTR) (PART OF 1, 25) (AC-DELCO #16161313)	93	Y (UK1, UL2, U1F) (EXPORT)	2	16161313
6.	8-D17	9.655	PLATE, RDO FRT SPKR MT	93-96	Y (UM6)	RH	10098450
	8-D17	9.655	PLATE, RDO FRT SPKR MT	93-96	Y (UM6)	LH	10098451
7.	8-D14	9.650	SPEAKER, RDO FRT (AC-DELCO #16033662)	93-96	Y (UY5)	2	16033662
8.	8-D14	9.650	RADIO, AM/FM STEREO & CLK & T/PLYR & CD PLYR (MAY REQ 1 OF THE FOLLOWING ANT ADAP:16169581, 16169591, 16169601, 16169611) (AC-DELCO #16178751)	93-95	Y (UL2, U1F)	1	16178751
	8-D14	9.650	RADIO, AM/FM STEREO & CLK & T/PLYR & CD PLYR (MAY REQ 1 OF THE FOLLOWING ANT ADAP:16169581, 16169591, 16169601, 16169611) (AC-DELCO #16169531)	93-96	Y (UK1, U1F) (EXPORT)	1	16169531
9.		8.900	BOLT/SCREW, HWH W/FL WA M4.2X1.41X20, 6010M, 7253M, 12.5 OD, DOG PT (8.977)	93-96	.....	AR	115097[illegible]
10.		8.900	BOLT, HEX W/WA, M4.2X1.41X16, 6010M, PC, 8 OD, HI LO THD	93-96	.....	AR	11509713
11.	8-D17	9.655	GRILLE, RDO FRT SPKR (BLACK) (9.650)	93	Y (19I)	LH	10220615
	8-D17	9.655	GRILLE, RDO FRT SPKR (BLACK) (9.650)	93	Y (19I)	RH	10220616
	8-D17	9.655	GRILLE, RDO FRT SPKR (BLACK) (9.650)	93	Y (10I)	LH	10220615

	8-D17	9.655	GRILLE, RDO FRT SPKR (BLACK) (9.650)	93	Y (10I)	RH	10220616
		DISCON	GRILLE, RDO FRT SPKR (BEIGE)	93	Y (64I)	LH	10220617
	8-D17	9.655	GRILLE, RDO FRT SPKR (BEIGE) (9.650)	93	Y (64I)	RH	10220618
	8-D17	9.655	GRILLE, RDO FRT SPKR (GRAY) (9.650)	93	Y (14I)	LH	10220619
	8-D17	9.655	GRILLE, RDO FRT SPKR (GRAY) (9.650)	93	Y (14I)	RH	10220620
	8-D17	9.655	GRILLE, RDO FRT SPKR (RED) (9.650) (AC-DELCO #10220623)	93	Y (79I)	LH	10220623
	8-D17	9.655	GRILLE, RDO FRT SPKR (RED) (9.650)	93	Y (79I)	RH	10220624
	8-D17	9.655	GRILLE, RDO FRT SPKR (RED) (9.650)	93	Y (70I)	LH	10220625
	8-D17	9.655	GRILLE, RDO FRT SPKR (RED) (9.650)	93	Y (70I)	RH	10220626
	8-D17	9.655	GRILLE, RDO FRT SPKR (BLACK) (9.650)	94-96	Y (19I)	LH	10238587
	8-D17	9.655	GRILLE, RDO FRT SPKR (BLACK) (9.650)	94-96	Y (19I)	RH	10238588
		DISCON	GRILLE, RDO FRT SPKR (BEIGE) (9.650)	94-96	Y (64I)	LH	10238589
	8-D17	9.655	GRILLE, RDO FRT SPKR (BEIGE) (9.650)	94-96	Y (64I)	RH	10238590
	8-D17	9.655	GRILLE, RDO FRT SPKR (GRAY) (9.650)	94-96	Y (14I)	LH	10238591
	8-D17	9.655	GRILLE, RDO FRT SPKR (GRAY) (9.650)	94-96	Y (14I)	RH	10238592
	8-D17	9.655	GRILLE, RDO FRT SPKR (RED) (9.650)	94-96	Y (70I)	LH	10238593
		DISCON	GRILLE, RDO FRT SPKR (RED) (9.650)	94-96	Y (70I)	RH	10238594
12.		8.977	SCREW, PAN HD TORX W/WA, M4.2X1.41X20, T15, 6 LOB, ZN	93-96		AR	11513849
13.	8-N5	2.480	HARNESS, I/P WRG	93	Y (MD8, C60) (EXC T90)	1	12141443
	8-N5	2.480	HARNESS, I/P WRG (FOR VEH -DRL, SPLICE CAV D TO CAV E @ BLUE 8-WAY DRL MDL CONN.)	93	Y (ML9, C68) (EXC T90)	1	12141444
	8-N5	2.480	HARNESS, I/P WRG	93	Y (ML9, C60) (EXC T90)	1	12141445
	8-N5	2.480	HARNESS, I/P WRG (ON VEHS W/O DAYTIME RUNNING LPS SPLICE CAV D & E WIRES TOGETHER AT BLUE DRL MDL CONN.)	93	Y (MD8, C68) (EXC T90)	1	12141446
	8-N5	2.480	HARNESS, I/P WRG	94	Y (ML9, C60) (EXC T61, T72, T84, T85, T90)	1	12130324
	8-N5	2.480	HARNESS, I/P WRG	94	Y (ML9, C68) (EXC T61, T72, T84, T85, T90)	1	12130326
	8-N5	2.480	HARNESS, I/P WRG	94	Y (M30, C60) (EXC T61, T72, T84, T85, T90) (2ND DES)	1	12130491
	8-N5	2.480	HARNESS, I/P WRG	94	Y (M30, C60, T61) (EXC T72, T84, T85, T90)	1	12130492
	8-N5	2.480	HARNESS, I/P WRG	94	Y (M30, C68) (EXC T61, T72, T84, T85, T90)	1	12130493
	8-N5	2.480	HARNESS, I/P WRG	94	Y (M30, C68, T61) (EXC T72, T84, T85, T90)	1	12130494

© 2000 GENERAL MOTORS SERVICE PARTS OPERATIONS-CHEVROLET-14Y

					1Y09-035
8-N5	2.480	HARNESS, I/P WRG (TAGGED 0322 OR 0323) (ON VEH W/DAYTIME RUNNING LGHTS, ADD 9-WAY BLUE CONN TO DAYTIME RUNNING LGHT, SPLICE CAV D & CAV E WIRES TOGETHER)	94	Y (M30, C68, T61) (EXC T72, T84, T85, T90) (1ST DES)	1 12141788
8-N5	2.480	HARNESS, I/P WRG	94	Y (ML9, C60, T61) (EXC T72, T84, T85, T90)	1 12141789
8-N5	2.480	HARNESS, I/P WRG	94	Y (ML9, C68, T61) (EXC T72, T84, T85, T90)	1 12141790
8-N5	2.480	HARNESS, I/P WRG	94	Y (ML9, C68) (EXC T72, T84, T85, T90)	1 12163703
8-N5	2.480	HARNESS, I/P WRG	95	Y (LT5, ML9, C68) (EXC T61)	1 12130326
8-N5	2.480	HARNESS, I/P WRG	95	Y (LT1, M30, C60, T61) (EXC T72, T84, T85, T90)	1 12130389
8-N5	2.480	HARNESS, I/P WRG (SPLICE CAV D & E WIRES @ BLUE DRL MDL CONN FOR VEH W/O DRL.)	95	Y (LT1, M30, C68, T61) (EXC T72, T84, T85, T90)	1 12130391
8-N5	2.480	HARNESS, I/P WRG	95	Y (LT5, ML9, C68, T61) .	1 12141790
8-N5	2.480	HARNESS, I/P WRG	95	Y (LT1, ML9, C60) (EXC T61, T72, T84, T85, T90)	1 12163700
8-N5	2.480	HARNESS, I/P WRG	95	Y (LT1, ML9, C68) (EXC T61, T72, T84, T85, T90)	1 12163702
8-N5	2.480	HARNESS, I/P WRG	95	Y (LT5, ML9, C68)	1 12163703
8-N5	2.480	HARNESS, I/P WRG (TAGGED 0320 OR 0321) (ON VEH W/O DRL, AT 8-WAY BLUE CONN TO DRL MDL SPLICE CAV D & CAV E LEADS TOGETHER.)	94	Y (M30, C60, T61) (EXC T72, T84, T85, T90) (1ST DES)	1 12141787
8-N5	2.480	HARNESS, I/P WRG (WHEN USE ON VEH W/O DAYTIME RUN LIGHTS, SPLICE CAV D&E TOGETHER @ BLUE 8-WAY DRL MOD CONN)	96	Y (M30, C60) (EXC T72, T84, T85, T90)	1 12130468
8-N5	2.480	HARNESS, I/P WRG (WHEN USE ON VEH W/O DAYTIME RUN LIGHTS, SPLICE CAV D&E TOGETHER @ BLUE 8-WAY DRL MOD CONN)	96	Y (M30, C68) (EXC T72, T84, T85, T90)	1 12130470
8-N5	2.480	HARNESS, I/P WRG (WHEN USE ON VEH W/O DAYTIME RUN LIGHTS, SPLICE CAV D&E TOGETHER @ BLUE 8-WAY DRL MOD CONN)	96	Y (ML9, C60) (EXC T72, T84, T85, T90)	1 12130472
8-N5	2.480	HARNESS, I/P WRG (WHEN USE ON VEH W/O DAYTIME RUN LIGHTS, SPLICE CAV D&E TOGETHER @ BLUE 8-WAY DRL MOD CONN)	96	Y (ML9, C68) (EXC T72, T84, T85, T90)	1 12130474
8-N5	2.480	HARNESS, I/P WRG	93	Y (ML9, C68, T90) (EXPORT)	1 12141441
8-N5	2.480	HARNESS, I/P WRG	93	Y (MD8, C68, T90) (EXPORT)	1 12141442
8-N5	2.480	HARNESS, I/P WRG	94	Y (M30, C68, T72, T84, T85, T90) (EXPORT) ...	1 12130495

© 2000 GENERAL MOTORS SERVICE PARTS OPERATIONS-CHEVROLET-14Y

							1Y09-035
	8-N5	2.480	HARNESS, I/P WRG	94	Y (ML9, C68, T72, T84, T85, T90) (EXPORT) ...	1	12141792
	8-N5	2.480	HARNESS, I/P WRG	95	Y (LT1, M30, C68, T72, T84, T85, T90) (EXC T61) (EXPORT)	1	12130396
	8-N5	2.480	HARNESS, I/P WRG	95	Y (LT1, ML9, C60, T61) (EXC T72, T84, T85, T90) (EXPORT)	1	12163701
	8-N5	2.480	HARNESS, I/P WRG	95	Y (LT1, ML9, C68, T61) (EXC T72, T84, T85, T90) (EXPORT)	1	12163703
	8-N5	2.480	HARNESS, I/P WRG	95	Y (LT1, ML9, C68, T72, T84, T85, T90) (EXC T61) (EXPORT)	1	12163704
	8-N5	2.480	HARNESS, I/P WRG	96	Y (M30, C68, T72, T84, T85, T90) (EXC T61) (EXPORT)	1	12130475
	8-N5	2.480	HARNESS, I/P WRG	96	Y (LT4, ML9, C68, T72, T84, T85, T90) (EXC T61) (EXPORT)	1	12163715
	8-N5	2.480	HARNESS, I/P WRG (TAGGED 0328)	94	Y (M30, C68, T72, T84, T85, T90) (1ST DES) (EXPORT)	1	12141791
14.	8-D17	9.655	BRACKET, RDO RR SPKR GRL (GRL MTG)	93-96	Y07	2	10082810
15.	8-D17	9.655	PLATE, RDO SPKR NA (9.665) ..	93-96	Y (UM6)	2	14057530
16.		8.921	NUT, U-TYPE, 4.2X1.41, DIM A-15, DIM B-14 DIM C-8.65, 1050, PZOR	93-96	.....	AR	12338121
17.	8-D22	9.665	PLATE, RDO RR SPKR MT (LT RR ON COUPE, RT RR ON CONVERTIBLE)	93-96	Y (UM6)	1	10098442
	8-D22	9.665	PLATE, RDO RR SPKR MT (RT RR ON COUPE, LT RR ON CONVERTIBLE)	93-96	Y (UM6)	1	10098443
18.		8.900	BOLT, HWH M5X.8X25 4.8 PEOR FULL THD	93-96	.....	AR	11508858
19.	8-D22	9.665	SPEAKER, RDO RR (AC-DELCO #16040940)	93-96	Y (UY5)	2	16040940
20.	8-D20	9.656	WIRE, RDO RR SPKR	93-96	Y (UY5)	1	12055834
21.		8.929	WASHER, FL 7/32X1/2X5/8 1050 CAD HARD	93-96	.....	AR	2077521
22.		8.977	SCREW, HWH TAP 4.2 X 1.41 X 25 (10.783)	93-96	.....	AR	1640810
23.		DISCON	GRILLE, RDO RR SPKR (BLACK)	93	Y07 (10I, 19I)	LH	10219851
		DISCON	GRILLE, RDO RR SPKR (BLACK)	93	Y07 (10I, 19I)	RH	10219852
	8-D22	9.665	GRILLE, RDO RR SPKR (BEIGE) .	93	Y07 (64I)	LH	10219853
	8-D22	9.665	GRILLE, RDO RR SPKR (BEIGE) .	93	Y07 (64I)	RH	10219854
	8-D22	9.665	GRILLE, RDO RR SPKR (GRAY) .	93	Y07 (14I)	LH	10219855
	8-D22	9.665	GRILLE, RDO RR SPKR (GRAY) .	93	Y07 (14I)	RH	10219856
	8-D22	9.665	GRILLE, RDO RR SPKR (BEIGE) .	93	Y67 (64I)	2	10175628
		DISCON	GRILLE, RDO RR SPKR (BLACK)	93	Y67 (10I, 19I)	2	10219863
	8-D22	9.665	GRILLE, RDO RR SPKR (GRAY) .	93	Y67 (14I)	2	10219865
	8-D22	9.665	GRILLE, RDO RR SPKR (RED) ...	93	Y07 (79I)	LH	10219859
	8-D22	9.665	GRILLE, RDO RR SPKR (RED) ...	93	Y07 (79I)	RH	10219860
		DISCON	GRILLE, RDO RR SPKR (RED) ...	93	Y07 (70I)	LH	10219861
	8-D22	9.665	GRILLE, RDO RR SPKR (RED) ...	93	Y07 (70I)	RH	10219862
	8-D22	9.665	GRILLE, RDO RR SPKR (RED) ...	93	Y67 (79I)	2	10219866
	8-D22	9.665	GRILLE, RDO RR SPKR (BLACK)	94-96	Y07 (19I)	LH	10238611

© 2000 GENERAL MOTORS SERVICE PARTS OPERATIONS-CHEVROLET-14Y

							1Y09-035
	8-D22	9.665	GRILLE, RDO RR SPKR (BLACK)	94-96	Y07 (19I)	RH	10238612
	8-D22	9.665	GRILLE, RDO RR SPKR (BEIGE) .	94-96	Y07 (64I)	LH	10238613
	8-D22	9.665	GRILLE, RDO RR SPKR (BEIGE) .	94-96	Y07 (64I)	RH	10238614
	8-D22	9.665	GRILLE, RDO RR SPKR (GRAY) .	94-96	Y07 (14I)	LH	10238615
	8-D22	9.665	GRILLE, RDO RR SPKR (GRAY) .	94-96	Y07 (14I)	RH	10238616
	8-D22	9.665	GRILLE, RDO RR SPKR (RED) ...	94-95	Y07 (70I)	LH	10238617
	8-D22	9.665	GRILLE, RDO RR SPKR (RED) ...	94-95	Y07 (70I)	RH	10238618
	8-D22	9.665	GRILLE, RDO RR SPKR (BLACK)	94-96	Y67 (19I)	2	10238620
	8-D22	9.665	GRILLE, RDO RR SPKR (BEIGE) .	94-96	Y67 (64I)	2	10238621
	8-D22	9.665	GRILLE, RDO RR SPKR (GRAY) .	94-96	Y67 (14I)	2	10238622
	8-D22	9.665	GRILLE, RDO RR SPKR (RED) ...	94-95	Y67 (70I)	2	10238623
	8-D22	9.665	GRILLE, RDO RR SPKR (BLACK)	96	Y07 (Z16, 70I)	LH	10238611
	8-D22	9.665	GRILLE, RDO RR SPKR (BLACK)	96	Y07 (Z16, 70I)	RH	10238612
	8-D22	9.665	GRILLE, RDO RR SPKR (RED) ...	96	Y07 (70I) (EXC Z16) ...	LH	10238617
	8-D22	9.665	GRILLE, RDO RR SPKR (RED) ...	96	Y07 (70I) (EXC Z16) ...	RH	10238618
	8-D22	9.665	GRILLE, RDO RR SPKR (RED) ...	96	Y67 (70I) (EXC Z16) ...	2	10238623
24.		8.977	SCREW, OV TR (35) HD C/R TAP (AB) SC&WA 4.2X1.41X25 PC ...	93-96	.....	AR	11500673
25.	8-D14	9.650	CONTROL, AM/FM STEREO & CLK & T/PLYR & CD PLYR RDO (INCLS 4, 5, 26) (AC-DELCO #16172721)	93-94	Y (U F) (EXC UK1, UL2)	1	16172721
		DISCON	CONTROL, AM/FM STEREO & CLK & T/PLYR & CD PLYR RDO (INCLS 4, 5, 26)	95	Y (U1F) (EXC UK1, UL2)	1	16208171
	8-D14	9.650	RADIO, AM/FM STEREO & CLK & T/PLYR & CD PLYR (MAY REQ 1 OF THE FOLLOWING ANT ADAP:16169581, 16169591, 16169601, 16169611) (INCLS 4, 5, 26) (AC-DELCO #16178751) .	93-95	Y (UL2, U1F)	1	16178751
	8-D14	9.650	CONTROL, AM/FM STEREO & CLK & T/PLYR & CD PLYR RDO (INCLS 4, 5, 26) (AC-DELCO #16172731)	94	Y (UK1, U1F) (EXPORT)	1	16172731
	8-D14	9.650	CONTROL, AM/FM STEREO & CLK & T/PLYR & CD PLYR RDO (INCLS 4, 5, 26) (AC-DELCO #16172741)	94	Y (UL2, U1F) (EXPORT)	1	16172741
		DISCON	CONTROL, AM/FM STEREO & CLK & T/PLYR & CD PLYR RDO (INCLS 4, 5, 26)	95	Y (UK1, U1F) (EXPORT)	1	16208181
	8-D14	9.650	CONTROL, AM/FM STEREO & CLK & T/PLYR & CD PLYR RDO (INCLS 4, 5, 26) (AC-DELCO #16208191)	95	Y (UL2, U1F) (EXPORT)	1	16208191
	8-D14	9.650	RADIO, AM/FM STEREO & CLK & T/PLYR & CD PLYR (MAY REQ 1 OF THE FOLLOWING ANT ADAP:16169581, 16169591, 16169601, 16169611) (INCLS 4, 5, 26) (AC-DELCO #16169531) .	93-96	Y (UK1, U1F) (EXPORT)	1	16169531
26.	8-D12	9.649	KNOB, RDO VOL CONT (PART OF 1, 25) (AC-DELCO #16123224)	93	Y (UU8, U1F)	1	16123224
	8-D12	9.649	KNOB, RDO VOL CONT (PART OF 1, 25) (AC-DELCO #16188235)	94-96	Y (UM6, UU8, U1F)	1	16188235

							1Y09-035
	8-D12	9.649	KNOB, RDO VOL CONT (OTR) (PART OF 1, 25) (SPD CONT VOL) (AC-DELCO #16161312) ..	93-96	Y (UM6, UU8, U1F)	1	16161312
	8-D12	9.649	KNOB, RDO VOL CONT (PART OF 1, 25) (AC-DELCO #16123224)	93	Y (UK1, UL2, U1F) (EXPORT)	1	16123224
	8-D12	9.649	KNOB, RDO VOL CONT (PART OF 1, 25) (SPD CONT VOL) (AC-DELCO #16192674)	94-96	Y (UL2, U1F) (EXPORT)	1	16192674
	8-D12	9.649	KNOB, RDO VOL CONT (PART OF 1, 25) (AC-DELCO #16192675)	94-96	Y (UL2, U1F) (EXPORT)	1	16192675
	8-D12	9.649	KNOB, RDO VOL CONT (OTR) (PART OF 1, 25) (SPD CONT VOL) (AC-DELCO #16161312) ..	93	Y (UK1, UL2, U1F) (EXPORT)	1	16161312
27.	8-D20	9.656	TAPE, RDO FRT SPKR WRG HARNESS (9.250)	93-96	.....		3999572

RPO DEFINITIONS
C60 – AIR CONDITIONER,FRONT,MANUAL CONTROLS
C68 – AIR CONDITIONER,FRONT,AUTOMATIC,ELECTRONIC CONTROLS
LT1 – ENGINE-GAS, 8 CYL, 5.7L(5.7P),MFI,HO
LT4 – ENGINE GAS, 8 CYL, 5.7L, MFI, HIGH OUTPUT
LT5 – ENGINE,5.7L(5.7J),TPI
MD8 – TRANSMISSION,AUTOMATIC 4-SPEED(THM700R4/4L60)
ML9 – TRANSMISSION,MANUAL 6-SPEED
M30 – TRANSMISSION,AUTOMATIC 4 SPEED,4L60E,ELECTRONIC
T61 – LIGHTING,DAYTIME RUNNING
T72 – HEADLAMPS,LH RULE OF THE ROAD(EXPORT)
T84 – HEADLAMPS,RH RULE OF THE ROAD,RECTANGULAR(MARKED E)(EXPORT)
T85 – HEADLAMPS,LH RULE OF THE ROAD,RECTANGULAR(MARKED E)(EXPORT)
T90 – LAMP,SIGNALING AND MARKER(EXPORT)
UK1 – RADIO FREQUENCY(JAPANESE)
UL2 – RADIO FREQUENCY(EUROPEAN)
UM6 – RADIO,AM/FM STEREO,CASSETTE,ETR,INCLUDES CLOCK
UU8 – RADIO,AM/FM STEREO,CASSETTE,ETR,DELCO/BOSE,DOLBY,INCLUDES CLOCK
UX0 – SPEAKER SYSTEM,SIX,DUAL FLOOR SILL,DUAL EXTENDED RANGE SAIL PANEL
UY5 – SPEAKER SYSTEM 4, DUAL FRT FLR SILL, DUAL EXT RANGE QTR MTD
U1F – RADIO,AM/FM STEREO,CASSETTE,C.D. PLAYER,ETR,BOSE,INCLUDES CLOCK
Z16 – APPEARANCE PACKAGE,GRAND SPORT EDITION
10I – INTERIOR TRIM– ARCTIC WHITE
14I – INTERIOR TRIM LT GRAY
19I – INTERIOR TRIM,BLACK
64I – INTERIOR TRIM,LIGHT BEIGE
70I – INTERIOR TRIM,TORCH RED
79I – INTERIOR TRIM,RUBY RED

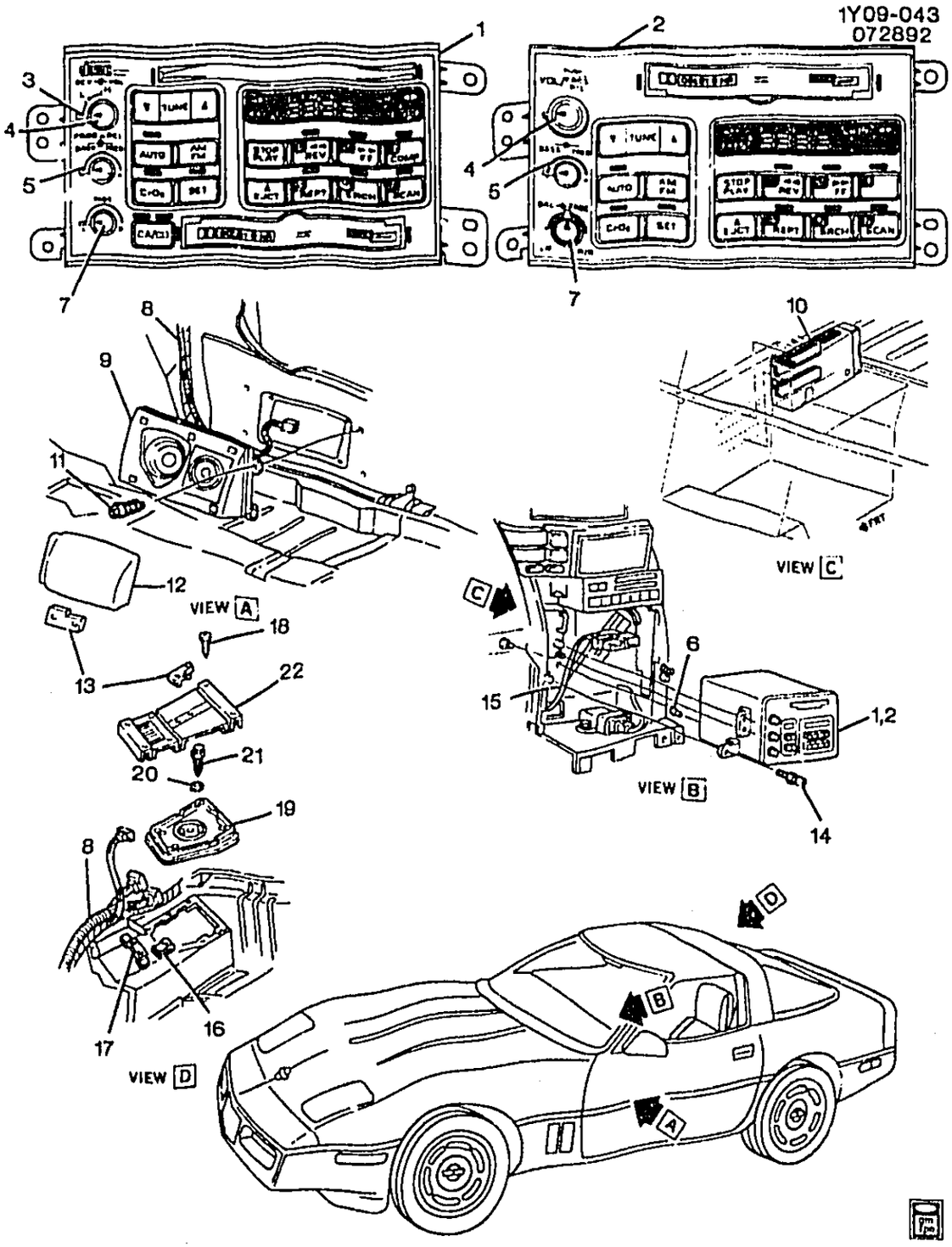

1Y09-043

1993--1996 Y AUDIO SYSTEM (UX0)

1.	8-D14	9.650	CONTROL, AM/FM STEREO & CLK & T/PLYR & CD PLYR RDO (INCLS 3-5, 7) (AC-DELCO #16172721)	93-94	Y (U1F) (EXC UK1, UL2)	1 16172721

© 2000 GENERAL MOTORS SERVICE PARTS OPERATIONS-CHEVROLET-14Y

							1Y09-043
		DISCON	CONTROL, AM/FM STEREO & CLK & T,PLYR & CD PLYR RDO (INCLS 3-5, 7)	95-96	Y (U1F) (EXC UK1, UL2)	1	16208171
	8-D14	9.650	CONTROL, AM/FM STEREO & CLK & T/PLYR & CD PLYR RDO (INCLS 3-5, 7) (AC-DELCO #16172731)	94	Y (UK1, U1F) (EXPORT)	1	16172731
	8-D14	9.650	CONTROL, AM/FM STEREO & CLK & T/PLYR & CD PLYR RDO (INCLS 3-5, 7) (AC-DELCO #16172741)	94	Y (UL2, U1F) (EXPORT)	1	16172741
		DISCON	CONTROL, AM/FM STEREO & CLK & T/PLYR & CD PLYR RDO (INCLS 3-5, 7)	95-96	Y (UK1, U1F) (EXPORT)	1	16208181
	8-D14	9.650	CONTROL, AM/FM STEREO & CLK & T/PLYR & CD PLYR RDO (INCLS 3-5, 7) (AC-DELCO #16208191)	95-96	Y (UL2, U1F) (EXPORT)	1	16208191
2.		DISCON	CONTROL, AM/FM STEREO & CLK & T/PLYR RDO (INCLS 4, 5, 7)	93-94	Y (UM6)	1	16172701
	8-D14	9.650	CONTROL, AM/FM STEREO & CLK & T/PLYR RDO (INCLS 4, 5, 7) (AC-DELCO #16208151)	95-96	Y (UM6)	1	16208151
	8-D14	9.650	CONTROL, AM/FM STEREO & CLK & T/PLYR RDO (INCLS 4, 5, 7) (AC-DELCO #16208161)	93-96	Y (UU8)	1	16208161
3.	8-D12	9.649	SPACER, RDO TUNING CONT KNOB (OTR) (PART OF 1) (AC-DELCO #16161320)	93-94	Y (U1F)	1	16161320
	8-D12	9.649	SPACER, RDO TUNING CONT KNOB (OTR) (PART OF 1) (AC-DELCO #16161320)	93	Y (UK1, UL2, U1F) (EXPORT)	1	16161320
4.	8-D12	9.649	KNOB, RDO VOL CONT (PART OF 1, 2) (AC-DELCO #16123224)	93	Y (UU8, U1F)	1	16123224
	8-D12	9.649	KNOB, RDO VOL CONT (PART OF 1, 2) (AC-DELCO #16188235)	94-96	Y (UM6, UU8, U1F)	1	16188235
	8-D12	9.649	KNOB, RDO VOL CONT (OTR) (PART OF 1, 2) (SPD CONT VOL) (AC-DELCO #16161312)	93-96	Y (UM6, UU8, U1F)	1	16161312
	8-D12	9.649	KNOB, RDO VOL CONT (PART OF 1, 2) (AC-DELCO #16123224)	93	Y (UU8, U1F)	1	16123224
	8-D12	9.649	KNOB, RDO VOL CONT (PART OF 1, 2) (AC-DELCO #16188235)	94-96	Y (UM6, UU8, U1F)	1	16188235
	8-D12	9.649	KNOB, RDO VOL CONT (OTR) (PART OF 1, 2) (SPD CONT VOL) (AC-DELCO #16161312)	93-96	Y (UM6, UU8, U1F)	1	16161312
	8-D12	9.649	KNOB, RDO VOL CONT (PART OF 1, 2) (AC-DELCO #16123224)	93	Y (UK1, UL2, U1F) (EXPORT)	1	16123224
	8-D12	9.649	KNOB, RDO VOL CONT (PART OF 1, 2) (SPD CONT VOL) (AC-DELCO #16192674)	94-96	Y (UL2, U1F) (EXPORT)	1	16192674

© 2000 GENERAL MOTORS SERVICE PARTS OPERATIONS-CHEVROLET-14Y

							1Y09-043
	8-D12	9.649	KNOB, RDO VOL CONT (PART OF 1, 2) (AC-DELCO #16192675)	94-96	Y (UL2, U1F) (EXPORT)	1	16192675
	8-D12	9.649	KNOB, RDO VOL CONT (OTR) (PART OF 1, 2) (SPD CONT VOL) (AC-DELCO #16161312)	93	Y (UK1, UL2, U1F) (EXPORT)	1	16161312
	8-D12	9.649	KNOB, RDO VOL CONT (PART OF 1, 2) (AC-DELCO #16123224)	93	Y (UK1, UL2, U1F) (EXPORT)	1	16123224
	8-D12	9.649	KNOB, RDO VOL CONT (PART OF 1, 2) (SPD CONT VOL) (AC-DELCO #16192674)	94-96	Y (UL2, U1F) (EXPORT)	1	16192674
	8-D12	9.649	KNOB, RDO VOL CONT (PART OF 1, 2) (AC-DELCO #16192675)	94-96	Y (UL2, U1F) (EXPORT)	1	16192675
	8-D12	9.649	KNOB, RDO VOL CONT (OTR) (PART OF 1, 2) (SPD CONT VOL) (AC-DELCO #16161312)	93	Y (UK1, UL2, U1F) (EXPORT)	1	16161312
5.	8-D12	9.649	KNOB, RDO TONE CONT (PART OF 1, 2) (BASS) (AC-DELCO #16123225)	93	Y (UU8)	2	16123226
	8-D12	9.649	KNOB, RDO TONE CONT (PART OF 1, 2) (BASS) (AC-DELCO #16123226)	93	Y (U1F)	2	16123226
	8-D12	9.649	KNOB, RDO CONT (BASS/BAL) (PART OF 1, 2) (AC-DELCO #16188236)	94-96	Y (UM6, UU8, U1F)	2	16188236
	8-D12	9.649	KNOB, RDO CONT (BASS/BAL) (PART OF 1, 2) (AC-DELCO #16182924)	94-96	Y (UL2, U1F) (EXPORT)	1	16182924
6.	8-D24	9.667	BOLT, RDO CONT (POSN #2) (M5X.8X16 THD) (SPECIAL) (3.671) (AC-DELCO #12337892)	93-96	Y	1	12337892
7.	8-D12	9.649	KNOB, RDO SPKR CONT (BAL) (OTR) (PART OF 1, 2) (AC-DELCO #16161313)	93-96	Y (UM6, UU8, U1F)	2	16161313
	8-D12	9.649	KNOB, RDO SPKR CONT (BAL) (PART OF 1, 2) (AC-DELCO #16182925)	94-96	Y (UL2, U1F) (EXPORT)	1	16182925
	8-D12	9.649	KNOB, RDO SPKR CONT (BAL) (OTR) (PART OF 1, 2) (AC-DELCO #16161313)	93	Y (UK1, UL2, U1F) (EXPORT)	2	16161313
8.	8-D20	9.656	HARNESS, RDO FRT SPKR WRG	93-96	Y (UX0)	1	12141864
9.	8-D14	9.650	SPEAKER, RDO FRT (AC-DELCO #16166471)	93-96	Y07 (UX0)	RH	16166471
	8-D14	9.650	SPEAKER, RDO FRT (AC-DELCO #16166481)	93-96	Y07 (UX0)	LH	16166481
	8-D14	9.650	SPEAKER, RDO FRT (AC-DELCO #16166491)	93-96	Y67 (UX0)	RH	16166491
	8-D14	9.650	SPEAKER, RDO FRT (AC-DELCO #16166501)	93-96	Y67 (UX0)	LH	16166501
	8-D14	9.650	SPEAKER, RDO FRT (LESS CLOSURE) (AC-DELCO #16141716)	93-96	Y67 (UX0)	2	16141716
10.		N.S.	RADIO, AM/FM STEREO & CLK & T/PLYR (AVAILABLE ONLY THROUGH AC DELCO SERVICE CENTERS)		.....		

		N.S.	RADIO, AM/FM STEREO & CLK & T/PLYR & CD PLYR (AVAILABLE ONLY THROUGH AC DELCO SERVICE CENTERS)		.....		
11.		8.900	BOLT/SCREW, HWH W/FL WA M4.2X1.41X20, 6010M, 7253M, 12.5 OD, DOG PT (8.977)	93-96	.....	AR	11509709
12.	8-D17	9.655	GRILLE, RDO FRT SPKR (BLACK) (9.650)	93	Y (19I)	LH	10220615
	8-D17	9.655	GRILLE, RDO FRT SPKR (BLACK) (9.650)	93	Y (19I)	RH	10220616
	8-D17	9.655	GRILLE, RDO FRT SPKR (BLACK) (9.650)	93	Y (10I)	LH	10220615
	8-D17	9.655	GRILLE, RDO FRT SPKR (BLACK) (9.650)	93	Y (10I)	RH	10220616
		DISCON	GRILLE, RDO FRT SPKR (BEIGE)	93	Y (64I)	LH	10220617
	8-D17	9.655	GRILLE, RDO FRT SPKR (BEIGE) (9.650)	93	Y (64I)	RH	10220618
	8-D17	9.655	GRILLE, RDO FRT SPKR (GRAY) (9.650)	93	Y (14I)	LH	10220619
	8-D17	9.655	GRILLE, RDO FRT SPKR (GRAY) (9.650)	93	Y (14I)	RH	10220620
	8-D17	9.655	GRILLE, RDO FRT SPKR (RED) (9.650) (AC-DELCO #10220623)	93	Y (79I)	LH	10220623
	8-D17	9.655	GRILLE, RDO FRT SPKR (RED) (9.650)	93	Y (79I)	RH	10220624
	8-D17	9.655	GRILLE, RDO FRT SPKR (RED) (9.650)	93	Y (70I)	LH	10220625
	8-D17	9.655	GRILLE, RDO FRT SPKR (RED) (9.650)	93	Y (70I)	RH	10220626
	8-D17	9.655	GRILLE, RDO FRT SPKR (BLACK) (9.650)	94-96	Y (19I)	LH	10238587
	8-D17	9.655	GRILLE, RDO FRT SPKR (BLACK) (9.650)	94-96	Y (19I)	RH	10238588
		DISCON	GRILLE, RDO FRT SPKR (BEIGE)	94-96	Y (64I)	LH	10238589
	8-D17	9.655	GRILLE, RDO FRT SPKR (BEIGE) (9.650)	94-96	Y (64I)	RH	10238590
	8-D17	9.655	GRILLE, RDO FRT SPKR (GRAY) (9.650)	94-96	Y (14I)	LH	10238591
	8-D17	9.655	GRILLE, RDO FRT SPKR (GRAY) (9.650)	94-96	Y (14I)	RH	10238592
	8-D17	9.655	GRILLE, RDO FRT SPKR (RED) (9.650)	94-96	Y (70I)	LH	10238593
		DISCON	GRILLE, RDO FRT SPKR (RED) ..	94-96	Y (70I)	RH	10238594
13.	8-D17	9.655	PLATE, RDO SPKR NA (GOLD SERIES)	93-96	Y (UU8, U1F)	2	10146468
14.		8.977	SCREW, PAN HD TORX W/WA, M4.2X1.41X20, T15, 6 LOB, ZN ..	93-96	.....	AR	11513849
15.	8-N5	2.480	HARNESS, I/P WRG	93	Y (MD8, C60) (EXC T90)	1	12141443
	8-N5	2.480	HARNESS, I/P WRG (FOR VEH -DRL, SPLICE CAV D TO CAV E @ BLUE 8-WAY DRL MDL CONN.)	93	Y (ML9, C68) (EXC T90)	1	12141444
	8-N5	2.480	HARNESS, I/P WRG	93	Y (ML9, C60) (EXC T90)	1	12141445

© 2000 GENERAL MOTORS SERVICE PARTS OPERATIONS-CHEVROLET-14Y

						1Y09-043
8-N5	2.480	HARNESS, I/P WRG (ON VEHS W/O DAYTIME RUNNING LPS SPLICE CAV D & E WIRES TOGETHER AT BLUE DRL MDL CONN.)	93	Y (MD8, C68) (EXC T90)	1	12141446
8-N5	2.480	HARNESS, I/P WRG	94	Y (ML9, C60) (EXC T61, T72, T84, T85, T90)	1	12130324
8-N5	2.480	HARNESS, I/P WRG	94	Y (ML9, C68) (EXC T61, T72, T84, T85, T90)	1	12130326
8-N5	2.480	HARNESS, I/P WRG	94	Y (M30, C60) (EXC T61, T72, T84, T85, T90) (2ND DES)	1	12130491
8- N5	2.480	HARNESS, I/P WRG	94	Y (M30, C60, T61) (EXC T72, T84, T85, T90)	1	12130492
8-N5	2.480	HARNESS, I/P WRG	94	Y (M30, C68) (EXC T61, T72, T84, T85, T90)	1	12130493
8-N5	2.480	HARNESS, I/P WRG	94	Y (M30, C68, T61) (EXC T72, T84, T85, T90)	1	12130494
8-N5	2.480	HARNESS, I/P WRG (TAGGED 0322 OR 0323) (ON VEH W/DAYTIME RUNNING LGHTS, ADD 8-WAY BLUE CONN TO DAYTIME RUNNING LGHT, SPLICE CAV D & CAV E WIRES TOGETHER)	94	Y (M30, C68, T61) (EXC T72, T84, T85, T90) (1ST DES)	1	12141788
8-N5	2.480	HARNESS, I/P WRG	94	Y (ML9, C60, T61) (EXC T72, T84, T85, T90)	1	12141789
8-N5	2.480	HARNESS, I/P WRG	94	Y (ML9, C68, T61) (EXC T72, T84, T85, T90)	1	12141790
8-N5	2.480	HARNESS, I/P WRG	94	Y (ML9, C68) (EXC T72, T84, T85, T90)	1	12163703
8-N5	2.480	HARNESS, I/P WRG	95	Y (LT5, ML9, C68) (EXC T61)	1	12130326
8-N5	2.480	HARNESS, I/P WRG	95	Y (LT1, M30, C60, T61) (EXC T72, T84, T85, T90)	1	12130389
8-N5	2.480	HARNESS, I/P WRG (SPLICE CAV D & E WIRES @ BLUE DRL MDL CONN FOR VEH W/O DRL.)	95	Y (LT1, M30, C68, T61) (EXC T72, T84, T85, T90)	1	12130391
8-N5	2.480	HARNESS, I/P WRG	95	Y (LT5, ML9, C68, T61) .	1	12141790
8-N5	2.480	HARNESS, I/P WRG	95	Y (LT1, ML9, C60) (EXC T61, T72, T84, T85, T90)	1	12163700
8-N5	2.480	HARNESS, I/P WRG	95	Y (LT1, ML9, C68) (EXC T61, T72, T84, T85, T90)	1	12163702
8-N5	2.480	HARNESS, I/P WRG	95	Y (LT5, ML9, C68)	1	12163703
8-N5	2.480	HARNESS, I/P WRG (TAGGED 0320 OR 0321) (ON VEH W/O DRL, AT 8-WAY BLUE CONN TO DRL MDL SPLICE CAV D & CAV E LEADS TOGETHER.)	94	Y (M30, C60, T61) (EXC T72, T84, T85, T90) (1ST DES)	1	12141787
8-N5	2.480	HARNESS, I/P WRG (WHEN USE ON VEH W/O DAYTIME RUN LIGHTS, SPLICE CAV D&E TOGETHER @ BLUE 8-WAY DRL MOD CONN)	96	Y (M30, C60) (EXC T72, T84, T85, T90)	1	12130468

							1Y09-043
	8-N5	2.480	HARNESS, I/P WRG (WHEN USE ON VEH W/O DAYTIME RUN LIGHTS, SPLICE CAV D&E TOGETHER @ BLUE 8-WAY DRL MOD CONN)	96	Y (M30, C68) (EXC T72, T84, T85, T90)	1	12130470
	8-N5	2.480	HARNESS, I/P WRG (WHEN USE ON VEH W/O DAYTIME RUN LIGHTS, SPLICE CAV D&E TOGETHER @ BLUE 8-WAY DRL MOD CONN)	96	Y (ML9, C60) (EXC T72, T84, T85, T90)	1	12130472
	8-N5	2.480	HARNESS, I/P WRG (WHEN USE ON VEH W/O DAYTIME RUN LIGHTS, SPLICE CAV D&E TOGETHER @ BLUE 8-WAY DRL MOD CONN)	96	Y (ML9, C68) (EXC T72, T84, T85, T90)	1	12130474
	8-N5	2.480	HARNESS, I/P WRG	93	Y (ML9, C68, T90) (EXPORT)	1	12141441
	8-N5	2.480	HARNESS, I/P WRG	93	Y (MD8, C68, T90) (EXPORT)	1	12141442
	8-N5	2.480	HARNESS, I/P WRG	94	Y (M30, C68, T72, T84, T85, T90) (EXPORT) ...	1	12130495
	8-N5	2.480	HARNESS, I/P WRG	94	Y (ML9, C68, T72, T84, T85, T90) (EXPORT) ...	1	12141792
	8-N5	2.480	HARNESS, I/P WRG	95	Y (LT1, M30, C68, T72, T84, T85, T90) (EXC T61) (EXPORT)	1	12130396
	8-N5	2.480	HARNESS, I/P WRG	95	Y (LT1, ML9, C60, T61) (EXC T72, T84, T85, T90) (EXPORT)	1	12163701
	8-N5	2.480	HARNESS, I/P WRG	95	Y (LT1, ML9, C68, T61) (EXC T72, T84, T85, T90) (EXPORT)	1	12163703
	8-N5	2.480	HARNESS, I/P WRG	95	Y (LT1, ML9, C68, T72, T84, T85, T90) (EXC T61) (EXPORT)	1	12163704
	8-N5	2.480	HARNESS, I/P WRG	96	Y (M30, C68, T72, T84, T85, T90) (EXC T61) (EXPORT)	1	12130475
	8-N5	2.480	HARNESS, I/P WRG	96	Y (LT4, ML9, C68, T72, T84, T85, T90) (EXC T61) (EXPORT)	1	12163715
	8-N5	2.480	HARNESS, I/P WRG (TAGGED 0328)	94	Y (M30, C68, T72, T84, T85, T90) (1ST DES) (EXPORT)	1	12141791
16.		8.921	NUT, U-TYPE, 4.2X1.41, DIM A-15, DIM B-14 DIM C-8.65, 1050, PZOR	93-96	.....	AR	12338121
17.	8-D17	9.655	BRACKET, RDO RR SPKR GRL (GRL MTG) (FOR Y67 USAGE, SEE "AUDIO SYSTEMS REAR" ILLUSTRATION IN GROUP 9.000 FOR DETAILED ILLUSTRATED VIEW.)	93-96	Y07	2	10082810
18.		8.977	SCREW, OV TR (35) HD C/R TAP (AB) SC&WA 4.2X1.41X25 PC ...	93-96	.....	AR	11500673

© 2000 GENERAL MOTORS SERVICE PARTS OPERATIONS-CHEVROLET-14Y

							1Y09-043
19.	8-D22	9.665	**SPEAKER**, RDO RR (POS #2) (FOR Y67 USAGE, SEE "AUDIO SYSTEMS REAR" ILLUSTRATION IN GROUP 9.000 FOR DETAILED ILLUSTRATED VIEW.) (INCLUDES AMPLIFIER) (AC-DELCO #16174481)	93-96	Y07 (UX0)	RH	16174481
	8-D22	9.665	**SPEAKER**, RDO RR (POS #2) (FOR Y67 USAGE, SEE "AUDIO SYSTEMS REAR" ILLUSTRATION IN GROUP 9.000 FOR DETAILED ILLUSTRATED VIEW.) (INCLUDES AMPLIFIER) (AC-DELCO #16174501)	93-96	Y07 (UX0)	LH	16174501
20.		8.929	**WASHER**, FL 7/32X1/2X5/8 1050 CAD HARD	93-96	.....	AR	2077521
21.		8.977	**SCREW**, HWH TAP 4.2 X 1.41 X 25 (10.783)	93-96	.....	AR	1640810
22.		DISCON	**GRILLE**, RDO RR SPKR (FOR Y67 USAGE, SEE "AUDIO SYSTEMS REAR" ILLUSTRATION IN GROUP 9.000 FOR DETAILED ILLUSTRATED VIEW.) (BLACK) ...	93	Y07 (10I, 19I)	LH	10219851
		DISCON	**GRILLE**, RDO RR SPKR (FOR Y67 USAGE, SEE "AUDIO SYSTEMS REAR" ILLUSTRATION IN GROUP 9.000 FOR DETAILED ILLUSTRATED VIEW.) (BLACK) ...	93	Y07 (10I, 19I)	RH	10219852
	8-D22	9.665	**GRILLE**, RDO RR SPKR (FOR Y67 USAGE, SEE "AUDIO SYSTEMS REAR" ILLUSTRATION IN GROUP 9.000 FOR DETAILED ILLUSTRATED VIEW.) (BEIGE) ...	93	Y07 (64I)	LH	10219853
	8-D22	9.665	**GRILLE**, RDO RR SPKR (FOR Y67 USAGE, SEE "AUDIO SYSTEMS REAR" ILLUSTRATION IN GROUP 9.000 FOR DETAILED ILLUSTRATED VIEW.) (BEIGE) ...	93	Y07 (64I)	RH	10219854
	8-D22	9.665	**GRILLE**, RDO RR SPKR (FOR Y67 USAGE, SEE "AUDIO SYSTEMS REAR" ILLUSTRATION IN GROUP 9.000 FOR DETAILED ILLUSTRATED VIEW.) (GRAY)	93	Y07 (14I)	LH	10219855
	8-D22	9.665	**GRILLE**, RDO RR SPKR (FOR Y67 USAGE, SEE "AUDIO SYSTEMS REAR" ILLUSTRATION IN GROUP 9.000 FOR DETAILED ILLUSTRATED VIEW.) (GRAY)	93	Y07 (14I)	RH	10219856
	8-D22	9.665	**GRILLE**, RDO RR SPKR (FOR Y67 USAGE, SEE "AUDIO SYSTEMS REAR" ILLUSTRATION IN GROUP 9.000 FOR DETAILED ILLUSTRATED VIEW.) (RED)	93	Y07 (79I)	LH	10219859
	8-D22	9.665	**GRILLE**, RDO RR SPKR (FOR Y67 USAGE, SEE "AUDIO SYSTEMS REAR" ILLUSTRATION IN GROUP 9.000 FOR DETAILED ILLUSTRATED VIEW.) (RED)	93	Y07 (79I)	RH	10219860

						1Y09-043
	DISCON	GRILLE, RDO RR SPKR (FOR Y67 USAGE, SEE "AUDIO SYSTEMS REAR" ILLUSTRATION IN GROUP 9.000 FOR DETAILED ILLUSTRATED VIEW.) (RED)	93	Y07 (70I)	LH	10219861
8-D22	9.665	GRILLE, RDO RR SPKR (FOR Y67 USAGE, SEE "AUDIO SYSTEMS REAR" ILLUSTRATION IN GROUP 9.000 FOR DETAILED ILLUSTRATED VIEW.) (RED)	93	Y07 (70I)	RH	10219862
8-D22	9.665	GRILLE, RDO RR SPKR (FOR Y67 USAGE, SEE "AUDIO SYSTEMS REAR" ILLUSTRATION IN GROUP 9.000 FOR DETAILED ILLUSTRATED VIEW.) (BLACK) ...	94-96	Y07 (19I)	LH	10238611
8-D22	9.665	GRILLE, RDO RR SPKR (FOR Y67 USAGE, SEE "AUDIO SYSTEMS REAR" ILLUSTRATION IN GROUP 9.000 FOR DETAILED ILLUSTRATED VIEW.) (BLACK) ...	94-96	Y07 (19I)	RH	10238612
8-D22	9.665	GRILLE, RDO RR SPKR (FOR Y67 USAGE, SEE "AUDIO SYSTEMS REAR" ILLUSTRATION IN GROUP 9.000 FOR DETAILED ILLUSTRATED VIEW.) (BEIGE) ...	94-96	Y07 (64I)	LH	10238613
8-D22	9.665	GRILLE, RDO RR SPKR (FOR Y67 USAGE, SEE "AUDIO SYSTEMS REAR" ILLUSTRATION IN GROUP 9.000 FOR DETAILED ILLUSTRATED VIEW.) (BEIGE) ...	94-96	Y07 (64I)	RH	10238614
8-D22	9.665	GRILLE, RDO RR SPKR (FOR Y67 USAGE, SEE "AUDIO SYSTEMS REAR" ILLUSTRATION IN GROUP 9.000 FOR DETAILED ILLUSTRATED VIEW.) (GRAY)	94-96	Y07 (14I)	LH	10238615
8-D22	9.665	GRILLE, RDO RR SPKR (FOR Y67 USAGE, SEE "AUDIO SYSTEMS REAR" ILLUSTRATION IN GROUP 9.000 FOR DETAILED ILLUSTRATED VIEW.) (GRAY)	94-96	Y07 (14I)	RH	10238616
8-D22	9.665	GRILLE, RDO RR SPKR (FOR Y67 USAGE, SEE "AUDIO SYSTEMS REAR" ILLUSTRATION IN GROUP 9.000 FOR DETAILED ILLUSTRATED VIEW.) (RED)	94-95	Y07 (70I)	LH	10238617
8-D22	9.665	GRILLE, RDO RR SPKR (FOR Y67 USAGE, SEE "AUDIO SYSTEMS REAR" ILLUSTRATION IN GROUP 9.000 FOR DETAILED ILLUSTRATED VIEW.) (RED)	94-95	Y07 (70I)	RH	10238618
8-D22	9.665	GRILLE, RDO RR SPKR (FOR Y67 USAGE, SEE "AUDIO SYSTEMS REAR" ILLUSTRATION IN GROUP 9.000 FOR DETAILED ILLUSTRATED VIEW.) (BLACK) ...	96	Y07 (Z16, 70I)	LH	10238611

							1Y09-043
8-D22	9.665	GRILLE, RDO RR SPKR (FOR Y67 USAGE, SEE "AUDIO SYSTEMS REAR" ILLUSTRATION IN GROUP 9.000 FOR DETAILED ILLUSTRATED VIEW.) (BLACK) . . .	96	Y07 (Z16, 70I)	RH	10238612
8-D22	9.665	GRILLE, RDO RR SPKR (FOR Y67 USAGE, SEE "AUDIO SYSTEMS REAR" ILLUSTRATION IN GROUP 9.000 FOR DETAILED ILLUSTRATED VIEW.) (RED)	96	Y07 (70I) (EXC Z16) ...	LH	10238617
8-D22	9.665	GRILLE, RDO RR SPKR (FOR Y67 USAGE, SEE "AUDIO SYSTEMS REAR" ILLUSTRATION IN GROUP 9.000 FOR DETAILED ILLUSTRATED VIEW.) (RED)	96	Y07 (70I) (EXC Z16) ...	RH	10238618

RPO DEFINITIONS

C60 – AIR CONDITIONER,FRONT,MANUAL CONTROLS
C68 – AIR CONDITIONER,FRONT,AUTOMATIC,ELECTRONIC CONTROLS
LT1 – ENGINE–GAS, 8 CYL, 5.7L(5.7P),MFI,HO
LT4 – ENGINE GAS, 8 CYL, 5.7L, MFI, HIGH OUTPUT
LT5 – ENGINE,5.7L(5.7J),TPI
MD8 – TRANSMISSION,AUTOMATIC 4–SPEED(THM700R4/4L60)
ML9 – TRANSMISSION,MANUAL 6–SPEED
M30 – TRANSMISSION,AUTOMATIC 4 SPEED,4L60E,ELECTRONIC
T61 – LIGHTING,DAYTIME RUNNING
T72 – HEADLAMPS,LH RULE OF THE ROAD(EXPORT)
T84 – HEADLAMPS,RH RULE OF THE ROAD,RECTANGULAR(MARKED E)(EXPORT)
T85 – HEADLAMPS,LH RULE OF THE ROAD,RECTANGULAR(MARKED E)(EXPORT)
T90 – LAMP,SIGNALING AND MARKER(EXPORT)
UK1 – RADIO FREQUENCY(JAPANESE)
UL2 – RADIO FREQUENCY(EUROPEAN)
UM6 – RADIO,AM/FM STEREO,CASSETTE,ETR,INCLUDES CLOCK
UU8 – RADIO,AM/FM STEREO,CASSETTE,ETR,DELCO/BOSE,DOLBY,INCLUDES CLOCK
UX0 – SPEAKER SYSTEM,SIX,DUAL FLOOR SILL,DUAL EXTENDED RANGE SAIL PANEL
U1F – RADIO,AM/FM STEREO,CASSETTE,C.D. PLAYER,ETR,BOSE,INCLUDES CLOCK
Z16 – APPEARANCE PACKAGE,GRAND SPORT EDITION
10I – INTERIOR TRIM– ARCTIC WHITE
14I – INTERIOR TRIM LT GRAY
19I – INTERIOR TRIM,BLACK
64I – INTERIOR TRIM,LIGHT BEIGE
70I – INTERIOR TRIM,TORCH RED
79I – INTERIOR TRIM,RUBY RED

© 2000 GENERAL MOTORS SERVICE PARTS OPERATIONS–CHEVROLET–14Y

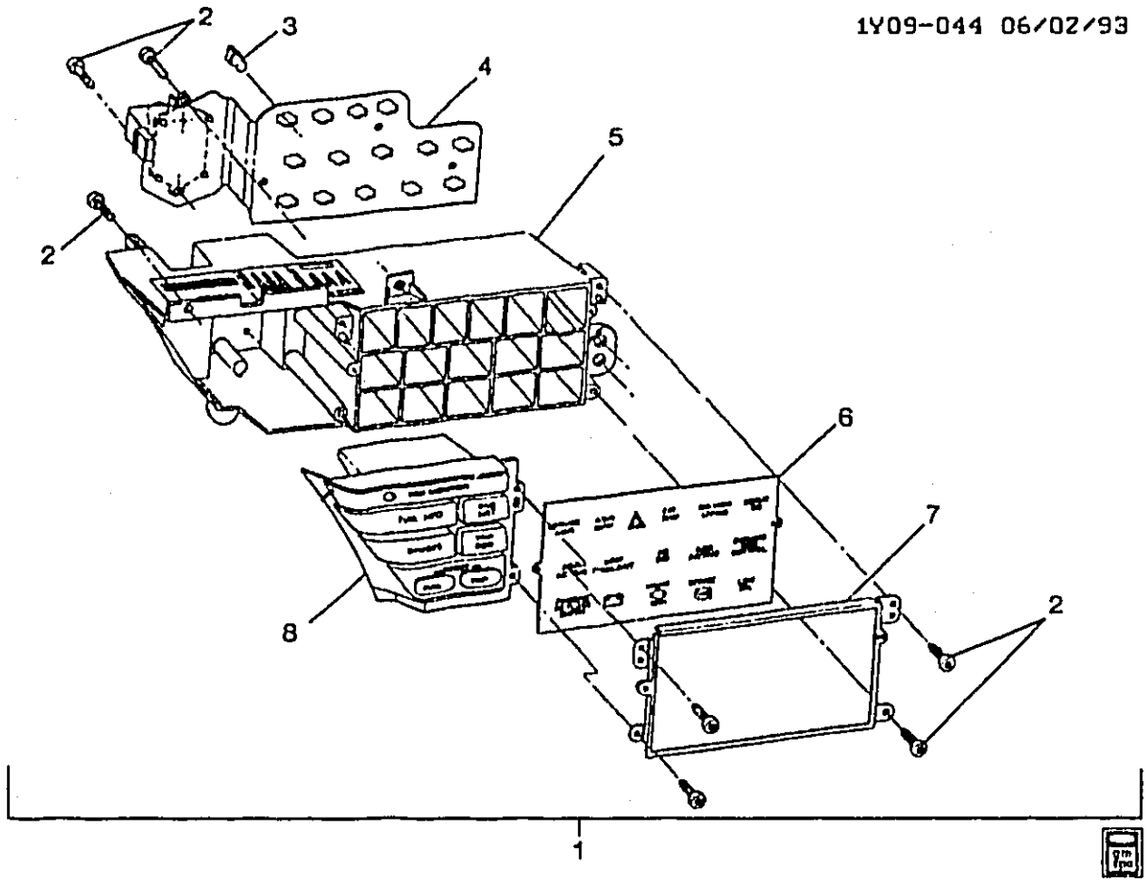

1994-1996 Y ELECTRICAL CONTROLS/INSTRUMENT PANEL-INFORMATION CENTER

1.		N.S.	**DISPLAY**, DRVR INFO (CPS)		.....		
2.	8-E9	9.765	**BOLT**, INFO CTR TELLTALE (M3.5) (9.735) (AC-DELCO #25112341)	94-96	Y	7	25112341
3.		8.991	**BULB**, SPD IND LP W/SOCKET TRADE #PC74 (.7 CP) (INFO CTR TELLTALE IND) (AC-DELCO #25086809)	94-96	.....	13	25086809
4.	8-E9	9.765	**BOARD**, TELLTALE CIRC (AC-DELCO #16175457)	94-96	Y	1	16175457
5.	8-E9	9.765	**HOUSING**, TELLTALE (9.743) (AC-DELCO #25088424)	94-96	Y	1	25088424
6.	8-E10	9.768	**APPLIQUE**, DRVR INFO DISPLAY (9.743) (AC-DELCO #16175454)	94-96	Y	1	16175454
7.	8-E10	9.768	**RETAINER**, DRVR INFO DISPLAY (9.748) (AC-DELCO #25088429)	94-96	Y	1	25088429
8.	8-E10	9.768	**SWITCH**, DRVR INFO DISPLAY (AC-DELCO #16175456)	94-96	Y	1	16175456

© 2000 GENERAL MOTORS SERVICE PARTS OPERATIONS-CHEVROLET-14Y

1Y09-012
071489

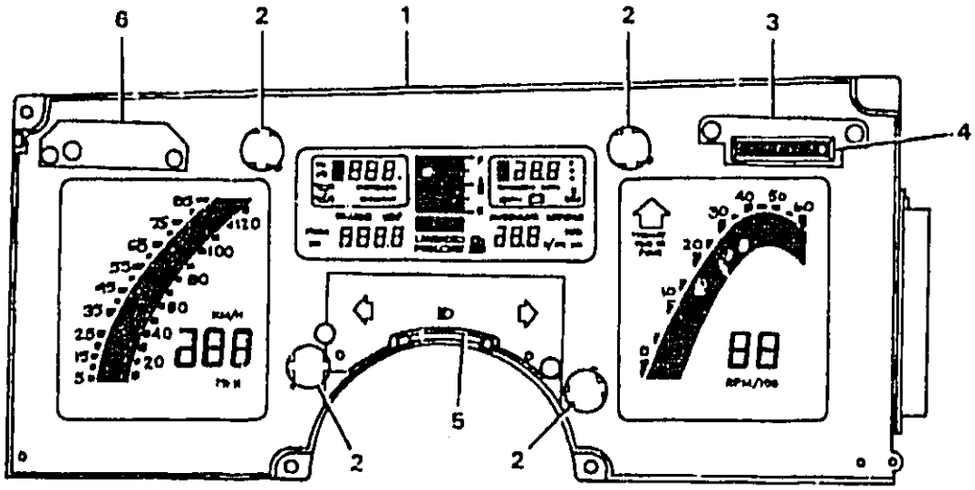

1Y09-012

1984–1989 Y CLUSTER ASM/INSTRUMENT PANEL

NOTE: SERVICED THROUGH AC DELCO REPAIR CENTERS ONLY

1.		DISCON	CLUSTER (1984) (INCL 2–6) (COMPONENT PARTS SERVICED)	25076600
		N.S.	CLUSTER (1985) (COMPONENT PARTS SERVICED)	
		DISCON	CLUSTER (1986) (INCL 2–5) (COMPONENT PARTS SERVICED)	25080224
		DISCON	CLUSTER (1987–88) (INCL 2–5) (COMPONENT PARTS SERVICED)	25083577
		N.S.	CLUSTER (1989) (INCL 2–6) (COMPONENT PARTS SERVICED)	
		DISCON	SPACER, SPEEDO MT (1985–89)	25017001
		8.991	LAMP, W/SOC (HALOGEN #882) (AC–DELCO #L882)	11508221
	8–E6	9.744	SOCKET, LP (3/8 DIAM) (1989) (AC–DELCO #25078397)	25078397
	8–E6	9.743	SCREW (M3.5X1.34X12.70) (1989) (AC–DELCO #25044356)	25044356
		8.991	LAMP, FUEL ECON GA (1989) (AC–DELCO #L74)	9433184
2.	8–E9	9.765	PLUG, HEAT SINK (PART OF 1) (AC–DELCO #25083144)	25083144
3.		DISCON	FILTER, ODOM (1984–85) (PART OF 1)	25049508
	8–E8	9.761	FILTER, ODOM (1986–89) (PART OF 1) (AC–DELCO #25083048) ..	25083048
	8–E7	9.748	RETAINER, FLTR (PART OF 1) (AC–DELCO #25052493)	25052493
4.	8–E8	9.761	ODOMETER, (PART OF 1) (AC–DELCO #25058127)	25058127
	8–E8	9.761	MOTOR, ODOM (1984) (PART OF 1) (AC–DELCO #25058048)	25058048
		DISCON	MOTOR, ODOM (1985–88) (PART OF 1)	25058583
		DISCON	CABLE, ODOM (1989) (PART OF 1)	16128542
5.		DISCON	FILTER, HIGH BEAM & T/SIG (PART OF 1)	25083049
6.	8–E7	9.748	FILTER, PHOTO CELL SEN (1984–86, 1989) (PART OF 1) (AC–DELCO #25051131)	25051131

© 2000 GENERAL MOTORS SERVICE PARTS OPERATIONS–CHEVROLET–14Y

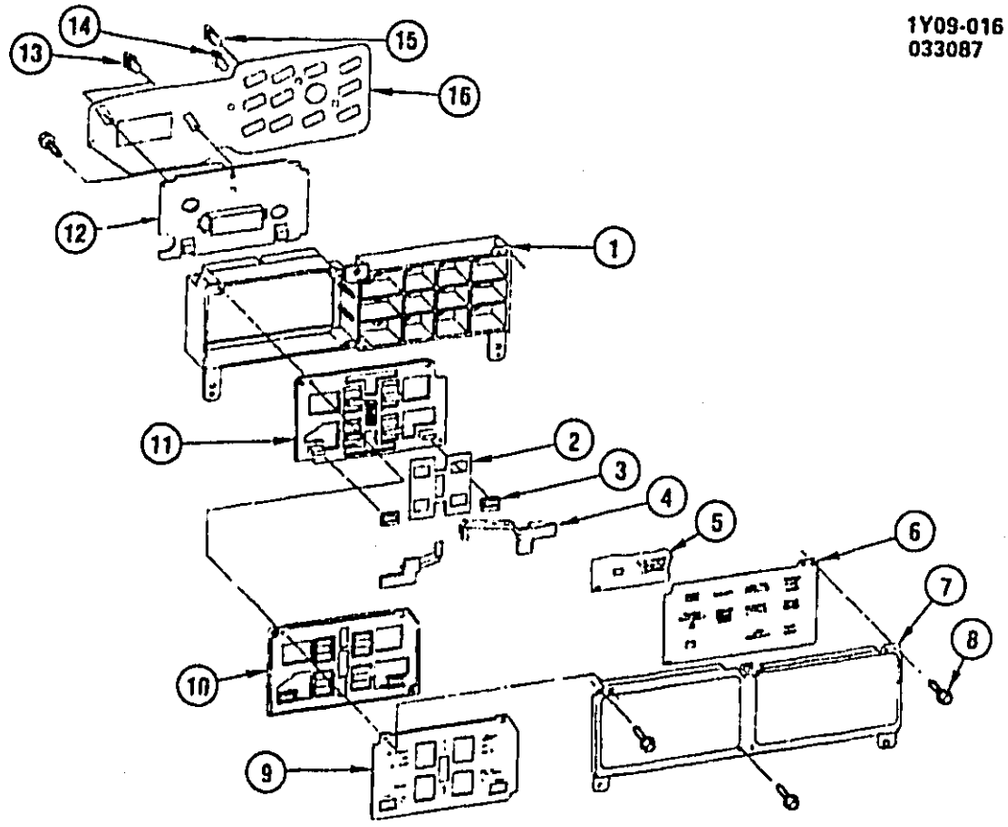

1Y09–016

1984–1989 Y CLUSTER ASM/INSTRUMENT PANEL/INFORMATION CENTER

NOTE: SERVICED THROUGH AC DELCO REPAIR CENTERS ONLY

1.	DISCON	CASE, CSTR	25083758
2.	DISCON	GASKET, SW PLT	25076945
3.	DISCON	GASKET, RESET KNOB	25053247
4.	DISCON	PIPE, TELLTALE LGT	25076505
5.	DISCON	FILTER, TELLTALE (1984–85)	25078813
	DISCON	FILTER, TELLTALE LGT (1986)	25080195
6.	DISCON	FILTER, TELLTALE LGT (1987–88 W/A.T.)	25087391
	N.S.	FILTER, TELLTALE LGT (1987–88 W/M.T.)	
	DISCON	FILTER, INFO CTR LGT (1989)	25089615
7.	DISCON	RETAINER, MET	25049481
8.	DISCON	BOLT, TELLTALE (1989)	25023919
9.	DISCON	APPLIQUE, SW PLT	25051610
10.	DISCON	RETAINER, PLSTC	25051613
11.	DISCON	SWITCH PLATE, W/HARN (1984–85)	25049485
	DISCON	SWITCH, W/HARN (1986–89)	25080197
12.	DISCON	BACKPLATE, TELLTALE	25050492
13.	8.965	SOCKET, WGE BASE INTR LP (.50X.63X.25) (AC–DELCO #25085970)	25085970
14.	8.991	BULB, .08 AMPS, 19/32 LONG, .3 CP (AC–DELCO #9436790)	9436790
15.	8.991	BULB, 194 (AC–DELCO #L194)	9421330
16.	DISCON	CIRCUIT, PRINTED CNSL INFO CTR (1984–85)	25076711
	DISCON	CIRCUIT, PRINTED INST CSTR (1986–89)	25083760

© 2000 GENERAL MOTORS SERVICE PARTS OPERATIONS–CHEVROLET–14Y

1Y09-300
072189

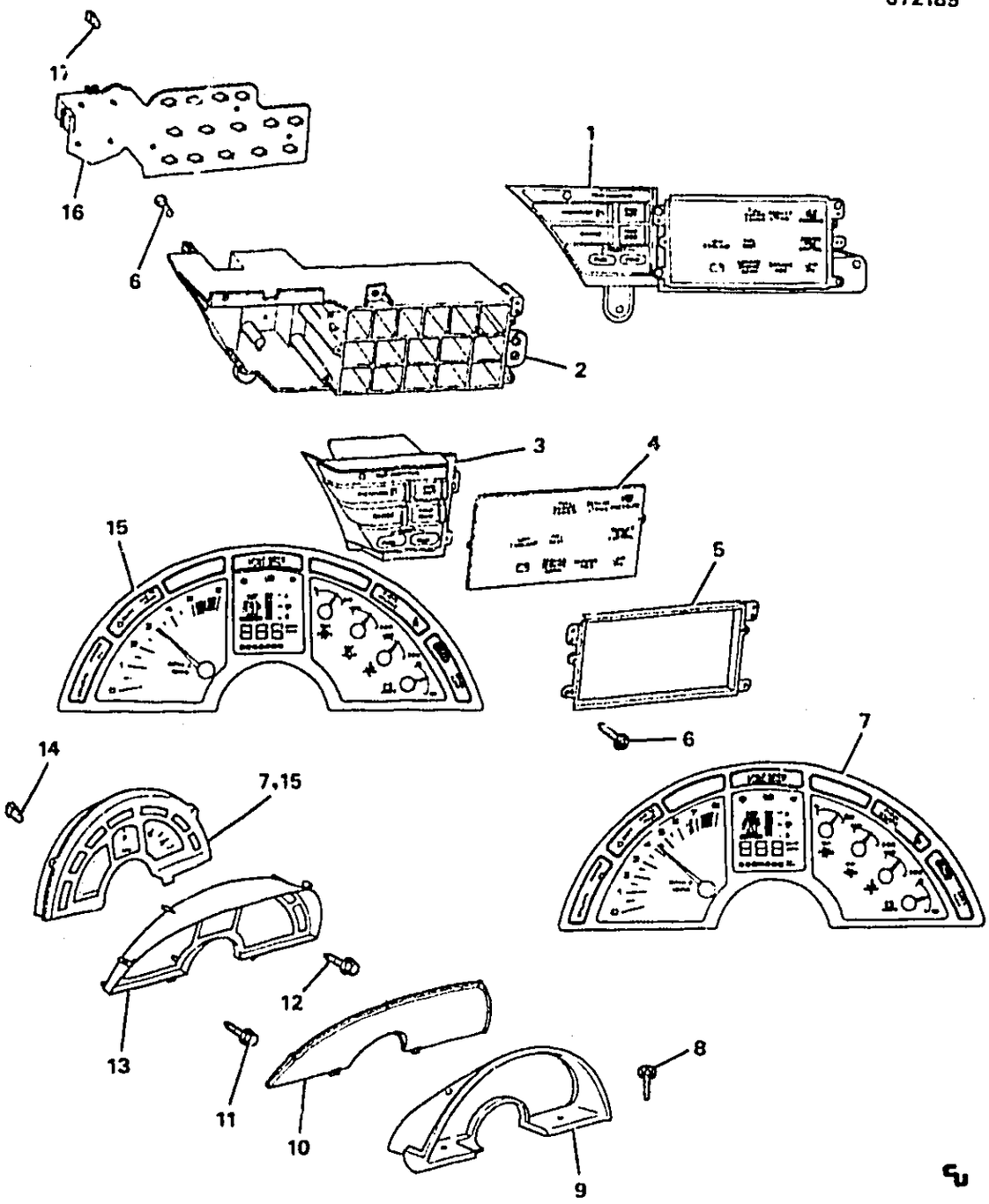

1Y09-300

1990-1991 Y CLUSTER ASM/INSTRUMENT PANEL/INFORMATION CENTER

NOTE: SERVICED THROUGH AC DELCO REPAIR CENTERS ONLY.

1.		N.S.	DISPLAY (1990) (INCL 2-5, 16, 17) (CPS)	
		DISCON	DISPLAY (1991) (INCL 2, 3, 5, 16, 17) (CPS)	16142541
	8-E6	9.744	BULB, W/SOC DISPLAY SW (1990) (AC-DELCO #10159597)	10159597
	8-D25	9.735	SCREW (1991) (AC-DELCO #25112341)	25112341
2.	8-E6	9.743	CASE, DISPLAY (PART OF 1) (AC-DELCO #25088424)	25088424
3.	8-E10	9.768	SWITCH, DISPLAY (PART OF 1) (AC-DELCO #25088425)	25088425

© 2000 GENERAL MOTORS SERVICE PARTS OPERATIONS-CHEVROLET-14Y

				1Y09-300
4.		DISCON	FILTER, TELLTALE (1990) (PART OF 1)	25088427
5.	8-E7	9.748	RETAINER, DISPLAY (PART OF 1) (AC-DELCO #25088429)	25088429
6.		8.977	SCREW, PAN HD W/FLAT WA (M4.2X1.41X20)	11515324
7.		DISCON	CLUSTER (LT5/5.7J) (INCL 10-14)	16142481
8.		8.977	SCREW, PAN HD TORX W/WA (M4.2X1.41X20)	11513849
9.	8-E6	9.743	PLATE, TR	10172301
10.	8-E7	9.748	LENS (PART OF 7, 15) (AC-DELCO #25084951)	25084951
11.	8-E6	9.743	SCREW (3.5X1.34X12.70) (1990) (PART OF 7, 15) (AC-DELCO #25044356)	25044356
12.		8.977	SCREW, HEX WA HD (M3.5X1.34X19) (1990) (PART OF 7, 15) (AC-DELCO #25023918)	25023918
13.	8-E7	9.748	LENS, INST CSTR (PART OF 7, 15) (AC-DELCO #25084950)	25084950
14.		9.991	BULB, W/SOCKET .9 CANDLE ((INST CSTR BULB) (PART OF 7, 15)) (AR) (AC-DELCO #25089349)	25089349
15.		DISCON	CLUSTER (1990 L98/5.7-8) (INCL 10-14)	16133431
		DISCON	CLUSTER (1991 L98/5.7-8) (INCL 10, 13, 14)	16142451
16.	8-E6	9.744	PRINTED CIRCUIT (PART OF 1) (AC-DELCO #25088430)	25088430
17.		8.991	BULB, SPD IND LP W/SOCKET TRADE #PC74 (.7 CP) (DRVR INFO CTR (PART OF 1)) (AR) (AC-DELCO #25086809)	25086809

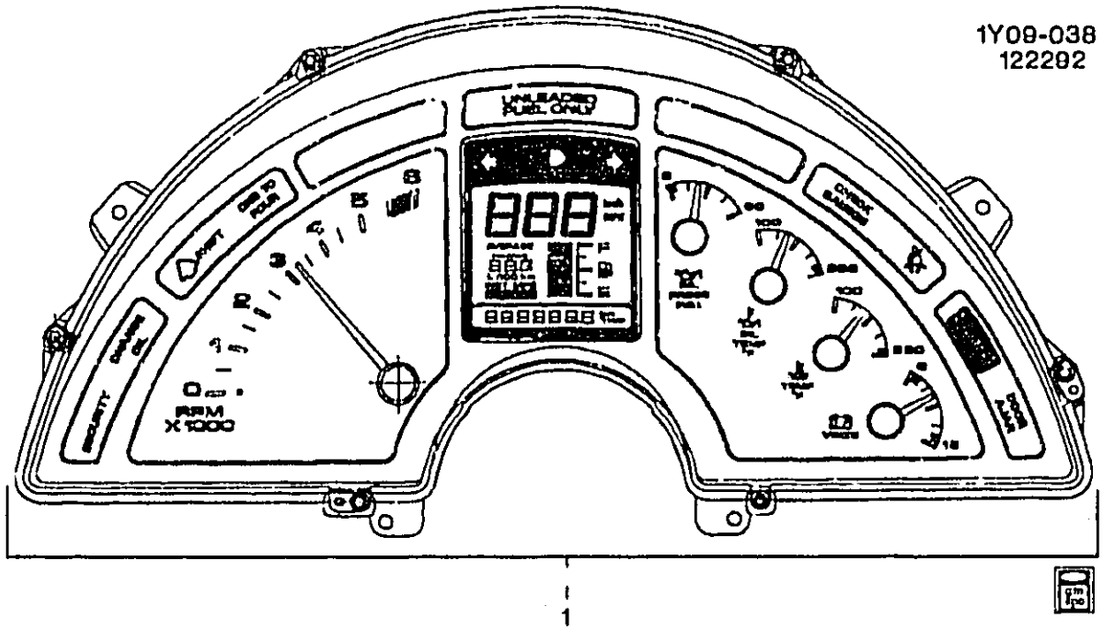

1Y09–038

1992–1993 Y CLUSTER ASM/INSTRUMENT PANEL (LIQ CRYSTAL DISPLAY, ELECTRONIC)(U52)

NOTE: SERVICED THROUGH AC DELCO REPAIR CENTERS ONLY

1.		DISCON	**CLUSTER**, INST (LIQ CRYSTAL DISPLAY)	92–93	Y (LT1, U52) (EXC U19)	1	16158831
	8–E7	6.748	**LENS**, INST CSTR (AC–DELCO #25084951)	92–93	Y (LT1, LT5, U52)	1	25084951
		8.991	**LAMP**, W/SOCKET (TRADE #PC195 (INST CSTR BULB) (AC–DELCO #25089350)	92–93	.....	1	25089350
		8.991	**BULB**, W/SOCKET .9 CANDLE (INST CSTR BULB) (AC–DELCO #25089349)	92–93	.....	1	25089349
		DISCON	**CLUSTER**, INST (LIQ CRYSTAL DISPLAY)	92–93	Y (LT1, U19, U52) (EXPORT)	1	16158851
		DISCON	**CLUSTER**, INST (LIQ CRYSTAL DISPLAY)	92	Y (LT5, U19, U52) (EXC B4H) (EXPORT)	1	16158861
		DISCON	**CLUSTER**, INST (LIQ CRYSTAL DISPLAY)	92	Y (LT5, B4H, U19, U52) (EXPORT)	1	16172481
		DISCON	**CLUSTER**, INST (LIQ CRYSTAL DISPLAY)	93	Y (LT5, U19, U52) (EXPORT)	1	16158861

RPO DEFINITIONS

B4H – MODIFICATION–NOISE CONTROL, EXPORT
LT1 – ENGINE–GAS, 8 CYL, 5.7L(5.7P),MFI,HO
LT5 – ENGINE,5.7L(5.7J),TPI
U19 – SPEEDOMETER,INSTRUMENT(EXPORT)
U52 – CLUSTER,INSTRUMENT(ELECTRONIC)

© 2000 GENERAL MOTORS SERVICE PARTS OPERATIONS–CHEVROLET–14Y

0.829 BOLT – BRACKET – SHIM – SPACER, Engine Clutch Pedal [8–CYLINDER]

90–93	Y 4–SPD A/TRANS (MD8)	10126405	1	2.05	SPACER, HOOD PRIM LAT REL CBL BRKT
94–96	Y 4–SPD A/TRANS (M30)	10126405	1	2.05	SPACER, HOOD PRIM LAT REL CBL BRKT

1.055 BOLT – BOLT KIT – BRACKET – BRACKET KIT – CONNECTOR – FAN – FAN KIT – MOTOR KIT – NUT – RELAY – RETAINER – SWITCH, Engine Air Cooling (Electrical)

Note: FOR ADDITIONAL INFORMATION, SEE ELECTRIC COOLING MOTOR AND FAN APPLICATION CHARTS IN THE REFERENCE CATALOG (CODE 88R).

88–89	Y 5.7–8) M/TRNS	14104140	1	1.88	BRACKET, FAN CONT RLY (M.T. O/D SW RELAY)
90–94	Y	14104140	1	1.88	BRACKET, FAN CONT RLY (STEEL) (3.0"X2.0") (76.7MMX51.0MM))
84	Y	14078902	1	16.26	RELAY, FAN CONT (AC–DELCO #15–8218)
85–87	Y	10038311	1	16.26	RELAY, FAN CONT (AC–DELCO #15–8333)
88–94	Y	14089936	2	16.26	RELAY, FAN CONT (5–PIN OVAL SHAPE) (USE W/CONN 15306002) (AC–DELCO #15–8240)
95–96	Y	12193601	1	23.44	RELAY, FAN CONT (BLACK) (5–WAY M) (USED W/CONNECTOR 15306045) (09.277) (AC–DELCO #15–8719)
95–96	Y	12193603	2	20.30	RELAY, FAN CONT (GRAY) (SPST 280 MINI) (4–WAY) (02.100) (AC–DELCO #12193603)
86	Y B4P (2ND DES)	10074160	1	DISCON	RETAINER, ELEC CLG FAN (SPR CLIP RETAINING FAN BLADE) (NO COMPARABLE 1ST DES)
85	Y HVY DUTY CLG (V08)	10074160	1	DISCON	RETAINER, ENG COOL FAN MOT LEAD
87–89	Y B4P	10074160	1	DISCON	RETAINER, ENG COOL FAN MOT LEAD
84–88	Y	20664092	AR	*.40	RETAINER, ENG COOL FAN RLY (PUSH–IN) (01.276)
95–96	Y	12129271	3	.73	RETAINER, FAN CONT RLY (ATCHS TO RELAY CONN)
84	Y	03040674	1	22.44	SWITCH, FAN CONT (1 BUTTON TERM, 3/8–18 THD) (TEMP STMP 108C) (AC–DELCO #15–5403)
85	Y	14043276	1	10.51	SWITCH, FAN CONT (1 BUTTON TERM, 3/8–18 THD) (USED ON VEHS W/TWO SPD CLG FAN) (AC–DELCO #D1852B)
86–89	Y 5.7–8 (L98), FAN (B4P)	14043276	1	10.51	SWITCH, FAN CONT (1 BUTTON TERM, 3/8–18 THD) (USE ON VEHS W/2 SPD CLG FAN) (AC–DELCO #D1852B)

1.060 BOLT – SHIELD – TENSIONER – WASHER, Engine Fan Coolant

84	Y	14055164	1	102.10	TENSIONER, DR BELT
85–87	Y	14084312	1	82.10	TENSIONER, DR BELT
88–91	Y 5.7–8 (L98)	10055897	1	82.10	TENSIONER, DRV BELT
90–95	Y 5.7J (LT5)	10067479	1	60.60	TENSIONER, DRV BELT
92	Y 5.7P (LT1)	10186197	1	54.10	TENSIONER, DRV BELT
93	Y 5.7P (LT1), (1ST DES)	10186197	1	54.10	TENSIONER, DRV BELT (HAS GROOVED PUL)

© 2000 GENERAL MOTORS SERVICE PARTS OPERATIONS

MICROFICHE INDEX

GROUPS 8.000 THRU 9.000

FICHE 8 OF 11

GROUP	DESCRIPTION	STARTING GRID LOCATION PARTS	ILLUSTRATIONS
–	GENERAL INFORMATION	1–A2	1–G2
–	ALPHABETICAL INDEX	1–B13	N.A.
8.000	FRONT END SHEET METAL – HEATER	8–A2	8–F2
9.000	BODY MOUNTING – AIR CONDITIONING – INSTRUMENT CLUSTER	8–C2	8–I2
–	OUT OF FICHE CALLS	N.A.	8–M27

8–N1

1.060 BOLT – SHIELD – TENSIONER – WASHER, Engine Fan Coolant(Con't)

93	Y 5.7P (LT1), (2ND DES)	10227507	1	41.15	TENSIONER, DRV BELT (HAS FLAT PUL)
94–96	Y 5.7P (LT1)	10227507	1	41.15	TENSIONER, DRV BELT
96	Y 5.7–5 (LT4)	10227507	1	41.15	TENSIONER, DRV BELT
90–95	Y 5.7J (LT5)	10067747	1	2.30	WASHER, DRV BELT TENSR (FLAT)

1.073 BOLT – INLET – STUD, Engine Coolant Pump

92–96	Y 5.7P (LT1)	10108667	1	12.75	INLET, W/PMP (W/THERM HSG & BLEDR SCREW)
96	Y 5.7–5 (LT4)	10108667	1	12.75	INLET, W/PMP (W/THERM HSG & BLEDR SCREW)
84–88	Y	14055139	AR	17.80	STUD (3/8–16X2.73/3/8–16X1.32)
84–88	Y	10046099	AR	6.15	STUD, CLNT PUMP (3/8 16X2.19, 3/8 16X1.85)
84	Y	14085701	1	23.25	STUD, CLNT PUMP (3/8–16X1.85/3/8–16X.96) (03.655)

1.097 BOLT – BRACKET – HOSE – NUT – PIPE – SEAL, Engine Coolant By–Pass

92–94	Y 5.7P (LT1)	12552974	1	3.95	BOLT, ENG COOL AIR BL PIPE
95–96	Y 5.7P (LT1)	12552974	2	3.95	BOLT, ENG COOL AIR BL PIPE
96	Y 5.7–5 (LT4)	12552974	2	3.95	BOLT, ENG COOL AIR BL PIPE
96	Y 5.7P (LT1)	09442958	3	*1.00	NUT, ENG COOL AIR BL PIPE (3/8–16 PC, 286M) (HEX, FLANGE) (08.917)
96	Y 5.7–5 (LT4)	09442958	3	*1.00	NUT, ENG COOL AIR BL PIPE (3/8–16 PC, 286M) (HEX, FLANGE) (08.917)
90	Y 5.7J (LT5)	10146245	LH	9.35	PIPE, COOLANT AIR BLEED
86–89	Y 5.7–8 (L98)	14087587	1	8.25	PIPE, ENG COOL (INT MANIF VPR PIPE TO HTR OTLT PIPE)
92–94	Y 5.7P (LT1)	10108636	1	39.50	PIPE, ENG COOL AIR BL
95–96	Y 5.7P (LT1)	12556260	1	39.50	PIPE, ENG COOL AIR BL (INCLUDES BOLTS & SEALS)
96	Y 5.7–5 (LT4), 6–SPD M/TRANS (ML3)	12556260	1	39.50	PIPE, ENG COOL AIR BL (INCLUDES BOLTS & SEALS)
92–94	Y 5.7P (LT1)	10108689	2	5.78	SEAL, ENG COOL AIR BL PIPE (O RING)
95–96	Y 5.7P (LT1)	10108689	4	5.78	SEAL, ENG COOL AIR BL PIPE (O RING)
96	Y 5.7–5 (LT4)	10108689	4	5.78	SEAL, ENG COOL AIR BL PIPE (O RING)

1.166 CLAMP – GUARD – SUPPORT, Hose (Radiator, Heater, A/C)

84–87	Y	02012781	1	3.70	CLAMP, A/C CMPR & CNDSR HOSE
90–95	Y 5.7J (LT5)	10157995	2	2.00	CLAMP, RAD BYPASS HOSE (08.948)
91	Y 5.7–8 (L98)	21030917	1	4.35	CLAMP, RAD INL HOSE ((37.5MM TO 44.5MM) NOMINAL SIZE 42MM, STAMPED "P") (08.948)
90–94	Y 5.7J (LT5)	10108248	5	1.85	CLAMP, RAD INL HOSE ENG (44MM) (08.948)
92–94	Y 5.7P (LT1)	21030917	1	4.35	CLAMP, RAD INL HOSE ENG ((37.5MM TO 44.5MM) NOMINAL SIZE 42MM, STAMPED "P") (08.948)
90–94	Y	21030894	1	3.05	CLAMP, RAD INL HOSE RAD (47MM)
95	Y 5.7P (LT1)	21030894	1	3.05	CLAMP, RAD INL HOSE RAD (47MM)
96	Y	21030894	1	3.05	CLAMP, RAD INL HOSE RAD (47MM)
90–91	Y 5.7–8 (L98)	21030894	1	3.05	CLAMP, RAD OTLT HOSE ENG (47MM)
91	Y	11516239	1	6.90	CLAMP, RAD OTLT HOSE ENG (LT BROWN) (08.948)

© 2000 GENERAL MOTORS SERVICE PARTS OPERATIONS

1.166 CLAMP – GUARD – SUPPORT, Hose (Radiator, Heater, A/C)(Con'd)

92–94	Y 5.7P (LT1)	21030917	1	4.35	CLAMP, RAD OTLT HOSE ENG ((37.5MM TO 44.5MM) NOMINAL SIZE 42MM, STAMPED "P") (08.948)
90–91	Y 5.7–8 (L98)	10158012	AR	3.05	CLAMP, RAD OTLT HOSE RAD (53MM) (08.948)
90–95	Y 5.7J (LT5)	10158012	AR	3.05	CLAMP, RAD OTLT HOSE RAD (53MM) (08.948)
92–96	Y 5.7P (LT1)	10158012	AR	3.05	CLAMP, RAD OTLT HOSE RAD (53MM) (08.948)
90–94	Y 5.7J (LT5)	11516239	2	6.90	CLAMP, RAD OTLT RR HOSE ENG (51MM) (LT BROWN) (08.948)
90–95	Y 5.7J (LT5)	10019739	1	1.10	CLAMP, SECD AIR INJN CHK VLV HOSE (31.5 TO 36MM) (01.762)
92–93	Y 5.7P (LT1)	22518665	AR	*.93	CLAMP, SECD AIR INJN CHK VLV HOSE (9/16 TO 1 1/16 DIA) (08.948)
84–91	Y	22513665	AR	*.93	CLAMP, WORM TYPE (9/16 TO 1 1/16 DIA) (08.948)

1.173 CLIP – COCK – HOSE, Radiator Outlet (Lower)

90–95	Y 5.7J (LT5)	10187787	1	5.00	CLIP, COOL AIR PURGE PIPE
84	Y	14051150	1	27.25	HOSE, RAD OTLT
85–86	Y07	14078648	1	27.25	HOSE, RAD OTLT
86–87	Y67	14092705	1	45.25	HOSE, RAD OTLT
87	Y07 (EXC 1BL PERF HDLG PKG Z51, B2B SPORT HDLG PKG Z52)	14078648	1	27.25	HOSE, RAD OTLT
87	Y07 1BL (PERF HDLG PKG Z51), B2B (SPORT HDLG PKG Z52)	14092705	1	45.25	HOSE, RAD OTLT
88–89	Y	10135651	1	23.75	HOSE, RAD OTLT
90–91	Y 5.7–8 (L98)	10135653	1	25.75	HOSE, RAD OTLT
90–95	Y 5.7J (LT5)	10135660	1	4.65	HOSE, RAD OTLT (UPR)
92–95	Y 5.7P (LT1)	10257252	1	23.55	HOSE, RAD OTLT
96	Y	10257252	1	23.55	HOSE, RAD OTLT
90–95	Y 5.7J (LT5)	10157990	1	15.10	HOSE, RAD OTLT RR (LWR)

1.240 BOLT – BRACKET – CAP – CLAMP – CLIP – HOSE – HOSE KIT – RESERVOIR – RETAINER – TANK – WASHER, Engine Coolant Recovery

90–96	Y	10082901	1	6.50	BRACKET, RAD SURGE TK
92–94	Y 5.7P (LT1)	52463838	1	9.85	BRACKET, RAD SURGE TK (09.211)
95	Y 5.7P (LT1), (1ST DES)	52463838	1	9.85	BRACKET, RAD SURGE TK (USED ON VEHICLES W/VIN OF 119804 AND PRIOR) (09.211)
95	Y 5.7P (LT1), (2ND DES)	52475992	1	9.85	BRACKET, RAD SURGE TK (USED ON VEHICLES W/VIN OF 119805 AND GREATER) (09.211)
96	Y 5.7P (LT1)	52475992	1	9.85	BRACKET, RAD SURGE TK (09.211)
90–91	Y 5.7–8 (L98)	10135654	1	112.00	HOSE, RAD SURGE TK AIR BFL & OVERFLOW
90–91	Y 5.7J (LT5)	10135654	1	112.00	HOSE, RAD SURGE TK AIR BFL & OVERFLOW
90–94	Y	10135654	1	112.00	HOSE, RAD SURGE TK AIR BL & OVFL
95	Y 5.7J (LT5)	10135654	1	112.00	HOSE, RAD SURGE TK AIR BL & OVFL
95	Y 5.7P (LT1)	10262504	1	112.00	HOSE, RAD SURGE TK AIR BL & OVFL
96	Y	10262504	1	112.00	HOSE, RAD SURGE TK AIR BL & OVFL
90–96	Y	10257254	1	10.90	HOSE, RAD SURGE TK INL

© 2000 GENERAL MOTORS SERVICE PARTS OPERATIONS

1.246 THERMOSTAT, Engine Coolant Temperature

84–88	Y	12514334	1	7.66	THERMOSTAT, ENG COOL (195 DEG) (AC–DELCO #131–87)
89–91	Y 5.7–8 (L98)	12514334	1	7.66	THERMOSTAT, ENG COOL (AC–DELCO #131–87)
90–95	Y 5.7J (LT5)	10135627	1	21.62	THERMOSTAT, ENG COOL (AC–DELCO #131–51)
90–95	Y 5.7J (LT5)	14104599	1	236.64	THERMOSTAT, ENG COOL (INCLS HSG (UPR/LWR), THERM, BRKT & BOLTS)
92–96	Y 5.7P (LT1)	12555290	1	21.32	THERMOSTAT, ENG COOL (180 DEG) (AC–DELCO #131–100)
96	Y 5.7–5 (LT4)	12555290	1	21.32	THERMOSTAT, ENG COOL (180 DEG) (AC–DELCO #131–100)

1.270 INSULATOR – SUPPORT, Radiator

84–85	Y	14043103	2	2.47	INSULATOR, MT (LH)
84–85	Y	14043104	2	DISCON	INSULATOR, MT (RH)
86–88	Y	14081867	2	2.47	INSULATOR, MT (LH)
86–88	Y	14081868	2	2.47	INSULATOR, MT (RH)
89	Y 5.7–8 (L98)	14081867	2	2.47	INSULATOR, MT (LH)
89	Y 5.7–8 (L98)	14081868	2	2.47	INSULATOR, MT (RH)
90–93	Y	10082904	RH	2.47	INSULATOR, RAD LWR
90–93	Y	10082905	LH	3.57	INSULATOR, RAD LWR
94–96	Y	10219101	LH	4.45	INSULATOR, RAD LWR
94–96	Y	10219102	RH	4.45	INSULATOR, RAD LWR
90–91	Y 5.7–8 (L98)	10086303	RH	4.52	INSULATOR, RAD MT (UPR)
90–93	Y	10082902	LH	2.47	INSULATOR, RAD UPR
90–93	Y 5.7J (LT5)	10082903	RH	3.57	INSULATOR, RAD UPR
92–93	Y 5.7P (LT1)	10086303	RH	4.52	INSULATOR, RAD UPR
94–96	Y	10219097	LH	4.45	INSULATOR, RAD UPR
94–96	Y	10219098	RH	4.45	INSULATOR, RAD UPR

1.540 BOLT – BRACKET – CLAMP – CLIP – COOLER – FITTING – HOSE – PIPE – PLUG – RETAINER – RING – SEAL – SEAT – STUD – VALVE, Engine Oil Cooler

84	Y	12364237	1	DISCON	COOLER, ENG OIL
85–91	Y 5.7–8 (L98)	14084369	1	261.60	COOLER, ENG OIL
90–93	Y 5.7J (LT5)	14104653	1	313.00	COOLER, ENG OIL
94–95	Y 5.7J (LT5)	10219643	1	313.00	COOLER, ENG OIL
84	Y	10070158	2	4.32	FITTING, ENG OIL CLR HOSE (04.931)
85–91	Y 5.7–8 (L98), ENG OIL CLG (KC4)	14034019	1	11.60	FITTING, ENG OIL CLR HOSE (1/4–18X16MM)
90–95	Y 5.7J (LT5)	14104403	2	11.60	FITTING, ENG OIL CLR PIPE (HEX NUT)
85	Y	14084014	1	DISCON	PIPE, CLR
84	Y	14084035	1	DISCON	PIPE, CLR INL (LWR ON CLR)
84	Y	14084036	1	DISCON	PIPE, CLR OTLT (UPR ON CLR)
86–91	Y 5.7–8 (L98), ENG OIL CLG (KC4)	10077544	1	26.75	PIPE, ENG OIL CLR
90–95	Y 5.7J (LT5)	10067688	1	73.00	PLUG, ENG OIL CLR BYPASS VLV (01.800)
90–95	Y 5.7J (LT5)	10067722	1	32.13	RING, ENG OIL CLR BYPASS VLV PLUG RET (01.800)
90–95	Y 5.7J (LT5)	10067687	1	159.12	SEAT, ENG OIL CLR BYPASS VLV (01.800)
90–95	Y 5.7J (LT5)	10067599	1	24.02	VALVE, ENG OIL CLR BYPASS (01.800)

© 2000 GENERAL MOTORS SERVICE PARTS OPERATIONS

2.277 BOLT – BRACE – BRACKET – SHIELD – SPACER, Generator Mounting

92–95	Y 5.7P (LT1)	10105345	1	3.06	BOLT, GEN
96	Y 5.7P (LT1), 5.7–5 (LT4)	10105345	1	3.06	BOLT, GEN
90–95	Y 5.7J (LT5)	10049639	1	3.70	BOLT, GEN BRKT (M10X1.5X100 13HEX) (00.002)
90–95	Y 5.7J (LT5)	11508355	1	.95	BOLT, GEN BRKT (TOP) (M10X1.5X50 10.9 POR) (08.900)
92	Y 5.7P (LT1)	09440073	1	2.25	BOLT, GEN BRKT (HFH 3/8–16X2.00 280M POR 6174M) (08.900)
92–96	Y 5.7P (LT1)	09441560	2	*1.50	BOLT, GEN BRKT (HFH, 3/8–16X1.75, 1.12–THD LEN 0.75–OD, 300M, POR) (3/8–16X1.75, 1.12–THD) (08.900)
91	Y 5.7J (LT5)	11508687	2	1.82	BOLT, GEN BRKT BTM (HEX M8X1.25X20) (08.900) (AC–DELCO #11508687)
95–96	Y	11516523	1	DISCON	BOLT, GEN RR BR (08.900)
84	Y	14063758	1	DISCON	BRACKET, GEN
85	Y	14084384	1	19.84	BRACKET, GEN
86–89	Y	14087519	1	19.43	BRACKET, GEN
90–95	Y 5.7J (LT5)	10067545	1	51.00	BRACKET, GEN (TOP) (02.317)
90–95	Y 5.7J (LT5)	10067686	1	32.39	BRACKET, GEN (BOTTOM)
90–91	Y 5.7–8 (L98)	14087519	1	19.43	BRACKET, GEN
92–95	Y 5.7P (LT1)	12550052	1	77.01	BRACKET, GEN & A/C CMPR & P/S PUMP
93	Y 5.7J (LT5)	12550052	1	77.01	BRACKET, GEN & A/C CMPR & P/S PUMP
96	Y	12550052	1	77.01	BRACKET, GEN & A/C CMPR & P/S PUMP
85–90	Y	14087559	1	43.35	BRACKET, GEN & P/S PUMP
91	Y 5.7–8 (L98)	14087559	1	43.35	BRACKET, GEN & P/S PUMP
85	Y	14085724	1	DISCON	BRACKET, GEN SUP RR
92–96	Y 5.7P (LT1)	10028767	1	1.58	SPACER, GEN
93	Y 5.7J (LT5)	10028767	1	1.58	SPACER, GEN
96	Y 5.7–5 (LT4), 6–SPD M/TRANS (ML9)	10028767	1	1.58	SPACER, GEN

2.480 BRACKET – CONNECTOR – HARNESS – WIRE, Chassis Wiring

94	Y 4–SPD A/TRANS (M30)	15320479	1	119.63	HARNESS, A/TRNS WRG (AC–DELCO #15320479)
95	Y 4–SPD A/TRANS (M30)	15320477	1	75.73	HARNESS, A/TRNS WRG (INCLS TCC SOLENOID W/TCC DRAINDOWN FEATURE) (AC–DELCO #15320477)
96	Y 4–SPD A/TRANS (M30)	15320476	1	81.04	HARNESS, A/TRNS WRG (INCLS TCC SOL VLV) (AC–DELCO #15320476)
85	Y A/TRNS (MD8)	12048732	1	DISCON	HARNESS, E.C.M.
85	Y M/TRNS (MH5, MK2) W/FED (NA5)	12048733	1	DISCON	HARNESS, E.C.M.
84	Y A/TRNS, FED, CALIF (1ST DES)	12026754	1	DISCON	HARNESS, ELEK CONT MDL WRG (SGL WIRE OIL PRESS SW CONN)
84	Y M/TRNS, FED, CALIF (1ST DES)	12029199	1	DISCON	HARNESS, ELEK CONT MDL WRG (SGL WIRE OIL PRESS SW CONN)
84	Y M/TRNS, FED, CALIF (2ND DES)	12029216	1	DISCON	HARNESS, ELEK CONT MDL WRG (DBL WIRE OIL PRESS SW CONN)
84	Y A/TRNS, FED, CALIF (2ND DES)	12029217	1	DISCON	HARNESS, ELEK CONT MDL WRG (DBL WIRE OIL PRESS SW CONN)
89	Y (5.7–8) A/TRNS, A/C (C68)	12090323	1	1266.25	HARNESS, ENG & ECM (02.525)
86	Y M/TRNS, A/C (C60), FED (NA5) (EXC NM8 EXPORT)	12048815	1	DISCON	HARNESS, ENG & ECM WRG (02.525)

© 2000 GENERAL MOTORS SERVICE PARTS OPERATIONS

2.480 BRACKET – CONNECTOR – HARNESS – WIRE, Chassis Wiring(Con't)

86	Y A/TRNS, A/C (C60) (EXC NM8 EXPORT)	12048817	1	DISCON	HARNESS, ENG & ECM WRG (02.525)
86	Y A/TRNS, A/C (C68) (EXC NM8 EXPORT)	12048818	1	DISCON	HARNESS, ENG & ECM WRG (02.525)
86	Y07 M/TRNS, A/C (C68), FED (NA5) (EXC NM8 EXPORT)	12048816	1	DISCON	HARNESS, ENG & ECM WRG (02.525)
87	Y M/TRNS, A/C (C60)	12067670	1	DISCON	HARNESS, ENG & ECM WRG (02.525)
87	Y M/TRNS, A/C (C68)	12067671	1	DISCON	HARNESS, ENG & ECM WRG (02.525)
87	Y A/TRNS, A/C, FED (NA5) (EXC NM8 EXPORT)	12067672	1	DISCON	HARNESS, ENG & ECM WRG (02.525)
87	Y A/TRNS, A/C (C68), FED (NA5) (EXC NM8 EXPORT)	12067673	1	DISCON	HARNESS, ENG & ECM WRG (02.525)
88	Y A/TRNS, A/C (C60)	12055808	1	DISCON	HARNESS, ENG & ECM WRG (02.525)
88	Y A/TRNS, A/C (C68)	12055809	1	DISCON	HARNESS, ENG & ECM WRG (02.525)
88	Y M/TRNS, A/C (C60)	12080840	1	DISCON	HARNESS, ENG & ECM WRG (02.525)
88	Y M/TRNS, A/C (C68)	12080841	1	DISCON	HARNESS, ENG & ECM WRG (02.525)
89	Y (5.7–8) M/TRNS, A/C (C60) (2ND DES)	12090320	1	1266.25	HARNESS, ENG & ECM WRG (02.525) (ORANGE WIRE IN B–8 CAV OF VATS MDL CONN)
89	Y (5.7–8) M/TRNS, A/C (C68)	12090321	1	1266.25	HARNESS, ENG & ECM WRG (02.525)
89	Y (5.7–8) A/TRNS, A/C (C60) (2ND DES)	12090322	1	1266.25	HARNESS, ENG & ECM WRG (02.525) (ORANGE WIRE IN B–8 CAV OF VATS MDL CONN)
89	Y (5.7J)	12090324	1	1266.25	HARNESS, ENG & ECM WRG (02.525)
91	Y 5.7J (LT5)	12106549	1	26.14	HARNESS, ENG PWR SW WRG (I/P TO VALET MODE SW) (USE W/4 PIN ENG PWR SW CONN)
87–89	Y	12067418	1	DISCON	HARNESS, F/FLR CNSL
84–86	Y	12029153	1	DISCON	HARNESS, FRT FLR CNSL WRG
85	Y (EXC VB4, VD1, VE1, VT7 EXPORT)	12050645	1	DISCON	HARNESS, FWD LP
86	Y (EXC VB4, VD1, VE1, VT7 EXPORT)	12048809	1	DISCON	HARNESS, FWD LP
87	Y (EXC T72, T84 EXPORT)	12067732	1	DISCON	HARNESS, FWD LP
84	Y	12028953	1	DISCON	HARNESS, FWD LP WRG
88	Y (EXC T72, T84 EXPORT)	12073487	1	666.86	HARNESS, FWD LP WRG
89	Y (5.7–8)	12073487	1	666.86	HARNESS, FWD LP WRG
90	Y (5.7–8) (EXC CANADIAN T61)	12073776	1	666.86	HARNESS, FWD LP WRG
90	Y (5.7J) SOFT RIDE SUSP (FE1), H .D .SUSP (EXC CANADIAN T61)	12090331	1	985.50	HARNESS, FWD LP WRG
91	Y 5.7–8 (L98), (EXC DAYTIME RUNNING LGT (T61)	12080863	1	985.50	HARNESS, FWD LP WRG
91	Y 5.7J (LT5), SOFT RIDE SUSP (FE1), HVY DUTY SUSP (FE7), (EXC DAYTIME RUNNING LGT (T61)	12080864	1	666.86	HARNESS, FWD LP WRG
92	Y 5.7P (LT1), (EXC DAYTIME RUNNING LGT (T61)	12090371	1	292.85	HARNESS, FWD LP WRG
92	Y 5.7J (LT5), (EXC DAYTIME RUNNING LGT (T61)	12090372	1	315.14	HARNESS, FWD LP WRG
93	Y 5.7P (LT1), (EXC DIAGNOSTIC SYSTEM (BAK), DAYTIME RUNNING LGT (T61)	12106580	1	816.00	HARNESS, FWD LP WRG
93–94	Y 5.7J (LT5), (EXC DAYTIME RUNNING LGT (T61)	12106583	1	985.50	HARNESS, FWD LP WRG
93	Y 5.7P (LT1), DIAGNOSTIC SYSTEM (BAK), (EXC DAYTIME RUNNING LGT (T61)	12141822	1	292.85	HARNESS, FWD LP WRG

© 2000 GENERAL MOTORS SERVICE PARTS OPERATIONS

2.480 BRACKET – CONNECTOR – HARNESS – WIRE, Chassis Wiring(Con't)

94	Y 5.7P (LT1), (EXC HDLP (T72) (EXPORT), RH RULE OF ROAD HDLP (T84) (EXPORT), LH RULE OF ROAD HDLP (T85) (EXPORT), SIG & MKR LP (T90) (EXPORT) ...	12130480	1	292.85	HARNESS, FWD LP WRG .....
94	Y 5.7J (LT5), (EXC HDLP (T72) (EXPORT), RH RULE OF ROAD HDLP (T84) (EXPORT), LH RULE OF ROAD HDLP (T85) (EXPORT), SIG & MKR LP (T90) (EXPORT) ...	12154336	1	292.85	HARNESS, FWD LP WRG .....
95	Y 5.7P (LT1), (EXC HDLP (T72) (EXPORT), RH RULE OF ROAD HDLP (T84) (EXPORT), LH RULE OF ROAD HDLP (T85) (EXPORT), SIG & MKR LP (T90) (EXPORT) ...	12130484	1	292.85	HARNESS, FWD LP WRG .....
95	Y 5.7J (LT5), (EXC HDLP (T72) (EXPORT), RH RULE OF ROAD HDLP (T84) (EXPORT), LH RULE OF ROAD HDLP (T85) (EXPORT), SIG & MKR LP (T90) (EXPORT) ...	12130486	1	292.85	HARNESS, FWD LP WRG .....
96	Y (EXC HDLP (T72) (EXPORT), RH RULE OF ROAD HDLP (T84) (EXPORT), LH RULE OF ROAD HDLP (T85) (EXPORT), SIG & MKR LP (T90) (EXPORT)	12163717	1	292.85	HARNESS, FWD LP WRG .....
85	Y A/TRNS (MD8), A/C (C60)	12048741	1	DISCON	HARNESS, I/P .....
85	Y M/TRNS (MH5, MK2), A/C (C60) ..	12048742	1	DISCON	HARNESS, I/P .....
86	Y M/TRNS, A/C (C60)	12048793	1	DISCON	HARNESS, I/P .....
86	Y A/TRNS, A/C (C60)	12048794	1	DISCON	HARNESS, I/P .....
86	Y M/TRNS, A/C (C68)	12048795	1	DISCON	HARNESS, I/P .....
86	Y A/TRNS, A/C (C68)	12048796	1	DISCON	HARNESS, I/P .....
87	Y A/TRNS, A/C (C68)	12068102	1	1257.59	HARNESS, I/P .....
87	Y M/TRNS, A/C (C68)	12068103	1	1257.59	HARNESS, I/P .....
87	Y A/TRNS, A/C (C60)	12073820	1	DISCON	HARNESS, I/P .....
84	Y A/TRNS (1ST DES)	12036383	1	DISCON	HARNESS, I/P WRG (BLACK 5–WAY AC CONN W/2 DBL WIRES IN CAVS C & D) .....
84	Y M/TRNS	12043083	1	DISCON	HARNESS, I/P WRG .....
84	Y A/TRNS (2ND DES)	12043276	1	DISCON	HARNESS, I/P WRG (1 DBL WIRE IN CAV D) .....
87	Y M/TRNS (MH5, MK2), A/C (C60) ..	12073821	1	DISCON	HARNESS, I/P WRG .....
88	Y (5.7–8) M/TRNS, A/C (C60)	12073824	1	DISCON	HARNESS, I/P WRG .....
88	Y (5.7–8) A/TRNS, A/C (C60)	12073825	1	DISCON	HARNESS, I/P WRG .....
88	Y (5.7–8) M/TRNS, A/C (C68)	12073826	1	DISCON	HARNESS, I/P WRG .....
88	Y (5.7–8) A/TRNS, A/C (C68)	12073827	1	DISCON	HARNESS, I/P WRG .....
89	Y (5.7–8) ML9, A/C (C60) (1ST DES)	12073507	1	1548.75	HARNESS, I/P WRG (PINK WIRE IN B–8 CAV OF VATS MDL CONN) ...
89	Y (5.7–8) A/TRNS (MD8), A/C (C60) (1ST DES)	12073509	1	1548.75	HARNESS, I/P WRG (PINK WIRE IN B–8 CAV OF VATS MDL CONN) .....
89	Y (5.7–8) M/TRNS (ML9), A/C (C68) (1ST DES)	12073511	1	1548.75	HARNESS, I/P WRG (PINK WIRE IN B–8 CAV OF VATS MDL CONN) .....
89	Y (5.7–8) A/TRNS (MD8), A/C (C68) (1ST DES)	12073513	1	1548.75	HARNESS, I/P WRG (PINK WIRE IN B–8 CAV OF VATS MDL CONN) .....
89	Y (5.7–8) ML9, A/C (C60) (2ND DES)	12090315	1	1548.75	HARNESS, I/P WRG (ORANGE WIRE IN B–8 CAV OF VATS MDL CONN) .....
89	Y (5.7–8) A/TRNS (MD8), A/C (C60) (2ND DES)	12090316	1	1257.59	HARNESS, I/P WRG (ORANGE WIRE IN B–8 CAV OF VATS MDL CONN) .....
89	Y (5.7–8) M/TRNS (ML9), A/C (C68) (2ND DES)	12090318	1	1548.75	HARNESS, I/P WRG (ORANGE WIRE IN B–8 CAV OF VATS MDL CONN) .....
89	Y (5.7–8) A/TRNS (MD8), A/C (C68) (2ND DES)	12090319	1	1266.25	HARNESS, I/P WRG (ORANGE WIRE IN B–8 CAV OF VATS MDL CONN) .....

© 2000 GENERAL MOTORS SERVICE PARTS OPERATIONS

2.480 BRACKET – CONNECTOR – HARNESS – WIRE, Chassis Wiring(Con't)

90	Y M/TRNS (ML9), A/C (C60) (EXC CANADIAN T61)	12101432	1	1239.00	HARNESS, I/P WRG (**VPI 1–877–846–8243) .....
90	Y M/TRNS (ML9), A/C (C68) (EXC CANADIAN T61)	12101434	1	1548.75	HARNESS, I/P WRG .....
90	Y 4–SPD A/TRANS (MD8), A/C MAN CONT (C60), (EXC DAYTIME RUNNING LGT (T61)	12102274	1	1257.59	HARNESS, I/P WRG .....
90	Y A/TRNS (MD8), A/C (C63) (EXC CANADIAN T61)	12102538	1	1257.59	HARNESS, I/P WRG .....
91	Y 4–SPD A/TRANS (MD8), A/C MAN CONT (C60), (EXC DAYTIME RUNNING LGT (T61)	12116436	1	1028.20	HARNESS, I/P WRG .....
91	Y 6–SPD M/TRANS (ML9), A/C MAN CONT (C60), (EXC DAYTIME RUNNING LGT (T61)	12116438	1	1028.20	HARNESS, I/P WRG .....
91	Y 4–SPD A/TRANS (MD8), A/C AUTO ELEC CONT (C68), (EXC DAYTIME RUNNING LGT (T61)	12116500	1	1266.25	HARNESS, I/P WRG (MAY REQ 12106563 WIRE IF JMPR PRESENT AT THE PWR SEAT FEED) .....
91	Y 6–SPD M/TRANS (ML9), A/C AUTO ELEC CONT (C68), (EXC DAYTIME RUNNING LGT (T61)	12116502	1	1028.20	HARNESS, I/P WRG .....
92	Y 4–SPD A/TRANS (MD8), A/C MAN CONT (C60), (EXC DAYTIME RUNNING LGT (T61)	12125005	1	1028.20	HARNESS, I/P WRG .....
92	Y 6–SPD M/TRANS (ML9), A/C MAN CONT (C60), (EXC DAYTIME RUNNING LGT (T61)	12125007	1	1257.59	HARNESS, I/P WRG .....
92	Y 4–SPD A/TRANS (MD8), A/C AUTO ELEC CONT (C68), (EXC DAYTIME RUNNING LGT (T61)	12125813	1	881.59	HARNESS, I/P WRG .....
92	Y 6–SPD M/TRANS (ML9), A/C AUTO ELEC CONT (C68), (EXC DAYTIME RUNNING LGT (T61)	12125815	1	881.59	HARNESS, I/P WRG .....
93	Y 4–SPD A/TRANS (MD8), A/C MAN CONT (C60), (EXC SIG & MKR LP (T90) (EXPORT)	12141443	1	1257.59	HARNESS, I/P WRG .....
93	Y 6–SPD M/TRANS (ML9), A/C AUTO ELEC CONT (C68), (EXC SIG & MKR LP (T90) (EXPORT) ...	12141444	1	1257.59	HARNESS, I/P WRG (FOR VEH –DRL, SPLICE CAV D TO CAV E @ BLUE 8–WAY DRL MDL CONN.) .....
93	Y 6–SPD M/TRANS (ML9), A/C MAN CONT (C60), (EXC SIG & MKR LP (T90) (EXPORT)	12141445	1	1257.59	HARNESS, I/P WRG .....
93	Y 4–SPD A/TRANS (MD8), A/C AUTO ELEC CONT (C68), (EXC SIG & MKR LP (T90) (EXPORT) ...	12141446	1	1257.59	HARNESS, I/P WRG (ON VEHS W/O DAYTIME RUNNING LPS SPLICE CAV D & E WIRES TOGETHER AT BLUE DRL MDL CONN.) .....
94	Y 6–SPD M/TRANS (ML9), A/C MAN CONT (C60), (EXC DAYTIME RUNNING LGT (T61), HDLP (T72) (EXPORT), RH RULE OF ROAD HDLP (T84) (EXPORT), LH RULE OF ROAD HDLP (T85) (EXPORT), SIG & MKR LP (T90) (EXPORT) ...	12130324	1		HARNESS, I/P WRG .....
94	Y 6–SPD M/TRANS (ML9), A/C AUTO ELEC CONT (C68), (EXC DAYTIME RUNNING LGT (T61), HDLP (T72) (EXPORT), RH RULE OF ROAD HDLP (T84) (EXPORT), LH RULE OF ROAD HDLP (T85) (EXPORT), SIG & MKR LP (T90) (EXPORT)	12130326	1	1548.75	HARNESS, I/P WRG .....

© 2000 GENERAL MOTORS SERVICE PARTS OPERATIONS

2.480 BRACKET – CONNECTOR – HARNESS – WIRE, Chassis Wiring(Con't)

94	Y 4–SPD A/TRANS (M30), A/C MAN CONT (C60), (EXC DAYTIME RUNNING LGT (T61), HDLP (T72) (EXPORT), RH RULE OF ROAD HDLP (T84) (EXPORT), LH RULE OF ROAD HDLP (T85) (EXPORT), SIG & MKR LP (T90) (EXPORT), (2ND DES)	12130491	1		HARNESS, I/P WRG .....
94	Y 4–SPD A/TRANS (M30), A/C MAN CONT (C60), DAYTIME RUNNING LGT (T61), (EXC HDLP (T72) (EXPORT), RH RULE OF ROAD HDLP (T84) (EXPORT), LH RULE OF ROAD HDLP (T85) (EXPORT), SIG & MKR LP (T90) (EXPORT) ...	12130492	1		HARNESS, I/P WRG .....
94	Y 4–SPD A/TRANS (M30), A/C AUTO ELEC CONT (C68), (EXC DAYTIME RUNNING LGT (T61), HDLP (T72) (EXPORT), RH RULE OF ROAD HDLP (T84) (EXPORT), LH RULE OF ROAD HDLP (T85) (EXPORT), SIG & MKR LP (T90) (EXPORT)	12130493	1	1488.75	HARNESS, I/P WRG .....
94	Y 4–SPD A/TRANS (M30), A/C AUTO ELEC CONT (C68), DAYTIME RUNNING LGT (T61), (EXC HDLP (T72) (EXPORT), RH RULE OF ROAD HDLP (T84) (EXPORT), LH RULE OF ROAD HDLP (T85) (EXPORT), SIG & MKR LP (T90) (EXPORT)	12130494	1		HARNESS, I/P WRG .....
94	Y 4–SPD A/TRANS (M30), A/C MAN CONT (C60), DAYTIME RUNNING LGT (T61), (EXC HDLP (T72) (EXPORT), RH RULE OF ROAD HDLP (T84) (EXPORT), LH RULE OF ROAD HDLP (T85) (EXPORT), SIG & MKR LP (T90) (EXPORT), (1ST DES)	12141787	1		HARNESS, I/P WRG (TAGGED 0320 OR 0321) (ON VEH W/O DRL, AT 8–WAY BLUE CONN TO DRL MDL SPLICE CAV D & CAV E LEADS TOGETHER.) .....
94	Y 4–SPD A/TRANS (M30), A/C AUTO ELEC CONT (C68), DAYTIME RUNNING LGT (T61), (EXC HDLP (T72) (EXPORT), RH RULE OF ROAD HDLP (T84) (EXPORT), LH RULE OF ROAD HDLP (T85) (EXPORT), SIG & MKR LP (T90) (EXPORT), (1ST DES) ...	12141788	1		HARNESS, I/P WRG (TAGGED 0322 OR 0323) (ON VEH W/DAYTIME RUNNING LGHTS, ADD 8–WAY BLUE CONN TO DAYTIME RUNNING LGHT, SPLICE CAV D & CAV E WIRES TOGETHER) .....
94	Y 6–SPD M/TRANS (ML9), A/C MAN CONT (C60), DAYTIME RUNNING LGT (T61), (EXC HDLP (T72) (EXPORT), RH RULE OF ROAD HDLP (T84) (EXPORT), LH RULE OF ROAD HDLP (T85) (EXPORT), SIG & MKR LP (T90) (EXPORT) ...	12141789	1		HARNESS, I/P WRG .....
94	Y 6–SPD M/TRANS (ML9), A/C AUTO ELEC CONT (C68), DAYTIME RUNNING LGT (T61), (EXC HDLP (T72) (EXPORT), RH RULE OF ROAD HDLP (T84) (EXPORT), LH RULE OF ROAD HDLP (T85) (EXPORT), SIG & MKR LP (T90) (EXPORT)	12141790	1		HARNESS, I/P WRG .....

© 2000 GENERAL MOTORS SERVICE PARTS OPERATIONS

2.480 BRACKET – CONNECTOR – HARNESS – WIRE, Chassis Wiring(Con't)

94	Y 6–SPD M/TRANS (ML9), A/C AUTO ELEC CONT (C68), (EXC HDLP (T72) (EXPORT), RH RULE OF ROAD HDLP (T84) (EXPORT), LH RULE OF ROAD HDLP (T85) (EXPORT), SIG & MKR LP (T90) (EXPORT)	12133703	1	1257.59	HARNESS, I/P WRG .....
95	Y 5.7J (LT5), 6–SPD M/TRANS (ML9), A/C AUTO ELEC CONT (C68), (EXC DAYTIME RUNNING LGT (T61)	12130326	1	1548.75	HARNESS, I/P WRG .....
95	Y 5.7P (LT1), 4–SPD A/TRANS (M30), A/C MAN CONT (C60), DAYTIME RUNNING LGT (T61), (EXC HDLP (T72) (EXPORT), RH RULE OF ROAD HDLP (T84) (EXPORT), LH RULE OF ROAD HDLP (T85) (EXPORT), SIG & MKR LP (T90) (EXPORT)	12130389	1	1424.85	HARNESS, I/P WRG .....
95	Y 5.7P (LT1), 4–SPD A/TRANS (M30), A/C AUTO ELEC CONT (C68), DAYTIME RUNNING LGT (T61), (EXC HDLP (T72) (EXPORT), RH RULE OF ROAD HDLP (T84) (EXPORT), LH RULE OF ROAD HDLP (T85) (EXPORT), SIG & MKR LP (T90) (EXPORT)	12130391	1	1424.85	HARNESS, I/P WRG (SPLICE CAV D & E WIRES @ BLUE DRL MDL CONN FOR VEH W/O DRL.) .....
95	Y 5.7J (LT5), 6–SPD M/TRANS (ML9), A/C AUTO ELEC CONT (C68), DAYTIME RUNNING LGT (T61)	12141790	1		HARNESS, I/P WRG .....
95	Y 5.7P (LT1), 6–SPD M/TRANS (ML9), A/C MAN CONT (C60), (EXC DAYTIME RUNNING LGT (T61), HDLP (T72) (EXPORT), RH RULE OF ROAD HDLP (T84) (EXPORT), LH RULE OF ROAD HDLP (T85) (EXPORT), SIG & MKR LP (T90) (EXPORT)	12163700	1	1548.75	HARNESS, I/P WRG .....
95	Y 5.7P (LT1), 6–SPD M/TRANS (ML9), A/C AUTO ELEC CONT (C68), (EXC DAYTIME RUNNING LGT (T61), HDLP (T72) (EXPORT), RH RULE OF ROAD HDLP (T84) (EXPORT), LH RULE OF ROAD HDLP (T85) (EXPORT), SIG & MKR LP (T90) (EXPORT)	12163702	1	1257.59	HARNESS, I/P WRG .....
95	Y 5.7J (LT5), 6–SPD M/TRANS (ML9), A/C AUTO ELEC CONT (C68)	12163703	1	1257.59	HARNESS, I/P WRG .....
96	Y 4–SPD A/TRANS (M30), A/C MAN CONT (C60), (EXC HDLP (T72) (EXPORT), RH RULE OF ROAD HDLP (T84) (EXPORT), LH RULE OF ROAD HDLP (T85) (EXPORT), SIG & MKR LP (T90) (EXPORT) ...	12130468	1	1548.75	HARNESS, I/P WRG (WHEN USE ON VEH W/O DAYTIME RUN LIGHTS, SPLICE CAV D&E TOGETHER @ BLUE 8–WAY DRL MOD CONN) .....

© 2000 GENERAL MOTORS SERVICE PARTS OPERATIONS

2.480 BRACKET – CONNECTOR – HARNESS – WIRE, Chassis Wiring(Con't)

96	Y 4–SPD A/TRANS (M30), A/C AUTO ELEC CONT (C68), (EXC HDLP (T72) (EXPORT), RH RULE OF ROAD HDLP (T84) (EXPORT), LH RULE OF ROAD HDLP (T85) (EXPORT), SIG & MKR LP (T90) (EXPORT)	12130470	1	1061.69	HARNESS, I/P WRG (WHEN USE ON VEH W/O DAYTIME RUN LIGHTS, SPLICE CAV D&E TOGETHER @ BLUE 8–WAY DRL MOD CONN) .....
96	Y 6–SPD M/TRANS (ML9), A/C MAN CONT (C60), (EXC HDLP (T72) (EXPORT), RH RULE OF ROAD HDLP (T84) (EXPORT), LH RULE OF ROAD HDLP (T85) (EXPORT), SIG & MKR LP (T90) (EXPORT) ...	12130472	1	1257.59	HARNESS, I/P WRG (WHEN USE ON VEH W/O DAYTIME RUN LIGHTS, SPLICE CAV D&E TOGETHER @ BLUE 8–WAY DRL MOD CONN) .....
96	Y 6–SPD M/TRANS (ML9), A/C AUTO ELEC CONT (C68), (EXC HDLP (T72) (EXPORT), RH RULE OF ROAD HDLP (T84) (EXPORT), LH RULE OF ROAD HDLP (T85) (EXPORT), SIG & MKR LP (T90) (EXPORT)	12130474	1	1257.59	HARNESS, I/P WRG (WHEN USE ON VEH W/O DAYTIME RUN LIGHTS, SPLICE CAV D&F TOGETHER @ BLUE 8–WAY DRL MOD CONN) .....
84–91	Y RECL FRT BKT ST (AQ9)	12028999	1	DISCON	HARNESS, I/P WRG HARN EXTN .....
91	Y	12126533	1	DISCON	HARNESS, I/P WRG HARN EXTN (VALET MODE) (USE W/4 PIN ENG PWR SW CONN) .....
92–93	Y RECL FRT BKT ST (AQ9)	12106560	1	47.45	HARNESS, I/P WRG HARN EXTN .....
85–91	Y	12029463	1	25.75	HARNESS, INT AIR TEMP SEN WRG ...
84–85	Y	12028667	1	DISCON	HARNESS, MIR LP WRG .....
	*EXPORT***************EXPORT***************EXPORT***************EXPORT***************EXPORT*				
84	Y NM5 (EXPORT CANADA) (2ND DES)	12029435	1	DISCON	HARNESS, ELEK CONT MDL (OIL PRESS SW HAS 3 SINGLE WIRES) ..
84	Y NM5 (EXPORT, CANADA) (1ST DES)	12029044	1	DISCON	HARNESS ELEK CONT MDL WRG (OIL PRESS SW CONN HAS 1 DBL WIRE & 1 SGL WIRE) .....
86	Y M/TRNS, A/C (C60), (NM5) EXPORT, CANADA (EXC NM8 EXPORT)	12048815	1	DISCON	HARNESS, ENG & ECM WRG (02.525) .
86	Y A/TRNS, NM8 (EXPORT)	12048819	1	DISCON	HARNESS, ENG & ECM WRG (02.525) .
86	Y07 M/TRNS, A/C (C68), (NM5) EXPORT, CANADA (EXC NM8 EXPORT)	12048816	1	DISCON	HARNESS, ENG & ECM WRG (02.525) .
87	Y A/TRNS, A/C, NM5 (EXPORT, CANADA) (EXC NM8 EXPORT)	12067672	1	DISCON	HARNESS, ENG & ECM WRG (02.525) .
87	Y A/TRNS, A/C (C68), NM5 (EXPORT, CANADA) (EXC NM8 EXPORT)	12067673	1	DISCON	HARNESS, ENG & ECM WRG (02.525) .
87	Y A/TRNS, NM8 (EXPORT)	12067674	1	DISCON	HARNESS, ENG & ECM WRG (02.525) .
84	Y VB4, VD1, VE1, VT7 (EXPORT) ...	12029218	1	DISCON	HARNESS, FWD LP .....
85	Y VB4, VD1, VE1, VT7 (EXPORT) ...	12050642	1	DISCON	HARNESS, FWD LP .....
86	Y VB4, VD1, VE1, VT7 (EXPORT) ...	12055776	1	DISCON	HARNESS, FWD LP .....
87	Y T72, T84 (EXPORT)	12067734	1	DISCON	HARNESS, FWD LP .....
88	Y T72, T84 (EXPORT)	12055615	1	DISCON	HARNESS, FWD LP WRG .....
90	Y (5.7–8) T61 (CANADIAN)	12090336	1	667.87	HARNESS, FWD LP WRG .....
90	Y (5.7J) T61 (CANADIAN)	12090337	1	987.00	HARNESS, FWD LP WRG .....
91	Y 5.7–8 (L98), DAYTIME RUNNING LGT (T61)	12090346	1	667.87	HARNESS, FWD LP WRG .....
91	Y 5.7J (LT5), DAYTIME RUNNING LGT (T61)	12090347	1	667.87	HARNESS, FWD LP WRG .....
92	Y 5.7F (LT1), DAYTIME RUNNING LGT (T61)	12090373	1	667.87	HARNESS, FWD LP WRG .....
92	Y 5.7J (LT5), DAYTIME RUNNING LGT (T61)	12090374	1	667.87	HARNESS, FWD LP WRG .....

© 2000 GENERAL MOTORS SERVICE PARTS OPERATIONS

2.480 BRACKET – CONNECTOR – HARNESS – WIRE, Chassis Wiring(Con't)

93	Y 5.7P (LT1), DAYTIME RUNNING LGT (T61)	12106581	1	666.96	HARNESS, FWD LP WRG
93	Y 5.7J (LT5), DAYTIME RUNNING LGT (T61)	12106582	1	611.03	HARNESS, FWD LP WRG
94	Y 5.7P (LT1), HDLP (T72) (EXPORT), RH RULE OF ROAD HDLP (T84) (EXPORT), LH RULE OF ROAD HDLP (T85) (EXPORT), SIG & MKR LP (T90) (EXPORT)	12130481	1		HARNESS, FWD LP WRG
94	Y 5.7J (LT5), HDLP (T72) (EXPORT), RH RULE OF ROAD HDLP (T84) (EXPORT), LH RULE OF ROAD HDLP (T85) (EXPORT), SIG & MKR LP (T90) (EXPORT)	12154337	1		HARNESS, FWD LP WRG
95	Y 5.7P (LT1), HDLP (T72) (EXPORT), RH RULE OF ROAD HDLP (T84) (EXPORT), LH RULE OF ROAD HDLP (T85) (EXPORT), SIG & MKR LP (T90) (EXPORT)	12130485	1	292.85	HARNESS, FWD LP WRG
96	Y HDLP (T72) (EXPORT), RH RULE OF ROAD HDLP (T84) (EXPORT), LH RULE OF ROAD HDLP (T85) (EXPORT), SIG & MKR LP (T90) (EXPORT)	12163718	1	272.58	HARNESS, FWD LP WRG
94–96	Y HDLP (T72) (EXPORT), RH RULE OF ROAD HDLP (T84) (EXPORT), LH RULE OF ROAD HDLP (T85) (EXPORT), SIG & MKR LP (T90) (EXPORT)	12130344	2	40.09	HARNESS, FWD LP WRG HARN EXTN
90	Y M/TRNS (ML9), A/C (C60), T61 (CANADIAN)	12101433	1	1266.25	HARNESS, I/P WRG
90	Y M/TRNS (ML9), A/C (C68), T61 (CANADIAN)	12101435	1	1266.25	HARNESS, I/P WRG
90	Y A/TRNS (MD8), A/C (C68), T61 (CANADIAN)	12102273	1	1028.20	HARNESS, I/P WRG
90	Y A/TRNS (MD8), A/C (C60), T61 (CANADIAN)	12102537	1		HARNESS, I/P WRG
91	Y 4–SPD A/TRANS (MD8), A/C MAN CONT (C60), DAYTIME RUNNING LGT (T61)	12116437	1	1028.20	HARNESS, I/P WRG
91	Y 6–SPD M/TRANS (ML9), A/C MAN CONT (C60), DAYTIME RUNNING LGT (T61)	12116439	1	1028.20	HARNESS, I/P WRG
91	Y 4–SPD A/TRANS (MD8), A/C AUTO ELEC CONT (C68), DAYTIME RUNNING LGT (T61)	12116501	1	1028.20	HARNESS, I/P WRG
91	Y 6–SPD M/TRANS (ML9), A/C AUTO ELEC CONT (C68), DAYTIME RUNNING LGT (T61)	12116503	1	1028.20	HARNESS, I/P WRG
92	Y 4–SPD A/TRANS (MD8), A/C MAN CONT (C60), DAYTIME RUNNING LGT (T61)	12125006	1	1028.20	HARNESS, I/P WRG
92	Y 6–SPD M/TRANS (ML9), A/C MAN CONT (C60), DAYTIME RUNNING LGT (T61)	12125008	1	1028.20	HARNESS, I/P WRG
92	Y 4–SPD A/TRANS (MD8), A/C AUTO ELEC CONT (C68), DAYTIME RUNNING LGT (T61)	12125814	1	1028.20	HARNESS, I/P WRG
92	Y 6–SPD M/TRANS (ML9), A/C AUTO ELEC CONT (C68), DAYTIME RUNNING LGT (T61)	12125816	1	1028.20	HARNESS, I/P WRG

© 2000 GENERAL MOTORS SERVICE PARTS OPERATIONS

2.480 BRACKET – CONNECTOR – HARNESS – WIRE, Chassis Wiring(Con't)

93	Y 6–SPD M/TRANS (ML9), A/C AUTO ELEC CONT (C68), SIG & MKR LP (T90) (EXPORT)	12141441	1	1547.50	HARNESS, I/P WRG .....
93	Y 4–SPD A/TRANS (MD8), A/C AUTO ELEC CONT (C68), SIG & MKR LP (T90) (EXPORT)	12141442	1	1256.57	HARNESS, I/P WRG .....
94	Y 4–SPD A/TRANS (M30), A/C AUTO ELEC CONT (C68), HDLP (T72) (EXPORT), RH RULE OF ROAD HDLP (T84) (EXPORT), LH RULE OF ROAD HDLP (T85) (EXPORT), SIG & MKR LP (T90) (EXPORT)	12130495	1		HARNESS, I/P WRG .....
94	Y 4–SPD A/TRANS (M30), A/C AUTO ELEC CONT (C68), HDLP (T72) (EXPORT), RH RULE OF ROAD HDLP (T84) (EXPORT), LH RULE OF ROAD HDLP (T85) (EXPORT), SIG & MKR LP (T90) (EXPORT), (1ST DES)	12141791	1		HARNESS, I/P WRG (TAGGED 0328) ...
94	Y 6–SPD M/TRANS (ML9), A/C AUTO ELEC CONT (C68), HDLP (T72) (EXPORT), RH RULE OF ROAD HDLP (T84) (EXPORT), LH RULE OF ROAD HDLP (T85) (EXPORT), SIG & MKR LP (T90) (EXPORT)	12141792	1		HARNESS, I/P WRG .....
95	Y 5.7P (LT1), 4–SPD A/TRANS (M30), A/C AUTO ELEC CONT (C68), HDLP (T72) (EXPORT), RH RULE OF ROAD HDLP (T84) (EXPORT), LH RULE OF ROAD HDLP (T85) (EXPORT), SIG & MKR LP (T90) (EXPORT), (EXC DAYTIME RUNNING LGT (T61)	12130396	1	1257.59	HARNESS, I/P WRG .....
95	Y 5.7P (LT1), 6–SPD M/TRANS (ML9), A/C MAN CONT (C60), DAYTIME RUNNING LGT (T61), (EXC HDLP (T72) (EXPORT), RH RULE OF ROAD HDLP (T84) (EXPORT), LH RULE OF ROAD HDLP (T85) (EXPORT), SIG & MKR LP (T90) (EXPORT)	12163701	1	1257.59	HARNESS, I/P WRG .....
95	Y 5.7P (LT1), 6–SPD M/TRANS (ML9), A/C AUTO ELEC CONT (C68), DAYTIME RUNNING LGT (T61), (EXC HDLP (T72) (EXPORT), RH RULE OF ROAD HDLP (T84) (EXPORT), LH RULE OF ROAD HDLP (T85) (EXPORT), SIG & MKR LP (T90) (EXPORT)	12163703	1	1257.59	HARNESS, I/P WRG .....
95	Y 5.7P (LT1), 6–SPD M/TRANS (ML9), A/C AUTO ELEC CONT (C68), HDLP (T72) (EXPORT), RH RULE OF ROAD HDLP (T84) (EXPORT), LH RULE OF ROAD HDLP (T85) (EXPORT), SIG & MKR LP (T90) (EXPORT), (EXC DAYTIME RUNNING LGT (T61)	12163704	1	1257.59	HARNESS, I/P WRG .....

© 2000 GENERAL MOTORS SERVICE PARTS OPERATIONS

2.480 BRACKET – CONNECTOR – HARNESS – WIRE, Chassis Wiring(Con't)

96	Y 4–SPD A/TRANS (M30), A/C AUTO ELEC CONT (C68), HDLP (T72) (EXPORT), RH RULE OF ROAD HDLP (T84) (EXPORT), LH RULE OF ROAD HDLP (T85) (EXPORT), SIG & MKR LP (T90) (EXPORT), (EXC DAYTIME RUNNING LGT (T61)	12130475	1	1257.59	HARNESS, I/P WRG ....
96	Y 5.7–5 (LT4), 6–SPD M/TRANS (ML9), A/C AUTO ELEC CONT (C68), HDLP (T72) (EXPORT), RH RULE OF ROAD HDLP (T84) (EXPORT), LH RULE OF ROAD HDLP (T85) (EXPORT), SIG & MKR LP (T90) (EXPORT), (EXC DAYTIME RUNNING LGT (T61)	12163715	1	1257.59	HARNESS, I/P WRG .....

2.483 BLOCK – BRACKET – BREAKER – CLIP – CONNECTOR – COVER – HOUSING – INSULATOR – LABEL – NUT – PULLER – RETAINER – RIVET, Main Wiring Junction and Fuse Block

93	Y	10165399	1	4.34	BRACKET, ENG WRG HARN FUSE BLK (LOCATED BEHIND BATT) .....
94–95	Y 5.7J (LT5)	10165399	1	4.34	BRACKET, ENG WRG HARN FUSE BLK (LOCATED BEHIND BATT) .....
94–96	Y 5.7P (LT1)	10252093	1	4.34	BRACKET, ENG WRG HARN FUSE BLK (LOCATED BEHIND BATT) .....
86–92	Y	14093148	1	DISCON	BRACKET, ENG WRG HARN J/BLK ....
93–96	Y	10202843	1	4.34	BRACKET, FWD LP WRG HARN FUSE BLK (LOCATED ON WHL/HSE PNL) ..
84–96	Y	14062568	1	3.72	BRACKET, I/P WRG HARN FUSE BLK ..
84–85	Y	14062512	1	DISCON	BRACKET, MULTIUSE RLY .....
90–96	Y	10172488	1	6.58	BRACKET, MULTIUSE RLY (RIGHT BRKT) (4.0", 102.0 MM LG) (PLASTIC) .....
90–91	Y	10175542	LH	22.29	BRACKET, MULTIUSE RLY (LEFT BRKT) (5.2", 132.0 MM LG) (PLASTIC) .....
90–93	Y	10240571	1	11.58	BRACKET, MULTIUSE RLY (BLACK) (18.3", 465.0MM LONG) (PLASTIC) ...
90	Y 5.7J (LT5), A/C MAN CONT (C60) .	14104778	1	3.06	BRACKET, MULTIUSE RLY (STEEL) (8.7"X3.5") (220.0MMX88.5MM) .....
92	Y 5.7P (LT1), 6–SPD M/TRANS (ML9,, A/C MAN CONT (C60)	10165350	1	6.58	BRACKET, MULTIUSE RLY (7.4", 188.0 MM LG) (STEEL) .....
92	Y 5.7J (LT5)	10165350	1	6.58	BRACKET, MULTIUSE RLY (7.4", 188.0 MM LG) (STEEL) .....
92	Y 5.7P (LT1), 4–SPD A/TRANS (MD8), A/C MAN CONT (C60)	10165387	1	DISCON	BRACKET, MULTIUSE RLY (5.4", 136.0 MM LG) (STEEL) .....
92–96	Y	10167109	1	11.58	BRACKET, MULTIUSE RLY (5.2", 132 MM LG) (PLASTIC) .....
92	Y 5.7P (LT1), 6–SPD M/TRANS (ML9), A/C AUTO ELEC CONT (C68)	14104140	1	1.88	BRACKET, MULTIUSE RLY (STEEL) (3.0"X2.0") (76.7MMX51.0MM)) (01.055) .....
93–95	Y 5.7J (LT5)	10204735	1	6.58	BRACKET, MULTIUSE RLY .....
93–95	Y 5.7P (LT1), A/C AUTO ELEC CONT (C68)	10214029	1	6.58	BRACKET, MULTIUSE RLY .....
93–95	Y 5.7P (LT1), A/C MAN CONT (C60)	10214030	1	6.58	BRACKET, MULTIUSE RLY .....
94–96	Y	10161867	1	11.58	BRACKET, MULTIUSE RLY .....
96	Y A/C AUTO ELEC CONT (C68)	10214029	1	6.58	BRACKET, MULTIUSE RLY .....
96	Y A/C MAN CONT (C60)	10214030	1	6.58	BRACKET, MULTIUSE RLY .....
84–89	Y	14062543	1	DISCON	COVER, F/FLR CNSL COMPT LP .....
93–96	Y	12077538	2	5.57	COVER, FUSE BLK .....

© 2000 GENERAL MOTORS SERVICE PARTS OPERATIONS

2.483 BLOCK – BRACKET – BREAKER – CLIP – CONNECTOR – COVER – HOUSING – INSULATOR – LABEL – NUT – PULLER – RETAINER – RIVET, Main Wiring Junction and Fuse Block(Con't)

84–89	Y	14047597	1	7.29	COVER, FUSE BOX ACC HOLE (SCREW LOCK IS PART OF ASM)
90–92	Y	10172478	1	22.38	COVER, I/P FUSE BLK ACC HOLE
93	Y	10221936	1	22.38	COVER, I/P FUSE BLK ACC HOLE
94	Y	10257359	1	19.23	COVER, I/P FUSE BLK ACC HOLE (BLACK)
95	Y	10257359	1	19.23	COVER, I/P FUSE BLK ACC HOLE (BLACK)
96	Y	10260357	1	22.38	COVER, I/P FUSE BLK ACC HOLE (BLACK)
94	Y 4–SPD A/TRANS (M30), A/C MAN CONT (C60), A/C AUTO ELEC CONT (C68)	12077573	1	3.80	COVER, MULTIUSE RLY & FUSE (PART OF HARN) (FROM I/P HARNESS)
95	Y 6–SPD M/TRANS (ML9), A/C MAN CONT (C60), A/C AUTO ELEC CONT (C68)	12077573	1	3.80	COVER, MULTIUSE RLY & FUSE (PART OF HARN) (FROM I/P HARNESS)
96	Y	12077573	1	3.80	COVER, MULTIUSE RLY & FUSE (FROM I/P HARNESS)
84–92	Y	14049066	1	1.05	NUT, I/P FUSE BLK ACC HOLE CVR

2.525 HARNESS, Engine Wiring

86	Y M/TRNS, A/C (C60), FED (NA5) (EXC NM8 EXPORT)	12048815	1	DISCON	HARNESS, ENG & ECM WRG
86	Y A/TRNS, A/C (C60) (EXC NM8 EXPORT)	12048817	1	DISCON	HARNESS, ENG & ECM WRG
86	Y A/TRNS, A/C (C68) (EXC NM8 EXPORT)	12048818	1	DISCON	HARNESS, ENG & ECM WRG
86	Y07 M/TRNS, A/C (C68), FED (NA5) (EXC NM8 EXPORT)	12048816	1	DISCON	HARNESS, ENG & ECM WRG
87	Y M/TRNS, A/C (C60)	12067670	1	DISCON	HARNESS, ENG & ECM WRG
87	Y M/TRNS, A/C (C68)	12067671	1	DISCON	HARNESS, ENG & ECM WRG
87	Y A/TRNS, A/C, FED (NA5) (EXC NM8 EXPORT)	12067672	1	DISCON	HARNESS, ENG & ECM WRG
87	Y A/TRNS, A/C (C68), FED (NA5) (EXC NM8 EXPORT)	12067673	1	DISCON	HARNESS, ENG & ECM WRG
88	Y A/TRNS, A/C (C60)	12055808	1	DISCON	HARNESS, ENG & ECM WRG
88	Y A/TRNS, A/C (C68)	12055809	1	DISCON	HARNESS, ENG & ECM WRG
88	Y M/TRNS, A/C (C60)	12080840	1	DISCON	HARNESS, ENG & ECM WRG
88	Y M/TRNS, A/C (C68)	12080841	1	DISCON	HARNESS, ENG & ECM WRG
89	Y (5.7–8) M/TRNS, A/C (C60) (2ND DES)	12090320	1	1266.25	HARNESS, ENG & ECM WRG (ORANGE WIRE IN B–8 CAV OF VATS MDL CONN)
89	Y (5.7–8) M/TRNS, A/C (C68)	12090321	1	1266.25	HARNESS, ENG & ECM WRG
89	Y (5.7–8) A/TRNS, A/C (C60) (2ND DES)	12090322	1	1266.25	HARNESS, ENG & ECM WRG (ORANGE WIRE IN B–8 CAV OF VATS MDL CONN)
89	Y (5.7–8) A/TRNS, A/C (C68)	12090323	1	1266.25	HARNESS, ENG & ECM WRG
89	Y (5.7J)	12090324	1	1266.25	HARNESS, ENG & ECM WRG
84	Y	12029248	1	DISCON	HARNESS, ENG WRG
85	Y	12029301	1	DISCON	HARNESS, ENG WRG
90	Y 5.7J (LT5), A/C MAN CONT (C60), SOFT RIDE SUSP (FE1), HVY DUTY SUSP (FE7)	12090375	1	1337.50	HARNESS, ENG WRG
90	Y 5.7J (LT5), A/C AUTO ELEC CONT (C68), SOFT RIDE SUSP (FE1), HVY DUTY SUSP (FE7)	12090376	1	1311.25	HARNESS, ENG WRG
90	Y (5.7–8) M/TRNS (ML9), A/C (C60)	12090377	1	1086.05	HARNESS, ENG WRG
90	Y (5.7–8) M/TRNS (ML9), A/C (C68)	12090378	1	1086.05	HARNESS, ENG WRG

© 2000 GENERAL MOTORS SERVICE PARTS OPERATIONS

2.525 HARNESS, Engine Wiring(Con't)

90	Y (5.7–8) A/TRNS (MD8), A/C (C60)	12090379	1	1311.25	HARNESS, ENG WRG
90	Y (5.7–8) A/TRNS (MD8), A/C (C68)	12090380	1	1311.25	HARNESS, ENG WRG
91	Y 5.7–8 (L98), 4–SPD A/TRANS (MD8), A/C MAN CONT (C60)	12080865	1	1086.05	HARNESS, ENG WRG
91	Y 5.7–8 (L98), 6–SPD M/TRANS (ML9), A/C MAN CONT (C60)	12080866	1	1086.05	HARNESS, ENG WRG
91	Y 5.7–8 (L98), 4–SPD A/TRANS (MD8), A/C AUTO ELEC CONT (C68)	12080867	1	1086.05	HARNESS, ENG WRG
91	Y 5.7–8 (L98), 6–SPD M/TRANS (ML9), A/C AUTO ELEC CONT (C68)	12080868	1	1086.05	HARNESS, ENG WRG
91	Y 5.7J (LT5), A/C AUTO ELEC CONT (C68), SOFT RIDE SUSP (FE1), HVY DUTY SUSP (FE7)	12080870	1	1086.05	HARNESS, ENG WRG
92	Y 5.7J (LT5)	12117829	1	1086.05	HARNESS, ENG WRG
92	Y 5.7P (LT1), 4–SPD A/TRANS (MD8), A/C MAN CONT (C60)	12125009	1	1086.05	HARNESS, ENG WRG
92	Y 5.7P (LT1), 6–SPD M/TRANS (ML9), A/C MAN CONT (C60)	12125010	1	1086.05	HARNESS, ENG WRG
92	Y 5.7P (LT1), 4–SPD A/TRANS (MD8), A/C AUTO ELEC CONT (C68)	12125011	1	867.83	HARNESS, ENG WRG
92	Y 5.7P (LT1), 6–SPD M/TRANS (ML9), A/C AUTO ELEC CONT (C68)	12125012	1	1086.05	HARNESS, ENG WRG
93–95	Y 5.7J (LT5)	12141078	1	1086.05	HARNESS, ENG WRG
93	Y 5.7P (LT1), 6–SPD M/TRANS (ML9), A/C MAN CONT (C60)	12154081	1		HARNESS, ENG WRG
93	Y 5.7P (LT1), 6–SPD M/TRANS (ML9), A/C AUTO ELEC CONT (C68)	12154082	1	3054.14	HARNESS, ENG WRG
93	Y 5.7P (LT1), 4–SPD A/TRANS (MD8), A/C MAN CONT (C60)	12154083	1	1086.05	HARNESS, ENG WRG
93	Y 5.7P (LT1), 4–SPD A/TRANS (MD8), A/C AUTO ELEC CONT (C68)	12154084	1	1086.05	HARNESS, ENG WRG
94	Y 5.7P (LT1), 6–SPD M/TRANS (ML9), A/C MAN CONT (C60), (EXC VE1 (EXPORT)	12141752	1	1086.05	HARNESS, ENG WRG
94	Y 5.7P (LT1), 6–SPD M/TRANS (ML9), A/C AUTO ELEC CONT (C68), (EXC VE1 (EXPORT)	12141753	1	1337.50	HARNESS, ENG WRG
94	Y 5.7P (LT1), 4–SPD A/TRANS (M30), A/C MAN CONT (C60), (EXC VE1 (EXPORT)	12141754	1	1086.05	HARNESS, ENG WRG
94	Y 5.7P (LT1), 4–SPD A/TRANS (M30), A/C AUTO ELEC CONT (C68), (EXC VE1 (EXPORT)	12141755	1	1068.75	HARNESS, ENG WRG
95	Y 5.7P (LT1), 6–SPD M/TRANS (ML9), A/C MAN CONT (C60), (EXC VE1 (EXPORT)	12130370	1	1337.50	HARNESS, ENG WRG
95	Y 5.7P (LT1), 4–SPD A/TRANS (M30), A/C MAN CONT (C60), (EXC VE1 (EXPORT)	12130371	1	1086.05	HARNESS, ENG WRG
95	Y 5.7P (LT1), 6–SPD M/TRANS (ML9), A/C AUTO ELEC CONT (C68), (EXC VE1 (EXPORT)	12130372	1	1086.05	HARNESS, ENG WRG
95	Y 5.7P (LT1), 4–SPD A/TRANS (M30), A/C AUTO ELEC CONT (C68), (EXC VE1 (EXPORT)	12130373	1	1068.75	HARNESS, ENG WRG

© 2000 GENERAL MOTORS SERVICE PARTS OPERATIONS

2.525 HARNESS, Engine Wiring(Con't)

96	Y 6-SPD M/TRANS (ML9), A/C MAN CONT (C60), (EXC VE1 (EXPORT) .	12130461	1	1337.50	HARNESS, ENG WRG .....
96	Y 4-SPD A/TRANS (M30), A/C MAN CONT (C60), (EXC VE1 (EXPORT) .	12130462	1	1086.05	HARNESS, ENG WRG .....
96	Y 6-SPD M/TRANS (ML9), A/C AUTO ELEC CONT (C68), (EXC VE1 (EXPORT)	12130463	1	1337.50	HARNESS, ENG WRG .....
96	Y 4-SPD A/TRANS (M30), A/C AUTO ELEC CONT (C68), (EXC VE1 (EXPORT)	12130464	1	842.45	HARNESS, ENG WRG .....
86-91	Y	12048806	1	DISCON	HARNESS, ENG WRG HARN EXTN (WSW PUMP JPR) .....
	*EXPORT**********EXPORT**********EXPORT**********EXPORT**********EXPORT*				
86	Y M/TRNS, A/C (C60), (NM5) EXPORT, CANADA (EXC NM8 EXPORT)	12048815	1	DISCON	HARNESS, ENG & ECM WRG .....
86	Y A/TRNS, NM8 (EXPORT)	12048819	1	DISCON	HARNESS, ENG & ECM WRG .....
86	Y07 M/TRNS, A/C (C68), (NM5) EXPORT, CANADA (EXC NM8 EXPORT)	12048816	1	DISCON	HARNESS, ENG & ECM WRG .....
87	Y A/TRNS, A/C, NM5 (EXPORT, CANADA) (EXC NM8 EXPORT)	12067672	1	DISCON	HARNESS, ENG & ECM WRG .....
87	Y A/TRNS, A/C (C68), NM5 (EXPORT, CANADA) (EXC NM8 EXPORT)	12067673	1	DISCON	HARNESS, ENG & ECM WRG .....
87	Y A/TRNS, NM8 (EXPORT)	12067674	1	DISCON	HARNESS, ENG & ECM WRG .....
94	Y 5.7P (LT1), 4-SPD A/TRANS (M30), A/C AUTO ELEC CONT (C68), VE1 (EXPORT)	12141756	1	851.59	HARNESS, ENG WRG .....
94	Y 5.7P (LT1), 6-SPD M/TRANS (ML9), A/C AUTO ELEC CONT (C68), VE1 (EXPORT)	12141757	1	1064.74	HARNESS, ENG WRG .....
95	Y 5.7P (LT1), 4-SPD A/TRANS (M30), A/C AUTO ELEC CONT (C68), VE1 (EXPORT)	12130374	1	867.83	HARNESS, ENG WRG .....
95	Y 5.7P (LT1), 6-SPD M/TRANS (ML9), A/C AUTO ELEC CONT (C68), VE1 (EXPORT)	12130375	1	1086.05	HARNESS, ENG WRG .....
96	Y 4-SPD A/TRANS (M30), A/C AUTO ELEC CONT (C68), VE1 (EXPORT)	12130465	1	867.83	HARNESS, ENG WRG .....

2.559 BOLT - BRACKET - CLIP - COVER - INSULATOR - PLATE - RETAINER - SHIELD - SPACER - STRAP - STUD - WASHER, Chassis/Engine Wiring Harness

84-89	Y 5.7-8	14062552	1	1.12	BRACKET, ECM WRG HARN .....
90-91	Y 5.7-8 (L98)	14062552	1	1.12	BRACKET, ECM WRG HARN .....
84	Y	14066570	2	DISCON	BRACKET, ELEC CONT MDL HARN (TO ENG HD CVR) .....
84	Y	14057560	1	DISCON	BRACKET, ENG WRG HARN (TO CASE) .....
84-91	Y	14062511	AR	2.04	BRACKET, ENG WRG HARN (R/SI RR) .
84-85	Y	14062552	1	1.12	BRACKET, ENG WRG HARN (TO OIL PAN) .....
84-88	Y	14062599	AR	.68	BRACKET, ENG WRG HARN (ABOVE LH ENG MT) .....
84-88	Y	14073493	1	2.04	BRACKET, ENG WRG HARN (L/SI RR) ..
85-87	Y	14100810	1	DISCON	BRACKET, ENG WRG HARN (RH SI INT MANIF) .....
89-91	Y 5.7-8 (L98)	14062599	AR	.68	BRACKET, ENG WRG HARN (ABOVE LH ENG MT) .....

© 2000 GENERAL MOTORS SERVICE PARTS OPERATIONS

2.559 BOLT – BRACKET – CLIP – COVER – INSULATOR – PLATE – RETAINER – SHIELD – SPACER – STRAP – STUD – WASHER, Chassis/Engine Wiring Harness(Con't)

89–91	Y 5.7–8 (L98), 4–SPD A/TRANS (MD8)	14073493	1	2.04	BRACKET, ENG WRG HARN (L/SI RR)
89	Y M/TRNS	14104953	1	DISCON	BRACKET, ENG WRG HARN (L/SI RR)
90	Y 5.7J (LT5), A/C MAN CONT (C60), A/C AUTO ELEC CONT (C68), SOFT RIDE SUSP (FE1), HVY DUTY SUSP (FE7)	14104749	1	2.04	BRACKET, ENG WRG HARN (ALUM, LOC AT RR OF ENG)
90–91	Y 5.7J (LT5)	14104938	1	35.45	BRACKET, ENG WRG HARN (AT OXY & KNOCK SEN CABLES) (STEEL) (LWR LH SI OF BLK NEAR OIL PAN)
91–95	Y 5.7J (LT5)	14104749	1	2.04	BRACKET, ENG WRG HARN (ALUM, LOC AT RR OF ENG)
91–92	Y 5.7J (LT5)	14104941	1	12.90	BRACKET, ENG WRG HARN (TO OIL PAN) (03.682)
91	Y 5.7–8 (L98)	15664822	1	1.05	BRACKET, ENG WRG HARN (01.166)
92–95	Y 5.7J (LT5)	10098912	1	12.90	BRACKET, ENG WRG HARN (03.682)
92–95	Y 5.7P (LT1)	12553341	4	1.12	BRACKET, ENG WRG HARN
92–95	Y 5.7J (LT5)	14104938	1	35.45	BRACKET, ENG WRG HARN (STEEL) (LWR LH SI OF BLK NEAR OIL PAN)
96	Y	12553341	5	1.12	BRACKET, ENG WRG HARN (POS#RH–3, 6, 8, LH–6, 7)
89	Y A/C MAN CONT (C60), A/C AUTO ELEC CONT (C68), SOFT RIDE SUSP (FE1), HVY DUTY SUSP (FE7)	14104961	1	11.32	BRACKET, ENG WRG HARN SHLD
90–91	Y 5.7J (LT5), A/C MAN CONT (C60), A/C AUTO ELEC CONT (C68), SOFT RIDE SUSP (FE1), HVY DUTY SUSP (FE7)	14104961	1	11.32	BRACKET, ENG WRG HARN SHLD
92–95	Y 5.7J (LT5)	14104961	1	11.32	BRACKET, ENG WRG HARN SHLD
84–86	Y	14066531	LH	DISCON	BRACKET, FWD LP WRG HARN (TO FRT BPR IMPACT BAR)
84–86	Y	14066532	RH	DISCON	BRACKET, FWD LP WRG HARN (TO FRT BPR IMPACT BAR)
84–90	Y	14091207	LH	7.55	BRACKET, FWD LP WRG HARN (TO REINFORCEMENT OTR)
84–89	Y	14091208	RH	7.55	BRACKET, FWD LP WRG HARN (TO REINFORCEMENT OTR)
90	Y SOFT RIDE SUSP (FE1), H .D .SUSP (FE7)	14091208	RH	7.55	BRACKET, FWD LP WRG HARN (TO REINFORCEMENT OTR)
84–86	Y	14062523	1	DISCON	BRACKET, I/P WRG HARN
90–93	Y	10165378	1	DISCON	BRACKET, I/P WRG HARN
94–96	Y	10251214	1	6.03	BRACKET, I/P WRG HARN
84–96	Y	14066593	2	3.26	BRACKET, I/P WRG HARN DR LEAD
84–88	Y M/TRNS	14081179	1	DISCON	BRACKET, TBI HARNESS CLIP
88–89	Y A/C (C68)	09798835	1	1.20	CLIP, A .C. DA WIRE TO EVAP HSNG
84–93	Y 4–SPD A/TRANS (MD8)	08673068	2	1.82	CLIP, A/TRNS WRG HARN (04.197) (AC–DELCO #8673068)
90–91	Y 5.7J (LT5), A/C MAN CONT (C60), A/C AUTO ELEC CONT (C68), SOFT RIDE SUSP (FE1), HVY DUTY SUSP (FE7)	14104936	1	.94	CLIP, ENG WRG HARN (2 HOLES) (FRT CVR CYL CASE)
90–95	Y 5.7J (LT5)	14104937	1	.94	CLIP, ENG WRG HARN (1 HOLE) (OIL FILTER HSG)
92–95	Y 5.7J (LT5)	14104936	1	.94	CLIP, ENG WRG HARN (2 HOLES) (FRT CVR CYL CASE)
93–95	Y 5.7P (LT1)	01864022	1	.77	CLIP, ENG WRG HARN (1/2 DIA HARD STL)

© 2000 GENERAL MOTORS SERVICE PARTS OPERATIONS

2.559 BOLT – BRACKET – CLIP – COVER – INSULATOR – PLATE – RETAINER – SHIELD – SPACER – STRAP – STUD – WASHER, Chassis/Engine Wiring Harness(Con't)

93–94	Y 5.7P (LT1)	01864022	1	.77	CLIP, FWD LP WRG HARN (1/2 DIA HARD STL)
93–94	Y	03816659	AR	*.87	CLIP, FWD LP WRG HARN (7" ADJ, W/ROSEBUD FOR .25 DIA HOLE .031–.14 TH) (08.965) (STRAP)
94	Y 5.7J (LT5)	01864022	1	.77	CLIP, FWD LP WRG HARN (1/2 DIA HARD STL)
85	Y	09798835	1	1.20	CLIP, I/P WRG HARN
93–94	Y	01839906	1	*.13	CLIP, I/P WRG HARN (LARGE 3–5 WIRE) (08.965) (AC–DELCO #1839906)
93	Y	01864022	1	.77	CLIP, I/P WRG HARN (1/2 DIA HARD STL)
92–93	Y RECL FRT BKT ST (AQ9)	01864022	1	.77	CLIP, I/P WRG HARN EXTN HARN (1/2 DIA HARD STL)
94–95	Y	01864022	1	.77	CLIP, WRG HARN (BRK PRESS MOD VLV) (1/2 DIA HARD STL)
86–96	Y	14090618	1	7.05	PLATE, ECM WRG HARN GROM RET STUD (03.675)
92–96	Y	10086254	1	3.37	PLATE, ELEK BRK CONT WRG HARN GROM MT
90–96	Y	10086254	1	3.37	PLATE, ENG WRG HARN GROM BKG
84–87	Y	00480534	AR	*.84	RETAINER, PNL HOLE (DIA.250, THK .03–.30) (11.419)
93	Y 5.7P (LT1), 6–SPD M/TRANS (ML9), DIAGNOSTIC SYSTEM (BAK), A/C MAN CONT (C60)	12129021	4	1.52	RETAINER, ECM WRG HARN (BLACK) (32–WAY F)
93	Y 5.7P (LT1), 6–SPD M/TRANS (ML9), DIAGNOSTIC SYSTEM (BAK), A/C MAN CONT (C60)	12129022	4	1.52	RETAINER, ECM WRG HARN (CLEAR) (USE W/32–WAY CONN)
93	Y 5.7P (LT1), 6–SPD M/TRANS (ML9), DIAGNOSTIC SYSTEM (BAK), A/C MAN CONT (C60)	12129023	4	1.52	RETAINER, ECM WRG HARN (BLUE) (USE W/32–WAY CONN)
94	Y 5.7P (LT1)	12129021	4	1.52	RETAINER, ECM WRG HARN (BLACK) (32–WAY F)
94	Y 5.7P (LT1)	12129022	4	1.52	RETAINER, ECM WRG HARN (CLEAR) (USE W/32–WAY CONN)
94	Y 5.7P (LT1)	12129023	4	1.52	RETAINER, ECM WRG HARN (BLUE) (USE W/32–WAY CONN)
89–91	Y	12020833	1	*.73	RETAINER, ECM WRG HARN CONN (GRAY) (1" LONG) (PUSH–IN)
94–96	Y	12129030	2	2.50	RETAINER, ECM WRG HARN CONN (GRAY) (STRAIN RELIEF)
96	Y	12129021	4	1.52	RETAINER, ECM WRG HARN CONN (BLACK) (32–WAY F)
96	Y	12129022	4	1.52	RETAINER, ECM WRG HARN CONN (CLEAR) (USE W/32–WAY CONN)
96	Y	12129023	4	1.52	RETAINER, ECM WRG HARN CONN (BLUE) (USE W/32–WAY CONN)
96	Y	12129024	3	2.50	RETAINER, ECM WRG HARN CONN (RED) (USE W/32–WAY CONN)
96	Y	12129028	2	2.50	RETAINER, ECM WRG HARN CONN (GRAY) (32–WAY)
84–88	Y	14066575	1	DISCON	RETAINER, ENG WRG HARN
89–91	Y 5.7–8 (L98)	14104541	1	4.13	RETAINER, ENG WRG HARN
92–95	Y 5.7P (LT1)	14104541	1	4.13	RETAINER, ENG WRG HARN
96	Y	14104541	1	4.13	RETAINER, ENG WRG HARN
90–91	Y	12077996	1	.52	RETAINER, F/INJR WRG HARN CONN (02.535)

© 2000 GENERAL MOTORS SERVICE PARTS OPERATIONS

2.559 BOLT – BRACKET – CLIP – COVER – INSULATOR – PLATE – RETAINER – SHIELD – SPACER – STRAP – STUD – WASHER, Chassis/Engine Wiring Harness(Con't)

84	Y 5.7–8 (L83)	08917236	1	1.45	RETAINER, OXY SEN CONN
85–91	Y 5.7–8 (L98)	08917236	1	1.45	RETAINER, OXY SEN CONN
92–94	Y 5.7P (LT1), (EXC LEADED FUEL EMIS EXPORT (NM8)	08917236	1	1.45	RETAINER, OXY SEN CONN

2.729 INSULATOR – NUT, Capsule/Headlamp Trim

84–85	Y	14013246	AR	*1.10	NUT (M4.2 DIA SCR M7.8 DIA RND HOLE)
84–90	Y	00347347	AR	*1.00	NUT, SPL ANC (NYLON) (SQUARE HOLE) (01.267)
	*EXPORT**********EXPORT**********EXPORT**********EXPORT**********EXPORT*				
94–96	Y HDLP (T72) (EXPORT), RH RULE OF ROAD HDLP (T84) (EXPORT), LH RULE OF ROAD HDLP (T85) (EXPORT)	00347347	2	*1.00	NUT, HDLP BZL (UPLEVEL) (01.267)

3.275 BOLT – STUD, Intake & Exhaust Manifold

92–93	Y 5.7P (LT1)	09440073	2	2.25	BOLT, EXH MANIF (HFH 3/8–16X2.00 280M POR 6174M) (08.900)
92–95	Y 5.7J (LT5)	10065580	2	.54	BOLT, EXH MANIF (HFH M8X1.25X37) (02 277)
92–95	Y 5.7J (LT5)	10187720	2	23.40	BOLT, EXH MANIF
94–96	Y 5.7P (LT1)	12552096	1	*.86	BOLT, EXH MANIF (3/8–16 X 2 1/8) (01.079)
95	Y 5.7P (LT1)	09440073	2	2.25	BOLT, EXH MANIF (HFH 3/8–16X2.00 280M POR 6174M) (08.900)
96	Y 5.7–5 (LT4)	12552096	1	*.86	BOLT, EXH MANIF (3/8–16 X 2 1/8) (01.079)
85–90	Y	14082425	1	.42	BOLT, INL MANIF PLNM EXTN (4X.7X13)
84	Y	14067336	9	DISCON	BOLT, INT MANIF (3/8–16X1.00 280M)
90–91	Y 5.7–8 (L98)	10108661	4	DISCON	BOLT, INT MANIF (PAN HD TORX MACH, 3/8 -16X1.375, 280M, PE) (03.265)
85–88	Y	14081014	7	1.00	BOLT, INT MANIF PLNM (M8X1.25X30)
91	Y 5.7–8 (L98)	14082425	1	.42	BOLT, INT MANIF PLNM EXTN (4X.7X13)
85–88	Y	14081014	4	1.00	BOLT, INT MANIF TUBE (M8X1.25X30)
85–88	Y	14081015	2	1.90	BOLT, INT MANIF TUBE (M8X1.25X34.5)
85–88	Y	14081016	2	*1.55	BOLT, INT MANIF TUBE (M8X1.25X39.5)
85–88	Y	14081017	4	*1.85	BOLT, INT MANIF TUBE (TORX HEAD 8X1.25X54)
89–91	Y 5.7–8 (L98)	14081014	AR	1.00	BOLT, PLNM AIR INT TUBE (M8X1.25X30)
89–91	Y 5.7–8 (L98)	14081015	2	1.90	BOLT, PLNM AIR INT TUBE (M8X1.25X34.5)
89–91	Y 5.7–8 (L98)	14081016	2	*1.55	BOLT, PLNM AIR INT TUBE (M8X1.25X39.5)
89–91	Y 5.7–8 (L98)	14081017	4	*1.85	BOLT, PLNM AIR INT TUBE (TORX HEAD 8X1.25X54)
91	Y 5.7–8 (L98), 6–SPD M/TRANS (ML9)	10055606	1	1.65	STUD, CLU HSG (3/8–16X25/32 BOTH ENDS)
84–85	Y	03932448	1	7.45	STUD, EXH MANIF (NO.3 HOLE LH)
84–87	Y	14057002	3	3.95	STUD, EXH MANIF (#1–4 RH, #2 LH)
88–91	Y 5.7–8 (L98)	12550726	3	*1.48	STUD, EXH MANIF (#3–4 RH & #2 LH)

© 2000 GENERAL MOTORS SERVICE PARTS OPERATIONS

3.275 BOLT – STUD, Intake & Exhaust Manifold(Con't)

88–91	Y 5.7–8 (L98)	14057002	3	3.95	STUD, EXH MANIF (#1–4 RH, #2 LH) (3/8 X 16 X 2.08)
90–91	Y 5.7J (LT5)	10122181	2	5.50	STUD, EXH MANIF
92–95	Y 5.7J (LT5)	10187719	2	23.40	STUD, EXH MANIF
92–96	Y 5.7P (LT1)	12550726	3	*1.48	STUD, EXH MANIF
92–93	Y 5.7P (LT1)	14057002	3	3.95	STUD, EXH MANIF (#1–4 RH, #2 LH) (3/8 X 16 X 2.08)
96	Y 5.7–5 (LT4)	12550726	3	*1.48	STUD, EXH MANIF
84–87	Y (5.7–8)	12550726	3	*1.48	STUD, EXH MANIF #1–4 RH & #2 LH
92–96	Y 5.7P (LT1)	10106420	3	1.45	STUD, INT MANIF (3/8X16X1 3/8)
96	Y 5.7–5 (LT4)	10106420	3	1.45	STUD, INT MANIF (3/8X16X1 3/8)
84	Y	12552858	1	*1.30	STUD, INT MANIF #1 RH (01.153)
89–91	Y 5.7–8 (L98)	14091678	1	2.25	STUD, INT MANIF PLENUM (M8X1.25X30)
86–88	Y	14091678	1	2.25	STUD, INT MANIF PLNM (M8 X 1.25 X 30)
85	Y	14084304	1	DISCON	STUD, INT MANIF PLNM #2 LH

3.339 BRACKET – CONNECTOR – MODULE – SENSOR – SENSOR KIT, Multi Port Fuel Injection Throttle Position

Note: FOR 1985–1991 USAGE REFER TO THROTTLE BODY CHART GRP 3.335

92–94	Y	10143541	1	3.26	BRACKET, THROT POSN SEN INTERFACE MDL
95	Y 5.7J (LT5)	10143541	1	3.26	BRACKET, THROT POSN SEN INTERFACE MDL

3.410 BOLT – BREATHER – COVER – ELEMENT – RETAINER – SEAL, Air Cleaner Intake

Note: SEE GROUP 2.270 FOR TUNE–UP PARTS CHART

90–93	Y	12550915	2	4.40	BOLT, A/CL HSG CVR (OUTBOARD POSITIONS) (63MM LONG)
90–96	Y	14104835	1	4.40	BOLT, A/CL HSG CVR (CTR POSITION) (48MM LG) (03.403)
94–96	Y	12550915	2	4.40	BOLT, A/CL HSG CVR (OUTBOARD POSITIONS) (63MM LONG)
84	Y	25041410	1	DISCON	COVER, A/CL
85–89	Y (5.7–8)	14091889	1	30.50	COVER, A/CL
90	Y 5.7–8 (L98)	12552873	1	34.00	COVER, A/CL HSG
90–95	Y 5.7J (LT5)	12552873	1	34.00	COVER, A/CL HSG
91	Y 5.7–8 (L98), (EXC MODIFICATION–NOISE CONTROL (B4H) (EXPORT)	12552873	1	34.00	COVER, A/CL HSG
92–93	Y 5.7P (LT1)	10186711	1	80.00	COVER, A/CL HSG
94–96	Y 5.7P (LT1), (EXC MODIFICATION–NOISE CONTROL (B4H) (EXPORT)	12552873	1	34.00	COVER, A/CL HSG
96	Y 5.7–5 (LT4)	12552873	1	34.00	COVER, A/CL HSG
84	Y 5.7–8 (L83)	25042383	1	N.L.	ELEMENT, A/CL (AC–DELCO #A862C)
85–89	Y 5.7–8 (L98)	25042562	1	N.L.	ELEMENT, A/CL (AC–DELCO #A917C)
90–91	Y 5.7–8 (L98)	25096933	1	N.L.	ELEMENT, A/CL (A1097C) (AC–DELCO #A1097C)
90–95	Y 5.7J (LT5)	25096933	1	N.L.	ELEMENT, A/CL (A1097C) (AC–DELCO #A1097C)
92–96	Y 5.7P (LT1)	25096933	1	N.L.	ELEMENT, A/CL (A1097C) (AC–DELCO #A1097C)
96	Y 5.7–5 (LT4)	25096933	1	N.L.	ELEMENT, A/CL (A1097C) (AC–DELCO #A1097C)
92–93	Y 5.7P (LT1), 5.7J (LT5), (EXC MODIFICATION–NOISE CONTROL (B4H) (EXPORT)	10198767	1	4.30	SEAL, A/CL HOOD

© 2000 GENERAL MOTORS SERVICE PARTS OPERATIONS

3.410 BOLT – BREATHER – COVER – ELEMENT – RETAINER – SEAL, Air Cleaner Intake(Con't)

94–95	Y 5.7P (LT1), 5.7J (LT5)	10198767	1	4.30	SEAL, A/CL HOOD
96	Y 5.7P (LT1), 5.7–5 (LT4)	10198767	1	4.30	SEAL, A/CL HOOD
	*EXPORT**********EXPORT**********EXPORT**********EXPORT**********EXPORT*				
91	Y 5.7–8 (L98), MODIFICATION–NOISE CONTROL (B4H) (EXPORT)	10186111	1	80.00	COVER, A/CL HSG
94–95	Y 5.7P (LT1), MODIFICATION–NOISE CONTROL (B4H) (EXPORT)	10186111	1	80.00	COVER, A/CL HSG
96	Y 5.7P (LT1), 5.7–5 (LT4), MODIFICATION–NOISE CONTROL (B4H) (EXPORT)	10186111	1	80.00	COVER, A/CL HSG

3.417 CLAMP – DUCT – ELBOW – PIN – RESONATOR – RETAINER – SCREW – SEAL – STOVE – TUBE, Air Cleaner Air Intake

90–91	Y 5.7–8 (L98)	14104556	1	6.45	CLAMP, INTER INT AIR DUCT
90–95	Y 5.7J (LT5)	14104556	2	6.45	CLAMP, INTER INT AIR DUCT
92–94	Y 5.7P (LT1)	14104556	1	6.45	CLAMP, INTER INT AIR DUCT
85–91	Y 5.7–8 (L98)	10146826	1	4.85	CLAMP, RR INT AIR DUCT (3.31 TO 4.25)
85–89	Y (5.7–8)	14084404	1	50.25	DUCT, A/CL FRT AIR METER INT
90–91	Y 5.7–8 (L98)	12553505	1	56.75	DUCT, FRT INT AIR (WHEN USING IN PLACE OF 14104555;MUST BLOCK OFF HOSE CONN.)
90–95	Y 5.7J (LT5)	12553505	1	56.75	DUCT, FRT INT AIR (WHEN USING IN PLACE OF 14104555, MUST BLOCK OFF HOSE CONN.)
92–96	Y 5.7P (LT1)	12553505	1	56.75	DUCT, FRT INT AIR (WHEN USING IN PLACE OF 14104555, MUST BLOCK OFF HOSE CONN.)
96	Y 5.7–5 (LT4)	12553505	1	56.75	DUCT, FRT INT AIR
90–91	Y 5.7–8 (L98)	10108444	1	44.00	DUCT, INTER INT AIR
90–95	Y 5.7J (LT5)	14104557	1	26.25	DUCT, INTER INT AIR
92	Y 5.7P (LT1)	25099598	1	155.00	DUCT, INTER INT AIR (MAY REQUIRE CLAMP 14104556)
93	Y 5.7P (LT1), DIAGNOSTIC SYSTEM (BAK)	25099264	1	36.98	DUCT, INTER INT AIR
93	Y 5.7P (LT1)	25099598	1	155.00	DUCT, INTER INT AIR
94	Y 5.7P (LT1)	25099264	1	36.98	DUCT, INTER INT AIR
85–89	Y (5.7–8)	14081891	1	7.65	DUCT, RR AIR INT
93	Y 5.7P (LT1), DIAGNOSTIC SYSTEM (BAK)	25099266	1	49.47	DUCT, RR INT AIR
94	Y 5.7P (LT1)	25099266	1	49.47	DUCT, RR INT AIR
95	Y 5.7P (LT1)	25147192	1	49.75	DUCT, RR INT AIR (03.407)
96	Y	25147192	1	49.75	DUCT, RR INT AIR (03.407)
85–89	Y (5.7–8)	14081885	2	3.40	PIN, A/CL FRT AIR INT DUCT RET
85–89	Y (5.7–8)	14081886	2	8.35	RETAINER, A/CL FRT AIR INT DUCT
85–89	Y (5.7–8)	14084405	2	4.05	SCREW, FRT AIR INT DUCT
84–85	Y	14046756	2	20.35	SEAL, FRT AIR INT DUCT
84	Y 5.7–8 (L83)	14055131	2	13.35	STOVE, ENG AIR HT INR
85–91	Y 5.7–8 (L98)	14055131	2	13.35	STOVE, ENG AIR HT INR
84	Y	14055129	LH	DISCON	STOVE, ENG AIR HT OTR

© 2000 GENERAL MOTORS SERVICE PARTS OPERATIONS

3.671 ADAPTER – BOLT – BOLT KIT – BRACKET – CLAMP – CLIP – COVER – FILTER – GASKET – GROMMET – HOUSING – NUT – PLATE – RETAINER – SPACER – STUD, Emission Control System

84–93	Y	12337892	2	*1.13	BOLT, ECM BRKT (M5X.8X16 THD) (SPECIAL) (AC–DELCO #12337892)
93–95	Y 5.7J (LT5)	12337892	4	*1.13	BOLT, ECM BRKT (M5X.8X16 THD) (SPECIAL) (AC–DELCO #12337892)
92–94	Y 5.7P (LT1)	09441894	2	2.85	BOLT, EGR VLV (TO BE USED W/WASHER 11501869) (HFH, 5/16–18X1.00, 280M, PC, .65 OD) (08.900)
85–87	Y	14082472	1	DISCON	BRACKET, AIR INJ CONT VLV
85	Y FED	14082477	1	DISCON	BRACKET, AIR INJ SW VLV
86–87	Y (EXC NM8 EXPORT)	14082477	1	DISCON	BRACKET, AIR INJ SW VLV
90–91	Y (5.7J)	10086315	1	31.11	BRACKET, ECM
92–96	Y	10143544	1	31.11	BRACKET, ECM
90–91	Y (5.7–8)	10143544	1	31.11	BRACKET, ECM W/SEAL
84	Y	14057006	1	DISCON	BRACKET, EGR SOL
85	Y	14087565	1	DISCON	BRACKET, EGR SOL
85	Y	14087418	1	DISCON	BRACKET, EGR TEMP SW WIRE
85–89	Y	14080604	1	11.68	BRACKET, ELEK FUEL CONT MDL
84	Y	14062575	1	DISCON	BRACKET, ELEK FUEL CONT MDL LWR
84	Y	14062576	1	DISCON	BRACKET, ELEK FUEL CONT MDL UPR
94–95	Y 5.7P (LT1)	10211331	1	8.72	BRACKET, PCM
96	Y	10211331	1	8.72	BRACKET, PCM
90–91	Y 5.7J (LT5), SOFT RIDE SUSP (FE1), HVY DUTY SUSP (FE7)	14104859	1	7.29	BRACKET, SECD AIR INJN BYPASS VLV
94	Y 5.7P (LT1)	12129073	1	.45	BRACKET, SECD AIR INJN PUMP RLY (BLACK) (04.720) (AC–DELCO #12129073)
96	Y	12129073	1	.45	BRACKET, SECD AIR INJN PUMP RLY (BLACK) (04.720) (AC–DELCO #12129073)
84–88	Y	01985870	1	1.68	CLIP, FILTER RET
89–91	Y 5.7–8 (L98)	01985870	1	1.68	CLIP, FILTER RET
96	Y 5.7–5 (LT4), LEADED FUEL EMIS EXPORT (NM8)	10054880	1	6.22	COVER, EGR VLV OPG
85–89	Y	14080605	1	DISCON	COVER, ELEK FUEL CONT MDL HSG
90–92	Y 5.7J (LT5)	01977796	1	.18	FILTER, EGR VAC REG SOL VLV (AC–DELCO #219–14)
92–96	Y 5.7P (LT1)	01977880	1	*.39	FILTER, EGR VAC REG SOL VLV (03.140) (AC–DELCO #219–15)
93–95	Y 5.7J (LT5)	10159525	1	2.47	FILTER, EGR VAC REG SOL VLV (03.670) (AC–DELCO #219–16)
90–91	Y SOFT RIDE SUSP (FE1), H.D .SUSP (FE7)	10086259	1	11.27	HOUSING, ECM
92–93	Y	10086259	1	11.27	HOUSING, ECM
94–95	Y 5.7J (LT5)	10086259	1	11.27	HOUSING, ECM
92–96	Y 5.7P (LT1)	09442958	1	*1.00	NUT, EGR VAC REG VLV SOL (3/8–16 PC, 286M) (HEX, FLANGE (08.917)
94–96	Y 5.7P (LT1)	14080362	2	*1.65	STUD, EGR VLV (5/16 X 18 X 1 43/64) (01.428)
96	Y 5.7–5 (LT4)	14080362	2	*1.65	STUD, EGR VLV (5/16 X 18 X 1 43/64) (01.428)
	*EXPORT**********EXPORT**********EXPORT**********EXPORT**********EXPORT*				
94–96	Y 5.7P (LT1), LEADED FUEL EMIS EXPORT (NM8)	10054880	1	6.22	COVER, EGR VLV OPG

© 2000 GENERAL MOTORS SERVICE PARTS OPERATIONS

6.760 BRACKET – NUT – REINFORCEMENT – WASHER, Steering Column Attaching

90–96	Y	10086066	1	67.20	BRACKET, STRG COL UPR SUPT
90–96	Y	10146441	2	2.85	NUT, STRG COL SUPT BRKT SI BRKT
90–96	Y	10086084	1	12.67	REINFORCEMENT, STRG COL SUPT BRKT

7.865 SHIM, Bumper/Fascia Mounting

84–96	Y	14046663	AR	5.60	SHIM, FRT BPR IMP BAR (POSN #1) (53MMX177MMX0.8MM) (07.833)
84–96	Y	14046664	AR	5.60	SHIM, FRT BPR IMP BAR (POSN #2) (53MMX177MMX3MM) (07.833)
84–93	Y	14081864	AR	1.80	SHIM, FRT BPR IMP BAR (POSN #3) (21MMX38MM)

10.186 BEZEL – BOLT – CONNECTOR – INSULATOR – KNOB – LAMP – MOTOR – NUT – RETAINER – SWITCH, Rear View Mirror

87–89	Y67 A/C (C60), ELEC HTD MIR (DL8)	01228279	1	7.00	KNOB, SIDE MIRROR (W/SPRING)
89	Y07 A/C (C60)	01228279	1	7.00	KNOB, SIDE MIRROR (W/SPRING)

12.807 BARRIER – COVER – FRAME – GUSSET – PLATE – REINFORCEMENT – SEAL – WEATHERSTRIP, Windshield Frame

90–96	Y	10137761	1	56.44	REINFORCEMENT, W/S LWR FRM RR OTR
90–96	Y	10217340	RH	33.05	REINFORCEMENT, W/S LWR FRM RR OTR
84–96	Y	10238887	1	231.60	WEATHERSTRIP, W/S FRM (12.810)

12.981 BOLT – BRACKET – COMPARTMENT – CYLINDER – CYLINDER KIT – DOOR – DOOR & FRAME – FILLER – GASKET – HANDLE – INSULATOR – PANEL – PLATE – REINFORCEMENT – RETAINER – SPRING – STRIKER – STRIP – TRAY – TUMBLER, Rear Compartment Floor

86–96	Y07	14100206	2	2.85	BRACKET, FLR RR PNL CTR
86–89	Y67	14064526	2	.70	BRACKET, FLR RR PNL CTR CPT (10.230)
90–96	Y67	14064526	3	.70	BRACKET, FLR RR PNL CTR CPT (10.230)
86–96	Y67	14092735	LH	38.75	BRACKET, R/FLR PNL UPR FRT
86–96	Y67	14092736	RH	38.75	BRACKET, R/FLR PNL UPR FRT
89–92	Y67	10123005	LH	65.85	BRACKET, R/FLR PNL UPR FRT (14.310)
86–96	Y67	14100357	LH	25.32	FILLER, R/FLR PNL INTER
86–96	Y67	14100358	RH	25.32	FILLER, R/FLR PNL INTER
86–96	Y67	14092725	LH	38.65	FILLER, R/FLR PNL LWR
86–96	Y67	14092726	RH	38.65	FILLER, R/FLR PNL LWR
86–96	Y67	14092723	LH	26.70	FILLER, R/FLR PNL UPR
86–96	Y67	14092724	RH	26.70	FILLER, R/FLR PNL UPR
84–87	Y	14064513	LH	DISCON	INSULATOR, INR INTER SI MBR
84–96	Y	14064514	RH	3.10	INSULATOR, INR INTER SI MBR
88	Y	10094902	LH	DISCON	INSULATOR, INR INTER SI MBR
89–96	Y	10137253	LH	1.05	INSULATOR, INR INTER SI MBR
86–96	Y67	14092737	1	12.92	INSULATOR, R/FLR PNL (UPR)
86–93	Y67	14092738	1	13.34	INSULATOR, R/FLR PNL (LWR)
88–95	Y07	10054603	LH	26.00	INSULATOR, R/FLR PNL (12.980)
88–96	Y07	10054604	RH	26.00	INSULATOR, R/FLR PNL (12.980)
90–96	Y67	10193758	RH	11.44	INSULATOR, R/FLR PNL

© 2000 GENERAL MOTORS SERVICE PARTS OPERATIONS

12.981 BOLT – BRACKET – COMPARTMENT – CYLINDER – CYLINDER KIT – DOOR – DOOR & FRAME – FILLER – GASKET – HANDLE – INSULATOR – PANEL – PLATE – REINFORCEMENT - RETAINER – SPRING – STRIKER – STRIP – TRAY – TUMBLER, Rear Compartment Floor(Con't)

92–95	Y67	10193757	LH	11.44	INSULATOR, R/FLR PNL
93–96	Y67	11515174	2	*1.50	INSULATOR, R/FLR PNL (POSN #1) (4 1/4"X7 1/2") (TRIM AS REQ'D) (15.492)
96	Y07	10282261	LH	26.00	INSULATOR, R/FLR PNL
96	Y67	10282262	LH	11.44	INSULATOR, R/FLR PNL
86–96	Y07	10175524	1	29.24	INSU[illegible] R/FLR PNL CTR
90–96	Y67	10146480	1	29.24	INS[illegible] /FLR PNL CTR
90–96	Y67	10146449	1	13.63	PA[illegible] FIL
84–87	Y	10067390	1	DISCON	PANEL, [illegible] FLR (DEALER TO REMOVE EXTENSION ASM WHEN INSTALLING ON Y07 (COUPE) CARS
89–96	Y	10198704	1	147.47	PANEL, INTER FLR
84–85	Y07	14104866	1	DISCON	PANEL, R/FLR (MUST ALSO ORDER (1) 14105595, (2) 14088454, (8) 2495701, (8) 11508426, (1) 14088439, (1) 14088442, (8) 1646714)
86–89	Y07	14104866	1	DISCON	PANEL, R/FLR
86–91	Y67	10193727	1	370.65	PANEL, R/FLR
92–96	Y07	10280990	1	381.38	PANEL, R/FLR
92–96	Y67	10280989	1	381.38	PANEL, R/FLR (PANEL HAS A SQUARE ARM, (DEALER TO CUT HOLE OUT ON INSIDE MARKED BY ETCHING WHEN USING ON 1992 AND PRIOR)
84–89	Y	14104991	LH	DISCON	PANEL, R/FLR CLOSEOUT
84–89	Y	14104992	RH	DISCON	PANEL, R/FLR CLOSEOUT
84–96	Y07	14043111	LH	12.87	PANEL, R/FLR PNL UPR FRT CLOSEOUT
84–96	Y07	14043112	RH	12.87	PANEL, R/FLR PNL UPR FRT CLOSEOUT
84–89	Y07	14043113	LH	DISCON	PANEL, RR COMPT CLOSEOUT
84–89	Y07	14043114	RH	DISCON	PANEL, RR COMPT CLOSEOUT

13.090 BRACKET – CLIP – HARNESS – MODULE – RETAINER – STRAP – TAPE – WIRE, Body Wiring

86–89	Y67	14100354	1	DISCON	BRACKET, BODY WRG HARN
84–90	Y	14066514	2	DISCON	BRACKET, DR ELEC WRG LWR RR
84–96	Y	14073415	2	.70	BRACKET, P/W DR WRG HARN
89	Y07 STEREO (UU8)	12085454	1	DISCON	HARNESS, BODY FRT WRG
89	Y67 STEREO (UM6)	12080872	1	DISCON	HARNESS, BODY FRT WRG
89	Y67 STEREO (UU8)	12080873	1	DISCON	HARNESS, BODY FRT WRG
90	Y STEREO (UU8)	12101487	1	DISCON	HARNESS, BODY FRT WRG
90	Y STEREO (UM6)	12101488	1	DISCON	HARNESS, BODY FRT WRG
90	Y67 STEREO (UM6)	12073787	1	DISCON	HARNESS, BODY FRT WRG
90	Y67 STEREO (UU8, U1F)	12073788	1	DISCON	HARNESS, BODY FRT WRG
91	Y07 STEREO CASSETTE (UM6)	12112419	1	DISCON	HARNESS, BODY FRT WRG
91	Y07 CASSETTE STEREO (UU8), CASSETTE/CD PLAYER (U1F)	12112460	1	DISCON	HARNESS, BODY FRT WRG
91	Y67 STEREO CASSETTE (UM6)	12090311	1	DISCON	HARNESS, BODY FRT WRG
91	Y67 CASSETTE STEREO (UU8), CASSETTE/CD PLAYER (U1F)	12090312	1	DISCON	HARNESS, BODY FRT WRG
92	Y07 CASSETTE STEREO (UU8), CASSETTE/CD PLAYER (U1F)	12125811	1	DISCON	HARNESS, BODY FRT WRG
92	Y07 STEREO CASSETTE (UM6)	12125812	1	DISCON	HARNESS, BODY FRT WRG

© 2000 GENERAL MOTORS SERVICE PARTS OPERATIONS

13.090 BRACKET – CLIP – HARNESS – MODULE – RETAINER – STRAP – TAPE – WIRE, Body Wiring(Con't)

92	Y67 STEREO CASSETTE (UM6) ...	12106537	1	DISCON	HARNESS, BODY FRT WRG .....
92	Y67 CASSETTE STEREO (UU8), CASSETTE/CD PLAYER (U1F)	12106538	1	DISCON	HARNESS, BODY FRT WRG .....
93	Y07	12141786	1	780.00	HARNESS, BODY FRT WRG .....
93	Y67	12130341	1	244.62	HARNESS, BODY FRT WRG .....
94	Y07 SIG & MKR LP (T90) (EXPORT)	12141786	1	780.00	HARNESS, BODY FRT WRG .....
94	Y07 (EXC SIG & MKR LP (T90) (EXPORT)	12141796	1	244.62	HARNESS, BODY FRT WRG .....
94	Y67 (EXC SIG & MKR LP (T90) (EXPORT)	12130355	1	361.50	HARNESS, BODY FRT WRG .....
95	Y07 (EXC SIG & MKR LP (T90) (EXPORT), SPECIAL PERFORMANCE PKG (ZR1)	12130403	1	244.62	HARNESS, BODY FRT WRG .....
95	Y07 SPECIAL PERFORMANCE PKG (ZR1)	12141796	1	244.62	HARNESS, BODY FRT WRG .....
95	Y67 (EXC SIG & MKR LP (T90) (EXPORT)	12130478	1	244.62	HARNESS, BODY FRT WRG .....
96	Y07 (EXC SIG & MKR LP (T90) (EXPORT)	12130458	1	361.50	HARNESS, BODY FRT WRG .....
96	Y67 (EXC SIG & MKR LP (T90) (EXPORT)	12130456	1	244.62	HARNESS, BODY FRT WRG .....
86–88	Y67 (EXC, EXPORT T89, T90)	12073839	1	DISCON	HARNESS, BODY RR WRG (WHEN SERVICING 1986–87 VEH, MUST ALSO USE (4) CONN 8918527) .....
87–88	Y07 (EXC TAIL & S/LP (T89) (EXPORT), SIG & MKR LP (T90) (EXPORT)	12067493	1	DISCON	HARNESS, BODY RR WRG (WHEN USED ON 1987 MODELS MUST USE 4 OF 8918527 SOCKETS) .....
87	Y67 STEREO (UM6, UM7) (EXC T89, T90 EXPORT)	12080872	1	DISCON	HARNESS, BODY RR WRG (MAY NEED TO USE CONN 12126015 & 12085482) .....
88	Y67 (EXC RDO, EXPORT T89, T90) .	12080872	1	DISCON	HARNESS, BODY RR WRG (MAY NEED TO USE CONN 12126015 & 12085482) .....
88	Y67 STEREO (UM6) (EXC EXPORT T89, T90)	12080872	1	DISCON	HARNESS, BODY RR WRG (MAY NEED TO USE CONN 12126015 & 12085482) .....
89–90	Y07	12067493	1	DISCON	HARNESS, BODY RR WRG .....
89–92	Y67	12073839	1	DISCON	HARNESS, BODY RR WRG .....
91–92	Y07 SPECIAL PERFORMANCE PKG (ZR1)	12067493	1	DISCON	HARNESS, BODY RR WRG .....
91–92	Y07 (EXC SPECIAL PERFORMANCE PKG (ZR1)	12090341	1	DISCON	HARNESS, BODY RR WRG . .....
93	Y (EXC SIG & MKR LP (T90) (EXPORT)	12130377	1	527.80	HARNESS, BODY RR WRG .....
94–95	Y07 (EXC SIG & MKR LP (T90) (EXPORT), SPECIAL PERFORMANCE PKG (ZR1)	12130357	1	244.62	HARNESS, BODY RR WRG .....
94–95	Y07 SPECIAL PERFORMANCE PKG (ZR1), (EXC SIG & MKR LP (T90) (EXPORT)	12130377	1	527.80	HARNESS, BODY RR WRG .....
94–96	Y67 (EXC SIG & MKR LP (T90) (EXPORT)	12130356	1	527.80	HARNESS, BODY RR WRG .....
96	Y07 (EXC SIG & MKR LP (T90) (EXPORT)	12130357	1	244.62	HARNESS, BODY RR WRG .....
84	Y STEREO (UU8)	12036116	1	DISCON	HARNESS, BODY WRG .....
84	Y STEREO (UM6, UM7), RDO UL5 (EXC EXPORT)	12036117	1	DISCON	HARNESS, BODY WRG .....
85	Y STEREO (UU8)	12049881	1	DISCON	HARNESS, BODY WRG .....
86	Y STEREO (UM6, UM7 (EXC EXPORT)	12048813	1	DISCON	HARNESS, BODY WRG .....

© 2000 GENERAL MOTORS SERVICE PARTS OPERATIONS

13.090 BRACKET – CLIP – HARNESS – MODULE – RETAINER – STRAP – TAPE – WIRE, Body Wiring(Con't)

86	Y07 STEREO (UU8)	12048812	1	DISCON	HARNESS, BODY WRG
86	Y67 (EXC STEREO UU8)	12055600	1	DISCON	HARNESS, BODY WRG
86	Y67 STEREO (UU8)	12055601	1	DISCON	HARNESS, BODY WRG
87–88	Y07 STEREO (UU8)	12073831	1	DISCON	HARNESS, BODY WRG
87	Y07 STEREO (UM6, UM7) (EXC EXPORT T89, T90)	12085453	1	DISCON	HARNESS, BODY WRG
87–88	Y67 STEREO (UU8)	12073830	1	DISCON	HARNESS, BODY WRG
88	Y STEREO (UM6) (EXC EXPORT T89, T90)	12085453	1	DISCON	HARNESS, BODY WRG
89	Y07 STEREO (UM6)	12085453	1	DISCON	HARNESS, BODY WRG
84–90	Y AQ9	14079490	2	DISCON	HARNESS, CUSH WRG
91	Y RECL FRT BKT ST (AQ9)	12506477	1	DISCON	HARNESS, D/SEAT ADJR WRG
91	Y RECL FRT BKT ST (AQ9)	14079481	2	DISCON	HARNESS, D/SEAT ADJR WRG
92–93	Y RECL FRT BKT ST (AQ9)	12520129	1	52.27	HARNESS, D/SEAT ADJR WRG
88	Y	12055829	LH	DISCON	HARNESS, ELEC DR WRG
88	Y	12055831	RH	DISCON	HARNESS, ELEC DR WRG
94–96	Y RECL FRT BKT ST (AQ9)	12141781	1	477.00	HARNESS, P/SEAT ADJR & LUMBAR CONT WRG (INCLUDES RELAY CTR)
84–91	Y RECL FRT BKT ST (AQ9)	14079481	2	DISCON	HARNESS, P/SEAT ADJR & RECL WRG
91	Y RECL FRT BKT ST (AQ9)	12506477	1	DISCON	HARNESS, P/SEAT ADJR WRG
92–93	Y RECL FRT BKT ST (AQ9)	12520129	1	52.27	HARNESS, P/SEAT ADJR WRG
84–85	Y (EXC ELEC DR LK AU3)	12016810	RH	DISCON	HARNESS, PWR WDO DR WRG
84–85	Y (EXC ELEC DR LK AU3)	12016811	LH	DISCON	HARNESS, PWR WDO DR WRG
84–85	Y ELEC DR LK (AU3)	12028821	LH	DISCON	HARNESS, PWR WDO DR WRG
84–85	Y ELEC DR LK (AU3)	12028822	RH	DISCON	HARNESS, PWR WDO DR WRG
86–87	Y	12069840	LH	DISCON	HARNESS, PWR WDO DR WRG
86–87	Y	12069841	RH	DISCON	HARNESS, PWR WDO DR WRG
93	Y67	12106561	1	34.26	HARNESS, R/CON DR LK RCVR ANT WRG
94–96	Y67 (EXC EUROPEAN PROVISIONS (VD1) (EXPORT), VE1 (EXPORT)	12106561	1	34.26	HARNESS, R/CON DR LK RCVR ANT WRG
88–96	Y	12073639	1	25.27	HARNESS, WSW & WSWA WRG
84–87	Y	12016892	1	DISCON	HARNESS, WSW MTR AND WSWA PUMP WRG
84–91	Y	12088529	1	22.29	MODULE, BODY WRG HARN (02.510) (IF USE IN PLC OF MDL W/DBL 4–WAY CONN, MUST ALSO ORDER 1–12116930 SINGLE ROW 4 WAY CONN)
91–92	Y07 STEREO CASSETTE (UM6), CASSETTE STEREO (UU8), CASSETTE/CD PLAYER (U1F)	12088529	1	22.29	MODULE, BODY WRG HARN (3 DIODE ARRAY) (02.510)
93	Y07	12088529	1	22.29	MODULE, BODY WRG HARN (3 DIODE ARRAY) (02.510)
94	Y	12088529	1	22.29	MODULE, BODY WRG HARN (3 DIODE ARRAY) (02.510)
84–96	Y	14073416	1	1.94	RETAINER, BODY WRG HARN
93–96	Y67	11515174	1	*1.50	RETAINER, BODY WRG HARN (4 1/4"X7 1/2") (TRIM AS REQ'D) (15.492)
89–93	Y	12020833	1	*.73	RETAINER, BODY WRG HARN CONN (GRAY) (1" LONG) (PUSH–IN) (02.559)
94	Y	20664092	2	*.40	RETAINER, F/TOP WRG HARN STRP (BLACK) (PUSH–IN) (01.276)
95–96	Y RECL FRT BKT ST (AQ9)	20664092	1	*.40	RETAINER, F/TOP WRG HARN STRP (BLACK) (PUSH–IN) (01.276)

© 2000 GENERAL MOTORS SERVICE PARTS OPERATIONS

13.090 BRACKET – CLIP – HARNESS – MODULE – RETAINER – STRAP – TAPE – WIRE, Body Wiring(Con't)

94–95	Y RECL FRT BKT ST (AQ9)	11515174	1	*1.50	RETAINER, P/SEAT LUMBAR CONT WRG HARN (4 1/4"X7 1/2") (TRIM AS REQ'D) (15.492) .....
88–89	Y07	03816659	1	*.87	STRAP, BODY FRT WRG HARN (08.965) .....
94–96	Y RECL FRT BKT ST (AQ9), IL3	10250231	1	6.32	STRAP, ST INFLR FEED WRG HARN (DRVR SEAT) .....
91–92	Y	12090348	1	DISCON	WIRE, CONV TOP .....
93	Y67	12106597	LH	DISCON	WIRE, CONV TOP .....
94–96	Y67	12130363	LH	59.12	WIRE, CONV TOP .....
91	Y	12106563	1	DISCON	WIRE, PWR ST DIODE JPR .....
90–92	Y67	12080875	1	DISCON	WIRE, R/CMPT LID LID REL .....
89	Y67	12080874	1	DISCON	WIRE, R/COMPT LID LK REL .....
	*EXPORT**********EXPORT**********EXPORT**********EXPORT**********EXPORT*				
94	Y07 SIG & MKR LP (T90) (EXPORT)	12130341	1	244.62	HARNESS, BODY FRT WRG .....
95	Y07 SIG & MKR LP (T90) (EXPORT)	12130402	1	244.62	HARNESS, BODY FRT WRG .....
95	Y67 SIG & MKR LP (T90) (EXPORT)	12130477	1	244.62	HARNESS, BODY FRT WRG .....
96	Y07 SIG & MKR LP (T90) (EXPORT)	12130457	1	244.62	HARNESS, BODY FRT WRG .....
96	Y67 SIG & MKR LP (T90) (EXPORT)	12130455	1	244.62	HARNESS, BODY FRT WRG .....
87–88	Y07 T89, T90 (EXPORT)	12055823	1	137.03	HARNESS, BODY RR WRG .....
93	Y07 SIG & MKR LP (T90) (EXPORT)	12130379	1	DISCON	HARNESS, BODY RR WRG .....
93	Y67 SIG & MKR LP (T90) (EXPORT)	12130380	1	526.79	HARNESS, BODY RR WRG .....
94–96	Y07 SIG & MKR LP (T90) (EXPORT)	12130335	1	526.79	HARNESS, BODY RR WRG .....
94–96	Y67 SIG & MKR LP (T90) (EXPORT)	12130336	1	527.80	HARNESS, BODY RR WRG .....
84–85	Y VB4, VD1, VE1, VT7 (EXPORT) ...	12043419	1	DISCON	HARNESS, BODY WRG .....
86	Y EXPORT (VB4, VD1, VE1, VT7) ...	12048814	1	DISCON	HARNESS, BODY WRG .....
87–88	Y07 T89, T90 (EXPORT)	12039375	1	DISCON	HARNESS, BODY WRG .....
94–96	Y RH RULE OF ROAD HDLP (T84) (EXPORT), LH RULE OF ROAD HDLP (T85) (EXPORT), SIG & MKR LP (T90) (EXPORT)	11515174	2	*1.50	RETAINER, BODY RR WRG HARN (4 1/4"X7 1/2") (TRIM AS REQ'D) (15.492) .....

© 2000 GENERAL MOTORS SERVICE PARTS OPERATIONS

MICROFICHE INDEX

GROUPS 10.000 THRU 11.000

FICHE 9 OF 11

GROUP	DESCRIPTION	STARTING GRID LOCATION PARTS	ILLUSTRATIONS
–	GENERAL INFORMATION	1–A2	1–G2
–	ALPHABETICAL INDEX	1–B13	N.A.
10.000	DOORS – REGULATORS – WINDSHIELD – WIPER – WASHER	9–A2	9–D2
11.000	REAR GLASS – SEAT PARTS – ADJUSTER	9–C2	9–I2
–	OUT OF FICHE CALLS	N.A.	9–L4

9–A1

CHEVROLET
BODY GROUP 10.000

DOORS – REGULATORS – WINDSHIELD – WIPER – WASHER

ALPHABETICAL INDEX

A

ABSORBER, Instrument Panel Pad 10.235 9–A21
ACTUATOR, Door Electric and Vacuum Locks 10.485 9–B5
ANTENNA, Door Electric and Vacuum Locks 10.485 9–B5
APPLIQUE, Floor Console 10.240 9–A23
ARM, Windshield Wiper Arm 10.147 9–A10
ARM, Windshield Wiper Motor Drive ... 10.151 9–A11

B

BARRIER, Door Inner Panel 10.355 9–B4
BEZEL, Door Lock Inside Handle Escutcheon (Trim Protector) 10.515 9–B7
BEZEL, Door Window 10.777 9–B14
BEZEL, Rear View Mirror 10.186 9–A15
BLADE, Windshield Wiper Blade 10.146 9–A9
BOLSTER, Instrument Panel Pad 10.235 9–A21
BOLT, Door Hinge 10.463 9–B5
BOLT, Door Opening 10.695 9–B11
BOLT, Floor Console Compartment Door 10.242 9–A26
BOLT, Front Door Window Glass Channel (Outer & Inner) 10.710 9–B12
BOLT, Front Door Window 10.685 9–B11
BOLT, Front Door Window 10.728 9–B14
BOLT, Instrument Panel Pad 10.235 9–A21
BOLT, Rear View Mirror 10.186 9–A15
BOLT, Side Door Lock 10.474 9–B5
BOLT, Windshield Sunshade 10.219 9–A18
BOLT, Windshield Washer 10.154 9–A11
BOLT, Windshield Wiper Motor 10.152 9–A11
BOLT, Windshield Wiper Transmission . 10.160 9–A12
BRACE, Instrument Panel Pad 10.235 9–A21
BRACE, Instrument Panel 10.230 9–A18
BRACKET, Door Electric and Vacuum Locks 10.485 9–B5
BRACKET, Floor Console 10.240 9–A23
BRACKET, Front Door Window 10.716 9–B14
BRACKET, Inside Rear View Mirror 10.187 9–A17
BRACKET, Instrument Panel Pad 10.235 9–A21
BRACKET, Instrument Panel Trim 10.252 9–A28
BRACKET, Instrument Panel 10.230 9–A18
BRACKET, Windshield Wiper Transmission 10.159 9-A12
BUMPER, Door 10.587 9–B10
BUMPER, Floor Console Compartment Door 10.242 9–A26
BUMPER, Instrument Panel Compartment Door Lock and Console Compartment Door Lock ... 10.268 9–B3
BUMPER, Instrument Panel Compartment Door 10.263 9–A28
BUSHING, Door Hinge 10.464 9–B5
BUSHING, Front Door Window 10.685 9–B11
BUSHING, Front Door Window 10.716 9–B14

C

CAP, Windshield Washer 10.154 9–A11
CARPET, Instrument Panel Pad 10.235 9–A21
CHANNEL, Front Door Window Glass .. 10.701 9–B12
CLIP, Door Inside Locking Rod 10.565 9–B9
CLIP, Door Lock Inside Handle 10.512 9–B7
CLIP, Floor Console 10.240 9–A23
CLIP, Instrument Panel Pad 10.235 9–A21
CLIP, Instrument Panel Trim 10.252 9–A28
CLIP, Windshield Sunshade 10.219 9–A18
COMPARTMENT, Instrument Panel 10.260 9–A28
CONNECTOR, Door Electric and Vacuum Locks 10.485 9–B5
CONNECTOR, Door Lock (Keyless Entry) 10.526 9–B8
CONNECTOR, Door Lock Bellcrank ... 10.506 9–B7
CONNECTOR, Door Lock Remote Control 10.500 9–B7
CONNECTOR, Door Window 10.777 9–B14
CONNECTOR, Front Door Window Regulator 10.783 9–B15
CONNECTOR, Inside Rear View 10.185 9–A12
CONNECTOR, Instrument Panel Compartment Lamp 10.275 9–B3
CONNECTOR, Rear View Mirror 10.186 9–A15
CONNECTOR, Windshield Washer Pump 10.153 9–A11
CONNECTOR, Windshield Washer 10.154 9–A11
CONNECTOR, Windshield Washer 10.155 9–A12
CONNECTOR, Windshield Wiper Control 10.163 9–A12
CONNECTOR, Windshield Wiper Motor 10.150 9–A10
CONSOLE, Floor Console 10.240 9–A23

© GENERAL MOTORS SERVICE PARTS OPERATIONS–CHEVROLET–14Y

CONTACT, Windshield Wiper Motor 10.150 9–A10
CONTAINER KIT, Windshield Washer .. 10.154 9–A11
CONTAINER, Windshield Washer 10.154 9–A11
CONTROL, Inside Rear View 10.185 9–A12
COVER, Door Lock Inside Handle Escutcheon (Trim Protector) 10.515 9–B7
COVER, Floor Console Compartment Door 10.242 9–A26
COVER, Floor Console 10.240 9–A23
COVER, Instrument Panel Opening 10.256 9–A28
COVER, Windshield Sunshade 10.219 9–A18
COVER, Windshield Wiper Motor 10.150 9–A10
CYLINDER KIT, Door Outside Lock 10.550 9–B8
CYLINDER KIT, Instrument Panel Compartment Door Lock 10.266 9–B2
CYLINDER, Instrument Panel Compartment Door Lock 10.266 9–B2

D

DECAL, Windshield Glass 10.027 9–A9
DEFLECTOR, Inside Rear View 10.185 9–A12
DOOR, Floor Console Compartment Door 10.242 9–A26
DOOR, Front Door 10.351 9–B3
DOOR, Instrument Panel Compartment Door 10.261 9–A28

E

ELBOW, Windshield Washer 10.155 9–A12
EMBLEM, Floor Console 10.240 9–A23
ESCUTCHEON, Door Electric and Vacuum Locks 10.485 9–B5
EXTENSION, Door Opening 10.695 9–B11

F

FASTENER, Instrument Panel Trim 10.252 9–A28
FILLER, Floor Console 10.240 9–A23
FILTER, Door Lock (Keyless Entry) 10.526 9–B8
FILTER, Windshield Washer 10.154 9–A11

G

GASKET, Door Outside Lock 10.550 9–B8
GASKET, Windshield Washer Pump 10.153 9–A11
GASKET, Windshield Wiper Motor 10.152 9–A11
GROMMET KIT, Windshield Wiper Motor 10.152 9–A11
GUARD, Door Opening 10.695 9–B11
GUARD, Front Door Window Glass Channel (Outer & Inner) 10.710 9–B12
GUIDE, Door Inside Locking Rod 10.565 9–B9
GUIDE, Front Door Window 10.685 9–B11

H

HANDLE, Door Lock Inside Handle 10.512 9–B7
HANDLE, Door Outside Handle 10.527 9–B8
HINGE, Door Hinge 10.450 9–B5
HINGE, Floor Console Compartment Door 10.242 9–A26
HINGE, Front Door Lower Hinge 10.454 9–B5
HINGE, Instrument Panel Compartment Door 10.262 9–A28
HOLDER, Floor Console 10.240 9–A23
HOLDER, Front Door Window Regulator 10.783 9–B15
HOUSING, Floor Console Compartment Door 10.242 9–A26

I

INSULATOR, Door Inner Panel 10.355 9–B4
INSULATOR, Door Inside Locking Rod . 10.565 9–B9
INSULATOR, Door Opening 10.695 9–B11
INSULATOR, Front Door Window Regulator 10.783 9–B15
INSULATOR, Front Door Window 10.685 9–B11
INSULATOR, Inside Rear View 10.185 9–A12
INSULATOR, Instrument Panel Pad 10.235 9–A21
INSULATOR, Instrument Panel 10.230 9–A18
INSULATOR, Rear View Mirror 10.186 9–A15
INSULATOR, Windshield Garnish Molding 10.056 9–A9

K

KNOB, Door Inside Locking Rod 10.559 9–B9
KNOB, Rear View Mirror 10.186 9–A15

L

LAMP, Door Window 10.777 9–B14
LAMP, Instrument Panel Compartment Lamp 10.275 9–B3
LAMP, Rear View Mirror 10.186 9–A15
LATCH, Instrument Panel Compartment Door Lock and Console Compartment Door Lock 10.268 9–B3
LENS, Instrument Panel Compartment Lamp 10.275 9–B3
LENS, Sunshade Vanity Mirror 10.195 9–A17
LOCATOR, Door Lock Striker 10.571 9–B10
LOCK KIT, Instrument Panel Compartment Door Lock and Console Compartment Door Lock ... 10.268 9–B3
LOCK PKG, Instrument Panel Compartment Door Lock 10.266 9–B2
LOCK, Front Side Door 10.470 9–B5
LOCK, Instrument Panel Compartment Door Lock 10.266 9–B2

M

MAT, Floor Console 10.240 9–A23
MIRROR KIT, Inside Rear View 10.185 9–A12
MIRROR, Inside Rear View 10.185 9–A12
MIRROR, Sunshade Vanity Mirror 10.195 9–A17
MODULE, Door Window 10.777 9–B14
MOLDING, Windshield Garnish Molding 10.051 9–A9
MOLDING, Windshield Reveal Molding . 10.093 9–A9
MOTOR KIT, Inside Rear View 10.185 9–A12
MOTOR, Front Door Window Regulator 10.783 9–B15
MOTOR, Rear View Mirror 10.186 9–A15
MOTOR, Windshield Wiper Motor 10.150 9–A10

N

NUT, Door Electric and Vacuum Locks . 10.485 9–B5
NUT, Floor Console 10.240 9–A23
NUT, Front Door Window 10.716 9–B14
NUT, Front Door Window 10.728 9–B14
NUT, Instrument Panel Compartment Door Lock 10.266 9–B2
NUT, Instrument Panel 10.230 9–A18
NUT, Rear View Mirror 10.186 9–A15

P

PAD, Instrument Panel Pad 10.235 9–A21
PANEL, Door Opening 10.695 9–B11
PANEL, Floor Console 10.240 9–A23
PANEL, Instrument Panel Compartment Door 10.261 9–A28
PANEL, Instrument Panel Trim 10.252 9–A28
PANEL, Instrument Panel 10.230 9–A18
PAWL, Door Outside Lock Cylinder 10.551 9–B8
PIN, Door Hinge 10.466 9–B5
PIN, Door Lock Striker 10.570 9–B10
PIN, Floor Console Compartment Door . 10.242 9–A26
PLATE, Door Electric and Vacuum Locks 10.485 9–B5
PLATE, Door Lock Striker 10.571 9–B10
PLATE, Floor Console 10.240 9–A23
PLATE, Instrument Panel Trim 10.252 9–A28
PLATE, Instrument Panel 10.230 9–A18
PLATE, Instrument Panel 10.254 9–A28
PLUG, Door 10.587 9–B10
PLUG, Windshield Wiper Motor 10.150 9–A10
PROTECTOR, Floor Console 10.240 9–A23
PUMP, Windshield Washer Pump 10.153 9–A11

R

RACK, Front Door Window Regulator .. 10.783 9–B15
RAMP, Windshield Wiper Arm 10.147 9–A10
RECEIVER, Door Electric and Vacuum Locks 10.485 9–B5
REGULATOR, Front Door Window Regulator 10.783 9–B15
REINFORCEMENT, Door Lock Striker .. 10.571 9–B10
REINFORCEMENT, Instrument Panel Pad 10.235 9–A21
REINFORCEMENT, Instrument Panel .. 10.230 9–A18
REINFORCEMENT, Windshield Wiper Transmission 10.159 9–A12
RETAINER, Door Electric and Vacuum Locks 10.485 9–B5
RETAINER, Door Inside Locking Rod .. 10.565 9–B9
RETAINER, Door Lock Cylinder 10.553 9–B9
RETAINER, Door Opening 10.695 9–B11
RETAINER, Door Weatherstrip 10.694 9–B11
RETAINER, Floor Console 10.240 9–A23
RETAINER, Front Door Window Glass Channel (Outer & Inner) 10.710 9–B12
RETAINER, Instrument Panel Compartment Door Lock and Console Compartment Door Lock ... 10.268 9–B3
RETAINER, Instrument Panel 10.230 9–A18
RETAINER, Rear View Mirror 10.186 9–A15
RETAINER, Windshield Sunshade 10.219 9–A18
RETAINER, Windshield Washer 10.156 9–A12
RING, Door Outside Lock Cylinder 10.551 9–B8
RIVET, Door Electric and Vacuum Locks 10.485 9–B5
RIVET, Door Opening 10.695 9–B11
ROD, Door Inside Locking 10.563 9–B9

S

SEAL, Door Lock Striker 10.571 9–B10
SEAL, Instrument Panel Pad 10.235 9–A21
SEAL, Windshield 10.092 9–A9
SEALING STRIP, Door Opening 10.695 9–B11
SEALING STRIP, Front Door Window Glass Channel (Outer & Inner) 10.710 9–B12
SHIM, Instrument Panel 10.230 9–A18
SHUTTER, Door Outside Lock Cylinder 10.552 9–B8
SPACER, Floor Console 10.240 9–A23
SPRING, Door Lock Cylinder 10.553 9–B9
SPRING, Door Outside Lock Cylinder .. 10.552 9–B8
SPRING, Floor Console Compartment Door 10.242 9–A26
SPRING, Instrument Panel Compartment Door Lock 10.266 9–B2
SPRING, Side Door Lock 10.474 9–B5
SPRING, Windshield Sunshade 10.219 9–A18
STABILIZER, Front Door Window 10.685 9–B11
STOP, Front Door Window 10.716 9–B14
STOP, Windshield Wiper Arm 10.147 9–A10
STOP, Windshield Wiper Blade 10.146 9–A9
STRAP, Instrument Panel 10.260 9–A28
STRIKER, Door Lock Striker 10.569 9–B10
STRIKER, Instrument Panel Compartment Door Lock and Console Compartment Door Lock ... 10.268 9–B3
STUD, Front Door Window 10.685 9–B11
STUD, Inside Rear View 10.185 9–A12
SUNSHADE KIT, Windshield Sunshade . 10.203 9–A17
SUNSHADE, Windshield Sunshade 10.203 9–A17
SUPPORT, Instrument Panel 10.230 9–A18

SUPPORT, Windshield Sunshade 10.219 9–A18
SWITCH, Door Electric and Vacuum Locks 10.485 9–B5
SWITCH, Door Window 10.777 9–B14
SWITCH, Instrument Panel Compartment Lamp 10.275 9–B3
SWITCH, Rear View Mirror 10.186 9–A15
SWITCH, Windshield Wiper Control 10.163 9–A12
SWITCH, Windshield Wiper Motor 10.150 9–A10

T

TRANSMISSION, Windshield Wiper Transmission 10.159 9–A12
TRANSMITTER, Door Electric and Vacuum Locks 10.485 9–B5
TRAY, Floor Console Compartment Door 10.242 9–A26
TRUNNION, Inside Rear View 10.185 9–A12
TUMBLER, Door Lock Cylinder 10.553 9–B9
TUMBLER, Instrument Panel Compartment Door Lock 10.266 9–B2

W

WASHER, Door Lock Striker 10.571 9–B10
WASHER, Door Outside Lock Cylinder . 10.551 9–B8
WASHER, Front Door Window 10.685 9–B11
WASHER, Windshield Washer 10.154 9–A11
WEATHERSTRIP, Door Weatherstrip ... 10.694 9–B11
WEATHERSTRIP, Front Door Window Glass Channel (Outer & Inner) 10.710 9–B12
WINDOW, Front Door Window 10.681 9–B10
WINDSHIELD, Windshield Glass 10.027 9–A9
WIPER, Windshield Wiper Blade 10.146 9–A9

CHART INDEX

GROUP 10 GRID

ILLUS INDEX (GRP 10) 9–A8

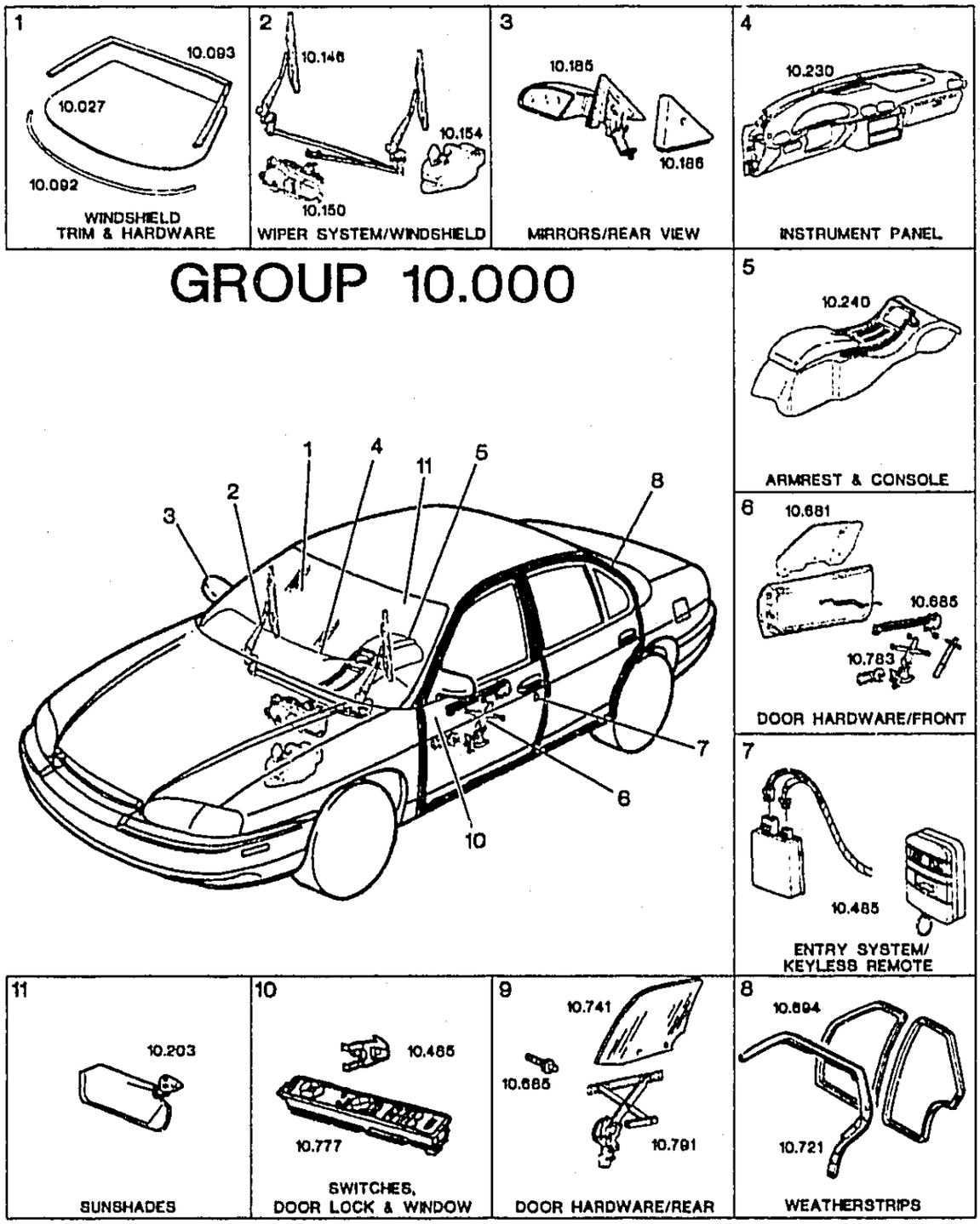
1
10.093
10.027
10.092
WINDSHIELD TRIM & HARDWARE
2
10.146
10.154
10.150
WIPER SYSTEM/WINDSHIELD
3
10.185
10.186
MIRRORS/REAR VIEW
4
10.230
INSTRUMENT PANEL
GROUP 10.000
5
10.240
ARMREST & CONSOLE
6
10.681
10.685
10.783
DOOR HARDWARE/FRONT
7
10.485
ENTRY SYSTEM/ KEYLESS REMOTE
1
2
3
4
5
6
7
8
10
11
11
10.203
SUNSHADES
10
10.465
10.777
SWITCHES, DOOR LOCK & WINDOW
9
10.741
10.685
10.791
DOOR HARDWARE/REAR
8
10.694
10.721
WEATHERSTRIPS

10.027 DECAL – WINDSHIELD, Windshield Glass

95	Y INDY PACE CAR (Z4Z)	10278406	1	52.60	DECAL, W/S NA	10–D17,8
84–96	Y (EXC EUROPEAN WDO GLAZING (A26) (EXPORT) ..	10172302	1	744.60	WINDSHIELD	9–D4,1
90–92	Y SPECIAL PERFORMANCE PKG (ZR1)	10145993	1	1043.20	WINDSHIELD	9–D4,1
90–95	Y (EXC SPECIAL PERFORMANCE PKG (ZR1)	10172302	1	744.60	WINDSHIELD	9–D4,1
93–95	Y SPECIAL PERFORMANCE PKG (ZR1)	10172489	1	963.90	WINDSHIELD	9–D4,1
	*EXPORT**********EXPORT**********EXPORT**********EXPORT**********EXPORT*					
94–96	Y EUROPEAN WDO GLAZING (A26) (EXPORT)	10210801	1	1017.00	WINDSHIELD	9–D4,1

10.051 MOLDING, Windshield Garnish Molding

84–89	Y	14049297	LH	8.70	MOLDING, W/S LWR COR GARN	9–H2,31
84–89	Y	14049298	RH	8.70	MOLDING, W/S LWR COR GARN	9–H2,31
84–89	Y	14047447	LH	32.50	MOLDING, W/S SI GARN	9–H2,2
84–89	Y	14047448	RH	32.50	MOLDING, W/S SI GARN	9–H2,2
90–96	Y	10265823	RH	39.00	MOLDING, W/S SI GARN	9–H5,32
90–96	Y	10265824	LH	39.00	MOLDING, W/S SI GARN	9–H5,32
84–85	Y	14046699	1	DISCON	MOLDING, W/S UPR GARN	
86	Y07 (2ND DESIGN)	10104016	1	39.00	MOLDING, W/S UPR GARN (W/2 12MM HOLES 95MM FROM EDGE	9–H2,1
86	Y07 (1ST DESIGN)	14046699	1	DISCON	MOLDING, W/S UPR GARN (W/2 12MM HOLES 140MM FROM EDGE	
86	Y67	10104016	1	39.00	MOLDING, W/S UPR GARN	9–H2,1
87–88	Y	10104016	1	39.00	MOLDING, W/S UPR GARN	9–H2,1
89–96	Y	10236001	1	35.00	MOLDING, W/S UPR GARN	9–H2,1

10.056 INSULATOR, Windshield Garnish Molding

90–96	Y	3999572	4	4.98	INSULATOR, W/S SI UPR G/MLDG (09.260)	9–H5,33

10.092 SEAL, Windshield

84–96	Y	10236368	1	17.30	SEAL, W/S (BLACK)	9–D4,2
87–96	Y	3999572	5	4.98	SEAL, W/S INR LWR FRM (09.260) .	9–F2,85

10.093 MOLDING, Windshield Reveal Molding

86–92	Y	10045695	2	9.30	MOLDING, W/S (LWR CORNERS) .	10–D5,16
93–96	Y	10045695	2	9.30	MOLDING, W/S	10–D5,16
84–96	Y	14049031	LH	30.60	MOLDING, W/S SI RVL	10–D5,2
84–96	Y	14049032	RH	30.60	MOLDING, W/S SI RVL	10–D5,2
84–96	Y	14049033	1	37.50	MOLDING, W/S UPR RVL (INCLS UPR WEATHER STRIP RET) ...	10–D5,[illegible]

10.146 BLADE – STOP – WIPER, Windshield Wiper Blade

84–87	Y (EXC EUROPEAN PROVISIONS (VD1) (EXPORT)	12363800	2	13.52	BLADE, WSW (BLACK) (ANCO 20") (USE INSERT 14069842)	9–D9,1
84–87	Y	22110158	2	11.31	BLADE, WSW (TRICO) (BLACK–18")	9–D11,1
88–94	Y (EXC W/S ARM & BLADE (C18)	12363800	2	13.52	BLADE, WSW (BLACK) (ANCO 20", USE W/INSERT 14069842)	9–D9,1
88–94	Y	12481188	2	13.52	BLADE, WSW (20" ARCTIC BLADE)	9–D11,1
88–91	Y W/S ARM & BLADE (C18) .	22110158	2	11.31	BLADE, WSW (PIN TYPE)	9–D11,1

© 2000 GENERAL MOTORS SERVICE PARTS OPERATIONS–CHEVROLET–14Y

10.146 BLADE – STOP – WIPER, Windshield Wiper Blade (Con't)

92–93	Y W/S ARM & BLADE (C18) (EXPORT), (EXC SPECIAL PERFORMANCE PKG (ZR1)	22110158	2	11.31	BLADE, WSW (PIN TYPE)	9–D11,1
94	Y W/S ARM & BLADE (C18) (EXPORT)	22110158	2	11.31	BLADE, WSW (PIN TYPE)	9–D11,1
95–96	Y	22154985	LH	14.59	BLADE, WSW	9–D11,1
95–96	Y	22155368	RH	21.90	BLADE, WSW	9–D11,1
84–91	Y	10137723	1	3.26	STOP, WSW BLADE (10.147)	9–D9,17
92–96	Y	14064572	1	3.52	STOP, WSW BLADE (10.147)	9–D11,17
84–87	Y	12399988	AR	*7.40	WIPER, W/S (TRICO–18")	9–D11,1
88–94	Y W/S ARM & BLADE (C18) .	12399988	AR	*7.40	WIPER, W/S (ANCO–18") (BLACK)	9–D11,1
88–94	Y (EXC W/S ARM & BLADE (C18)	12533416	2	7.06	WIPER, W/S (TRICO–20")	9–D9,1
84–87	Y	12533416	2	7.06	WIPER, WSW (BLACK) (TRICO–20")	9–D9,1

10.147 ARM – RAMP – STOP, Windshield Wiper Arm

84–94	Y	22144264	RH	51.85	ARM, WSW	9–D9,4
84–94	Y	22144265	LH	51.85	ARM, WSW (INCLD NOZZLE) ...	9–D9,4
95	Y W/S ARM & BLADE (C18) .	10288070	LH	20.11	ARM, WSW (INCLS NOZZLE)	9–D11,4
95–96	Y (EXC W/S ARM & BLADE (C18)	10288071	LH	20.91	ARM, WSW (1 PC HOSE GUARD)	9–D11,4
95–96	Y	10288072	RH	20.91	ARM, WSW (1 PC HOSE GUARD)	9–D11,4
95–96	Y (EXC W/S ARM & BLADE (C18)	22154987	LH	20.91	ARM, WSW (2 PC HOSE GUARD)	9–D11,4
96	Y W/S ARM & BLADE (C18) .	10288070	LH	20.11	ARM, WSW (HOSE GUARD ONE PC) (INCLS NOZZLE)	9–D11,4
84–94	Y	14046751	2	5.25	RAMP, WSW ARM PARK (10.130)	9–D9,9
95–96	Y	10272127	2	5.20	RAMP, WSW ARM PARK	9–D11,9
84–91	Y	14064572	1	3.52	STOP, WSW ARM	9–D9,19
92–96	Y	10137723	1	3.26	STOP, WSW ARM	9–D11,19

10.150 CONNECTOR – CONTACT – COVER – MOTOR – PLUG – SWITCH, Windshield Wiper Motor

90–92	Y	12117269	1	18.92	CONNECTOR, MOT–WSW (3–WAY F) (W/LEADS) (AC–DELCO #PT442)	
92–96	Y	12020014	1	*1.33	CONNECTOR, MOT–WSW (BLACK) (3–WAY F) (09.647) (AC–DELCO #12020014)	
93	Y	12101855	1	19.95	CONNECTOR, MOT–WSW (2–WAY F) (W/LEADS) (W/SEAL) (02.535) (AC–DELCO #PT247)	
93–96	Y	12117339	1	26.83	CONNECTOR, MOT–WSW (3–WAY F) (W/LEADS) (AC–DELCO #PT472)	
95	Y	12101855	1	19.95	CONNECTOR, MOT–WSW (2–WAY F) (W/LEADS) (W/SEAL) (02.535) (AC–DELCO #PT247)	
84–96	Y	22054236	1	3.65	CONTACT, WSW MOT PARK SW (AC–DELCO #22054236)	9–D14,3
84–96	Y	22101362	1	128.60	COVER, WSW MOT (10.151) (AC–DELCO #22101362)	9–D14,1
84–96	Y	22072790	1	233.25	MOTOR, WSW (LESS C/ARM & CVR) (3–TERM CONN, USE THE WIRE HARN TO REPLC 2–TERM) (AC–DELCO #22072790)	9–D9,15

© 2000 GENERAL MOTORS SERVICE PARTS OPERATIONS–CHEVROLET–14Y

10.150 CONNECTOR – CONTACT – COVER – MOTOR – PLUG – SWITCH, Windshield Wiper Motor (Con't)

84–93	Y	22039499	2	.94	PLUG, WSWA MOT TERM CONN	
84–96	Y	22063283	1	54.75	SWITCH, WSW MOT PARK (AC–DELCO #22063283)	9–D14,2

10.151 ARM, Windshield Wiper Motor Drive

84–90	Y	22155286	1	18.28	ARM, WSW MOT CRK (AC–DELCO #22155286)	9–D14,5
91	Y	22155286	1	18.28	ARM, WSW MOT CRK (USED ONLY W/MOTOR STMPD 5049161) (AC–DELCO #22155286)	9–D14,5
92–96	Y	22155286	1	18.28	ARM, WSW MOT CRK (AC–DELCO #22155286)	9–D14,5

10.152 BOLT – GASKET – GROMMET KIT, Windshield Wiper Motor

84–96	Y	10132913	3	.68	BOLT, WSW MOT (10.252)	9–D9,20
84–96	Y	20489125	1	1.48	GASKET, WSW MOT	9–D9,16
84–92	Y	22121217	1	6.95	GROMMET KIT, WSW MOT (**VPI 1–877–846–8243)	

10.153 CONNECTOR – GASKET – PUMP, Windshield Washer Pump

86–91	Y	12117391	1	41.60	CONNECTOR, MOT–WSWA PUMP (W/LEADS) (09.744) (AC–DELCO #PT523)	
91	Y	12085485	1	18.11	CONNECTOR, MOT–WSWA PUMP (2–WAY M) (W/LEADS) (02.535) (AC–DELCO #PT107)	
92–96	Y	12102747	1	21.07	CONNECTOR, MOT–WSWA PUMP (BLACK) (2–WAY F) (W/LEADS) (03.670) (AC–DELCO #PT374)	
84–91	Y	22049510	1	.55	GASKET, WSWA PUMP VLV (AC–DELCO #22049510)	9–D9,25
84–91	Y	12355775	1	34.23	PUMP, WSWA (W/O FILTER NUT) (AC–DELCO #12355775)	9–D9,24
92–96	Y	22111432	1	36.92	PUMP, WSWA (AC–DELCO #22111432)	9–D11,24

10.154 BOLT – CAP – CONNECTOR – CONTAINER – CONTAINER KIT – FILTER – WASHER, Windshield Washer

94–96	Y	22538027	3	.59	BOLT, WSWA SOLV CNTNR (M6.3X1.81X25) (07.833)	
84–96	Y	12363335	1	4.06	CAP, WSWA SOLV CNTNR (16.065) (AC–DELCO #12363335)	9–D9,29
86–91	Y	12117390	1	25.47	CONNECTOR, SW–WSWA SOLV LVL (W/LEADS) (09.744) (AC–DELCO #PT522)	
92–95	Y	22110415	1	31.62	CONTAINER KIT, WSWA SOLV	9–D11,27
96	Y	22110415	1	31.62	CONTAINER KIT, WSWA SOLV	9–D11,27
84–91	Y	22039451	1	14.79	CONTAINER, WSWA SOLV (MAY REQUIRE SEAL 22062337)	9–D9,27
84–91	Y	22048299	1	2.00	FILTER, WSWA SOLV (W/NUT) (AC–DELCO #22048299)	9–D9,28
92–96	Y	22063292	1	9.96	FILTER, WSWA SOLV (AC–DELCO #22063292)	9–D11,2
87–93	Y	14016675	3	1.10	WASHER, WSWA SOLV CNTNR (.281 I/D) (01.240)	

© 2000 GENERAL MOTORS SERVICE PARTS OPERATIONS–CHEVROLET–14Y

10.155 CONNECTOR – ELBOW, Windshield Washer

84–96	Y	14057582	1	1.22	CONNECTOR, WSWA NOZ HOSE (ELBOW)	9–D9,10
84–96	Y	14057583	1	*1.22	CONNECTOR, WSWA NOZ HOSE (TEE)	9–D9,21
92–96	Y	22094772	1	*.78	CONNECTOR, WSWA NOZ HOSE (10.154)	9–D11,3
92–96	Y	22094774	1	*1.48	ELBOW, WSWA NOZ HOSE (10.154)	9–D11,29

10.156 RETAINER, Windshield Washer

94–96	Y	10268251	2	.18	RETAINER, WSWA NOZ HOSE CONN (10.155)	9–D11,5

10.159 BRACKET – REINFORCEMENT – TRANSMISSION, Windshield Wiper Transmission

84–96	Y	22039698	2	8.77	BRACKET, WSW ARM SHF (AC–DELCO #22039698)	9–D9,7
84–96	Y	14047426	2	5.51	REINFORCEMENT, WSW TRANS (10.160)	9–D9,12
84–96	Y	22038692	RH	64.14	TRANSMISSION, WSW (AC–DELCO #22038692)	9–D9,13
84–96	Y	22038693	LH	70.77	TRANSMISSION, WSW (AC–DELCO #22038693)	9–D9,13

10.160 BOLT, Windshield Wiper Transmission

84–96	Y	14100225	6	1.30	BOLT, WSW TRANS REINF (6.60X1.69X18)	9–D9,11

10.163 CONNECTOR – SWITCH, Windshield Wiper Control

86–91	Y	12117388	1	25.47	CONNECTOR, SW–WSW (W/LEADS) (09.744) (AC–DELCO #PT520)	
94–95	Y	12102608	1	DISCON	CONNECTOR, SW–WSW (7–WAY F) (16.067)	
94–95	Y	12126431	1	47.58	CONNECTOR, SW–WSW (7–WAY F) (W/LEADS) (W/O CLIP) (AC–DELCO #PT702)	
84–89	Y	10045832	1	40.56	SWITCH, WSW & WSWA (FOR SOME VEH IT WILL BE NECESSARY TO CUT LEADS FROM BOTH SWITCHES AND SPLICE LEADS) (AC–DELCO #D6371A)	9–D9,2
91–93	Y	26015119	1	142.80	SWITCH, WSW & WSWA (02.459)	7–F13,23
94–96	Y	26036071	1	18.26	SWITCH, WSW & WSWA (AC–DELCO #D6323D)	7–F21,23

10.185 CONNECTOR – CONTROL – DEFLECTOR – INSULATOR – MIRROR – MIRROR KIT – MOTOR KIT – STUD – TRUNNION, Inside Rear View

NOTE: WHEN INDIVIDUAL SERVICE MIRRORS ARE NOT LISTED, REFER TO THE ACCESSORY SECTION LOCATED IN THE FRONT OF THE CATALOG FOR THE COMPLETE MIRROR PACKAGES.

90–92	Y 4–SPD A/TRANS (MD8), 6–SPD M/TRANS (ML9), A/C MAN CONT (C60)	12085481	1	17.56	CONNECTOR, INLINE–TO I/S RR VIEW MIR (BLACK) (2–WAY M) (W/LEADS) (02.535) (AC–DELCO #PT103)	
90–93	Y	12101866	1	17.78	CONNECTOR, INLINE–TO I/S RR VIEW MIR (3–WAY M) (W/LEADS) (02.535) (AC–DELCO #PT258)	

© 2000 GENERAL MOTORS SERVICE PARTS OPERATIONS–CHEVROLET–14Y

10.185 CONNECTOR – CONTROL – DEFLECTOR – INSULATOR – MIRROR – MIRROR KIT – MOTOR KIT – STUD – TRUNNION, Inside Rear View (Con't)

96	Y	12085481	2	17.56	**CONNECTOR**, INLINE–TO I/S RR VIEW MIR (BLACK) (2–WAY M) (W/LEADS) (02.535) (AC–DELCO #PT103)	
96	Y	12101866	1	17.78	**CONNECTOR**, INLINE–TO I/S RR VIEW MIR (3–WAY M) (W/LEADS) (02.535) (AC–DELCO #PT258)	
90–96	Y	12117025	LH	21.82	**CONNECTOR**, MOT–O/S RR VIEW MIR (BLACK) (3–WAY F) (W/LEADS) (02.383) (AC–DELCO #PT420)	
92	Y	12101822	1	32.35	**CONNECTOR**, MOT–O/S RR VIEW MIR (GRAY) (8–WAY F) (W/LEADS) (02.535) (AC–DELCO #PT214)	
92	Y	12102747	LH	21.07	**CONNECTOR**, MOT–O/S RR VIEW MIR (BLACK) (2–WAY F) (W/LEADS) (03.670) (AC–DELCO #PT374)	
84–86	Y07 ELEC R/CON HTD MIR (DL8)	16500951	1	87.50	**CONTROL**, O/S RR VIEW MIR REM	9–D17,9
87–89	Y07	16509990	1	DISCON	**CONTROL**, O/S RR VIEW MIR REM	
86–87	Y67 ELEC SPORT MIR (DG7)	10077387	LH	20.70	**DEFLECTOR**, O/S RR VIEW MIR .	9–D17,13
86–87	Y67 ELEC SPORT MIR (DG7)	10077388	RH	20.70	**DEFLECTOR**, O/S RR VIEW MIR .	9–D17,13
87	Y07 ELEC SPORT MIR (DG7)	10077387	LH	20.70	**DEFLECTOR**, O/S RR VIEW MIR .	9–D17,13
87	Y07 ELEC SPORT MIR (DG7)	10077388	RH	20.70	**DEFLECTOR**, O/S RR VIEW MIR .	9–D17,13
88–96	Y67 ELEC R/CON HTD MIR (DL8)	10077387	LH	20.70	**DEFLECTOR**, O/S RR VIEW MIR AIR	9–D17,13
88–96	Y67 ELEC R/CON HTD MIR (DL8)	10077388	RH	20.70	**DEFLECTOR**, O/S RR VIEW MIR AIR	9–D17,13
94–95	Y	3999572	AR	4.98	**INSULATOR**, O/S RR VIEW MIR WRG HARN CONN (09.260) ...	
96	Y	3999572	2	4.98	**INSULATOR**, O/S RR VIEW MIR WRG HARN CONN (09.260) ...	
84	Y ELEC R/CON HTD MIR (DL8), (2ND DES)	10065262	RH	117.30	**MIRROR KIT**, O/S RR VIEW (PWR PKG REPL) (LETTER A STAMPED ON INSIDE MIRROR HOUSING ON LOWER SURFACE TOWARD OUTER EDGE)	9–D19,14
84	Y	10065263	LH	DISCON	**MIRROR KIT**, O/S RR VIEW (PWR PKG REPL)	
84	Y (EXC ELEC HTD MIR DL8) (2ND DES)	10065264	RH	115.70	**MIRROR KIT**, O/S RR VIEW (PWR PKG REPL) (LETTER A STAMPED ON INSIDE MIRROR HOUSING ON LOWER SURFACE TOWARD OUTER EDGE)	9–D19,18
85–87	Y (EXC ELEC R/CON HTD MIR (DL8)	10065263	LH	DISCON	**MIRROR KIT**, O/S RR VIEW (PWR PKG REPL)	
85–87	Y (EXC ELEC R/CON HTD MIR (DL8)	10065264	RH	115.70	**MIRROR KIT**, O/S RR VIEW (PWR PKG REPL)	9–D19,18
88–96	Y ELEC R/CON HTD MIR (DL8)	12522265	LH	40.80	**MIRROR KIT**, O/S RR VIEW (W/CASE)	9–D19,17
88–96	Y ELEC R/CON HTD MIR (DL8)	12522266	RH	40.80	**MIRROR KIT**, O/S RR VIEW (W/CASE)	9–D19,17
84	Y ELEC HTD MIR (DL8) (2ND DES)	10065261	LH	117.30	**MIRROR KIT**, O/S RR VIEW MIR & PWR PKG REPL (LETTER A STAMPED ON INSIDE MIRROR HOUSING ON LOWER SURFACE TOWARD OUTER EDGE)	9–D19,14

© 2000 GENERAL MOTORS SERVICE PARTS OPERATIONS–CHEVROLET–14Y

10.185 CONNECTOR – CONTROL – DEFLECTOR – INSULATOR – MIRROR – MIRROR KIT – MOTOR KIT – STUD – TRUNNION, Inside Rear View (Con't)

84	Y (EXC ELEC HTD MIR DL8) (1ST DES)	14083564	RH	DISCON	MIRROR KIT, O/S RR VIEW MIR & PWR PKG REPL (NO IDENTIFYING MARK ON INSIDE MIRROR HOUSING ON LOWER SURFACE TOWARD OUTER EDGE)	
84	Y ELEC HTD MIR (DL8) (1ST DES)	14083565	LH	DISCON	MIRROR KIT, O/S RR VIEW MIR & PWR PKG REPL (NO IDENTIFYING MARK ON INSIDE MIRROR HOUSING ON LOWER SURFACE TOWARD OUTER EDGE)	
84	Y ELEC HTD MIR (DL8) (1ST DES)	14083566	RH	DISCON	MIRROR KIT, O/S RR VIEW MIR & PWR PKG REPL (NO IDENTIFYING MARK ON INSIDE MIRROR HOUSING ON LOWER SURFACE TOWARD OUTER EDGE)	
84–86	Y07 (EXC D36 EXPORT)	12513139	1	54.70	MIRROR, I/S RR VIEW (EXC MAP LIGHT)	9–D25,1
86–96	Y	12513138	1	87.50	MIRROR, I/S RR VIEW	9–D26,2
84–87	Y O/S ELEC R/CON PAINTED MIR (DG7)	14086767	LH	192.80	MIRROR, O/S RR VIEW (PAINT TO MATCH) (BLACK)	9–D17,1
84–87	Y O/S ELEC R/CON PAINTED MIR (DG7)	14086768	RH	192.80	MIRROR, O/S RR VIEW (PAINT TO MATCH) (BLACK)	9–D17,1
84–86	Y ELEC HTD MIR (DL8)	14086769	LH	227.10	MIRROR, O/S RR VIEW (PAINT TO MATCH)	9–D17,1
84–86	Y ELEC HTD MIR (DL8)	14086770	RH	DISCON	MIRROR, O/S RR VIEW (PAINT TO MATCH)	
86	Y67 ELEC SPORT MIR (DG7)	10045653	LH	DISCON	MIRROR, O/S RR VIEW (BLACK–41U)	
86	Y67 ELEC SPORT MIR (DG7)	10045654	RH	DISCON	MIRROR, O/S RR VIEW (BLACK–41U)	
87	Y ELEC HTD MIR (DL8) (2ND DES)	10054659	LH	227.10	MIRROR, O/S RR VIEW (PAINT TO MATCH) (INCLS AIR DEFLECTOR) (HAS 1 OVAL & 1 RETANGULAR WIRING CONNECTOR)	9–D17,1
87	Y ELEC HTD MIR (DL8) (2ND DES)	10054660	RH	DISCON	MIRROR, O/S RR VIEW (PAINT TO MATCH) (INCL DEFLECTOR) (HAS 1 OVAL & 1 RECTANGULAR WIRING CONNECTOR)	
87	Y ELEC HTD MIR (DL8) (2ND DES)	10075221	LH	DISCON	MIRROR, O/S RR VIEW (PAINT TO MATCH) (W/OUT AIR DEFLECTORS (HAS 1 OVAL & 1 RETANGULAR WIRING CONNECTOR)	
87	Y ELEC HTD MIR (DL8) (2ND DES)	10075222	RH	DISCON	MIRROR, O/S RR VIEW (PAINT TO MATCH) (EXC DEFLECTOR) (HAS 1 OVAL & 1 RECTANGULAR WIRING CONNECTOR)	
87	Y ELEC HTD MIR (DL8) (1ST DES)	14086769	LH	227.10	MIRROR, O/S RR VIEW (PAINT TO MATCH) (HAS 2 RECTANGULAR WIRING CONNECTORS)	9–D17,1
87	Y ELEC HTD MIR (DL8) (1ST DES)	14086770	RH	DISCON	MIRROR, O/S RR VIEW (PAINT TO MATCH) (1ST DES HAS 2 RECTANGULAR WIRING CONNECTORS)	
88–90	Y O/S ELEC R/CON PAINTED MIR (DG7)	10075251	LH	192.80	MIRROR, O/S RR VIEW	9–D17,1

© 2000 GENERAL MOTORS SERVICE PARTS OPERATIONS–CHEVROLET–14Y

10.185 CONNECTOR – CONTROL – DEFLECTOR – INSULATOR – MIRROR – MIRROR KIT – MOTOR KIT – STUD – TRUNNION, Inside Rear View (Con't)

88–90	Y O/S ELEC R/CON PAINTED MIR (DG7)	10075252	RH	DISCON	MIRROR, O/S RR VIEW (PAINT TO MATCH)	
88–96	Y ELEC R/CON HTD MIR (DL8)	10273679	LH	220.40	MIRROR, O/S RR VIEW (PAINT TO MATCH)	9–D17,1
88–96	Y ELEC R/CON HTD MIR (DL8)	10273680	RH	220.40	MIRROR, O/S RR VIEW (PAINT TO MATCH)	9–D17,1
85–94	Y ELEC R/CON HTD MIR (DL8)	10065261	LH	117.30	MOTOR KIT, O/S RR VIEW MIR (W/MIRROR & CASE)	9–D19,14
85–94	Y ELEC R/CON HTD MIR (DL8)	10065262	RH	117.30	MOTOR KIT, O/S RR VIEW MIR (W/MIRROR & CASE)	9–D19.14
90–96	Y ELEC R/CON HTD MIR (DL8)	12390122	2	*2.50	STUD, O/S RR VIEW MIR ADJR BALL (W/O COPPER INSERT) (HARMON AUTO MIR)	9–D19,16
88–96	Y ELEC R/CON HTD MIR (DL8)	12522163	2	*.60	TRUNNION, O/S RR VIEW MIR ..	9–D19,15
	*EXPORT**********EXPORT**********EXPORT**********EXPORT**********EXPORT*					
90–93	Y ELEC REM CONT MIR (DC7) (EXPORT), O/S ELEC R/CON PAINTED MIR (DC8) (EXPORT)	10065263	LH	DISCON	MIRROR KIT, O/S RR VIEW (PWR PKG REPL)	
90–93	Y ELEC REM CONT MIR (DC7) (EXPORT), O/S ELEC R/CON PAINTED MIR (DC8) (EXPORT)	10065264	RH	115.70	MIRROR KIT, O/S RR VIEW (PWR PKG REPL)	9–D19,16
94–96	Y O/S ELEC R/CON PAINTED MIR (DC8) (EXPORT)	3636500	2	47.00	MIRROR KIT, O/S RR VIEW	9–D19,18
87	Y DD9, VB4, VD1, VT7 (EXPORT)	10054673	LH	DISCON	MIRROR, O/S RR VIEW (BLACK)	
87	Y DD9, VB4, VD1, VT7 (EXPORT)	10054674	RH	DISCON	MIRROR, O/S RR VIEW (BLACK)	
87	Y DD9, VE1 (EXPORT)	10054675	LH	DISCON	MIRROR, O/S RR VIEW (BLACK)	
87	Y DD9, VE1 (EXPORT)	10054676	RH	DISCON	MIRROR, O/S RR VIEW (BLACK)	
88–93	Y ELEC REM CONT MIR (DC7) (EXPORT)	10222801	LH	210.20	MIRROR, O/S RR VIEW (BLACK) (PAINT TO MATCH)	9–D19,18
88–93	Y O/S ELEC R/CON PAINTED MIR (DC8) (EXPORT)	10222801	LH	210.20	MIRROR, O/S RR VIEW (BLACK) (PAINT TO MATCH)	9–D19,18
88–93	Y ELEC REM CONT MIR (DC7) (EXPORT)	10222802	RH	210.20	MIRROR, O/S RR VIEW (BLACK) (PAINT TO MATCH)	9–D19,18
94–96	Y O/S ELEC R/CON PAINTED MIR (DC8) (EXPORT)	10222801	LH	210.20	MIRROR, O/S RR VIEW (BLACK) (PAINT TO MATCH)	9–D19,18
94–96	Y O/S ELEC R/CON PAINTED MIR (DC8) (EXPORT)	10222802	RH	210.20	MIRROR, O/S RR VIEW (BLACK) (PAINT TO MATCH)	9–D19,18
84–86	Y DD9, VB4, VD1, VT7 (EXPORT)	14076507	LH	DISCON	MIRROR, O/S RR VIEW ELEC REM	
84–86	Y DD9, VB4, VD1, VT7 (EXPORT)	14076508	RH	DISCON	MIRROR, O/S RR VIEW ELEC REM	
84–86	Y DD9, VE1 (EXPORT)	14076509	LH	DISCON	MIRROR, O/S RR VIEW ELEC REM	
84–86	Y DD9, VE1 (EXPORT)	14076510	RH	DISCON	MIRROR, O/S RR VIEW ELEC REM	
94–96	Y O/S ELEC R/CON PAINTED MIR (DC8) (EXPORT)	3636501	2	73.50	MOTOR KIT, O/S RR VIEW MIR (INCLUDES GLASS & CASE) ..	9–D19,14

10.186 BEZEL – BOLT – CONNECTOR – INSULATOR – KNOB – LAMP – MOTOR – NUT – RETAINER – SWITCH, Rear View Mirror

84–89	Y	14047175	1	DISCON	BEZEL, O/S RR VIEW MIR (R/CON)	
90–96	Y	10167086	1	.71	BOLT, I/S RR VIEW MIR (OVAL CSK, M5X.8X30, 25.7 THD, 9.8, NZ, C/R)	9–D27,8

© 2000 GENERAL MOTORS SERVICE PARTS OPERATIONS–CHEVROLET–14Y

10.186 BEZEL – BOLT – CONNECTOR – INSULATOR – KNOB – LAMP – MOTOR – NUT – RETAINER – SWITCH, Rear View Mirror (Con't)

90–96	Y	12101822	1	32.35	CONNECTOR, SW–O/S RR VIEW MIR R/CON (GRAY) (8–WAY F) (W/LEADS) (02.535) (AC–DELCO #PT214)	
84	Y (EXC DD9 EXPORT)	10054678	RH	1.70	INSULATOR, O/S MIR	9–D17,2
84	Y (EXC DD9 EXPORT)	14100295	LH	1.48	INSULATOR, O/S RR VIEW MIR .	9–D17,2
85–88	Y ELEC SPORT MIR (DG7), ELEC HTD MIR (DL8)	14100295	LH	1.48	INSULATOR, O/S RR VIEW MIR .	9–D17,2
89	Y ELEC R/CON HTD MIR (DL8)	14100295	LH	1.48	INSULATOR, O/S RR VIEW MIR .	9–D17,2
90–95	Y ELEC R/CON HTD MIR (DL8), (EXC SPECIAL PERFORMANCE PKG (ZR1)	10054678	RH	1.70	INSULATOR, O/S RR VIEW MIR .	9–D17,2
90–95	Y ELEC R/CON HTD MIR (DL8), (EXC SPECIAL PERFORMANCE PKG (ZR1)	14100295	LH	1.48	INSULATOR, O/S RR VIEW MIR .	9–D17,2
90–95	Y ELEC R/CON HTD MIR (DL8), SPECIAL PERFORMANCE PKG (ZR1)	14104569	LH	1.30	INSULATOR, O/S RR VIEW MIR .	9–D19,3
90–95	Y ELEC R/CON HTD MIR (DL8), SPECIAL PERFORMANCE PKG (ZR1)	14104570	RH	1.30	INSULATOR, O/S RR VIEW MIR .	9–D19,3
96	Y ELEC R/CON HTD MIR (DL8)	10054678	RH	1.70	INSULATOR, O/S RR VIEW MIR .	9–D17,2
96	Y ELEC R/CON HTD MIR (DL8)	14100295	LH	1.48	INSULATOR, O/S RR VIEW MIR .	9–D17,2
85–89	Y O/S ELEC R/CON PAINTED MIR (DG7), ELEC R/CON HTD MIR (DL8)	10054678	RH	1.70	INSULATOR, O/S RR VIEW MIR MT PLT	9–D17,2
87–89	Y67 A/C (C60), ELEC HTD MIR (DL8)	1228279	1	7.00	KNOB, SIDE MIRROR (W/SPRING) .	8–J25,5
89	Y07 A/C (C60)	1228279	1	7.00	KNOB, SIDE MIRROR (W/SPRING) .	8–J25,5
90–96	Y	12506723	1	5.40	LAMP, O/S RR VIEW MIR R/CON SEL SW	9–D19,9
95–96	Y ELEC R/CON HTD MIR (DL8)	12500532	2	47.20	MOTOR, O/S RR VIEW MIR (10.185)	9–D19,14
91–96	Y	12337912	AR	*.90	NUT, I/S RR VIEW MIR (16.460) ..	9–D27,7
84–89	Y	459503	1	2.35	RETAINER, O/S R/CON RR VIEW MIR BZL	9–D17,7
84	Y	25509338	RH	9.08	RETAINER, O/S RR VIEW MIR R/CON (MOUNTED ON I/P) ...	9–D17,7
84–96	Y	14051157	LH	2.19	RETAINER, O/S RR VIEW MIR WRG LEAD	9–D17,3
84–96	Y	14051158	RH	2.19	RETAINER, O/S RR VIEW MIR WRG LEAD	9–D17,3
84–89	Y	14047174	1	18.72	SWITCH, O/S R/CON RR VIEW MIR	9–D17,11
90–91	Y	10098486	LH	30.35	SWITCH, O/S RR VIEW MIR R/CON (W/SI WDO SW)	9–D19,9
92–93	Y	10161833	LH	42.33	SWITCH, O/S RR VIEW MIR R/CON (W/SI WDO SW)	9–D19,9
94–96	Y	10212994	LH	42.33	SWITCH, O/S RR VIEW MIR R/CON (W/SI WDO SW)	9–D19,9
	*EXPORT**********EXPORT**********EXPORT**********EXPORT**********EXPORT*					
84	Y DD9 (EXPORT)	14076506	2	DISCON	INSULATOR, O/S MIR MT PLT REM (52.5 MM)	
84–87	Y DD9 (EXPORT)	14088425	2	1.58	INSULATOR, O/S MIR MT PLT REM (58.5 MM)	9–D19,19
88	Y ELEC REM CONT MIR (DC7, DC8) (EXPORT)	14088425	2	1.58	INSULATOR, O/S MIR MT PLT REM (58.5 MM)	9–D19,19

© 2000 GENERAL MOTORS SERVICE PARTS OPERATIONS–CHEVROLET–14Y

10.186 BEZEL – BOLT – CONNECTOR – INSULATOR – KNOB – LAMP – MOTOR – NUT – RETAINER – SWITCH, Rear View Mirror (Con't)

90–92	Y ELEC REM CONT MIR (DC7) (EXPORT), O/S ELEC R/CON PAINTED MIR (DC8) (EXPORT), SPECIAL PERFORMANCE PKG (ZR1)	10143531	LH	DISCON	INSULATOR, O/S RR VIEW MIR MT PLT (10.230)	
90–92	Y ELEC REM CONT MIR (DC7) (EXPORT), O/S ELEC R/CON PAINTED MIR (DC8) (EXPORT), SPECIAL PERFORMANCE PKG (ZR1)	10143532	RH	1.20	INSULATOR, O/S RR VIEW MIR MT PLT (10.230)	9–D19,19
90–93	Y ELEC REM CONT MIR (DC7) (EXPORT), (EXC SPECIAL PERFORMANCE PKG (ZR1)	14088425	2	1.58	INSULATOR, O/S RR VIEW MIR MT PLT	9–D19,19
90–95	Y O/S ELEC R/CON PAINTED MIR (DC8) (EXPORT), (EXC SPECIAL PERFORMANCE PKG (ZR1)	14088425	2	1.58	INSULATOR, O/S RR VIEW MIR MT PLT	9–D19,19
96	Y O/S ELEC R/CON PAINTED MIR (DC8) (EXPORT)	14088425	2	1.58	INSULATOR, O/S RR VIEW MIR MT PLT	9–D19,19

10.187 BRACKET, Inside Rear View Mirror

84–88	Y	9831062	1	*7.60	BRACKET, I/S RR VIEW MIR	9–D25,10

10.195 LENS – MIRROR, Sunshade Vanity Mirror

84–88	Y (EXC EXPORT VD1)	5972555	LH	DISCON	LENS, S/S VAN	
84–88	Y (EXC EXPORT VD1)	5972556	RH	DISCON	LENS, S/S VAN	
84–85	Y (EXC VD1 EXPORT)	918295	RH	DISCON	MIRROR, MINI LIGHT VANITY ...	
84–88	Y	5937896	2	DISCON	MIRROR, S/S VAN	
	*EXPORT**********EXPORT**********EXPORT**********EXPORT**********EXPORT*					
84–87	Y EUROPEAN PROVISIONS (VD1) (EXPORT)	1741050	AR	30.60	MIRROR, S/S	

10.203 SUNSHADE – SUNSHADE KIT, Windshield Sunshade

84–85	Y	10051877	LH	62.90	SUNSHADE	9–D25,9
86–89	Y (EXC ILLUM S/S MIR (D74)	10051877	LH	62.90	SUNSHADE	9–D25,9
86	Y	10199727	LH	67.20	SUNSHADE	9–D26,5
87–89	Y ILLUM S/S MIR (D74), (19I)	10199727	LH	67.20	SUNSHADE	9–D26,5
94–96	Y (EXC EUROPEAN PROVISIONS (VD1) (EXPORT)	12459827	1	215.00	SUNSHADE KIT, (INCLS RH & LH S/S)	9–D27,2
84–85	Y (EXC EUROPEAN PROVISIONS (VD1) (EXPORT)	10199728	RH	67.20	SUNSHADE, (MAY NEED TO REPLACE BODY SIDE CONNECTOR THAT MATES W/SUNSHADE HARNESS; USE CONN PKG 12085481)	9–D25,8
86–93	Y	10199728	RH	67.20	SUNSHADE, (BLACK)	9–D25,8
90–93	Y	10199727	LH	67.20	SUNSHADE, (BLACK)	9–D26,5
94–96	Y (EXC EUROPEAN PROVISIONS (VD1) (EXPORT)	12453667	LH	67.20	SUNSHADE, (SEE KIT 12459827) (BLACK)	9–D27,3
94–96	Y (EXC EUROPEAN PROVISIONS (VD1) (EXPORT)	12453668	RH	67.20	SUNSHADE, (SEE KIT 12459827) (BLACK)	9–D27,2
	*EXPORT**********EXPORT**********EXPORT**********EXPORT**********EXPORT*					
84–87	Y (VD1) EXPORT	10051880	RH	DISCON	SUNSHADE	

© 2000 GENERAL MOTORS SERVICE PARTS OPERATIONS–CHEVROLET–14Y

10.203 SUNSHADE – SUNSHADE KIT, Windshield Sunshade (Con't)

94–96	Y EUROPEAN PROVISIONS (VD1) (EXPORT)	10251051	LH	67.20	SUNSHADE, (BLACK)	9–D27,3
94–96	Y EUROPEAN PROVISIONS (VD1) (EXPORT)	10251052	RH	67.20	SUNSHADE, (BLACK)	9–D27,2

10.219 BOLT – CLIP – COVER – RETAINER – SPRING – SUPPORT, Windshield Sunshade

92–96	Y	14081021	4	*1.25	BOLT, S/S SUPT (TORX HD 8X1.25X20) (C8.913)	10–G9,14
86–89	Y67 (11T)	10048842	1	DISCON	CLIP, S/S SUPT (WHITE)	
89–96	Y	10219601	LH	6.40	COVER, S/S SUPT TR	10–G5,32
89–96	Y	10219602	RH	6.40	COVER, S/S SUPT TR	10–G5,32
84–96	Y	14060215	2	.70	RETAINER, S/S	9–D25,5
84–96	Y	14060216	2	1.30	SPRING, S/S	9–D25,7
89–96	Y	10198727	LH	91.72	SUPPORT, S/S	10–G5,29
89–96	Y	10198728	RH	91.72	SUPPORT, S/S	10–G5,29

10.230 BRACE – BRACKET – INSULATOR – NUT – PANEL – PLATE – REINFORCEMENT – RETAINER – SHIM – SUPPORT, Instrument Panel

84–89	Y	14046649	1	DISCON	BRACE, I/P LWR	
84–89	Y	14047477	2	DISCON	BRACE, I/P LWR	
89–92	Y	10085905	LH	DISCON	BRACE, I/P LWR	
89–92	Y	10085906	RH	DISCON	BRACE, I/P LWR	
84–89	Y	14060213	LH	DISCON	BRACE, I/P REINF	
84–89	Y	14060214	RH	DISCON	BRACE, I/P REINF	
84–85	Y	14046644	LH	DISCON	BRACE, I/P UPR	
84–89	Y	14049198	RH	DISCON	BRACE, I/P UPR	
86–89	Y	14078645	LH	DISCON	BRACE, I/P UPR	
90–96	Y	10085903	LH	3.60	BRACE, I/P UPR	9–E8,26
84–94	Y	14104971	1	2.70	BRACKET, I/P INSL	9–E2,57
84–85	Y	14046650	1	DISCON	BRACKET, I/P REINF	
86–89	Y	14078646	1	DISCON	BRACKET, I/P REINF	
89–96	Y	10085902	1	3.60	BRACKET, I/P REINF	9–E8,44
84–89	Y	14047445	LH	DISCON	BRACKET, I/P UPR	
84–89	Y	14047446	RH	DISCON	BRACKET, I/P UPR	
90–96	Y	10086013	LH	12.90	BRACKET, I/P UPR	10–E19,61
90–93	Y	10137758	RH	DISCON	BRACKET, I/P UPR	
94–96	Y	10251278	LH	3.60	BRACKET, I/P UPR T/PNL	9–F2,71
84–89	Y	10125970	LH	32.50	INSULATOR, I/P (TRIM AS REQ) .	9–E2,47
84–89	Y	14051132	RH	67.20	INSULATOR, I/P	9–E2,34
86–89	Y	10045697	1	DISCON	INSULATOR, I/P (WRG HARN FUSE)	
90–96	Y	3999572	1	4.98	INSULATOR, I/P (09.260)	9–E12,35
94–96	Y	10077470	1	3.21	INSULATOR, I/P (12.810)	
91–93	Y	10175813	2	1.00	NUT, I/P (10.252)	9–E19,45
94	Y 5.7J (LT5)	10175813	2	1.00	NUT, I/P (10.252)	9–E19,45
94–96	Y	11506117	1	*.56	NUT, I/P (08.917)	
94–96	Y	11513599	2	.20	NUT, I/P (M4.2X1.41TAP) (U TYPE) (PZOR) (08.921) (AC–DELCO #11513599)	
90–93	Y	10086210	RH	29.60	PANEL, I/P LWR TR (PAINT TO MATCH)	9–E8,12
90	Y 6–SPD M/TRANS (ML9), (73I)	10132978	LH	100.50	PANEL, I/P LWR TR (FLAME RED) .	
90	Y 6–SPD M/TRANS (ML9), (90I)	10132979	LH	100.50	PANEL, I/P LWR TR (MED GRAYSMOKE)	

© 2000 GENERAL MOTORS SERVICE PARTS OPERATIONS–CHEVROLET–14Y

10.230 BRACE – BRACKET – INSULATOR – NUT – PANEL – PLATE – REINFORCEMENT – RETAINER – SHIM – SUPPORT, Instrument Panel (Con't)

90	Y 4–SPD A/TRANS (MD8), (73I)	10132983	LH	100.50	PANEL, I/P LWR TR (FLAME RED)	
90	Y 4–SPD A/TRANS (MD8), (90I)	10132984	LH	100.50	PANEL, I/P LWR TR (MED GRAYSMOKE)	
90	Y 6–SPD M/TRANS (ML9), (19I)	10193746	1	133.30	PANEL, I/P LWR TR (BLACK)	9–E12,21
90	Y 6–SPD M/TRANS (ML9), (22I)	10193747	1	133.30	PANEL, I/P LWR TR (BLUE)	
90	Y 6–SPD M/TRANS (ML9), (60I)	10193748	1	133.30	PANEL, I/P LWR TR (COGNAC)	9–E8,21
90	Y 3–SPD A/TRANS (MD9), (22I)	10193753	1	133.30	PANEL, I/P LWR TR (BLUE)	
90	Y 3–SPD A/TRANS (MD9), 6–SPD M/TRANS (ML9), (60I)	12523669	1	DISCON	PANEL, I/P LWR TR (10.252)	
90	Y 3–SPD A/TRANS (MD9), 6–SPD M/TRANS (ML9), (90I)	12523671	1	DISCON	PANEL, I/P LWR TR (GRAY) (10.252)	
90–91	Y 4–SPD A/TRANS (MD8), (19I)	12523674	1	DISCON	PANEL, I/P LWR TR (CUT HOLES FOR LAP DUCTS AS REQ) (BLACK)	
90–91	Y 6–SPD M/TRANS (ML9), (19I)	12523674	1	DISCON	PANEL, I/P LWR TR (BLACK)	
91	Y 6–SPD M/TRANS (ML9), (73I)	10132978	LH	100.50	PANEL, I/P LWR TR (HAS HOLES FOR LAP DUCTS) (RED)	
91	Y 6–SPD M/TRANS (ML9), (90I)	10132979	LH	100.50	PANEL, I/P LWR TR (HAS HOLES FOR LAP DUCTS) (GRAY)	
91	Y 4–SPD A/TRANS (MD8), (73I)	10132983	LH	100.50	PANEL, I/P LWR TR (HAS HOLES FOR LAP DUCTS) (RED)	
91	Y 4–SPD A/TRANS (MD8), (90I)	10132984	LH	100.50	PANEL, I/P LWR TR (HAS HOLES FOR LAP DUCTS) (GRAY)	
91	Y 6–SPD M/TRANS (ML9), (19I)	10193746	1	133.30	PANEL, I/P LWR TR (CUT HOLES FOR LAP DUCTS AS REQ) (BLACK)	9–E12,21
91	Y 6–SPD M/TRANS (ML9), (22I)	10193747	1	133.30	PANEL, I/P LWR TR (CUT HOLES FOR LAP DUCTS AS REQ) (BLUE)	
91	Y 6–SPD M/TRANS (ML9), (60I)	10193748	1	133.30	PANEL, I/P LWR TR (CUT HOLES FOR LAP DUCTS AS REQ) (COGNAC)	9–E8,21
91	Y 4–SPD A/TRANS (MD8), (22I)	10193753	1	133.30	PANEL, I/P LWR TR (CUT HOLES FOR LAP DUCTS AS REQ) (BLUE)	
91	Y 4–SPD A/TRANS (MD8), 6–SPD M/TRANS (ML9), (60I)	12523669	1	DISCON	PANEL, I/P LWR TR (CUT HOLES FOR LAP DUCTS AS REQ, D) (MED COGNAC) (10.252)	
91	Y 4–SPD A/TRANS (MD8), 6–SPD M/TRANS (ML9), (73I)	12523670	1	DISCON	PANEL, I/P LWR TR (CUT HOLES FOR LAP DUCTS AS REQ) (RED) (10.252)	
91	Y 4–SPD A/TRANS (MD8), 6–SPD M/TRANS (ML9), (90I)	12523671	1	DISCON	PANEL, I/P LWR TR (CUT HOLES FOR LAP DUCTS AS REQ) (GRAY) (10.252)	
92–93	Y 6–SPD M/TRANS (ML9), (10I), (19I)	10193746	LH	133.30	PANEL, I/P LWR TR (BLACK)	9–E12,21
92	Y (73I)	12523670	LH	DISCON	PANEL, I/P LWR TR (RED) (10.252)	
92–93	Y (64I)	12523672	LH	DISCON	PANEL, I/P LWR TR (BEIGE)	
92–93	Y 4–SPD A/TRANS (MD8), (14I)	12523673	LH	DISCON	PANEL, I/P LWR TR (GRAY)	
92–93	Y 4–SPD A/TRANS (MD8), (10I), (19I)	12523674	LH	DISCON	PANEL, I/P LWR TR (BLACK)	

© 2000 GENERAL MOTORS SERVICE PARTS OPERATIONS–CHEVROLET–14Y

10.230 BRACE – BRACKET – INSULATOR – NUT – PANEL – PLATE – REINFORCEMENT – RETAINER – SHIM – SUPPORT, Instrument Panel (Con't)

92–93	Y 6–SPD M/TRANS (ML9), (10I), (19I)	12523674	1	DISCON	PANEL, I/P LWR TR (BLACK)	
93	Y 4–SPD A/TRANS (MD8), 6–SPD M/TRANS (ML9), (79I)	12523675	LH	DISCON	PANEL, I/P LWR TR (RED)	
93	Y 4–SPD A/TRANS (MD8), 6–SPD M/TRANS (ML9), (70I)	12523676	LH	DISCON	PANEL, I/P LWR TR (RED)	
94	Y (64I)	10256832	RH	126.80	PANEL, I/P LWR TR (BEIGE) (MAY NEED TO ENLARGE 7MM HOLE & 10X7.6MM SLOT AT RH RR OF PNL TO OBTAIN PROPER FIT)	9–F2,25
94	Y (70I)	10256834	RH	126.80	PANEL, I/P LWR TR (RED) (MAY NEED TO ENLARGE 7MM HOLE & 10X7.6MM SLOT AT RH RR OF PNL TO OBTAIN PROPER FIT)	9–F2,25
94	Y (14I)	10256836	RH	126.80	PANEL, I/P LWR TR (GRAY) (MAY NEED TO ENLARGE 7MM HOLE & 10X7.6MM SLOT AT RH RR OF PNL TO OBTAIN PROPER FIT)	9–F2,25
94	Y (19I)	10256838	RH	126.80	PANEL, I/P LWR TR (BLACK) (MAY NEED TO ENLARGE 7MM HOLE & 10X7.6MM SLOT AT RH RR OF PNL TO OBTAIN PROPER FIT)	9–F2,25
94–96	Y (14I)	10268023	LH	133.30	PANEL, I/P LWR TR (GRAY)	9–F2,47
94–96	Y (19I)	10268024	LH	126.80	PANEL, I/P LWR TR (BLACK)	9–F2,47
94–96	Y (64I)	10268025	LH	133.30	PANEL, I/P LWR TR (BEIGE)	9–F2,47
94–96	Y (70I)	10268026	LH	133.30	PANEL, I/P LWR TR (RED)	9–F2,47
95–96	Y (64I)	10256832	RH	126.80	PANEL, I/P LWR TR (BEIGE)	9–F2,25
95–96	Y (70I)	10256834	RH	126.80	PANEL, I/P LWR TR (RED)	9–F2,25
95–96	Y (14I)	10256836	RH	126.80	PANEL, I/P LWR TR (GRAY)	9–F2,25
95–96	Y (19I)	10256838	RH	126.80	PANEL, I/P LWR TR (BLACK)	9–F2,25
84–85	Y	14046643	1	DISCON	PANEL, INST	
86–89	Y	10064350	1	DISCON	PANEL, INST	
90–91	Y	10167108	1	175.50	PANEL, INST	9–E8,29
92–93	Y	10167108	1	175.50	PANEL, INST	9–E8,29
94–96	Y	10285922	1	166.90	PANEL, INST	9–F2,9
84–92	Y 4–SPD A/TRANS (MD8), (1ST DES)	14046622	1	DISCON	PLATE, I/P LWR BRKT STUD (1ST DESIGN HAS TWO 20MM STUDS)	
84–88	Y M/TRNS	14046742	1	DISCON	PLATE, I/P LWR BRKT STUD	
89–92	Y 6–SPD M/TRANS (ML9)	14104930	1	DISCON	PLATE, I/P LWR BRKT STUD	
92	Y 4–SPD A/TRANS (MD8), (2ND DES)	10215425	1	13.80	PLATE, I/P LWR BRKT STUD (2ND DESIGN HAS NO STUDS)	10–F7,6
93	Y 4–SPD A/TRANS (MD8)	10215425	1	13.80	PLATE, I/P LWR BRKT STUD	10–F7,6
94–96	Y 4–SPD A/TRANS (M30)	10215425	1	13.80	PLATE, I/P LWR BRKT STUD	10–F7,6
84–89	Y	14092605	1	DISCON	REINFORCEMENT, I/P CTR	
90–96	Y	10086173	1	9.30	REINFORCEMENT, I/P CTR LWR SUPT	9–E8,89
84–89	Y	14046714	2	DISCON	RETAINER, I/P	
90–93	Y	10086122	2	DISCON	RETAINER, I/P	
94–95	Y	14049081	AR	.61	SHIM, I/P LWR T/PNL (08.153)	
84–89	Y	14060247	2	DISCON	SHIM, I/P REINF (OTR)	
84–89	Y	14060248	RH	DISCON	SHIM, I/P REINF (INR)	
84–89	Y	14060249	LH	DISCON	SHIM, I/P REINF (INR)	
84–89	Y	14047475	RH	DISCON	SUPPORT, I/P CTR	
89–96	Y	10086085	1	12.90	SUPPORT, I/P CTR LWR	9–E8,92
89–93	Y	10175530	1	25.80	SUPPORT, I/P LWR T/PNL	9–E8,81

© 2000 GENERAL MOTORS SERVICE PARTS OPERATIONS–CHEVROLET–14Y

10.235 ABSORBER – BOLSTER – BOLT – BRACE – BRACKET – CARPET – CLIP – INSULATOR – PAD – REINFORCEMENT – SEAL, Instrument Panel Pad

90–91	Y	10172459	1	103.00	BOLSTER, I/P DRVR KNEE	9–E8,78
92–96	Y	10251819	1	103.00	BOLSTER, I/P DRVR KNEE	9–E12,78
94–96	Y	10210760	1	12.90	BOLSTER, I/P PASS KNEE	9–F2,32
93–96	Y	11504611	2	2.10	BOLT, I/P DRVR KNEE BOLS (POS#2) (08.900)	
96	Y	11514623	3	*.96	BOLT, I/P DRVR KNEE BOLS OTR BRKT (POSN #10, 11, 12) (M6X1X20) (HEX W/CON WA) (08.900)	
96	Y	11514623	3	*.96	BOLT, I/P PASS KNEE BOLS OTR BRKT (POSN #1, 13, 14) (M6X1X20) (HEX W/CON WA) (08.900)	
90–94	Y	10259399	1	7.70	BRACE, I/P DRVR KNEE BOLS INR BRKT	9–E8,65
95–96	Y	10259399	1	7.70	BRACE, I/P DRVR KNEE BOLS INR BRKT	9–E8,65
90–93	Y	10251817	1	8.70	BRACKET, I/P DRVR KNEE BOLS CTR	9–E8,80
94–96	Y	10251817	1	8.70	BRACKET, I/P DRVR KNEE BOLS CTR	9–E8,80
89–90	Y	10175531	LH	DISCON	BRACKET, I/P DRVR KNEE BOLS INR (10.230)	
91–93	Y	10211797	1	DISCON	BRACKET, I/P DRVR KNEE BOLS INR	
94–96	Y	10250909	1	19.30	BRACKET, I/P DRVR KNEE BOLS INR	9–F2,67
90–92	Y	10085943	LH	27.90	BRACKET, I/P DRVR KNEE BOLS OTR (10.230)	9–E8,43
93–96	Y	10085943	1	27.90	BRACKET, I/P DRVR KNEE BOLS OTR (10.230)	9–E8,43
86–89	Y	14078662	2	DISCON	BRACKET, I/P LWR TR PAD (10.230)	
89–90	Y	10175532	RH	DISCON	BRACKET, I/P PASS KNEE BOLS INR (10.230)	
91–93	Y	10175591	1	DISCON	BRACKET, I/P PASS KNEE BOLS INR	
94–96	Y	10250910	1	19.30	BRACKET, I/P PASS KNEE BOLS INR	9–F2,55
90–92	Y	10085944	RH	DISCON	BRACKET, I/P PASS KNEE BOLS OTR	
93	Y	10085944	1	DISCON	BRACKET, I/P PASS KNEE BOLS OTR	
94–96	Y	10251492	1	27.90	BRACKET, I/P PASS KNEE BOLS OTR	9–F2,50
90–92	Y (19I)	10181250	1	DISCON	CARPET, I/P LWR T/PNL (BLACK)	
90–91	Y (60I)	10181251	1	DISCON	CARPET, I/P LWR T/PNL (COGNAC)	
90–92	Y (73I)	10181252	1	DISCON	CARPET, I/P LWR T/PNL (RED)	
90–91	Y (90I)	10181253	1	DISCON	CARPET, I/P LWR T/PNL (GRAY SMLOE)	
90–91	Y (22I)	10181254	1	DISCON	CARPET, I/P LWR T/PNL (BLUE STEEL)	
92–93	Y (14I)	12515911	1	DISCON	CARPET, I/P LWR T/PNL (GRAY)	
92–93	Y (64I)	12515912	1	DISCON	CARPET, I/P LWR T/PNL (BEIGE)	
93	Y (10I), (19I)	10181250	1	DISCON	CARPET, I/P LWR T/PNL (BLACK)	
93	Y (79I)	[illegible]18335	1	DISCON	CARPET, I/P LWR T/PNL (RED)	
90	Y	[illegible]J038190	1	.07	CLIP, I/P TR PAD (10.240) (AC–DELCO #10038190)	

10.235 ABSORBER – BOLSTER – BOLT – BRACE – BRACKET – CARPET – CLIP – INSULATOR – PAD – REINFORCEMENT – SEAL, Instrument Panel Pad (Con't)

94–96	Y	3999572	2	4.98	INSULATOR, I/P DRVR KNEE BOLS BRKT (09.260)	9–E19,7
84–89	Y	14046646	1	DISCON	PAD, I/P CTR TR (PAINT TO MATCH)	
84–87	Y (12I)	14047481	LH	155.00	PAD, I/P LWR TR (GRAPHITE)	9–E2,50
84–87	Y (12I)	14047482	RH	DISCON	PAD, I/P LWR TR (GRAPHITE)	
84–87	Y (15I)	14058211	LH	DISCON	PAD, I/P LWR TR (GRAY)	
84–87	Y (15I)	14058212	RH	DISCON	PAD, I/P LWR TR (GRAY)	
84–85	Y (28I)	14058213	LH	DISCON	PAD, I/P LWR TR (BLUE)	
84–85	Y (28I)	14058214	RH	DISCON	PAD, I/P LWR TR (BLUE)	
84–87	Y (61I)	14058215	LH	DISCON	PAD, I/P LWR TR (BRONZE)	
84–87	Y (65I)	14058216	RH	DISCON	PAD, I/P LWR TR (BRONZE)	
84–87	Y (62I)	14058217	LH	DISCON	PAD, I/P LWR TR (SADDLE)	
84–87	Y (62I)	14058218	RH	DISCON	PAD, I/P LWR TR (SADDLE)	
84–85	Y (74I)	14058219	LH	DISCON	PAD, I/P LWR TR (CARMINE)	
84–85	Y (74I)	14058220	RH	DISCON	PAD, I/P LWR TR (CARMINE)	
86–87	Y (21I)	14094207	LH	DISCON	PAD, I/P LWR TR (BLUE)	
86–87	Y (21I)	14094208	RH	DISCON	PAD, I/P LWR TR (BLUE)	
86–87	Y (73I)	14094209	LH	DISCON	PAD, I/P LWR TR (RED)	
86–87	Y (73I)	14094210	RH	DISCON	PAD, I/P LWR TR (RED)	
88–89	Y (21I)	10095108	RH	146.30	PAD, I/P LWR TR (BLUE)	
88–89	Y (19I)	10132993	LH	DISCON	PAD, I/P LWR TR (BLACK)	
88–89	Y (19I)	10132994	RH	DISCON	PAD, I/P LWR TR (BLACK)	
88–89	Y (21I)	10132995	LH	DISCON	PAD, I/P LWR TR (BLUE)	
88–89	Y (60I)	10132997	LH	DISCON	PAD, I/P LWR TR (COGNAC)	
88–89	Y (73I)	10132999	LH	DISCON	PAD, I/P LWR TR (RED)	
88–89	Y (73I)	10133000	RH	DISCON	PAD, I/P LWR TR (RED)	
88–89	Y (90I)	10135901	LH	DISCON	PAD, I/P LWR TR (GRAY)	
88–89	Y (90I)	10135902	RH	DISCON	PAD, I/P LWR TR (GRAY)	
84–85	Y	14046647	1	DISCON	PAD, I/P UPR TR (PAINT TO MATCH)	
86–89	Y	14078653	1	528.70	PAD, I/P UPR TR	9–E5,1
90–91	Y (22I)	10153636	1	DISCON	PAD, I/P UPR TR (W/AIRBAG) (BLUE)	
90–91	Y (60I)	10153637	1	DISCON	PAD, I/P UPR TR (W/AIRBAG) (COGNAC)	
90–91	Y (90I)	10153639	1	DISCON	PAD, I/P UPR TR (W/AIRBAG) (GRAY)	
90–92	Y (73I)	10193735	1	DISCON	PAD, I/P UPR TR (RED)	
90–91	Y (19I)	10242873	1	689.00	PAD, I/P UPR TR (BLACK)	9–E12,7
92–93	Y (10I), (19I)	10242873	1	689.00	PAD, I/P UPR TR (BLACK)	9–E12,7
93	Y (79I)	10242874	1	DISCON	PAD, I/P UPR TR (RED)	
93	Y (70I)	10242875	1	DISCON	PAD, I/P UPR TR (RED)	
94–96	Y	10271585	1	594.80	PAD, I/P UPR TR (W/PASS SI INFL RST CVR)	9–F2,2
94–96	Y	10250906	1	21.70	REINFORCEMENT, I/P PASS KNEE BOLS	9–F2,34
90–96	Y	3999572	2	4.98	SEAL, I/P UPR T/PNL (09.260)	9–E19,7
	*EXPORT**********EXPORT**********EXPORT**********EXPORT**********EXPORT*					
94–96	Y EUROPEAN PROVISIONS (VD1) (EXPORT)	10256625	1	8.80	ABSORBER, I/P TR PAD ENGY	

© 2000 GENERAL MOTORS SERVICE PARTS OPERATIONS–CHEVROLET–14Y

10.240 APPLIQUE – BRACKET – CLIP – CONSOLE – COVER – EMBLEM – FILLER – HOLDER – MAT – NUT – PANEL – PLATE – PROTECTOR – RETAINER – SPACER, Floor Console

NOTE: FOR 1985–1991 USAGE REFER TO INSTRUMENT CLUSTER CHART GRP 9.735

84–87	Y (EXC VE1 (EXPORT)	25051610	1	DISCON	APPLIQUE, DRVR INFO DISPLAY SW	
85–89	Y FOR MOD APPL & POA SEE INST CSTR CHT	25051610	1	DISCON	APPLIQUE, DRVR INFO DISPLAY SW	
84–96	Y	14046621	2	2.00	BRACKET, F/FLR CNSL	9–F17,25
84–94	Y	14049146	RH	.70	BRACKET, F/FLR CNSL FRT	9–F17,24
84–94	Y	14065087	LH	.47	BRACKET, F/FLR CNSL FRT	9–F17,24
84–96	Y	10137744	LH	.80	BRACKET, F/FLR CNSL INTER (RR)	9–F17,29
84–94	Y	14049236	RH	.70	BRACKET, F/FLR CNSL INTER (FRT)	9–F17,26
84–88	Y A/TRNS	14049237	LH	.70	BRACKET, F/FLR CNSL INTER (FRT)	9–F17,28
84–96	Y	14049238	RH	.70	BRACKET, F/FLR CNSL INTER (RR)	9–F17,27
89–94	Y	14049237	LH	.70	BRACKET, F/FLR CNSL INTER (FRT)	9–F17,28
90	Y	10038190	AR	.07	CLIP, FRT CNSL TR PAD (AC–DELCO #10038190)	9–F20,33
84–86	Y (EXC 6–WAY A42)	10045622	1	DISCON	CONSOLE, F/FLR	
84–85	Y 6–WAY (A42)	10045623	1	DISCON	CONSOLE, F/FLR	
86–88	Y 6–WAY (AC3) (EXC 6–WAY AC1)	10045623	1	DISCON	CONSOLE, F/FLR	
87–88	Y (EXC 6–WAY AC1 OR 6–WAY AC3)	10045622	1	DISCON	CONSOLE, F/FLR	
87–88	Y 6–WAY (AC1), 6–WAY (AC3)	14094282	1	DISCON	CONSOLE, F/FLR	
89	Y 6–WAY PWR P/SEAT ADJR (AC1), 6–WAY PWR D/SEAT ADJR (AC3)	14104804	1	DISCON	CONSOLE, F/FLR	
89	Y 6–WAY PWR D/SEAT ADJR (AC3), (EXC 6–WAY PWR P/SEAT ADJR (AC1)	14104817	1	DISCON	CONSOLE, F/FLR	
89	Y (EXC 6–WAY PWR P/SEAT ADJR (AC1), 6–WAY PWR D/SEAT ADJR (AC3)	14104819	1	DISCON	CONSOLE, F/FLR	
90–96	Y	10175510	1	80.20	CONSOLE, F/FLR	9–F20,23
84–89	Y	10064307	1	20.40	COVER, F/FLR CNSL PKT OPG (CLOTH LOOP MATL W/ADHES BKG)	9–F17,52
85–88	Y M/TRNS	14076544	1	DISCON	EMBLEM, F/FLR CNSL TR PLT ..	
88	Y 35 ANNIV (Z01)	10123023	1	DISCON	EMBLEM, F/FLR CNSL TRANS SHFT OPG TR PLT	
84–92	Y	14049207	4	.80	FILLER, F/FLR CNSL COMPT (OVAL SHAPED)	9–F20,11
93–94	Y	14049207	4	.80	FILLER, F/FLR CNSL COMPT ...	9–F20,11
90–91	Y	10086113	1	DISCON	HOLDER, F/FLR CNSL CUP (10.242)	
92–95	Y (EXC 6–WAY PWR P/SEAT ADJR (AC1), 6–WAY PWR D/SEAT ADJR (AC3), ELEK RIDE & HANDLING (FX3) ...	10199504	1	30.90	HOLDER, F/FLR CNSL CUP	9–G2,10
96	Y (EXC 6–WAY PWR D/SEAT ADJR (AG1), 6–WAY PWR P/SEAT ADJR (AG2), CHASSIS, REALTIME DAMPING (F45)	10199504	1	30.90	HOLDER, F/FLR CNSL CUP	9–G2,10
90–95	Y	10167113	1	4.20	MAT, F/FLR CNSL TR PLT (BLACK) .	9–F20,61
96	Y	10167113	2	4.20	MAT, F/FLR CNSL TR PLT (BLACK) .	9–F20,61

© 2000 GENERAL MOTORS SERVICE PARTS OPERATIONS–CHEVROLET–14Y

10.240 APPLIQUE – BRACKET – CLIP – CONSOLE – COVER – EMBLEM – FILLER – HOLDER – MAT – NUT – PANEL – PLATE – PROTECTOR – RETAINER – SPACER, Floor Console (Con't)

89–91	Y MAN RECL FRT BKT ST (AR9)	9415253	AR	.33	NUT, F/FLR CNSL (09.665)	
84–89	Y	10175813	AR	1.00	NUT, F/FLR CNSL TR PLT (10.252) .	9–E8,93
90–93	Y 4–SPD A/TRANS (MD8) ...	10175813	6	1.00	NUT, F/FLR CNSL TR PLT (10.252) .	9–E8,93
90–96	Y 6–SPD M/TRANS (ML9) ...	10175813	4	1.00	NUT, F/FLR CNSL TR PLT (10.252) .	9–E8,93
94–96	Y 4–SPD A/TRANS (M30) ...	10175813	6	1.00	NUT, F/FLR CNSL TR PLT (10.252) .	9–E8,93
84–85	Y (28I)	14058226	RH	156.00	PANEL, F/FLR CNSL SI TR (INCL CARPET, BLUE)	
84–87	Y (12I)	14081847	LH	DISCON	PANEL, F/FLR CNSL SI TR (INCL CARPET, GRAPHITE)	
84–87	Y (12I)	14081848	RH	DISCON	PANEL, F/FLR CNSL SI TR (INCL CARPET, GRAPHITE)	
84–87	Y (15I)	14081849	LH	DISCON	PANEL, F/FLR CNSL SI TR (INCL CARPET, GRAY)	
84–87	Y (15I)	14081850	RH	DISCON	PANEL, F/FLR CNSL SI TR (INCL CARPET, GRAY)	
84–85	Y	14081851	LH	DISCON	PANEL, F/FLR CNSL SI TR (BLUE–28I)	
84–87	Y (62I)	14081854	RH	DISCON	PANEL, F/FLR CNSL SI TR (INCL CARPET, SADDLE)	
84–87	Y (65I)	14081855	LH	DISCON	PANEL, F/FLR CNSL SI TR (INCL CARPET, BRONZE)	
84–87	Y (65I)	14081856	RH	DISCON	PANEL, F/FLR CNSL SI TR (INCL CARPET, BRONZE)	
84–85	Y (74I)	14081857	LH	DISCON	PANEL, F/FLR CNSL SI TR (INCL CARPET, CARMINE)	
84–85	Y (74I)	14081858	RH	DISCON	PANEL, F/FLR CNSL SI TR (INCL CARPET, CARMINE)	
86–87	Y (21I)	14094253	LH	DISCON	PANEL, F/FLR CNSL SI TR (INCL CARPET, BLUE)	
86–87	Y (21I)	14094254	RH	DISCON	PANEL, F/FLR CNSL SI TR (INCL CARPET, BLUE)	
86–87	Y (73I)	14094255	LH	DISCON	PANEL, F/FLR CNSL SI TR (INCL CARPET, RED)	
86–87	Y (73I)	14094256	RH	DISCON	PANEL, F/FLR CNSL SI TR (INCL CARPET, RED)	
88–89	Y (19I)	10095117	LH	DISCON	PANEL, F/FLR CNSL SI TR (BLACK)	
88–89	Y (19I)	10095118	RH	DISCON	PANEL, F/FLR CNSL SI TR (BLACK)	
88–89	Y (21I)	10095119	LH	DISCON	PANEL, F/FLR CNSL SI TR (BLUE) .	
88–89	Y (21I)	10095120	RH	DISCON	PANEL, F/FLR CNSL SI TR (BLUE) .	
88–89	Y (60I)	10095121	LH	DISCON	PANEL, F/FLR CNSL SI TR (COGNAC)	
88–89	Y (60I)	10095122	RH	DISCON	PANEL, F/FLR CNSL SI TR (COGNAC)	
88–89	Y (73I)	10095123	LH	DISCON	PANEL, F/FLR CNSL SI TR (RED)	
88–89	Y (73I)	10095124	RH	DISCON	PANEL, F/FLR CNSL SI TR (RED)	
88–89	Y (90I)	10095125	LH	DISCON	PANEL, F/FLR CNSL SI TR (GRAY) .	
88–89	Y (90I)	10095126	RH	DISCON	PANEL, F/FLR CNSL SI TR (GRAY) .	
90–91	Y (90I)	10095092	RH	DISCON	PANEL, F/FLR CNSL SI TR (GRAY) .	
90–91	Y (22I)	10095094	RH	DISCON	PANEL, F/FLR CNSL SI TR (BLUE) .	
90–91	Y (60I)	10095096	RH	DISCON	PANEL, F/FLR CNSL SI TR (COGNAC)	
90–92	Y (73I)	10095100	RH	156.00	PANEL, F/FLR CNSL SI TR (RED)	9–F20,32
90–91	Y (22I)	10175797	LH	DISCON	PANEL, F/FLR CNSL SI TR (BLUE) .	
90–91	Y (60I)	10175799	LH	DISCON	PANEL, F/FLR CNSL SI TR (COGNAC)	
90–92	Y (73I)	10175801	LH	DISCON	PANEL, F/FLR CNSL SI TR (RED)	
90–91	Y (90I)	10175803	LH	DISCON	PANEL, F/FLR CNSL SI TR (GRAY) .	

© 2000 GENERAL MOTORS SERVICE PARTS OPERATIONS–CHEVROLET–14Y

10.240 APPLIQUE – BRACKET – CLIP – CONSOLE – COVER – EMBLEM – FILLER – HOLDER – MAT – NUT – PANEL – PLATE – PROTECTOR – RETAINER – SPACER, Floor Console (Con't)

90–91	Y (19I)	10220077	LH	156.00	PANEL, F/FLR CNSL SI TR (BLACK)	9–F20,32
90–91	Y (19I)	10220078	RH	156.00	PANEL, F/FLR CNSL SI TR (BLACK)	9–F20,32
92–93	Y (14I)	10220073	LH	156.00	PANEL, F/FLR CNSL SI TR (GRAY)	9–G2,32
92–93	Y (14I)	10220074	RH	156.00	PANEL, F/FLR CNSL SI TR (GRAY)	9–G2,32
92–93	Y (64I)	10220075	LH	156.00	PANEL, F/FLR CNSL SI TR (BEIGE)	9–G2,32
92–93	Y (64I)	10220076	RH	156.00	PANEL, F/FLR CNSL SI TR (BEIGE)	9–G2,32
92–93	Y (10I), (19I)	10220077	LH	156.00	PANEL, F/FLR CNSL SI TR (BLACK)	9–F20,32
92–93	Y (10I), (19I)	10220078	RH	156.00	PANEL, F/FLR CNSL SI TR (BLACK)	9–F20,32
93	Y (79I)	10220079	LH	156.00	PANEL, F/FLR CNSL SI TR (RED)	9–G2,32
93	Y (79I)	10220080	RH	DISCON	PANEL, F/FLR CNSL SI TR (RED)	
93	Y (70I)	10220081	LH	156.00	PANEL, F/FLR CNSL SI TR (RED)	9–G2,32
93	Y (70I)	10220082	RH	156.00	PANEL, F/FLR CNSL SI TR (RED)	9–G2,32
94–96	Y (19I)	10238465	LH	103.00	PANEL, F/FLR CNSL SI TR (BLACK)	9–G2,32
94–96	Y (19I)	10238466	RH	100.50	PANEL, F/FLR CNSL SI TR (BLACK)	9–G2,32
94–96	Y (64I)	10238467	LH	103.00	PANEL, F/FLR CNSL SI TR (BEIGE)	9–G2,32
94–96	Y (64I)	10238468	RH	100.50	PANEL, F/FLR CNSL SI TR (BEIGE)	9–G2,32
94–95	Y (70I)	10238469	LH	103.00	PANEL, F/FLR CNSL SI TR (RED)	9–G2,32
94–95	Y (70I)	10238470	RH	100.50	PANEL, F/FLR CNSL SI TR (RED)	9–G2,32
94–96	Y (14I)	10238471	LH	103.00	PANEL, F/FLR CNSL SI TR (GRAY)	9–G2,32
94–96	Y (14I)	10238472	RH	100.50	PANEL, F/FLR CNSL SI TR (GRAY)	9–G2,32
96	Y (70I), (EXC GRAND SPORT EDITION (Z16)	10238469	LH	103.00	PANEL, F/FLR CNSL SI TR (RED)	9–G2,32
96	Y (70I), (EXC GRAND SPORT EDITION (Z16)	10238470	RH	100.50	PANEL, F/FLR CNSL SI TR (RED)	9–G2,32
89	Y (EXC ELEK RIDE & HANDLING (FX3)	14104468	1	DISCON	PLATE, F/FLR CNSL ACSRY TR	
89	Y ELEK RIDE & HANDLING (FX3), 6–SPD M/TRANS (ML9)	14104915	1	DISCON	PLATE, F/FLR CNSL ACSRY TR	
84–85	Y	14089615	1	DISCON	PLATE, F/FLR CNSL TR	
85	Y M/TRNS, 6–WAY (A42) (1ST DES)	14089618	1	DISCON	PLATE, F/FLR CNSL TR (W/OVERDRIVE SW ON CNSL TR PLATE)	
85	Y M/TRNS (EXC 6–WAY A42) (2ND DES)	14090633	1	DISCON	PLATE, F/FLR CNSL TR (W/OVERDRIVE SW ON SHIFTER KNOB)	
85	Y M/TRNS, 6–WAY (A42) (2ND DES)	14090634	1	DISCON	PLATE, F/FLR CNSL TR (W/OVERDRIVE SW ON SHIFTER KNOB)	
86	Y 6–WAY PWR ST ADJR (AG9), (2ND DES)	14089615	1	DISCON	PLATE, F/FLR CNSL TR (LESS PWR SEAT ADJ GRAPHICS)	
86	Y M/TRNS (2ND DES)	14090633	1	DISCON	PLATE, F/FLR CNSL TR (LESS PWR SEAT ADJ GRAPHICS)	
86	Y M/TRNS, 6–WAY (A42) (1ST DES)	14090634	1	DISCON	PLATE, F/FLR CNSL TR (WITH PWR SEAT ADJ GRAPHICS)	
87–88	Y 4–SPD A/TRANS (MD8)	14089615	1	DISCON	PLATE, F/FLR CNSL TR (LESS PWR SEAT ADJ GRAPHICS)	
87–88	Y M/TRNS	14090633	1	DISCON	PLATE, F/FLR CNSL TR	
89	Y 6–SPD M/TRANS (ML9), ACTIVE SUSP (Z5Z)	10085920	1	DISCON	PLATE, F/FLR CNSL TR	
89	Y 4–SPD A/TRANS (MD8), (EXC ELEK RIDE & HANDLING (FX3)	14089615	1	DISCON	PLATE, F/FLR CNSL TR (LESS PWR SEAT ADJ GRAPHICS)	
90–91	Y 6–SPD M/TRANS (ML9)	10085920	1	DISCON	PLATE, F/FLR CNSL TR	
92–93	Y 4–SPD A/TRANS (MD8), (EXC VE1 (EXPORT)	10152827	1	246.00	PLATE, F/FLR CNSL TR	9–G2,9
92–93	Y 6–SPD M/TRANS (ML9)	10199502	1	246.00	PLATE, F/FLR CNSL TR	9–G2,8

© 2000 GENERAL MOTORS SERVICE PARTS OPERATIONS–CHEVROLET–14Y

10.240 APPLIQUE – BRACKET – CLIP – CONSOLE – COVER – EMBLEM – FILLER – HOLDER – MAT – NUT – PANEL – PLATE – PROTECTOR – RETAINER – SPACER, Floor Console (Con't)

94	Y 6–SPD M/TRANS (ML9) ...	10161884	1	246.00	PLATE, F/FLR CNSL TR (BLACK)	9–G2,8
94–96	Y 4–SPD A/TRANS (M30), (EXC VE1 (EXPORT)	10265546	1	246.00	PLATE, F/FLR CNSL TR	9–G2,9
95–96	Y 6–SPD M/TRANS (ML9) ...	10267745	1	246.00	PLATE, F/FLR CNSL TR	9–G2,8
85	Y A/TRNS (6–WAY (AG9) ...	14089616	1	DISCON	PLATE, F/FLR CNSL TR PLT	
86	Y A/TRNS (6–WAY (AG9) (1ST DES)	14089616	1	DISCON	PLATE, F/FLR CNSL TR PLT (WITH PWR SEAT ADJ GRAPHICS) ..	
90–96	Y	10085932	1	7.10	PROTECTOR, F/FLR CNSL COMPT	9–F20,20
84–89	Y	12523184	1	4.90	RETAINER, F/FLR CNSL TR PLT (10.242)	
90–93	Y	22570333	1	*.60	RETAINER, F/FLR CNSL TR PLT .	9–F20,28
94–96	Y	10246510	1	2.60	SPACER, F/FLR CNSL SI T/PNL .	9–F2,36
	*EXPORT**********EXPORT**********EXPORT**********EXPORT**********EXPORT*					
85–87	Y FOR MOD APPL & POA SEE INST CSTR CHT	25051811	1	DISCON	APPLIQUE, CNSL INFO CTR SWITCH PLT	
84–87	Y VE1 (EXPORT)	25051811	1	DISCON	APPLIQUE, DRVR INFO DISPLAY SW	
92–93	Y 4–SPD A/TRANS (MD8), VE1 (EXPORT)	10199501	1	DISCON	PLATE, F/FLR CNSL TR	
94–96	Y 4–SPD A/TRANS (M30), VE1 (EXPORT)	10265547	1	247.00	PLATE, F/FLR CNSL TR	9–G2,9

10.242 BOLT – BUMPER – COVER – DOOR – HINGE – HOUSING – PIN – SPRING – TRAY, Floor Console Compartment Door

90–95	Y	20175457	2	.30	BOLT, F/FLR CNSL DR (08.977) ..	9–F20,17
96	Y	20175457	2	.30	BOLT, F/FLR CNSL DR (08.977) ..	9–F20,17
84–89	Y	365797	4	*.46	BUMPER, F/FLR FRT CNSL DR (3MM DIA HEIGHT) (10.263) ...	9–F17,57
90–91	Y (1ST DES)	365797	4	*.46	BUMPER, F/FLR FRT CNSL DR (10.263) (USED ON FRT FLR CNSL PNL W/3MM DIA HOLE) .	9–F17,57
90–91	Y (2ND DES)	1625385	1	.75	BUMPER, F/FLR FRT CNSL DR (I/P UPR TR) (W/5.5MM HOLE AT RR OF PNL) (10.263)	9–F20,21
90–91	Y (2ND DES)	10172357	1	3.60	BUMPER, F/FLR FRT CNSL DR (SI TR) (W/5.5MM HOLE ON RR OF PNL)	9–F20,21
92–96	Y	365797	4	*.46	BUMPER, F/FLR FRT CNSL DR (3MM DIA HOLE) (10.263)	9–F17,57
92–93	Y	1625385	1	.75	BUMPER, F/FLR FRT CNSL DR (10.263)	9–F20,21
92–96	Y	10172357	1	3.60	BUMPER, F/FLR FRT CNSL DR ..	9–F20,21
84–90	Y	365641	4	.39	BUMPER, FRT (12.986)	
84–89	Y	14047526	1	DISCON	COVER, F/FLR CNSL ASHTRAY .	
84–89	Y	14051142	1	DISCON	COVER, F/FLR CNSL DR LAT OPG (10.240)	
84–89	Y	14046652	1	84.80	DOOR, F/FLR CNSL (PAINT TO MATCH)	9–F17,6
88–89	Y (60I)	10072158	1	DISCON	DOOR, F/FLR CNSL (COGNAC) .	
88	Y 35 ANNIVERSARY (Z01), (11I)	10123022	1	DISCON	DOOR, F/FLR CNSL (WHITE)	
88–89	Y (73I)	14094258	1	165.80	DOOR, F/FLR CNSL (RED)	
90–96	Y	10262883	1	165.80	DOOR, F/FLR CNSL (BLACK) ...	9–F20,14
84–89	Y	14046698	1	DISCON	HINGE, F/FLR CNSL DR	
90–95	Y	10085922	1	22.90	HINGE, F/FLR CNSL DR	9–F20,16
96	Y	10085922	1	22.90	HINGE, F/FLR CNSL DR	9–F20,16

© 2000 GENERAL MOTORS SERVICE PARTS OPERATIONS–CHEVROLET–14Y

10.242 BOLT – BUMPER – COVER – DOOR – HINGE – HOUSING – PIN – SPRING – TRAY, Floor Console Compartment Door (Con't)

90–91	Y 6–WAY PWR P/SEAT ADJR (AC1), 6–WAY PWR D/SEAT ADJR (AC3), ELEK RIDE & HANDLING (FX3)	10086231	1	85.17	HOUSING, F/FLR CNSL ACSRY SW	9–F20,57
90–91	Y 6–WAY PWR D/SEAT ADJR (AC3), (EXC 6–WAY PWR P/SEAT ADJR (AC1), ELEK RIDE & HANDLING (FX3) ...	10086232	1	DISCON	HOUSING, F/FLR CNSL ACSRY SW	
90–91	Y 6–WAY PWR P/SEAT ADJR (AC1), 6–WAY PWR D/SEAT ADJR (AC3), SOFT RIDE SUSP (FE1), (EXC ELEK RIDE & HANDLING (FX3) ...	10086233	1	28.50	HOUSING, F/FLR CNSL ACSRY SW	9–F20,40
92–94	Y 6–WAY PWR D/SEAT ADJR (AC3), (EXC 6–WAY PWR P/SEAT ADJR (AC1), ELEK RIDE & HANDLING (FX3) ...	10161841	1	26.00	HOUSING, F/FLR CNSL ACSRY SW	9–G2,53
92–94	Y 6–WAY PWR P/SEAT ADJR (AC1), 6–WAY PWR D/SEAT ADJR (AC3), (EXC ELEK RIDE & HANDLING (FX3) ...	10161844	1	26.00	HOUSING, F/FLR CNSL ACSRY SW	9–G2,53
92–94	Y 6–WAY PWR P/SEAT ADJR (AC1), 6–WAY PWR D/SEAT ADJR (AC3), ELEK RIDE & HANDLING (FX3)	10161846	1	26.00	HOUSING, F/FLR CNSL ACSRY SW	9–G2,53
95	Y 6–WAY PWR D/SEAT ADJR (AG1), (EXC 6–WAY PWR P/SEAT ADJR (AG2), ELEK RIDE & HANDLING (FX3) ...	10161841	1	26.00	HOUSING, F/FLR CNSL ACSRY SW	9–G2,53
95–96	Y 6–WAY PWR D/SEAT ADJR (AG1), 6–WAY PWR P/SEAT ADJR (AG2), MAN RECL FRT BKT ST (AR9), RECL FRT BKT ST (AQ9), (EXC ELEK RIDE & HANDLING (FX3)	10161844	1	26.00	HOUSING, F/FLR CNSL ACSRY SW	9–G2,53
95–96	Y 6–WAY PWR D/SEAT ADJR (AG1), 6–WAY PWR P/SEAT ADJR (AG2), RECL FRT BKT ST (AQ9), MAN RECL FRT BKT ST (AR9), ELEK RIDE & HANDLING (FX3)	10161846	1	26.00	HOUSING, F/FLR CNSL ACSRY SW	9–G2,53
96	Y 6–WAY PWR D/SEAT ADJR (AG1), (EXC 6–WAY PWR P/SEAT ADJR (AG2), CHASSIS, REALTIME DAMPING (F45)	10161841	1	26.00	HOUSING, F/FLR CNSL ACSRY SW	9–G2,53
84–96	Y	379997	2	2.11	PIN, F/FLR CNSL ASHTRAY CVR (12.009)	9–F17,62
90–94	Y	12523184	1	4.90	SPRING, F/FLR CNSL ASHTRAY CVR	9–F17,59
95–96	Y 4–SPD A/TRANS (M30) ...	12523184	1	4.90	SPRING, F/FLR CNSL ASHTRAY CVR	9–F17,59
84–93	Y	12524132	1	.41	SPRING, F/FLR CNSL DR	
94–96	Y	12524132	1	.41	SPRING, F/FLR CNSL DR	
84–89	Y STEREO CASSETTE (UM6), CASSETTE STEREO (UU8)	14047474	1	21.70	TRAY, F/FLR CNSL TAPE STOR (10.240)	9–F17,21

© 2000 GENERAL MOTORS SERVICE PARTS OPERATIONS–CHEVROLET–14Y

10.252 BRACKET – CLIP – FASTENER – PANEL – PLATE, Instrument Panel Trim

84–85	Y	14049085	1	DISCON	BRACKET, LWR TR PAD INR	
84–85	Y	14049084	1	DISCON	BRACKET, LWR TR PAD OTR	
90–93	Y	10175544	2	.40	CLIP, I/P ACSRY TR PLT	9–E19,75
94–96	Y	10270778	1	*.50	CLIP, I/P TR PLT	9–F2,31
84	Y	14065045	4	.90	FASTENER, I/P TR PLT (VELCRO TAPE)	9–E2,19
90–93	Y	10267755	1	19.80	PANEL, I/P SI TR	9–E8,9
94–96	Y	10267755	1	19.80	PANEL, I/P SI TR	9–E8,9
84–89	Y	10103967	1	85.10	PLATE, I/P ACSRY TR	9–E2,37
90–91	Y 5.7–8 (L98)	10085311	1	33.90	PLATE, I/P ACSRY TR	9–E8,71
90	Y 5.7J (LT5)	10086273	1	DISCON	PLATE, I/P ACSRY TR	
91	Y 5.7J (LT5)	10177904	1	DISCON	PLATE, I/P ACSRY TR	
92–94	Y 5.7J (LT5)	10233781	1	107.80	PLATE, I/P ACSRY TR	9–E12,71
92–93	Y 5.7P (LT1)	10233785	1	25.80	PLATE, I/P ACSRY TR (BLACK)	9–E12,71
94–95	Y 5.7P (LT1)	10262830	1	25.80	PLATE, I/P ACSRY TR	9–F2,29
94–95	Y 5.7J (LT5)	10262831	1	25.80	PLATE, I/P ACSRY TR	9–F2,29
96	Y	10262830	1	25.00	PLATE, I/P ACSRY TR	9–F2,29
90–93	Y	10085914	1	DISCON	PLATE, I/P SW TR	
94–96	Y	10256762	1	19.40	PLATE, I/P SW TR (BLACK)	9–F2,88
84–89	Y	10103968	1	DISCON	PLATE, I/P TR	

10.254 PLATE, Instrument Panel

86	Y67	10045698	1	DISCON	PLATE, I/P NA (OFFICIAL PACE CAR)	

10.256 COVER, Instrument Panel Opening

94–96	Y	10210578	RH	4.50	COVER, I/P OTR AIR OTLT OPG	9–F2,23
84–89	Y	14049019	1	DISCON	COVER, RDO OPG	

10.260 COMPARTMENT – STRAP, Instrument Panel

90–92	Y	10137256	1	29.00	COMPARTMENT, I/P	9–E8,1
93	Y	10225894	1	29.00	COMPARTMENT, I/P	9–E19,1
95–96	Y	25533564	2	DISCON	STRAP, I/P COMPT (POSN 2, POSN 3) (445 MM LONG) (09.786)	

10.261 DOOR – PANEL, Instrument Panel Compartment Door

90–93	Y	10216288	1	114.90	DOOR, I/P COMPT	9–E5,88
90–92	Y	10221116	1	21.90	PANEL, I/P COMPT DR INR (WHEN USING ON EARLY 92 VEHICLES IT WILL BE NECESSARY TO REPL I/P COMPARTMENT WITH 10216271)	9–E8,85
93	Y	10221116	1	21.90	PANEL, I/P COMPT DR INR	9–E8,85

10.262 HINGE, Instrument Panel Compartment Door

90–93	Y	10137257	1	DISCON	HINGE, I/P COMPT DR	

10.263 BUMPER, Instrument Panel Compartment Door

90–93	Y	1625385	2	.75	BUMPER, I/P COMPT DR STOP (I/P UPR TR)	9–E8,4

© 2000 GENERAL MOTORS SERVICE PARTS OPERATIONS–CHEVROLET–14Y

MICROFICHE INDEX

GROUPS 10.000 THRU 11.000

FICHE 9 OF 11

GROUP	DESCRIPTION	STARTING GRID LOCATION PARTS	ILLUSTRATIONS
–	GENERAL INFORMATION	1–A2	1–G2
–	ALPHABETICAL INDEX	1–B13	N.A.
10.000	DOORS – REGULATORS – WINDSHIELD – WIPER – WASHER	9–A2	9–D2
11.000	REAR GLASS – SEAT PARTS – ADJUSTER	9–C2	9–I2
–	OUT OF FICHE CALLS	N.A.	9–L4

9–B1

10.266 CYLINDER – CYLINDER KIT – LOCK – LOCK PKG – NUT – SPRING – TUMBLER, Instrument Panel Compartment Door Lock

91–96	Y	12507229	1	12.72	CYLINDER KIT, F/FLR CNSL DR LK (UNCODED)	9–F20,30
90	Y	12507454	1	7.91	CYLINDER, I/P COMPT DR LK (UNCODED)	
91–93	Y	12506447	1	7.63	CYLINDER, I/P COMPT DR LK	9–E19,76
84–86	Y	14075364	1	19.23	LOCK PKG, F/FLR CNSL COMPT DR (UNCODED) (B&S 609541–2) (CONSISTS OF LK CYLINDER, SPR WA, CASE, MTG NUT, LEVER & SEM SCREW)	9–F17,33
84–86	Y07	14075365	2	22.44	LOCK PKG, U/B STOR COMPT (UNCODED) (B&S 609542–2) (CONSISTS OF LK CYLINDER, CASE & BOLT, & SCREW)	10–I5,7
90–93	Y	14042799	1	10.95	LOCK, I/P COMPT DR (PAINT TO MATCH)	9–E8,5
84–96	Y	52356317	1	*1.10	NUT, F/FLR CNSL DR LK CYL CASE	9–F17,31
84–96	Y	6259315	5	*.58	SPRING, F/FLR CNSL COMPT DR LK CYL TUMB (SNAP IN) (10.268)	
90–94	Y	20496065	AR	*.08	SPRING, I/P COMPT DR LK CYL A/RTL TUMB (ANTI–RATTLE)	
90–93	Y	6259315	5	*.58	SPRING, I/P COMPT DR LK CYL TUMB (SNAP IN) (10.268)	
84–96	Y	6259309	1	*.27	TUMBLER, F/FLR CNSL DR LK CYL (#1) (SNAP IN) (10.553)	
84–96	Y	6259311	1	*.27	TUMBLER, F/FLR CNSL DR LK CYL (#3) (SNAP IN)	
84–96	Y	6259312	1	*.27	TUMBLER, F/FLR CNSL DR LK CYL (#4) (SNAP IN)	
84–96	Y	6259313	1	*.27	TUMBLER, F/FLR CNSL DR LK CYL (#5) (SNAP IN)	
91–96	Y	6259310	1	*.27	TUMBLER, F/FLR CNSL DR LK CYL (#2) (SNAP IN)	
90–93	Y	6259309	1	*.27	TUMBLER, I/P COMPT DR LK CYL (#1) (SNAP IN) (10.553)	
90–93	Y	6259310	1	*.27	TUMBLER, I/P COMPT DR LK CYL (#2) (SNAP IN)	
90–93	Y	6259311	1	*.27	TUMBLER, I/P COMPT DR LK CYL (#3) (SNAP IN)	
90–93	Y	6259312	1	*.27	TUMBLER, I/P COMPT DR LK CYL (#4) (SNAP IN)	
90–93	Y	6259313	1	*.27	TUMBLER, I/P COMPT DR LK CYL (#5) (SNAP IN)	
90–94	Y	20496064	AR	26.91	TUMBLER, I/P COMPT DR LK CYL A/RTL	
92–93	Y	6259309	1	*.27	TUMBLER, LK CYL #1 (SNAP IN) (#1) (SNAP IN) (10.553)	
92–93	Y	6259310	1	*.27	TUMBLER, LK CYL #2 (SNAP IN) (#2) (SNAP IN)	
92–95	Y	6259311	1	*.27	TUMBLER, LK CYL #3 (SNAP IN) (#3) (SNAP IN)	
92–93	Y	6259312	1	*.27	TUMBLER, LK CYL #4 (SNAP IN) (#4) (SNAP IN)	
92–93	Y	6259313	AR	*.27	TUMBLER, LK CYL #5 (SNAP IN) (#5) (SNAP IN)	

© 2000 GENERAL MOTORS SERVICE PARTS OPERATIONS–CHEVROLET–14Y

10.268 BUMPER – LATCH – LOCK KIT – RETAINER – STRIKER, Instrument Panel Compartment Door Lock and Console Compartment Door Lock

90–92	Y	1625385	2	.75	BUMPER, I/P COMPT DR LK STKR (I/P UPR TR) (10.263)	
84–93	Y	12524133	1	2.11	LATCH, F/FLR CNSL DR	
94–96	Y	12524133	1	2.11	LATCH, F/FLR CNSL DR	
87	Y	10074165	1	19.23	LOCK KIT, F/FLR CNSL COMPT DR (10.266) (CONSISTS OF LK CYL, SPR WA, CASE, MTG NUT, LVR & SEM 2 SCREW)	9–F17,33
88–89	Y	10074165	1	19.23	LOCK KIT, F/FLR CNSL COMPT DR (10.266)	9–F17,33
90	Y (EXC SPECIAL PERFORMANCE PKG (ZR1)	10074165	1	19.23	LOCK KIT, F/FLR CNSL COMPT DR (10.266)	9–F17,33
90–93	Y	10024625	1	.56	RETAINER, I/P COMPT DR LK (10.262)	9–E8,2
84–89	Y	14046798	1	.80	STRIKER, F/FLR COMPT DR LAT (10.242)	9–F17,19
90–96	Y	10086183	1	4.81	STRIKER, F/FLR COMPT DR LAT (10.242)	9–F20,13
90–93	Y	10137258	1	*2.99	STRIKER, I/P COMPT DR LK	9–E8,3

10.275 CONNECTOR – LAMP – LENS – SWITCH, Instrument Panel Compartment Lamp

91	Y	12101836	1	17.46	CONNECTOR, LP–I/P COMPT (2–WAY M, W/LEADS) (02.535) (AC–DELCO #PT228)	
96	Y	12101836	1	17.46	CONNECTOR, LP–I/P COMPT (2–WAY M, W/LEADS) (02.535) (AC–DELCO #PT228)	
92–95	Y	12101836	1	17.46	CONNECTOR, SW–I/P COMPT LP (2–WAY M, W/LEADS) (02.535) (AC–DELCO #PT228)	
92–93	Y	12101934	1	15.21	CONNECTOR, SW–I/P COMPT LP (2–WAY F) (W/LEADS) (02.535) (AC–DELCO #PT206)	
92	Y	12101936	1	60.09	CONNECTOR, SW–I/P COMPT LP (17–PIN) (NATURAL) (17–WAY F, W/LEADS) (02.535) (AC–DELCO #PT208)	
93	Y	12101834	1	27.44	CONNECTOR, SW–I/P COMPT LP (9–WAY, W/LEADS, W/1 OFF SET & 1 FLUSH CONN GUIDES) (9–WAY F, W/LEADS) (02.535) (AC–DELCO #PT226)	
84–94	Y	16512252	1	52.80	LAMP, F/FLR CNSL COMPT	9–F17,5
95–96	Y	16512252	1	52.80	LAMP, F/FLR CNSL COMPT	9–F17,5
90–93	Y	14059878	1	.58	LENS, I/P COMPT LP (GLOVE BOX) (02.776)	9–E8,6
90–93	Y	12373319	1	17.00	SWITCH, I/P COMPT LP (W/BULB & CONN HARN) (NEED TO CUT AND SPLICE LEADS)	9–E8,87

10.351 DOOR, Front Door

84–89	Y	10228732	RH	674.10	DOOR, FRT SI (CUT SPKR HOLES AS REQUIRED)	9–G10,65
84–89	Y	10270267	LH	652.91	DOOR, FRT SI (CUT SPKR HOLES AS REQ) (USE RET 25016383 TO ATCH DR PRIM SEAL)	9–G10,65

© 2000 GENERAL MOTORS SERVICE PARTS OPERATIONS–CHEVROLET–14Y

10.351 DOOR, Front Door (Con't)

90–92	Y (EXC SPECIAL PERFORMANCE PKG (ZR1)	10228732	RH	674.10	DOOR, FRT SI (ACTR ROD HOLE IN B/C) (ADD TWO 7.5 MM X 16 MM SLOTS FOR LOCATING PIN USING CROSS MARKS ON DOOR MARKS ON DOOR FOR LOCATION.)	9–G10,65
90–92	Y (EXC SPECIAL PERFORMANCE PKG (ZR1)	10270267	LH	652.91	DOOR, FRT SI (ACTR ROD HOLE IN B/C) (ADD 2–7.5MMX16MM SLOTS FOR LOC PIN USING CR MARKS ON DR FOR SLOT LOC.USE RET 25016383 TO ATCH DR PRIM SEAL)	9–G10,65
90–92	Y SPECIAL PERFORMANCE PKG (ZR1)	10270269	LH	715.97	DOOR, FRT SI (ADD 7.5 MM X 16 MM SLOTS FOR LOCATING PIN USING CROSS MARKS ON DOOR FOR SLOT LOCATION.) (USE RET 25016383 TO ATCH DR PRIM SEAL)	
90–92	Y SPECIAL PERFORMANCE PKG (ZR1)	10270270	RH	715.97	DOOR, FRT SI (ADD 7.5 MM X 16 MM SLOTS FOR LOCATING PIN USING CROSS MARKS ON DR FOR SLOT LOC)	
93	Y (EXC SPECIAL PERFORMANCE PKG (ZR1)	10228732	RH	674.10	DOOR, FRT SI	9–G10,65
93–94	Y (EXC SPECIAL PERFORMANCE PKG (ZR1)	10270267	LH	652.91	DOOR, FRT SI (USE RET 25016383 TO ATCH DR PRIM SEAL)	9–G10,65
93	Y SPECIAL PERFORMANCE PKG (ZR1)	10270269	LH	715.97	DOOR, FRT SI (USE RET 25016383 TO ATCH DR PRIM SEAL)	
93	Y SPECIAL PERFORMANCE PKG (ZR1)	10270270	RH	715.97	DOOR, FRT SI	
94	Y (EXC SPECIAL PERFORMANCE PKG (ZR1)	10270268	RH	652.91	DOOR, FRT SI (USE RET 25016383 TO ATCH DR PRIM SEAL)	
94	Y SPECIAL PERFORMANCE PKG (ZR1)	10270269	LH	715.97	DOOR, FRT SI (USE RET 25016383 TO ATCH DR PRIM SEAL)	
94	Y SPECIAL PERFORMANCE PKG (ZR1)	10270270	RH	715.97	DOOR, FRT SI (USE RET 25016383 TO ATCH DR PRIM SEAL)	
95	Y (EXC SPECIAL PERFORMANCE PKG (ZR1)	10270267	LH	652.91	DOOR, FRT SI	9–G10,65
95	Y (EXC SPECIAL PERFORMANCE PKG (ZR1)	10270268	RH	652.91	DOOR, FRT SI	
95	Y SPECIAL PERFORMANCE PKG (ZR1)	10270269	LH	715.97	DOOR, FRT SI	
95	Y SPECIAL PERFORMANCE PKG (ZR1)	10270270	RH	715.97	DOOR, FRT SI	
96	Y	10270267	LH	652.91	DOOR, FRT SI	9–G10,65
96	Y	10270268	RH	652.91	DOOR, FRT SI	

10.355 BARRIER – INSULATOR, Door Inner Panel

91	Y	11515174	AR	*1.50	BARRIER, FRT S/D INR PNL SND (4 1/4"X7 1/2") (TRIM AS REQ'D) (15.492)	
84–96	Y	10193703	LH	13.63	INSULATOR, FRT S/D (12.895) ..	9–G10,50
84–96	Y	10193704	RH	13.63	INSULATOR, FRT S/D (12.895) ..	9–G10,50
90–94	Y	3999572	1	4.98	INSULATOR, FRT S/D (09.260) (POS #4)	9–G14,48
95–96	Y	3999572	2	4.98	INSULATOR, FRT S/D (09.260) ..	9–G14,48
86–94	Y	10045633	2	11.70	INSULATOR, FRT S/D OTR PNL BAR (10.685)	9–G10,53
95–96	Y	10045633	4	11.70	INSULATOR, FRT S/D OTR PNL BAR (10.685)	9–G10,53

© 2000 GENERAL MOTORS SERVICE PARTS OPERATIONS–CHEVROLET–14Y

	10.450	**HINGE, Door Hinge**				
84–96	Y	14043176	2	39.51	HINGE, FRT S/D UPR	9–G10,63
	10.454	**HINGE, Front Door Lower Hinge**				
84–96	Y	14043177	2	33.15	HINGE, FRT S/D LWR (10.450)	9–G10,57
	10.463	**BOLT, Door Hinge**				
93–96	Y	11503990	6	1.80	BOLT, FRT S/D HGE (POSN #2) (08.900)	
	10.464	**BUSHING, Door Hinge**				
84–96	Y	20429500	4	*.61	BUSHING, FRT S/D HGE PIN (UPR/LWR) (15MM O.D.)	9–G10,64
	10.466	**PIN, Door Hinge**				
84–96	Y	20046147	4	*3.10	PIN, FRT S/D HGE (UPR/LWR)	9–G10,59
84–93	Y	20046147	AR	*3.10	PIN, RR S/D HGE (UPR/LWR)	9–G10,59
	10.470	**LOCK, Front Side Door**				
84–88	Y	16608234	RH	93.93	LOCK, FRT S/D	9–G10,23
84–88	Y	16608235	LH	93.93	LOCK, FRT S/D	9–G10,23
89–96	Y	10259203	RH	47.24	LOCK, FRT S/D	9–G10,23
89–96	Y	10259204	LH	48.35	LOCK, FRT S/D	9–G10,23
	10.474	**BOLT – SPRING, Side Door Lock**				
91–96	Y	10172329	6	*1.30	BOLT, FRT S/D LK	9–G14,17
84–88	Y	20047022	RH	*.20	SPRING, FRT S/D LK FORK	9–G10,19
84–88	Y	20047023	LH	.20	SPRING, FRT S/D LK FORK	9–G10,19
	10.485	**ACTUATOR – ANTENNA – BRACKET – CONNECTOR – ESCUTCHEON – NUT – PLATE – RECEIVER – RETAINER – RIVET – SWITCH – TRANSMITTER, Door Electric and Vacuum Locks**				
84	Y	22020256	AR	63.85	ACTUATOR, FRT S/D LK (AC–DELCO #22020256)	9–G10,31
85–93	Y	22049686	2	71.67	ACTUATOR, FRT S/D LK (AC–DELCO #22049686)	9–G10,31
94–96	Y	22137716	2	45.55	ACTUATOR, FRT S/D LK (AC–DELCO #22137716)	9–G22,37
93	Y	10098467	2	52.53	ANTENNA, R/CON DR LK RCVR	9–H13,1
94–96	Y (EXC EUROPEAN PROVISIONS (VD1) (EXPORT), VE1 (EXPORT)	10098467	2	52.53	ANTENNA, R/CON DR LK RCVR	9–H13,1
84–93	Y	22049754	2	3.92	BRACKET, FRT S/D LK ACTR (AC–DELCO #22049754)	9–G10,31
93	Y	10252241	1	6.63	BRACKET, R/CON DR LK RCVR	9–E19,25
94–96	Y (EXC EUROPEAN PROVISIONS (VD1) (EXPORT), VE1 (EXPORT)	10252241	1	6.63	BRACKET, R/CON DR LK RCVR	9–E19,25
94–95	Y	12101858	1	18.13	CONNECTOR, ANT–R/CON DR LK RCVR (RED) (2–WAY F) (W/LEADS) (02.535) (AC–DELCO #PT250)	
93	Y	12102779	2	16.04	CONNECTOR, MOT–DR LK ACTR (2–WAY F) (W/LEADS) (W/O SEAL) (10.783) (AC–DELCO #PT407)	

© 2000 GENERAL MOTORS SERVICE PARTS OPERATIONS–CHEVROLET–14Y

10.485 ACTUATOR – ANTENNA – BRACKET – CONNECTOR – ESCUTCHEON – NUT – PLATE – RECEIVER – RETAINER – RIVET – SWITCH – TRANSMITTER, Door Electric and Vacuum Locks (Con't)

95–96	Y	12116247	1	19.47	CONNECTOR, MOT–DR LK ACTR (BLACK) (2–WAY M) (W/LEADS) (13.090) (AC–DELCO #PT288)	
90–95	Y	12102747	2	21.07	CONNECTOR, SW–DR LK (BLACK) (2–WAY F) (W/LEADS) (03.670) (AC–DELCO #PT374)	
90–96	Y	12117265	2	39.53	CONNECTOR, SW–DR LK (5–WAY) (W/LEADS) (11.558)	
84–90	Y	20401575	2	6.80	ESCUTCHEON, DR LK SW (10.777)	9–F17,14
91–96	Y	10161852	2	4.90	ESCUTCHEON, DR LK SW (10.777)	9–H5,24
94–96	Y	347347	8	*1.00	NUT, FRT S/D LK ACTR MT PLT (UPLEVEL) (01.267)	9–G22,36
94–96	Y	10259357	LH	3.76	PLATE, FRT S/D LK ACTR MT	9–G22,40
94–96	Y	10259358	RH	3.76	PLATE, FRT S/D LK ACTR MT	9–G22,40
93	Y	10261112	1	251.94	RECEIVER, R/CON DR LK	9–F8,84
94–96	Y (EXC EUROPEAN PROVISIONS (VD1) (EXPORT), VE1 (EXPORT)	10261112	1	251.94	RECEIVER, R/CON DR LK	9–F8,84
84–89	Y	12338100	AR	*.97	RETAINER, DR LK SW TERM BD (16.341)	9–G10,17
84–88	Y	20150792	AR	1.10	RETAINER, DR LK SW TERM BD (10.565)	9–G10,16
91–93	Y	9437486	4	*.30	RIVET, FRT S/D LK ACTR (08.967)	9–G18,38
94–96	Y	22093245	4	.73	RIVET, FRT S/D LK ACTR (ALUMINUM)	9–G22,38
95–96	Y07 (EXC EUROPEAN PROVISIONS (VD1) (EXPORT), VE1 (EXPORT)	10125439	2	*.65	RIVET, R/CON DR LK RCVR ANT (POSN #1) (23.5LG 9.89 OD) (08.967)	9–H13,2
95–96	Y07	10125439	2	*.65	RIVET, R/CON DR LK RCVR ANT (POSN #2) (23.5LG 9.89 OD) (08.967)	9–H13,2
95–96	Y67 (EXC EUROPEAN PROVISIONS (VD1) (EXPORT), VE1 (EXPORT)	10125439	2	*.65	RIVET, R/CON DR LK RCVR ANT (23.5LG 9.89 OD) (08.967)	9–H13,2
84–85	Y	20344292	RH	5.51	SWITCH, DR LK (MOD ON TR PAD) (AC–DELCO #D6075)	9–H2,27
84–85	Y	20344293	LH	5.51	SWITCH, DR LK (MOD ON TR PAD) (AC–DELCO #D6076)	9–H2,27
86–89	Y	10092804	2	5.20	SWITCH, DR LK	9–H2,27
90	Y	10098462	2	4.59	SWITCH, DR LK (10.777)	9–H5,25
91–96	Y	10161853	2	6.68	SWITCH, DR LK (10.500)	9–H5,25
87–96	Y	10074163	RH	17.03	SWITCH, THEFT DTRNT DR LK (W/WIRE LEAD) (02.195)	9–G14,72
87–96	Y	10074164	LH	17.03	SWITCH, THEFT DTRNT DR LK (W/WIRE LEAD)	9–G14,72
84–86	Y	14047191	LH	18.26	SWITCH, W/WIRE, SI DR ANTI–THEFT (B&S 592702)	3–G6,14
84–86	Y	14047192	RH	18.26	SWITCH, W/WIRE, SI DR ANTI–THEFT (B&S 592703)	3–G6,14
93	Y07	10282929	1	123.42	TRANSMITTER, R/CON DR LK	9–H13,4
93	Y67	10282930	2	123.42	TRANSMITTER, R/CON DR LK	9–H13,4
94–96	Y07 (EXC EUROPEAN PROVISIONS (VD1) (EXPORT), VE1 (EXPORT)	10282929	1	123.42	TRANSMITTER, R/CON DR LK	9–H13,4
94–96	Y67 (EXC EUROPEAN PROVISIONS (VD1) (EXPORT), VE1 (EXPORT)	10282930	1	123.42	TRANSMITTER, R/CON DR LK	9–H13,4

© 2000 GENERAL MOTORS SERVICE PARTS OPERATIONS–CHEVROLET–14Y

10.500 CONNECTOR, Door Lock Remote Control

94–95	Y	12101875	1	32.61	CONNECTOR, MDL–DR LK CONT (BLUE) (8–WAY F) (W/LEADS) (02.535) (AC–DELCO #PT266)	

10.506 CONNECTOR, Door Lock Bellcrank

84–88	Y ELEC DR LK (AU3)	20007898	AR	1.80	CONNECTOR, F/D LK REM CONT ROD (09.786)	9–G10,14

10.512 CLIP – HANDLE, Door Lock Inside Handle

84–96	Y	375180	2	1.10	CLIP, FRT S/D I/S HDL (10.565)	9–G10,49
84	Y (1ST DES)	14043185	2	DISCON	HANDLE (SOLID W/CURLED END)	
84–96	Y	10153684	2	30.09	HANDLE, FRT S/D I/S (BLACK)	9–G10,47
84–92	Y (73I)	10153685	2	DISCON	HANDLE, FRT S/D I/S (RED)	
90–91	Y (90I)	10153681	2	DISCON	HANDLE, FRT S/D I/S (GRAY)	
90–91	Y (22I)	10153682	2	DISCON	HANDLE, FRT S/D I/S (BLUE)	
90–91	Y (60I)	10153683	2	DISCON	HANDLE, FRT S/D I/S (COGNAC)	
92–93	Y (14I)	10175707	2	30.09	HANDLE, FRT S/D I/S (GRAY)	9–G14,40
92–93	Y (64I)	10175708	2	30.09	HANDLE, FRT S/D I/S (BEIGE)	9–G14,40
93	Y (70I)	10199543	2	DISCON	HANDLE, FRT S/D I/S (RED)	
93	Y (79I)	10199713	2	30.09	HANDLE, FRT S/D I/S (RED)	9–G18,44

10.515 BEZEL – COVER, Door Lock Inside Handle Escutcheon (Trim Protector)

90–91	Y (19I)	10167157	LH	32.50	BEZEL, FRT S/D I/S HDL (BLACK)	9–H5,25
90–91	Y (19I)	10167158	RH	DISCON	BEZEL, FRT S/D I/S HDL (BLACK)	
90–91	Y (22I)	10167159	LH	DISCON	BEZEL, FRT S/D I/S HDL (BLUE)	
90–91	Y (22I)	10167160	RH	DISCON	BEZEL, FRT S/D I/S HDL (BLUE)	
90–91	Y (60I)	10167161	LH	DISCON	BEZEL, FRT S/D I/S HDL (COGNAC)	
90–91	Y (60I)	10167162	RH	DISCON	BEZEL, FRT S/D I/S HDL (COGNAC)	
90–91	Y (73I)	10167163	LH	DISCON	BEZEL, FRT S/D I/S HDL (RED)	
90–91	Y (73I)	10167164	RH	DISCON	BEZEL, FRT S/D I/S HDL (RED)	
90–91	Y (90I)	10167165	LH	DISCON	BEZEL, FRT S/D I/S HDL (GRAY)	
90–91	Y (90I)	10167166	RH	DISCON	BEZEL, FRT S/D I/S HDL (GRAY)	
92–93	Y (10I), (19I)	10161823	LH	30.60	BEZEL, FRT S/D I/S HDL (BLACK)	9–H5,25
92–93	Y (10I), (19I)	10161824	RH	30.90	BEZEL, FRT S/D I/S HDL (BLACK)	9–H5,25
92	Y (73I)	10161825	LH	DISCON	BEZEL, FRT S/D I/S HDL (RED)	
92	Y (73I)	10161826	RH	DISCON	BEZEL, FRT S/D I/S HDL (RED)	
92–93	Y (14I)	10161827	LH	30.60	BEZEL, FRT S/D I/S HDL (GRAY)	9–H5,25
92–93	Y (14I)	10161828	RH	DISCON	BEZEL, FRT S/D I/S HDL (GRAY)	
92–93	Y (64I)	10161829	LH	30.60	BEZEL, FRT S/D I/S HDL (BEIGE)	9–H5,25
92–93	Y (64I)	10161830	RH	28.50	BEZEL, FRT S/D I/S HDL (BEIGE) (**VPI 1–877–846–8243)	9–H5,25
93	Y (79I)	10199541	LH	30.60	BEZEL, FRT S/D I/S HDL (RED)	9–H5,25
93	Y (79I)	10199544	RH	DISCON	BEZEL, FRT S/D I/S HDL (RED)	
93	Y (70I)	10199711	LH	30.60	BEZEL, FRT S/D I/S HDL (RED)	9–H5,25
93	Y (70I)	10199712	RH	DISCON	BEZEL, FRT S/D I/S HDL (RED)	
94–96	Y	10279181	LH	30.90	BEZEL, FRT S/D I/S HDL (BLACK) (W/FLOCKING)	9–H5,25
94	Y	10279182	RH	30.90	BEZEL, FRT S/D I/S HDL (BLACK) (W/FLOCKING)	9–H5,25
95–96	Y	10279182	RH	30.90	BEZEL, FRT S/D I/S HDL (BLACK) (W/FLOCKING)	9–H5,25
84–85	Y	20354690	RH	3.70	COVER, FRT S/D LK ESCUT & R/CON HDL & SW	
84–85	Y	20354691	LH	3.52	COVER, FRT S/D LK ESCUT & R/CON HDL & SW	

© 2000 GENERAL MOTORS SERVICE PARTS OPERATIONS–CHEVROLET–14Y

10.526 CONNECTOR – FILTER, Door Lock (Keyless Entry)

93	Y	12101858	1	18.13	CONNECTOR, MDL–KEYLESS ENTRY CONT (RED) (2–WAY F) (W/LEADS) (02.535) (AC–DELCO #PT250)	
93	Y	12116521	1	DISCON	CONNECTOR, MDL–KEYLESS ENTRY CONT (W/LEADS)	
96	Y	12101875	1	32.61	CONNECTOR, MDL–KEYLESS ENTRY CONT (BLUE) (8–WAY F) (W/LEADS) (02.535) (AC–DELCO #PT266)	
93	Y	12141018	1	DISCON	FILTER, KEYLESS ENTRY RF CHOKE	

10.527 HANDLE, Door Outside Handle

88	Y 35 ANNIV (ZO1)	10123041	LH	DISCON	HANDLE, FRT DR O/S (WHITE)	
88	Y 35 ANNIV (ZO1)	10123042	RH	DISCON	HANDLE, FRT DR O/S (WHITE)	
84–96	Y	14075358	RH	39.27	HANDLE, FRT S/D O/S (LESS LOCK) (B&S 593094)	9–G10,7
84–96	Y	14075359	LH	39.27	HANDLE, FRT S/D O/S (LESS LOCK) (B&S 593095)	9–G10,7

10.550 CYLINDER KIT – GASKET, Door Outside Lock

84–90	Y	12522046	2	8.52	CYLINDER KIT, FRT S/D LK (UNCODED) (CONSISTS OF:UNIT SHUTTER, LK CYL, CASE, E–RING, RETAINER, 2 SPRINGS)	9–G10,7
91–96	Y	12520461	2	10.51	CYLINDER KIT, FRT S/D LK (UNCODED)	9–G14,65
84–92	Y	4587931	2	*.27	GASKET, FRT S/D LK CYL (1.12 IN DIA)	9–G10,2

10.551 PAWL – RING – WASHER, Door Outside Lock Cylinder

84–89	Y	14075363	2	1.67	PAWL, FRT S/D LK	9–G10,7
90–95	Y SPECIAL PERFORMANCE PKG (ZR1)	10159539	LH	1.67	PAWL, FRT S/D LK	9–G14,5
90–95	Y SPECIAL PERFORMANCE PKG (ZR1)	10159540	RH	1.67	PAWL, FRT S/D LK	9–G14,5
90–95	Y (EXC SPECIAL PERFORMANCE PKG (ZR1)	14075363	2	1.67	PAWL, FRT S/D LK	9–G10,7
96	Y	14075363	2	1.67	PAWL, FRT S/D LK	9–G10,7
84–96	Y	9431762	2	1.82	RING, FRT S/D LK PAWL RET (08.934) (AC–DELCO #9431762)	
89–92	Y	8779134	AR	.24	WASHER, FRT S/D LK CYL (.75 IN DIA) (12.249)	9–G14,20

10.552 SHUTTER – SPRING, Door Outside Lock Cylinder

84–90	Y	12503692	1	2.04	SHUTTER, FRT S/D LK CYL (CHROME)	
84–90	Y	12503693	1	2.04	SHUTTER, FRT S/D LK CYL (BLACK)	9–G10,7
84–90	Y	12503691	1	.31	SPRING, FRT S/D LK CYL SHUTTER (10.550)	9–G10,7

© 2000 GENERAL MOTORS SERVICE PARTS OPERATIONS–CHEVROLET–14Y

10.553 RETAINER – SPRING – TUMBLER, Door Lock Cylinder

84–90	Y	601261	1	4.98	RETAINER, FRT S/D LK CYL TUMB SPR (BAR TYPE) (UNIT CONTAINS 12 PCS)	
84–96	Y	3901067	10	*.03	SPRING, FRT S/D LK CYL TUMB (BAR TYPE TUMBLER)	9–G14,73
84–96	Y	3901061	1	*.17	TUMBLER, FRT S/D LK CYL (#1) (SI BAR)	9–G18,15
84–96	Y	3901062	AR	*.17	TUMBLER, FRT S/D LK CYL (#2) (SI BAR)	9–G18,15
84–96	Y	3901063	AR	*.17	TUMBLER, FRT S/D LK CYL (#3) (SI BAR)	9–G18,15
84–96	Y	3901064	AR	*.17	TUMBLER, FRT S/D LK CYL (#4) (SI BAR)	9–G18,15
84–96	Y	3901065	AR	*.17	TUMBLER, FRT S/D LK CYL (#5) (SI BAR)	9–G18,15

10.559 KNOB, Door Inside Locking Rod

84–89	Y	20632681	2	*2.33	KNOB	9–G10,46
90–93	Y	10086294	2	5.25	KNOB, FRT S/D LKG ROD	9–H5,26
94–96	Y	10218124	2	5.25	KNOB, FRT S/D LKG ROD	9–H5,26

10.563 ROD, Door Inside Locking

84–89	Y	14043181	2	3.59	ROD, FRT S/D I/S HDL	9–G10,12
84–96	Y	14043187	LH	3.32	ROD, FRT S/D I/S HDL	9–G10,42
84–96	Y	14043188	RH	3.32	ROD, FRT S/D I/S HDL	9–G10,42
90–95	Y (EXC SPECIAL PERFORMANCE PKG (ZR1)	14043181	2	3.59	ROD, FRT S/D I/S HDL	9–G10,12
90–95	Y SPECIAL PERFORMANCE PKG (ZR1)	14104399	2	5.25	ROD, FRT S/D I/S HDL	9–G14,9
96	Y	14043181	2	3.59	ROD, FRT S/D I/S HDL	9–G10,12
84–93	Y	14043193	LH	1.02	ROD, FRT S/D LK ACTR	9–G10,30
84–93	Y	14043194	RH	1.02	ROD, FRT S/D LK ACTR	9–G10,30
84–89	Y	14043183	LH	.75	ROD, FRT S/D LK CYL	9–G10,15
84–89	Y	14043184	RH	.75	ROD, FRT S/D LK CYL	9–G10,15
90–95	Y SPECIAL PERFORMANCE PKG (ZR1)	10137745	LH	6.97	ROD, FRT S/D LK CYL	9–G14,12
90–95	Y SPECIAL PERFORMANCE PKG (ZR1)	10137746	RH	6.97	ROD, FRT S/D LK CYL	9–G14,12
90–95	Y (EXC SPECIAL PERFORMANCE PKG (ZR1)	14043183	LH	.75	ROD, FRT S/D LK CYL	9–G10,15
90–95	Y (EXC SPECIAL PERFORMANCE PKG (ZR1)	14043184	RH	.75	ROD, FRT S/D LK CYL	9–G10,15
96	Y	14043183	LH	.75	ROD, FRT S/D LK CYL	9–G10,15
96	Y	14043184	RH	.75	ROD, FRT S/D LK CYL	9–G10,15
84–89	Y	10048899	LH	DISCON	ROD, FRT S/D LK REM CONT LK	
90–93	Y	10086309	LH	11.10	ROD, FRT S/D LKG	9–G14,35
90–93	Y	10086310	RH	11.10	ROD, FRT S/D LKG	9–G14,35
94–96	Y	10256912	RH	6.68	ROD, FRT S/D LKG	9–G22,33
94–96	Y	10272379	LH	6.68	ROD, FRT S/D LKG	9–G22,33

10.565 CLIP – GUIDE – INSULATOR – RETAINER, Door Inside Locking Rod

84–93	Y	20007898	2	1.80	CLIP, FRT S/D LKG ROD (PLASTIC) (09.786)	9–G14,11
84–96	Y	15592648	2	.61	GUIDE, FRT S/D I/S HDL ROD	9–G10,45
84–96	Y	15592648	2	.61	GUIDE, FRT S/D LKG ROD	9–G10,45
86–90	Y	10045696	2	DISCON	INSULATOR, FRT S/D LKG ROD	
92–96	Y	10215230	2	.31	INSULATOR, FRT S/D O/S HDL ROD	9–G18,13

© 2000 GENERAL MOTORS SERVICE PARTS OPERATIONS–CHEVROLET–14Y

10.565 CLIP – GUIDE – INSULATOR – RETAINER, Door Inside Locking Rod (Con't)

84–96	Y	16607593	RH	*.24	RETAINER, FRT S/D LK CYL ROD (RED) (SNAP–ON)	9–G10,13
84–96	Y	16627328	LH	*.44	RETAINER, FRT S/D LK CYL ROD (RED) (NYLON) (10.527)	9–G10,29
93–96	Y	20633148	RH	1.80	RETAINER, FRT S/D LK CYL ROD (PART IS MOLDED PLASTIC & NOT A SPRING) (BLACK) (MOLDED PLASTIC) (10.474)	
93–96	Y	20633149	LH	1.80	RETAINER, FRT S/D LK CYL ROD (PART IS MOLDED PLASTIC & NOT A SPRING) (NATURAL) (MOLDED PLASTIC) (10.474)	
84–96	Y	16607593	LH	*.24	RETAINER, FRT S/D O/S HDL ROD (RED) (SNAP–ON)	9–G10,13
84–96	Y	16627328	RH	*.44	RETAINER, FRT S/D O/S HDL ROD (RED) (NYLON) (10.527)	9–G10,29

10.569 STRIKER, Door Lock Striker

84–87	Y	20351024	2	11.32	STRIKER, FRT S/D LK (12.237)	9–G10,34
88–96	Y	16602509	2	7.50	STRIKER, FRT S/D LK	9–G10,34

10.570 PIN, Door Lock Striker

84–90	Y07	14060282	2	DISCON	PIN, FRT S/D LOC (10.466)	
86–90	Y67	14092602	2	DISCON	PIN, FRT S/D LOC	
91–92	Y	14060282	2	DISCON	PIN, FRT S/D LOC (10.466)	

10.571 LOCATOR – PLATE – REINFORCEMENT – SEAL – WASHER, Door Lock Striker

84–89	Y07	14046603	LH	18.11	LOCATOR, FRT S/D	9–G10,37
84–89	Y07	14046604	RH	18.11	LOCATOR, FRT S/D	9–G10,37
86–90	Y67	14092601	2	DISCON	LOCATOR, FRT S/D	
90	Y07 SOFT RIDE SUSP (FE1), HVY DUTY SUSP (FE7)	14046603	LH	18.11	LOCATOR, FRT S/D	9–G10,37
90	Y07 SOFT RIDE SUSP (FE1), HVY DUTY SUSP (FE7)	14046604	RH	18.11	LOCATOR, FRT S/D	9–G10,37
91–92	Y	14046603	LH	18.11	LOCATOR, FRT S/D	9–G10,37
91–92	Y	14046604	RH	18.11	LOCATOR, FRT S/D	9–G10,37
84–96	Y	14060217	2	4.98	PLATE, FRT S/D LK STKR TAP	9–G10,36
84–92	Y	14047542	2	.90	REINFORCEMENT, FRT S/D LOCR (10.450)	9–G10,39
84–90	Y07	10078256	RH	.78	SEAL, FRT S/D LOCR (10.584)	9–G10,38
84–90	Y07	10078257	LH	.73	SEAL, FRT S/D LOCR (10.584)	9–G10,38
86–90	Y67	10075364	RH	DISCON	SEAL, FRT S/D LOCR (10.584)	
86–90	Y67	10075365	LH	DISCON	SEAL, FRT S/D LOCR (10.584)	
91–92	Y	10078256	RH	.78	SEAL, FRT S/D LOCR (10.584)	9–G10,38
91–92	Y	10078257	LH	.73	SEAL, FRT S/D LOCR (10.584)	9–G10,38
84–96	Y	4469196	4	*.31	WASHER, FRT S/D LK STKR (10.5X4X0.25 STL)	9–G10,33

10.587 BUMPER – PLUG, Door

84–88	Y	14030512	2	1.43	BUMPER, SI F/D	9–G10,27
93	Y	10222497	1	6.24	PLUG, FRT S/D ACC HOLE	9–G18,56

10.681 WINDOW, Front Door Window

84–90	Y	14094291	LH	205.70	WINDOW, FRT S/D	9–D4,10
84–90	Y	14094292	RH	205.70	WINDOW, FRT S/D	9–D4,10
91–93	Y	10267189	LH	254.00	WINDOW, FRT S/D	9–D4,10

© 2000 GENERAL MOTORS SERVICE PARTS OPERATIONS–CHEVROLET–14Y

10.681 WINDOW, Front Door Window (Con't)

91–93	Y	10267190	RH	254.00	WINDOW, FRT S/D	9–D4,10
94–96	Y (EXC EUROPEAN WDO GLAZING (A26) (EXPORT)	10267189	LH	254.00	WINDOW, FRT S/D	9–D4,10
94–96	Y (EXC EUROPEAN WDO GLAZING (A26) (EXPORT)	10267190	RH	254.00	WINDOW, FRT S/D	9–D4,10
	*EXPORT**********EXPORT**********EXPORT**********EXPORT**********EXPORT*					
94–96	Y EUROPEAN WDO GLAZING (A26) (EXPORT)	10267191	LH	248.90	WINDOW, FRT S/D	9–D4,10
94–96	Y EUROPEAN WDO GLAZING (A26) (EXPORT)	10267192	RH	248.90	WINDOW, FRT S/D	9–D4,10

10.685 BOLT – BUSHING – GUIDE – INSULATOR – STABILIZER – STUD – WASHER, Front Door Window

88–96	Y	10045630	6	1.84	BOLT, FRT S/D WDO	9–G10,71
90–92	Y	20196450	4	.90	BOLT, FRT S/D WDO STAB (10.728)	9–G14,8
94	Y	11516061	4	*1.10	BOLT, FRT S/D WDO STAB (M6X1X12, FL HD) (08.900)	
84–96	Y	1705300	6	1.63	BUSHING, FRT S/D WDO (NYLON)	9–G14,61
93–96	Y	10243037	LH	8.60	GUIDE, FRT S/D WDO CHAN	9–G18,62
93–96	Y	10243038	RH	8.60	GUIDE, FRT S/D WDO CHAN	9–G18,62
84–85	Y	1408[illegible]	4	DISCON	INSULATOR, SI F/D WDO GLS	
84–96	Y	10054691	4	9.18	STABILIZER, FRT S/D WDO (10.716)	9–G10,24
84–96	Y	10267183	LH	8.60	STABILIZER, FRT S/D WDO	9–G10,5
84–96	Y	10267184	RH	8.60	STABILIZER, FRT S/D WDO	9–G10,5
84–87	Y	10045630	AR	1.84	STUD, GLS	9–G10,71
84–96	Y	8731399	6	*.22	WASHER, FRT S/D WDO	9–G14,60
84–86	Y	7734899	AR	*.30	WASHER, FRT S/D WDO FRT UP STOP BPR	

10.694 RETAINER – WEATHERSTRIP, Door Weatherstrip

90–96	Y	20740895	2	.30	RETAINER, FRT S/D W/STR (10.695)	9–H5,16
84–89	Y	17986019	LH	105.30	WEATHERSTRIP, FRT S/D	9–D4,8
84–89	Y	17986020	RH	105.30	WEATHERSTRIP, FRT S/D	9–D4,8
90–96	Y	10269865	LH	56.40	WEATHERSTRIP, FRT S/D (BLACK)	9–D4,8
90–96	Y	10269866	RH	69.40	WEATHERSTRIP, FRT S/D (BLACK)	9–D4,8

10.695 BOLT – EXTENSION – GUARD – INSULATOR – PANEL – RETAINER – RIVET – SEALING STRIP, Door Opening

93	Y	11508443	8	*.46	BOLT, FRT S/D W/STR (4.2–1.41 X 20 HEX HILO 12.00) (M4.2X0.79X20, 12.0 OD) (08.977)	
94–96	Y	20540336	8	.32	BOLT, FRT S/D W/STR (PAINT TO MATCH) (FITS .18 HOLE, .7 LG, .43 OD, NYLON) (14.630)	9–D4,18
90–95	Y SPECIAL PERFORMANCE PKG (ZR1)	10175533	LH	24.26	EXTENSION, FRT S/D OPG FIN PNL RR (12.942)	10–E19,24
90–95	Y SPECIAL PERFORMANCE PKG (ZR1)	10175534	RH	23.49	EXTENSION, FRT S/D OPG FIN PNL RR (12.942)	10–E19,24
91	Y	11515174	AR	*1.50	INSULATOR, FRT S/D OPG FRM TR PNL (4 1/4"X7 1/2") (TRIM AS REQ'D) (15.492)	

© 2000 GENERAL MOTORS SERVICE PARTS OPERATIONS–CHEVROLET–14Y

10.695 BOLT – EXTENSION – GUARD – INSULATOR – PANEL – RETAINER – RIVET – SEALING STRIP, Door Opening (Con't)

84–92	Y	10287792	LH	115.94	PANEL, FRT S/D OPG FIN (12.942) (ADD 16 MM X 48.5 MM SLOT FOR DOOR PIN LOCATOR USING OUTLINE MOLDED INTO PART FOR SLOT LOC)	10–E5,32
84–92	Y	10287793	RH	111.87	PANEL, FRT S/D OPG FIN (12.942) (ADD 16MM X 48.5MM SLOT FOR DR PIN LOCATOR, USE OUTLINE MOLDED INTO PART FOR SLOT LOC)	10–E5,32
93–96	Y	10287792	LH	115.94	PANEL, FRT S/D OPG FIN (12.942)	10–E5,32
93–96	Y	10287793	RH	111.87	PANEL, FRT S/D OPG FIN (12.942)	10–E5,32
88–96	Y07	8731909	2	*.40	RETAINER, FLR PNL RR CPT SUPT (FULL FLDG)	9–D4,19
85–96	Y	20032850	2	*.64	RETAINER, FRT S/D OPG FIN PNL (PUSH IN) (14.683)	10–E5,64
84–96	Y	8731909	4	*.40	RETAINER, FRT S/D WDO FRT W/STR RET (PUSH IN) (LWR) (FULL FLDG)	9–D4,19
84–96	Y	20540336	2	.32	RETAINER, FRT S/D WDO FRT W/STR RET (PUSH IN) (UPR) (PAINT TO MATCH) (FITS .18 HOLE, .7 LG, .43 OD, NYLON) (14.630)	9–D4,18
93–96	Y	9428047	6	.36	RIVET, FRT S/D WDO OTR S/STR (08.967)	
84–96	Y	14069649	6	1.40	SEALING STRIP, FRT S/D OPG FIN PNL (12.840)	9–H2,5
	*EXPORT**********EXPORT**********EXPORT**********EXPORT**********EXPORT*					
94–96	Y07 DUAL REM RF (C2L), CLEAR RF PNL (CC3), REMOVABLE SUNROOF (CF7), EUROPEAN PROVISIONS (VD1) (EXPORT)	12512656	AR	1.10	GUARD, FRT S/D WDO UPR W/STR RET EDGE	

10.701 CHANNEL, Front Door Window Glass

93–96	Y	10167081	LH	20.60	CHANNEL, FRT S/D WDO	9–G18,47
93–96	Y	10167082	RH	20.60	CHANNEL, FRT S/D WDO	9–G18,47

10.710 BOLT – GUARD – RETAINER – SEALING STRIP – WEATHERSTRIP, Front Door Window Glass Channel (Outer & Inner)

89–95	Y67 AUX RF (CC2)	10137767	10	.80	BOLT, FRT S/D WDO RR W/STR RET (M4.2X1.41X16) (M4.2 X 1.41 X 16)	10–D24,30
89–96	Y67 AUX RF (CC2)	10137780	2	3.30	BOLT, FRT S/D WDO UPR FRT W/STR	10–D24,32
89–96	Y67 AUX RF (CC2)	10137767	10	.80	BOLT, FRT S/D WDO UPR FRT W/STR RET (M4.2 X 1.41 X 16)	10–D24,30
84–96	Y	14049243	LH	28.73	RETAINER, FRT S/D WDO FRT W/STR (12.810)	9–D4,7
84–96	Y	14049244	RH	28.73	RETAINER, FRT S/D WDO FRT W/STR (12.810)	9–D4,7
84–95	Y07	8731909	AR	*.40	RETAINER, FRT S/D WDO INR S/STR RR FIL (FULL FLDG) (10.695)	
86–96	Y67	14092709	LH	54.60	RETAINER, FRT S/D WDO RR W/STR (POSN #2) (14.260)	10–E2,21

© 2000 GENERAL MOTORS SERVICE PARTS OPERATIONS–CHEVROLET–14Y

10.710 BOLT – GUARD – RETAINER – SEALING STRIP – WEATHERSTRIP, Front Door Window Glass Channel (Outer & Inner) (Con't)

86–96	Y67	14092710	RH	54.50	RETAINER, FRT S/D WDO RR W/STR (POSN #2) (14.260)	10–E2,21
87–96	Y67	20540336	4	.32	RETAINER, FRT S/D WDO RR W/STR (POS #1) (PAINT TO MATCH) (FITS .18 HOLE, .7 LG, .43 OD, NYLON) (14.630)	9–D7,13
89–96	Y67 AUX RF (CC2)	10123053	LH	36.87	RETAINER, FRT S/D WDO RR W/STR (13.346)	10–D24,21
89–96	Y67 AUX RF (CC2)	10123054	RH	36.87	RETAINER, FRT S/D WDO RR W/STR (13.346)	10–D24,21
91–95	Y67	8731909	2	DISCON	RETAINER, FRT S/D WDO RR W/STR (LWR) (FULL FLDG) (10.695)	
86–96	Y67	14092711	LH	53.10	RETAINER, FRT S/D WDO UPR FRT W/STR (14.060)	10–E2,26
86–96	Y67	14092712	RH	53.10	RETAINER, FRT S/D WDO UPR FRT W/STR (14.060)	10–E2,26
87–96	Y	20540336	2	.32	RETAINER, FRT S/D WDO UPR FRT W/STR (PAINT TO MATCH) (FITS .18 HOLE, .7 LG, .43 OD, NYLON) (14.630)	9–D7,13
89–96	Y67 AUX RF (CC2)	10137751	LH	53.90	RETAINER, FRT S/D WDO UPR FRT W/STR (13.346)	10–D24,36
89–96	Y67 AUX RF (CC2)	10137752	RH	53.90	RETAINER, FRT S/D WDO UPR FRT W/STR (13.346)	10–D24,36
84–96	Y07	14049245	LH	20.01	RETAINER, FRT S/D WDO UPR W/STR (12.810)	9–D4,13
84–96	Y07	14049246	RH	20.01	RETAINER, FRT S/D WDO UPR W/STR (12.810)	9–D4,13
84–89	Y	14071841	LH	35.19	SEALING STRIP, FRT S/D WDO INR	9–H2,7
84–89	Y	14071842	RH	35.19	SEALING STRIP, FRT S/D WDO INR	9–H2,7
90–91	Y	10086110	RH	30.30	SEALING STRIP, FRT S/D WDO INR	9–H5,2
90–96	Y	10199731	LH	29.40	SEALING STRIP, FRT S/D WDO INR (DRILL ONE HOLE IN FRT OF DR TR)	9–H5,2
92–96	Y	10199732	RH	29.40	SEALING STRIP, FRT S/D WDO INR (DRILL ONE HOLE IN FRT OF DR TR)	9–H5,2
84–96	Y	10245645	LH	31.70	SEALING STRIP, FRT S/D WDO OTR	9–D4,9
84–96	Y	10245646	RH	31.70	SEALING STRIP, FRT S/D WDO OTR	9–D4,9
86–96	Y67	10269867	LH	40.30	WEATHERSTRIP, FRT S/D WDO UPR RR	9–D7,12
86–96	Y67	10269868	RH	40.30	WEATHERSTRIP, FRT S/D WDO UPR RR	9–D7,12
86–90	Y67	10123055	LH	152.00	WEATHERSTRIP, FRT S/D WDO RR (PART OF REMOVEABLE HARD TOP)	9–D7,2
86–90	Y67	10123056	RH	152.00	WEATHERSTRIP, FRT S/D WDO RR (PART OF REMOVEABLE HARD TOP)	9–D7,2
86–96	Y67	10273003	LH	45.20	WEATHERSTRIP, FRT S/D WDO RR	9–D7,2
86–96	Y67	10273004	RH	45.20	WEATHERSTRIP, FRT S/D WDO RR	9–D7,2
91–96	Y67 AUX RF (CC2)	10123055	LH	152.00	WEATHERSTRIP, FRT S/D WDO RR (PART OF REMOVEABLE HARD TOP) (B–PILLAR)	9–D7,2
91–96	Y67 AUX RF (CC2)	10123056	RH	152.00	WEATHERSTRIP, FRT S/D WDO RR (PART OF REMOVEABLE HARD TOP) (B–PILLAR)	9–D7,2

© 2000 GENERAL MOTORS SERVICE PARTS OPERATIONS–CHEVROLET–14Y

10.710 BOLT – GUARD – RETAINER – SEALING STRIP – WEATHERSTRIP, Front Door Window Glass Channel (Outer & Inner) (Con't)

86–88	Y67	10123051	LH	207.50	WEATHERSTRIP, FRT S/D WDO UPR FRT (PART OF REMOVEABLE HARD TOP) (13.346)	10–D24,31
86–88	Y67	10123052	RH	207.50	WEATHERSTRIP, FRT S/D WDO UPR FRT (PART OF REMOVEABLE HARD TOP) (13.346)	10–D24,31
86–96	Y67	17987731	LH	42.10	WEATHERSTRIP, FRT S/D WDO UPR FRT (14.120)	9–D7,1
86–96	Y67	17987732	RH	42.10	WEATHERSTRIP, FRT S/D WDO UPR FRT (14.120)	9–D7,1
89–96	Y67 AUX RF (CC2)	10123051	LH	207.50	WEATHERSTRIP, FRT S/D WDO UPR FRT (PART OF REMOVEABLE HARD TOP) (13.346)	10–D24,31
89–96	Y67 AUX RF (CC2)	10123052	RH	207.50	WEATHERSTRIP, FRT S/D WDO UPR FRT (PART OF REMOVEABLE HARD TOP) (13.346)	10–D24,31
	*EXPORT**********EXPORT**********EXPORT**********EXPORT**********EXPORT*					
94–96	Y67 EUROPEAN PROVISIONS (VD1) (EXPORT)	12512656	2	1.10	GUARD, FRT S/D WDO UPR FRT W/STR RET EDGE (10.695)	11–E16,35
94–96	Y67 EUROPEAN PROVISIONS (VD1) (EXPORT)	12512656	2	1.10	GUARD, FRT S/D WDO UPR RR W/STR RET EDGE (10.695)	11–E16,35

10.716 BRACKET – BUSHING – NUT – STOP, Front Door Window

84–92	Y	20698689	2	9.18	BRACKET, FRT S/D WDO STOP	9–G10,32
84–92	Y	1705300	2	1.63	BUSHING, FRT S/D WDO FRT UP STOP (NYLON) (10.685)	9–G10,67
93	Y	8731399	2	*.22	BUSHING, FRT S/D WDO FRT UP STOP (10.685)	9–G18,68
96	Y	8731399	2	*.22	BUSHING, FRT S/D WDO FRT UP STOP (10.685)	9–G18,68
84–96	Y	20213450	2	1.20	NUT, FRT S/D WDO FRT UP STOP (HEX M6X1) (8.0/2.0 MM) (10.728)	9–G14,59
87–96	Y	22063270	2	2.40	STOP, FRT S/D WDO DN	9–G14,45
84–92	Y	20229773	2	5.66	STOP, FRT S/D WDO FRT UP (10.685)	9–G10,68
93–96	Y	10263155	2	5.66	STOP, FRT S/D WDO UP	9–G18,41
86	Y67	22063270	2	2.40	STOP, SI F/D WDO	9–G14,45

10.728 BOLT – NUT, Front Door Window

84–85	Y	20196450	6	.90	BOLT, GLS STAB GDE (M6X1X16)	9–G10,6
84–96	Y	20213450	12	1.20	NUT, FRT S/D WDO (HEX M6X1) (8.0/2.0 MM)	9–G10,69
84–96	Y	20310129	8	1.40	NUT, FRT S/D WDO (POSN #1) (7.75/1.75MM)	9–G10,4

10.777 BEZEL – CONNECTOR – LAMP – MODULE – SWITCH, Door Window

84–89	Y	20401575	2	6.80	BEZEL, SI WDO SW	
84	Y	12117399	1	26.22	CONNECTOR, MDL–P/W CONT (AUTO DWN) (09.778) (AC–DELCO #PT531)	

© 2000 GENERAL MOTORS SERVICE PARTS OPERATIONS–CHEVROLET–14Y

10.777 BEZEL – CONNECTOR – LAMP – MODULE – SWITCH, Door Window (Con't)

94–96	Y	12117399	1	26.22	CONNECTOR, MDL–P/W CONT (AUTO DWN) (5–WAY F) (09.778) (AC–DELCO #PT531)	
90–96	Y	12085492	1	26.75	CONNECTOR, SW–SI WDO (W/LEADS) (3–WAY F, W/LEADS) (02.535) (AC–DELCO #PT114)	
90–96	Y	12102481	1	35.57	CONNECTOR, SW–SI WDO (8–WAY F, W/LEADS) (AC–DELCO #PT272)	
92–93	Y 4–SPD A/TRANS (MD8), 6–SPD M/TRANS (ML9), A/C MAN CONT (C60), A/C AUTO ELEC CONT (C68)	15300003	1	1.63	CONNECTOR, SW–SI WDO (3–WAY M) (W/O LEADS) (M/P 280–BODY ONLY) (02.530)	
94	Y 6–SPD M/TRANS (ML9), A/C MAN CONT (C60), A/C AUTO ELEC CONT (C68)	15300003	1	1.63	CONNECTOR, SW–SI WDO (3–WAY M) (W/O LEADS) (M/P 280–BODY ONLY) (02.530)	
95	Y 5.7J (LT5), 6–SPD M/TRANS (ML9), A/C AUTO ELEC CONT (C68)	15300003	1	1.63	CONNECTOR, SW–SI WDO (3–WAY M) (W/O LEADS) (M/P 280–BODY ONLY) (02.530)	
96	Y	12066400	1	2.14	CONNECTOR, SW–SI WDO (RR WIRING) (3–WAY M, W/O LEADS) (03.900)	
90–96	Y	10148011	2	3.01	LAMP, FRT S/D WDO SW	9–D19,10
94–96	Y	12088564	1	54.32	MODULE, P/W CONT	9–F8,32
94–96	Y	10212994	LH	42.33	SWITCH, O/S RR VIEW MIR R/CON (W/SI WDO SW) (10.186)	9–D19,9
84–89	Y	10092804	2	5.20	SWITCH, SI WDO (10.485)	9–F17,42
90–91	Y	10098479	RH	33.41	SWITCH, SI WDO	9–D19,10
90–91	Y	10098482	LH	105.06	SWITCH, SI WDO	9–D19,10
92–93	Y	10161835	RH	33.41	SWITCH, SI WDO	9–D19,10
92–96	Y	10212993	LH	105.06	SWITCH, SI WDO	9–D19,10
94–96	Y	10252372	RH	42.55	SWITCH, SI WDO	9–D19,10

10.783 CONNECTOR – HOLDER – INSULATOR – MOTOR – RACK – REGULATOR, Front Door Window Regulator

NOTE: TAPE, FRT S/D WDO REG (20604413 90 FT ROLL 15MM WIDE) (REFER TO STANDARD PARTS CAT GP 8.961)

91–96	Y	12102779	2	16.04	CONNECTOR, MOT–WDO REG (2–WAY F) (W/LEADS) (W/O SEAL) (AC–DELCO #PT407)	
93	Y07	12103188	1	1.82	CONNECTOR, MOT–WDO REG (BLUE) (10–WAY M, W/O LEADS) (02.530)	
88–93	Y	22094719	1	22.39	HOLDER, FRT S/D WDO REG MOT BRUSH	9–G14,1
94–96	Y	3999572	1	4.98	INSULATOR, P/W CONT MDL (09.260)	
84–95	Y	22143947	LH	114.99	MOTOR, FRT S/D WDO REG (AC–DELCO #22143947)	
86–95	Y	22143948	RH	118.03	MOTOR, FRT S/D WDO REG (AC–DELCO #22143948)	
84–85	Y	10045642	2	23.26	RACK, WDO REG FLEX (THIS SERVICES WDO REG. THAT HAVE A CHROME PLATED FLEX RACK TRACK FOR 1984–1985.)	9–G10,66
84–96	Y	22063224	RH	282.78	REGULATOR, FRT S/D WDO (W/MOT) (AC–DELCO #22063224)	9–G10,66
84–96	Y	22063225	LH	282.78	REGULATOR, FRT S/D WDO (W/MOT) (AC–DELCO #22063225)	9–G10,66

© 2000 GENERAL MOTORS SERVICE PARTS OPERATIONS–CHEVROLET–14Y

MICROFICHE INDEX

GROUPS 10.000 THRU 11.000

FICHE 9 OF 11

GROUP	DESCRIPTION	STARTING GRID LOCATION PARTS	ILLUSTRATIONS
–	GENERAL INFORMATION	1–A2	1–G2
–	ALPHABETICAL INDEX	1–B13	N.A.
10.000	DOORS – REGULATORS – WINDSHIELD – WIPER – WASHER	9–A2	9–D2
11.000	REAR GLASS – SEAT PARTS – ADJUSTER	9–C2	9–I2
–	OUT OF FICHE CALLS	N.A.	9–L4

9–C1

CHEVROLET
BODY GROUP 11.000

REAR GLASS – SEAT PARTS – ADJUSTER

ALPHABETICAL INDEX

A

ADJUSTER, Front Seat Adjuster 11.561 9–C24
ARM, Front Seat Bolster 11.379 9–C18

B

BEARING KIT, Front Seat Bolster 11.379 9–C18
BEARING, Front Seat Bolster 11.379 9–C18
BEZEL, Front Seat Back Lock 11.390 9–C19
BEZEL, Front Seat Lumbar 11.378 9–C17
BLADDER, Front Seat Lumbar 11.378 9–C17
BOLT, Front Door Sill 11.175 9–C8
BOLT, Front Seat Back Lock 11.390 9–C19
BOLT, Front Seat Back Reclining 11.377 9–C15
BOLT, Front Seat Back 11.373 9–C12
BOLT, Front Seat Bolster 11.379 9–C18
BOLT, Front Seat Cushion 11.419 9–C21
BRACKET, Front Seat Adjuster 11.558 9–C23
BRACKET, Front Seat Back Reclining .. 11.377 9–C15
BRACKET, Front Seat Bolster 11.379 9–C18
BRACKET, Front Seat Lumbar 11.378 9–C17
BUSHING, Front Seat Bolster 11.379 9–C18

C

CABLE, Front Seat Adjuster 11.561 9–C24
CABLE, Front Seat Back Lock 11.390 9–C19
CABLE, Front Seat Back Reclining 11.377 9–C15
CABLE, Front Seat Bolster 11.379 9–C18
CASING, Front Seat Adjuster 11.561 9–C24
CLIP, Front Seat Back Lock 11.390 9–C19
CONNECTOR, Courtesy Lamp and Door Ajar 11.950 9–C28
CONNECTOR, Courtesy/Dome/Reading Lamp 11.927 9–C27
CONNECTOR, Front Seat Adjuster 11.558 9–C23
CONNECTOR, Front Seat Back Reclining 11.377 9–C15
CONNECTOR, Front Seat Lumbar 11.378 9–C17
CONTROL, Front Seat Adjuster 11.558 9–C23
CONTROL, Front Seat Lumbar 11.378 9–C17
COVER, Front Seat Adjuster Track 11.573 9–C25
COVER, Front Seat Back Lock 11.390 9–C19

E

ESCUTCHEON, Front Seat Adjuster ... 11.558 9–C23
ESCUTCHEON, Rear Window Reveal Molding 11.209 9–C12

F

FRAME, Front Seat Back 11.373 9–C12
FRAME, Front Seat Cushion 11.419 9–C21

G

GEAR, Front Seat Back Reclining 11.377 9–C15

H

HANDLE, Front Seat Back Lock 11.390 9–C19
HANDLE, Front Seat Back Reclining ... 11.377 9–C15
HARNESS, Front Seat Lumbar 11.378 9–C17
HINGE, Front Seat Bottom Hinge 11.375 9–C15
HOSE, Front Seat Lumbar 11.378 9–C17

I

INSERT, Front Seat Adjuster 11.558 9–C23

K

KNOB, Front Seat Adjuster Handle 11.588 9–C27
KNOB, Front Seat Adjuster 11.558 9–C23

L

LAMP, Courtesy/Dome/Reading Lamp .. 11.927 9–C27
LAMP, Front Seat Adjuster 11.558 9–C23
LEADSCREW, Front Seat Adjuster 11.556 9–C23
LEVER, Front Seat Back Reclining 11.377 9–C15

M

MAT, Front Door Sill 11.175 9–C8
MOLDING, Rear Window Reveal Molding 11.208 9–C12
MOTOR, Front Seat Adjuster 11.556 9–C23
MOTOR, Front Seat Bolster 11.379 9–C18

N

NUT, Front Seat Back Lock 11.390 9–C19
NUT, Front Seat Bolster 11.379 9–C18

P

PANEL, Rear Hatch Window 11.120 9–C7
PIN, Front Seat Back Reclining 11.377 9–C15
PIN, Front Seat Bolster 11.379 9–C18
PLATE, Front Door Sill 11.175 9–C8
PLATE, Front Seat Adjuster 11.561 9–C24
POD, Front Seat Lumbar 11.378 9–C17
PUMP, Front Seat Lumbar 11.378 9–C17

R

RECLINER, Front Seat Back Reclining . 11.377 9–C15
RELAY, Front Seat Adjuster 11.556 9–C23
RETAINER, Courtesy Lamp and Door Ajar 11.950 9–C28
RETAINER, Courtesy/Dome/Reading Lamp 11.927 9–C27
RETAINER, Front Seat Adjuster Track .. 11.573 9–C25
RETAINER, Front Seat Adjuster 11.558 9–C23
RETAINER, Front Seat Adjuster 11.561 9–C24
RETAINER, Front Seat Cushion 11.419 9–C21
RETAINER, Front Seat Lumbar 11.378 9–C17
REWORK KIT, Front Seat Adjuster 11.561 9–C24
RING, Front Seat Bolster 11.379 9–C18
RIVET, Front Seat Lumbar 11.378 9–C17

S

SEAL, Courtesy Lamp and Door Ajar ... 11.950 9–C28
SHIM, Front Seat Bolster 11.379 9–C18
SOCKET, Courtesy/Dome/Reading Lamp 11.927 9–C27
SPACER, Front Seat Adjuster 11.556 9–C23
SPACER, Front Seat Adjuster 11.561 9–C24
SPACER, Front Seat Bolster 11.379 9–C18
SPRING, Front Seat Adjuster 11.561 9–C24
SPRING, Front Seat Bolster 11.379 9–C18
SPRING, Seat Adjuster 11.581 9–C27
STRAP, Front Seat Cushion 11.419 9–C21
SUPPORT, Front Seat Back Reclining .. 11.377 9–C15
SUPPORT, Front Seat Bolster 11.379 9–C18
SWITCH, Courtesy Lamp and Door Ajar 11.950 9–C28
SWITCH, Front Seat Adjuster 11.558 9–C23
SWITCH, Front Seat Bolster 11.379 9–C18
SWITCH, Front Seat Lumbar 11.378 9–C17

V

VALVE, Front Seat Lumbar 11.378 9–C17

W

WASHER, Front Seat Adjuster 11.561 9–C24
WASHER, Front Seat Back Lock 11.390 9–C19
WASHER, Front Seat Bolster 11.379 9–C18
WINDLACE, Rear Door Belt Trim Finish & Window Garnish 11.089 9–C7
WINDOW, Rear Window 11.204 9–C12
WIRE, Front Seat Back Lock 11.390 9–C19
WIRE, Front Seat Back Reclining 11.377 9–C15
WIRE, Front Seat Back 11.373 9–C12
WIRE, Front Seat Cushion 11.419 9–C21

CHART INDEX

GROUP 11 GRID

ILLUS INDEX (GRP 11) 9–C6

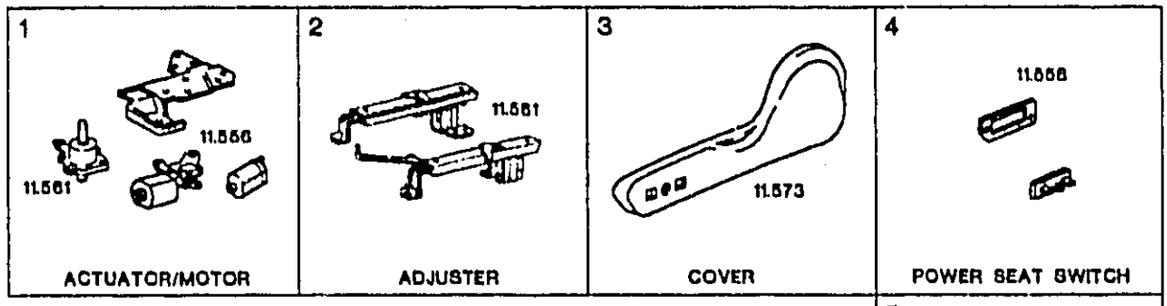

GROUP 11.000

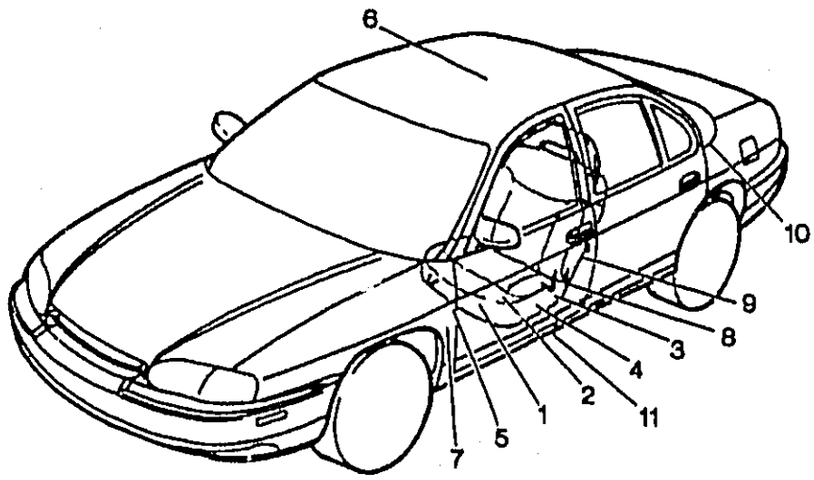

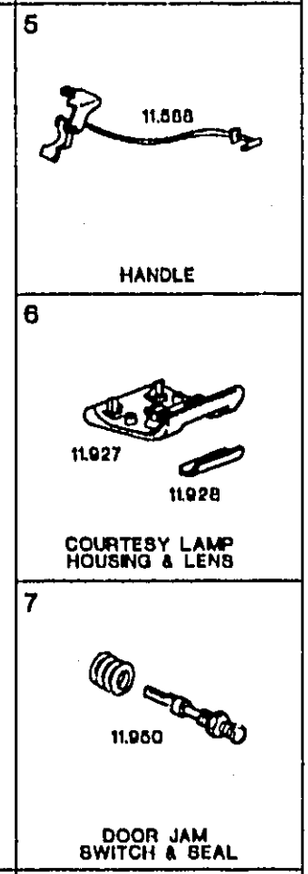

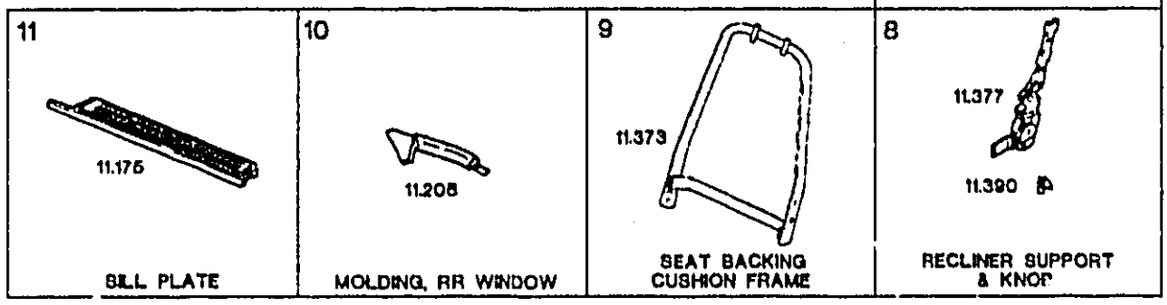

© 2000 GENERAL MOTORS SERVICE PARTS OPERATIONS - CHEVROLET - 14Y

11.089 WINDLACE, Rear Door Belt Trim Finish & Window Garnish

84–96	Y07	10104026	1	21.10	WINDLACE, R/CMPT L/WDO FRT TR PNL (W/THREE LARGE HOLES AT ENDS)	10–G16,28

11.120 PANEL, Rear Hatch Window

84–90	Y07	10282934	1	38.00	PANEL, R/CMPT L/WDO RR TR (N/SEAL) (MUST ALSO REPL LH/RH SI PNLS–P/N 10193737–38) (IF USING ON MODELS WHERE SOME HOLES ARE NOT USED, FILL HOLES W/BLACK FINISH SCREWS OF APPROPRIATE SIZE)	10–G16,8
91–96	Y07	10282934	1	38.00	PANEL, R/CMPT L/WDO RR TR (TAKES BUMPER 16662198)	10–G16,8
84–91	Y07 (19I)	12508061	LH	40.10	PANEL, RR HATCH WDO FRT TR (BLACK) (DRILL ST BELT ATCH HOLE AS REQ)	9–J23,1
84–91	Y07 (19I)	12509348	RH	71.30	PANEL, RR HATCH WDO FRT TR (BLACK) (DRILL ST BELT ATCH HOLE AS REQ)	9–J23,1
90–91	Y07 (22I)	12508063	LH	DISCON	PANEL, RR HATCH WDO FRT TR (BLUE) (LESS ST BELT ATTACHMENT HOLE, DRILL AS REQ)	
90–91	Y07 (60I)	12508065	LH	DISCON	PANEL, RR HATCH WDO FRT TR (COGNAC) (DRILL ST BELT ATCH HOLE AS REQ)	
90–92	Y07 (73I)	12508067	LH	40.10	PANEL, RR HATCH WDO FRT TR (RED) (DRILL ST BELT ATCH HOLE AS REQ)	9–J23,1
90–91	Y07 (90I)	12508069	LH	DISCON	PANEL, RR HATCH WDO FRT TR (GRAY) (DRILL ST BELT ATCH HOLE AS REQ)	
90	Y07 (22I)	12509349	RH	DISCON	PANEL, RR HATCH WDO FRT TR (DRILL ST BELT ATCH HOLE AS REQ'D) (DK BLUESTEEL)	
90–91	Y07 (60I)	12509350	RH	DISCON	PANEL, RR HATCH WDO FRT TR (COGNAC) (DRILL ST BELT ATCH HOLE AS REQ)	
90	Y07 (73I)	12509351	RH	DISCON	PANEL, RR HATCH WDO FRT TR (FLAME RED) (LESS ST BELT ATTACHMENT HOLE–DRILL AS REQUIRED)	
90	Y07 (90I)	12509352	RH	DISCON	PANEL, RR HATCH WDO FRT TR (LESS ST BELT ATTACHMENT HOLE – DRILL AS REQUIRED)	
91	Y07 (22I)	12509349	RH	DISCON	PANEL, RR HATCH WDO FRT TR (BLUE) (DRILL ST BELT ATCH HOLE AS REQ)	
91–92	Y07 (73I)	12509351	RH	DISCON	PANEL, RR HATCH WDO FRT TR (RED) (LESS ST BELT ATTACHMENT HOLE, DRILL AS REQ)	
91	Y07 (90I)	12509352	RH	DISCON	PANEL, RR HATCH WDO FRT TR (GRAY) (DRILL ST BELT ATCH HOLE AS REQ)	
92–93	Y07 (10I), (19I)	12508061	LH	40.10	PANEL, RR HATCH WDO FRT TR (BLACK) (DRILL ST BELT ATCH HOLE AS REQ)	9–J23,1

© 2000 GENERAL MOTORS SERVICE PARTS OPERATIONS–CHEVROLET–14Y

11.120 PANEL, Rear Hatch Window (Con't)

92–93	Y07 (10I), (19I)	12509348	RH	71.30	PANEL, RR HATCH WDO FRT TR (BLACK) (DRILL ST BELT ATCH HOLE AS REQ)	9–J23,1
92–93	Y07 (64I)	12509353	RH	71.30	PANEL, RR HATCH WDO FRT TR (BEIGE)	9–J24,1
92–93	Y07 (14I)	12509354	RH	71.30	PANEL, RR HATCH WDO FRT TR (GRAY)	9–J24,1
92–93	Y07 (64I)	12509714	LH	54.50	PANEL, RR HATCH WDO FRT TR (BEIGE)	9–J24,1
92–93	Y07 (14I)	12509715	LH	54.50	PANEL, RR HATCH WDO FRT TR (GRAY)	9–J24,1
93	Y07 (79I)	10199558	RH	50.10	PANEL, RR HATCH WDO FRT TR (RED)	9–J24,1
93	Y07 (79I)	10199559	LH	35.80	PANEL, RR HATCH WDO FRT TR (RED)	9–J24,1
93	Y07 (70I)	10199724	RH	DISCON	PANEL, RR HATCH WDO FRT TR (RED)	
93	Y07 (70I)	10199725	LH	DISCON	PANEL, RR HATCH WDO FRT TR (RED)	
94–96	Y07 (14I), (19I), (64I), (70I)	12508061	LH	40.10	PANEL, RR HATCH WDO FRT TR (BLACK) (DRILL ST BELT ATCH HOLE AS REQ)	9–J23,1
94–96	Y07 (14I), (19I), (64I), (70I)	12509348	RH	71.30	PANEL, RR HATCH WDO FRT TR (BLACK) (DRILL ST BELT ATCH HOLE AS REQ)	9–J23,1

11.175 BOLT – MAT – PLATE, Front Door Sill

94–96	Y (70I)	10247847	4	*.40	BOLT, FRT S/D SILL RR TR PLT	
94–96	Y (64I)	10247848	4	*.40	BOLT, FRT S/D SILL RR TR PLT	
94–96	Y (14I)	10247849	4	*.40	BOLT, FRT S/D SILL RR TR PLT	
94–96	Y (70I)	10247847	4	*.40	BOLT, FRT S/D SILL TR PLT	
94–96	Y (64I)	10247848	4	*.40	BOLT, FRT S/D SILL TR PLT	
94–96	Y (14I)	10247849	4	*.40	BOLT, FRT S/D SILL TR PLT	
84–87	Y	14047499	LH	DISCON	MAT, FRT S/D STEP (PAINT TO MATCH)	
84–87	Y	14047500	RH	23.05	MAT, FRT S/D STEP (PAINT TO MATCH)	11–H4,7
92	Y (64I)	10175667	LH	DISCON	PLATE, FRT S/D SILL (BEIGE)	
92	Y (64I)	10175668	RH	DISCON	PLATE, FRT S/D SILL (BEIGE)	
92	Y (14I)	10175673	LH	DISCON	PLATE, FRT S/D SILL (GRAY)	
92	Y (14I)	10175674	RH	DISCON	PLATE, FRT S/D SILL (GRAY)	
88–90	Y (73I)	10149254	RH	11.24	PLATE, FRT S/D SILL RR TR (RED) (CUT TO FIT FOR CONV)	
88–91	Y (19I)	10175773	LH	10.90	PLATE, FRT S/D SILL RR TR (BLACK)	11–H10,8
88–92	Y (73I)	10175773	LH	10.90	PLATE, FRT S/D SILL RR TR (PAINT TO MATCH) (BLACK)	11–H10,8
88–91	Y (19I)	10175774	RH	10.90	PLATE, FRT S/D SILL RR TR (BLACK)	11–H10,8
88–92	Y (73I)	10175774	RH	10.90	PLATE, FRT S/D SILL RR TR (PAINT TO MATCH) (BLACK)	11–H10,8
88–91	Y (60I)	10175775	LH	DISCON	PLATE, FRT S/D SILL RR TR (COGNAC)	
88–90	Y (60I)	10175776	RH	DISCON	PLATE, FRT S/D SILL RR TR (COGNAC)	
88–90	Y (90I)	10175779	LH	DISCON	PLATE, FRT S/D SILL RR TR (SMOKE GRAY) (CUT TO FIT FOR CONV)	
88–91	Y (90I)	10175780	RH	11.24	PLATE, FRT S/D SILL RR TR (GRAY)	11–H4,10

© 2000 GENERAL MOTORS SERVICE PARTS OPERATIONS–CHEVROLET–14Y

11.175 BOLT – MAT – PLATE, Front Door Sill (Con't)

88–89	Y (22I)	10175781	LH	DISCON	PLATE, FRT S/D SILL RR TR (CUT TO FIT CONV) (STEEL BLUE)	
88–89	Y (21I)	10175782	RH	DISCON	PLATE, FRT S/D SILL RR TR (BLUE) (CUT TO FIT FOR CONV)	
90	Y (22I)	10175781	LH	DISCON	PLATE, FRT S/D SILL RR TR (STEEL BLUE)	
90–91	Y (22I)	10175782	RH	DISCON	PLATE, FRT S/D SILL RR TR (BLUE)	
91	Y (60I)	10175776	RH	DISCON	PLATE, FRT S/D SILL RR TR (COGNAC)	
91	Y (90I)	10175779	LH	DISCON	PLATE, FRT S/D SILL RR TR (GRAY)	
91	Y (22I)	10175781	LH	DISCON	PLATE, FRT S/D SILL RR TR (BLUE)	
92–96	Y (64I)	10175614	RH	10.90	PLATE, FRT S/D SILL RR TR (BEIGE)	11–H10,8
92–96	Y (64I)	10175615	LH	10.90	PLATE, FRT S/D SILL RR TR (BEIGE)	11–H10,8
92–96	Y (14I)	10175616	RH	10.90	PLATE, FRT S/D SILL RR TR (GRAY)	11–H10,8
92–96	Y (14I)	10175617	LH	10.90	PLATE, FRT S/D SILL RR TR (GRAY)	11–H10,8
92–93	Y (10I), (19I)	10175773	LH	10.90	PLATE, FRT S/D SILL RR TR (BLACK)	11–H10,8
92–93	Y (10I), (19I)	10175774	RH	10.90	PLATE, FRT S/D SILL RR TR (BLACK)	11–H10,8
93	Y (79I)	10199552	RH	11.24	PLATE, FRT S/D SILL RR TR (RED)	11–H10,8
93	Y (79I)	10199553	LH	11.24	PLATE, FRT S/D SILL RR TR (RED)	11–H10,8
93–95	Y (70I)	10199718	RH	10.90	PLATE, FRT S/D SILL RR TR (RED)	11–H10,8
93–95	Y (70I)	10199719	LH	10.90	PLATE, FRT S/D SILL RR TR (RED)	11–H10,8
94–96	Y (19I)	10175773	LH	10.90	PLATE, FRT S/D SILL RR TR (BLACK)	11–H10,8
94–96	Y (19I)	10175774	RH	10.90	PLATE, FRT S/D SILL RR TR (BLACK)	11–H10,8
96	Y (70I), (EXC GRAND SPORT EDITION (Z16)	10199718	RH	10.90	PLATE, FRT S/D SILL RR TR (RED)	11–H10,8
96	Y (70I), (EXC GRAND SPORT EDITION (Z16)	10199719	LH	10.90	PLATE, FRT S/D SILL RR TR (RED)	11–H10,8
84–87	Y (15I)	14058256	RH	DISCON	PLATE, FRT S/D SILL TR (GRAY)	
84–85	Y (28I)	14058258	RH	DISCON	PLATE, FRT S/D SILL TR (BLUE)	
84–87	Y (65I)	14058260	RH	DISCON	PLATE, FRT S/D SILL TR (BRONZE)	
84–87	Y (62I)	14058262	RH	DISCON	PLATE, FRT S/D SILL TR (SADDLE)	
84–85	Y (74I)	14058264	RH	DISCON	PLATE, FRT S/D SILL TR (CARMINE)	
84–87	Y (15I)	14089603	LH	DISCON	PLATE, FRT S/D SILL TR (GRAY) (FOR 1985 VEH, MAY NEED TO USE CVR, P/N 14088497)	
84–85	Y (28I)	14089605	LH	DISCON	PLATE, FRT S/D SILL TR (BLUE) (FOR 1985, MAY NEED TO USE CVR, P/N 14088497)	
84–87	Y (65I)	14089607	LH	DISCON	PLATE, FRT S/D SILL TR (BRONZE) (FOR 1985 VEH, MAY NEED TO USE CVR P/N 14088497)	
84–87	Y (62I)	14089609	LH	DISCON	PLATE, FRT S/D SILL TR (SADDLE) (FOR 1985 VEH, MAY NEED TO USE CVR, P/N 14088497)	
86–87	Y (21I)	14094225	LH	DISCON	PLATE, FRT S/D SILL TR (BLUE)	
86–87	Y (21I)	14094226	RH	DISCON	PLATE, FRT S/D SILL TR (BLUE)	
86–87	Y (73I)	14094227	LH	DISCON	PLATE, FRT S/D SILL TR (RED)	
86–87	Y (73I)	14094228	RH	DISCON	PLATE, FRT S/D SILL TR (RED)	
88–89	Y (19I)	10095141	LH	66.94	PLATE, FRT S/D SILL TR (BLACK)	
88–89	Y (19I)	10095142	RH	DISCON	PLATE, FRT S/D SILL TR (BLACK)	

© 2000 GENERAL MOTORS SERVICE PARTS OPERATIONS–CHEVROLET–14Y

11.175 BOLT – MAT – PLATE, Front Door Sill (Con't)

88–89	Y (21I)	10095143	LH	DISCON	PLATE, FRT S/D SILL TR (BLUE) .	
88–89	Y (21I)	10095144	RH	DISCON	PLATE, FRT S/D SILL TR (BLUE) .	
88–89	Y (60I)	10095145	LH	DISCON	PLATE, FRT S/D SILL TR (COGNAC)	
88–89	Y (60I)	10095146	RH	DISCON	PLATE, FRT S/D SILL TR (COGNAC)	
88–89	Y (73I)	10095147	LH	DISCON	PLATE, FRT S/D SILL TR (RED) ..	
88–89	Y (73I)	10095148	RH	DISCON	PLATE. FRT S/D SILL TR (RED) ..	
88–89	Y (90I)	10095149	LH	DISCON	PLATE, FRT S/D SILL TR (GRAY)	
90	Y (19I)	10172437	LH	DISCON	PLATE, FRT S/D SILL TR (MUST ALSO ORDER SPEAKER GRILLE 10220615 FOR VIN PRIOR TO 116467 (L98) OR VIN PRIOR TO 800158 (LT5))	
90	Y (19I)	10172438	RH	DISCON	PLATE, FRT S/D SILL TR (MUST ALSO ORDER SPEAKER GRILLE 10220616 FOR VIN PRIOR TO 116467 (L98) OR VIN PRIOR TO 800158 (LT5))	
90	Y (22I)	10172439	LH	DISCON	PLATE, FRT S/D SILL TR (MUST ALSO ORDER SPEAKER GRILLE 10172449 FOR VIN PRIOR TO 116467 (L98) OR VIN PRIOR TO 800158 (LT5))	
90	Y (22I)	10172440	RH	DISCON	PLATE, FRT S/D SILL TR (MUST ALSO ORDER SPEAKER GRILLE 10172450 FOR VIN PRIOR TO 116467 (L98) OR VIN PRIOR TO 800158 (LT5))	
90	Y (60I)	10172441	LH	DISCON	PLATE, FRT S/D SILL TR (MUST ALSO ORDER SPEAKER GRILLE 10172451 FOR VIN PRIOR TO 116467 (L98) OR VIN PRIOR TO 800158 (LT5))	
90	Y (60I)	10172442	RH	DISCON	PLATE, FRT S/D SILL TR (MUST ALSO ORDER SPEAKER GRILLE 10172452 FOR VIN PRIOR TO 116467 (L98) OR VIN PRIOR TO 800158 (LT5))	
90	Y (73I)	10172443	LH	148.05	PLATE, FRT S/D SILL TR (MUST ALSO ORDER SPEAKER GRILLE 10172453 FOR VIN PRIOR TO 116467 (L98) OR VIN PRIOR TO 800158 (LT5))	11–H10,9
90	Y (73I)	10172444	RH	148.05	PLATE, FRT S/D SILL TR (MUST ALSO ORDER SPEAKER GRILLE 10172454 FOR VIN PRIOR TO 116467 (L98) OR VIN PRIOR TO 800158 (LT5))	11–H10,9
90	Y (90I)	10172445	LH	DISCON	PLATE, FRT S/D SILL TR (MUST ALSO ORDER SPEAKER GRILLE 10172455 FOR VIN PRIOR TO 116467 (L98) OR VIN PRIOR TO 800158 (LT5))	
90	Y (90I)	10172446	RH	DISCON	PLATE, FRT S/D SILL TR (MUST ALSO ORDER SPEAKER GRILLE 10172456 FOR VIN PRIOR TO 116467 (L98) OR VIN PRIOR TO 800158 (LT5))	
91	Y (19I)	10172437	LH	DISCON	PLATE, FRT S/D SILL TR (BLACK) .	
91	Y (19I)	10172438	RH	DISCON	PLATE, FRT S/D SILL TR (BLACK) .	
91	Y (22I)	10172439	LH	DISCON	PLATE, FRT S/D SILL TR (BLUE) .	

© 2000 GENERAL MOTORS SERVICE PARTS OPERATIONS–CHEVROLET–14Y

11.175 BOLT – MAT – PLATE, Front Door Sill (Con't)

91	Y (22I)	10172440	RH	DISCON	PLATE, FRT S/D SILL TR (BLUE)	
91	Y (60I)	10172441	LH	DISCON	PLATE, FRT S/D SILL TR (COGNAC)	
91	Y (60I)	10172442	RH	DISCON	PLATE, FRT S/D SILL TR (COGNAC)	
91–92	Y (73I)	10172443	LH	148.05	PLATE, FRT S/D SILL TR (RED)	11–H10,9
91–92	Y (73I)	10172444	RH	148.05	PLATE, FRT S/D SILL TR (RED)	11–H10,9
91	Y (90I)	10172445	LH	DISCON	PLATE, FRT S/D SILL TR (GRAY)	
91	Y (90I)	10172446	RH	DISCON	PLATE, FRT S/D SILL TR (GRAY)	
92	Y (10I), (19I)	10172437	LH	DISCON	PLATE, FRT S/D SILL TR (BLACK)	
92	Y (10I), (19I)	10172438	RH	DISCON	PLATE, FRT S/D SILL TR (BLACK)	
93	Y (10I), (19I)	10211921	LH	148.05	PLATE, FRT S/D SILL TR (BLACK)	11–H10,9
93	Y (10I), (19I)	10211922	RH	DISCON	PLATE, FRT S/D SILL TR (BLACK)	
93	Y (64I)	10211923	LH	DISCON	PLATE, FRT S/D SILL TR (BEIGE)	
93	Y (64I)	10211924	RH	DISCON	PLATE, FRT S/D SILL TR (BEIGE)	
93	Y (14I)	10211925	LH	148.05	PLATE, FRT S/D SILL TR (GRAY)	11–H10,9
93	Y (14I)	10211926	RH	DISCON	PLATE, FRT S/D SILL TR (GRAY)	
93	Y (79I)	10211947	LH	148.05	PLATE, FRT S/D SILL TR (RED)	11–H10,9
93	Y (79I)	10211948	RH	DISCON	PLATE, FRT S/D SILL TR (RED)	
93	Y (70I)	10211949	LH	DISCON	PLATE, FRT S/D SILL TR (RED)	
93	Y (70I)	10211950	RH	148.05	PLATE, FRT S/D SILL TR (RED)	11–H10,9
94–96	Y (19I), (EXC MAN RST SYS (AX4) (EXPORT)	10238577	LH	143.00	PLATE, FRT S/D SILL TR (BLACK)	11–H10,9
94–96	Y (19I), (EXC MAN RST SYS (AX4) (EXPORT)	10238578	RH	143.00	PLATE, FRT S/D SILL TR (BLACK)	11–H10,9
94–96	Y (64I), (EXC MAN RST SYS (AX4) (EXPORT)	10238579	LH	143.00	PLATE, FRT S/D SILL TR (BEIGE)	11–H10,9
94–96	Y (64I), (EXC MAN RST SYS (AX4) (EXPORT)	10238580	RH	143.00	PLATE, FRT S/D SILL TR (BEIGE)	11–H10,9
94–96	Y (14I), (EXC MAN RST SYS (AX4) (EXPORT)	10238581	LH	143.00	PLATE, FRT S/D SILL TR (GRAY)	11–H10,9
94–96	Y (14I), (EXC MAN RST SYS (AX4) (EXPORT)	10238582	RH	143.00	PLATE, FRT S/D SILL TR (GRAY)	11–H10,9
94–95	Y (70I), (EXC MAN RST SYS (AX4) (EXPORT)	10238583	LH	143.00	PLATE, FRT S/D SILL TR (RED)	11–H10,9
94–95	Y (70I), (EXC MAN RST SYS (AX4) (EXPORT)	10238584	RH	143.00	PLATE, FRT S/D SILL TR (RED)	11–H10,9
96	Y (70I), (EXC MAN RST SYS (AX4) (EXPORT), GRAND SPORT EDITION (Z16)	10238583	LH	143.00	PLATE, FRT S/D SILL TR (RED)	11–H10,9
96	Y (70I), (EXC MAN RST SYS (AX4) (EXPORT), GRAND SPORT EDITION (Z16)	10238584	RH	143.00	PLATE, FRT S/D SILL TR (RED)	11–H10,9
	*EXPORT**********EXPORT**********EXPORT**********EXPORT**********EXPORT*					
94–96	Y MAN RST SYS (AX4) (EXPORT), (19I)	10239063	LH	143.00	PLATE, FRT S/D SILL TR (BLACK)	11–H10,9
94–96	Y MAN RST SYS (AX4) (EXPORT), (19I)	10239064	RH	143.00	PLATE, FRT S/D SILL TR (BLACK)	11–H10,9
94–96	Y MAN RST SYS (AX4) (EXPORT), (64I)	10239065	LH	143.00	PLATE, FRT S/D SILL TR (BEIGE)	11–H10,9
94–96	Y MAN RST SYS (AX4) (EXPORT), (64I)	10239066	RH	143.00	PLATE, FRT S/D SILL TR (BEIGE)	11–H10,9
94–96	Y MAN RST SYS (AX4) (EXPORT), (14I)	10239067	LH	143.00	PLATE, FRT S/D SILL TR (GRAY)	11–H10,9
94–96	Y MAN RST SYS (AX4) (EXPORT), (14I)	10239068	RH	143.00	PLATE, FRT S/D SILL TR (GRAY)	11–H10,9
94–95	Y MAN RST SYS (AX4) (EXPORT), (70I)	10239069	LH	143.00	PLATE, FRT S/D SILL TR (RED)	11–H10,9
94–95	Y MAN RST SYS (AX4) (EXPORT), (70I)	10239070	RH	143.00	PLATE, FRT S/D SILL TR (RED)	11–H10,9

© 2000 GENERAL MOTORS SERVICE PARTS OPERATIONS–CHEVROLET–14Y

11.175 BOLT – MAT – PLATE, Front Door Sill (Con't)

96	Y07 MAN RST SYS (AX4) (EXPORT), (70I)	10239069	LH	143.00	PLATE, FRT S/D SILL TR (RED) ..	11–H10,9
96	Y07 MAN RST SYS (AX4) (EXPORT), (70I)	10239070	RH	143.00	PLATE, FRT S/D SILL TR (RED) ..	11–H10,9
96	Y67 MAN RST SYS (AX4) (EXPORT), GRAND SPORT EDITION (Z16), (70I)	10239063	LH	143.00	PLATE, FRT S/D SILL TR (BLACK) .	11–H10,9
96	Y67 MAN RST SYS (AX4) (EXPORT), GRAND SPORT EDITION (Z16), (70I)	10239064	RH	143.00	PLATE, FRT S/D SILL TR (BLACK) .	11–H10,9
96	Y67 MAN RST SYS (AX4) (EXPORT), (70I), (EXC GRAND SPORT EDITION (Z16)	10239069	LH	143.00	PLATE, FRT S/D SILL TR (RED) ..	11–H10,9
96	Y67 MAN RST SYS (AX4) (EXPORT), (70I), (EXC GRAND SPORT EDITION (Z16)	10239070	RH	143.00	PLATE, FRT S/D SILL TR (RED) ..	11–H10,9

11.204 WINDOW, Rear Window

86–88	Y67	10123050	1	278.50	WINDOW, R/TOP RR (HTD W/HARN)	10–D24,6
89–96	Y67 AUX RF (CC2)	10123050	1	278.50	WINDOW, R/TOP RR (HTD W/HARN)	10–D24,6

11.208 MOLDING, Rear Window Reveal Molding

86–88	Y67	10123057	1	45.70	MOLDING, R/TOP R/WDO RVL ..	10–D24,3
89–96	Y67 AUX RF (CC2)	10123057	1	45.70	MOLDING, R/TOP R/WDO RVL ..	10–D24,3

11.209 ESCUTCHEON, Rear Window Reveal Molding

89–96	Y67 AUX RF (CC2)	10092411	1	9.40	ESCUTCHEON, R/WDO LWR R/MLDG (BLACK)	10–E2,17

11.373 BOLT – FRAME – WIRE, Front Seat Back

94–96	Y	10248440	1	5.40	BOLT, D/SEAT BK CUSH FRM ...	9–J8,5
94–96	Y RECL FRT BKT ST (AQ9), IL3	10255664	1	.70	BOLT, D/SEAT BK CUSH FRM ...	9–J8,5
94–96	Y	10248440	1	5.40	BOLT, P/SEAT BK CUSH FRM ...	9–J8,5
94–96	Y RECL FRT BKT ST (AQ9), IL3	10255664	1	.70	BOLT, P/SEAT BK CUSH FRM ...	9–J8,5
84–88	Y	14047570	1	209.10	FRAME, D/SEAT BACKREST	9–I6,2
89–90	Y RECL FRT BKT ST (AQ9), MAN RECL FRT BKT ST (AR9), (19I)	10135998	1	209.10	FRAME, D/SEAT BK CUSH (BLACK)	9–I4,31
90	Y MAN RECL FRT BKT ST (AR9), (22I)	10135996	1	DISCON	FRAME, D/SEAT BK CUSH (BLUE) .	
90	Y MAN RECL FRT BKT ST (AR9), (78I)	10135997	1	DISCON	FRAME, D/SEAT BK CUSH (RED)	
90	Y MAN RECL FRT BKT ST (AR9), (60I)	10135999	1	DISCON	FRAME, D/SEAT BK CUSH (COGNAC)	
90	Y MAN RECL FRT BKT ST (AR9), (90I)	10136000	1	DISCON	FRAME, D/SEAT BK CUSH (GRAY) .	
91	Y RECL FRT BKT ST (AQ9), MAN RECL FRT BKT ST (AR9), (22I), (223)	10135996	1	DISCON	FRAME, D/SEAT BK CUSH (BLUE) .	
91	Y RECL FRT BKT ST (AQ9), MAN RECL FRT BKT ST (AR9), (73I), (733)	10135997	1	DISCON	FRAME, D/SEAT BK CUSH (RED)	

© 2000 GENERAL MOTORS SERVICE PARTS OPERATIONS–CHEVROLET–14Y

11.373 BOLT – FRAME – WIRE, Front Seat Back (Con't)

91–93	Y RECL FRT BKT ST (AQ9), (193)	10135998	1	209.10	FRAME, D/SEAT BK CUSH (BLACK/PAINT TO MATCH) ...	9–I4,31
91–93	Y MAN RECL FRT BKT ST (AR9), (19C), (193)	10135998	1	209.10	FRAME, D/SEAT BK CUSH (BLACK/PAINT TO MATCH) ...	9–I4,31
91	Y RECL FRT BKT ST (AQ9), MAN RECL FRT BKT ST (AR9), (60I), (603)	10135999	1	DISCON	FRAME, D/SEAT BK CUSH (COGNAC)	
91	Y RECL FRT BKT ST (AQ9), MAN RECL FRT BKT ST (AR9), (90I), (903)	10136000	1	DISCON	FRAME, D/SEAT BK CUSH (GRAY) .	
92	Y RECL FRT BKT ST (AQ9), MAN RECL FRT BKT ST (AR9), (733)	10135997	1	DISCON	FRAME, D/SEAT BK CUSH (RED)	
92–93	Y RECL FRT BKT ST (AQ9), MAN RECL FRT BKT ST (AR9), (643)	10175575	1	209.10	FRAME, D/SEAT BK CUSH (BEIGE)	9–I24,1
92–93	Y RECL FRT BKT ST (AQ9), MAN RECL FRT BKT ST (AR9), (103)	10175576	1	DISCON	FRAME, D/SEAT BK CUSH (WHITE)	
92–93	Y RECL FRT BKT ST (AQ9), MAN RECL FRT BKT ST (AR9), (143)	10175577	1	209.10	FRAME, D/SEAT BK CUSH (GRAY) .	9–I24,1
93	Y MAN RECL FRT BKT ST (AR9), RECL FRT BKT ST (AQ9), (703)	12518711	1	DISCON	FRAME, D/SEAT BK CUSH (RED)	
93	Y RECL FRT BKT ST (AQ9), (793)	12518733	1	209.10	FRAME, D/SEAT BK CUSH (RED)	9–J2,1
94	Y MAN RECL FRT BKT ST (AR9), (1ST DES)	10248421	1	209.10	FRAME, D/SEAT BK CUSH (USE W/STS THAT DO NOT HAVE WIRES IN ST BK UPR BOLSTER)	9–J8,6
94	Y MAN RECL FRT BKT ST (AR9), (193), (2ND DES) ...	10262253	1	179.90	FRAME, D/SEAT BK CUSH (USE W/STS THAT HAVE WIRES IN THE ST BK UPR BOLSTER) ...	9–J8,6
94–96	Y RECL FRT BKT ST (AQ9) ..	10262253	1	179.90	FRAME, D/SEAT BK CUSH	9–J8,6
95–96	Y MAN RECL FRT BKT ST (AR9)	10262253	1	179.90	FRAME, D/SEAT BK CUSH	9–J8,6
84–88	Y	14047570	1	209.10	FRAME, P/SEAT BACKREST	9–I6,2
89–90	Y RECL FRT BKT ST (AQ9), MAN RECL FRT BKT ST (AR9), (19I)	10135998	1	209.10	FRAME, P/SEAT BK CUSH (BLACK)	9–I4,31
90	Y MAN RECL FRT BKT ST (AR9), (22I)	10135996	1	DISCON	FRAME, P/SEAT BK CUSH (BLUE) .	
90	Y MAN RECL FRT BKT ST (AR9), (73I)	10135997	1	DISCON	FRAME, P/SEAT BK CUSH (RED)	
90	Y MAN RECL FRT BKT ST (AR9), (60I)	10135999	1	DISCON	FRAME, P/SEAT BK CUSH (COGNAC)	
90	Y MAN RECL FRT BKT ST (AR9), (90I)	10136000	1	DISCON	FRAME, P/SEAT BK CUSH (GRAY) .	
91	Y RECL FRT BKT ST (AQ9), MAN RECL FRT BKT ST (AR9), (22I), (223)	10135996	1	DISCON	FRAME, P/SEAT BK CUSH (BLUE) .	
91	Y RECL FRT BKT ST (AQ9), MAN RECL FRT BKT ST (AR9), (73I), (733)	10135997	1	DISCON	FRAME, P/SEAT BK CUSH (RED)	
91–93	Y RECL FRT BKT ST (AQ9), (193)	10135998	1	209.10	FRAME, P/SEAT BK CUSH (BLACK/PAINT TO MATCH) ...	9–I4,31
91–93	Y MAN RECL FRT BKT ST (AR9), (19C), (193)	10135998	1	209.10	FRAME, P/SEAT BK CUSH (BLACK/PAINT TO MATCH) ...	9–I4,31
91	Y RECL FRT BKT ST (AQ9), MAN RECL FRT BKT ST (AR9), (60I), (603)	10135999	1	DISCON	FRAME, P/SEAT BK CUSH (COGNAC)	

© 2000 GENERAL MOTORS SERVICE PARTS OPERATIONS–CHEVROLET–14Y

11.373 BOLT – FRAME – WIRE, Front Seat Back (Con't)

91	Y RECL FRT BKT ST (AQ9), MAN RECL FRT BKT ST (AR9), (901), (903)	10136000	1	DISCON	FRAME, P/SEAT BK CUSH (GRAY) .	
92	Y RECL FRT BKT ST (AQ9), MAN RECL FRT BKT ST (AR9), (733)	10135997	1	DISCON	FRAME, P/SEAT BK CUSH (RED)	
92–93	Y RECL FRT BKT ST (AQ9), MAN RECL FRT BKT ST (AR9), (343)	10175575	1	209.10	FRAME, P/SEAT BK CUSH (BEIGE)	9–I24,1
92–93	Y RECL FRT BKT ST (AQ9), MAN RECL FRT BKT ST (AR9), (103)	10175576	1	DISCON	FRAME, P/SEAT BK CUSH (WHITE)	
92–93	Y RECL FRT BKT ST (AQ9), MAN RECL FRT BKT ST (AR9), (143)	10175577	1	209.10	FRAME, P/SEAT BK CUSH (GRAY) .	9–I24,1
93	Y MAN RECL FRT BKT ST (AR9), RECL FRT BKT ST (AQ9), (703)	12518711	1	DISCON	FRAME, P/SEAT BK CUSH (RED)	
93	Y RECL FRT BKT ST (AQ9), (793)	12518733	1	209.10	FRAME, P/SEAT BK CUSH (RED)	9–J2,1
94	Y MAN RECL FRT BKT ST (AR9), (1ST DES)	10248421	1	209.10	FRAME, P/SEAT BK CUSH (USE W/STS THAT DO NOT HAVE WIRES IN ST BK UPR BOLSTER)	9–J8,6
94	Y MAN RECL FRT BKT ST (AR9), (2ND DES)	10262253	1	179.90	FRAME, P/SEAT BK CUSH (USE W/STS THAT HAVE WIRES IN THE ST BK UPR BOLSTER) ...	9–J8,6
94–96	Y RECL FRT BKT ST (AQ9) ..	10262253	1	179.90	FRAME, P/SEAT BK CUSH	9–J8,6
95–96	Y MAN RECL FRT BKT ST (AR9)	10262253	1	179.90	FRAME, P/SEAT BK CUSH	9–J8,6
94–96	Y MAN RECL FRT BKT ST (AR9)	10251958	1	4.50	WIRE, D/SEAT BK CUSH BOLS (INR)	9–J8,25
94–96	Y MAN RECL FRT BKT ST (AR9)	10251959	1	4.50	WIRE, D/SEAT BK CUSH BOLS (OTR)	9–J8,27
94–96	Y MAN RECL FRT BKT ST (AR9)	10251960	1	4.50	WIRE, D/SEAT BK CUSH HORIZ BOLS LSTG (333 MM LGTH W/BOTH ENDS BENT APPX 45 DEG ANGLES)	9–J8,26
95–96	Y MAN RECL FRT BKT ST (AR9)	10268825	1	8.20	WIRE, D/SEAT BK CUSH HORIZ BOLS LSTG (193 MM LGTH W/LOOP ON 1 END)	9–I9,72
89–93	Y RECL FRT BKT ST (AQ9) ..	10148094	LH	DISCON	WIRE, D/SEAT BK CUSH PAD (14.802)	
89–93	Y RECL FRT BKT ST (AQ9) ..	10268825	4	8.20	WIRE, D/SEAT BK CUSH PAD (AT H/RST, 193 MM LGTH W/LOOP ON 1 END)	9–I9,72
89–93	Y MAN RECL FRT BKT ST (AR9)	10268825	4	8.20	WIRE, D/SEAT BK CUSH PAD (AT H/RST, 193 MM LGTH W/LOOP ON 1 END)	9–I9,72
94–96	Y MAN RECL FRT BKT ST (AR9)	10251958	1	4.50	WIRE, P/SEAT BK CUSH BOLS (INR)	9–J8,25
94–96	Y MAN RECL FRT BKT ST (AR9)	10251959	1	4.50	WIRE, P/SEAT BK CUSH BOLS (OTR)	9–J8,27
94–96	Y MAN RECL FRT BKT ST (AR9)	10251960	1	4.50	WIRE, P/SEAT BK CUSH HORIZ BOLS LSTG (333 MM LGTH W/BOTH ENDS BENT APPX 45 DEG ANGLES)	9–J8,26
95–96	Y MAN RECL FRT BKT ST (AR9)	10268825	1	8.20	WIRE, P/SEAT BK CUSH HORIZ BOLS LSTG (193 MM LGTH W/LOOP ON 1 END)	9–I9,72
89–93	Y RECL FRT BKT ST (AQ9) ..	10148094	RH	DISCON	WIRE, P/SEAT BK CUSH PAD (14.802)	

© 2000 GENERAL MOTORS SERVICE PARTS OPERATIONS–CHEVROLET–14Y

11.375 HINGE, Front Seat Bottom Hinge

84–91	Y RECL FRT BKT ST (AQ9) ..	10174812	1	DISCON	HINGE, D/SEAT BK CUSH	
85	Y (EXC RECL FRT BKT ST (AQ9), (2ND DES)	10153621	1	DISCON	HINGE, D/SEAT BK CUSH (2 BOLT ATTACHMENT)	
86	Y (EXC RECL FRT BKT ST (AQ9)	10153621	1	DISCON	HINGE, D/SEAT BK CUSH	
87–91	Y MAN RECL FRT BKT ST (AR9)	10153621	1	DISCON	HINGE, D/SEAT BK CUSH	
92–93	Y MAN RECL FRT BKT ST (AR9)	10152830	1	DISCON	HINGE, D/SEAT BK CUSH	
92–93	Y RECL FRT BKT ST (AQ9) ..	10152830	1	DISCON	HINGE, D/SEAT BK CUSH	
84–91	Y RECL FRT BKT ST (AQ9) ..	10174812	1	DISCON	HINGE, P/SEAT BK CUSH	
85	Y (EXC RECL FRT BKT ST (AQ9), (2ND DES)	10153621	1	DISCON	HINGE, P/SEAT BK CUSH (2 BOLT ATTACHMENT)	
86	Y (EXC RECL FRT BKT ST (AQ9)	10153621	1	DISCON	HINGE, P/SEAT BK CUSH	
87–91	Y MAN RECL FRT BKT ST (AR9)	10153621	1	DISCON	HINGE, P/SEAT BK CUSH	
92–93	Y MAN RECL FRT BKT ST (AR9)	10152830	1	DISCON	HINGE, P/SEAT BK CUSH	
92–93	Y RECL FRT BKT ST (AQ9) ..	10152830	1	DISCON	HINGE, P/SEAT BK CUSH	
84	Y (EXC AQ9)	14049004	2	DISCON	HINGE, ST BK	
85	Y (EXC AQ9) (1ST DES)	14049004	2	DISCON	HINGE, ST BK (3 BOLT ATTACHMENT)	

11.377 BOLT – BRACKET – CABLE – CONNECTOR – GEAR – HANDLE – LEVER – PIN – RECLINER – SUPPORT – WIRE, Front Seat Back Reclining

87–96	Y	14089631	2	1.75	BOLT, D/SEAT RECL (M8X1.25X21 16.3 O.D.) (RR) (11.390)	9–I12,27
85–86	Y (EXC RECL FRT BKT ST (AQ9)	14089631	2	1.75	BOLT, D/SEAT RECL ACTR (M8X1.25X21 16.3–OD) (11.390)	9–I12,27
85–86	Y (EXC RECL FRT BKT ST (AQ9)	14089632	2	1.75	BOLT, D/SEAT RECL ACTR (M8X1.25X42 16.3–OD) (11.390)	9–I4,6
87–91	Y RECL FRT BKT ST (AQ9), MAN RECL FRT BKT ST (AR9)	14089632	2	1.75	BOLT, D/SEAT RECL ACTR (M8X1.25X42 16.3 O.D.) (FRT) (11.390)	9–I4,6
92–93	Y RECL FRT BKT ST (AQ9) ..	14089632	2	1.75	BOLT, D/SEAT RECL ACTR (M8X1.25X42 16.3 O.D.) (FRT) (11.390)	9–I4,6
84–90	Y RECL FRT BKT ST (AQ9) ..	14079491	4	DISCON	BOLT, D/SEAT RECL ACTR BRKT (BUTTONHEAD)	
89–90	Y RECL FRT BKT ST (AQ9) ..	10148063	4	DISCON	BOLT, D/SEAT SHLDR RECL ACTR .	
89–90	Y AQ9	14049281	4	DISCON	BOLT, P&D/ST SHLDR RECL (11.390)	
87–96	Y	14089631	1	1.75	BOLT, P/SEAT RECL (M8X1.25X21 16.3 O.D.) (RR) (11.390)	9–I12,27
85–86	Y (EXC RECL FRT BKT ST (AQ9)	14089631	2	1.75	BOLT, P/SEAT RECL ACTR (M8X1.25X21 16.3–OD) (11.390)	9–I12,27
85–86	Y (EXC RECL FRT BKT ST (AQ9)	14089632	2	1.75	BOLT, P/SEAT RECL ACTR (M8X1.25X42 16.3–OD) (11.390)	9–I4,6
87–91	Y RECL FRT BKT ST (AQ9), MAN RECL FRT BKT ST (AR9)	14089632	2	1.75	BOLT, P/SEAT RECL ACTR (M8X1.25X42 16.3 O.D.) (FRT) (11.390)	9–I4,6
92–93	Y RECL FRT BKT ST (AQ9) ..	14089632	2	1.75	BOLT, P/SEAT RECL ACTR (M8X1.25X42 16.3 O.D.) (FRT) (11.390)	9–I4,6
89–90	Y RECL FRT BKT ST (AQ9) ..	10148063	4	DISCON	BOLT, P/SEAT SHLDR RECL ACTR .	
84–90	Y RECL FRT BKT ST (AQ9) ..	14079482	2	DISCON	BRACKET, BK REST RECL ACTR	
84–90	Y RECL FRT BKT ST (AQ9) ..	14079483	2	DISCON	BRACKET, RECL MTR	
85–86	Y (EXC RECL FRT BKT ST (AQ9), (2ND DES)	14089649	1	DISCON	CABLE, D/SEAT RECL ACTR (W/LEVER) (404.5MM CABLE) .	

11.377 BOLT – BRACKET – CABLE – CONNECTOR – GEAR – HANDLE – LEVER – PIN – RECLINER – SUPPORT – WIRE, Front Seat Back Reclining (Con't)

87–89	Y RECL FRT BKT ST (AQ9), MAN RECL FRT BKT ST (AR9)	14089649	1	DISCON	CABLE, D/SEAT RECL ACTR (W/LEVER)	
84	Y (EXC AQ9)	14081869	1	DISCON	CABLE, D/SEAT RECL ADJR (W/LEVER) (11.390)	
85	Y (EXC AQ9) (1ST DES)	14081869	1	DISCON	CABLE, D/SEAT RECL ADJR (W/LEVER) (263.7MM CABLE) (11.390)	
85–86	Y (EXC RECL FRT BKT ST (AQ9)	10137720	1	25.42	CABLE, P/SEAT RECL ACTR (W/LEVER) (2ND DES) (584.5MM CABLE)	9–I4,11
84	Y (EXC AQ9)	14081870	1	DISCON	CABLE, P/SEAT RECL ADJR (W/LEVER) (11.390)	
85	Y (EXC AQ9) (1ST DES)	14081870	1	DISCON	CABLE, P/SEAT RECL ADJR (W/LEVER) (473.0MM CABLE) (11.390)	
90–91	Y RECL FRT BKT ST (AQ9) ..	12117331	1	DISCON	CONNECTOR, MOT–ST RECL (W/LEADS) (13.100)	
84–90	Y RECL FRT BKT ST (AQ9) ..	20454999	1	85.92	GEAR, D/SEAT BK RECL ACTR DRV	9–I6,23
84–90	Y RECL FRT BKT ST (AQ9) ..	20454999	1	85.92	GEAR, P/SEAT BK RECL ACTR DRV	9–I6,23
89–91	Y MAN RECL FRT BKT ST (AR9)	10137719	1	25.42	HANDLE, D/SEAT RECL	9–I12,17
91–93	Y RECL FRT BKT ST (AQ9) ..	10137719	1	25.42	HANDLE, D/SEAT RECL	9–I12,17
92–93	Y MAN RECL FRT BKT ST (AR9)	10152835	1	12.82	HANDLE, D/SEAT RECL	9–I24,10
94–96	Y	10152835	1	12.82	HANDLE, D/SEAT RECL	9–I24,10
87–91	Y MAN RECL FRT BKT ST (AR9)	10137720	1	25.42	HANDLE, P/SEAT RECL	9–I4,11
91–93	Y RECL FRT BKT ST (AQ9) ..	10137720	1	25.42	HANDLE, P/SEAT RECL	9–I4,11
92–93	Y MAN RECL FRT BKT ST (AR9)	10152834	1	12.82	HANDLE, P/SEAT RECL	9–I24,10
94–96	Y	10152834	1	12.82	HANDLE, P/SEAT RECL	9–I24,10
93	Y MAN RECL FRT BKT ST (AR9)	10152835	1	12.82	LEVER, D/SEAT BK ADJR ACTR .	9–I24,10
93	Y MAN RECL FRT BKT ST (AR9)	10152834	1	12.82	LEVER, P/SEAT BK ADJR ACTR .	9–I24,10
94	Y	10152834	1	12.82	LEVER, P/SEAT BK ADJR ACTR .	9–I24,10
92–93	Y MAN RECL FRT BKT ST (AR9)	10152832	1	1.00	PIN, D/SEAT RECL	9–I24,6
94–96	Y	10152832	1	1.00	PIN, D/SEAT RECL	9–I24,6
92–93	Y MAN RECL FRT BKT ST (AR9)	10152832	1	1.00	PIN, P/SEAT RECL	9–I24,6
94–96	Y	10152832	1	1.00	PIN, P/SEAT RECL	9–I24,6
85–86	Y (EXC RECL FRT BKT ST (AQ9), (2ND DES)	14088485	1	148.07	RECLINER, D/SEAT (2 BOLT HGE ATTACHMENT) (11.561)	9–I4,25
89–90	Y RECL FRT BKT ST (AQ9) ..	10148050	1	37.25	RECLINER, D/SEAT (**VPI 1–877–846–8243)	9–I12,25
91–93	Y RECL FRT BKT ST (AQ9) ..	14088485	1	148.07	RECLINER, D/SEAT (11.561)	9–I4,25
92–93	Y MAN RECL FRT BKT ST (AR9)	10152831	1	60.23	RECLINER, D/SEAT (11.561)	9–I24,14
94–96	Y	10152831	1	60.23	RECLINER, D/SEAT (11.561)	9–I24,14
85–86	Y (EXC RECL FRT BKT ST (AQ9), (2ND DES)	14088485	1	148.07	RECLINER, P/SEAT (2 BOLT HGE ATTACHMENT) (11.561)	9–I4,25
89–90	Y RECL FRT BKT ST (AQ9) ..	10148050	1	37.25	RECLINER, P/SEAT (**VPI 1–877–846–8243)	9–I12,25
91–93	Y RECL FRT BKT ST (AQ9) ..	14088485	1	148.07	RECLINER, P/SEAT (11.561)	9–I4,25

© 2000 GENERAL MOTORS SERVICE PARTS OPERATIONS–CHEVROLET–14Y

11.377 BOLT – BRACKET – CABLE – CONNECTOR – GEAR – HANDLE – LEVER – PIN – RECLINER – SUPPORT – WIRE, Front Seat Back Reclining (Con't)

92–93	Y MAN RECL FRT BKT ST (AR9)	10152831	1	60.23	RECLINER, P/SEAT (11.561)	9–I24,14
94–96	Y	10152831	1	60.23	RECLINER, P/SEAT (11.561)	9–I24,14
89–90	Y RECL FRT BKT ST (AQ9)	10148062	1	DISCON	SUPPORT, D/SEAT BRKT (RECL ACTR)	
89–90	Y RECL FRT BKT ST (AQ9)	10148062	1	DISCON	SUPPORT, P/SEAT BRKT (RECL ACTR)	
89	Y	10148095	4	DISCON	WIRE, D/SEAT LUMBAR BLADDER RET	
89	Y	10148095	4	DISCON	WIRE, P/SEAT LUMBAR BLADDER RET	

11.378 BEZEL – BLADDER – BRACKET – CONNECTOR – CONTROL – HARNESS – HOSE – POD – PUMP – RETAINER – RIVET – SWITCH – VALVE, Front Seat Lumbar

84–93	Y RECL FRT BKT ST (AQ9)	10148091	1	8.23	BEZEL, D/SEAT LUMBAR SUPT SW (11.377)	9–I6,35
84–93	Y RECL FRT BKT ST (AQ9)	10148091	1	8.23	BEZEL, P/SEAT LUMBAR SUPT SW (11.377)	9–I6,35
84–93	Y RECL FRT BKT ST (AQ9)	14079496	2	167.96	BLADDER, D/SEAT LUMBAR SUPT	9–I6,39
84–93	Y RECL FRT BKT ST (AQ9)	14079496	2	167.96	BLADDER, P/SEAT LUMBAR SUPT	9–I6,39
94–96	Y RECL FRT BKT ST (AQ9), IL3	10248446	2	35.36	BLADDER, ST LATERAL SUPT	9–J13,9
94–96	Y RECL FRT BKT ST (AQ9), IL3	10248445	1	35.36	BLADDER, ST LUMBAR SUPT	9–J13,2
94–96	Y RECL FRT BKT ST (AQ9), IL3	10250235	1	10.95	BRACKET, D/SEAT & P/SEAT CUSH AIR PUMP	9–J13,42
89–93	Y RECL FRT BKT ST (AQ9)	10148088	AR	13.97	BRACKET, F/SEAT LUMBAR CONT POD MT (11.390)	9–I9,57
94	Y	12101762	1	68.40	CONNECTOR, SOL–ST INFLR VLV (10–WAY F) (W/LEADS) (02.535) (AC–DELCO #PT150)	
96	Y RECL FRT BKT ST (AQ9)	12101762	1	68.40	CONNECTOR, SOL–ST INFLR VLV (10–WAY F) (W/LEADS) (02.535) (AC–DELCO #PT150)	
94–96	Y	12101762	1	68.40	CONNECTOR, SW–ST INFLR (10–WAY F) (W/LEADS) (02.535) (AC–DELCO #PT150)	
94–95	Y	12125665	1	28.96	CONNECTOR, SW–ST INFLR (GRAY) (6–WAY F) (W/LEADS) (04.663)	
96	Y RECL FRT BKT ST (AQ9)	12125665	1	28.96	CONNECTOR, SW–ST INFLR (GRAY) (6–WAY F) (W/LEADS) (04.663)	
90	Y RECL FRT BKT ST (AQ9)	10174811	1	83.15	CONTROL, F/SEAT LUMBAR	9–I9,65
91	Y RECL FRT BKT ST (AQ9)	12508092	RH	DISCON	CONTROL, F/SEAT LUMBAR	
91	Y RECL FRT BKT ST (AQ9)	12508095	LH	DISCON	CONTROL, F/SEAT LUMBAR	
92–93	Y RECL FRT BKT ST (AQ9)	12510956	LH	125.97	CONTROL, F/SEAT LUMBAR	9–J2,54
92–93	Y RECL FRT BKT ST (AQ9)	12510957	RH	125.97	CONTROL, F/SEAT LUMBAR	9–J2,54
94–95	Y RECL FRT BKT ST (AQ9), IL3	16749289	1	87.57	CONTROL, PWR ST LUMBAR (PASS SEAT)	9–J13,41
96	Y RECL FRT BKT ST (AQ9), IL3, GRAND SPORT (IL5)	16749289	1	87.57	CONTROL, PWR ST LUMBAR (PASS SEAT)	9–J13,41
94–96	Y RECL FRT BKT ST (AQ9), IL3	10248448	1	20.89	HARNESS, D/SEAT AIR SPLY	9–J13,22
94–96	Y RECL FRT BKT ST (AQ9), IL3	10248448	1	20.89	HARNESS, P/SEAT AIR SPLY	9–J13,22
94–96	Y RECL FRT BKT ST (AQ9), IL3	16735451	1	13.92	HOSE, D/SEAT AIR SPLY (PASS SEAT)	9–J13,39

© 2000 GENERAL MOTORS SERVICE PARTS OPERATIONS–CHEVROLET–14Y

11.378 BEZEL – BLADDER – BRACKET – CONNECTOR – CONTROL – HARNESS – HOSE – POD – PUMP – RETAINER – RIVET – SWITCH – VALVE, Front Seat Lumbar (Con't)

96	Y RECL FRT BKT ST (AQ9), GRAND SPORT (IL5)	16735451	1	13.92	HOSE, D/SEAT AIR SPLY (PASS SEAT)	9–J13,39
84–89	Y AQ9	14079480	2	177.91	POD, LUMBAR CONT	9–I6,34
84–90	Y RECL FRT BKT ST (AQ9) ..	14079486	2	140.76	PUMP, D/SEAT & P/SEAT CUSH AIR	9–I6,27
91–93	Y RECL FRT BKT ST (AQ9) ..	12508087	AR	137.02	PUMP, D/SEAT & P/SEAT CUSH AIR (PASS W/MTR–LUMBAR)	9–I19,39
94–95	Y RECL FRT BKT ST (AQ9), IL3	16622020	1	182.33	PUMP, D/SEAT & P/SEAT CUSH AIR (PNEUMATIC) (BOSCH MTR PUMP)	9–J13,43
96	Y RECL FRT BKT ST (AQ9) ..	16622020	1	182.33	PUMP, D/SEAT & P/SEAT CUSH AIR (PNEUMATIC) (BOSCH MTR PUMP)	9–J13,43
84–93	Y RECL FRT BKT ST (AQ9) ..	14079474	2	DISCON	RETAINER, D/SEAT LUMBAR SUPT BLADDER (TUBE RET)	
89–93	Y RECL FRT BKT ST (AQ9) ..	10148068	2	DISCON	RETAINER, D/SEAT LUMBAR SUPT BLADDER (CONDUIT–TO FRM) .	
84–93	Y RECL FRT BKT ST (AQ9) ..	14079474	2	DISCON	RETAINER, P/SEAT LUMBAR SUPT BLADDER (TUBE RET)	
89–93	Y RECL FRT BKT ST (AQ9) ..	10148068	2	DISCON	RETAINER, P/SEAT LUMBAR SUPT BLADDER (CONDUIT–TO FRM) .	
94–96	Y RECL FRT BKT ST (AQ9) ..	10131511	4	.70	RIVET, D/SEAT & P/SEAT CUSH AIR VLV (12.118)	9–J13,32
94	Y 6–WAY PWR P/SEAT ADJR (AC1), 6–WAY PWR D/SEAT ADJR (AC3), RECL FRT BKT ST (AQ9)	10211792	1	144.76	SWITCH, DRVR/PASS ST BK LUMBAR SUPT	9–G2,42
95–96	Y 6–WAY PWR D/SEAT ADJR (AG1), 6–WAY PWR P/SEAT ADJR (AG2), RECL FRT BKT ST (AQ9)	10211792	1	144.76	SWITCH, DRVR/PASS ST BK LUMBAR SUPT	9–G2,42
94–96	Y RECL FRT BKT ST (AQ9), IL3	16600786	1	66.57	VALVE, D/SEAT CUSH AIR	9–J13,31
94–96	Y RECL FRT BKT ST (AQ9), IL3	16600786	1	66.57	VALVE, P/SEAT CUSH AIR	9–J13,31

11.379 ARM – BEARING – BEARING KIT – BOLT – BRACKET – BUSHING – CABLE – MOTOR – NUT – PIN – RING – SHIM – SPACER – SPRING – SUPPORT – SWITCH – WASHER, Front Seat Bolster

84–88	Y RECL FRT BKT ST (AQ9) ..	14079493	LH	DISCON	ARM, ST SI BOLS (W/PADDLE) ..	
84–88	Y RECL FRT BKT ST (AQ9) ..	14079494	RH	DISCON	ARM, ST SI BOLS (W/PADDLE) ..	
84–90	Y RECL FRT BKT ST (AQ9) ..	14094539	4	DISCON	BEARING KIT, F/SEAT BOLS	
91–93	Y RECL FRT BKT ST (AQ9) ..	12506487	1	DISCON	BEARING, F/SEAT THR	
84–93	Y RECL FRT BKT ST (AQ9) ..	14094547	LH	14.14	BOLT, D/SEAT BK BOLS ADJR ...	9–I6,50
84–93	Y RECL FRT BKT ST (AQ9) ..	14094548	RH	14.14	BOLT, D/SEAT BK BOLS ADJR ...	9–I6,47
89–93	Y RECL FRT BKT ST (AQ9), (TO MTR)	10148082	AR	DISCON	BOLT, F/SEAT BOLS	
84–93	Y RECL FRT BKT ST (AQ9) ..	14094547	LH	14.14	BOLT, P/SEAT BK BOLS ADJR ...	9–I6,50
84–93	Y RECL FRT BKT ST (AQ9) ..	14094548	RH	14.14	BOLT, P/SEAT BK BOLS ADJR ...	9–I6,47
94–96	Y RECL FRT BKT ST (AQ9), IL3	10250253	1	11.54	BRACKET, D/SEAT BK CUSH SI BOLS ADJ (INR)	9–J13,23
94–96	Y RECL FRT BKT ST (AQ9), IL3	10250254	1	11.54	BRACKET, D/SEAT BK CUSH SI BOLS ADJ (OTR)	9–J13,10
94–96	Y RECL FRT BKT ST (AQ9), IL3	10255599	1	10.95	BRACKET, D/SEAT BK CUSH SI BOLS ADJ	9–J13,45
94–96	Y RECL FRT BKT ST (AQ9), IL3	10250253	1	11.54	BRACKET, P/SEAT BK CUSH SI BOLS ADJ (INR)	9–J13,23

© 2000 GENERAL MOTORS SERVICE PARTS OPERATIONS–CHEVROLET–14Y

11.379 ARM – BEARING – BEARING KIT – BOLT – BRACKET – BUSHING – CABLE – MOTOR – NUT – PIN – RING – SHIM – SPACER – SPRING – SUPPORT – SWITCH – WASHER, Front Seat Bolster (Con't)

94–96	Y RECL FRT BKT ST (AQ9), IL3	10250254	1	11.54	BRACKET, P/SEAT BK CUSH SI BOLS ADJ (OTR)	9–J13,10
94–96	Y RECL FRT BKT ST (AQ9), IL3	10255601	1	10.95	BRACKET, P/SEAT BK CUSH SI BOLS ADJ	9–J13,45
84–93	Y RECL FRT BKT ST (AQ9)	14094542	4	5.92	BUSHING, F/SEAT BOLS INR (SMALL)	9–I6,52
84–93	Y RECL FRT BKT ST (AQ9)	14094546	4	3.21	BUSHING, F/SEAT BOLS INR (LARGE)	9–I6,48
84–93	Y RECL FRT BKT ST (AQ9)	14079498	2	62.15	CABLE, F/SEAT BOLS DRV	9–I6,8
84–93	Y RECL FRT BKT ST (AQ9)	14079423	2	303.88	MOTOR, ST BOLS DRV	9–I6,18
84–93	Y RECL FRT BKT ST (AQ9)	14094549	LH	11.66	NUT, F/SEAT BOLS ADJR	9–I6,51
84–93	Y RECL FRT BKT ST (AQ9)	14094550	RH	11.66	NUT, F/SEAT BOLS ADJR	9–I6,46
84–88	Y RECL FRT BKT ST (AQ9)	20496179	4	DISCON	PIN, ST SI BOLS ADJR (PADDLE ARM)	
91–93	Y RECL FRT BKT ST (AQ9)	1409[illegible]545	2	1.16	RING, F/SEAT RET (ST BOLSTER)	9–I19,30
91–93	Y RECL FRT BKT ST (AQ9)	12508488	AR	DISCON	SHIM, F/SEAT BOLS DRV	
84–93	Y RECL FRT BKT ST (AQ9)	14079497	AR	3.49	SPACER, F/SEAT BOLS ADJR MOT	9–I6,12
94–96	Y RECL FRT BKT ST (AQ9), IL3	10250255	1	7.14	SPRING, D/SEAT BK CUSH SI BOLS ADJ BRKT	9–J13,7
94–96	Y RECL FRT BKT ST (AQ9), IL3	10250255	1	7.14	SPRING, P/SEAT BK CUSH SI BOLS ADJ BRKT	9–J13,7
94–96	Y RECL FRT BKT ST (AQ9), IL3	10250251	1	11.54	SUPPORT, D/SEAT BK CUSH SI BOLS (INR)	9–J13,24
94–96	Y RECL FRT BKT ST (AQ9), IL3	10250252	1	11.54	SUPPORT, D/SEAT BK CUSH SI BOLS (OTR)	9–J13,8
94–96	Y RECL FRT BKT ST (AQ9), IL3	10250251	1	11.54	SUPPORT, P/SEAT BK CUSH SI BOLS (INR)	9–J13,24
94–96	Y RECL FRT BKT ST (AQ9), IL3	10250252	1	11.54	SUPPORT, P/SEAT BK CUSH SI BOLS	9–J13,8
84–89	Y RECL FRT BKT ST (AQ9)	14079478	2	61.34	SWITCH, ST BOLS CONT (BLACK)	9–I6,33
90	Y RECL FRT BKT ST (AQ9)	10174810	2	24.12	SWITCH, ST BOLS CONT (GRAY)	9–I9,59
91	Y RECL FRT BKT ST (AQ9)	12508093	RH	DISCON	SWITCH, ST BOLS CONT	
91	Y RECL FRT BKT ST (AQ9)	12508096	LH	38.50	SWITCH, ST BOLS CONT (**VPI 1–877–846–8243)	9–I19,23
92–93	Y RECL FRT BKT ST (AQ9)	12510958	LH	33.92	SWITCH, ST BOLS CONT	9–J2,23
92–93	Y RECL FRT BKT ST (AQ9)	12510959	RH	33.92	SWITCH, ST BOLS CONT	9–J2,23
91–92	Y RECL FRT BKT ST (AQ9)	12506486	1	DISCON	WASHER, F/SEAT INR THR	
84–93	Y RECL FRT BKT ST (AQ9)	14079487	12	DISCON	WASHER, F/SEAT LUMBAR PUMP MTG (MTR/INSULATING) (RUBBER)	
91–93	Y RECL FRT BKT ST (AQ9)	12506486	1	DISCON	WASHER, F/SEAT OTR THR	
91–94	Y	14094540	2	1.50	WASHER, SPR WAVE (ST BOLSTER)	9–I19,34

11.390 BEZEL – BOLT – CABLE – CLIP – COVER – HANDLE – NUT – WASHER – WIRE, Front Seat Back Lock

84–93	Y RECL FRT BKT ST (AQ9), MAN RECL FRT BKT ST (AR9)	14049158	1	1.90	BEZEL, D/SEAT BK CUSH LAT REL HDL	9–I4,1
94	Y IL3	10262345	1	6.63	BEZEL, D/SEAT BK CUSH LAT REL HDL (BLACK)	9–J8,28
95–96	Y (143)	10262342	1	6.63	BEZEL, D/SEAT BK CUSH LAT REL HDL (GRAY)	9–J8,28
95–96	Y (703)	10262343	1	6.63	BEZEL, D/SEAT BK CUSH LAT REL HDL (RED)	9–J8,28
95–96	Y (643)	10262344	1	6.63	BEZEL, D/SEAT BK CUSH LAT REL HDL (BEIGE)	9–J8,28

© 2000 GENERAL MOTORS SERVICE PARTS OPERATIONS–CHEVROLET· 14Y

11.390 BEZEL – BOLT – CABLE – CLIP – COVER – HANDLE – NUT – WASHER – WIRE, Front Seat Back Lock (Con't)

95–96	Y (193)	10262345	1	6.63	BEZEL, D/SEAT BK CUSH LAT REL HDL (BLACK)	9–J8,28
96	Y RECL FRT BKT ST (AQ9), COLLECTORS EDITION (Z15)	10262345	1	6.63	BEZEL, D/SEAT BK CUSH LAT REL HDL (BLACK)	9–J8,28
96	Y RECL FRT BKT ST (AQ9), GRAND SPORT (IL5), GRAND SPORT EDITION (Z16)	10262345	1	6.63	BEZEL, D/SEAT BK CUSH LAT REL HDL (BLACK)	9–J8,28
84–03	Y RECL FRT BKT ST (AQ9), MAN RECL FRT BKT ST (AR9)	14049158	1	1.90	BEZEL, P/SEAT BK CUSH LAT REL HDL	9–I4,1
94	Y IL3	10262345	1	6.63	BEZEL, P/SEAT BK CUSH LAT REL HDL (BLACK)	9–J8,28
95–96	Y (143)	10262342	1	6.63	BEZEL, P/SEAT BK CUSH LAT REL HDL (GRAY)	9–J8,28
95–96	Y (703)	10262343	1	6.63	BEZEL, P/SEAT BK CUSH LAT REL HDL (RED)	9–J8,28
95–96	Y (643)	10262[illegible]	1	6.63	BEZEL, P/SEAT BK CUSH LAT REL HDL (BEIGE)	9–J8,28
95–96	Y (193)	10262345	1	6.63	BEZEL, P/SEAT BK CUSH LAT REL HDL (BLACK)	9–J8,28
96	Y RECL FRT BKT ST (AQ9), COLLECTORS EDITION (Z15)	10262345	1	6.63	BEZEL, P/SEAT BK CUSH LAT REL HDL (BLACK)	9–J8,28
96	Y RECL FRT BKT ST (AQ9), GRAND SPORT (IL5), GRAND SPORT EDITION (Z16)	10262345	1	6.63	BEZEL, P/SEAT BK CUSH LAT REL HDL (BLACK)	9–J8,28
84–88	Y (EXC AQ9)	14049281	4	DISCON	BOLT, ADJ ACTR	
95–96	Y (143)	10262373	2	8.16	BOLT, D/SEAT BK CUSH LAT REL HDL BZL (GRAY)	9–J13,14
95–96	Y (703)	10262374	2	8.16	BOLT, D/SEAT BK CUSH LAT REL HDL BZL (RED)	9–J13,14
95–96	Y (643)	10262375	2	8.16	BOLT, D/SEAT BK CUSH LAT REL HDL BZL (BEIGE)	9–J13,14
95–96	Y (193)	10262376	2	8.16	BOLT, D/SEAT BK CUSH LAT REL HDL BZL (BLACK)	9–J13,14
95–96	Y (143)	10262373	2	8.16	BOLT, P/SEAT BK CUSH LAT REL HDL BZL (GRAY)	9–J13,14
95–96	Y (703)	10262374	2	8.16	BOLT, P/SEAT BK CUSH LAT REL HDL BZL (RED)	9–J13,14
95–96	Y (643)	10262375	2	8.16	BOLT, P/SEAT BK CUSH LAT REL HDL BZL (BEIGE)	9–J13,14
95–96	Y (193)	10262376	2	8.16	BOLT, P/SEAT BK CUSH LAT REL HDL BZL (BLACK)	9–J13,14
84–90	Y RECL FRT BKT ST (AQ9)	14081109	4	DISCON	BOLT, ST RECL VERT ACTR ATCH (11.377)	
84–91	Y RECL FRT BKT ST (AQ9), MAN RECL FRT BKT ST (AR9)	12515850	1	12.43	CABLE, D/SEAT BK CUSH LAT REL	9–I4,2
92–93	Y RECL FRT BKT ST (AQ9), MAN RECL FRT BKT ST (AR9)	12515850	1	12.43	CABLE, D/SEAT BK CUSH LAT REL	9–I4,2
84–91	Y RECL FRT BKT ST (AQ9), MAN RECL FRT BKT ST (AR9)	12515850	1	12.43	CABLE, P/SEAT BK CUSH LAT REL	9–I4,2
92–93	Y RECL FRT BKT ST (AQ9), MAN RECL FRT BKT ST (AR9)	12515850	1	12.43	CABLE, P/SEAT BK CUSH LAT REL	9–I4,2

© 2000 GENERAL MOTORS SERVICE PARTS OPERATIONS–CHEVROLET–14Y

11.390 BEZEL – BOLT – CABLE – CLIP – COVER – HANDLE – NUT – WASHER – WIRE, Front Seat Back Lock (Con't)

90	Y MAN RECL FRT BKT ST (AR9)	10137250	2	DISCON	CLIP, D/SEAT BK LK CBL	
90	Y MAN RECL FRT BKT ST (AR9)	10137250	2	DISCON	CLIP, P/SEAT BK LK CBL	
94–96	Y	10248443	1	9.95	COVER, D/SEAT BK CUSH LAT REL HDL FIN	9–J8,1
94–96	Y	10248443	1	9.95	COVER, P/SEAT BK LAT REL HDL FIN	9–J8,1
94	Y	10262340	1	20.15	HANDLE, D/SEAT BK CUSH LAT REL (BLACK)	9–J8,3
95–96	Y (143)	10262337	1	20.15	HANDLE, D/SEAT BK CUSH LAT REL (GRAY)	9–J8,3
95–96	Y (703)	10262338	1	20.15	HANDLE, D/SEAT BK CUSH LAT REL (RED)	9–J8,3
95–96	Y (643)	10262339	1	20.15	HANDLE, D/SEAT BK CUSH LAT REL (BEIGE)	9–J8,3
95–96	Y (193)	10262340	1	20.15	HANDLE, D/SEAT BK CUSH LAT REL (BLACK)	9–J8,3
94	Y	10262340	1	20.15	HANDLE, P/SEAT BK CUSH LAT REL (BLACK)	9–J8,3
95–96	Y (143)	10262337	1	20.15	HANDLE, P/SEAT BK CUSH LAT REL (GRAY)	9–J8,3
95–96	Y (703)	10262338	1	20.15	HANDLE, P/SEAT BK CUSH LAT REL (RED)	9–J8,3
95–96	Y (643)	10262339	1	20.15	HANDLE, P/SEAT BK CUSH LAT REL (BEIGE)	9–J8,3
95–96	Y (193)	10262340	1	20.15	HANDLE, P/SEAT BK CUSH LAT REL (BLACK)	9–J8,3
91–92	Y RECL FRT BKT ST (AQ9)	9415253	1	.33	NUT, D/SEAT BK CUSH LAT REL HDL BZL (09.665)	9–I19,24
91–92	Y RECL FRT BKT ST (AQ9)	9415253	1	.33	NUT, P/SEAT BK CUSH LAT REL HDL BZL (09.665)	9–I19,24
91–93	Y RECL FRT BKT ST (AQ9)	14079487	12	DISCON	WASHER, F/SEAT BK REL ESCUT (RUBBER) (11.379)	
84–88	Y RECL FRT BKT ST (AQ9)	14079479	2	DISCON	WIRE, BACKREST PAD RET	

11.419 BOLT – FRAME – RETAINER – STRAP – WIRE, Front Seat Cushion

89–90	Y RECL FRT BKT ST (AQ9)	10148065	AR	DISCON	BOLT, D/SEAT RECL ACTR BRKT (TO FRM)	
89–90	Y RECL FRT BKT ST (AQ9)	10148065	AR	DISCON	BOLT, P/SEAT RECL ACTR BRKT (TO FRM)	
84	Y (EXC AQ9)	14047569	1	DISCON	FRAME, D/SEAT CUSH	
84–88	Y RECL FRT BKT ST (AQ9)	14079488	2	DISCON	FRAME, D/SEAT CUSH	
85	Y (EXC AQ9) (1ST DES)	14047569	1	DISCON	FRAME, D/SEAT CUSH (3 BOLT HINGE ATTACHMENT)	
85–86	Y (EXC AQ9) (2ND DES)	14089677	1	DISCON	FRAME, D/SEAT CUSH (2 BOLT HINGE ATTACHMENT)	
87–88	Y AR9	14089677	1	DISCON	FRAME, D/SEAT CUSH	
89–90	Y RECL FRT BKT ST (AQ9)	10148049	2	DISCON	FRAME, D/SEAT CUSH	
89–91	Y MAN RECL FRT BKT ST (AR9)	12515849	1	DISCON	FRAME, D/SEAT CUSH	
91	Y RECL FRT BKT ST (AQ9)	12510925	1	DISCON	FRAME, D/SEAT CUSH	
92–93	Y RECL FRT BKT ST (AQ9)	12522025	1	DISCON	FRAME, D/SEAT CUSH	
92–93	Y MAN RECL FRT BKT ST (AR9)	12522027	1	124.60	FRAME, D/SEAT CUSH	9–I24,12
94–96	Y	10248432	1	189.60	FRAME, D/SEAT CUSH	9–J8,17
84	Y (EXC AQ9)	14051128	1	DISCON	FRAME, P/SEAT CUSH	
84–88	Y RECL FRT BKT ST (AQ9)	14079488	2	DISCON	FRAME, P/SEAT CUSH	

© 2000 GENERAL MOTORS SERVICE PARTS OPERATIONS–CHEVROLET–14Y

11.419 BOLT – FRAME – RETAINER – STRAP – WIRE, Front Seat Cushion (Con't)

85	Y (EXC AQ9) (1ST DES)	14051128	1	DISCON	FRAME, P/SEAT CUSH (3 BOLT HINGE ATTACHMENT)	
85–86	Y (EXC AQ9) (2ND DES)	14089652	1	DISCON	FRAME, P/SEAT CUSH (2 BOLT HINGE ATTACHMENT)	
87–88	Y AR9	14089652	1	DISCON	FRAME, P/SEAT CUSH	
89–90	Y RECL FRT BKT ST (AQ9) ..	10148049	2	DISCON	FRAME, P/SEAT CUSH	
89–91	Y MAN RECL FRT BKT ST (AR9)	12515848	1	DISCON	FRAME, P/SEAT CUSH	
91	Y RECL FRT BKT ST (AQ9) ..	12510924	1	DISCON	FRAME, P/SEAT CUSH	
92–93	Y RECL FRT BKT ST (AQ9) ..	12522024	1	DISCON	FRAME, P/SEAT CUSH	
92–93	Y MAN RECL FRT BKT ST (AR9)	12522026	1	DISCON	FRAME, P/SEAT CUSH	
94–96	Y	10248447	1	189.60	FRAME, P/SEAT CUSH	9–J8,17
94–96	Y	10248422	1	.73	RETAINER, D/SEAT CUSH	9–J8,20
94–96	Y	10248419	2	.73	RETAINER, D/SEAT CUSH RET ..	9–J8,21
94–96	Y	10248435	1	7.24	RETAINER, D/SEAT CUSH STRP (FRT)	9–J8,15
94–96	Y	10248436	1	7.24	RETAINER, D/SEAT CUSH STRP (RR)	9–J8,13
94–96	Y	10248422	1	.73	RETAINER, P/SEAT CUSH	9–J8,20
94–96	Y	10248419	2	.73	RETAINER, P/SEAT CUSH RET ..	9–J8,21
94–96	Y	10248435	1	7.24	RETAINER, P/SEAT CUSH STRP (FRT)	9–J8,15
94–96	Y	10248436	1	7.24	RETAINER, P/SEAT CUSH STRP (RR)	9–J8,13
91–93	Y RECL FRT BKT ST (AQ9), MAN RECL FRT BKT ST (AR9)	10248420	1	11.30	STRAP, D/SEAT CUSH	9–I24,7
94–96	Y	10248420	2	11.30	STRAP, D/SEAT CUSH	9–I24,7
91–93	Y RECL FRT BKT ST (AQ9), MAN RECL FRT BKT ST (AR9)	10248420	1	11.30	STRAP, P/SEAT CUSH	9–I24,7
94–96	Y	10248420	2	11.30	STRAP, P/SEAT CUSH	9–I24,7
95–96	Y MAN RECL FRT BKT ST (AR9)	10268824	1	.63	WIRE, D/SEAT CUSH BOLS LSTG .	9–I12,29
89–93	Y RECL FRT BKT ST (AQ9) ..	10153686	1	DISCON	WIRE, D/SEAT CUSH PAD	
89–93	Y MAN RECL FRT BKT ST (AR9)	10153686	1	DISCON	WIRE, D/SEAT CUSH PAD	
91	Y MAN RECL FRT BKT ST (AR9)	10268824	2	.63	WIRE, D/SEAT CUSH PAD (FRT) .	9–I12,29
91–93	Y RECL FRT BKT ST (AQ9), MAN RECL FRT BKT ST (AR9)	12510484	1	DISCON	WIRE, D/SEAT CUSH PAD (FRT) .	
91–93	Y RECL FRT BKT ST (AQ9), MAN RECL FRT BKT ST (AR9)	12510485	1	DISCON	WIRE, D/SEAT CUSH PAD (RR) ..	
92–93	Y RECL FRT BKT ST (AQ9), MAN RECL FRT BKT ST (AR9)	10268824	2	.63	WIRE, D/SEAT CUSH PAD (FRT) .	9–I12,29
95–96	Y MAN RECL FRT BKT ST (AR9)	10268824	1	.63	WIRE, P/SEAT CUSH BOLS LSTG	9–I12,29
89–93	Y RECL FRT BKT ST (AQ9) ..	10153686	1	DISCON	WIRE, P/SEAT CUSH PAD	
89–93	Y MAN RECL FRT BKT ST (AR9)	10153686	1	DISCON	WIRE, P/SEAT CUSH PAD	
91	Y MAN RECL FRT BKT ST (AR9)	10268824	2	.63	WIRE, P/SEAT CUSH PAD (FRT) .	9–I12,29
92–93	Y RECL FRT BKT ST (AQ9), MAN RECL FRT BKT ST (AR9)	10268824	2	.63	WIRE, P/SEAT CUSH PAD (FRT) .	9–I12,29

© 2000 GENERAL MOTORS SERVICE PARTS OPERATIONS–CHEVROLET–14Y

11.556 CONNECTOR – LEADSCREW – MOTOR – RELAY – SPACER, Front Seat Adjuster

92–94	Y	12126016	1	50.75	CONNECTOR, SW–PWR ST ADJR (4–WAY M, W/LEADS)	
96	Y	12126016	1	50.75	CONNECTOR, SW–PWR ST ADJR (4–WAY M, W/LEADS)	
84–90	Y AQ9	14079484	2	DISCON	LEADSCREW, BACKREST	
84–86	Y 6–WAY (A42)	14067605	1	DISCON	MOTOR, D/SEAT ADJR ACTR	
87	Y 6–WAY PWR D/SEAT ADJR (AC3)	14067605	1	DISCON	MOTOR, D/SEAT ADJR ACTR	
88–94	Y 6–WAY PWR D/SEAT ADJR (AC3)	10137220	1	136.82	MOTOR, D/SEAT ADJR ACTR (AC–DELCO #10137220)	9–J21,1
95–96	Y 6–WAY PWR D/SEAT ADJR (AG1)	10137220	1	136.82	MOTOR, D/SEAT ADJR ACTR (AC–DELCO #10137220)	9–J21,1
84–90	Y RECL FRT BKT ST (AQ9)	22009386	AR	131.60	MOTOR, D/SEAT RECL (ACTR SUPT) (AC–DELCO #22009386)	9–I6,29
84–86	Y 6–WAY (A42)	14067605	1	DISCON	MOTOR, P/SEAT ADJR ACTR	
87	Y 6–WAY PWR P/SEAT ADJR (AC1)	14067605	1	DISCON	MOTOR, P/SEAT ADJR ACTR	
88–94	Y 6–WAY PWR P/SEAT ADJR (AC1)	10137220	1	136.82	MOTOR, P/SEAT ADJR ACTR (AC–DELCO #10137220)	9–J21,1
95–96	Y 6–WAY PWR P/SEAT ADJR (AG2)	10137220	1	136.82	MOTOR, P/SEAT ADJR ACTR (AC–DELCO #10137220)	9–J21,1
94–96	Y RECL FRT BKT ST (AQ9)	1213506[illegible]	1	9.55	RELAY, ST ADJR (02.815) (AC–DELCO #D1719A)	
84–90	Y RECL FRT BKT ST (AQ9)	14079500	2	DISCON	SPACER, F/SEAT RECL	

11.558 BRACKET – CONTROL – ESCUTCHEON – INSERT – KNOB – LAMP – RETAINER – SWITCH, Front Seat Adjuster

84–86	Y 6–WAY (A42)	14047189	1	DISCON	BRACKET, PWR ST ADJR SW	
87–89	Y 6–WAY PWR D/SEAT ADJR (AC3)	14047189	1	DISCON	BRACKET, PWR ST ADJR SW	
92–93	Y 6–WAY PWR D/SEAT ADJR (AC3), ELEK RIDE & HANDLING (FX3), (EXC 6–WAY PWR P/SEAT ADJR (AC1)	10161836	1	158.10	CONTROL, ELEK SUSP (W/D/SEAT ADJR SW) (07.450)	9–G2,42
84–90	Y RECL FRT BKT ST (AQ9)	10148090	2	3.93	ESCUTCHEON, ST RECL SW (BOLS) (11.379)	9–I6,35
90–91	Y 6–WAY PWR D/SEAT ADJR (AC3)	12514822	[illegible]	6.53	INSERT, D/SEAT ADJR SW PLT	9–F20,37
90–91	Y 6–WAY PWR P/SEAT ADJR (AC1), 6–WAY PWR D/SEAT ADJR (AC3)	12514823	1	6.53	INSERT, P/SEAT ADJR SW PLT	9–F20,60
84–86	Y 6–WAY (A42)	14057581	[illegible]	2.82	KNOB, PWR ST ADJR SW	9–I6,53
87–89	Y 6–WAY PWR D/SEAT ADJR (AC3)	14057581	1	2.82	KNOB, PWR ST ADJR SW	9–I6,53
90–93	Y 6–WAY PWR D/SEAT ADJR (AC3)	10148002	2	2.90	LAMP, D/SEAT & P/SEAT ADJR SW	9–G2,37
86	Y 6–WAY (A42)	1376906	1	DISCON	RETAINER, PWR ST ADJR SW	
87–89	Y 6–WAY PWR D/SEAT ADJR (AC3)	1376906	1	DISCON	RETAINER, PWR ST ADJR SW	
84–89	Y AQ9	14079477	2	43.86	SWITCH, BACKREST CONT (BLACK)	9–I6,32
90–91	Y 6–WAY PWR D/SEAT ADJR (AC3)	10086227	1	77.27	SWITCH, D/SEAT ADJR	9–F20,37
92	Y 6–WAY PWR P/SEAT ADJR (AC1), 6–WAY PWR D/SEAT ADJR (AC3), ELEK RIDE & HANDLING (FX3)	10161837	1	97.92	SWITCH, D/SEAT ADJR	9–G2,37

© 2000 GENERAL MOTORS SERVICE PARTS OPERATIONS–CHEVROLET–14Y

11.558 BRACKET – CONTROL – ESCUTCHEON – INSERT – KNOB – LAMP – RETAINER – SWITCH, Front Seat Adjuster (Con't)

93	Y 6–WAY PWR D/SEAT ADJR (AC3)	10161837	1	97.92	SWITCH, D/SEAT ADJR	9–G2,37
94–96	Y	10212990	1	70.72	SWITCH, D/SEAT ADJR	7–I14,2
90	Y RECL FRT BKT ST (AQ9)	10174809	1	31.37	SWITCH, D/SEAT RECL (GRAY)	9–I9,73
90–91	Y 6–WAY PWR P/SEAT ADJR (AC1), 6–WAY PWR D/SEAT ADJR (AC3)	10086228	1	77.27	SWITCH, P/SEAT ADJR	9–F20,39
92–93	Y 6–WAY PWR P/SEAT ADJR (AC1), 6–WAY PWR D/SEAT ADJR (AC3)	10161843	1	97.92	SWITCH, P/SEAT ADJR	9–G2,39
94–96	Y	10212992	1	70.72	SWITCH, P/SEAT ADJR	7–I14,5
90	Y RECL FRT BKT ST (AQ9)	10174809	1	31.37	SWITCH, P/SEAT RECL (GRAY)	9–I9,73
84–86	Y 6–WAY (A42)	14047185	1	112.20	SWITCH, PWR ST ADJR	9–F17,40
87	Y 6–WAY PWR D/SEAT ADJR (AC3)	14103355	LH	DISCON	SWITCH, PWR ST ADJR	
87	Y 6–WAY PWR P/SEAT ADJR (AC1)	14103356	RH	DISCON	SWITCH, PWR ST ADJR	
88–89	Y 6–WAY PWR D/SEAT ADJR (AC3)	10098456	LH	77.27	SWITCH, PWR ST ADJR	9–F17,40
88–89	Y 6–WAY PWR P/SEAT ADJR (AC1)	10098457	RH	77.27	SWITCH, PWR ST ADJR	9–F17,40

11.561 ADJUSTER – CABLE – CASING – PLATE – RETAINER – REWORK KIT – SPACER – SPRING – WASHER, Front Seat Adjuster

84–86	Y 6–WAY (A42)	10137221	1	423.22	ADJUSTER, D/SEAT (LESS MTR)	9–I12,8
86–94	Y 6–WAY PWR D/SEAT ADJR (AC3)	10137221	1	423.22	ADJUSTER, D/SEAT (LESS MTR)	9–I12,8
95–96	Y 6–WAY PWR D/SEAT ADJR (AG1)	10137221	1	423.22	ADJUSTER, D/SEAT (LESS MTR)	9–I12,8
84–86	Y (EXC 6–WAY (A42)	14064592	RH	68.51	ADJUSTER, D/SEAT INR	9–I4,18
87–94	Y (EXC 6–WAY PWR D/SEAT ADJR (AC3)	14064592	RH	68.51	ADJUSTER, D/SEAT INR	9–I4,18
95–96	Y (EXC 6–WAY PWR P/SEAT ADJR (AG2)	14064592	RH	68.51	ADJUSTER, D/SEAT INR	9–I4,18
84–86	Y (EXC 6–WAY (A42)	14064591	LH	68.51	ADJUSTER, D/SEAT OTR	9–I4,18
87–94	Y (EXC 6–WAY PWR D/SEAT ADJR (AC3)	14064591	LH	68.51	ADJUSTER, D/SEAT OTR	9–I4,18
95–96	Y (EXC 6–WAY PWR D/SEAT ADJR (AG1)	14064591	LH	68.51	ADJUSTER, D/SEAT OTR	9–I4,18
84–86	Y 6–WAY (A42)	10137222	1	423.22	ADJUSTER, P/SEAT (LESS MTR)	9–I12,8
86–94	Y 6–WAY PWR P/SEAT ADJR (AC1)	10137222	1	423.22	ADJUSTER, P/SEAT (LESS MTR)	9–I12,8
95–96	Y 6–WAY PWR P/SEAT ADJR (AG2)	10137222	1	423.22	ADJUSTER, P/SEAT (LESS MTR)	9–I12,8
84–86	Y	14064591	LH	68.51	ADJUSTER, P/SEAT INR	9–I4,18
87–94	Y (EXC 6–WAY PWR P/SEAT ADJR (AC1)	14064591	LH	68.51	ADJUSTER, P/SEAT INR	9–I4,18
95–96	Y (EXC 6–WAY PWR P/SEAT ADJR (AG2)	14064591	LH	68.51	ADJUSTER, P/SEAT INR	9–I4,18
84–86	Y	14064592	RH	68.51	ADJUSTER, P/SEAT OTR	9–I4,18
87–94	Y (EXC 6–WAY PWR P/SEAT ADJR (AC1)	14064592	RH	68.51	ADJUSTER, P/SEAT OTR	9–I4,18
95–96	Y (EXC 6–WAY PWR P/SEAT ADJR (AG2)	14064592	RH	68.51	ADJUSTER, P/SEAT OTR	9–I4,18
84–86	Y 6–WAY (A42)	14067608	3	6.19	CABLE, D/SEAT HORIZ ADJR	9–J20,11
87–94	Y 6–WAY PWR D/SEAT ADJR (AC3)	14067608	3	6.19	CABLE, D/SEAT HORIZ ADJR	9–J20,11
95–96	Y 6–WAY PWR D/SEAT ADJR (AG1)	14067608	3	6.19	CABLE, D/SEAT HORIZ ADJR	9–J20,11

© 2000 GENERAL MOTORS SERVICE PARTS OPERATIONS–CHEVROLET–14Y

11.561 ADJUSTER – CABLE – CASING – PLATE – RETAINER – REWORK KIT – SPACER – SPRING – WASHER, Front Seat Adjuster (Con't)

88–94	Y 6–WAY PWR P/SEAT ADJR (AC1)	14067608	3	6.19	CABLE, P/SEAT HORIZ ADJR ...	9–J20,11
95–96	Y 6–WAY PWR P/SEAT ADJR (AG2)	14067608	3	6.19	CABLE, P/SEAT HORIZ ADJR ...	9–J20,11
87–94	Y 6–WAY PWR P/SEAT ADJR (AC1), 6–WAY PWR D/SEAT ADJR (AC3)	14067613	1	5.47	CASING, P/SEAT RECL ACTR CBL (ST ADJR CBL HSG)	9–J20,13
95–96	Y 6–WAY PWR D/SEAT ADJR (AG1), 6–WAY PWR P/SEAT ADJR (AG2)	14067613	1	5.47	CASING, P/SEAT RECL ACTR CBL (ST ADJR CBL HSG)	9–J20,13
84–86	Y 6–WAY (A42)	14067613	1	5.47	CASING, ST ADJR CBL	9–J20,13
93–96	Y	14046602	1	1.73	PLATE, D/SEAT FRT ANC	
84–91	Y	14046692	4	1.63	PLATE, D/SEAT RR ANC	9–I4,17
92–96	Y	14046692	2	1.63	PLATE, D/SEAT RR ANC	9–I4,17
93–96	Y	14046602	1	1.73	PLATE, P/SEAT FRT ANC	
84–91	Y	14046692	4	1.63	PLATE, P/SEAT RR ANC	9–I4,17
92–96	Y	14046692	2	1.63	PLATE, P/SEAT RR ANC	9–I4,17
84–86	Y 6–WAY (A42)	14067607	1	DISCON	RETAINER, ST ADJR HSG	
87	Y 6–WAY PWR D/SEAT ADJR (AC3)	14067607	1	DISCON	RETAINER, ST ADJR HSG	
84–86	Y 6–WAY (A42)	14067606	1	DISCON	SPRING, HORIZ ST ADJR	
87–88	Y 6–WAY PWR D/SEAT ADJR (AC3)	14067606	1	DISCON	SPRING, HORIZ ST ADJR	
84–86	Y 6–WAY (A42)	14039186	1	DISCON	SPRING, VERT ST ADJR	
87	Y 6–WAY PWR D/SEAT ADJR (AC3)	14039186	1	DISCON	SPRING, VERT ST ADJR	
91–93	Y RECL FRT BKT ST (AQ9) ..	12506485	AR	DISCON	WASHER, D/SEAT ADJR	
91–93	Y RECL FRT BKT ST (AQ9) ..	12506485	AR	DISCON	WASHER, P/SEAT ADJR	
	*EXPORT**********EXPORT**********EXPORT**********EXPORT**********EXPORT*					
84–85	Y EUROPEAN PROVISIONS (VD1) (EXPORT)	14084474	1	DISCON	REWORK KIT, ST	
84	Y EUROPEAN PROVISIONS (VD1) (EXPORT)	14051169	AR	DISCON	SPACER, D/SEAT	
84	Y EUROPEAN PROVISIONS (VD1) (EXPORT)	14051169	AR	DISCON	SPACER, P/SEAT	

11.573 COVER – RETAINER, Front Seat Adjuster Track

84–86	Y	14049296	1	3.70	COVER, D/SEAT INR ADJR FRT FIN	9–I12,6
84–91	Y (EXC 6–WAY PWR P/SEAT ADJR (AC1), 6–WAY PWR D/SEAT ADJR (AC3)	14064590	4	3.70	COVER, D/SEAT INR ADJR FRT FIN (74.5X60MM) (2.9X2.4IN) (SQUARE SHAPED)	9–I4,7
87–94	Y 6–WAY PWR D/SEAT ADJR (AC3)	14049296	1	3.70	COVER, D/SEAT INR ADJR FRT FIN	9–I12,6
92–94	Y (EXC 6–WAY PWR P/SEAT ADJR (AC1), 6–WAY PWR D/SEAT ADJR (AC3)	14064590	1	3.70	COVER, D/SEAT INR ADJR FRT FIN (74.5X60MM) (2.9X2.4IN) (SQUARE SHAPED)	9–I4,7
95–96	Y 6–WAY PWR D/SEAT ADJR (AG1)	14049296	RH	3.70	COVER, D/SEAT INR ADJR FRT FIN	9–I12,6
95–96	Y (EXC 6–WAY PWR D/SEAT ADJR (AG1), 6–WAY PWR P/SEAT ADJR (AG2)	14064590	1	3.70	COVER, D/SEAT INR ADJR FRT FIN (74.5X60MM) (2.9X2.4IN) (SQUARE SHAPED)	9–I4,7
84–94	Y	10054460	1	3.70	COVER, D/SEAT OTR ADJR FRT FIN (5.3X3.4IN) (L–SHAPED) (135.5X86.5MM)	9–I4,7
84–91	Y (EXC 6–WAY PWR P/SEAT ADJR (AC1), 6–WAY PWR D/SEAT ADJR (AC3)	14064590	4	3.70	COVER, D/SEAT OTR ADJR FRT FIN (74.5X60MM) (2.9X2.4IN) (SQUARE SHAPED)	9–I4,7

© 2000 GENERAL MOTORS SERVICE PARTS OPERATIONS–CHEVROLET–14Y

11.573 COVER – RETAINER, Front Seat Adjuster Track (Con't)

92–94	Y (EXC 6–WAY PWR P/SEAT ADJR (AC1), 6–WAY PWR D/SEAT ADJR (AC3)	14064590	1	3.70	COVER, D/SEAT OTR ADJR FRT FIN (74.5X60MM) (2.9X2.4IN) (SQUARE SHAPED)	9–I4,7
95–96	Y 6–WAY PWR D/SEAT ADJR (AG1)	10054460	LH	3.70	COVER, D/SEAT OTR ADJR FRT FIN (5.3X3.4IN) (L–SHAPED) (135.5X86.5MM)	9–I4,7
95–96	Y (EXC 6–WAY PWR D/SEAT ADJR (AG1), 6–WAY PWR P/SEAT ADJR (AG2)	14064590	1	3.70	COVER, D/SEAT OTR ADJR FRT FIN (74.5X60MM) (2.9X2.4IN) (SQUARE SHAPED)	9–I4,7
91–93	Y RECL FRT BKT ST (AQ9) ..	12508088	LH	22.81	COVER, D/SEAT WELDMENT ADJ BOLS	9–I19,15
91–93	Y RECL FRT BKT ST (AQ9) ..	12508089	RH	DISCON	COVER, D/SEAT WELDMENT ADJ BOLS	
89–90	Y RECL FRT BKT ST (AQ9) ..	10148076	LH	DISCON	COVER, D/SEAT WELDMENT ADJR BOLSTER	
89–90	Y RECL FRT BKT ST (AQ9) ..	10148077	RH	DISCON	COVER, D/SEAT WELDMENT ADJR BOLSTER	
84–91	Y (EXC 6–WAY PWR P/SEAT ADJR (AC1), 6–WAY PWR D/SEAT ADJR (AC3)	14064590	4	3.70	COVER, P/SEAT ADJR FIN (74.5X60MM) (2.9X2.4IN) (SQUARE SHAPED)	9–I4,7
92–94	Y 6–WAY PWR D/SEAT ADJR (AC3), (EXC 6–WAY PWR P/SEAT ADJR (AC1)	14064590	2	3.70	COVER, P/SEAT ADJR FIN (74.5X60MM) (2.9X2.4IN) (SQUARE SHAPED)	9–I4,7
95–96	Y 6–WAY PWR D/SEAT ADJR (AG1), (EXC 6–WAY PWR P/SEAT ADJR (AG2)	14064590	2	3.70	COVER, P/SEAT ADJR FIN (74.5X60MM) (2.9X2.4IN) (SQUARE SHAPED)	9–I4,7
84–86	Y	14049296	1	3.70	COVER, P/SEAT INR ADJR FRT FIN	9–I12,6
84–91	Y (EXC 6–WAY PWR P/SEAT ADJR (AC1), 6–WAY PWR D/SEAT ADJR (AC3)	14064590	4	3.70	COVER, P/SEAT INR ADJR FRT FIN (74.5X60MM) (2.9X2.4IN) (SQUARE SHAPED)	9–I4,7
87–94	Y 6–WAY PWR P/SEAT ADJR (AC1), 6–WAY PWR D/SEAT ADJR (AC3)	14049296	1	3.70	COVER, P/SEAT INR ADJR FRT FIN	9–I12,6
92–94	Y (EXC 6–WAY PWR P/SEAT ADJR (AC1), 6–WAY PWR D/SEAT ADJR (AC3)	14064590	1	3.70	COVER, P/SEAT INR ADJR FRT FIN (74.5X60MM) (2.9X2.4IN) (SQUARE SHAPED)	9–I4,7
95–96	Y 6–WAY PWR D/SEAT ADJR (AG1), 6–WAY PWR P/SEAT ADJR (AG2)	14049296	RH	3.70	COVER, P/SEAT INR ADJR FRT FIN	9–I12,6
95–96	Y (EXC 6–WAY PWR D/SEAT ADJR (AG1), 6–WAY PWR P/SEAT ADJR (AG2)	14064590	1	3.70	COVER, P/SEAT INR ADJR FRT FIN (74.5X60MM) (2.9X2.4IN) (SQUARE SHAPED)	9–I4,7
84–94	Y	10054460	1	3.70	COVER, P/SEAT OTR ADJR FRT FIN (5.3X3.4IN) (L–SHAPED) (135.5X86.5MM)	9–I4,7
92–94	Y (EXC 6–WAY PWR P/SEAT ADJR (AC1), 6–WAY PWR D/SEAT ADJR (AC3)	14064590	1	3.70	COVER, P/SEAT OTR ADJR FRT FIN (74.5X60MM) (2.9X2.4IN) (SQUARE SHAPED)	9–I4,7
95–96	Y 6–WAY PWR D/SEAT ADJR (AG1), 6–WAY PWR P/SEAT ADJR (AG2)	10054460	LH	3.70	COVER, P/SEAT OTR ADJR FRT FIN (5.3X3.4IN) (L–SHAPED) (135.5X86.5MM)	9–I4,7
95–96	Y (EXC 6–WAY PWR D/SEAT ADJR (AG1), 6–WAY PWR P/SEAT ADJR (AG2)	14064590	1	3.70	COVER, P/SEAT OTR ADJR FRT FIN (74.5X60MM) (2.9X2.4IN) (SQUARE SHAPED)	9–I4,7
91–93	Y RECL FRT BKT ST (AQ9) ..	12508088	LH	22.81	COVER, P/SEAT WELDMENT ADJ BOLS	9–I19,15
91–93	Y RECL FRT BKT ST (AQ9) ..	12508089	RH	DISCON	COVER, P/SEAT WELDMENT ADJ BOLS	
89–90	Y RECL FRT BKT ST (AQ9) ..	10148076	LH	DISCON	COVER, P/SEAT WELDMENT ADJR BOLSTER	

© 2000 GENERAL MOTORS SERVICE PARTS OPERATIONS–CHEVROLET–14Y

11.573 COVER – RETAINER, Front Seat Adjuster Track (Con't)

89–90	Y RECL FRT BKT ST (AQ9) ..	10148077	RH	DISCON	COVER, P/SEAT WELDMENT ADJR BOLSTER	
84–95	Y	20664092	AR	*.40	RETAINER, D/SEAT INR ADJR FRT FIN CVR (PUSH IN) (BLACK) (PUSH–IN) (01.276)	9–I4,8
96	Y	20664092	1	*.40	RETAINER, D/SEAT INR ADJR FRT FIN CVR (PUSH IN) (BLACK) (PUSH–IN) (01.276)	9–I4,8
84–95	Y	20664092	AR	*.40	RETAINER, D/SEAT OTR ADJR FRT FIN CVR (PUSH IN) (BLACK) (PUSH–IN) (01.276)	9–I4,8
96	Y	20664092	1	*.40	RETAINER, D/SEAT OTR ADJR FRT FIN CVR (PUSH IN) (BLACK) (PUSH–IN) (01.276)	9–I4,8
84–95	Y	20664092	AR	*.40	RETAINER, P/SEAT INR ADJR FRT FIN CVR (PUSH IN) (BLACK) (PUSH–IN) (01.276)	9–I4,8
96	Y	20664092	1	*.40	RETAINER, P/SEAT INR ADJR FRT FIN CVR (PUSH IN) (BLACK) (PUSH–IN) (01.276)	9–I4,8
84–95	Y	20664092	AR	*.40	RETAINER, P/SEAT OTR ADJR FRT FIN CVR (PUSH IN) (BLACK) (PUSH–IN) (01.276)	9–I4,8
96	Y	20664092	1	*.40	RETAINER, P/SEAT OTR ADJR FRT FIN CVR (PUSH IN) (BLACK) (PUSH–IN) (01.276)	9–I4,8

11.581 SPRING, Seat Adjuster

*EXPORT****************EXPORT****************EXPORT****************EXPORT****************EXPORT*

84–86	Y EXPORT (EXC 6–WAY A42)	14086757	2	DISCON	SPRING, D/SEAT ADJR	
84–86	Y EXPORT	14086757	2	DISCON	SPRING, P/SEAT ADJR	

11.588 KNOB, Front Seat Adjuster Handle

84–86	Y (EXC 6–WAY (A42)	14069603	1	11.22	KNOB, D/SEAT ADJR HDL (BLACK) (PAINT TO MATCH)	9–I4,22
87–94	Y (EXC 6–WAY PWR D/SEAT ADJR (AC3)	14069603	1	11.22	KNOB, D/SEAT ADJR HDL (BLACK)	9–I4,22
95–96	Y (EXC 6–WAY PWR D/SEAT ADJR (AG1)	14069603	1	11.22	KNOB, D/SEAT ADJR HDL	9–I4,22
84–86	Y	14069603	1	11.22	KNOB, P/SEAT ADJR HDL (BLACK) (PAINT TO MATCH)	9–I4,22
87–94	Y (EXC 6–WAY PWR P/SEAT ADJR (AC1)	14069603	1	11.22	KNOB, P/SEAT ADJR HDL (BLACK)	9–I4,22
95–96	Y (EXC 6–WAY PWR P/SEAT ADJR (AG2)	14069603	1	11.22	KNOB, P/SEAT ADJR HDL	9–I4,22

11.927 CONNECTOR – LAMP – RETAINER – SOCKET, Courtesy/Dome/Reading Lamp

88–92	Y67	12125650	1	19.00	CONNECTOR, LP–CTSY (2–WAY F)	
90	Y 4–SPD A/TRANS (MD3), 6–SPD M/TRANS (ML9), A/C MAN CONT (C60)	12085537	1	31.88	CONNECTOR, LP–CTSY (02.535) (AC–DELCO #PT147)	
88–92	Y67	12125650	1	19.00	CONNECTOR, LP–DM & RDG (2–WAY F)	
84–92	Y	10199743	1	10.35	LAMP, CTSY (USED W/9433040 BULB)	9–J23,10
92–96	Y	10199743	2	10.35	LAMP, CTSY (USED W/9433040 BULB)	9–J23,10

© 2000 GENERAL MOTORS SERVICE PARTS OPERATIONS–CHEVROLET–14Y

11.927 CONNECTOR – LAMP – RETAINER – SOCKET, Courtesy/Dome/Reading Lamp (Con't)

84–85	Y	918255	LH	DISCON	LAMP, DM & RDG (IN DR) (14.691)	
84–85	Y	918256	RH	DISCON	LAMP, DM & RDG (IN DR) (14.691)	
86–89	Y	5974773	LH	DISCON	LAMP, DM & RDG (IN DR) (14.691)	
86–89	Y	5974774	RH	DISCON	LAMP, DM & RDG (IN DR) (14.691)	
90–96	Y	10213747	LH	30.10	LAMP, DM & RDG	9–H5,27
90–96	Y	10213748	RH	44.60	LAMP, DM & RDG	9–H5,27
86–96	Y67	10175743	2	5.41	RETAINER, C/LP	9–J23,9
95–96	Y07	8901283	2	8.06	SOCKET, C/LP (WGE BASE W2 RD FLG) (02.725)	
90–91	Y07	6298886	1	6.95	SOCKET, DM LP (02.575) (AC–DELCO #7434)	
	*EXPORT***********	*EXPORT***********		*EXPORT***********	*EXPORT***********	*EXPORT*
94	Y SIG & MKR LP (T90) (EXPORT)	8901283	2	8.06	SOCKET, C/LP (W/CABLE) (WGE BASE W2 RD FLG) (02.725)	
94	Y67 SIG & MKR LP (T90) (EXPORT)	12125650	1	19.00	SOCKET, C/LP (2–WAY F)	

11.950 CONNECTOR – RETAINER – SEAL – SWITCH, Courtesy Lamp and Door Ajar

91–92	Y 4–SPD A/TRANS (MD8), 6–SPD M/TRANS (ML9), A/C MAN CONT (C60), A/C AUTO ELEC CONT (C68)	12101899	2	17.95	CONNECTOR, SW–DR JAMB (BLACK) (2–WAY F) (W/LEADS) (02.383) (AC–DELCO #PT169)	
93	Y	12101899	2	17.95	CONNECTOR, SW–DR JAMB (BLACK) (2–WAY F) (W/LEADS) (02.383) (AC–DELCO #PT169)	
84–96	Y	14087682	2	.63	RETAINER, DR AJAR IND SW	9–G22,22
84–89	Y	20057139	2	*2.09	SEAL, DR JAMB SW	9–G10,58
84	Y	14062556	2	8.72	SWITCH, DR AJAR IND	9–G10,26
85–87	Y	10045838	2	14.44	SWITCH, DR AJAR IND (AC–DELCO #D6036)	9–G10,26
88–96	Y	10098478	2	7.34	SWITCH, DR AJAR IND (AC–DELCO #D6055)	9–G22,20
84–89	Y	10045860	2	12.20	SWITCH, DR JAMB (AC–DELCO #D6039)	9–G10,60

© 2000 GENERAL MOTORS SERVICE PARTS OPERATIONS–CHEVROLET–14Y

MICROFICHE INDEX

GROUPS 10.000 THRU 11.000

FICHE 9 OF 11

GROUP	DESCRIPTION	STARTING GRID LOCATION PARTS	ILLUSTRATIONS
–	GENERAL INFORMATION	1–A2	1–G2
–	ALPHABETICAL INDEX	1–B13	N.A.
10.000	DOORS – REGULATORS – WINDSHIELD – WIPER – WASHER	9–A2	9–D2
11.000	REAR GLASS – SEAT PARTS – ADJUSTER	9–C2	9–I2
–	OUT OF FICHE CALLS	N.A.	9–L4

9–D1

CHEVROLET
BODY GROUP 10.000

ILLUSTRATION INDEX

	TITLE	GRID
1984–1996	Y07 BODY GLASS & WEATHERSTRIPS–& GLASS	9–D4
1987–1996	Y67 BODY GLASS & WEATHERSTRIPS–& GLASS	9–D7
1984–1991	Y WIPER SYSTEM/WINDSHIELD	9–D9
1992–1996	Y WIPER SYSTEM/WINDSHIELD	9–D11
1984–1987	Y WIPER MOTOR/WINDSHIELD (DELCO)	9–D14
1988–1996	Y WIPER MOTOR/WINDSHIELD	9–D15
1984–1989	Y MIRRORS/REAR VIEW & CONTROLS/EXTERIOR	9–D17
1990–1996	Y MIRRORS/REAR VIEW & CONTROLS/EXTERIOR	9–D19
1984–1985	Y SUNSHADE ASM MIRROR/VANITY & SUNSHADE	9–D25
1986–1990	Y SUNSHADE ASM MIRROR/VANITY & SUNSHADE	9–D26
1991–1996	Y SUNSHADE ASM MIRROR/VANITY & SUNSHADE	9–D27
1984–1985	Y INSTRUMENT PANEL	9–E2
1986–1989	Y INSTRUMENT PANEL	9–E5
1990–1991	Y INSTRUMENT PANEL	9–E8
1992	Y INSTRUMENT PANEL	9–E12
1993	Y INSTRUMENT PANEL	9–E19
1994–1996	Y INSTRUMENT PANEL PART 1	9–F2
1994–1996	Y INSTRUMENT PANEL PART 2	9–F8
1984–1989	Y CONSOLE/SEAT SEPARATOR	9–F17
1990–1991	Y CONSOLE/SEAT SEPARATOR	9–F20
1992–1996	Y CONSOLE/SEAT SEPARATOR	9–G2
1984–1989	Y DOOR HARDWARE/FRONT	9–G10
1990–1992	Y DOOR HARDWARE/FRONT	9–G14
1993	Y DOOR HARDWARE/FRONT	9–G18
1994–1996	Y DOOR HARDWARE/FRONT	9–G22
1984–1989	Y DOOR TRIM & SEALING/FRONT	9–H2
1990–1996	Y DOOR TRIM & SEALING/FRONT	9–H5
1993–1996	Y ENTRY SYSTEM/KEYLESS REMOTE	9–H13

1Y10-007 01/25/96

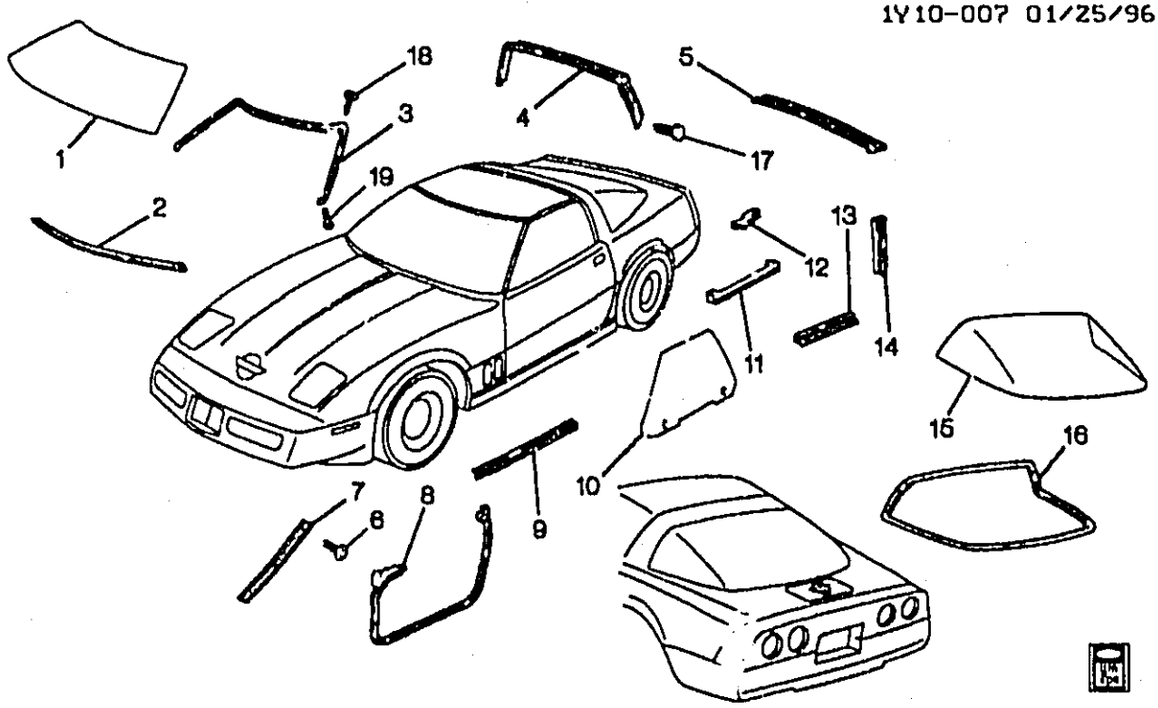

1Y10-007

1984-1996 Y07 BODY GLASS & WEATHERSTRIPS-& GLASS

1.	9-A9	10.027	WINDSHIELD,	84-96	Y (EXC A26)	1	10172302
	9-A9	10.027	WINDSHIELD,	90-92	Y (ZR1)	1	10145993
	9-A9	10.027	WINDSHIELD,	90-95	Y (EXC ZR1)	1	10172302
	9-A9	10.027	WINDSHIELD,	93-95	Y (ZR1)	1	10172489
	9-A9	10.027	WINDSHIELD,	94-96	Y (A26) (EXPORT)	1	10210801
2.	9-A9	10.092	SEAL, W/S (BLACK	84-96	Y	1	10236368
3.	9-M27	12.807	WEATHERSTRIP, W/S FRM (12.810)	84-96	Y	1	10268887
4.	9-M27	12.810	WEATHERSTRIP, RF LIFT OFF PNL/WDO RR (W/DEPRESSED SURFACE AT TOP CORNER)	84-96	Y07	1	10283997
5.	9-M27	12.810	RETAINER, RF LIFT OFF PNL/WDO RR W/STR	84-96	Y07	1	14049242
6.		8.977	SCREW, TORX, RND WA, M4.2X1.41X10, PS (FRT S/D WDO FRT W/STR RET)	84-94		8	11509703
		8.977	SCREW-ROUNDWASHER M4.2X1.4X13, 8.63OD, 6010M, 6138M, C/R, TAP (FRT S/D WDO FRT W/STR RET)	95-96		8	11515893
7.	9-B12	10.710	RETAINER, FRT S/D WDO FRT W/STR (12.810)	84-96	Y	LH	14049243
	9-B12	10.710	RETAINER, FRT S/D WDO FRT W/STR (12.810)	84-96	Y	RH	14049244
8.	9-B11	10.694	WEATHERSTRIP, FRT S/D	84-89	Y	LH	17986019
	9-B11	10.694	WEATHERSTRIP, FRT S/D	84-89	Y	RH	17986020
	9-B11	10.694	WEATHERSTRIP, FRT S/D (BLACK)	90-96	Y	LH	10269865
	9-B11	10.694	WEATHERSTRIP, FRT S/D (BLACK)	90-96	Y	RH	10269866
9.	9-B12	10.710	SEALING STRIP, FRT S/D WDO OTR	84-96	Y	LH	10245645

© 2000 GENERAL MOTORS SERVICE PARTS OPERATIONS-CHEVROLET-14Y

							1Y10-007
	9-B12	10.710	SEALING STRIP, FRT S/D WDO OTR	84-96	Y	RH	10245646
10.	9-B10	10.681	WINDOW, FRT S/D	84-90	Y	LH	14094291
	9-B10	10.681	WINDOW, FRT S/D	84-90	Y	RH	14094292
	9-B10	10.681	WINDOW, FRT S/D	91-93	Y	LH	10267189
	9-B10	10.681	WINDOW, FRT S/D	91-93	Y	RH	10267190
	9-B10	10.681	WINDOW, FRT S/D	94-96	Y (EXC A26)	LH	10267189
	9-B10	10.681	WINDOW, FRT S/D	94-96	Y (EXC A26)	RH	10267190
	9-B10	10.681	WINDOW, FRT S/D	94-96	Y (A26) (EXPORT)	LH	10267191
	9-B10	10.681	WINDOW, FRT S/D	94-96	Y (A26) (EXPORT)	RH	10267192
11.	9-M27	12.810	WEATHERSTRIP, RF LIFT OFF PNL/WDO SI BODY (10.710)	84-96	Y07	LH	22112053
	9-M27	12.810	WEATHERSTRIP, RF LIFT OFF PNL/WDO SI BODY (10.710)	84-96	Y07	RH	22112054
12.	9-M27	12.810	PROTECTOR, FRT S/D WDO W/STR UPR FRT	84-91	Y	LH	10217223
	9-M27	12.810	PROTECTOR, FRT S/D WDO W/STR UPR FRT	84-90	Y	RH	10217224
	9-M27	12.810	PROTECTOR, FRT S/D WDO W/STR UPR FRT	91	Y07 (C2L, CC3, CF7)	RH	10217224
	9-M27	12.810	PROTECTOR, FRT S/D WDO W/STR UPR FRT	92-96	Y07	LH	10217223
	9-M27	12.810	PROTECTOR, FRT S/D WDO W/STR UPR FRT	92-96	Y07	RH	10217224
13.	9-B12	10.710	RETAINER, FRT S/D WDO UPR W/STR (12.810)	84-96	Y07	LH	14049245
	9-B12	10.710	RETAINER, FRT S/D WDO UPR W/STR (12.810)	84-96	Y07	RH	14049246
14.	9-M27	12.810	RETAINER, RF LIFT OFF PNL/WDO RR W/STR (TO W/STR MLDG) (W/SEAL STRP)	84-96	Y07	RH	14049248
	9-M27	12.810	RETAINER, RF LIFT OFF PNL/WDO RR W/STR (TO W/STR MLDG) (W/SEAL STRP)	84-96	Y07	LH	14049247
15.	9-M26	12.180	WINDOW, R/CMPT LIFT (CPS)	84-85	Y07 (C49) (EXC A26)	1	12523677
	9-M26	12.180	WINDOW, R/CMPT LIFT (CPS)	86-90	Y07 (C49)	1	12523679
		DISCON	WINDOW, R/CMPT LIFT (CPS)	86-88	Y07 (EXC C49)	1	14091500
	9-M26	12.180	WINDOW, R/CMPT LIFT (CPS)	91-95	Y07 (EXC ZR1)	1	12523677
	9-M26	12.180	WINDOW, R/CMPT LIFT (CPS)	91-95	Y07 (ZR1)	1	12523679
	9-M26	12.180	WINDOW, R/CMPT LIFT (CPS)	94-96	Y07 (EXC A26)	1	12523677
	9-M26	12.184	BOLT, R/CMPT L/WDO WDO SI HGE	84-96	Y07	2	14049008
	9-M26	12.184	WASHER, R/CMPT L/WDO WDO SI HGE	84-96	Y07	3	14049007
	9-M26	12.180	WINDOW, R/CMPT LIFT (CPS)	94-96	Y07 (A26) (EXPORT)	1	12523678
16.	9-M27	12.269	WEATHERSTRIP, R/CMPT L/WDO	84-96	Y07	1	9768068
17.	9-M27	12.810	RETAINER, RF LIFT OFF PNL/WDO RR W/STR (PUSH IN) (FULL FLDG) (10.695)	84-96	Y07	2	8731909
18.	9-B11	10.695	RETAINER, FRT S/D WDO FRT W/STR RET (PUSH IN) (PAINT TO MATCH) (FITS .18 HOLE, .7 LG, .43 OD, NYLON) (14.630)	94-96	Y	2	20540335
19.	9-B11	10.695	RETAINER, FRT S/D WDO FRT W/STR RET (PUSH IN) (FULL FLDG)	94-96	Y	4	8731909

© 2000 GENERAL MOTORS SERVICE PARTS OPERATIONS-CHEVROLET-14Y

RPO DEFINITIONS

A26 – WINDOW,UNITED KINGDOM AND EUROPEAN GLAZING(EXPORT)
CC3 – ROOF,SUN,REMOVEABLE PANELS(TRANSPARENT PLASTIC)
CF7 – ROOF,SUN,REMOVABLE,NON–TRANSPARENT
C2L – ROOF PACKAGE,DUAL REMOVEABLE
C49 – DEFOGGER,REAR WINDOW,ELECTRIC
ZR1 – PACKAGE,SPECIAL PERFORMANCE COUPE(1YY07 + ZR1 == 1YZ07)

© 2000 GENERAL MOTORS SERVICE PARTS OPERATIONS–CHEVROLET–14Y

1Y10-014 01/16/96

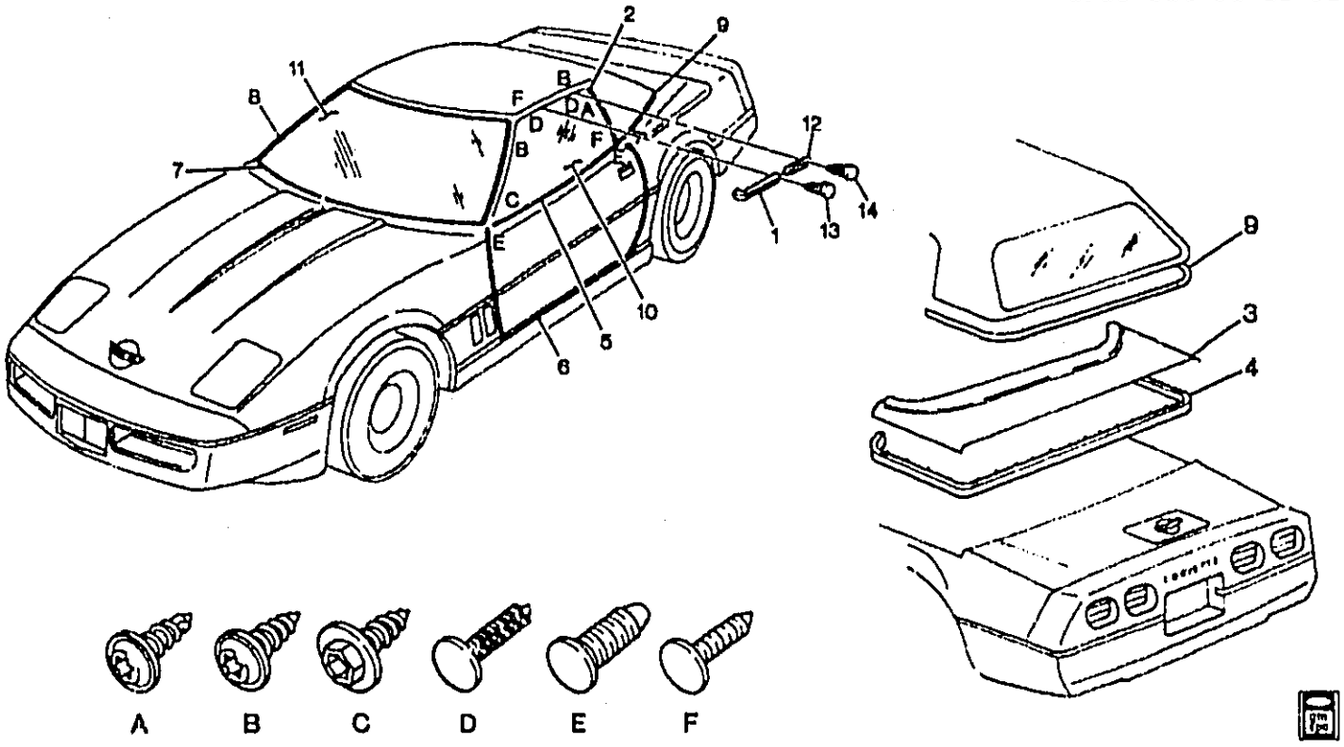

1Y10-014

1987-1996 Y67 BODY GLASS & WEATHERSTRIPS-& GLASS

NOTE: (A) SCREW, RD WA HD (M4.2X1.41X13) GROUP: 8.977
NOTE: (B) SCREW, TORX RD WA (M4.2X1.4X16) PS GROUP: 8.977
NOTE: (C) SCREW, HEX W/FL WA (M4.2X1.41X16) TAP GROUP: 8.977
NOTE: (D) RETAINER, PLASTIC GROUP: 9.262
NOTE: (E) FASTNER, SI DOOR W/STRIP GROUP: 10.695
NOTE: (F) FASTNER, SI WINDOW W/STRIP GROUP: 10.695

1.	9-B12	10.710	WEATHERSTRIP, FRT S/D WDO UPR FRT (14.120)	87-96	Y	LH	17987731
	9-B12	10.710	WEATHERSTRIP, FRT S/D WDO UPR FRT (14.120)	87-96	Y	RH	17987732
2.	9-B12	10.710	WEATHERSTRIP, FRT S/D WDO RR	87-96	Y67	LH	10273003
	9-B12	10.710	WEATHERSTRIP, FRT S/D WDO RR	87-96	Y67	RH	10273004
	9-B12	10.710	WEATHERSTRIP, FRT S/D WDO RR (PART OF REMOVEABLE HARD TOP)	87-90	Y67	LH	10123055
	9-B12	10.710	WEATHERSTRIP, FRT S/D WDO RR (PART OF REMOVEABLE HARD TOP)	87-90	Y67	RH	10123056
	9-B12	10.710	WEATHERSTRIP, FRT S/D WDO RR (PART OF REMOVEABLE HARD TOP) (B-PILLAR)	91-96	Y67 (CC2)	LH	10123055
	9-B12	10.710	WEATHERSTRIP, FRT S/D WDO RR (PART OF REMOVEABLE HARD TOP) (B-PILLAR)	91-96	Y67 (CC2)	RH	10123056
3.		DISCON	LID, F/TOP STOW COMPT	87-88	Y	1	14092653
	9-M23	12.170	LID, F/TOP STOW COMPT	93-96	Y67	1	10276994

© 2000 GENERAL MOTORS SERVICE PARTS OPERATIONS-CHEVROLET-14Y

							1Y10-014
	9-M23	12.170	LID, F/TOP STOW COMPT (IF SERVICE 1992 & PRIOR MODELS, MUST USE 10193665 T/W 10198642 RELEASE CABLE ASM)	89-92	Y67	1	10276994
4.	9-M23	12.170	WEATHERSTRIP, F/TOP STOW COMPT LID	87-96	Y67	1	14092675
5.	9-B12	10.710	SEALING STRIP, FRT S/D WDO OTR	87-96	Y	LH	10245645
	9-B12	10.710	SEALING STRIP, FRT S/D WDO OTR	87-96	Y	RH	10245646
6.	9-B11	10.694	WEATHERSTRIP, FRT S/D	87-89	Y	LH	17986019
	9-B11	10.694	WEATHERSTRIP, FRT S/D	87-89	Y	RH	17986020
	9-B11	10.694	WEATHERSTRIP, FRT S/D (BLACK)	90-96	Y	LH	10269865
	9-B11	10.694	WEATHERSTRIP, FRT S/D (BLACK)	90-96	Y	RH	10269866
7.	9-A9	10.092	SEAL, W/S (BLACK)	87-96	Y	1	10236368
8.	9-M27	12.807	WEATHERSTRIP, W/S FRM (12.810)	87-96	Y	1	10268087
9.	9-N8	13.346	WEATHERSTRIP, F/TOP RR	87-91	Y67	1	14092676
	9-N8	13.346	WEATHERSTRIP, F/TOP RR	92-96	Y67 (C05)	1	14092676
10.	9-B10	10.681	WINDOW, FRT S/D	87-90	Y	LH	14094291
	9-B10	10.681	WINDOW, FRT S/D	87-90	Y	RH	14094292
	9-B10	10.681	WINDOW, FRT S/D	91-93	Y	LH	10267189
	9-B10	10.681	WINDOW, FRT S/D	91-93	Y	RH	10267190
	9-B10	10.681	WINDOW, FRT S/D	94-96	Y (EXC A26)	LH	10267189
	9-B10	10.681	WINDOW, FRT S/D	94-96	Y (EXC A26)	RH	10267190
	9-B10	10.681	WINDOW, FRT S/D	94-96	Y (A26) (EXPORT)	LH	10267191
	9-B10	10.681	WINDOW, FRT S/D	94-96	Y (A26) (EXPORT)	RH	10267192
11.	9-A9	10.027	WINDSHIELD, ...	87-96	Y (EXC A26)	1	10172302
	9-A9	10.027	WINDSHIELD, ...	90-95	Y (EXC ZR1)	1	10172302
	9-A9	10.027	WINDSHIELD, ...	94-96	Y (A26) (EXPORT)	1	10210801
12.	9-B12	10.710	WEATHERSTRIP, FRT S/D WDO UPR RR	87-96	Y67	LH	10269867
	9-B12	10.710	WEATHERSTRIP, FRT S/D WDO UPR RR	87-96	Y67	RH	10269868
13.	9-B12	10.710	RETAINER, FRT S/D WDO UPR FRT W/STR (PAINT TO MATCH) (FITS .18 HOLE, .7 LG, .43 OD, NYLON) (14.630)	87-96	Y	2	20540336
14.	9-B12	10.710	RETAINER, FRT S/D WDO RR W/STR (POSN #1) (PAINT TO MATCH) (FITS .18 HOLE, .7 LG, .43 OD, NYLON) (14.630)	87-96	Y	4	20540336

RPO DEFINITIONS

A26 – WINDOW,UNITED KINGDOM AND EUROPEAN GLAZING(EXPORT)
CC2 – ROOF,AUXILIARY
C05 – ROOF,CONVERTIBLE,FOLDING
ZR1 – PACKAGE,SPECIAL PERFORMANCE COUPE(1YY07 + ZR1 == 1YZ07)

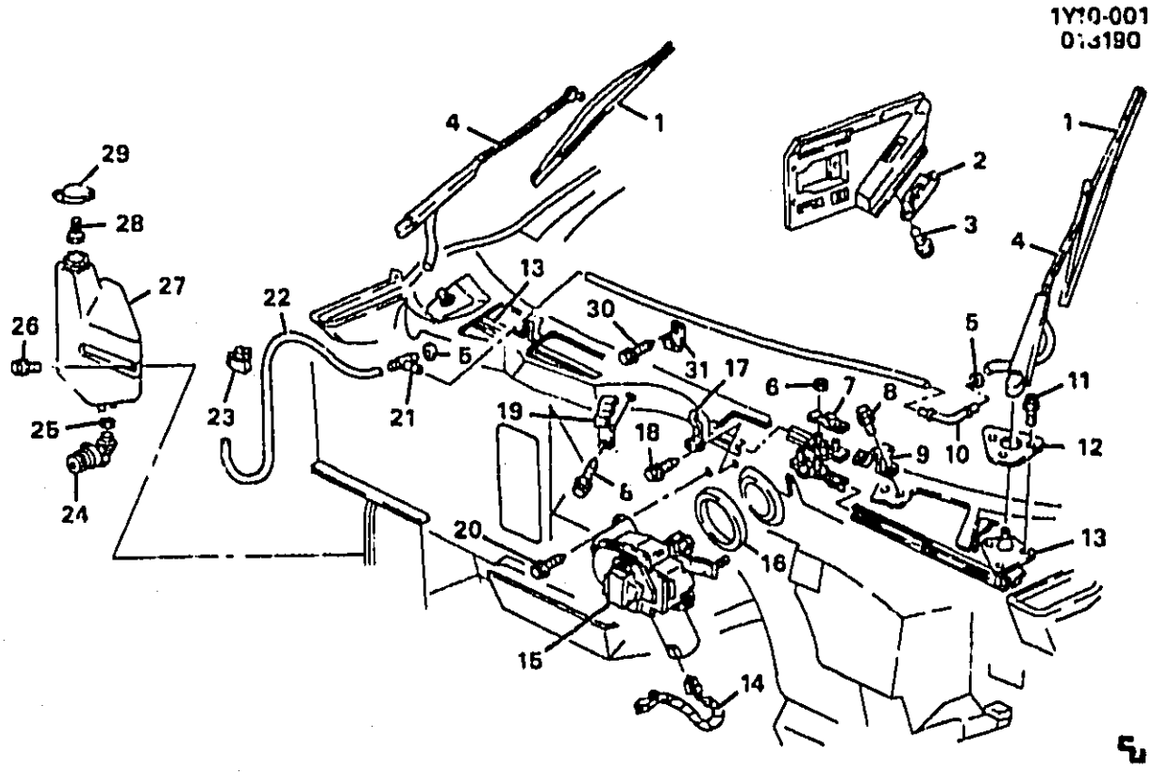

1Y10-001

1984-1991 Y WIPER SYSTEM/WINDSHIELD

1.	9-A9	10.146	BLADE, WSW (TRICO) (CPS)	12363800
	9-A9	10.146	WIPER, W/S (TRICO)	12533416
2.	9-A12	10.163	SWITCH, WSW (1984-89) (AC-DELCO #D6371A)	10045832
3.		8.977	SCREW, PAN HD TORX W/FL WA (M4.2X1.41X20) BLK	11508561
4.	9-A10	10.147	ARM, WSW (RH)	22144264
	9-A10	10.147	ARM, WSW (LH)	22144265
5.		8.921	NUT, PUSH-ON (SELFLOCK EXT RET 1/4") PHOS	3909063
6.		N.S.	NUT, SOC TO TRANS	
7.	9-A12	10.159	BRACKET, WSW ARM SHF (AC-DELCO #22039698)	22039698
8.		8.977	SCREW, HEX TAP W/WA (M4.2X1.41X16) POR	25512804
9.	9-A10	10.147	RAMP, WSW ARM PARK	14046751
10.	9-A12	10.155	CONNECTOR, WSWA NOZ HOSE (EL)	14057582
11.	9-A12	10.160	BOLT, WSW TRANS REINF	14100225
12.	9-A12	10.159	REINFORCEMENT, WSW TRANS	14047426
13.	9-A12	10.159	TRANSMISSION, WSW (RH) (AC-DELCO #22038692)	22038692
	9-A12	10.159	TRANSMISSION, WSW (LH) (AC-DELCO #22038693)	22038693
14.		DISCON	HARNESS, MTR AND PUMP WRG (1984-87)	12016892
	9-N5	13.090	HARNESS, WSW & WSWA WRG (1988-91)	12073639
15.	9-A10	10.150	MOTOR, WSW (AC-DELCO #22072790)	22072790
16.	9-A11	10.152	GASKET, WSW MOT	20489125
17.	9-A9	10.146	STOP, WSW BLADE	10137723
18.		6.900	BOLT, HEX W/CON WA (M5X.8X13) 9.8, POR	25602318
19.	9-A10	10.147	STOP, WSW ARM	14064572
20.	9-A11	10.152	BOLT, WSW MOT	10132913
21.	9-A12	10.155	CONNECTOR, WSWA NOZ HOSE (TEE)	14057583
22.		8.962	HOSE (5/32X25 FT)	1359744
23.		N.S.	CLIP, DELRIN	
24.	9-A11	10.153	PUMP (AC-DELCO #12355775)	12355775
25.	9-A11	10.153	GASKET, PUMP (AC-DELCO #22049510)	22049510

© 2000 GENERAL MOTORS SERVICE PARTS OPERATIONS-CHEVROLET-14Y

				1Y10-001
26.		8.900	BOLT, HEX W/CON WA (M6X1X25) 9.8, PZOR	20351035
27.	9-A11	10.154	CONTAINER, SOLV	22039451
28.	9-A11	10.154	FILTER, PUMP (W/NUT) (AC-DELCO #22048299)	22048299
29.	9-A11	10.154	CAP, SOLV CNTNR (AC-DELCO #12363335)	12363335
30.		8.977	SCREW, PAN HD TORX W/FL WA (M4.2X1.41X20) BLK	11508561
31.		8.950	CLIP, OPEN LOOP (.44" DIA) RUB COAT	3866187

© 2000 GENERAL MOTORS SERVICE PARTS OPERATIONS-CHEVROLET-14'

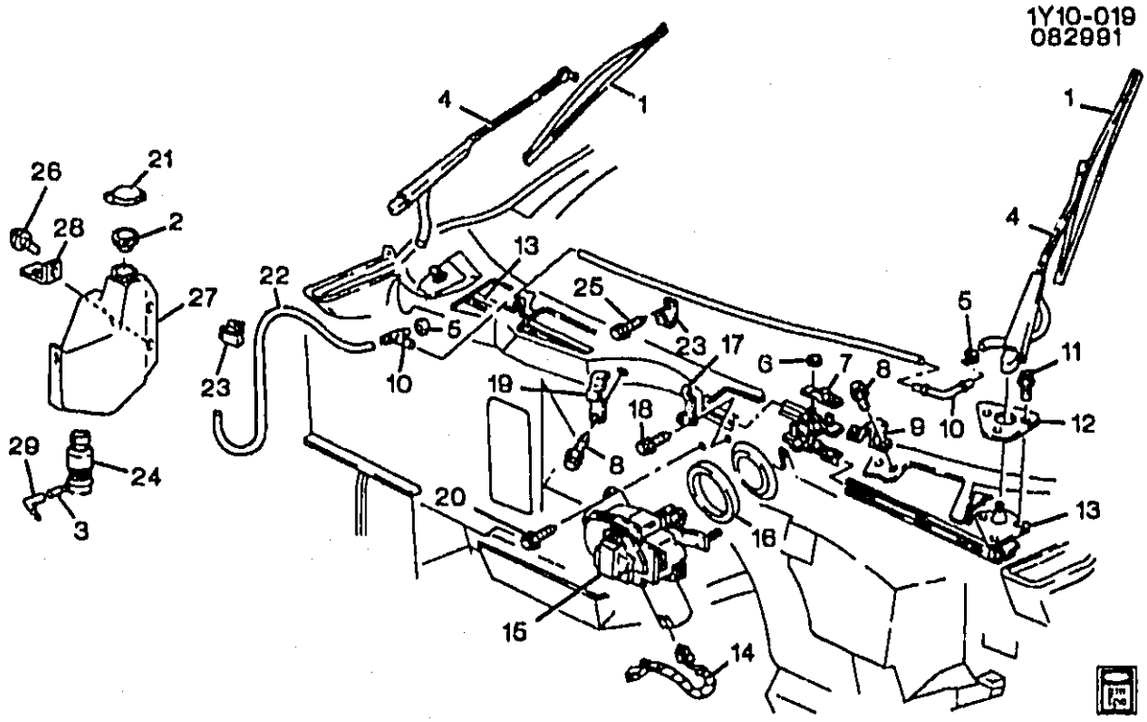

1Y10-019

1992-1996 Y WIPER SYSTEM/WINDSHIELD

1.	9-A9	10.146	BLADE, WSW (CPS) (PIN TYPE) .	92-93	Y (C18) (EXC ZR1)	2	22110158
	9-A9	10.146	BLADE, WSW (CPS) (PIN TYPE) .	94	Y (C18)	2	22110158
	9-A9	10.146	BLADE, WSW (BLACK) (ANCO 20", USE W/INSERT 14069842) (CPS)	92-94	Y (EXC C18)	2	12363800
	9-A9	10.146	BLADE, WSW (20" ARCTIC BLADE) (CPS)	92-94	Y	2	12481188
	9-A9	10.146	WIPER, W/S (ANCO-18") (BLACK)	92-94	Y (C18)	AR	12399988
	9-A9	10.146	WIPER, W/S (TRICO-20")	92-94	Y (EXC C18)	2	12533416
	9-A9	10.146	BLADE, WSW (ASM)	95-96	Y	LH	22154985
	9-A9	10.146	BLADE, WSW (ASM)	95-96	Y	RH	22155368
2.	9-A11	10.154	FILTER, WSWA SOLV (AC-DELCO #22063292)	92-96	Y	1	22063292
3.	9-A12	10.155	CONNECTOR, WSWA NOZ HOSE (10.154)	92-96	Y	1	22094772
	9-A12	10.155	CONNECTOR, WSWA NOZ HOSE (ELBOW)	92-96	Y	1	14057582
	9-A12	10.155	CONNECTOR, WSWA NOZ HOSE (TEE)	92-96	Y	1	14057583
4.	9-A10	10.147	ARM, WSW	92-94	Y	RH	22144264
	9-A10	10.147	ARM, WSW (INCLS NOZZLE)	96	Y (C18)	LH	10288070
	9-A10	10.147	ARM, WSW (HOSE GUARD ONE PC) (INCLS NOZZLE)	96	Y (C18)	LH	10288070
	9-A10	10.147	ARM, WSW (INCLD NOZZLE) ...	92-94	Y	LH	22144265
	9-A10	10.147	ARM, WSW (1 PC HOSE GUARD)	95-96	Y (EXC C18)	LH	10288071
	9-A10	10.147	ARM, WSW (1 PC HOSE GUARD)	95-96	Y	RH	10288072
	9-A10	10.147	ARM, WSW (2 PC HOSE GUARD)	95-96	Y (EXC C18)	LH	22154987

© 2000 GENERAL MOTORS SERVICE PARTS OPERATIONS-CHEVROLET-14Y

							1Y10-019
5.		8.921	NUT, PUSH-ON (SELFLOCK EXT RET 1/4" PHOS) (WSW & NOZ HOSE CONN)	92-93	Y	2	3909063
	9-A12	10.156	RETAINER, WSWA NOZ HOSE CONN (10.155)	94-96	Y	2	10268251
6.		N.S.	NUT, TRANS SOCKET TO MOTOR		.....		
7.	9-A12	10.159	BRACKET, WSW ARM SHF (AC-DELCO #22039698)	92-96	Y	2	22039698
8.		8.977	SCREW, HEX W/WA, M4.2X1.41X16, TAP, AB PT, 6010M, POR	92-96	.....	AR	25512804
9.	9-A10	10.147	RAMP, WSW ARM PARK (10.130)	92-94	Y	2	14046751
	9-A10	10.147	RAMP, WSW ARM PARK	95-96	Y	2	10272127
10.	9-A12	10.155	CONNECTOR, WSWA NOZ HOSE (10.154)	92-96	Y	1	22094772
	9-A12	10.155	CONNECTOR, WSWA NOZ HOSE (ELBOW)	92-96	Y	1	14057582
	9-A12	10.155	CONNECTOR, WSWA NOZ HOSE (TEE)	92-96	Y	1	14057583
11.	9-A12	10.160	BOLT, WSW TRANS REINF (6.60X1.69X18)	92-96	Y	6	14100225
12.	9-A12	10.159	REINFORCEMENT, WSW TRANS (10.160)	92-96	Y	2	14047426
13.	9-A12	10.159	TRANSMISSION, WSW (AC-DELCO #22038692)	92-96	Y	RH	22038692
	9-A12	10.159	TRANSMISSION, WSW (AC-DELCO #22038693)	92-96	Y	LH	22038693
14.	9-N5	13.090	HARNESS, WSW & WSWA WRG	92-96	Y	1	12073639
15.	9-A10	10.150	MOTOR, WSW (LESS C/ARM & CVR) (3-TERM CONN, USE THE WIRE HARN TO REPLC 2-TERM) (AC-DELCO #22072790)	92-96	Y	1	22072790
16.	9-A11	10.152	GASKET, WSW MOT	92-96	Y	1	20489125
17.	9-A9	10.146	STOP, WSW BLADE (10.147)	92-96	Y	1	14064572
18.		8.900	BOLT, HEX W/CON WA M5X.8X13 HRD PT 9.8 POR (8.141)	92-96	.....	AR	25602318
19.	9-A10	10.147	STOP, WSW ARM	92-96	Y	1	10137723
20.	9-A11	10.152	BOLT, WSW MOT (10.252)	92-96	Y	3	10132913
21.	9-A11	10.154	CAP, WSWA SOLV CNTNR (16.065) (AC-DELCO #12363335)	92-96	Y	1	12363335
22.		8.962	HOSE, 5/32X25 FT WINDSHIELD WASHER	92-96	.....	AR	1359744
23.		8.950	CLIP, OPEN LOOP .44 DIA RUBBER COAT	92-96	.....	AR	3866187
24.	9-A11	10.153	PUMP, WSWA (AC-DELCO #22111432)	92-96	Y	1	22111432
25.		8.977	SCREW, PAN HD TORX W/FL WA M4.2X1.41X20303 BLK	92-96	.....	AR	11508561
26.		8.900	BOLT, ...	92-96	.....	AR	20351035
27.	9-A11	10.154	CONTAINER KIT, WSWA SOLV ..	92-96	Y	1	22110415
28.	9-M7	4.720	BRACKET, WHL SPD SEN WRG HARN CLIP (2.559)	92-96	Y	1	14062552
29.	9-A12	10.155	ELBOW, WSWA NOZ HOSE (10.154)	92-96	Y	1	22094774

© 2000 GENERAL MOTORS SERVICE PARTS OPERATIONS-CHEVROLET-14Y

RPO DEFINITIONS
C18 – ARM AND BLADE,WINDSHIELD(BLACK)
ZR1 – PACKAGE,SPECIAL PERFORMANCE COUPE(1YY07 + ZR1 == 1YZ07)

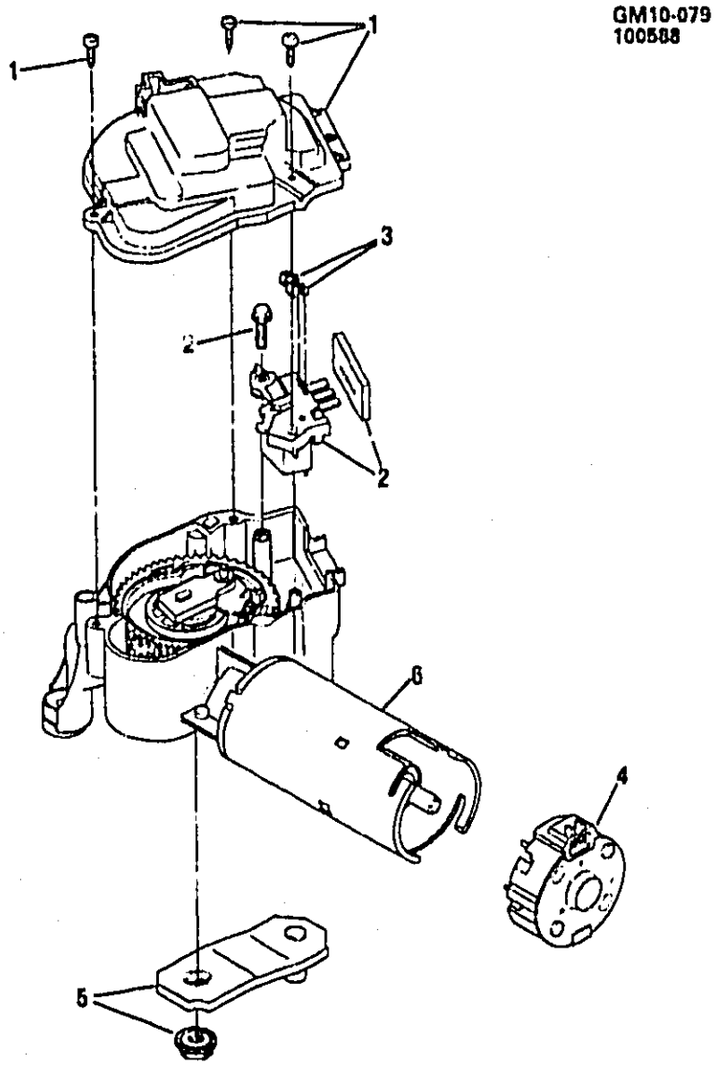

GM10–079

1984–1987 Y WIPER MOTOR/WINDSHIELD (DELCO)

1.	9–A10	10.150	COVER, WSW MTR (AC–DELCO #22101362)	22101362
2.	9–A10	10.150	SWITCH, WSW MTR PARK (PART OF 6) (AC–DELCO #22063283) ..	22063283
3.	9–A10	10.150	CONTACT, WSW MOT PARK SW (AC–DELCO #22054236)	22054236
4.		N.S.	CAP, WSW ARM NUT (WSW MOT END) (PART OF 6)	
5.	9–A11	10.151	ARM, WSW MTR CRK (AC–DELCO #22155286)	22155286
6.	9–A10	10.150	MOTOR, WSW W//HSG (INCL 2, 4) (AC–DELCO #22072790)	22072790
		DISCON	GEAR KIT, WSW MTR	22038792

© 2000 GENERAL MOTORS SERVICE PARTS OPERATIONS–CHEVROLET–14Y

GM10-104 10/26/93

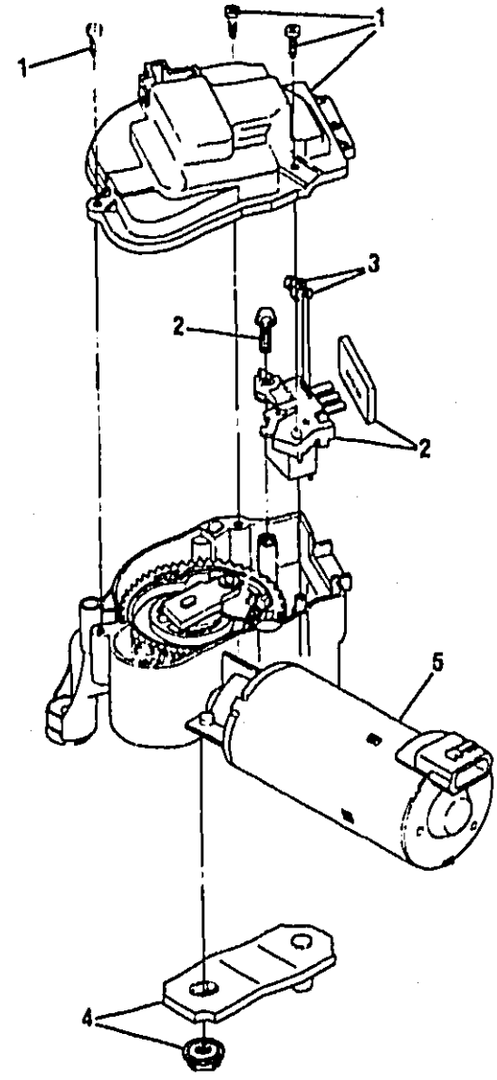

GM10-104Y

1988-1996 Y WIPER MOTOR/WINDSHIELD

1.	9-A10	10.150	COVER, WSW MOT (10.151) (AC-DELCO #22101362)	88-96	Y	1	22101362
2.	9-A10	10.150	SWITCH, WSW MOT PARK (INCLS 3) (PART OF 5) (AC-DELCO #22063283)	88-96	Y	1	22063283
3.	9-A10	10.150	CONTACT, WSW MOT PARK SW (PART OF 2, 5) (AC-DELCO #22054236)	88-96	Y	1	22054236
4.	9-A11	10.151	ARM, WSW MOT CRK (AC-DELCO #22155286)	88-90	Y	1	22155286
	9-A11	10.151	ARM, WSW MOT CRK (AC-DELCO #22155286)	92-96	Y	1	22155286

© 2000 GENERAL MOTORS SERVICE PARTS OPERATIONS-CHEVROLET-14Y

								GM10-104Y
	9-A11	10.151	ARM, WSW MOT CRK (USED ONLY W/MOTOR STMPD 5049161) (AC-DELCO #22155286)	91	Y	1	22155286
5.	9-A10	10.150	MOTOR, WSW (LESS C/ARM & CVR) (INCLS 2, 3) (3-TERM CONN, USE THE WIRE HARN TO REPLC 2-TERM) (AC-DELCO #22072790)	88-96	Y	1	22072790

© 2000 GENERAL MOTORS SERVICE PARTS OPERATIONS-CHEVROLET-14Y

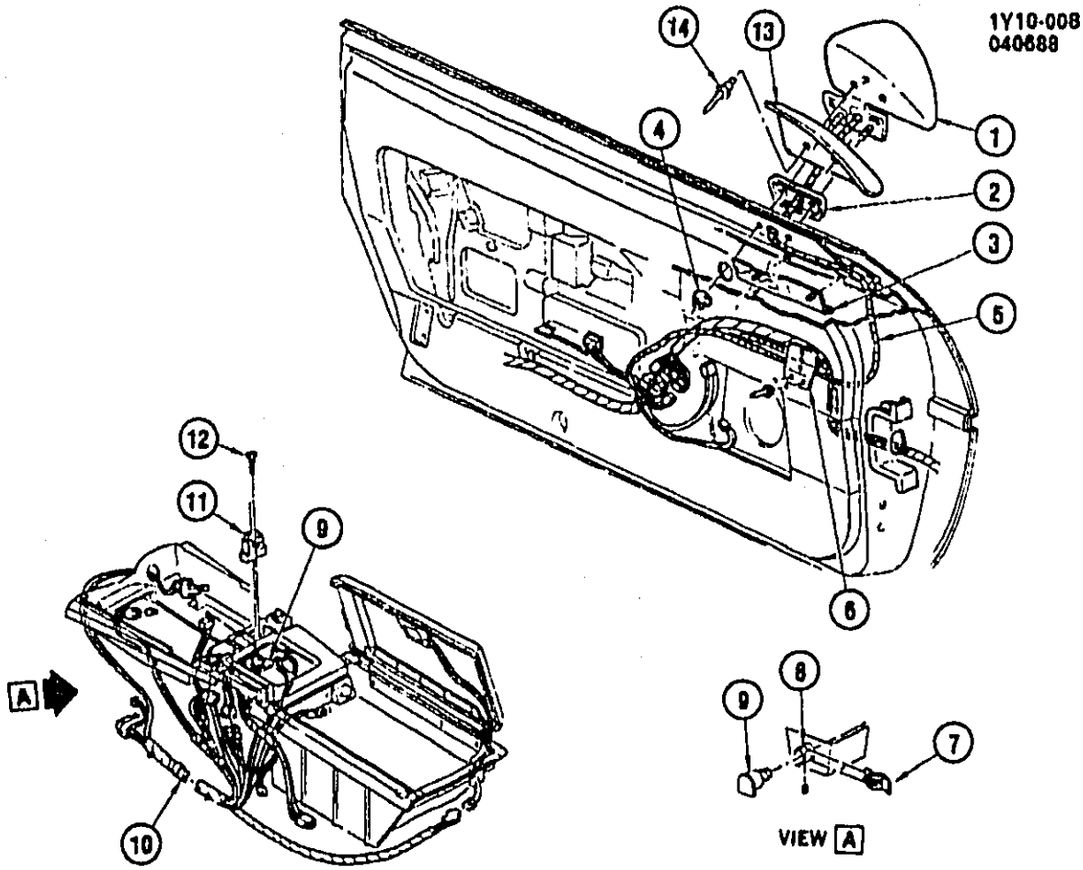

1Y10–008

1984–1989 Y MIRRORS/REAR VIEW & CONTROLS/EXTERIOR

1.	9–A12	10.185	MIRROR, RH (1984–87 Y07 DG7) (1986–88 Y67 DG7) (PAINT TO MATCH)	14086768
		DISCON	MIRROR, RH (1988 Y07 DG7) (PAINT TO MATCH)	10075252
		DISCON	MIRROR, RH (1984–87 DL8) (PAINT TO MATCH) (1987 1ST DESIGN HAS "2" RECTANGULAR WIRING CONNECTORS)	14086770
		DISCON	MIRROR, RH (1987 DL8) (W/DEFL) (PAINT TO MATCH) (1987 2ND DESIGN HAS "1" OVAL & "1" RECTANGULAR WIRING CONNECTOR)	10054660
	9–A12	10.185	MIRROR, RH (1988–89 DL8) (PAINT TO MATCH)	10273680
	9–A12	10.185	MIRROR, LH (1984–87 Y07 DG7) (1987–88 Y67 DG7) (PAINT TO MATCH)	14086767
		DISCON	MIRROR, LH (1986 Y67 DG7) (PAINT TO MATCH)	10045653
	9–A12	10.185	MIRROR, LH (1988 Y07 DG7) (PAINT TO MATCH)	10075251
	9–A12	10.185	MIRROR, LH (1984–87 DL8) (PAINT TO MATCH) (1987 1ST DESIGN HAS "2" RECTANGULAR WIRING CONNECTORS)	14086769
	9–A12	10.185	MIRROR, LH (1987 DL8) (W/DEFL) (PAINT TO MATCH) (1987 2ND DESIGN HAS "1" OVAL & "1" RECTANGULAR WIRING CONNECTOR)	10054659
	9–A12	10.185	MIRROR, LH (1988–89 DL8) (PAINT TO MATCH)	10273679
2.	9–A15	10.186	INSULATOR, RH	10054678
	9–A15	10.186	INSULATOR, LH	14100295
3.	9–A15	10.186	RETAINER, SI DR WIRE–RH	14051158
	9–A15	10.186	RETAINER, SI DR WIRE–LH	14051157
4.		8.917	NUT, HEX W/WA (M6X1) PEOR	11516793
5.		N.S.	HARNESS, ELEC CONT	
6.	9–L25	2.559	BRACKET, I/P WRG HARN DR LEAD	14066583

© 2000 GENERAL MOTORS SERVICE PARTS OPERATIONS–CHEVROLET–14Y

				1Y10-008
7.	9-A15	10.186	RETAINER, R/CONT SPR TYPE	459503
	9-A15	10.186	RETAINER, R/CONT RND TYPE (1984)	25509338
8.		DISCON	BEZEL	14047175
9.	9-A12	10.185	CONTROL, REM (1984-86)	16500951
		DISCON	CONTROL, REM (1987-89)	16509990
10.		DISCON	HARNESS, FRT FLR CNSL (1984-86)	12029153
		DISCON	HARNESS, FRT FLR CNSL (1987-89)	12067418
11.	9-A15	10.186	SWITCH, R/CONT SEL	14047174
12.		8.977	SCREW, OV HD C/R TAP (M4.2X1.41X13)	11515037
13.	9-A12	10.185	DEFLECTOR, RH (1987 Y07) (1986-89 Y67)	10077388
	9-A12	10.185	DEFLECTOR, LH (1987 Y07) (1986-89 Y67)	10077387
14.		8.967	RIVET, POP (3/16X0.305)	9441697

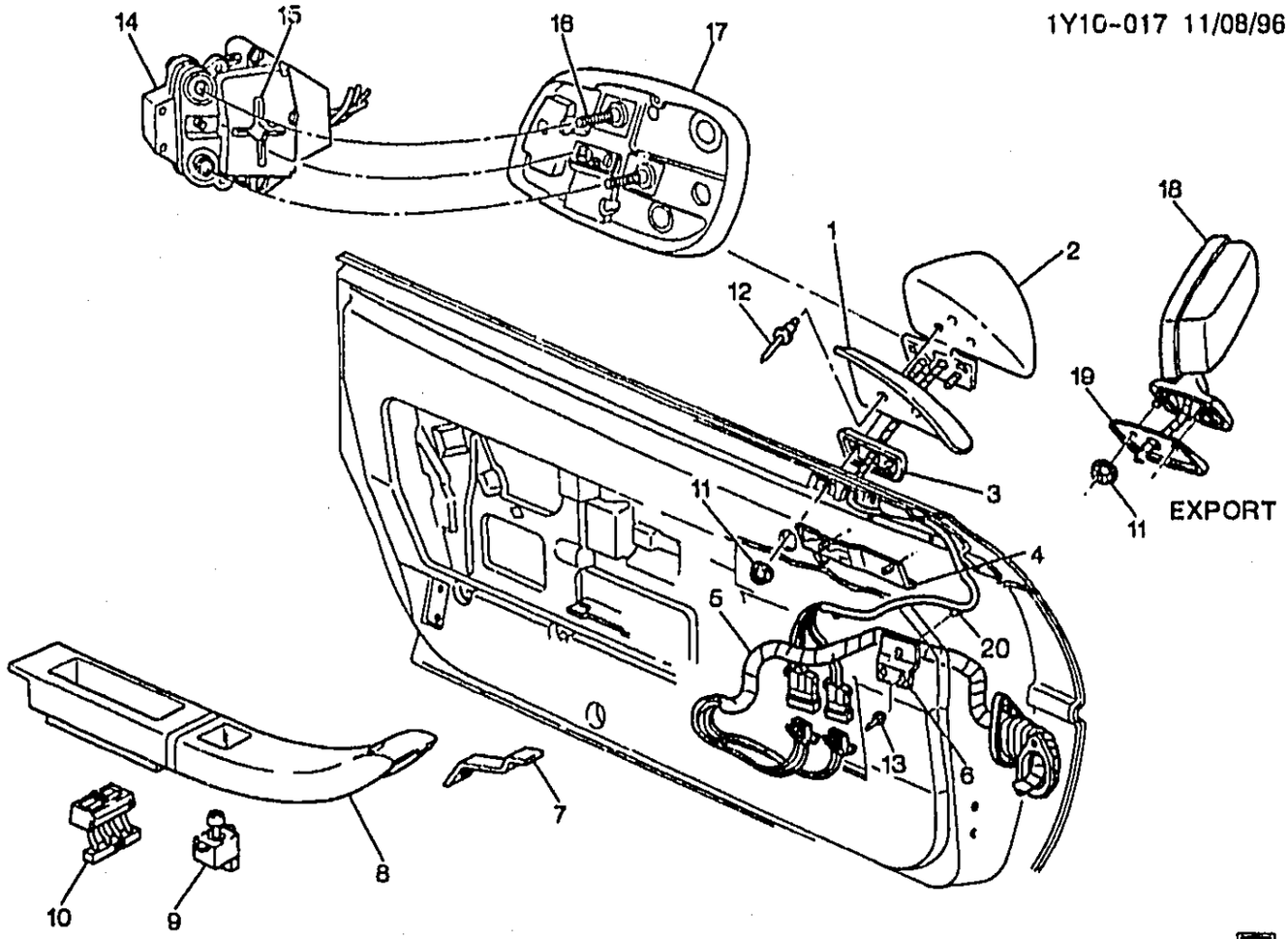

1Y10-017

1990-1996 Y MIRRORS/REAR VIEW & CONTROLS/EXTERIOR

1.	9-A12	10.185	DEFLECTOR, O/S RR VIEW MIR AIR	90-96	Y67 (DL8)	LH	10077387
	9-A12	10.185	DEFLECTOR, O/S RR VIEW MIR AIR	90-96	Y67 (DL8)	RH	10077388
2.	9-A12	10.185	MIRROR, O/S RR VIEW	90	Y (DG7)	LH	10075251
	9-A12	10.185	MIRROR, O/S RR VIEW (PAINT TO MATCH)	90-96	Y (DL8)	LH	10273679
	9-A12	10.185	MIRROR, O/S RR VIEW (PAINT TO MATCH)	90-96	Y (DL8)	RH	10273680
		DISCON	MIRROR, O/S RR VIEW (PAINT TO MATCH)	90	Y (DG7)	RH	10075252
3.	9-A15	10.186	INSULATOR, O/S RR VIEW MIR	90-95	Y (DL8) (EXC ZR1)	RH	10054678
	9-A15	10.186	INSULATOR, O/S RR VIEW MIR	90-95	Y (DL8) (EXC ZR1)	LH	14100295
	9-A15	10.186	INSULATOR, O/S RR VIEW MIR	90-95	Y (DL8, ZR1)	LH	14104569
	9-A15	10.186	INSULATOR, O/S RR VIEW MIR	90-95	Y (DL8, ZR1)	RH	14104570
	9-A15	10.186	INSULATOR, O/S RR VIEW MIR	96	Y (DL8)	RH	10054678
	9-A15	10.186	INSULATOR, O/S RR VIEW MIR	96	Y (DL8)	LH	14100295
4.	9-A15	10.186	RETAINER, O/S RR VIEW MIR WRG LEAD	90-96	Y	LH	14051157
	9-A15	10.186	RETAINER, O/S RR VIEW MIR WRG LEAD	90-96	Y	RH	14051158

© 2000 GENERAL MOTORS SERVICE PARTS OPERATIONS-CHEVROLET-14Y

						1Y10-017	
5.	9-L8	2.480	HARNESS, I/P WRG	90	Y M/TRNS (ML9), A/C (C60) (EXC CANADIAN T61)	1	12101432
	9-L8	2.480	HARNESS, I/P WRG	90	Y M/TRNS (ML9), A/C (C68) (EXC CANADIAN T61)	1	12101434
	9-L8	2.480	HARNESS, I/P WRG	90	Y (MD8, C60) (EXC T61)	1	12102274
	9-L8	2.480	HARNESS, I/P WRG	90	Y A/TRNS (MD8), A/C (C68) (EXC CANADIAN T61)	1	12102538
	9-L8	2.480	HARNESS, I/P WRG	91	Y (MD8, C60) (EXC T61)	1	12116436
	9-L8	2.480	HARNESS, I/P WRG	91	Y (ML9, C60) (EXC T61)	1	12116438
	9-L8	2.480	HARNESS, I/P WRG (MAY REQ 12106563 WIRE IF JMPR PRESENT AT THE PWR SEAT FEED)	91	Y (MD8, C68) (EXC T61)	1	12116500
	9-L8	2.480	HARNESS, I/P WRG	91	Y (ML9, C68) (EXC T61)	1	12116502
	9-L8	2.480	HARNESS, I/P WRG	92	Y (MD8, C60) (EXC T61)	1	12125005
	9-L8	2.480	HARNESS, I/P WRG	92	Y (ML9, C60) (EXC T61)	1	12125007
	9-L8	2.480	HARNESS, I/P WRG	92	Y (MD8, C68) (EXC T61)	1	12125813
	9-L8	2.480	HARNESS, I/P WRG	92	Y (ML9, C68) (EXC T61)	1	12125815
	9-L8	2.480	HARNESS, I/P WRG	93	Y (MD8, C60) (EXC T90)	1	12141443
	9-L8	2.480	HARNESS, I/P WRG (FOR VEH -DRL, SPLICE CAV D TO CAV E @ BLUE 8-WAY DRL MDL CONN.)	93	Y (ML9, C68) (EXC T90)	1	12141444
	9-L8	2.480	HARNESS, I/P WRG	93	Y (ML9, C60) (EXC T90)	1	12141445
	9-L8	2.480	HARNESS, I/P WRG (ON VEHS W/O DAYTIME RUNNING LPS SPLICE CAV D & E WIRES TOGETHER AT BLUE DRL MDL CONN.)	93	Y (MD8, C68) (EXC T90)	1	12141446
	9-L8	2.480	HARNESS, I/P WRG	94	Y (ML9, C60) (EXC T61, T72, T84, T85, T90)	1	12130324
	9-L8	2.480	HARNESS, I/P WRG	94	Y (ML9, C68) (EXC T61, T72, T84, T85, T90)	1	12130326
	9-L8	2.480	HARNESS, I/P WRG	94	Y (M30, C60) (EXC T61, T72, T84, T85, T90) (2ND DES)	1	12130491
	9-L8	2.480	HARNESS, I/P WRG	94	Y (M30, C60, T61) (EXC T72, T84, T85, T90)	1	12130492
	9-L8	2.480	HARNESS, I/P WRG	94	Y (M30, C68) (EXC T61, T72, T84, T85, T90)	1	12130493
	9-L8	2.480	HARNESS, I/P WRG	94	Y (M30, C68, T61) (EXC T72, T84, T85, T90)	1	12130494
	9-L8	2.480	HARNESS, I/P WRG (TAGGED 0322 OR 0323) (ON VEH W/DAYTIME RUNNING LGHTS, ADD 8-WAY BLUE CONN TO DAYTIME RUNNING LGHT, SPLICE CAV D & CAV E WIRES TOGETHER)	94	Y (M30, C68, T61) (EXC T72, T84, T85, T90) (1ST DES)	1	12141788
	9-L8	2.480	HARNESS, I/P WRG	94	Y (ML9, C60, T61) (EXC T72, T84, T85, T90)	1	12141789

						1Y10-017
9-L8	2.480	HARNESS, I/P WRG	94	Y (ML9, C68, T61) (EXC T72, T84, T85, T90)	1	12141790
9-L8	2.480	HARNESS, I/P WRG	94	Y (ML9, C68) (EXC T72, T84, T85, T90)	1	12163703
9-L8	2.480	HARNESS, I/P WRG	95	Y (LT5, ML9, C68) (EXC T61)	1	12130326
9-L8	2.480	HARNESS, I/P WRG	95	Y (LT1, M30, C60, T61) (EXC T72, T84, T85, T90)	1	12130389
9-L8	2.480	HARNESS, I/P WRG (SPLICE CAV D & E WIRES @ BLUE DRL MDL CONN FOR VEH W/O DRL.)	95	Y (LT1, M30, C68, T61) (EXC T72, T84, T85, T90)	1	12130391
9-L8	2.480	HARNESS, I/P WRG	95	Y (LT5, ML9, C68, T61) .	1	12141790
9-L8	2.480	HARNESS, I/P WRG	95	Y (LT1, ML9, C60) (EXC T61, T72, T84, T85, T90)	1	12163700
9-L8	2.480	HARNESS, I/P WRG	95	Y (LT1, ML9, C68) (EXC T61, T72, T84, T85, T90)	1	12163702
9-L8	2.480	HARNESS, I/P WRG	95	Y (LT5, ML9, C68)	1	12163703
9-L8	2.480	HARNESS, I/P WRG (TAGGED 0320 OR 0321) (ON VEH W/O DRL, AT 8-WAY BLUE CONN TO DRL MDL SPLICE CAV D & CAV E LEADS TOGETHER.)	94	Y (M30, C60, T61) (EXC T72, T84, T85, T90) (1ST DES)	1	12141787
9-L8	2.480	HARNESS, I/P WRG (WHEN USE ON VEH W/O DAYTIME RUN LIGHTS, SPLICE CAV D&E TOGETHER @ BLUE 8-WAY DRL MOD CONN)	96	Y (M30, C60) (EXC T72, T84, T85, T90)	1	12130468
9-L8	2.480	HARNESS, I/P WRG (WHEN USE ON VEH W/O DAYTIME RUN LIGHTS, SPLICE CAV D&E TOGETHER @ BLUE 8-WAY DRL MOD CONN)	96	Y (M30, C68) (EXC T72, T84, T85, T90)	1	12130470
9-L8	2.480	HARNESS, I/P WRG (WHEN USE ON VEH W/O DAYTIME RUN LIGHTS, SPLICE CAV D&E TOGETHER @ BLUE 8-WAY DRL MOD CONN)	96	Y (ML9, C60) (EXC T72, T84, T85, T90)	1	12130472
9-L8	2.480	HARNESS, I/P WRG (WHEN USE ON VEH W/O DAYTIME RUN LIGHTS, SPLICE CAV D&E TOGETHER @ BLUE 8-WAY DRL MOD CONN)	96	Y (ML9, C68) (EXC T72, T84, T85, T90)	1	12130474
9-L8	2.480	HARNESS, I/P WRG	90	Y M/TRNS (ML9), A/C (C60), T61 (CANADIAN) (EXPORT)	1	12101433
9-L8	2.480	HARNESS, I/P WRG	90	Y M/TRNS (ML9), A/C (C68), T61 (CANADIAN) (EXPORT)	1	12101435
9-L8	2.480	HARNESS, I/P WRG	90	Y A/TRNS (MD8), A/C (C68), T61 (CANADIAN) (EXPORT)	1	12102273
9-L8	2.480	HARNESS, I/P WRG	90	Y A/TRNS (MD8), A/C (C60), T61 (CANADIAN) (EXPORT)	1	12102537
9-L8	2.480	HARNESS, I/P WRG	91	Y (MD8, C60, T61) (EXPORT)	1	12116437

							1Y10-017
	9-L8	2.480	HARNESS, I/P WRG	91	Y (ML9, C60, T61) (EXPORT)	1	12116439
	9-L8	2.480	HARNESS, I/P WRG	91	Y (MD8, C68, T61) (EXPORT)	1	12116501
	9-L8	2.480	HARNESS, I/P WRG	91	Y (ML9, C68, T61) (EXPORT)	1	12116503
	9-L8	2.480	HARNESS, I/P WRG	92	Y (MD8, C60, T61) (EXPORT)	1	12125006
	9-L8	2.480	HARNESS, I/P WRG	92	Y (ML9, C60, T61) (EXPORT)	1	12125008
	9-L8	2.480	HARNESS, I/P WRG	92	Y (MD8, C68, T61) (EXPORT)	1	12125814
	9-L8	2.480	HARNESS, I/P WRG	92	Y (ML9, C68, T61) (EXPORT)	1	12125816
	9-L8	2.480	HARNESS, I/P WRG	93	Y (ML9, C68, T90) (EXPORT)	1	12141441
	9-L8	2.480	HARNESS, I/P WRG	93	Y (MD8, C68, T90) (EXPORT)	1	12141442
	9-L8	2.480	HARNESS, I/P WRG	94	Y (M30, C68, T72, T84, T85, T90) (EXPORT) ...	1	12130495
	9-L8	2.480	HARNESS, I/P WRG	94	Y (ML9, C68, T72, T84, T85, T90) (EXPORT) ...	1	12141792
	9-L8	2.480	HARNESS, I/P WRG	95	Y (LT1, M30, C68, T72, T84, T85, T90) (EXC T61) (EXPORT)	1	12130396
	9-L8	2.480	HARNESS, I/P WRG	95	Y (LT1, ML9, C60, T61) (EXC T72, T84, T85, T90) (EXPORT)	1	12163701
	9-L8	2.480	HARNESS, I/P WRG	95	Y (LT1, ML9, C68, T61) (EXC T72, T84, T85, T90) (EXPORT)	1	12163703
	9-L8	2.480	HARNESS, I/P WRG	95	Y (LT1, ML9, C68, T72, T84, T85, T90) (EXC T61) (EXPORT)	1	12163704
	9-L8	2.480	HARNESS, I/P WRG	96	Y (M30, C68, T72, T84, T85, T90) (EXC T61) (EXPORT)	1	12130475
	9-L8	2.480	HARNESS, I/P WRG	96	Y (LT4, ML9, C68, T72, T84, T85, T90) (EXC T61) (EXPORT)	1	12163715
	9-L8	2.480	HARNESS, I/P WRG (TAGGED 0328)	94	Y (M30, C68, T72, T84, T85, T90) (1ST DES) (EXPORT)	1	12141791
6.	9-L25	2.559	BRACKET, I/P WRG HARN DR LEAD	90-96	Y	2	14066583
7.	9-N12	14.686	CLIP, FRT S/D A/RST FIL	90-96	Y	1	10086313
8.	9-N12	14.686	FILLER, FRT S/D A/RST (GRAY) .	90-91	Y	LH	10085953
		DISCON	FILLER, FRT S/D A/RST (BLACK)	90-93	Y (19I)	RH	10167170
		DISCON	FILLER, FRT S/D A/RST (BLUE) .	90-91	Y (22I)	RH	10167172
		DISCON	FILLER, FRT S/D A/RST (COGNAC)	90-91	Y (60I)	RH	10167174
		DISCON	FILLER, FRT S/D A/RST (RED) ..	90-92	Y (73I)	RH	10167176
		DISCON	FILLER, FRT S/D A/RST (GRAY) .	90-91	Y (90I)	RH	10167178
		DISCON	FILLER, FRT S/D A/RST (BEIGE) .	92-93	Y (64I)	RH	10175686
		DISCON	FILLER, FRT S/D A/RST (GRAY) .	92-93	Y (14I)	RH	10175688
		DISCON	FILLER, FRT S/D A/RST (WHITE)	92-93	Y (10I)	RH	10175738
	9-N12	14.686	FILLER, FRT S/D A/RST (BLACK)	94-96	Y	RH	10245573
	9-N12	14.686	FILLER, FRT S/D A/RST (BLACK)	94-96	Y	LH	12514441
	9-N12	14.686	CLIP, FRT S/D A/RST FIL	90-96	Y	1	10086313

							1Y10-017
9.	9-A15	10.186	SWITCH, O/S RR VIEW MIR R/CON (W/SI WDO SW) (CPS) ...	90-91	Y	LH	10098486
	9-A15	10.186	SWITCH, O/S RR VIEW MIR R/CON (W/SI WDO SW) (CPS) ...	92-93	Y	LH	10161833
	9-A15	10.186	SWITCH, O/S RR VIEW MIR R/CON (W/SI WDO SW) (CPS) ...	94-96	Y	LH	10212994
	9-B14	10.777	SWITCH, O/S RR VIEW MIR R/CON (W/SI WDO SW) (CPS) (10.186)	94-96	Y	LH	10212994
	9-A15	10.186	LAMP, O/S RR VIEW MIR R/CON SEL SW	90-96	Y	1	12506723
10.	9-B14	10.777	SWITCH, SI WDO (CPS)	90-91	Y	RH	10098479
	9-B14	10.777	SWITCH, SI WDO (CPS)	90-91	Y	LH	10098482
	9-B14	10.777	SWITCH, SI WDO (CPS)	92-93	Y	RH	10161835
	9-B14	10.777	SWITCH, SI WDO (CPS)	92-96	Y	LH	10212993
	9-B14	10.777	SWITCH, SI WDO (CPS)	94-96	Y	RH	10252372
	9-B14	10.777	LAMP, FRT S/D WDO SW	90-96	Y	2	10148011
11.		8.917	NUT, HEX W/CON WA M6X1X5.5 (9) 7111M 16-OD (O/S RR VIEW MIR)	90-96	.....	4	11516793
12.		8.967	RIVET, 3/16X.430, DOME HD TYPE P (O/S RR VIEW MIR A/DFL)	90-96	.....	6	9439762
13.		N.S.	RIVET, I/P WRG HARN DR LEAD BRKT		.....	2	
14.	9-A15	10.186	MOTOR, O/S RR VIEW MIR (10.185)	95-96	Y (DL8)	2	12500532
	9-A12	10.185	MOTOR KIT, O/S RR VIEW MIR (W/MIRROR & CASE)	90-94	Y (DL8)	LH	10065261
	9-A12	10.185	MOTOR KIT, O/S RR VIEW MIR (W/MIRROR & CASE)	90-94	Y (DL8)	RH	10065262
	9-A12	10.185	MOTOR KIT, O/S RR VIEW MIR (INCLUDES GLASS & CASE)	94-96	Y (DC8) (EXPORT)	2	3636501
15.	9-A12	10.185	TRUNNION, O/S RR VIEW MIR ..	90-96	Y (DL8)	2	12522163
16.	9-A12	10.185	STUD, O/S RR VIEW MIR ADJR BALL (W/O COPPER INSERT) (HARMON AUTO MIR)	90-96	Y (DL8)	2	12390122
17.	9-A12	10.185	MIRROR KIT, O/S RR VIEW (W/CASE)	90-96	Y (DL8)	LH	12522265
	9-A12	10.185	MIRROR KIT, O/S RR VIEW (W/CASE)	90-96	Y (DL8)	RH	12522266
18.	9-A12	10.185	MIRROR, O/S RR VIEW (BLACK) (PAINT TO MATCH)	90-93	Y (DC7) (EXPORT)	LH	10222801
	9-A12	10.185	MIRROR, O/S RR VIEW (BLACK) (PAINT TO MATCH)	90-96	Y (DC8) (EXPORT)	LH	10222801
	9-A12	10.185	MIRROR, O/S RR VIEW (BLACK) (PAINT TO MATCH)	90-93	Y (DC7) (EXPORT)	RH	10222802
	9-A12	10.185	MIRROR, O/S RR VIEW (BLACK) (PAINT TO MATCH)	94-96	Y (DC8) (EXPORT)	RH	10222802
	9-A12	10.185	MIRROR KIT, O/S RR VIEW	94-96	Y (DC8) (EXPORT)	2	3636500
		DISCON	MIRROR KIT, O/S RR VIEW (PWR PKG REPL)	90-93	Y (DC7, DC8) (EXPORT)	LH	10065263
	9-A12	10.185	MIRROR KIT, O/S RR VIEW (PWR PKG REPL)	90-93	Y (DC7, DC8) (EXPORT)	RH	10065264
19.		DISCON	INSULATOR, O/S RR VIEW MIR MT PLT (10.230)	90-92	Y (DC7, DC8, ZR1) (EXPORT)	LH	10143531
	9-A15	10.186	INSULATOR, O/S RR VIEW MIR MT PLT (10.230)	90-92	Y (DC7, DC8, ZR1) (EXPORT)	RH	10143532

© 2000 GENERAL MOTORS SERVICE PARTS OPERATIONS-CHEVROLET-14Y

							1Y10-017
	9-A15	10.186	INSULATOR, O/S RR VIEW MIR MT PLT	90-93	Y (DC7) (EXC ZR1) (EXPORT)	2	14088425
	9-A15	10.186	INSULATOR, O/S RR VIEW MIR MT PLT	90-95	Y (DC8) (EXC ZR1) (EXPORT)	2	14088425
	9-A15	10.186	INSULATOR, O/S RR VIEW MIR MT PLT	96	Y (DC8) (EXPORT)	2	14088425
20.		8.965	STRAP-TIE-7"ADJ (W/ROSEBUD FOR .25 DIA HOLE .031-.14 TH) (O/S RR VIEW MIR WRG LEAD (LH QTY 1; RH QTY 2))	90-96	.....	3	3816659

RPO DEFINITIONS

C60 – AIR CONDITIONER,FRONT,MANUAL CONTROLS
C68 – AIR CONDITIONER,FRONT,AUTOMATIC,ELECTRONIC CONTROLS
DC7 – MIRROR,OUTSIDE,RH AND LH,REMOTE CONTROL,ELECTRIC,BREAKAWAY(PAINTED)(50 INCH FIELD OF VIEW)
DC8 – MIRROR,OUTSIDE,RH AND LH REMOTE CONTROL ELECTRIC,BREAKAWAY(PAINTED)(55 INCH FIELD OF VIEW)
DG7 – MIRROR,OUTSIDE,RH AND LH REMOTE CONTROL,ELECTRIC(PAINTED)
DL8 – MIRROR,OUTSIDE,RH AND LH REMOTE CONTROL,ELECTRIC,DEFOG
LT1 – ENGINE-GAS, 8 CYL, 5.7L(5.7P),MFI,HO
LT4 – ENGINE GAS, 8 CYL, 5.7L, MFI, HIGH OUTPUT
LT5 – ENGINE,5.7L(5.7J),TPI
MD8 – TRANSMISSION,AUTOMATIC 4-SPEED(THM700R4/4L60)
ML9 – TRANSMISSION,MANUAL 6-SPEED
M30 – TRANSMISSION,AUTOMATIC 4 SPEED,4L60E,ELECTRONIC
T61 – LIGHTING,DAYTIME RUNNING
T72 – HEADLAMPS,LH RULE OF THE ROAD(EXPORT)
T84 – HEADLAMPS,RH RULE OF THE ROAD,RECTANGULAR(MARKED E)(EXPORT)
T85 – HEADLAMPS,LH RULE OF THE ROAD,RECTANGULAR(MARKED E)(EXPORT)
T90 – LAMP,SIGNALING AND MARKER(EXPORT)
ZR1 – PACKAGE,SPECIAL PERFORMANCE COUPE(1YY07 + ZR1 == 1YZ07)
10I – INTERIOR TRIM– ARCTIC WHITE
14I – INTERIOR TRIM LT GRAY
19I – INTERIOR TRIM,BLACK
22I – INTERIOR TRIM,DARK ROYAL BLUE
60I – INTERIOR TRIM,DARK COGNAC
64I – INTERIOR TRIM,LIGHT BEIGE
73I – INTERIOR TRIM,FLAME RED
90I – INTERIOR TRIM,SMOKE GRAY

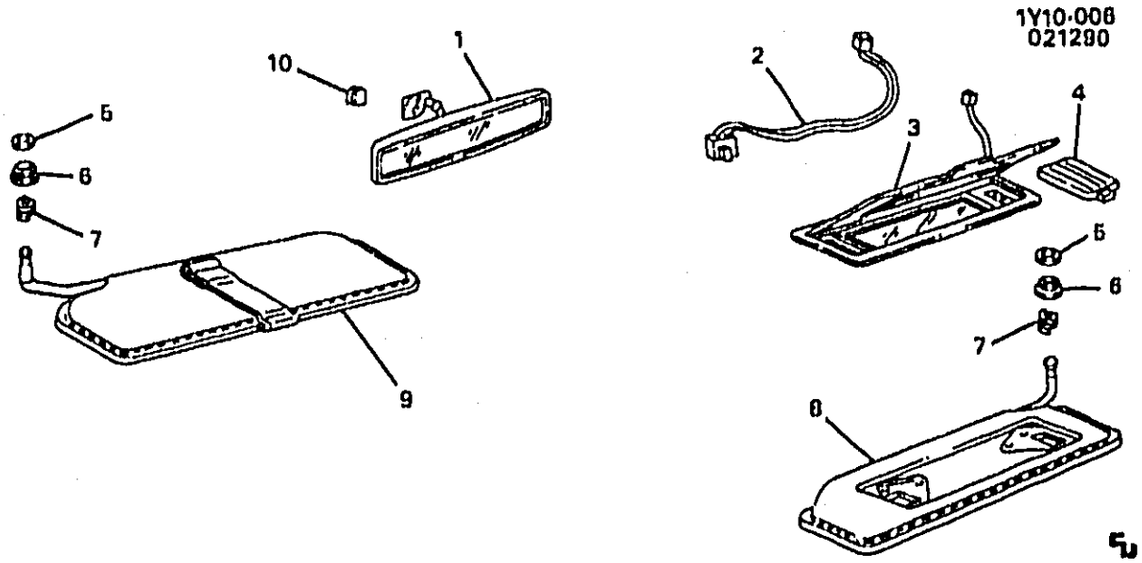

1Y10-006

1984-1985 Y SUNSHADE ASM MIRROR/VANITY & SUNSHADE

1.	9-A12	10.185	MIRROR, I/S RR VIEW	12513139
2.		DISCON	HARNESS, MIR LP	12028667
3.		DISCON	MIRROR, S/S VAN UNFLOCKED-RH (1984) (PAINT TO MATCH)	16501040
		DISCON	MIRROR, MIN LGT VAN-RH	918295
4.		DISCON	LENS, S/S VAN-RH	5972556
		DISCON	LENS, S/S VAN-LH	5972555
5.	9-A18	10.219	RETAINER	14060215
6.		8.921	NUT, RD PUSH-ON (M3.6X11.23) (AC-DELCO #11501937)	11501937
7.	9-A18	10.219	SPRING, SUPT	14060216
8.	9-A17	10.203	SUNSHADE, 'MAY NEED TO REPLACE BODY SI CONN THAT MATES W/SUNSHADE HARNESS; USE CONN PKG 12085481) (EXC VD1)	10199728
9.	9-A17	10.203	SUNSHADE, LH	10051877
10.	9-A17	10.187	BRACKET, I/S RR VIEW MIR	9831062

RPO DEFINITIONS
VD1 - PROVISION OPTIONS,EUROPE(EXPORT)

© 2000 GENERAL MOTORS SERVICE PARTS OPERATIONS-CHEVROLET-14Y

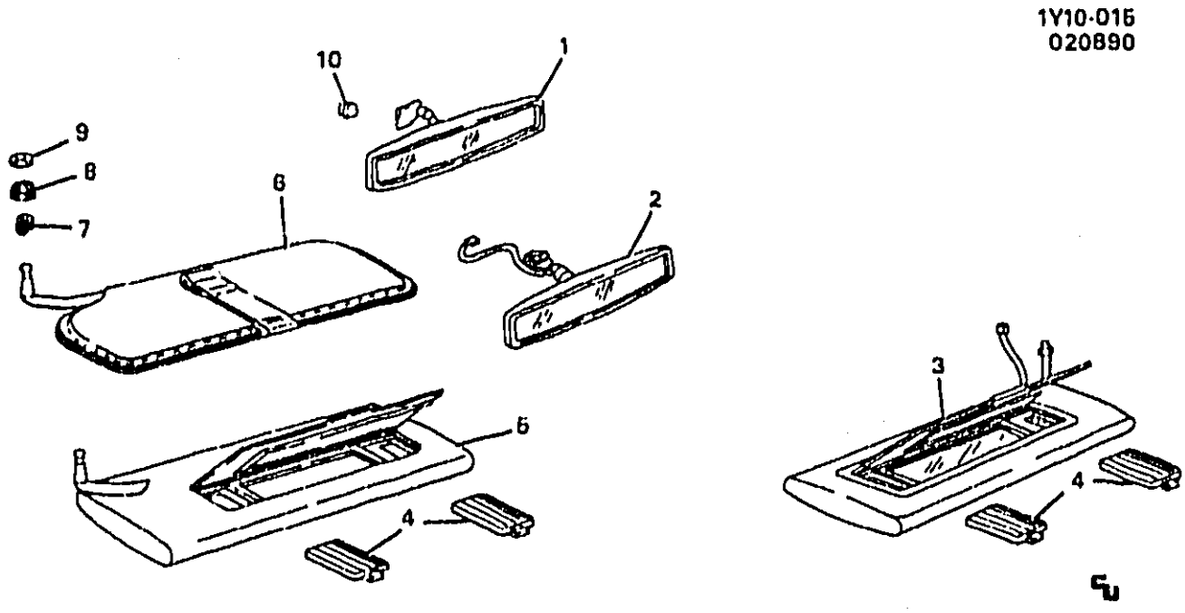

1986-1990 Y SUNSHADE ASM MIRROR/VANITY & SUNSHADE

1.	9-A12	10.185	MIRROR, I/S RR VIEW (EXC MAP LGT) (1986)	12513139
2.	9-A12	10.185	MIRROR, I/S RR VIEW (W/MAP LGT) (1986-89)	12513138
	9-A12	10.185	MIRROR, I/S RR VIEW	12513138
3.	9-A17	10.203	SUNSHADE, (RH)	10199728
4.		DISCON	LENS, VAN-RH (1986-88)	5972556
		DISCON	LENS, VAN-LH (1986-88)	5972555
5.	9-A17	10.203	SUNSHADE, (LH)	10199727
6.	9-A17	10.203	SUNSHADE, LH (1986) (1987-89 EXC D74)	10051877
7.	9-A18	10.219	SPRING, S/S	14060216
8.		8.921	NUT-PUSH ON SPRING FOR .153 TO .159 INCH DIA STUD, .70 OD, .35 THK, SAE1050 CRB .SPR .STL, PC (AR) (AC-DELCO #11501937)	11501937
9.	9-A18	10.219	RETAINER, S/S	14060215
10.	9-A17	10.187	BRACKET, I/S RR VIEW MIR (1986 -88)	9831062

© 2000 GENERAL MOTORS SERVICE PARTS OPERATIONS-CHEVROLET-14Y

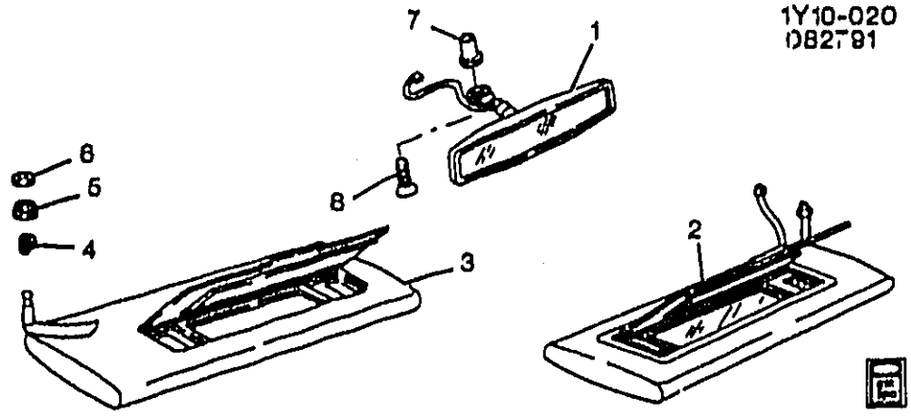

1Y10-020

1991-1996 Y SUNSHADE ASM MIRROR/VANITY & SUNSHADE

1.	9-A12	10.185	MIRROR, I/S RR VIEW	91-96	Y	1	12513138
2.	9-A17	10.203	SUNSHADE, (BLACK)	91-93	Y	RH	10199728
	9-A17	10.203	SUNSHADE, (SEE KIT 12459827) (BLACK)	94-96	Y (EXC VD1)	RH	12453668
	9-A17	10.203	SUNSHADE KIT, (INCLS RH & LH S/S)	94-96	Y (EXC VD1)	1	12459827
	9-A17	10.203	SUNSHADE, (BLACK)	94-95	Y (VD1) (EXPORT)	RH	10251052
3.	9-A17	10.203	SUNSHADE, (BLACK)	91-93	Y	LH	10199727
	9-A17	10.203	SUNSHADE, (SEE KIT 12459827) (BLACK)	94-96	Y (EXC VD1)	LH	12453667
	9-A17	10.203	SUNSHADE KIT, (INCLS RH & LH S/S)	94-96	Y (EXC VD1)	1	12459827
	9-A17	10.203	SUNSHADE, (BLACK)	94-96	Y (VD1) (EXPORT)	LH	10251051
4.	9-A18	10.219	SPRING, S/S	91-96	Y	2	14060216
5.		8.921	NUT-PUSH ON SPRING FOR .153 TO .159 INCH DIA STUD, .70 OD, .35 THK, SAE1050 CRB .SPR .STL, PC (AC-DELCO #11501937)	91-96		AR	11501937
6.	9-A13	10.219	RETAINER, S/S	91-96	Y	2	14060215
7.	9-A15	10.186	NUT, I/S RR VIEW MIR (16.460)	91-96	Y	AR	12337912
8.	9-A15	10.186	BOLT, I/S RR VIEW MIR (OVAL CSK, M5X.8X30, 25.7 THD, 9.8, NZ, C/R)	91-96	Y	1	10167086

RPO DEFINITIONS
VD1 - PROVISION OPTIONS,EUROPE(EXPORT)

© 2000 GENERAL MOTORS SERVICE PARTS OPERATIONS-CHEVROLET-14Y

MICROFICHE INDEX

GROUPS 10.000 THRU 11.000

FICHE 9 OF 11

GROUP	DESCRIPTION	STARTING GRID LOCATION PARTS	ILLUSTRATIONS
–	GENERAL INFORMATION	1–A2	1–G2
–	ALPHABETICAL INDEX	1–B13	N.A.
10.000	DOORS – REGULATORS – WINDSHIELD – WIPER – WASHER	9–A2	9–D2
11.000	REAR GLASS – SEAT PARTS – ADJUSTER	9–C2	9–I2
–	OUT OF FICHE CALLS	N.A.	9–L4

9–E1

1Y10-002
082791

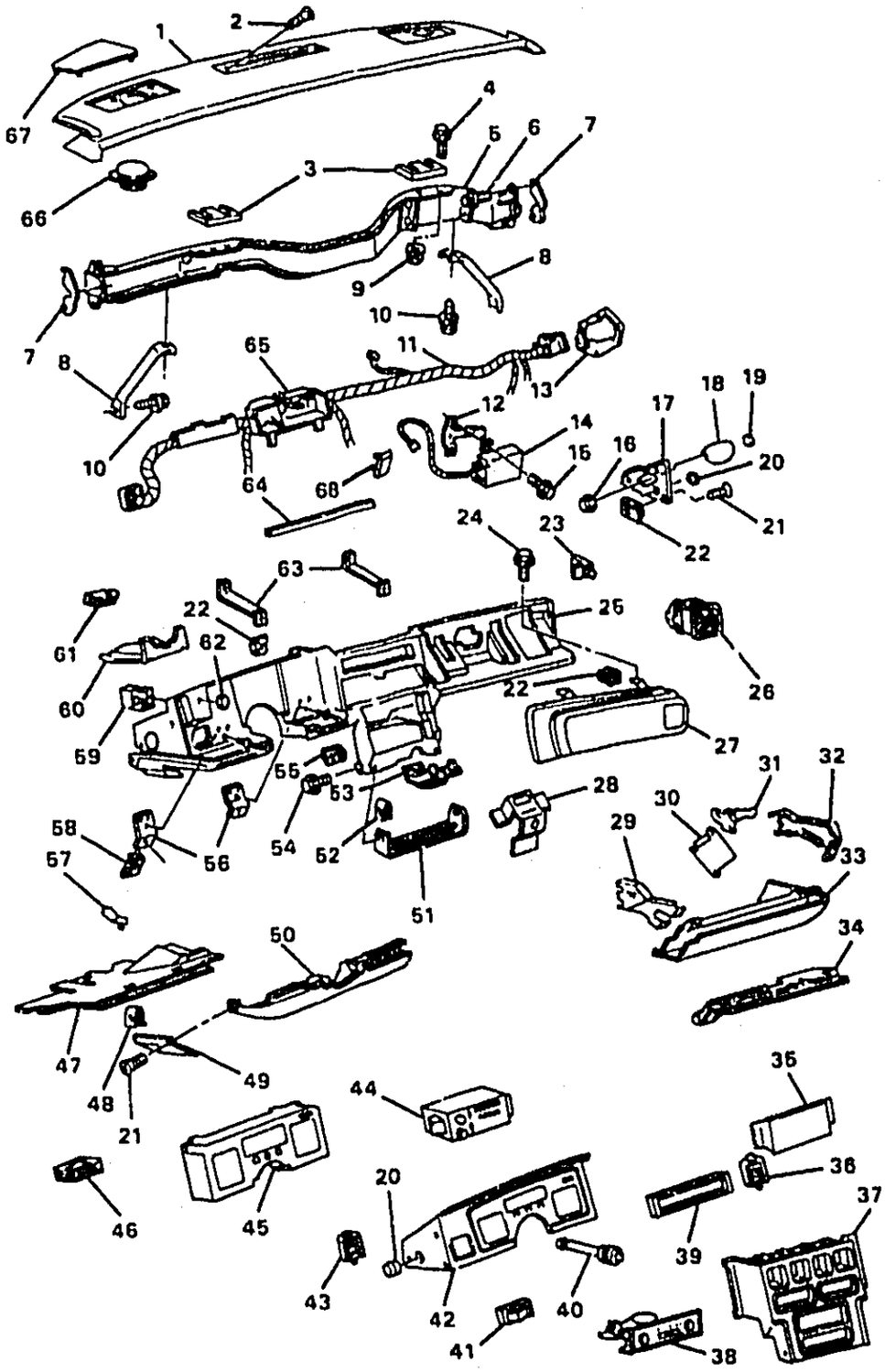

1Y10-002

1984-1985 Y INSTRUMENT PANEL

1.	DISCON	PAD, UPR	14046647
2.	8.977	SCREW, OV HD TAP (W/WA) (M4.2X1.41X40)	11502770
3.	DISCON	SHIM, REINF-RH	14060248
	DISCON	SHIM, REINF-LH	14060249
4.	8.900	BOLT, HEX (W/SPR WA) (M6X1X30) 9.8, POR	11505209
5.	DISCON	REINFORCEMENT	14092605
6.	8.900	BOLT, HEX (W/WA) (M8X1.25X30) 9.8, PZOR	11508269

© 2000 GENERAL MOTORS SERVICE PARTS OPERATIONS-CHEVROLET-14Y

				1Y10-002
7.		DISCON	SHIM, REINF	14060247
8.		DISCON	BRACE, REINF-RH	14060214
		DISCON	BRACE, REINF-LH	14060213
9.		8.917	NUT (M6X1X6.5) ZOR	3530297
10.		8.900	BOLT, HEX (W/WA) (M8X1.25X20) 9.8, POR	11504611
11.	9-L8	2.480	HARNESS (SEE PARTS SECTION FOR USAGE)	
12.		DISCON	BRACKET, MASS AIR FLOW SEN BURNOFF (1985)	14080660
13.	9-L17	2.483	BRACKET, WRG HARN FUSE	14062568
14.	9-M2	3.682	MODULE, MASS AIR FLOW SEN BURNOFF (1985) (AC-DELCO #216-52)	14080620
15.		8.977	BOLT, HEX TAP (W/WA) (M4.2X1.41X16) NIOR	11509374
16.	9-L17	2.483	NUT, FUSE BOX ACC HOLE CVR (PART OF 18)	14049066
17.		DISCON	PLATE, TR	10103968
18.	9-L17	2.483	COVER, FUSE BOX ACC HOLE (INCL 16)	14047597
19.	9-A28	10.252	FASTENER, TR PLT (1984)	14065045
20.	9-M22	9.780	SEAL, SI WDO DEFG OTLT DUCT (COMPONENTS SERVICED)	14052304
	9-M22	9.780	SEAL, SI WDO DEFG OTLT DUCT	14052304
21.		8.977	SCREW, OV HD C/R (M4.2X1.41X25)	11503566
22.		8.921	NUT, U-SHAPE (M4.2X1.41X.065) ZOR (AC-DELCO #15650655)	15650655
23.		DISCON	BRACKET, UPR-RH	14047446
		DISCON	BRACKET, UPR-LH	14047445
24.		8.977	SCREW, HEX (W/WA) (M4.2X1.41X16) POR	25512804
25.		DISCON	PANEL	14046643
26.	9-M12	9.264	OUTLET, OTR AIR-RH (INCL 43)	14046018
27.		DISCON	PAD, CTR TR	14046646
28.		DISCON	RETAINER	14046714
29.		DISCON	SUPPORT, CTR-RH	14047475
30.	9-L7	2.195	MODULE, THEFT DETER (CIRC INTERRUPT)	16158276
31.		DISCON	BRACKET, THEFT DETER MDL	10099473
32.		DISCON	BRACE, I/P LWR	14047477
33.		DISCON	PAD, LWR TR-RH (GRAPHITE 121) (SEE PARTS SECTION FOR ADDITIONAL COLORS & TRIM COMBINATIONS)	14047482
34.	9-A18	10.230	INSULATOR, SOUND-RH	14051132
35.		DISCON	COVER, RDO OPG	14049019
36.	9-M12	9.264	DEFLECTOR, A.C. AIR CTR OTLT (PART OF 37)	14046019
37.	9-A28	10.252	PLATE, ACSRY TR (INCL 36)	10103967
38.	9-M13	9.273	CONTROL, HTR & A.C. (C49, C60) (SEE CHART IN GROUP FOR USAGE) (AC-DELCO #15-71414)	16040111
39.		DISCON	SEAL, CTR AIR OTLT	14069129
40.	9-L19	2.486	KNOB, HDLP SW	10098728
41.	9-L18	2.485	SWITCH, FOG LP	14066536
42.		DISCON	PLATE, CSTR TR (INCL 43)	14047529
43.	9-M12	9.264	DEFLECTOR, OTR AIR OTLT (PART OF 26, 42)	14046017
44.	9-M16	9.650	RECEIVER, RDO (SEE PARTS SECTION FOR USAGE)	
	9-M15	9.649	KNOB, VOLUME OR TUNING CONT (UM6) (SEE PARTS SECTION FOR ADDITIONAL USAGE) (AC-DELCO #16020297)	16020297
	9-M17	9.652	BUTTON, CONT (UM6) (SEE PARTS SECTION FOR ADDITIONAL USAGE) (AC-DELCO #16020534)	16020534
	9-M15	9.649	KNOB, FADER/BAL (UM6) (SEE PARTS SECTION FOR ADDITIONAL USAGE) (AC-DELCO #16035456)	16035456
45.	9-M19	9.735	CLUSTER (SEE CHART IN GROUP FOR USAGE) (CLUSTERS SERVICED THROUGH A.C. DELCO REPAIR CENTER)	
46.	9-C27	11.927	LAMP, CTSY	10199743
47.	9-A18	10.230	INSULATOR, SOUND-LH	10125970
48.		8.921	NUT, U-TYPE (4.2X1.41) PZOR	12338121
49.	9-M11	8.075	BEZEL, HOOD PRIM LAT REL CBL HDL (PAINT TO MATCH)	14047492

© 2000 GENERAL MOTORS SERVICE PARTS OPERATIONS-CHEVROLET-14Y

				1Y10-002
50.	9-A21	10.235	PAD, LWR TR-LH (GRAPHITE 12I) (SEE PARTS CATALOG FOR ADDITIONAL COLORS & TRIM COMBINATIONS)	14047481
51.		DISCON	BRACE, I/P LWR	14046649
52.		8.921	NUT, U-SHAPED (M6X1) POR	12338151
53.		DISCON	PLATE, LWR BRKT STUD (W/A.T.)	14046622
		DISCON	PLATE, LWR BRKT STUD (W/M.T.)	14046742
54.		8.900	BOLT, HEX (W/WA) (M6X1X20) 9.8, PZOR	11514623
55.		DISCON	PLATE, IGN KEY PROTECTOR	14083511
56.		DISCON	BRACKET, LWR TR PAD OTR	14049084
		DISCON	BRACKET, LWR TR PAD INR	14049085
57.	9-A18	10.230	BRACKET, SOUND INSL	14104971
58.		8.921	NUT, U-SHAPE MULTI-THD (M8X1.25)	11516150
59.	9-L18	2.485	SWITCH, HDLP (AC-DELCO #D1530A)	1995257
60.		DISCON	BRACKET, REINF	14046650
61.	9-L8	2.440	BRACKET, WRG HARN DIAGN CONN	14073479
62.	9-L19	2.487	NUT, HDLP SW	3916710
63.		DISCON	BRACE, UPR-RH	14049198
		DISCON	BRACE, UPR-LH	14046644
64.		N.S.	INSULATOR, SOUND	
65.		DISCON	BRACKET, MULTIUSE RLY	14062512
66.	9-M16	9.650	SPEAKER, RDO FRT (AC-DELCO #16033662)	16033662
67.	9-M16	9.650	GRILLE, RDO FRT SPKR-RH (UQ4)	14081838
	9-M16	9.650	GRILLE, RDO FRT SPKR-RH (EXC UQ4)	14047518
	9-M16	9.650	GRILLE, RDO FRT SPKR-LH (UQ4)	14081837
	9-M16	9.650	GRILLE, RDO FRT SPKR-LH (EXC UQ4)	14047517
68.	9-N8	13.095	BREAKER, R/WDO DEFG CIRC (12.5V-35A) (1985) (DL8) (AC-DELCO #14103366)	14103366

RPO DEFINITIONS
DL8 – MIRROR,OUTSIDE,RH AND LH REMOTE CONTROL,ELECTRIC,DEFOG

© 2000 GENERAL MOTORS SERVICE PARTS OPERATIONS-CHEVROLET-14Y

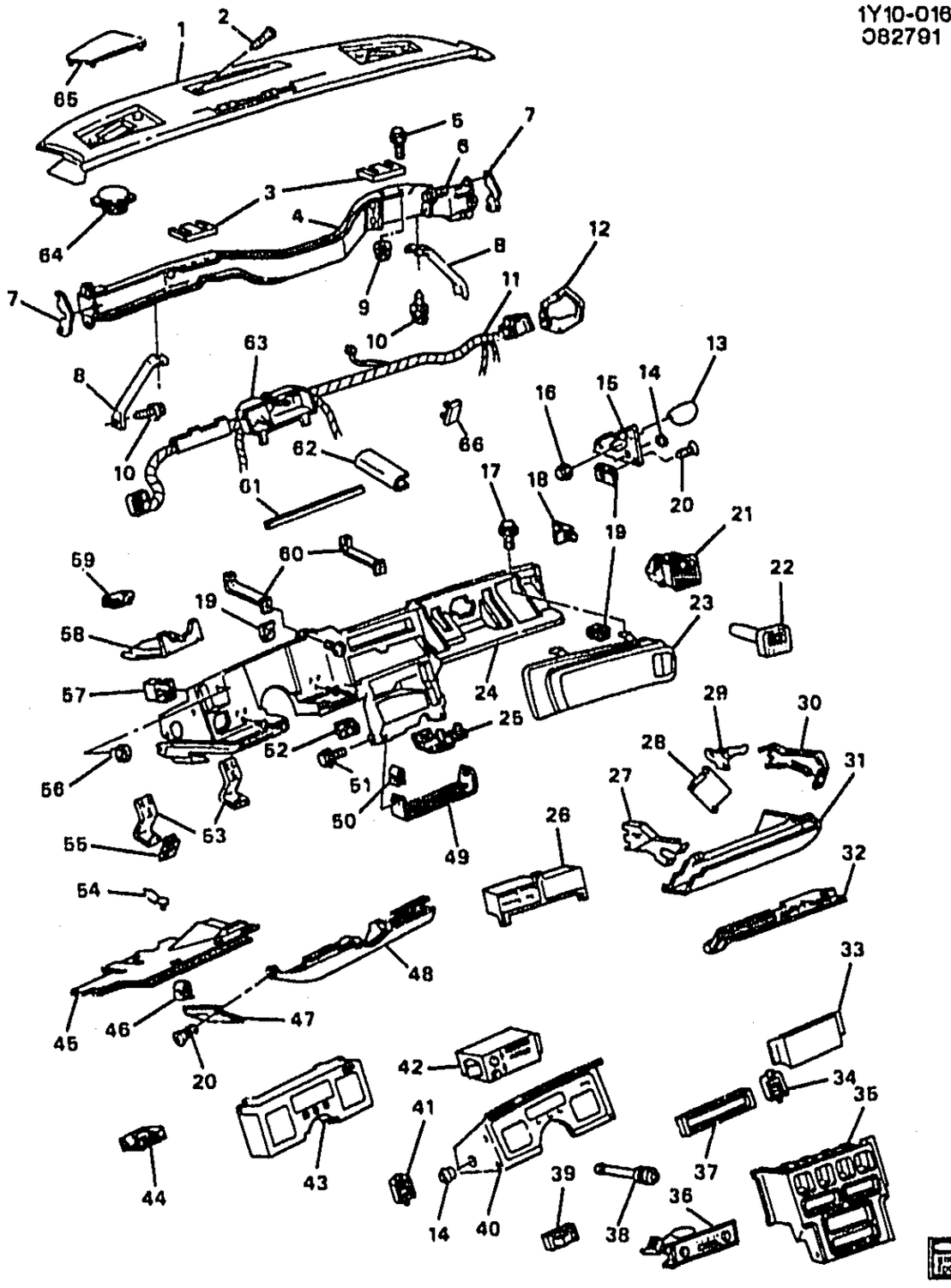

1986–1989 Y INSTRUMENT PANEL

1.	9–A21	10.235	PAD, UPR	14078653
2.		8.977	SCREW, OV HD TAP (W/WA) (M4.2X1.41X40)	11502770
3.		DISCON	SHIM, REINF–RH	14060248
		DISCON	SHIM, REINF–LH	14060249
4.		DISCON	REINFORCEMENT	14092605
5.		8.900	SCREW, HEX (W/WA) (M6X1X30) 9.8, POR	11505209

© 2000 GENERAL MOTORS SERVICE PARTS OPERATIONS–CHEVROLET–14Y

				1Y10-016
6.		8.900	BOLT, HEX (W/WA) (M8X1.25X30) 9.8, PZOR	11508269
7.		DISCON	SHIM, REINF	14060247
8.		DISCON	BRACE, REINF-RH	14060214
		DISCON	BRACE, REINF-LH	14060213
9.		8.917	NUT (M6X1X6.5) ZOR	3530297
10.		8.900	BOLT, HFH (W/WA) (M8X1.25X20) 9.8, POR	11504611
11.	9-L8	2.480	HARNESS (SEE PARTS SECTION FOR USAGE)	
12.	9-L17	2.483	BRACKET, WRG HARN FUSE	14062568
13.	9-L17	2.483	COVER, FUSE BOX ACC HOLE (INCL 16)	14047597
14.	9-M22	9.780	SEAL, SI WDO DEFG OTLT DUCT	14052304
	9-M22	9.780	SEAL, SI WDO DEFG OTLT DUCT	14052304
15.		DISCON	PLATE, TR (1986-87)	10103968
		DISCON	PLATE, TR (1988-89)	10103968
16.	9-L17	2.483	NUT, FUSE BOX ACC HOLE CVR (PART OF 13)	14049066
17.		8.977	SCREW, HEX (W/WA) (M4.2X1.41X16) POR	25512804
18.		DISCON	BRACKET, UPR-RH	14047446
		DISCON	BRACKET, UPR-LH	14047445
19.		8.921	NUT, M4.2X1.4, 19.3X213.6.8.9 (AR) (AC-DELCO #15650655)	15650655
20.		8.977	SCREW, OV HD C/R (M4.2X1.41X25)	11503566
21.	9-M12	9.264	OUTLET, OTR AIR-RH (INCL 41)	14046018
22.		DISCON	PLATE, NA "OFFICIAL PACE CAR" (1986 Y67)	10045698
23.		DISCON	PAD, CTR TR	14046646
24.		DISCON	PANEL	10064350
25.		DISCON	PLATE, LWR BRKT STUD (MD8)	14046622
		DISCON	PLATE, LWR BRKT STUD (1986-88 ML9)	14046742
		DISCON	PLATE, LWR BRKT STUD (1989 ML3)	14104930
26.		DISCON	TELLTALE, INFO CTR (1987-88) (SEE CHART IN GROUP FOR USAGE)	25083583
		DISCON	TELLTALE, INFO CTR (1989) (SEE CHART IN GROUP FOR USAGE)	25089614
27.		DISCON	SUPPORT, CTR-RH	14047475
28.	9-L7	2.195	MODULE, THEFT DETER (CIRC INTERRUPT)	16158276
29.		DISCON	BRACKET, THEFT DETER MDL	10098473
30.		DISCON	BRACE, I/P LWR	14047477
31.		DISCON	PAD, LWR TR-RH (1986-87) (GRAPHITE 12I) (SEE PARTS SECTION FOR ADDITIONAL COLORS & TRIM COMBINATIONS)	14047482
		DISCON	PAD, LWR TR-RH (1988-89) (BLACK 19I) (SEE PARTS SECTION FOR ADDITIONAL COLORS & TRIM COMBINATIONS)	10132994
32.	9-A18	10.230	INSULATOR, SOUND-RH	14051132
33.		DISCON	COVER, RDO OPG	14049019
34.	9-M12	9.264	DEFLECTOR, A.C. AIR CTR OTLT (PART OF 35)	14046019
35.	9-A28	10.252	PLATE, ACSRY TR (INCL 34)	10103967
36.	9-M13	9.273	CONTROL, HTR & A.C. (1986 C49, C60) (1987-89 Y07 C49, C60) (SEE CHART IN GROUP FOR USAGE) (AC-DELCO #15-71414)	16040111
	9-M13	9.273	CONTROL, HTR & A.C. (1987-89 Y67 C60, DL8) (SEE CHART IN GROUP FOR USAGE) (AC-DELCO #15-71576)	16068761
37.		DISCON	SEAL, CTR AIR OTLT	14069129
38.	9-L19	2.486	KNOB, HDLP SW	10098728
39.	9-L18	2.485	SWITCH, FOG LP	14066536
40.	9-M20	9.743	PLATE, CSTR TR (INCL 41)	14078656
41.	9-M12	9.264	DEFLECTOR, OTR AIR OTLT (PART OF 21, 40)	14046017
42.		DISCON	RADIO PKG, (UM6) (SEE PARTS SECTION FOR ADDITIONAL USAGE)	12344493
	9-M15	9.649	KNOB, VOLUME OR TUNING CONT (UM6) (SEE PARTS SECTION FOR ADDITIONAL USAGE) (AC-DELCO #16020297)	16020297
	9-M17	9.652	BUTTON, CONT (UM6) (SEE PARTS SECTION FOR ADDITIONAL USAGE) (AC-DELCO #16020534)	16020534
	9-M15	9.649	KNOB, FADER/BAL (UM6) (SEE PARTS SECTION FOR ADDITIONAL USAGE) (AC-DELCO #16035456)	16035456

© 2000 GENERAL MOTORS SERVICE PARTS OPERATIONS-CHEVROLET-14Y

43.		N.S.	CLUSTER (1986) (SEE CHART IN GROUP FOR USAGE) (CLUSTERS SERVICED THROUGH A.C. DELCO REPAIR CENTER) ..	
		DISCON	CLUSTER (1987 K34) (1988) (SEE CHART IN GROUP FOR USAGE) (CLUSTERS SERVICED THROUGH A.C. DELCO REPAIR CENTER) ..	25083577
		N.S.	CLUSTER (1989 U52) (SEE CHART IN GROUP FOR USAGE) (CLUSTERS SERVICED THROUGH A.C. DELCO REPAIR CENTER) ..	
44.	9-C27	11.927	LAMP, CTSY	10199743
45.	9-A18	10.230	INSULATOR, SOUND-LH	10125970
46.		8.921	NUT, U-TYPE (M4.2X1.41) PZOR	12338121
47.	9-M11	8.075	BEZEL, HOOD PRIM LAT REL CBL HDL (PAINT TO MATCH)	14047492
48.	9-A21	10.235	PAD, LWR TR-LH (1986-87) (GRAPHITE 12I) (SEE PARTS SECTION FOR ADDITIONAL COLORS & TRIM COMBINATIONS)	14047481
		DISCON	PAD, LWR TR-LH (1988-89) (BLACK 11I, 19I) (SEE PARTS SECTION FOR ADDITIONAL COLORS & TRIM COMBINATIONS)	10132993
49.		DISCON	BRACE, I/P LWR	14046649
50.		8.921	NUT, U-SHAPED (M6X1.20X24) POR	12338151
51.		8.900	BOLT, HEX (W/WA) (M6X1X20) 9.8, PZOR	11514623
52.		DISCON	PLATE, IGN KEY PROTECTOR	14083511
53.		DISCON	BRACKET, LWR TR PAD	14078662
54.	9-A18	10.230	BRACKET, SOUND INSL	14104971
55.		8.921	NUT-U, M8X1.25, 17 WIDE, 32 OAL, 21 CTR TO END, 8-4 PNL RANGE (AR)	11516150
56.	9-L19	2.487	NUT, HDLP SW	3916710
57.	9-L18	2.485	SWITCH, HDLP (AC-DELCO #D1530A)	1995257
58.		DISCON	BRACKET, REINF	14078646
59.	9-L8	2.440	BRACKET, WRG HARN DIAGN CONN	14073479
60.		DISCON	BRACE, UPR-RH	14049198
		DISCON	BRACE, UPR-LH	14078645
61.		N.S.	INSULATOR, SOUND	
62.		DISCON	INSULATOR, I/P WRG HARN FUSE (1988-89)	10045697
63.	9-L27	2.560	BRACKET, MULTIUSE RLY (Y67)	14100353
64.	9-M16	9.650	SPEAKER, RDO FRT (AC-DELCO #16033662)	16033662
65.	9-M16	9.650	GRILLE, RDO FRT SPKR-RH (UQ4)	14081838
	9-M16	9.650	GRILLE, RDO FRT SPKR-RH (EXC UQ4)	14047518
	9-M16	9.650	GRILLE, RDO FRT SPKR-LH (UQ4)	14081837
	9-M16	9.650	GRILLE, RDO FRT SPKR-LH (EXC UQ4)	14047517
66.	9-N8	13.095	BREAKER, R/WDO DEFG CIRC (12.5V-35A) (AC-DELCO #14103366)	14103366

© 2000 GENERAL MOTORS SERVICE PARTS OPERATIONS-CHEVROLET-14Y

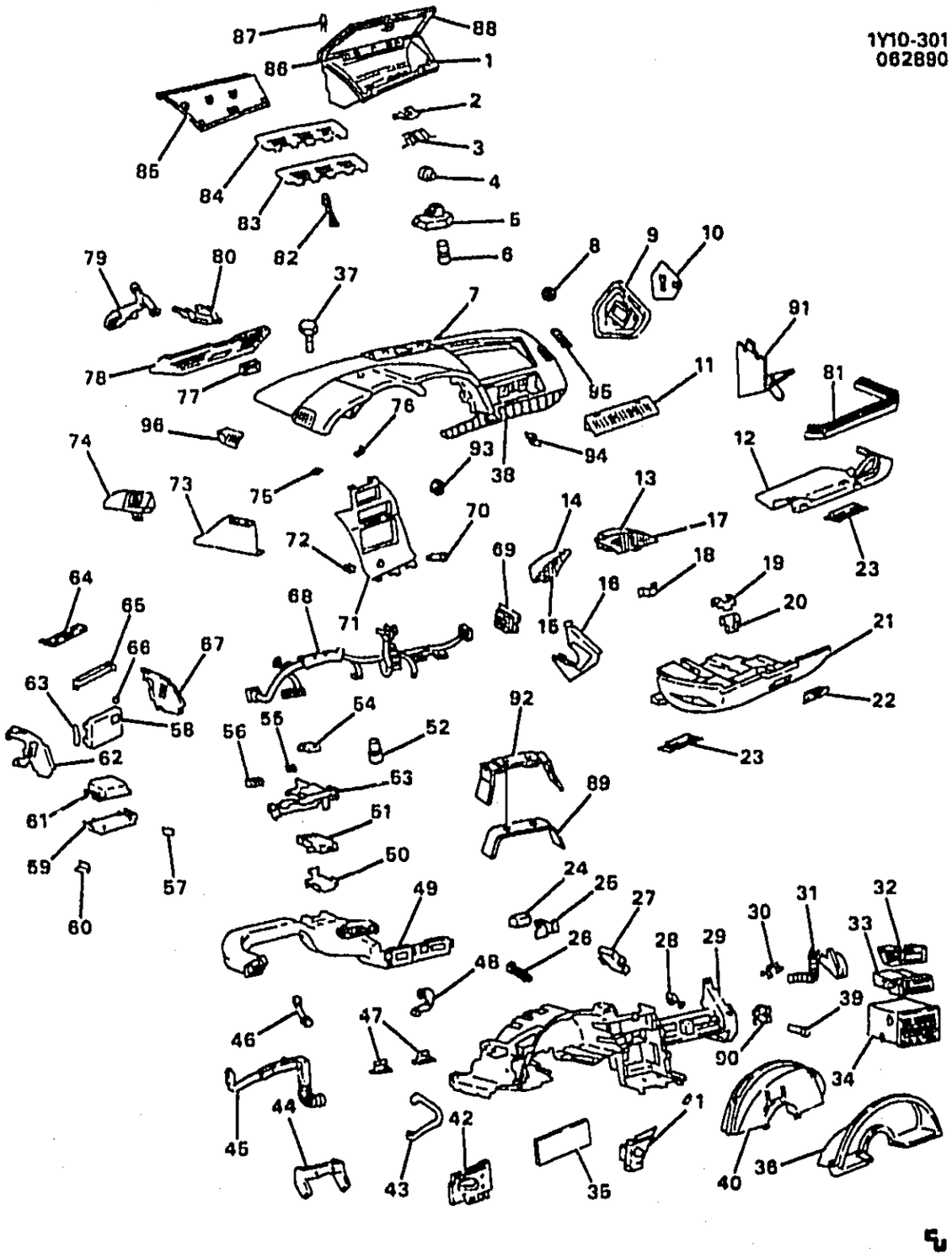

1990-1991 Y INSTRUMENT PANEL

1.	9-A28	10.260	COMPARTMENT, I/P	10137256
2.	9-B3	10.268	RETAINER, COMPT DR LK	10024625
3.	9-B3	10.268	STRIKER, COMPT DR LK	10137258
4.	9-A28	10.263	BUMPER, COMPT DR	1625385
5.	9-B2	10.266	LOCK, I/P COMPT DR	14042799
6.	9-B3	10.275	LENS, COMPT LP (2.776)	14059878

© 2000 GENERAL MOTORS SERVICE PARTS OPERATIONS-CHEVROLET-14Y

				1Y10-301
7.		DISCON	PAD, UPR TR (MED COGNAC 60I) (SEE PARTS SECTION FOR ADDITIONAL COLORS & TRIM COMBINATIONS)	10153637
8.	9-L17	2.483	NUT, FUSE BOX ACC HOLE CVR (PART OF 9)	14049066
9.	9-A28	10.252	PANEL, SI TR (INCL 8)	10267755
10.	9-L17	2.483	COVER, FUSE BOX ACC HOLE	10172478
11.	9-M12	9.262	OUTLET, OTR AIR-RH	10199754
	9-M12	9.264	GRILLE, I/P OTR AIR OTLT-RH	10085982
12.	9-A18	10.230	PANEL, LWR TR-RH	10086210
13.	9-M12	9.264	DEFLECTOR, CTR AIR OTLT	10086046
14.	9-M12	9.264	DEFLECTOR, OTR AIR-LH	10086045
15.		DISCON	GRILLE, OTR AIR OTLT-LH	10085930
16.		DISCON	BRACKET, PASSENGER KNEE BOLS OTR	10085944
17.	9-M12	9.264	GRILLE, CTR AIR OTLT	10085931
13.	9-L19	2.490	DIMMER, LP (AC-DELCO #D1509B)	1995263
19.	9-L8	2.440	BRACKET, WRG HARN DIAGN CONN	14073479
20.	9-L8	2.440	COVER, WRG HARN DIAGN CONN	10021766
21.		DISCON	PANEL, LWR TR-LH (MED COGNAC 60I) (MD8) (SEE PARTS SECTION FOR ADDITIONAL COLORS & TRIM COMBINATIONS)	10193754
	9-A18	10.230	PANEL, LWR TR-LH (MED COGNAC 60I) (ML9) (SEE PARTS SECTION FOR ADDITIONAL COLORS & TRIM COMBINATIONS)	10193748
22.	9-M12	9.264	DEFLECTOR, LAP AIR OTLT	10100163
23.	9-C27	11.927	LAMP, CTSY	10199743
		8.991	BULB, 12CP ID 561 (AC-DELCO #L561)	9433040
24.	9-L7	2.195	ALARM, ST BELT & IGN KEY & LPS (9.765)	25518745
25.	9-L7	2.195	BRACKET, ST BELT & IGN KEY & LPS ALARM	10098454
26.	9-A18	10.230	BRACE, UPR-LH	10085903
27.	9-M9	5.890	MODULE, LOW TIRE PRESS IND	10143565
28.	9-M14	9.275	SENSOR, I/S AIR TEMP (AC-DELCO #15-71650)	16129011
29.	9-A18	10.230	PANEL (INCL 35, 47)	10167108
30.		8.965	RETAINER, PLSTC 7" ADJ STRAP	3816659
31.	9-M22	9.780	DUCT, SI WDO DEFG OTLT-RH	10239089
32.		N.S.	DISPLAY, DRIVER INFO (1990) (SERVICED BY)	
		DISCON	DISPLAY, DRIVER INFO (1991) (CPS)	16142541
		DISCON	FILTER, DRVR INFO DISPLAY	25088427
	9-M21	9.769	BULB, DRVR INFO DISPLAY SW (1990) (AC-DELCO #10159597)	10159597
		8.991	BULB, SPD IND LP W/SOCKET TRADE #PC74 (.7 CP) (DRVR INFO CTR) (AR) (AC-DELCO #25086809)	25086809
	9-M20	9.743	CASE, DRVR INFO DISPLAY (AC-DELCO #25088424)	25088424
	9-M21	9.768	SWITCH, DRVR INFO DISPLAY (INCLUDES PUSHBUTTONS) (AC-DELCO #25088425)	25088425
	9-M20	9.748	RETAINER, INST CSTR LENS (AC-DELCO #25088429)	25088429
	9-M20	9.744	CIRCUIT, PRINTED INST CSTR (AC-DELCO #25088430)	25088430
	9-M19	9.735	BOLT, INST CSTR (AC-DELCO #25112341)	25112341
		8.991	BULB, SPD IND LP W/SOCKET TRADE #PC74 (.7 CP) (DRVR INFO CTR) (AR) (AC-DELCO #25086809)	25086809
33.	9-M13	9.273	CONTROL, HTR & A .C. (C60) (Y67 CC2) (SEE PARTS SECTION FOR USAGE) (SEE GROUP 9.000 "A/C & HEATER CONTROL ASM" FOR DETAIL ILLUSTRATED VIEW) (AC-DELCO #15-71667)	16085521
34.		DISCON	CONTROL PKG, RDO (1990 UM6) (SEE PARTS SECTION FOR ADDITIONAL USAGE)	16172721
		DISCON	CONTROL, RDO (1991 UM6) (SEE PARTS SECTION FOR ADDITIONAL USAGE)	16172701
35.		DISCON	SEAL, UPR TR PNL (PART OF 29) (10.092)	3999512
36.	9-M20	9.743	PLATE, I/P CSTR TR	10253257
37.	9-M22	9.780	BOLT, SI WDO DEFG OTLT GRL (8.977)	11515303
38.		DISCON	CARPET, LWR TR PNL (COGNAC 60I) (SEE PARTS SECTION FOR ADDITIONAL COLORS & TRIM COMBINATIONS)	10181251
39.	9-M19	9.667	NUT, RDO CONT (PUSH ON) (3.671) (AC-DELCO #10027015)	10027015

© 2000 GENERAL MOTORS SERVICE PARTS OPERATIONS-CHEVROLET-14Y

40.		DISCON	CLUSTER, INST (1990 L98/5.7-8) (CLUSTERS SRVCD THROUGH A.C. DELCO RPR CNTR) (SEE GRP 9.000 "CLUSTER ASM/INSTRUMENT PANEL" FOR DETAIL ILLUSTRATED VIEW)	16133431
		DISCON	CLUSTER, INST (1991 L98/5.7-8) (CLUSTERS SRVCD THROUGH A.C. DELCO RPR CNTR) (SEE GRP 9.000 "CLUSTER ASM/INSTRUMENT PANEL" FOR DETAIL ILLUSTRATED VIEW)	16142451
		DISCON	CLUSTER, INST (LT5/5.7J) (CLUSTERS SRVCD THROUGH A.C. DELCO RPR CNTR) (SEE GRP 9.000 "CLUSTER ASM/INSTRUMENT PANEL" FOR DETAIL ILLUSTRATED VIEW)	16142481
41.	9-L18	2.485	SWITCH, HDLP, LP DIMR & ACSRY (W/HSG) (CPS) (AC-DELCO #D1527C)	10098487
	9-L18	2.485	LAMP, FOG HDLP SW	10159561
	9-L19	2.487	LAMP, FOG LP SW	12506368
42.	9-M14	9.275	BRACKET, HTR & A .C. PROGMR	10086302
43.	9-A21	10.235	BRACKET, DRIVER KNEE BOLS OTR	10085943
44.	9-A18	10.230	BRACKET, REINF	10085902
45.	9-M22	9.780	DUCT, SI WDO DEFG OTLT-LH	10158004
46.		DISCON	DUCT, LAP AIR OTLT	10086253
47.	9-L17	2.483	BRACKET, MULTIUSE RLY-RH (PART OF 29)	10172488
	9-L17	2.483	BRACKET, MULTIUSE RLY-LH (PART OF 29)	10175542
48.		DISCON	DUCT, FLR AIR OTLT	10100164
49.		DISCON	DUCT, AIR DISTR	10100159
50.		DISCON	BRACKET, WRG HARN	10165378
51.		DISCON	RADIO, AM/FM STEREO (UM6)	16208545
		DISCON	RADIO, AM/FM STEREO & CLK (UU8)	16141351
52.	9-N5	13.090	MODULE, DIODE ARRAY (1990)	12088529
	9-N5	13.090	MODULE, DIODE ARRAY (1991)	12088529
53.	9-L17	2.483	BRACKET, MULTIUSE RLY	10240571
54.	9-M5	3.887	MODULE, CR/CONT (AC-DELCO #25140992)	25140992
55.	9-L28	2.575	FLASHER, HAZARD LP (AC-DELCO #SF552)	491391
	9-M2	2.892	FLASHER, T/SIG LP (AC-DELCO #SF323YB)	10041073
56.	9-L28	2.815	RELAY, HORN (1.055) (AC-DELCO #15-8426)	14100455
	9-M21	9.778	RELAY, R/WDO DEFG (1.055) (AC-DELCO #15-8426)	14100455
57.	9-N21	14.865	BRACKET, INFL RST CONT MOD-RH (L SHAPED W/4 HOLES)	10086177
58.	9-L27	2.560	MODULE, BODY CONT (1990)	16146688
	9-L27	2.560	MODULE, BODY CONT (1991)	16155502
59.		DISCON	BRACKET, INFL RST CONT MOD (INCL NUTS & STUDS)	10085936
60.	9-N21	14.865	BRACKET, INFL RST CONT MOD-LH (L SHAPED W/4 HOLES)	10086086
61.	9-N21	14.865	MODULE, INFL RST RESV ENGY (DERM) (1990)	10094618
	9-N21	14.865	MODULE, INFL RST RESV ENGY (DERM) (1991) (AC-DELCO #1228874)	1228874
62.		DISCON	BRACKET, DRIVER KNEE BOLS INR-LH (1990)	10175531
		DISCON	BRACKET, DRIVER KNEE BOLS INR-LH (1991)	10211797
63.	9-L27	2.560	BRACKET, BODY CONT MOD BRKT	10085989
64.	9-M20	9.743	CARRIER, INST (UPR)	10086247
65.	9-A21	10.235	BRACE, DRIVER KNEE BOLS INR BRKT	10259399
66.	9-L27	2.560	NUT, BCM (BODY CONT MDL RET) (AC-DELCO #10027015)	10027015
67.		DISCON	BRACKET, PASSENGER KNEE BOLS INR-RH	10175532
68.		N.S.	HARNESS, WRG (SEE PARTS SECTION FOR ADDITIONAL USAGE) .	
69.	9-L17	2.483	BRACKET, WRG HARN FUSE BLK	14062568
70.	9-L6	2.188	SWITCH, ENG PWR (1990) (CPS)	14104646
	9-L5	2.187	KEY, ENG PWR SW (1990)	12505009
	9-L6	2.188	SWITCH, ENG PWR (1991)	12514730
71.	9-A28	10.252	PLATE, ACSRY TR (L98/5.7)	10085911
		DISCON	PLATE, ACSRY TR (1990 LT5/5.7J)	10086273
		DISCON	PLATE, ACSRY TR (1991 LT5/5.7J)	10177904
72.	9-L6	2.188	RETAINER, ENG PWR SW (1990)	5713260

© 2000 GENERAL MOTORS SERVICE PARTS OPERATIONS-CHEVROLET-14Y

				1Y10-301
73.		DISCON	PLATE, SW TR	10085914
74.	9-M22	9.780	DUCT, SI WDO DEFG OTLT OTR TO I/P-LH	10100177
75.		DISCON	BRACE, LWR-LH	10085905
76.		DISCON	BRACE, LWR-RH	10085906
77.		DISCON	SEAL, LAP AIR OTLT DUCT	10086125
78.	9-A21	10.235	BOLSTER, DRIVER KNEE	10172459
79.		DISCON	DUCT, LAP AIR OTLT LWR (1990-1991)	10158009
80.	9-A21	10.235	BRACKET, DRIVER KNEE BOLS CTR (10.235)	10251817
81.	9-A18	10.230	SUPPORT, LWR TR PNL	10175530
82.	9-M14	9.275	SENSOR, SUN LOAD TEMP (1990) (AC-DELCO #15-71638)	16123101
	9-M14	9.275	SENSOR, SUN LOAD TEMP (1991) (AC-DELCO #15-71850)	16137801
83.	9-M22	9.779	GRILLE, W/S DEFR NOZ (C68)	10242848
84.	9-M22	9.779	GRILLE, W/S DEFR NOZ (C60)	10242849
85.	9-A28	10.261	PANEL, COMPT DR INR	10221110
86.		DISCON	HINGE, COMPT DR	10137257
87.	9-B3	10.275	SWITCH, I/P COMPT LP (W/SOC)	12373319
88.	9-A28	10.261	DOOR, COMPT	10216288
89.	9-A18	10.230	REINFORCEMENT, CTR LWR SUPT	10086173
90.		DISCON	RETAINER, I/P (PART OF W/S INR LWR FRAME GRP 12.807)	10086122
91.	9-A18	10.230	BRACKET, SND INSL	14104971
92.	9-A18	10.230	SUPPORT, CTR LWR	10086085
93.	9-A23	10.240	NUT (1991)	10175813
94.		DISCON	GRILLE, UPR TR PAD AIR VENT (9.789)	10086032
95.	9-M22	9.780	GRILLE, SI WDO DEFG OTLT-RH	10153626
96.	9-M22	9.780	GRILLE, SI WDO DEFG OTLT-LH	10086033

RPO DEFINITIONS
UM6 – RADIO,AM/FM STEREO,CASSETTE,ETR,INCLUDES CLOCK
UU8 – RADIO,AM/FM STEREO,CASSETTE,ETR,DELCO/BOSE,DOLBY,INCLUDES CLOCK

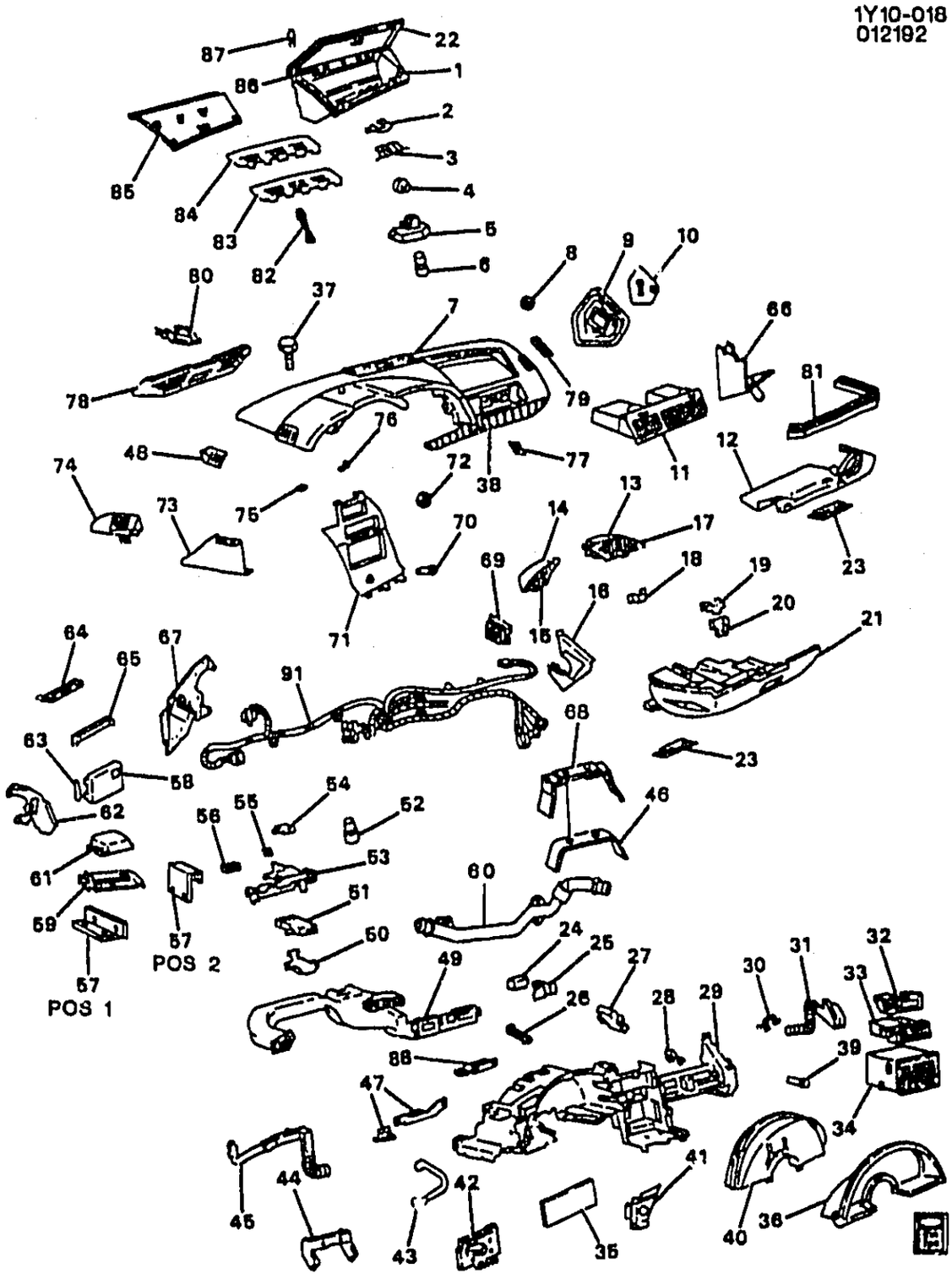

1992 Y INSTRUMENT PANEL

1.	9-A28	10.260	COMPARTMENT, I/P	92	Y	1	10137256
2.	9-B3	10.268	RETAINER, I/P COMPT DR LK (10.262)	92	Y	1	10024625
3.	9-B3	10.268	STRIKER, I/P COMPT DR LK	92	Y	1	10137258
4.	9-A28	10.263	BUMPER, I/P COMPT DR STOP (I/P UPR TR)	92	Y	2	1625385

© 2000 GENERAL MOTORS SERVICE PARTS OPERATIONS-CHEVROLET-14Y

							1Y10-018
5.	9-B2	10.266	LOCK, I/P COMPT DR (PAINT TO MATCH)	92	Y	1	14042799
6.	9-B3	10.275	LENS, I/P COMPT LP (GLOVE BOX) (2.776)	92	Y	1	14059078
7.		DISCON	PAD, I/P UPR TR (INCLS 38) (RED)	92	Y (73I)	1	10193735
	9-A21	10.235	PAD, I/P UPR TR (INCLS 38) (BLACK)	92	Y (10I, 19I)	1	10242873
8.	9-L17	2.483	NUT, I/P FUSE BLK ACC HOLE CVR	92	Y	1	14049066
9.	9-A28	10.252	PANEL, I/P SI TR	92	Y	1	10267755
10.	9-L17	2.483	COVER, I/P FUSE BLK ACC HOLE	92	Y	1	10172478
11.	9-M12	9.262	OUTLET, I/P OTR AIR (CPS) (BLACK)	92	Y	RH	10199754
	9-M12	9.264	DEFLECTOR, I/P OTR AIR OTLT (INBOARD)	92	Y	RH	10256267
	9-M12	9.264	DEFLECTOR, I/P OTR AIR OTLT (OUTBOARD)	92	Y	RH	10263250
	9-M12	9.264	GRILLE, I/P OTR AIR OTLT (BLACK)	92	Y	RH	10085982
12.	9-A18	10.230	PANEL, I/P LWR TR (PAINT TO MATCH)	92	Y	RH	10086210
13.	9-M12	9.264	DEFLECTOR, I/P CTR AIR OTLT	92	Y	1	10272750
14.	9-M12	9.264	DEFLECTOR, I/P OTR AIR OTLT	92	Y	LH	10199753
15.		DISCON	GRILLE, I/P OTR AIR OTLT (BLACK)	92	Y	LH	10199769
16.		DISCON	BRACKET, I/P PASS KNEE BOLS OTR	92	Y	RH	10085944
17.		DISCON	GRILLE, I/P CTR AIR OTLT (9.264)	92	Y	1	10199768
18.	9-L19	2.490	DIMMER, I/P LP (AC-DELCO #D1509B)	92	Y	1	1995263
19.	9-L8	2.440	BRACKET, I/P WRG HARN ECM DATA LINK CONN (DIAG CONN)	92	Y	1	14073479
20.	9-L8	2.440	COVER, I/P WRG HARN DATA LINK CONN	92	Y	1	10021766
21.	9-A18	10.230	PANEL, I/P LWR TR (BLACK)	92	Y (ML9, 10I, 19I)	LH	10193746
		DISCON	PANEL, I/P LWR TR (RED) (10.252)	92	Y (73I)	LH	12523670
		DISCON	PANEL, I/P LWR TR (BEIGE)	92	Y (64I)	LH	12523672
		DISCON	PANEL, I/P LWR TR (GRAY)	92	Y (MD8, 14I)	LH	12523673
		DISCON	PANEL, I/P LWR TR (BLACK)	92	Y (MD8, 10I, 19I)	LH	12523674
		DISCON	PANEL, I/P LWR TR (BLACK)	92	Y (ML9, 10I, 19I)	1	12523674
22.	9-A28	10.261	DOOR, I/P COMPT	92	Y	1	10216288
23.	9-C27	11.927	LAMP, CTSY (USED W/9433040 BULB)	92	Y	1	10199743
		8.991	BULB, 12CP ID 561 (AC-DELCO #561)	92		AR	9433040
24.	9-M21	9.765	ALARM, ST BELT & IGN KEY & LPS	92	Y	1	25518745
	9-L8	2.461	ALARM, ST BELT & IGN KEY & LPS (9.765)	92	Y	1	25518745
25.	9-L7	2.195	BRACKET, ST BELT & IGN KEY & LPS ALARM	92	Y	1	10098454
	9-M21	9.765	BRACKET, ST BELT & IGN KEY & LPS ALARM (2.195)	92	Y	1	10098454
26.	9-A18	10.230	BRACE, I/P UPR	92	Y	LH	10085903
27.	9-M9	5.890	MODULE, LOW TIRE PRESS IND	92	Y (UJ6)	1	10143565

							1Y10-018
28.	9-M14	9.275	SENSOR, I/S AIR TEMP (AC-DELCO #15-71650)	92	Y (C68)	1	16129011
29.	9-A18	10.230	PANEL, INST (INCLS 35, 47, 88) .	92	Y	1	10167108
30.		8.965	STRAP-TIE-7"ADJ (W/ROSEBUD FOR .25 DIA HOLE .031-.14 TH)	92	.....	AR	3816659
31.	9-M22	9.780	DUCT, SI WDO DEFG OTLT	92	Y	RH	10239089
32.		DISCON	DISPLAY, DRVR INFO	92	Y	1	16157161
	9-M21	9.768	APPLIQUE, DRVR INFO DISPLAY (9.743) (AC-DELCO #16159248)		.....		16159248
	9-M21	9.768	SWITCH, DRVR INFO DISPLAY (INCLS RESET BUTTON) (9.765) (AC-DELCO #16159512)		Y		16159512
		N.S.	BOLT, DRVR INFO DISPLAY	92	Y		
		8.991	BULB, SPD IND LP W/SOCKET TRADE #PC74 (.7 CP) (DRVR INFO CTR) (AC-DELCO #25086809)	92	.....	AR	25086809
33.	9-M13	9.273	CONTROL, HTR & A/C (SEE GROUP 9.000 "A/C & HEATER CONTROL ASM" FOR DETAIL ILLUSTRATED VIEW.) (AC-DELCO #15-71929)	92	Y07 (C60)	1	16162371
	9-M13	9.273	CONTROL, HTR & A/C (SEE GROUP 9.000 "A/C & HEATER CONTROL ASM" FOR DETAIL ILLUSTRATED VIEW.) (AC-DELCO #15-71928)	92	Y67 (C60, DL8) (EXC CC2)	1	16162361
	9-M13	9.273	CONTROL, HTR & A/C (SEE GROUP 9.000 "A/C & HEATER CONTROL ASM" FOR DETAIL ILLUSTRATED VIEW.) (AC-DELCO #15-71929)	92	Y67 (CC2, C60)	1	16162371
	9-M13	9.273	CONTROL, HTR & A/C (SEE GROUP 9.000 "A/C & HEATER CONTROL ASM" FOR DETAIL ILLUSTRATED VIEW.) (AC-DELCO #15-71929)	92	Y67 (C60, DC8) (EXC CC2) (EXPORT)	1	16162371
34.		N.S.	CONTROL, AM/FM STEREO & CLK & T/PLYR RDO (AVAILABLE ONLY THROUGH AC DELCO SERVICE CENTERS)		.....		
35.	9-A18	10.230	INSULATOR, I/P (PART OF 29) (9.260)	92	Y	1	3999572
36.	9-M20	9.743	PLATE, I/P CSTR TR	92	Y	1	10253257
37.		8.977	BOLT/SCREW ASM M4.2X1.41 #18 HEX HD GM71	92	.....	AR	11515303
38.		DISCON	CARPET, I/P LWR T/PNL (PART OF 7) (BLACK) (10.235)	92	Y (19I)	1	10181250
		DISCON	CARPET, I/P LWR T/PNL (PART OF 7) (RED) (10.235)	92	Y (73I)	1	10181252
		DISCON	CARPET, I/P LWR T/PNL (PART OF 7) (GRAY) (10.235)	92	Y (14I)	1	12515911
		DISCON	CARPET, I/P LWR T/PNL (PART OF 7) (BEIGE) (10.235)	92	Y (64I)	1	12515912
39.	9-M19	9.667	NUT, RDO CONT (PUSH-ON) (OVERALL LENGTH 1.25") (3.671) (AC-DELCO #10027015)	92	Y	1	10027015

© 2000 GENERAL MOTORS SERVICE PARTS OPERATIONS-CHEVROLET-14Y

							1Y10-018
40.		DISCON	**CLUSTER**, INST (LIQ CRYSTAL DISPLAY) (CPS) (SEE SERVICE BULLETIN FOR REPAIR PROCEDURE)	92	Y (LT1, U52) (EXC U19)	1	16158831
	9-M20	9.743	**BEZEL**, INST CSTR (AC-DELCO #25084950)	92	Y (LT1, U52)	1	25084950
	9-M20	9.743	**BEZEL**, INST CSTR (AC-DELCO #25084950)	92	Y (LT5, U52) (EXC B4H)	1	25084950
	9-M20	9.748	**LENS**, INST CSTR (AC-DELCO #25084951)	92	Y (LT1, LT5, U52)	1	25084951
		8.991	**LAMP**, W/SOCKET (TRADE #PC195 (INST CSTR BULB) (AC-DELCO #25089350)	92	.....	1	25089350
		8.991	**BULB**, W/SOCKET .9 CANDLE (INST CSTR BULB) (AC-DELCO #25089349)	92	.....	1	25089349
		DISCON	**CLUSTER**, INST (LIQ CRYSTAL DISPLAY) (CPS) (SEE SERVICE BULLETIN FOR REPAIR PROCEDURE)	92	Y (LT1, U19, U52) (EXPORT)	1	16158851
		DISCON	**CLUSTER**, INST (LIQ CRYSTAL DISPLAY) (CPS) (SEE SERVICE BULLETIN FOR REPAIR PROCEDURE)	92	Y (LT5, U19, U52) (EXC B4H) (EXPORT)	1	16158861
		DISCON	**CLUSTER**, INST (LIQ CRYSTAL DISPLAY) (CPS) (SEE SERVICE BULLETIN FOR REPAIR PROCEDURE)	92	Y (LT5, B4H, U19, U52) (EXPORT)	1	16172481
41.	9-L18	2.485	**SWITCH**, HDLP & I/P LP DIMR & ACSRY & ELEK TRACT CONT (W/HSG) (AC-DELCO #D1588C)	92	Y	1	10098500
	9-L18	2.485	**LAMP**, HDLP SW (FOG LP) (CARTRIDGE TYPE-CLEAR BULB W/ORANGE CAP)	92	Y	1	10159561
	9-L19	2.487	**LAMP**, FOG LP SW (2.485)	92	Y	1	12506368
42.	9-M14	9.275	**BRACKET**, HTR & A/C PROGMR .	92	Y	1	10086302
43.	9-A21	10.235	**BRACKET**, I/P DRVR KNEE BOLS OTR (10.230)	92	Y	LH	10085943
44.	9-A18	10.230	**BRACKET**, I/P REINF	92	Y	1	10085902
45.	9-M22	9.780	**DUCT**, SI WDO DEFG OTLT	92	Y	LH	10158004
46.	9-A18	10.230	**REINFORCEMENT**, I/P CTR LWR SUPT	92	Y	1	10086173
47.	9-L17	2.483	**BRACKET**, MULTIUSE RLY (PART OF 29) (5.2", 132 MM LG) (PLASTIC)	92	Y	1	10167109
48.	9-M22	9.780	**GRILLE**, SI WDO DEFG OTLT (LEFT SIDE) (BLACK)	92	Y	1	10086033
49.	9-M22	9.786	**DUCT**, AIR DISTR (NO LAP COOLER DUCTS)	92	Y	1	10157937
50.		DISCON	**BRACKET**, I/P WRG HARN	92	Y	1	10165378
51.		N.S.	**RADIO**, AM/FM STEREO & CLK & T/PLYR & CD PLYR (AVAILABLE ONLY THROUGH AC DELCO SERVICE CENTERS)		.....		
		N.S.	**RADIO**, AM/FM STEREO & CLK (AVAILABLE ONLY THROUGH AC DELCO SERVICE CENTERS)		.....		

		N.S.	RADIO, AM/FM STEREO (AVAILABLE ONLY THROUGH AC DELCO SERVICE CENTERS)				
52.	9-L19	2.510	MODULE, I/P WRG HARN	92	Y	1	12088529
53.	9-L17	2.483	BRACKET, MULTIUSE RLY (BLACK) (18.3", 465.0MM LONG) (PLASTIC)	92	Y	1	10240571
54.	9-M5	3.887	MODULE, CRCONT (AC-DELCO #25140992)	92	Y	1	25140992
55.	9-L28	2.575	FLASHER, HAZARD LP (1 1/2" DIA) (6 LP FLSHR) (AC-DELCO #SF552)	92	Y	1	491391
	9-M2	2.892	FLASHER, T/SIG LP (YELLOW) (AC-DELCO #SF323YB)	92	Y	1	10041073
56.	9-M21	9.778	RELAY, R/WDO DEFG (BLACK) (5-WAY) (9.277) (AC-DELCO #15-8426)	92	Y	1	14100455
57.	9-N21	14.865	BRACKET, INFL RST CONT MDL (4 HOLES, L-SHAPED, POSN #1)	92	Y	LH	10086086
	9-N21	14.865	BRACKET, INFL RST CONT MDL (4 HOLES, L-SHAPED, POSN #1)	92	Y	RH	10086177
		DISCON	BRACKET, INFL RST CONT MDL (POSN #2)	92	Y	1	10211797
58.	9-L27	2.560	MODULE, BODY CONT (REMAN)	92	Y	1	16193458
59.		DISCON	BRACKET, INFL RST CONT MDL (2 WELDED NUTS, 4 WELDED STUDS)	92	Y	1	10193723
60.	9-M22	9.780	DUCT, SI WDO DEFG OTLT (INR CTR)	92	Y	1	10247780
61.	9-N21	14.865	MODULE, INFL RST DIAGN ENGY RESV (REMAN) (DERM) (AC-DELCO #1228874) (USE ON PROD UNITS W/16081221 ON LABEL)	92	Y (1ST DES)	1	1228874
	9-N21	14.865	MODULE, INFL RST DIAGN ENGY RESV (REMAN) (AC-DELCO #16177277) (USE ON PROD UNITS W/16176561 ON LABEL)	92	Y (2ND DES)	1	16177277
62.		DISCON	BRACKET, I/P DRVR KNEE BOLS INR	92	Y	1	10211797
63.	9-L27	2.560	BRACKET, BCM BRKT	92	Y	1	10085989
64.	9-M20	9.743	CARRIER, INST (UPR) (10.230) ..	92	Y	1	10086247
65.	9-A21	10.235	BRACE, I/P DRVR KNEE BOLS INR BRKT	92	Y	1	10259399
66.	9-A18	10.230	BRACKET, I/P INSL	92	Y	1	14104971
67.		DISCON	BRACKET, I/P PASS KNEE BOLS INR	92	Y	1	10175591
68.	9-A18	10.230	SUPPORT, I/P CTR LWR	92	Y	1	10086085
69.	9-L17	2.483	BRACKET, I/P WRG HARN FUSE BLK	92	Y	1	14062568
70.	9-L6	2.188	SWITCH, ENG PWR	92	Y (LT5)	1	12514730
71.	9-A28	10.252	PLATE, I/P ACSRY TR (BLACK) ..	92	Y (LT1)	1	10233785
	9-A28	10.252	PLATE, I/P ACSRY TR	92	Y (LT5)	1	10233781
72.	9-A23	10.240	NUT, F/FLR CNSL TR PLT (10.252)	92	Y (MD8)	6	10175813

© 2000 GENERAL MOTORS SERVICE PARTS OPERATIONS-CHEVROLET-14Y

							1Y10-018
	9-A23	10.240	NUT, F/FLR CNSL TR PLT (10.252)	92	Y (ML9)	4	10175813
73.		DISCON	PLATE, I/P SW TR (10.252)	92	Y	1	10085914
74.	9-M22	9.780	DUCT, SI WDO DEFG OTLT (OTR TO I/P)	92	Y	1	10100177
75.		DISCON	BRACE, I/P LWR	92	Y	LH	10085905
76.		DISCON	BRACE, I/P LWR	92	Y	RH	10085906
77.		DISCON	GRILLE, I/P UPR TR PAD AIR VENT (BLACK) (9.769)	92	Y	1	10086032
78.	9-A21	10.235	BOLSTER, I/P DRVR KNEE	92	Y	1	10251819
79.	9-M22	9.780	GRILLE, SI WDO DEFG OTLT (RIGHT SIDE) (BLACK)	92	Y	1	10153626
80.	9-A21	10.235	BRACKET, I/P DRVR KNEE BOLS CTR	92	Y	1	10251817
81.	9-A18	10.230	SUPPORT, I/P LWR T/PNL	92	Y	1	10175530
82.	9-M14	9.275	SENSOR, SUN LOAD TEMP (INCLUDES COVER) (AC-DELCO #15-71850)	92	Y (C68)	1	16137801
83.	9-M22	9.779	GRILLE, W/S DEFR NOZ (BLACK)	92	Y (C68)	1	10242848
84.	9-M22	9.779	GRILLE, W/S DEFR NOZ (BLACK)	92	Y (C60)	1	10242849
85.	9-A28	10.261	PANEL, I/P COMPT DR INR (WHEN USING ON EARLY 92 VEHICLES IT WILL BE NECESSARY TO REPL I/P COMPARTMENT WITH 10216271)	92	Y	1	10221116
86.		DISCON	HINGE, I/P COMPT DR (10.262)	92	Y	1	10137257
87.		N.S.	LAMP, I/P COMPT				
	9-B3	10.275	SWITCH, I/P COMPT LP (W/BULB & CONN HARN) (NEED TO CUT AND SPLICE LEADS)	92	Y	1	12373319
88.	9-L17	2.483	BRACKET, MULTIUSE RLY (PART OF 29) (4.0", 102.0 MM LG) (PLASTIC)	92	Y	1	10172488
91.	9-L8	2.480	HARNESS, I/P WRG	92	Y (MD8, C60) (EXC T61)	1	12125005
	9-L8	2.480	HARNESS, I/P WRG	92	Y (ML9, C60) (EXC T61)	1	12125007
	9-L8	2.480	HARNESS, I/P WRG	92	Y (MD8, C68) (EXC T61)	1	12125813
	9-L8	2.480	HARNESS, I/P WRG	92	Y (ML9, C68) (EXC T61)	1	12125815

RPO DEFINITIONS

B4H – MODIFICATION–NOISE CONTROL, EXPORT
CC2 – ROOF,AUXILIARY
C60 – AIR CONDITIONER,FRONT,MANUAL CONTROLS
C68 – AIR CONDITIONER,FRONT,AUTOMATIC,ELECTRONIC CONTROLS
DC8 – MIRROR,OUTSIDE,RH AND LH REMOTE CONTROL ELECTRIC,BREAKAWAY(PAINTED)(55 INCH FIELD OF VIEW)
DL8 – MIRROR,OUTSIDE,RH AND LH REMOTE CONTROL,ELECTRIC,DEFOG
LT1 – ENGINE–GAS, 8 CYL, 5.7L(5.7P),MFI,HO
LT5 – ENGINE,5.7L(5.7J),TPI
MD8 – TRANSMISSION,AUTOMATIC 4–SPEED(THM700R4/4L60)
ML9 – TRANSMISSION,MANUAL 6–SPEED
T61 – LIGHTING,DAYTIME RUNNING
UJ6 – INDICATOR,LOW TIRE PRESS
U19 – SPEEDOMETER,INSTRUMENT(EXPORT)
U52 – CLUSTER,INSTRUMENT(ELECTRONIC)
10I – INTERIOR TRIM– ARCTIC WHITE

© 2000 GENERAL MOTORS SERVICE PARTS OPERATIONS–CHEVROLET–14Y

141 – INTERIOR TRIM LT GRAY
191 – INTERIOR TRIM,BLACK
641 – INTERIOR TRIM,LIGHT BEIGE
731 – INTERIOR TRIM,FLAME RED

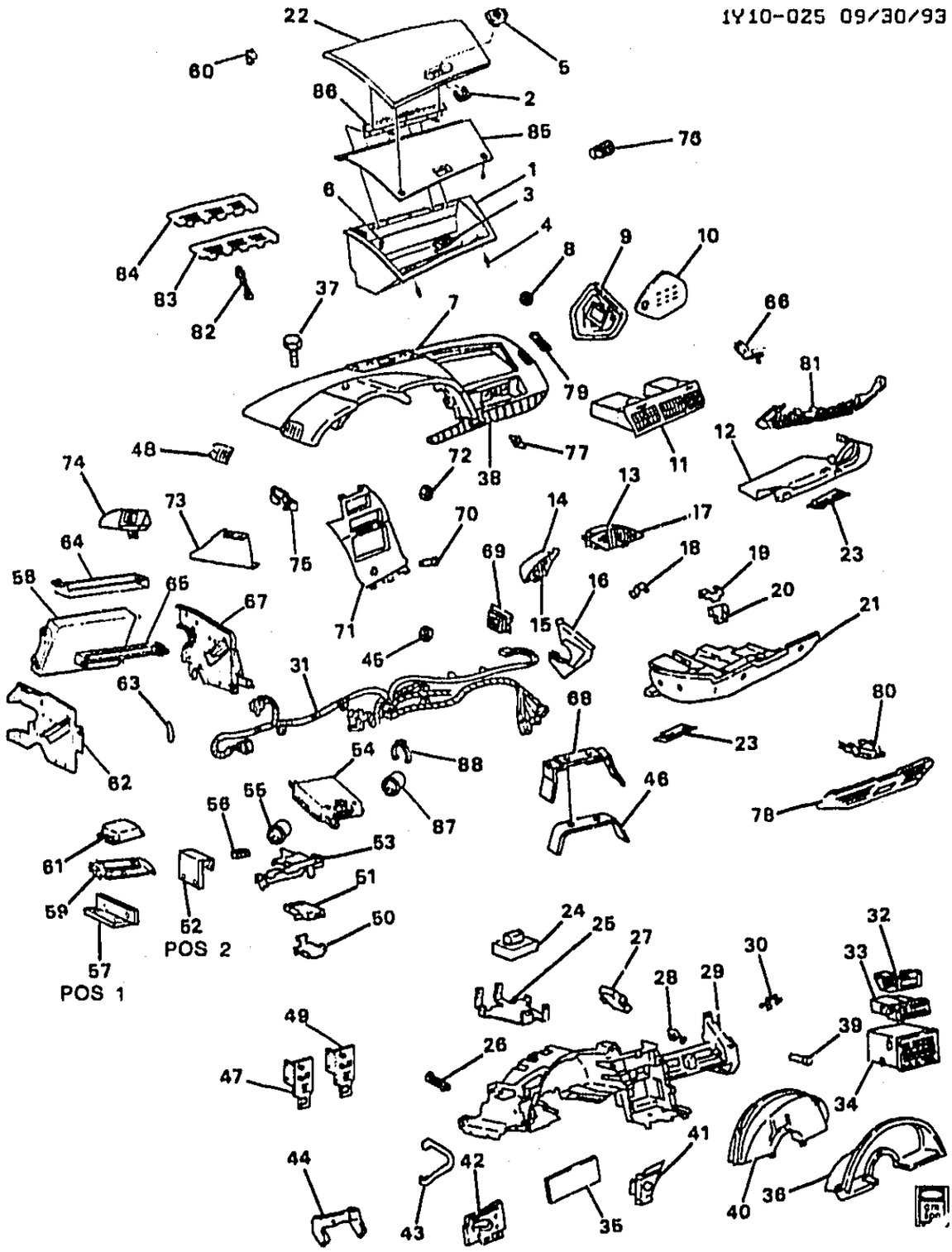

1Y10-025

1993 Y INSTRUMENT PANEL

1.	9-A28	10.260	COMPARTMENT, I/P	93	Y	1	10225894
2.	9-B3	10.268	RETAINER, I/P COMPT DR LK (PART OF 7) (10.262)	93	Y	1	10024625
3.	9-B3	10.268	STRIKER, I/P COMPT DR LK (PART OF 7)	93	Y	1	10137256

© 2000 GENERAL MOTORS SERVICE PARTS OPERATIONS-CHEVROLET-14Y

							1Y10-025
4.	9-A28	10.263	BUMPER, I/P COMPT DR STOP (I/P UPR TR) (PART OF 7)	93	Y	2	1625385
5.	9-B2	10.266	LOCK, I/P COMPT DR (PART OF 7) (PAINT TO MATCH)	93	Y	1	14042799
6.	9-B3	10.275	LENS, I/P COMPT LP (PART OF 7) (GLOVE BOX) (2.776)	93	Y	1	14059878
7.	9-A21	10.235	PAD, I/P UPR TR (INCLS 2-6, 22, 37, 38, 48, 79, 85, 86) (CPS) (BLACK)	93	Y (10I, 19I)	1	10242873
		DISCON	PAD, I/P UPR TR (INCLS 2-6, 22, 37, 38, 48, 79, 85, 86) (CPS) (RED)	93	Y (79I)	1	10242874
		DISCON	PAD, I/P UPR TR (INCLS 2-6, 22, 37, 38, 48, 79, 85, 86) (CPS) (RED)	93	Y (70I)	1	10242875
	9-A21	10.235	SEAL, I/P UPR T/PNL (9.260)	93	Y	2	3999572
8.		N.S.	NUT, I/P FUSE BLK ACC HOLE CVR (PART OF 9)		.....		
9.	9-A28	10.252	PANEL, I/P SI TR (INCLS 8)	93	Y	1	10267755
10.	9-L17	2.483	COVER, I/P FUSE BLK ACC HOLE	93	Y	1	10221936
11.	9-M12	9.262	OUTLET, I/P OTR AIR (CPS) (BLACK)	93	Y	RH	10199754
	9-M12	9.264	DEFLECTOR, I/P OTR AIR OTLT (INBOARD)	93	Y	RH	10256267
	9-M12	9.264	DEFLECTOR, I/P OTR AIR OTLT (OUTBOARD)	93	Y	RH	10263250
	9-M12	9.264	GRILLE, I/P OTR AIR OTLT (BLACK)	93	Y	RH	10085982
12.	9-A18	10.230	PANEL, I/P LWR TR (PAINT TO MATCH)	93	Y	RH	10086210
13.	9-M12	9.264	DEFLECTOR, I/P CTR AIR OTLT .	93	Y	1	10272750
14.	9-M12	9.264	DEFLECTOR, I/P OTR AIR OTLT .	93	Y	LH	10199753
15.		DISCON	GRILLE, I/P OTR AIR OTLT (BLACK)	93	Y	LH	10199769
16.		DISCON	BRACKET, I/P PASS KNEE BOLS OTR	93	Y	1	10085944
17.		DISCON	GRILLE, I/P CTR AIR OTLT	93	Y	1	10199768
18.	9-L19	2.490	DIMMER, I/P LP (AC-DELCO #D1509B)	93	Y	1	1995263
19.	9-L8	2.440	BRACKET, I/P WRG HARN ECM DATA LINK CONN (DIAG CONN) .	93	Y	1	14073479
20.	9-L8	2.440	COVER, I/P WRG HARN DATA LINK CONN	93	Y	1	10021766
21.	9-A18	10.230	PANEL, I/P LWR TR (BLACK)	93	Y (ML9, 10I, 19I)	LH	10193746
		DISCON	PANEL, I/P LWR TR (BEIGE)	93	Y (64I)	LH	12523672
		DISCON	PANEL, I/P LWR TR (GRAY)	93	Y (MD8, 14I)	LH	12523673
		DISCON	PANEL, I/P LWR TR (BLACK)	93	Y (MD8, 10I, 19I)	LH	12523674
		DISCON	PANEL, I/P LWR TR (BLACK)	93	Y (ML9, 10I, 19I)	1	12523674
		DISCON	PANEL, I/P LWR TR (RED)	93	Y (MD8, ML9, 79I)	LH	12523675
		DISCON	PANEL, I/P LWR TR (RED)	93	Y (MD8, ML9, 70I)	LH	12523676
22.	9-A28	10.261	DOOR, I/P COMPT (PART OF 7) .	93	Y	1	10216288
23.	9-C27	11.927	LAMP, CTSY (USED W/9433040 BULB)	93	Y	2	10199743
		8.991	BULB, 12CP ID 561 (AC-DELCO #L561)	93	.....	AR	9433040

							1Y10-025
24.	9-L7	2.195	**ALARM**, ST BELT & IGN KEY & LPS (W/R/CON DR LK RCVR) (9.765)	93	Y	1	25518745
25.	9-B5	10.485	**BRACKET**, R/CON DR LK RCVR .	93	Y	1	10252241
26.	9-A18	10.230	**BRACE**, I/P UPR	93	Y	LH	10085903
27.	9-M9	5.890	**MODULE**, LOW TIRE PRESS IND	93	Y (UJ6)	1	10161858
28.	9-M14	9.275	**SENSOR**, I/S AIR TEMP (AC-DELCO #15-71650)	93	Y (C68)	1	16129011
29.	9-A18	10.230	**PANEL**, INST (INCLS 35, 47, 49) .	93	Y	1	10167108
30.		8.965	**STRAP-TIE-7"ADJ** (W/ROSEBUD FOR .25 DIA HOLE .031-.14 TH) (ENG WRG HARN) .	93	.....	1	3816659
31.	9-	2.480	**HARNESS**, I/P WRG	93	Y (MD8, C60) (EXC T90)	1	12141443
	9-L8	2.480	**HARNESS**, I/P WRG (FOR VEH -DRL, SPLICE CAV D TO CAV E @ BLUE 8-WAY DRL MDL CONN.)	93	Y (ML9, C68) (EXC T90)	1	12141444
	9-L8	2.480	**HARNESS**, I/P WRG	93	Y (ML9, C60) (EXC T90)	1	12141445
	9-L8	2.480	**HARNESS**, I/P WRG (ON VEHS W/O DAYTIME RUNNING LPS SPLICE CAV D & E WIRES TOGETHER AT BLUE DRL MDL CONN.)	93	Y (MD8, C68) (EXC T90)	1	12141446
	9-L8	2.480	**HARNESS**, I/P WRG	93	Y (ML9, C68, T90) (EXPORT)	1	12141441
	9-L8	2.480	**HARNESS**, I/P WRG	93	Y (MD8, C68, T90) (EXPORT)	1	12141442
32.		DISCON	**DISPLAY**, DRVR INFO (CPS)	93	Y	1	16157161
	9-M21	9.768	**APPLIQUE**, DRVR INFO DISPLAY (9.743) (AC-DELCO #16159248)	93	Y	1	16159248
	9-M21	9.768	**SWITCH**, DRVR INFO DISPLAY (INCLS RESET BUTTON) (9.765) (AC-DELCO #16159512)	93	Y	1	16159512
	9-M21	9.768	**BOLT**, DRVR INFO DISPLAY (M3.5) (9.735) (AC-DELCO #25112341)	93	Y	1	25112341
		8.991	**BULB**, SPD IND LP W/SOCKET TRADE #PC74 (.7 CP) (DRVR INFO CTR) (AC-DELCO #25086809)	93	.....	AR	25086809
	9-M21	9.768	**RETAINER**, DRVR INFO DISPLAY (9.748) (AC-DELCO #25088429)	93	Y	1	25088429
33.	9-M13	9.273	**CONTROL**, HTR & A/C (SEE GROUP 9.000 "A/C & HEATER CONTROL ASM" FOR DETAIL ILLUSTRATED VIEW.) (AC-DELCO #15-71929)	93	Y07 (C60)	1	16162371
	9-M13	9.273	**CONTROL**, HTR & A/C (SEE GROUP 9.000 "A/C & HEATER CONTROL ASM" FOR DETAIL ILLUSTRATED VIEW.) (AC-DELCO #15-71928)	93	Y67 (C60, DL8) (EXC CC2)	1	16162361
	9-M13	9.273	**CONTROL**, HTR & A/C (SEE GROUP 9.000 "A/C & HEATER CONTROL ASM" FOR DETAIL ILLUSTRATED VIEW.) (AC-DELCO #15-71929)	93	Y67 (CC2, C60)	1	16162371

								1Y10-025
34.		N.S.	CONTROL, AM/FM STEREO & CLK & T/PLYR RDO (AVAILABLE ONLY THROUGH AC DELCO SERVICE CENTERS)					
35.	9-A18	10.230	INSULATOR, I/P (PART OF 29) (9.260)	93	Y		1	3999572
36.	9-M20	9.743	PLATE, I/P CSTR TR	93	Y		1	10253257
37.		8.977	BOLT/SCREW ASM M4.2X1.41 #18 HEX HD GM71 (I/P COMPT) (PART OF 7)	93	.....		3	11515303
38.		DISCON	CARPET, I/P LWR T/PNL (PART OF 7) (GRAY) (10.235)	93	Y (14I)		1	12515911
		DISCON	CARPET, I/P LWR T/PNL (PART OF 7) (BEIGE) (10.235)	93	Y (64I)		1	12515912
		DISCON	CARPET, I/P LWR T/PNL (PART OF 7) (BLACK) (10.235)	93	Y (10I, 19I)		1	10181250
		DISCON	CARPET, I/P LWR T/PNL (PART OF 7) (RED) (10.235)	93	Y (79I)		1	12518335
39.	9-M19	9.667	NUT, RDO CONT (PUSH-ON) (OVERALL LENGTH 1.25") (3.671) (AC-DELCO #10027015)	93	Y		1	10027015
40.		DISCON	CLUSTER, INST (LIQ CRYSTAL DISPLAY) (SEE SERVICE BULLETIN FOR REPAIR PROCEDURE.)	93	Y (LT1, U52) (EXC U19)		1	16158831
		DISCON	CLUSTER, INST (LIQ CRYSTAL DISPLAY) (SEE SERVICE BULLETIN FOR REPAIR PROCEDURE.)	93	Y (LT1, U19, U52) (EXPORT)		1	16158851
		DISCON	CLUSTER, INST (LIQ CRYSTAL DISPLAY) (SEE SERVICE BULLETIN FOR REPAIR PROCEDURE.)	93	Y (LT5, U19, U52) (EXPORT)		1	16158861
41.	9-L18	2.485	SWITCH, HDLP & I/P LP DIMR & ACSRY & ELEK TRACT CONT (W/HSG) (CPS) (AC-DELCO #D1588C)	93	Y		1	10098500
	9-L18	2.485	LAMP, HDLP SW (FOG LP) (CARTRIDGE TYPE-CLEAR BULB W/ORANGE CAP)	93	Y		1	10159561
	9-L19	2.487	LAMP, FOG LP SW (2.485)	93	Y		1	12506368
42.	9-M14	9.275	BRACKET, HTR & A/C PROGMR .	93	Y		1	10086302
43.	9-A21	10.235	BRACKET, I/P DRVR KNEE BOLS OTR (10.230)	93	Y		1	10085943
44.	9-A18	10.230	BRACKET, I/P REINF	93	Y		1	10085902
45.	9-A18	10.230	NUT, I/P (PART OF 71) (10.252) ..	93	Y		2	10175813
46.	9-A18	10.230	REINFORCEMENT, I/P CTR LWR SUPT	93	Y		1	10086173
47.	9-L17	2.483	BRACKET, MULTIUSE RLY (PART OF 29) (5.2", 132 MM LG) (PLASTIC)	93	Y		1	10167109
48.	9-M22	9.780	GRILLE, SI WDO DEFG OTLT (LEFT SIDE) (PART OF 7) (BLACK)	93	Y		1	10086033
49.	9-L17	2.483	BRACKET, MULTIUSE RLY (PART OF 29) (4.0", 102.0 MM LG) (PLASTIC)	93	Y		1	10172488
50.		DISCON	BRACKET, I/P WRG HARN	93	Y		1	10165378

© 2000 GENERAL MOTORS SERVICE PARTS OPERATIONS-CHEVROLET-14Y

							1Y10-025
51.		N.S.	RADIO, AM/FM STEREO & CLK & T/PLYR (AVAILABLE ONLY THROUGH AC DELCO SERVICE CENTERS)				
52.		DISCON	BRACKET, INFL RST CONT MDL (POSN #2)	93	Y	1	10211797
53.	9-L17	2.483	BRACKET, MULTIUSE RLY (BLACK) (18.3", 465.0MM LONG) (PLASTIC)	93	Y	1	10240571
54.	9-M5	3.887	MODULE, CRCONT (AC-DELCO #25140723)	93	Y	1	25140723
55.	9-L28	2.575	FLASHER, HAZARD LP (1 1/2" DIA) (6 LP FLSHR) (AC-DELCO #SF552)	93	Y	1	491391
56.	9-M21	9.778	RELAY, R/WDO DEFG (BLACK) (5-WAY) (9.277) (AC-DELCO #15-8426)	93	Y	1	14100455
57.	9-N21	14.865	BRACKET, INFL RST CONT MDL (4 HOLES, L-SHAPED, POSN #1)	93	Y	LH	10086086
	9-N21	14.865	BRACKET, INFL RST CONT MDL (4 HOLES, L-SHAPED, POSN #1)	93	Y	RH	10086177
58.	9-L27	2.560	MODULE, BODY CONT (REMAN)	93	Y	1	16193458
59.		DISCON	BRACKET, INFL RST CONT MDL (2 WELDED NUTS, 4 WELDED STUDS)	93	Y	1	10193723
60.		N.S.	LAMP, I/P COMPT				
	9-B3	10.275	SWITCH, I/P COMPT LP (W/BULB & CONN HARN) (NEED TO CUT AND SPLICE LEADS)	93	Y	1	12373319
61.	9-N21	14.865	MODULE, INFL RST DIAGN ENGY RESV (REMAN) (AC-DELCO #16177277)	93	Y	1	16177277
62.		DISCON	BRACKET, I/P DRVR KNEE BOLS INR	93	Y	1	10211797
63.	9-L27	2.560	BRACKET, BCM BRKT	93	Y	1	10085989
64.	9-M20	9.743	CARRIER, INST (10.230)	93	Y (FE1, FE7)	1	10086247
65.	9-A21	10.235	BRACE, I/P DRVR KNEE BOLS INR BRKT	93	Y	1	10259399
66.	9-A18	10.230	BRACKET, I/P INSL	93	Y	1	14104971
67.		DISCON	BRACKET, I/P PASS KNEE BOLS INR	93	Y	1	10175591
68.	9-A18	10.230	SUPPORT, I/P CTR LWR	93	Y	1	10086085
69.	9-L17	2.483	BRACKET, I/P WRG HARN FUSE BLK	93	Y	1	14062568
70.	9-L6	2.188	SWITCH, ENG PWR	93	Y (LT5)	1	12514730
71.	9-A28	10.252	PLATE, I/P ACSRY TR (BLACK)	93	Y (LT1)	1	10233785
	9-A28	10.252	PLATE, I/P ACSRY TR (INCLS 45)	93	Y (LT5)	1	10233781
72.	9-A23	10.240	NUT, F/FLR CNSL TR PLT (10.252)	93	Y (MD8)	6	10175813
	9-A23	10.240	NUT, F/FLR CNSL TR PLT (10.252)	93	Y (ML9)	4	10175813
73.		DISCON	PLATE, I/P SW TR	93	Y	1	10085914
74.	9-M22	9.780	DUCT, SI WDO DEFG OTLT (OTR TO I/P)	93	Y	1	10100177
75.	9-A28	10.252	CLIP, I/P ACSRY TR PLT	93	Y	2	10175544
76.	9-B2	10.266	CYLINDER, I/P COMPT DR LK	93	Y	1	12506447

								1Y10-025
77.		DISCON	GRILLE, I/P UPR TR PAD AIR VENT (BLACK)	93	Y	1	10086032
78.	9-A21	10.235	BOLSTER, I/P DRVR KNEE	93	Y	1	10251819
79.	9-M22	9.780	GRILLE, SI WDO DEFG OTLT (RIGHT SIDE) (PART OF 7) (BLACK)	93	Y	1	10153626
80.	9-A21	10.235	BRACKET, I/P DRVR KNEE BOLS CTR	93	Y	1	10251817
81.	9-A18	10.230	SUPPORT, I/P LWR T/PNL	93	Y	1	10175530
82.	9-M14	9.275	SENSOR, SUN LOAD TEMP (INCLUDES COVER) (AC-DELCO #15-71850)	93	Y (C68)	1	16137801
83.	9-M22	9.779	GRILLE, W/S DEFR NOZ (BLACK)	93	Y (C68)	1	10242848
84.	9-M22	9.779	GRILLE, W/S DEFR NOZ (BLACK)	93	Y (C60)	1	10242849
85.	9-A28	10.261	PANEL, I/P COMPT DR INR (PART OF 7)	93	Y	1	10221116
86.		DISCON	HINGE, I/P COMPT DR (PART OF 7)	93	Y	1	10137257
87.	9-M2	2.892	FLASHER, T/SIG LP (YELLOW) (AC-DELCO #SF323YB)	93	Y (EXC T90)	1	10041073
	9-M2	2.892	FLASHER, T/SIG LP (YELLOW) (2 LP FLSHR) (AC-DELCO #SF224)	93	Y (T90) (EXPORT)	1	10041074
88.	9-L28	2.575	CLIP, HAZARD LP FLSHR (2.892)	93	Y	2	25534019

RPO DEFINITIONS

CC2 – ROOF,AUXILIARY
C60 – AIR CONDITIONER,FRONT,MANUAL CONTROLS
C68 – AIR CONDITIONER,FRONT,AUTOMATIC,ELECTRONIC CONTROLS
DL8 – MIRROR,OUTSIDE,RH AND LH REMOTE CONTROL,ELECTRIC,DEFOG
FE1 – SUSPENSION SYSTEM,SOFT RIDE
FE7 – SUSPENSION SYSTEM,FRONT AND REAR,HEAVY DUTY(USED WITH PERFORMANCE HANDLING PACKAGE Z51)
LT1 – ENGINE-GAS, 8 CYL, 5.7L(5.7P),MFI,HO
LT5 – ENGINE,5.7L(5.7J),TPI
MD8 – TRANSMISSION,AUTOMATIC 4-SPEED(THM700R4/4L60)
ML9 – TRANSMISSION,MANUAL 6-SPEED
T90 – LAMP,SIGNALING AND MARKER(EXPORT)
UJ6 – INDICATOR,LOW TIRE PRESS
U19 – SPEEDOMETER,INSTRUMENT(EXPORT)
U52 – CLUSTER,INSTRUMENT(ELECTRONIC)
10I – INTERIOR TRIM – ARCTIC WHITE
14I – INTERIOR TRIM LT GRAY
19I – INTERIOR TRIM,BLACK
94I – INTERIOR TRIM,LIGHT BEIGE
70I – INTERIOR TRIM,TORCH RED
79I – INTERIOR TRIM,RUBY RED

MICROFICHE INDEX

GROUPS 10.000 THRU 11.000

FICHE 9 OF 11

GROUP	DESCRIPTION	STARTING GRID LOCATION PARTS	ILLUSTRATIONS
–	GENERAL INFORMATION	1–A2	1–G2
–	ALPHABETICAL INDEX	1–B13	N.A.
10.000	DOORS – REGULATORS – WINDSHIELD – WIPER – WASHER	9–A2	9–D2
11.000	REAR GLASS – SEAT PARTS – ADJUSTER	9–C2	9–I2
–	OUT OF FICHE CALLS	N.A.	9–L4

9–F1

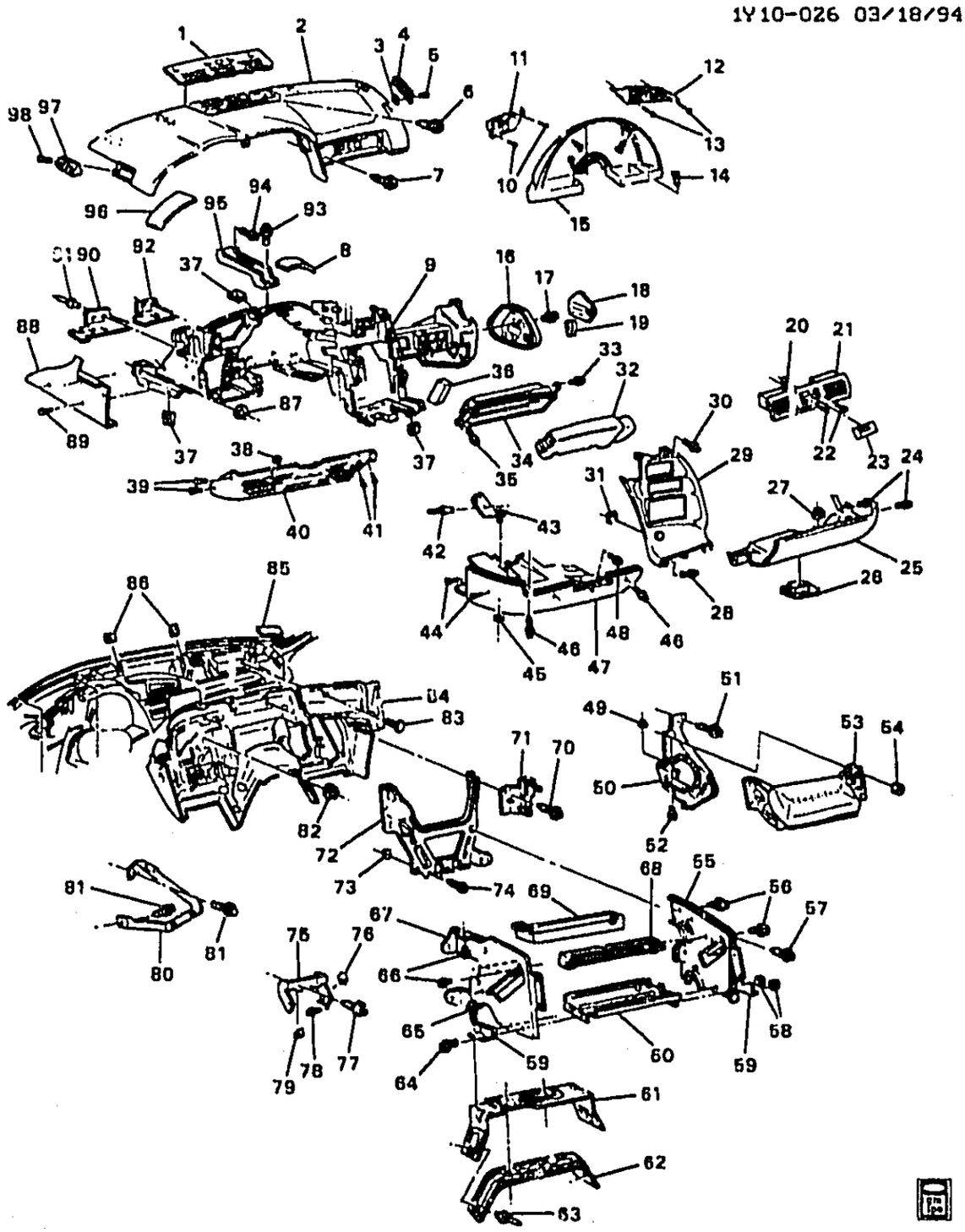

1Y10-026

1994–1996 Y INSTRUMENT PANEL PART 1

1.	9–M22	9.779	GRILLE, W/S DEFR NOZ (BLACK)	94–96 Y (C68)	1	10242848
	9–M22	9.779	GRILLE, W/S DEFR NOZ (BLACK)	94–96 Y (C60)	1	10242849
2.	9–A21	10.235	PAD, I/P UPR TR (W/PASS SI INFL RST CVR) (INCL 3–5, 96–98)	94–96 Y	1	10271585

© 2000 GENERAL MOTORS SERVICE PARTS OPERATIONS–CHEVROLET–14Y

							1Y10-026
3.		8.921	NUT, U-TYPE, 4.2X1.41, DIM A-15, DIM B-14 DIM C-8.65, 1050, PZOR (PART OF 2)	94-96	.....	1	12338121
4.	9-M22	9.780	GRILLE, SI WDO DEFG OTLT (RIGHT SIDE) (PART OF 2) (BLACK)	94-96	Y	1	10153626
5.		8.977	BOLT/SCREW ASM M4.2X1.41 #18 HEX HD GM71 (PART OF 2) .	94-96	.....	1	11515303
6.		8.977	SCREW, HEX WA HD TAP/BSD/#8-18X1.000 PC (I/P UPR TR PAD) (10.230)	94-96	.....	2	9423010
7.		8.977	BOLT, HEX W/12.5 OD WA, M4.2X1.41X16 DBL LD HI-LO 6010M (I/P UPR TR PAD)	94-96	.....	3	11515312
8.	9-A18	10.230	INSULATOR, I/P (PART OF 9) (9.260)	94-96	Y	1	3999572
9.	9-A18	10.230	PANEL, INST (INCL 8, 90-92) ...	94-96	Y	1	10285922
10.		8.977	SCREW, PAN HD TORX W/WA, M4.2X1.41X20, T15, 6 LOB, ZN (I/P OTR AIR OTLT)	94-96	.....	2	11513849
11.	9-M12	9.264	DEFLECTOR, I/P OTR AIR OTLT .	94-96	Y	LH	10199753
	9-M12	9.264	GRILLE, I/P OTR AIR OTLT (BLACK)	94-96	Y	LH	10161885
12.	9-M12	9.264	DEFLECTOR, I/P CTR AIR OTLT .	94-96	Y	1	10272750
	9-M12	9.264	GRILLE, I/P CTR AIR OTLT	94-96	Y	1	10251301
13.		8.977	SCREW, PAN HD TORX W/WA, M4.2X1.41X20, T15, 6 LOB, ZN (I/P CTR AIR OTLT)	94-96	.....	2	11513849
14.		8.977	SCREW, OVAL CSK TRIM HD W/WA TYPE AB (4.2X1.4X20) (I/P CSTR TR PLT BZL) (16.682)	94-96	.....	4	12338093
15.	9-M20	9.743	PLATE, I/P CSTR TR	94-96	Y	1	10253257
16.	9-A28	10.252	PANEL, I/P SI TR (CPS)	94-96	Y	1	10267755
17.		8.977	SCREW, PAN HD TORX W/WA, M4.2X1.41X20, T15, 6 LOB, ZN (I/P FUSE BLK ACC HOLE CVR) .	94-96	.....	3	11513849
18.	9-L17	2.483	COVER, I/P FUSE BLK ACC HOLE (BLACK)	94-95	Y	1	10257359
	9-L17	2.483	COVER, I/P FUSE BLK ACC HOLE (BLACK)	96	Y	1	10280357
19.		N.S.	PULLER, FUSE		.....		
20.		N.S.	CAP, I/S AIR TEMP SEN ASPIRATOR DUCT OPG		.....		
21.	9-M12	9.262	OUTLET, I/P OTR AIR (INCL GRL & 2 DFL) (CPS)	94-96	Y (EXC VD1)	RH	10263246
	9-M12	9.264	GRILLE, I/P OTR AIR OTLT	94-96	Y	RH	10248497
	9-M12	9.264	DEFLECTOR, I/P OTR AIR OTLT (INBOARD)	94-96	Y	RH	10256267
	9-M12	9.264	DEFLECTOR, I/P OTR AIR OTLT (OUTBOARD)	94-96	Y	RH	10263250
	9-M12	9.262	OUTLET, I/P OTR AIR (CPS)	94-96	Y (VD1) (EXPORT)	RH	10263248
22.		8.977	SCREW, PAN HD TORX W/WA, M4.2X1.41X20, T15, 6 LOB, ZN (I/P OTR AIR OTLT)	94-96	.....	2	11513849
23.	9-A28	10.256	COVER, I/P OTR AIR OTLT OPG .	94-96	Y	RH	10210578
24.		8.977	BOLT/SCREW ASM M4.2X1.41 #18 HEX HD GM71 (I/P LWR T/PNL)	94-96	.....	2	11515303

© 2000 GENERAL MOTORS SERVICE PARTS OPERATIONS-CHEVROLET-14Y

							1Y10-026
25.	9-A18	10.230	PANEL, I/P LWR TR (BEIGE) (MAY NEED TO ENLARGE 7MM HOLE & 10X7.6MM SLOT AT RH RR OF PNL TO OBTAIN PROPER FIT)	94-96	Y (64I)	RH	10256832
	9-A18	10.230	PANEL, I/P LWR TR (GRAY) (MAY NEED TO ENLARGE 7MM HOLE & 10X7.6MM SLOT AT RH RR OF PNL TO OBTAIN PROPER FIT) ...	94-96	Y (14I)	RH	10256836
	9-A18	10.230	PANEL, I/P LWR TR (RED)	94-96	Y (70I)	RH	10256834
	9-A18	10.230	PANEL, I/P LWR TR (BLACK)	94-96	Y (19I)	RH	10256836
26.	9-C27	11.927	LAMP, CTSY (USED W/9433040 BULB)	94-96	Y	2	10199743
27.		8.917	NUT, HEX W/CON WA M6X1X5.5 (9) 7111M 16-OD (I/P LWR T/PNL)	94-96	.....	3	11516793
28.		8.900	BOLT/SCREW, HWH W/FL WA M4.2X1.41X20, 6010M, 7253M, 12.5 OD, DOG PT (I/P ACSRY TR PLT) (8.977)	94-96	.....	2	11509709
29.	9-A28	10.252	PLATE, I/P ACSRY TR (INCL 31) .	94-95	Y (LT1)	1	10262830
	9-A28	10.252	PLATE, I/P ACSRY TR (INCL 31) .	94-95	Y (LT5)	1	10262831
	9-A28	10.252	PLATE, I/P ACSRY TR (INCL 31) .	96	Y	1	10262830
30.		8.977	BOLT, HEX W/12.5 OD WA, M4.2X1.41X16 DBL LD HI-LO 6010M (I/P ACSRY TR PLT)	94-96	.....	1	11515312
31.	9-A28	10.252	CLIP, I/P TR PLT (PART OF 29) ...	94-96	Y	1	10270778
32.	9-A21	10.235	BOLSTER, I/P PASS KNEE	94-96	Y	1	10210760
33.		8.900	BOLT, HFH M8X1.25X21MM, 17 OD, 10.9 (I/P PASS KNEE BOLS) .	94-96	.....	2	12551177
34.	9-A21	10.235	REINFORCEMENT, I/P PASS KNEE BOLS	94-96	Y	1	10250906
35.		8.900	BOLT, HEX W/CON WA, M6X1X20 (I/P PASS KNEE BOLS)	94-96	.....	2	11514623
36.	9-A23	10.240	SPACER, F/FLR CNSL SI T/PNL .	94-96	Y	1	10246570
37.		8.921	NUT, U TYPE, MULTI THD, PREV TORQ, M4.2X1.41TAP, 8.1REACH, 0.65-3.80 PNLS 1065 PZOR (I/P) (AC-DELCO #11513599)	94-96	.....	32	11513599
38.		8.921	NUT, U-TYPE, 4.2X1.41, DIM A-15, DIM B-14 DIM C-8.65, 1050, PZOR (PART OF 40)	94-96	.....	1	12338121
39.		8.900	BOLT, HEX W/WA, M8X1.25X20, 8.8, PC (I/P DRVR KNEE BOLS) ..	94-96	.....	2	11504611
40.	9-A21	10.235	BOLSTER, I/P DRVR KNEE (INCL 38)	94-96	Y	1	10251819
41.		8.900	BOLT, HEX W/CON WA, M6X1X20 (I/P DRVR KNEE BOLS)	94-96	.....	2	11514623
42.		N.S.	RIVET, I/P INSL		.....		
43.	9-A18	10.230	BRACKET, I/P INSL	94	Y	1	14104971
44.		8.977	SCREW, PAN HD TORX W/WA, M4.2X1.41X20, T15, 6 LOB, ZN (I/P LWR T/PNL)	94-96	.....	2	11513849
45.		N.S.	WASHER, I/P LWR T/PNL		.....		
46.		8.977	SCREW, HEX WA HD TAP/BSD/#8-18X1.000 PC (I/P LWR T/PNL) (10.230)	94-96	.....	4	9423010
47.	9-A18	10.230	PANEL, I/P LWR TR (GRAY)	94-96	Y (14I)	LH	10268023

© 2000 GENERAL MOTORS SERVICE PARTS OPERATIONS-CHEVROLET-14Y

							1Y10-026
	9-A18	10.230	PANEL, I/P LWR TR (BLACK)	94-96	Y (19I)	LH	10268024
	9-A18	10.230	PANEL, I/P LWR TR (BEIGE)	94-96	Y (64I)	LH	10268025
	9-A18	10.230	PANEL, I/P LWR TR (RED)	94-96	Y (70I)	LH	10268026
48.		8.977	BOLT, SCR HEX W/FLAT WA 12 DIA TYPE AB (I/P LWR T/PNL) ...	94-96	.....	1	11509374
49.		8.921	NUT, U TYPE, MULTI THD, PREV TORQ, M4.2X1.41TAP, 8.1REACH, 0.65-3.80 PNLS 1065 PZOR (MULTIUSE RLY BRKT) (AC-DELCO #11513599)	94-96	.....	2	11513599
50.	9-A21	10.235	BRACKET, I/P PASS KNEE BOLS OTR	94-96	Y	1	10251492
51.		8.900	BOLT, HEX W/CON WA, M6X1X20 (I/P PASS KNEE BOLS OTR BRKT)	94-96	.....	3	11514623
52.		8.977	BOLT/SCREW ASM M4.2X1.41 #18 HEX HD GM71 (I/P PASS KNEE BOLS OTR BRKT)	94-96	.....	2	11515303
53.	9-N21	14.865	MODULE, I/P INFL RST	94-96	Y (AK5)	1	10252293
54.		8.917	NUT, HFH 6X1X7 SELF LK 14.2-OD (9) 7111M ALL MET PREV TORQ (I/P INFL RST MDL) .	94-96	.....	4	11516075
55.	9-A21	10.235	BRACKET, I/P PASS KNEE BOLS INR	94-96	Y	1	10250910
56.		8.900	BOLT, HEX W/CON WA, M6X1X20 (I/P PASS KNEE BOLS INR BRKT BR)	94-96	.....	2	11514623
57.		8.900	BOLT, HEX W/CON WA, M6X1X20 (I/P PASS KNEE BOLS INR BRKT)	94-96	.....	2	11514623
		8.900	BOLT, HEX W/CON WA, M6X1X20 (I/P DRVR KNEE BOLS INR BRKT)	94-96	.....	2	11514623
58.		8.917	NUT, HEX W/CON WA M6X1X5.5 (9) 7111M 16-OD (I/P PASS KNEE BOLS INR BRKT)	94-96	.....	2	11516793
59.	9-N21	14.865	BRACKET, INFL RST CONT MDL	94-96	Y (AK5)	LH	10086086
	9-N21	14.865	BRACKET, INFL RST CONT MDL	94-96	Y (AK5)	RH	10086177
60.	9-N21	14.865	BRACKET, F/END INFL RST DISCRM SEN	94-96	Y (AK5)	1	10161868
61.	9-A18	10.230	SUPPORT, I/P CTR LWR	94-96	Y	1	10086073
62.	9-A18	10.230	REINFORCEMENT, I/P CTR LWR SUPT	94-96	Y	1	10086173
63.		N.S.	RIVET, I/P CTR LWR SUPT		.....		
64.		8.900	BOLT, HEX W/CON WA, M6X1X20 (INFL RST CONT MDL BRKT UPR)	94-96	.....	2	11514623
65.		8.900	BOLT, HEX W/CON WA, M6X1X20 (INFL RST CONT MDL BRKT LWR)	94-96	.....	4	11514623
66.		8.900	BOLT, HEX W/CON WA, M6X1X20 (I/P DRVR KNEE BOLS INR BRKT BR)	94-96	.....	2	11514623
67.	9-A21	10.235	BRACKET, I/P DRVR KNEE BOLS INR	94-96	Y	1	10250909
68.	9-A21	10.235	BRACE, I/P DRVR KNEE BOLS INR BRKT	94-96	Y	1	10259399
69.	9-M20	9.743	CARRIER, INST (10.230)	94-96	Y (FE1, FE7)	1	10086247

© 2000 GENERAL MOTORS SERVICE PARTS OPERATIONS-CHEVROLET-14Y

							1Y10-026
70.		8.900	BOLT, HEX W/CON WA, M6X1X20 (I/P UPR T/PNL BRKT) .	94-96		2	11514623
71.	9-A18	10.230	BRACKET, I/P UPR T/PNL	94-96	Y	LH	10251278
72.	9-N4	12.980	BRACKET, FLR FRT PNL UPR ...	94-96	Y	1	10086170
73.		8.921	NUT, (SPRING, TYPE C, U-SHAPED, MULTI THD) (M6X1, 1060 PEOR) (FLR FRT PNL UPR BRKT)	94-96		3	12337917
74.		8.900	BOLT, HEX W/CON WA, M6X1X20 (FLR FRT PNL UPR BRKT)	94-96		5	11514623
75.	9-A18	10.230	BRACKET, I/P REINF	94-96	Y	1	10085902
76.		8.921	NUT, U TYPE, MULTI THD, PREV TORQ, M4.2X1.41TAP, 8.1REACH, 0.65-3.80 PNLS 1065 PZOR (I/P REINF BRKT LWR) (AC-DELCO #11513599)	94-96		2	11513599
77.		8.977	BOLT/SCREW ASM M4.2X1.41 #18 HEX HD GM71 (I/P REINF BRKT UPR)	94-96		2	11515303
78.		8.977	BOLT/SCREW ASM M4.2X1.41 #18 HEX HD GM71 (I/P REINF BRKT LWR)	94-96		2	11515303
79.		8.921	NUT, U TYPE, MULTI THD, PREV TORQ, M4.2X1.41TAP, 8.1REACH, 0.65-3.80 PNLS 1065 PZOR (I/P REINF BRKT UPR) (AC-DELCO #11513599)	94-96		2	11513599
80.	9-A21	10.235	BRACKET, I/P DRVR KNEE BOLS OTR (10.230)	94-96	Y	1	10085943
81.		8.900	BOLT, HEX W/CON WA, M6X1X20 (I/P DRVR KNEE BOLS OTR BRKT)	94-96		3	11514623
82.		8.917	NUT-HEX, M5X0.8X5.3, 19 OD, GM 510-M (9), POR (DA PNL INSL) (AC-DELCO #11504614) .	94-96		1	11504614
83.		8.950	RETAINER, PUSH-IN, FITS .250 HOLE, 1.01LG.700-OD NYLON BLACK (DA PNL INSL)	94-96		3	10121502
84.	9-M27	12.804	INSULATOR, DA PNL	94-96	Y	1	10224033
85.	9-A9	10.092	SEAL, W/S INR LWR FRM (9.260)	94-96	Y	5	3999572
86.		8.921	NUT, U-SHAPED, M4.2X1.41, 6010M, ZP, PNL RNG .65-1.25 (I/P UPR TR PAD RET)	94-96		2	1638575
87.		8.915	NUT, HEX W/CON WA M8X1.25X9.5 19-OD 9 ZP (I/P) (8.917)	94-96		4	11506117
88.	9-A28	10.252	PLATE, I/P SW TR (BLACK)	94-96	Y	1	10256762
89.		8.977	SCREW, PAN HD TORX W/WA, M4.2X1.41X20, T15, 6 LOB, ZN (I/P SW TR PLT)	94-96		3	11513849
90.	9-L17	2.483	BRACKET, MULTIUSE RLY (PART OF 9) (5.2", 132 MM LG) (PLASTIC)	94-96	Y	1	10167109
91.		N.S.	RIVET, I/P (PART OF 9)				
92.	9-L17	2.483	BRACKET, MULTIUSE RLY (PART OF 9) (4.0", 102.0 MM LG) (PLASTIC)	94-96	Y	1	10172438

							1Y10-026
93.		8.977	BOLT/SCREW ASM M4.2X1.41 #18 HEX HD GM71 (I/P UPR BR RR)	94-96	.....	1	11515303
94.		8.977	BOLT/SCREW ASM M4.2X1.41 #18 HEX HD GM71 (I/P UPR BR FRT)	94-96	.....	1	11515303
95.	9-A18	10.230	BRACE, I/P UPR	94-96	Y	LH	10085903
96.	9-A21	10.235	SEAL, I/P UPR T/PNL (PART OF 2) (9.260)	94-96	Y	2	3999572
97.	9-M22	9.780	GRILLE, SI WDO DEFG OTLT (LEFT SIDE) (PART OF 2) (BLACK)	94-96	Y	1	10086033
98.		8.977	SCREW, PAN HD TORX W/WA, M4.2X1.41X20, T15, 6 LOB, ZN (PART OF 2)	94-96	.....	1	11513849

RPO DEFINITIONS

AK5 – RESTRAINT SYSTEM,FRONT SEAT,INFLATABLE,DRIVER AND PASSENGER
C60 – AIR CONDITIONER,FRONT,MANUAL CONTROLS
C68 – AIR CONDITIONER,FRONT,AUTOMATIC,ELECTRONIC CONTROLS
FE1 – SUSPENSION SYSTEM,SOFT RIDE
FE7 – SUSPENSION SYSTEM,FRONT AND REAR,HEAVY DUTY
LT1 – ENGINE–GAS, 8 CYL, 5.7L(5.7P),MFI,HO
LT5 – ENGINE,5.7L(5.7J),TPI
VD1 – PROVISION OPTIONS,EUROPE(EXPORT)
14I – INTERIOR TRIM LT GRAY
19I – INTERIOR TRIM,BLACK
64I – INTERIOR TRIM,LIGHT BEIGE
70I – INTERIOR TRIM,TORCH RED

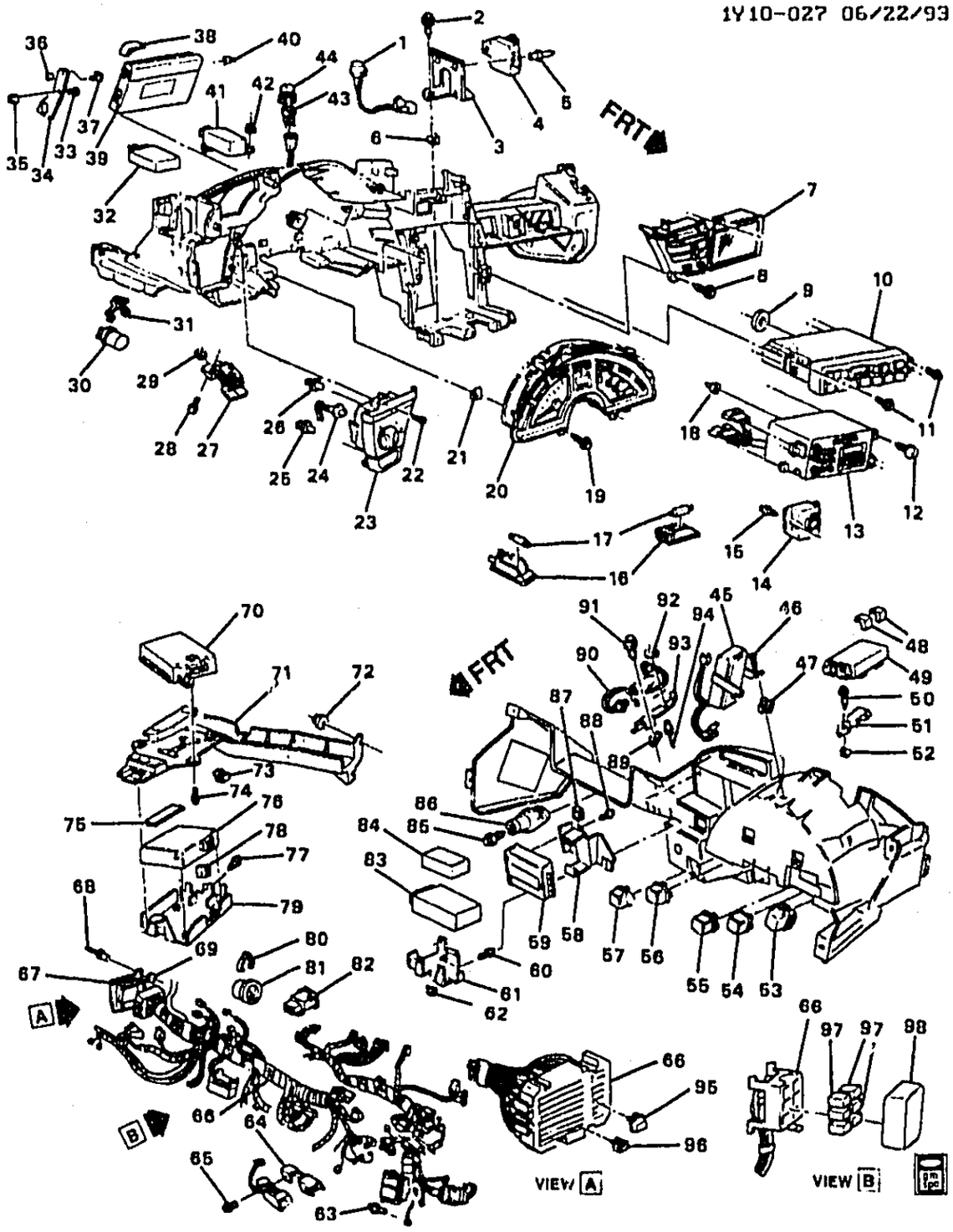

1Y10-027

1994-1996 Y INSTRUMENT PANEL PART 2

1.	9-M14	9.275	SENSOR, SUN LOAD TEMP (INCLUDES COVER) (AC-DELCO #15-71850)	94-96	Y (C68)	1 16137801
2.		8.077	SCREW, HWH, 9.2OD, 13.8 THD (VEH LATL ACCLRM)	94-96	.....	2 16516859
3.	9-M9	7.440	BRACKET, VEH LATL ACCLRM ..	94-96	Y	1 10248890
4.	9-M9	7.440	ACCELEROMETER, VEH LATL ..	94-96	Y	1 10210848
5.		N.S.	RIVET, VEH LATL ACCLRM		.....	

© 2000 GENERAL MOTORS SERVICE PARTS OPERATIONS-CHEVROLET-14Y

							1Y10-027
6.		8.921	NUT, U TYPE, MULTI THD, PREV TORQ, M4.2X1.41TAP, 8.1REACH, 0.65-3.80 PNLS 1065 PZOR (VEH LATL ACCLRM BRKT) (AC-DELCO #11513599)	94-96	.....	2	11513599
7.		N.S.	**DISPLAY**, DRVR INFO (SEE GROUP 9.000 "CLUSTER ARM/INSTRUMENT PANEL/INFORMATION CENTER" FOR DETAIL ILLUSTRATED VIEW.)		.....		
8.		8.977	**BOLT**, HEX W/12.5 OD WA, M4.2X1.41X16 DBL LD HI-LO 6010M (DRVR INFO)	94-96	.....	3	11515312
9.	9-M13	9.273	**INSULATOR**, HTR & A/C CONT ..	94-96	Y	1	10158011
10.	9-M13	9.273	**CONTROL**, HTR & A/C (SEE GROUP 9.000 "A/C & HEATER CONTROL ASM" FOR DETAIL ILLUSTRATED VIEW.) (AC-DELCO #15-72065)	94-96	Y (C60)	1	16170891
11.		8.977	**BOLT**, HEX W/12.5 OD WA, M4.2X1.41X16 DBL LD HI-LO 6010M (HTR & A/C CONT)	94-96	.....	2	11515312
12.		8.977	**BOLT**, HEX W/12.5 OD WA, M4.2X1.41X16 DBL LD HI-LO 6010M (RDO CONT)	94-96	.....	4	11515312
13.		N.S.	**CONTROL**, AM/FM STEREO & CLK & T/PLYR RDO (SEE GROUP 9.000 "AUDIO SYSTEMS" FOR DETAIL ILLUSTRATED VIEW) (AVAILABLE ONLY THROUGH AC DELCO SERVICE CENTERS)		.....		
14.	9-L6	2.188	**SWITCH**, ENG PWR	94-95	Y (LT5)	1	12514730
15.		8.977	**SCREW-ROUNDWASHER** M4.2X1.4X13, 8.63OD, 6010M, 6138M, C/R, TAP (ENG PWR SW)	94-96	.....	2	11515893
16.	9-C27	11.927	**LAMP**, CTSY (INCL 17) (USED W/9433040 BULB)	94-96	Y	2	10199743
17.		8.991	**BULB**, 6CP ID 562 (PART OF 16) (AC-DELCO #L562)	94-96	.....	2	9427943
18.	9-M19	9.607	**NUT**, RDO CONT (PUSH-ON) (OVERALL LENGTH 1.25") (3.671) (AC-DELCO #10027015)	94-96	Y	1	10027015
19.		8.977	**BOLT/SCREW ASM** M4.2X1.41 #18 HEX HD GM71 (INST CSTR)	94-96	.....	1	11515303
20.	9-M19	9.735	**CLUSTER**, INST (SEE GROUP 9.000 "CLUSTER ASM/INSTRUMENT PANEL" FOR DETAIL ILLUSTRATED VIEW.) (AC-DELCO #16168021)	94	Y (LT1, U52) (EXC U19)	1	16168021
	0-M19	9.735	**CLUSTER**, INST (SEE GROUP 9.000 "CLUSTER ASM/INSTRUMENT PANEL" FOR DETAIL ILLUSTRATED VIEW.) (AC-DELCO #16168031)	94-95	Y (LT5, U52) (EXC U19)	1	16168031

		DISCON	CLUSTER, INST (SEE GROUP 9.000 "CLUSTER ASM/INSTRUMENT PANEL" FOR DETAIL ILLUSTRATED VIEW.) (LAM)	95-96	Y (LT1, U52) (EXC U19)	1	16182831
		DISCON	CLUSTER, INST (SEE GROUP 9.000 "CLUSTER ASM/INSTRUMENT PANEL" FOR DETAIL ILLUSTRATED VIEW.) (LBJ)	96	Y (LT4, U52) (EXC U19)	1	16201621
	9-M19	9.735	CLUSTER, INST (SEE GROUP 9.000 "CLUSTER ASM/INSTRUMENT PANEL" FOR DETAIL ILLUSTRATED VIEW.) (LBK) (AC-DELCO #16215971) .	96	Y (LT4, U19, U52)	1	16215971
	9-M19	9.735	CLUSTER, INST (SEE GROUP 9.000 "CLUSTER ASM/INSTRUMENT PANEL" FOR DETAIL ILLUSTRATED VIEW.) (LAX) (AC-DELCO #16168041) .	94-95	Y (LT1, U19, U52) (EXPORT)	1	16168041
	9-M19	9.735	CLUSTER, INST (SEE GROUP 9.000 "CLUSTER ASM/INSTRUMENT PANEL" FOR DETAIL ILLUSTRATED VIEW.) (AC-DELCO #16168051)	94-95	Y (LT5, U19, U52) (EXPORT)	1	16168051
21.		8.921	NUT, U TYPE, MULTI THD, PREV TORQ, M4.2X1.41TAP, 8.1REACH, 0.65-3.80 PNLS 1065 PZOR (I/P) (AC-DELCO #11513599)	94-96	.....	1	11513599
22.		8.977	SCREW, HWH TAP M4.2X1.41X10, 9.2-OD 6010PZOR BLK (HDLP & I/P LP DIMR & ACSRY & ELEK TRACT CONT SW)	94-96	.....	2	11509212
23.	9-L18	2.485	SWITCH, HDLP & I/P LP DIMR & ACSRY & ELEK TRACT CONT (W/HSG) (INCL.24-26)	94-96	Y	1	10210758
24.	9-L18	2.485	LAMP, HDLP SW (FOG LP) (CARTRIDGE TYPE-CLEAR BULB W/ORANGE CAP) (PART OF 23)	94-96	Y	1	10159561
25.	9-L19	2.487	LAMP, FOG LP SW (PART OF 23) (2.485)	94-96	Y	1	12506368
26.	9-M21	9.765	LAMP, TRACT CONT ACTIVE IND (PART OF 23) (2.485)	94-96	Y	1	12506368
27.	9-L19	2.490	DIMMER, I/P LP (AC-DELCO #D1509B)	94-96	Y	1	1995263
28.		8.977	BOLT/SCREW ASM M4.2X1.41 #18 HEX HD GM71 (I/P LP DIMR)	94-96	.....	2	11515303
29.		8.921	NUT, U TYPE, MULTI THD, PREV TORQ, M4.2X1.41TAP, 8.1REACH, 0.65-3.80 PNLS 1065 PZOR (I/P LP DIMR) (AC-DELCO #11513599)	94-96	.....	2	11513599
30.	9-M2	2.892	FLASHER, T/SIG LP (YELLOW) (AC-DELCO #SF323YB)	94-96	Y (EXC T90)	1	10041073
31.	9-L28	2.575	CLIP, HAZARD LP FLSHR (2.892)	94-96	Y	1	25534019
32.	9-B14	10.777	MODULE, P/W CONT	94-96	Y	1	12088564

© 2000 GENERAL MOTORS SERVICE PARTS OPERATIONS-CHEVROLET-14Y

							1Y10-027
33.		8.900	BOLT, HEX, M5X.8X16, 14.5 THD, 4.8, PC (BCM BRKT)	94-96	.....	2	11502982
34.	9-L27	2.560	BRACKET, BCM BRKT	94-96	Y	1	10085989
35.		8.917	NUT, CONICAL SPR WA HEX (METRIC STYLE 2) M5 X 0.8 (BCM BRKT)	94-96	.....	2	11503647
36.		8.917	NUT, CONICAL SPR WA HEX (METRIC STYLE 2) M5 X 0.8 (BCM)	94-96	.....	1	11503647
37.	9-L27	2.560	BOLT, BCM BRKT (POSN #2) (M5X.8X16 THD) (SPECIAL) (3.671) (AC-DELCO #12337892)	94-96	Y	4	12337892
38.	9-L27	2.560	INSULATOR, BCM (9.260)	94-96	Y	2	3999572
39.	9-L27	2.560	MODULE, BODY CONT (REMAN) (AC-DELCO #16212971)	94	Y	1	16212971
	9-L27	2.560	MODULE, BODY CONT (REMAN) (AC-DELCO #16223622)	95	Y	1	16223622
	9-L27	2.560	MODULE, BODY CONT	96	Y	1	16230561
40.	9-L27	2.560	NUT, BCM (PUSH-ON) (OVERALL LENGTH 1.25") (3.671) (AC-DELCO #10027015)	94-96	Y	2	10027015
41.	9-N21	14.865	SENSOR, INFL RST ARMING	94-96	Y (AK5)	1	10143543
42.		8.917	NUT, HFH 6X1X7 SELF LK 14.2-OD (9) 7111M ALL MET PREV TORQ (INFL RST ARMING SEN)	94-96	.....	3	11516075
43.	9-L18	2.485	SENSOR, DAYTIME RUNNING LP AMB LGT	94-96	Y (T61) (EXPORT)	1	10067986
44.	9-L18	2.485	GRILLE, HDLP AUTO CONT AMB LGT SEN	94-96	Y (T61) (EXPORT)	1	10067987
45.	9-M9	5.890	MODULE, LOW TIRE PRESS IND	94-96	Y (UJ6)	1	10161858
46.		8.977	BOLT/SCREW ASM M4.2X1.41 #18 HEX HD GM71 (LOW TIRE PRESS IND MDL)	94-96	.....	1	11515303
47.		8.921	NUT, U TYPE, MULTI THD, PREV TORQ, M4.2X1.41TAP, 8.1REACH, 0.65-3.80 PNLS 1065 PZOR (LOW TIRE PRESS IND MDL) (AC-DELCO #11513599)	94-96	.....	1	11513599
48.		N.S.	INSULATOR, DAYTIME RUNNING LP CONT MDL		.....		
49.	9-L18	2.485	MODULE, HDLP AUTO CONT (LESS BRKT & BOLTS)	94-96	Y (T61) (EXPORT)	1	10098712
50.		8.977	SCREW, HWH, M4.2X1.41X20, 9.2OD, 13.8 THD (DAYTIME RUNNING LP CONT MDL BRKT) .	94-96	.....	2	22536997
51.	9-L18	2.485	BRACKET, DAYTIME RUNNING LP CONT MDL	94-96	Y (T61) (EXPORT)	1	10177914
52.		8.921	NUT, U TYPE, MULTI THD, PREV TORQ, M4.2X1.41TAP, 8.1REACH, 0.65-3.80 PNLS 1065 PZOR (DAYTIME RUNNING LP CONT MDL BRKT) (AC-DELCO #11513599)	94-96	.....	2	11513599
53.	9-M5	3.887	RELAY, CRCONT CUTOFF (9.647) (AC-DELCO #22535475)	94-96	Y	1	22535475
54.	9-L19	2.510	RELAY, ACSRY TIME DELAY CUTOFF (BLACK) (5-WAY) (9.277) (AC-DELCO #15-8426)	94-96	Y	1	14100455

							1Y10-027
55.	9-L19	2.510	RELAY, STRTR (BLACK) (5-WAY) (9.277) (AC-DELCO #15-8426)	94-96	Y	1	14100455
56.	9-M21	9.778	RELAY, R/WDO DEFG (BLACK) (5-WAY) (9.277) (AC-DELCO #15-8426)	94-96	Y	1	14100455
57.	9-M2	2.892	FLASHER, T/SIG LP (AC-DELCO #9442495)	94-96	Y (T90) (EXPORT)	1	9442495
58.	9-L7	2.195	BRACKET, ST BELT & IGN KEY & LPS ALARM	94-96	Y (VD1, VE1) (EXPORT)	1	10098454
	9-M21	9.765	BRACKET, ST BELT & IGN KEY & LPS ALARM (2.195)	94-96	Y (VD1, VE1) (EXPORT)	1	10098454
59.	9-M21	9.765	ALARM, ST BELT & IGN KEY & LPS	94-96	Y	1	25518745
	9-L7	2.195	ALARM, ST BELT & IGN KEY & LPS (9.765)	94-96	Y	1	25518745
60.		8.977	BOLT/SCREW ASM M4.2X1.41 #18 HEX HD GM71 (R/CON DR LK RCVR BRKT)	94-96		2	11515303
61.	9-B5	10.485	BRACKET, R/CON DR LK RCVR	94-96	Y (EXC VD1, VE1)	1	10252241
62.		8.921	NUT, M4.2X1.4, 19.3X213.6.8.9 (R/CON DR LK RCVR BRKT) (AC-DELCO #15650655)	94-96		3	15650655
63.		8.900	BOLT, HFH M8X1.25X21MM, 17 OD, 10.9 (I/P WRG HARN GND)	94-96		3	12551177
64.	9-L8	2.440	BRACKET, I/P WRG HARN ECM DATA LINK CONN (DIAG CONN)	94-96	Y	1	14073479
65.		8.977	BOLT, SCR HEX W/FLAT WA 12 DIA TYPE AB (I/P WRG HARN DATA LINK CONN)	94-96		1	11509374
66.	9-L8	2.480	HARNESS, I/P WRG (INCL.82, 95-98)	94	Y (ML9, C60) (EXC T61, T72, T84, T85, T90)	1	12130324
	9-L8	2.480	HARNESS, I/P WRG (INCL.82, 95-98)	94	Y (ML9, C68) (EXC T61, T72, T84, T85, T90)	1	12130326
	9-L8	2.480	HARNESS, I/P WRG (INCL.82, 95-98)	94	Y (M30, C60) (EXC T61, T72, T84, T85, T90) (2ND DES)	1	12130491
	9-L8	2.480	HARNESS, I/P WRG (INCL.82, 95-98)	94	Y (M30, C60, T61) (EXC T72, T84, T85, T90)	1	12130492
	9-L8	2.480	HARNESS, I/P WRG (INCL.82, 95-98)	94	Y (M30, C68) (EXC T61, T72, T84, T85, T90)	1	12130493
	9-L8	2.480	HARNESS, I/P WRG (INCL.82, 95-98)	94	Y (M30, C68, T61) (EXC T72, T84, T85, T90)	1	12130494
	9-L8	2.480	HARNESS, I/P WRG (INCL.82, 95-98) (TAGGED 0322 OR 0323) (ON VEH W/DAYTIME RUNNING LGHTS, ADD 8-WAY BLUE CONN TO DAYTIME RUNNING LGHT, SPLICE CAV D & CAV E WIRES TOGETHER)	94	Y (M30, C68, T61) (EXC T72, T84, T85, T90) (1ST DES)	1	12141788
	9-L8	2.480	HARNESS, I/P WRG (INCL.82, 95-98)	94	Y (ML9, C60, T61) (EXC T72, T84, T85, T90)	1	12141789
	9-L8	2.480	HARNESS, I/P WRG (INCL.82, 95-98)	94	Y (ML9, C68, T61) (EXC T72, T84, T85, T90)	1	12141790
	9-L8	2.480	HARNESS, I/P WRG (INCL.82, 95-98)	94	Y (ML9, C68) (EXC T72, T84, T85, T90)	1	12163703
	9-L8	2.480	HARNESS, I/P WRG (INCL.82, 95-98)	95	Y (LT5, ML9, C68) (EXC T61)	1	12130326

© 2000 GENERAL MOTORS SERVICE PARTS OPERATIONS-CHEVROLET-14Y

					1Y10-027
9-L8	2.480	HARNESS, I/P WRG (INCL.82, 95-98)	95	Y (LT1, M30, C60, T61) (EXC T72, T84, T85, T90)	1 12130389
9-L8	2.480	HARNESS, I/P WRG (INCL.82, 95-98) (SPLICE CAV D & E WIRES @ BLUE DRL MDL CONN FOR VEH W/O DRL.)	95	Y (LT1, M30, C68, T61) (EXC T72, T84, T85, T90)	1 12130391
9-L8	2.480	HARNESS, I/P WRG (INCL.82, 95-98)	95	Y (LT5, ML9, C68, T61) .	1 12141790
9-L8	2.480	HARNESS, I/P WRG (INCL.82, 95-98)	95	Y (LT1, ML9, C60) (EXC T61, T72, T84, T85, T90)	1 12163700
9-L8	2.480	HARNESS, I/P WRG (INCL.82, 95-98)	95	Y (LT1, ML9, C68) (EXC T61, T72, T84, T85, T90)	1 12163702
9-L8	2.480	HARNESS, I/P WRG (INCL.82, 95-98)	95	[illegible]T5, ML9, C68)	1 12163703
9-L8	2.480	HARNESS, I/P WRG (TAGGED 0320 OR 0321) (INCL.82, 95-98) (ON VEH W/O DRL, AT 8-WAY BLUE CONN TO DRL MDL SPLICE CAV D & CAV E LEADS TOGETHER.)	[illegible]	[illegible] (M30, C60, T61) (EXC T72, T84, T85, T90) (1ST DES)	1 12141787
9-L8	2.480	HARNESS, I/P WRG (WHEN USE ON VEH W/O DAYTIME RUN LIGHTS, SPLICE CAV D&E TOGETHER @ BLUE 8-WAY DRL MOD CONN) (INCL.82, 95-98)	96	Y (M30, C60) (EXC T72, T84, T85, T90)	1 12130468
9-L8	2.480	HARNESS, I/P WRG (WHEN USE ON VEH W/O DAYTIME RUN LIGHTS, SPLICE CAV D&E TOGETHER @ BLUE 8-WAY DRL MOD CONN) (INCL.82, 95-98)	96	Y (M30, C68) (EXC T72, T84, T85, T90)	1 12130470
9-L8	2.480	HARNESS, I/P WRG (WHEN USE ON VEH W/O DAYTIME RUN LIGHTS, SPLICE CAV D&E TOGETHER @ BLUE 8-WAY DRL MOD CONN) (INCL.82, 95-98)	96	Y (ML9, C60) (EXC T72, T84, T85, T90)	1 12130472
9-L8	2.480	HARNESS, I/P WRG (WHEN USE ON VEH W/O DAYTIME RUN LIGHTS, SPLICE CAV D&E TOGETHER @ BLUE 8-WAY DRL MOD CONN) (INCL.82, 95-98)	96	Y (ML9, C68) (EXC T72, T84, T85, T90)	1 12130474
9-L8	2.480	HARNESS, I/P WRG (INCL.82, 95-98)	94	Y (M30, C68, T72, T84, T85, T90) (EXPORT) ...	1 12130495
9-L8	2.480	HARNESS, I/P WRG (INCL.82, 95-98)	94	Y (ML9, C68, T72, T84, T85, T90) (EXPORT) ...	1 12141792
9-L8	2.480	HARNESS, I/P WRG (INCL.82, 95-98)	95	Y (LT1, M30, C68, T72, T84, T85, T90) (EXC T61) (EXPORT)	1 12130396
9-L8	2.480	HARNESS, I/P WRG (INCL.82, 95-98)	95	Y (LT1, ML9, C60, T61) (EXC T72, T84, T85, T90) (EXPORT)	1 12163701
9-L8	2.480	HARNESS, I/P WRG (INCL.82, 95-98)	95	Y ([illegible]1, ML9, C68, T61) (EXC T72, T84, T85, T90) (EXPORT)	1 12163703

© 2000 GENERAL MOTORS SERVICE PARTS OPERATIONS-CHEVROLET-14Y

							1Y10-027
	9-L8	2.480	HARNESS, I/P WRG (INCL.82, 95-98)	95	Y (LT1, ML9, C68, T72, T84, T85, T90) (EXC T61) (EXPORT)	1	12163704
	9-L8	2.480	HARNESS, I/P WRG (INCL.82, 95-98)	96	Y (M30, C68, T72, T84, T85, T90) (EXC T61) (EXPORT)	1	12130475
	9-L8	2.480	HARNESS, I/P WRG (INCL.82, 95-98)	96	Y (LT4, ML9, C68, T72, T84, T85, T90) (EXC T61) (EXPORT)	1	12163715
	9-L8	2.480	HARNESS, I/P WRG (TAGGED 0328) (INCL.82, 95-98)	94	Y (M30, C68, T72, T84, T85, T90) (1ST DES) (EXPORT)	1	12141791
67.	9-L17	2.483	BRACKET, I/P WRG HARN FUSE BLK	94-96	Y	1	14062568
68.		N.S.	RIVET, I/P WRG HARN FUSE BLK BRKT				
69.		N.S.	WASHER, I/P WRG HARN FUSE BLK BRKT				
70.	9-M5	3.887	MODULE, CRCONT (AC-DELCO #25140723)	94-96	Y	1	25140723
71.	9-L17	2.483	BRACKET, MULTIUSE RLY	94-96	Y	1	10161867
72.		8.917	NUT, HEX W/CON WA M6X1X5.5 (9) 7111M 16-OD (MULTIUSE RLY BRKT)	94-96		2	11516793
73.		8.921	NUT, U TYPE, MULTI THD, PREV TORQ, M4.2X1.41TAP, 8.1REACH, 0.65-3.80 PNLS 1065 PZOR (CRCONT MDL) (AC-DELCO #11513599)	94-96		2	11513599
74.		8.977	BOLT/SCREW ASM M4.2X1.41 #18 HEX HD GM71 (CRCONT MDL BRKT)	94-96		2	11515303
75.	9-N21	14.865	INSULATOR, INFL RST DIAGN ENGY RESV MDL (9.260)	94-96	Y	3	3999572
76.	9-N21	14.865	MODULE, INFL RST DIAGN ENGY RESV (REMAN)	94-96	Y (AK5)	1	16176558
77.		8.977	BOLT/SCREW ASM M4.2X1.41 #18 HEX HD GM71 (I/P WRG HARN BRKT)	94-96		1	11515303
78.		8.921	NUT, U TYPE, MULTI THD, PREV TORQ, M4.2X1.41TAP, 8.1REACH, 0.65-3.80 PNLS 1065 PZOR (MULTIUSE RLY BRKT) (AC-DELCO #11513599)	94-96		1	11513599
79.	9-L25	2.550	BRACKET, I/P WRG HARN	94-96	Y	1	10251214
80.	9-M2	2.892	CLIP, T/SIG LP FLSHR	94-96	Y (EXC T90)	1	25534019
81.	9-L28	2.575	FLASHER, HAZARD LP (1 1/2" DIA) (6 LP FLSHR) (AC-DELCO #SF552)	94-96	Y	1	491391
82.		N.S.	DIODE, M/FUNC (PART OF 66)				
83.	9-M21	9.765	ALARM, ST BELT & IGN KEY & LPS	94-96	Y	1	25518745
	9-L7	2.195	ALARM, ST BELT & IGN KEY & LPS (9.765)	94-96	Y	1	25518745
84.	9-B5	10.485	RECEIVER, R/CON DR LK	94-96	Y (EXC VD1, VE1)	1	10261112
85.		8.977	BOLT, HEX W/12.5 OD WA, M4.2X1.41X16 DBL LD HI-LO 6010M (I/S AIR TEMP SEN)	94-96		2	11515312

© 2000 GENERAL MOTORS SERVICE PARTS OPERATIONS-CHEVROLET-14Y

							1Y10-027
86.	9-M14	9.275	**SENSOR**, I/S AIR TEMP (AC-DELCO #15-71650)	94-96	Y (C68)	1	16129011
87.		8.921	**NUT**, U TYPE, MULTI THD, PREV TORQ, M4.2X1.41TAP, 8.1REACH, 0.65-3.80 PNLS 1065 PZOR (ST BELT & IGN KEY & LPS ALARM) (AC-DELCO #11513599)	94-96	.....	2	11513599
88.		8.977	**BOLT/SCREW ASM** M4.2X1.41 #18 HEX HD GM71 (ST BELT & IGN KEY & LPS ALARM BRKT) ...	94-96	.....	2	11515303
89.		8.921	**NUT**, U TYPE, MULTI THD, PREV TORQ, M4.2X1.41TAP, 8.1REACH, 0.65-3.80 PNLS 1065 PZOR (CTLTC CONV TEMP ALARM MDL) (AC-DELCO #11513599) .	94-96	.....	1	11513599
90.	9-M5	3.686	**MODULE**, CTLTC CONV TEMP ALARM	94-96	Y (UD6) (EXPORT)	1	10219872
91.		8.977	**SCREW**, HWH, M4.2X1.41X20, 9.2OD, 13.8 THD (CTLTC CONV TEMP ALARM MDL)	94-96	.....	1	22536997
92.		8.929	**WASHER**, FLAT 5MM PEOR (CTLTC CONV TEMP ALARM MDL)	94-96	.....	2	11508426
93.	9-M5	3.686	**BRACKET**, CTLTC CONV TEMP ALARM MDL	94-96	Y (UD6) (EXPORT)	1	10219873
94.		8.967	**RIVET** (CTLTC CONV TEMP ALARM MDL)	94-96	.....	2	2477054
95.		N.S.	**BREAKER**, I/P WRG HARN FUSE BLK CIRC (PART OF 66)		.....		
96.		8.965	**FUSE**, MINI, 30 AMP (GREEN) (PART OF 66) (AC-DELCO #12092075)	94-96	.....	AR	12092075
		8.965	**FUSE**, MINI, 25 AMP (CLEAR) (PART OF 66)	94-96	.....	AR	12092076
		8.965	**FUSE**, MINI, 20 AMP (YELLOW) (PART OF 66)	94-96	.....	AR	12092077
		8.965	**FUSE**, MINI, 15 AMP (BLUE) (PART OF 66)	94-96	.....	AR	12092078
		8.965	**FUSE**, MINI, 10 AMP (RED) (PART OF 66)	94-96	.....	AR	12092079
		8.965	**FUSE**, MINI, 5 AMP (TAN) (PART OF 66)	94-96	.....	AR	12092081
97.	9-L19	2.510	**RELAY**, I/P WRG HARN (PART OF 66) (BLACK) (5-WAY) (9.277) (AC-DELCO #15-8426)	94-96	Y (UX0)	1	14100455
98.		N.S.	**COVER**, CONVENIENCE CTR RLY (PART OF 66)		.....	AR	

RPO DEFINITIONS

AK5 – RESTRAINT SYSTEM,FRONT SEAT,INFLATABLE,DRIVER AND PASSENGER
C60 – AIR CONDITIONER,FRONT,MANUAL CONTROLS
C68 – AIR CONDITIONER,FRONT,AUTOMATIC,ELECTRONIC CONTROLS
LT1 – ENGINE-GAS, 8 CYL, 5.7L(5.7P),MFI,HO
LT4 – ENGINE GAS, 8 CYL, 5.7L, MFI, HIGH OUTPUT
LT5 – ENGINE,5.7L(5.7J),TPI
ML9 – TRANSMISSION,MANUAL 6-SPEED
M30 – TRANSMISSION,AUTOMATIC 4 SPEED,4L60E,ELECTRONIC
T61 – LIGHTING,DAYTIME RUNNING
T72 – HEADLAMPS,LH RULE OF THE ROAD(EXPORT)
T84 – HEADLAMPS,RH RULE OF THE ROAD,RECTANGULAR(MARKED E)(EXPORT)

© 2000 GENERAL MOTORS SERVICE PARTS OPERATIONS-CHEVROLET-14Y

T85 – HEADLAMPS,LH RULE OF THE ROAD,RECTANGULAR(MARKED E)(EXPORT)
T90 – LAMP,SIGNALING AND MARKER(EXPORT)
UD6 – ALARM,EXHAUST TEMPERATURE(EXPORT)
UJ6 – INDICATOR,LOW TIRE PRESS
UX0 – SPEAKER SYSTEM,SIX,DUAL FLOOR SILL,DUAL EXTENDED RANGE SAIL PANEL
U19 – SPEEDOMETER,INSTRUMENT(EXPORT)
U52 – CLUSTER,INSTRUMENT(ELECTRONIC)
VD1 – PROVISION OPTIONS,EUROPE(EXPORT)
VE1 – PROVISION OPTIONS,JAPAN(EXPORT)

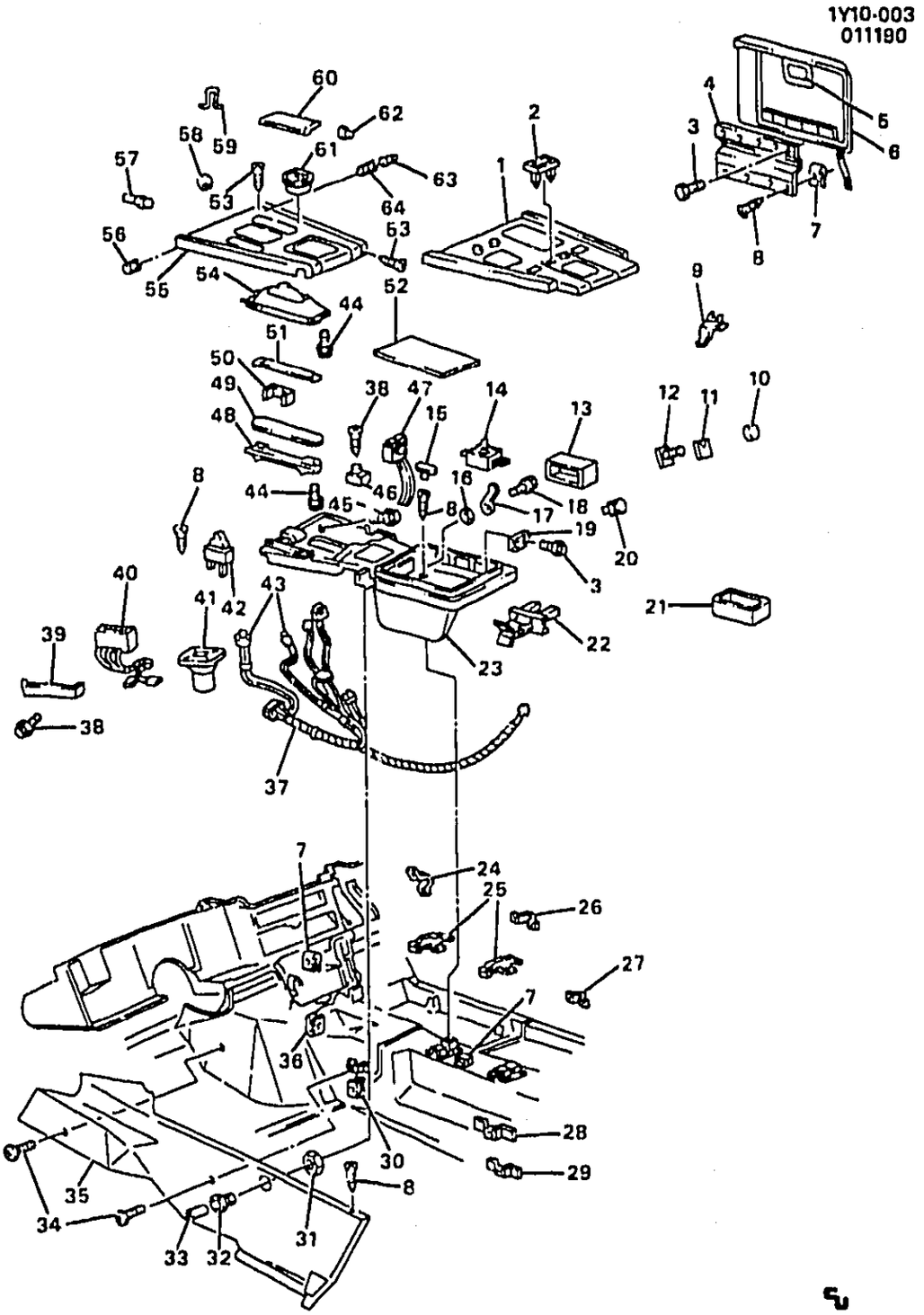

1Y10–003

1984–1989 Y CONSOLE/SEAT SEPARATOR

1.	DISCON	PLATE, TR (1984 M.T.)	14078621
	DISCON	PLATE, TR (1985 M.T., EXC A42) (INCL 2, 57–60, 62) (*4)	14089617
	DISCON	PLATE, TR (1985–86 M.T., A42) (INCL 2, 57–60, 62) (*1, 3)	14090634
	DISCON	PLATE, TR (1985 EXC A42) (1985–88 M.T.) (INCL 59, 60, 62) (*2, 3)	14090633
	DISCON	PLATE, TR (1989 M.T., FX3) (INCL 57, 58, 60, 62)	14104915

© 2000 GENERAL MOTORS SERVICE PARTS OPERATIONS–CHEVROLET–14Y

				1Y10-003
		DISCON	PLATE, TR (COMPL) (1989 M.T., EXC FX3) (INCL 57, 58, 60, 62)	14104468
2.		DISCON	EMBLEM, TRANS SHFT OPG TR PLT (1988)	10123023
		DISCON	EMBLEM, TR PLT (PART OF 1)	14076544
3.		8.977	SCREW, HEX TAP (W/WA) (M4.2X1.41X16) POR	25512804
4.		DISCON	HINGE, DR	14046698
5.	9-B3	10.275	LAMP, DR (PART OF 6)	16512252
6.	9-A26	10.242	DOOR (1984-86) (INCL 5) (PAINT TO MATCH)	14046652
	9-A26	10.242	DOOR (1987-89) (BLUE MED 21I) (INCL 5) (SEE PARTS SECTION FOR ADDITIONAL COLORS & TRIM COMBINATIONS)	14046652
7.		8.921	NUT, U-SHAPE (M4.2X1.41X.065) ZOR (AC-DELCO #15650655)	15650655
8.		8.977	SCREW, PAN HD TAP (M4.2X1.41X16) POR	11504736
9.		DISCON	COVER, COMPT LP	14062543
10.		DISCON	BEZEL, O/S RR VIEW MIR R/CONT	14047175
11.	9-A15	10.186	RETAINER, O/S RR VIEW MIR R/CONT	459503
12.	9-A12	10.185	CONTROL, O/S RR VIEW MIR REM (1984-86)	16500951
		DISCON	CONTROL, O/S RR VIEW MIR REM (1987-89)	16509990
13.		DISCON	COVER, DR LAT OPG	14051142
14.	9-B5	10.485	ESCUTCHEON, DR LK SW	20401575
15.	9-A23	10.240	FILLER, F/FLR CNSL COMPT	
16.		N.S.	WASHER, COMPT DR LK CYL (PART OF 33)	
17.		N.S.	LEVER, COMPT DR LK (PART OF 33)	
18.		N.S.	BOLT, COMPT DR LK CYL (PART OF 33)	
19.	9-B3	10.268	STRIKER, F/FLR COMPT DR LAT	14046798
20.	9-M26	12.243	SWITCH, RR COMPT LID REL (AC-DELCO #D7048)	1620478
21.	9-A26	10.242	TRAY, TAPE STOR	14047474
22.		DISCON	CLIP, RF LIFT OFF PNL/WDO WRENCH (PART OF 23)	14089621
23.		DISCON	CONSOLE (1984 EXC A42) (INCLUDES 22)	10045622
		DISCON	CONSOLE (1984-86 A42) (1987-88 AC3, EXC AC1) (INCLUDES 22)	10045623
		DISCON	CONSOLE (1985-86 EXC A42) (1987-88 EXC AC1, AC3) (INCLUDES 22)	10045622
		DISCON	CONSOLE (1987-88 AC1, AC3) (INCLUDES 22)	14094282
		DISCON	CONSOLE (1989 AC1, AC3) (INCLUDES 22)	14104804
		DISCON	CONSOLE (1989 AC3, EXC AC1) (INCLUDES 22)	14104817
		DISCON	CONSOLE (1989 EXC AC1, AC3) (INCLUDES 22)	14104819
		DISCON	RETAINER, SPL SECURITY WHL LK NUT WRENCH (1985-86)	14090626
	9-M9	5.813	HOLDER, SPL SECURITY WHL LK KEY (1986-88)	10064306
24.	9-A23	10.240	BRACKET, FRT-RH	14049146
	9-A23	10.240	BRACKET, FRT-LH	14065087
25.	9-A23	10.240	BRACKET	14046621
26.	9-A23	10.240	BRACKET, INTER TO PNL-RH	14049236
27.	9-A23	10.240	BRACKET, INTER TO INTER PNL-RH	14049238
28.	9-A23	10.240	BRACKET, INTER TO PNL-LH	14049237
29.	9-A23	10.240	BRACKET, INTER TO INTER PNL-LH	10137744
30.		N.S.	NUT, SI TR PNL	
31.	9-B2	10.266	NUT, F/FLR CNSL DR LK CYLCASE	52356317
32.		N.S.	CASE, COMPT DR LK (PART OF 33)	
33.	9-B2	10.266	LOCK PKG, F/FLR CNSL COMPT DR (UNCODED) (1984-86) (B&S 609541-2) (INCLS 16-18, 32)	14075364
	9-B3	10.268	LOCK KIT, F/FLR SI COMPT (1987-89) (INCLS 16-18, 32)	10074165
34.		8.977	SCREW, OV HD (M4.2X1.41X20)	12338093
35.		DISCON	PANEL, SI TR-RH (1984-87) (GRAPHITE 12I) (SEE PARTS SECTION FOR ADDITIONAL COLORS & TRIM COMBINATIONS)	14081848
		DISCON	PANEL, SI TR-RH (1988-89) (BLACK 11I, 19I) (SEE PARTS SECTION FOR ADDITIONAL COLORS & TRIM COMBINATIONS)	10095118
		DISCON	PANEL, SI TR-LH (1984-87) (GRAPHITE 12I) (SEE PARTS SECTION FOR ADDITIONAL COLORS & TRIM COMBINATIONS)	14081847

© 2000 GENERAL MOTORS SERVICE PARTS OPERATIONS-CHEVROLET-14Y

				1Y10-003
		DISCON	PANEL, SI TR-LH (1988-89) (BLACK 11I, 19I) (SEE PARTS SECTION FOR ADDITIONAL COLORS & TRIM COMBINATIONS)	10095117
36.		8.921	NUT, U-SHAPED (M6X1, 20X24) POR	12338151
37.		DISCON	HARNESS (1984-86)	12029153
		DISCON	HARNESS (1987-89)	12067418
38.		8.977	SCREW, OV CNTR SUNK HD, TAP (M4.2X1.41X13) ZN	11515037
39.		DISCON	BRACKET, PWR ST ADJ SW	14047189
40.	9-C23	11.558	SWITCH, PWR ST ADJ (1984-86)	14047185
		DISCON	SWITCH, PWR ST ADJ-RH (1987)	14103356
	9-C23	11.558	SWITCH, PWR ST ADJ-RH (1988)	10098457
	9-C23	11.558	SWITCH, PWR ST ADJ-RH (1989)	10098457
		DISCON	SWITCH, PWR ST ADJ-LH (1987)	14103355
	9-C23	11.558	SWITCH, PWR ST ADJ-LH (1988-89)	10098456
41.	9-C23	11.558	KNOB, PWR ST ADJ SW	14057581
42.	9-B14	10.777	SWITCH, SI WDO	10092804
43.		8.991	BULB, 194 (AC-DELCO #L194)	9421330
44.		8.977	SCREW, RD WA HD TAP (M4.2X1.41X13) BLK ORG	10180421
45.		8.900	BOLT, HEX (WA) (M6X1X25) 9.8, PZOR	20351035
46.	9-A15	10.186	SWITCH, O/S RR VIEW MIR R/CONT SEL	14047174
47.	9-M5	4.460	RELAY, M .T. O/D SW (1984-87) (3.140) (AC-DELCO #212-307) ...	14078915
	9-L5	1.055	RELAY, M .T. O/D SW (1988-89) (1.055) (AC-DELCO #15-8240) ...	14089936
48.	9-M6	4.020	HOUSING, TRANS CONT IND	10146440
49.	9-M6	4.022	SHIELD, TRANS CONT IND LT	14046746
50.	9-M6	4.020	INDICATOR, TRANS CONT	14046747
51.	9-M6	4.020	DIAL, TRANS CONT IND	10146407
52.	9-A23	10.240	COVER, PKT OPG	10064307
53.		8.977	SCREW, OV HD (M4.2X1.41X30)	11503409
54.	9-M6	4.015	BOOT, TRANS CONT LVR UPR (A.T.)	10104025
	9-M5	4.015	BOOT, TRANS CONT LVR UPR (M.T.) (1984-88)	14047412
	9-M6	4.015	BOOT, TRANS CONT LVR UPR (M.T.) (1989)	14104919
55.		DISCON	PLATE, TR (A.T.) (1985 EXC A42) (1989 EXC FX3) (INCL 57-60, 62) (*2)	14089615
		DISCON	PLATE, TR (1985-86 A.T., A42) (INCL 57-60, 62) (*1)	14089616
		DISCON	PLATE, TR (1989 A.T., FX3) (INCL 57, 58, 60, 62)	14104466
56.		DISCON	RETAINER, C/LTR HSG (ROCHESTER) (1984)	17062404
	9-M19	9.709	RETAINER, C/LTR (CASCO)	3986870
57.	9-A26	10.242	BUMPER, F/FLR FRT CNSL DR (PART OF 1, 55) (10.263)	365797
58.	9-A23	10.240	NUT, TRANS CONT IND HSG & LVR BOOT (PART OF 1, 55) (10.252)	10175813
59.	9-A26	10.242	SPRING, TR PLATE (PART OF 1, 55)	12523184
60.		DISCON	COVER, ASH TRAY (PART OF 1, 55)	14047526
61.	9-M23	12.009	ASHTRAY, ...	10213297
62.	9-A26	10.242	PIN, F/FLR CNSL ASHTRAY CVR (PART OF 1, 55)	379997
63.	9-M19	9.709	HOUSING, C/LTR (CASCO)	11516142
64.		DISCON	LIGHTER, W/KNOB (ROCHESTER) (1984)	17057195
	9-M19	9.709	LIGHTER, CIG	11516141
	9-M19	9.709	HEATER, C/LTR (ELEMENT) (CASCO)	344801

NOTE 1: 1986 1ST DESIGN – WITH POWER SEAT ADJUSTER GRAPHICS
NOTE 2: 1986 2ND DESIGN – LESS POWER SEAT ADJUSTER GRAPHICS
NOTE 3: 1985 2ND DESIGN – WITH OVERDRIVE SWITCH ON SHIFTER KNOB
NOTE 4: 1985 1ST DESIGN – WITH OVERDRIVE SWITCH ON CONSOLE TRIM PLATE

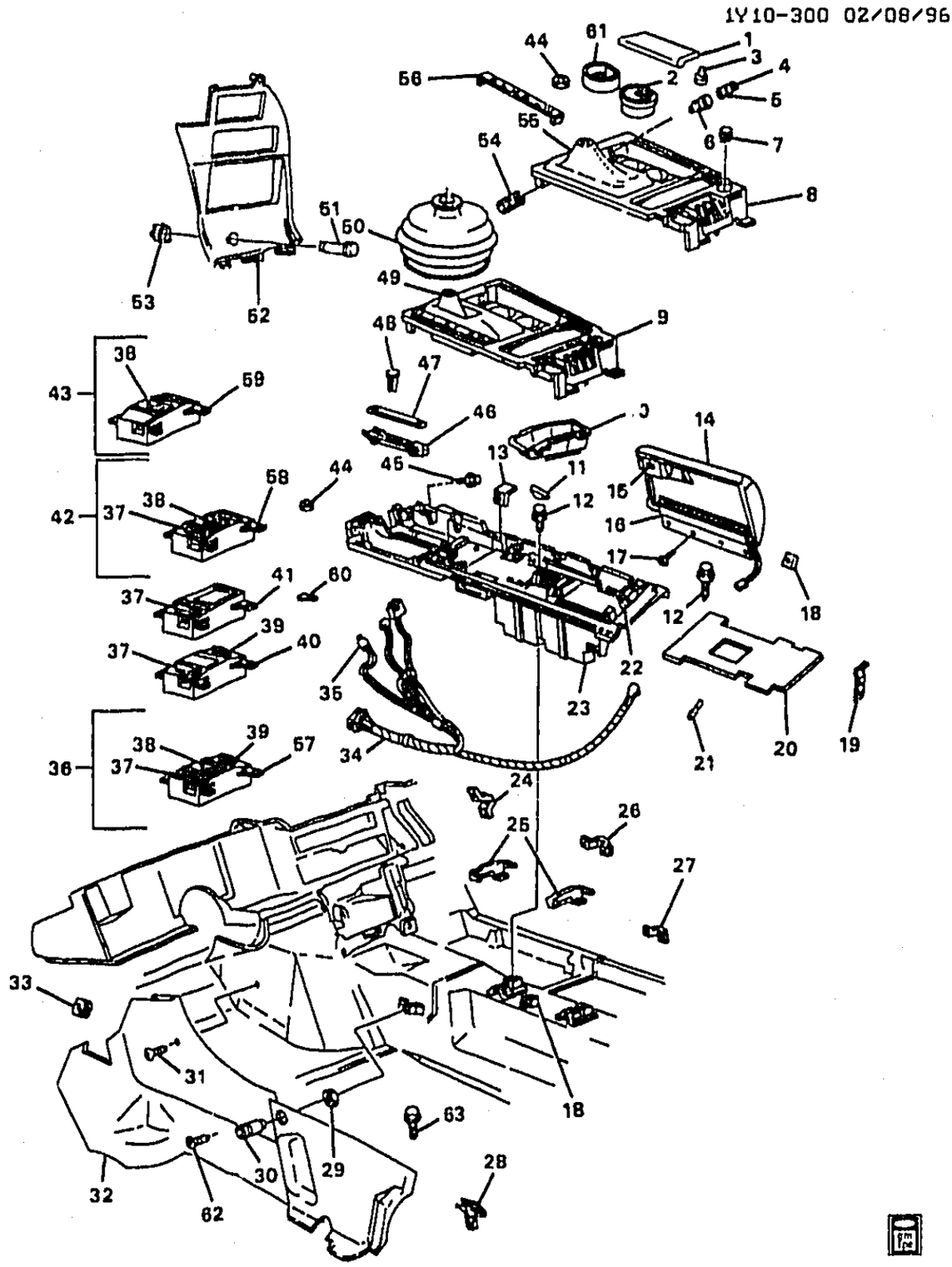

1Y10-300

1990-1991 Y CONSOLE/SEAT SEPARATOR

1.	9-M23	12.009	COVER, ASHTRAY (PART OF 8, 9) (GRAYMOON) (10.242)	90-91 Y	1	10086104

© 2000 GENERAL MOTORS SERVICE PARTS OPERATIONS-CHEVROLET-14Y

							1Y10-300
2.	9-M23	12.009	ASHTRAY, (BLACK) (IF USED IN PLC OF ASHTRAY W/CLIP 14046653, MAY NEED TO USE 10167113 CUP HOLDER MAT ALSO.)	90-91	Y	1	10213297
3.	9-A26	10.242	PIN, F/FLR CNSL ASHTRAY CVR (PART OF 8, 9) (12.009)	90-91	Y	2	379997
4.	9-M19	9.709	LIGHTER, CIG (INCLS 5) (BLACK) (SM) (CASCO)	90-91	Y	1	11516141
5.	9-M19	9.709	HEATER, C/LTR (ELEMENT) (PART OF 4)	90-91	Y	1	344801
6.	9-M19	9.709	HOUSING, C/LTR (MATES W/CONN 12085504, (CASCO) 1-PIN CONN)	90-91	Y	1	11516142
7.	9-M26	12.243	SWITCH, R/CMPT LID REL (CTR CONSOLE) (AC-DELCO #D7048)	90-91	Y	1	1620478
	9-M26	12.243	SWITCH, R/CMPT LID REL (DR JAMB)	90-91	Y	1	10098458
8.		DISCON	PLATE, F/FLR CNSL TR (W/M.T.) (INCLS 1, 3, 21, 44, 45)	90-91	Y (ML9)	1	10085920
9.		N.S.	PLATE, F/FLR CNSL TR (W/A.T.) (INCLS 1, 3, 21, 44, 46-49, 56)				
10.		DISCON	HOLDER, F/FLR CNSL CUP (10.242)	90-91	Y	1	10086113
11.	9-A23	10.240	FILLER, F/FLR CNSL COMPT (OVAL SHAPED)	90-91	Y	4	14049207
12.		8.977	BOLT/SCREW ASM M4.2X1.41 #18 HEX HD GM71 (FRT S/D LWR)	90-91		6	11515303
13.	9-B3	10.268	STRIKER, F/FLR COMPT DR LAT (PART OF 23) (10.242)	90-91	Y	1	10086183
14.	9-A26	10.242	DOOR, F/FLR CNSL (INCLS 15, 16, 17) (BLACK)	90-91	Y	1	10262883
15.	9-B3	10.275	LAMP, F/FLR CNSL COMPT (PART OF 14)	90-91	Y	1	16512252
		8.991	BULB, DOUBLE WEDGE .44 AMPS, 1 11/16 LEN2 CP, #564 TRADE NBR (F/FLR CNSL FLOOD LP)	90-91		1	9433102
16.	9-A26	10.242	HINGE, F/FLR CNSL DR (PART OF 14) (INCLS 17)	90-91	Y	1	10085922
17.	9-A26	10.242	BOLT, F/FLR CNSL DR (PART OF 14, 16) (8.977)	90-91	Y	2	20175457
18.		8.921	NUT, M4.2X1.4, 19.3X213.6.8.9 (F/FLR CNSL BRKT) (AC-DELCO #15650655)	90-91		4	15650655
19.	9-M27	12.810	CLIP, RF LIFT OFF PNL/WDO WRENCH (PART OF 23)	90-91	Y	1	10086148
20.	9-A23	10.240	PROTECTOR, F/FLR CNSL COMPT	90-91	Y	1	10085932
21.	9-A26	10.242	BUMPER, F/FLR FRT CNSL DR (PART OF 8, 9) (10.263) (USED ON FRT FLR CNSL PNL W/3MM DIA HOLE)	90-91	Y (1ST DES)	4	365797
	9-A26	10.242	BUMPER, F/FLR FRT CNSL DR (PART OF 8, 9) (SI TR) (W/5.5MM HOLE ON RR OF PNL)	90-91	Y (2ND DES)	1	10172357

							1Y10-300
	9-A26	10.242	BUMPER, F/FLR FRT CNSL DR (I/P UPR TR) (W/5.5MM HOLE AT RR OF PNL) (PART OF 8, 9) (10.263)	90-91	Y (2ND DES)	1	1625385
22.		DISCON	CLIP, WHL WRENCH SOC	90	Y	1	10086147
23.	9-A23	10.240	CONSOLE, F/FLR (INCLS 13, 19) (CPS)	90-91	Y	1	10175510
		8.921	NUT, U-TYPE, 4.2X1.41, DIM A-15, DIM B-14 DIM C-8.65, 1050, PZOR (F/FLR CNSL)	90-91		4	12338121
24.	9-A23	10.240	BRACKET, F/FLR CNSL FRT	90-91	Y	RH	14049146
	9-A23	10.240	BRACKET, F/FLR CNSL FRT	90-91	Y	LH	14065087
25.	9-A23	10.240	BRACKET, F/FLR CNSL	90-91	Y	2	14046621
26.	9-A23	10.240	BRACKET, F/FLR CNSL INTER (FRT)	90-91	Y	RH	14049236
	9-A23	10.240	BRACKET, F/FLR CNSL INTER (FRT)	90-91	Y	LH	14049237
27.	9-A23	10.240	BRACKET, F/FLR CNSL INTER (RR)	90-91	Y	RH	14049238
	9-A23	10.240	BRACKET, F/FLR CNSL INTER (RR)	90-91	Y	LH	10137744
28.	9-A23	10.240	RETAINER, F/FLR CNSL TR PLT	90-91	Y	1	22570333
29.	9-B2	10.266	NUT, F/FLR CNSL DR LK CYL CASE	90-91	Y	1	52356317
30.	9-B3	10.266	LOCK KIT, F/FLR CNSL COMPT DR (10.266)	90	Y (EXC ZR1)	1	10074165
	9-B2	10.266	CYLINDER KIT, F/FLR CNSL DR LK (UNCODED)	91	Y	1	12507229
31.		8.977	BOLT/SCREW ASM M4.2X1.41 #18 HEX HD GM71 (F/FLR CNSL SI T/PNL)	90-91		1	11515303
32.		DISCON	PANEL, F/FLR CNSL SI TR (GRAY)	90-91	Y (90I)	RH	10095092
		DISCON	PANEL, F/FLR CNSL SI TR (BLUE)	90-91	Y (22I)	RH	10095094
		DISCON	PANEL, F/FLR CNSL SI TR (COGNAC)	90-91	Y (60I)	RH	10095096
	9-A23	10.240	PANEL, F/FLR CNSL SI TR (RED)	90-91	Y (73I)	RH	10095100
		DISCON	PANEL, F/FLR CNSL SI TR (BLUE)	90-91	Y (22I)	LH	10175797
		DISCON	PANEL, F/FLR CNSL SI TR (COGNAC)	90-91	Y (60I)	LH	10175799
		DISCON	PANEL, F/FLR CNSL SI TR (RED)	90-91	Y (73I)	LH	10175801
		DISCON	PANEL, F/FLR CNSL SI TR (GRAY)	90-91	Y (90I)	LH	10175803
	9-A23	10.240	PANEL, F/FLR CNSL SI TR (BLACK)	90-91	Y (19I)	LH	10220077
	9-A23	10.240	PANEL, F/FLR CNSL SI TR (BLACK)	90-91	Y (19I)	RH	10220078
33.	9-A23	10.240	CLIP, FRT CNSL TR PAD (AC-DELCO #10038190)	90	Y	AR	10038190
34.	9-L8	2.480	HARNESS, I/P WRG	90	Y M/TRNS (ML9), A/C (C60) (EXC CANADIAN T61)	1	12101432
	9-L8	2.480	HARNESS, I/P WRG	90	Y M/TRNS (ML9), A/C (C68) (EXC CANADIAN T61)	1	12101434
	9-L8	2.480	HARNESS, I/P WRG	90	Y (MD8, C60) (EXC T61)	1	12102274

							1Y10-300
	9-L8	2.480	HARNESS, I/P WRG	90	Y A/TRNS (MD8), A/C (C68) (EXC CANADIAN T61)	1	12102538
	9-L8	2.480	HARNESS, I/P WRG	91	Y (MD8, C60) (EXC T61)	1	12116436
	9-L8	2.480	HARNESS, I/P WRG	91	Y (ML9, C60) (EXC T61)	1	12116438
	9-L8	2.480	HARNESS, I/P WRG (MAY REQ 12106563 WIRE IF JMPR PRESENT AT THE PWR SEAT FEED)	91	Y (MD8, C68) (EXC T61)	1	12116500
	9-L8	2.480	HARNESS, I/P WRG	91	Y (ML9, C68) (EXC T61)	1	12116502
	9-L8	2.480	HARNESS, I/P WRG	90	Y M/TRNS (ML9), A/C (C60), T61 (CANADIAN) (EXPORT)	1	12101433
	9-L8	2.480	HARNESS, I/P WRG	90	Y M/TRNS (ML9), A/C (C68), T61 (CANADIAN) (EXPORT)	1	12101435
	9-L8	2.480	HARNESS, I/P WRG	90	Y A/TRNS (MD8), A/C (C68), T61 (CANADIAN) (EXPORT)	1	12102273
	9-L8	2.480	HARNESS, I/P WRG	90	Y A/TRNS (MD8), A/C (C60), T61 (CANADIAN) (EXPORT)	1	12102537
35.		8.991	BULB, 194 (12V, 2CP) (AC-DELCO #L194)	90-91	.....	AR	9421330
36.	9-M9	7.450	SWITCH, ELEK SUSP (INCLS 37-39, 57)	90-91	Y (AC1, AC3, FX3)	1	10086226
	9-M9	7.450	SWITCH, ELEK SUSP (INCLS 37-39, 57)	90-91	Y (AC3, FX3) (EXC AC1)	1	10086226
	9-M9	7.450	SWITCH, ELEK SUSP (INCLS 37-39, 57)	90	Y (FX3) (EXC AC1, AC3)	1	10086226
	9-M9	7.450	SWITCH, ELEK SUSP (INCLS 37-39, 57)	91	Y (FX3) (EXC AC1, AC3)	1	10098437
	9-M9	7.450	LAMP, SELECTIVE RIDE SW	90-91	Y (AC1, AC3, FX3)	1	10159560
37.	9-C23	11.558	SWITCH, D/SEAT ADJR (PART OF 36, 42) (CPS)	90-91	Y (AC3)	1	10086227
	9-C23	11.558	LAMP, D/SEAT & P/SEAT ADJR SW	90-91	Y (AC3)	2	10148002
	9-C23	11.558	INSERT, D/SEAT ADJR SW PLT ..	90-91	Y (AC3)	1	12514822
38.	9-M9	7.450	SWITCH, ELEK SUSP (PART OF 36, 42, 43)	90-91	Y (AC1, AC3, FX3)	1	10086226
39.	9-C23	11.558	SWITCH, P/SEAT ADJR (PART OF 36) (CPS)	90-91	Y (AC1, AC3)	1	10086228
	9-C23	11.558	LAMP, D/SEAT & P/SEAT ADJR SW	90-91	Y (AC3)	2	10148002
	9-C23	11.558	INSERT, P/SEAT ADJR SW PLT ..	90-91	Y (AC1, AC3)	1	12514823
40.	9-A26	10.242	HOUSING, F/FLR CNSL ACSRY SW	90-91	Y (AC1, AC3, FE1) (EXC FX3)	1	10086233
41.		DISCON	HOUSING, F/FLR CNSL ACSRY SW	90-91	Y (AC3) (EXC AC1, FX3)	1	10086232
42.	9-M9	7.450	CONTROL, ELEK SUSP (W/D/SEAT ADJR SW) (INCLS 37, 39, 58)	90-91	Y (AC3, FX3) (EXC AC1)	1	10098438
43.	9-M9	7.450	SWITCH, ELEK SUSP (INCLS 38, 59)	90-91	Y (FX3) (EXC AC1, AC3)	1	10098437
44.	9-A23	10.240	NUT, F/FLR CNSL TR PLT (PART OF 8, 9) (10.252)	90-91	Y (MD8)	6	10175813
	9-A23	10.240	NUT, F/FLR CNSL TR PLT (PART OF 8, 9) (10.252)	90-91	Y (ML9)	4	10175813

© 2000 GENERAL MOTORS SERVICE PARTS OPERATIONS-CHEVROLET-14Y

							1Y10-300
45.		8.977	BOLT/SCREW ASM M4.2X1.41 #18 HEX HD GM71 (F/FLR CNSL)	90-91		6	11515303
46.	9-M6	4.020	HOUSING, A/TRNS CONT IND (PART OF 9)	90-91	Y (MD8)	1	10146440
47.	9-M6	4.022	SHIELD, A/TRNS CONT IND LGT (PART OF 9)	90-91	Y	1	14046745
48.	9-M6	4.020	INDICATOR, A/TRNS CONT (PART OF 9)	90-91	Y	1	10146437
49.	9-M6	4.015	BOOT, A/TRNS CONT (PART OF 9)	90-91	Y	1	10175792
50.	9-M6	4.015	BOOT, M/TRNS CONT LVR LWR	90-91	Y	1	14104932
51.	9-L6	2.188	SWITCH, ENG PWR (W/KEYS)	90	Y (LT5)	1	14104646
	9-L6	2.188	SWITCH, ENG PWR (W/KEYS) (MUST USE 12126533 HARNESS)	91	Y (LT5, FE1, FE7)	1	12514730
52.	9-A28	10.252	PLATE, I/P ACSRY TR	90-91	Y (L98)	1	10085911
		DISCON	PLATE, I/P ACSRY TR	90	Y (LT5)	1	10086273
		DISCON	PLATE, I/P ACSRY TR	91	Y (LT5)	1	10177904
53.	9-L6	2.188	RETAINER, ENG PWR SW (17.198)	90	Y (LT5)	1	5713260
54.	9-M19	9.709	RETAINER, C/LTR HSG (CASCO)	90-91	Y	1	3986870
55.	9-M6	4.015	BOOT, M/TRNS CONT LVR (UPR) (ON EARLY 92 & PRIOR MDLS, REMOVE & DISCARD C-CLIP ON SHFTR LVR) (PART OF 8)	90-91	Y (ML9)	1	10193729
56.	9-M6	4.020	DIAL, A/TRNS CONT IND (PART OF 9)	90-91	Y (MD8)	1	10153627
57.	9-A26	10.242	HOUSING, F/FLR CNSL ACSRY SW (PART OF 36)	90-91	Y (AC1, AC3, FX3)	1	10086231
58.		N.S.	HOUSING, F/FLR CNSL ACSRY SW (PART OF 42)				
59.		N.S.	HOUSING, F/FLR CNSL ACSRY SW (PART OF 43)				
60.	9-C23	11.558	INSERT, P/SEAT ADJR SW PLT (TRIANGLE SHAPED)	90-91	Y (AC1, AC3)	1	12514823
61.	9-A23	10.240	MAT, F/FLR CNSL TR PLT (CUP HOLDER) (BLACK)	90-91	Y	1	10167113
62.		8.977	SCREW, OVAL CSK TRIM HD W/WA TYPE AB (4.2X1.4X20) (F/FLR CNSL SI T/PNL) (16.682)	90-91		3	12338093
63.		8.977	BOLT, HEX W/12.5 OD WA, M4.2X1.41X16 DBL LD HI-LO 6010M (F/FLR CNSL SI T/PNL)	90-91		2	11515312

RPO DEFINITIONS

AC1 – ADJUSTER,SEAT,6-WAY POWER,BUCKET,PASSENGER
AC3 – ADJUSTER,SEAT,6-WAY POWER,BUCKET,DRIVER
C60 – AIR CONDITIONER,FRONT,MANUAL CONTROLS
C68 – AIR CONDITIONER,FRONT,AUTOMATIC,ELECTRONIC CONTROLS
FE1 – SUSPENSION SYSTEM,SOFT RIDE
FE7 – SUSPENSION SYSTEM,FRONT AND REAR,HEAVY DUTY(USED WITH PERFORMANCE HANDLING PACKAGE Z51)
FX3 – RIDE AND HANDLING,ELECTRONIC CONTROLLED
LT5 – ENGINE,5.7L(5.7J),TPI
L98 – ENGINE, 5.7L, (5.7-8) 350 CID, V8, TPI
MD8 – TRANSMISSION,AUTOMATIC 4-SPEED(THM700R4/4L60)
ML9 – TRANSMISSION,MANUAL 6-SPEED
T61 – LIGHTING,DAYTIME RUNNING
ZR1 – PACKAGE,SPECIAL PERFORMANCE COUPE(1YY07 + ZR1 == 1YZ07)

© 2000 GENERAL MOTORS SERVICE PARTS OPERATIONS-CHEVROLET-14Y

191 – INTERIOR TRIM,BLACK
221 – INTERIOR TRIM,DARK ROYAL BLUE
601 – INTERIOR TRIM,DARK COGNAC
731 – INTERIOR TRIM,FLAME RED
901 – INTERIOR TRIM,SMOKE GRAY

MICROFICHE INDEX

GROUPS 10.000 THRU 11.000

FICHE 9 OF 11

GROUP	DESCRIPTION	STARTING GRID LOCATION PARTS	ILLUSTRATIONS
–	GENERAL INFORMATION	1–A2	1–G2
–	ALPHABETICAL INDEX	1–B13	N.A.
10.000	DOORS – REGULATORS – WINDSHIELD – WIPER – WASHER	9–A2	9–D2
11.000	REAR GLASS – SEAT PARTS – ADJUSTER	9–C2	9–I2
–	OUT OF FICHE CALLS	N.A.	9–L4

9–G1

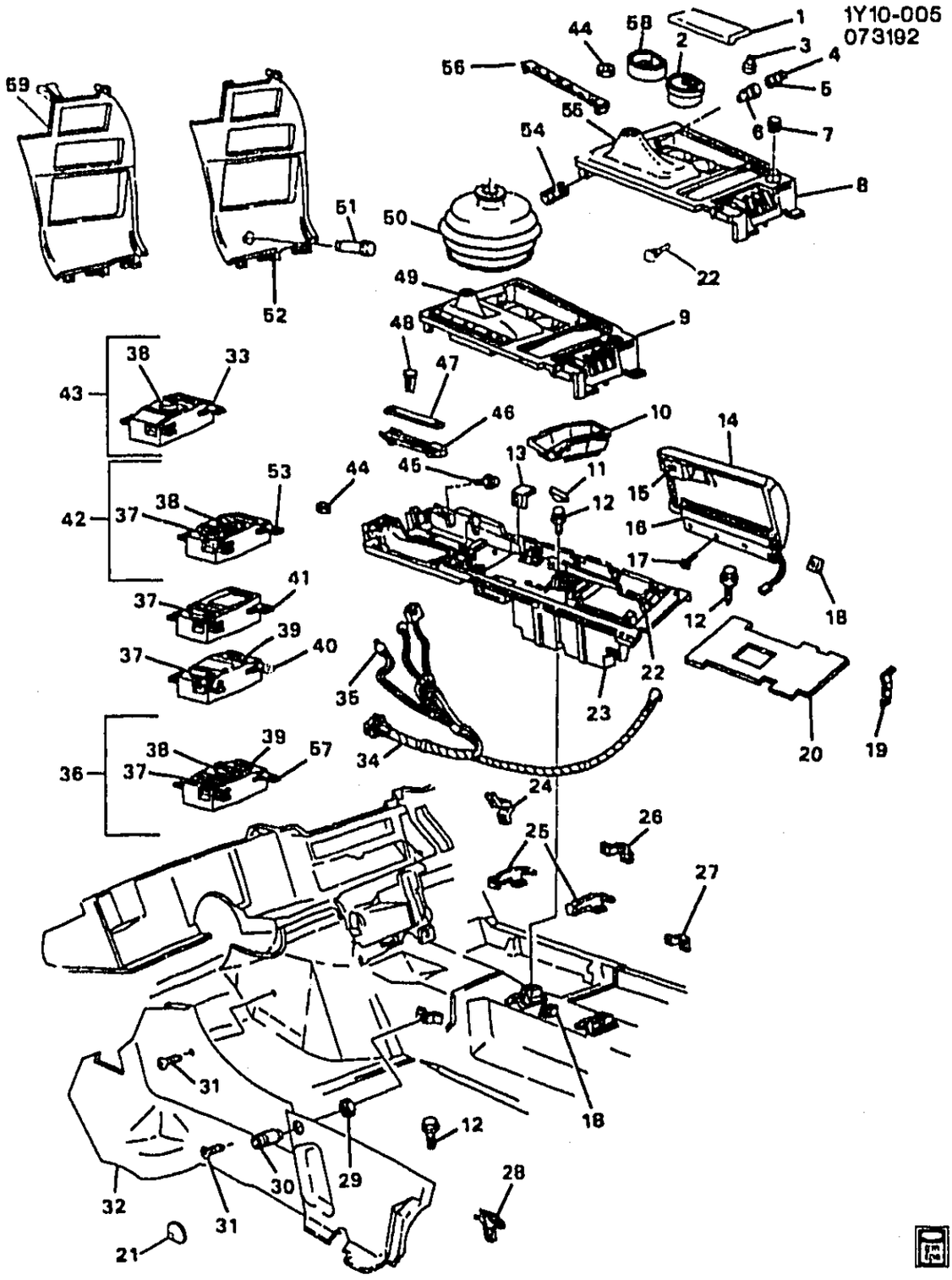

1Y10-005

1992-1996 Y CONSOLE/SEAT SEPARATOR

1.	9-M23	12.009	COVER, ASHTRAY (PART OF 8, 9) (BLACK)	92-93 Y (MD9, ML9)	1	10199767
	9-M23	12.009	COVER, ASHTRAY (PART OF 8, 9) (BLACK)	94-96 Y (M30, ML9)	1	10199767

© 2000 GENERAL MOTORS SERVICE PARTS OPERATIONS-CHEVROLET-14Y

							1Y10-005
2.	9-M23	12.009	ASHTRAY, (BLACK) (IF USED IN PLC OF ASHTRAY W/CLIP 14046653, MAY NEED TO USE 10167113 CUP HOLDER MAT ALSO.)	92-96	Y	1	10213297
3.	9-A26	10.242	PIN, F/FLR CNSL ASHTRAY CVR (PART OF 8, 9) (12.009)	92-96	Y	2	379997
4.	9-M19	9.709	LIGHTER, CIG (INCL 5) (BLACK) (SM) (CASCO)	92-96	Y	1	11516141
5.	9-M19	9.709	HEATER, C/LTR (ELEMENT) (PART OF 4)	92-96	Y	1	344801
6.	9-M19	9.709	HOUSING, C/LTR (MATES W/CONN 12085504, (CASCO) 1-PIN CONN)	92-96	Y	1	11516142
7.	9-M26	12.243	SWITCH, R/CMPT LID REL (CTR CONSOLE) (AC-DELCO #D7048)	92-96	Y	1	1620478
8.	9-A23	10.240	PLATE, F/FLR CNSL TR (M.T.) (INCL 1, 3, 22, 44, 55)	92-93	Y (ML9)	1	10199502
	9-A23	10.240	PLATE, F/FLR CNSL TR (M.T.) (INCL 1, 3, 22, 44, 55) (BLACK) ..	94	Y (ML9)	1	10161884
	9-A23	10.240	PLATE, F/FLR CNSL TR (M.T.) (INCL 1, 3, 22, 44, 55)	95-96	Y (ML9)	1	10267745
9.	9-A23	10.240	PLATE, F/FLR CNSL TR (A.T.) (INCL 1, 3, 22, 44, 46-49, 56) ...	92-93	Y (MD8) (EXC VE1)	1	10152827
	9-A23	10.240	PLATE, F/FLR CNSL TR (A.T.) (INCL 1, 3, 22, 44, 46-49, 56) ...	94-96	Y (M30) (EXC VE1)	1	10265546
		DISCON	PLATE, F/FLR CNSL TR (A.T.) (INCL 1, 3, 22, 44, 46-49, 56) ...	92-93	Y (MD8, VE1) (EXPORT)	1	10199501
	9-A23	10.240	PLATE, F/FLR CNSL TR (A.T.) (INCL 1, 3, 22, 44, 46-49, 56) ...	94-96	Y (M30, VE1) (EXPORT)	1	10265547
10.	9-A23	10.240	HOLDER, F/FLR CNSL CUP	92-95	Y (EXC AC1, AC3, FX3)	1	10199504
	9-A23	10.240	HOLDER, F/FLR CNSL CUP	96	Y (EXC AG1, AG2, F45)	1	10199504
11.	9-A23	10.240	FILLER, F/FLR CNSL COMPT ...	93-94	Y	4	14049207
	9-A23	10.240	FILLER, F/FLR CNSL COMPT (OVAL SHAPED)	92	Y	4	14049207
12.		8.977	SCREW, PAN HD C/R TAP M4.2X1.41X16 B PTPOR	92-96	.....	AR	11504736
13.	9-B3	10.268	STRIKER, F/FLR COMPT DR LAT (PART OF 23) (10.242)	92-96	Y	1	10086183
14.	9-A26	10.242	DOOR, F/FLR CNSL (INCL 15, 16) (BLACK)	92-96	Y	1	10262883
15.	9-B3	10.275	LAMP, F/FLR CNSL COMPT (PART OF 14)	92-96	Y	1	16512252
		8.991	BULB, DOUBLE WEDGE .44 AMPS, 1 11/16 LEN2 CP, #564 TRADE NBR (F/FLR CNSL FLOOD LP)	92-96	.....	1	9433102
16.	9-A26	10.242	HINGE, F/FLR CNSL DR (PART OF 14) (INCL 17)	92-96	Y	1	10085922
17.	9-A26	10.242	BOLT, F/FLR CNSL DR (PART OF 16) (8.977)	92-96	Y	2	20175457
18.		8.921	NUT, M4.2X1.4, 19.3X213.6.8.9 (AC-DELCO #15650655)	92-96	.....	AR	15650655
19.	9-M27	12.810	CLIP, RF LIFT OFF PNL/WDO WRENCH (PART OF 23)	92-96	Y	1	10086148
20.	9-A23	10.240	PROTECTOR, F/FLR CNSL COMPT	92-96	Y	1	10085932

© 2000 GENERAL MOTORS SERVICE PARTS OPERATIONS-CHEVROLET-14Y

							1Y10-005
21.	9-A26	10.242	BUMPER, F/FLR FRT CNSL DR (PART OF 32)	92-96	Y	1	10172357
22.	9-A26	10.242	BUMPER, F/FLR FRT CNSL DR (PART OF 8, 9) (10.263)	92-96	Y	4	365797
23.	9-A23	10.240	CONSOLE, F/FLR (INCL 13, 19)	92-96	Y	1	10175510
24.	9-A23	10.240	BRACKET, F/FLR CNSL FRT	92-94	Y	RH	14049146
	9-A23	10.240	BRACKET, F/FLR CNSL FRT	92-94	Y	LH	14065087
25.	9-A23	10.240	BRACKET, F/FLR CNSL	92-96	Y	2	14046621
26.	9-A23	10.240	BRACKET, F/FLR CNSL INTER (FRT)	92-94	Y	RH	14049236
	9-A23	10.240	BRACKET, F/FLR CNSL INTER (FRT)	92-94	Y	LH	14049237
27.	9-A23	10.240	BRACKET, F/FLR CNSL INTER (RR)	92-96	Y	RH	14049238
	9-A23	10.240	BRACKET, F/FLR CNSL INTER (RR)	92-96	Y	LH	10137744
28.	9-A23	10.240	RETAINER, F/FLR CNSL TR PLT	92-93	Y	1	22570333
		N.S.	RETAINER, F/FLR CNSL TR PLT	94-96			
29.	9-B2	10.266	NUT, F/FLR CNSL DR LK CYL CASE	92-96	Y	1	52356317
30.	9-B2	10.263	CYLINDER KIT, F/FLR CNSL DR LK (UNCODED)	92-96	Y	1	12507229
31.		8.977	SCREW, OVAL CSK [illegible] HD W/WA TYPE AB (4.2X1.4X20) (16.682)	92-96		AR	12338093
32.	9-A23	10.240	PANEL, F/FLR CNSL SI TR (INCL 21) (RED)	92	Y (73I)	RH	10095100
		DISCON	PANEL, F/FLR CNSL SI TR (INCL 21) (RED)	92	Y (73I)	LH	10175801
	9-A23	10.240	PANEL, F/FLR CNSL SI TR (INCL 21) (GRAY)	92-93	Y (14I)	LH	10220073
	9-A23	10.240	PANEL, F/FLR CNSL SI TR (INCL 21) (GRAY)	92-93	Y (14I)	RH	10220074
	9-A23	10.240	PANEL, F/FLR CNSL SI TR (INCL 21) (BEIGE)	92-93	Y (64I)	LH	10220075
	9-A23	10.240	PANEL, F/FLR CNSL SI TR (INCL 21) (BEIGE)	92-93	Y (64I)	RH	10220076
	9-A23	10.240	PANEL, F/FLR CNSL SI TR (INCL 21) (BLACK)	92-93	Y (10I, 19I)	LH	10220077
	9-A23	10.240	PANEL, F/FLR CNSL SI TR (INCL 21) (BLACK)	92-93	Y (10I, 19I)	RH	10220078
	9-A23	10.240	PANEL, F/FLR CNSL SI TR (INCL 21) (RED)	93	Y (79I)	LH	10220079
		DISCON	PANEL, F/FLR CNSL SI TR (INCL 21) (RED)	93	Y (79I)	RH	10220080
	9-A23	10.240	PANEL, F/FLR CNSL SI TR (INCL 21) (RED)	93	Y (70I)	LH	10220081
	9-A23	10.240	PANEL, F/FLR CNSL SI TR (INCL 21) (RED)	93	Y (70I)	RH	10220082
	9-A23	10.240	PANEL, F/FLR CNSL SI TR (INCL 21) (BLACK)	94-96	Y (19I)	LH	10238465
	9-A23	10.240	PANEL, F/FLR CNSL SI TR (INCL 21) (BLACK)	94-96	Y (19I)	RH	10238466
	9-A23	10.240	PANEL, F/FLR CNSL SI TR (INCL 21) (BEIGE)	94-96	Y (64I)	LH	10238467
	9-A23	10.240	PANEL, F/FLR CNSL SI TR (INCL 21) (BEIGE)	94-96	Y (64I)	RH	10238468
	9-A23	10.240	PANEL, F/FLR CNSL SI TR (INCL 21) (RED)	94-95	Y (70I)	LH	10238469

© 2000 GENERAL MOTORS SERVICE PARTS OPERATIONS-CHEVROLET-14Y

							1Y10–C56
	9–A23	10.240	PANEL, F/FLR CNSL SI TR (INCL 21) (RED)	94–95	Y (70I)	RH	10238470
	9–A23	10.240	PANEL, F/FLR CNSL SI TR (INCL 21) (GRAY)	94–96	Y (14I)	LH	10238471
	9–A23	10.240	PANEL, F/FLR CNSL SI TR (INCL 21) (GRAY)	94–96	Y (14I)	RH	10238472
	9–A23	10.240	PANEL, F/FLR CNSL SI TR (INCL 21) (RED)	96	Y (70I) (EXC Z16)	LH	10238469
	9–A23	10.240	PANEL, F/FLR CNSL SI TR (INCL 21) (RED)	96	Y (70I) (EXC Z16)	RH	10238470
33.		N.S.	HOUSING, F/FLR CNSL ACSRY SW (PART OF 43)		.....		
34.	9–L8	2.480	HARNESS, I/P WRG	92	Y (MD8, C60) (EXC T61)	1	12125005
	9–L8	2.480	HARNESS, I/P WRG	92	Y (ML9, C60) (EXC T61)	1	12125007
	9–L8	2.480	HARNESS, I/P WRG	92	Y (MD8, C68) (EXC T61)	1	12125813
	9–L8	2.480	HARNESS, I/P WRG	92	Y (ML9, C68) (EXC T61)	1	12125815
	9–L8	2.480	HARNESS, I/P WRG	93	Y (MD8, C60) (EXC T90)	1	12141443
	9–L8	2.480	HARNESS, I/P WRG (FOR VEH –DRL, SPLICE CAV D TO CAV E @ BLUE 8–WAY DRL MDL CONN.)	93	Y (ML9, C68) (EXC T90)	1	12141444
	9–L8	2.480	HARNESS, I/P WRG	93	Y (ML9, C60) (EXC T90)	1	12141445
	9–L8	2.480	HARNESS, I/P WRG (ON VEHS W/O DAYTIME RUNNING LPS SPLICE CAV D & E WIRES TOGETHER AT BLUE DRL MDL CONN.)	93	Y (MD8, C68) (EXC T90)	1	12141446
	9–L8	2.480	HARNESS, I/P WRG	94	Y (ML9, C60) (EXC T61, T72, T84, T85, T90)	1	12130324
	9–L8	2.480	HARNESS, I/P WRG	94	Y (ML9, C68) (EXC T61, T72, T84, T85, T90)	1	12130326
	9–L8	2.480	HARNESS, I/P WRG	94	Y (M30, C60) (EXC T61, T72, T84, T85, T90) (2ND DES)	1	12130491
	9–L8	2.480	HARNESS, I/P WRG	94	Y (M30, C68) (EXC T61, T72, T84, T85, T90)	1	12130493
	9–L8	2.480	HARNESS, I/P WRG	94	Y (ML9, C68) (EXC T72, T84, T85, T90)	1	12163703
	9–L8	2.480	HARNESS, I/P WRG	95	Y (LT5, ML9, C68) (EXC T61)	1	12130326
	9–L8	2.480	HARNESS, I/P WRG	95	Y (LT1, ML9, C60) (EXC T61, T72, T84, T85, T90)	1	12163700
	9–L8	2.480	HARNESS, I/P WRG	95	Y (LT1, ML9, C68) (EXC T61, T72, T84, T85, T90)	1	12163702
	9–L8	2.480	HARNESS, I/P WRG	95	Y (LT5, ML9, C68)	1	12163703
	9–L8	2.480	HARNESS, I/P WRG (WHEN USE ON VEH W/O DAYTIME RUN LIGHTS, SPLICE CAV D&E TOGETHER @ BLUE 8–WAY DRL MOD CONN)	96	Y (M30, C60) (EXC T72, T84, T85, T90)	1	12130468
	9–L8	2.480	HARNESS, I/P WRG (WHEN USE ON VEH W/O DAYTIME RUN LIGHTS, SPLICE CAV D&E TOGETHER @ BLUE 8–WAY DRL MOD CONN)	96	Y (M30, C68) (EXC T72, T84, T85, T90)	1	12130470

© 2000 GENERAL MOTORS SERVICE PARTS OPERATIONS–CHEVROLET–14Y

							1Y10-005
	9-L8	2.480	HARNESS, I/P WRG (WHEN USE ON VEH W/O DAYTIME RUN LIGHTS, SPLICE CAV D&E TOGETHER @ BLUE 8-WAY DRL MOD CONN)	96	Y (ML9, C60) (EXC T72, T84, T85, T90)	1	12130472
	9-L8	2.480	HARNESS, I/P WRG (WHEN USE ON VEH W/O DAYTIME RUN LIGHTS, SPLICE CAV D&E TOGETHER @ BLUE 8-WAY DRL MOD CONN)	96	Y (ML9, C68) (EXC T72, T84, T85, T90)	1	12130474
	9-L8	2.480	HARNESS, I/P WRG	93	Y (ML9, C68, T90) (EXPORT)	1	12141441
	9-L8	2.480	HARNESS, I/P WRG	93	Y (MD8, C68, T90) (EXPORT)	1	12141442
	9-L8	2.480	HARNESS, I/P WRG	94	Y (M30, C68, T72, T84, T85, T90) (EXPORT) ...	1	12130495
	9-L8	2.480	HARNESS, I/P WRG	94	Y (ML9, C68, T72, T84, T85, T90) (EXPORT) ...	1	12141792
	9-L8	2.480	HARNESS, I/P WRG	95	Y (LT1, M30, C68, T72, T84, T85, T90) (EXC T61) (EXPORT)	1	12130396
	9-L8	2.480	HARNESS, I/P WRG	95	Y (LT1, ML9, C68, T72, T84, T85, T90) (EXC T61) (EXPORT)	1	12163704
	9-L8	2.480	HARNESS, I/P WRG	96	Y (M30, C68, T72, T84, T85, T90) (EXC T61) (EXPORT)	1	12130475
	9-L8	2.480	HARNESS, I/P WRG	96	Y (LT4, ML9, C68, T72, T84, T85, T90) (EXC T61) (EXPORT)	1	12163715
	9-L8	2.480	HARNESS, I/P WRG (TAGGED 0328)	94	Y (M30, C68, T72, T84, T85, T90) (1ST DES) (EXPORT)	1	12141791
35.		8.991	BULB, 194 (12V, 2CP) (AC-DELCO #L194)	92-96	.....	AR	9421330
36.	9-C17	11.378	SWITCH, DRVR/PASS ST BK LUMBAR SUPT	94	Y (AC1, AC3, AQ9)	1	10211792
	9-C17	11.378	SWITCH, DRVR/PASS ST BK LUMBAR SUPT	95	Y (AG1, AG2, AQ9)	1	10211792
	9-M9	7.450	CONTROL, ELEK SUSP (W/D/SEAT ADJR SW)	92-93	Y (AC3, FX3) (EXC AC1)	1	10161836
	9-C23	11.558	CONTROL, ELEK SUSP (W/D/SEAT ADJR SW) (7.450) ...	92-93	Y (AC3, FX3) (EXC AC1)	1	10161836
37.	9-C23	11.558	SWITCH, D/SEAT ADJR (PART OF 42) (CPS)	92	Y (AC1, AC3, FX3)	1	10161837
	9-C23	11.558	SWITCH, D/SEAT ADJR (PART OF 42) (CPS)	93	Y (AC3)	1	10161837
	9-C23	11.558	LAMP, D/SEAT & P/SEAT ADJR SW	92-93	Y (AC3)	2	10148002
38.	9-M9	7.450	SWITCH, ELEK SUSP (PART OF 42, 43) (CPS)	92	Y (FX3)	1	10161838
	9-M9	7.450	SWITCH, ELEK SUSP (PART OF 42, 43) (CPS)	93	Y (FX3, AC3)	1	10161838
	9-M9	7.450	LAMP, SELECTIVE RIDE SW	92	Y (FX3)	1	10159560
	9-M9	7.450	LAMP, SELECTIVE RIDE SW	93	Y (AC1, AC3, FX3)	1	10159560
39.	9-C23	11.558	SWITCH, P/SEAT ADJR (CPS) ...	92-93	Y (AC1, AC3)	1	10161843
	9-C23	11.558	LAMP, D/SEAT & P/SEAT ADJR SW	92-93	Y (AC3)	2	10148002
40.	9-A26	10.242	HOUSING, F/FLR CNSL ACSRY SW	92-94	Y (AC1, AC3) (EXC FX3)	1	10161844

							1Y10-005
	9-A26	10.242	HOUSING, F/FLR CNSL ACSRY SW	95	Y (AG1) (EXC AG2, FX3)	1	10161841
	9-A26	10.242	HOUSING, F/FLR CNSL ACSRY SW	95-96	Y (AG1, AG2, AR9, AQ9) (EXC FX3)	1	10161844
	9-A26	10.242	HOUSING, F/FLR CNSL ACSRY SW	96	Y (AG1) (EXC AG2, F45)	1	10161841
41.	9-A26	10.242	HOUSING, F/FLR CNSL ACSRY SW	92-94	Y (AC3) (EXC AC1, FX3)	1	10161841
	9-A26	10.242	HOUSING, F/FLR CNSL ACSRY SW	95	Y (AG1) (EXC AG2, FX3)	1	10161841
	9-A26	10.242	HOUSING, F/FLR CNSL ACSRY SW	95-96	Y (AG1, AG2, AR9, AQ9) (EXC FX3)	1	10161844
	9-A26	10.242	HOUSING, F/FLR CNSL ACSRY SW	96	Y (AG1) (EXC AG2, F45)	1	10161841
42.	9-M9	7.450	CONTROL, ELEK SUSP (W/D/SEAT ADJR SW) (INCL 37, 38, 53)	92-93	Y (AC3, FX3) (EXC AC1)	1	10161836
	9-C23	11.558	CONTROL, ELEK SUSP (W/D/SEAT ADJR SW) (INCL 37, 38, 53) (7.450)	92-93	Y (AC3, FX3) (EXC AC1)	1	10161836
	9-C17	11.378	SWITCH, DRVR/PASS ST BK LUMBAR SUPT (INCL 37, 38, 53)	94	Y (AC1, AC3, AQ9)	1	10211792
	9-C17	11.378	SWITCH, DRVR/PASS ST BK LUMBAR SUPT (INCL 37, 38, 53)	95	Y (AG1, AG2, AQ9)	1	10211792
43.	9-M9	7.450	SWITCH, ELEK SUSP (INCLS 33)	92	Y (FX3)	1	10161838
	9-M9	7.450	SWITCH, ELEK SUSP (INCLS 33)	92	Y (FX3) (EXC AC1, AC3)	1	10161847
	9-M9	7.450	SWITCH, ELEK SUSP (INCLS 33)	93	Y (FX3, AC3)	1	10161838
	9-M9	7.450	SWITCH, ELEK SUSP (INCLS 33)	94-95	Y (FX3)	1	10212995
	9-M9	7.450	SWITCH, ELEK SUSP (INCLS 33)	96	Y (F45)	1	10212995
44.	9-A23	10.240	NUT, F/FLR CNSL TP PLT (PART OF 8, 9) (10.252)	92-93	Y (MD8)	6	10175813
	9-A23	10.240	NUT, F/FLR CNSL TR PLT (PART OF 8, 9) (10.252)	92-96	Y (ML9)	4	10175813
	9-A23	10.240	NUT, F/FLR CNSL TR PLT (PART OF 8, 9) (10.252)	94-96	Y (M30)	6	10175813
45.		8.900	SCREW, FL WA&HEX HD TAP 4.2-1.41X16 (F/FLR CNSL) (8.977)	92-96		5	11503395
46.	9-M6	4.020	HOUSING, A/TRNS CONT IND (PART OF 9)	92-93	Y (MD8)	1	10146440
	9-M6	4.020	HOUSING, A/TRNS CONT IND (PART OF 9)	94-96	Y (M30)	1	10146440
47.	9-M6	4.022	SHIELD, A/TRNS CONT IND LGT (PART OF 9)	92-96	Y	1	14046746
48.	9-M6	4.020	INDICATOR, A/TRNS CONT (PART OF 9)	92-93	Y (MD8)	1	10146437
	9-M6	4.020	INDICATOR, A/TRNS CONT (PART OF 9)	94-96	Y (M30)	1	10146437
49.	9-M6	4.015	BOOT, A/TRNS CONT (PART OF 9)	92-96	Y	1	10175792
50.	9-M6	4.015	BOOT, M/TRNS CONT LVR LWR	92-96	Y	1	14104932
51.	9-L6	2.188	SWITCH, ENG PWR	92-95	Y (LT5)	1	12514730
52.	9-A28	10.252	PLATE, I/P ACSRY TR (BLACK)	92-93	Y (LT1)	1	10233785
	9-A28	10.252	PLATE, I/P ACSRY TR	94-95	Y (LT1)	1	10262830
	9-A28	10.252	PLATE, I/P ACSRY TR	94-95	Y (LT5)	1	10262831
	9-A28	10.252	PLATE, I/P ACSRY TR	96	Y	1	10262830
53.	9-A26	10.242	HOUSING, F/FLR CNSL ACSRY SW	92-94	Y (AC3) (EXC AC1, FX3)	1	10161841

© 2000 GENERAL MOTORS SERVICE PARTS OPERATIONS-CHEVROLET-14Y

							1Y10-005
	9-A26	10.242	HOUSING, F/FLR CNSL ACSRY SW	92-94	Y (AC1, AC3) (EXC FX3)	1	10161844
	9-A26	10.242	HOUSING, F/FLR CNSL ACSRY SW	92-94	Y (AC1, AC3, FX3)	1	10161846
	9-A26	10.242	HOUSING, F/FLR CNSL ACSRY SW	95	Y (AG1) (EXC AG2, FX3)	1	10161841
	9-A26	10.242	HOUSING, F/FLR CNSL ACSRY SW	95-96	Y (AG1, AG2, AR9, AQ9) (EXC FX3)	1	10161844
	9-A26	10.242	HOUSING, F/FLR CNSL ACSRY SW	95-96	Y (AG1, AG2, AQ9, AR9, FX3)	1	10161846
	9-A26	10.242	HOUSING, F/FLR CNSL ACSRY SW	96	Y (AG1) (EXC AG2, F45)	1	10161841
54.	9-M19	9.709	RETAINER, C/LTR HSG (CASCO)	92-96	Y	1	3986870
55.	9-M6	4.015	BOOT, M/TRNS CONT LVR (PART OF 8)	95-96	Y (ML9)	1	10267746
	9-M6	4.015	BOOT, M/TRNS CONT LVR (UPR) (ON EARLY 92 & PRIOR MDLS, REMOVE & DISCARD C-CLIP ON SHFTR LVR) (PART OF 8)	92-94	Y (ML9)	1	10193729
56.	9-M6	4.020	DIAL, A/TRNS CONT IND (PART OF 9)	92-93	Y (MD8) (EXC VE1)	1	10153627
	9-M6	4.020	DIAL, A/TRNS CONT IND (PART OF 9)	94-96	Y (M30) (EXC VE1)	1	10220955
		DISCON	DIAL, A/TRNS CONT IND (PART OF 9)	92-93	Y (MD8, VE1) (EXPORT)	1	10175897
	9-M6	4.020	DIAL, A/TRNS CONT IND (PART OF 9)	94-96	Y (M30, VE1) (EXPORT)	1	10220956
57.	9-A26	10.242	HOUSING, F/FLR CNSL ACSRY SW	92-93	Y (AC1, AC3, FX3)	1	10161846
58.	9-A23	10.240	MAT, F/FLR CNSL TR PLT (CUP HOLDER) (BLACK)	92-96	Y	2	10167113
59.	9-A28	10.252	PLATE, I/P ACSRY TR (PART OF 43) (BLACK)	92-93	Y (LT1)	1	10233785
	9-A28	10.252	PLATE, I/P ACSRY TR (PART OF 43)	94-95	Y (LT1)	1	10262830
	9-A28	10.252	PLATE, I/P ACSRY TR (PART OF 43)	94-95	Y (LT5)	1	10262831
	9-A28	10.252	PLATE, I/P ACSRY TR (PART OF 43)	96	Y	1	10262830
	9-A28	10.252	PLATE, I/P ACSRY TR (PART OF 43)	92-93	Y (LT5)	1	10233781

RPO DEFINITIONS

AC1 – ADJUSTER,SEAT,6-WAY POWER,BUCKET,PASSENGER
AC3 – ADJUSTER,SEAT,6-WAY POWER,BUCKET,DRIVER
AG1 – ADJUSTER,SEAT,6-WAY POWER,DRIVER(60-40)(VAR 2)
AG2 – ADJUSTER,SEAT,6-WAY POWER,SPLIT BENCH,PASSENGER
AQ9 – SEAT,FRONT BUCKET,DRIVER,PASSENGER,RECLINING
AR9 – SEAT,FRONT BUCKET,DRIVER,PASSENGER,MANUAL RECLINING(EUROPEAN STYLE)
C60 – AIR CONDITIONER,FRONT,MANUAL CONTROLS
C68 – AIR CONDITIONER,FRONT,AUTOMATIC,ELECTRONIC CONTROLS
FX3 – RIDE AND HANDLING,ELECTRONIC CONTROLLED
F45 – CHASSIS CONTINUOUS VALVE REAL TIME DAMPING
LT1 – ENGINE-GAS, 8 CYL, 5.7L(5.7P),MFI,HO
LT4 – ENGINE GAS, 8 CYL, 5.7L, MFI, HIGH OUTPUT
LT5 – ENGINE,5.7L(5.7J),TPI
MD8 – TRANSMISSION,AUTOMATIC 4-SPEED(THM700R4/4L60)
ML9 – TRANSMISSION,MANUAL 6-SPEED
M30 – TRANSMISSION,AUTOMATIC 4 SPEED,4L60E,ELECTRONIC
T61 – LIGHTING,DAYTIME RUNNING

© 2000 GENERAL MOTORS SERVICE PARTS OPERATIONS-CHEVROLET-14Y

T72 – HEADLAMPS,LH RULE OF THE ROAD(EXPORT)
T84 – HEADLAMPS,RH RULE OF THE ROAD,RECTANGULAR(MARKED E)(EXPORT)
T85 – HEADLAMPS,LH RULE OF THE ROAD,RECTANGULAR(MARKED E)(EXPORT)
T90 – LAMP,SIGNALING AND MARKER(EXPORT)
VE1 – PROVISION OPTIONS,JAPAN(EXPORT)
Z16 – APPEARANCE PACKAGE,GRAND SPORT EDITION
10I – INTERIOR TRIM – ARCTIC WHITE
14I – INTERIOR TRIM LT GRAY
19I – INTERIOR TRIM,BLACK
64I – INTERIOR TRIM,LIGHT BEIGE
70I – INTERIOR TRIM,TORCH RED
73I – INTERIOR TRIM,FLAME RED
79I – INTERIOR TRIM,RUBY RED

© 2000 GENERAL MOTORS SERVICE PARTS OPERATIONS – CHEVROLET – 14Y

1Y10-009 07/27/98

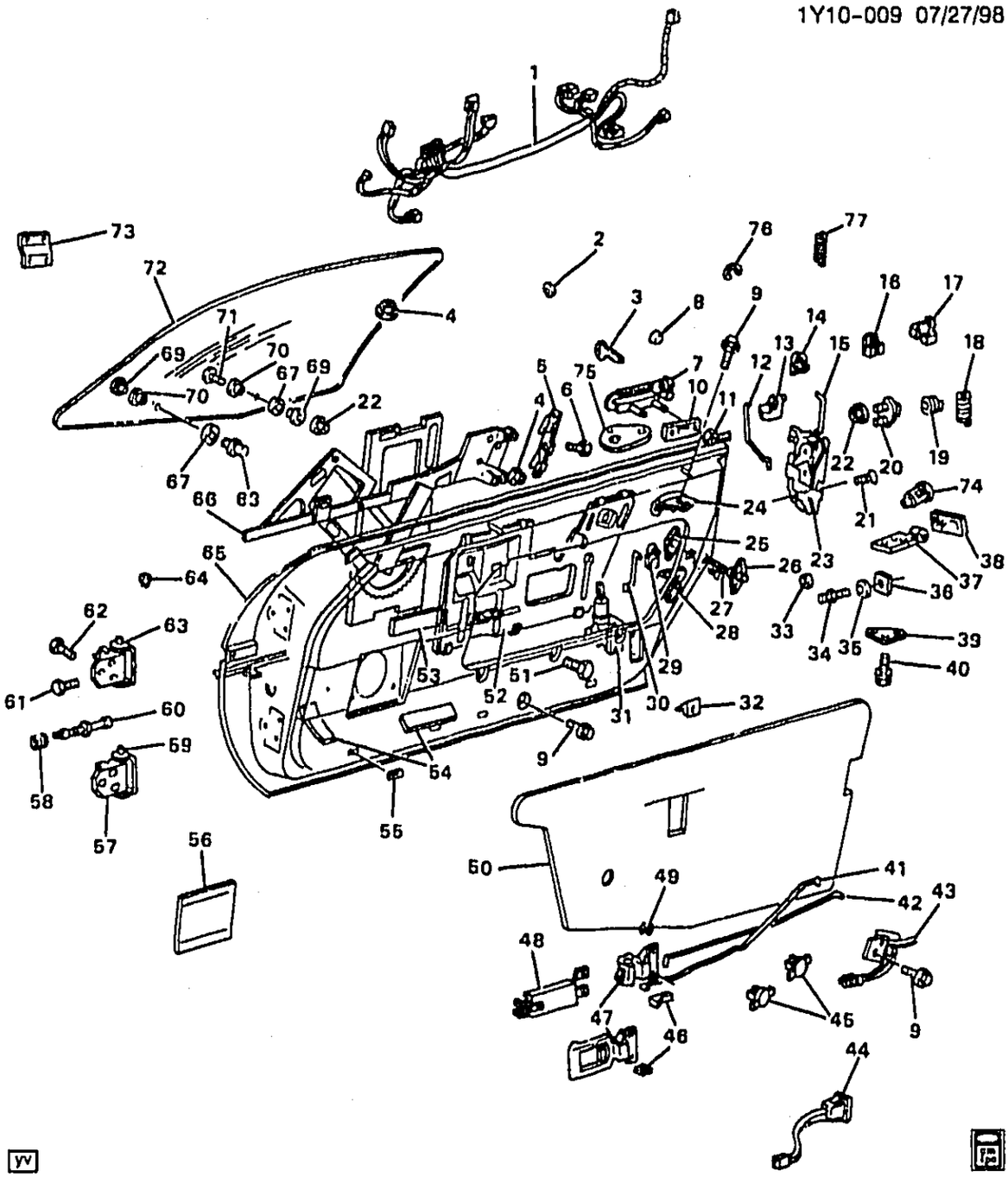

1Y10-009

1984-1989 Y DOOR HARDWARE/FRONT

1.		DISCON	HARNESS, PWR WDO WRG-RH (1984-85 AU3)	12028822
		DISCON	HARNESS, PWR WDO WRG-RH (1984-85 EXC AU3)	12016810
		DISCON	HARNESS, PWR WDO WRG-RH (1986-87)	12069841
		DISCON	HARNESS, PWR WDO WRG-RH (1988)	12055831
		DISCON	HARNESS, PWR WDO WRG-LH (1984-85 AU3)	12028821
		DISCON	HARNESS, PWR WDO WRG-LH (1984-85 EXC AU3)	12016811
		DISCON	HARNESS, PWR WDO WRG-LH (1986-87)	12069840
		DISCON	HARNESS, PWR WDO WRG-LH (1988)	12055829
2.	9-B8	10.550	GASKET, LK CYL	4587931
3.	9-L5	2.187	KEY, BLANK OVAL HD (B&S 320589A)	1154611

© 2000 GENERAL MOTORS SERVICE PARTS OPERATIONS-CHEVROLET-14Y

				1Y10-009
	9-L5	2.187	KEY, BLANK OVAL HD (1987-89) (B&S 320653A)	1154605
4.	9-B14	10.728	NUT, WDO (6X1)	20310129
5.	9-B11	10.685	STABILIZER, WDO GLS-RH	10267184
	9-B11	10.685	STABILIZER, WDO GLS-LH	10267183
6.	9-B14	10.728	BOLT, WDO GLS STAB GDE	20196450
7.	9-B8	10.527	HANDLE, O/S-RH (LESS LK) (B&S 593094)	14075358
	9-B8	10.527	HANDLE, O/S-LH (LESS LK) (B&S 593095)	14075359
	9-B8	10.550	CYLINDER KIT, FRT S/D LK (UNCD) (1984-89) (INCLS UNIT SHUTTER, LK CYL, CASE, E-RING, RETAINER, SPRINGS)	12522046
	9-B8	10.550	CYLINDER KIT FRT S/D LK (UNCODED) (1987-89) (B&S 700636)	12522046
	9-B8	10.551	PAWL, LK (B&S 321226)	14075363
	9-B8	10.552	SHUTTER, FRT S/D LK CYL	12503693
	9-M26	12.249	SHUTTER, R/CMPT LID LK CYL	12503692
	9-B8	10.552	SPRING, FRT S/D LK CYL SHUTTER	12503691
8.		N.S.	CAP, FRT S/D LK CYL (B&S 321166) NOT USED AFTER 1982	
9.		8.900	BOLT, HEX (M6X1X13) 9.8, POR (AC-DELCO #11514149)	11514149
10.	9-N5	13.090	BRACKET, PWR WDO WRG HARN	14073415
11.		8.921	NUT, FLG STMP (SEAL) (M6.3X24) ZC	11508693
12.	9-B9	10.563	ROD, LK O/S HDL	14043181
13.	9-B9	10.565	RETAINER, FRT S/D O/S HDL ROD (1985-89)	16607593
	9-B9	10.565	RETAINER, FRT S/D O/S HDL ROD	16607593
14.	9-B7	10.506	CONNECTOR, LK R/CONT ROD (9.786)	20007898
15.	9-B9	10.563	ROD, LK CYL-RH	14043184
	9-B9	10.563	ROD, LK CYL-LH	14043183
16.	9-B5	10.485	RETAINER, DR LK SW TERM BD (1984-88) (PART OF 23)	20150792
17.	9-B5	10.485	RETAINER, SPR LK REM LVR, LK SW TERM (1987-88) (B&S 320931) (PART OF 23)	12338100
18.		N.S.	SPRING, O/S HDL (1987-88) (PART OF 23)	
19.	9-B5	10.474	SPRING, LK OVER CTR-RH (1987-88) (PART OF 23)	20047022
	9-B5	10.474	SPRING, LK OVER CTR-LH (1987-88) (PART OF 23)	20047023
20.		DISCON	PIN, GDE (Y07)	14060282
		DISCON	PIN, GDE (Y67)	14092602
21.		8.913	SCREW, PAN HD TORX (W/WA) (M6X1X16) SS	11508468
22.		8.917	NUT, HEX, SL (6X1X5) ZP	94009170
23.	9-B5	10.470	LOCK, RH (1984-88) (INCL 16-19)	16608234
	9-B5	10.470	LOCK, RH (1989)	10259204
	9-B5	10.470	LOCK, LH (1984-88) (INCL 16-19)	16608235
	9-B5	10.470	LOCK, LH (1989)	10259203
24.	9-B11	10.685	STABILIZER, FRT S/D WDO	10054691
25.		DISCON	RETAINER, AJAR IND SW	14087682
26.	9-C28	11.950	SWITCH, AJAR IND (1984)	14062556
	9-C28	11.950	SWITCH, AJAR IND (1985-87) (AC-DELCO #D6036)	10045838
	9-C28	11.950	SWITCH, AJAR IND (1988-89) (AC-DELCO #D6055)	10098478
27.	9-B10	10.587	BUMPER (1984-88)	14030512
28.		DISCON	BRACKET, PWR LK WRG HARN	14066514
29.	9-B9	10.565	RETAINER, FRT S/D O/S HDL ROD	16627328
	9-B9	10.565	RETAINER, FRT S/D LK CYL ROD (1985-89)	16627328
30.	9-B9	10.563	ROD, LK R/CONT-RH	14043194
	9-B9	10.563	ROD, LK R/CONT-LH	14043193
31.	9-B5	10.485	ACTUATOR, ELEC LK (1984) (AC-DELCO #22020256)	22020256
	9-B5	10.485	ACTUATOR, ELEC LK (1985-89) (AC-DELCO #22049686)	22049686
	9-B5	10.485	BRACKET, ELEC LK ACTR (AC-DELCO #22049754)	22049754
32.	9-B14	10.716	BRACKET, SI F/D WDO STOP	20698689
33.	9-B10	10.571	WASHER, STKR TO PNL	4469196
34.	9-B10	10.569	STRIKER, LK (1984-88) (12.237)	20351024
	9-B10	10.569	STRIKER, LK (1989)	16602509
35.		8.929	WASHER, FL (M13X45X1.5)	1260895

© 2000 GENERAL MOTORS SERVICE PARTS OPERATIONS-CHEVROLET-14Y

				1Y10-009
36.	9-B10	10.571	PLATE, LK STKR TAP	14060217
37.	9-B10	10.571	LOCATOR, GDE PIN-RH (Y07)	14046604
	9-B10	10.571	LOCATOR, GDE PIN-LH (Y07)	14046603
		DISCON	LOCATOR, GDE PIN (Y67)	14092601
38.	9-B10	10.571	SEAL, GDE PIN LOC-RH (Y07)	10078256
		DISCON	SEAL, GDE PIN LOC-RH (Y67)	10075364
	9-B10	10.571	SEAL, GDE PIN LOC-LH (Y07)	10078257
		DISCON	SEAL, GDE PIN LOC-LH (Y67)	10075365
39.	9-B10	10.571	REINFORCEMENT, LOC	14047542
40.		8.900	BOLT, HFH (M6X1X20) 9.8, PZOR (AC-DELCO #11508600)	11508600
41.		DISCON	ROD, LK R/CONT LK-RH	14043190
		DISCON	ROD, LK R/CONT LK-LH	10048899
42.	9-B9	10.563	ROD, LK I/S HDL-RH	14043188
	9-B9	10.563	ROD, LK I/S HDL-LH	14043187
43.		DISCON	SWITCH, THEFT DETERENT LK-RH (1984-87)	14066516
	9-L7	2.195	SWITCH, THEFT DETERENT LK-LH (1984-87)	14066515
44.	9-M26	12.243	SWITCH, COMPT LID REL (1984-85)	14062518
	9-M26	12.243	SWITCH, COMPT LID REL (1986-87) (AC-DELCO #14093168)	14093168
	9-M26	12.243	SWITCH, COMPT LID REL (1988-89)	14104196
45.	9-B9	10.565	GUIDE, LK I/S HDL ROD, LK R/CONT ROD	15592648
46.	9-B9	10.559	KNOB, I/S LK ROD (1984-87)	20632681
	9-B9	10.559	KNOB, LK R/CONT LK ROD (1988-89)	20632681
47.		DISCON	HANDLE, I/S (1984) (1984 1ST DESIGN - SOLID WITH A CURLED END)	14043185
	9-B7	10.512	HANDLE, I/S (1984-89) (1984 2ND DESIGN - FLAT WITH RECTANGULAR HOLE IN IT)	10153684
48.	9-N10	14.685	INSERT, TR PNL	10248659
49.	9-B7	10.512	CLIP, I/S HDL	375180
50.	9-B4	10.355	INSULATOR, FRT S/D (RH) (RH)	10193704
	9-B4	10.355	INSULATOR, FRT S/D (LH) (LH)	10193703
	9-B4	10.355	INSULATOR, INR PNL WAT (1989) (RH)	10193704
	9-B4	10.355	INSULATOR, INR PNL WAT (1989) (LH)	10193703
51.		8.977	SCREW, HEX TAP (W/WA) (M4.2X1.41X16) POR	25512804
52.		DISCON	PLATE, ACSRY MT-RH	10045632
		DISCON	PLATE, ACSRY MT-LH	10045631
53.		DISCON	INSULATOR, WDO GLS (1984-85)	14081887
	9-B4	10.355	INSULATOR, WDO GLS (1986-89) (10.355)	10045633
54.	9-M12	9.260	SEAL, POLYU (3.145)	3999572
55.		8.921	NUT, ANC (8X18) NY	1377030
56.	9-M17	9.665	SEAL, DR RADIO SPKR OPG CVR	14064578
57.	9-B5	10.454	HINGE, LWR (INCL 59, 64)	14043177
58.	9-C28	11.950	SEAL, JAMB SW	20057139
59.	9-B5	10.466	PIN, HGE UPR/LWR (PART OF 57, 63)	20046147
60.	9-C28	11.950	SWITCH, JAMB (AC-DELCO #D6039)	10045860
61.		8.900	SCREW, HEX (W/WA) (M8X1.25X40)	11503990
62.		8.900	BOLT, HEX (M8X1.25X25) 10.9, PC (AC-DELCO #11500918)	11500918
63.	9-B5	10.450	HINGE, UPR (INCL 59, 64)	14043176
64.	9-B5	10.464	BUSHING, HGE UPR/LWR (PART OF 57, 63)	20429500
65.	9-B3	10.351	DOOR, FRT SI CUT SPKR HOLES AS REQUIRED	10228732
	9-B3	10.351	DOOR, FRT SI CUT SPKR HOLES AS REQUIRED	10270267
	9-N3	12.895	PANEL, OTR-RH	14043106
	9-N3	12.895	PANEL, OTR-LH	14043105
66.		DISCON	MOTOR, WDO LIFT (1984-85)	22039707
		N.S.	ARMATURE KIT, WDO LIFT MTR (1984)	
	9-B15	10.783	RACK, WDO REG FLEX (1984-85)	10045642
	9-B15	10.783	REGULATOR, WDO-RH (AC-DELCO #22063224)	22063224
	9-B15	10.783	REGULATOR, WDO-LH (AC-DELCO #22063225)	22063225

© 2000 GENERAL MOTORS SERVICE PARTS OPERATIONS-CHEVROLET-14Y

		N.S.	HOLDER, WDO REG BRUSH (1988-89)	
67.	9-B14	10.716	BUSHING, FRT S/D WDO FRT UP STOP	1705300
68.	9-B14	10.716	STOP, WDO GLS (10.685)	20229773
69.	9-B14	10.728	NUT, WDO STOP, WDO (M6X1) (8.02/2.0NM)	20213450
70.	9-B14	10.716	BUSHING, FRT S/D WDO FRT UP STOP	
71.	9-B11	10.685	STUD, WDO GLS (1984-87)	10045630
	9-B11	10.685	BOLT, WDO GLS (1988-89)	10045630
72.	9-B10	10.681	WINDOW, DR-RH	14094292
	9-B10	10.681	WINDOW, DR-LH	14094291
73.	9-L25	2.559	BRACKET, I/P WRG HARN LEAD	14066583
74.	9-B8	10.550	CYLINDER KIT, FRT S/D LK (UNCODED)	
75.	9-B8	10.551	PAWL, FRT S/D LK	
76.		8.934	RING, TYPE TE #25 (FRT S/D LK PAWL REL) (2) (AC-DELCO #9431762)	9431762
77.	9-B9	10.553	SPRING, FRT S/D LK CYL TUMB (2)	

© 2000 GENERAL MOTORS SERVICE PARTS OPERATIONS-CHEVROLET-14Y

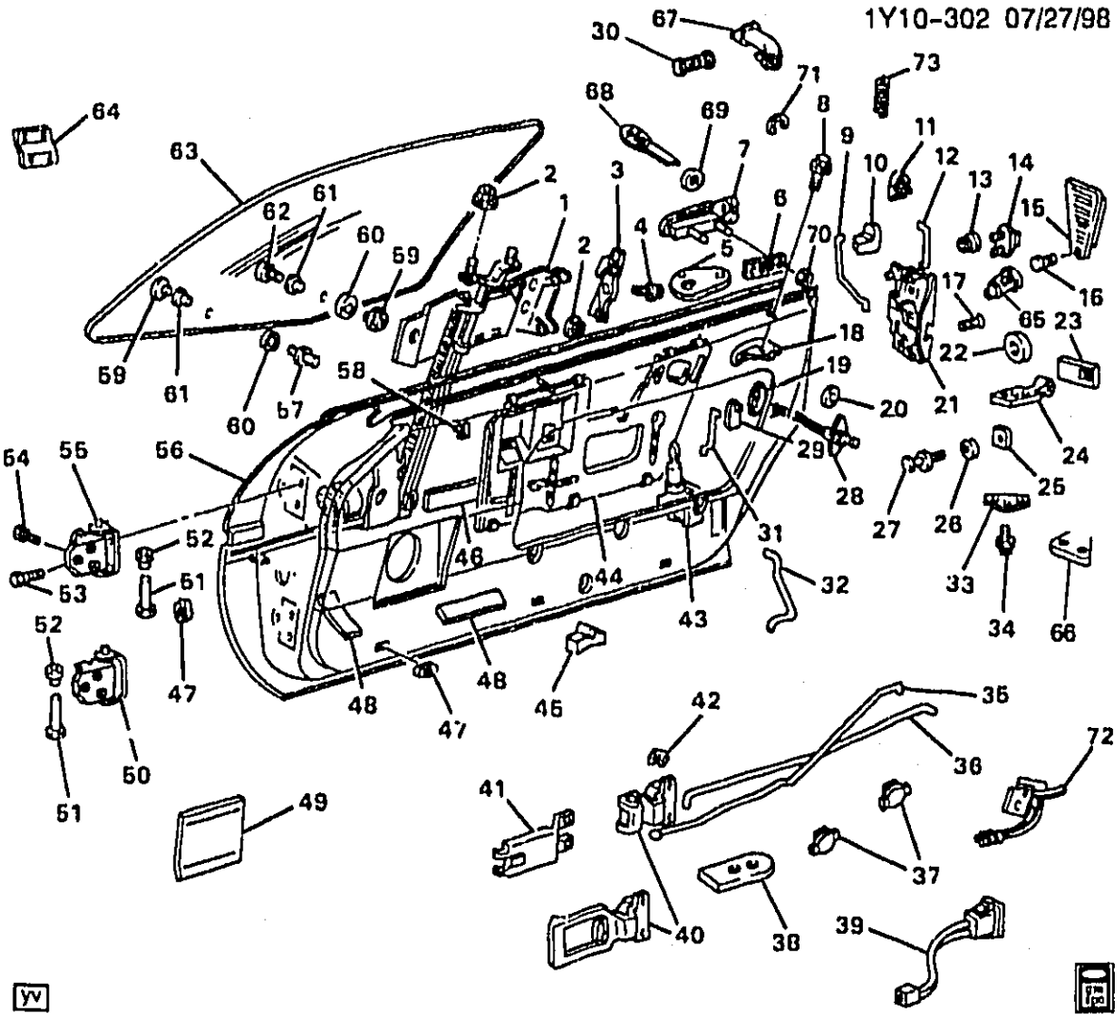

1990-1992 Y DOOR HARDWARE/FRONT

1.	9-B15	10.783	REGULATOR, FRT S/D WDO (W/MOT) (AC-DELCO #22063224)	90-92	Y	RH	22063224
	9-B15	10.783	REGULATOR, FRT S/D WDO (W/MOT) (AC-DELCO #22063225)	90-92	Y	LH	22063225
	9-B15	10.783	HOLDER, FRT S/D WDO REG MOT BRUSH	90-92	Y	1	22094719
2.	9-B14	10.728	NUT, FRT S/D WDO (POSN #1) (7.75/1.75MM)	90-92	Y	8	20310129
		8.917	NUT, HEX W/CON WA M6X1X5.5, 24-OD 9 PEOR (POSN #2) (8.915)	90-92	.....	4	11508388
3.	9-B11	10.685	STABILIZER, FRT S/D WDO	90-92	Y	LH	10267183
	9-B11	10.685	STABILIZER, FRT S/D WDO	90-92	Y	RH	10267184
4.		N.S.	SCREW, HEX W/WA (M6X1X16) .		.....		
5.	9-B8	10.551	PAWL, FRT S/D LK	90-92	Y (ZR1)	LH	10159539
	9-B8	10.551	PAWL, FRT S/D LK	90-92	Y (ZR1)	RH	10159540
	9-B8	10.551	PAWL, FRT S/D LK	90-92	Y (EXC ZR1)	2	14075363
6.	9-N5	13.090	BRACKET, P/W DR WRG HARN .	90-92	Y	2	14073415
7.	9-B8	10.527	HANDLE, FRT S/D O/S (LESS LOCK) (B&S 593094)	90-92	Y	RH	14075358

© 2000 GENERAL MOTORS SERVICE PARTS OPERATIONS-CHEVROLET-14Y

							1Y10-302
	9-B8	10.527	HANDLE, FRT S/D O/S (LESS LOCK) (B&S 593095)	90-92	Y	LH	14075359
8.	9-B11	10.685	BOLT, FRT S/D WDO STAB (10.728)	90-92	Y	4	20196450
9.	9-B9	10.563	ROD, FRT S/D I/S HDL	90-92	Y (EXC ZR1)	2	14043181
	9-B9	10.563	ROD, FRT S/D I/S HDL	90-92	Y (ZR1)	2	14104399
10.	9-B9	10.565	RETAINER, FRT S/D O/S HDL ROD (RED) (SNAP-ON)	90-92	Y	LH	16607593
	9-B9	10.565	RETAINER, FRT S/D O/S HDL ROD (RED) (NYLON) (10.527)	90-92	Y	RH	16627328
11.	9-B9	10.565	CLIP, FRT S/D LKG ROD (PLASTIC) (9.786)	90-92	Y	2	20007898
12.	9-B9	10.563	ROD, FRT S/D LK CYL	90-92	Y (ZR1)	LH	10137745
	9-B9	10.563	ROD, FRT S/D LK CYL	90-92	Y (ZR1)	RH	10137746
	9-B9	10.563	ROD, FRT S/D LK CYL	90-92	Y (EXC ZR1)	LH	14043183
	9-B9	10.563	ROD, FRT S/D LK CYL	90-92	Y (EXC ZR1)	RH	14043184
13.		8.917	NUT, HEX W/CON WA M6X1X5.5 (9) 7111M 16-OD	90-92		AR	11516793
14.		DISCON	PIN, FRT S/D LOC (10.466)	90	Y07	2	14060282
		DISCON	PIN, FRT S/D LOC (10.570)	90	Y67	2	14092602
		DISCON	PIN, FRT S/D LOC (10.466)	91-92	Y	2	14060282
15.	9-N4	12.942	VALVE, FRT S/D PRESS RLF	90-92	Y07	2	10054609
16.		8.977	SCREW, PAN HD TORX TAP M4.2X1.41X16 SS BLK 7.5 OD (FRT S/D PRESS RLF VLV)	90-92		2	11508879
17.		8.913	SCREW, PAN HD TORX W/CON WA M6X1X16 SS BLK HRD PT (FRT S/D LK)	90		6	11508468
	9-B5	10.474	BOLT, FRT S/D LK	91-92	Y	6	10172329
18.	9-B11	10.685	STABILIZER, FRT S/D WDO	90-92	Y	LH	10267183
	9-B11	10.685	STABILIZER, FRT S/D WDO	90-92	Y	RH	10267184
19.	9-C28	11.950	RETAINER, DR AJAR IND SW	90-92	Y	2	14087[illegible]82
20.	9-B8	10.551	WASHER, FRT S/D LK CYL (.75 IN DIA) (12.249)	90-92	Y	AR	8779134
21.	9-B5	10.470	LOCK, FRT S/D	90-92	Y	RH	10259203
	9-B5	10.470	LOCK, FRT S/D	90-92	Y	LH	10259204
22.		N.S.	WASHER				
23.	9-B10	10.571	SEAL, FRT S/D LOCR (10.584)	90	Y07	RH	10078256
	9-B10	10.571	SEAL, FRT S/D LOCR (10.584)	90	Y07	LH	10078257
		DISCON	SEAL, FRT S/D LOCR (10.584)	90	Y67	RH	10075364
		DISCON	SEAL, FRT S/D LOCR (10.584)	90	Y67	LH	10075365
	9-B10	10.571	SEAL, FRT S/D LOCR (10.584)	91-92	Y	RH	10078256
	9-B10	10.571	SEAL, FRT S/D LOCR (10.584)	91-92	Y	LH	10078257
24.	9-B10	10.571	LOCATOR, FRT S/D	90	Y07 (FE1, FE7)	LH	14046603
	9-B10	10.571	LOCATOR, FRT S/D	90	Y07 (FE1, FE7)	RH	14046604
	9-B10	10.571	LOCATOR, FRT S/D	91-92	Y	LH	14046603
	9-B10	10.571	LOCATOR, FRT S/D	91-92	Y	RH	14046604
25.	9-B10	10.571	PLATE, FRT S/D LK STKR TAP	90-92	Y	2	14060217
26.	9-B10	10.571	WASHER, FRT S/D LK STKR (10.5X4X0.25 STL)	90-92	Y	4	4469196
27.	9-B10	10.569	STRIKER, FRT S/D LK	90-92	Y	2	16602509
28.	9-C28	11.950	SWITCH, DR AJAR IND (AC-DELCO #D6055)	90-92	Y	2	10098478
29.	9-B9	10.565	RETAINER, FRT S/D LK CYL ROD (RED) (SNAP-ON)	90-92	Y	RH	16607593
	9-B9	10.565	RETAINER, FRT S/D LK CYL ROD (RED) (NYLON) (10.527)	90-92	Y	LH	16627328
30.	9-L19	2.530	CONDUIT, S/D WRG	91-92	Y	2	10098907

© 2000 GENERAL MOTORS SERVICE PARTS OPERATIONS-CHEVROLET-14Y

							1Y10-302
31.	9-B9	10.563	ROD, FRT S/D LK ACTR	90-92	Y	LH	14043193
32.	9-B9	10.563	ROD, FRT S/D LK ACTR	90-92	Y	RH	14043194
33.	9-B10	10.571	REINFORCEMENT, FRT S/D LOCR (10.450)	90-92	Y	2	14047542
34.		8.900	BOLT, HFH (M6X1X20 9.8 PZOR (AC-DELCO #11508600)	90-92		AR	11508600
35.	9-B9	10.563	ROD, FRT S/D LKG	90-92	Y	LH	10086309
	9-B9	10.563	ROD, FRT S/D LKG	90-92	Y	RH	10086310
36.	9-B9	10.563	ROD, FRT S/D I/S HDL	90-92	Y	LH	14043187
	9-B9	10.563	ROD, FRT S/D I/S HDL	90-92	Y	RH	14043188
37.	9-B9	10.565	GUIDE, FRT S/D LKG ROD	90-92	Y	2	15592648
	9-B9	10.565	GUIDE, FRT S/D I/S HDL ROD	90-92	Y	2	15592648
38.		N.S.	INSULATOR, FRT S/D LKG ROD				
39.	9-M26	12.243	SWITCH, R/CMPT LID REL	90-92	Y	2	10098458
40.	9-B7	10.512	HANDLE, FRT S/D I/S (BLACK)	90-92	Y	2	10153684
		DISCON	HANDLE, FRT S/D I/S (RED)	90-92	Y (73I)	2	10153685
		DISCON	HANDLE, FRT S/D I/S (GRAY)	90-91	Y (90I)	2	10153681
		DISCON	HANDLE, FRT S/D I/S (BLUE)	90-91	Y (22I)	2	10153682
		DISCON	HANDLE, FRT S/D I/S (COGNAC)	90-91	Y (60I)	2	10153683
	9-B7	10.512	HANDLE, FRT S/D I/S (GRAY)	92	Y (14I)	2	10175707
	9-B7	10.512	HANDLE, FRT S/D I/S (BEIGE)	92	Y (64I)	2	10175708
41.	9-N10	14.685	INSERT, FRT S/D T/PNL (BLACK) (PAINT TO MATCH)	90-92	Y	2	10248659
42.	9-B7	10.512	CLIP, FRT S/D I/S HDL (10.565)	90-92	Y	2	375180
43.	9-B5	10.485	ACTUATOR, FRT S/D LK (AC-DELCO #22049686)	90-92	Y	2	22049686
	9-B5	10.485	BRACKET, FRT S/D LK ACTR (AC-DELCO #22049754)	90-92	Y	2	22049754
44.	9-N3	12.895	PANEL, FRT S/D INR MTG	92	Y	LH	10086185
	9-N3	12.895	PANEL, FRT S/D INR MTG	92	Y	RH	10086186
	9-N3	12.895	PANEL, FRT S/D INR MTG (DRILL TWO HOLES IN PLT FOR ELEC DR ACT.)	90-91	Y	LH	10086185
	9-N3	12.895	PANEL, FRT S/D INR MTG (DRILL TWO HOLES IN PLT FOR ELEC DR ACT.)	90-91	Y	RH	10086186
45.	9-B14	10.716	STOP, FRT S/D WDO DN	90-92	Y	2	22063270
46.	9-B4	10.355	INSULATOR, FRT S/D OTR PNL BAR (10.685)	90-92	Y	2	10045633
47.		8.921	NUT, ANCHOR THD SIZE 8-18 NYLON	90-92		AR	1377030
48.	9-B4	10.355	INSULATOR, FRT S/D (9.260)	90-92	Y	2	3999572
49.		N.S.	SEAL, RDO SPKR OPG				
50.	9-B5	10.454	HINGE, FRT S/D LWR (10.450)	90-92	Y	2	14043177
51.	9-B5	10.466	PIN, FRT S/D HGE (UPR/LWR)	90-92	Y	4	20046147
52.	9-B5	10.464	BUSHING, FRT S/D HGE PIN (UPR/LWR) (15MM O.D.)	90-92	Y	4	20429500
53.		8.900	SCREW, HEX M8X1.25X40 W/CON WA 9.8 ZD (FRT S/D HGE)	90-92		6	11503990
54.		8.900	BOLT, HEX M8-1.25X25 10.9 PC (AC-DELCO #11500918)	90-92		AR	11500918
55.	9-B5	10.450	HINGE, FRT S/D UPR	90-92	Y	2	14043176
56.	9-N3	12.895	PANEL, FRT S/D OTR	90-92	Y (EXC ZR1)	LH	14043105
	9-N3	12.895	PANEL, FRT S/D OTR	90-92	Y (EXC ZR1)	RH	14043106
57.	9-B14	10.716	STOP, FRT S/D WDO FRT UP (10.685)	90-92	Y	2	20229773

© 2000 GENERAL MOTORS SERVICE PARTS OPERATIONS-CHEVROLET-14Y

							1Y10-302
58.	9-B14	10.716	BRACKET, FRT S/D WDO STOP	90-92	Y	2	20698689
59.	9-B14	10.716	NUT, FRT S/D WDO FRT UP STOP (8.0/2.0 MM) (10.728)	90-92	Y	4	20213450
	9-B14	10.728	NUT, FRT S/D WDO (8.0/2.0 MM)	90-92	Y	6	20213450
60.	9-B11	10.685	WASHER, FRT S/D WDO	90-92	Y	6	8731399
61.	9-B11	10.685	BUSHING, FRT S/D WDO (NYLON)	90-92	Y	6	1705300
	9-B14	10.716	BUSHING, FRT S/D WDO FRT UP STOP (NYLON) (10.685)	90-92	Y	2	1705300
62.	9-B11	10.685	BOLT, FRT S/D WDO	90-92	Y	6	10045630
63.	9-B10	10.681	WINDOW, FRT S/D	90	Y	LH	14094291
	9-B10	10.681	WINDOW, FRT S/D	90	Y	RH	14094292
	9-B10	10.681	WINDOW, FRT S/D	91-92	Y	LH	10267189
	9-B10	10.681	WINDOW, FRT S/D	91-92	Y	RH	10267190
64.	9-L25	2.559	BRACKET, I/P WRG HARN DR LEAD	90-92	Y	2	14066583
65.	9-B8	10.550	CYLINDER KIT, FRT S/D LK (UNCODED) (CONSISTS OF:UNIT SHUTTER, LK CYL, CASE, E-RING, RETAINER, 2 SPRINGS)	90	Y	2	12522046
	9-B8	10.550	CYLINDER KIT, FRT S/D LK (UNCODED)	91-92	Y	2	12520461
66.	9-B10	10.571	REINFORCEMENT, FRT S/D LOCR (10.450)	90-92	Y	2	14047542
67.	9-L19	2.530	CONDUIT, S/D WRG	90	Y	2	10098907
68.	9-L5	2.187	KEY, DR LK (OVAL HD, GRV H, B&S 320405A, CAN USE 20364745 BOOT)	91-92	Y	2	1154607
	9-L5	2.187	KEY, DR LK (UNCODED) (OVAL HD) (GRV D)	90	Y	AR	1154605
69.	9-B8	10.551	WASHER, FRT S/D LK CYL (.75 IN DIA) (12.249)	90-92	Y	AR	8779134
70.		8.921	NUT, STAMPED FITS 6.3 STUD-TYPE B SELF THD STL PC (FRT S/D O/S HDL)	90-92		4	11502553
71.		8.934	RING, TYPE TE #25 (FRT S/D LK PAWL REL) (AC-DELCO #9431762)	90-92		2	9431762
72.	9-B5	10.485	SWITCH, THEFT DTRNT DR LK (W/WIRE LEAD) (2.195)	90-92	Y	RH	10074163
	9-B5	10.485	SWITCH, THEFT DTRNT DR LK (W/WIRE LEAD)	90-92	Y	LH	10074164
73.	9-B9	10.553	SPRING, FRT S/D LK CYL TUMB (BAR TYPE TUMBLER)	90-92	Y	10	3901067

RPO DEFINITIONS

FE1 – SUSPENSION SYSTEM,SOFT RIDE
FE7 – SUSPENSION SYSTEM,FRONT AND REAR,HEAVY DUTY(USED WITH PERFORMANCE HANDLING PACKAGE Z51)
ZR1 – PACKAGE,SPECIAL PERFORMANCE COUPE(1YY07 + ZR1 == 1YZ07)
14I – INTERIOR TRIM LT GRAY
22I – INTERIOR TRIM,DARK ROYAL BLUE
60I – INTERIOR TRIM,DARK COGNAC
64I – INTERIOR TRIM,LIGHT BEIGE
73I – INTERIOR TRIM,FLAME RED
90I – INTERIOR TRIM,SMOKE GRAY

© 2000 GENERAL MOTORS SERVICE PARTS OPERATIONS-CHEVROLET-14Y

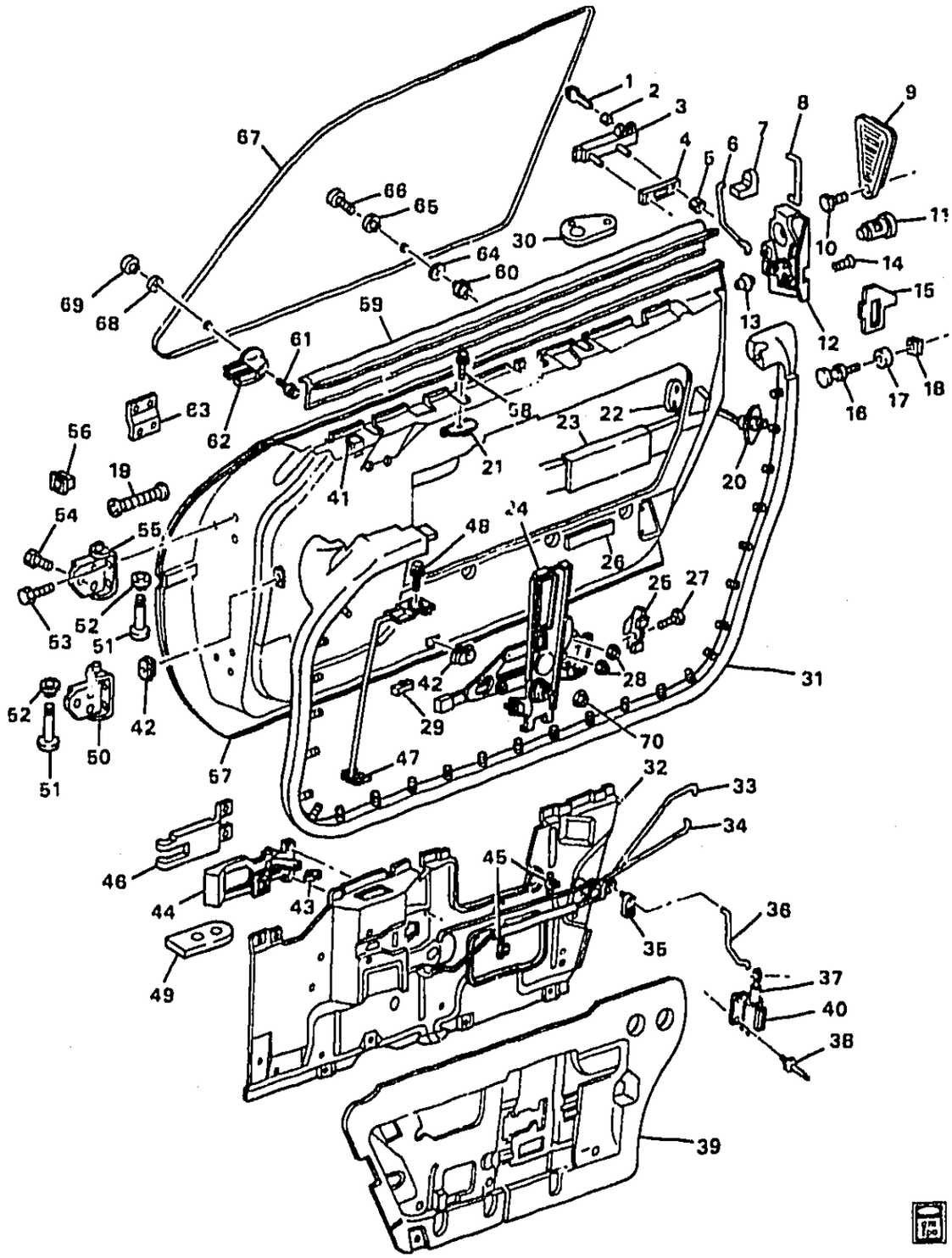

1Y10-004

1993 Y DOOR HARDWARE/FRONT

1.	9-L5	2.187	KEY, DR LK (OVAL HD, GRV H, B&S 320405A, CAN USE 20364745 BOOT)	93 Y	2	1154607
2.		8.929	WASHER, FL M13X45X1.5 PC (FRT S/D LK CYL)	93	1	1260895

© 2000 GENERAL MOTORS SERVICE PARTS OPERATIONS-CHEVROLET-14Y

								1Y10-004
3.	9-B8	10.527	HANDLE, FRT S/D O/S (LESS LOCK) (B&S 593094)	93	Y		RH	14075358
	9-B8	10.527	HANDLE, FRT S/D O/S (LESS LOCK) (B&S 593095)	93	Y		LH	14075359
4.	9-N5	13.090	BRACKET, P/W DR WRG HARN	93	Y		2	14073415
5.		8.921	NUT, CARBON SPR STL, FITS 6.3 DIA STUD, 6174M PO (FRT S/D O/S HDL)	93			4	10220447
6.	9-B9	10.563	ROD, FRT S/D I/S HDL	93	Y (EXC ZR1)		2	14043181
	9-B9	10.563	ROD, FRT S/D I/S HDL	93	Y (ZR1)		2	14104399
7.	9-B9	10.565	RETAINER, FRT S/D O/S HDL ROD (RED) (SNAP-ON)	93	Y		LH	16607593
	9-B9	10.565	RETAINER, FRT S/D O/S HDL ROD (RED) (NYLON) (10.527)	93	Y		RH	16627328
8.	9-B9	10.563	ROD, FRT S/D LK CYL	93	Y (ZR1)		LH	10137745
	9-B9	10.563	ROD, FRT S/D LK CYL	93	Y (ZR1)		RH	10137746
	9-B9	10.563	ROD, FRT S/D LK CYL	93	Y (EXC ZR1)		LH	14043183
	9-B9	10.563	ROD, FRT S/D LK CYL	93	Y (EXC ZR1)		RH	14043184
9.	9-N4	12.942	VALVE, FRT S/D PRESS RLF	93	Y07		2	10054609
10.		8.977	SCREW, OVAL CSK TRIM HD W/WA TYPE AB (4.2X1.4X20) (FRT S/D PRESS RLF) (16.682)	93			2	12338093
11.	9-B8	10.560	CYLINDER KIT, FRT S/D LK (UNCODED)	93	Y		2	12520461
12.	9-B5	10.470	LOCK, FRT S/D	93	Y		RH	10259203
	9-B5	10.470	LOCK, FRT S/D	93	Y		LH	10259204
13.	9-B9	10.565	INSULATOR, FRT S/D O/S HDL ROD	93	Y		2	10215230
14.	9-B5	10.474	BOLT, FRT S/D LK	93	Y		6	10172329
15.	9-B9	10.553	TUMBLER, FRT S/D LK CYL (#1) (SI BAR)	93	Y		1	3901061
	9-B9	10.553	TUMBLER, FRT S/D LK CYL (#2) (SI BAR)	93	Y		AR	3901062
	9-B9	10.553	TUMBLER, FRT S/D LK CYL (#3) (SI BAR)	93	Y		AR	3901063
	9-B9	10.553	TUMBLER, FRT S/D LK CYL (#4) (SI BAR)	93	Y		AR	3901064
	9-B9	10.553	TUMBLER, FRT S/D LK CYL (#5) (SI BAR)	93	Y		AR	3901065
16.	9-B10	10.569	STRIKER, FRT S/D LK	93	Y		2	16602509
17.	9-B10	10.571	WASHER, FRT S/D LK STKR (10.5X4X0.25 STL)	93	Y		4	4469196
18.	9-B10	10.571	PLATE, FRT S/D LK STKR TAP	93	Y		2	14060217
19.	9-L19	2.530	CONDUIT, S/D WRG	93	Y		2	10098907
20.	9-C28	11.950	SWITCH, DR AJAR IND (AC-DELCO #D6055)	93	Y		2	10098478
21.	9-B11	10.685	STABILIZER, FRT S/D WDO (10.716)	93	Y		4	10054691
22.	9-C28	11.950	RETAINER, DR AJAR IND SW	93	Y		2	14087682
23.	9-B4	10.355	INSULATOR, FRT S/D OTR PNL BAR (10.685)	93	Y		2	10045633
24.	9-B15	10.783	REGULATOR, FRT S/D WDO (W/MOT) (AC-DELCO #22063224)	93	Y		RH	22063224
	9-B15	10.783	REGULATOR, FRT S/D WDO (W/MOT) (AC-DELCO #22063225)	93	Y		LH	22063225
25.	9-B11	10.685	STABILIZER, FRT S/D WDO	93	Y		LH	10267183

© 2000 GENERAL MOTORS SERVICE PARTS OPERATIONS-CHEVROLET-14Y

							1Y10-004
	9-B11	10.685	STABILIZER, FRT S/D WDO	93	Y	RH	10267184
26.	9-B4	10.355	INSULATOR, FRT S/D (9.260)	93	Y	2	3999572
27.		8.900	SCREW, HEX W/TT CON WA 24-OD M6X1X16 9.8 CAD (FRT S/D WDO STAB)	93		4	11505062
28.	9-B14	10.728	NUT, FRT S/D WDO (POSN #1) (7.75/1.75MM)	93	Y	8	20310129
29.	9-B14	10.716	STOP, FRT S/D WDO DN	93	Y	2	22063270
30.	9-B8	10.551	PAWL, FRT S/D LK	93	Y (ZR1)	LH	10159539
	9-B8	10.551	PAWL, FRT S/D LK	93	Y (ZR1)	RH	10159540
	9-B8	10.551	PAWL, FRT S/D LK	93	Y (EXC ZR1)	2	14075363
31.	9-B11	10.694	WEATHERSTRIP, FRT S/D (BLACK)	93	Y	LH	10269865
	9-B11	10.694	WEATHERSTRIP, FRT S/D (BLACK)	93	Y	RH	10269866
32.	9-N3	12.895	PANEL, FRT S/D INR MTG (INCL 49)	93	Y	LH	10086185
	9-N3	12.895	PANEL, FRT S/D INR MTG (INCL 49)	93	Y	RH	10086186
33.	9-B9	10.563	ROD, FRT S/D LKG	93	Y	LH	10086309
	9-B9	10.563	ROD, FRT S/D LKG	93	Y	RH	10086310
34.	9-B9	10.563	ROD, FRT S/D I/S HDL	93	Y	LH	14043187
	9-B9	10.563	ROD, FRT S/D I/S HDL	93	Y	RH	14043188
35.	9-B9	10.565	CLIP, FRT S/D LKG ROD (PLASTIC) (9.786)	93	Y	2	20007898
36.	9-B9	10.563	ROD, FRT S/D LK ACTR	93	Y	RH	14043194
37.	9-B5	10.485	ACTUATOR, FRT S/D LK (AC-DELCO #22049686)	93	Y	2	22049686
38.	9-B5	10.485	RIVET, FRT S/D LK ACTR (POSN #2) (8.967)	93	Y	4	9437486
39.	9-B4	10.355	INSULATOR, FRT S/D (12.895)	93	Y	RH	10193704
	9-B4	10.355	INSULATOR, FRT S/D (12.895)	93	Y	LH	10193703
40.	9-B5	10.485	BRACKET, FRT S/D LK ACTR (AC-DELCO #22049754)	93	Y	2	22049754
41.	9-B14	10.716	STOP, FRT S/D WDO UP	93	Y	2	10263155
42.		8.921	NUT, ANCHOR THD SIZE 8-18 NYLON (FRT S/D T/PNL)	93		14	1377030
43.	9-B7	10.512	CLIP, FRT S/D I/S HDL (10.565)	93	Y	2	375180
44.	9-B7	10.512	HANDLE, FRT S/D I/S (BLACK)	93	Y	2	10153884
	9-B7	10.512	HANDLE, FRT S/D I/S (GRAY)	93	Y (14I)	2	10175707
	9-B7	10.512	HANDLE, FRT S/D I/S (BEIGE)	93	Y (64I)	2	10175708
		DISCON	HANDLE, FRT S/D I/S (RED)	93	Y (70I)	2	10199543
	9-B7	10.512	HANDLE, FRT S/D I/S (RED)	93	Y (79I)	2	10199713
45.	9-B9	10.565	GUIDE, FRT S/D LKG ROD	93	Y	2	15592648
	9-B9	10.565	GUIDE, FRT S/D I/S HDL ROD	93	Y	2	15592648
46.	9-N10	14.685	INSERT, FRT S/D T/PNL (BLACK) (PAINT TO MATCH)	93	Y	2	10248659
47.	9-B12	10.701	CHANNEL, FRT S/D WDO	93	Y	LH	10167081
	9-B12	10.701	CHANNEL, FRT S/D WDO	93	Y	RH	10167082
48.		8.900	BOLT, HEX W/CON WA, M6X1X20 (FRT S/D WDO CHAN)	93		4	11514623
49.		N.S.	INSULATOR, FRT S/D LKG ROD (PART OF 32)				
50.	9-B5	10.454	HINGE, FRT S/D LWR (INCL 51, 52) (10.450)	93	Y	2	14043177
51.	9-B5	10.466	PIN, FRT S/D HGE (UPR/LWR) (PART OF 50, 55)	93	Y	4	20046147

							1Y10-004
52.	9-B5	10.464	**BUSHING**, FRT S/D HGE PIN (UPR/LWR) (PART OF 50, 55) (15MM O.D.)	93	Y	4	20429500
53.		8.900	**SCREW**, HEX M8X1.25X40 W/CON WA 9.8 ZD (FRT S/D HGE POSN #1)	93		18	11503990
54.		8.900	**BOLT**, HEX M8-1.25X25 10.9 PC (FRT S/D HGE POSN #2) (AC-DELCO #11500918)	93		10	11500918
55.	9-B5	10.450	**HINGE**, FRT S/D UPR (INCL 51, 52)	93	Y	2	14043176
56.	9-B10	10.587	**PLUG**, FRT S/D ACC HOLE	93	Y	1	10222497
57.	9-N3	12.895	**PANEL**, FRT S/D OTR	93	Y (EXC ZR1)	LH	14043105
	9-N3	12.895	**PANEL**, FRT S/D OTR	93	Y (EXC ZR1)	RH	14043106
58.		8.900	**BOLT**, M6X1X12, 10 THD, 11.6 OD, 9.8 GM500-M, POR, MACH (FRT S/D WDO STAB) (AC-DELCO #11514149)	93		4	11514149
59.	9-B12	10.710	**SEALING STRIP**, FRT S/D WDO OTR	93	Y	RH	10245646
	9-B12	10.710	**SEALING STRIP**, FRT S/D WDO OTR	93	Y	LH	10245645
60.	9-B14	10.728	**NUT**, FRT S/D WDO (8.0/2.0 MM)	93	Y	6	20213450
61.		8.900	**BOLT**, HFH M6X1X16 9.8 POR (FRT S/D WDO CHAN GDE)	93		2	11508805
62.	9-B11	10.685	**GUIDE**, FRT S/D WDO CHAN	93	Y	LH	10243037
	9-B11	10.685	**GUIDE**, FRT S/D WDO CHAN	93	Y	RH	10243038
63.	9-L25	2.559	**BRACKET**, I/P WRG HARN DR LEAD	93	Y	2	14066583
64.	9-B11	10.685	**WASHER**, FRT S/D WDO	93	Y	6	8731399
65.	9-B11	10.685	**BUSHING**, FRT S/D WDO (NYLON)	93	Y	6	1705300
66.	9-B11	10.685	**BOLT**, FRT S/D WDO	93	Y	6	10045630
67.	9-B10	10.681	**WINDOW**, FRT S/D	93	Y	LH	10267189
	9-B10	10.681	**WINDOW**, FRT S/D	93	Y	RH	10267190
68.	9-B14	10.716	**BUSHING**, FRT S/D WDO FRT UP STOP (10.685)	93	Y	2	8731399
69.	9-B14	10.716	**NUT**, FRT S/D WDO FRT UP STOP (HEX M6X1) (8.0/2.0 MM) (10.728)	93	Y	2	20213450
70.		8.917	**NUT**, HEX W/CON WA M6X1X5.5, 24-OD 9 PEOR (POSN #2) (8.915)	93		4	11508388

RPO DEFINITIONS

ZR1 – PACKAGE,SPECIAL PERFORMANCE COUPE(1YY07 + ZR1 == 1YZ07)
1[illegible] – INTERIOR TRIM LT GRAY
641 – INTERIOR TRIM,LIGHT BEIGE
701 – INTERIOR TRIM,TORCH RED
791 – INTERIOR TRIM,RUBY RED

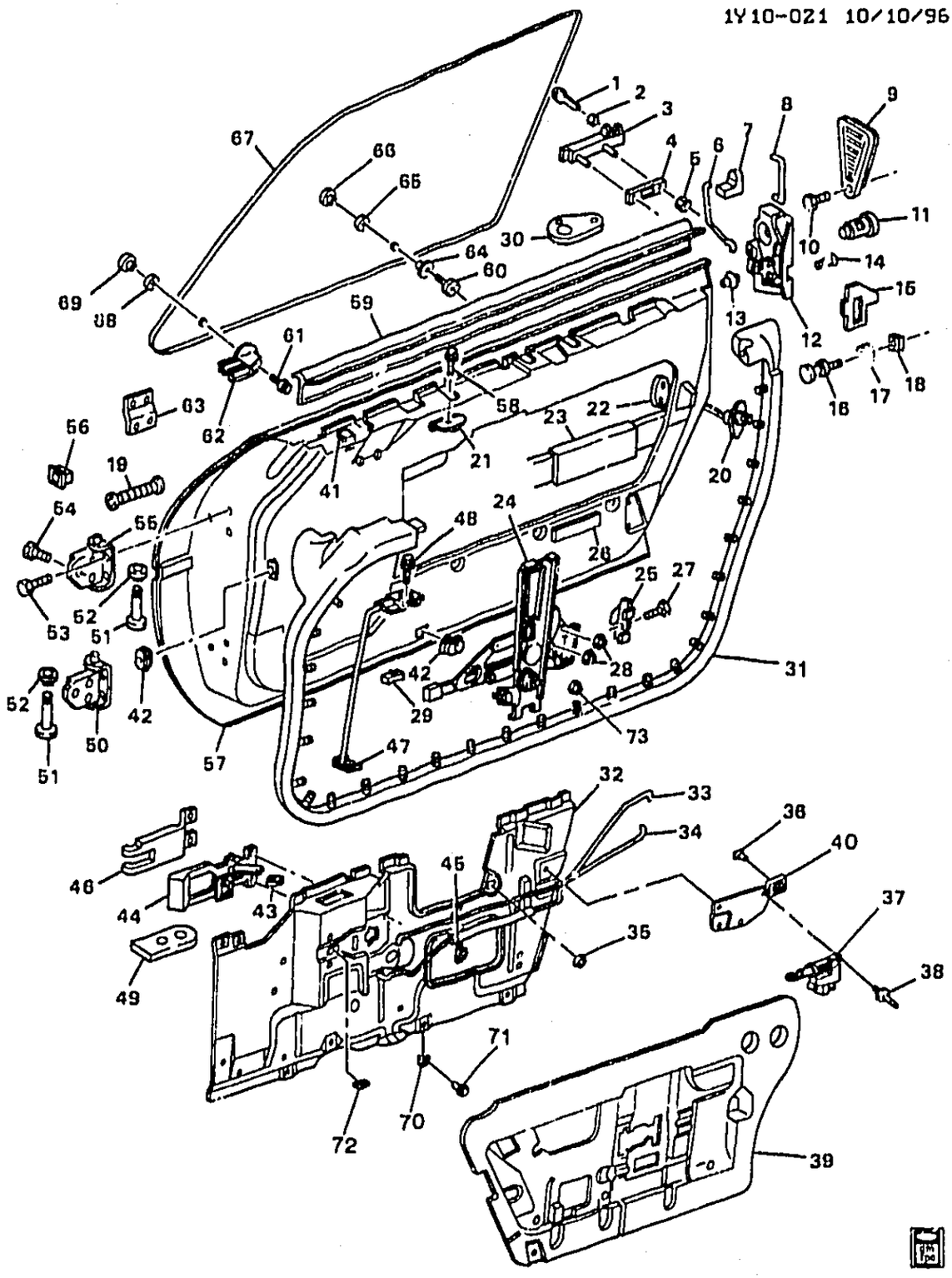

1994-1996 Y DOOR HARDWARE/FRONT

1.	9-L5	2.187	KEY, DR LK (OVAL HD, GRV H, B&S 320405A, CAN USE 20364745 BOOT)	94-96	Y	2	1154607
2.		6.929	WASHER, FL M13X45X1.5 PC (FRT S/D LK CYL)	94-96	.....	1	1260395

© 2000 GENERAL MOTORS SERVICE PARTS OPERATIONS-CHEVROLET-14Y

							1Y10-021
3.	9-B8	10.527	HANDLE, FRT S/D O/S (LESS LOCK) (B&S 593094)	94-96	Y	RH	14075358
	9-B8	10.527	HANDLE, FRT S/D O/S (LESS LOCK) (B&S 593095)	94-96	Y	LH	14075359
4.	9-N5	13.090	BRACKET, P/W DR WRG HARN	94-96	Y	2	14073415
5.		8.921	NUT, CARBON SPR STL, FITS 6.3 DIA STUD, 6174M PO (FRT S/D O/S HDL)	94-96		4	10220447
6.	9-B9	10.563	ROD, FRT S/D I/S HDL	94-95	Y (EXC ZR1)	2	14043181
	9-B9	10.563	ROD, FRT S/D I/S HDL	94-95	Y (ZR1)	2	14104399
	9-B9	10.563	ROD, FRT S/D I/S HDL	96	Y	2	14043181
7.	9-B9	10.565	RETAINER, FRT S/D O/S HDL ROD (RED) (SNAP-ON)	94-96	Y	LH	16607593
	9-B9	10.565	RETAINER, FRT S/D O/S HDL ROD (RED) (NYLON) (10.527)	94-96	Y	RH	16627328
8.	9-B9	10.563	ROD, FRT S/D LK CYL	94-95	Y (ZR1)	LH	10137745
	9-B9	10.563	ROD, FRT S/D LK CYL	94-95	Y (ZR1)	RH	10137746
	9-B9	10.563	ROD, FRT S/D LK CYL	94-95	Y (EXC ZR1)	LH	14043183
	9-B9	10.563	ROD, FRT S/D LK CYL	94-95	Y (EXC ZR1)	RH	14043184
	9-B9	10.563	ROD, FRT S/D LK CYL	96	Y	LH	14043183
	9-B9	10.563	ROD, FRT S/D LK CYL	96	Y	RH	14043184
9.	9-N4	12.942	VALVE, FRT S/D PRESS RLF	94-96	Y07	2	10054609
10.		8.977	SCREW, OVAL CSK TRIM HD W/WA TYPE AB (4.2X1.4X20) (FRT S/D PRESS RLF) (16.682)	94-96		2	12338093
11.	9-B8	10.550	CYLINDER KIT, FRT S/D LK (UNCODED)	94-96	Y	2	12520461
12.	9-B5	10.470	LOCK, FRT S/D	94-96	Y	RH	10259203
	9-B5	10.470	LOCK, FRT S/D	94-96	Y	LH	10259204
13.	9-B9	10.565	INSULATOR, FRT S/D O/S HDL ROD	94-96	Y	2	10215230
14.	9-B5	10.474	BOLT, FRT S/D LK	94-96	Y	6	10172329
15.	9-B9	10.553	TUMBLER, FRT S/D LK CYL (#1) (SI BAR)	94-96	Y	1	3901061
	9-B9	10.553	TUMBLER, FRT S/D LK CYL (#2) (SI BAR)	94-96	Y	AR	3901062
	9-B9	10.553	TUMBLER, FRT S/D LK CYL (#3) (SI BAR)	94-96	Y	AR	3901063
	9-B9	10.553	TUMBLER, FRT S/D LK CYL (#4) (SI BAR)	94-96	Y	AR	3901064
	9-B9	10.553	TUMBLER, FRT S/D LK CYL (#5) (SI BAR)	94-96	Y	AR	3901065
16.	9-B10	10.569	STRIKER, FRT S/D LK	94-96	Y	2	16602509
17.	9-B10	10.571	WASHER, FRT S/D LK STKR (10.5X4X0.25 STL)	94-96	Y	4	4469196
18.	9-B10	10.571	PLATE, FRT S/D LK STKR TAP	94-96	Y	2	14060217
19.	9-L19	2.530	CONDUIT, S/D WRG	94-96	Y	2	10098907
20.	9-C28	11.950	SWITCH, DR AJAR IND (AC-DELCO #D6055)	94-96	Y	2	10098478
21.	9-B11	10.685	STABILIZER, FRT S/D WDO (10.716)	94-96	Y	4	10054691
22.	9-C28	11.950	RETAINER, DR AJAR IND SW	94-96	Y	2	14087682
23.	9-B4	10.355	INSULATOR, FRT S/D OTR PNL BAR (10.685)	94-96	Y	4	10045633
24.	9-B15	10.783	REGULATOR, FRT S/D WDO (W/MOT) (AC-DELCO #22063224)	94-96	Y	RH	22063224

							1Y10-021
	9-B15	10.783	REGULATOR, FRT S/D WDO (W/MOT) (AC-DELCO #22063225)	94-96	Y	LH	22063225
25.	9-B11	10.685	STABILIZER, FRT S/D WDO	94-96	Y	LH	10267183
	9-B11	10.685	STABILIZER, FRT S/D WDO	94-96	Y	RH	10267184
26.	9-B4	10.355	INSULATOR, FRT S/D (9.260)	94-96	Y	2	3999572
27.		8.900	SCREW, HEX W/TT CON WA 24-OD M6X1X16 9.8 CAD (FRT S/D WDO STAB)	94-96		4	11505062
28.	9-B14	10.726	NUT, FRT S/D WDO (POSN #1) (7.75/1.75MM)	94-96	Y	8	20310129
29.	9-B14	10.716	STOP, FRT S/D WDO DN	94-96	Y	2	22063270
30.	9-B8	10.551	PAWL, FRT S/D LK	94-95	Y (ZR1)	LH	10159539
	9-B8	10.551	PAWL, FRT S/D LK	94-95	Y (ZR1)	RH	10159540
	9-B8	10.551	PAWL, FRT S/D LK	94-95	Y (EXC ZR1)	2	14075363
	9-B8	10.551	PAWL, FRT S/D LK	96	Y	2	14075363
31.	9-B11	10.694	WEATHERSTRIP, FRT S/D (BLACK)	94-96	Y	LH	10269865
	9-B11	10.694	WEATHERSTRIP, FRT S/D (BLACK)	94-96	Y	RH	10269866
32.	9-N3	12.895	PANEL, FRT S/D INR MTG (INCLS 49)	94-96	Y	LH	10272377
	9-N3	12.895	PANEL, FRT S/D INR MTG (INCLS 49)	94-96	Y	RH	10272378
33.	9-B9	10.563	ROD, FRT S/D LKG	94-96	Y	RH	10256912
	9-B9	10.563	ROD, FRT S/D LKG	94-96	Y	LH	10272379
34.	9-B9	10.563	ROD, FRT S/D I/S HDL	94-96	Y	LH	14043187
	9-B9	10.563	ROD, FRT S/D I/S HDL	94-96	Y	RH	14043188
35.	9-B9	10.565	GUIDE, FRT S/D I/S HDL ROD	94-96	Y	2	15592648
36.	9-B5	10.485	NUT, FRT S/D LK ACTR MT PLT (UPLEVEL) (1.267)	94-96	Y	8	347347
37.	9-B5	10.485	ACTUATOR, FRT S/D LK (AC-DELCO #22137716)	94-96	Y	2	22137716
38.	9-B5	10.485	RIVET, FRT S/D LK ACTR (POSN #2) (ALUMINUM)	94-96	Y	4	22093245
39.	9-B4	10.355	INSULATOR, FRT S/D (12.895)	94-96	Y	LH	10193703
	9-B4	10.355	INSULATOR, FRT S/D (12.895)	94-96	Y	RH	10193704
	9-B4	10.355	INSULATOR, FRT S/D (9.260)	94-96	Y	2	3999572
40.	9-B5	10.485	PLATE, FRT S/D LK ACTR MT	94-96	Y	LH	10259357
	9-B5	10.485	PLATE, FRT S/D LK ACTR MT	94-96	Y	RH	10259358
41.	9-B14	10.716	STOP, FRT S/D WDO UP	94-96	Y	2	10263155
42.		8.921	NUT, ANCHOR THD SIZE 8-18 NYLON (FRT S/D T/PNL)	94-96		14	1377030
43.	9-B7	10.512	CLIP, FRT S/D I/S HDL (10.565)	94-96	Y	2	375180
44.	9-B7	10.512	HANDLE, FRT S/D I/S (BLACK)	94-96	Y	2	10153684
45.	9-B9	10.565	GUIDE, FRT S/D LKG ROD	94-96	Y	2	15592648
	9-B9	10.565	GUIDE, FRT S/D I/S HDL ROD	94-96	Y	2	15592648
46.	9-N10	14.685	INSERT, FRT S/D T/PNL (BLACK) (PAINT TO MATCH)	94-96	Y	2	10248659
47.	9-B12	10.701	CHANNEL, FRT S/D WDO	94-96	Y	LH	10167081
	9-B12	10.701	CHANNEL, FRT S/D WDO	94-96	Y	RH	10167082
48.		8.900	BOLT, HEX W/CON WA, M6X1X20 (FRT S/D WDO CHAN)	94-96		4	11514623
49.		N.S.	INSULATOR, FRT S/D LKG ROD (PART OF 32)				
50.	9-B5	10.454	HINGE, FRT S/D LWR (INCL 51, 52) (10.450)	94-96	Y	2	14043177

							1Y10-021
51.	9-B5	10.466	PIN, FRT S/D HGE (UPR/LWR) (PART OF 50, 55)	94-96	Y	4	20046147
52.	9-B5	10.464	BUSHING, FRT S/D HGE PIN (UPR/LWR) (PART OF 50, 55) (15MM O.D.)	94-96	Y	4	20429500
53.		8.900	SCREW, HEX M8X1.25X40 W/CON WA 9.8 ZD (FRT S/D HGE POSN #1)	94-96		18	11503990
54.		8.900	BOLT, HEX M8-1.25X25 10.9 PC (FRT S/D HGE POSN #2) (AC-DELCO #11500918)	94-96		10	11500918
55.	9-B5	10.450	HINGE, FRT S/D UPR (INCL 51, 52)	94-96	Y	2	14043176
56.		N.S.	PLUG, FRT S/D ACC HOLE (NEVER USED)				
57.	9-N3	12.895	PANEL, FRT S/D OTR	94-95	Y (EXC ZR1)	LH	14043105
	9-N3	12.895	PANEL, FRT S/D OTR	94-95	Y (EXC ZR1)	RH	14043106
	9-N3	12.895	PANEL, FRT S/D OTR	96	Y	LH	14043105
	9-N3	12.895	PANEL, FRT S/D OTR	96	Y	RH	14043106
58.		8.900	BOLT, M6X1X12, 10 THD, 11.6 OD, 9.8 GM500-M, POR, MACH (FRT S/D WDO STAB) (AC-DELCO #11514149)	94-96		4	11514149
59.	9-B12	10.710	SEALING STRIP, FRT S/D WDO OTR	94-96	Y	RH	10245646
	9-B12	10.710	SEALING STRIP, FRT S/D WDO OTR	94-96	Y	LH	10245645
60.	9-B14	10.728	NUT, FRT S/D WDO (8.0/2.0 MM)	94-96	Y	12	20213450
61.	9-B11	10.685	BOLT, FRT S/D WDO	94-96	Y	6	10045630
62.	9-B11	10.685	GUIDE, FRT S/D WDO CHAN	94-96	Y	LH	10243037
	9-B11	10.685	GUIDE, FRT S/D WDO CHAN	94-96	Y	RH	10243038
63.	9-L25	2.559	BRACKET, I/P WRG HARN DR LEAD	94-96	Y	2	14066583
64.	9-B11	10.685	WASHER, FRT S/D WDO	94-96	Y	6	8731399
65.	9-B11	10.685	BUSHING, FRT S/D WDO (NYLON)	94-96	Y	6	1705300
66.	9-B11	10.685	BOLT, FRT S/D WDO	94-96	Y	6	10045630
67.	9-B10	10.681	WINDOW, FRT S/D	94-96	Y (EXC A26)	LH	10267189
	9-B10	10.681	WINDOW, FRT S/D	94-96	Y (EXC A26)	RH	10267190
	9-B10	10.681	WINDOW, FRT S/D	94-96	Y (A26) (EXPORT)	LH	10267191
	9-B10	10.681	WINDOW, FRT S/D	94-96	Y (A26) (EXPORT)	RH	10267192
68.	9-B11	10.685	WASHER, FRT S/D WDO	94-96	Y	6	8731399
69.	9-B14	10.716	NUT, FRT S/D WDO FRT UP STOP (HEX M6X1) (8.0/2.0 MM) (10.728)	94-96	Y	2	20213450
70.		8.921	NUT, M4.2X1.4, 19.3X213.6.8.9 (POSN #1) (AC-DELCO #15650655)	94-96		30	15650655
71.		8.977	BOLT, SCR HEX W/FLAT WA 12 DIA TYPE AB (FRT S/D INR MTG PNL)	94-96		30	11509374
72.		8.921	NUT, ANCHOR THD SIZE 8-18 NYLON (POSN #2)	94-96		10	1377030
73.		8.917	NUT, HEX W/CON WA M6X1X5.5, 24-OD 9 PEOR (POSN #2) (8.915)	94-96		4	11508388

RPO DEFINITIONS

A26 - WINDOW,UNITED KINGDOM AND EUROPEAN GLAZING(EXPORT)

© 2000 GENERAL MOTORS SERVICE PARTS OPERATIONS-CHEVROLET-14Y

MICROFICHE INDEX

GROUPS 10.000 THRU 11.000

FICHE 9 OF 11

GROUP	DESCRIPTION	STARTING GRID LOCATION PARTS	ILLUSTRATIONS
–	GENERAL INFORMATION	1–A2	1–G2
–	ALPHABETICAL INDEX	1–B13	N.A.
10.000	DOORS – REGULATORS – WINDSHIELD – WIPER – WASHER	9–A2	9–D2
11.000	REAR GLASS – SEAT PARTS – ADJUSTER	9–C2	9–I2
–	OUT OF FICHE CALLS	N.A.	9–L4

9–H1

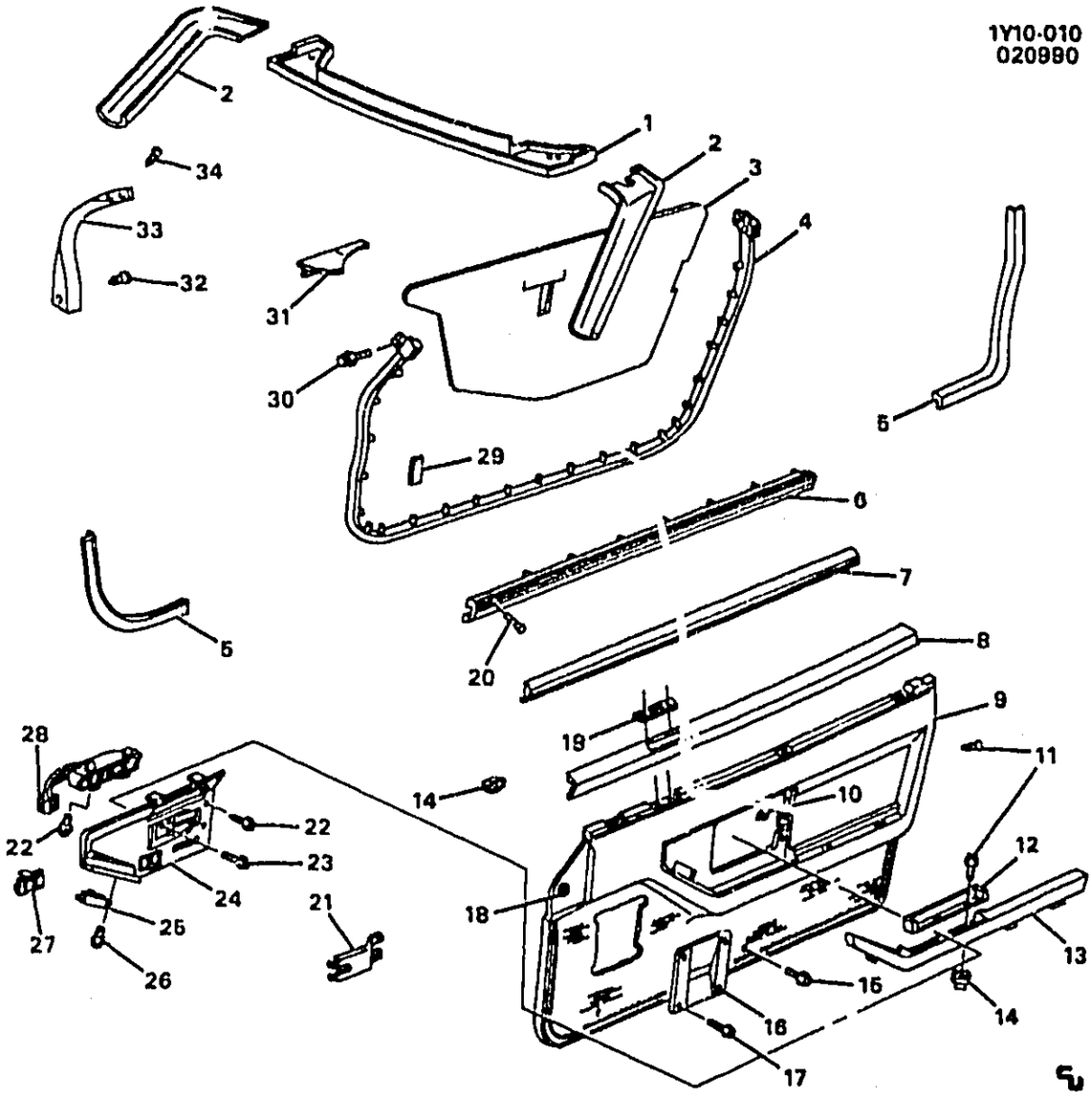

1984-1989 Y DOOR TRIM & SEALING/FRONT

1.		DISCON	MOLDING, W/S UPR (1984-85) (1986 Y07) (1986 1ST DESIGN HAS TWO LARGE HOLES AT EACH END)	14046699
	9-A9	10.051	MOLDING, W/S UPR (1986-88) (INCL 29) (1986 2ND DESIGN HAS THREE LARGE HOLES AT EACH END)	10104016
	9-A9	10.051	MOLDING, W/S UPR (1989)	10236001
2.	9-A9	10.051	MOLDING, W/S SI-RH	14047448
	9-A9	10.051	MOLDING, W/S SI-LH	14047447
3.	9-B4	10.355	INSULATOR, FRT S/D (LH)	10193703
	9-B4	10.355	INSULATOR, FRT S/D (RH) (RH)	10193704
	9-B4	10.355	INSULATOR, INR PNL WAT (1989) (LH)	10193703
4.	9-B11	10.694	WEATHERSTRIP, LH	17986019
	9-B11	10.694	WEATHERSTRIP, RH	17986020
5.	9-B11	10.695	SEALING STRIP, FRT S/D OPG FIN PNL	14069649
6.	9-B12	10.710	SEALING STRIP, WDO OTR-RH	10245646
	9-B12	10.710	SEALING STRIP, WDO OTR-LH	10245645
7.	9-B12	10.710	SEALING STRIP, FRT S/D WDO INR (GLS INR) (RH) (84-88)	14071842
	9-B12	10.710	SEALING STRIP, FRT S/D WDO INR (GLS INR) (LH) (84-88)	14071841

© 2000 GENERAL MOTORS SERVICE PARTS OPERATIONS-CHEVROLET-14Y

				1Y10-010
8.	9-N13	14.691	COVER, PNL UPR-RH (Y07)	14094586
	9-N13	14.691	COVER, PNL-RH (Y67)	14092750
	9-N13	14.691	COVER, PNL UPR-LH (Y07)	14094585
	9-N13	14.691	COVER, PNL-LH (Y67)	14092749
9.		DISCON	PANEL, RH (1984-86) (GRAPHITE 12I)	10104499
		DISCON	PANEL, RH (1987) (GRAPHITE 12I)	10104499
		DISCON	PANEL, RH (1988-89) (BLACK 19I)	10149228
	9-N10	14.685	PANEL, LH (1984-87) (GRAPHITE 12I) (SEE PARTS SECTION FOR ADDITIONAL COLORS & TRIM COMBINATIONS)	10104498
		DISCON	PANEL, LH (1988-89) (BLACK 19I) (SEE PARTS SECTION FOR ADDITIONAL COLORS & TRIM COMBINATIONS)	10149227
10.		8.921	NUT, U-SHAPE (M4.2X1.41X.065) ZOR (AC-DELCO #15650655)	15650655
11.		8.977	SCREW, RD LRG WA HD C/R (M4.2X1.41X25) PEOR	11505850
12.	9-N12	14.686	FILLER, A/RST-RH	14069626
	9-N12	14.686	FILLER, A/RST-LH	14069625
13.		DISCON	ARMREST, -RH (1984-87) (GRAPHITE 12I)	14049160
		DISCON	ARMREST, LH (1984-87) (GRAPHITE 12I) (SEE PARTS SECTION FOR ADDITIONAL COLORS & TRIM COMBINATIONS)	14049159
		DISCON	ARMREST, RH (BLAC (1988-89) (SEE PARTS SECTION FOR ADDITIONAL COLORS & TRIM COMBINATIONS)	10076632
		DISCON	ARMREST, LH (BLACK 19I) (1988-89) (SEE PARTS SECTION FOR ADDITIONAL COLORS & TRIM COMBINATIONS)	10076631
14.		8.921	NUT, ANCHOR THD SIZE 8-18	1377030
15.		8.977	SCREW, OV HD C/R W/STY WA (M4.2X1.41X20)	12338093
16.	9-M17	9.665	GRILLE, RDO SPKR (PAINT TO MATCH)	14049217
17.		8.977	SCREW, PAN HD C/R TAP (M4.2X1.41X25)	11515244
18.	9-M22	9.780	BEZEL, SI WDO DEFR DUCT-FRT (1984-88)	14071838
19.	9-M22	9.780	BEZEL, SI WDO DEFR OTLT-RH	14071840
	9-M22	9.780	BEZEL, SI WDO DEFR OTLT-LH	14071839
20.		8.977	SCREW, PAN HD C/R (M4.2X1.41X8)	
21.	9-N10	14.685	INSERT, PNL	10248659
22.		8.977	SCREW, OV HD CNTRSUNK, C/R TAP (M4.2X1.41X13)	11515037
23.		8.977	BOLT, HEX W/FL WA TAP (M4.2X1.41X16)	11509374
24.		DISCON	PLATE, ACSRY-RH (1984-85 W/AU3)	14076584
	9-N13	14.691	PLATE, ACSRY-RH (1986-87 W/AU3) (1988-89)	14088470
		DISCON	PLATE, ACSRY-RH (1984-85 EXC AU3)	14076586
		DISCON	PLATE, ACSRY-RH (1986-87 EXC AU3)	14088468
		DISCON	PLATE, ACSRY-LH (1984-85 W/AU3)	14076583
	9-N13	14.691	PLATE, ACSRY-LH (1986-87 W/AU3) (1988-89)	14088469
		N.S.	PLATE, ACSRY-LH (1984-85 EXC AU3)	
		DISCON	PLATE, ACSRY-LH (1986-87 EXC AU3)	14088467
25.	9-A12	10.163	SWITCH, WSW & WSWA (AC-DELCO #D6371A)	10045832
26.		8.977	SCREW, HWH TAP (M4.2X1.41X10) 8.5, POR	11509212
27.	9-B5	10.485	SWITCH, PWR LK-RH (1984-85) (AC-DELCO #D6075)	20344292
	9-B5	10.485	SWITCH, PWR LK-LH (1984-85) (AC-DELCO #D6076)	20344293
	9-B5	10.485	SWITCH, PWR LK (1986-89) (QTY 2)	10092804
28.		DISCON	LAMP, DM & RDG IN DR-RH (1984-85)	918256
		DISCON	LAMP, MT MAP IN DR-RH (1986-88)	5974774
		DISCON	LAMP, DM & RDG IN DR-LH (1984-85)	918255
		DISCON	LAMP, MT MAP IN DR-LH (1986-88)	5974773
29.	9-M12	9.260	SEAL, POLYU (59.50X1.25X.75) (CUT AS REQUIRED)	3999572
30.		8.977	BOLT, HEX W/FL WA TAP (M4.2X1.41X16)	11509374
31.	9-A9	10.051	MOLDING, W/S LWR COR-RH	14049298
	9-A9	10.051	MOLDING, W/S LWR COR-LH	14049297
32.		8.950	RETAINER, PUSH-IN FITS .250 HOLE	10121502
33.	9-N10	14.665	WINDLACE, OPG-RH	14060206

© 2000 GENERAL MOTORS SERVICE PARTS OPERATIONS-CHEVROLET-14Y

				1Y10-010
	9-N10	14.665	WINDLACE, OPG-LH	14060205
34.		8.977	SCREW, PAN HD C/R TAP (M4.2X1.41X16) POR	11504736

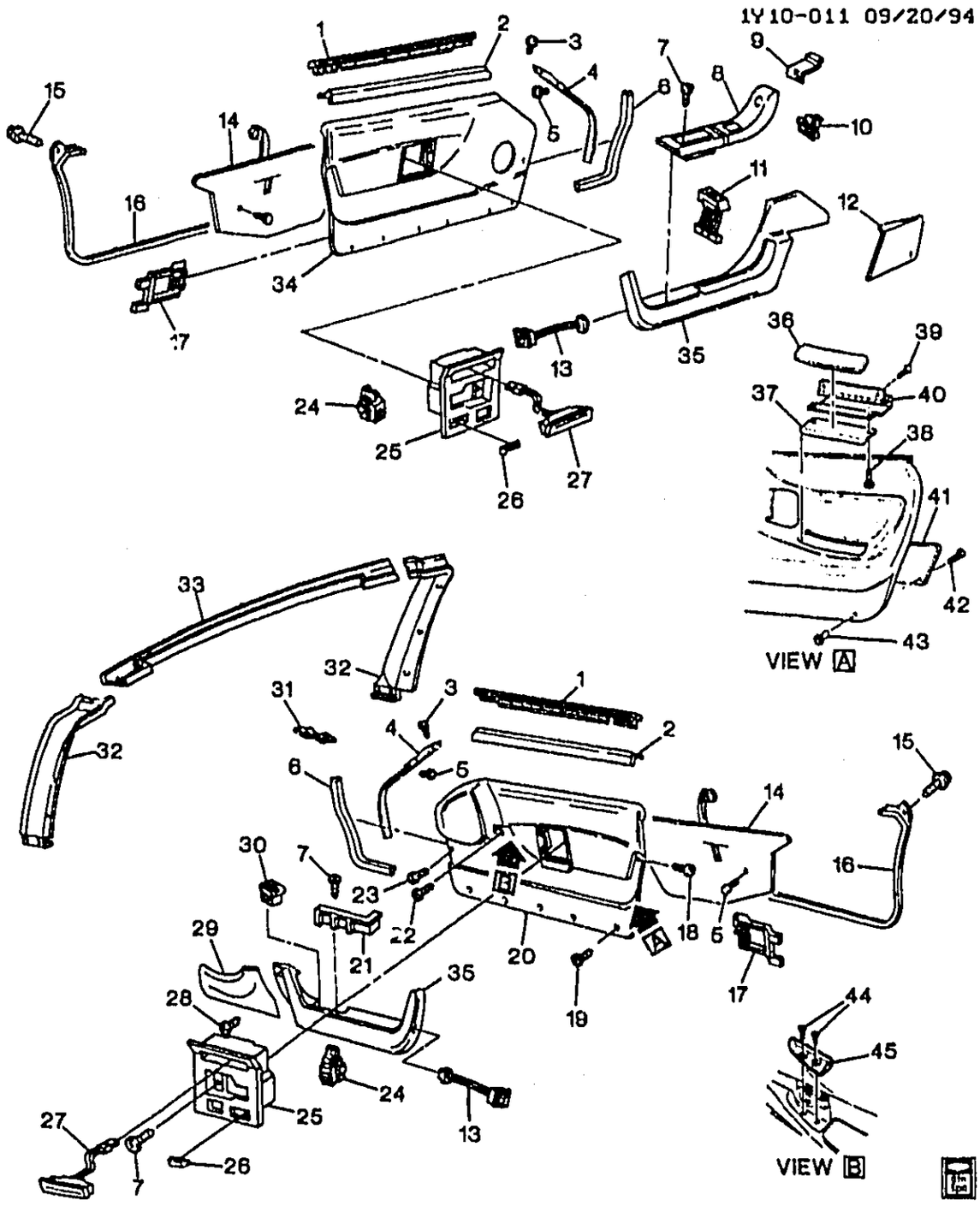

1Y10-011

1990-1996 Y DOOR TRIM & SEALING/FRONT

1.	9-B12	10.710	SEALING STRIP, FRT S/D WDO OTR	90-96	Y	LH	10245645
	9-B12	10.710	SEALING STRIP, FRT S/D WDO OTR	90-96	Y	RH	10245646
2.	9-B12	10.710	SEALING STRIP, FRT S/D WDO INR (PART OF 20)	90-91	Y	RH	10088110
	9-B12	10.710	SEALING STRIP, FRT S/D WDO INR (DRILL ONE HOLE IN FRT OF DR TR) (PART OF 20)	90-96	Y	LH	10199731

© 2000 GENERAL MOTORS SERVICE PARTS OPERATIONS-CHEVROLET-14Y

							1Y10-011
	9-B12	10.710	SEALING STRIP, FRT S/D WDO INR (DRILL ONE HOLE IN FRT OF DR TR) (PART OF 20)	92-96	Y	RH	10199732
		N.S.	SEALING STRIP, FRT S/D TR SUPT (PART OF 34)		.....		
3.		8.977	SCREW-ROUNDWASHER M4.2X1.4X13, 8.63OD, 6010M, 6138M, C/R, TAP (FRT S/D OPG FRT W/LACE)	90-96	.....	2	11515893
4.	9-N10	14.665	LACE, FRT S/D OPG FRT	90-96	Y	LH	10278971
	9-N10	14.665	LACE, FRT S/D OPG FRT	90-96	Y	RH	10278972
5.		8.950	RETAINER, PUSH-IN, FITS .250 HOLE, 1.01LG.700-OD NYLON BLACK (FRT S/D OPG FRT W/LACE)	90-96	.....	2	10121502
6.	9-B11	10.695	SEALING STRIP, FRT S/D OPG FIN PNL (12.840)	90-96	Y	6	14069649
7.		8.977	SCREW, OVAL CSK TRIM HD W/WA TYPE AB (4.2X1.4X20) (FRT S/D A/RST FIL) (16.682)	90-96	.....	LH	12338093
		8.977	SCREW, OVAL CSK TRIM HD W/WA TYPE AB (4.2X1.4X20) (FRT S/D A/RST FIL) (16.682)	90-96	.....	RH	12338093
		8.977	SCREW, OVAL CSK TRIM HD W/WA TYPE AB (4.2X1.4X20) (POSN #1) (16.682)	90-96	.....	3	12338093
8.	9-N12	14.686	FILLER, FRT S/D A/RST (GRAY) .	90-91	Y	LH	10085953
	9-N12	14.686	FILLER, FRT S/D A/RST (BLACK)	92-93	Y	LH	12512653
	9-N12	14.686	FILLER, FRT S/D A/RST (BLACK)	94-96	Y	LH	12514441
9.	9-N12	14.686	CLIP, FRT S/D A/RST FIL	90-96	Y	1	10086313
10.	9-A15	10.186	SWITCH, O/S RR VIEW MIR R/CON (W/SI WDO SW) (CPS) ...	90-91	Y	LH	10098486
	9-A15	10.186	SWITCH, O/S RR VIEW MIR R/CON (W/SI WDO SW) (CPS) ...	92-93	Y	LH	10161833
	9-A15	10.186	SWITCH, O/S RR VIEW MIR R/CON (W/SI WDO SW) (CPS) ...	94-96	Y	LH	10212994
	9-B14	10.777	SWITCH, O/S RR VIEW MIR R/CON (W/SI WDO SW) (CPS) (10.186)	94-96	Y	LH	10212994
	9-A15	10.186	LAMP, O/S RR VIEW MIR R/CON SEL SW	90-96	Y	1	12506723
11.	9-B14	10.777	SWITCH, SI WDO	90-91	Y	RH	10098479
	9-B14	10.777	SWITCH, SI WDO	90-91	Y	LH	10098482
	9-B14	10.777	SWITCH, SI WDO	92-93	Y	RH	10161835
	9-B14	10.777	SWITCH, SI WDO	92-96	Y	LH	10212993
	9-B14	10.777	SWITCH, SI WDO	94-96	Y	RH	10252372
	9-B14	10.777	LAMP, FRT S/D WDO SW	90-96	Y	2	10148011
12.		N.S.	COVER, FRT S/D T/PNL INS (PART OF 34)		.....		
13.	9-M26	12.243	SWITCH, R/CMPT LID REL	90-93	Y	1	10098458
	9-M26	12.243	SWITCH, R/CMPT LID REL (AC-DELCO #D7015A)	94-96	Y	1	10210771
14.	9-B4	10.355	INSULATOR, FRT S/D (12.895) ..	90-96	Y	LH	10193703
	9-B4	10.355	INSULATOR, FRT S/D (12.895) ..	90-96	Y	RH	10193704
15.		8.977	SCREW, HEX W/FL WA M4.2X2.25X20 TAP POR (FRT S/D W/STR)	90-93	.....	8	11508443

© 2000 GENERAL MOTORS SERVICE PARTS OPERATIONS-CHEVROLET-14Y

							1Y10-011
	9-B11	10.695	BOLT, FRT S/D W/STR (PAINT TO MATCH) (FITS .18 HOLE, .7 LG, .43 OD, NYLON) (14.630)	94-96	Y	8	20540336
16.	9-B11	10.694	WEATHERSTRIP, FRT S/D (CPS) (BLACK)	90-96	Y	LH	10269865
	9-B11	10.694	WEATHERSTRIP, FRT S/D (CPS) (BLACK)	90-96	Y	RH	10269866
	9-B11	10.694	RETAINER, FRT S/D W/STR (10.695)	90-96	Y	2	20740895
17.	9-N10	14.685	INSERT, FRT S/D T/PNL (BLACK) (PAINT TO MATCH)	90-96	Y	2	10248659
18.		8.977	SCREW, RD LRG WA HD C/R M4.2X1.41X25PEOR	90-96	.....	AR	11505850
19.	9-N10	14.683	RETAINER, FRT S/D T/PNL (PUSH IN) (BLACK)	94-96	Y (19I)	10	10248245
	9-N10	14.683	RETAINER, FRT S/D T/PNL (PUSH IN) (RED)	94-96	Y (70I)	10	10248246
	9-N10	14.683	RETAINER, FRT S/D T/PNL (PUSH IN) (BEIGE)	94-96	Y (64I)	10	10248247
	9-N10	14.683	RETAINER, FRT S/D T/PNL (PUSH IN) (GRAY)	94-96	Y (14I)	10	10248248
		8.921	NUT, ANCHOR THD SIZE 8-18 NYLON (FRT S/D T/PNL (PUSH IN))	90-96	.....	AR	1377030
20.		DISCON	TRIM, FRT S/D (INCLS 2, 28, 29, 31, 36) (BLUE) (14.685)	91	Y (22I)	RH	10167184
		DISCON	TRIM, FRT S/D (INCLS 2, 28, 29, 31, 36) (COGNAC) (14.685)	91	Y (60I)	RH	10167186
		DISCON	TRIM, FRT S/D (INCLS 2, 28, 29, 31, 36) (GRAY) (14.685)	91	Y (90I)	RH	10167190
		DISCON	TRIM, FRT S/D (INCLS 2, 28, 29, 31, 36) (RED) (14.685)	91	Y (73I)	RH	10199736
		DISCON	TRIM, FRT S/D (INCLS 2, 28, 29, 31, 36) (RED)	92	Y (73I)	RH	10199736
		DISCON	TRIM, FRT S/D (INCLS 2, 28, 29, 31, 36) (BEIGE)	92-93	Y (64I)	RH	10240808
		DISCON	TRIM, FRT S/D (INCLS 2, 28, 29, 31, 36) (GRAY)	92-93	Y (14I)	RH	10240810
		DISCON	TRIM, FRT S/D (INCLS 2, 28, 29, 31, 36) (WHITE)	92-93	Y (10I)	RH	10240812
		DISCON	TRIM, FRT S/D (INCLS 2, 28, 29, 31, 36) (RED) (14.685)	93	Y (79I)	RH	10240800
		DISCON	TRIM, FRT S/D (INCLS 2, 28, 29, 31, 36) (RED) (14.685)	93	Y (70I)	RH	10240802
	9-N10	14.685	TRIM, FRT S/D (INCLS 2, 28, 29, 31, 36) (BLACK)	94	Y (19I)	RH	10278984
	9-N10	14.685	TRIM, FRT S/D (INCLS 2, 28, 29, 31, 36) (RED)	94	Y (70I)	RH	10278985
	9-N10	14.685	TRIM, FRT S/D (INCLS 2, 28, 29, 31, 36) (BEIGE)	94	Y (64I)	RH	10278986
	9-N10	14.685	TRIM, FRT S/D (INCLS 2, 28, 29, 31, 36) (GRAY)	94	Y (14I)	RH	10278987
	9-N10	14.685	TRIM, FRT S/D (INCLS 2, 28, 29, 31, 36) (BLACK)	96	Y (19I)	RH	10278984
	9-N10	14.685	TRIM, FRT S/D (INCLS 2, 28, 29, 31, 36) (RED)	96	Y (70I)	RH	10278985
	9-N10	14.685	TRIM, FRT S/D (INCLS 2, 28, 29, 31, 36) (BEIGE)	96	Y (64I)	RH	10278986

								1Y10-011
	9-N10	14.685	TRIM, FRT S/D (INCLS 2, 28, 29, 31, 36) (GRAY)	96	Y (14I)		RH	10278987
		DISCON	TRIM, FRT S/D (BLUE) (INCLS 2, 28, 29, 31, 36) (14.685)	90	Y (22I)		RH	10167184
		DISCON	TRIM, FRT S/D (COGNAC) (INCLS 2, 28, 29, 31, 36) (14.685)	90	Y (60I)		RH	10167186
		DISCON	TRIM, FRT S/D (GRAY) (INCLS 2, 28, 29, 31, 36) (14.685)	90	Y (90I)		RH	10167190
		DISCON	TRIM, FRT S/D (RED) (INCLS 2, 28, 29, 31, 36)	90	Y (73I)		RH	10199736
	9-N10	14.685	TRIM, FRT S/D (4"X4" FOAM PATCH BY HNDL, 2"X4" FOAM AT BTM RR) (INCLS 2, 28, 29, 31, 36) (BLACK)	95	Y (19I) (2ND DES)		RH	10278984
	9-N10	14.685	TRIM, FRT S/D (4"X4" FOAM PATCH BY HNDL, 2"X4" FOAM AT BTM RR) (INCLS 2, 28, 29, 31, 36) (RED)	95	Y (70I)		RH	10278985
	9-N10	14.685	TRIM, FRT S/D (4"X4" FOAM PATCH BY HNDL, 2"X4" FOAM AT BTM RR) (INCLS 2, 28, 29, 31, 36) (BEIGE)	95	Y (64I) (2ND DES)		RH	10278986
	9-N10	14.685	TRIM, FRT S/D (4"X4" FOAM PATCH BY HNDL, 2"X4" FOAM AT BTM RR) (INCLS 2, 28, 29, 31, 36) (GRAY)	95	Y (14I) (2ND DES)		RH	10278987
21.		DISCON	FILLER, FRT S/D A/RST (BLACK)	90-93	Y (19I)		RH	10167170
		DISCON	FILLER, FRT S/D A/RST (BLUE)	90-91	Y (22I)		RH	10167172
		DISCON	FILLER, FRT S/D A/RST (COGNAC)	90-91	Y (60I)		RH	10167174
		DISCON	FILLER, FRT S/D A/RST (RED)	90-92	Y (73I)		RH	10167176
		DISCON	FILLER, FRT S/D A/RST (GRAY)	90-91	Y (90I)		RH	10167178
		DISCON	FILLER, FRT S/D A/RST (BEIGE)	92-93	Y (64I)		RH	10175686
		DISCON	FILLER, FRT S/D A/RST (GRAY)	92-93	Y (14I)		RH	10175688
		DISCON	FILLER, FRT S/D A/RST (WHITE)	92-93	Y (10I)		RH	10175738
	9-N12	14.686	FILLER, FRT S/D A/RST (BLACK)	94-96	Y		RH	10245573
22.		8.977	SCREW, HWH TAP M4.2X1.41X16 9.2-OD DRILPT BLK PZOR	90-96			AR	11509135
23.		8.977	SCREW, METRIC OVAL 90 DEG C/SUNK TR HD-CROSS RECESS-TAP (4.2X1.41X50) (FRT S/D T/PNL)	90-96			AR	11515187
24.	9-B5	10.485	ESCUTCHEON, DR LK SW (PART OF 25) (10.777)	90	Y		2	20401575
	9-B5	10.485	ESCUTCHEON, DR LK SW (PART OF 25) (10.777)	91-96	Y		2	10161852
25.	9-B7	10.515	BEZEL, FRT S/D I/S HDL (INCLS 24) (BLACK)	90-91	Y (19I)		LH	10167157
		DISCON	BEZEL, FRT S/D I/S HDL (INCLS 24) (BLACK)	90-91	Y (19I)		RH	10167158
		DISCON	BEZEL, FRT S/D I/S HDL (INCLS 24) (BLUE)	90-91	Y (22I)		LH	10167159
		DISCON	BEZEL, FRT S/D I/S HDL (INCLS 24) (BLUE)	90-91	Y (22I)		RH	10167160
		DISCON	BEZEL, FRT S/D I/S HDL (INCLS 24) (COGNAC)	90-91	Y (60I)		LH	10167161
		DISCON	BEZEL, FRT S/D I/S HDL (INCLS 24) (COGNAC)	90-91	Y (60I)		RH	10167162

© 2000 GENERAL MOTORS SERVICE PARTS OPERATIONS-CHEVROLET-14Y

								1Y10-011
		DISCON	BEZEL, FRT S/D I/S HDL (INCLS 24) (RED)	90-91	Y (73I)		LH	10167163
		DISCON	BEZEL, FRT S/D I/S HDL (INCLS 24) (RED)	90-91	Y (73I)		RH	10167164
		DISCON	BEZEL, FRT S/D I/S HDL (INCLS 24) (GRAY)	90-91	Y (90I)		LH	10167165
		DISCON	BEZEL, FRT S/D I/S HDL (INCLS 24) (GRAY)	90-91	Y (90I)		RH	10167166
	9-B7	10.515	BEZEL, FRT S/D I/S HDL (INCLS 24) (BLACK)	92-93	Y (10I, 19I)		LH	10161823
	9-B7	10.515	BEZEL, FRT S/D I/S HDL (INCLS 24) (BLACK)	92-93	Y (10I, 19I)		RH	10161824
		DISCON	BEZEL, FRT S/D I/S HDL (INCLS 24) (RED)	92	Y (73I)		LH	10161825
		DISCON	BEZEL, FRT S/D I/S HDL (INCLS 24) (RED)	92	Y (73I)		RH	10161826
	9-B7	10.515	BEZEL, FRT S/D I/S HDL (INCLS 24) (GRAY)	92-93	Y (14I)		LH	10161827
		DISCON	BEZEL, FRT S/D I/S HDL (INCLS 24) (GRAY)	92-93	Y (14I)		RH	10161828
	9-B7	10.515	BEZEL, FRT S/D I/S HDL (INCLS 24) (BEIGE)	92-93	Y (64I)		LH	10161829
	9-B7	10.515	BEZEL, FRT S/D I/S HDL (INCLS 24) (BEIGE)	92-93	Y (64I)		RH	10161830
	9-B7	10.515	BEZEL, FRT S/D I/S HDL (INCLS 24) (RED)	93	Y (79I)		LH	10199541
		DISCON	BEZEL, FRT S/D I/S HDL (INCLS 24) (RED)	93	Y (79I)		RH	10199544
	9-B7	10.515	BEZEL, FRT S/D I/S HDL (INCLS 24) (RED)	93	Y (70I)		LH	10199711
		DISCON	BEZEL, FRT S/D I/S HDL (INCLS 24) (RED)	93	Y (70I)		RH	10199712
	9-B7	10.515	BEZEL, FRT S/D I/S HDL (INCLS 24) (BLACK) (W/FLOCKING)	94-96	Y		LH	10279181
	9-B7	10.515	BEZEL, FRT S/D I/S HDL (INCLS 24) (BLACK) (W/FLOCKING)	94-96	Y		RH	10279182
	9-B5	10.485	SWITCH, DR LK (10.777)	90	Y		2	10098462
	9-B5	10.485	SWITCH, DR LK (10.500)	91-96	Y		2	10161853
	9-B5	10.485	ESCUTCHEON, DR LK SW (10.777)	90	Y		2	20401575
	9-B5	10.485	ESCUTCHEON, DR LK SW (10.777)	91-96	Y		2	10161852
		8.977	SCREW, HWH TAP M4.2X1.41X10, 9.2-OD 6010PZOR BLK (DR LK SW)	90-96			2	11509212
26.	9-B9	10.559	KNOB, FRT S/D LKG ROD	90-93	Y		2	10086294
	9-B9	10.559	KNOB, FRT S/D LKG ROD	94-96	Y		2	10218124
27.	9-C27	11.927	LAMP, DM & RDG	90-96	Y		LH	10213747
	9-C27	11.927	LAMP, DM & RDG	90-96	Y		RH	10213748
28.		8.977	BOLT, SCR HEX W/FLAT WA 12 DIA TYPE AB (POSN #2) (PART OF 20, 34)	90-96			2	11509374
29.		N.S.	COVER, FRT S/D T/PNL INS (PART OF 20)				RH	
30.	9-B14	10.777	SWITCH, SI WDO (CPS)	90-91	Y		RH	10098479
	9-B14	10.777	SWITCH, SI WDO (CPS)	92-93	Y		RH	10161835
	9-B14	10.777	SWITCH, SI WDO (CPS)	94-96	Y		RH	10252372
	9-B14	10.777	LAMP, FRT S/D WDO SW	90-96	Y		2	10148011

© 2000 GENERAL MOTORS SERVICE PARTS OPERATIONS-CHEVROLET-14Y

							1Y10-011
31.		N.S.	BRACKET, FRT S/D A/RST (PART OF 20)				
32.	9-A9	10.051	MOLDING, W/S SI GARN	90-96	Y	RH	10265823
	9-A9	10.051	MOLDING, W/S SI GARN	90-96	Y	LH	10265824
33.	9-A9	10.051	MOLDING, W/S UPR GARN (CPS)	90-96	Y	1	10236001
	9-A9	10.056	INSULATOR, W/S SI UPR G/MLDG (9.260)	90-96	Y	4	3999572
		8.800	ADHESIVE, LOCTITE 414 (4G BOTTLE) (W/S MLDG)	90-96		1	1052621
34.		DISCON	TRIM, FRT S/D (INCLS 2, 12, 28, 35) (BLUE) (14.685)	90-91	Y (22I)	LH	10167183
		DISCON	TRIM, FRT S/D (INCLS 2, 12, 28, 35) (COGNAC) (14.685)	90-91	Y (60I)	LH	10167185
		DISCON	TRIM, FRT S/D (INCLS 2, 12, 28, 35) (GRAY) (14.685)	90-91	Y (90I)	LH	10167189
	9-N10	14.685	TRIM, FRT S/D (INCLS 2, 12, 28, 35) (BLACK)	90-93	Y (19I)	LH	10240803
		DISCON	TRIM, FRT S/D (INCLS 2, 12, 28, 35) (RED) (14.685)	91-92	Y (73I)	LH	10199735
		DISCON	TRIM, FRT S/D (INCLS 2, 12, 28, 35) (BEIGE)	92-93	Y (64I)	LH	10240807
		DISCON	TRIM, FRT S/D (INCLS 2, 12, 28, 35) (GRAY)	92-93	Y (14I)	LH	10240809
		DISCON	TRIM, FRT S/D (INCLS 2, 12, 28, 35) (WHITE)	92-93	Y (10I)	LH	10240811
		DISCON	TRIM, FRT S/D (INCLS 2, 12, 28, 35) (RED) (14.685)	93	Y (79I)	LH	10240799
		DISCON	TRIM, FRT S/D (INCLS 2, 12, 28, 35) (RED) (14.685)	93	Y (70I)	LH	10240801
	9-N10	14.685	TRIM, FRT S/D (INCLS 2, 12, 28, 35) (BLACK)	94	Y (19I)	LH	10278979
	9-N10	14.685	TRIM, FRT S/D (INCLS 2, 12, 28, 35) (RED)	94	Y (70I)	LH	10278980
	9-N10	14.685	TRIM, FRT S/D (INCLS 2, 12, 28, 35) (BEIGE)	94	Y (64I)	LH	10278981
	9-N10	14.685	TRIM, FRT S/D (INCLS 2, 12, 28, 35) (GRAY)	94	Y (14I)	LH	10278982
	9-N10	14.685	TRIM, FRT S/D (INCLS 2, 12, 28, 35) (RED)	96	Y (70I)	LH	10278980
	9-N10	14.685	TRIM, FRT S/D (INCLS 2, 12, 28, 35) (BEIGE)	96	Y (64I)	LH	10278981
	9-N10	14.685	TRIM, FRT S/D (INCLS 2, 12, 28, 35) (GRAY)	96	Y (14I)	LH	10278982
	9-N10	14.685	TRIM, FRT S/D (W/HTCH REL SW MUST CUT HOLE) (INCLS 2, 12, 28, 35) (BLACK)	96	Y (19I)	LH	10278979
	9-N10	14.685	TRIM, FRT S/D (4"X4" FOAM PATCH BY HNDL, 2"X4" FOAM AT BTM RR) (INCLS 2, 12, 28, 35) (BLACK)	95	Y (19I)	LH	10278979
	9-N10	14.685	TRIM, FRT S/D (4"X4" FOAM PATCH BY HNDL, 2"X4" FOAM AT BTM RR) (INCLS 2, 12, 28, 35) (RED)	95	Y (70I)	LH	10278980
	9-N10	14.685	TRIM, FRT S/D (4"X4" FOAM PATCH BY HNDL, 2"X4" FOAM AT BTM RR) (INCLS 2, 12, 28, 35) (BEIGE)	95	Y (64I)	LH	10278981

© 2000 GENERAL MOTORS SERVICE PARTS OPERATIONS-CHEVROLET-14Y

								1Y10-011
	9-N10	14.685	TRIM, FRT S/D (4"X4" FOAM PATCH BY HNDL, 2"X4" FOAM AT BTM RR) (INCLS 2, 12, 28, 35) (GRAY)	95	Y (14I) (2ND DES)	LH	10278982
35.		DISCON	ARMREST, FRT S/D (14.686)	90-93	Y	LH	10085969
		DISCON	ARMREST, FRT S/D (BLACK) (14.686) (W/VIN PRIOR TO 102411)	91	Y (19I) (1ST DES)	RH	10135908
		DISCON	ARMREST, FRT S/D (BLUE) (14.686) (W/VIN PRIOR TO 102411)	91	Y (22I) (1ST DES)	RH	10135914
		DISCON	ARMREST, FRT S/D (MED COGNAC) (14.686) (W/VIN PRIOR TO 102411)	91	Y (60I) (1ST DES)	RH	10135920
		DISCON	ARMREST, FRT S/D (FLAME RED) (14.686) (W/VIN PRIOR TO 102411)	91	Y (73I)	RH	10135926
		DISCON	ARMREST, FRT S/D (GRAY) (14.686) (W/VIN PRIOR TO 102411)	91	Y (90I) (1ST DES)	RH	10135932
	9-N12	14.686	ARMREST, FRT S/D (BLACK) (STARTING W/VIN #102411)	91	Y (19I) (2ND DES)	RH	10167130
		DISCON	ARMREST, FRT S/D (BLUE) (STARTING W/VIN #102411)	91	Y (22I) (2ND DES)	RH	10167136
		DISCON	ARMREST, FRT S/D (COGNAC) (STARTING W/VIN #102411)	91	Y (60I) (2ND DES)	RH	10167142
		DISCON	ARMREST, FRT S/D (RED) (STARTING W/VIN #102411)	91	Y (73I) (2ND DES)	RH	10167148
		DISCON	ARMREST, FRT S/D (GRAY) (STARTING W/VIN #102411)	91	Y (90I)	RH	10167154
	9-N12	14.686	ARMREST, FRT S/D (BLACK)	92-93	Y (19I)	RH	10167130
		DISCON	ARMREST, FRT S/D (RED)	92	Y (73I)	RH	10167148
		DISCON	ARMREST, FRT S/D (GRAY)	92-93	Y (14I)	RH	10175702
		DISCON	ARMREST, FRT S/D (BEIGE)	92-93	Y (64I)	RH	10175722
		DISCON	ARMREST, FRT S/D (WHITE)	92-93	Y (10I)	RH	10175728
		DISCON	ARMREST, FRT S/D (RED)	93	Y (79I)	RH	10199750
		DISCON	ARMREST, FRT S/D (RED)	93	Y (70I)	RH	10199752
		DISCON	ARMREST, FRT S/D (BLACK) (14.686)	90	Y (19I)	RH	10135908
		DISCON	ARMREST, FRT S/D (BLUE) (14.686)	90	Y (22I)	RH	10135914
		DISCON	ARMREST, FRT S/D (COGNAC) (14.686)	90	Y (60I)	RH	10135920
		DISCON	ARMREST, FRT S/D (GRAY) (14.686)	90	Y (90I)	RH	10135932
		DISCON	ARMREST, FRT S/D (RED) (14.686)	90	Y (73I)	RH	10135926
36.	9-N12	14.686	ARMREST, FRT S/D (PART OF 20)	94-96	Y	LH	12522295
	9-N12	14.686	ARMREST, FRT S/D (PART OF 20)	94-96	Y	RH	12522296
37.	9-N13	14.688	BEZEL, FRT S/D A/RST (14.686) .	94-96	Y	LH	12522861
	9-N13	14.688	BEZEL, FRT S/D A/RST (14.686) .	94-96	Y	RH	12522862
38.		8.908	SCR LGE WASHER HEAD HI-LO BHL	90-96	.....	AR	
39.		8.977	SCREW, RD WA HD TAP M4.2X1.41X8 11-OD W/THD SEALER 6138M BLK	90-96	.....	AR	

© 2000 GENERAL MOTORS SERVICE PARTS OPERATIONS-CHEVROLET-14Y

							1Y10-011	
40.	9-N12	14.686	HINGE, FRT S/D A/RST (14.762) .	94-96	Y	2	12532158
41.	9-N12	14.686	PANEL, FRT S/D A/RST STOW COMPT (14.692)	94-96	Y	LH	12522859
	9-N12	14.686	PANEL, FRT S/D A/RST STOW COMPT (14.692)	94-96	Y	RH	12522860
42.		8.977	SCREW, LG RD HD TORX TAP M4.2X1.41X20 SS BL OX	90-96	.....	AR	
43.		N.S.	WASHER, FRT S/D T/PNL (PART OF 20, 34)		.....	AR	
44.		8.977	SCREW, OVAL CSK TRIM HD W/WA TYPE AB (4.2X1.4X20) (FRT S/D A/RST FIL) (16.682)	90-96	.....	2	12338093
45.	9-N12	14.686	FILLER, FRT S/D A/RST (BLACK)	94-95	Y	RH	10245573
	9-N12	14.686	FILLER, FRT S/D A/RST (BLACK)	94-95	Y	LH	12514441

RPO DEFINITIONS

10I – INTERIOR TRIM – ARCTIC WHITE
14I – INTERIOR TRIM LT GRAY
19I – INTERIOR TRIM,BLACK
22I – INTERIOR TRIM,DARK ROYAL BLUE
60I – INTERIOR TRIM,DARK COGNAC
64I – INTERIOR TRIM,LIGHT BEIGE
70I – INTERIOR TRIM,TORCH RED
73I – INTERIOR TRIM,FLAME RED
79I – INTERIOR TRIM,RUBY RED
90I – INTERIOR TRIM,SMOKE GRAY

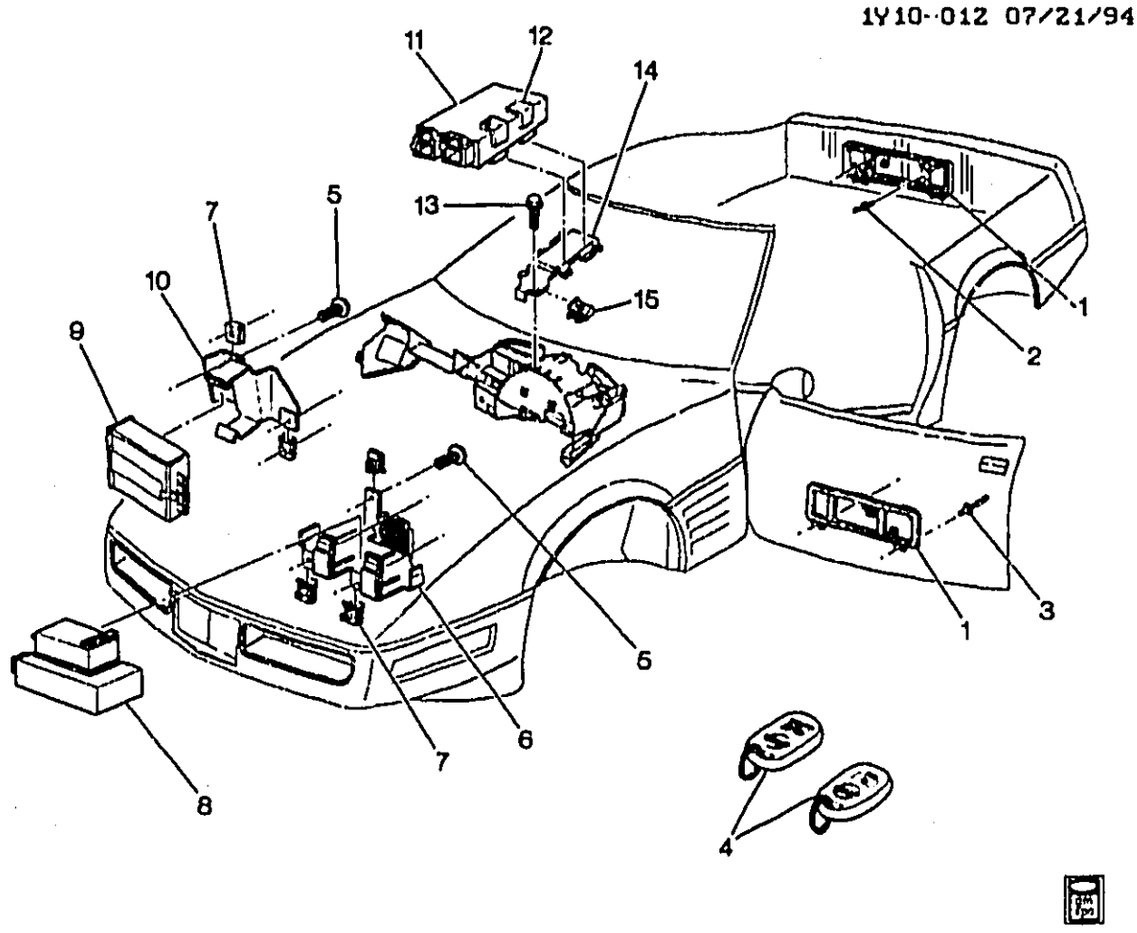

1Y10-012

1993-1996 Y ENTRY SYSTEM/KEYLESS REMOTE

1.	9-B5	10.485	ANTENNA, R/CON DR LK RCVR .	93	Y	2	10098467
	9-B5	10.485	ANTENNA, R/CON DR LK RCVR .	94-96	Y (EXC VD1, VE1)	2	10098467
2.		8.967	RIVET, POP, .188 SHANK DIA, .43 LEN, .625 OD, .188-.25 GRIP, ALUM, BA (R/CON DR LK RCVR ANT)	93-94	.....	4	9439559
	9-B5	10.485	RIVET, R/CON DR LK RCVR ANT (23.5LG 9.89 OD) (8.967)	95-96	Y67 (EXC VD1, VE1) ...	2	10125439
	9-B5	10.485	RIVET, R/CON DR LK RCVR ANT (POSN #1) (23.5LG 9.89 OD) (8.967)	95-96	Y07 (EXC VD1, VE1) ...	2	10125439
	9-B5	10.485	RIVET, R/CON DR LK RCVR ANT (POSN #2) (23.5LG 9.89 OD) (8.967)	95-96	Y07	2	10125439
3.		8.967	RIVET POP, .188 SHANK DIA, .43 LEN, .625 OD, .188-.25 GRIP, ALUM, BA (R/CON DR LK RCVR ANT)	93-94	.....	4	9439559
	9-B5	10.485	RIVET, R/CON DR LK RCVR ANT (23.5LG 9.89 OD) (8.967)	95-96	Y67 (EXC VD1, VE1) ...	2	10125439
	9-B5	10.485	RIVET, R/CON DR LK RCVR ANT (POSN #1) (23.5LG 9.89 OD) (8.967)	95-96	Y07 (EXC VD1, VE1) ...	2	10125439

© 2000 GENERAL MOTORS SERVICE PARTS OPERATIONS-CHEVROLET-14Y

							1Y10-012
	9-B5	10.485	RIVET, R/CON DR LK RCVR ANT (POSN #2) (23.5LG 9.89 OD) (8.967)	95-96	Y07	2	10125439
4.	9-B5	10.485	TRANSMITTER, R/CON DR LK	93	Y07	1	10282929
	9-B5	10.485	TRANSMITTER, R/CON DR LK	93	Y67	2	10282930
	9-B5	10.485	TRANSMITTER, R/CON DR LK	94-96	Y07 (EXC VD1, VE1)	1	10282929
	9-B5	10.485	TRANSMITTER, R/CON DR LK	94-96	Y67 (EXC VD1, VE1)	1	10282930
	9-B5	10.485	RECEIVER, R/CON DR LK	93	Y	1	10261112
	9-B5	10.485	RECEIVER, R/CON DR LK	94-96	Y (EXC VD1, VE1)	1	10261112
5.		8.977	BOLT/SCREW ASM M4.2X1.41 #18 HEX HD GM71 (R/CON DR LK RCVR BRKT)	93-96		AR	
6.	9-B5	10.485	BRACKET, R/CON DR LK RCVR	93	Y	1	10252241
	9-B5	10.485	BRACKET, R/CON DR LK RCVR	94-96	Y (EXC VD1, VE1)	1	10252241
7.		8.921	NUT, U TYPE, MULTI THD, PREV TORQ, M4.2X1.41TAP, 8.1REACH, 0.65-3.80 PNLS 1065 PZOR (EXC EXPORT) (AC-DELCO #11513599)	93-96		3	11513599
		8.921	NUT, U TYPE, MULTI THD, PREV TORQ, M4.2X1.41TAP, 8.1REACH, 0.65-3.80 PNLS 1065 PZOR (EXPORT) (AC-DELCO #11513599)	93-96		2	11513599
8.		N.S.	ALARM, ST BELT & IGN KEY & LPS (W/R/CON DR LK RCVR) (EXC EXPORT) (N-CPS)	93-96	Y	1	
	9-B5	10.485	RECEIVER, R/CON DR LK (EXC EXPORT)	93	Y	1	10261112
	9-B5	10.485	RECEIVER, R/CON DR LK (EXC EXPORT)	94-96	Y (EXC VD1, VE1)	1	10261112
	9-L8	2.461	ALARM, ST BELT & IGN KEY & LPS (EXC EXPORT) (9.765)		Y	1	25518745
9.	9-L8	2.461	ALARM, ST BELT & IGN KEY & LPS (EXPORT) (9.765)	93-96	Y	1	25518745
10.	9-L7	2.195	BRACKET, ST BELT & IGN KEY & LPS ALARM	93-96	Y (VD1, VE1) (EXPORT)	1	10098454
	9-M21	9.765	BRACKET, ST BELT & IGN KEY & LPS ALARM (2.195)	93-96	Y (VD1, VE1) (EXPORT)	1	10098454
11.	9-L18	2.485	MODULE, HDLP AUTO CONT (LESS BRKT & BOLTS)	93-96	Y (T61) (EXPORT)	1	10098712
12.		N.S.	INSULATOR, DAYTIME RUNNING LP CONT MDL				
13.		8.977	SCREW, HWH, M4.2X1.41X20, 9.2OD, 13.8 THD (DAYTIME RUNNING LP CONT MDL BRKT)	93-96		1	22536997
14.	9-L18	2.485	BRACKET, DAYTIME RUNNING LP CONT MDL	93-96	Y (T61) (EXPORT)	1	10177914
15.		8.921	NUT, U TYPE, MULTI THD, PREV TORQ, M4.2X1.41TAP, 8.1REACH, 0.65-3.80 PNLS 1065 PZOR (DAYTIME RUNNING LP CONT MDL BRKT) (AC-DELCO #11513599)	93-96		1	11513599

RPO DEFINITIONS
T61 - LIGHTING,DAYTIME RUNNING
VD1 - PROVISION OPTIONS,EUROPE(EXPORT)
VE1 - PROVISION OPTIONS,JAPAN(EXPORT)

© 2000 GENERAL MOTORS SERVICE PARTS OPERATIONS-CHEVROLET-14Y

MICROFICHE INDEX

GROUPS 10.000 THRU 11.000

FICHE 9 OF 11

GROUP	DESCRIPTION	STARTING GRID LOCATION PARTS	ILLUSTRATIONS
–	GENERAL INFORMATION	1–A2	1–G2
–	ALPHABETICAL INDEX	1–B13	N.A.
10.000	DOORS – REGULATORS – WINDSHIELD – WIPER – WASHER	9–A2	9–D2
11.000	REAR GLASS – SEAT PARTS – ADJUSTER	9–C2	9–I2
–	OUT OF FICHE CALLS	N.A.	9–L4

9–11

CHEVROLET
BODY GROUP 11.000

ILLUSTRATION INDEX

	TITLE	GRID
1984–1988	Y SEAT ASM & HARDWARE/FRONT (AR9)	9–I4
1984–1988	Y SEAT ASM & HARDWARE/FRONT RECLINER BUCKET(AQ9)	9–I6
1989–1990	Y SEAT ASM & HARDWARE/FRONT RECLINER BUCKET(AQ9)	9–I9
1989–1991	Y SEAT ASM & HARDWARE/FRONT (AR9)	9–I12
1991	Y SEAT ASM & HARDWARE/FRONT (AQ9)	9–I19
1992–1993	Y SEAT ASM & HARDWARE/FRONT (AR9)	9–I24
1992–1993	Y SEAT ASM & HARDWARE/FRONT (AQ9)	9–J2
1994–1996	Y SEAT ASM & HARDWARE/FRONT (AR9)	9–J8
1994–1996	Y SEAT ASM & HARDWARE/FRONT (AQ9)	9–J13
1984–1987	Y ADJUSTER ASM/SEAT/ELECTRIC	9–J20
1988–1996	Y ADJUSTER ASM/SEAT/ELECTRIC	9–J21
1984–1990	Y LAMPS/INTERIOR–COURTESY & INTERIOR CARGO	9–J23
1991–1996	Y LAMPS/INTERIOR–COURTESY & INTERIOR CARGO	9–J24

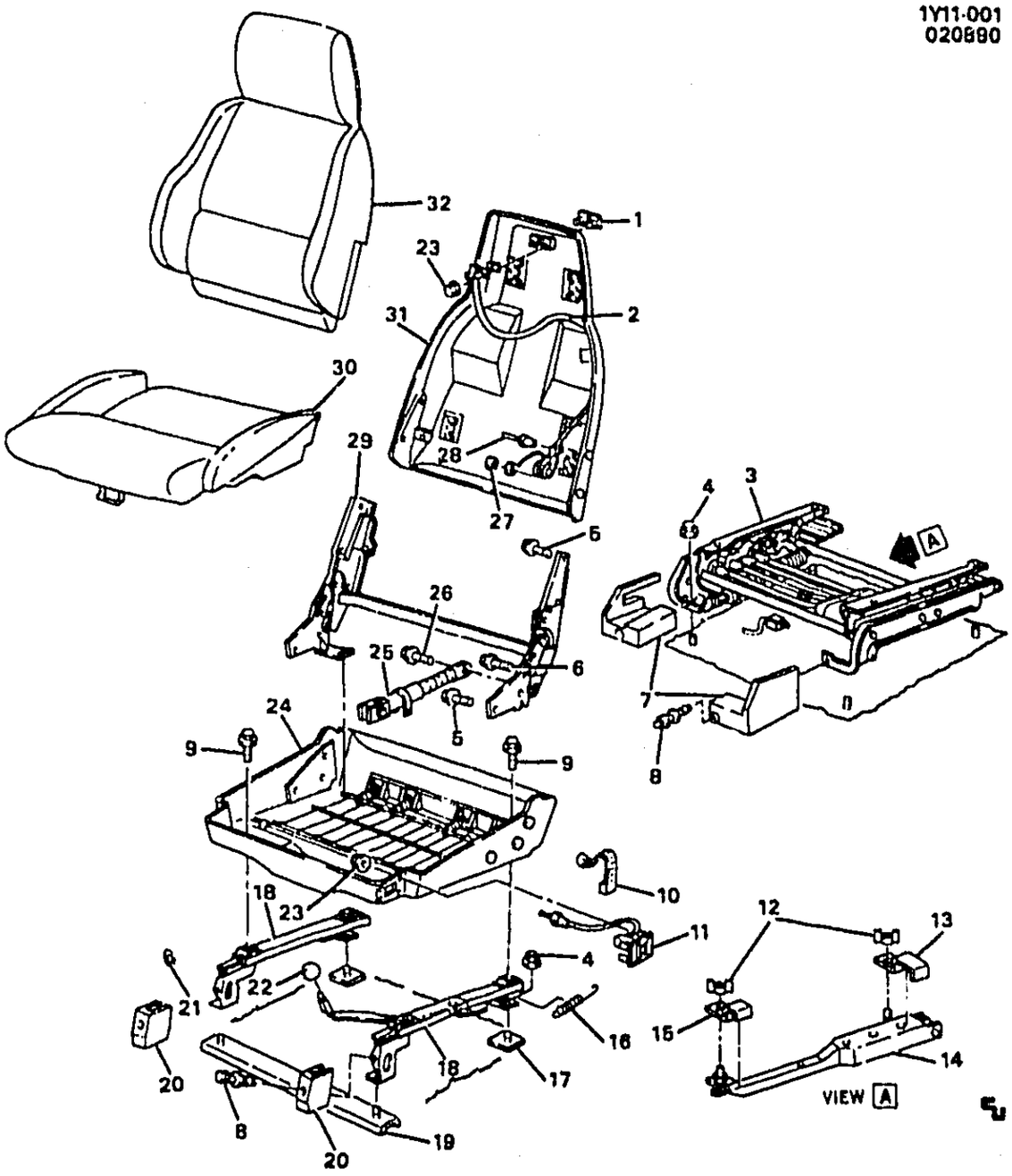

1Y11-001

1984-1988 Y SEAT ASM & HARDWARE/FRONT (AR9)

1.	9-C19	11.390	BEZEL, D/SEAT BK CUSH LAT REL HDL	14049158
	9-C19	11.390	BEZEL, P/SEAT BK CUSH LAT REL HDL	14049158
2.	9-C19	11.390	CABLE, ST BK	12515850
3.		N.S.	ADJUSTER, ST (W/AC3, AC1) (SEE GROUP 11.000 "ADJUSTER ASM/SEAT/ELECTRIC" FOR DETAIL ILLUSTRATED VIEW.)	
4.		8.917	NUT, HEX TORQ PREV (M8X1.25) 10 CAD	11515748
		8.929	WASHER, FLAT (M8X2.3)	
5.		8.900	BOLT, ST BK HGE (M6X1X10)	11508567
6.	9-C15	11.377	BOLT, D/SEAT RECL ACTR (1985-88)	14089632
	9-C15	11.377	BOLT, P/SEAT RECL ACTR (1985-88)	14089632
7.	9-C25	11.573	COVER, D/ST ADJ (W/AC1, AC3) (SEE PARTS SECTION FOR ADDITIONAL USAGE)	10054460

© 2000 GENERAL MOTORS SERVICE PARTS OPERATIONS-CHEVROLET-14Y

				1Y11-001
	9-C25	11.573	COVER, P/ST ADJ (W/AC1, AC3) (SEE PARTS SECTION FOR ADDITIONAL USAGE)	14064590
8	9-C25	11.573	RETAINER, ST ADJ CVR (1.276)	20664092
9.		8.900	BOLT (M8X1.25X20)	
10.		8.965	RETAINER, 7" STRAP	3816659
11.		DISCON	CABLE, PWR D/ST BK ADJ ACTR (1984) (1985 1ST DES) (1ST DESIGN CABLE IS 263.7MM, 2ND DESIGN CABLE IS 404.5MM)	14081869
		DISCON	CABLE, PWR D/ST BK ADJ ACTR W/LVR (1985 2ND DES) (1986-88) (1ST DESIGN CABLE IS 263.7MM, 2ND DESIGN CABLE IS 404.5MM)	14089649
		DISCON	CABLE, P/ST BK ADJ ACTR (1984)	14081870
		DISCON	CABLE, PWR P/ST BK ADJ ACTR (1985 1ST DES) (1ST DESIGN CABLE IS 473MM, 2ND DESIGN CABLE IS 584.5MM)	14081870
	9-C15	11.377	CABLE, PWR P/ST BK ADJ ACTR (1985 2ND DES) (1986-88) (1ST DESIGN CABLE IS 473MM, 2ND DESIGN CABLE IS 584.5MM)	10137720
12.	9-M2	3.403	NUT, WING M8X1.25 POR (AR)	14001846
13.		N.S.	RETAINER, WRENCH INTR	
14.	9-M12	8.821	HANDLE, JK WHL WRENCH (INCL WHL NUT SOCKET)	14050029
15.		N.S.	RETAINER, WRENCH OTR	
16.		DISCON	SPRING, ST ADJ (1984-86)	14086757
17.	9-C24	11.561	PLATE, ST ADJ RR STUD	14046692
18.	9-C24	11.561	ADJUSTER, ST-LH	14064591
	9-C24	11.561	ADJUSTER, ST-RH	14064592
19.		N.S.	REINFORCEMENT, U/B	
20.	9-C25	11.573	COVER, ST ADJ (EXC AC1, AC3)	14064590
21.	9-N13	14.800	RING, HOG	4876466
22.	9-C27	11.588	KNOB, ST ADJ (EXC AC1, AC3)	14069603
23.		8.921	NUT, MET SKW (M5X15)	11501047
24.		DISCON	FRAME, D/ST CUSH (SEE PARTS SECTION FOR ADDITIONAL USAGE)	14047569
		DISCON	FRAME, P/ST CUSH (SEE PARTS SECTION FOR ADDITIONAL USAGE)	14051128
25.		DISCON	ACTUATOR, ADJ (1984) (1985 1ST DES: HAS 3 BOLTS ON SIDE OF CUSH FRM TO ATTCH HGE ASM) ; (2ND DES HAS 2 BOLTS ON SIDE OF CUSH FRM TO ATTCH HGE ASM)	14049140
	9-C15	11.377	RECLINER, D/ST (1985 2ND DES) (1986 1ST DES: HAS 3 BOLTS ON SIDE OF CUSH FRM TO ATTCH HGE ASM; 2ND DES HAS 2 BOLTS ON SIDE OF CUSH FRM TO ATTCH HGE ASM	14088485
	9-C15	11.377	RECLINER, D/ST (1987-88)	14088485
	9-C15	11.377	RECLINER, P/ST (1985 2ND DES) (1986 1ST DES HAS 3 BOLTS ON SIDE OF CUSH FRM TO ATTCH HGE ASM; 2ND DES HAS 2 BOLTS ON SIDE OF CUSH FRM TO ATTCH HGE ASM)	14088485
	9-C15	11.377	RECLINER, P/ST (1987-88)	14088485
26.		DISCON	BOLT, ST BK ADJ ACTR	14040281
27.		N.S.	RETAINER, PUSH ON	
28.		N.S.	RIVET	
29.		DISCON	HINGE, ST BK (1984) (1985 1ST DES) (1ST DES HAS 3 BLTS ON SIDE OF CSHN FRM TO ATCH HNG ASM, 2ND DES HAS 2 BLTS ON SIDE OF CSHN FRM TO ATCH HNG ASM)	14049004
		DISCON	HINGE, ST BK (1985 2ND DES) (1986) (1ST DES HAS 3 BLTS ON SIDE OF CSHN FRM TO ATCH HNG ASM, 2ND DES HAS 2 BLTS ON SIDE OF CSHN FRM TO ATCH HNG ASM)	10153621
		DISCON	HINGE, ST BK (1987-88)	10153621
30.		DISCON	TRIM, CUSH (SEE PARTS SECTION FOR ADDITIONAL USAGE)	14058503
31.	9-C12	11.373	FRAME, ST BK (PAINT TO MATCH)	10135998
32.		DISCON	TRIM, ST BK-CLOTH (SEE PARTS SECTION FOR ADDITIONAL USAGE)	14058509

© 2000 GENERAL MOTORS SERVICE PARTS OPERATIONS-CHEVROLET-14Y

1Y11-003 12/05/94

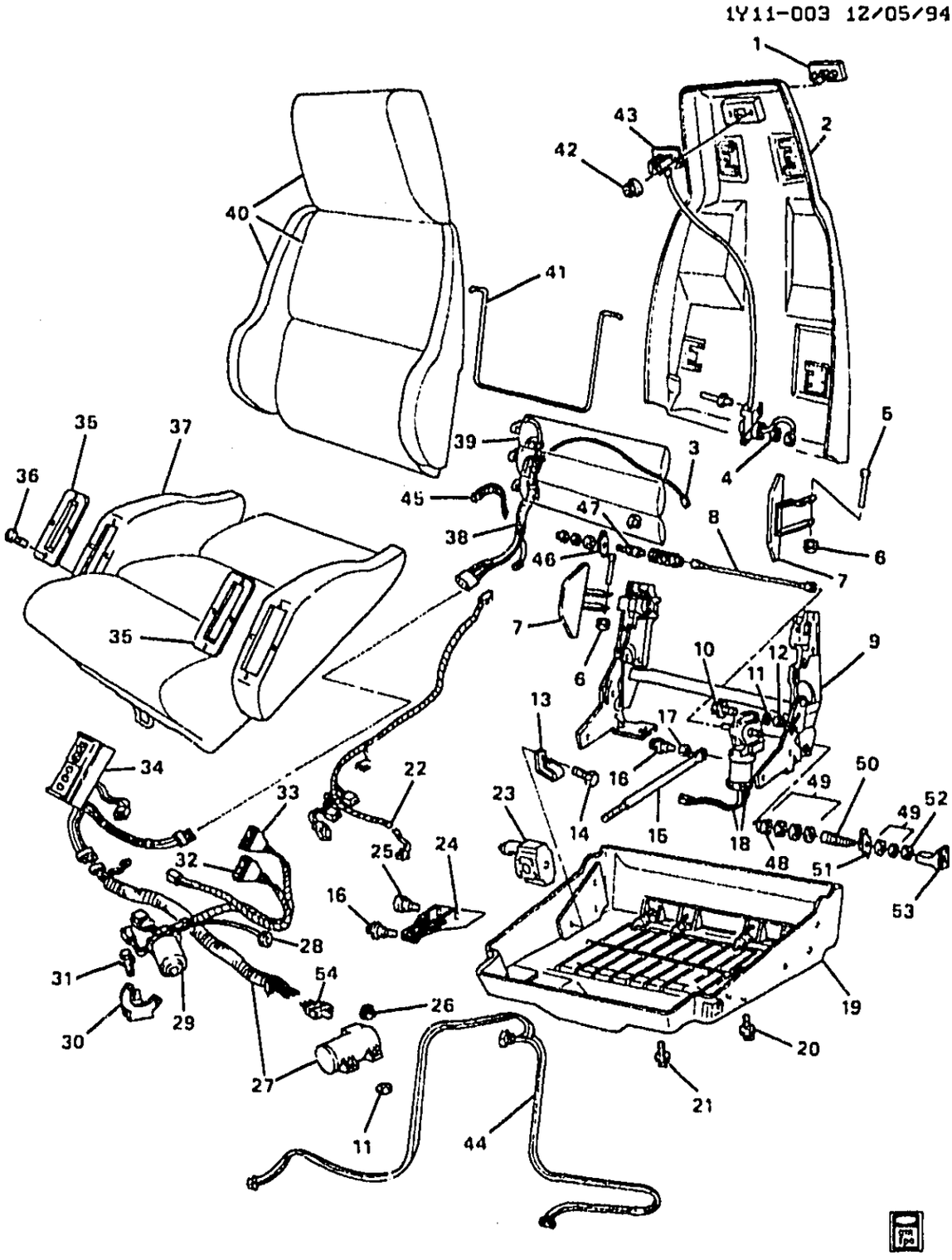

1Y11-003

1984-1988 Y SEAT ASM & HARDWARE/FRONT RECLINER BUCKET(AQ9)

1.	9-C19	11.390	BEZEL, D/SEAT BK CUSH LAT REL HDL	14049158
	9-C19	11.390	BEZEL, P/SEAT BK CUSH LAT REL HDL	14049158
2.	9-C12	11.373	FRAME, BACKREST	14047570
3.		DISCON	HARNESS, JPR	14079481
4.		N.S.	RETAINER, PUSH-ON	
5.		DISCON	PIN, BOLSTER ADJ PADL	20496179

© 2000 GENERAL MOTORS SERVICE PARTS OPERATIONS-CHEVROLET-14Y

6.		8.934	RING, SNAP, ARM & PADL PIV PIN (3/16" DIA SHAFT)	
7.		DISCON	ARM, W/PADL, BOLSTER-RH	14079494
		DISCON	ARM, W/PADL, BOLSTER-LH	14079493
8.	9-C18	11.379	CABLE, BOLSTER DR	14079498
9.		DISCON	HINGE, ST FRM	10174812
10.		8.977	SCREW, BOLSTER MTR BRKT (HEX HD TAP #10-32X1 1/4")	
11.		DISCON	WASHER, MTR INST (RUB)	14079487
12.	9-C18	11.379	SPACER, BOLSTER MTR	14079497
13.		DISCON	RETAINER, D/SEAT LUMBAR SUPT BLADDER (TUBE RET)	14079474
		DISCON	RETAINER, P/SEAT LUMBAR SUPT BLADDER (TUBE RET)	14079474
14.		8.900	BOLT, HEX FLG HD (M6X1X10)	
15.		DISCON	LEADSCREW, BACKREST	14079484
16.		DISCON	BOLT, ST BK ADJ ACTR	14049281
17.		DISCON	SPACER, BACKREST LEADSCREW	14079500
18.	9-C18	11.379	MOTOR, BOLSTER ADJ	14079423
19.		DISCON	FRAME, ST CUSH	14079468
20.		DISCON	BOLT, D/SEAT RECL ACTR BRKT BUTTON HEAD	14079491
21.		8.977	SCREW, LUMBAR MTR ATCH (HEX HD #10-24X1/2")	
22.		DISCON	HARNESS, CUSH WRG	14079490
23.	9-C15	11.377	GEAR, D/SEAT BK RCL ACTR DRV	20454999
	9-C15	11.377	GEAR, P/SEAT BK RECL ACTR DRV	20454999
24.		DISCON	BRACKET, BACKREST GEARNUT	14079482
25.		DISCON	BOLT, ST RECL VERT ACTR ATCH	14081109
26.		8.917	NUT, LUMBAR MTR ATTCH HEX FLG (#10-24)	
27.	9-C17	11.378	PUMP, ST INFL (INCLS ITEM #54)	14079486
28.		DISCON	CABLE, BACKREST DR	14079485
29.	9-C23	11.556	MOTOR, ST BK RECL ACTR SUPT (AC-DELCO #22009386)	22009386
30.		DISCON	BRACKET, BACKREST MTR	14079483
31.		8.900	BOLT, BACKREST MTR ATCH HEX TAP (1/4"-20X1/2")	
32.	9-C23	11.558	SWITCH, BACKREST CONT	14079477
33.	9-C18	11.379	SWITCH, BOLSTER CONT	14079478
34.	9-C17	11.378	POD, LUMBAR CONT	14079480
35.	9-C17	11.378	BEZEL, D/SEAT LUMBAR SUPT SW	10148091
	9-C17	11.378	BEZEL, P/SEAT LUMBAR SUPT SW	10148091
	9-C23	11.558	ESCUTCHEON, ST RECL SW (BOLS)	10148090
36.		8.977	SCREW, OV HD C/R (M4.2X1.41X13)	
37.		DISCON	PAD, ST CUSH	14094551
	9-N22	14.880	TRIM, ST CUSH (SEE PARTS SECTION FOR ADDITIONAL COLORS & TRIM COMBINATIONS)	
38.		8.965	CONDUIT, ELEC (1/2")	
39.	9-C17	11.378	BLADDER, LUMBAR SUP	14079496
40.		DISCON	PAD, BACKREST CUSH	14079495
	9-N13	14.800	TRIM, BACKREST BOLSTER (SEE PARTS SECTION FOR ADDITIONAL COLORS & TRIM COMBINATIONS)	
	9-N13	14.800	TRIM, BACKREST CTR INS (SEE PARTS SECTION FOR ADDITIONAL COLORS & TRIM COMBINATIONS)	
41.		DISCON	WIRE, BACKREST PAD RET	14079479
42.		8.921	NUT, STMP W/SLR (M5X0.8)	
43.	9-C19	11.390	CABLE, ST BK	12515850
44.		DISCON	HARNESS, I/P WRG TO ST EXT	12028999
45.		8.965	STRAP, PLSTC 7" ADJ	
46.	9-C18	11.379	NUT, ST BOLSTER ADJ-RH	14094550
47.	9-C18	11.379	BOLT, PSEAT BK BOLS ADJR	14094548
48.	9-C18	11.379	BUSHING, ST BOLSTER INR (LRG)	14094546
49.		DISCON	BEARING KIT, ST BOLSTER	14094539
50.	9-C18	11.379	BOLT, D/SEAT BK BOLS ADJR	14094547
51.	9-C18	11.379	NUT, ST BOLSTER ADJ-LH	14094549

© 2000 GENERAL MOTORS SERVICE PARTS OPERATIONS-CHEVROLET-14Y

				1Y11-003
52.	9-C18	11.379	**BUSHING**, ST BOLSTER OTR (SML)	14094542
53.	9-C23	11.558	**KNOB**, PWR ST ADJ SW (CPS)	14057581
		DISCON	**RETAINER**, PWR ST ADJ SW (1986-88)	1376906
54.		N.S.	**DIAPHRAGM**, D/P SEAT BK LUMBAR (PART OF ITEM #27)	

RPO DEFINITIONS
AQ9 - SEAT,FRONT BUCKET,DRIVER,PASSENGER,RECLINING

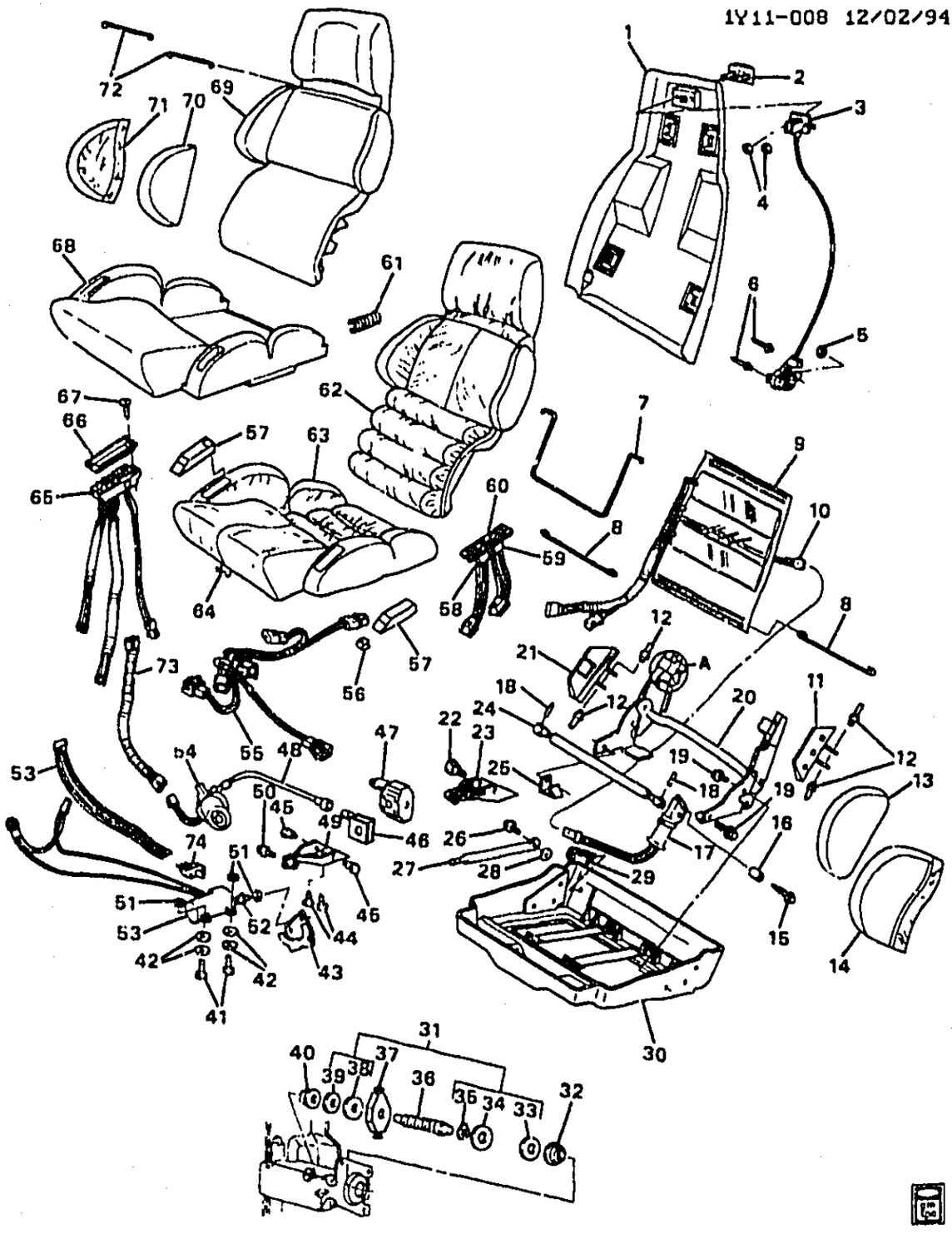

1989-1990 Y SEAT ASM & HARDWARE/FRONT RECLINER BUCKET(AQ9)

1.	9-C12	11.373	FRAME, BK	10135998
2.	9-C19	11.390	BEZEL, D/SEAT BK CUSH LAT REL HDL	14049158
	9-C19	11.390	BEZEL, P/SEAT BK CUSH LAT REL HDL	14049158
3.	9-C19	11.390	CABLE, BK	12515850
4.		8.921	NUT, MET SKW (M5X15) FLG PHOS	11501047
5.		N.S.	NUT, BK REL	
6.		N.S.	RIVET, DOME HD BLIND (187X.555)	

© 2000 GENERAL MOTORS SERVICE PARTS OPERATIONS-CHEVROLET-14Y

				1Y11-008
7.		DISCON	WIRE, D/SEAT BK CUSH PAD	10148094
		DISCON	WIRE, P/SEAT BK CUSH PAD	10148084
8.		DISCON	WIRE, LUMBAR BLADDER RET (1989)	10148095
		N.S.	WIRE, LUMBAR BLADDER RET (1990)	
9.	9-C17	11.378	BLADDER, LUMBAR SUPT	14079496
10.		DISCON	HARNESS, JPR	14079481
11.		DISCON	COVER, WELDMENT ADJ BOLSTER-LH	10148076
12.		N.S.	RIVET, 3/16 BRIV	
13.		DISCON	PAD, D/SEAT BK SI BOLS	10148080
14.		DISCON	TRIM, BK BOLSTER-LH (1989) (192) (BLACK) (SEE PARTS SECTION FOR ADDITIONAL COLORS & TRIM COMBINATIONS)	10140659
		DISCON	COVER, BK BOLSTER-LH (1990) (193) (BLACK) (SEE PARTS SECTION FOR ADDITIONAL COLORS & TRIM COMBINATIONS)	10174828
15.		DISCON	BOLT, ST BOLSTO MTR	10148082
16.	9-C18	11.379	SPACER, BOLSTER MTR	14079497
17.	9-C18	11.379	MOTOR, BOLSTER	14079423
18.		N.S.	PIN, FLEX DR CBL	
19.		8.900	BOLT, HEX LARGE FLANGED M6X1X10 PC (HGE TO FRM) (AR)	11508567
20.		DISCON	HINGE, FRM (1989)	10174812
		DISCON	HINGE, FRM (1990)	10174812
21.		DISCON	COVER, WELDMENT ADJ BOLSTER-RH	10148077
22.		DISCON	BOLT, ST RECL VERT ACTR ATCH	14081109
23.		DISCON	BRACKET, BACKREST GEARNUT	14079482
24.	9-C18	11.379	CABLE, BOLSTER DR	14079498
25.		DISCON	RETAINER, D/SEAT LUMBAR SUPT BLADDER (TUBE RET)	14079474
		DISCON	RETAINER, P/SEAT LUMBAR SUPT BLADDER (TUBE RET)	14079474
26.		DISCON	BOLT, SHLDR RECL	14049281
27.		DISCON	LEADSCREW, BACKREST	14079484
28.		DISCON	SPACER, BACKREST SCR	14079500
29.		DISCON	RETAINER, ST LUMBAR BLADDER TUBE CONDUIT-TO FRM	10148068
30.		DISCON	FRAME, CUSH BTM	10148049
31.		DISCON	BEARING KIT, BOLSTER	14094539
32.	9-C18	11.379	BUSHING, BOLSTER OTR	14094542
33.		N.S.	WASHER, INR THRUST	
34.		N.S.	BEARING, THRUST	
35.		N.S.	RING, RET	
36.	9-C18	11.379	BOLT, D/SEAT BK BOLS ADJR	14094548
	9-C18	11.379	BOLT, P/SEAT BK BOLS ADJR	14094547
37.	9-C18	11.379	NUT, BOLSTER ADJ-RH	14094550
	9-C18	11.379	NUT, BOLSTER ADJ-LH	14094549
38.		N.S.	WASHER, OTR THRUST	
39.		N.S.	WASHER, WAVE	
40.	9-C18	11.379	BUSHING, BOLSTER INR	14094546
41.		N.S.	SCREW, LUMBAR PUMP MT	
42.		DISCON	WASHER, MTR INSL (RUB)	14079487
43.		DISCON	BRACKET, MTR	14079483
44.		DISCON	BOLT, D/SEAT RECL ACTR BRKTBUTTON HEAD	14079491
45.		DISCON	BOLT, SHLDR RECL GEARNUT	10148063
46.		DISCON	RECLINER, GEARNUT	10148050
47.	9-C15	11.377	GEAR, D/SEAT BK RECL ACTR DRV	20454999
	9-C15	11.377	GEAR, P/SEAT BK RECL ACTR DRV	20454999
48.		DISCON	CABLE, BACKREST DR	14079485
49.		DISCON	SUPPORT, BRKT GEARNUT	10148062
50.		DISCON	BOLT, SHLDR RECL	14049281
51.		N.S.	NUT, LUMBAR PUMP MT	
52.		DISCON	BOLT, D/SEAT RECL ACTR BRKT (TO FRM	10148065
		DISCON	BOLT, P/SEAT RECL ACTR BRKT (TO FRM	10148065

© 2000 GENERAL MOTORS SERVICE PARTS OPERATIONS-CHEVROLET-14Y

				1Y11-008
53.	9-C17	11.378	PUMP, ST INFL (INCLS ITEM #74)	14079486
54.	9-C23	11.556	MOTOR, BK RECL ACTR SUPT (AC-DELCO #22009386)	22009386
55.		DISCON	HARNESS, CUSH WRG	14079490
56.		N.S.	NUT, SW SUPT BRKT	
57.	9-C17	11.378	BRACKET, F/SEAT LUMBAR CONT POD MT	10148088
58.	9-C23	11.558	SWITCH, BACKREST CONT	14079477
59.	9-C18	11.379	SWITCH, BOLSTER CONT (1989)	14079478
	9-C18	11.379	SWITCH, ST BOLS CONT (GRAY) (1990)	10174810
60.	9-C23	11.558	ESCUTCHEON, ST RECL SW (BOLS)	10148090
61.	9-N13	14.800	RING, HOG	4876466
62.		DISCON	TRIM, BACKREST INS (1989) (192) (BLACK) (SEE PARTS SECTION FOR ADDITIONAL COLORS & TRIM COMBINATIONS)	10140650
		DISCON	COVER, F/ST BACK (1990) (193) (BLACK) (SEE PARTS SECTION FOR ADDITIONAL COLORS & TRIM COMBINATIONS)	10174818
63.		DISCON	COVER, CUSH (1989) (192) (BLACK) (SEE PARTS SECTION FOR ADDITIONAL COLORS & TRIM COMBINATIONS)	10140654
		DISCON	COVER, F/SEAT CUSH (BLACK) (1990) (SEE PARTS SECTION FOR ADDITIONAL COLORS & TRIM COMBINATIONS)	10174813
64.		DISCON	WIRE, D/P SEAT CUSH	10153686
65.	9-C17	11.378	POD, LUMBAR CONT (1989)	14079480
	9-C17	11.378	CONTROL, F/ST LUMBAR (1990)	10174811
66.	9-C17	11.378	BEZEL, D/SEAT LUMBAR SUPT SW	10148091
	9-C17	11.378	BEZEL, P/SEAT LUMBAR SUPT SW	10148091
67.		8.977	SCREW, OV HO C/S TORX (M4.2X1.41X20) SS BL OX	11504659
68.		DISCON	CUSHION, D/SEAT BK (FOAM & WIRE)	10148086
		DISCON	CUSHION, P/SEAT BK (FOAM & WIRE)	10148086
69.		DISCON	BACKREST, D/SEAT FOAM & WIRE	10148093
		DISCON	BACKREST, P/SEAT FOAM & WIRE	10148093
70.		DISCON	PAD, DSEAT BK SI BOLS	10148081
71.		DISCON	TRIM, BK BOLSTER-RH (1989) (192) (BLACK) (SEE PARTS SECTION FOR ADDITIONAL COLORS & TRIM COMBINATIONS)	10140658
		DISCON	COVER, BK BOLSTER-RH (1990) (193) (BLACK) (SEE PARTS SECTION FOR ADDITIONAL COLORS & TRIM COMBINATIONS)	10174823
72.	9-C12	11.373	WIRE, D/ST BK CUSH PAD (AT H/RST)	10268825
73.	9-C23	11.558	SWITCH, SEAT RECL	10174809
74.		N.S.	DIAPHRAGM, D/P SEAT BK LUMBAR (PART OF ITEM #53)	

RPO DEFINITIONS
AQ9 – SEAT,FRONT BUCKET,DRIVER,PASSENGER,RECLINING

© 2000 GENERAL MOTORS SERVICE PARTS OPERATIONS-CHEVROLET-14Y

1Y11-010
073092

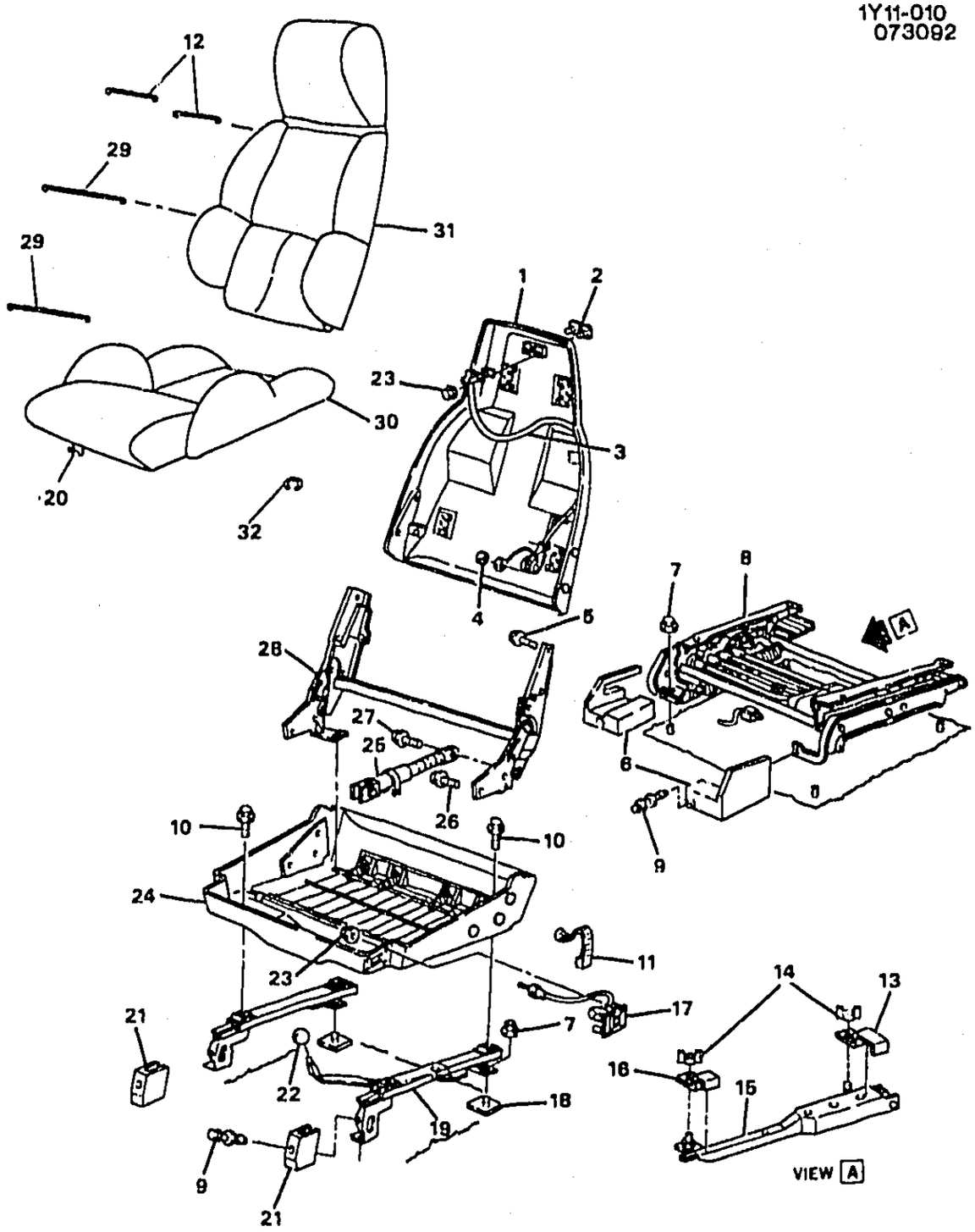

1Y11-010

1989-1991 Y SEAT ASM & HARDWARE/FRONT (AR9)

1.		DISCON	FRAME, D/SEAT BK CUSH (BLUE)	91	Y (AQ9, AR9, 22I, 223) .	1	10135996
		DISCON	FRAME, D/SEAT BK CUSH (RED)	91	Y (AQ9, AR9, 73I, 733) .	1	10135997
	9-C12	11.373	FRAME, D/SEAT BK CUSH (BLACK/PAINT TO MATCH)	91	Y (AQ9, 193)	1	10135998

© 2000 GENERAL MOTORS SERVICE PARTS OPERATIONS-CHEVROLET-14Y

							1Y11-010
	9-C12	11.373	FRAME, D/SEAT BK CUSH (BLACK/PAINT TO MATCH)	91	Y (AR9, 19C, 193)	1	10135998
		DISCON	FRAME, D/SEAT BK CUSH (COGNAC)	91	Y (AQ9, AR9, 60I, 603) .	1	10135999
		DISCON	FRAME, D/SEAT BK CUSH (GRAY)	91	Y (AQ9, AR9, 90I, 903) .	1	10136000
	9-C12	11.373	FRAME, D/SEAT BK CUSH (BLACK)	89-90	Y (AQ9, AR9, 19I)	1	10135998
		DISCON	FRAME, D/SEAT BK CUSH (BLUE)	90	Y (AR9, 22I)	1	10135996
		DISCON	FRAME, D/SEAT BK CUSH (COGNAC)	90	Y (AR9, 60I)	1	10135999
		DISCON	FRAME, D/SEAT BK CUSH (GRAY)	90	Y (AR9, 90I)	1	10136000
		DISCON	FRAME, D/SEAT BK CUSH (RED)	90	Y (AR9, 78I)	1	10135997
		DISCON	FRAME, P/SEAT BK CUSH (BLUE)	91	Y (AQ9, AR9, 22I, 223) .	1	10135996
		DISCON	FRAME, P/SEAT BK CUSH (RED)	91	Y (AQ9, AR9, 73I, 733) .	1	10135997
	9-C12	11.373	FRAME, P/SEAT BK CUSH (BLACK/PAINT TO MATCH)	91	Y (AQ9, 193)	1	10135998
	9-C12	11.373	FRAME, P/SEAT BK CUSH (BLACK/PAINT TO MATCH)	91	Y (AR9, 19C, 193)	1	10135998
		DISCON	FRAME, P/SEAT BK CUSH (COGNAC)	91	Y (AQ9, AR9, 60I, 603) .	1	10135999
		DISCON	FRAME, P/SEAT BK CUSH (GRAY)	91	Y (AQ9, AR9, 90I, 903) .	1	10136000
	9-C12	11.373	FRAME, P/SEAT BK CUSH (BLACK)	89-90	Y (AQ9, AR9, 19I)	1	10135998
		DISCON	FRAME, P/SEAT BK CUSH (BLUE)	90	Y (AR9, 22I)	1	10135996
		DISCON	FRAME, P/SEAT BK CUSH (COGNAC)	90	Y (AR9, 60I)	1	10135999
		DISCON	FRAME, P/SEAT BK CUSH (GRAY)	90	Y (AR9, 90I)	1	10136000
		DISCON	FRAME, P/SEAT BK CUSH (RED)	90	Y (AR9, 73I)	1	10135997
2.	9-C19	11.390	BEZEL, D/SEAT BK CUSH LAT REL HDL	89-91	Y (AQ9, AR9)	1	14049158
	9-C19	11.390	BEZEL, P/SEAT BK CUSH LAT REL HDL	89-91	Y (AQ9, AR9)	1	14049158
3.	9-C19	11.390	CABLE, D/SEAT BK CUSH LAT REL	89-91	Y (AQ9, AR9)	1	12515850
	9-C19	11.390	CABLE, P/SEAT BK CUSH LAT REL	89-91	Y (AQ9, AR9)	1	12515850
4.		N.S.	NUT, BK LK CBL (PUSH-ON) ...		.....		
5.		8.900	BOLT, HEX LARGE FLANGED M6X1X10 PC (D/SEAT BK CUSH HGE)	89-91	.....	12	11508567
		8.900	BOLT, HEX LARGE FLANGED M6X1X10 PC (P/SEAT BK CUSH HGE)	89-91	.....	12	11508567
6.	9-C25	11.573	COVER, D/SEAT OTR ADJR FRT FIN (5.3X3.4IN) (L-SHAPED) (135.5X86.5MM)	89-91	Y	1	10054460
	9-C25	11.573	COVER, D/SEAT INR ADJR FRT FIN	89-91	Y (AC3)	1	14049296
	9-C25	11.573	COVER, P/SEAT OTR ADJR FRT FIN (5.3X3.4IN) (L-SHAPED) (135.5X86.5MM)	89-91	Y	1	10054460

							1Y11-010
	9-C25	11.573	COVER, P/SEAT INR ADJR FRT FIN	89-91	Y (AC1, AC3)	1	14049296
7.		8.917	NUT, M8X1.25X7.1, ZC 10	89-91		AR	11515748
8.	9-C24	11.561	ADJUSTER, D/SEAT (SEE GROUP 11.000 "ADJUSTER ASM/SEAT/ELECTRIC" FOR DETAIL ILLUSTRATED VIEW.) (LESS MTR)	89-91	Y (AC3)	1	10137221
	9-C24	11.561	ADJUSTER, P/SEAT (SEE GROUP 11.000 "ADJUSTER ASM/SEAT/ELECTRIC" FOR DETAIL ILLUSTRATED VIEW.) (LESS MTR)	89-91	Y (AC1)	1	10137222
9.	9-C25	11.573	RETAINER, D/SEAT INR ADJR FRT FIN CVR (PUSH IN) (BLACK) (PUSH-IN) (1.276)	89-91	Y	AR	20664092
	9-C25	11.573	RETAINER, D/SEAT OTR ADJR FRT FIN CVR (PUSH IN) (BLACK) (PUSH-IN) (1.276)	89-91	Y	AR	20664092
	9-C25	11.573	RETAINER, P/SEAT INR ADJR FRT FIN CVR (PUSH IN) (BLACK) (PUSH-IN) (1.276)	89-91	Y	AR	20664092
	9-C25	11.573	RETAINER, P/SEAT OTR ADJR FRT FIN CVR (PUSH IN) (BLACK) (PUSH-IN) (1.276)	89-91	Y	AR	20664092
10.		8.900	BOLT, HFH M8X1.25X21MM, 17 OD, 10.9	89-91		AR	12551177
11.		8.965	STRAP-TIE-7"ADJ (W/ROSEBUD FOR .25 DIA HOLE .031-.14 TH)	89-91		AR	3816659
12.	9-C12	11.373	WIRE, D/SEAT BK CUSH PAD (AT H/RST, 193 MM LGTH W/LOOP ON 1 END)	89-91	Y (AR9)	4	10268825
13.	9-M11	8.820	RETAINER, JK/WHL WRENCH HDL INR	89-91	Y	1	10077281
14.	9-M2	3.403	NUT, WING M8X1.25 POR	89-91		AR	14001846
15.	9-M12	8.821	HANDLE, JK/WHL WRENCH (INCLUDES WRENCH FOR 84-90) (8.820)	89-91	Y	1	14050029
16.	9-M11	8.820	RETAINER, JK/WHL WRENCH HDL OTR	89-91	Y	1	10077282
17.	9-C15	11.377	HANDLE, D/SEAT RECL	89-91	Y (AR9)	1	10137719
	9-C15	11.377	HANDLE, D/SEAT RECL	91	Y (AQ9)	1	10137719
	9-C15	11.377	HANDLE, P/SEAT RECL	89-91	Y (AR9)	1	10137720
	9-C15	11.377	HANDLE, P/SEAT RECL	91	Y (AQ9)	1	10137720
18.	9-C24	11.561	PLATE, D/SEAT RR ANC	89-91	Y	4	14046692
	9-C24	11.561	PLATE, P/SEAT RR ANC	89-91	Y	4	14046692
19.	9-C24	11.561	ADJUSTER, D/SEAT INR	89-91	Y (EXC AC3)	RH	14064592
	9-C24	11.561	ADJUSTER, D/SEAT OTR	89-91	Y (EXC AC3)	LH	14064591
	9-C24	11.561	ADJUSTER, P/SEAT OTR	89-91	Y (EXC AC1)	RH	14064592
	9-C24	11.561	ADJUSTER, P/SEAT INR	89-91	Y (EXC AC1)	LH	14064591
20.		DISCON	WIRE, D/SEAT CUSH PAD	89-91	Y (AQ9)	1	10153686
		DISCON	WIRE, D/SEAT CUSH PAD	89-91	Y (AR9)	1	10153686
	9-C21	11.419	WIRE, D/SEAT CUSH PAD (FRT)	91	Y (AR9)	2	10268824
		DISCON	WIRE, D/SEAT CUSH PAD (FRT)	91	Y (AQ9, AR9)	1	12510484
		DISCON	WIRE, D/SEAT CUSH PAD (RR)	91	Y (AQ9, AR9)	1	12510485
		DISCON	WIRE, P/SEAT CUSH PAD	89-91	Y (AQ9)	1	10153686
		DISCON	WIRE, P/SEAT CUSH PAD	89-91	Y (AR9)	1	10153686

© 2000 GENERAL MOTORS SERVICE PARTS OPERATIONS-CHEVROLET-147

							1Y11-010
	9-C21	11.419	WIRE, P/SEAT CUSH PAD (FRT) .	91	Y (AR9)	2	10268824
21.	9-C25	11.573	COVER, D/SEAT INR ADJR FRT FIN (74.5X60MM) (2.9X2.4IN) (SQUARE SHAPED)	89-91	Y (EXC AC1, AC3)	4	14064590
	9-C25	11.573	COVER, D/SEAT OTR ADJR FRT FIN (5.3X3.4IN) (L-SHAPED) (135.5X86.5MM)	89-91	Y	1	10054460
	9-C25	11.573	COVER, D/SEAT OTR ADJR FRT FIN (74.5X60MM) (2.9X2.4IN) (SQUARE SHAPED)	89-91	Y (EXC AC1, AC3)	4	14064590
	9-C25	11.573	COVER, P/SEAT INR ADJR FRT FIN (74.5X60MM) (2.9X2.4IN) (SQUARE SHAPED)	89-91	Y (EXC AC1, AC3)	4	14064590
	9-C25	11.573	COVER, P/SEAT OTR ADJR FRT FIN (5.3X3.4IN) (L-SHAPED) (135.5X86.5MM)	89-91	Y	1	10054460
22.	9-C27	11.588	KNOB, D/SEAT ADJR HDL (BLACK)	89-91	Y (EXC AC3)	1	14069603
	9-C27	11.588	KNOB, P/SEAT ADJR HDL (BLACK)	89-91	Y (EXC AC1)	1	14069603
23.		8.921	NUT, MET SKW FLG PHOS	89-91	.....	AR	11501047
24.		DISCON	FRAME, D/SEAT CUSH	89-91	Y (AR9)	1	12515849
		DISCON	FRAME, P/SEAT CUSH	89-91	Y (AR9)	1	12515848
25.	9-C15	11.377	RECLINER, D/SEAT	89-90	Y (AQ9)	1	10148050
	9-C15	11.377	RECLINER, D/SEAT (11.561)	91	Y (AQ9)	1	14088485
	9-C15	11.377	RECLINER, P/SEAT	89-90	Y (AQ9)	1	10148050
	9-C15	11.377	RECLINER, P/SEAT (11.561)	91	Y (AQ9)	1	14088485
26.	9-C15	11.377	BOLT, D/SEAT RECL ACTR (M8X1.25X42 16.3 O.D.) (FRT) (11.390)	89-91	Y	1	14089632
	9-C15	11.377	BOLT, P/SEAT RECL (M8X1.25X42 16.3 O.D.) (FRT) (11.390)	89-91	Y	1	14089632
27.	9-C15	11.377	BOLT, D/SEAT RECL ACTR (M8X1.25X21 16.3 O.D.) (RR) (11.390)	89-91	Y	1	14089631
	9-C15	11.377	BOLT, P/SEAT RECL (M8X1.25X21 16.3 O.D.) (RR) (11.390)	89-91	Y	1	14089631
28.		DISCON	HINGE, D/SEAT BK CUSH (11.375)	89-91	Y (AR9)	1	10153621
		DISCON	HINGE, P/SEAT BK CUSH (11.375)	89-91	Y (AR9)	1	10153621
29.		DISCON	WIRE, D/SEAT CUSH PAD	89-91	Y (AQ9)	1	10153686
		DISCON	WIRE, D/SEAT CUSH PAD	89-91	Y (AR9)	1	10153686
	9-C21	11.419	WIRE, D/SEAT CUSH PAD (FRT) .	91	Y (AR9)	2	10268824
		DISCON	WIRE, D/SEAT CUSH PAD (FRT) .	91	Y (AQ9, AR9)	1	12510484
		DISCON	WIRE, D/SEAT CUSH PAD (RR) ..	91	Y (AQ9, AR9)	1	12510485
		DISCON	WIRE, P/SEAT CUSH PAD	89-91	Y (AQ9)	1	10153686
		DISCON	WIRE, P/SEAT CUSH PAD	89-91	Y (AR9)	1	10153686
	9-C21	11.419	WIRE, P/SEAT CUSH PAD (FRT) .	91	Y (AR9)	2	10268824
30.		DISCON	COVER, D/SEAT CUSH (BLACK) .	89	Y (AR9, 192)	LH	10125937
		DISCON	COVER, D/SEAT CUSH (BLACK) .	90	Y (AR9, 193)	LH	10137703
		DISCON	COVER, D/SEAT CUSH (BLUE) ..	89	Y (AR9, 212)	LH	10125935
		DISCON	COVER, D/SEAT CUSH (BLUE) ..	90	Y (AR9, 223)	LH	10137701
		DISCON	COVER, D/SEAT CUSH (COGNAC)	89	Y (AR9, 602)	LH	10125938

							1Y11-010
		DISCON	COVER, D/SEAT CUSH (COGNAC)	90	Y (AR9, 603)	LH	10137704
		DISCON	COVER, D/SEAT CUSH (GRAY)	89	Y (AR9, 902)	LH	10125939
		DISCON	COVER, D/SEAT CUSH (GRAY)	90	Y (AR9, 903)	LH	10137705
		DISCON	COVER, D/SEAT CUSH (RED)	89	Y (AR9, 732)	LH	10125936
		DISCON	COVER, D/SEAT CUSH (RED)	90	Y (AR9, 733)	LH	10137702
	9-N22	14.880	COVER, D/SEAT CUSH (W/CUSH) (BLACK)	91	Y (AR9, 193)	LH	12517319
		DISCON	COVER, D/SEAT CUSH (W/CUSH) (BLACK)	91	Y (AR9, 19C)	LH	12517320
		DISCON	COVER, D/SEAT CUSH (W/CUSH) (COGNAC)	91	Y (AR9, 603)	LH	12517321
		DISCON	COVER, D/SEAT CUSH (W/CUSH) (COGNAC)	91	Y (AR9, 60C)	LH	12517322
		DISCON	COVER, D/SEAT CUSH (W/CUSH) (BLUE)	91	Y (AR9, 223)	LH	12517323
		DISCON	COVER, D/SEAT CUSH (W/CUSH) (GRAY)	91	Y (AR9, 903)	LH	12517324
		DISCON	COVER, D/SEAT CUSH (W/CUSH) (RED)	91	Y (AR9, 733)	LH	12517325
		DISCON	COVER, P/SEAT CUSH (BLACK)	89	Y (AR9, 192)	RH	10125937
		DISCON	COVER, P/SEAT CUSH (BLACK)	90	Y (AR9, 193)	RH	10137703
		DISCON	COVER, P/SEAT CUSH (BLUE)	89	Y (AR9, 212)	RH	10125935
		DISCON	COVER, P/SEAT CUSH (BLUE)	90	Y (AR9, 223)	RH	10137701
		DISCON	COVER, P/SEAT CUSH (COGNAC)	89	Y (AR9, 602)	RH	10125938
		DISCON	COVER, P/SEAT CUSH (COGNAC)	90	Y (AR9, 603)	RH	10137704
		DISCON	COVER, P/SEAT CUSH (GRAY)	89	Y (AR9 902)	RH	10125939
		DISCON	COVER, P/SEAT CUSH (GRAY)	90	Y (AR9, 903)	RH	10137705
		DISCON	COVER, P/SEAT CUSH (RED)	89	Y (AR9, 732)	RH	10125936
		DISCON	COVER, P/SEAT CUSH (RED)	90	Y (AR9, 733)	RH	10137702
	9-N22	14.860	COVER, P/SEAT CUSH (W/CUSH) (BLACK)	91	Y (AR9, 193)	RH	12517319
		DISCON	COVER, P/SEAT CUSH (W/CUSH) (BLACK)	91	Y (AR9, 19C)	RH	12517320
		DISCON	COVER, P/SEAT CUSH (W/CUSH) (COGNAC)	91	Y (AR9, 603)	RH	12517321
		DISCON	COVER, P/SEAT CUSH (W/CUSH) (COGNAC)	91	Y (AR9, 60C)	RH	12517322
		DISCON	COVER, P/SEAT CUSH (W/CUSH) (BLUE)	91	Y (AR9, 223)	RH	12517323
		DISCON	COVER, P/SEAT CUSH (W/CUSH) (GRAY)	91	Y (AR9, 903)	RH	12517324
		DISCON	COVER, P/SEAT CUSH (W/CUSH) (RED)	91	Y (AR9, 733)	RH	12517325
31.		DISCON	COVER, D/SEAT BK CUSH (BLACK)	89	Y (AR9, 192)	LH	10125944
		DISCON	COVER, D/SEAT BK CUSH (BLUE)	89	Y (AR9, 212)	LH	10125942
		DISCON	COVER, D/SEAT BK CUSH (COGNAC)	89	Y (AR9, 602)	LH	10125945
		DISCON	COVER, D/SEAT BK CUSH (GRAY)	89	Y (AR9 902)	LH	10125946
	9-N13	14.800	COVER, D/SEAT BK CUSH (RED)	89	Y (AR9, 732)	LH	10125943
		DISCON	COVER, D/SEAT BK CUSH (W/CUSH) (COGNAC)	89-91	Y (AR9, 60C)	LH	12517333
		DISCON	COVER, D/SEAT BK CUSH (W/CUSH) (BLACK)	90-91	Y (AR9, 19C)	LH	12517331

© 2000 GENERAL MOTORS SERVICE PARTS OPERATIONS-CHEVROLET-14Y

						1Y11-010
9-N13	14.800	COVER, D/SEAT BK CUSH (W/CUSH) (BLACK)	91	Y (AR9, 193)	LH	12517330
	DISCON	COVER, D/SEAT BK CUSH (W/CUSH) (COGNAC)	91	Y (AR9, 603)	LH	12517332
	DISCON	COVER, D/SEAT BK CUSH (W/CUSH) (BLUE)	91	Y (AR9, 223)	LH	12517334
	DISCON	COVER, D/SEAT BK CUSH (W/CUSH) (GRAY)	91	Y (AR9, 903)	LH	12517335
9-N13	14.800	COVER, D/SEAT BK CUSH (W/CUSH) (RED)	91	Y (AR9, 733)	LH	12517336
	DISCON	CUSHION, D/SEAT BK (14.896) (BLACK)	90	Y (AR9, 193)	LH	10137708
	DISCON	CUSHION, D/SEAT BK (BLUE) (14.896)	90	Y (AR9, 223)	LH	10137706
	DISCON	CUSHION, D/SEAT BK (COGNAC) (14.896)	90	Y (AR9, 603)	LH	10137709
	DISCON	CUSHION, D/SEAT BK (GRAY) (14.896)	90	Y (AR9, 903)	LH	10137710
	DISCON	CUSHION, D/SEAT BK (RED) (14.896)	90	Y (AR9, 733)	LH	10137707
	DISCON	COVER, P/SEAT BK CUSH (BLACK)	89	Y (AR9, 192)	RH	10125944
	DISCON	COVER, P/SEAT BK CUSH (BLUE)	89	Y (AR9, 212)	RH	10125942
	DISCON	COVER, P/SEAT BK CUSH (COGNAC)	89	Y (AR9, 602)	RH	10125945
	DISCON	COVER, P/SEAT BK CUSH (GRAY)	89	Y (AR9 902)	RH	10125946
9-N13	14.800	COVER, P/SEAT BK CUSH (RED)	89	Y (AR9, 732)	RH	10125943
	DISCON	COVER, P/SEAT BK CUSH (W/CUSH) (BLACK)	90-91	Y (AR9, 19C)	RH	12517331
9-N13	14.800	COVER, P/SEAT BK CUSH (W/CUSH) (BLACK)	91	Y (AR9, 193)	RH	12517330
	DISCON	COVER, P/SEAT BK CUSH (W/CUSH) (COGNAC)	91	Y (AR9, 603)	RH	12517332
	DISCON	COVER, P/SEAT BK CUSH (W/CUSH) (COGNAC)	89-91	Y (AR9, 60C)	RH	12517333
	DISCON	COVER, P/SEAT BK CUSH (W/CUSH) (BLUE)	91	Y (AR9, 223)	RH	12517334
	DISCON	COVER, P/SEAT BK CUSH (W/CUSH) (GRAY)	91	Y (AR9, 903)	RH	12517335
9-N13	14.800	COVER, P/SEAT BK CUSH (W/CUSH) (RED)	91	Y (AR9, 733)	RH	12517336
	DISCON	CUSHION, P/SEAT BK (14.896) (BLACK)	90	Y (AR9, 193)	RH	10137708
	DISCON	CUSHION, P/SEAT BK (BLUE) (14.896)	90	Y (AR9, 223)	RH	10137706
	DISCON	CUSHION, P/SEAT BK (COGNAC) (14.896)	90	Y (AR9, 603)	RH	10137709
	DISCON	CUSHION, P/SEAT BK (GRAY) (14.896)	90	Y (AR9, 903)	RH	10137710
	DISCON	CUSHION, P/SEAT BK (RED) (14.896)	90	Y (AR9, 733)	RH	10137707
	N.S.	CUSHION, P/SEAT BK (NO LONGER AVAILABLE)	91	.....		
	N.S.	CUSHION, D/SEAT BK (NO LONGER AVAILABLE)	91	.....		
32.	8.934	RING, HOG	89-91	.....	AR	4876466

© 2000 GENERAL MOTORS SERVICE PARTS OPERATIONS-CHEVROLET-14Y

RPO DEFINITIONS

AC1 – ADJUSTER,SEAT,6-WAY POWER,BUCKET,PASSENGER
AC3 – ADJUSTER,SEAT,6-WAY POWER,BUCKET,DRIVER
AQ9 – SEAT,FRONT BUCKET,DRIVER,PASSENGER,RECLINING
AR9 – SEAT,FRONT BUCKET,DRIVER,PASSENGER,MANUAL RECLINING(EUROPEAN STYLE)
19C – TRIM COMBINATION,CLOTH,BLACK
19I – INTERIOR TRIM,BLACK
192 – TRIM COMBINATION,BLACK LEATHER
193 – TRIM COMBINATION,BLACK LEATHER
212 – TRIM COMBINATION LEATHER, MED BLUE(212)
22I – INTERIOR TRIM,DARK ROYAL BLUE
223 – TRIM COMBINATION,LEATHER,STEEL BLUE
60C – TRIM COMBINATION CLOTH, DK COGNAC
60I – INTERIOR TRIM,DARK COGNAC
602 – TRIM COMBINATION,LEATHER,DARK COGNAC
603 – TRIM COMBINATION– LEATHER,COGNAC
73I – INTERIOR TRIM,FLAME RED
732 – TRIM COMBINATION–FLAME RED
733 – TRIM COMBINATION– LEATHER,FLAME RED
78I – INTERIOR TRIM,GARNET RED
90I – INTERIOR TRIM,SMOKE GRAY
902 – TRIM COMBINATION,LEATHER,SMOKE GRAY
903 – TRIM COMBINATION,LEATHER,SMOKE GRAY

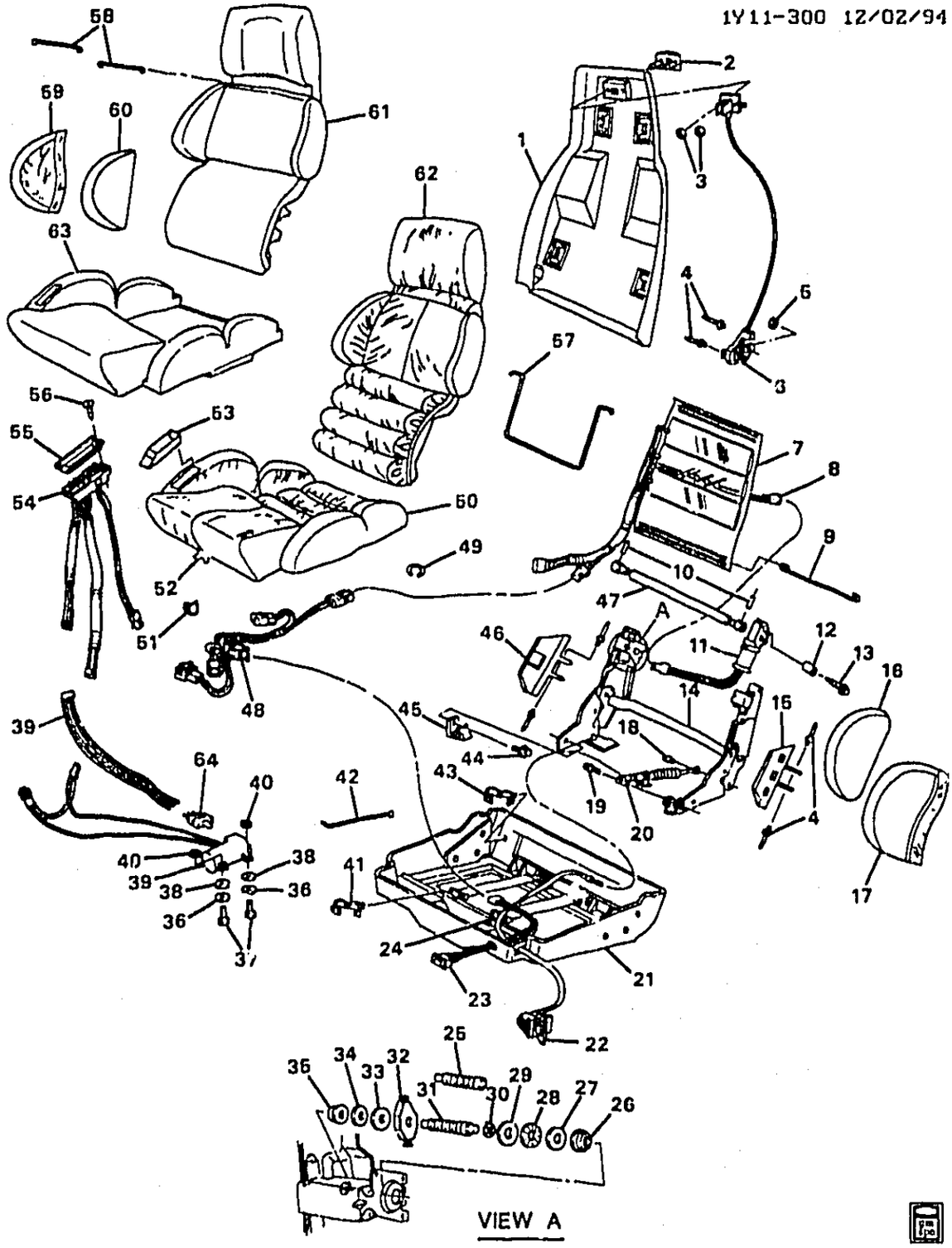

1Y11-300

1991 Y SEAT ASM & HARDWARE/FRONT (AQ9)

1.		DISCON	FRAME, D/SEAT BK CUSH (BLUE)	91 Y (AQ9, AR9, 22I, 223) .	1	10135996
		DISCON	FRAME, D/SEAT BK CUSH (RED)	91 Y (AQ9, AR9, 73I, 733) .	1	10135997
	9-C12	11.373	FRAME, D/SEAT BK CUSH (BLACK/PAINT TO MATCH)	91 Y (AQ9, 193)	1	10135998

© 2000 GENERAL MOTORS SERVICE PARTS OPERATIONS-CHEVROLET-14Y

							1Y11-300
		DISCON	FRAME, D/SEAT BK CUSH (COGNAC)	91	Y (AQ9, AR9, 60I, 603)	1	10135999
		DISCON	FRAME, D/SEAT BK CUSH (GRAY)	91	Y (AQ9, AR9, 90I, 903)	1	10136000
		DISCON	FRAME, P/SEAT BK CUSH (BLUE)	91	Y (AQ9, AR9, 22I, 223)	1	10135996
		DISCON	FRAME, P/SEAT BK CUSH (RED)	91	Y (AQ9, AR9, 73I, 733)	1	10135997
	9-C12	11.373	FRAME, P/SEAT BK CUSH (BLACK/PAINT TO MATCH)	91	Y (AQ9, 193)	1	10135998
		DISCON	FRAME, P/SEAT BK CUSH (COGNAC)	91	Y (AQ9, AR9, 60I, 603)	1	10135999
		DISCON	FRAME, P/SEAT BK CUSH (GRAY)	91	Y (AQ9, AR9, 90I, 903)	1	10136000
2.	9-C19	11.390	BEZEL, D/SEAT BK CUSH LAT REL HDL	91	Y (AQ9, AR9)	1	14049158
	9-C19	11.390	BEZEL, P/SEAT BK CUSH LAT REL HDL	91	Y (AQ9, AR9)	1	14049158
3.		6.921	NUT, MET SKW FLG PHOS	91		AR	11501047
4.		N.S.	RIVET				
5.		N.S.	NUT, F/SEAT BK CUSH LAT			1	9432507
6.	9-C19	11.390	CABLE, D/SEAT BK CUSH LAT REL	91	Y (AQ9, AR9)	1	12515850
	9-C19	11.390	CABLE, P/SEAT BK CUSH LAT REL	91	Y (AQ9, AR9)	1	12515850
7.	9-C17	11.378	BLADDER, D/SEAT LUMBAR SUPT	91	Y (AQ9)	2	14079496
	9-C17	11.378	BLADDER, P/SEAT LUMBAR SUPT	91	Y (AQ9)	2	14079496
8.		DISCON	HARNESS, D/SEAT ADJR WRG	91	Y (AQ9)	1	12506477
		DISCON	HARNESS, D/SEAT ADJR WRG	91	Y (AQ9)	2	14079481
		DISCON	HARNESS, P/SEAT ADJR & RECL WRG	91	Y (AQ9)	2	14079481
9.		N.S.	WIRE, D/SEAT CUSH PAD				
		N.S.	WIRE, P/SEAT CUSH PAD				
10.		N.S.	PIN, ST FLEX CRV CBL				
11.	9-C18	11.379	MOTOR, ST BOLS DRV	91	Y (AQ9)	2	14079423
12.	9-C18	11.379	SPACER, F/SEAT BOLS ADJR MOT	91	Y (AQ9)	AR	14079497
13.		DISCON	BOLT, F/SEAT BOLS	91	Y (AQ9) (TO MTR)	AR	10148082
14.		DISCON	HINGE, D/SEAT BK CUSH (11.375)	91	Y (AQ9)	1	10174812
		DISCON	HINGE, P/SEAT BK CUSH (11.375)	91	Y (AQ9)	1	10174812
15.	9-C25	11.573	COVER, D/SEAT WELDMENT ADJ BOLS	91	Y (AQ9)	LH	12508088
	9-C25	11.573	COVER, P/SEAT WELDMENT ADJ BOLS	91	Y (AQ9)	LH	12508088
16.		DISCON	PAD, D/SEAT BK CUSH SI BOLS	91	Y (AQ9)	LH	12508090
		DISCON	PAD, P/SEAT BK CUSH SI BOLS (14.802)	91	Y (AQ9)	LH	12508090
17.		DISCON	TRIM, F/SEAT BOLS CUSH (BLACK)	91	Y (AQ9, 193)	LH	12506467
		DISCON	TRIM, F/SEAT BOLS CUSH (BLUE)	91	Y (AQ9, 223)	LH	12506469
		DISCON	TRIM, F/SEAT BOLS CUSH (COGNAC)	91	Y (AQ9, 603)	LH	12506471
	9-N22	14.880	TRIM, F/SEAT BOLS CUSH (GRAY)	91	Y (AQ9, 903)	LH	12506475

© 2000 GENERAL MOTORS SERVICE PARTS OPERATIONS-CHEVROLET-14Y

							1Y11-300
18.	9-C15	11.377	BOLT, D/SEAT RECL ACTR (M8X1.25X21 16.3 O.D.) (RR) (11.390)	91	Y	2	14089631
	9-C15	11.377	BOLT, P/SEAT RECL (M8X1.25X21 16.3 O.D.) (RR) (11.390)	91	Y	2	14089631
19.	9-C15	11.377	BOLT, D/SEAT RECL ACTR (M8X1.25X42 16.3 O.D.) (FRT) (11.390)	91	Y	2	14089632
	9-C15	11.377	BOLT, P/SEAT RECL (M8X1.25X42 16.3 O.D.) (FRT) (11.390)	91	Y	2	14089632
20.	9-C15	11.377	RECLINER, D/SEAT (11.561)	91	Y (AQ9)	1	14088485
	9-C15	11.377	RECLINER, P/SEAT (11.561)	91	Y (AQ9)	1	14088485
21.		DISCON	FRAME, D/SEAT CUSH (11.419)	91	Y (AQ9)	1	12510925
		DISCON	FRAME, P/SEAT CUSH (11.419)	91	Y (AQ9)	1	12510924
22.	9-C15	11.377	HANDLE, D/SEAT RECL	91	Y (AR9)	1	10137719
	9-C15	11.377	HANDLE, D/SEAT RECL	91	Y (AQ9)	1	10137719
	9-C15	11.377	HANDLE, P/SEAT RECL	91	Y (AR9)	1	10137720
	9-C15	11.377	HANDLE, P/SEAT RECL	91	Y (AQ9)	1	10137720
23.		DISCON	SWITCH, ST BOLS CONT	91	Y (AQ9)	RH	12508093
	9-C18	11.379	SWITCH, ST BOLS CONT	91	Y (AQ9)	LH	12508096
24.	9-C19	11.390	NUT, D/SEAT BK CUSH LAT REL HDL BZL (9.665)	91	Y (AQ9)	1	9415253
	9-C19	11.390	NUT, P/SEAT BK CUSH LAT REL HDL BZL (9.665)	91	Y (AQ9)	1	9415253
25.	9-C18	11.379	BOLT, D/SEAT BK BOLS ADJR	91	Y (AQ9)	LH	14094547
	9-C18	11.379	BOLT, P/SEAT BK BOLS ADJR	91	Y (AQ9)	LH	14094547
26.	9-C18	11.379	BUSHING, F/SEAT BOLS INR (SMALL)	91	Y	4	14094542
27.		DISCON	WASHER, F/SEAT OTR THR	91	Y (AQ9)	1	12506486
28.		DISCON	BEARING, F/SEAT THR	91	Y (AQ9)	1	12506487
29.		DISCON	SHIM, F/SEAT BOLS DRV (11.379)	91	Y (AQ9)	AR	12506488
30.	9-C18	11.379	RING, F/SEAT RET (ST BOLSTER)	91	Y (AQ9)	2	14094545
31.	9-C18	11.379	BOLT, D/SEAT BK BOLS ADJR	91	Y (AQ9)	RH	14094548
	9-C18	11.379	BOLT, P/SEAT BK BOLS ADJR	91	Y (AQ9)	RH	14094548
32.	9-C18	11.379	NUT, F/SEAT BOLS ADJR	91	Y (AQ9)	LH	14094549
	9-C18	11.379	NUT, F/SEAT BOLS ADJR	91	Y (AQ9)	RH	14094550
33.		DISCON	WASHER, D/SEAT ADJR	91	Y (AQ9)	AR	12506485
		DISCON	WASHER, P/SEAT ADJR	91	Y (AQ9)	AR	12506485
34.	9-C18	11.379	WASHER, SPR WAVE (ST BOLSTER)	91	Y	2	14094540
35.	9-C18	11.379	BUSHING, F/SEAT BOLS INR (LARGE)	91	Y	4	14094546
36.		N.S.	WASHER, ST BK REL ESCUT				
37.		N.S.	BOLT, ST LUMBAR PUMP MTG				
38.		DISCON	WASHER, F/SEAT LUMBAR PUMP MTG (MTR/INSULATING) (RUBBER)	91	Y (AQ9)	12	14079487
39.	9-C17	11.378	PUMP, D/SEAT & P/SEAT CUSH AIR (PASS W/MTR-LUMBAR) (INCLS ITEM #64)	91	Y (AQ9)	AR	12508087
40.		N.S.	NUT, ST LUMBAR PUMP MTG				
41.		DISCON	RETAINER, D/SEAT LUMBAR SUPT BLADDER (CONDUIT-TO FRM)	91	Y	1	10148068

© 2000 GENERAL MOTORS SERVICE PARTS OPERATIONS-CHEVROLET-14Y

							1Y11-300
		DISCON	RETAINER, P/SEAT LUMBAR SUPT BLADDER (CONDUIT-TO FRM)	91	Y	1	10148068
42.		N.S.	FASTENER, TIE STRAP				
43.		8.965	STRAP-TIE-7"ADJ (W/ROSEBUD FOR .25 DIA HOLE .031-.14 TH)	91		AR	2816659
44.		8.900	BOLT, HEX LARGE FLANGED M6X1X10 PC	91		AR	11508567
45.		DISCON	RETAINER, D/SEAT LUMBAR SUPT BLADDER (TUBE RET)	91	Y	1	14079474
		DISCON	RETAINER, P/SEAT LUMBAR SUPT BLADDER (TUBE RET)	91	Y	1	14079474
46.		DISCON	COVER, D/SEAT WELDMENT ADJ BOLS	91	Y (AQ9)	RH	12508089
		DISCON	COVER, P/SEAT WELDMENT ADJ BOLS	91	Y (AQ9)	RH	12508089
47.	9-C18	11.379	CABLE, F/SEAT BOLS DRV	91	Y (AQ9)	2	14079498
48.		DISCON	HARNESS, D/SEAT ADJR WRG	91	Y (AQ9)	1	12506477
		DISCON	HARNESS, D/SEAT ADJR WRG	91	Y (AQ9)	2	14079481
		DISCON	HARNESS, P/SEAT ADJR WRG	91	Y (AQ9)	1	12506477
49.		8.934	RING, HOG	91		AR	4876466
50.		DISCON	COVER, D/SEAT CUSH (BLACK)	91	Y (AQ9, 193)	LH	12506457
		DISCON	COVER, D/SEAT CUSH (BLUE)	91	Y (AQ9, 223)	LH	12506459
		DISCON	COVER, D/SEAT CUSH (COGNAC)	91	Y (AQ9, 603)	LH	12506461
		DISCON	COVER, D/SEAT CUSH (GRAY)	91	Y (AQ9, 903)	LH	12506465
	9-N22	14.880	COVER, P/SEAT CUSH (BLACK)	91	Y (AQ9, 193)	RH	12506456
		DISCON	COVER, P/SEAT CUSH (BLUE)	91	Y (AQ9, 223)	RH	12506458
		DISCON	COVER, P/SEAT CUSH (COGNAC)	91	Y (AQ9, 603)	RH	12506460
	9-N22	14.880	COVER, P/SEAT CUSH (RED)	91	Y (AQ9, 733)	RH	12506462
		DISCON	COVER, P/SEAT CUSH (GRAY)	91	Y (AQ9, 903)	RH	12506464
51.		N.S.	CLIP, ST CUSH FSTN				
52.		DISCON	WIRE, D/SEAT CUSH PAD	91	Y (AQ9)	1	10153686
		DISCON	WIRE, D/SEAT CUSH PAD	91	Y (AR9)	1	10153686
	9-C21	11.419	WIRE, D/SEAT CUSH PAD (FRT)	91	Y (AR9)	2	10268824
		DISCON	WIRE, D/SEAT CUSH PAD (FRT)	91	Y (AQ9, AR9)	1	12510484
		DISCON	WIRE, D/SEAT CUSH PAD (RR)	91	Y (AQ9, AR9)	1	12510485
		DISCON	WIRE, P/SEAT CUSH PAD	91	Y (AQ9)	1	10153686
		DISCON	WIRE, P/SEAT CUSH PAD	91	Y (AR9)	1	10153686
	9-C21	11.419	WIRE, P/SEAT CUSH PAD (FRT)	91	Y (AR9)	2	10268824
53.		N.S.	SWITCH, F/SEAT SUPT BRKT (PART OF ITEM #54)				
54.		DISCON	CONTROL, F/SEAT LUMBAR	91	Y (AQ9)	RH	12508092
		DISCON	CONTROL, F/SEAT LUMBAR	91	Y (AQ9)	LH	12508095
55.	9-C17	11.378	BEZEL, D/SEAT LUMBAR SUPT SW (11.377)	91	Y (AQ9)	1	10148091
	9-C17	11.378	BEZEL, P/SEAT LUMBAR SUPT SW (11.377)	91	Y (AQ9)	1	10148091
56.		8.977	SCREW, OV HO C/S TORX M4.2X1.41X20 SS BL-OX	91		AR	11504659
57.		DISCON	WIRE, D/SEAT BK CUSH PAD (14.802)	91	Y (AQ9)	LH	10148094
	9-C12	11.373	WIRE, D/SEAT BK CUSH PAD (AT H/RST, 193 MM LGTH W/LOOP ON 1 END)	91	Y (AQ9)	4	10268825

© 2000 GENERAL MOTORS SERVICE PARTS OPERATIONS-CHEVROLET-14Y

								1Y11-300
	9-C12	11.373	WIRE, D/SEAT BK CUSH PAD (AT H/RST, 193 MM LGTH W/LOOP ON 1 END)	91	Y (AR9)	4	10268825
		DISCON	WIRE, P/SEAT BK CUSH PAD (14.802)	91	Y (AQ9)	RH	10148094
58.		DISCON	WIRE, D/SEAT BK CUSH PAD (14.802)	91	Y (AQ9)	LH	10148094
	9-C12	11.373	WIRE, D/SEAT BK CUSH PAD (AT H/RST, 193 MM LGTH W/LOOP ON 1 END)	91	Y (AQ9)	4	10268825
59.	9-N22	14.880	TRIM, F/SEAT BOLS CUSH (BLACK)	91	Y (AQ9, 193)	RH	12506466
		DISCON	TRIM, F/SEAT BOLS CUSH (BLUE)	91	Y (AQ9, 223)	RH	12506468
		DISCON	TRIM, F/SEAT BOLS CUSH (COGNAC)	91	Y (AQ9, 603)	RH	12506470
		DISCON	TRIM, F/SEAT BOLS CUSH (RED)	91	Y (AQ9, 733)	RH	12506472
	9-N22	14.880	TRIM, F/SEAT BOLS CUSH (GRAY)	91	Y (AQ9, 903)	RH	12506474
60.		DISCON	PAD, D/SEAT BK CUSH SI BOLS .	91	Y (AQ9)	RH	12508091
		DISCON	PAD, P/SEAT BK CUSH SI BOLS (14.802)	91	Y (AQ9)	RH	12508091
61.		DISCON	CUSHION, F/SEAT BK (PAD) (14.896)	91	Y (AQ9)	1	12506478
62.	9-N13	14.800	COVER, D/SEAT BK CUSH (BLACK)	91	Y (AQ9, 193)	LH	12506479
		DISCON	COVER, D/SEAT BK CUSH (BLUE)	91	Y (AQ9, 223)	LH	12506480
		DISCON	COVER, D/SEAT BK CUSH (COGNAC)	91	Y (AQ9, 603)	LH	12506481
		DISCON	COVER, D/SEAT BK CUSH (GRAY)	91	Y (AQ9, 903)	LH	12506483
	9-N13	14.800	COVER, P/SEAT BK CUSH (BLACK)	91	Y (AQ9, 193)	RH	12506479
		DISCON	COVER, P/SEAT BK CUSH (BLUE)	91	Y (AQ9, 223)	RH	12506480
		DISCON	COVER, P/SEAT BK CUSH (COGNAC)	91	Y (AQ9, 603)	RH	12506481
		DISCON	COVER, P/SEAT BK CUSH (GRAY)	91	Y (AQ9, 903)	RH	12506483
63.		DISCON	CUSHION, P/SEAT (14.880)	91	Y (AQ9)	RH	12506454
		DISCON	CUSHION, D/SEAT (14.880)	91	Y (AQ9)	LH	12506455
64.		N.S.	BLADDER, D/SEAT LUMBAR SUPT (PART OF ITEM #39)		....		
		N.S.	BLADDER, P/SEAT LUMBAR SUPT (PAART OF ITEM #39)		.....		

RI D DEFINITIONS
A(.9 – SEAT,FRONT BUCKET,DRIVER,PASSENGER,RECLINING
AR9 – SEAT,FRONT BUCKET,DRIVER,PASSENGER,MANUAL RECLINING(EUROPEAN STYLE)
193 – TRIM COMBINATION,BLACK LEATHER
221 – INTERIOR TRIM,DARK ROYAL BLUE
223 – TRIM COMBINATION,LEATHER,STEEL BLUE
601 – INTERIOR TRIM,DARK COGNAC
603 – TRIM COMBINATION– LEATHER,COGNAC
731 – INTERIOR TRIM,FLAME RED
733 – TRIM COMBINATION– LEATHER,FLAME RED
901 – INTERIOR TRIM,SMOKE GRAY
903 – TRIM COMBINATION,LEATHER,SMOKE GRAY

© 2000 GENERAL MOTORS SERVICE PARTS OPERATIONS–CHEVROLET–14Y

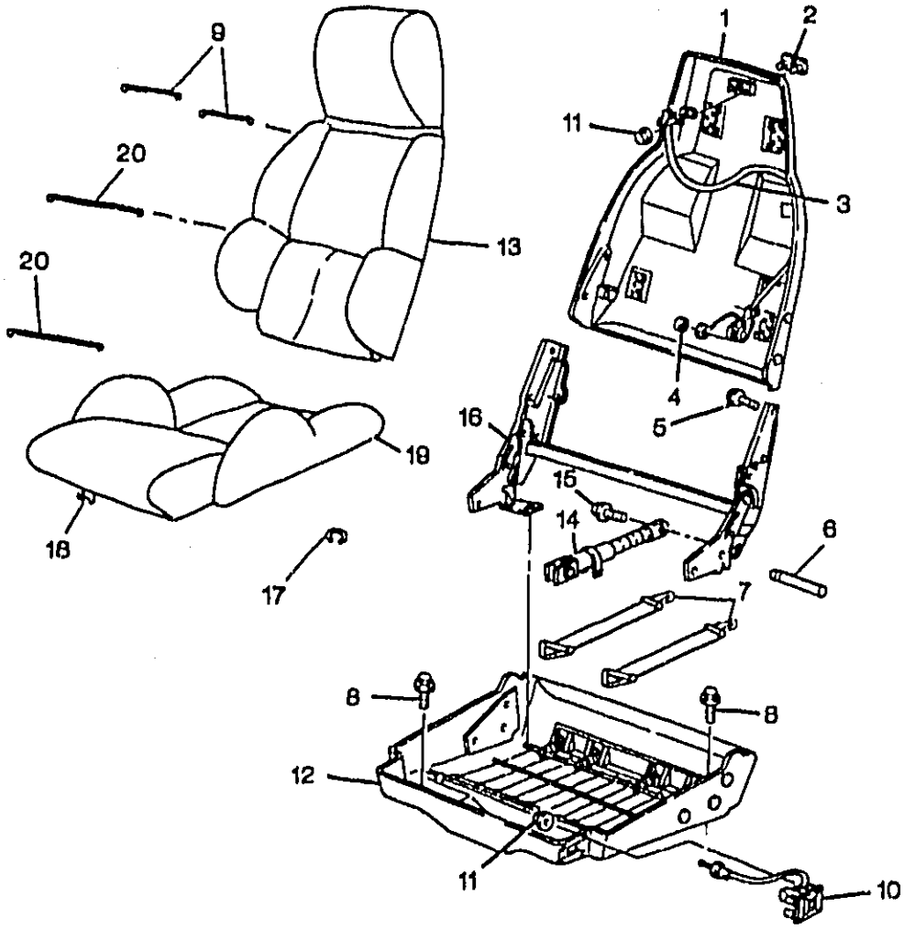

1Y11-007

1992-1993 Y SEAT ASM & HARDWARE/FRONT (AR9)

1.	9-C12	11.373	FRAME, D/SEAT BK CUSH (BLACK/PAINT TO MATCH)	92-93	Y (AQ9, 193)	1	10135998
	9-C12	11.373	FRAME, D/SEAT BK CUSH (BLACK/PAINT TO MATCH)	92-93	Y (AR9, 19C, 193)	1	10135998
		DISCON	FRAME, D/SEAT BK CUSH (RED)	92	Y (AQ9, AR9, 733)	1	10135997
	9-C12	11.373	FRAME, D/SEAT BK CUSH (BEIGE)	92-93	Y (AQ9, AR9, 643)	1	10175575
		DISCON	FRAME, D/SEAT BK CUSH (WHITE)	92-93	Y (AQ9, AR9, 103)	1	10175576
	9-C12	11.373	FRAME, D/SEAT BK CUSH (GRAY)	92-93	Y (AQ9, AR9, 143)	1	10175577
		DISCON	FRAME, D/SEAT BK CUSH (RED)	93	Y (AR9, AQ9, 703)	1	12518711
	9-C12	11.373	FRAME, P/SEAT BK CUSH (BLACK/PAINT TO MATCH)	92-93	Y (AQ9, 193)	1	10135998
	9-C12	11.373	FRAME, P/SEAT BK CUSH (BLACK/PAINT TO MATCH)	92-93	Y (AR9, 19C, 193)	1	10135998
		DISCON	FRAME, P/SEAT BK CUSH (RED)	92	Y (AQ9, AR9, 733)	1	10135997
	9-C12	11.373	FRAME, P/SEAT BK CUSH (BEIGE)	92-93	Y (AQ9, AR9, 643)	1	10175575
		DISCON	FRAME, P/SEAT BK CUSH (WHITE)	92-93	Y (AQ9, AR9, 103)	1	10175576
	9-C12	11.373	FRAME, P/SEAT BK CUSH (GRAY)	92-93	Y (AQ9, AR9, 143)	1	10175577

© 2000 GENERAL MOTORS SERVICE PARTS OPERATIONS-CHEVROLET-14Y

						1Y11-007	
		DISCON	FRAME, P/SEAT BK CUSH (RED)	93	Y (AR9, AQ9, 703)	1	12518711
2.	9-C19	11.390	BEZEL, D/SEAT BK CUSH LAT REL HDL	92-93	Y (AQ9, AR9)	1	14049158
	9-C19	11.390	BEZEL, P/SEAT BK CUSH LAT REL HDL	92-93	Y (AQ9, AR9)	1	14049158
3.	9-C19	11.390	CABLE, D/SEAT BK CUSH LAT REL	92-93	Y (AQ9, AR9)	1	12515850
	9-C19	11.390	CABLE, P/SEAT BK CUSH LAT REL	92-93	Y (AQ9, AR9)	1	12515850
4.		N.S.	NUT, BK LK CBL (PUSH-ON) ...		.....		
5.		8.900	BOLT, HEX LARGE FLANGED M6X1X10 PC (D/SEAT BK CUSH HGE)	92-93	.....	12	11508567
		8.900	BOLT, HEX LARGE FLANGED M6X1X10 PC (P/SEAT BK CUSH HGE)	92-93	.....	12	11508567
6.	9-C15	11.377	PIN, D/SEAT RECL	92-93	Y (AR9)	1	10152832
	9-C15	11.377	PIN, P/SEAT RECL	92-93	Y (AR9)	1	10152832
7.	9-C21	11.419	STRAP, D/SEAT CUSH	92-93	Y (AQ9, AR9)	1	10248420
8.		8.900	BOLT, HFH M8X1.25X21MM, 17 OD, 10.9	92-93	.....	AR	12551177
9.	9-C12	11.373	WIRE, D/SEAT BK CUSH PAD (AT H/RST, 193 MM LGTH W/LOOP ON 1 END)	92-93	Y (AR9)	4	10268825
10.	9-C15	11.377	HANDLE, D/SEAT RECL	92-93	Y (AR9)	1	10152835
	9-C15	11.377	HANDLE, P/SEAT RECL	92-93	Y (AR9)	1	10152834
11.	9-M17	9.665	NUT, STAMPED/SK/SELF THD .187 PC	92-93	.....	AR	9415253
12.	9-C21	11.419	FRAME, D/SEAT CUSH	92-93	Y (AR9)	1	12522027
		DISCON	FRAME, P/SEAT CUSH	92-93	Y (AR9)	1	12522026
13.		DISCON	COVER, D/SEAT BK CUSH (W/CUSH) (BLACK)	92-93	Y (AR9, 19C)	LH	12517331
	9-N13	14.800	COVER, D/SEAT BK CUSH (W/CUSH) (BLACK)	92	Y (AR9, 193)	LH	12517330
	9-N13	14.800	COVER, D/SEAT BK CUSH (W/CUSH) (RED)	92	Y (AR9, 733)	LH	12517336
	9-N13	14.800	COVER, D/SEAT BK CUSH (W/CUSH) (WHITE)	92	Y (AR9, 103)	LH	12517337
	9-N13	14.800	COVER, D/SEAT BK CUSH (W/CUSH) (GRAY)	92	Y (AR9, 143)	LH	12517338
	9-N13	14.800	COVER, D/SEAT BK CUSH (W/CUSH) (BEIGE)	92	Y (AR9, 643)	LH	12517339
	9-N13	14.800	COVER, D/SEAT BK CUSH (W/CUSH) (BLACK)	93	Y (AR9, 193)	LH	12521032
	9-N13	14.800	COVER, D/SEAT BK CUSH (W/CUSH) (WHITE)	93	Y (AR9, 103)	LH	12521033
	9-N13	14.800	COVER, D/SEAT BK CUSH (W/CUSH) (GRAY)	93	Y (AR9, 143)	LH	12521034
	9-N13	14.800	COVER, D/SEAT BK CUSH (W/CUSH) (BEIGE)	93	Y (AR9, 643)	LH	12521035
	9-N13	14.800	COVER, D/SEAT BK CUSH (W/CUSH) (RED)	93	Y (AR9, 703)	LH	12521036
		DISCON	COVER, P/SEAT BK CUSH (W/CUSH) (BLACK)	92-93	Y (AR9, 19C)	RH	12517331
	9-N13	14.800	COVER, P/SEAT BK CUSH (W/CUSH) (BLACK)	92	Y (AR9, 193)	RH	12517330
	9-N13	14.800	COVER, P/SEAT BK CUSH (W/CUSH) (RED)	92	Y (AR9, 733)	RH	12517336

© 2000 GENERAL MOTORS SERVICE PARTS OPERATIONS-CHEVROLET-14Y

								1Y11-007
	9-N13	14.800	COVER, P/SEAT BK CUSH (W/CUSH) (WHITE)	92	Y (AR9, 103)	RH	12517337
	9-N13	14.800	COVER, P/SEAT BK CUSH (W/CUSH) (GRAY)	92	Y (AR9, 143)	RH	12517338
	9-N13	14.800	COVER, P/SEAT BK CUSH (W/CUSH) (BEIGE)	92	Y (AR9, 643)	RH	12517339
	9-N13	14.800	COVER, P/SEAT BK CUSH (W/CUSH) (BLACK)	93	Y (AR9, 193)	RH	12521032
	9-N13	14.800	COVER, P/SEAT BK CUSH (W/CUSH) (WHITE)	93	Y (AR9, 103)	RH	12521033
	9-N13	14.800	COVER, P/SEAT BK CUSH (W/CUSH) (GRAY)	93	Y (AR9, 143)	RH	12521034
	9-N13	14.800	COVER, P/SEAT BK CUSH (W/CUSH) (BEIGE)	93	Y (AR9, 643)	RH	12521035
	9-N13	14.800	COVER, P/SEAT BK CUSH (W/CUSH) (RED)	93	Y (AR9, 703)	RH	12521036
14.	9-C15	11.377	RECLINER, D/SEAT (11.561)	92-93	Y (AR9)	1	10152831
	9-C15	11.377	RECLINER, P/SEAT (11.561)	92-93	Y (AR9)	1	10152831
15.	9-C15	11.377	BOLT, D/SEAT RECL ACTR (M8X1.25X42 16.3 O.D.) (FRT) (11.390)	92-93	Y (AQ9)	2	14089632
	9-C15	11.377	BOLT, P/SEAT RECL (M8X1.25X21 16.3 O.D.) (RR) (11.390)	92-93	Y	1	14089631
16.		DISCON	HINGE, D/SEAT BK CUSH (11.375)	92-93	Y (AR9)	1	10152830
		DISCON	HINGE, P/SEAT BK CUSH	92-93	Y (AR9)	1	10152830
17.		8.934	RING, HOG	92-93		AR	4876466
18.		DISCON	WIRE, D/SEAT CUSH PAD (11.419)	92-93	Y (AQ9)	1	10153686
		DISCON	WIRE, D/SEAT CUSH PAD (11.419)	92-93	Y (AR9)	1	10153686
		DISCON	WIRE, D/SEAT CUSH PAD (FRT)	92-93	Y (AQ9, AR9)	1	12510484
	9-C21	11.419	WIRE, D/SEAT CUSH PAD (FRT)	92-93	Y (AQ9, AR9)	2	10268824
		DISCON	WIRE, D/SEAT CUSH PAD (RR)	92-93	Y (AQ9, AR9)	1	12510485
		DISCON	WIRE, P/SEAT CUSH PAD (11.419)	92-93	Y (AQ9)	1	10153686
		DISCON	WIRE, P/SEAT CUSH PAD (11.419)	92-93	Y (AR9)	1	10153686
	9-C21	11.419	WIRE, P/SEAT CUSH PAD (FRT)	92-93	Y (AQ9, AR9)	2	10268824
19.	9-N22	14.880	COVER, D/SEAT CUSH (W/CUSH) (BLACK)	92-93	Y (AR9, 193)	LH	12517319
		DISCON	COVER, D/SEAT CUSH (W/CUSH) (BLACK)	92-93	Y (AR9, 19C)	LH	12517320
		DISCON	COVER, D/SEAT CUSH (W/CUSH) (RED)	92	Y (AR9, 733)	LH	12517325
	9-N22	14.880	COVER, D/SEAT CUSH (W/CUSH) (WHITE)	92-93	Y (AR9, 103)	LH	12517326
	9-N22	14.880	COVER, D/SEAT CUSH (W/CUSH) (GRAY)	92-93	Y (AR9, 143)	LH	12517327
	9-N22	14.880	COVER, D/SEAT CUSH (W/CUSH) (BEIGE)	92-93	Y (AR9, 643)	LH	12517328
	9-N22	14.880	COVER, D/SEAT CUSH (W/CUSH) (RED)	93	Y (AR9, 703)	LH	12517329
	9-N22	14.880	COVER, P/SEAT CUSH (W/CUSH) (BLACK)	92-93	Y (AR9, 193)	RH	12517319
		DISCON	COVER, P/SEAT CUSH (W/CUSH) (BLACK)	92-93	Y (AR9, 19C)	RH	12517320

© 2000 GENERAL MOTORS SERVICE PARTS OPERATIONS-CHEVROLET-14Y

							1Y11-007	
		DISCON	COVER, P/SEAT CUSH (W/CUSH) (RED)	92	Y (AR9, 733)	RH		12517325
	9-N22	14.880	COVER, P/SEAT CUSH (W/CUSH) (WHITE)	92-93	Y (AR9, 103)	RH		12517326
	9-N22	14.880	COVER, P/SEAT CUSH (W/CUSH) (GRAY)	92-93	Y (AR9, 143)	RH		12517327
	9-N22	14.880	COVER, P/SEAT CUSH (W/CUSH) (BEIGE)	92-93	Y (AR9, 643)	RH		12517328
	9-N22	14.880	COVER, P/SEAT CUSH (W/CUSH) (RED)	93	Y (AR9, 703)	RH		12517329
20.		DISCON	WIRE, D/SEAT CUSH PAD (11.419)	92-93	Y (AQ9)		1	10153686
		DISCON	WIRE, D/SEAT CUSH PAD (11.419)	92-93	Y (AR9)		1	10153686
		DISCON	WIRE, D/SEAT CUSH PAD (FRT) .	92-93	Y (AQ9, AR9)		1	12510484
	9-C21	11.419	WIRE, D/SEAT CUSH PAD (FRT) .	92-93	Y (AQ9, AR9)		2	10268824
		DISCON	WIRE, D/SEAT CUSH PAD (RR) ..	92-93	Y (AQ9, AR9)		1	12510485
		DISCON	WIRE, P/SEAT CUSH PAD (11.419)	92-93	Y (AQ9)		1	10153686
		DISCON	WIRE, P/SEAT CUSH PAD (11.419)	92-93	Y (AR9)		1	10153686
	9-C21	11.419	WIRE, P/SEAT CUSH PAD (FRT) .	92-93	Y (AQ9, AR9)		2	10268824

RPO DEFINITIONS
AQ9 – SEAT,FRONT BUCKET,DRIVER,PASSENGER,RECLINING
AR9 – SEAT,FRONT BUCKET,DRIVER,PASSENGER,MANUAL RECLINING(EUROPEAN STYLE)
103 – TRIM COMBINATION– LEATHER,ARCTIC WHITE
143 – TRIM COMBINATION,LEATHER, LT GRAY
19C – TRIM COMBINATION,CLOTH,BLACK
193 – TRIM COMBINATION,BLACK LEATHER
643 – TRIM COMBINATION LEATHER, LT BEIGE
703 – TRIM COMBINATION,LEATHER,TORCH RED
733 – TRIM COMBINATION– LEATHER,FLAME RED

© 2000 GENERAL MOTORS SERVICE PARTS OPERATIONS–CHEVROLET–14Y

MICROFICHE INDEX

GROUPS 10.000 THRU 11.000

FICHE 9 OF 11

GROUP	DESCRIPTION	STARTING GRID LOCATION PARTS	ILLUSTRATIONS
–	GENERAL INFORMATION	1–A2	1–G2
–	ALPHABETICAL INDEX	1–B13	N.A.
10.000	DOORS – REGULATORS – WINDSHIELD – WIPER – WASHER	9–A2	9–D2
11.000	REAR GLASS – SEAT PARTS – ADJUSTER	9–C2	9–I2
–	OUT OF FICHE CALLS	N.A.	9–L4

9–J1

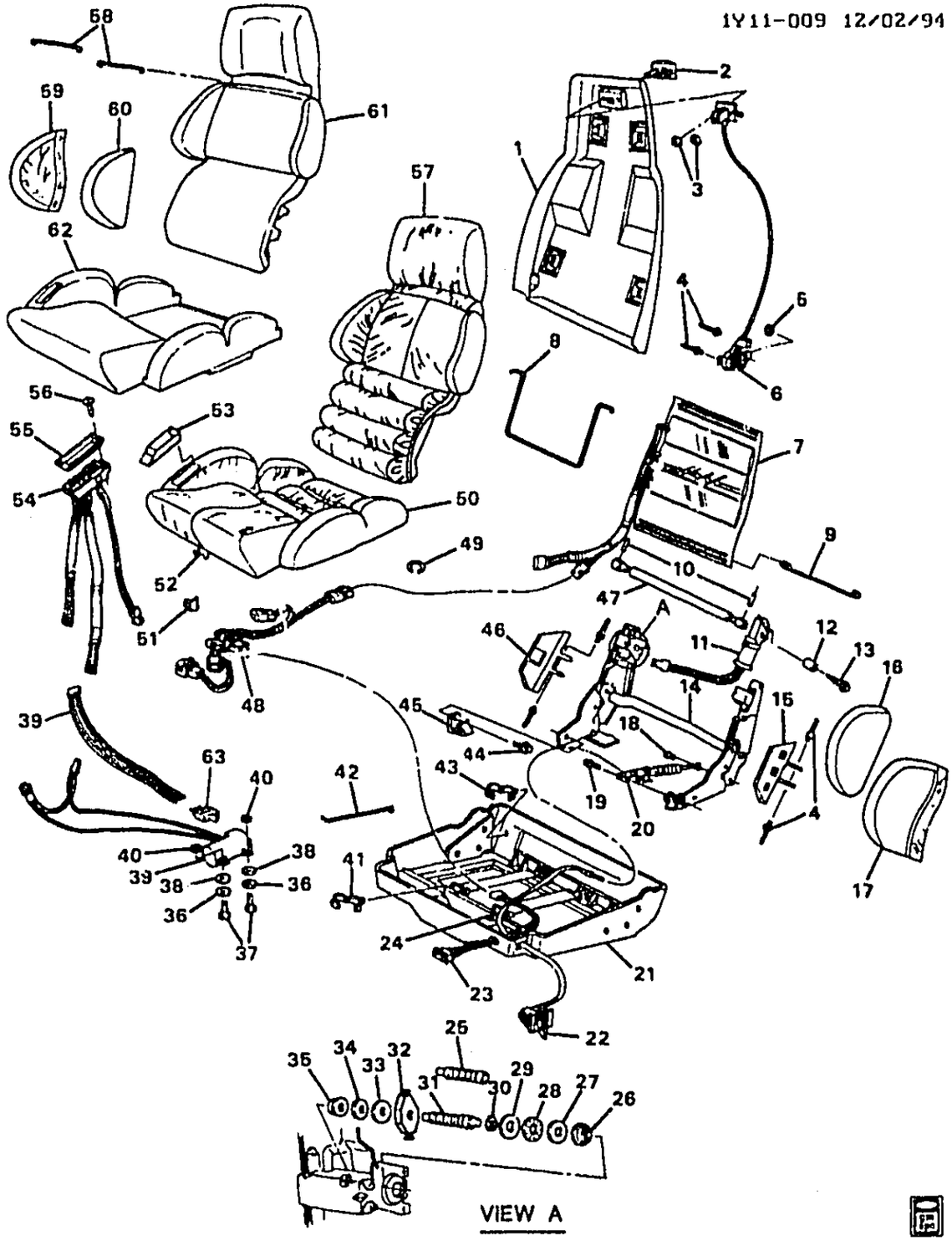

1Y11-009

1092-1993 Y SEAT ASM & HARDWARE/FRONT (AQ9)

1.	9-C12	11.373	FRAME, D/SEAT BK CUSH (BLACK/PAINT TO MATCH)	92-93	Y (AQ9, 193)	1	10135998
		DISCON	FRAME, D/SEAT BK CUSH (RED)	92	Y (AQ9, AR9, 733)	1	10135997
	9-C12	11.373	FRAME, D/SEAT BK CUSH (BEIGE)	92-93	Y (AQ9, AR9, 643)	1	10175575

© 2000 GENERAL MOTORS SERVICE PARTS OPERATIONS-CHEVROLET-14Y

						1Y11-009	
		DISCON	FRAME, D/SEAT BK CUSH (WHITE)	92-93	Y (AQ9, AR9, 103)	1	10175576
	9-C12	11.373	FRAME, D/SEAT BK CUSH (GRAY)	92-93	Y (AQ9, AR9, 143)	1	10175577
	9-C12	11.373	FRAME, D/SEAT BK CUSH (RED)	93	Y (AQ9, 793)	1	12518733
	9-C12	11.373	FRAME, P/SEAT BK CUSH (BLACK/PAINT TO MATCH)	92-93	Y (AQ9, 193)	1	10135998
		DISCON	FRAME, P/SEAT BK CUSH (RED)	92	Y (AQ9, AR9, 733)	1	10135997
	9-C12	11.373	FRAME, P/SEAT BK CUSH (BEIGE)	92-93	Y (AQ9, AR9, 643)	1	10175575
		DISCON	FRAME, P/SEAT BK CUSH (WHITE)	92-93	Y (AQ9, AR9, 103)	1	10175576
	9-C12	11.373	FRAME, P/SEAT BK CUSH (GRAY)	92-93	Y (AQ9, AR9, 143)	1	10175577
	9-C12	11.373	FRAME, P/SEAT BK CUSH (RED)	93	Y (AQ9, 793)	1	12518733
2.	9-C19	11.390	BEZEL, D/SEAT BK CUSH LAT REL HDL	92-93	Y (AQ9, AR9)	1	14049158
	9-C19	11.390	BEZEL, P/SEAT BK CUSH LAT REL HDL	92-93	Y (AQ9, AR9)	1	14049158
3.		8.921	NUT, MET SKW FLG PHOS	92-93		AR	11501047
4.		N.S.	RIVET				
5.		N.S.	NUT, F/SEAT BK CUSH LAT			1	
6.	9-C19	11.390	CABLE, D/SEAT BK CUSH LAT REL	92-93	Y (AQ9, AR9)	1	12515850
	9-C19	11.390	CABLE, P/SEAT BK CUSH LAT REL	92-93	Y (AQ9, AR9)	1	12515850
7.	9-C17	11.378	BLADDER, D/SEAT LUMBAR SUPT	92-93	Y (AQ9)	2	14079496
	9-C17	11.378	BLADDER, P/SEAT LUMBAR SUPT	92-93	Y (AQ9)	2	14079496
8.		DISCON	WIRE, D/SEAT BK CUSH PAD (14.802)	92-93	Y (AQ9)	LH	10148094
	9-C12	11.373	WIRE, D/SEAT BK CUSH PAD (AT H/RST, 193 MM LGTH W/LOOP ON 1 END)	92-93	Y (AQ9)	4	10268825
	9-C12	11.373	WIRE, D/SEAT BK CUSH PAD (AT H/RST, 193 MM LGTH W/LOOP ON 1 END)	92-93	Y (AR9)	4	10268825
		DISCON	WIRE, P/SEAT BK CUSH PAD (14.802)	92-93	Y (AQ9)	RH	10148094
9.		DISCON	WIRE, D/SEAT CUSH PAD	92-93	Y (AQ9)	1	10153686
		DISCON	WIRE, D/SEAT CUSH PAD	92-93	Y (AR9)	1	10153686
		DISCON	WIRE, D/SEAT CUSH PAD (FRT)	92-93	Y (AQ9, AR9)	1	12510484
	9-C21	11.419	WIRE, D/SEAT CUSH PAD (FRT)	92-93	Y (AQ9, AR9)	2	10268824
		DISCON	WIRE, D/SEAT CUSH PAD (RR)	92-93	Y (AQ9, AR9)	1	12510485
		DISCON	WIRE, P/SEAT CUSH PAD	92-93	Y (AQ9)	1	10153686
		DISCON	WIRE, P/SEAT CUSH PAD	92-93	Y (AR9)	1	10153686
	9-C21	11.419	WIRE, P/SEAT CUSH PAD (FRT)	92-93	Y (AQ9, AR9)	2	10268824
10.		N.S.	PIN, ST FLEX CRV CBL				
11.	9-C18	11.379	MOTOR, ST BOLS DRV	92-93	Y (AQ9)	2	14079423
12.	9-C18	11.379	SPACER, F/SEAT BOLS ADJR MOT	92-93	Y (AQ9)	AR	14079497
13.		DISCON	BOLT, F/SEAT BOLS	92-93	Y (AQ9) (TO MTR)	AR	10148082
14.		DISCON	HINGE, D/SEAT BK CUSH	92-93	Y (AQ9)	1	10152830
		DISCON	HINGE, P/SEAT BK CUSH	92-93	Y (AQ9)	1	10152830
15.	9-C25	11.573	COVER, D/SEAT WELDMENT ADJ BOLS	92-93	Y (AQ9)	LH	12508088

							1Y11-009
	9-C25	11.573	COVER, P/SEAT WELDMENT ADJ BOLS	92-93	Y (AQ9)	LH	12508088
16.		DISCON	PAD, D/SEAT BK CUSH SI BOLS	92-93	Y (AQ9)	LH	12508090
		DISCON	PAD, P/SEAT BK CUSH SI BOLS (14.802)	92-93	Y (AQ9)	LH	12508090
17.		DISCON	TRIM, F/SEAT BOLS CUSH (BLACK)	92-93	Y (AQ9, 193)	LH	12506467
	9-N22	14.880	TRIM, F/SEAT BOLS CUSH (WHITE)	92-93	Y (AQ9, 103)	LH	12510918
	9-N22	14.880	TRIM, F/SEAT BOLS CUSH (GRAY)	92-93	Y (AQ9, 143)	LH	12510920
	9-N22	14.880	TRIM, F/SEAT BOLS CUSH (BEIGE)	92-93	Y (AQ9, 643)	LH	12510922
	9-N22	14.880	TRIM, F/SEAT BOLS CUSH (RED)	93	Y (AQ9, 703)	LH	12510740
	9-N22	14.880	TRIM, F/SEAT BOLS CUSH (RED)	93	Y (AQ9, 793)	LH	12518742
18.	9-C15	11.377	BOLT, D/SEAT RECL ACTR (M8X1.25X42 16.3 O.D.) (FRT) (11.390)	92-93	Y (AQ9)	2	14089632
19.	9-C15	11.377	BOLT, P/SEAT RECL ACTR (M8X1.25X42 16.3 O.D.) (FRT) (11.390)	92-93	Y (AQ9)	2	14089632
20.	9-C15	11.377	RECLINER, D/SEAT (11.561)	92-93	Y (AQ9)	1	14088485
	9-C15	11.377	RECLINER, P/SEAT (11.561)	92-93	Y (AQ9)	1	14088485
21.		DISCON	FRAME, D/SEAT CUSH	92-93	Y (AQ9)	1	12522025
		DISCON	FRAME, P/SEAT CUSH	92-93	Y (AQ9)	1	12522024
22.	9-C15	11.377	HANDLE, D/SEAT RECL	92-93	Y (AQ9)	1	10137719
	9-C15	11.377	HANDLE, P/SEAT RECL	92-93	Y (AQ9)	1	10137720
23.	9-C18	11.379	SWITCH, ST BOLS CONT	92-93	Y (AQ9)	LH	12510958
	9-C18	11.379	SWITCH, ST BOLS CONT	92-93	Y (AQ9)	RH	12510959
24.	9-C19	11.390	NUT, D/SEAT BK CUSH LAT REL HDL BZL (9.665)	92	Y (AQ9)	1	9415253
	9-C19	11.390	NUT, P/SEAT BK CUSH LAT REL HDL BZL (9.665)	92	Y (AQ9)	1	9415253
	9-M17	9.665	NUT, STAMPED/SK/SELF THD .187 PC (D/SEAT BK LK REL ESCUT)	93		6	9415253
	9-M17	9.665	NUT, STAMPED/SK/SELF THD .187 PC (P/SEAT BK LK REL ESCUT)	93		6	9415253
25.	9-C18	11.379	BOLT, D/SEAT BK BOLS ADJR	92-93	Y (AQ9)	LH	14094547
	9-C18	11.379	BOLT, P/SEAT BK BOLS ADJR	92-93	Y (AQ9)	LH	14094547
26.	9-C18	11.379	BUSHING, F/SEAT BOLS INR (SMALL)	92-93	Y	4	14094542
27.		DISCON	WASHER, F/SEAT OTR THR	92-93	Y (AQ9)	1	12506486
28.		DISCON	BEARING, F/SEAT THR	92-93	Y (AQ9)	1	12506487
29.		DISCON	SHIM, F/SEAT BOLS DRV	92-93	Y (AQ9)	AR	12506488
30.	9-C18	11.379	RING, F/SEAT RET (ST BOLSTER)	92-93	Y (AQ9)	2	14094545
31.	9-C18	11.379	BOLT, D/SEAT BK BOLS ADJR	92-93	Y (AQ9)	RH	14094548
	9-C18	11.379	BOLT, P/SEAT BK BOLS ADJR	92-93	Y (AQ9)	RH	14094548
32.	9-C18	11.379	NUT, F/SEAT BOLS ADJR	92-93	Y (AQ9)	LH	14094549
	9-C18	11.379	NUT, F/SEAT BOLS ADJR	92-93	Y (AQ9)	RH	14094550
33.		DISCON	WASHER, D/SEAT ADJR	92-93	Y (AQ9)	AR	12506485
		DISCON	WASHER, P/SEAT ADJR	92-93	Y (AQ9)	AR	12506485
34.	9-C18	11.379	WASHER, SPR WAVE (ST BOLSTER)	92-93	Y	2	14094540

© 2000 GENERAL MOTORS SERVICE PARTS OPERATIONS-CHEVROLET-14Y

							1Y11-009
35.	9-C18	11.379	BUSHING, F/SEAT BOLS INR (LARGE)	92-93	Y	4	14096546
36.		N.S.	WASHER, ST BK REL ESCUT				
37.		N.S.	BOLT, ST LUMBAR PUMP MTG				
38.		DISCON	WASHER, F/SEAT LUMBAR PUMP MTG (MTR/INSULATING) (RUBBER)	92-93	Y (AQ9)	12	14079487
39.	9-C17	11.378	PUMP, D/SEAT & P/SEAT CUSH AIR (PASS W/MTR-LUMBAR) (INCLS ITEM #63)	92-93	Y (AQ9)	AR	12508087
40.		N.S.	NUT, ST LUMBAR PUMP MTG				
41.		DISCON	RETAINER, D/SEAT LUMBAR SUPT BLADDER (CONDUIT-TO FRM)	92-93	Y	1	10148068
		DISCON	RETAINER, P/SEAT LUMBAR SUPT BLADDER (CONDUIT-TO FRM)	92-93	Y	1	10148068
42.		N.S.	FASTENER, TIE STRAP				
43.		8.965	STRAP-TIE-7"ADJ (W/ROSEBUD FOR .25 DIA HOLE .031-.14 TH)	92-93		AR	3816659
44.		8.900	BOLT, HEX LARGE FLANGED M6X1X10 PC	92-93		AR	11508567
45.		DISCON	RETAINER, D/SEAT LUMBAR SUPT BLADDER (TUBE RET)	92-93	Y	1	14079474
		DISCON	RETAINER, P/SEAT LUMBAR SUPT BLADDER (TUBE RET)	92-93	Y	1	14079474
46.		DISCON	COVER, D/SEAT WELDMENT ADJ BOLS	92-93	Y (AQ9)	RH	12508089
		DISCON	COVER, P/SEAT WELDMENT ADJ BOLS	92-93	Y (AQ9)	RH	12508089
47.	9-C18	11.379	CABLE, F/SEAT BOLS DRV	92-93	Y (AQ9)	2	14079498
48.	9-N5	13.090	HARNESS, D/SEAT ADJR WRG	92-93	Y (AQ9)	1	12520129
	9-N5	13.090	HARNESS, P/SEAT ADJR WRG	92-93	Y (AQ9)	1	12520129
49.		8.934	RING, HOG	92-93		AR	4876466
50.		DISCON	COVER, D/SEAT CUSH (BLACK)	92-93	Y (AQ9, 193)	LH	12506457
	9-N22	14.880	COVER, D/SEAT CUSH (WHITE)	92-93	Y (AQ9, 103)	LH	12510909
	9-N22	14.880	COVER, D/SEAT CUSH (GRAY)	92-93	Y (AQ9, 143)	LH	12510911
	9-N22	14.880	COVER, D/SEAT CUSH (BEIGE)	92-93	Y (AQ9, 643)	LH	12510913
	9-N22	14.880	COVER, D/SEAT CUSH (RED)	93	Y (AQ9, 703)	LH	12518736
	9-N22	14.880	COVER, D/SEAT CUSH (RED)	93	Y (AQ9, 793)	LH	12518738
	9-N22	14.880	COVER, P/SEAT CUSH (BLACK)	92-93	Y (AQ9, 193)	RH	12506456
	9-N22	14.880	COVER, P/SEAT CUSH (RED)	92	Y (AQ9, 733)	RH	12506462
	9-N22	14.880	COVER, P/SEAT CUSH (WHITE)	92-93	Y (AQ9, 103)	RH	12510910
	9-N22	14.880	COVER, P/SEAT CUSH (GRAY)	92-93	Y (AQ9, 143)	RH	12510912
	9-N22	14.880	COVER, P/SEAT CUSH (BEIGE)	92-93	Y (AQ9, 643)	RH	12510914
	9-N22	14.880	COVER, P/SEAT CUSH (RED)	93	Y (AQ9, 703)	RH	12518735
	9-N22	14.880	COVER, P/SEAT CUSH (RED)	93	Y (AQ9, 793)	RH	12518737
51.		N.S.	CLIP, ST CUSH FSTN				
52.		DISCON	WIRE, D/SEAT CUSH PAD	92-93	Y (AQ9)	1	10153686
		DISCON	WIRE, D/SEAT CUSH PAD	92-93	Y (AR9)	1	10153686
		DISCON	WIRE, D/SEAT CUSH PAD (FRT)	92-93	Y (AQ9, AR9)	1	12510484
	9-C21	11.419	WIRE, D/SEAT CUSH PAD (FRT)	92-93	Y (AQ9, AR9)	2	10268824
		DISCON	WIRE, D/SEAT CUSH PAD (RR)	92-93	Y (AQ9, AR9)	1	12510485
		DISCON	WIRE, P/SEAT CUSH PAD	92-93	Y (AQ9)	1	10153686
		DISCON	WIRE, P/SEAT CUSH PAD	92-93	Y (AR9)	1	10153686
	9-C21	11.419	WIRE, P/SEAT CUSH PAD (FRT)	92-93	Y (AQ9, AR9)	2	10268824

© 2000 GENERAL MOTORS SERVICE PARTS OPERATIONS-CHEVROLET-14Y

							1Y11-009
53.		N.S.	SWITCH, F/SEAT SUPT BRKT (PART IS POA #54)				
54.	9-C17	11.378	CONTROL, F/SEAT LUMBAR	92-93	Y (AQ9)	LH	12510956
	9-C17	11.378	CONTROL, F/SEAT LUMBAR	92-93	Y (AQ9)	RH	12510957
55.	9-C17	11.378	BEZEL, D/SEAT LUMBAR SUPT SW (11.377)	92-93	Y (AQ9)	1	10148091
	9-C17	11.378	BEZEL, P/SEAT LUMBAR SUPT SW (11.377)	92-93	Y (AQ9)	1	10148091
56.		8.977	SCREW, OV HO C/S TORX M4.2X1.41X20 SS BL-OX	92-93		AR	11504659
57.	9-N13	14.800	COVER, D/SEAT BK CUSH (BLACK)	92	Y (AQ9, 193)	LH	12506479
	9-N13	14.800	COVER, D/SEAT BK CUSH (WHITE)	92	Y (AQ9, 103)	LH	12510915
	9-N13	14.800	COVER, D/SEAT BK CUSH (GRAY)	92	Y (AQ9, 143)	LH	12510916
	9-N13	14.800	COVER, D/SEAT BK CUSH (BEIGE)	92	Y (AQ9, 643)	LH	12510917
	9-N13	14.800	COVER, D/SEAT BK CUSH (BLACK)	93	Y (AQ9, 193)	LH	12521389
	9-N13	14.800	COVER, D/SEAT BK CUSH (RED)	93	Y (AQ9, 703)	LH	12521390
	9-N13	14.800	COVER, D/SEAT BK CUSH (RED)	93	Y (AQ9, 793)	LH	12521391
	9-N13	14.800	COVER, D/SEAT BK CUSH (WHITE)	93	Y (AQ9, 103)	LH	12521392
	9-N13	14.800	COVER, D/SEAT BK CUSH (GRAY)	93	Y (AQ9, 143)	LH	12521393
	9-N13	14.800	COVER, D/SEAT BK CUSH (BEIGE)	93	Y (AQ9, 643)	LH	12521394
	9-N13	14.800	COVER, P/SEAT BK CUSH (BLACK)	92	Y (AQ9, 193)	RH	12506479
	9-N13	14.800	COVER, P/SEAT BK CUSH (WHITE)	92	Y (AQ9, 103)	RH	12510915
	9-N13	14.800	COVER, P/SEAT BK CUSH (GRAY)	92	Y (AQ9, 143)	RH	12510916
	9-N13	14.800	COVER, P/SEAT BK CUSH (BEIGE)	92	Y (AQ9, 643)	RH	12510917
	9-N13	14.800	COVER, P/SEAT BK CUSH (BLACK)	93	Y (AQ9, 193)	RH	12521389
	9-N13	14.800	COVER, P/SEAT BK CUSH (RED)	93	Y (AQ9, 703)	RH	12521390
	9-N13	14.800	COVER, P/SEAT BK CUSH (RED)	93	Y (AQ9, 793)	RH	12521391
	9-N13	14.800	COVER, P/SEAT BK CUSH (WHITE)	93	Y (AQ9, 103)	RH	12521392
	9-N13	14.800	COVER, P/SEAT BK CUSH (GRAY)	93	Y (AQ9, 143)	RH	12521393
	9-N13	14.800	COVER, P/SEAT BK CUSH (BEIGE)	93	Y (AQ9, 643)	RH	12521394
58.		DISCON	WIRE, D/SEAT BK CUSH PAD (14.802)	92-93	Y (AQ9)	LH	10148094
	9-C12	11.373	WIRE, D/SEAT BK CUSH PAD (AT H/RST, 193 MM LGTH W/LOOP ON 1 END)	92-93	Y (AQ9)	4	10268825
59.	9-N22	14.880	TRIM, F/SEAT BOLS CUSH (BLACK)	92-93	Y (AQ9, 193)	RH	12506466
		DISCON	TRIM, F/SEAT BOLS CUSH (RED)	92	Y (AQ9, 733)	RH	12506472
	9-N22	14.880	TRIM, F/SEAT BOLS CUSH (WHITE)	92-93	Y (AQ9, 103)	RH	12510919
	9-N22	14.880	TRIM, F/SEAT BOLS CUSH (GRAY)	92-93	Y (AQ9, 143)	RH	12510921

© 2000 GENERAL MOTORS SERVICE PARTS OPERATIONS-CHEVROLET-14Y

								1Y11-009
	9-N22	14.880	TRIM, F/SEAT BOLS CUSH (BEIGE)	92-93	Y (AQ9, 643)	RH	12510923
	9-N22	14.880	TRIM, F/SEAT BOLS CUSH (RED)	93	Y (AQ9, 703)	RH	12518739
	9-N22	14.880	TRIM, F/SEAT BOLS CUSH (RED)	93	Y (AQ9, 793)	RH	12518741
60.		DISCON	PAD, D/SEAT BK CUSH SI BOLS .	92-93	Y (AQ9)	RH	12508091
		DISCON	PAD, P/SEAT BK CUSH SI BOLS (14.802)	92-93	Y (AQ9)	RH	12508091
61.		DISCON	CUSHION, F/SEAT BK (PAD) (14.896)	92-93	Y (AQ9)	1	12506478
62.		DISCON	PAD, D/SEAT CUSH (W/WIRE) ...	92-93	Y (AQ9)	1	12522165
		DISCON	PAD, P/SEAT CUSH (W/WIRE) (14.890)	92-93	Y (AQ9)	1	12522166
63.		N.S.	BLADDER, D/SEAT LUMBAR SUPT (PART OF ITEM #39)		.....		
		N.S.	BLADDER, P/SEAT LUMBAR SUPT (PART OF ITEM #39)		.....		

RPO DEFINITIONS

AQ9 – SEAT,FRONT BUCKET,DRIVER,PASSENGER,RECLINING
AR9 – SEAT,FRONT BUCKET,DRIVER,PASSENGER,MANUAL RECLINING(EUROPEAN STYLE)
103 – TRIM COMBINATION– LEATHER,ARCTIC WHITE
143 – TRIM COMBINATION,LEATHER, LT GRAY
193 – TRIM COMBINATION,BLACK LEATHER
643 – TRIM COMBINATION LEATHER, LT BEIGE
703 – TRIM COMBINATION,LEATHER,TORCH RED
733 – TRIM COMBINATION– LEATHER,FLAME RED
793 – TRIM COMBINATION LEATHER,RUBY RED

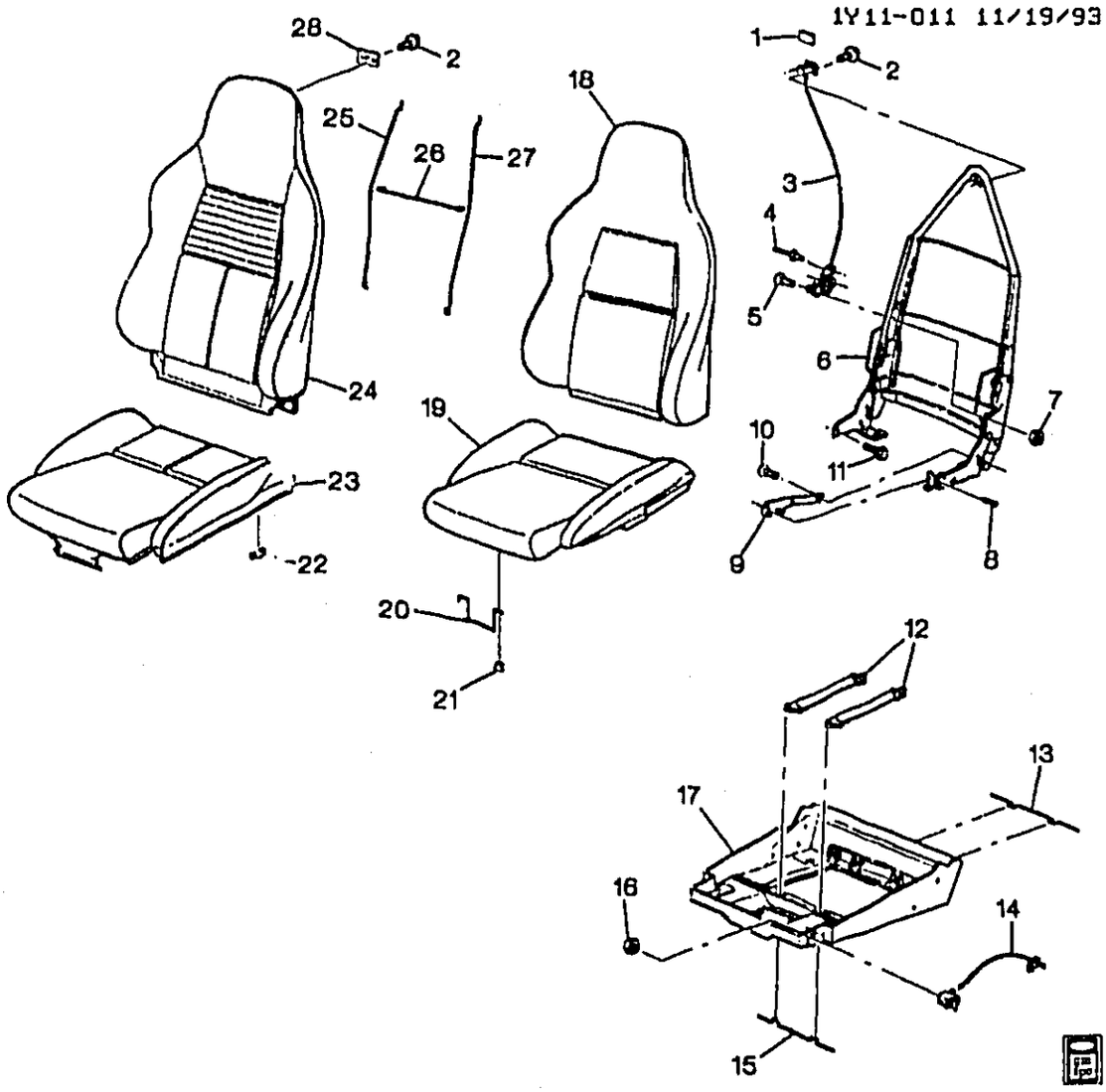

1Y11-011

1994-1996 Y SEAT ASM & HARDWARE/FRONT (AR9)

1.	9-C19	11.390	COVER, D/SEAT BK CUSH LAT REL HDL FIN	94-96	Y	1	10248443
	9-C19	11.390	COVER, P/SEAT BK LAT REL HDL FIN	94-96	Y	1	10248443
2.		8.977	SCREW, OV HO C/S TORX M4.2X1.41X20 SS BL-OX (D/SEAT BK CUSH LAT REL HDL BZL)	94-96		2	11504659
		8.977	SCREW, OV HO C/S TORX M4.2X1.41X20 SS BL-OX (P/SEAT BK CUSH LAT REL HDL BZL)	94-96		2	11504659
3.	9-C19	11.390	HANDLE, D/SEAT BK CUSH LAT REL (BLACK)	94	Y	1	10262340
	9-C19	11.390	HANDLE, D/SEAT BK CUSH LAT REL (GRAY)	95-96	Y (143)	1	10262337
	9-C19	11.390	HANDLE, D/SEAT BK CUSH LAT REL (RED)	95-96	Y (703)	1	10262338
	9-C19	11.390	HANDLE, D/SEAT BK CUSH LAT REL (BEIGE)	95-96	Y (643)	1	10262339

© 2000 GENERAL MOTORS SERVICE PARTS OPERATIONS-CHEVROLET-14Y

							1Y11-011
	9-C19	11.390	HANDLE, D/SEAT BK CUSH LAT REL (BLACK)	95-96	Y (193)	1	10262340
	9-C19	11.390	HANDLE, P/SEAT BK CUSH LAT REL (BLACK)	94	Y	1	10262340
	9-C19	11.390	HANDLE, P/SEAT BK CUSH LAT REL (GRAY)	95-96	Y (143)	1	10262337
	9-C19	11.390	HANDLE, P/SEAT BK CUSH LAT REL (RED)	95-96	Y (703)	1	10262338
	9-C19	11.390	HANDLE, P/SEAT BK CUSH LAT REL (BEIGE)	95-96	Y (643)	1	10262339
	9-C19	11.390	HANDLE, P/SEAT BK CUSH LAT REL (BLACK)	95-96	Y (193)	1	10262340
4.		8.967	RIVET, POP, .187 SHANK, .680 LEN, .378-.500 GRIP RANGE, SST, PL (D/SEAT BK CUSH LAT REL HDL)	94-96	.....	1	9441770
		8.967	RIVET, POP, .187 SHANK, .680 LEN, .378-.500 GRIP RANGE, SST, PL (P/SEAT BK CUSH LAT REL HDL)	94-96	.....	1	9441770
5.	9-C12	11.373	BOLT, D/SEAT BK CUSH FRM ...	94-96	Y	1	10248440
	9-C12	11.373	BOLT, D/SEAT BK CUSH FRM ...	94-96	Y (AQ9, IL3)	1	10255664
	9-C12	11.373	BOLT, P/SEAT BK CUSH FRM ...	94-96	Y	1	10248440
	9-C12	11.373	BOLT, P/SEAT BK CUSH FRM ...	94-96	Y (AQ9, IL3)	1	10255664
6.	9-C12	11.373	FRAME, D/SEAT BK CUSH	95-96	Y (AR9)	1	10262253
	9-C12	11.373	FRAME, D/SEAT BK CUSH (USE W/STS THAT DO NOT HAVE WIRES IN ST BK UPR BOLSTER)	94	Y (AR9) (1ST DES)	1	10248421
	9-C12	11.373	FRAME, D/SEAT BK CUSH (USE W/STS THAT HAVE WIRES IN THE ST BK UPR BOLSTER)	94	Y (AR9, 193) (2ND DES)	1	10262253
	9-C12	11.373	FRAME, P/SEAT BK CUSH	94-96	Y (AQ9)	1	10262253
	9-C12	11.373	FRAME, P/SEAT BK CUSH	95-96	Y (AR9)	1	10262253
	9-C12	11.373	FRAME, P/SEAT BK CUSH (USE W/STS THAT DO NOT HAVE WIRES IN ST BK UPR BOLSTER)	94	Y (AR9) (1ST DES)	1	10248421
	9-C12	11.373	FRAME, P/SEAT BK CUSH (USE W/STS THAT HAVE WIRES IN THE ST BK UPR BOLSTER)	94	Y (AR9) (2ND DES)	1	10262253
7.		8.915	NUT, HEX STYLE 2 M4X0.7 3THK 9ZC (D/SEAT BK CUSH FRM) ...	94-96	.....	1	11502847
		8.915	NUT, HEX STYLE 2 M4X0.7 3THK 9ZC (P/SEAT BK CUSH FRM)	94-96	.....	1	11502847
8.	9-C15	11.377	PIN, D/SEAT RECL	94-96	Y	1	10152832
	9-C15	11.377	PIN, P/SEAT RECL	94-96	Y	1	10152832
9.	9-C15	11.377	RECLINER, D/SEAT (11.561)	94-96	Y	1	10152831
	9-C15	11.377	RECLINER, P/SEAT (11.561)	94-96	Y	1	10152831
10.	9-C15	11.377	BOLT, D/SEAT RECL (M8X1.25X21 16.3 O.D.) (RR) (11.390)	94-96	Y	2	14089631
	9-C15	11.377	BOLT, P/SEAT RECL (M8X1.25X21 16.3 O.D.) (RR) (11.390)	94-96	Y	1	14089631
11.		8.900	BOLT, HEX LARGE FLANGED M6X1X10 PC (D/SEAT BK CUSH HGE)	94-96	.....	AR	
12.	9-C21	11.419	STRAP, D/SEAT CUSH	94-96	Y	2	10248420
	9-C21	11.419	STRAP, P/SEAT CUSH	94-96	Y	2	10248420

© 2000 GENERAL MOTORS SERVICE PARTS OPERATIONS-CHEVROLET-14Y

							1Y11-011
13.	9-C21	11.419	RETAINER, D/SEAT CUSH STRP (RR)	94	Y	1	10248436
	9-C21	11.419	RETAINER, P/SEAT CUSH STRP (RR)	94	Y	1	10248436
14.	9-C15	11.377	HANDLE, D/SEAT RECL	94-96	Y	1	10152835
	9-C15	11.377	HANDLE, P/SEAT RECL	94-96	Y	1	10152834
15.	9-C21	11.419	RETAINER, D/SEAT CUSH STRP (FRT)	94	Y	1	10248435
	9-C21	11.419	RETAINER, P/SEAT CUSH STRP (FRT)	94	Y	1	10248435
16.		8.900	NUT, STAMPED/SK/SELF THD .187 PC (D/SEAT RECL HDL) (8.921)	94-96		AR	9420621
17.	9-C21	11.419	FRAME, D/SEAT CUSH	94-96	Y	1	10248432
	9-C21	11.419	FRAME, P/SEAT CUSH	94-96	Y	1	10248447
18.	9-N20	14.802	PAD, D/SEAT BK CUSH (W/WIRE) (USE ON VEHS W/STS W/WIRES IN ST BK UPR BOLSTER)	94	Y (AR9)	1	10262256
	9-N20	14.802	PAD, D/SEAT BK CUSH (W/WIRE) (PAD W/SLOT FOR WIRE STIFFNER)	95-96	Y (AR9)	1	10262256
	9-N20	14.802	PAD, P/SEAT BK CUSH (W/WIRE) (USE ON VEHS W/STS W/WIRES IN ST BK UPR BOLSTER)	94	Y (AR9)	1	10262256
	9-N20	14.802	PAD, P/SEAT BK CUSH (W/WIRE) (PAD W/SLOT FOR WIRE STIFFNER)	95-96	Y (AR9)	1	10262256
19.	9-N28	14.890	PAD, D/SEAT CUSH	94-96	Y (AR9)	1	10248424
	9-N28	14.890	PAD, P/SEAT CUSH	94-96	Y (AR9)	1	10248424
20.	9-C21	11.419	RETAINER, D/SEAT CUSH	94-96	Y	1	10248422
	9-C21	11.419	RETAINER, P/SEAT CUSH	94-96	Y	1	10248422
21.	9-C21	11.419	RETAINER, D/SEAT CUSH RET	94-96	Y	2	10248419
	9-C21	11.419	RETAINER, P/SEAT CUSH RET	94-96	Y	2	10248419
22.		8.934	RING, HOG (F/SEAT CUSH CVR HOG)	94-96		AR	4876466
23.	9-N22	14.880	COVER, D/SEAT CUSH (GRAY)	94-96	Y (AR9, 143)	1	10248451
	9-N22	14.880	COVER, D/SEAT CUSH (BEIGE)	94-96	Y (AR9, 643)	1	10248466
	9-N22	14.880	COVER, D/SEAT CUSH (BLACK)	94-96	Y (AR9, 193)	1	10248468
	9-N22	14.880	COVER, D/SEAT CUSH (RED)	94-96	Y (AR9, 703)	1	10248470
	9-N22	14.880	COVER, P/SEAT CUSH (GRAY)	94-96	Y (AR9, 143)	1	10248451
	9-N22	14.880	COVER, P/SEAT CUSH (BEIGE)	94-96	Y (AR9, 643)	1	10248466
	9-N22	14.880	COVER, P/SEAT CUSH (BLACK)	94-96	Y (AR9, 193)	1	10248468
	9-N22	14.880	COVER, P/SEAT CUSH (RED)	94-96	Y (AR9, 703)	1	10248470
24.	9-N13	14.800	COVER, D/SEAT BK CUSH (GRAY)	94-96	Y (AR9, 143)	1	10248450
	9-N13	14.800	COVER, D/SEAT BK CUSH (BEIGE)	94-96	Y (AR9, 643)	1	10248465
	9-N13	14.800	COVER, D/SEAT BK CUSH (BLACK)	94-96	Y (AR9, 193)	1	10248467
	9-N13	14.800	COVER, D/SEAT BK CUSH (RED)	94-96	Y (AR9, 703)	1	10248469
	9-N13	14.800	COVER, P/SEAT BK CUSH (GRAY)	94-96	Y (AR9, 143)	1	10248450
	9-N13	14.800	COVER, P/SEAT BK CUSH (BEIGE)	94-96	Y (AR9, 643)	1	10248465
	9-N13	14.800	COVER, P/SEAT BK CUSH (BLACK)	94-96	Y (AR9, 193)	1	10248467
	9-N13	14.800	COVER, P/SEAT BK CUSH (RED)	94-96	Y (AR9, 703)	1	10248469

© 2000 GENERAL MOTORS SERVICE PARTS OPERATIONS-CHEVROLET-14Y

							1Y11-011
25.	9-C12	11.373	WIRE, D/SEAT BK CUSH BOLS (INR)	94	Y (AR9)	1	10251958
	9-C12	11.373	WIRE, P/SEAT BK CUSH BOLS (INR)	94	Y (AR9)	1	10251958
26.	9-C12	11.373	WIRE, D/SEAT BK CUSH HORIZ BOLS LSTG (193 MM LGTH W/LOOP ON 1 END)	95-96	Y (AR9)	1	10268825
	9-C12	11.373	WIRE, D/SEAT BK CUSH HORIZ BOLS LSTG (333 MM LGTH W/BOTH ENDS BENT APPX 45 DEG ANGLES)	94-96	Y (AR9)	1	10251960
	9-C12	11.373	WIRE, P/SEAT BK CUSH HORIZ BOLS LSTG (193 MM LGTH W/LOOP ON 1 END)	95-96	Y (AR9)	1	10268825
	9-C12	11.373	WIRE, P/SEAT BK CUSH HORIZ BOLS LSTG (333 MM LGTH W/BOTH ENDS BENT APPX 45 DEG ANGLES)	94-96	Y (AR9)	1	10251960
27.	9-C12	11.373	WIRE, D/SEAT BK CUSH BOLS (OTR)	94	Y (AR9)	1	10251959
	9-C12	11.373	WIRE, P/SEAT BK CUSH BOLS (OTR)	94	Y (AR9)	1	10251959
28.	9-C19	11.390	BEZEL, D/SEAT BK CUSH LAT REL HDL (BLACK)	94	Y (IL3)	1	10262345
	9-C19	11.390	BEZEL, D/SEAT BK CUSH LAT REL HDL (GRAY)	95-96	Y (143)	1	10262342
	9-C19	11.390	BEZEL, D/SEAT BK CUSH LAT REL HDL (RED)	95-96	Y (703)	1	10262343
	9-C19	11.390	BEZEL, D/SEAT BK CUSH LAT REL HDL (BEIGE)	95-96	Y (643)	1	10262344
	9-C19	11.390	BEZEL, D/SEAT BK CUSH LAT REL HDL (BLACK)	95-96	Y (193)	1	10262345
	9-C19	11.390	BEZEL, D/SEAT BK CUSH LAT REL HDL (BLACK)	96	Y (AQ9, IL5, Z16)	1	10262345
	9-C19	11.390	BEZEL, D/SEAT BK CUSH LAT REL HDL (BLACK)	96	Y (AQ9, Z15)	1	10262345
	9-C19	11.390	BEZEL, P/SEAT BK CUSH LAT REL HDL (BLACK)	94	Y (IL3)	1	10262345
	9-C19	11.390	BEZEL, P/SEAT BK CUSH LAT REL HDL (GRAY)	95-96	Y (143)	1	10262342
	9-C19	11.390	BEZEL, P/SEAT BK CUSH LAT REL HDL (RED)	95-96	Y (703)	1	10262343
	9-C19	11.390	BEZEL, P/SEAT BK CUSH LAT REL HDL (BEIGE)	95-96	Y (643)	1	10262344
	9-C19	11.390	BEZEL, P/SEAT BK CUSH LAT REL HDL (BLACK)	95-96	Y (193)	1	10262345
	9-C19	11.390	BEZEL, P/SEAT BK CUSH LAT REL HDL (BLACK)	96	Y (AQ9, IL5, Z16)	1	10262345
	9-C19	11.390	BEZEL, P/SEAT BK CUSH LAT REL HDL (BLACK)	96	Y (AQ9, Z15)	1	10262345

RPO DEFINITIONS

AQ9 – SEAT,FRONT BUCKET,DRIVER,PASSENGER,RECLINING
AR9 – SEAT,FRONT BUCKET,DRIVER,PASSENGER,MANUAL RECLINING(EUROPEAN STYLE)
IL3 – TRIM,INTERIOR DESIGN
IL5 – GRAND SPORT EDITION
Z15 – APPEARANCE PACKAGE,COLLECTORS EDITION
Z16 – APPEARANCE PACKAGE,GRAND SPORT EDITION
143 – TRIM COMBINATION,LEATHER, LT GRAY
193 – TRIM COMBINATION,BLACK LEATHER

© 2000 GENERAL MOTORS SERVICE PARTS OPERATIONS-CHEVROLET-14Y

643 – TRIM COMBINATION LEATHER, LT BEIGE
703 – TRIM COMBINATION,LEATHER,TORCH RED

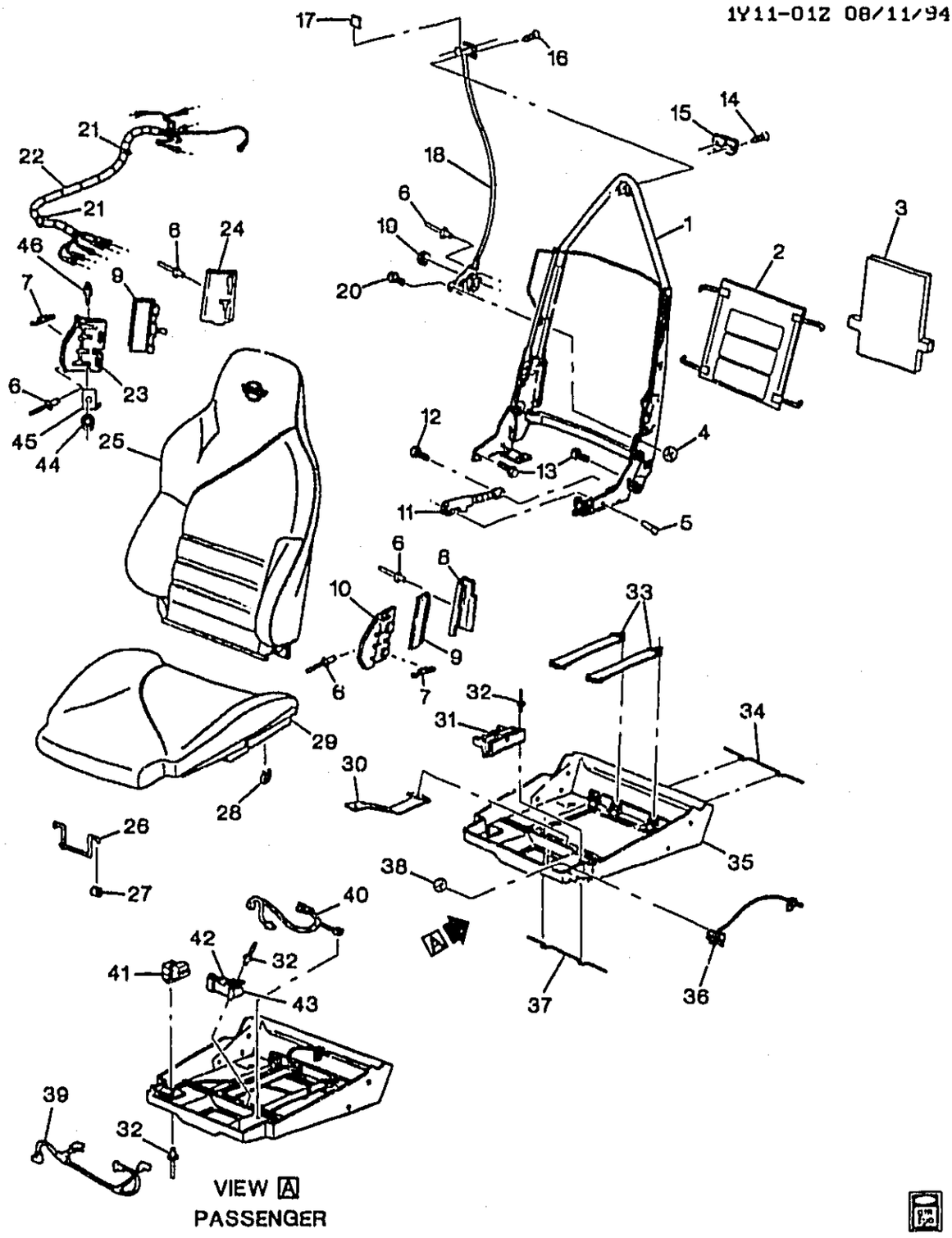

1Y11-012

1994-1996 Y SEAT ASM & HARDWARE/FRONT (AQ9)

1.	9-C12	11.373	FRAME, D/SEAT BK CUSH	94-96	Y (AQ9)	1 10262253
	9-C12	11.373	FRAME, P/SEAT BK CUSH	94-96	Y (AQ9)	1 10262253
2.	9-C17	11.378	BLADDER, ST LUMBAR SUPT ...	94-96	Y (AQ9, IL3)	1 10248445
3.		N.S.	PAD, D/SEAT BK CUSH RR		.....	
		N.S.	PAD, P/SEAT BK CUSH RR		.....	

© 2000 GENERAL MOTORS SERVICE PARTS OPERATIONS-CHEVROLET-14Y

							1Y11-012
4.		8.915	NUT, HEX STYLE 2 M4X0.7 3THK 9ZC (D/SEAT BK CUSH FRM) ...	94-96	.....	2	11502847
		8.915	NUT, HEX STYLE 2 M4X0.7 3THK 9ZC (P/SEAT BK CUSH FRM)	94-96	.....	2	11502847
5.	9-C15	11.377	PIN, D/SEAT RECL	94-96	Y	1	10152832
	9-C15	11.377	PIN, P/SEAT RECL	94-96	Y	1	10152832
6.		8.967	RIVET, POP, .187 SHANK, .680 LEN, .378-.500 GRIP RANGE, SST, PL (D/SEAT BK CUSH LAT REL HDL)	94-96	.....	9	9441770
		8.967	RIVET, POP, .187 SHANK, .680 LEN, .378-.500 GRIP RANGE, SST, PL (P/SEAT BK CUSH LAT REL HDL)	94-96	.....	9	9441770
7.	9-C18	11.379	SPRING, D/SEAT BK CUSH SI BOLS ADJ BRKT	94-96	Y (AQ9, IL3)	1	10250255
	9-C18	11.379	SPRING, P/SEAT BK CUSH SI BOLS ADJ BRKT	94-96	Y (AQ9, IL3)	1	10250255
8.	9-C18	11.379	SUPPORT, D/SEAT BK CUSH SI BOLS (OTR)	94-96	Y	1	10250252
	9-C18	11.379	SUPPORT, P/SEAT BK CUSH SI BOLS (OTR)	94-96	Y	1	10250252
9.	9-C17	11.378	BLADDER, ST LATERAL SUPT ..	94-96	Y (AQ9, IL3)	2	10248446
10.	9-C18	11.379	BRACKET, D/SEAT BK CUSH SI BOLS ADJ (OTR)	94-96	Y	1	10250254
	9-C18	11.379	BRACKET, P/SEAT BK CUSH SI BOLS ADJ (OTR)	94-96	Y	1	10250254
11.	9-C15	11.377	RECLINER, D/SEAT (11.561)	94-96	Y	1	10152831
	9-C15	11.377	RECLINER, P/SEAT (11.561)	94-96	Y	1	10152831
12.	9-C15	11.377	BOLT, D/SEAT RECL (M8X1.25X21 16.3 O.D.) (RR) (11.390)	94-96	Y	2	14089631
	9-C15	11.377	BOLT, P/SEAT RECL (M8X1.25X21 16.3 O.D.) (RR) (11.390)	94-96	Y	1	14089631
13.		8.900	BOLT, HEX LARGE FLANGED M6X1X10 PC (D/SEAT BK CUSH HGE)	94-96	.....	12	11508567
		8.900	BOLT, HEX LARGE FLANGED M6X1X10 PC (P/SEAT BK CUSH HGE)	94-96	.....	12	11508567
14.		8.977	SCREW, OV HO C/S TORX M4.2X1.41X20 SS BL-OX (D/SEAT BK CUSH LAT REL HDL BZL)	94	.....	2	11504659
		8.977	SCREW, OV HO C/S TORX M4.2X1.41X20 SS BL-OX (P/SEAT BK CUSH LAT REL HDL BZL)	94	.....	2	11504659
		8.977	SCREW, OV HO C/S TORX M4.2X1.41X20 SS BL-OX (D/SEAT BK CUSH LAT REL HDL BZL)	96	(Z15, Z16)	2	11504659
		8.977	SCREW, OV HO C/S TORX M4.2X1.41X20 SS BL-OX (P/SEAT BK CUSH LAT REL HDL BZL)	96	(Z15, Z16)	2	11504659
	9-C19	11.390	BOLT, D/SEAT BK CUSH LAT REL HDL BZL (GRAY)	95-96	Y (143)	2	10262373

© 2000 GENERAL MOTORS SERVICE PARTS OPERATIONS-CHEVROLET-14Y

							1Y11-012
	9-C19	11.390	BOLT, D/SEAT BK CUSH LAT REL HDL BZL (RED)	95-96	Y (703)	2	10262374
	9-C19	11.390	BOLT, D/SEAT BK CUSH LAT REL HDL BZL (BEIGE)	95-96	Y (643)	2	10262375
	9-C19	11.390	BOLT, D/SEAT BK CUSH LAT REL HDL BZL (BLACK)	95-96	Y (193)	2	10262376
	9-C19	11.390	BOLT, P/SEAT BK CUSH LAT REL HDL BZL (GRAY)	95-96	Y (143)	2	10262373
	9-C19	11.390	BOLT, P/SEAT BK CUSH LAT REL HDL BZL (RED)	95-96	Y (703)	2	10262374
	9-C19	11.390	BOLT, P/SEAT BK CUSH LAT REL HDL BZL (BEIGE)	95-96	Y (643)	2	10262375
	9-C19	11.390	BOLT, P/SEAT BK CUSH LAT REL HDL BZL (BLACK)	95-96	Y (193)	2	10262376
15.	9-C19	11.390	BEZEL, D/SEAT BK CUSH LAT REL HDL (BLACK)	94	Y (IL3)	1	10262345
	9-C19	11.390	BEZEL, D/SEAT BK CUSH LAT REL HDL (GRAY)	95-96	Y (143)	1	10262342
	9-C19	11.390	BEZEL, D/SEAT BK CUSH LAT REL HDL (RED)	95-96	Y (703)	1	10262343
	9-C19	11.390	BEZEL, D/SEAT BK CUSH LAT REL HDL (BEIGE)	95-96	Y (643)	1	10262344
	9-C19	11.390	BEZEL, D/SEAT BK CUSH LAT REL HDL (BLACK)	95-96	Y (193)	1	10262345
	9-C19	11.390	BEZEL, D/SEAT BK CUSH LAT REL HDL (BLACK)	96	Y (AQ9, IL5, Z16)	1	10262345
	9-C19	11.390	BEZEL, D/SEAT BK CUSH LAT REL HDL (BLACK)	96	Y (AQ9, Z15)	1	10262345
	9-C19	11.390	BEZEL, P/SEAT BK CUSH LAT REL HDL (BLACK)	94	Y (IL3)	1	10262345
	9-C19	11.390	BEZEL, P/SEAT BK CUSH LAT REL HDL (GRAY)	95-96	Y (143)	1	10262342
	9-C19	11.390	BEZEL, P/SEAT BK CUSH LAT REL HDL (RED)	95-96	Y (703)	1	10262343
	9-C19	11.390	BEZEL, P/SEAT BK CUSH LAT REL HDL (BEIGE)	95-96	Y (643)	1	10262344
	9-C19	11.390	BEZEL, P/SEAT BK CUSH LAT REL HDL (BLACK)	95-96	Y (193)	1	10262345
	9-C19	11.390	BEZEL, P/SEAT BK CUSH LAT REL HDL (BLACK)	96	Y (AQ9, IL5, Z16)	1	10262345
	9-C19	11.390	BEZEL, P/SEAT BK CUSH LAT REL HDL (BLACK)	96	Y (AQ9, Z15)	1	10262345
16.		8.963	TEE, CONN 3/16" DIA HOSE (D/P ST CUSH FRM)	94-96		2	6272766
17.	9-C19	11.390	COVER, D/SEAT BK CUSH LAT REL HDL FIN	94-96	Y	1	10248443
	9-C19	11.390	COVER, P/SEAT BK LAT REL HDL FIN	94-96	Y	1	10248443
18.	9-C19	11.390	HANDLE, D/SEAT BK CUSH LAT REL (BLACK)	94	Y	1	10262340
	9-C19	11.390	HANDLE, D/SEAT BK CUSH LAT REL (GRAY)	95-96	Y (143)	1	10262337
	9-C19	11.390	HANDLE, D/SEAT BK CUSH LAT REL (RED)	95-96	Y (703)	1	10262338
	9-C19	11.390	HANDLE, D/SEAT BK CUSH LAT REL (BEIGE)	95-96	Y (643)	1	10262339
	9-C19	11.390	HANDLE, D/SEAT BK CUSH LAT REL (BLACK)	95-96	Y (193)	1	10262340

							1Y11-012
	9-C19	11.390	HANDLE, P/SEAT BK CUSH LAT REL (BLACK)	94	Y	1	10262340
	9-C19	11.390	HANDLE, P/SEAT BK CUSH LAT REL (GRAY)	95-96	Y (143)	1	10262337
	9-C19	11.390	HANDLE, P/SEAT BK CUSH LAT REL (RED)	95-96	Y (703)	1	10262338
	9-C19	11.390	HANDLE, P/SEAT BK CUSH LAT REL (BEIGE)	95-96	Y (643)	1	10262339
	9-C19	11.390	HANDLE, P/SEAT BK CUSH LAT REL (BLACK)	95-96	Y (193)	1	10262340
19.		N.S.	RETAINER, P/SEAT BK CUSH LAT REL CBL (PUSH ON)				
		N.S.	RETAINER, D/SEAT BK CUSH LAT REL CBL (PUSH ON)				
20.	9-C12	11.373	BOLT, D/SEAT BK CUSH FRM	94-96	Y	1	10248440
	9-C12	11.373	BOLT, D/SEAT BK CUSH FRM	94-96	Y (AQ9, IL3)	1	10255664
	9-C12	11.373	BOLT, P/SEAT BK CUSH FRM	94-96	Y	1	10248440
	9-C12	11.373	BOLT, P/SEAT BK CUSH FRM	94-96	Y (AQ9, IL3)	1	10255664
21.		N.S.	CLIP, P/SEAT SUSP AIR SPLY HARN				
		N.S.	CLIP, D/SEAT SUSP AIR SPLY HARN				
22.	9-C17	11.378	HARNESS, D/SEAT AIR SPLY	94-96	Y (AQ9, IL3)	1	10248448
	9-C17	11.378	HARNESS, P/SEAT AIR SPLY	94-96	Y (AQ9, IL3)	1	10248448
23.	9-C18	11.379	BRACKET, D/SEAT BK CUSH SI BOLS ADJ (INR)	94-96	Y	1	10250253
	9-C18	11.379	BRACKET, P/SEAT BK CUSH SI BOLS ADJ (INR)	94-96	Y	1	10250253
24.	9-C18	11.379	SUPPORT, D/SEAT BK CUSH SI BOLS (INR)	94-96	Y	1	10250251
	9-C18	11.379	SUPPORT, P/SEAT BK CUSH SI BOLS (INR)	94-96	Y	1	10250251
25.		DISCON	COVER, D/SEAT BK CUSH (BLACK)	94	Y (AQ9, 193)	1	10248471
	9-N13	14.800	COVER, D/SEAT BK CUSH (RED)	94	Y (AQ9, 703)	1	10248472
		DISCON	COVER, D/SEAT BK CUSH (GRAY)	94	Y (AQ9, 143)	1	10248473
		DISCON	COVER, D/SEAT BK CUSH (BEIGE)	94	Y (AQ9, 643)	1	10248474
	9-N13	14.800	COVER, D/SEAT BK CUSH (BLACK) (WITH PAD)	95-96	Y (AQ9, 193)	1	10262389
	9-N13	14.800	COVER, D/SEAT BK CUSH (RED) (WITH PAD)	95-96	Y (AQ9, 703)	1	10262391
	9-N13	14.800	COVER, D/SEAT BK CUSH (GRAY) (WITH PAD)	95-96	Y (AQ9, 143)	1	10262393
	9-N13	14.800	COVER, D/SEAT BK CUSH (BEIGE) (WITH PAD)	95-96	Y (AQ9, 643)	1	10262395
	9-N13	14.800	COVER, D/SEAT BK CUSH (BLACK)	95	Y67 (AQ9, 194)	1	12455824
	9-N13	14.800	COVER, D/SEAT BK CUSH (BLACK)	96	Y (AQ9, Z15, 194)	1	10260195
	9-N13	14.800	COVER, D/SEAT BK CUSH (RED)	96	Y (AQ9, Z15)	1	10262523
	9-N13	14.800	COVER, D/SEAT BK CUSH (BLACK)	96	Y (AQ9, Z16, 195)	1	10262535
	9-N13	14.800	COVER, D/SEAT BK CUSH (RED)	96	Y (AQ9, Z16)	1	10262541
	9-N13	14.800	COVER, D/SEAT BK CUSH (GRAY)	96	Y (AQ9, Z15, 144)	1	10270159
		DISCON	COVER, P/SEAT BK CUSH (BLACK)	94	Y (AQ9, 193)	1	10250850

© 2000 GENERAL MOTORS SERVICE PARTS OPERATIONS-CHEVROLET-14Y

							1Y11-012
		DISCON	COVER, P/SEAT BK CUSH (RED)	94	Y (AQ9, 703)	1	10250874
		DISCON	COVER, P/SEAT BK CUSH (GRAY)	94	Y (AQ9, 143)	1	10250878
		DISCON	COVER, P/SEAT BK CUSH (BEIGE)	94	Y (AQ9, 643)	1	10250880
	9-N13	14.800	COVER, P/SEAT BK CUSH (BLACK) (WITH PAD)	95-96	Y (AQ9, 193)	1	10262390
	9-N13	14.800	COVER, P/SEAT BK CUSH (RED) (WITH PAD)	95-96	Y (AQ9, 703)	1	10262392
	9-N13	14.800	COVER, P/SEAT BK CUSH (GRAY) (WITH PAD)	95-96	Y (AQ9, 143)	1	10262394
	9-N13	14.800	COVER, P/SEAT BK CUSH (BEIGE) (WITH PAD)	95-96	Y (AQ9, 643)	1	10262396
	9-N13	14.800	COVER, P/SEAT BK CUSH (BLACK)	95	Y67 (AQ9, 194)	1	12455823
	9-N13	14.800	COVER, P/SEAT BK CUSH (BLACK)	96	Y (AQ9, Z15, 194)	1	10260194
	9-N13	14.800	COVER, P/SEAT BK CUSH (RED)	96	Y (AQ9, Z15)	1	10262520
	9-N13	14.800	COVER, P/SEAT BK CUSH (BLACK)	96	Y (AQ9, Z16, 195)	1	10262536
	9-N13	14.800	COVER, P/SEAT BK CUSH (RED)	96	Y (AQ9, Z16)	1	10262542
	9-N13	14.800	COVER, P/SEAT BK CUSH (GRAY)	96	Y (AQ9, Z15, 144)	1	10270160
26.	9-C21	11.419	RETAINER, D/SEAT CUSH	94-96	Y	1	10248422
	9-C21	11.419	RETAINER, P/SEAT CUSH	94-96	Y	1	10248422
27.	9-C21	11.419	RETAINER, D/SEAT CUSH RET	94-96	Y	2	10248419
	9-C21	11.419	RETAINER, P/SEAT CUSH RET	94-96	Y	2	10248419
28.		8.934	RING, HOG (F/SEAT CUSH CVR HOG)	94-96		2	4876466
29.		DISCON	COVER, D/SEAT CUSH (BLACK)	94	Y (AQ9, 193)	1	10248475
		DISCON	COVER, D/SEAT CUSH (RED)	94	Y (AQ9, 703)	1	10248476
		DISCON	COVER, D/SEAT CUSH (GRAY)	94	Y (AQ9, 143)	1	10248477
		DISCON	COVER, D/SEAT CUSH (BEIGE)	94	Y (AQ9, 643)	1	10248478
	9-N22	14.880	COVER, D/SEAT CUSH (BLACK)	95-96	Y (AQ9, 193)	1	10262379
	9-N22	14.880	COVER, D/SEAT CUSH (RED)	95-96	Y (AQ9, 703)	1	10262381
	9-N22	14.880	COVER, D/SEAT CUSH (GRAY)	95-96	Y (AQ9, 143)	1	10262383
	9-N22	14.880	COVER, D/SEAT CUSH (BEIGE)	95-96	Y (AQ9, 643)	1	10262385
	9-N22	14.880	COVER, D/SEAT CUSH (BLACK)	95	Y67 (AQ9, 194)	1	12455826
	9-N22	14.880	COVER, D/SEAT CUSH (RED)	96	Y (AQ9, Z15, Z16)	1	10262525
	9-N22	14.880	COVER, D/SEAT CUSH (BLACK)	96	Y (AQ9, Z15, 194)	1	10262537
	9-N22	14.880	COVER, D/SEAT CUSH (BLACK)	96	Y (AQ9, Z16, 195)	1	10262537
	9-N22	14.880	COVER, D/SEAT CUSH (GRAY)	96	Y (AQ9, Z15, 144)	1	10270161
	9-N22	14.880	COVER, P/SEAT CUSH (BLACK)	95-96	Y (AQ9, 193)	1	10262380
	9-N22	14.880	COVER, P/SEAT CUSH (RED)	95-96	Y (AQ9, 703)	1	10262382
	9-N22	14.880	COVER, P/SEAT CUSH (GRAY)	95-96	Y (AQ9, 143)	1	10262384
	9-N22	14.880	COVER, P/SEAT CUSH (BEIGE)	95-96	Y (AQ9, 643)	1	10262386
	9-N22	14.880	COVER, P/SEAT CUSH (BLACK)	95	Y67 (AQ9, 194)	1	12455825
	9-N22	14.880	COVER, P/SEAT CUSH (RED)	96	Y (AQ9, Z15)	1	10262524
	9-N22	14.880	COVER, P/SEAT CUSH (RED)	96	Y (AQ9, Z16)	1	10262524
	9-N22	14.880	COVER, P/SEAT CUSH (BLACK)	96	Y (AQ9, Z15, 194)	1	10262538
	9-N22	14.880	COVER, P/SEAT CUSH (BLACK)	96	Y (AQ9, Z16, 195)	1	10262538
	9-N22	14.880	COVER, P/SEAT CUSH (GRAY)	96	Y (AQ9, Z15, 144)	1	10270162
		DISCON	COVER, P/SEAT CUSH (INCLUDES PAD) (BLACK)	94	Y (AQ9, 193)	1	10250859
		DISCON	COVER, P/SEAT CUSH (INCLUDES PAD) (RED)	94	Y (AQ9, 703)	1	10250875
		DISCON	COVER, P/SEAT CUSH (INCLUDES PAD) (GRAY)	94	Y (AQ9, 143)	1	10250879

							1Y11-012
		DISCON	COVER, P/SEAT CUSH (INCLUDES PAD) (BEIGE)	94	Y (AQ9, 643)	1	10250881
30.	9-N5	13.090	STRAP, ST INFLR FEED WRG HARN (DRVR SEAT)	94-96	Y (AQ9, IL3)	1	10250231
31.	9-C17	11.378	VALVE, D/SEAT CUSH AIR	94-96	Y (AQ9, IL3)	1	16600786
	9-C17	11.378	VALVE, P/SEAT CUSH AIR	94-96	Y (AQ9, IL3)	1	16600786
32.	9-C17	11.378	RIVET, D/SEAT & P/SEAT CUSH AIR VLV (12.118)	94-96	Y (AQ9)	4	10131511
33.	9-C21	11.419	STRAP, D/SEAT CUSH	94-96	Y	2	10248420
	9-C21	11.419	STRAP, P/SEAT CUSH	94-96	Y	2	10248420
34.	9-C21	11.419	RETAINER, D/SEAT CUSH STRP (RH)	94-96	Y	1	10248436
	9-C21	11.419	RETAINER, P/SEAT CUSH STRP (RR)	94-96	Y	1	10248436
35.	9-C21	11.419	FRAME, D/SEAT CUSH	94-96	Y	1	10248432
	9-C21	11.419	FRAME, P/SEAT CUSH	94-96	Y	1	10248447
36.	9-C15	11.377	HANDLE, D/SEAT RECL	94-96	Y	1	10152835
	9-C15	11.377	HANDLE, P/SEAT RECL	94-96	Y	1	10152834
37.	9-C21	11.419	RETAINER, D/SEAT CUSH STRP (FRT)	94-96	Y	1	10248435
	9-C21	11.419	RETAINER, P/SEAT CUSH STRP (FRT)	94-96	Y	1	10248435
38.	9-M17	9.665	NUT, STAMPED/SK/SELF THD .187 PC (D/SEAT RECL HDL)	94-96	.....	4	9415253
	9-M17	9.665	NUT, STAMPED/SK/SELF THD .187 PC (P/SEAT BK CUSH LAT REL HDL BZL)	94-96	.....	4	9415253
39.	9-C17	11.378	HOSE, D/SEAT AIR SPLY (PASS SEAT)	94-96	Y (AQ9, IL3)	1	16735451
	9-C17	11.378	HOSE, D/SEAT AIR SPLY (PASS SEAT)	96	Y (AQ9, IL5)	1	16735451
40.	9-N21	14.865	HARNESS, INFLR AIR WRG	94	Y (M30, C60, C68)	1	12143757
	9-N21	14.865	HARNESS, INFLR AIR WRG	95	Y (LT1, M30, ML9, C60, C68)	1	12143757
	9-N21	14.865	HARNESS, INFLR AIR WRG (PASS SEAT)	94-96	Y (AQ9, IL3)	1	10250232
41.	9-C17	11.378	CONTROL, PWR ST LUMBAR (PASS SEAT)	94-95	Y (AQ9, IL3)	1	16749289
	9-C17	11.378	CONTROL, PWR ST LUMBAR (PASS SEAT)	96	Y (AQ9, IL3, IL5)	1	16749289
42.	9-C17	11.378	BRACKET, D/SEAT & P/SEAT CUSH AIR PUMP	94-96	Y (AQ9, IL3)	1	10250235
43.	9-C17	11.378	PUMP, D/SEAT & P/SEAT CUSH AIR (PNEUMATIC) (BOSCH MTR PUMP)	94-95	Y (AQ9, IL3)	1	16622020
	9-C17	11.378	PUMP, D/SEAT & P/SEAT CUSH AIR (PNEUMATIC) (BOSCH MTR PUMP)	96	Y (AQ9)	1	16622020
44.		8.915	NUT, HEX STYLE 2 M4X0.7 3THK 9ZC ((T/W #11504107 WASHER))	94-96	.....	AR	11502847
45.	9-C18	11.379	BRACKET, D/SEAT BK CUSH SI BOLS ADJ	94-96	Y	1	10255599
	9-C18	11.379	BRACKET, P/SEAT BK CUSH SI BOLS ADJ	94-96	Y	1	10255601
46.	9-C12	11.373	BOLT, D/SEAT BK CUSH FRM ...	94-96	Y	1	10248440
	9-C12	11.373	BOLT, D/SEAT BK CUSH FRM ...	94-96	Y (AQ9, IL3)	1	10255664
	9-C12	11.373	BOLT, P/SEAT BK CUSH FRM ...	94-96	Y	1	10248440
	9-C12	11.373	BOLT, P/SEAT BK CUSH FRM ...	94-96	Y (AQ9, IL3)	1	10255664

© 2000 GENERAL MOTORS SERVICE PARTS OPERATIONS-CHEVROLET-14Y

RPO DEFINITIONS

AQ9 – SEAT,FRONT BUCKET,DRIVER,PASSENGER,RECLINING
C60 – AIR CONDITIONER,FRONT,MANUAL CONTROLS
C68 – AIR CONDITIONER,FRONT,AUTOMATIC,ELECTRONIC CONTROLS
IL3 – TRIM,INTERIOR DESIGN
IL5 – GRAND SPORT EDITION
LT1 – ENGINE–GAS, 8 CYL, 5.7L(5.7P),MFI,HO
ML9 – TRANSMISSION,MANUAL 6–SPEED
M30 – TRANSMISSION,AUTOMATIC 4 SPEED,4L60E,ELECTRONIC
Z15 – APPEARANCE PACKAGE,COLLECTORS EDITION
Z16 – APPEARANCE PACKAGE,GRAND SPORT EDITION
143 – TRIM COMBINATION,LEATHER, LT GRAY
144 – TRIM COMBINATION LEATHER, LT GRAY
193 – TRIM COMBINATION,BLACK LEATHER
194 – TRIM COMBINATION,BLACK LEATHER
195 – TRIM COMBINATION,BLACK LEATHER
643 – TRIM COMBINATION LEATHER, LT BEIGE
703 – TRIM COMBINATION,LEATHER,TORCH RED

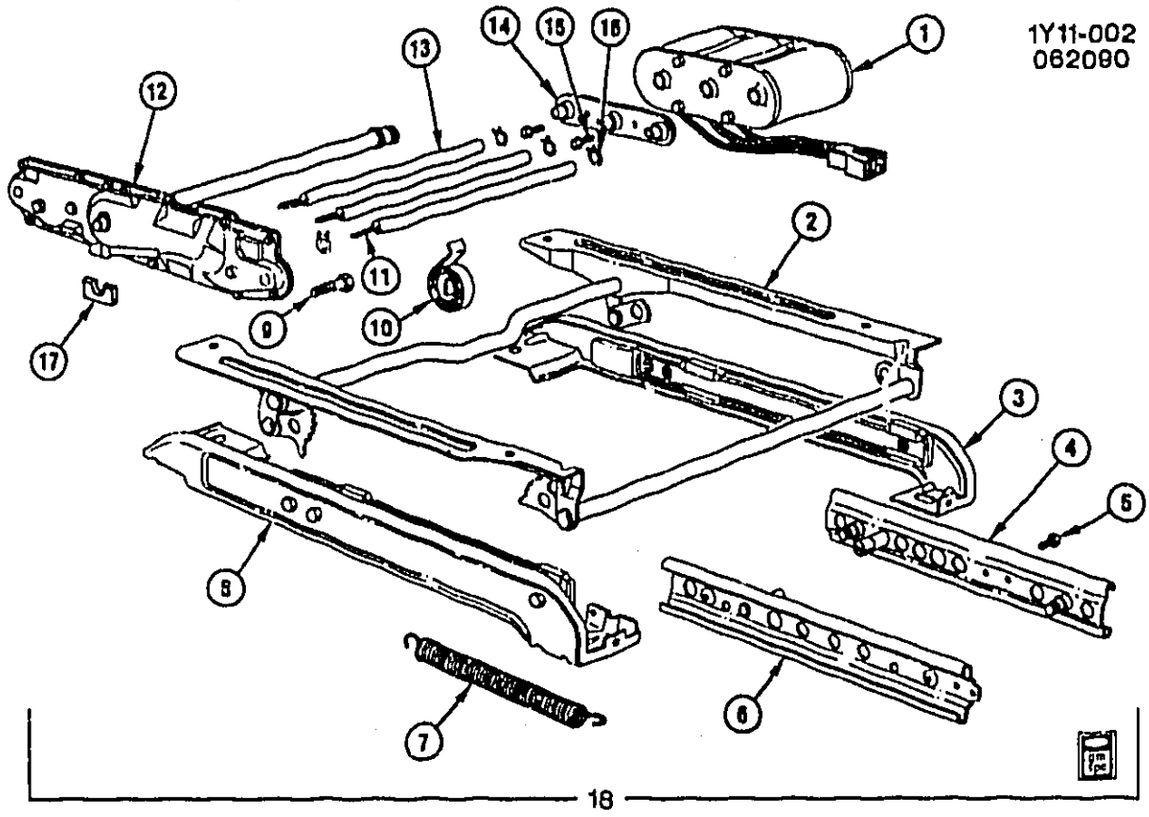

1Y11-002

1984-1987 Y ADJUSTER ASM/SEAT/ELECTRIC

1.		DISCON	MOTOR, ST ADJ	14067605
2.		N.S.	SUPPORT, UPR ST ADJ (PART OF 18)	
3.		DISCON	BASE, RACK & MT ST ADJ-LH (1984-86) (W/A42)	14067603
		DISCON	BASE, RACK & MT ST ADJ-LH (1987) (W/AC3) (DR SI)	14067603
		N.S.	BASE, RACK & MT ST ADJ-LH (1987) (W/AC3) (PASS SI) (PART OF #18)	
4.		N.S.	CARRIAGE, ST ADJ-LH (PART OF #18)	
5.		N.S.	SCREW, HEX HD TAP (8-32 X 1/2")	
6.		DISCON	CARRIAGE, ST ADJ-RH (PART OF 8)	14067602
7.		DISCON	SPRING, HORIZ ST ADJ	14067606
8.		N.S.	BASE, RACK & MT ST ADJ (PART OF #18)	
9.		N.S.	SCREW, HEX HD (M6.3 X 1 X 22)	
10.		DISCON	SPRING, VERT ST ADJ	14039186
11.	9-C24	11.561	CABLE, ST ADJ	14067608
12.		N.S.	TRANSMISSION, ST ADJ (PART OF ITEM 18)	
13.	9-C24	11.561	CASING, CBL ST ADJ	14067613
14.		DISCON	RETAINER, HSG ST ADJ	14067607
15.		N.S.	SCREW, HEX HD TAP (8-16 X 1/2")	
16.		N.S.	CLAMP (3/8")	
17.		N.S.	RETAINER, PIN (D/ST ADJ) (PART OF #18)	
18.	9-C24	11.561	ADJUSTER, D/ST (LESS MTR) (INCL 2-17)	10137221
	9-C24	11.561	ADJUSTER, P/ST (LESS MTR) (INCL 2-17)	10137222

© 2000 GENERAL MOTORS SERVICE PARTS OPERATIONS-CHEVROLET-14Y

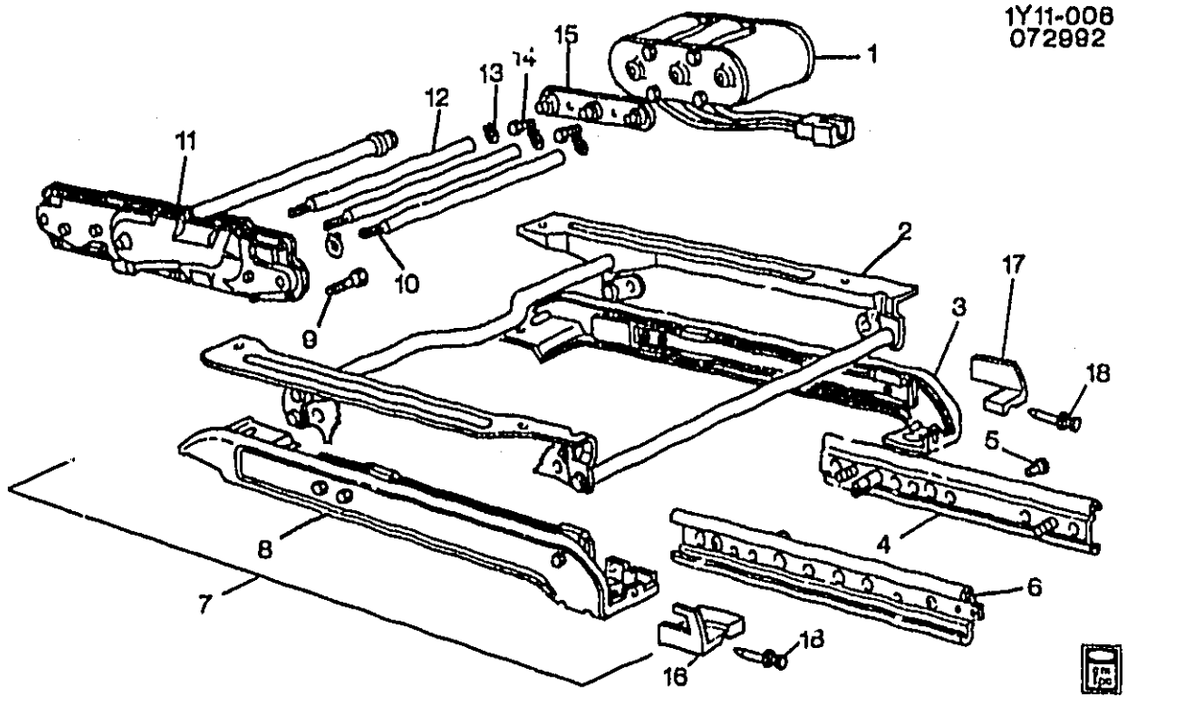

1968-1996 Y ADJUSTER ASM/SEAT/ELECTRIC

NOTE: ITEMS NOT SERVICED ARE NOT AVAILABLE SEPARATELY DUE TO INACCURATE ALIGNMENT. PER MFG. JOHNSON CONTROLS.

1.	9-C23	11.556	**MOTOR**, D/SEAT ADJR ACTR (AC-DELCO #10137220)	88-94	Y (AC3)	1	10137220
	9-C23	11.556	**MOTOR**, D/SEAT ADJR ACTR (AC-DELCO #10137220)	95-96	Y (AG1)	1	10137220
	9-C23	11.556	**MOTOR**, P/SEAT ADJR ACTR (AC-DELCO #10137220)	88-94	Y (AC1)	1	10137220
	9-C23	11.556	**MOTOR**, P/SEAT ADJR ACTR (AC-DELCO #10137220)	95-96	Y (AG2)	1	10137220
2.		N.S.	**SUPPORT**, UPR (PART OF 7)		.....		
3.		N.S.	**BASE**, RACK & MT-LH (PART OF 7)		.....		
4.		N.S.	**CARRIAGE**, LH (PART OF 7)		.....		
5.		N.S.	**SCREW**, HEX HD TAP (3X32X1/2") (PART OF 7)		.....		
6.		N.S.	**CARRIAGE**, RH (PART OF 7)		.....		
7.	9-C24	11.561	**ADJUSTER**, D/SEAT (INCL 2-6, 8, 9, 11, 13-15) (LESS MTR)	88-94	Y (AC3)	1	10137221
	9-C24	11.561	**ADJUSTER**, D/SEAT (INCL 2-6, 8, 9, 11, 13-15) (LESS MTR)	95-96	Y (AG1)	1	10137221
	9-C24	11.561	**ADJUSTER**, P/SEAT (INCL 2-6, 8, 9, 11, 13-15) (LESS MTR)	88-94	Y (AC1)	1	10137222
	9-C24	11.561	**ADJUSTER**, P/SEAT (INCL 2-6, 8, 9, 11, 13-15) (LESS MTR)	95-96	Y (AG2)	1	10137222
8.		N.S.	**BASE**, RACK & MT-RH (PART OF 7)		.....		
9.		N.S.	**SCREW**, HEX HD (M6.3X1X22) (PART OF 7)		.....		
10.	9-C24	11.561	**CABLE**, D/SEAT HORIZ ADJR ...	88-94	Y (AC3)	3	14067608
	9-C24	11.561	**CABLE**, D/SEAT HORIZ ADJR ...	95-96	Y (AG1)	3	14067608
	9-C24	11.561	**CABLE**, P/SEAT HORIZ ADJR ...	88-94	Y (AC1)	3	14067608
	9-C24	11.561	**CABLE**, P/SEAT HORIZ ADJR ...	95-96	Y (AG2)	3	14067608

© 2000 GENERAL MOTORS SERVICE PARTS OPERATIONS-CHEVROLET-14Y

							1Y11-006
11.		N.S.	TRANSMISSION (PART OF 7) ...		.....		
12.	9-C24	11.561	CASING, P/SEAT RECL ACTR CBL (ST ADJR CBL HSG)	88-94	Y (AC1, AC3)	1	14067613
	9-C24	11.561	CASING, P/SEAT RECL ACTR CBL (ST ADJR CBL HSG)	95-96	Y (AG1, AG2)	1	14067613
13.		N.S.	CLAMP (3/8") (PART OF 7)		.....		
14.		N.S.	SCREW, HEX HD TAP (8X16X1/2") (PART OF 7)		.....		
15.		N.S.	RETAINER, HSG (PART OF 7) ...		.....		
16.	9-C25	11.573	COVER, D/SEAT INR ADJR FRT FIN	88-94	Y (AC3)	1	14049296
	9-C25	11.573	COVER, D/SEAT INR ADJR FRT FIN	95-96	Y (AG1)	RH	14049296
	9-C25	11.573	COVER, D/SEAT INR ADJR FRT FIN (74.5X60MM) (2.9X2.4IN) (SQUARE SHAPED)	95-96	Y (EXC AG1, AG2)	1	14064590
	9-C25	11.573	COVER, P/SEAT OTR ADJR FRT FIN (5.3X3.4IN) (L-SHAPED) (135.5X86.5MM)	88-94	Y	1	10054460
	9-C25	11.573	COVER, P/SEAT OTR ADJR FRT FIN (5.3X3.4IN) (L-SHAPED) (135.5X86.5MM)	95-96	Y (AG1, AG2)	LH	10054460
	9-C25	11.573	COVER, P/SEAT OTR ADJR FRT FIN (74.5X60MM) (2.9X2.4IN) (SQUARE SHAPED)	95-96	Y (EXC AG1, AG2)	1	14064590
17.	9-C25	11.573	COVER, D/SEAT OTR ADJR FRT FIN (5.3X3.4IN) (L-SHAPED) (135.5X86.5MM)	88-94	Y	1	10054460
	9-C25	11.573	COVER, D/SEAT OTR ADJR FRT FIN (5.3X3.4IN) (L-SHAPED) (135.5X86.5MM)	95-96	Y (AG1)	LH	10054460
	9-C25	11.573	COVER, D/SEAT OTR ADJR FRT FIN (74.5X60MM) (2.9X2.4IN) (SQUARE SHAPED)	95-96	Y (EXC AG1, AG2)	1	14064590
	9-C25	11.573	COVER, P/SEAT INR ADJR FRT FIN	88-94	Y (AC1, AC3)	1	14049296
	9-C25	11.573	COVER, P/SEAT INR ADJR FRT FIN	95-96	Y (AG1, AG2)	RH	14049296
	9-C25	11.573	COVER, P/SEAT INR ADJR FRT FIN (74.5X60MM) (2.9X2.4IN) (SQUARE SHAPED)	95-96	Y (EXC AG1, AG2)	1	14064590
18.	9-C25	11.573	RETAINER, P/SEAT OTR ADJR FRT FIN CVR (PUSH IN) (BLACK) (PUSH-IN) (1.276)	88-96	Y	1	20664092
	9-C25	11.573	RETAINER, P/SEAT INR ADJR FRT FIN CVR (PUSH IN) (BLACK) (PUSH-IN) (1.276)	88-96	Y	1	20664092
	9-C25	11.573	RETAINER, D/SEAT INR ADJR FRT FIN CVR (PUSH IN) (BLACK) (PUSH-IN) (1.276)	88-96	Y	AR	20664092
	9-C25	11.573	RETAINER, D/SEAT OTR ADJR FRT FIN CVR (PUSH IN) (BLACK) (PUSH-IN) (1.276)	88-96	Y	1	20664092

RPO DEFINITIONS

AC1 – ADJUSTER,SEAT,6-WAY POWER,BUCKET,PASSENGER
AC3 – ADJUSTER,SEAT,6-WAY POWER,BUCKET,DRIVER
AG1 – ADJUSTER,SEAT,6-WAY POWER,DRIVER(60-40)(VAR 2)
AG2 – ADJUSTER,SEAT,6-WAY POWER,SPLIT BENCH,PASSENGER

© 2000 GENERAL MOTORS SERVICE PARTS OPERATIONS-CHEVROLET-14Y

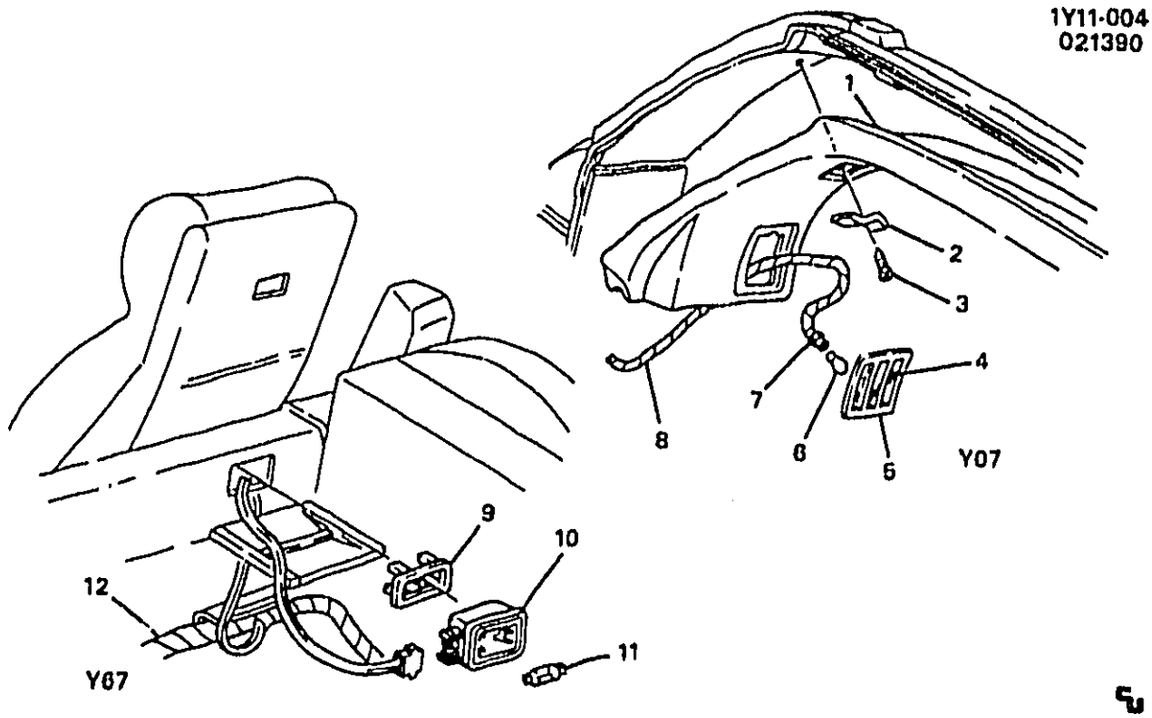

1Y11-004

1984-1990 Y LAMPS/INTERIOR-COURTESY & INTERIOR CARGO

1.	9-C7	11.120	PANEL, RR HATCH WDO FRT TR-RH (1984-89)	12509348
		DISCON	PANEL, RR HATCH WDO FRT TR-RH (1990) (SEE PARTS SECTION FOR ADDITIONAL COLORS & TRIM COMBINATIONS) (73I)	12509351
	9-C7	11.120	PANEL, RR HATCH WDO FRT TR-LH (1984-89)	12508061
	9-C7	11.120	PANEL, RR HATCH WDO FRT TR-LH (1990) (SEE PARTS SECTION FOR ADDITIONAL COLORS & TRIM COMBINATIONS) (73I)	12508067
2.		DISCON	HOOK, COAT (PAINT TO MATCH)	14049099
3.		8.977	SCREW, M4.2-1.41X30 OV HD (AR)	11503409
4.	9-M23	9.988	BEZEL, RR CARGO LP (W/LENS)	16513254
	9-M23	9.988	BEZEL, R/CMPT C/LP (RH) (1990)	16513254
	9-M23	9.988	BEZEL, R/CMPT C/LP (LH)	16513253
5.	9-M23	9.988	HOUSING, CARGO LP (RH)	16501568
	9-M23	9.988	HOUSING, CARGO LP (LH)	16501567
6.		8.991	BULB, 6CP-906 (AR) (AC-DELCO #L906)	9436750
7.	9-M23	9.988	SOCKET, CARGO LP (1990) (AC-DELCO #7434)	6298886
8.		DISCON	HARNESS, BODY FRT WRG (1990 UM6) (SEE PARTS SECTION FOR ADDITIONAL USAGE)	12101488
9.	9-C27	11.927	RETAINER, CTSY (1986-90)	10175743
10.	9-C27	11.927	LAMP, CARGO	10189743
11.		8.991	BULB, 12CP ID 561 (AR) (AC-DELCO #L561)	9433040
12.		DISCON	HARNESS, BODY FRT WRG (1990 UM6) (SEE PARTS SECTION FOR ADDITONAL USAGE)	12101488

RPO DEFINITIONS
73I - INTERIOR TRIM,FLAME RED

© 2000 GENERAL MOTORS SERVICE PARTS OPERATIONS-CHEVROLET-14Y

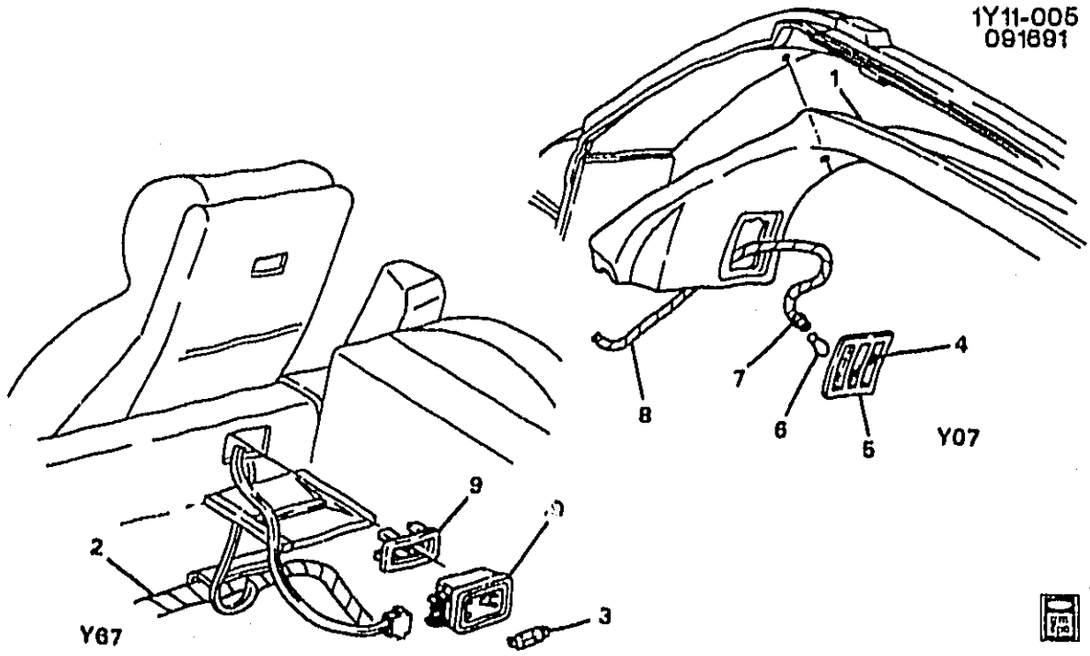

1Y11-005

1991-1996 Y LAMPS/INTERIOR-COURTESY & INTERIOR CARGO

1.	9-C7	11.120	PANEL, RR HATCH WDO FRT TR (BLACK) (DRILL ST BELT ATCH HOLE AS REQ)	91	Y07 (19I)	LH	12500061
	9-C7	11.120	PANEL, RR HATCH WDO FRT TR (BLACK) (DRILL ST BELT ATCH HOLE AS REQ)	91	Y07 (19I)	RH	12509348
		DISCON	PANEL, RR HATCH WDO FRT TR (BLUE) (LESS ST BELT ATTACHMENT HOLE, DRILL AS REQ)	91	Y07 (22I)	LH	12508063
		DISCON	PANEL, RR HATCH WDO FRT TR (COGNAC) (DRILL ST BELT ATCH HOLE AS REQ)	91	Y07 (60I)	LH	12508065
	9-C7	11.120	PANEL, RR HATCH WDO FRT TR (RED) (DRILL ST BELT ATCH HOLE AS REQ)	91-92	Y07 (73I)	LH	12508067
		DISCON	PANEL, RR HATCH WDO FRT TR (GRAY) (DRILL ST BELT ATCH HOLE AS REQ)	91	Y07 (90I)	LH	12508069
		DISCON	PANEL, RR HATCH WDO FRT TR (COGNAC) (DRILL ST BELT ATCH HOLE AS REQ)	91	Y07 (60I)	RH	12509350
		DISCON	PANEL, RR HATCH WDO FRT TR (BLUE) (DRILL ST BELT ATCH HOLE AS REQ)	91	Y07 (22I)	RH	12509349
		DISCON	PANEL, RR HATCH WDO FRT TR (RED) (LESS ST BELT ATTACHMENT HOLE, DRILL AS REQ)	91-92	Y07 (73I)	RH	12509351
		DISCON	PANEL, RR HATCH WDO FRT TR (GRAY) (DRILL ST BELT ATCH HOLE AS REQ)	91	Y07 (90I)	RH	12509352

© 2000 GENERAL MOTORS SERVICE PARTS OPERATIONS-CHEVROLET-14Y

								1Y11-005
	9-C7	11.120	PANEL, RR HATCH WDO FRT TR (BLACK) (DRILL ST BELT ATCH HOLE AS REQ)	92-93	Y07 (10I, 19I)	LH	12508061
	9-C7	11.120	PANEL, RR HATCH WDO FRT TR (BLACK) (DRILL ST BELT ATCH HOLE AS REQ)	92-93	Y07 (10I, 19I)	RH	12509348
	9-C7	11.120	PANEL, RR HATCH WDO FRT TR (BEIGE)	92-93	Y07 (64I)	RH	12509353
	9-C7	11.120	PANEL, RR HATCH WDO FRT TR (GRAY)	92-93	Y07 (14I)	RH	12509354
	9-C7	11.120	PANEL, RR HATCH WDO FRT TR (BEIGE)	92-93	Y07 (64I)	LH	12509714
	9-C7	11.120	PANEL, RR HATCH WDO FRT TR (GRAY)	92-93	Y07 (14I)	LH	12509715
	9-C7	11.120	PANEL, RR HATCH WDO FRT TR (RED)	93	Y07 (79I)	RH	10199558
	9-C7	11.120	PANEL, RR HATCH WDO FRT TR (RED)	93	Y07 (79I)	LH	10199559
		DISCON	PANEL, RR HATCH WDO FRT TR (RED)	93	Y07 (70I)	RH	10199724
		DISCON	PANEL, RR HATCH WDO FRT TR (RED)	93	Y07 (70I)	LH	10199725
	9-C7	11.120	PANEL, RR HATCH WDO FRT TR (BLACK) (DRILL ST BELT ATCH HOLE AS REQ)	94-96	Y07 (14I, 19I, 64I, 70I) ..	LH	12508061
	9-C7	11.120	PANEL, RR HATCH WDO FRT TR (BLACK) (DRILL ST BELT ATCH HOLE AS REQ)	94-96	Y07 (14I, 19I, 64I, 70I) ..	RH	12509348
2.		DISCON	HARNESS, BODY FRT WRG	91	Y67 (UM6)	1	12090311
		DISCON	HARNESS, BODY FRT WRG	91	Y67 (UU8, U1F)	1	12090312
		DISCON	HARNESS, BODY FRT WRG	92	Y67 (UM6)	1	12106537
		DISCON	HARNESS, BODY FRT WRG	92	Y67 (UU8, U1F)	1	12106538
	9-N5	13.090	HARNESS, BODY FRT WRG	93	Y67	1	12130341
	9-N5	13.090	HARNESS, BODY FRT WRG	94	Y67 (EXC T90)	1	12130355
	9-N5	13.090	HARNESS, BODY FRT WRG	95	Y67 (EXC T90)	1	12130478
	9-N5	13.090	HARNESS, BODY FRT WRG	96	Y67 (EXC T90)	1	12130456
	9-N5	13.090	HARNESS, BODY FRT WRG	94	Y67 (T90) (EXPORT) ...	1	12130341
	9-N5	13.090	HARNESS, BODY FRT WRG	95	Y67 (T90) (EXPORT) ...	1	12130477
	9-N5	13.090	HARNESS, BODY FRT WRG	96	Y67 (T90) (EXPORT) ...	1	12130455
3.		8.991	BULB, 12CP ID 561 (AC-DELCO #L561)	91-96	.....	AR	9433040
4.	9-M23	9.988	BEZEL, R/CMPT C/LP (W/LENS) .	91-96	Y07	LH	16513253
	9-M23	9.988	BEZEL, R/CMPT C/LP (W/LENS) .	91-96	Y07	RH	16513254
5.	9-M23	9.988	HOUSING, CARGO LP (11.927) ..	91-96	Y07	RH	16501568
	9-M23	9.988	HOUSING, CARGO LP (RR)	91-96	Y07	LH	16501567
6.		8.991	BULB, 6CP-906 (AC-DELCO #L906)	91-96	.....	AR	9436750
7.	9-M23	9.986	SOCKET, CARGO LP (2.575) (AC-DELCO #7434)	91-96	Y07	1	6298886
8.		DISCON	HARNESS, BODY FRT WRG . .	91	Y07 (UM6)	1	12112419
		DISCON	HARNESS, BODY FRT WRG	91	Y07 (UU8, U1F)	1	12112460
		DISCON	HARNESS, BODY FRT WRG	92	Y07 (UU8, U1F)	1	12125811
		DISCON	HARNESS, BODY FRT WRG	92	Y07 (UM6)	1	12125812
	9-N5	13.090	HARNESS, BODY FRT WRG	93	Y07	1	12141786
	9-N5	13.090	HARNESS, BODY FRT WRG	94	Y07 (T90)	1	12141786
	9-N5	13.090	HARNESS, BODY FRT WRG	94	Y07 (EXC T90)	1	12141796
	9-N5	13.090	HARNESS, BODY FRT WRG	95	Y07 (EXC T90, ZR1) ...	1	12130403
	9-N5	13.090	HARNESS, BODY FRT WRG	95	Y07 (ZR1)	1	12141796

							1Y11-005
	9-N5	13.090	HARNESS, BODY FRT WRG	96	Y07 (EXC T90)	1	12130458
	9-N5	13.090	HARNESS, BODY FRT WRG	95	Y07 (T90) (EXPORT) ...	1	12130402
	9-N5	13.090	HARNESS, BODY FRT WRG	96	Y07 (T90) (EXPORT) ...	1	12130457
9.	9-C27	11.927	RETAINER, C/LP	91-96	Y67	2	10175743
10.	9-M23	9.988	LAMP, CARGO (USED W/9433040 BULB) (11.927)	91-96	Y67	2	10199743

RPO DEFINITIONS
T90 – LAMP,SIGNALING AND MARKER(EXPORT)
UM6 – RADIO,AM/FM STEREO,CASSETTE,ETR,INCLUDES CLOCK
UU8 – RADIO,AM/FM STEREO,CASSETTE,ETR,DELCO/BOSE,DOLBY,INCLUDES CLOCK
U1F – RADIO,AM/FM STEREO,CASSETTE,C.D. PLAYER,ETR,BOSE,INCLUDES CLOCK
ZR1 – PACKAGE,SPECIAL PERFORMANCE COUPE(1YY07 + ZR1 == 1YZ07)
10I – INTERIOR TRIM– ARCTIC WHITE
14I – INTERIOR TRIM LT GRAY
19I – INTERIOR TRIM,BLACK
22I – INTERIOR TRIM,DARK ROYAL BLUE
60I – INTERIOR TRIM,DARK COGNAC
64I – INTERIOR TRIM,LIGHT BEIGE
70I – INTERIOR TRIM,TORCH RED
73I – INTERIOR TRIM,FLAME RED
79I – INTERIOR TRIM,RUBY RED
90I – INTERIOR TRIM,SMOKE GRAY

MICROFICHE INDEX

GROUPS 10.000 THRU 11.000

FICHE 9 OF 11

GROUP	DESCRIPTION	STARTING GRID LOCATION PARTS	ILLUSTRATIONS
–	GENERAL INFORMATION	1–A2	1–G2
–	ALPHABETICAL INDEX	1–B13	N.A.
10.000	DOORS – REGULATORS – WINDSHIELD – WIPER – WASHER	9–A2	9–D2
11.000	REAR GLASS – SEAT PARTS – ADJUSTER	9–C2	9–I2
–	OUT OF FICHE CALLS	N.A.	9–L4

9–K1

MICROFICHE INDEX

GROUPS 10.000 THRU 11.000

FICHE 9 OF 11

GROUP	DESCRIPTION	STARTING GRID LOCATION PARTS	ILLUSTRATIONS
–	GENERAL INFORMATION	1–A2	1–G2
–	ALPHABETICAL INDEX	1–B13	N.A.
10.000	DOORS – REGULATORS – WINDSHIELD – WIPER – WASHER	9–A2	9–D2
11.000	REAR GLASS – SEAT PARTS – ADJUSTER	9–C2	9–I2
–	OUT OF FICHE CALLS	N.A.	9–L4

9–L1

1.055 BOLT – BOLT KIT – BRACKET – BRACKET KIT – CONNECTOR – FAN – FAN KIT – MOTOR KIT – NUT – RELAY – RETAINER – SWITCH, Engine Air Cooling (Electrical)

Note: FOR ADDITIONAL INFORMATION, SEE ELECTRIC COOLING MOTOR AND FAN APPLICATION CHARTS IN THE REFERENCE CATALOG (CODE 88R).

88–89	Y 5.7–8) M/TRNS	14104140	1	1.88	BRACKET, FAN CONT RLY (M.T. O/D SW RELAY)
90–94	Y	14104140	1	1.88	BRACKET, FAN CONT RLY (STEEL) (3.0"X2.0") (76.7MMX51.0MM))
84	Y	14078902	1	16.26	RELAY, FAN CONT (AC–DELCO #15–8218)
85–87	Y	10038311	1	16.26	RELAY, FAN CONT (AC–DELCO #15–8333)
88–94	Y	14089936	2	16.26	RELAY, FAN CONT (5–PIN OVAL SHAPE) (USE W/CONN 15306002) (AC–DELCO #15–8240)
95–96	Y	12193601	1	23.44	RELAY, FAN CONT (BLACK) (5–WAY M) (USED W/CONNECTOR 15306045) (09.277) (AC–DELCO #15–8719)
95–96	Y	12193603	2	20.30	RELAY, FAN CONT (GRAY) (SPST 280 MINI) (4–WAY) (02.100) (AC–DELCO #12193603)
86	Y B4P (2ND DES)	10074160	1	DISCON	RETAINER, ELEC CLG FAN (SPR CLIP RETAINING FAN BLADE) (NO COMPARABLE 1ST DES)
85	Y HVY DUTY CLG (V08)	10074160	1	DISCON	RETAINER, ENG COOL FAN MOT LEAD
87–89	Y B4P	10074160	1	DISCON	RETAINER, ENG COOL FAN MOT LEAD
84–88	Y	20664092	AR	*.40	RETAINER, ENG COOL FAN RLY (PUSH–IN) (01.276)
95–96	Y	12129271	3	.73	RETAINER, FAN CONT RLY (ATCHS TO RELAY CONN)
84	Y	03040674	1	22.44	SWITCH, FAN CONT (1 BUTTON TERM, 3/8–18 THD) (TEMP STMP 108C) (AC–DELCO #15–5403)
85	Y	14043276	1	10.51	SWITCH, FAN CONT (1 BUTTON TERM, 3/8–18 THD) (USED ON VEHS W/TWO SPD CLG FAN) (AC–DELCO #D1852B)
86–89	Y 5.7–8 (L98), FAN (B4P)	14043276	1	10.51	SWITCH, FAN CONT (1 BUTTON TERM, 3/8–18 THD) (USE ON VEHS W/2 SPD CLG FAN) (AC–DELCO #D1852B)

2.187 KEY, Ignition and Locks

Note: FOR 1986–1991 USAGE REFER TO TO STRG COLUMN CHART GRP 6.518

84–86	Y	01154611	AR	*1.12	KEY, DR LK (UNCODED) (OVAL HD) (GRV B)
87–90	Y	01154605	AR	*1.17	KEY, DR LK (UNCODED) (OVAL HD) (GRV D)
91–96	Y	01154607	2	*1.17	KEY, DR LK (OVAL HD, GRV H, B&S 320405A, CAN USE 20364745 BOOT)
90	Y 5.7J (LT5), SOFT RIDE SUSP (FE1), HVY DUTY SUSP (FE7)	12505009	1	30.35	KEY, ENG PWR SW (CODED)
91–95	Y 5.7J (LT5)	12508275	1	13.57	KEY, ENG PWR SW (CODED)
86–96	Y	26019393	1	22.90	KEY, IGN LK (RESISTOR CODE #3)
86–96	Y	26019395	3	22.90	KEY, IGN LK (RESISTOR CODE #5)
86–96	Y	26019396	1	22.90	KEY, IGN LK (RESISTOR CODE #6)
86–96	Y	26019397	3	22.90	KEY, IGN LK (RESISTOR CODE #7)
86–96	Y	26019398	3	22.90	KEY, IGN LK (RESISTOR CODE #8)

© 2000 GENERAL MOTORS SERVICE PARTS OPERATIONS

2.187 KEY, Ignition and Locks(Con't)

86-96	Y	26019399	3	22.90	KEY, IGN LK (RESISTOR CODE #9)
86-96	Y	26019400	3	22.90	KEY, IGN LK (RESISTOR CODE #10)
86-96	Y	26019401	3	22.90	KEY, IGN LK (RESISTOR CODE #11)
86-96	Y	26019402	3	22.90	KEY, IGN LK (RESISTOR CODE #12)
86-96	Y	26019403	3	22.90	KEY, IGN LK (RESISTOR CODE #13)
86-96	Y	26019404	3	22.90	KEY, IGN LK (RESISTOR CODE #14)
86-96	Y	26019405	3	22.90	KEY, IGN LK (RESISTOR CODE #15)
91	Y	26007687	1	*1.12	KEY, IGN LK (SQUARE HD W/O RES PELLET) (GRV C)
91-96	Y	26019392	1	22.90	KEY, IGN LK (RESISTOR CODE #2)
91-96	Y	26019394	3	22.90	KEY, IGN LK (RESISTOR CODE #4)
92-96	Y	26007687	1	*1.12	KEY, IGN LK (SQUARE HD W/O RES PELLET) (GRV C)
84-85	Y	01154610	AR	*1.12	KEY, SQUARE HD (BLANK) (PRIM) (GRV A)
86	Y	26007687	1	*1.12	KEY, SQUARE HEAD WITHOUT RESISTOR PELLET
86-89	Y	26019391	AR	22.90	KEY, THEFT DTRNT IGN (RESISTOR CODE #1)
86-90	Y	26019392	AR	22.90	KEY, THEFT DTRNT IGN (RESISTOR CODE #2)
86-89	Y	26019394	AR	22.90	KEY, THEFT DTRNT IGN (RESISTOR CODE #4)
86-89	Y	26019398	AR	22.90	KEY, THEFT DTRNT IGN (RESISTOR CODE #8)
86-89	Y	26019405	AR	22.90	KEY, THEFT DTRNT IGN (RESISTOR CODE #15)

2.188 BOLT – CONNECTOR – CYLINDER – RETAINER – SCREW – STUD – SWITCH, Ignition Switch

Note: FOR 1986–1991 USAGE REFER TO STEERING COLUMN CHART GRP 6.518

Note: WHEN ORDERING CYLINDER/LOCK FOR VEHICLES EQUIPPED WITH "VATS" (VEHICLE ANTI–THEFT SYSTEM), YOU MUST ALSO ORDER RESISTOR KEY (GRP 2.187) . REFER TO SERVICE MANUAL FOR DETAILS.

84-86	Y	07806433	2	2.40	BOLT, IGN SW
91-96	Y	07806433	2	2.40	BOLT, IGN SW (10–24X1/4) (RD WSHR HD C/R)
84-85	Y	07830380	1	25.26	CYLINDER, STRG COL LK & IGN SW (CODED W/KEY) (B&S 607872) (CHROME) (AC–DELCO #D1403B)
84-85	Y	07840574	1	29.07	CYLINDER, STRG COL LK & IGN SW (CODED W/KEY, B&S 609532) (BLACK) (AC–DELCO #D1414B)
86	Y	26033390	1	48.45	CYLINDER, STRG COL LK & IGN SW (AC–DELCO #D1456C)
89	Y M/TRANS	26033387	1	81.09	CYLINDER, STRG COL LK & IGN SW (AC–DELCO #D1453C)
90-96	Y 6–SPD M/TRANS (ML9)	26033387	1	81.09	CYLINDER, STRG COL LK & IGN SW (AC–DELCO #D1453C)
90-93	Y 4–SPD A/TRANS (MD8)	26033390	1	48.45	CYLINDER, STRG COL LK & IGN SW (AC–DELCO #D1456C)
94-96	Y 4–SPD A/TRANS (M30)	26033390	1	48.45	CYLINDER, STRG COL LK & IGN SW (AC–DELCO #D1456C)
90	Y 5.7J (LT5)	05713260	1	3.76	RETAINER, ENG PWR SW (17.198)
84-86	Y	07829779	1	3.85	STUD, DIMMER & IGN SW MTG
91-96	Y	07829779	1	3.85	STUD, IGN & START SW
90	Y 5.7J (LT5)	14104646	1	30.86	SWITCH, ENG PWR (W/KEYS)
91	Y 5.7J (LT5), SOFT RIDE SUSP (FE1), HVY DUTY SUSP (FE7)	12514730	1	180.54	SWITCH, ENG PWR (W/KEYS) (MUST USE 12126533 HARNESS)
92-95	Y 5.7J (LT5)	12514730	1	180.54	SWITCH, ENG PWR

© 2000 GENERAL MOTORS SERVICE PARTS OPERATIONS

2.188 BOLT – CONNECTOR – CYLINDER – RETAINER – SCREW – STUD – SWITCH, Ignition Switch(Con't)

84–85	Y T&T WHL (N37)	01990116	1	20.67	SWITCH, IGN & START (AC–DELCO #D1405B)
86	Y	01990116	1	20.67	SWITCH, IGN & START (AC–DELCO #D1405B)
91–96	Y	01990116	1	20.67	SWITCH, IGN & START (AC–DELCO #D1405B)

2.195 ACTUATOR – ALARM – BOLT – BRACKET – CLIP – CONNECTOR – MODULE – RACK – RACK KIT – RELAY – SCREW – SHAFT – SPRING – SWITCH, Ignition Switch Warning, Lock, Headlamp, Theft Deterrent or Rear/Side Object

Note: FOR 1986–1991 USAGE REFER TO STEERING COLUMN CHART GRP 6.518

91–96	Y	26015728	1	11.78	ACTUATOR, IGN & START SW
84–86	Y	07840683	1	DISCON	ACTUATOR, IGN SW
84	Y	14062571	1	42.33	ALARM, ST BELT & IGN KEY & LPS
85–89	Y	10037040	1	54.57	ALARM, ST BELT & IGN KEY & LPS
90–93	Y	25518745	1	55.34	ALARM, ST BELT & IGN KEY & LPS (W/R/CON DR LK RCVR) (09.765)
90–96	Y	25518745	1	55.34	ALARM, ST BELT & IGN KEY & LPS (09.765)
91–96	Y	07841678	1	4.15	BOLT, STRG COL LK & IGN SW CYL (THD SECT AT TOP OF SCREW)
90–92	Y	10098454	1	4.64	BRACKET, ST BELT & IGN KEY & LPS ALARM
84–89	Y	10098473	1	DISCON	BRACKET, THEFT DTRNT MDL
86	Y	14091266	1	DISCON	BRACKET, THEFT DTRNT MDL (USE W/KEY DECODER MDL)
87–88	Y	14093186	1	DISCON	BRACKET, THEFT DTRNT MDL (USE W/KEY DECODER MDL)
89	Y	14104799	1	DISCON	BRACKET, THEFT DTRNT MODULE
84–86	Y	07830376	1	5.60	CLIP, ALARM SW RET
84–89	Y	16158276	1	109.10	MODULE, THEFT DETER (FORCED ENTRY ALARM)
86–88	Y	01228548	1	262.14	MODULE, THEFT DTRNT (KEY DECODER, PASS KEY SYS) (THIS MDL ONLY AVAIL W/RANDOM SELECTION KEY CODES & A NEW KEY WILL HAVE TO BE CUT USING THE CODE PROVIDED W/NEW MDL)
89	Y	16135270	1	175.44	MODULE, THEFT DTRNT (PASS KEY SYS)
91–96	Y	07844651	1	27.29	RACK KIT, IGN SW (W/SECTOR)
84–86	Y	07844651	1	27.29	RACK KIT, W/COL SECTOR
91–96	Y	07827157	1	6.73	RACK, IGN & START SW (USED W/ TILT COL)
84–86	Y T&T WHL (N37)	07827157	1	6.73	RACK, IGN SW ACTR
84–86	Y	07841678	1	4.15	SCREW, COL LK RET
91–96	Y	07837466	1	16.93	SHAFT, IGN & START SW ACTR
84–86	Y	07837466	1	16.93	SHAFT, STRG COL IGN SW SEL DRIVE
91–96	Y	07804908	1	4.35	SPRING, IGN & START SW RACK
84–86	Y	07804908	1	4.35	SPRING, IGN SW RACK PRELOAD
91–96	Y	26022717	1	5.81	SWITCH, IGN KEY ALARM (BUZZER ONLY) (AC–DELCO #D1458C)
84–86	Y	26022717	1	5.81	SWITCH, IGN KEY WARNING ALARM (AC–DELCO #D1458C)
84–87	Y (EXC ELEC S/D LK (AU3)	14066515	LH	42.59	SWITCH, THEFT DTRNT DR LK
84–87	Y (EXC ELEC S/D LK (AU3)	14066516	RH	DISCON	SWITCH, THEFT DTRNT DR LK

© 2000 GENERAL MOTORS SERVICE PARTS OPERATIONS

2.195 ACTUATOR – ALARM – BOLT – BRACKET – CLIP – CONNECTOR – MODULE – RACK – RACK KIT – RELAY – SCREW – SHAFT – SPRING – SWITCH, Ignition Switch Warning, Lock, Headlamp, Theft Deterrent or Rear/Side Object(Con't)

EXPORT ***************EXPORT***************EXPORT***************EXPORT***************EXPORT*

93–96	EUROPEAN PROVISIONS (VD1) (EXPORT), VE1 (EXPORT)	10098454	1	4.64	BRACKET, ST BELT & IGN KEY & LPS ALARM .....

2.440 BRACKET – CONNECTOR – COVER, Chassis Electric Diagnostic

84–96	Y	14073479	1	1.63	BRACKET, I/P WRG HARN ECM DATA LINK CONN (DIAG CONN) .....
84–93	Y	10021766	1	2.24	COVER, I/P WRG HARN DATA LINK CONN .....

2.461 ALARM, Capsule/Headlamp Warning

90–96	Y	25518745	1	55.34	ALARM, ST BELT & IGN KEY & LPS (09.765) .....

2.480 BRACKET – CONNECTOR – HARNESS – WIRE, Chassis Wiring

94	Y 4–SPD A/TRANS (M30)	15320479	1	119.63	HARNESS, A/TRNS WRG (AC–DELCO #15320479) .....
95	Y 4–SPD A/TRANS (M30)	15320477	1	75.73	HARNESS, A/TRNS WRG (INCLS TCC SOLENOID W/TCC DRAINDOWN FEATURE) (AC–DELCO #15320477)
96	Y 4–SPD A/TRANS (M30)	15320476	1	81.04	HARNESS, A/TRNS WRG (INCLS TCC SOL VLV) (AC–DELCO #15320476) .
85	Y A/TRNS (MD8)	12048732	1	DISCON	HARNESS, E .C .M. .....
85	Y M/TRNS (MH5, MK2) W/FED (NA5)	12048733	1	DISCON	HARNESS, E .C .M. .....
84	Y A/TRNS, FED, CALIF (1ST DES) ..	12028754	1	DISCON	HARNESS, ELEK CONT MDL WRG (SGL WIRE OIL PRESS SW CONN) ..
84	Y M/TRNS, FED, CALIF (1ST DES) .	12029190	1	DISCON	HARNESS, ELEK CONT MDL WRG (SGL WIRE OIL PRESS SW CONN) ..
84	Y M/TRNS, FED, CALIF (2ND DES) .	12029216	1	DISCON	HARNESS, ELEK CONT MDL WRG (DBL WIRE OIL PRESS SW CONN) ..
84	Y A/TRNS, FED, CALIF (2ND DES) .	12029217	1	DISCON	HARNESS, ELEK CONT MDL WRG (DBL WIRE OIL PRESS SW CONN) ..
89	Y (5.7–8) A/TRNS, A/C (C68)	12090323	1	1266.25	HARNESS, ENG & ECM (02.525) .....
86	Y M/TRNS, A/C (C60), FED (NA5) (EXC NM8 EXPORT)	12048815	1	DISCON	HARNESS, ENG & ECM WRG (02.525) .
86	Y A/TRNS, A/C (C60) (EXC NM8 EXPORT)	12048817	1	DISCON	HARNESS, ENG & ECM WRG (02.525) .
86	Y A/TRNS, A/C (C68) (EXC NM8 EXPORT)	12048818	1	DISCON	HARNESS, ENG & ECM WRG (02.525) .
86	Y07 M/TRNS, A/C (C68), FED (NA5) (EXC NM8 EXPORT)	12048816	1	DISCON	HARNESS, ENG & ECM WRG (02.525) .
87	Y M/TRNS, A/C (C60)	12067670	1	DISCON	HARNESS, ENG & ECM WRG (02.525) .
87	Y M/TRNS, A/C (C68)	12067671	1	DISCON	HARNESS, ENG & ECM WRG (02.525) .
87	Y A/TRNS, A/C, FED (NA5) (EXC NM8 EXPORT)	12067672	1	DISCON	HARNESS, ENG & ECM WRG (02.525) .
87	Y A/TRNS, A/C (C68), FED (NA5) (EXC NM8 EXPORT)	12067673	1	DISCON	HARNESS, ENG & ECM WRG (02.525) .
88	Y A/TRNS, A/C (C60)	12055808	1	DISCON	HARNESS, ENG & ECM WRG (02.525) .
88	Y A/TRNS, A/C (C68)	12055809	1	DISCON	HARNESS, ENG & ECM WRG (02.525) .
88	Y M/TRNS, A/C (C60)	12080840	1	DISCON	HARNESS, ENG & ECM WRG (02.525) .
88	Y M/TRNS, A/C (C68)	12080841	1	DISCON	HARNESS, ENG & ECM WRG (02.525) .
89	Y (5.7–8) M/TRNS, A/C (C60) (2ND DES)	12090320	1	1266.25	HARNESS, ENG & ECM WRG (02.525) (ORANGE WIRE IN B–8 CAV OF VATS MDL CONN) .....
89	Y (5.7–8) M/TRNS, A/C (C68)	12090321	1	1266.25	HARNESS, ENG & ECM WRG (02.525) .

© 2000 GENERAL MOTORS SERVICE PARTS OPERATIONS

2.480 BRACKET – CONNECTOR – HARNESS – WIRE, Chassis Wiring(Con't)

89	Y (5.7–8) A/TRNS, A/C (C60) (2ND DES)	12090322	1	1266.25	HARNESS, ENG & ECM WRG (02.525) (CHANGE WIRE IN B–8 CAV OF VATS MDL CONN) .....
89	Y (5.7J)	12090324	1	1266.25	HARNESS, ENG & ECM WRG (02.525) .
91	Y 5.7J (LT5)	12106549	1	26.14	HARNESS, ENG PWR SW WRG (I/P TO VALET MODE SW) (USE W/4 PIN ENG PWR SW CONN) .....
87–89	Y	12067418	1	DISCON	HARNESS, F/FLR CNSL .....
84–86	Y	12029153	1	DISCON	HARNESS, FRT FLR CNSL WRG .....
85	Y (EXC VB4, VD1, VE1, VT7 EXPORT)	12050645	1	DISCON	HARNESS, FWD LP .....
86	Y (EXC VB4, VD1, VE1, VT7 EXPORT)	12048809	1	DISCON	HARNESS, FWD LP .....
87	Y (EXC T72, T84 EXPORT)	12067732	1	DISCON	HARNESS, FWD LP .....
84	Y	12028953	1	DISCON	HARNESS, FWD LP WRG .....
88	Y (EXC T72, T84 EXPORT)	12073487	1	666.86	HARNESS, FWD LP WRG .....
89	Y (5.7–8)	12073487	1	666.86	HARNESS, FWD LP WRG .....
90	Y (5.7–8) (EXC CANADIAN T61) ...	12073776	1	666.86	HARNESS, FWD LP WRG .....
90	Y (5.7J) SOFT RIDE SUSP (FE1), H .D .SUSP (EXC CANADIAN T61) ...	12090331	1	985.50	HARNESS, FWD LP WRG .....
91	Y 5.7–8 (LC8), (EXC DAYTIME RUNNING LGT (T61)	12080863	1	985.50	HARNESS, FWD LP WRG .....
91	Y 5.7J (LT5), SOFT RIDE SUSP (FE1), HVY DUTY SUSP (FE7), (EXC DAYTIME RUNNING LGT (T61)	12080864	1	666.86	HARNESS, FWD LP WRG .....
92	Y 5.7P (LT1), (EXC DAYTIME RUNNING LGT (T61)	12090371	1	292.85	HARNESS, FWD LP WRG .....
92	Y 5.7J (LT5), (EXC DAYTIME RUNNING LGT (T61)	12090372	1	315.14	HARNESS, FWD LP WRG .....
93	Y 5.7P (LT1), (EXC DIAGNOSTIC SYSTEM (BAK), DAYTIME RUNNING LGT (T61)	12106580	1	816.00	HARNESS, FWD LP WRG .....
93–94	Y 5.7J (LT5), (EXC DAYTIME RUNNING LGT (T61)	12106583	1	985.50	HARNESS, FWD LP WRG .....
93	Y 5.7P (LT1), DIAGNOSTIC SYSTEM (BAK), (EXC DAYTIME RUNNING LGT (T61)	12141822	1	292.85	HARNESS, FWD LP WRG .....
94	Y 5.7P (LT1), (EXC HDLP (T72) (EXPORT), RH RULE OF ROAD HDLP (T84) (EXPORT), LH RULE OF ROAD HDLP (T85) (EXPORT), SIG & MKR LP (T90) (EXPORT) ...	12130480	1	292.85	HARNESS, FWD LP WRG .....
94	Y 5.7J (LT5), (EXC HDLP (T72) (EXPORT), RH RULE OF ROAD HDLP (T84) (EXPORT), LH RULE OF ROAD HDLP (T85) (EXPORT), SIG & MKR LP (T90) (EXPORT) ...	12154336	1	292.85	HARNESS, FWD LP WRG .....
95	Y 5.7P (LT1), (EXC HDLP (T72) (EXPORT), RH RULE OF ROAD HDLP (T84) (EXPORT), LH RULE OF ROAD HDLP (T85) (EXPORT), SIG & MKR LP (T90) (EXPORT) ...	12130484	1	292.85	HARNESS, FWD LP WRG .....
95	Y 5.7J (LT5), (EXC HDLP (T72) (EXPORT), RH RULE OF ROAD HDLP (T84) (EXPORT), LH RULE OF ROAD HDLP (T85) (EXPORT), SIG & MKR LP (T90) (EXPORT) ...	12130486	1	292.85	HARNESS, FWD LP WRG .....

© 2000 GENERAL MOTORS SERVICE PARTS OPERATIONS

2.480 BRACKET – CONNECTOR – HARNESS – WIRE, Chassis Wiring(Con't)

96	Y (EXC HDLP (T72) (EXPORT), RH RULE OF ROAD HDLP (T84) (EXPORT), LH RULE OF ROAD HDLP (T85) (EXPORT), SIG & MKR LP (T90) (EXPORT)	12163717	1	202.85	HARNESS, FWD LP WRG .....
85	Y A/TRNS (MD8), A/C (C60)	12048741	1	DISCON	HARNESS, I/P .....
85	Y M/TRNS (MH5, MK2), A/C (C60) ..	12048742	1	DISCON	HARNESS, I/P .....
86	Y M/TRNS, A/C (C60)	12048793	1	DISCON	HARNESS, I/P .....
86	Y A/TRNS, A/C (C60)	12048794	1	DISCON	HARNESS, I/P .....
86	Y M/TRNS, A/C (C68)	12048795	1	DISCON	HARNESS, I/P .....
86	Y A/TRNS, A/C (C68)	12048796	1	DISCON	HARNESS, I/P .....
87	Y A/TRNS, A/C (C68)	12068102	1	1257.59	HARNESS, I/P .....
87	Y M/TRNS, A/C (C68)	12068103	1	1257.59	HARNESS, I/P .....
87	Y A/TRNS, A/C (C60)	12073820	1	DISCON	HARNESS, I/P .....
84	Y A/TRNS (1ST DES)	12036383	1	DISCON	HARNESS, I/P WRG (BLACK 5–WAY AC CONN W/2 DBL WIRES IN CAVS C & D) .....
84	Y M/TRNS	12043083	1	DISCON	HARNESS, I/P WRG .....
84	Y A/TRNS (2ND DES)	12043276	1	DISCON	HARNESS, I/P WRG (1 DBL WIRE IN CAV D) .....
87	Y M/TRNS (MH5, MK2), A/C (C60) ..	12073821	1	DISCON	HARNESS, I/P WRG .....
88	Y (5.7–8) M/TRNS, A/C (C60)	12073824	1	DISCON	HARNESS, I/P WRG .....
88	Y (5.7–8) A/TRNS, A/C (C60)	12073825	1	DISCON	HARNESS, I/P WRG .....
88	Y (5.7–8) M/TRNS, A/C (C68)	12073826	1	DISCON	HARNESS, I/P WRG .....
88	Y (5.7–8) A/TRNS, A/C (C68)	12073827	1	DISCON	HARNESS, I/P WRG .....
89	Y (5.7–8) ML9, A/C (C60) (1ST DES)	12073507	1	1548.75	HARNESS, I/P WRG (PINK WIRE IN B–8 CAV OF VATS MDL CONN) .....
89	Y (5.7–8) A/TRNS (MD8), A/C (C60) (1ST DES)	12073509	1	1548.75	HARNESS, I/P WRG (PINK WIRE IN B–8 CAV OF VATS MDL CONN) .....
89	Y (5.7–8) M/TRNS (ML9), A/C (C68) (1ST DES)	12073511	1	1548.75	HARNESS, I/P WRG (PINK WIRE IN B–8 CAV OF VATS MDL CONN) .....
89	Y (5.7–8) A/TRNS (MD8), A/C (C68) (1ST DES)	12073513	1	1548.75	HARNESS, I/P WRG (PINK WIRE IN B–8 CAV OF VATS MDL CONN) .....
89	Y (5.7–8) ML9, A/C (C60) (2ND DES)	12090315	1	1548.75	HARNESS, I/P WRG (ORANGE WIRE IN B–8 CAV OF VATS MDL CONN) .....
89	Y (5.7–8) A/TRNS (MD8), A/C (C60) (2ND DES)	12090316	1	1257.59	HARNESS, I/P WRG (ORANGE WIRE IN B–8 CAV OF VATS MDL CONN) .....
89	Y (5.7–8) M/TRNS (ML9), A/C (C68) (2ND DES)	12090318	1	1548.75	HARNESS, I/P WRG (ORANGE WIRE IN B–8 CAV OF VATS MDL CONN) .....
89	Y (5.7–8) A/TRNS (MD8), A/C (C68) (2ND DES)	12090319	1	1266.25	HARNESS, I/P WRG (ORANGE WIRE IN B–8 CAV OF VATS MDL CONN) .....
90	Y M/TRNS (ML9), A/C (C60) (EXC CANADIAN T61)	12101432	1	1239.00	HARNESS, I/P WRG (**VPI 1–877–846–8243) .....
90	Y M/TRNS (ML9), A/C (C68) (EXC CANADIAN T61)	12101434	1	1548.75	HARNESS, I/P WRG .....
90	Y 4–SPD A/TRANS (MD8), A/C MAN CONT (C60), (EXC DAYTIME RUNNING LGT (T61)	12102274	1	1257.59	HARNESS, I/P WRG .....
90	Y A/TRNS (MD8), A/C (C68) (EXC CANADIAN T61)	12102538	1	1257.59	HARNESS, I/P WRG .....
91	Y 4–SPD A/TRANS (MD8), A/C MAN CONT (C60), (EXC DAYTIME RUNNING LGT (T61)	12116436	1	1028.20	HARNESS, I/P WRG .....
91	Y 6–SPD M/TRANS (ML9), A/C MAN CONT (C60), (EXC DAYTIME RUNNING LGT (T61)	12116438	1	1028.20	HARNESS, I/P WRG .....
91	Y 4–SPD A/TRANS (MD8), A/C AUTO ELEC CONT (C68), (EXC DAYTIME RUNNING LGT (T61)	12116500	1	1266.25	HARNESS, I/P WRG (MAY REQ 12106563 WIRE IF JMPR PRESENT AT THE PWR SEAT FEED) .....

© 2000 GENERAL MOTORS SERVICE PARTS OPERATIONS

2.480 BRACKET – CONNECTOR – HARNESS – WIRE, Chassis Wiring(Con't)

91	Y 6-SPD M/TRANS (ML9), A/C AUTO ELEC CONT (C68), (EXC DAYTIME RUNNING LGT (T61)	12116502	1	1028.20	HARNESS, I/P WRG .....
92	Y 4-SPD A/TRANS (MD8), A/C MAN CONT (C60), (EXC DAYTIME RUNNING LGT (T61)	12125005	1	1028.20	HARNESS, I/P WRG .....
92	Y 6-SPD M/TRANS (ML9), A/C MAN CONT (C60), (EXC DAYTIME RUNNING LGT (T61)	12125007	1	1257.59	HARNESS, I/P WRG .....
92	Y 4-SPD A/TRANS (MD8), A/C AUTO ELEC CONT (C68), (EXC DAYTIME RUNNING LGT (T61)	12125813	1	881.59	HARNESS, I/P WRG .....
92	Y 6-SPD M/TRANS (ML9), A/C AUTO ELEC CONT (C68), (EXC DAYTIME RUNNING LGT (T61)	12125815	1	881.59	HARNESS, I/P WRG .....
93	Y 4-SPD A/TRANS (MD8), A/C MAN CONT (C60), (EXC SIG & MKR LP (T90) (EXPORT)	12141443	1	1257.59	HARNESS, I/P WRG .....
93	Y 6-SPD M/TRANS (ML9), A/C AUTO ELEC CONT (C68), (EXC SIG & MKR LP (T90) (EXPORT) ...	12141444	1	1257.59	HARNESS, I/P WRG (FOR VEH –DRL, SPLICE CAV D TO CAV E @ BLUE 8–WAY DRL MDL CONN.) .....
93	Y 6-SPD M/TRANS (ML9), A/C MAN CONT (C60), (EXC SIG & MKR LP (T90) (EXPORT)	12141445	1	1257.59	HARNESS, I/P WRG .....
93	Y 4-SPD A/TRANS (MD8), A/C AUTO ELEC CONT (C68), (EXC SIG & MKR LP (T90) (EXPORT) ...	12141446	1	1257.59	HARNESS, I/P WRG (ON VEHS W/O DAYTIME RUNNING LPS SPLICE CAV D & E WIRES TOGETHER AT BLUE DRL MDL CONN.) .....
94	Y 6-SPD M/TRANS (ML9), A/C MAN CONT (C60), (EXC DAYTIME RUNNING LGT (T61), HDLP (T72) (EXPORT), RH RULE OF ROAD HDLP (T84) (EXPORT), LH RULE OF ROAD HDLP (T85) (EXPORT), SIG & MKR LP (T90) (EXPORT) ...	12130324	1		HARNESS, I/P WRG .....
94	Y 6-SPD M/TRANS (ML9), A/C AUTO ELEC CONT (C68), (EXC DAYTIME RUNNING LGT (T61), HDLP (T72) (EXPORT), RH RULE OF ROAD HDLP (T84) (EXPORT), LH RULE OF ROAD HDLP (T85) (EXPORT), SIG & MKR LP (T90) (EXPORT)	12130326	1	1548.75	HARNESS, I/P WRG .....
94	Y 4-SPD A/TRANS (M30), A/C MAN CONT (C60), (EXC DAYTIME RUNNING LGT (T61), HDLP (T72) (EXPORT), RH RULE OF ROAD HDLP (T84) (EXPORT), LH RULE OF ROAD HDLP (T85) (EXPORT), SIG & MKR LP (T90) (EXPORT), (2ND DES)	12130491	1		HARNESS, I/P WRG .....
94	Y 4-SPD A/TRANS (M30), A/C MAN CONT (C60), DAYTIME RUNNING LGT (T61), (EXC HDLP (T72) (EXPORT), RH RULE OF ROAD HDLP (T84) (EXPORT), LH RULE OF ROAD HDLP (T85) (EXPORT), SIG & MKR LP (T90) (EXPORT) ...	12130492	1		HARNESS, I/P WRG .....

© 2000 GENERAL MOTORS SERVICE PARTS OPERATIONS

2.480 BRACKET – CONNECTOR – HARNESS – WIRE, Chassis Wiring(Con't)

94	Y 4-SPD A/TRANS (M30), A/C AUTO ELEC CONT (C68), (EXC DAYTIME RUNNING LGT (T61), HDLP (T72) (EXPORT), RH RULE OF ROAD HDLP (T84) (EXPORT), LH RULE OF ROAD HDLP (T85) (EXPORT), SIG & MKR LP (T90) (EXPORT)	12130493	1	1488.75	HARNESS, I/P WRG .....
94	Y 4-SPD A/TRANS (M30), A/C AUTO ELEC CONT (C68), DAYTIME RUNNING LGT (T61), (EXC HDLP (T72) (EXPORT), RH RULE OF ROAD HDLP (T84) (EXPORT), LH RULE OF ROAD HDLP (T85) (EXPORT), SIG & MKR LP (T90) (EXPORT)	12130494	1		HARNESS, I/P WRG .....
94	Y 4-SPD A/TRANS (M30), A/C MAN CONT (C60), DAYTIME RUNNING LGT (T61), (EXC HDLP (T72) (EXPORT), RH RULE OF ROAD HDLP (T84) (EXPORT), LH RULE OF ROAD HDLP (T85) (EXPORT), SIG & MKR LP (T90) (EXPORT), (1ST DES)	12141787	1		HARNESS, I/P WRG (TAGGED 0320 OR 0321) (ON VEH W/O DRL, AT 8-WAY BLUE CONN TO DRL MDL SPLICE CAV D & CAV E LEADS TOGETHER.) .....
94	Y 4-SPD A/TRANS (M30), A/C AUTO ELEC CONT (C68), DAYTIME RUNNING LGT (T61), (EXC HDLP (T72) (EXPORT), RH RULE OF ROAD HDLP (T84) (EXPORT), LH RULE OF ROAD HDLP (T85) (EXPORT), SIG & MKR LP (T90) (EXPORT), (1ST DES) ...	12141788	1		HARNESS, I/P WRG (TAGGED 0322 OR 0323) (ON VEH W/DAYTIME RUNNING LGHTS, ADD 8-WAY BLUE CONN TO DAYTIME RUNNING LGHT, SPLICE CAV D & CAV E WIRES TOGETHER) .....
94	Y 6-SPD M/TRANS (ML9), A/C MAN CONT (C60), DAYTIME RUNNING LGT (T61), (EXC HDLP (T72) (EXPORT), RH RULE OF ROAD HDLP (T84) (EXPORT), LH RULE OF ROAD HDLP (T85) (EXPORT), SIG & MKR LP (T90) (EXPORT) ...	12141789	1		HARNESS, I/P WRG .....
94	Y 6-SPD M/TRANS (ML9), A/C AUTO ELEC CONT (C68), DAYTIME RUNNING LGT (T61), (EXC HDLP (T72) (EXPORT), RH RULE OF ROAD HDLP (T84) (EXPORT), LH RULE OF ROAD HDLP (T85) (EXPORT), SIG & MKR LP (T90) (EXPORT)	12141790	1		HARNESS, I/P WRG .....
94	Y 6-SPD M/TRANS (ML9), A/C AUTO ELEC CONT (C68), (EXC HDLP (T72) (EXPORT), RH RULE OF ROAD HDLP (T84) (EXPORT), LH RULE OF ROAD HDLP (T85) (EXPORT), SIG & MKR LP (T90) (EXPORT)	12163703	1	1257.59	HARNESS, I/P WRG .....
95	Y 5.7J (LT5), 6-SPD M/TRANS (ML9), A/C AUTO ELEC CONT (C68), (EXC DAYTIME RUNNING LGT (T61)	12130326	1	1548.75	HARNESS, I/P WRG .....

© 2000 GENERAL MOTORS SERVICE PARTS OPERATIONS

2.480 BRACKET – CONNECTOR – HARNESS – WIRE, Chassis Wiring(Con't)

95	Y 5.7P (LT1), 4-SPD A/TRANS (M30), A/C MAN CONT (C60), DAYTIME RUNNING LGT (T61), (EXC HDLP (T72) (EXPORT), RH RULE OF ROAD HDLP (T84) (EXPORT), LH RULE OF ROAD HDLP (T85) (EXPORT), SIG & MKR LP (T90) (EXPORT)	12130389	1	1424.85	HARNESS, I/P WRG .....
95	Y 5.7P (LT1), 4-SPD A/TRANS (M30), A/C AUTO ELEC CONT (C68), DAYTIME RUNNING LGT (T61), (EXC HDLP (T72) (EXPORT), RH RULE OF ROAD HDLP (T84) (EXPORT), LH RULE OF ROAD HDLP (T85) (EXPORT), SIG & MKR LP (T90) (EXPORT)	12130391	1	1424.85	HARNESS, I/P WRG (SPLICE CAV D & E WIRES @ BLUE DRL MDL CONN FOR VEH W/O DRL.) .....
95	Y 5.7J (LT5), 6-SPD M/TRANS (ML9), A/C AUTO ELEC CONT (C68), DAYTIME RUNNING LGT (T61)	12141790	1		HARNESS, I/P WRG .....
95	Y 5.7P (LT1), 6-SPD M/TRANS (ML9), A/C MAN CONT (C60), (EXC DAYTIME RUNNING LGT (T61), HDLP (T72) (EXPORT), RH RULE OF ROAD HDLP (T84) (EXPORT), LH RULE OF ROAD HDLP (T85) (EXPORT), SIG & MKR LP (T90) (EXPORT)	12163700	1	1548.75	HARNESS, I/P WRG .....
95	Y 5.7P (LT1), 6-SPD M/TRANS (ML9), A/C AUTO ELEC CONT (C68), (EXC DAYTIME RUNNING LGT (T61), HDLP (T72) (EXPORT), RH RULE OF ROAD HDLP (T84) (EXPORT), LH RULE OF ROAD HDLP (T85) (EXPORT), SIG & MKR LP (T90) (EXPORT)	12163702	1	1257.59	HARNESS, I/P WRG .....
95	Y 5.7J (LT5), 6-SPD M/TRANS (ML9), A/C AUTO ELEC CONT (C68)	12163703	1	1257.59	HARNESS, I/P WRG .....
96	Y 4-SPD A/TRANS (M30), A/C MAN CONT (C60), (EXC HDLP (T72) (EXPORT), RH RULE OF ROAD HDLP (T84) (EXPORT), LH RULE OF ROAD HDLP (T85) (EXPORT), SIG & MKR LP (T90) (EXPORT) ...	12130468	1	1548.75	HARNESS, I/P WRG (WHEN USE ON VEH W/O DAYTIME RUN LIGHTS, SPLICE CAV D&E TOGETHER @ BLUE 8-WAY DRL MOD CONN) .....
96	Y 4-SPD A/TRANS (M30), A/C AUTO ELEC CONT (C68), (EXC HDLP (T72) (EXPORT), RH RULE OF ROAD HDLP (T84) (EXPORT), LH RULE OF ROAD HDLP (T85) (EXPORT), SIG & MKR LP (T90) (EXPORT)	12130470	1	1061.69	HARNESS, I/P WRG (WHEN USE ON VEH W/O DAYTIME RUN LIGHTS, SPLICE CAV D&E TOGETHER @ BLUE 8-WAY DRL MOD CONN) .....
96	Y 6-SPD M/TRANS (ML9), A/C MAN CONT (C60), (EXC HDLP (T72) (EXPORT), RH RULE OF ROAD HDLP (T84) (EXPORT), LH RULE OF ROAD HDLP (T85) (EXPORT), SIG & MKR LP (T90) (EXPORT) ...	12130472	1	1257.59	HARNESS, I/P WRG (WHEN USE ON VEH W/O DAYTIME RUN LIGHTS, SPLICE CAV D&E TOGETHER @ BLUE 8-WAY DRL MOD CONN) .....

© 2000 GENERAL MOTORS SERVICE PARTS OPERATIONS

2.480 BRACKET – CONNECTOR – HARNESS – WIRE, Chassis Wiring(Con't)

96	Y 6–SPD M/TRANS (ML9), A/C AUTO ELEC CONT (C68), (EXC HDLP (T72) (EXPORT), RH RULE OF ROAD HDLP (T84) (EXPORT), LH RULE OF ROAD HDLP (T85) (EXPORT), SIG & MKR LP (T90) (EXPORT)	12130474	1	1257.59	HARNESS, I/P WRG (WHEN USE ON VEH W/O DAYTIME RUN LIGHTS, SPLICE CAV D&E TOGETHER @ BLUE 8–WAY DRL MOD CONN) .....
84–91	Y RECL FRT BKT ST (AQ9)	12028999	1	DISCON	HARNESS, I/P WRG HARN EXTN .....
91	Y	12126533	1	DISCON	HARNESS, I/P WRG HARN EXTN (VALET MODE) (USE W/4 PIN ENG PWR SW CONN) .....
92–97	Y RECL FRT BKT ST (AQ9)	12106560	1	47.45	HARNESS, I/P WRG HARN EXTN .....
85–91	Y	12029463	1	25.75	HARNESS, INT AIR TEMP SEN WRG ...
84–85	Y	12028667	1	DISCON	HARNESS, MIR LP WRG .....
	*EXPORT**********EXPORT**********EXPORT**********EXPORT**********EXPORT*				
84	Y NM5 (EXPORT CANADA) (2ND DES)	12029435	1	DISCON	HARNESS, ELEK CONT MDL (OIL PRESS SW HAS 3 SINGLE WIRES) ..
84	Y NM5 (EXPORT, CANADA) (1ST DES)	12029044	1	DISCON	HARNESS, ELEK CONT MDL WRG (OIL PRESS SW CONN HAS 1 DBL WIRE & 1 SGL WIRE) .....
86	Y M/TRNS, A/C (C60), (NM5) EXPORT, CANADA (EXC NM8 EXPORT)	12048815	1	DISCON	HARNESS, ENG & ECM WRG (02.525) .
86	Y A/TRNS, NM8 (EXPORT)	12048819	1	DISCON	HARNESS, ENG & ECM WRG (02.525) .
86	Y07 M/TRNS, A/C (C68), (NM5) EXPORT, CANADA (EXC NM8 EXPORT)	12048816	1	DISCON	HARNESS, ENG & ECM WRG (02.525) .
87	Y A/TRNS, A/C, NM5 (EXPORT, CANADA) (EXC NM8 EXPORT)	12067672	1	DISCON	HARNESS, ENG & ECM WRG (02.525) .
87	Y A/TRNS, A/C (C68), NM5 (EXPORT, CANADA) (EXC NM8 EXPORT)	12067673	1	DISCON	HARNESS, ENG & ECM WRG (02.525) .
87	Y A/TRNS, NM8 (EXPORT)	12067674	1	DISCON	HARNESS, ENG & ECM WRG (02.525) .
84	Y VB4, VD1, VE1, VT7 (EXPORT) ...	12029218	1	DISCON	HARNESS, FWD LP .....
85	Y VB4, VD1, VE1, VT7 (EXPORT) ...	12050642	1	DISCON	HARNESS, FWD LP .....
86	Y VB4, VD1, VE1, VT7 (EXPORT) ...	12055776	1	DISCON	HARNESS, FWD LP .....
87	Y T72, T84 (EXPORT)	12067734	1	DISCON	HARNESS, FWD LP .....
88	Y T72, T84 (EXPORT)	12055815	1	DISCON	HARNESS, FWD LP WRG .....
90	Y (5.7–8) T61 (CANADIAN)	12090336	1	667.87	HARNESS, FWD LP WRG .....
90	Y (5.7J) T61 (CANADIAN)	12090337	1	987.00	HARNESS, FWD LP WRG .....
91	Y 5.7–8 (L98), DAYTIME RUNNING LGT (T61)	12090346	1	667.87	HARNESS, FWD LP WRG .....
91	Y 5.7J (LT5), DAYTIME RUNNING LGT (T61)	12090347	1	667.87	HARNESS, FWD LP WRG .....
92	Y 5.7P (LT1), DAYTIME RUNNING LGT (T61)	12090373	1	667.87	HARNESS, FWD LP WRG .....
92	Y 5.7J (LT5), DAYTIME RUNNING LGT (T61)	12090374	1	667.87	HARNESS, FWD LP WRG .....
93	Y 5.7P (LT1), DAYTIME RUNNING LGT (T61)	12106581	1	666.86	HARNESS, FWD LP WRG .....
93	Y 5.7J (LT5), DAYTIME RUNNING LGT (T61)	12106582	1	611.03	HARNESS, FWD LP WRG .....
94	Y 5.7P (LT1), HDLP (T72) (EXPORT), RH RULE OF ROAD HDLP (T84) (EXPORT), LH RULE OF ROAD HDLP (T85) (EXPORT), SIG & MKR LP (T90) (EXPORT)	12130481	1		HARNESS, FWD LP WRG .....

© 2000 GENERAL MOTORS SERVICE PARTS OPERATIONS

2.480 BRACKET – CONNECTOR – HARNESS – WIRE, Chassis Wiring(Con't)

94	Y 5.7J (LT5), HDLP (T72) (EXPORT), RH RULE OF ROAD HDLP (T84) (EXPORT), LH RULE OF ROAD HDLP (T85) (EXPORT), SIG & MKR LP (T90) (EXPORT)	12154337	1		HARNESS, FWD LP WRG .....
95	Y 5.7P (LT1), HDLP (T72) (EXPORT), RH RULE OF ROAD HDLP (T84) (EXPORT), LH RULE OF ROAD HDLP (T85) (EXPORT), SIG & MKR LP (T90) (EXPORT)	12130485	1	292.85	HARNESS, FWD LP WRG .....
96	Y HDLP (T72) (EXPORT), RH RULE OF ROAD HDLP (T84) (EXPORT), LH RULE OF ROAD HDLP (T85) (EXPORT), SIG & MKR LP (T90) (EXPORT)	12163718	1	272.58	HARNESS, FWD LP WRG .....
94–96	Y HDLP (T72) (EXPORT), RH RULE OF ROAD HDLP (T84) (EXPORT), LH RULE OF ROAD HDLP (T85) (EXPORT), SIG & MKR LP (T90) (EXPORT)	12130344	2	40.09	HARNESS, FWD LP WRG HARN EXTN .
90	Y M/TRNS (ML9), A/C (C60), T61 (CANADIAN)	12101433	1	1266.25	HARNESS, I/P WRG .....
90	Y M/TRNS (ML9), A/C (C68), T61 (CANADIAN)	12101435	1	1266.25	HARNESS, I/P WRG .....
90	Y A/TRNS (MD8), A/C (C68), T61 (CANADIAN)	12102273	1	1028.20	HARNESS, I/P WRG .....
90	Y A/TRNS (MD8), A/C (C60), T61 (CANADIAN)	12102537	1		HARNESS, I/P WRG .....
91	Y 4–SPD A/TRANS (MD8), A/C MAN CONT (C60), DAYTIME RUNNING LGT (T61)	12116437	1	1028.20	HARNESS, I/P WRG .....
91	Y 6–SPD M/TRANS (ML9), A/C MAN CONT (C60), DAYTIME RUNNING LGT (T61)	12116439	1	1028.20	HARNESS, I/P WRG .....
91	Y 4–SPD A/TRANS (MD8), A/C AUTO ELEC CONT (C68), DAYTIME RUNNING LGT (T61)	12116501	1	1028.20	HARNESS, I/P WRG .....
91	Y 6–SPD M/TRANS (ML9), A/C AUTO ELEC CONT (C68), DAYTIME RUNNING LGT (T61)	12116503	1	1028.20	HARNESS, I/P WRG .....
92	Y 4–SPD A/TRANS (MD8), A/C MAN CONT (C60), DAYTIME RUNNING LGT (T61)	12125006	1	1028.20	HARNESS, I/P WRG .....
92	Y 6–SPD M/TRANS (ML9), A/C MAN CONT (C60), DAYTIME RUNNING LGT (T61)	12125008	1	1028.20	HARNESS, I/P WRG .....
92	Y 4–SPD A/TRANS (MD8), A/C AUTO ELEC CONT (C68), DAYTIME RUNNING LGT (T61)	12125814	1	1028.20	HARNESS, I/P WRG .....
92	Y 6–SPD M/TRANS (ML9), A/C AUTO ELEC CONT (C68), DAYTIME RUNNING LGT (T61)	12125816	1	1028.20	HARNESS, I/P WRG .....
93	Y 6–SPD M/TRANS (ML9), A/C AUTO ELEC CONT (C68), SIG & MKR LP (T90) (EXPORT)	12141441	1	1547.50	HARNESS, I/P WRG .....
93	Y 4–SPD A/TRANS (MD8), A/C AUTO ELEC CONT (C68), SIG & MKR LP (T90) (EXPORT)	12141442	1	1256.57	HARNESS, I/P WRG .....

© 2000 GENERAL MOTORS SERVICE PARTS OPERATIONS

2.480 BRACKET – CONNECTOR – HARNESS – WIRE, Chassis Wiring(Con't)

94	Y 4–SPD A/TRANS (M30), A/C AUTO ELEC CONT (C68), HDLP (T72) (EXPORT), RH RULE OF ROAD HDLP (T84) (EXPORT), LH RULE OF ROAD HDLP (T85) (EXPORT), SIG & MKR LP (T90) (EXPORT)	12130495	1		HARNESS, I/P WRG .....
94	Y 4–SPD A/TRANS (M30), A/C AUTO ELEC CONT (C68), HDLP (T72) (EXPORT), RH RULE OF ROAD HDLP (T84) (EXPORT), LH RULE OF ROAD HDLP (T85) (EXPORT), SIG & MKR LP (T90) (EXPORT), (1ST DES)	12141791	1		HARNESS, I/P WRG (TAGGED 0328) ...
94	Y 6–SPD M/TRANS (ML9), A/C AUTO ELEC CONT (C68), HDLP (T72) (EXPORT), RH RULE OF ROAD HDLP (T84) (EXPORT), LH RULE OF ROAD HDLP (T85) (EXPORT), SIG & MKR LP (T90) (EXPORT)	12141792	1		HARNESS, I/P WRG .....
95	Y 5.7P (LT1), 4–SPD A/TRANS (M30), A/C AUTO ELEC CONT (C68), HDLP (T72) (EXPORT), RH RULE OF ROAD HDLP (T84) (EXPORT), LH RULE OF ROAD HDLP (T85) (EXPORT), SIG & MKR LP (T90) (EXPORT), (EXC DAYTIME RUNNING LGT (T61)	12130396	1	1257.59	HARNESS, I/P WRG .....
95	Y 5.7P (LT1), 6–SPD M/TRANS (ML9), A/C MAN CONT (C60), DAYTIME RUNNING LGT (T61), (EXC HDLP (T72) (EXPORT), RH RULE OF ROAD HDLP (T84) (EXPORT), LH RULE OF ROAD HDLP (T35) (EXPORT), SIG & MKR LP (T90) (EXPORT)	12163701	1	1257.59	HARNESS, I/P WRG .....
95	Y 5.7P (LT1), 6–SPD M/TRANS (ML9), A/C AUTO ELEC CONT (C68), DAYTIME RUNNING LGT (T61), (EXC HDLP (T72) (EXPORT), RH RULE OF ROAD HDLP (T84) (EXPORT), LH RULE OF ROAD HDLP (T85) (EXPORT), SIG & MKR LP (T90) (EXPORT)	12163703	1	1257.59	HARNESS, I/P WRG .....
95	Y 5.7P (LT1), 6–SPD M/TRANS (ML9), A/C AUTO ELEC CONT (C68), HDLP (T72) (EXPORT), RH RULE OF ROAD HDLP (T84) (EXPORT), LH RULE OF ROAD HDLP (T85) (EXPORT), SIG & MKR LP (T90) (EXPORT), (EXC DAYTIME RUNNING LGT (T61)	12163704	1	1257.59	HARNESS, I/P WRG .....

© 2000 GENERAL MOTORS SERVICE PARTS OPERATIONS

2.480 BRACKET – CONNECTOR – HARNESS – WIRE, Chassis Wiring(Con't)

96	Y 4–SPD A/TRANS (M30), A/C AUTO ELEC CONT (C68), HDLP (T72) (EXPORT), RH RULE OF ROAD HDLP (T84) (EXPORT), LH RULE OF ROAD HDLP (T85) (EXPORT), SIG & MKR LP (T90) (EXPORT), (EXC DAYTIME RUNNING LGT (T61)	12130475	1	1257.59	HARNESS, I/P WRG .....
96	Y 5.7–5 (LT4), 6–SPD M/TRANS (ML9), A/C AUTO ELEC CONT (C68), HDLP (T72) (EXPORT), RH RULE OF ROAD HDLP (T84) (EXPORT), LH RULE OF ROAD HDLP (T85) (EXPORT), SIG & MKR LP (T90) (EXPORT), (EXC DAYTIME RUNNING LGT (T61)	12163715	1	1257.59	HARNESS, I/P WRG .....

2.483 BLOCK – BRACKET – BREAKER – CLIP – CONNECTOR – COVER – HOUSING – INSULATOR – LABEL – NUT – PULLER – RETAINER – RIVET, Main Wiring Junction and Fuse Block

93	Y	10165399	1	4.34	BRACKET, ENG WRG HARN FUSE BLK (LOCATED BEHIND BATT) .....
94–95	Y 5.7J (LT5)	10165399	1	4.34	BRACKET, ENG WRG HARN FUSE BLK (LOCATED BEHIND BATT) .....
94–96	Y 5.7P (LT1)	10252093	1	4.34	BRACKET, ENG WRG HARN FUSE BLK (LOCATED BEHIND BATT) .....
86–92	Y	14093148	1	DISCON	BRACKET, ENG WRG HARN J/BLK ....
93–96	Y	10202843	1	4.34	BRACKET, FWD LP WRG HARN FUSE BLK (LOCATED ON WHL/HSE PNL) ..
84–96	Y	14062568	1	3.72	BRACKET, I/P WRG HARN FUSE BLK ..
84–85	Y	14062512	1	DISCON	BRACKET, MULTIUSE RLY .....
90–96	Y	10172488	1	6.58	BRACKET, MULTIUSE RLY (RIGHT BRKT) (4.0", 102.0 MM LG) (PLASTIC) .....
90–91	Y	10175542	LH	22.29	BRACKET, MULTIUSE RLY (LEFT BRKT) (5.2", 132.0 MM LG) (PLASTIC) .....
90–93	Y	10240571	1	11.58	BRACKET, MULTIUSE RLY (BLACK) (18.3", 465.0MM LONG) (PLASTIC) ...
90	Y 5.7J (LT5), A/C MAN CONT (C60) .	14104778	1	3.06	BRACKET, MULTIUSE RLY (STEEL) (8.7"X3.5") (220.0MMX88.5MM) .....
92	Y 5.7P (LT1), 6–SPD M/TRANS (ML9), A/C MAN CONT (C60)	10165350	1	6.58	BRACKET, MULTIUSE RLY (7.4", 188.0 MM LG) (STEEL) .....
92	Y 5.7J (LT5)	10165350	1	6.58	BRACKET, MULTIUSE RLY (7.4", 188.0 MM LG) (STEEL) .....
92	Y 5.7P (LT1), 4–SPD A/TRANS (MD8), A/C MAN CONT (C60)	10165387	1	DISCON	BRACKET, MULTIUSE RLY (5.4", 136.0 MM LG) (STEEL) .....
92–96	Y	10167109	1	11.58	BRACKET, MULTIUSE RLY (5.2", 132 MM LG) (PLASTIC) .....
92	Y 5.7P (LT1), 6–SPD M/TRANS (ML9), A/C AUTO ELEC CONT (C68)	14104140	1	1.88	BRACKET, MULTIUSE RLY (STEEL) (3.0"X2.0") (76.7MMX51.0MM)) (01.055) .....
93–95	Y 5.7J (LT5)	10204735	1	6.58	BRACKET, MULTIUSE RLY .....
93–95	Y 5.7P (LT1), A/C AUTO ELEC CONT (C68)	10214029	1	6.58	BRACKET, MULTIUSE RLY .....
93–95	Y 5.7P (LT1), A/C MAN CONT (C60)	10214030	1	6.58	BRACKET, MULTIUSE RLY .....
94–96	Y	10161867	1	11.58	BRACKET, MULTIUSE RLY .....
96	Y A/C AUTO ELEC CONT (C68)	10214029	1	6.58	BRACKET, MULTIUSE RLY .....
96	Y A/C MAN CONT (C60)	10214030	1	6.58	BRACKET, MULTIUSE RLY .....
84–89	Y	14062543	1	DISCON	COVER, F/FLR CNSL COMPT LP .....
93–96	Y	12077538	2	5.57	COVER, FUSE BLK .....

© 2000 GENERAL MOTORS SERVICE PARTS OPERATIONS

2.483 BLOCK – BRACKET – BREAKER – CLIP – CONNECTOR – COVER – HOUSING – INSULATOR – LABEL – NUT – PULLER – RETAINER – RIVET, Main Wiring Junction and Fuse Block(Con't)

84–89	Y	14047597	1	7.29	COVER, FUSE BOX ACC HOLE (SCREW LOCK IS PART OF ASM)
90–92	Y	10172478	1	22.38	COVER, I/P FUSE BLK ACC HOLE
93	Y	10221936	1	22.38	COVER, I/P FUSE BLK ACC HOLE
94	Y	10257359	1	19.23	COVER, I/P FUSE BLK ACC HOLE (BLACK)
95	Y	10257359	1	19.23	COVER, I/P FUSE BLK ACC HOLE (BLACK)
96	Y	10280357	1	22.38	COVER, I/P FUSE BLK ACC HOLE (BLACK)
94	Y 4–SPD A/TRANS (M30), A/C MAN CONT (C60), A/C AUTO ELEC CONT (C68)	12077573	1	3.80	COVER, MULTIUSE RLY & FUSE (PART OF HARN) (FROM I/P HARNESS)
95	Y 6--SPD M/TRANS (ML9), A/C MAN CONT (C60), A/C AUTO ELEC CONT (C68)	12077573	1	3.80	COVER, MULTIUSE RLY & FUSE (PART OF HARN) (FROM I/P HARNESS)
96	Y	12077573	1	3.80	COVER, MULTIUSE RLY & FUSE (FROM I/P HARNESS)
84–92	Y	14049066	1	1.05	NUT, I/P FUSE BLK ACC HOLE CVR

2.485 BRACKET – CONNECTOR – GRILLE – LAMP – MODULE – RELAY – SENSOR – SOCKET – SWITCH, Capsule/Headlamp/Fog Lamp

90–96	Y	10159561	1	3.11	LAMP, HDLP SW (FOG LP) (CARTRIDGE TYPE–CLEAR BULB W/ORANGE CAP)
84–86	Y (EXC EXPORT)	14066536	1	13.01	SWITCH, FOG LP
87–88	Y (EXC T90 EXPORT)	14066536	1	13.01	SWITCH, FOG LP
89	Y	14066536	1	13.01	SWITCH, FOG LP
84–89	Y	01995257	1	31.62	SWITCH, HDLP (AC–DELCO #D1530A)
84–89	Y	10098435	1	24.75	SWITCH, HDLP (W/TIMER, INTR LP) (02.490) (AC–DELCO #10098435)
90–91	Y	10098487	1	138.72	SWITCH, HDLP & I/P LP DIMR & ACSRY (W/HSG) (AC–DELCO #D1527C)
92–93	Y	10098500	1	180.54	SWITCH, HDLP & I/P LP DIMR & ACSRY & ELEK TRACT CONT (W/HSG) (AC–DELCO #D1588C)
94–96	Y	10210758	1	206.04	SWITCH, HDLP & I/P LP DIMR & ACSRY & ELEK TRACT CONT (W/HSG)
	*EXPORT**********EXPORT**********EXPORT**********EXPORT**********EXPORT*				
93–96	Y DAYTIME RUNNING LGT (T61)	10177914	1	8.93	BRACKET, DAYTIME RUNNING LP CONT MDL
90–92	Y DAYTIME RUNNING LGT (T61)	10098711	1	DISCON	BRACKET, HDLP AUTO CONT AMB LGT SEN
90–91	Y DAYTIME RUNNING LGT (T61)	10067987	1	2.45	GRILLE, DAYTIME RUNNING LP AMB LGT SEN
92–96	Y DAYTIME RUNNING LGT (T61)	10067987	1	2.45	GRILLE, HDLP AUTO CONT AMB LGT SEN
90–96	Y DAYTIME RUNNING LGT (T61)	10098712	1	122.40	MODULE, HDLP AUTO CONT (LESS BRKT & BOLTS)
90–96	Y DAYTIME RUNNING LGT (T61)	10067986	1	11.02	SENSOR, DAYTIME RUNNING LP AMB LGT
84–86	Y EXPORT	14066546	1	DISCON	SWITCH, FOG LP
87–88	Y T90 EXPORT	14066546	1	DISCON	SWITCH, FOG LP
84–86	Y EXPORT (VE1)	14066546	1	DISCON	SWITCH, PARK LP
87	Y T72 EXPORT	14066546	1	DISCON	SWITCH, PARK LP

© 2000 GENERAL MOTORS SERVICE PARTS OPERATIONS

2.486 KNOB, Capsule/Headlamp/Fog Lamp Switch

84-89	Y	10098728	1	6.17	KNOB, HDLP SW

2.487 LAMP – NUT, Capsule/Headlamp/Fog Lamp Switch

90-96	Y	12506368	1	3.11	LAMP, FOG LP SW (02.485)
84-89	Y	03916710	1	3.70	NUT, LGT SW ROD

2.490 CONNECTOR – DIMMER – NUT, Instrument Panel/Interior Lamp Switch

89-96	Y	01995263	1	39.27	DIMMER, I/P LP (AC-DELCO #D1509B)

2.510 CONNECTOR – DIODE – MODULE – RELAY, Voltage and Glow Plug

91	Y	12088529	1	22.29	MODULE, I/P WRG HARN (IF USE IN PLC OF MDL W/4-WAY CONN, MUST ALSO ORDER 1-12116930 SINGLE ROW 4-WAY CONN)
92-95	Y	12088529	1	22.29	MODULE, I/P WRG HARN
92-93	Y 4-SPD A/TRANS (MD8), 6-SPD M/TRANS (ML9), A/C MAN CONT (C60), A/C AUTO ELEC CONT (C68)	12088529	1	22.29	MODULE, 3-DIODE ARRAY SP
92-96	Y	14100455	1	16.26	RELAY, ACSRY TIME DELAY CUTOFF (BLACK) (5-WAY) (09.277) (AC-DELCO #15-8426)
92	Y 5.7J (LT5)	14089936	1	16.26	RELAY, ENG WRG (5-PIN OVAL SHAPE) (USE W/CONN 15306002) (01.055) (AC-DELCO #15-8240)
93	Y	14100455	1	16.26	RELAY, FOG LP (BLACK) (5-WAY) (09.277) (AC-DELCO #15-8426)
93-96	Y 6 SPKR SYS (UX0)	14100455	1	16.26	RELAY, I/P WRG HARN (BLACK) (5-WAY) (09.277) (AC-DELCO #15-8426)
90-96	Y	14100455	1	16.26	RELAY, STRTR (BLACK) (5-WAY) (09.277) (AC-DELCO #15-8426)

2.530 BOOT – CONDUIT – CONNECTOR – COVER – INSULATOR – LOCK – PLUG – PROTECTOR – SEAL – TERMINAL, Chassis Electrical

Note: FOR ILLUSTRATION ON TERMINALS AND CONNECTORS SEE STANDARD PARTS BOOK GRP 8.965

84-96	Y	10098907	2	12.55	CONDUIT, S/D WRG
87-93	Y	12101857	1	18.70	CONNECTOR, AIR DVTR VLV WRG (WHITE) (2-WAY F, W/LEADS) (02.535) (AC-DELCO #PT249)
93	Y 5.7P (LT1)	15306045	1	28.78	CONNECTOR, AIR SW VLV (W/LEADS) (TWO 12GA AND THREE 14GA WIRES) (08.855) (AC-DELCO #PT1205)
94	Y 5.7P (LT1)	12117025	1	21.82	CONNECTOR, AIR SW VLV (W/LEADS) (BLACK) (3-WAY F) (W/LEADS) (02.383) (AC-DELCO #PT420)
90	Y 4-SPD A/TRANS (MD8), 6-SPD M/TRANS (ML9)	12116930	1	29.89	CONNECTOR, DIODE NETWORK (W/LEADS) (02.535) (AC-DELCO #PT418)
90-91	Y07 STEREO CASSETTE (UM6), CASSETTE STEREO (UU8), CASSETTE/CD PLAYER (U1F)	12116930	1	29.89	CONNECTOR, DIODE NETWORK (4-WAY FEMALE EDGE BOARD) (W/LEADS) (02.535) (AC-DELCO #PT418)
91-95	Y	12116930	1	29.89	CONNECTOR, DIODE NETWORK (4-WAY FEMALE EDGE BOARD) (W/LEADS) (02.535) (AC-DELCO #PT418)

© 2000 GENERAL MOTORS SERVICE PARTS OPERATIONS

2.530 BOOT – CONDUIT – CONNECTOR – COVER – INSULATOR – LOCK – PLUG – PROTECTOR – SEAL – TERMINAL, Chassis Electrical(Con't)

92	Y STEREO CASSETTE (UM6), CASSETTE STEREO (UU8), CASSETTE/CD PLAYER (U1F)	12116930	1	29.89	CONNECTOR, DIODE NETWORK (4–WAY FEMALE EDGE BOARD) (W/LEADS) (02.535) (AC–DELCO #PT418) .....
93	Y07	12069433	1	8[illegible].88	CONNECTOR, DIODE NETWORK (02.342) (AC–DELCO #4SW37FS) ...
90–91	Y 5.7–8 (L98)	12101910	1	35.81	CONNECTOR, DISTR (BLACK) (4–WAY F) (W/LEADS) (02.535) (AC–DELCO #PT182) .....
93	Y	15305942	1	36.08	CONNECTOR, DISTR (W/LEADS) (4–WAY F, W/LEADS) (02.383) (AC–DELCO #PT1174) .....
95–96	Y 5.7P (LT1)	12129619	1	2.79	CONNECTOR, DISTR (4–WAY F, W/O LEADS) .....
96	Y 5.7–5 (LT4)	12129619	1	2.79	CONNECTOR, DISTR (4–WAY F, W/O LEADS) .....
90–93	Y	12101918	1	27.21	CONNECTOR, I/P WRG HARN DATA LINK CONN BYPASS (12–WAY F) (W/LEADS) (02.535) (AC–DELCO #PT190) .....
91	Y 5.7–8 (L98)	12126446	1	60.39	CONNECTOR, INLINE–FUSE (2–WAY F, W/LEADS & COVER) (02.535) .....
92–93	Y 5.7J (LT5)	12126446	1	60.39	CONNECTOR, INLINE–FUSE (2–WAY F, W/LEADS & COVER) (02.535) .....
92–95	Y ELEK RIDE & HANDLING (FX3) ..	12092249	2	2.44	CONNECTOR, INLINE–TO CHAS HARN (23–WAY F) (W/LEADS) .....
92	Y	12116445	1	DISCON	CONNECTOR, INLINE–TO CHAS HARN (W/LEADS) .....
92–95	Y 5.7J (LT5)	12117271	1	57.63	CONNECTOR, INLINE–TO CHAS HARN (WHITE) (8–WAY F) (W/LEADS) (02.535) (AC–DELCO #PT444) .....
93	Y	12101853	1	19.29	CONNECTOR, INLINE–TO CHAS HARN (2–WAY M, W/LEADS, USED T/W 15300591) (02.535) (AC–DELCO #PT245) .....
93	Y 5.7P (LT1)	12117271	1	57.63	CONNECTOR, INLINE–TO CHAS HARN (WHITE) (8–WAY F) (W/LEADS) (02.535) (AC–DELCO #PT444) .....
94–95	Y	12092248	1	1.73	CONNECTOR, INLINE–TO CHAS HARN (23–WAY M) (W/O LEADS) ....
95	Y	12101853	1	19.29	CONNECTOR, INLINE–TO CHAS HARN (2–WAY M, W/LEADS, USED T/W 15300591) (02.535) (AC–DELCO #PT245) .....
94–96	Y	12117363	1	17.87	CONNECTOR, INLINE–TO COR LP (3–WAY F) (02.895) (AC–DELCO #PT496) .....
92	Y 5.7P (LT1), 4–SPD A/TRANS (MD8), 6–SPD M/TRANS (ML9), A/C MAN CONT (C60), A/C AUTO ELEC CONT (C68)	12101854	1	43.66	CONNECTOR, INLINE–TO DISTR HARN (6–WAY F) (W/LEADS) (02.535) (AC–DELCO #PT246) .....
93	Y 5.7P (LT1)	12085537	2	31.88	CONNECTOR, INLINE–TO DISTR HARN (4–WAY F) (W/LEADS) (02.535) (AC–DELCO #PT147) .....
93–94	Y	12085537	2	31.88	CONNECTOR, INLINE–TO ELEK IGN (4–WAY F) (W/LEADS) (02.535) (AC–DELCO #PT147) .....

© 2000 GENERAL MOTORS SERVICE PARTS OPERATIONS

2.530 BOOT – CONDUIT – CONNECTOR – COVER – INSULATOR – LOCK – PLUG – PROTECTOR – SEAL – TERMINAL, Chassis Electrical(Con't)

96	Y	12085537	2	31.88	CONNECTOR, INLINE–TO ELEK IGN (4–WAY F) (W/LEADS) (02.535) (AC–DELCO #PT147)
96	Y CHASSIS, REALTIME DAMPING (F45)	12117025	4	21.82	CONNECTOR, INLINE–TO ELEK SUSP POSN SEN (BLACK) (3–WAY F) (W/LEADS) (02.383) (AC–DELCO #PT420)
90	Y 5.7J (LT5), SOFT RIDE SUSP (FE1), HVY DUTY SUSP (FE7), (EXC DAYTIME RUNNING LGT (T61)	12085509	1	48.33	CONNECTOR, INLINE–TO ENG HARN (6–WAY F, W/LEADS) (02.535) (AC–DELCO #PT130)
90	Y 4–SPD A/TRANS (MD8), 6–SPD M/TRANS (ML9)	12101762	1	68.40	CONNECTOR, INLINE–TO ENG HARN (10–WAY F, W/LEADS) (02.535) (AC–DELCO #PT150)
90–96	Y	12101823	1	49.04	CONNECTOR, INLINE–TO ENG HARN (10–WAY M) (W/LEADS) (02.535) (AC–DELCO #PT215)
90	Y 5.7–8 (L98)	12101910	1	35.81	CONNECTOR, INLINE–TO ENG HARN (4–WAY F, W/LEADS) (02.535) (AC–DELCO #PT182)
90	Y 6–SPD M/TRANS (ML9), A/C MAN CONT (C60)	12125674	1	35.57	CONNECTOR, INLINE–TO ENG HARN (8–WAY M, W/LEADS) (AC–DELCO #PT586)
90	Y 6–SPD M/TRANS (ML9), A/C AUTO ELEC CONT (C68), SOFT RIDE SUSP (FE1), HVY DUTY SUSP (FE7), (EXC DAYTIME RUNNING LGT (T61)	12125674	1	35.57	CONNECTOR, INLINE–TO ENG HARN (8–WAY M, W/LEADS) (AC–DELCO #PT586)
90	Y 4–SPD A/TRANS (MD8), A/C MAN CONT (C60), A/C AUTO ELEC CONT (C68)	12125674	1	35.57	CONNECTOR, INLINE–TO ENG HARN (8–WAY M, W/LEADS) (AC–DELCO #PT586)
91	Y 6–SPD M/TRANS (ML9), A/C MAN CONT (C60), A/C AUTO ELEC CONT (C68)	12085481	1	17.56	CONNECTOR, INLINE–TO ENG HARN (BLACK) (2–WAY M) (W/LEADS) (02.535) (AC–DELCO #PT103)
91	Y 5.7J (LT5), SOFT RIDE SUSP (FE1), HVY DUTY SUSP (FE7), (EXC DAYTIME RUNNING LGT (T61)	12085509	1	48.33	CONNECTOR, INLINE–TO ENG HARN (6–WAY F) (W/LEADS) (02.535) (AC–DELCO #PT130)
91–93	Y 4–SPD A/TRANS (MD8), 6–SPD M/TRANS (ML9), A/C MAN CONT (C60), A/C AUTO ELEC CONT (C68)	12101762	1	68.40	CONNECTOR, INLINE–TO ENG HARN (10–WAY F) (W/LEADS) (02.535) (AC–DELCO #PT150)
91	Y 4–SPD A/TRANS (MD8), 6–SPD M/TRANS (ML9), A/C MAN CONT (C60), A/C AUTO ELEC CONT (C68)	12125674	1	35.57	CONNECTOR, INLINE–TO ENG HARN (8–WAY M) (W/LEADS) (AC–DELCO #PT586)
92–96	Y	12101832	1	45.10	CONNECTOR, INLINE–TO ENG HARN (BLUE) (10–WAY F, W/LEADS) (02.535) (AC–DELCO #PT224)
92–94	Y	12101854	1	43.66	CONNECTOR, INLINE–TO ENG HARN (6–WAY F) (W/LEADS) (02.535) (AC–DELCO #PT246)
92	Y	12116445	1	DISCON	CONNECTOR, INLINE–TO ENG HARN (W/LEADS)
92–96	Y	12117270	1	54.65	CONNECTOR, INLINE–TO ENG HARN (8–WAY M, W/LEADS) (AC–DELCO #PT443)
93–95	Y	12101855	1	19.95	CONNECTOR, INLINE–TO ENG HARN (2–WAY F) (W/LEADS) (W/SEAL) (02.535) (AC–DELCO #PT247)

© 2000 GENERAL MOTORS SERVICE PARTS OPERATIONS

2.530 BOOT – CONDUIT – CONNECTOR – COVER – INSULATOR – LOCK – PLUG – PROTECTOR – SEAL – TERMINAL, Chassis Electrical(Con't)

94–96	Y 6–SPD M/TRANS (ML9)	12092248	1	1.73	CONNECTOR, INLINE–TO ENG HARN (23–WAY M) (W/O LEADS) .....
94–95	Y	12101853	1	19.29	CONNECTOR, INLINE–TO ENG HARN (2–WAY M, W/LEADS, USED T/W 15300591) (02.535) (AC–DELCO #PT245) .....
95	Y 5.7J (LT5)	12117270	1	54.65	CONNECTOR, INLINE–TO ENG HARN (8–WAY M, W/LEADS) (AC–DELCO #PT443) .....
95–96	Y 5.7P (LT1)	12126023	1	48.08	CONNECTOR, INLINE–TO ENG HARN (4–WAY M, W/LEADS) (AC–DELCO #PT654) .....
96	Y 4–SPD A/TRANS (M30)	12092248	1	1.73	CONNECTOR, INLINE–TO ENG HARN (23–WAY M) (W/O LEADS) .....
96	Y	12101854	1	43.66	CONNECTOR, INLINE–TO ENG HARN (6–WAY F) (W/LEADS) (02.535) (AC–DELCO #PT246) .....
90	Y	12058688	1	DISCON	CONNECTOR, INLINE–TO ENG HARN, ECM HARN (CRT MONITOR COAXIAL LEAD–IN) (32 PIN) (JUNC 2) (02.535) .....
90	Y 5.7J (LT5), A/C MAN CONT (C60), SOFT RIDE SUSP (FE1), HVY DUTY SUSP (FE7), A/C AUTO ELEC CONT (C68)	12085491	AR	16.87	CONNECTOR, INLINE–TO F/INJR HARN (W/LEADS) (02.535) (AC–DELCO #PT113) .....
90–91	Y 5.7–8 (L98), 6–SPD M/TRANS (ML9), 4–SPD A/TRANS (MD8), A/C MAN CONT (C60), A/C AUTO ELEC CONT (C68)	12085491	AR	16.87	CONNECTOR, INLINE–TO F/INJR HARN (2–WAY F) (W/LEADS) (02.535) (AC–DELCO #PT113) .....
90–91	Y 5.7–8 (L98), 4–SPD A/TRANS (MD8), 6–SPD M/TRANS (ML9), A/C MAN CONT (C60), A/C AUTO ELEC CONT (C68)	12085534	1	32.61	CONNECTOR, INLINE–TO FWD LP HARN (4–WAY, W/LEADS) (02.535) (AC–DELCO #PT145) .....
91–96	Y	02965810	2	.70	CONNECTOR, INLINE–TO FWD LP HARN (3–WAY F, W/O LEADS) .....
91	Y 5.7J (LT5), A/C AUTO ELEC CONT (C68), SOFT RIDE SUSP (FE1), HVY DUTY SUSP (FE7)	12101892	1	47.82	CONNECTOR, INLINE–TO FWD LP HARN (W/LEADS) (02.535) (AC–DELCO #PT162) .....
91–96	Y	12117367	2	24.98	CONNECTOR, INLINE–TO FWD LP HARN (3–WAY F) (W/LEADS, 59 SERIES) (AC–DELCO #PT500) .....
92–96	Y	12101852	1	39.24	CONNECTOR, INLINE–TO FWD LP HARN (6–WAY M) (W/LEADS) (02.535) (AC–DELCO #PT244) .....
94	Y	12102747	2	21.07	CONNECTOR, INLINE–TO HTD OXY SEN (BLACK) (2–WAY F) (W/LEADS) (03.670) (AC–DELCO #PT374) .....
90–96	Y	12101762	1	68.40	CONNECTOR, INLINE–TO I/P HARN (10–WAY F) (W/LEADS) (02.535) (AC–DELCO #PT150) .....
90	Y 5.7J (LT5), A/C MAN CONT (C60), A/C AUTO ELEC CONT (C68), SOFT RIDE SUSP (FE1), HVY DUTY SUSP (FE7)	12101823	1	49.04	CONNECTOR, INLINE–TO I/P HARN (10–WAY M, W/LEADS) (02.535) (AC–DELCO #PT215) .....
90–91	Y 5.7–8 (L98), 4–SPD A/TRANS (MD8), 6–SPD M/TRANS (ML9), A/C MAN CONT (C60), A/C AUTO ELEC CONT (C68)	12101823	1	49.04	CONNECTOR, INLINE–TO I/P HARN (10–WAY M) (W/LEADS) (02.535) (AC–DELCO #PT215) .....

© 2000 GENERAL MOTORS SERVICE PARTS OPERATIONS

2.530 BOOT – CONDUIT – CONNECTOR – COVER – INSULATOR – LOCK – PLUG – PROTECTOR – SEAL – TERMINAL, Chassis Electrical(Con't)

90	Y STEREO CASSETTE (UM6), CASSETTE STEREO (UU8), CASSETTE/CD PLAYER (U1F)	12126015	1	28.45	CONNECTOR, INLINE–TO I/P HARN (4–WAY M, W/LEADS) (AC–DELCO #PT646) .....
90–92	Y67 STEREO CASSETTE (UM6), CASSETTE STEREO (UU8), CASSETTE/CD PLAYER (U1F)	12101823	1	49.04	CONNECTOR, INLINE–TO I/P HARN (10–WAY M) (W/LEADS) (02.535) (AC–DELCO #PT215) .....
91	Y 5.7J (LT5), A/C AUTO ELEC CONT (C68), SOFT RIDE SUSP (FE1), HVY DUTY SUSP (FE7)	12085535	1	17.46	CONNECTOR, INLINE–TO I/P HARN (2–WAY F) (W/LEADS) (HAS INDEX TAB @ OUTER EDGE OF CAVITY B) (02.535) (AC–DELCO #PT146) .....
91–95	Y	12101822	1	32.35	CONNECTOR, INLINE–TO I/P HARN (GRAY) (8–WAY F) (W/LEADS) (02.535) (AC–DELCO #PT214) .....
91	Y 5.7J (LT5), A/C AUTO ELEC CONT (C68), SOFT RIDE SUSP (FE1), HVY DUTY SUSP (FE7)	12101823	1	49.04	CONNECTOR, INLINE–TO I/P HARN (10–WAY M) (W/LEADS) (02.535) (AC–DELCO #PT215) .....
91	Y	12116926	1	61.00	CONNECTOR, INLINE–TO I/P HARN (PART OF SIR SUB HARN) (8–WAY F) (14.865) (AC–DELCO #PT415) ...
91–92	Y07 STEREO CASSETTE (UM6), CASSETTE STEREO (UU8), CASSETTE/CD PLAYER (U1F)	12126015	1	28.45	CONNECTOR, INLINE–TO I/P HARN (4–WAY M) (W/LEADS) (AC–DELCO #PT646) .....
92–96	Y	12092249	2	2.44	CONNECTOR, INLINE–TO I/P HARN (23–WAY F) (W/LEADS) .....
92–96	Y	12092248	1	1.73	CONNECTOR, INLINE–TO I/P HARN (23–WAY M) (W/O LEADS) .....
93–96	Y	12101823	1	49.04	CONNECTOR, INLINE–TO I/P HARN (10–WAY M) (W/LEADS) (02.535) (AC–DELCO #PT215) .....
93	Y	12101836	1	17.46	CONNECTOR, INLINE–TO I/P HARN (2–WAY M, W/LEADS) (02.535) (AC–DELCO #PT223) .....
93–96	Y	12103188	1	1.82	CONNECTOR, INLINE–TO I/P HARN (BLUE) (10–WAY M, W/O LEADS) ...
94	Y	12117371	1	13.24	CONNECTOR, INLINE–TO I/P HARN (3–WAY M) (W/LEADS) (AC–DELCO #PT504) .....
95–96	Y RECL FRT BKT ST (AQ9)	12117371	1	13.24	CONNECTOR, INLINE–TO I/P HARN (3–WAY M) (W/LEADS) (AC–DELCO #PT504) .....
94	Y 6–SPD M/TRANS (ML9)	12065803	1	2.20	CONNECTOR, INLINE–TO INST CSTR (34–WAY F) (09.735) .....
90–95	Y	12085481	1	17.56	CONNECTOR, INLINE–TO STRG COL HARN (BLACK) (2–WAY M) (W/LEADS) (02.535) (AC–DELCO #PT103) .....
91–95	Y 5.7J (LT5)	12101899	1	17.95	CONNECTOR, INLINE–TO STRG COL HARN (FEM METRI–PACK, PULL TO ST) (BLACK) (2–WAY F) (W/LEADS) (02.383) (AC–DELCO #PT169) .....
90–95	Y	12102756	1	38.31	CONNECTOR, INLINE–TO T/SIG SW (TO STRG COL) (11–WAY F) (AC–DELCO #PT386) .....
93	Y 4–SPD A/TRANS (M30)	12102633	1	18.27	CONNECTOR, INLINE–TO TRANS (5–WAY F, W/LEADS) (09.652) (AC–DELCO #12102633) .....
93–94	Y 5.7P (LT1)	15306045	1	28.78	CONNECTOR, INLINE–TO TRANS (4TH & 6TH GR/RLY) (TWO 12GA AND THREE 14GA WIRES) (08.855) (AC–DELCO #PT1205) .....

© 2000 GENERAL MOTORS SERVICE PARTS OPERATIONS

2.530 BOOT – CONDUIT – CONNECTOR – COVER – INSULATOR – LOCK – PLUG – PROTECTOR – SEAL – TERMINAL, Chassis Electrical(Con't)

94	Y	12126459	1	61.55	CONNECTOR, INLINE–TO TRANS (12–WAY F, W/LEADS) (AC–DELCO #PT729)
96	Y 4–SPD A/TRANS (M30)	12160492	1	5.58	CONNECTOR, INLINE–TO TRANS (13–WAY F, W/O LEADS)
96	Y 4–SPD A/TRANS (M30)	12160782	1	4.66	CONNECTOR, INLINE–TO TRANS (20–WAY M)
90	Y 5.7J (LT5), SOFT RIDE SUSP (FE1), HVY DUTY SUSP (FE7), (EXC DAYTIME RUNNING LGT (T61)	12126032	1	15.88	CONNECTOR, INLINE–TO VAC PUMP HARN (W/LEADS) (02.575) (AC–DELCO #PT663)
90	Y 5.7J (LT5), DAYTIME RUNNING LGT (T61)	12126032	1	15.88	CONNECTOR, INLINE–TO VAC PUMP HARN (W/LEADS) (02.575) (AC–DELCO #PT663)
90–94	Y	12117379	1	29.43	CONNECTOR, PARK/NEU POSN SW WRG HARN (6 CAV F) (04.054) (AC–DELCO #PT512)
90–94	Y	12101864	1	17.62	CONNECTOR, PWR FEED HARN (BLACK) (3–WAY F) (W/LEADS) (02.535) (AC–DELCO #PT256)
96	Y	15305875	1		CONNECTOR, RLY–BLO MOT LOW SPD (5–WAY F) (W/LEADS & RELAY) (08.855) (AC–DELCO #PT1016)
96	Y	15306045	1	28.78	CONNECTOR, RLY–BLO MOT LOW SPD (TWO 12GA AND THREE 14GA WIRES) (08.855) (AC–DELCO #PT1205)
96	Y 4–SPD A/TRANS (M30)	12162201	1	.56	CONNECTOR, SOL–A SHFT VLV (NATURAL) (2–WAY F) (W/O LEADS)
90	Y	10098903	1	11.82	COVER, ENG WRG HARN ECM CONN (02.525)
91	Y 5.7J (LT5)	10098903	1	11.82	COVER, ENG WRG HARN ECM CONN (02.525)
91	Y 5.7–8 (L98)	12064802	1	10.29	COVER, ENG WRG HARN ECM CONN .
92–93	Y	12064802	1	10.29	COVER, ENG WRG HARN ECM CONN .
94–95	Y 5.7J (LT5)	12064802	1	10.29	COVER, ENG WRG HARN ECM CONN .
84–93	Y	10054241	1	*1.82	SEAL, A/TRNS WRG CONN (O RING) (.687 I.D. X .1" THK) (04.338) (AC–DELCO #10054241)
94	Y 5.7P (LT1), 4–SPD A/TRANS (M30), 2.59R (GM1), 3.07R (G44)	10054241	1	*1.82	SEAL, A/TRNS WRG CONN (O RING) (.687 I.D. X .1" THK) (04.338) (AC–DELCO #10054241)
	*EXPORT*********EXPORT*********EXPORT*********EXPORT*********EXPORT*				
96	Y SIG & MKR LP (T90) (EXPORT)	12101823	1	49.04	CONNECTOR, INLINE–TO ELEK BRK MDL (10–WAY M) (W/LEADS) (02.535) (AC–DELCO #PT215)
90	Y 5.7J (LT5), DAYTIME RUNNING LGT (T61)	12085509	1	48.33	CONNECTOR, INLINE–TO ENG HARN (6–WAY F, W/LEADS) (02.535) (AC–DELCO #PT130)
90	Y 6–SPD M/TRANS (ML9), A/C AUTO ELEC CONT (C68), DAYTIME RUNNING LGT (T61)	12125674	1	35.57	CONNECTOR, INLINE–TO ENG HARN (8–WAY M W/LEADS) (AC–DELCO #PT586)
91	Y 5.7J (LT5), DAYTIME RUNNING LGT (T61)	12085509	1	48.33	CONNECTOR, INLINE–TO ENG HARN (6–WAY F) (W/LEADS) (02.535) (AC–DELCO #PT130)
94–95	Y07 SIG & MKR LP (T90) (EXPORT)	12084203	1	4.74	CONNECTOR, INLINE–TO F/PMP (4–WAY M) (03.107)

© 2000 GENERAL MOTORS SERVICE PARTS OPERATIONS

2.530 BOOT – CONDUIT – CONNECTOR – COVER – INSULATOR – LOCK – PLUG – PROTECTOR – SEAL – TERMINAL, Chassis Electrical(Con't)

94–96	Y HDLP (T72) (EXPORT), RH RULE OF ROAD HDLP (T84) (EXPORT), LH RULE OF ROAD HDLP (T85) (EXPORT), SIG & MKR LP (T70) (EXPORT)	12085537	2	31.88	CONNECTOR, INLINE–TO FWD LP HARN (4–WAY F) (W/LEADS) (02.535) (AC–DELCO #PT147)
90	Y 4–SPD A/TRANS (MD8), A/C MAN CONT (C60), DAYTIME RUNNING LGT (T61)	12167138	1	15.40	CONNECTOR, INLINE–TO I/P HARN (W/LEADS) (02.485) (AC–DELCO #LS71)

2.559 BOLT – BRACKET – CLIP – COVER – INSULATOR – PLATE – RETAINER – SHIELD – SPACER – STRAP – STUD – WASHER, Chassis/Engine Wiring Harness

84–89	Y 5.7–8	14062552	1	1.12	BRACKET, ECM WRG HARN
90–91	Y 5.7–8 (L98)	14062552	1	1.12	BRACKET, ECM WRG HARN
84	Y	14066570	2	DISCON	BRACKET, ELEC CONT MDL HARN (TO ENG HD CVR)
84	Y	14057560	1	DISCON	BRACKET, ENG WRG HARN (TO CASE)
84–91	Y	14062511	AR	2.04	BRACKET, ENG WRG HARN (R/SI RR)
84–85	Y	14062552	1	1.12	BRACKET, ENG WRG HARN (TO OIL PAN)
84–88	Y	14062599	AR	.68	BRACKET, ENG WRG HARN (ABOVE LH ENG MT)
84–88	Y	14073493	1	2.04	BRACKET, ENG WRG HARN (L/SI RR)
85–87	Y	14100810	1	DISCON	BRACKET, ENG WRG HARN (RH SI INT MANIF)
89–91	Y 5.7–8 (L98)	14062599	AR	.68	BRACKET, ENG WRG HARN (ABOVE LH ENG MT)
89–91	Y 5.7–8 (L98), 4–SPD A/TRANS (MD8)	14073493	1	2.04	BRACKET, ENG WRG HARN (L/SI RR)
89	Y M/TRNS	14104953	1	DISCON	BRACKET, ENG WRG HARN (L/SI RR)
90	Y 5.7J (LT5), A/C MAN CONT (C60), A/C AUTO ELEC CONT (C68), SOFT RIDE SUSP (FE1), HVY DUTY SUSP (FE7)	14104749	1	2.04	BRACKET, ENG WRG HARN (ALUM, LOC AT RR OF ENG)
90–91	Y 5.7J (LT5)	14104938	1	35.45	BRACKET, ENG WRG HARN (AT OXY & KNOCK SEN CABLES) (STEEL) (LWR LH SI OF BLK NEAR OIL PAN)
91–95	Y 5.7J (LT5)	14104749	1	2.04	BRACKET, ENG WRG HARN (ALUM, LOC AT RR OF ENG)
91–92	Y 5.7J (LT5)	14104941	1	12.90	BRACKET, ENG WRG HARN (TO OIL PAN) (03.632)
91	Y 5.7–8 (L98)	15664822	1	1.05	BRACKET, ENG WRG HARN (01.166)
92–95	Y 5.7J (LT5)	10098912	1	12.90	BRACKET, ENG WRG HARN (03.682)
92–95	Y 5.7P (LT1)	12553341	4	1.12	BRACKET, ENG WRG HARN
92–95	Y 5.7J (LT5)	14104938	1	35.45	BRACKET, ENG WRG HARN (STEEL) (LWR LH SI OF BLK NEAR OIL PAN)
96	Y	12553341	5	1.12	BRACKET, ENG WRG HARN (POS#RH–3, 6, 8, LH–6, 7)
89	Y A/C MAN CONT (C60), A/C AUTO ELEC CONT (C68), SOFT RIDE SUSP (FE1), HVY DUTY SUSP (FE7)	14104961	1	11.32	BRACKET, ENG WRG HARN SHLD
90–91	Y 5.7J (LT5), A/C MAN CONT (C60), A/C AUTO ELEC CONT (C68), SOFT RIDE SUSP (FE1), HVY DUTY SUSP (FE7)	14104961	1	11.32	BRACKET, ENG WRG HARN SHLD
92–95	Y 5.7J (LT5)	14104961	1	11.32	BRACKET, ENG WRG HARN SHLD

© 2000 GENERAL MOTORS SERVICE PARTS OPERATIONS

2.559 BOLT – BRACKET – CLIP – COVER – INSULATOR – PLATE – RETAINER – SHIELD – SPACER – STRAP – STUD – WASHER, Chassis/Engine Wiring Harness(Con't)

84–86	Y	14066531	LH	DISCON	BRACKET, FWD LP WRG HARN (TO FRT BPR IMPACT BAR)
84–86	Y	14066532	RH	DISCON	BRACKET, FWD LP WRG HARN (TO FRT BPR IMPACT BAR)
84–90	Y	14091207	LH	7.55	BRACKET, FWD LP WRG HARN (TO REINFORCEMENT OTR)
84–89	Y	14091208	RH	7.55	BRACKET, FWD LP WRG HARN (TO REINFORCEMENT OTR)
90	Y SOFT RIDE SUSP (FE1), H .D .SUSP (FE7)	14091208	RH	7.55	BRACKET, FWD LP WRG HARN (TO REINFORCEMENT OTR)
84–86	Y	14062523	1	DISCON	BRACKET, I/P WRG HARN
90–93	Y	10165378	1	DISCON	BRACKET, I/P WRG HARN
94–96	Y	10251214	1	6.03	BRACKET, I/P WRG HARN
84–96	Y	14066583	2	3.26	BRACKET, I/P WRG HARN DR LEAD
84–88	Y M/TRNS	14081179	1	DISCON	BRACKET, TBI HARNESS CLIP
88–89	Y A/C (C68)	09798835	1	1.20	CLIP, A .C. DA WIRE TO EVAP HSNG
84–93	Y 4–SPD A/TRANS (MD8)	08673068	2	1.82	CLIP, A/TRNS WRG HARN (04.197) (AC–DELCO #8673068)
90–91	Y 5.7J (LT5), A/C MAN CONT (C60), A/C AUTO ELEC CONT (C68), SOFT RIDE SUSP (FE1), HVY DUTY SUSP (FE7)	14104936	1	.94	CLIP, ENG WRG HARN (2 HOLES) (FRT CVR CYL CASE)
90–95	Y 5.7J (LT5)	14104937	1	.94	CLIP, ENG WRG HARN (1 HOLE) (OIL FILTER HSG)
92–95	Y 5.7J (LT5)	14104936	1	.94	CLIP, ENG WRG HARN (2 HOLES) (FRT CVR CYL CASE)
93–95	Y 5.7P (LT1)	01864022	1	.77	CLIP, ENG WRG HARN (1/2 DIA HARD STL)
93–94	Y 5.7P (LT1)	01864022	1	.77	CLIP, FWD LP WRG HARN (1/2 DIA HARD STL)
93–94	Y	03816659	AR	*.87	CLIP, FWD LP WRG HARN (7" ADJ, W/ROSEBUD FOR .25 DIA HOLE .031–.14 TH) (08.965) (STRAP)
94	Y 5.7J (LT5)	01864022	1	.77	CLIP, FWD LP WRG HARN (1/2 DIA HARD STL)
85	Y	09798835	1	1.20	CLIP, I/P WRG HARN
93–94	Y	01839906	1	*.13	CLIP, I/P WRG HARN (LARGE 3–5 WIRE) (08.965) (AC–DELCO #1839906)
93	Y	01864022	1	.77	CLIP, I/P WRG HARN (1/2 DIA HARD STL)
92–93	Y RECL FRT BKT ST (AQ9)	01864022	1	.77	CLIP, I/P WRG HARN EXTN HARN (1/2 DIA HARD STL)
94–95	Y	01864022	1	.77	CLIP, WRG HARN (BRK PRESS MOD VLV) (1/2 DIA HARD STL)
86–96	Y	14090618	1	7.05	PLATE, ECM WRG HARN GROM RET STUD (03.675)
92–96	Y	10086254	1	3.37	PLATE, ELEK BRK CONT WRG HARN GROM MT
90–96	Y	10086254	1	3.37	PLATE, ENG WRG HARN GROM BKG
84–87	Y	00480534	AR	*.84	RETAINER, PNL HOLE (DIA.250, THK .03–.30) (11.419)
93	Y 5.7P (LT1), 6–SPD M/TRANS (ML9), DIAGNOSTIC SYSTEM (BAK), A/C MAN CONT (C60)	12129021	4	1.52	RETAINER, ECM WRG HARN (BLACK) (32–WAY F)
93	Y 5.7P (LT1), 6–SPD M/TRANS (ML9), DIAGNOSTIC SYSTEM (BAK), A/C MAN CONT (C60)	12129022	4	1.52	RETAINER, ECM WRG HARN (CLEAR) (USE W/32–WAY CONN)

© 2000 GENERAL MOTORS SERVICE PARTS OPERATIONS

2.559 BOLT – BRACKET – CLIP – COVER – INSULATOR – PLATE – RETAINER – SHIELD – SPACER – STRAP – STUD – WASHER, Chassis/Engine Wiring Harness(Con't)

93	Y 5.7P (LT1), 6–SPD M/TRANS (ML9), DIAGNOSTIC SYSTEM (BAK), A/C MAN CONT (C60)	12129023	4	1.52	RETAINER, ECM WRG HARN (BLUE) (USE W/32–WAY CONN) .....
94	Y 5.7P (LT1)	12129021	4	1.52	RETAINER, ECM WRG HARN (BLACK) (32–WAY F) .....
94	Y 5.7P (LT1)	12129022	4	1.52	RETAINER, ECM WRG HARN (CLEAR) (USE W/32–WAY CONN) .....
94	Y 5.7P (LT1)	12129023	4	1.52	RETAINER, ECM WRG HARN (BLUE) (USE W/32–WAY CONN) .....
89–91	Y	12020833	1	*.73	RETAINER, ECM WRG HARN CONN (GRAY) (1" LONG) (PUSH–IN) .....
94–96	Y	12129030	2	2.50	RETAINER, ECM WRG HARN CONN (GRAY) (STRAIN RELIEF) .....
95	Y	12129021	4	1.52	RETAINER, ECM WRG HARN CONN (BLACK) (32–WAY F) .....
96	Y	12129022	4	1.52	RETAINER, ECM WRG HARN CONN (CLEAR) (USE W/32–WAY CONN) ...
96	Y	12129023	4	1.52	RETAINER, ECM WRG HARN CONN (BLUE) (USE W/32–WAY CONN) ....
96	Y	12129024	3	2.50	RETAINER, ECM WRG HARN CONN (RED) (USE W/32–WAY CONN) .....
96	Y	12129028	2	2.50	RETAINER, ECM WRG HARN CONN (GRAY) (32–WAY) .....
84–88	Y	14066575	1	DISCON	RETAINER, ENG WRG HARN .....
89–91	Y 5.7–8 (L98)	14104541	1	4.13	RETAINER, ENG WRG HARN .....
92–95	Y 5.7P (LT1)	14104541	1	4.13	RETAINER, ENG WRG HARN .....
96	Y	14104541	1	4.13	RETAINER, ENG WRG HARN .....
90–91	Y	12077996	1	.52	RETAINER, F/INJR WRG HARN CONN (02.535) .....
84	Y 5.7–8 (L83)	08917236	1	1.45	RETAINER, OXY SEN CONN .....
85–91	Y 5.7–8 (L98)	08917236	1	1.45	RETAINER, OXY SEN CONN .....
92–94	Y 5.7P (LT1), (EXC LEADED FUEL EMIS EXPORT (NM8)	08917236	1	1.45	RETAINER, OXY SEN CONN .....

2.560 BOLT – BRACKET – INSULATOR – MODULE – NUT, Body Multifunction Electric Computer

91–96	Y	12337892	4	*1.13	BOLT, BCM BRKT (POSN #2) (M5X.8X16 THD) (SPECIAL) (03.671) (AC–DELCO #12337892) .....
90–96	Y	10085989	1	3.37	BRACKET, BCM BRKT .....
86–90	Y67	14100353	1	12.80	BRACKET, MULTIUSE RLY .....
93–95	Y	03999572	2	4.98	INSULATOR, BCM (09.260) .....
96	Y	03999572	1	4.98	INSULATOR, BCM (09.260) .....
90	Y	16146688	1	172.55	MODULE, BODY CONT (REMAN) .....
91	Y	16150502	1	172.55	MODULE, BODY CONT (REMAN) .....
92–93	Y	16193458	1	168.00	MODULE, BODY CONT (REMAN) .....
94	Y	16212971	1	210.70	MODULE, BODY CONT (REMAN) (AC–DELCO #16212971) .....
95	Y	16223622	1	479.80	MODULE, BODY CONT (REMAN) (AC–DELCO #16223622) .....
96	Y	16230561	1	399.83	MODULE, BODY CONT .....
90–96	Y	10027015	2	.53	NUT, BCM (PUSH–ON) (OVERALL LENGTH 1.25") (03.671) (AC–DELCO #10027015) .....

© 2000 GENERAL MOTORS SERVICE PARTS OPERATIONS

2.575 BRACKET – BUTTON – CLIP – CONNECTOR – FILLER – FLASHER – KNOB – LAMP – PUSHBUTTON – SOCKET – SPRING, Side Marker and Hazard Flasher

Note: IT IS NECESSARY TO CAREFULLY CHECK THE PARTS CATALOGS FOR CORRECT APPLICATION WHEN REPLACING LAMP SOCKET ASM. IF INCORRECT SOCKETS ARE USED FOR REPLACEMENT, THE BULB FILAMENT WILL BE IN THE WRONG LOCATION WITH RESPECT TO THE LENS AND/OR REFLECTOR. AS A RESULT, THE LAMP MAY FAIL TO MEET STANDAR.

Note: FOR USAGE REFER TO LAMP SOCKET CHART GRP 2.999

84–94	Y	25534019	2	*.60	CLIP, HAZARD LP FLSHR (02.892)
95–96	Y	25534019	1	*.60	CLIP, HAZARD LP FLSHR (02.892)
84–96	Y	00491391	1	8.20	FLASHER, HAZARD LP (1 1/2" DIA) (6 LP FLSHR) (AC–DELCO #SF552)
86	Y (EXC EXPORT VB4, VD1, VE1, VT7)	10039390	1	7.09	FLASHER, HAZARD LP
94–96	Y (EXC SIG & MKR LP (T90) (EXPORT)	05975793	LH	62.70	LAMP, FRT SI MKR & COR (02.585)
94–96	Y (EXC SIG & MKR LP (T90) (EXPORT)	05975794	RH	62.70	LAMP, FRT SI MKR & COR (02.585)
84–87	Y	00917901	LH	44.10	LAMP, RR SI MKR
84–87	Y	00917902	RH	44.10	LAMP, RR SI MKR
88–90	Y	16508517	LH	44.10	LAMP, RR SI MKR & SI B/U
88–90	Y	16508518	RH	44.10	LAMP, RR SI MKR & SI B/U
91–93	Y	16514357	LH	44.10	LAMP, RR SI MKR & SI B/U
91–93	Y	16514358	RH	44.10	LAMP, RR SI MKR & SI B/U
94–96	Y (EXC SIG & MKR LP (T90) (EXPORT)	16514357	LH	44.10	LAMP, RR SI MKR & SI B/U
94–96	Y (EXC SIG & MKR LP (T90) (EXPORT)	16514358	RH	44.10	LAMP, RR SI MKR & SI B/U
	*EXPORT**********EXPORT**********EXPORT**********EXPORT**********EXPORT*				
84–86	Y VB4, VD1, VE1, VT7 (EXPORT)	00491391	1	8.20	FLASHER, HAZARD LP (FLASHER, T/SIG LP) (AC–DELCO #SF552)
87–88	Y T72, T84 (EXPORT)	00491391	1	8.20	FLASHER, HAZARD LP (FLASHER, T/SIG LP) (AC–DELCO #SF552)

2.815 CLIP – CONNECTOR – RELAY – WIRE, Horn

84–89	Y	25523703	1	12.20	RELAY, HORN (AC–DELCO #D1776)
90–93	Y	14100455	1	16.26	RELAY, HORN (BLACK) (5–WAY) (09.277) (AC–DELCO #15–8426)
94	Y A/C AUTO ELEC CONT (C68)	12065125	1	16.73	RELAY, HORN (13.095) (AC–DELCO #D1703A)
94	Y 6–SPD M/TRANS (ML9), A/C MAN CONT (C60), (EXC HDLP (T72) (EXPORT), RH RULE OF ROAD HDLP (T84) (EXPORT), LH RULE OF ROAD HDLP (T85) (EXPORT), SIG & MKR LP (T90) (EXPORT)	12065125	1	16.73	RELAY, HORN (13.095) (AC–DELCO #D1703A)
95	Y 5.7J (LT5), 6–SPD M/TRANS (ML9), A/C AUTO ELEC CONT (C68)	12065125	1	16.73	RELAY, HORN (13.095) (AC–DELCO #D1703A)
95	Y 5.7P (LT1), 4–SPD A/TRANS (M30), A/C AUTO ELEC CONT (C68)	12065125	1	16.73	RELAY, HORN (13.095) (AC–DELCO #D1703A)
95	Y 5.7P (LT1), 4–SPD A/TRANS (M30), A/C MAN CONT (C60), (EXC HDLP (T72) (EXPORT), RH RULE OF ROAD HDLP (T84) (EXPORT), LH RULE OF ROAD HDLP (T85) (EXPORT), SIG & MKR LP (T90) (EXPORT)	12065125	1	16.73	RELAY, HORN (13.095) (AC–DELCO #D1703A)

© 2000 GENERAL MOTORS SERVICE PARTS OPERATIONS

MICROFICHE INDEX

GROUPS 10.000 THRU 11.000

FICHE 9 OF 11

GROUP	DESCRIPTION	STARTING GRID LOCATION PARTS	ILLUSTRATIONS
–	GENERAL INFORMATION	1–A2	1–G2
–	ALPHABETICAL INDEX	1–B13	N.A.
10.000	DOORS – REGULATORS – WINDSHIELD – WIPER – WASHER	9–A2	9–D2
11.000	REAR GLASS – SEAT PARTS – ADJUSTER	9–C2	9–I2
–	OUT OF FICHE CALLS	N.A.	9–L4

9–M1

2.815 CLIP – CONNECTOR – RELAY – WIRE, Horn(Con't)

95	Y 5.7P (LT1), 6–SPD M/TRANS (ML9), A/C MAN CONT (C60), (EXC HDLP (T72) (EXPORT), RH RULE OF ROAD HDLP (T84) (EXPORT), LH RULE OF ROAD HDLP (T85) (EXPORT), SIG & MKR LP (T90) (EXPORT)	12135084	1	9.55	RELAY, HORN (AC–DELCO #D1719A) .
95	Y 5.7P (LT1), 6–SPD M/TRANS (ML9), A/C AUTO ELEC CONT (C68)	12135084	1	9.55	RELAY, HORN (AC–DELCO #D1719A) .
96	Y	12135084	1	9.55	RELAY, HORN (AC–DELCO #D1719A) .
	*EXPORT**********EXPORT**********EXPORT**********EXPORT**********EXPORT*				
94	Y 4–SPD A/TRANS (M30), A/C MAN CONT (C60), DAYTIME RUNNING LGT (T61), (EXC HDLP (T72) (EXPORT), RH RULE OF ROAD HDLP (T84) (EXPORT), LH RULE OF ROAD HDLP (T85) (EXPORT), SIG & MKR LP (T90) (EXPORT) ...	12065125	1	16.73	RELAY, HORN (13.095) (AC–DELCO #D1703A) .....

2.892 CLIP – CONNECTOR – FLASHER – SOCKET, Turn Signal Lamp

84–87	Y	25534019	1	*.60	CLIP, T/SIG LP FLSHR .....
92–93	Y	25534019	1	*.60	CLIP, T/SIG LP FLSHR .....
94–96	Y (EXC SIG & MKR LP (T90) (EXPORT)	25534019	1	*.60	CLIP, T/SIG LP FLSHR .....
84–88	Y (EXC EXPORT)	10041073	1	9.80	FLASHER, T/SIG LP (AC–DELCO #SF323YB) .....
89–92	Y	10041073	1	9.80	FLASHER, T/SIG LP (YELLOW) (AC–DELCO #SF323YB) .....
93–96	Y (EXC SIG & MKR LP (T90) (EXPORT)	10041073	1	9.80	FLASHER, T/SIG LP (YELLOW) (AC–DELCO #SF323YB) .....
	*EXPORT**********EXPORT**********EXPORT**********EXPORT**********EXPORT*				
93	Y SIG & MKR LP (T90) (EXPORT) ..	10041074	1	10.06	FLASHER, T/SIG LP (YELLOW) (2 LP FLSHR) (AC–DELCO #SF224) .....
94–96	Y SIG & MKR LP (T90) (EXPORT) ..	09442495	1	20.80	FLASHER, T/SIG LP (AC–DELCO #9442495) .....

3.403 NUT – SCREW – SEAL, Air Cleaner and Silencer

84–85	Y	14055160	2	DISCON	NUT, W/INSERT, A/CL RET .....
85–89	Y	14081888	2	3.95	SCREW, A/CL COVER .....
84	Y	10019632	2	4.69	SEAL, A/CL .....

3.682 BOLT – BRACKET – BUFFER – CLAMP – CONNECTOR -- COVER – MODULE – PLUG – RELAY – RETAINER – SEAL – SENSOR – SPACER, Computer Control Sensors

90–95	Y 5.7J (LT5)	11514491	2	4.75	BOLT, MAP SEN (TO BRKT) (5X.8X30, 28.4 THD, 5.9 OD, T25 TORX DR. 9.8 STL) (08.907) .....
90–95	Y 5.7J (LT5)	10192577	2	1.30	BOLT, MAP SEN BRKT (TO PLENUM) (M6X1.0X13.0) (METRIC TORX HD) (08.913) .....
92	Y 5.7J (LT5)	11516061	1	*1.10	BOLT, OXY SEN BRKT (M6X1X12, FL HD) (08.900) .....
90–95	Y 5.7J (LT5)	10192577	4	1.30	BOLT, SECD PORT THROT VLV BRKT (M6X1.0X13.0) (METRIC TORX HD) (08.913) .....
90–95	Y 5.7J (LT5)	10067781	1	8.68	BRACKET, MAP SEN .....
90–91	Y 5.7–8 (L98)	10096141	1	4.44	BRACKET, MAP SEN .....
85	Y	14080660	1	DISCON	BRACKET, MASS AIR FLOW SEN BURNOFF MDL .....

© 2000 GENERAL MOTORS SERVICE PARTS OPERATIONS

3.682 BOLT – BRACKET – BUFFER – CLAMP – CONNECTOR – COVER – MODULE – PLUG – RELAY – RETAINER – SEAL – SENSOR – SPACER, Computer Control Sensors(Con't)

88–89	Y 5.7–8	14104140	1	1.88	BRACKET, MASS AIRFLOW SEN RLY (01.055)
93–95	Y 5.7J (LT5)	10168622	1	26.01	BRACKET, MDP SEN (03.671)
89	Y	14062552	1	1.12	BRACKET, OXY SEN CONN RET (02.559)
90–91	Y 5.7–8 (L98)	14062552	1	1.12	BRACKET, OXY SEN CONN RET (02.559)
90–92	Y 5.7J (LT5)	14104941	1	12.90	BRACKET, OXY SEN CONN RET
92–96	Y 5.7P (LT1)	10165388	1	2.50	BRACKET, OXY SEN CONN RET (02.559)
93–95	Y 5.7J (LT5)	10225129	1	7.75	BRACKET, OXY SEN CONN RET
96	Y 5.7–5 (LT4)	10165388	1	2.50	BRACKET, OXY SEN CONN RET (02.559)
93–95	Y 5.7J (LT5)	10168670	1	31.60	CLAMP, MDP SEN (01.750)
90–95	Y 5.7J (LT5)	10090513	1	15.41	COVER, MAP SEN (AC–DELCO #10090513)
85	Y 5.7–8 (L98)	14080320	1	882.82	MODULE, MASS AIRFLOW SEN (AC–DELCO #216–52)
92–96	Y 5.7P (LT1)	03738198	1	.71	PLUG, MAP SEN HOLE (08.153)
96	Y 5.7–5 (LT4)	03738198	1	.71	PLUG, MAP SEN HOLE (08.153)
84–90	Y	12338069	1	*3.67	RETAINER, VEH SPD SEN (4338) (AC–DELCO #12338069)
86–96	Y	12146312	1	9.10	SENSOR, ENG COOL TEMP (UND PLENUM) (USED FOR CLUSTERS W/OIL GAGE & LGT COMB) (2–WAY M) (AC–DELCO #213–310)
90–91	Y 5.7J (LT5)	25176708	2	104.75	SENSOR, EXH OXY (STAMPED 10096129) (AC–DELCO #213–632) (RETAIL SENSOR)
92	Y 5.7J (LT5), (1ST DES)	25176708	2	104.75	SENSOR, EXH OXY (W/HARN THAT IS 350MM LG) (STAMPED 10096129) (AC–DELCO #213–632) (RETAIL SENSOR)
92	Y 5.7J (LT5), (2ND DES)	25176709	2	117.30	SENSOR, EXH OXY (W/HARNESS THAT IS 240MM LG) (STAMPED 10137641) (AC–DELCO #213–633)
93–95	Y 5.7J (LT5)	25176709	2	117.30	SENSOR, HTD OXY (STAMPED 10137641) (AC–DELCO #213–633)
94	Y 5.7P (LT1), (EXC LEADED FUEL EMIS EXPORT (NM8)	25312184	3	62.81	SENSOR, HTD OXY (AC–DELCO #AFS75) (OEM SENSOR)
95	Y 5.7P (LT1), (EXC LEADED FUEL EMIS EXPORT (NM8), EUROPEAN PROVISIONS (VD1) (EXPORT), VE1 (EXPORT)	25312184	3	62.81	SENSOR, HTD OXY (AC–DELCO #AFS75) (OEM SENSOR)
96	Y 5.7–5 (LT4)	25312184	4	62.81	SENSOR, HTD OXY (2–PRE CONVERTER, 2–POST CONVERTER) (AC–DELCO #AFS75) (OEM SENSOR)
96	Y 5.7P (LT1), (EXC LEADED FUEL EMIS EXPORT (NM8)	25312184	4	62.81	SENSOR, HTD OXY (2–PRE CONVERTER, 2–POST CONVERTER) (AC–DELCO #AFS75) (OEM SENSOR)
90–95	Y 5.7J (LT5)	25036751	1	33.33	SENSOR, INT AIR TEMP (2 BLADE TERM, 3/8–18 THD) (STAMPED AC12V) (AC–DELCO #213–190)
92–95	Y 5.7P (LT1)	12160244	1	14.61	SENSOR, INT AIR TEMP (AC–DELCO #213–243)
96	Y	12160244	1	14.61	SENSOR, INT AIR TEMP (AC–DELCO #213–243)

© 2000 GENERAL MOTORS SERVICE PARTS OPERATIONS

3.682 BOLT – BRACKET – BUFFER – CLAMP – CONNECTOR – COVER – MODULE – PLUG – RELAY – RETAINER – SEAL – SENSOR – SPACER, Computer Control Sensors(Con't)

85–90	Y	12146312	1	9.10	SENSOR, MANIF AIR TEMP (AT INT MANIF) (2 BLADE TERM, 3/8–18 THD) (USED FOR CLUSTERS W/OIL GAGE & LIGHT COMB) (AC–DELCO #213–310)
85	Y (1ST DES)	25036751	1	33.33	SENSOR, MANIF AIR TEMP (2 BLADE TERM, 3/8–18 THD) (STAMPED AC12V) (HOLES IN PROBE & MATES W/SQUARE SLOTTED CONN) (AC–DELCO #213–190)
91	Y 5.7–8 (L98)	12146312	1	9.10	SENSOR, MANIF AIR TEMP (AT INT MANIF) (USED FOR CLUSTER W/OIL GAGE & LIGHT COMB) (2–WAY M) (AC–DELCO #213–310)
84	Y	16137039	1	65.40	SENSOR, MAP (1 PORT, 3 BLADE TERM, 2 BOLT HOLES) (AC–DELCO #213–185)
90	Y	16137039	1	65.40	SENSOR, MAP (1 PORT, 3 TERM, 2 BOLT HOLES) (AC–DELCO #213–185)
91	Y 5.7–8 (L98)	16137039	1	65.40	SENSOR, MAP (1 PORT, 3 TERM, 2 BOLT HOLES) (AC–DELCO #213–185)
91–95	Y 5.7J (LT5)	16137039	1	65.40	SENSOR, MAP (1 PORT, 3 TERM, 2 BOLT HOLES) (AC–DELCO #213–185)
92–95	Y 5.7P (LT1)	16137039	1	65.40	SENSOR, MAP (1 PORT, 3 TERM, 2 BOLT HOLES) (AC–DELCO #213–185)
96	Y	16137039	1	65.40	SENSOR, MAP (AC–DELCO #213–185)
85	Y	14081243	1	540.26	SENSOR, MASS AIRFLOW (AC–DELCO #213–162)
86–87	Y	14094712	1	507.44	SENSOR, MASS AIRFLOW (AC–DELCO #213–163)
88	Y	10055877	1	397.22	SENSOR, MASS AIRFLOW (AC–DELCO #213–161)
89	Y 5.7–8 (L98)	10055877	1	397.22	SENSOR, MASS AIRFLOW (AC–DELCO #213–161)
94–95	Y 5.7P (LT1)	25008308	1	367.42	SENSOR, MASS AIRFLOW (INCLS SNSR & 2 CLMPS) (AC–DELCO #213–252)
94	Y 5.7P (LT1)	25099215	1	579.98	SENSOR, MASS AIRFLOW (W/INT AIR TEMP SEN) (W/DUCT) (AC–DELCO #213–238)
96	Y	25008308	1	367.42	SENSOR, MASS AIRFLOW (INCLS SNSR & 2 CLMPS) (AC–DELCO #213–252)
90–95	Y 5.7J (LT5)	16006834	1	61.77	SENSOR, MDP (AC–DELCO #16006834)
84–87	Y	25162693	1	51.12	SENSOR, OXY (1 WIRE) (AC–DELCO #AFS20) (OEM SENSOR)
87	Y (EXC LEADED FUEL EMIS EXPORT (NM8)	25166816	2	51.55	SENSOR, OXY (1 WIRE) (AC–DELCO #AFS21) (OEM SENSOR)
88–91	Y 5.7–8 (L98)	25166816	2	51.55	SENSOR, OXY (PURPLE WIRE) (18 X 1.5) (TYPE #21 MATES W/12015791) (AC–DELCO #AFS21) (OEM SENSOR)

© 2000 GENERAL MOTORS SERVICE PARTS OPERATIONS

3.682 BOLT – BRACKET – BUFFER – CLAMP – CONNECTOR – COVER – MODULE – PLUG – RELAY – RETAINER – SEAL – SENSOR – SPACER, Computer Control Sensors(Con't)

92–93	Y 5.7P (LT1), (EXC LEADED FUEL EMIS EXPORT (NM8)	25166816	2	51.55	SENSOR, OXY (PURPLE WIRE) (18 X 1.5) (TYPE #21 MATES W/12015791) (AC–DELCO #AFS21) (OEM SENSOR) .....
84–90	Y D9A	25007224	1	99.55	SENSOR, VEH SPD (TRANS MTD) (USED W/AXLE RATIO 2.59, 2.73) (AC–DELCO #213–210) .....
84–90	Y D9B	25007308	1	98.96	SENSOR, VEH SPD (TRANS MTD) (USED W/AXLE RATIO 3.07, 3.33, 3.45) (AC–DELCO #213–223) .....
91–93	Y (D8I)	10456089	1	36.09	SENSOR, VEH SPD (W/ O–RING) (04.329) (AC–DELCO #213–198) ...
91–93	Y (D8K)	10456091	1	32.70	SENSOR, VEH SPD (NATURAL COLOR) (PART NO STAMPED ON HSG) (04.329) (AC–DELCO #213–199) ...
91–93	Y (D8L)	10456092	1	32.70	SENSOR, VEH SPD (BLACK COLOR) (PART NO STAMPED ON HSG) (04.329) (AC–DELCO #213–200) ...
94–96	Y 6–SPD M/TRANS (ML9)	10456089	1	36.09	SENSOR, VEH SPD (W/ O–RING) (04.329) (AC–DELCO #213–198) ...
	*EXPORT**********EXPORT**********EXPORT**********EXPORT**********EXPORT*				
95	Y 5.7P (LT1), EUROPEAN PROVISIONS (VD1) (EXPORT), VE1 (EXPORT)	25312184	2	62.81	SENSOR, HTD OXY (AC–DELCO #AFS75) (OEM SENSOR) .....

3.686 BRACKET – CONNECTOR – HARNESS – INSULATOR – MODULE – NUT – SENSOR, Catalytic Converter

	*EXPORT**********EXPORT**********EXPORT**********EXPORT**********EXPORT*				
94–96	Y EXH TEMP ALARM (UD6) (EXPORT)	10219873	1	33.00	BRACKET, CTLTC CONV TEMP ALARM MDL .....
94–96	Y EXH TEMP ALARM (UD6) (EXPORT)	10219872	1	437.00	MODULE, CTLTC CONV TEMP ALARM .

3.887 CONNECTOR – MODULE – PROTECTOR – RELAY – SWITCH, Cruise Control

Note: FOR 1986–1991 USAGE REFER TO STEERING COLUMN CHART GRP 6.518

90–92	Y	25140992	1	190.23	MODULE, CRCONT (AC–DELCO #25140992) .....
93–96	Y	25140723	1	203.21	MODULE, CRCONT (AC–DELCO #25140723) .....
92–96	Y	22535475	1	8.80	RELAY, CRCONT CUTOFF (09.647) (AC–DELCO #22535475) .....

4.015 BOOT – RETAINER, Transmission Control Lever [4–SPEED MANUAL]

84–88	Y	14047412	1	33.15	BOOT, CONT LVR UPR .....
84–88	Y	14046623	1	DISCON	RETAINER, CONT LVR BOOT .....

4.480 BLOCK – GASKET – RELAY – SEAL – SWITCH, Transmission Overdrive [4–SPEED MANUAL]

84–88	Y	14081180	2	3.11	GASKET, 1ST & 2ND OVERDRIVE OVERIDE SW (AC–DELCO #14081180) .....
84–87	Y	14078915	1	14.70	RELAY, M/TRNS O/D SW (03.140) (AC–DELCO #212–307) .....
88–89	Y	14089936	1	16.26	RELAY, M/TRNS O/D SW (USE W/CONN 15306002) (01.055) (AC–DELCO #15–8240) .....

© 2000 GENERAL MOTORS SERVICE PARTS OPERATIONS

4.480 BLOCK – GASKET – RELAY – SEAL – SWITCH, Transmission Overdrive [4–SPEED MANUAL](Con't)

86–88	Y	14057528	2	14.78	SWITCH, OVERDRIVE OVERRIDE REV (AC–DELCO #14057528)
84–85	Y	14057528	2	14.78	SWITCH, OVERDRIVE OVERRIDE REV & 4TH GEAR (AC–DELCO #14057528)
84	Y	14078914	1	11.02	SWITCH, TRANS OVERDRIVE (MTS ON CNSL) (AC–DELCO #14078914)
85	Y	14087647	1	DISCON	SWITCH, TRANS OVERDRIVE (MTS ON CNSL)
85	Y (2ND DES)	14087686	1	104.04	SWITCH, TRANS OVERDRIVE (IN SHFTR KNOB) (AC–DELCO #14087686)
86–88	Y	14087693	1	86.87	SWITCH, TRANS OVERDRIVE (ON SHFTR LVR–UNDER BOOT) (AC–DELCO #14087693)
84–88	Y	14057529	2	17.27	SWITCH, 1ST & 2ND OVERDRIVE OVERIDE (AC–DELCO #14057529)

4.015 BOOT – NUT – RETAINER, Transmission Control Lever [6–SPEED MANUAL]

89	Y	14104919	1	51.26	BOOT, M/TRNS CONT LVR
90–94	Y 6–SPD M/TRANS (ML9)	10193729	1	83.92	BOOT, M/TRNS CONT LVR (UPR) (ON EARLY 92 & PRIOR MDLS, REMOVE & DISCARD C–CLIP ON SHFTR LVR)
95–96	Y 6–SPD M/TRANS (ML9)	10267746	1	85.17	BOOT, M/TRNS CONT LVR
89–96	Y	14104932	1	43.35	BOOT, M/TRNS CONT LVR LWR
89–96	Y 6–SPD M/TRANS (ML9)	14104848	4	1.40	NUT, M/TRNS CONT LVR BOOT (M6X1X12)
89–96	Y 6–SPD M/TRANS (ML9)	14104931	1	8.20	RETAINER, M/TRNS CONT LVR BOOT

4.015 BOOT, Transmission Control Lever [AUTOMATIC]

90–96	Y	10175792	1	104.04	BOOT, A/TRNS CONT
84–89	Y	10104025	1	106.11	BOOT, CONT LVR UPR

4.020 DIAL – HOUSING – INDICATOR, Transmission Shift Control Selector [AUTOMATIC]

84–89	Y	10146407	1	7.30	DIAL, A/TRNS CONT IND
90–91	Y 4–SPD A/TRANS (MD8)	10153627	1	7.30	DIAL, A/TRNS CONT IND
92–93	Y 4–SPD A/TRANS (MD8), (EXC VE1 (EXPORT)	10153627	1	7.30	DIAL, A/TRNS CONT IND
94–96	Y 4–SPD A/TRANS (M30), (EXC VE1 (EXPORT)	10220955	1	7.30	DIAL, A/TRNS CONT IND
84–93	Y 4–SPD A/TRANS (MD8)	10146440	1	10.50	HOUSING, A/TRNS CONT IND
94–96	Y 4–SPD A/TRANS (M30)	10146440	1	10.50	HOUSING, A/TRNS CONT IND
84–89	Y	14046747	1	17.27	INDICATOR, A/TRNS CONT
90–91	Y	10146437	1	6.85	INDICATOR, A/TRNS CONT
92–93	Y 4–SPD A/TRANS (MD8)	10146437	1	6.85	INDICATOR, A/TRNS CONT
94–96	Y 4–SPD A/TRANS (M30)	10146437	1	6.85	INDICATOR, A/TRNS CONT
	*EXPORT**********EXPORT**********EXPORT**********EXPORT**********EXPORT*				
92	Y 4–SPD A/TRANS (MD8), VE1 (EXPORT)	10175897	1	DISCON	DIAL, A/TRNS CONT IND
93	Y 4–SPD A/TRANS (MD8), VE1 (EXPORT)	10175897	1	DISCON	DIAL, A/TRNS CONT IND
94–96	Y 4–SPD A/TRANS (M30), VE1 (EXPORT)	10220956	1	7.25	DIAL, A/TRNS CONT IND

4.022 SHIELD – SOCKET, Transmission Control Indicator Lamp [AUTOMATIC]

84–96	Y	14046746	1	2.40	SHIELD, A/TRNS CONT IND LGT

© 2000 GENERAL MOTORS SERVICE PARTS OPERATIONS

4.720 BOLT – BRACKET – CLIP – CONNECTOR – COVER – DIODE – GASKET – HARNESS – MODULE – PLATE – RELAY – RETAINER – SUPPORT – WIRE, Electronic Brake Control

92–94	Y	10143546	1	3.26	BRACKET, ELEK BRK & TRACT CONT MDL
95	Y 5.7J (LT5)	10143546	1	3.26	BRACKET, ELEK BRK & TRACT CONT MDL
86–91	Y	14088443	1	DISCON	BRACKET, ELEK BRK CONT MDL (RR)
86–91	Y	14088444	1	DISCON	BRACKET, ELEK BRK CONT MDL (FRT)
96	Y (EXC DAYTIME RUNNING LGT (T61), HDLP (T72) (EXPORT), RH RULE OF ROAD HDLP (T84) (EXPORT), LH RULE OF ROAD HDLP (T85) (EXPORT), SIG & MKR LP (T90) (EXPORT)	12129073	1	.45	BRACKET, ELEK BRK CONT RLY (BLACK) (AC–DELCO #12129073)
87–95	Y	14062552	2	1.12	BRACKET, WHL SPD SEN WRG HARN CLIP (02.559)
96	Y	14062552	1	1.12	BRACKET, WHL SPD SEN WRG HARN CLIP (02.559)
92–94	Y	10143537	1	21.78	COVER, ELEK BRK CONT MDL
95	Y SPECIAL PERFORMANCE PKG (ZR1)	10143537	1	21.78	COVER, ELEK BRK CONT MDL
95	Y (EXC SPECIAL PERFORMANCE PKG (ZR1)	10225919	1	23.31	COVER, ELEK BRK CONT MDL
96	Y	10225919	1	23.31	COVER, ELEK BRK CONT MDL
92–96	Y	10167107	1	4.13	GASKET, ELEK BRK CONT MDL CVR
86	Y (2ND DES)	12046596	1	DISCON	HARNESS, BRK PRESS MOD VLV WRG (HAS 3 CONNECTORS FOR WHL SPD SEN HARNESS)
86	Y (1ST DES)	12048801	1	DISCON	HARNESS, BRK PRESS MOD VLV WRG (HAS 2 CONNECTORS FOR WHL SPD SEN HARNESS)
87	Y	12067433	1	DISCON	HARNESS, BRK PRESS MOD VLV WRG
88	Y	12083507	1	DISCON	HARNESS, BRK PRESS MOD VLV WRG
89	Y	12083507	1	DISCON	HARNESS, BRK PRESS MOD VLV WRG
90	Y (EXC FX3)	12080844	1	DISCON	HARNESS, BRK PRESS MOD VLV WRG
90	Y RIDE & HDLG (FX3)	12080845	1	DISCON	HARNESS, BRK PRESS MOD VLV WRG
91	Y (EXC ELEK RIDE & HANDLING (FX3)	12112465	1	DISCON	HARNESS, BRK PRESS MOD VLV WRG
91	Y ELEK RIDE & HANDLING (FX3)	12112466	1	DISCON	HARNESS, BRK PRESS MOD VLV WRG
93	Y (EXC ELEK RIDE & HANDLING (FX3)	12106505	1	260.86	HARNESS, BRK PRESS MOD VLV WRG
93	Y ELEK RIDE & HANDLING (FX3)	12106507	1	DISCON	HARNESS, BRK PRESS MOD VLV WRG
94	Y (EXC ELEK RIDE & HANDLING (FX3)	12130360	1	260.86	HARNESS, BRK PRESS MOD VLV WRG
94	Y ELEK RIDE & HANDLING (FX3)	12130361	1	260.86	HARNESS, BRK PRESS MOD VLV WRG
95	Y 5.7J (LT5)	12130361	1	260.86	HARNESS, BRK PRESS MOD VLV WRG
86–90	Y	12055840	1	DISCON	HARNESS, BRK PRESS MOD VLV WRG HARN GRD
92	Y (EXC ELEK RIDE & HANDLING (FX3)	12106545	1	390.00	HARNESS, ELEK BRK CONT & ELEC TRACT CONT WRG (CONT MDL TO WHL SEN HARN)

© 2000 GENERAL MOTORS SERVICE PARTS OPERATIONS

4.720 BOLT – BRACKET – CLIP – CONNECTOR – COVER – DIODE – GASKET – HARNESS – MODULE – PLATE – RELAY – RETAINER – SUPPORT – WIRE, Electronic Brake Control(Con't)

92	Y (EXC ELEK RIDE & HANDLING (FX3)	12106546	1	260.86	HARNESS, ELEK BRK CONT & ELEC TRACT CONT WRG (FRT & RR WHL SEN TO CONT HARN)
93-94	Y ELEK RIDE & HANDLING (FX3)	12130313	1	522.73	HARNESS, ELEK BRK CONT & ELEC TRACT CONT WRG
93-94	Y (EXC ELEK RIDE & HANDLING (FX3)	12130314	1	260.86	HARNESS, ELEK BRK CONT & ELEC TRACT CONT WRG
95	Y 5.7J (LT5)	12130313	1	522.73	HARNESS, ELEK BRK CONT & ELEC TRACT CONT WRG
95	Y 5.7P (LT1)	12130367	1	772.50	HARNESS, ELEK BRK CONT & ELEC TRACT CONT WRG
96	Y CHASSIS, REALTIME DAMPING (F45)	12130459	1	522.73	HARNESS, ELEK BRK CONT & ELEC TRACT CONT WRG
96	Y (EXC CHASSIS, REALTIME DAMPING (F45)	12130496	1	522.73	HARNESS, ELEK BRK CONT & ELEC TRACT CONT WRG
92	Y ELEK RIDE & HANDLING (FX3)	12106547	1	DISCON	HARNESS, ELEK BRK CONT & ELEK SUSP & TRACTION CONT WRG (CONT MDL TO WHL SEN HARN)
92	Y ELEK RIDE & HANDLING (FX3)	12106548	1	DISCON	HARNESS, ELEK BRK CONT & ELEK SUSP & TRACTION CONT WRG (FRT & RR WHL SEN TO CONT HARN)
86	Y07 (1ST DES)	12048802	1	DISCON	HARNESS, WHL SPD SEN WRG (2 CONNECTORS FOR BRK MODULE HARN)
86	Y07 (2ND DES)	12055921	1	DISCON	HARNESS, WHL SPD SEN WRG (3 CONNECTORS FOR BRK MODULE HARN)
86	Y67 (1ST DES)	12048803	1	DISCON	HARNESS, WHL SPD SEN WRG (HAS 2 CONNECTORS FOR BRK MODULE HARN)
86	Y67 (2ND DES)	12055922	1	DISCON	HARNESS, WHL SPD SEN WRG (HAS 3 CONNECTORS FOR BRK MODULE HARN)
87	Y07 (EXC 1BL PERF HDLG PKG Z51, B2B SPORT HDLG PKG Z52)	12046597	1	DISCON	HARNESS, WHL SPD SEN WRG
87	Y07 1BL (PERF HDLG PKG Z51), B2B (SPORT HDLG PKG Z52)	12067499	1	DISCON	HARNESS, WHL SPD SEN WRG
87	Y67	12046598	1	DISCON	HARNESS, WHL SPD SEN WRG
88-90	Y	12073494	1	385.50	HARNESS, WHL SPD SEN WRG
91	Y (EXC ELEK RIDE & HANDLING (FX3)	12090313	1	260.86	HARNESS, WHL SPD SEN WRG
91	Y ELEK RIDE & HANDLING (FX3)	12090314	1	260.86	HARNESS, WHL SPD SEN WRG
91-96	Y	12090339	2	80.25	HARNESS, WHL SPD SEN WRG HARN EXTN
92-94	Y	10241014	1	1030.00	MODULE, ELEK BRK & TRACT CONT (AC-DELCO #10241014)
95	Y 5.7J (LT5)	10241014	1	1030.00	MODULE, ELEK BRK & TRACT CONT (AC-DELCO #10241014)
86-89	Y	14103343	1	990.05	MODULE, ELEK BRK CONT (MODULE, ELEK BRK CONT) (AC-DELCO #14103343)
90-91	Y	10223326	1	1030.00	MODULE, ELEK BRK CONT (AC-DELCO #10223326)
95	Y 5.7P (LT1)	12521972	1	643.62	MODULE, ELEK BRK CONT (& TRACT CONT)
96	Y	12525023	1	857.82	MODULE, ELEK BRK CONT
92-94	Y	14058658	2	1.68	PLATE, ELEK BRK & TRACT CONT MDL BRKT STUD (12.986)

© 2000 GENERAL MOTORS SERVICE PARTS OPERATIONS

4.720 BOLT – BRACKET – CLIP – CONNECTOR – COVER – DIODE – GASKET – HARNESS – MODULE – PLATE – RELAY – RETAINER – SUPPORT – WIRE, Electronic Brake Control(Con't)

95	Y 5.7J (LT5)	14058658	1	1.68	PLATE, ELEK BRK & TRACT CONT MDL BRKT STUD (12.986)
86–91	Y	14091012	1	DISCON	PLATE, ELEK BRK CONT WRG HARN CLIP TAP (U–SHAPE) (03.675)
92–96	Y	10045625	7	1.07	PLATE, ELEK BRK CONT WRG HARN CLIP TAP (W/STUD) (12.981)
92–96	Y	14090618	1	7.05	PLATE, ELEK BRK CONT WRG HARN GNOM TAP (03.675)
92–94	Y	10143547	1	2.19	SUPPORT, ELEK BRK & TRACT CONT MDL
95	Y 5.7J (LT5)	10143547	1	2.19	SUPPORT, ELEK BRK & TRACT CONT MDL
91–96	Y	12080879	1	9.90	WIRE, BRK PRESS MOD VLV WRG HARN GND

5.813 BOLT – CAP – HOLDER – NUT – NUT KIT – RETAINER, Hub Front and Rear

86–87	Y	10064306	1	10.50	HOLDER, SPL SECURITY WHL LK KEY
88	Y ALUM WHL (PY3)	10064306	1	10.50	HOLDER, SPL SECURITY WHL LK KEY
84–96	Y	11506101	8	*.46	NUT, FRT WHL HUB (M10X1.5 PC HEX FLG) (08.917)
84	Y	09591700	20	*7.00	NUT, WHL (M12X1.5 W/PLSTC CTD SS/CAP) (09591700–DOME TOP CAP, 09591664–FLAT TOP CAP, MAY NEED TO REPL ALL WHL NUTS W/SIMILAR TYPE)
85–96	Y	10028615	20	*1.10	NUT, WHL (BLACK) (M12X1.5 W/M24X2.0 OTR THD)
89	Y QA1	14092673	20	*5.00	NUT, WHL

5.890 CONNECTOR – GAGE – INSULATOR – MODULE – SENSOR, Tire Pressure

89	Y LOW TIRE PRESSURE IND (UJ6)	14093187	1	DISCON	MODULE, LOW TIRE PRESS IND
90–92	Y LOW TIRE PRESSURE IND (UJ6)	10143565	1	170.52	MODULE, LOW TIRE PRESS IND
93–96	Y LOW TIRE PRESSURE IND (UJ6)	10161858	1	170.52	MODULE, LOW TIRE PRESS IND

7.440 ACCELEROMETER – ACCELEROMETER KIT – ACTUATOR – BRACKET, Hydraulic Suspension

90–93	Y	12524328	1	184.62	ACCELEROMETER KIT, VEH LATL
94–96	Y	10210848	1	201.97	ACCELEROMETER, VEH LATL
89–95	Y ELEK RIDE & HANDLING (FX3)	22068666	2	501.83	ACTUATOR, FRT HYD SUSP (INCLUDES SNAP RING)
94–96	Y	10248890	1	1.12	BRACKET, VEH LATL ACCLRM

7.450 BRACKET – CONNECTOR – CONTROL – HARNESS – LAMP – MODULE – NUT – RETAINER – SWITCH – TAPE, Electronic Control Suspension

91	Y ELEK RIDE & HANDLING (FX3)	14104798	1	DISCON	BRACKET, ELEK SUSP CONT MDL
96	Y CHASSIS, REALTIME DAMPING (F45)	10274869	1	.99	BRACKET, ELEK SUSP CONT MDL
90–93	Y ELEK RIDE & HANDLING (FX3)	12125665	1	28.96	CONNECTOR, ELEK SUSP STRUT HARN EXTN (GRAY) (6–WAY F) (W/LEADS) (04.663)
92–93	Y	12101827	1	36.30	CONNECTOR, ELEK SUSP STRUT HARN EXTN (8–WAY M) (W/LEADS) (02.535) (AC–DELCO #PT219)

© 2000 GENERAL MOTORS SERVICE PARTS OPERATIONS

7.450 BRACKET – CONNECTOR – CONTROL – HARNESS – LAMP – MODULE – NUT – RETAINER – SWITCH – TAPE, Electronic Control Suspension(Con't)

94	Y ELEK RIDE & HANDLING (FX3) ..	12125665	1	28.96	CONNECTOR, INLINE–TO ELEK SUSP MDL (GRAY) (6–WAY F) (W/LEADS) (04.663) .....
95	Y 5.7J (LT5)	12125665	1	28.96	CONNECTOR, INLINE–TO ELEK SUSP MDL (GRAY) (6–WAY F) (W/LEADS) (04.663) .....
96	Y	12085535	1	17.46	CONNECTOR, INLINE–TO ELEK SUSP MDL (2–WAY F) (W/LEADS) (HAS INDEX TAB @ OUTER EDGE OF CAVITY B) (02.535) (AC–DELCO #PT146) .....
94–95	Y	12041476	1	2.53	CONNECTOR, MDL–ELEK SUSP CONT (32–WAY FEMALE) (W/O LEADS) (02.480) .....
96	Y CHASSIS, REALTIME DAMPING (F45)	12110206	1	3.50	CONNECTOR, MDL–ELEK SUSP CONT (LT BLUE) (24–W F) (W/O LEADS) (03.670) .....
96	Y CHASSIS, REALTIME DAMPING (F45)	12129088	1	2.43	CONNECTOR, MDL–ELEK SUSP CONT (BLACK) (8–WAY F, W/O LEADS) (04.720) .....
91–95	Y ELEK RIDE & HANDLING (FX3) ..	12117350	1	22.35	CONNECTOR, SW–ELEK SUSP (4–WAY F) (W/LEADS) (09.764) (AC–DELCO #PT483) .....
93	Y	12125665	1	28.96	CONNECTOR, SW–ELEK SUSP (GRAY) (6–WAY F) (W/LEADS) (04.663) .....
94–95	Y	12101827	1	36.30	CONNECTOR, SW–ELEK SUSP (8–WAY M) (W/LEADS) (02.535) (AC–DELCO #PT219) .....
96	Y CHASSIS, REALTIME DAMPING (F45)	12117350	1	22.35	CONNECTOR, SW–ELEK SUSP (4–WAY F) (W/LEADS) (09.764) (AC–DELCO #PT483) .....
89	Y RIDE & HDLG (FX3)	10098464	1	24.78	CONTROL, ELEK SUSP .....
90–91	Y 6–WAY PWR D/SEAT ADJR (AC3), ELEK RIDE & HANDLING (FX3), (EXC 6–WAY PWR P/SEAT ADJR (AC1)	10098438	1	158.10	CONTROL, ELEK SUSP (W/D/SEAT ADJR SW) .....
90	Y 6–WAY (AC1, AC3), RIDE & HDLG (FX3)	14104668	1	DISCON	CONTROL, ELEK SUSP (W/FRT ST ADJR SW) .....
92–93	Y 6–WAY PWR D/SEAT ADJR (AC3), ELEK RIDE & HANDLING (FX3), (EXC 6–WAY PWR P/SEAT ADJR (AC1)	10161836	1	158.10	CONTROL, ELEK SUSP (W/D/SEAT ADJR SW) .....
89	Y ELEK SUSP CONT (FX3)	12080608	1	DISCON	HARNESS, ELEK SUSP STRUT WRG HARN EXTN .....
90–93	Y ELEK RIDE & HANDLING (FX3) ..	12080956	1	38.50	HARNESS, ELEK SUSP STRUT WRG HARN EXTN .....
94–95	Y 6–SPD M/TRANS (ML9), ELEK RIDE & HANDLING (FX3)	12130362	1	38.50	HARNESS, ELEK SUSP STRUT WRG HARN EXTN .....
94–95	Y 4–SPD A/TRANS (M30), ELEK RIDE & HANDLING (FX3)	12130490	1	82.62	HARNESS, ELEK SUSP STRUT WRG HARN EXTN .....
96	Y CHASSIS, REALTIME DAMPING (F45)	12130460	1	38.50	HARNESS, ELEK SUSP STRUT WRG HARN EXTN .....
90–91	Y 6–WAY PWR P/SEAT ADJR (AC1), 6–WAY PWR D/SEAT ADJR (AC3), ELEK RIDE & HANDLING (FX3) ...	10159560	1	1.90	LAMP, SELECTIVE RIDE SW .....
92	Y ELEK RIDE & HANDLING (FX3) ..	10159560	1	1.90	LAMP, SELECTIVE RIDE SW .....

© 2000 GENERAL MOTORS SERVICE PARTS OPERATIONS

7.450 BRACKET – CONNECTOR – CONTROL – HARNESS – LAMP – MODULE – NUT – RETAINER – SWITCH – TAPE, Electronic Control Suspension(Con't)

93	Y 6-WAY PWR P/SEAT ADJR (AC1), 6-WAY PWR D/SEAT ADJR (AC3), ELEK RIDE & HANDLING (FX3) ...	10159560	1	1.90	LAMP, SELECTIVE RIDE SW .....
89-91	Y ELEK RIDE & HANDLING (FX3) ..	22115156	1	1578.97	MODULE, ELEK SUSP CONT .....
92-95	Y ELEK RIDE & HANDLING (FX3) ..	22052752	1	1014.90	MODULE, ELEK SUSP CONT .....
94-95	Y 4-SPD A/TRANS (M30), ELEK RIDE & HANDLING (FX3)	12135092	1	27.53	MODULE, ELEK SUSP CONT (FILTER) (PART OF ELEK SUSP WRG HARN EXTN) .....
96	Y CHASSIS, REALTIME DAMPING (F45)	16205661	1	674.22	MODULE, ELEK SUSP CONT (MUST BE PROGRAMMED AT DEALER) .....
96	Y CHASSIS, REALTIME DAMPING (F45)	10257543	1	1.38	RETAINER, ELEK SUSP CONT MDL ...
90	Y ELEK RIDE & HANDLING (FX3), (EXC 6-WAY PWR P/SEAT ADJR (AC1), 6-WAY PWR D/SEAT ADJR (AC3)	10086226	1	54.07	SWITCH, ELEK SUSP .....
90-91	Y 6-WAY PWR D/SEAT ADJR (AC3), ELEK RIDE & HANDLING (FX3), (EXC 6-WAY PWR P/SEAT ADJR (AC1)	10086226	1	54.07	SWITCH, ELEK SUSP .....
90-91	Y 6-WAY PWR P/SEAT ADJR (AC1), 6-WAY PWR D/SEAT ADJR (AC3), ELEK RIDE & HANDLING (FX3) ...	10086226	1	54.07	SWITCH, ELEK SUSP .....
91	Y ELEK RIDE & HANDLING (FX3), (EXC 6-WAY PWR P/SEAT ADJR (AC1), 6-WAY PWR D/SEAT ADJR (AC3)	10098437	1	54.07	SWITCH, ELEK SUSP .....
92	Y ELEK RIDE & HANDLING (FX3) ..	10161838	1	54.07	SWITCH, ELEK SUSP .....
92	Y ELEK RIDE & HANDLING (FX3), (EXC 6-WAY PWR P/SEAT ADJR (AC1), 6-WAY PWR D/SEAT ADJR (AC3)	10161847	1	54.07	SWITCH, ELEK SUSP .....
93	Y ELEK RIDE & HANDLING (FX3), 6-WAY PWR D/SEAT ADJR (AC3) .	10161838	1	54.07	SWITCH, ELEK SUSP .....
94-95	Y ELEK RIDE & HANDLING (FX3) ..	10212995	1	54.07	SWITCH, ELEK SUSP .....
96	Y CHASSIS, REALTIME DAMPING (F45)	10212995	1	54.07	SWITCH, ELEK SUSP .....

8.075 BEZEL – BOLT – BUMPER – CABLE – CAP – HANDLE – PLATE – RETAINER, Hood Latch

84-89	Y (12I)	14047492	1	8.36	BEZEL, PRIM LAT REL CBL HDL (GRAPHITE) (PAINT TO MATCH) .....
84-87	Y (15I)	14058618	1	DISCON	BEZEL, PRIM LAT REL CBL HDL (MED GRAY) .....
84-85	Y (28I)	14058619	1	DISCON	BEZEL, PRIM LAT REL CBL HDL (BLUE) .....
84-87	Y (65I)	14058620	1	DISCON	BEZEL, PRIM LAT REL CBL HDL (BRONZE) .....
84-87	Y (62I)	14058621	1	DISCON	BEZEL, PRIM LAT REL CBL HDL (SADDLE) .....
84-85	Y	14058622	1	DISCON	BEZEL, PRIM LAT REL CBL HDL (CARMINE) .....
90-96	Y	10086014	1	6.14	PLATE, HOOD PRIM LAT REL CBL BRKT NUT .....

8.820 CONTAINER – JACK – LATCH – RETAINER, Auto

94-96	Y07	10219041	1	12.90	CONTAINER, JK STOW .....
94-96	Y67	10219040	1	11.99	CONTAINER, JK STOW .....

© 2000 GENERAL MOTORS SERVICE PARTS OPERATIONS

8.820 CONTAINER – JACK – LATCH – RETAINER, Auto(Con't)

93–96	Y	10230427	1	56.61	JACK
84–92	Y	10230427	1	56.61	JACK, (ON 92 & PRIOR MODELS, ALSO REPLACE JACK LABEL W/10219501)
84	Y	14060278	1	DISCON	RETAINER, JK STOW
85–93	Y	14084442	1	8.21	RETAINER, JK STOW
88–96	Y	10077281	1	5.15	RETAINER, JK/WHL WRENCH HDL INR
88–96	Y	10077282	1	5.15	RETAINER, JK/WHL WRENCH HDL OTR

8.821 BAG – CLIP – HANDLE – PLATE – WRENCH, Wheel, Jack and Miscellaneous Wrench

89–96	Y67 AUX RF (CC2)	10149268	1	32.04	BAG, TOOL STOW (13.346)
84–96	Y	14050029	1	16.07	HANDLE, JK/WHL WRENCH (INCLUDES WRENCH FOR 84–90) (08.820)
91–96	Y	10180890	1	29.84	WRENCH, WHL

9.260 SEAL, Air Outlet

84–91	Y	03999572	AR	4.98	SEAL, POLYURETHANE (59.50X1.25X.75)

9.262 DUCT – INSULATOR – OUTLET – RETAINER – SEAL, Air Distributor

84–88	Y A/C	14052309	RH	DISCON	OUTLET, FLR AIR
84–85	Y A/C	14052317	LH	DISCON	OUTLET, FLR AIR
89	Y	14052309	RH	DISCON	OUTLET, FLR AIR
90–96	Y	10086100	1	22.25	OUTLET, FLR AIR
90–91	Y	10199754	RH	68.07	OUTLET, I/P OTR AIR (BLACK)
92–93	Y	10199754	RH	68.07	OUTLET, I/P OTR AIR (BLACK)
94–96	Y (EXC EUROPEAN PROVISIONS (VD1) (EXPORT)	10263246	RH	64.27	OUTLET, I/P OTR AIR (INCL GRL & 2 DFL)
85–89	Y (5.7–8)	14090619	2	.93	RETAINER, FRT AIR INT DUCT
	*EXPORT**********EXPORT**********EXPORT**********EXPORT**********EXPORT*				
94–96	Y EUROPEAN PROVISIONS (VD1) (EXPORT)	10263248	RH	88.65	OUTLET, I/P OTR AIR

9.264 DEFLECTOR – GRILLE – OUTLET, Air Outlet

84–89	Y	14046017	AR	17.07	DEFLECTOR, I/P OTR AIR OTLT
84–89	Y	14046019	4	32.77	DEFLECTOR, A/C AIR CTR OTLT
90–91	Y	10086046	1	27.68	DEFLECTOR, I/P CTR AIR OTLT
92–96	Y	10272750	1	18.85	DEFLECTOR, I/P CTR AIR OTLT
90–91	Y	10086045	LH	29.72	DEFLECTOR, I/P OTR AIR OTLT
92–96	Y	10199753	LH	32.77	DEFLECTOR, I/P OTR AIR OTLT
92–96	Y	10256267	RH	29.97	DEFLECTOR, I/P OTR AIR OTLT (INBOARD)
92–96	Y	10263250	RH	29.97	DEFLECTOR, I/P OTR AIR OTLT (OUTBOARD)
90	Y	10100163	1	13.57	DEFLECTOR, LAP AIR OTLT
91	Y (1ST DES)	10100163	1	13.57	DEFLECTOR, LAP AIR OTLT (NO COMPARIBLE 2ND DES)
90–91	Y	10085931	1	10.92	GRILLE, I/P CTR AIR OTLT
92–93	Y	10199768	1	DISCON	GRILLE, I/P CTR AIR OTLT
94–96	Y	10251301	1	19.87	GRILLE, I/P CTR AIR OTLT
90–91	Y	10085930	LH	DISCON	GRILLE, I/P OTR AIR OTLT
90–93	Y	10085982	RH	13.57	GRILLE, I/P OTR AIR OTLT (BLACK)
92–93	Y	10199769	LH	DISCON	GRILLE, I/P OTR AIR OTLT (BLACK)
94–96	Y	10161885	LH	13.57	GRILLE, I/P OTR AIR OTLT (BLACK)

© 2000 GENERAL MOTORS SERVICE PARTS OPERATIONS

9.264 DEFLECTOR – GRILLE – OUTLET, Air Outlet(Con't)

94–96	Y	10248497	RH	23.42	GRILLE, I/P OTR AIR OTLT
89–93	Y	10086032	1	DISCON	GRILLE, I/P UPR TR PAD AIR VENT (BLACK) (09.789)
84–89	Y	14046018	RH	12.13	OUTLET, I/P OTR AIR

9.273 CONNECTOR – CONTROL – INSULATOR, Heater and A/C Control

86–87	YY07 A/C (C68) (EXC ELEC DEFG C49)	01228825	1	DISCON	CONTROL, HTR & A .C (REMAN)
84	Y EXC. ELEC DEFG	16040101	1	80.14	CONTROL, HTR & A/C (AC–DELCO #15–71413)
84–86	Y A/C MAN CONT (C60), ELEC RR WDO DEFG (C49)	16040111	1	131.44	CONTROL, HTR & A/C (AC–DELCO #15–71414)
85–86	Y A/C MAN CONT (C60), (EXC ELEC RR WDO DEFG (C49)	16040101	1	80.14	CONTROL, HTR & A/C (AC–DELCO #15–71413)
86	Y07 ELEC DEFG (C49), A/C (C68)	01228824	1	130.00	CONTROL, HTR & A/C (REMAN)
87–88	Y A/C MAN CONT (C60), (EXC ELEC RR WDO DEFG (C49), ELEC R/CON HTD MIR (DL8)	16040101	1	80.14	CONTROL, HTR & A/C (AC–DELCO #15–71413)
87	Y07 ELEC RR WDO DEFG (C49), A/C AUTO ELEC CONT (C68), ELEC R/CON HTD MIR (DL8)	01228824	1	130.00	CONTROL, HTR & A/C (REMAN)
87–88	Y07 A/C MAN CONT (C60), ELEC RR WDO DEFG (C49)	16040111	1	131.44	CONTROL, HTR & A/C (AC–DELCO #15–71414)
87–89	Y67 A/C (C68) (EXC ELEC HTD MIR DL8)	01228094	1	180.84	CONTROL, HTR & A/C (REMAN)
87–89	Y67 A/C (C68), ELEC HTD MIR (DL8)	01228095	1	180.84	CONTROL, HTR & A/C (REMAN)
87–89	Y67 A/C MAN CONT (C60), ELEC R/CON HTD MIR (DL8)	16068761	1	112.20	CONTROL, HTR & A/C (AC–DELCO #15–71576)
88	Y07 ELEC DEFG (C49), A/C (C68) (2ND DES)	01228824	1	130.00	CONTROL, HTR & A/C (REMAN) (STAMPED 16087191)
88	Y07 A/C (C68) (EXC ELEC DEFG C49) (2ND DES)	01228825	1	DISCON	CONTROL, HTR & A/C (REMAN) (STAMPED 16087201)
89	Y07 A/C (C68)	01228824	1	130.00	CONTROL, HTR & A/C (REMAN) (STAMPED 16087191)
89	Y07 A/C MAN CONT (C60)	16040111	1	131.44	CONTROL, HTR & A/C (AC–DELCO #15–71414)
90–91	Y07 A/C MAN CONT (C60)	16085521	1	269.28	CONTROL, HTR & A/C (AC–DELCO #15–71667)
90–91	Y07 A/C AUTO ELEC CONT (C68)	16152503	1	221.48	CONTROL, HTR & A/C (REMAN)
90–91	Y67 A/C MAN CONT (C60), ELEC R/CON HTD MIR (DL8), (EXC AUX RF (CC2)	16074571	1	269.28	CONTROL, HTR & A/C (AC–DELCO #15–71662)
90–91	Y67 A/C MAN CONT (C60), AUX RF (CC2)	16085521	1	269.28	CONTROL, HTR & A/C (AC–DELCO #15–71667)
90–91	Y67 A/C AUTO ELEC CONT (C68), ELEC R/CON HTD MIR (DL8), (EXC AUX RF (CC2)	16152502	1	207.04	CONTROL, HTR & A/C (REMAN)
90–91	Y67 A/C AUTO ELEC CONT (C68), AUX RF (CC2)	16152503	1	221.48	CONTROL, HTR & A/C (REMAN)
92–93	Y07 A/C AUTO ELEC CONT (C68)	16162118	1	265.18	CONTROL, HTR & A/C (REMAN)
92–93	Y07 A/C MAN CONT (C60)	16162371	1	269.28	CONTROL, HTR & A/C (AC–DELCO #15–71929)
92–93	Y67 AUX RF (CC2), A/C AUTO ELEC CONT (C68)	16162118	1	265.18	CONTROL, HTR & A/C (REMAN)
92–93	Y67 A/C AUTO ELEC CONT (C68), ELEC R/CON HTD MIR (DL8), (EXC AUX RF (CC2)	16162120	1	265.18	CONTROL, HTR & A/C (REMAN)
92–93	Y67 A/C MAN CONT (C60), ELEC R/CON HTD MIR (DL8), (EXC AUX RF (CC2)	16162361	1	269.28	CONTROL, HTR & A/C (AC–DELCO #15–71928)

© 2000 GENERAL MOTORS SERVICE PARTS OPERATIONS

9.273 CONNECTOR – CONTROL – INSULATOR, Heater and A/C Control(Con't)

92–93	Y67 AUX RF (CC2), A/C MAN CONT (C60)	16162371	1	269.28	CONTROL, HTR & A/C (AC–DELCO #15–71929)
94–96	Y A/C MAN CONT (C60)	16170891	1	224.38	CONTROL, HTR & A/C (AC–DELCO #15–72065)
94–96	Y A/C AUTO ELEC CONT (C68)	16192608	1	197.60	CONTROL, HTR & A/C (REMAN) (AC–DELCO #15–72077)
90–96	Y	10158011	1	1.03	INSULATOR, HTR & A/C CONT
	*EXPORT**********EXPORT**********EXPORT**********EXPORT**********EXPORT*				
90–91	Y67 A/C MAN CONT (C60), ELEC REM CONT MIR (DC7) (EXPORT), O/S ELEC R/CON PAINTED MIR (DC8) (EXPORT), (EXC AUX RF (CC2)	16085521	1	269.28	CONTROL, HTR & A/C (AC–DELCO #15–71667)
90	Y67 A/C AUTO ELEC CONT (C68), ELEC REM CONT MIR (DC7) (EXPORT), (EXC AUX RF (CC2)	16152503	1	221.48	CONTROL, HTR & A/C (REMAN)
91	Y67 A/C AUTO ELEC CONT (C68), ELEC REM CONT MIR (DC7) (EXPORT), O/S ELEC R/CON PAINTED MIR (DC8) (EXPORT), (EXC AUX RF (CC2)	16152503	1	221.48	CONTROL, HTR & A/C (REMAN)
92–93	Y67 A/C AUTO ELEC CONT (C68), ELEC REM CONT MIR (DC7) (EXPORT), O/S ELEC R/CON PAINTED MIR (DC8) (EXPORT), (EXC AUX RF (CC2)	16162118	1	265.18	CONTROL, HTR & A/C (REMAN)
92	Y67 A/C MAN CONT (C60), O/S ELEC R/CON PAINTED MIR (DC8) (EXPORT), (EXC AUX RF (CC2)	16162371	1	269.28	CONTROL, HTR & A/C (AC–DELCO #15–71929)

9.275 ASPIRATOR – BRACKET – CONNECTOR – DUCT – GRILLE – HOSE – KNOB – MODULE – MUFFLER – PROGRAMMER – SENSOR – SOLENOID – SPRING – SWITCH, A/C Electric Control

85–88	Y A/C AUTO ELEC CONT (C68)	14086765	1	DISCON	BRACKET, HTR & A/C PROGMR
90–96	Y	10086302	1	3.25	BRACKET, HTR & A/C PROGMR
85–88	Y A/C (C68)	14083707	3	DISCON	BRACKET, PROG BRKT (TO FIREWALL)
92–93	Y 5.7P (LT1)	22599559	1	48.08	SENSOR, A/C REFRIG PRESS (W/THREE TERMINALS) (MATES W/CONNECTOR 12102748) (AC–DELCO #15–72104)
94–95	Y 5.7P (LT1)	22601618	1	41.10	SENSOR, A/C REFRIG PRESS (MATES W/CONN. 12102748) (AC–DELCO #15–20310)
96	Y	22601618	1	41.10	SENSOR, A/C REFRIG PRESS (MATES W/CONN. 12102748) (AC–DELCO #15–20310)
86–89	Y A/C (C68)	16041001	1	23.88	SENSOR, I/S AIR TEMP
90–96	Y A/C AUTO ELEC CONT (C68)	16129011	1	32.48	SENSOR, I/S AIR TEMP (AC–DELCO #15–71650)
89	Y	16123101	1	29.78	SENSOR, SUN LOAD TEMP (09.260) (AC–DELCO #15–71638)
90	Y A/C AUTO ELEC CONT (C68)	16123101	1	29.78	SENSOR, SUN LOAD TEMP (09.260) (AC–DELCO #15–71638)
91–96	Y A/C AUTO ELEC CONT (C68)	16137801	1	35.20	SENSOR, SUN LOAD TEMP (INCLUDES COVER) (AC–DELCO #15–71850)
85–93	Y	14078970	1	34.44	SWITCH, A/C CMPR ENG COOL TEMP (2 TERM) (AC–DELCO #15–2351)
94–95	Y 5.7J (LT5)	10223909	1	17.64	SWITCH, A/C CMPR ENG COOL TEMP (AC–DELCO #15–2878)

© 2000 GENERAL MOTORS SERVICE PARTS OPERATIONS

9.275 ASPIRATOR – BRACKET – CONNECTOR – DUCT – GRILLE – HOSE – KNOB – MODULE – MUFFLER – PROGRAMMER – SENSOR – SOLENOID – SPRING – SWITCH, A/C Electric Control(Con't)

84	Y	03041336	1	34.44	SWITCH, A/C CYCLING & FAN CONT A/C REFRIG PRESS (W/O RING) (AC–DELCO #15–2151)
92–93	Y	52461142	1	35.26	SWITCH, A/C CYCLING & FAN CONT A/C REFRIG PRESS (AC–DELCO #15–5427)
94–96	Y	52468323	1	34.44	SWITCH, A/C CYCLING & FAN CONT A/C REFRIG PRESS (AC–DELCO #15–5705)
84–89	Y	16022463	1	12.80	SWITCH, HTR & A/C CONT BLO (BLOWER) (AC–DELCO #15–71226)
90–96	Y A/C MAN CONT (C60)	16064921	1	59.50	SWITCH, HTR & A/C CONT BLO (AC–DELCO #15–71587)
84–88	Y	16018267	1	12.80	SWITCH, HTR & A/C CONT SEL (SEL ROTARY) (AC–DELCO #15–71152)
89	Y A/C MAN CONT (C60)	16018267	1	12.80	SWITCH, HTR & A/C CONT SEL (SEL ROTARY) (AC–DELCO #15–71152)
84–89	Y	14073404	1	19.20	SWITCH, INST CSTR PASS COMPT AIR TEMP

9.649 KNOB – KNOB KIT – NUT – PUSHBUTTON – SPACER, Radio Control

84	Y UQ4 (BOSE)	16026396	2	DISCON	KNOB, BASS & TREBLE CONT
84	Y STEREO (UM7)	16020530	1	2.28	KNOB, FADER/BALANCE (AC–DELCO #16020530)
84	Y STEREO (UU8)	16035456	2	1.55	KNOB, FADER/BALANCE (AC–DELCO #16035456)
85–87	Y STEREO (UM7)	16019795	1	3.05	KNOB, FADER/BALANCE (AC–DELCO #16019795)
85–87	Y STEREO (UM6, UU8) (EXC UK1, UL2 EXPORT)	16035456	2	1.55	KNOB, FADER/BALANCE (AC–DELCO #16035456)
88–89	Y STEREO (UM6, UU8)	16035456	2	1.55	KNOB, FADER/BALANCE (AC–DELCO #16035456)
94–96	Y STEREO CASSETTE (UM6), CASSETTE STEREO (UU8), CASSETTE/CD PLAYER (U1F)	16188236	2	2.88	KNOB, RDO CONT (BASS/BAL) (AC–DELCO #16188236)
90–96	Y STEREO CASSETTE (UM6), CASSETTE STEREO (UU8), CASSETTE/CD PLAYER (U1F)	16161313	2	2.13	KNOB, RDO SPKR CONT (BAL) (OTR) (AC–DELCO #16161313)
90–93	Y CASSETTE STEREO (UU8)	16123226	2	3.20	KNOB, RDO TONE CONT (BASS) (AC–DELCO #16123226)
90–93	Y CASSETTE/CD PLAYER (U1F)	16123226	2	3.20	KNOB, RDO TONE CONT (BASS) (AC–DELCO #16123226)
90–93	Y STEREO CASSETTE (UM6)	16123226	2	3.20	KNOB, RDO TONE CONT (BASS) (AC–DELCO #16123226)
90–91	Y STEREO CASSETTE (UM6)	16123224	1	3.20	KNOB, RDO VOL CONT (AC–DELCO #16123224)
90–93	Y CASSETTE STEREO (UU8), CASSETTE/CD PLAYER (U1F)	16123224	1	3.20	KNOB, RDO VOL CONT (AC–DELCO #16123224)
90–96	Y STEREO CASSETTE (UM6), CASSETTE STEREO (UU8), CASSETTE/CD PLAYER (U1F)	16161312	1	2.13	KNOB, RDO VOL CONT (OTR) (SPD CONT VOL) (AC–DELCO #16161312)
94–96	Y STEREO CASSETTE (UM6), CASSETTE STEREO (UU8), CASSETTE/CD PLAYER (U1F)	16188235	1	2.88	KNOB, RDO VOL CONT (AC–DELCO #16188235)
84	Y STEREO	16020297	AR	1.52	KNOB, VOLUME/TUNING (AC–DELCO #16020297)
85–87	Y STEREO (EXC UK1/UL2 EXPORT)	16020297	AR	1.52	KNOB, VOLUME/TUNING (AC–DELCO #16020297)

© 2000 GENERAL MOTORS SERVICE PARTS OPERATIONS

9.649 KNOB – KNOB KIT – NUT – PUSHBUTTON – SPACER, Radio Control(Con't)

85–87	Y STEREO (UM7)	16030270	AR	1.60	KNOB, VOLUME/TUNING (AC–DELCO #16030270)
88	Y STEREO (UU8)	16020297	AR	1.52	KNOB, VOLUME/TUNING (AC–DELCO #16020297)
88–89	Y STEREO (UM6) (EXC EXPORT)	16020297	AR	1.52	KNOB, VOLUME/TUNING (AC–DELCO #16020297)
	*EXPORT***************EXPORT***************EXPORT***************EXPORT***************EXPORT*				
86–88	Y STEREO (UM6), UK1, UL2 (EXPORT)	16019795	1	3.05	KNOB, FADER/BALANCE (AC–DELCO #16019795)
94–96	Y EUROPEAN RDO FREQ (UL2) (EXPORT), CASSETTE/CD PLAYER (U1F)	16182924	1	5.08	KNOB, RDO CONT (BASS/BAL) (AC–DELCO #16182924)
90–93	Y JAPANESE RDO FREQ (UK1) (EXPORT), EUROPEAN RDO FREQ (UL2) (EXPORT), CASSETTE/CD PLAYER (U1F)	16161313	2	2.13	KNOB, RDO SPKR CONT (BAL) (OTR) (AC–DELCO #16161313)
94–96	Y EUROPEAN RDO FREQ (UL2) (EXPORT), CASSETTE/CD PLAYER (U1F)	16182925	1	5.08	KNOB, RDO SPKR CONT (BAL) (AC–DELCO #16182925)
94–96	Y EUROPEAN RDO FREQ (UL2) (EXPORT), CASSETTE/CD PLAYER (U1F)	16182926	1	3.40	KNOB, RDO TONE CONT (TREBLE) (AC–DELCO #16182926)
90–93	Y JAPANESE RDO FREQ (UK1) (EXPORT), EUROPEAN RDO FREQ (UL2) (EXPORT), CASSETTE/CD PLAYER (U1F)	16123224	1	3.20	KNOB, RDO VOL CONT (AC–DELCO #16123224)
90–93	Y JAPANESE RDO FREQ (UK1) (EXPORT), EUROPEAN RDO FREQ (UL2) (EXPORT), CASSETTE/CD PLAYER (U1F)	16161312	1	2.13	KNOB, RDO VOL CONT (OTR) (SPD CONT VOL) (AC–DELCO #16161312)
94–96	Y EUROPEAN RDO FREQ (UL2) (EXPORT), CASSETTE/CD PLAYER (U1F)	16192674	1	3.40	KNOB, RDO VOL CONT (SPD CONT VOL) (AC–DELCO #16192674)
94–96	Y EUROPEAN RDO FREQ (UL2) (EXPORT), CASSETTE/CD PLAYER (U1F)	16192675	1	5.08	KNOB, RDO VOL CONT (AC–DELCO #16192675)
84–85	Y UL2 (EXPORT), STEREO (UM6)	16029996	2	DISCON	KNOB, VOLUME/TUNING
84–85	Y UK1 (EXPORT), STEREO (UM6)	16036443	2	2.68	KNOB, VOLUME/TUNING (AC–DELCO #16036443)
86–88	Y STEREO (UM6), UK1 (EXPORT)	16030270	AR	1.60	KNOB, VOLUME/TUNING (AC–DELCO #16030270)

9.650 AMPLIFIER – CONNECTOR – CONTROL – ESCUTCHEON – GRILLE – MICROPHONE – RADIO – RECEIVER – RELAY – SPEAKER, Radio Receiver

Note: 1996 & GREATER RADIO ASSEMBLIES ARE SERVICED ONLY THROUGH AC DELCO SERVICE CENTERS. ACCESSORY RADIOS ARE AVAILABLE IN CATALOG GROUP 21.480.

84–89	Y (EXC UQ4 BOSE)	14047517	LH	19.00	GRILLE, RDO FRT SPKR
84–89	Y (EXC UQ4 BOSE)	14047518	RH	19.00	GRILLE, RDO FRT SPKR
84–89	Y UQ4 (BOSE) (EXC RDO)	14081837	LH	19.00	GRILLE, RDO FRT SPKR
84–89	Y UQ4 (BOSE) (EXC RDO)	14081838	RH	19.00	GRILLE, RDO FRT SPKR
84	Y STEREO (UU8)	16021351	1		RECEIVER, RDO
84	Y STEREO (UM6) (EXC UK1, UL2 EXPORT)	16029091	1	DISCON	RECEIVER, RDO
85–88	Y STEREO (UU8)	16060393	1	DISCON	RECEIVER, RDO (WHEN USED ON 88 VEHICLES, MUST ALSO USE HARNESS 16129051.)
89	Y STEREO (UU8)	16060393	1	DISCON	RECEIVER, RDO

© 2000 GENERAL MOTORS SERVICE PARTS OPERATIONS

9.650 AMPLIFIER – CONNECTOR – CONTROL – ESCUTCHEON – GRILLE – MICROPHONE – RADIO – RECEIVER – RELAY – SPEAKER, Radio Receiver(Con't)

84–89	Y BOSE SPKR SYS (UQ4)	14078902	1	16.26	RELAY, RDO SPKR AMPF (01.055) (AC–DELCO #15–8218) .....
90–92	Y CASSETTE STEREO (UU8), CASSETTE/CD PLAYER (U1F)	14100455	1	16.26	RELAY, RDO SPKR AMPF (BLACK) (5–WAY) (09.277) (AC–DELCO #15–8426) .....
93–94	Y 6 SPKR SYS (UX0)	14100455	1	16.26	RELAY, RDO SPKR AMPF (BLACK) (5–WAY) (09.277) (AC–DELCO #15–8426) .....
84–87	Y STEREO	16033662	2	27.68	SPEAKER, RDO FRT (AC–DELCO #16033662) .....
88–89	Y (EXC BOSE SPKR SYS (UQ4)	16033662	2	27.68	SPEAKER, RDO FRT (AC–DELCO #16033662) .....
90–92	Y (EXC 6 SPKR SYS (UX0)	16033662	2	27.68	SPEAKER, RDO FRT (AC–DELCO #16033662) .....
90	Y07 6 SPKR SYS (UX0)	16141716	LH	45.40	SPEAKER, RDO FRT (LESS CLOSURE) (AC–DELCO #16141716) .....
90–96	Y07 6 SPKR SYS (UX0)	16166471	RH	377.25	SPEAKER, RDO FRT (AC–DELCO #16166471) .....
90–96	Y07 6 SPKR SYS (UX0)	16166481	LH	365.27	SPEAKER, RDO FRT (AC–DELCO #16166481) .....
90–96	Y67 6 SPKR SYS (UX0)	16166491	RH	365.27	SPEAKER, RDO FRT (AC–DELCO #16166491) .....
90–96	Y67 6 SPKR SYS (UX0)	16166501	LH	365.27	SPEAKER, RDO FRT (AC–DELCO #16166501) .....
93–96	Y 4 SPKR SYS (UY5)	16033662	2	27.68	SPEAKER, RDO FRT (AC–DELCO #16033662) .....
93–96	Y67 6 SPKR SYS (UX0)	16141716	2	45.40	SPEAKER, RDO FRT (LESS CLOSURE) (AC–DELCO #16141716) .....
	*EXPORT***************EXPORT***************EXPORT***************EXPORT***************EXPORT*				
84–86	Y UK1 (EXPORT), STEREO (UM6) ..	16027300	1	763.42	RECEIVER, RDO (AC–DELCO #16027300) .....

9.652 BULB – BUTTON – LIGHTPIPE – PUSHBUTTON, Radio Tuner

84–87	Y STEREO (UM6, UM7)	16020534	2	1.15	BUTTON, CONT (AC–DELCO #16020534) .....
88	Y STEREO (UM6) (EXC UK1/UL2 EXPORT)	16020534	2	1.15	BUTTON, CONT (AC–DELCO #16020534) .....
89	Y STEREO (UM6)	16020534	2	1.15	BUTTON, CONT (AC–DELCO #16020534) .....
85–87	Y STEREO (UM7)	16032477	1	1.28	BUTTON, CONT TREBLE/BASE (AC–DELCO #16032477) .....
85–87	Y STEREO (UM7)	16032367	1	1.28	BUTTON, POWER (AC–DELCO #16032367) .....
	*EXPORT***************EXPORT***************EXPORT***************EXPORT***************EXPORT*				
86–88	Y STEREO (UM6), UK1 (EXPORT) ..	16024791	AR	.80	BUTTON, GRAPHIC EQUALIZER (AC–DELCO #16024791) .....

9.665 BRACKET – GASKET – GRILLE – HOUSING – INSULATOR – NUT – PLATE – REINFORCEMENT – SEAL – SPEAKER, Radio Auxiliary Speakers

84–87	Y07	14057533	LH	37.25	GRILLE, RDO RR SPKR (PAINT TO MATCH) .....
84–87	Y07	14057534	RH	37.25	GRILLE, RDO RR SPKR (PAINT TO MATCH) .....
86–89	Y67	14092707	2	DISCON	GRILLE, RDO RR SPKR .....
88–89	Y07	10054605	LH	33.00	GRILLE, RDO RR SPKR .....
88–89	Y07	10054606	RH	33.00	GRILLE, RDO RR SPKR .....
90–91	Y07 (22I)	10132937	LH	DISCON	GRILLE, RDO RR SPKR (BLUE) .....

© 2000 GENERAL MOTORS SERVICE PARTS OPERATIONS

9.665 BRACKET – GASKET – GRILLE – HOUSING – INSULATOR – NUT – PLATE – REINFORCEMENT – SEAL – SPEAKER, Radio Auxiliary Speakers(Con't)

90–91	Y07 (22I)	10132938	RH	DISCON	GRILLE, RDO RR SPKR (BLUE)
90–91	Y07 (60I)	10132939	LH	DISCON	GRILLE, RDO RR SPKR (COGNAC)
90–91	Y07 (60I)	10132940	RH	DISCON	GRILLE, RDO RR SPKR (COGNAC)
90–92	Y07 (73I)	10132941	LH	DISCON	GRILLE, RDO RR SPKR (RED)
90–92	Y07 (73I)	10132942	RH	22.05	GRILLE, RDO RR SPKR (RED)
90–91	Y07 (90I)	10132943	LH	DISCON	GRILLE, RDO RR SPKR (GRAY)
90–91	Y07 (90I)	10132944	RH	DISCON	GRILLE, RDO RR SPKR (GRAY)
90–93	Y07 (10I), (19I)	10219851	LH	DISCON	GRILLE, RDO RR SPKR (BLACK)
90–93	Y07 (10I), (19I)	10219852	RH	DISCON	GRILLE, RDO RR SPKR (BLACK)
90–91	Y67 (22I)	10123083	2	DISCON	GRILLE, RDO RR SPKR (BLUE)
90–91	Y67 (60I)	10123085	2	DISCON	GRILLE, RDO RR SPKR (COGNAC)
90–92	Y67 (73I)	10123087	2	DISCON	GRILLE, RDO RR SPKR (RED)
90–91	Y67 (90I)	10123089	2	DISCON	GRILLE, RDO RR SPKR (GRAY)
92–93	Y07 (64I)	10219853	LH	30.00	GRILLE, RDO RR SPKR (BEIGE)
92–93	Y07 (64I)	10219854	RH	24.73	GRILLE, RDO RR SPKR (BEIGE)
92–93	Y07 (14I)	10219855	LH	27.68	GRILLE, RDO RR SPKR (GRAY)
92–93	Y07 (14I)	10219856	RH	28.72	GRILLE, RDO RR SPKR (GRAY)
92–93	Y67 (64I)	10175628	2	33.25	GRILLE, RDO RR SPKR (BEIGE)
92–93	Y67 (10I), (19I)	10219863	2	DISCON	GRILLE, RDO RR SPKR (BLACK)
92–93	Y67 (14I)	10219865	2	28.98	GRILLE, RDO RR SPKR (GRAY)
93	Y07 (79I)	10219859	LH	28.20	GRILLE, RDO RR SPKR (RED)
93	Y07 (79I)	10219860	RH	28.20	GRILLE, RDO RR SPKR (RED)
93	Y07 (70I)	10219861	LH	DISCON	GRILLE, RDO RR SPKR (RED)
93	Y07 (70I)	10219862	RH	28.20	GRILLE, RDO RR SPKR (RED)
93	Y67 (79I)	10219866	2	23.05	GRILLE, RDO RR SPKR (RED)
94–96	Y07 (19I)	10238611	LH	22.05	GRILLE, RDO RR SPKR (BLACK)
94–96	Y07 (19I)	10238612	RH	28.50	GRILLE, RDO RR SPKR (BLACK)
94–96	Y07 (64I)	10238613	LH	28.50	GRILLE, RDO RR SPKR (BEIGE)
94–96	Y07 (64I)	10238614	RH	28.50	GRILLE, RDO RR SPKR (BEIGE)
94–96	Y07 (14I)	10238615	LH	28.50	GRILLE, RDO RR SPKR (GRAY)
94–96	Y07 (14I)	10238616	RH	28.50	GRILLE, RDO RR SPKR (GRAY)
94–95	Y07 (70I)	10238617	LH	28.50	GRILLE, RDO RR SPKR (RED)
94–95	Y07 (70I)	10238618	RH	28.50	GRILLE, RDO RR SPKR (RED)
94–96	Y67 (19I)	10238620	2	28.50	GRILLE, RDO RR SPKR (BLACK)
94–96	Y67 (64I)	10238621	2	28.50	GRILLE, RDO RR SPKR (BEIGE)
94–96	Y67 (14I)	10238622	2	28.50	GRILLE, RDO RR SPKR (GRAY)
94–95	Y67 (70I)	10238623	2	28.50	GRILLE, RDO RR SPKR (RED)
96	Y07 GRAND SPORT EDITION (Z16), (70I)	10238611	LH	22.05	GRILLE, RDO RR SPKR (BLACK)
96	Y07 GRAND SPORT EDITION (Z16), (70I)	10238612	RH	28.50	GRILLE, RDO RR SPKR (BLACK)
96	Y07 (70I), (EXC GRAND SPORT EDITION (Z16)	10238617	LH	28.50	GRILLE, RDO RR SPKR (RED)
96	Y07 (70I), (EXC GRAND SPORT EDITION (Z16)	10238618	RH	28.50	GRILLE, RDO RR SPKR (RED)
96	Y67 (70I), (EXC GRAND SPORT EDITION (Z16)	10238623	2	28.50	GRILLE, RDO RR SPKR (RED)
84–89	Y UQ4 (BOSE)	14049217	2	33.25	GRILLE, SI FRT DR SPKR (PAINT TO MATCH)
90–96	Y07	10193609	LH	24.41	HOUSING, RDO RR SPKR (12.981)
90–96	Y07	10193610	RH	24.41	HOUSING, RDO RR SPKR (12.981)
90–96	Y67	10218349	1	31.68	HOUSING, RDO RR SPKR (AC–DELCO #10218349)
90–91	Y	09415253	AR	.33	NUT, RDO FRT S/D SPKR GRL
93–96	Y	09415253	7	.33	NUT, RDO FRT S/D SPKR GRL

© 2000 GENERAL MOTORS SERVICE PARTS OPERATIONS

9.665 BRACKET – GASKET – GRILLE – HOUSING – INSULATOR – NUT – PLATE – REINFORCEMENT – SEAL – SPEAKER, Radio Auxiliary Speakers(Con't)

84–86	Y STEREO (UM6, UM7)	14064578	2	1.45	SEAL, DR RADIO SPKR OPG CVR .....
87–89	Y (EXC UQ4 BOSE)	14064578	2	1.45	SEAL, DR RADIO SPKR OPG CVR .....

9.667 BOLT – BRACKET – INSULATOR – NUT – RETAINER – TAPE, Radio Mounting

89–92	Y	12337892	2	*1.13	BOLT, RDO (POSN #2) (M5X.8X16 THD) (SPECIAL) (03.671) (AC–DELCO #12337892) .....
89–92	Y	12337892	1	*1.13	BOLT, RDO (POSN #1) (M5X.8X16 THD) (SPECIAL) (03.671) (AC–DELCO #12337892) .....
90–96	Y	12337892	1	*1.13	BOLT, RDO CONT (POSN #2) (M5X.8X16 THD) (SPECIAL) (03.671) (AC–DELCO #12337892) .....
84–96	Y	10027015	1	.53	NUT, RDO CONT (PUSH–ON) (OVERALL LENGTH 1.25") (03.671) (AC–DELCO #10027015) .....

9.709 CONNECTOR – HEATER – HOUSING – LIGHTER – RETAINER, Cigarette Lighter

84–96	Y	00344801	1	10.10	HEATER, C/LTR (ELEMENT) .....
84–96	Y	11516142	1	7.29	HOUSING, C/LTR (MATES W/CONN 12085504, (CASCO) 1–PIN CONN) ..
84–96	Y	11516141	1	4.69	LIGHTER, CIG (BLACK) (SM) (CASCO) .
84	Y	17057195	1	DISCON	LIGHTER, CIG (W/KNOB) (ROCHESTER) .....
84–96	Y	03986870	1	*2.50	RETAINER, C/LTR HSG (CASCO) .....

9.735 BOLT – CLUSTER – CONNECTOR, Instrument Panel Gage

Note: FOR 1985–1991 USAGE REFER TO INSTRUMENT CLUSTER CHART GRP 9.735

Note: SERVICEABLE COMPONENTS FOR 1992 THRU 1995 INSTRUMENT CLUSTERS MAY BE FOUND INDIVIDUALLY IN THEIR RESPECTIVE 9.000 GROUPS OF THE CATALOG TEXT OR COLLECTIVELY IN INSTRUMENT PANEL GRAPHICS (10.000 GROUP) .

Note: MOST COMPLETE CLUSTERS ARE SERVICED THROUGH GM PARTS FOR CASES OF CRASH, FIRE, THEFT AND FLOOD. COMPONENTS NOT LISTED ARE SERVICED BY A CLUSTER EXCHANGE THROUGH AN AC DELCO REPAIR CENTER. FOR ADDITIONAL INFORMATION REFER TO YOUR RESPECTIVE SERVICE BULLETIN.

Note: 1996 & GREATER CLUSTER ASSEMBLIES ARE SERVICED ONLY THROUGH AC DELCO SERVICE CENTERS.

84	Y (EXC U18, Z49 EXPORT CANADA)	25076600	1	DISCON	CLUSTER, INST .....
89	Y (5.7J)	16126371	1	DISCON	CLUSTER, INST .....
92–93	Y 5.7P (LT1), ELEK GA CSTR (U52), (EXC SPEEDO (U19) (EXPORT) ...	16158831	1	DISCON	CLUSTER, INST (LIQ CRYSTAL DISPLAY) .....
94	Y 5.7P (LT1), ELEK GA CSTR (U52), (EXC SPEEDO (U19) (EXPORT) ...	16168021	1	529.85	CLUSTER, INST (AC–DELCO #16168021) .....
94–95	Y 5.7J (LT5), ELEK GA CSTR (U52), (EXC SPEEDO (U19) (EXPORT) ...	16168031	1		CLUSTER, INST (AC–DELCO #16168031) .....
95–96	Y 5.7P (LT1), ELEK GA CSTR (U52), (EXC SPEEDO (U19) (EXPORT) ...	16182831	1	DISCON	CLUSTER, INST (LAM) .....
96	Y 5.7–5 (LT4), ELEK GA CSTR (U52), (EXC SPEEDO (U19) (EXPORT)	16201621	1	DISCON	CLUSTER, INST (LBJ) .....
96	Y 5.7–5 (LT4), SPEEDO (U19) (EXPORT), ELEK GA CSTR (U52) .	16215971	1	800.00	CLUSTER, INST (LBK) (AC–DELCO #16215971) .....

*EXPORT**********EXPORT**********EXPORT**********EXPORT**********EXPORT*

84	Y U18 (EXPORT)	25048933	1	DISCON	CLUSTER, INST .....
92–93	Y 5.7P (LT1), SPEEDO (U19) (EXPORT), ELEK GA CSTR (U52) .	16158851	1	DISCON	CLUSTER, INST (LIQ CRYSTAL DISPLAY) .....

© 2000 GENERAL MOTORS SERVICE PARTS OPERATIONS

9.735 BOLT – CLUSTER – CONNECTOR, Instrument Panel Gage(Con't)

92	Y 5.7J (LT5), SPEEDO (U19) (EXPORT), ELEK GA CSTR (U52), (EXC MODIFICATION–NOISE CONTROL (B4H) (EXPORT)	16158861	1	DISCON	CLUSTER, INST (LIQ CRYSTAL DISPLAY) .....
92	Y 5.7J (LT5), MODIFICATION–NOISE CONTROL (B4H) (EXPORT), SPEEDO (U19) (EXPORT), ELEK GA CSTR (U52) .	16172481	1	DISCON	CLUSTER, INST (LIQ CRYSTAL DISPLAY) .....
93	Y 5.7J (LT5), SPEEDO (U19) (EXPORT), ELEK GA CSTR (U52) .	16158861	1	DISCON	CLUSTER, INST (LIQ CRYSTAL DISPLAY) .....
94–95	Y 5.7P (LT1), SPEEDO (U19) (EXPORT), ELEK GA CSTR (U52) .	16168041	1	443.38	CLUSTER, INST (LAX) (AC–DELCO #16168041) .....
94–95	Y 5.7J (LT5), SPEEDO (U19) (EXPORT), ELEK GA CSTR (U52) .	16168051	1	468.82	CLUSTER, INST (AC–DELCO #16168051) .....

9.743 BEZEL – CARRIER – CASE – PLATE – SCREW, Instrument Cluster

Note: FOR 1985–1991 USAGE REFER TO INSTRUMENT CLUSTER CHART GRP 9.735

90–91	Y FOR MOD APPL & POA SEE INST CSTR CHT	25084950	1	49.02	BEZEL, INST CSTR (AC–DELCO #25084950) .....
92	Y 5.7J (LT5), ELEK GA CSTR (U52), (EXC MODIFICATION–NOISE CONTROL (B4H) (EXPORT)	25084950	1	49.02	BEZEL, INST CSTR (AC–DELCO #25084950) .....
92–93	Y 5.7P (LT1), ELEK GA CSTR (U52) .	25084950	1	49.02	BEZEL, INST CSTR (AC–DELCO #25084950) .....
93	Y 5.7J (LT5), ELEK GA CSTR (U52) .	25084950	1	49.02	BEZEL, INST CSTR (AC–DELCO #25084950) .....
95–96	Y 5.7P (LT1), ELEK GA CSTR (U52), (EXC SPEEDO (U19) (EXPORT) ...	25084950	1	49.02	BEZEL, INST CSTR (AC–DELCO #25084950) .....
96	Y 5.7–5 (LT4), ELEK GA CSTR (U52)	25084950	1	49.02	BEZEL, INST CSTR (AC–DELCO #25084950) .....
90–92	Y	10086247	1	14.50	CARRIER, INST (UPR) (10.230) .....
93–96	Y SOFT RIDE SUSP (FE1), HVY DUTY SUSP (FE7)	10086247	1	14.50	CARRIER, INST (10.230) .....
84–85	Y	25083758	1	78.04	CASE, CSTR CNSL (**VPI 1–877–846–8243) .....
86–89	Y FOR MOD APPL & POA SEE INST CSTR CHT	25083758	1	78.04	CASE, CSTR (**VPI 1–877–846–8243) .....
90–91	Y	25088424	1	15.00	CASE, DRVR INFO DISPLAY (AC–DELCO #25088424) .....
84–85	Y	14047529	1	DISCON	PLATE, CSTR TR .....
86–89	Y	14078656	1	86.50	PLATE, CSTR TR .....
90–96	Y	10253257	1	36.00	PLATE, I/P CSTR TR .....

9.744 CIRCUIT – CLIP – GASKET – PLUG – RETAINER – SOCKET – SWITCH – SWITCH PLATE, Instrument Cluster

Note: FOR 1985–1991 USAGE REFER TO INSTRUMENT CLUSTER CHART GRP 9.735

84	Y	25076711	1	DISCON	CIRCUIT, PRINTED CNSL INFO CTR ...
85	Y FOR MDL APPL & POA INFO SEE INST CSTR CHART	25076711	1	DISCON	CIRCUIT, PRINTED CNSL INFO CTR ...
86–89	Y FOR MOD APPL & POA SEE INST CSTR CHT	25083760	1	DISCON	CIRCUIT, PRINTED INST CSTR .....

9.748 BACKPLATE – FILTER – LENS – PIPE – RETAINER, Instrument Cluster

Note: FOR 1985–1991 USAGE REFER TO INSTRUMENT CLUSTER CHART GRP 9.735

92–95	Y 5.7P (LT1), 5.7J (LT5), ELEK GA CSTR (U52)	25084951	1	33.27	LENS, INST CSTR (AC–DELCO #25084951) .....
96	Y 5.7P (LT1), ELEK GA CSTR (U52) .	25084951	1	33.27	LENS, INST CSTR (AC–DELCO #25084951) .....

© 2000 GENERAL MOTORS SERVICE PARTS OPERATIONS

9.748 BACKPLATE – FILTER – LENS – PIPE – RETAINER, Instrument Cluster(Con't)

90–91	Y	25088429	1	6.18	RETAINER, DRVR INFO DISPLAY (AC–DELCO #25088429)
84	Y	25052493	6	*4.55	RETAINER, TELLTALE FILTER (AC–DELCO #25052493)
85–89	Y FOR MOD APPL & POA SEE INST CSTR CHT	25052493	6	*4.55	RETAINER, TELLTALE FILTER (AC–DELCO #25052493)

9.765 ALARM – BOARD – BOLT – BRACKET – CONNECTOR – HOUSING – LAMP – PLUG – TELLTALE – WASHER, Instrument Cluster Warning

Note: FOR 1985–1991 USAGE REFER TO INSTRUMENT CLUSTER CHART GRP 9.735

84	Y	14062571	1	42.33	ALARM, ST BELT & IGN KEY & LPS (02.195)
85–89	Y	10037040	1	54.57	ALARM, ST BELT & IGN KEY & LPS (02.195)
90–96	Y	25518745	1	55.34	ALARM, ST BELT & IGN KEY & LPS
90–92	Y	10098454	1	4.64	BRACKET, ST BELT & IGN KEY & LPS ALARM (02.195)
94–96	Y	12506368	1	3.11	LAMP, TRACT CONT ACTIVE IND (02.485)
84	Y	11508221	AR	22.58	LAMP, W/SOCKET, INSTR CSTR (HALOGEN) (#882) (08.991) (AC–DELCO #L882)
	*EXPORT**********EXPORT**********EXPORT**********EXPORT**********EXPORT*				
84–85	Y VE1 (EXPORT)	14073461	1	DISCON	ALARM, CTLCT CONV TEMP
93–96	Y EUROPEAN PROVISIONS (VD1) (EXPORT), VE1 (EXPORT)	10098454	1	4.64	BRACKET, ST BELT & IGN KEY & LPS ALARM (02.195)

9.768 APPLIQUE – BOLT – BULB – CLIP – CONNECTOR – DISPLAY – RETAINER – SWITCH, Driver Information Display

91	Y	16142524	1	DISCON	APPLIQUE, DRVR INFO DISPLAY (09.743)
92–93	Y	16159248	1	16.60	APPLIQUE, DRVR INFO DISPLAY (09.743) (AC–DELCO #16159248)
94–96	Y	16175454	1	16.88	APPLIQUE, DRVR INFO DISPLAY (09.743) (AC–DELCO #16175454)
92–93	Y	25112341	1	*3.08	BOLT, DRVR INFO DISPLAY (M3.5) (09.735) (AC–DELCO #25112341)
92–96	Y	25088429	1	6.18	RETAINER, DRVR INFO DISPLAY (09.748) (AC–DELCO #25088429)
92–93	Y	16159512	1	93.93	SWITCH, DRVR INFO DISPLAY (INCLS RESET BUTTON) (09.765) (AC–DELCO #16159512)
94–96	Y	16175456	1	102.88	SWITCH, DRVR INFO DISPLAY (AC–DELCO #16175456)

9.769 BULB, Vehicle Navigation

90	Y	10159597	AR	2.25	BULB, DRVR INFO DISPLAY SW (W/SOC) (09.744) (AC–DELCO #10159597)

9.778 CLIP – CONNECTOR – KNOB – RELAY – SPRING – SWITCH – WIRE, Rear Window Defogger

86–89	Y A/C AUTO ELEC CONT (C68)	16042336	1	16.26	RELAY, R/WDO DEFG (AC–DELCO #15–8239)
90–96	Y	14100455	1	16.26	RELAY, R/WDO DEFG (BLACK) (5–WAY) (09.277) (AC–DELCO #15–8426)

© 2000 GENERAL MOTORS SERVICE PARTS OPERATIONS

9.779 GRILLE – VALVE, Windshield Defroster

84–89	Y	14052467	1	12.35	GRILLE, DEFR DUCT
90–96	Y A/C AUTO ELEC CONT (C68)	10242848	1	14.88	GRILLE, W/S DEFR NOZ (BLACK)
90–96	Y A/C MAN CONT (C60)	10242849	1	14.88	GRILLE, W/S DEFR NOZ (BLACK)

9.780 BEZEL – BOLT – DUCT – GRILLE – INSULATOR – RETAINER – SEAL, Side Window Defroster

84–88	Y	14071838	2	2.80	BEZEL, SI DR FRT DEFR DUCT
84–89	Y	14071839	LH	1.47	BEZEL, SI WDO DEFR OTLT
84–89	Y	14071840	RH	1.47	BEZEL, SI WDO DEFR OTLT
90–91	Y	11515303	AR	*.38	BOLT, SI WDO DEFG OTLT GRL (08.977)
90	Y	10100173	1	19.55	DUCT, SI WDO DEFG OTLT (CTR)
90–96	Y	10100177	RH	11.53	DUCT, SI WDO DEFG OTLT (OTR TO I/P)
90–96	Y	10158004	LH	15.44	DUCT, SI WDO DEFG OTLT (LEFT SI, CNTR TO LH)
90–96	Y	10239089	RH	10.42	DUCT, SI WDO DEFG OTLT
90–96	Y	10247780	1	16.35	DUCT, SI WDO DEFG OTLT (INNER CTR)
84	Y	14052316	1	DISCON	DUCT, SI WDO DEFG OTLT CTR
84–89	Y	14052306	RH	DISCON	DUCT, SI WDO DEFR
84–89	Y	14052318	LH	DISCON	DUCT, SI WDO DEFR
85–87	Y A/C (C60)	14081369	1	DISCON	DUCT, SI WDO DEFR OTLT
88–89	Y	14081369	1	DISCON	DUCT, SI WDO DEFR OTLT
89–96	Y	10086033	1	11.68	GRILLE, SI WDO DEFG OTLT (LEFT SIDE) (BLACK)
90–96	Y	10153626	1	11.33	GRILLE, SI WDO DEFG OTLT (RIGHT SIDE) (BLACK)
84–89	Y	14052304	2	2.63	SEAL, SI WDO DEFG OTLT DUCT

9.786 BAFFLE – CASE – CONNECTOR – COUPLING – COVER – DUCT – INSULATOR – LEVER – LINK – OUTLET – PLATE – RETAINER – SEAL – SHAFT – STRAP – VALVE, Air Distributor

Note: FOR 1986–1991 USAGE REFER TO HEATER MODULE CHART GRP 8.845

Note: FOR 1986–1991 USAGE REFER TO AIR CONDITIONING MODULE CHART GRP 9.169

84–86	Y	01224062	1	4.32	CONNECTOR, LINK ADJ
86–89	Y A/C (C68)	14089386	1	.73	CONNECTOR, TEMP VLV LINK
92–96	Y A/C MAN CONT (C60)	14089386	1	.73	CONNECTOR, TEMP VLV LINK
92–96	Y A/C AUTO ELEC CONT (C68)	52452753	1	1.22	COUPLING, TEMP VLV ACTR
90	Y	10100159	1	DISCON	DUCT, AIR DISTR
91	Y (1ST DES)	10100159	1	DISCON	DUCT, AIR DISTR (W/LAP COOLER DUCTS)
91	Y (2ND DES)	10157937	1	52.07	DUCT, AIR DISTR (NO LAP COOLER DUCTS)
92–96	Y	10157937	1	52.07	DUCT, AIR DISTR (NO LAP COOLER DUCTS)
92–96	Y A/C MAN CONT (C60)	52452746	1	2.12	LEVER, TEMP VLV (SLAVE) (W/PIN)
92–96	Y A/C MAN CONT (C60)	52452748	1	2.12	LEVER, TEMP VLV (W/O SLAVE) (PLAS)
84–96	Y	03052308	1	1.08	LINK, AIR INL VLV
84–86	Y	03038869	1	.85	LINK, DVTR VLV
92–96	Y A/C MAN CONT (C60)	52452747	1	2.70	LINK, TEMP VLV (FORMED)
84–96	Y	14046783	1	.92	PLATE, AIR INL TAP (LWR RR)
84–96	Y	14046784	1	1.07	PLATE, AIR INL TAP (UPR RR)
84–96	Y	14046785	1	1.22	PLATE, AIR INL TAP (FRT)
84–90	Y	14046786	2	.82	PLATE, HTR CASE & CORE MT
91–96	Y	14046786	2	.82	PLATE, HTR NUT
84–86	Y	20007898	1	1.80	RETAINER, TEMP VLV LINK (PLSTC)

© 2000 GENERAL MOTORS SERVICE PARTS OPERATIONS

9.786 BAFFLE – CASE – CONNECTOR – COUPLING – COVER – DUCT – INSULATOR – LEVER – LINK – OUTLET – PLATE – RETAINER – SEAL – SHAFT – STRAP – VALVE, Air Distributor(Con't)

*EXPORT****************EXPORT****************EXPORT****************EXPORT****************EXPORT*

89	Y A/C (C60), EXPORT (L98)	20007898	1	1.80	RETAINER, TEMP VLV LINK (PLSTC) ...

9.988 BEZEL – BRACKET – HOUSING – LAMP – SHIELD – SOCKET, Rear Compartment Lamp

84–96	Y07	16513253	LH	21.20	BEZEL, R/CMPT C/LP (W/LENS) .....
84–96	Y07	16513254	RH	21.20	BEZEL, R/CMPT C/LP (W/LENS) .....
84–96	Y07	16501567	LH	7.55	HOUSING, CARGO LP (RR) .....
84–96	Y07	16501568	RH	7.55	HOUSING, CARGO LP (11.927) .....
84–96	Y67	10199743	2	10.35	LAMP, CARGO (USED W/9433040 BULB) (11.927) .....
84–87	Y	16519986	1	9.33	LAMP, SPA TIRE (02.700) .....
88–92	Y	16509351	1	6.32	LAMP, SPA TIRE (02.700) .....
90–96	Y07	06298886	1	6.95	SOCKET, CARGO LP (02.575) (AC–DELCO #7434) .....
88–92	Y	12083007	1	11.27	SOCKET, SPA TIRE LP (W/CABLE) (02.575) (AC–DELCO #LS13) .....

*EXPORT****************EXPORT****************EXPORT****************EXPORT****************EXPORT*

94–95	Y SIG & MKR LP (T90) (EXPORT) ..	12083007	1	11.27	SOCKET, SPA TIRE LP (W/CABLE) (02.575) (AC–DELCO #LS13) .....
96	Y07 SIG & MKR LP (T90) (EXPORT)	12083007	1	11.27	SOCKET, SPA TIRE LP (02.575) (AC–DELCO #LS13) .....

12.009 ASHTRAY – COVER, Instrument Panel Ashtray

84–96	Y	10273297	1	8.30	ASHTRAY, (BLACK) (IF USED IN PLC OF ASHTRAY W/CLIP 14046653, MAY NEED TO USE 10167113 CUP HOLDER MAT ALSO.) .....
90–91	Y	10086104	1	22.80	COVER, ASHTRAY (GRAYMOON) (10.242) .....
92–93	Y 4–SPD A/TRANS (MD8), 6–SPD M/TRANS (ML9)	10199767	1	48.50	COVER, ASHTRAY (BLACK) .....
94–96	Y 4–SPD A/TRANS (M30), 6–SPD M/TRANS (ML9)	10199767	1	48.50	COVER, ASHTRAY (BLACK) .....

12.170 ACTUATOR – BOLT – BRACKET – BUMPER – CONNECTOR – COVER – GUIDE – HINGE – INSULATOR – LATCH – LEVER – LID – PANEL – PLATE – PROTECTOR – RELAY – RETAINER – ROD – SHIM – SPACER – STOP – STRAP – STRIKER – STRIPE – WASHER – WEATHERSTRIP, Folding Top Compartment

86–91	Y67	14092646	2	107.10	ACTUATOR, F/TOP STOW COMPT LID LAT REL .....
92–93	Y67	10193606	1	56.70	ACTUATOR, F/TOP STOW COMPT LID LAT REL .....
86	Y67	14081021	4	*1.25	BOLT, F/TOP STOW COMPT LID HGE (08.913) .....
92	Y67 (2ND DES)	10198719	1	2.95	BOLT, F/TOP STOW COMPT LID HGE (HINGE HAS SQUARE ARM) .....
93–96	Y67	10198719	4	2.95	BOLT, F/TOP STOW COMPT LID HGE ..
86–90	Y	14100340	6	2.00	BOLT, F/TOP STOW COMPT LID LAT ACTR .....
91–96	Y67	14100340	6	2.00	BOLT, F/TOP STOW COMPT LID LAT ACTR .....
86–91	Y	14092733	LH	38.25	BRACKET, F/TOP STOW COMPT LID LAT .....
86–91	Y	14092734	RH	38.25	BRACKET, F/TOP STOW COMPT LID LAT .....

© 2000 GENERAL MOTORS SERVICE PARTS OPERATIONS

12.170 ACTUATOR – BOLT – BRACKET – BUMPER – CONNECTOR – COVER – GUIDE – HINGE – INSULATOR – LATCH – LEVER – LID – PANEL – PLATE – PROTECTOR – RELAY – RETAINER – ROD – SHIM – SPACER – STOP – STRAP – STRIKER – STRIPE – WASHER – WEATHERSTRIP, Folding Top Compartment(Con't)

92–96	Y67	14092733	LH	38.25	BRACKET, F/TOP STOW COMPT LID LAT
92–96	Y67	14092734	RH	38.25	BRACKET, F/TOP STOW COMPT LID LAT
86–91	Y67	14105153	LH	DISCON	BRACKET, F/TOP STOW COMPT LID LAT REL ACTR LVR
86–91	Y67	14105154	RH	DISCON	BRACKET, F/TOP STOW COMPT LID LAT REL ACTR LVR
92–96	Y67	10193607	LH	36.75	BRACKET, F/TOP STOW COMPT LID LAT REL ACTR LVR
92–96	Y67	10193608	RH	36.75	BRACKET, F/TOP STOW COMPT LID LAT REL ACTR LVR
92	Y67 (2ND DES)	10198703	2	2.65	BRACKET, F/TOP STOW COMPT LID LAT REL ACTR LVR (HINGE HAS SQUARE ARM)
93–96	Y67	10198703	2	2.65	BRACKET, F/TOP STOW COMPT LID LAT REL ACTR LVR
86–96	Y67	10175549	LH	372.00	HINGE, F/TOP STOW COMPT LID
86–96	Y67	10175550	RH	372.00	HINGE, F/TOP STOW COMPT LID
86–91	Y67	14092656	RH	DISCON	HINGE, F/TOP STOW COMPT LID
92	Y67	14092656	RH	DISCON	HINGE, F/TOP STOW COMPT LID (HAS A FLAT HINGE ARM)
91–96	Y67	03999572	1	4.98	INSULATOR, F/TOP STOW COMPT LID HGE ROD (09.260)
89–91	Y	10265173	2	1.20	INSULATOR, F/TOP STOW FRT
92–96	Y67	10265173	2	1.20	INSULATOR, F/TOP STOW FRT
86–96	Y67	14092743	LH	40.50	LATCH, F/TOP STOW COMPT LID
86–96	Y67	14092744	RH	40.50	LATCH, F/TOP STOW COMPT LID
86–88	Y67	14092661	LH	DISCON	LATCH, F/TOP STOW COMPT LID PRIM
86–88	Y67	14092662	RH	DISCON	LATCH, F/TOP STOW COMPT LID PRIM
86–91	Y67	14105151	LH	21.84	LEVER, F/TOP STOW COMPT LID LAT REL
86–91	Y67	14105152	RH	DISCON	LEVER, F/TOP STOW COMPT LID LAT REL
92–96	Y67	10175507	LH	5.92	LEVER, F/TOP STOW COMPT LID LAT REL ACTR (12.187)
92–96	Y67	10175508	RH	5.92	LEVER, F/TOP STOW COMPT LID LAT REL ACTR (12.187)
86–88	Y	14092653	1	DISCON	LID, F/TOP STOW COMPT
89–92	Y67	10276994	1	771.90	LID, F/TOP STOW COMPT (IF SERVICE 1992 & PRIOR MODELS, MUST USE 10193665 T/W 10198642 RELEASE CABLE ASM)
93–96	Y67	10276994	1	771.90	LID, F/TOP STOW COMPT
86–88	Y	14092671	1	DISCON	PANEL, F/TOP STOW COMPT LID
89–92	Y67 (19I)	10281070	1	368.00	PANEL, F/TOP STOW COMPT LID TR (BLACK)
90–91	Y67 (60I)	10123062	1	DISCON	PANEL, F/TOP STOW COMPT LID TR (COGNAC)
90–92	Y67 (73I)	10123063	1	DISCON	PANEL, F/TOP STOW COMPT LID TR (RED)
90–91	Y67 (90I)	10123064	1	DISCON	PANEL, F/TOP STOW COMPT LID TR (GRAY)

© 2000 GENERAL MOTORS SERVICE PARTS OPERATIONS

12.170 ACTUATOR – BOLT – BRACKET – BUMPER – CONNECTOR – COVER – GUIDE – HINGE – INSULATOR – LATCH – LEVER – LID – PANEL – PLATE – PROTECTOR – RELAY – RETAINER – ROD – SHIM – SPACER – STOP – STRAP – STRIKER – STRIPE – WASHER – WEATHERSTRIP, Folding Top Compartment(Con't)

90–91	Y67 (22I)	10123065	1	DISCON	PANEL, F/TOP STOW COMPT LID TR (BLUE)
92–93	Y67 (10I)	10198711	1	DISCON	PANEL, F/TOP STOW COMPT LID TR (WHITE)
92–96	Y67 (14I)	10281069	1	368.00	PANEL, F/TOP STOW COMPT LID TR (GRAY)
92–96	Y67 (64I)	10281071	1	368.00	PANEL, F/TOP STOW COMPT LID TR (BEIGE)
93	Y67 (79I)	10198716	1	DISCON	PANEL, F/TOP STOW COMPT LID TR (RED)
93–96	Y67 (19I)	10281070	1	368.00	ANEL, F/TOP STOW COMPT LID TR (BLACK)
93–96	Y67 (70I)	10281072	1	368.00	PANEL, F/TOP STOW COMPT LID TR (RED)
86–94	Y67	12524512	1	76.25	PROTECTOR, F/TOP STOW COMPT LID (W/CLEAR STRIPS)
95–98	Y67	12524512	1	76.25	PROTECTOR, F/TOP STOW COMPT LID (W/CLEAR STRIPS)
86–91	Y	14100345	2	.52	RETAINER, F/TOP STOW COMPT LID HGE GDE
92–96	Y67	14100345	2	.52	RETAINER, F/TOP STOW COMPT LID HGE GDE
86–91	Y67	10077491	1	[illegible].1	RETAINER, F/TOP STOW COMPT LID LAT REL ACTR LVR (PUSH ON)
92–96	Y67	10175798	1	2.14	RETAINER, F/TOP STOW COMPT LID LAT REL ACTR LVR (PUSH ON)
86–92	Y67 (1ST DES)	14092663	2	DISCON	ROD, F/TOP STOW COMPT LID HGE (USE WITH HINGE WITH FLAT ARM)
92	Y67 (2ND DES)	10175551	2	23.29	ROD, F/TOP STOW COMPT LID HGE TORQ (USE WITH SQUARE HINGE ARM)
93–94	Y67	10175551	2	23.29	ROD, F/TOP STOW COMPT LID HGE TORQ (USE WITH SQUARE HINGE ARM)
95	Y67	10175551	2	23.29	ROD, F/TOP STOW COMPT LID HGE TORQ
96	Y (2ND DES)	10283724	2	23.29	ROD, F/TOP STOW COMPT LID HGE TORQ (POS #1) (41MM ROD LENGTH W/OUT HOLE)
96	Y67 (1ST DES)	10175551	2	23.29	ROD, F/TOP STOW COMPT LID HGE TORQ (W/2MM HOLE AT 31MM ROD LENGTH)
86–96	Y67	10051895	4	9.45	SHIM, F/TOP STOW COMPT LID (0.5 THK)
86–88	Y	10051897	9	DISCON	SPACER, F/TOP STOW COMPT LID
89–91	Y67	10181383	2	7.61	SPACER, F/TOP STOW COMPT LID
92–94	Y67	14038397	2	*1.00	SPACER, F/TOP STOW COMPT LID HGE TORQ ROD (M8.6X20X2.50) (08.929)
86–88	Y67	10181383	2	7.61	SPACER, SOLENOID ASM F/TOP S/COMP
86–96	Y67	10285920	LH	12.70	STRIKER, F/TOP STOW COMPT LID LAT
86–96	Y67	10285921	RH	12.70	STRIKER, F/TOP STOW COMPT LID LAT
86	Y67	14100339	1	DISCON	WASHER, F/TOP RR AT LAT LVR

© 2000 GENERAL MOTORS SERVICE PARTS OPERATIONS

12.170 ACTUATOR – BOLT – BRACKET – BUMPER – CONNECTOR – COVER – GUIDE – HINGE – INSULATOR – LATCH – LEVER – LID – PANEL – PLATE – PROTECTOR – RELAY – RETAINER – ROD – SHIM – SPACER – STOP – STRAP – STRIKER – STRIPE – WASHER – WEATHERSTRIP, Folding Top Compartment(Con't)

86–87	Y67	14038397	AR	*1.00	WASHER, F/TOP STOW COMPT LID HGE GDE (08.929)
92–96	Y67	10175796	1	1.30	WASHER, F/TOP STOW COMPT LID LAT REL ACTR LVR
86–96	Y67	14092675	1	114.00	WEATHERSTRIP, F/TOP STOW COMPT LID

12.180 BOLT – GLASS – WINDOW, Rear Hatch Window

84–85	Y07 ELEC RR WDO DEFG (C49), (EXC EUROPEAN WDO GLAZING (A26) (EXPORT)	12523677	1	1771.80	WINDOW, R/CMPT LIFT
86–90	Y07 ELEC RR WDO DEFG (C49)	12523679	1	1640.20	WINDOW, R/CMPT LIFT
86–88	Y07 (EXC ELEC RR WDO DEFG (C49)	14091500	1	DISCON	WINDOW, R/CMPT LIFT
91–95	Y07 (EXC SPECIAL PERFORMANCE PKG (ZR1)	12523677	1	1771.80	WINDOW, R/CMPT LIFT
91–95	Y07 SPECIAL PERFORMANCE PKG (ZR1)	12523679	1	1640.20	WINDOW, R/CMPT LIFT
94–96	Y07 (EXC EUROPEAN WDO GLAZING (A26) (EXPORT)	12523677	1	1771.80	WINDOW, R/CMPT LIFT
	*EXPORT**********EXPORT**********EXPORT**********EXPORT**********EXPORT*				
94–96	Y07 EUROPEAN WDO GLAZING (A26) (EXPORT)	12523678	1	2235.90	WINDOW, R/CMPT LIFT

12.184 BOLT – HINGE – SPACER – WASHER, Rear Hatch Window

84–96	Y07	14049008	2	2.45	BOLT, R/CMPT L/WDO WDO SI HGE
84–96	Y07	14049007	3	.46	WASHER, R/CMPT L/WDO WDO SI HGE

12.243 CONNECTOR – RELAY – RETAINER – SOLENOID – SWITCH, Rear Hatch Window

84–90	Y	25523703	1	12.20	RELAY, R/CMPT LID REL (02.815) (AC–DELCO #D1776)
90–96	Y07	14100455	1	16.26	RELAY, R/CMPT LID REL (BLACK) (5–WAY) (09.277) (AC–DELCO #15–8426)
84–85	Y	14062518	2	15.45	SWITCH, LID LOCK REL
86–87	Y	14093168	2	11.59	SWITCH, R/CMPT LID REL (AC–DELCO #14093168)
88–89	Y	14104196	2	27.80	SWITCH, R/CMPT LID REL
90–96	Y	01620478	1	2.24	SWITCH, R/CMPT LID REL (CTR CONSOLE) (AC–DELCO #D7048)
90–92	Y	10098458	1	26.27	SWITCH, R/CMPT LID REL (DR JAMB)
93	Y07	10098458	1	26.27	SWITCH, R/CMPT LID REL
94–96	Y07	10210771	1	30.36	SWITCH, R/CMPT LID REL (AC–DELCO #D7015A)
84–96	Y07	10283365	1	6.32	SWITCH, R/COMPT L/WDO AJAR IND (PLUNGER DIA 12MM) (AC–DELCO #D6065)

12.249 CAP – SHUTTER – SPRING, Rear Hatch Window

84–92	Y	12503693	1	2.04	SHUTTER, L/GATE LK CYL (BLACK) (17MM DIA) (10.552)
84–92	Y	12503692	1	2.04	SHUTTER, R/CMPT LID LK CYL (CHROME) (17MM DIA) (10.552)

© 2000 GENERAL MOTORS SERVICE PARTS OPERATIONS

12.269 SEAL – WEATHERSTRIP, Rear Hatch Window

04–96	Y07	09768068	1	138.80	WEATHERSTRIP, R/CMPT L/WDO

12.804 BRACKET – INSULATOR – NUT – PANEL – RETAINER – SEAL – TUBE, Shroud and Dash and Vent Duct Panel

84–88	Y	14104654	1	DISCON	INSULATOR, DA PNL (15.280) (MAY NEED TO REWK INSUL USING OLD PART AS REFERENCE)
89	Y	14104654	1	DISCON	INSULATOR, DA PNL (15.280)
90–96	Y	10224033	1	192.21	INSULATOR, DA PNL

12.807 BARRIER – COVER – FRAME – GUSSET – PLATE – REINFORCEMENT – SEAL – WEATHERSTRIP, Windshield Frame

90–96	Y	10137761	1	56.44	REINFORCEMENT, W/S LWR FRM RR OTR
90–96	Y	10217340	RH	33.05	REINFORCEMENT, W/S LWR FRM RR OTR
84–96	Y	10268887	1	231.60	WEATHERSTRIP, W/S FRM (12.810)

12.810 BOLT – BRACKET – BUMPER – BUSHING – CLIP – COVER – FASTENER – HANDLE – HARDWARE KIT – INSULATOR – LATCH – LOCATOR – NUT – PAD – PANEL PKG – PIN – PLATE – PLUG – PROTECTOR – REINFORCEMENT – REPAIR KIT – RETAINER – SCREW – SEAL – SHIM – WASHER – WEATHERSTRIP – WINDOW PKG – WRENCH, Roof Panel

87–96	Y	14090607	2	4.15	BOLT, RF LIFT OFF PNL/WDO
86–95	Y07	14081021	4	*1.25	BOLT, RF LIFT OFF PNL/WDO FRT MT PLT (M8X1.25X20) (TORX HD 8X1.25X20) (08.913)
92–95	Y07 DUAL REM RF (C2L)	14081021	AR	*1.25	BOLT, RF LIFT OFF PNL/WDO FRT MT PLT (TORX HD 8X1.25X20) (08.913)
94	Y07 DUAL REM RF (C2L), CLEAR RF PNL (CC3), REMOVABLE SUNROOF (CF7)	14081021	AR	*1.25	BOLT, RF LIFT OFF PNL/WDO FRT MT PLT (M8X1.25X20) (TORX HD 8X1.25X20) (08.913)
96	Y07 DUAL REM RF (C2L), CLEAR RF PNL (CC3), REMOVABLE SUNROOF (CF7)	14081021	AR	*1.25	BOLT, RF LIFT OFF PNL/WDO FRT MT PLT (TORX HD 8X1.25X20) (08.913)
89–95	Y07 DUAL REM RF (C2L), CLEAR RF PNL (CC3), REMOVABLE SUNROOF (CF7)	14084506	8	.67	BOLT, RF LIFT OFF PNL/WDO RR LOCR (PAN HE TORX 8X1.5X16, 9.8 PEOR FULL THD W/NYLOC)
92–96	Y CLEAR RF PNL (CC3), REMOVABLE SUNROOF (CF7), DUAL REM RF (C2L)	14051183	2	3.20	BOLT, RF LIFT OFF PNL/WDO RR LOCR (M8X1.25X37) (12.815)
86	Y07 (2ND DES)	14090607	2	4.15	BOLT, RF PNL FRT HOLDN (NO COMPARABLE 1ST DES) (W/RF PNL, ATCH BOLT IN CTR OF BRKT BETWEEN TWO LRG CLEARANCE HOLES)
90–96	Y	10086148	1	4.15	CLIP, RF LIFT OFF PNL/WDO WRENCH
91–92	Y07 (73I)	10132951	LH	6.50	COVER, RF LIFT OFF PNL/WDO STOW FRT BRKT (RED)
91–92	Y07 (73I)	10132952	RH	6.50	COVER, RF LIFT OFF PNL/WDO STOW FRT BRKT (RED)
91	Y07 (19I)	10132961	LH	6.50	COVER, RF LIFT OFF PNL/WDO STOW FRT BRKT (BLACK)
91	Y07 (19I)	10132962	RH	6.50	COVER, RF LIFT OFF PNL/WDO STOW FRT BRKT (BLACK)
92–93	Y07 (10I), (19I)	10132961	LH	6.50	COVER, RF LIFT OFF PNL/WDO STOW FRT BRKT (BLACK)
92–93	Y07 (10I), (19I)	10132962	RH	6.50	COVER, RF LIFT OFF PNL/WDO STOW FRT BRKT (BLACK)

© 2000 GENERAL MOTORS SERVICE PARTS OPERATIONS

12.810 BOLT – BRACKET – BUMPER – BUSHING – CLIP – COVER – FASTENER – HANDLE – HARDWARE KIT – INSULATOR – LATCH – LOCATOR – NUT – PAD – PANEL PKG – PIN – PLATE – PLUG – PROTECTOR – REINFORCEMENT – REPAIR KIT – RETAINER – SCREW – SEAL – SHIM – WASHER – WEATHERSTRIP – WINDOW PKG – WRENCH, Roof Panel(Con't)

92–96	Y07 (64I)	10175677	LH	6.50	COVER, RF LIFT OFF PNL/WDO STOW FRT BRKT (BEIGE)
92–96	Y07 (64I)	10175678	RH	6.50	COVER, RF LIFT OFF PNL/WDO STOW FRT BRKT (BEIGE)
92–96	Y07 (14I)	10175679	LH	6.50	COVER, RF LIFT OFF PNL/WDO STOW FRT BRKT (GRAY)
92–96	Y07 (14I)	10175680	RH	6.50	COVER, RF LIFT OFF PNL/WDO STOW FRT BRKT (GRAY)
93	Y07 (79I)	10199532	RH	DISCON	COVER, RF LIFT OFF PNL/WDO STOW FRT BRKT (RED)
93	Y07 (79I)	10199533	LH	6.50	COVER, RF LIFT OFF PNL/WDO STOW FRT BRKT (RED)
93–95	Y07 (70I)	10199701	LH	6.50	COVER, RF LIFT OFF PNL/WDO STOW FRT BRKT (RED)
93–95	Y07 (70I)	10199702	RH	DISCON	COVER, RF LIFT OFF PNL/WDO STOW FRT BRKT (RED)
94–96	Y07 (19I)	10132961	LH	6.50	COVER, RF LIFT OFF PNL/WDO STOW FRT BRKT (BLACK)
94–96	Y07 (19I)	10132962	RH	6.50	COVER, RF LIFT OFF PNL/WDO STOW FRT BRKT (BLACK)
96	Y07 (70I), (EXC GRAND SPORT EDITION (Z16)	10199701	LH	6.50	COVER, RF LIFT OFF PNL/WDO STOW FRT BRKT (RED)
96	Y07 (70I), (EXC GRAND SPORT EDITION (Z16)	10199702	RH	DISCON	COVER, RF LIFT OFF PNL/WDO STOW FRT BRKT (RED)
84–85	Y	14049299	LH	DISCON	COVER, RF PNL FRT LAT
84–85	Y	14049300	RH	DISCON	COVER, RF PNL FRT LAT
86	Y (1ST DES)	14049299	LH	DISCON	COVER, RF PNL FRT LAT (W/RF PNL, ATCH BOLT NEAR INSIDE EDGE OF BRACKET)
86	Y (1ST DES)	14049300	RH	DISCON	COVER, RF PNL FRT LAT (W/RF PNL, ATCH BOLT NEAR INSIDE EDGE OF BRACKET)
86–87	Y07 (EXC CLEAR RF PNL (CC3) (2ND DES)	14089665	LH	DISCON	COVER, RF PNL FRT LAT (W/RF PNL, ATCH BOLT IN CTR OF BRKT BETWEEN 2 LRG CLEARANCE HOLES)
86–87	Y07 (EXC CLEAR RF PNL (CC3) (2ND DES)	14089666	RH	DISCON	COVER, RF PNL FRT LAT (W/RF PNL, ATCH BOLT IN CTR OF BRKT BETWEEN 2 LRG CLEARANCE HOLES)
86–88	Y67	14092641	LH	30.00	COVER, RF PNL FRT LAT
86–88	Y67	14092642	RH	DISCON	COVER, RF PNL FRT LAT
88	Y07	14089665	LH	DISCON	COVER, RF PNL FRT LAT
88	Y07	14089666	RH	DISCON	COVER, RF PNL FRT LAT
84–89	Y07	10074267	LH	7.88	COVER, RF PNL STOR FRT BRKT
84–89	Y07	10074268	RH	7.88	COVER, RF PNL STOR FRT BRKT
89	Y Z5Z	10132962	RH	6.50	COVER, RF PNL STOR FRT BRKT (BLACK)
90–91	Y07 (22I)	10132947	LH	DISCON	COVER, RF PNL STOR FRT BRKT (BLUE)
90–91	Y07 (22I)	10132948	RH	DISCON	COVER, RF PNL STOR FRT BRKT (BLUE)
90–91	Y07 (60I)	10132949	LH	DISCON	COVER, RF PNL STOR FRT BRKT (COGNAC)

© 2000 GENERAL MOTORS SERVICE PARTS OPERATIONS

MICROFICHE INDEX

GROUPS 10.000 THRU 11.000

FICHE 9 OF 11

GROUP	DESCRIPTION	STARTING GRID LOCATION PARTS	ILLUSTRATIONS
–	GENERAL INFORMATION	1–A2	1–G2
–	ALPHABETICAL INDEX	1–B13	N.A.
10.000	DOORS – REGULATORS – WINDSHIELD – WIPER – WASHER	9–A2	9–D2
11.000	REAR GLASS – SEAT PARTS – ADJUSTER	9–C2	9–I2
–	OUT OF FICHE CALLS	N.A.	9–L4

9–N1

12.810 BOLT – BRACKET – BUMPER – BUSHING – CLIP – COVER – FASTENER – HANDLE – HARDWARE KIT – INSULATOR – LATCH – LOCATOR – NUT – PAD – PANEL PKG – PIN – PLATE – PLUG – PROTECTOR – REINFORCEMENT – REPAIR KIT – RETAINER – SCREW – SEAL – SHIM – WASHER – WEATHERSTRIP – WINDOW PKG – WRENCH, Roof Panel(Con't)

90–91	Y07 (60I)	10132950	RH	DISCON	COVER, RF PNL STOR FRT BRKT (COGNAC)
90	Y07 (73I)	10132951	LH	6.50	COVER, RF PNL STOR FRT BRKT (RED)
90	Y07 (73I)	10132952	RH	6.50	COVER, RF PNL STOR FRT BRKT (RED)
90–91	Y07 (90I)	10132953	LH	DISCON	COVER, RF PNL STOR FRT BRKT (GRAY)
90–91	Y07 (90I)	10132954	RH	DISCON	COVER, RF PNL STOR FRT BRKT (GRAY)
90	Y07 (19I)	10132961	LH	6.50	COVER, RF PNL STOR FRT BRKT (BLACK)
90	Y07 (19I)	10132962	RH	6.50	COVER, RF PNL STOR FRT BRKT (BLACK)
84–91	Y	10217223	LH	16.13	PROTECTOR, FRT S/D WDO W/STR UPR FRT
84–90	Y	10217224	RH	16.13	PROTECTOR, FRT S/D WDO W/STR UPR FRT
91	Y07 DUAL REM RF (C2L), CLEAR RF PNL (CC3), REMOVABLE SUNROOF (CF7)	10217224	RH	16.13	PROTECTOR, FRT S/D WDO W/STR UPR FRT
91–96	Y67 AUX RF (CC2)	10217223	LH	16.13	PROTECTOR, FRT S/D WDO W/STR UPR FRT
91–96	Y67 AUX RF (CC2)	10217224	RH	16.13	PROTECTOR, FRT S/D WDO W/STR UPR FRT
92–96	Y07	10217223	LH	16.13	PROTECTOR, FRT S/D WDO W/STR UPR FRT
92–96	Y07	10217224	RH	16.13	PROTECTOR, FRT S/D WDO W/STR UPR FRT
86–89	Y	20292751	3	2.15	RETAINER, LUG STOW STRAP
86	Y07 (2ND DES)	10193699	2	3.46	RETAINER, RF LIFT OFF PNL/WDO BOLT (NO COMPARABLE 1ST DES) (W/RF PNL, ATCH BOLT IN CTR OF BRKT BETWEEN TWO LRG CLEARANCE HOLES.)
87–96	Y	10193699	2	3.46	RETAINER, RF LIFT OFF PNL/WDO BOLT
84–96	Y07 CLEAR RF PNL (CC3), REMOVABLE SUNROOF (CF7), DUAL REM RF (C2L)	14051184	2	4.64	RETAINER, RF LIFT OFF PNL/WDO RR LOCR BOLT
84–96	Y07	08731909	2	*.40	RETAINER, RF LIFT OFF PNL/WDO RR W/STR (PUSH IN) (FULL FLDG) (10.695)
84–96	Y07	14049242	1	24.14	RETAINER, RF LIFT OFF PNL/WDO RR W/STR (TOP SI)
84–96	Y07	14049247	LH	15.91	RETAINER, RF LIFT OFF PNL/WDO RR W/STR (TO W/STR MLDG) (W/SEAL STRP)
84–96	Y07	14049248	RH	15.91	RETAINER, RF LIFT OFF PNL/WDO RR W/STR (TO W/STR MLDG) (W/SEAL STRP)
84–85	Y	14060215	2	.70	RETAINER, RF PNL FRT LOCATOR (10.219)
84–90	Y	14049243	LH	28.73	RETAINER, RF PNL FRT W/STR
84–90	Y	14049244	RH	28.73	RETAINER, RF PNL FRT W/STR

© 2000 GENERAL MOTORS SERVICE PARTS OPERATIONS

12.810 BOLT – BRACKET – BUMPER – BUSHING – CLIP – COVER – FASTENER – HANDLE – HARDWARE KIT – INSULATOR – LATCH – LOCATOR – NUT – PAD – PANEL PKG – PIN – PLATE – PLUG – PROTECTOR – REINFORCEMENT – REPAIR KIT – RETAINER – SCREW – SEAL – SHIM – WASHER – WEATHERSTRIP – WINDOW PKG – WRENCH, Roof Panel(Con't)

84–94	Y07	10283997	1	219.30	WEATHERSTRIP, RF LIFT OFF PNL/WDO RR
95–96	Y07	10283997	1	219.30	WEATHERSTRIP, RF LIFT OFF PNL/WDO RR (W/DEPRESSED SURFACE AT TOP CORNER)
84–96	Y07	22112053	LH	79.60	WEATHERSTRIP, RF LIFT OFF PNL/WDO SI BODY (10.710)
84–96	Y07	22112054	RH	79.60	WEATHERSTRIP, RF LIFT OFF PNL/WDO SI BODY (10.710)
	*EXPORT**********EXPORT**********EXPORT**********EXPORT**********EXPORT*				
94–96	Y07 DUAL REM RF (C2L), EUROPEAN PROVISIONS (VD1) (EXPORT), VE1 (EXPORT)	10215333	LH	22.70	PROTECTOR, FRT S/D WDO W/STR UPR FRT
94–96	Y07 CLEAR RF PNL (CC3), REMOVABLE SUNROOF (CF7), EUROPEAN PROVISIONS (VD1) (EXPORT), VE1 (EXPORT)	10215333	LH	22.70	PROTECTOR, FRT S/D WDO W/STR UPR FRT
94–96	Y07 DUAL REM RF (C2L), EUROPEAN PROVISIONS (VD1) (EXPORT), VE1 (EXPORT)	10215334	RH	22.70	PROTECTOR, FRT S/D WDO W/STR UPR FRT
94–96	Y07 CLEAR RF PNL (CC3), REMOVABLE SUNROOF (CF7), EUROPEAN PROVISIONS (VD1) (EXPORT), VE1 (EXPORT)	10215334	RH	22.70	PROTECTOR, FRT S/D WDO W/STR UPR FRT
94–96	Y67 EUROPEAN PROVISIONS (VD1) (EXPORT), VE1 (EXPORT)	10215333	LH	22.70	PROTECTOR, FRT S/D WDO W/STR UPR FRT
94–96	Y67 EUROPEAN PROVISIONS (VD1) (EXPORT), VE1 (EXPORT)	10215334	RH	22.70	PROTECTOR, FRT S/D WDO W/STR UPR FRT

12.895 PANEL, Front Door Inner/Outer Panel

94–96	Y67	10208618	RH	40.43	PANEL, FRT S/D INR (LK) (12.942)
94–96	Y67	10208619	LH	40.43	PANEL, FRT S/D INR (LK) (12.942)
90–91	Y	10086185	LH	64.75	PANEL, FRT S/D INR MTG (DRILL TWO HOLES IN PLT FOR ELEC DR ACT.)
90–91	Y	10086186	RH	64.75	PANEL, FRT S/D INR MTG (DRILL TWO HOLES IN PLT FOR ELEC DR ACT.)
92–93	Y	10086185	LH	64.75	PANEL, FRT S/D INR MTG
92–93	Y	10086186	RH	64.75	PANEL, FRT S/D INR MTG
94–96	Y	10272377	LH	60.00	PANEL, FRT S/D INR MTG
94–96	Y	10272378	RH	63.00	PANEL, FRT S/D INR MTG
84–89	Y	14043105	LH	275.61	PANEL, FRT S/D OTR
84–89	Y	14043106	RH	300.02	PANEL, FRT S/D OTR
90–95	Y (EXC SPECIAL PERFORMANCE PKG (ZR1)	14043105	LH	275.61	PANEL, FRT S/D OTR
90–95	Y (EXC SPECIAL PERFORMANCE PKG (ZR1)	14043106	RH	300.02	PANEL, FRT S/D OTR
96	Y	14043105	LH	275.61	PANEL, FRT S/D OTR
96	Y	14043106	RH	300.02	PANEL, FRT S/D OTR

© 2000 GENERAL MOTORS SERVICE PARTS OPERATIONS

12.942 DEFLECTOR – FILLER – INSULATOR – PANEL – PILLAR – PLATE – PLUG – REINFORCEMENT – RETAINER – SEAL – VALVE, Rear Body Lock Pillar

84–91	Y07 SOFT RIDE SUSP (FE1), HVY DUTY SUSP (FE7)	14043123	LH	11.32	FILLER, BODY L/PLR LWR
84–91	Y07 SOFT RIDE SUSP (FE1), HVY DUTY SUSP (FE7)	14043124	RH	11.32	FILLER, BODY L/PLR LWR
86–96	Y67	14092647	LH	25.68	FILLER, BODY L/PLR LWR
86–96	Y67	14092648	RH	25.68	FILLER, BODY L/PLR LWR
92–96	Y07	14043123	LH	11.32	FILLER, BODY L/PLR LWR
92–96	Y07	14043124	RH	11.32	FILLER, BODY L/PLR LWR
84–96	Y07	10208618	RH	40.43	PANEL, BODY L/PLR INR
84–96	Y07	10208619	LH	40.43	PANEL, BODY L/PLR INR
86–96	Y67	10208620	RH	89.50	PANEL, BODY L/PLR INR
86–96	Y67	10208621	LH	81.11	PANEL, BODY L/PLR INR
86–93	Y67	14092637	LH	108.15	PANEL, BODY L/PLR OTR UPR
86–93	Y67	14092638	RH	DISCON	PANEL, BODY L/PLR OTR UPR
94–96	Y67	10250367	LH	96.11	PANEL, BODY L/PLR OTR UPR
94–96	Y67	10250368	RH	96.11	PANEL, BODY L/PLR OTR UPR
84–87	Y	14091023	LH	55.43	PILLAR, FRT S/D OTR LK
84–87	Y	14091024	RH	55.43	PILLAR, FRT S/D OTR LK
88–96	Y07	10051827	LH	55.43	PILLAR, FRT S/D OTR LK
88–96	Y07	10051828	RH	55.43	PILLAR, FRT S/D OTR LK
88–96	Y67	14091023	LH	55.43	PILLAR, FRT S/D OTR LK
[illegible]–96	Y67	14091024	RH	55.43	PILLAR, FRT S/D OTR LK
90–96	Y67	08731909	AR	*.40	RETAINER, FRT S/D L/PLR UPR SEAL (FULL FLDG) (10.695)
93–95	Y67	08731909	4	* .0	RETAINER, FRT S/D L/PLR UPR SEAL (FULL FLDG) (10.695)
86–96	Y67	14092683	LH	47.25	SEAL, FRT S/D L/PLR UPR (FRT)
86–96	Y67	14092684	RH	47.25	SEAL, FRT S/D L/PLR UPR (FRT)
86–96	Y67	14100365	LH	38.00	SEAL, FRT S/D L/PLR UPR (RR)
86–96	Y67	14100366	RH	41.70	SEAL, FRT S/D L/PLR UPR (RR)
89–96	Y07	10054609	2	8.54	VALVE, FRT S/D PRESS RLF

12.980 BOLT – BRACKET – COVER – EXTENSION – INSULATOR – PANEL – PLATE – PLUG – REINFORCEMENT – RETAINER – SPACER – STRIP – SUPPORT, Floor Pan

84–89	Y	14060212	1	14.54	BRACKET, F/FLR PNL UPR (**VPI 1–877–846–8243)
84–96	Y	14076517	1	13.78	BRACKET, FLR FRT PNL LWR
90–96	Y	10086170	1	35.09	BRACKET, FLR FRT PNL UPR
84–88	Y07	14090688	1	DISCON	EXTENSION, INTER FLR PNL (12.981)
86–96	Y67	14092607	1	265.44	EXTENSION, INTER FLR PNL (12.981)
89–96	Y07	10161896	1	83.39	EXTENSION, INTER FLR PNL (12.981)
84–85	Y	14065059	LH	DISCON	REINFORCEMENT, F/FLR PNL
84–85	Y	14065060	RH	DISCON	REINFORCEMENT, F/FLR PNL
90–96	Y67	10146450	1	20.44	REINFORCEMENT, FLR PNL #3 C/BAR
86–89	Y67	10051839	LH	DISCON	REINFORCEMENT, R/FLR PNL INR
86–89	Y67	10051840	RH	DISCON	REINFORCEMENT, R/FLR PNL INR
86–89	Y07	14105595	1	DISCON	REINFORCEMENT, R/FLR PNL OPG
86–96	Y67	10051841	2	20.44	REINFORCEMENT, R/FLR PNL OTR
86–96	Y67	14092624	1	30.76	REINFORCEMENT, U/B BR
84–89	Y07	03962891	2	2.10	SPACER, FLR RR PNL ADJ (08.024)
90–92	Y07 SOFT RIDE SUSP (FE1), HVY DUTY SUSP (FE7)	03962891	2	2.10	SPACER, FLR RR PNL ADJ (08.024)
93–96	Y07	03962891	2	2.10	SPACER, FLR RR PNL ADJ (08.024)
86–96	Y67	14092739	2	12.92	SPACER, R/FLR PNL INSL

© 2000 GENERAL MOTORS SERVICE PARTS OPERATIONS

13.090 BRACKET – CLIP – HARNESS – MODULE – RETAINER – STRAP – TAPE – WIRE, Body Wiring

86–89	Y67	14100354	1	DISCON	BRACKET, BODY WRG HARN
84–90	Y	14066514	2	DISCON	BRACKET, DR ELEC WRG LWR RR
84–96	Y	14073415	2	.70	BRACKET, P/W DR WRG HARN
89	Y07 STEREO (UU8)	12085454	1	DISCON	HARNESS, BODY FRT WRG
89	Y67 STEREO (UM6)	12080872	1	DISCON	HARNESS, BODY FRT WRG
89	Y67 STEREO (UU8)	12080873	1	DISCON	HARNESS, BODY FRT WRG
90	Y STEREO (UU8)	12101487	1	DISCON	HARNESS, BODY FRT WRG
90	Y STEREO (UM6)	12101488	1	DISCON	HARNESS, BODY FRT WRG
90	Y67 STEREO (UM6)	12073787	1	DISCON	HARNESS, BODY FRT WRG
90	Y67 STEREO (UU8, U1F)	12073788	1	DISCON	HARNESS, BODY FRT WRG
91	Y07 STEREO CASSETTE (UM6)	12112419	1	DISCON	HARNESS, BODY FRT WRG
91	Y07 CASSETTE STEREO (UU8), CASSETTE/CD PLAYER (U1F)	12112460	1	DISCON	HARNESS, BODY FRT WRG
91	Y67 STEREO CASSETTE (UM6)	12090311	1	DISCON	HARNESS, BODY FRT WRG
91	Y67 CASSETTE STEREO (UU8), CASSETTE/CD PLAYER (U1F)	12090312	1	DISCON	HARNESS, BODY FRT WRG
92	Y07 CASSETTE STEREO (UU8), CASSETTE/CD PLAYER (U1F)	12125811	1	DISCON	HARNESS, BODY FRT WRG
92	Y07 STEREO CASSETTE (UM6)	12125812	1	DISCON	HARNESS, BODY FRT WRG
92	Y67 STEREO CASSETTE (UM6)	12106537	1	DISCON	HARNESS, BODY FRT WRG
92	Y67 CASSETTE STEREO (UU8), CASSETTE/CD PLAYER (U1F)	12106538	1	DISCON	HARNESS, BODY FRT WRG
93	Y07	12141786	1	780.00	HARNESS, BODY FRT WRG
93	Y67	12130341	1	244.62	HARNESS, BODY FRT WRG
94	Y07 SIG & MKR LP (T90) (EXPORT)	12141786	1	780.00	HARNESS, BODY FRT WRG
94	Y07 (EXC SIG & MKR LP (T90) (EXPORT)	12141796	1	244.62	HARNESS, BODY FRT WRG
94	Y67 (EXC SIG & MKR LP (T90) (EXPORT)	12130355	1	361.50	HARNESS, BODY FRT WRG
95	Y07 (EXC SIG & MKR LP (T90) (EXPORT), SPECIAL PERFORMANCE PKG (ZR1)	12130403	1	244.62	HARNESS, BODY FRT WRG
95	Y07 SPECIAL PERFORMANCE PKG (ZR1)	12141796	1	244.62	HARNESS, BODY FRT WRG
95	Y67 (EXC SIG & MKR LP (T90) (EXPORT)	12130478	1	244.62	HARNESS, BODY FRT WRG
96	Y07 (EXC SIG & MKR LP (T90) (EXPORT)	12130458	1	361.50	HARNESS, BODY FRT WRG
96	Y67 (EXC SIG & MKR LP (T90) (EXPORT)	12130456	1	244.62	HARNESS, BODY FRT WRG
86–88	Y67 (EXC EXPORT T89, T90)	12073839	1	DISCON	HARNESS, BODY RR WRG (WHEN SERVICING 1986–87 VEH, MUST ALSO USE (4) CONN 8918527)
87–88	Y07 (EXC TAIL & S/LP (T89) (EXPORT), SIG & MKR LP (T90) (EXPORT)	12067493	1	DISCON	HARNESS, BODY RR WRG (WHEN USED ON 1987 MODELS MUST USE 4 OF 8918527 SOCKETS)
87	Y67 STEREO (UM6, UM7) (EXC T89, T90 EXPORT)	12080872	1	DISCON	HARNESS, BODY RR WRG (MAY NEED TO USE CONN 12126015 & 12085482)
88	Y67 (EXC RDO, EXPORT T89, T90)	12080872	1	DISCON	HARNESS, BODY RR WRG (MAY NEED TO USE CONN 12126015 & 12085482)
88	Y67 STEREO (UM6) (EXC EXPORT T89, T90)	12080872	1	DISCON	HARNESS, BODY RR WRG (MAY NEED TO USE CONN 12126015 & 12085482)
89–90	Y07	12067493	1	DISCON	HARNESS, BODY RR WRG
89–92	Y67	12073839	1	DISCON	HARNESS, BODY RR WRG
91–92	Y07 SPECIAL PERFORMANCE PKG (ZR1)	12067493	1	DISCON	HARNESS, BODY RR WRG

© 2000 GENERAL MOTORS SERVICE PARTS OPERATIONS

13.090 BRACKET – CLIP – HARNESS – MODULE – RETAINER – STRAP – TAPE – WIRE, Body Wiring(Con't)

91–92	Y07 (EXC SPECIAL PERFORMANCE PKG (ZR1)	12090341	1	DISCON	HARNESS, BODY RR WRG
93	Y (EXC SIG & MKR LP (T90) (EXPORT)	12130377	1	527.80	HARNESS, BODY RR WRG
94–95	Y07 (EXC SIG & MKR LP (T90) (EXPORT), SPECIAL PERFORMANCE PKG (ZR1)	12130357	1	244.62	HARNESS, BODY RR WRG
94–95	Y07 SPECIAL PERFORMANCE PKG (ZR1), (EXC SIG & MKR LP (T90) (EXPORT)	12130377	1	527.80	HARNESS, BODY RR WRG
94–96	Y67 (EXC SIG & MKR LP (T90) (EXPORT)	12130356	1	527.80	HARNESS, BODY RR WRG
96	Y07 (EXC SIG & MKR LP (T90) (EXPORT)	12130357	1	244.62	HARNESS, BODY RR WRG
84	Y STEREO (UU8)	12036116	1	DISCON	HARNESS, BODY WRG
84	Y STEREO (UM6, UM7), RDO UL5 (EXC EXPORT)	12036117	1	DISCON	HARNESS, BODY WRG
85	Y STEREO (UU8)	12049881	1	DISCON	HARNESS, BODY WRG
86	Y STEREO (UM6, UM7 (EXC EXPORT)	12048813	1	DISCON	HARNESS, BODY WRG
86	Y07 STEREO (UU8)	12048812	1	DISCON	HARNESS, BODY WRG
86	Y67 (EXC STEREO UU8)	12055600	1	DISCON	HARNESS, BODY WRG
86	Y67 STEREO (UU8)	12055601	1	DISCON	HARNESS, BODY WRG
87–88	Y07 STEREO (UU8)	12073831	1	DISCON	HARNESS, BODY WRG
87	Y07 STEREO (UM6, UM7) (EXC EXPORT T89, T90)	12085453	1	DISCON	HARNESS, BODY WRG
87–88	Y67 STEREO (UU8)	12073830	1	DISCON	HARNESS, BODY WRG
88	Y STEREO (UM6) (EXC EXPORT T89, T90)	12085453	1	DISCON	HARNESS, BODY WRG
89	Y07 STEREO (UM6)	12085453	1	DISCON	HARNESS, BODY WRG
84–90	Y AQ9	14079490	2	DISCON	HARNESS, CUSH WRG
91	Y RECL FRT BKT ST (AQ9)	12506477	1	DISCON	HARNESS, D/SEAT ADJR WRG
91	Y RECL FRT BKT ST (AQ9)	14079481	2	DISCON	HARNESS, D/SEAT ADJR WRG
92–93	Y RECL FRT BKT ST (AQ9)	12520129	1	52.27	HARNESS, D/SEAT ADJR WRG
88	Y	12055829	LH	DISCON	HARNESS, ELEC DR WRG
88	Y	12055831	RH	DISCON	HARNESS, ELEC DR WRG
94–96	Y RECL FRT BKT ST (AQ9)	12141781	1	477.00	HARNESS, P/SEAT ADJR & LUMBAR CONT WRG (INCLUDES RELAY CTR)
84–91	Y RECL FRT BKT ST (AQ9)	14079481	2	DISCON	HARNESS, P/SEAT ADJR & RECL WRG
91	Y RECL FRT BKT ST (AQ9)	12506477	1	DISCON	HARNESS, P/SEAT ADJR WRG
92–93	Y RECL FRT BKT ST (AQ9)	12520129	1	52.27	HARNESS, P/SEAT ADJR WRG
84–85	Y (EXC ELEC DR LK AU3)	12016810	RH	DISCON	HARNESS, PWR WDO DR WRG
84–85	Y (EXC ELEC DR LK AU3)	12016811	LH	DISCON	HARNESS, PWR WDO DR WRG
84–85	Y ELEC DR LK (AU3)	12028821	LH	DISCON	HARNESS, PWR WDO DR WRG
84–85	Y ELEC DR LK (AU3)	12028822	RH	DISCON	HARNESS, PWR WDO DR WRG
86–87	Y	12069840	LH	DISCON	HARNESS, PWR WDO DR WRG
86–87	Y	12069841	RH	DISCON	HARNESS, PWR WDO DR WRG
93	Y67	12106561	1	34.26	HARNESS, R/CON DR LK RCVR ANT WRG
94–96	Y67 (EXC EUROPEAN PROVISIONS (VD1) (EXPORT), VE1 (EXPORT)	12106561	1	34.26	HARNESS, R/CON DR LK RCVR ANT WRG
88–96	Y	12073639	1	25.27	HARNESS, WSW & WSWA WRG
84–87	Y	12016892	1	DISCON	HARNESS, WSW MTR AND WSWA PUMP WRG

© 2000 GENERAL MOTORS SERVICE PARTS OPERATIONS

13.090 BRACKET – CLIP – HARNESS – MODULE – RETAINER – STRAP – TAPE – WIRE, Body Wiring(Con'd)

84–91	Y	12080529	1	22.29	MODULE, BODY WRG HARN (02.510) (IF USE IN PLC OF MDL W/DBL 4–WAY CONN, MUST ALSO ORDER 1–12116930 SINGLE ROW 4–WAY CONN)
91–92	Y07 STEREO CASSETTE (UM6), CASSETTE STEREO (UU8), CASSETTE/CD PLAYER (U1F)	12088529	1	22.29	MODULE, BODY WRG HARN (3 DIODE ARRAY) (02.510)
93	Y07	12088529	1	22.29	MODULE, BODY WRG HARN (3 DIODE ARRAY) (02.510)
94	Y	12088529	1	22.29	MODULE, BODY WRG HARN (3 DIODE ARRAY) (02.510)
84–96	Y	14073416	1	1.94	RETAINER, BODY WRG HARN
93–96	Y67	11515174	1	*1.50	RETAINER, BODY WRG HARN (4 1/4"X7 1/2") (TRIM AS REQ'D) (15.492)
89–96	Y	12020833	1	*.73	RETAINER, BODY WRG HARN CONN (GRAY) (1" LONG) (PUSH–IN) (02.559)
94	Y	20664092	2	*.40	RETAINER, F/TOP WRG HARN STRP (BLACK) (PUSH–IN) (01.276)
95–96	Y RECL FRT BKT ST (AQ9)	20664092	1	*.40	RETAINER, F/TOP WRG HARN STRP (BLACK) (PUSH–IN) (01.276)
94–95	Y RECL FRT BKT ST (AQ9)	11515174	1	*1.50	RETAINER, P/SEAT LUMBAR CONT WRG HARN (4 1/4"X7 1/2") (TRIM AS REQ'D) (15.492)
88–89	Y07	C3816659	1	*.87	STRAP, BODY FRT WRG HARN (08.965)
94–96	Y RECL FRT BKT ST (AQ9), IL3	10250231	1	6.32	STRAP, ST INFLR FEED WRG HARN (DRVR SEAT)
91–92	Y	12090348	1	DISCON	WIRE, CONV TOP
93	Y67	12106597	LH	DISCON	WIRE, CONV TOP
94–96	Y67	12130363	LH	59.12	WIRE, CONV TOP
91	Y	12106563	1	DISCON	WIRE, PWR ST DIODE JPR
90–92	Y67	12080875	1	DISCON	WIRE, R/CMPT LID LID REL
89	Y67	12080874	1	DISCON	WIRE, R/COMPT LID LK REL
	*EXPORT**********EXPORT**********EXPORT**********EXPORT**********EXPORT*				
94	Y67 SIG & MKR LP (T90) (EXPORT)	12130341	1	244.62	HARNESS, BODY FRT WRG
95	Y07 SIG & MKR LP (T90) (EXPORT)	12130402	1	244.62	HARNESS, BODY FRT WRG
95	Y67 SIG & MKR LP (T90) (EXPORT)	12130477	1	244.62	HARNESS, BODY FRT WRG
96	Y07 SIG & MKR LP (T90) (EXPORT)	12130457	1	244.62	HARNESS, BODY FRT WRG
96	Y67 SIG & MKR LP (T90) (EXPORT)	12130455	1	244.62	HARNESS, BODY FRT WRG
87–88	Y07 T89, T90 (EXPORT)	12055823	1	137.03	HARNESS, BODY RR WRG
93	Y07 SIG & MKR LP (T90) (EXPORT)	12130379	1	DISCON	HARNESS, BODY RR WRG
93	Y67 SIG & MKR LP (T90) (EXPORT)	12130380	1	526.79	HARNESS, BODY RR WRG
94–96	Y07 SIG & MKR LP (T90) (EXPORT)	12130335	1	526.79	HARNESS, BODY [illegible]
94–96	Y67 SIG & MKR LP (T90) (EXPORT)	12130336	1	527.80	HARNESS, BODY RR W[illegible]
84–85	Y VB4, VD1, VE1, VT7 (EXPORT)	12043419	1	DISCON	HARNESS, BODY WRG
86	Y EXPORT (VB4, VD1, VE1, VT7)	12046814	1	DISCON	HARNESS, BODY WRG
87–88	Y07 T89, T90 (EXPORT)	12066375	1	DISCON	HARNESS, BODY WRG
94–96	Y RH RULE OF ROAD HDLP (T84) (EXPORT), LH RULE OF ROAD HDLP (T85) (EXPORT), SIG & MKR LP (T90) (EXPORT)	11515174	2	*1.50	RETAINER, BODY RR WRG HARN (4 1/4"X7 1/2") (TRIM AS REQ'D) (15.492)

© 2000 GENERAL MOTORS SERVICE PARTS OPERATIONS

13.095 BREAKER – CONNECTOR – RELAY, Body Wiring

85–90	Y ELEC R/CON HTD MIR (DL8)	14103366	1	4.04	BREAKER, R/WDO DEFG CIRC (12.5V) (30 AMP) (AC–DELCO #14103366) ..
91–92	Y ELEC R/CON HTD MIR (DL8)	14103366	1	4.04	BREAKER, R/WDO DEFG CIRC (12.5V) (30 AMP) (AC–DELCO #14103366) ..
94	Y RECL FRT BKT ST (AQ9)	12065125	1	16.73	RELAY, BODY WRG HARN (AC–DELCO #D1703A) .....
90–94	Y	14100455	1	16.26	RELAY, C/LP (BLACK) (5–WAY) (09.277) (AC–DELCO #15–8426) ...
94–95	Y	12065125	1	16.73	RELAY, C/LP (AC–DELCO #D1703A) ..
95	Y 5.7P (LT1), 6–SPD M/TRANS (ML9), A/C MAN CONT (C60), A/C AUTO ELEC CONT (C68)	12135084	1	9.55	RELAY, C/LP (02.815) (AC–DELCO #D1719A) .....
96	Y	12135084	1	9.55	RELAY, C/LP (02.815) (AC–DELCO #D1719A) .....
84–85	Y ELEC S/D LK (AU3)	22544850	1	18.07	RELAY, DR LK (AC–DELCO #D1707A) .
86–90	Y	22570060	1	16.26	RELAY, F/TOP RR LAT REL ACTR (POWER) (1 BOLT HOLE) (04.720) (AC–DELCO #15–8736) .....
86–96	Y67	12167112	1	51.50	RELAY, F/TOP RR LAT REL ACTR (POWER) (RELAY & CONN W/LEADS) (09.277) (AC–DELCO #15–8264) .....
86–96	Y67	22570060	1	16.26	RELAY, F/TOP RR LAT REL ACTR (POWER) (MATES W/CONNECTOR 12101882) (04.720) (AC–DELCO #15–8736) .....
87	Y	12167112	1	51.50	RELAY, F/TOP RR LAT REL ACTR (POWER) (1 BOLT HOLE) (W/CONN & LEADS) (09.277) (AC–DELCO #15–8264) .....

13.346 BAG – BOLT – BRACKET – ESCUTCHEON – GUIDE – HEADLINER – NUT – PLATE – PROTECTOR – RETAINER – RIVET – SPACER – STRIP – TAPE – TOP – WASHER – WEATHERSTRIP – WRENCH, Convertible and Hard Top

86–88	Y67	10137770	1	4.12	BOLT, HARDTOP RR (M6X1.0X65.0 HEX HD) .....
89–96	Y67 AUX RF (CC2)	10175552	2	4.53	BOLT, R/TOP BODY L/PLR UPR BRKT (M8X1.25X24.25, 10OD) .....
91–96	Y67 AUX RF (CC2)	10175553	2	4.53	BOLT, R/TOP BODY L/PLR UPR BRKT (M8X1.25X24.25;25.5OD) .....
89–96	Y67 AUX RF (CC2)	14060161	4	*.86	BOLT, R/TOP NUT PLT (M8X1.25X15 POR) (03.023) .....
89–91	Y67 AUX RF (CC2)	10137770	1	4.12	BOLT, REMOVABLE TOP (M6X1.0X65.0 HEX HD) .....
89–91	Y67 AUX RF (CC2)	10175553	6	4.53	BOLT, REMOVABLE TOP (M8X1.25X24.25;25.5OD) .....
92–96	Y67 AUX RF (CC2)	10137770	2	4.12	BOLT, REMOVABLE TOP .....
86–88	Y67	10137785	LH	46.78	BRACKET, "B" PLR .....
86–88	Y67	10137786	RH	46.78	BRACKET, "B" PLR .....
89–96	Y67 AUX RF (CC2)	10137785	LH	46.78	BRACKET, R/TOP BODY L/PLR UPR ...
89–96	Y67 AUX RF (CC2)	10137786	RH	46.78	BRACKET, R/TOP BODY L/PLR UPR ...
89–96	Y67 AUX RF (CC2)	10123047	LH	13.07	BRACKET, R/TOP RR .....
89–96	Y67 AUX RF (CC2)	10123048	RH	13.07	BRACKET, R/TOP RR .....
86–88	Y67	10123047	LH	13.07	BRACKET, RR PIN HT .....
86–88	Y67	10123048	RH	13.07	BRACKET, RR PIN HT .....
86–93	Y67 CONV RF (C05)	10048841	1	8.60	ESCUTCHEON, F/TOP CVR LWR RR MLDG RR (BLACK) (10.219) .....
86–94	Y67 CONV RF (C05)	10048843	1	8.60	ESCUTCHEON, F/TOP CVR LWR RR MLDG RR (SADDLE) (10.219) .....

© 2000 GENERAL MOTORS SERVICE PARTS OPERATIONS

13.346 BAG – BOLT – BRACKET – ESCUTCHEON – GUIDE – HEADLINER – NUT – PLATE – PROTECTOR – RETAINER – RIVET – SPACER – STRIP – TAPE – TOP – WASHER – WEATHERSTRIP – WRENCH, Convertible and Hard Top(Con't)

86–88	Y67	10137774	2	92.04	GUIDE, R/TOP BOLT
89–96	Y67 AUX RF (CC2)	10137774	2	92.04	GUIDE, R/TOP BOLT
86–90	Y67	10051856	2	1.70	NUT, F/TOP FRT LAT LVR
89–91	Y AUX RF (CC2)	10137771	AR	6.12	NUT, R/TOP BOLT GDE (M14X2.0–7.0 HEX JAM RR PIN MTG)
92–96	Y67 AUX RF (CC2)	10137771	2	6.12	NUT, R/TOP BOLT GDE (M14X2.0–7.0 HEX JAM RR PIN MTG)
91–96	Y67 AUX RF (CC2)	14105190	2	6.46	PLATE, R/TOP NUT (12.810)
86–88	Y67	10123053	LH	36.87	RETAINER, "B" PLR
86–88	Y67	10123054	RH	36.87	RETAINER, "B" PLR
86–93	Y67 CONV RF (C05)	10051858	1	DISCON	RETAINER, F/TOP HDLNG TR FIN PNL #1 BOW
94–96	Y67 CONV RF (C05)	10242136	1	60.51	RETAINER, F/TOP HDLNG TR FIN PNL #1 BOW
86–88	Y67	10137751	LH	53.90	RETAINER, W/STR DR RAIL
86–88	Y67	10137752	RH	53.90	RETAINER, W/STR DR RAIL
86–90	Y67 CONV RF (C05)	10064339	4	2.15	RIVET, F/TOP RR LAT STKR BRKT
91–96	Y67 CONV RF (C05)	10064339	10	2.15	RIVET, F/TOP RR LAT STKR BRKT
89–96	Y67 AUX RF (CC2)	10137775	8	2.20	RIVET, R/TOP RR BRKT
89–96	Y67 AUX RF (CC2)	10137776	2	3.56	SPACER, R/TOP BOLT GDE
86–90	Y67 (67T)	10153653	1	DISCON	TOP, FLDG (SADDLE)
86–93	Y67 CONV RF (C05), (10T)	10198721	1	DISCON	TOP, FLDG (WHITE)
86–90	Y67 (19T)	10198725	1	3890.00	TOP, FLDG (BLACK)
86–87	Y67 (19T)	14100301	1	3890.00	TOP, FLDG (BLACK)
91	Y67 CONV RF (C05), (29T)	10198723	1	DISCON	TOP, FLDG (SAPPHIRE)
91–93	Y67 CONV RF (C05), (41T)	10198725	1	3890.00	TOP, FLDG (BLACK)
91–96	Y67 CONV RF (C05), (16T)	10276976	1	3930.00	TOP, FLDG (WHITE)
92	Y67 CONV RF (C05), (29T)	10198723	1	DISCON	TOP, FLDG (SAPPHIRE)
92–93	Y67 CONV RF (C05), (68T)	10198724	1	3890.00	TOP, FLDG (BEIGE)
93	Y67 CONV RF (C05), (71T)	10208329	1	3890.00	TOP, FLDG (RED)
94–96	Y67 CONV RF (C05), (41T)	10276972	1	3930.00	TOP, FLDG (BLACK)
94	Y67 CONV RF (C05)	10276973	1	3930.00	TOP, FLDG (BEIGE)
95–96	Y67 CONV RF (C05)	10276973	1	3930.00	TOP, FLDG (BEIGE)
86–88	Y67	12508700	1	3930.00	TOP, REMOVABLE (PAINT TO MATCH) (RETROFIT PKG 12341183 USED TO COMPLETE INSTALLATION ON 1986–88 Y67 CONVERTIBLE MODELS, RR DEFG TO BE USED AS REQ)
89–96	Y67 AUX RF (CC2)	12508700	1	3930.00	TOP, REMOVABLE (PAINT TO MATCH) (RR DEFG TO BE USED AS REQ)
89–91	Y AUX RF (CC2)	10137772	AR	5.00	WASHER, R/TOP BOLT GDE (1.635X.661X.085)
92–96	Y67 AUX RF (CC2)	10137772	2	5.00	WASHER, R/TOP BOLT GDE (1.635X.661X.085)
86–91	Y67	14092676	1	59.90	WEATHERSTRIP, F/TOP RR
92–96	Y67 CONV RF (C05)	14092676	1	59.90	WEATHERSTRIP, F/TOP RR
89–96	Y67 AUX RF (CC2)	10123058	1	241.80	WEATHERSTRIP, R/TOP RR
86–88	Y67	10137741	1	37.00	WRENCH, HARDTOP REMOVAL
84–88	Y67	10172311	1	66.30	WRENCH, R/TOP (12.810)
89–96	Y67 AUX RF (CC2)	10137741	1	37.00	WRENCH, R/TOP (REMOVAL) (BOX END)
89–96	Y67 AUX RF (CC2)	10172311	1	66.30	WRENCH, R/TOP (RATCHET) (12.810)

© 2000 GENERAL MOTORS SERVICE PARTS OPERATIONS

14.665 LACE – WINDLACE, Side Door Opening Trim

90–94	Y	10278971	LH	38.00	LACE, FRT S/D OPG FRT
90–94	Y	10278972	RH	38.00	LACE, FRT S/D OPG FRT
95–96	Y	10278971	LH	38.00	LACE, FRT S/D OPG FRT
95–96	Y	10278972	RH	38.00	LACE, FRT S/D OPG FRT
84–89	Y	14060205	LH	38.00	WINDLACE, F/D SI OPG
84–89	Y	14060206	RH	38.00	WINDLACE, F/D SI OPG

14.683 BOLT – PLATE – RETAINER, Front Door Trim

84–89	Y	10082828	RH	1.30	RETAINER, F/D TR PNL
84–89	Y	10082829	LH	1.30	RETAINER, F/D TR PNL
94–96	Y (19I)	10248245	10	*.44	RETAINER, FRT S/D T/PNL (PUSH IN) (BLACK)
94–96	Y (70I)	10248246	10	.44	RETAINER, FRT S/D T/PNL (PUSH IN) (RED)
94–96	Y (64I)	10248247	10	.44	RETAINER, FRT S/D T/PNL (PUSH IN) (BEIGE)
94–96	Y (14I)	10248248	10	.44	RETAINER, FRT S/D T/PNL (PUSH IN) (GRAY)

14.685 COVER – INSERT – INSULATOR – PANEL – TRIM, Front Door Trim

84–96	Y	10248659	2	10.80	INSERT, FRT S/D T/PNL (BLACK) (PAINT TO MATCH)
84–86	Y (15I)	10048903	LH	509.20	PANEL, FRT S/D TR (GRAY)
84–87	Y (12I)	10104498	LH	525.50	PANEL, FRT S/D TR (GRAPHITE)
84–87	Y (12I)	10104499	RH	DISCON	PANEL, FRT S/D TR (GRAPHITE)
84–85	Y (28I)	14058247	LH	DISCON	PANEL, FRT S/D TR (BLUE)
84–85	Y (28I)	14058248	RH	DISCON	PANEL, FRT S/D TR (BLUE)
84–85	Y (74I)	14058253	LH	DISCON	PANEL, FRT S/D TR (CARMINE)
84–85	Y (74I)	14058254	RH	DISCON	PANEL, FRT S/D TR (CARMINE)
86–87	Y (21I)	10112607	RH	DISCON	PANEL, FRT S/D TR (BLUE)
86	Y67 (21I)	10048909	LH	525.50	PANEL, FRT S/D TR (BLUE)
87	Y (15I)	10104500	LH	DISCON	PANEL, FRT S/D TR (GRAY)
87	Y (62I)	10112604	LH	DISCON	PANEL, FRT S/D TR (SADDLE)
87	Y (21I)	10112606	LH	DISCON	PANEL, FRT S/D TR (BLUE)
87	Y (73I)	10112608	LH	DISCON	PANEL, FRT S/D TR (RED)
88	Y 35 ANNIVERSARY (Z01), (11I)	10120971	LH	DISCON	PANEL, FRT S/D TR (WHITE) (LESS TR FIN PNL & SPKR GRILLS)
88	Y 35 ANNIVERSARY (Z01), (11I)	10120972	RH	DISCON	PANEL, FRT S/D TR (WHITE) (LESS TR FIN PNL & SPKR GRILLS)
88	Y (11I)	10123027	LH	DISCON	PANEL, FRT S/D TR (WHITE) (COMPLETE)
88	Y (11I)	10123028	RH	DISCON	PANEL, FRT S/D TR (WHITE) (COMPLETE)
88–89	Y (19I)	10149227	LH	DISCON	PANEL, FRT S/D TR (BLACK)
88–89	Y (21I)	10149229	LH	DISCON	PANEL, FRT S/D TR (BLUE)
88–89	Y (60I)	10149232	RH	DISCON	PANEL, FRT S/D TR (COGNAC)
88–89	Y (73I)	10149233	LH	DISCON	PANEL, FRT S/D TR (RED)
88–89	Y (90I)	10149235	LH	DISCON	PANEL, FRT S/D TR (GRAY)
88–89	Y (90I)	10149236	RH	DISCON	PANEL, FRT S/D TR (GRAY)
84–87	Y	10112602	LH	DISCON	PANEL, SI F/D TR (BRONZE–65I)
90–91	Y (22I)	10167183	LH	DISCON	TRIM, FRT S/D (BLUE)
90	Y (22I)	10167184	RH	DISCON	TRIM, FRT S/D (BLUE)
90–91	Y (60I)	10167185	LH	DISCON	TRIM, FRT S/D (COGNAC)
90	Y (60I)	10167186	RH	DISCON	TRIM, FRT S/D (COGNAC)
90–91	Y (90I)	10167189	LH	DISCON	TRIM, FRT S/D (GRAY)
90	Y (90I)	10167190	RH	DISCON	TRIM, FRT S/D (GRAY)
90	Y (73I)	10199736	RH	DISCON	TRIM, FRT S/D (RED)

© 2000 GENERAL MOTORS SERVICE PARTS OPERATIONS

14.685 COVER – INSERT – INSULATOR – PANEL – TRIM, Front Door Trim(Con't)

90–93	Y (19I)	10240803	LH	525.50	TRIM, FRT S/D (BLACK)
91	Y (22I)	10167184	RH	DISCON	TRIM, FRT S/D (BLUE)
91	Y (60I)	10167186	RH	DISCON	TRIM, FRT S/D (COGNAC)
91	Y (90I)	10167190	RH	DISCON	TRIM, FRT S/D (GRAY)
91–92	Y (73I)	10199735	LH	DISCON	TRIM, FRT S/D (RED)
91	Y (73I)	10199736	RH	DISCON	TRIM, FRT S/D (RED)
92	Y (73I)	10199736	RH	DISCON	TRIM, FRT S/D (RED)
92–93	Y (64I)	10240807	LH	DISCON	TRIM, FRT S/D (BEIGE)
92–93	Y (64I)	10240808	RH	DISCON	TRIM, FRT S/D (BEIGE)
92–93	Y (14I)	10240809	LH	DISCON	TRIM, FRT S/D (GRAY)
92–93	Y (14I)	10240810	RH	DISCON	TRIM, FRT S/D (GRAY)
92–93	Y (10I)	10240811	LH	DISCON	TRIM, FRT S/D (WHITE)
92–93	Y (10I)	10240812	RH	DISCON	TRIM, FRT S/D (WHITE)
93	Y (79I)	10240799	LH	DISCON	TRIM, FRT S/D (RED)
93	Y (79I)	10240800	RH	DISCON	TRIM, FRT S/D (RED)
93	Y (70I)	10240801	LH	DISCON	TRIM, FRT S/D (RED)
93	Y (70I)	10240802	RH	DISCON	TRIM, FRT S/D (RED)
94	Y (19I)	10278979	LH	525.50	TRIM, FRT S/D (BLACK)
94	Y (70I)	10278980	LH	525.50	TRIM, FRT S/D (RED)
94	Y (64I)	10278981	LH	525.50	TRIM, FRT S/D (BEIGE)
94	Y (14I)	10278982	LH	525.50	TRIM, FRT S/D (GRAY)
94	Y (19I)	10278984	RH	525.50	TRIM, FRT S/D (BLACK)
94	Y (70I)	10278985	RH	463.70	TRIM, FRT S/D (RED)
94	Y (64I)	10278986	RH	525.50	TRIM, FRT S/D (BEIGE)
94	Y (14I)	10278987	RH	525.50	TRIM, FRT S/D (GRAY)
95	Y (19I)	10278979	LH	525.50	TRIM, FRT S/D (4"X4" FOAM PATCH BY HNDL, 2"X4" FOAM AT BTM RR) (BLACK)
95	Y (70I)	10278980	LH	525.50	TRIM, FRT S/D (4"X4" FOAM PATCH BY HNDL, 2"X4" FOAM AT BTM RR) (RED)
95	Y (64I)	10278981	LH	525.50	TRIM, FRT S/D (4"X4" FOAM PATCH BY HNDL, 2"X4" FOAM AT BTM RR) (BEIGE)
95	Y (14I), (2ND DES)	10278982	LH	525.50	TRIM, FRT S/D (4"X4" FOAM PATCH BY HNDL, 2"X4" FOAM AT BTM RR) (GRAY)
95	Y (19I), (2ND DES)	10278984	RH	525.50	TRIM, FRT S/D (4"X4" FOAM PATCH BY HNDL, 2"X4" FOAM AT BTM RR) (BLACK)
95	Y (70I)	10278985	RH	463.70	TRIM, FRT S/D (4"X4" FOAM PATCH BY HNDL, 2"X4" FOAM AT BTM RR) (RED)
95	Y (64I), (2ND DES)	10278986	RH	525.50	TRIM, FRT S/D (4"X4" FOAM PATCH BY HNDL, 2"X4" FOAM AT BTM RR) (BEIGE)
95	Y (14I), (2ND DES)	10278987	RH	525.50	TRIM, FRT S/D (4"X4" FOAM PATCH BY HNDL, 2"X4" FOAM AT BTM RR) (GRAY)
96	Y (19I)	10278979	LH	525.50	TRIM, FRT S/D (W/HTCH REL SW MUST CUT HOLE) (BLACK)
96	Y (70I)	10278980	LH	525.50	TRIM, FRT S/D (RED)
96	Y (64I)	10278981	LH	525.50	TRIM, FRT S/D (BEIGE)
96	Y (14I)	10278982	LH	525.50	TRIM, FRT S/D (GRAY)
96	Y (19I)	10278984	RH	525.50	TRIM, FRT S/D (BLACK)
96	Y (70I)	10278985	RH	463.70	TRIM, FRT S/D (RED)
96	Y (64I)	10278986	RH	525.50	TRIM, FRT S/D (BEIGE)
96	Y (14I)	10278987	RH	525.50	TRIM, FRT S/D (GRAY)

© 2000 GENERAL MOTORS SERVICE PARTS OPERATIONS

14.686 ARMREST – CLIP – FILLER – HINGE – PANEL, Front Door Armrest

84–87	Y (12I)	14049159	LH	DISCON	ARMREST, FRT S/D (GRAPHITE)
84–87	Y (15I)	14058233	LH	DISCON	ARMREST, FRT S/D (GRAY)
84–85	Y (28I)	14058235	LH	DISCON	ARMREST, FRT S/D (BLUE)
84–85	Y (28I)	14058236	RH	DISCON	ARMREST, FRT S/D (BLUE)
84–87	Y (65I)	14058237	LH	DISCON	ARMREST, FRT S/D (BRONZE)
84–87	Y (65I)	14058238	RH	DISCON	ARMREST, FRT S/D (BRONZE)
84–87	Y (62I)	14058240	RH	DISCON	ARMREST, FRT S/D (SADDLE)
84–85	Y (74I)	14058241	LH	DISCON	ARMREST, FRT S/D (CARMINE)
84–85	Y (74I)	14058242	RH	DISCON	ARMREST, FRT S/D (CARMINE)
86–89	Y (21I)	14094263	LH	DISCON	ARMREST, FRT S/D (BLUE)
86–89	Y (21I)	14094264	RH	DISCON	ARMREST, FRT S/D (BLUE)
86–89	Y (73I)	14094265	LH	DISCON	ARMREST, FRT S/D (RED)
86–89	Y (73I)	14094266	RH	DISCON	ARMREST, FRT S/D (RED)
88–89	Y (19I)	10076631	LH	DISCON	ARMREST, FRT S/D (BLACK)
88–89	Y (19I)	10076632	RH	DISCON	ARMREST, FRT S/D (BLACK)
88–89	Y (60I)	10076633	LH	DISCON	ARMREST, FRT S/D (COGNAC)
88–89	Y (60I)	10076634	RH	DISCON	ARMREST, FRT S/D (COGNAC)
88–89	Y (90I)	10076635	LH	DISCON	ARMREST, FRT S/D (GRAY)
88–89	Y (90I)	10076636	RH	DISCON	ARMREST, FRT S/D (GRAY)
88	Y 35 ANNIVERSARY (Z01), (11I)	10149223	LH	DISCON	ARMREST, FRT S/D (WHITE)
88	Y 35 ANNIVERSARY (Z01), (11I)	10149224	RH	DISCON	ARMREST, FRT S/D (WHITE)
90–93	Y	10085969	LH	DISCON	ARMREST, FRT S/D
90	Y (19I)	10135908	RH	DISCON	ARMREST, FRT S/D (BLACK)
90	Y (22I)	10135914	RH	DISCON	ARMREST, FRT S/D (BLUE)
90	Y (60I)	10135920	RH	DISCON	ARMREST, FRT S/D (COGNAC)
90	Y (73I)	10135926	RH	DISCON	ARMREST, FRT S/D (RED)
90	Y (90I)	10135932	RH	DISCON	ARMREST, FRT S/D (GRAY)
91	Y (19I), (1ST DES)	10135908	RH	DISCON	ARMREST, FRT S/D (BLACK) (W/VIN PRIOR TO 102411)
91	Y (22I), (1ST DES)	10135914	RH	DISCON	ARMREST, FRT S/D (BLUE) (W/VIN PRIOR TO 102411)
91	Y (60I), (1ST DES)	10135920	RH	DISCON	ARMREST, FRT S/D (MED COGNAC) (W/VIN PRIOR TO 102411)
91	Y (73I)	10135926	RH	DISCON	ARMREST, FRT S/D (FLAME RED) (W/VIN PRIOR TO 102411)
91	Y (90I), (1ST DES)	10135932	RH	DISCON	ARMREST, FRT S/D (GRAY) (W/VIN PRIOR TO 102411)
91	Y (19I), (2ND DES)	10167130	RH	236.20	ARMREST, FRT S/D (BLACK) (STARTING W/VIN #102411)
91	Y (22I), (2ND DES)	10167136	RH	DISCON	ARMREST, FRT S/D (BLUE) (STARTING W/VIN #102411)
91	Y (60I), (2ND DES)	10167142	RH	DISCON	ARMREST, FRT S/D (COGNAC) (STARTING W/VIN #102411)
91	Y (73I), (2ND DES)	10167148	RH	DISCON	ARMREST, FRT S/D (RED) (STARTING W/VIN #102411)
91	Y (90I)	10167154	RH	DISCON	ARMREST, FRT S/D (GRAY) (STARTING W/VIN #102411)
92–93	Y (19I)	10167130	RH	236.20	ARMREST, FRT S/D (BLACK)
92	Y (73I)	10167148	RH	DISCON	ARMREST, FRT S/D (RED)
92–93	Y (14I)	10175702	RH	DISCON	ARMREST, FRT S/D (GRAY)
92–93	Y (64I)	10175722	RH	DISCON	ARMREST, FRT S/D (BEIGE)
92–93	Y (10I)	10175728	RH	DISCON	ARMREST, FRT S/D (WHITE)
93	Y (79I)	10199750	RH	DISCON	ARMREST, FRT S/D (RED)
93	Y (70I)	10199752	RH	DISCON	ARMREST, FRT S/D (RED)
94–96	Y	12522295	LH	60.70	ARMREST, FRT S/D
94–96	Y	12522296	RH	60.70	ARMREST, FRT S/D
96	Y	12522296	1	60.70	ARMREST, FRT S/D

© 2000 GENERAL MOTORS SERVICE PARTS OPERATIONS

14.686 ARMREST – CLIP – FILLER – HINGE – PANEL, Front Door Armrest(Con't)

90–96	Y	10086313	1	1.10	CLIP, FRT S/D A/RST FIL
84–89	Y	14069625	LH	19.80	FILLER, FRT S/D A/RST
84–89	Y	14069626	RH	19.80	FILLER, FRT S/D A/RST
90–91	Y	10085953	LH	19.80	FILLER, FRT S/D A/RST (GRAY)
90–93	Y (19I)	10167170	RH	DISCON	FILLER, FRT S/D A/RST (BLACK)
90–91	Y (22I)	10167172	RH	DISCON	FILLER, FRT S/D A/RST (BLUE)
90–91	Y (60I)	10167174	RH	DISCON	FILLER, FRT S/D A/RST (COGNAC)
90–92	Y (73I)	10167176	RH	DISCON	FILLER, FRT S/D A/RST (RED)
90–91	Y (90I)	10167178	RH	DISCON	FILLER, FRT S/D A/RST (GRAY)
92–93	Y (64I)	10175686	RH	DISCON	FILLER, FRT S/D A/RST (BEIGE)
92–93	Y (14I)	10175688	RH	DISCON	FILLER, FRT S/D A/RST (GRAY)
92–93	Y (10I)	10175738	RH	DISCON	FILLER, FRT S/D A/RST (WHITE)
92–93	Y	12512653	LH	21.40	FILLER, FRT S/D A/RST (BLACK)
93	Y (79I)	10199542	RH	DISCON	FILLER, FRT S/D A/RST (RED)
93	Y (70I)	10199710	RH	DISCON	FILLER, FRT S/D A/RST (RED)
94–96	Y	10245573	RH	5.75	FILLER, FRT S/D A/RST (BLACK)
94–96	Y	12514441	LH	21.40	FILLER, FRT S/D A/RST (BLACK)
94–96	Y	12532158	2	11.70	HINGE, FRT S/D A/RST (14.762)
94–96	Y	12522859	LH	9.20	PANEL, FRT S/D A/RST STOW COMPT (14.692)
94–96	Y	12522860	RH	9.20	PANEL, FRT S/D A/RST STOW COMPT (14.692)

14.688 BEZEL, Front Door Armrest

94–96	Y	12522861	LH	9.00	BEZEL, FRT S/D A/RST (14.686)
94–96	Y	12522862	RH	9.00	BEZEL, FRT S/D A/RST (14.686)

14.691 CONNECTOR – COVER – PLATE, Front Door Trim

84–89	Y07	14094585	LH	74.80	COVER, DR TR PNL UPR
84–89	Y07	14094586	RH	74.80	COVER, DR TR PNL UPR
86–89	Y67	14092749	LH	132.20	COVER, TR PNL
86–89	Y67	14092750	RH	132.20	COVER, TR PNL
84–85	Y ELEC S/D LK (AU3)	14076584	RH	DISCON	PLATE, FRT S/D ACSRY TR
84–85	Y (EXC ELEC S/D LK (AU3)	14076586	RH	DISCON	PLATE, FRT S/D ACSRY TR
86–87	Y (EXC ELEC S/D LK (AU3)	14088467	LH	DISCON	PLATE, FRT S/D ACSRY TR
86–87	Y (EXC ELEC S/D LK (AU3)	14088468	RH	DISCON	PLATE, FRT S/D ACSRY TR
86–87	Y ELEC S/D LK (AU3)	14088469	LH	22.90	PLATE, FRT S/D ACSRY TR
86–87	Y ELEC S/D LK (AU3)	14088470	RH	22.30	PLATE, FRT S/D ACSRY TR
88–89	Y	14088469	LH	22.90	PLATE, FRT S/D ACSRY TR
88–89	Y	14088470	RH	22.90	PLATE, FRT S/D ACSRY TR

14.800 COVER – RING – TRIM, Front Seat Back and Back of Back

84–86	Y NON–RECL FRT BKT ST (A51), (122)	14058521	LH	DISCON	COVER, D/SEAT BK CUSH (LEATHER, GRAPHITE)
84–86	Y NON–RECL FRT BKT ST (A51), (152)	14058522	LH	DISCON	COVER, D/SEAT BK CUSH (LEATHER, GRAY)
84–85	Y NON–RECL FRT BKT ST (A51), (652)	14058524	LH	DISCON	COVER, D/SEAT BK CUSH (LEATHER, BRONZE)
84–86	Y NON–RECL FRT BKT ST (A51), (622)	14058525	LH	DISCON	COVER, D/SEAT BK CUSH (LEATHER, SADDLE)
84–85	Y NON–RECL FRT BKT ST (A51), (742)	14058526	LH	DISCON	COVER, D/SEAT BK CUSH (LEATHER, CARMINE)
86	Y NON–RECL FRT BKT ST (A51), (652), (1ST DES)	14058524	LH	DISCON	COVER, D/SEAT BK CUSH (LEATHER W/GOLD METALLIC FLECKS, BRONZE)
86–88	Y (12C)	14090646	LH	DISCON	COVER, D/SEAT BK CUSH (GRAPHITE)
86–87	Y (15C)	14090648	LH	DISCON	COVER, D/SEAT BK CUSH (GRAY)

© 2000 GENERAL MOTORS SERVICE PARTS OPERATIONS

14.800 COVER – RING – TRIM, Front Seat Back and Back of Back(Con't)

86–87	Y 21C	14090650	LH	DISCON	COVER, D/SEAT BK CUSH (BLUE)
86–87	Y (65C)	14090652	LH	DISCON	COVER, D/SEAT BK CUSH (BRONZE)
86–87	Y (62C)	14090654	LH	DISCON	COVER, D/SEAT BK CUSH (SADDLE)
86	Y NON–RECL FRT BKT ST (A51), (212)	14090660	LH	DISCON	COVER, D/SEAT BK CUSH (BLUE)
86	Y NON–RECL FRT BKT ST (A51), (732)	14090666	LH	DISCON	COVER, D/SEAT BK CUSH (RED)
87–88	Y MAN RECL FRT BKT ST (AR9), (122)	14058521	LH	DISCON	COVER, D/SEAT BK CUSH (LEATHER, GRAPHITE)
87	Y MAN RECL FRT BKT ST (AR9), (152)	14058522	LH	DISCON	COVER, D/SEAT BK CUSH (LEATHER, GRAY)
87	Y MAN RECL FRT BKT ST (AR9), (622)	14058525	LH	DISCON	COVER, D/SEAT BK CUSH (LEATHER, SADDLE)
87–88	Y MAN RECL FRT BKT ST (AR9), (212)	14090660	LH	DISCON	COVER, D/SEAT BK CUSH (BLUE)
87–88	Y MAN RECL FRT BKT ST (AR9), (732)	14090666	LH	DISCON	COVER, D/SEAT BK CUSH (RED)
88	Y MAN RECL FRT BKT ST (AR9), (192)	10076642	LH	DISCON	COVER, D/SEAT BK CUSH (BLACK)
88	Y MAN RECL FRT BKT ST (AR9), (602)	10076644	LH	DISCON	COVER, D/SEAT BK CUSH (COGNAC)
88	Y AR9 902	10076646	LH	DISCON	COVER, D/SEAT BK CUSH (GRAY)
88	Y (19C)	10076650	LH	DISCON	COVER, D/SEAT BK CUSH (BLACK)
88	Y (60C)	10076651	LH	DISCON	COVER, D/SEAT BK CUSH (COGNAC)
88	Y 35 ANNIVERSARY (Z01), (113)	10120970	LH	DISCON	COVER, D/SEAT BK CUSH (WHITE)
89	Y MAN RECL FRT BKT ST (AR9), (212)	10125942	LH	DISCON	COVER, D/SEAT BK CUSH (BLUE)
89	Y MAN RECL FRT BKT ST (AR9), (732)	10125943	LH	756.20	COVER, D/SEAT BK CUSH (RED)
89	Y MAN RECL FRT BKT ST (AR9), (192)	10125944	LH	DISCON	COVER, D/SEAT BK CUSH (BLACK)
89	Y MAN RECL FRT BKT ST (AR9), (602)	10125945	LH	DISCON	COVER, D/SEAT BK CUSH (COGNAC)
89	Y AR9 902	10125946	LH	DISCON	COVER, D/SEAT BK CUSH (GRAY)
89	Y RECL FRT BKT ST (AQ9), (212)	10140651	LH	DISCON	COVER, D/SEAT BK CUSH (BLUE)
89	Y RECL FRT BKT ST (AQ9), (602)	10140652	LH	DISCON	COVER, D/SEAT BK CUSH (COGNAC)
89	Y RECL FRT BKT ST (AQ9), (732)	10140653	LH	DISCON	COVER, D/SEAT BK CUSH (RED)
89–91	Y MAN RECL FRT BKT ST (AR9), (60C)	12517333	LH	DISCON	COVER, D/SEAT BK CUSH (W/CUSH) (COGNAC)
90–93	Y MAN RECL FRT BKT ST (AR9), (19C)	12517331	LH	DISCON	COVER, D/SEAT BK CUSH (W/CUSH) (BLACK)
91–92	Y RECL FRT BKT ST (AQ9), (193)	12506479	LH	482.10	COVER, D/SEAT BK CUSH (BLACK)
91	Y RECL FRT BKT ST (AQ9), (223)	12506480	LH	DISCON	COVER, D/SEAT BK CUSH (BLUE)
91	Y RECL FRT BKT ST (AQ9), (603)	12506481	LH	DISCON	COVER, D/SEAT BK CUSH (COGNAC)
91	Y RECL FRT BKT ST (AQ9), (903)	12506483	LH	DISCON	COVER, D/SEAT BK CUSH (GRAY) (DURASTOP)
91–92	Y MAN RECL FRT BKT ST (AR9), (193)	12517330	LH	482.10	COVER, D/SEAT BK CUSH (W/CUSH) (BLACK)
91	Y MAN RECL FRT BKT ST (AR9), (603)	12517332	LH	DISCON	COVER, D/SEAT BK CUSH (W/CUSH) (COGNAC)
91	Y MAN RECL FRT BKT ST (AR9), (223)	12517334	LH	DISCON	COVER, D/SEAT BK CUSH (W/CUSH) (BLUE)
91	Y MAN RECL FRT BKT ST (AR9), (903)	12517335	LH	DISCON	COVER, D/SEAT BK CUSH (W/CUSH) (GRAY)
91–92	Y MAN RECL FRT BKT ST (AR9), (733)	12517336	LH	482.10	COVER, D/SEAT BK CUSH (W/CUSH) (RED)
92	Y RECL FRT BKT ST (AQ9), (103)	12510915	LH	482.10	COVER, D/SEAT BK CUSH (WHITE)
92	Y RECL FRT BKT ST (AQ9), (143)	12510916	LH	482.10	COVER, D/SEAT BK CUSH (GRAY)
92	Y RECL FRT BKT ST (AQ9), (643)	12510917	LH	482.10	COVER, D/SEAT BK CUSH (BEIGE)

© 2000 GENERAL MOTORS SERVICE PARTS OPERATIONS

14.800 COVER – RING – TRIM, Front Seat Back and Back of Back(Con't)

92	Y MAN RECL FRT BKT ST (AR9), (103)	12517337	LH	482.10	COVER, D/SEAT BK CUSH (W/CUSH) (WHITE)
92	Y MAN RECL FRT BKT ST (AR9), (143)	12517338	LH	482.10	COVER, D/SEAT BK CUSH (W/CUSH) (GRAY)
92	Y MAN RECL FRT BKT ST (AR9), (643)	12517339	LH	576.50	COVER, D/SEAT BK CUSH (W/CUSH) (BEIGE)
93	Y MAN RECL FRT BKT ST (AR9), (193)	12521032	LH	482.10	COVER, D/SEAT BK CUSH (W/CUSH) (BLACK)
93	Y MAN RECL FRT BKT ST (AR9), (103)	12521033	LH	482.10	COVER, D/SEAT BK CUSH (W/CUSH) (WHITE)
93	Y MAN RECL FRT BKT ST (AR9), (143)	12521034	LH	482.10	COVER, D/SEAT BK CUSH (W/CUSH) (GRAY)
93	Y MAN RECL FRT BKT ST (AR9), (643)	12521035	LH	482.10	COVER, D/SEAT BK CUSH (W/CUSH) (BEIGE)
93	Y MAN RECL FRT BKT ST (AR9), (703)	12521036	LH	482.10	COVER, D/SEAT BK CUSH (W/CUSH) (RED)
93	Y RECL FRT BKT ST (AQ9), (193)	12521389	LH	482.10	COVER, D/SEAT BK CUSH (BLACK)
93	Y RECL FRT BKT ST (AQ9), (703)	12521390	LH	482.10	COVER, D/SEAT BK CUSH (RED)
93	Y RECL FRT BKT ST (AQ9), (793)	12521391	LH	482.10	COVER, D/SEAT BK CUSH (RED)
93	Y RECL FRT BKT ST (AQ9), (103)	12521392	LH	482.10	COVER, D/SEAT BK CUSH (WHITE)
93	Y RECL FRT BKT ST (AQ9), (143)	12521393	LH	482.10	COVER, D/SEAT BK CUSH (GRAY)
93	Y RECL FRT BKT ST (AQ9), (643)	12521394	LH	482.10	COVER, D/SEAT BK CUSH (BEIGE)
94–96	Y MAN RECL FRT BKT ST (AR9), (143)	10248450	1	554.70	COVER, D/SEAT BK CUSH (GRAY)
94–96	Y MAN RECL FRT BKT ST (AR9), (643)	10248465	1	554.70	COVER, D/SEAT BK CUSH (BEIGE)
94–96	Y MAN RECL FRT BKT ST (AR9), (193)	10248467	1	554.70	COVER, D/SEAT BK CUSH (BLACK)
94–96	Y MAN RECL FRT BKT ST (AR9), (703)	10248469	1	554.70	COVER, D/SEAT BK CUSH (RED)
94	Y RECL FRT BKT ST (AQ9), (193)	10248471	1	DISCON	COVER, D/SEAT BK CUSH (BLACK)
94	Y RECL FRT BKT ST (AQ9), (703)	10248472	1	554.70	COVER, D/SEAT BK CUSH (RED)
94	Y RECL FRT BKT ST (AQ9), (143)	10248473	1	DISCON	COVER, D/SEAT BK CUSH (GRAY)
94	Y RECL FRT BKT ST (AQ9), (643)	10248474	1	DISCON	COVER, D/SEAT BK CUSH (BEIGE)
95–96	Y RECL FRT BKT ST (AQ9), (193)	10262389	1	742.10	COVER, D/SEAT BK CUSH (BLACK) (WITH PAD)
95–96	Y RECL FRT BKT ST (AQ9), (703)	10262391	1	742.10	COVER, D/SEAT BK CUSH (RED) (WITH PAD)
95–96	Y RECL FRT BKT ST (AQ9), (143)	10262393	1	742.10	COVER, D/SEAT BK CUSH (GRAY) (WITH PAD)
95–96	Y RECL FRT BKT ST (AQ9), (643)	10262395	1	742.10	COVER, D/SEAT BK CUSH (BEIGE) (WITH PAD)
95	Y67 RECL FRT BKT ST (AQ9), (194)	12455824	1	614.00	COVER, D/SEAT BK CUSH (BLACK)
96	Y RECL FRT BKT ST (AQ9), COLLECTORS EDITION (Z15), (194)	10260195	1	742.10	COVER, D/SEAT BK CUSH (BLACK)
96	Y RECL FRT BKT ST (AQ9), COLLECTORS EDITION (Z15)	10262523	1	742.10	COVER, D/SEAT BK CUSH (RED)
96	Y RECL FRT BKT ST (AQ9), GRAND SPORT EDITION (Z16), (195)	10262535	1	742.10	COVER, D/SEAT BK CUSH (BLACK)
96	Y RECL FRT BKT ST (AQ9), GRAND SPORT EDITION (Z16)	10262541	1	742.10	COVER, D/SEAT BK CUSH (RED)
96	Y RECL FRT BKT ST (AQ9), COLLECTORS EDITION (Z15), (144)	10270159	1	742.10	COVER, D/SEAT BK CUSH (GRAY)
90	Y RECL FRT BKT ST (AQ9), (193)	10174818	2	DISCON	COVER, F/SEAT BK CUSH (BLACK)
90	Y RECL FRT BKT ST (AQ9), (223)	10174819	1	DISCON	COVER, F/SEAT BK CUSH (BLUE)
90	Y RECL FRT BKT ST (AQ9), (603)	10174820	1	DISCON	COVER, F/SEAT BK CUSH (COGNAC)
90	Y RECL FRT BKT ST (AQ9), (733)	10174821	1	DISCON	COVER, F/SEAT BK CUSH (RED)
90	Y RECL FRT BKT ST (AQ9), (903)	10174822	1	DISCON	COVER, F/SEAT BK CUSH (GRAY)

© 2000 GENERAL MOTORS SERVICE PARTS OPERATIONS

14.800 COVER – RING – TRIM, Front Seat Back and Back of Back(Con't)

90	Y RECL FRT BKT ST (AQ9), (193) ..	10174823	RH	DISCON	COVER, F/SEAT BK CUSH (BOLS, BLACK)
90	Y RECL FRT BKT ST (AQ9), (223) ..	10174824	RH	DISCON	COVER, F/SEAT BK CUSH (BOLS, BLUE)
90	Y RECL FRT BKT ST (AQ9), (603) ..	10174825	RH	DISCON	COVER, F/SEAT BK CUSH (BOLS, COGNAC)
90	Y RECL FRT BKT ST (AQ9), (733) ..	10174826	RH	DISCON	COVER, F/SEAT BK CUSH (BOLS, RED)
90	Y RECL FRT BKT ST (AQ9), (903) ..	10174827	RH	DISCON	COVER, F/SEAT BK CUSH (BOLS, GRAY)
90	Y RECL FRT BKT ST (AQ9), (193) ..	10174828	LH	DISCON	COVER, F/SEAT BK CUSH (BOLS, BLACK)
90	Y RECL FRT BKT ST (AQ9), (223) ..	10174829	LH	DISCON	COVER, F/SEAT BK CUSH (BOLS, BLUE)
90	Y RECL FRT BKT ST (AQ9), (603) ..	10174830	LH	DISCON	COVER, F/SEAT BK CUSH (BOLS, COGNAC)
90	Y RECL FRT BKT ST (AQ9), (733) ..	10174831	LH	DISCON	COVER, F/SEAT BK CUSH (BOLS, RED)
90	Y RECL FRT BKT ST (AQ9), (903) ..	10174832	LH	DISCON	COVER, F/SEAT BK CUSH (BOLS, GRAY)
84–86	Y NON–RECL FRT BKT ST (A51), (122)	14058521	RH	DISCON	COVER, P/SEAT BK CUSH (LEATHER, GRAPHITE)
84–86	Y NON–RECL FRT BKT ST (A51), (152)	14058522	RH	DISCON	COVER, P/SEAT BK CUSH (LEATHER, GRAY)
84–85	Y NON–RECL FRT BKT ST (A51), (652)	14058524	RH	DISCON	COVER, P/SEAT BK CUSH (LEATHER, BRONZE)
84–86	Y NON–RECL FRT BKT ST (A51), (622)	14058525	RH	DISCON	COVER, P/SEAT BK CUSH (LEATHER, SADDLE)
84–85	Y NON–RECL FRT BKT ST (A51), (742)	14058526	RH	DISCON	COVER, P/SEAT BK CUSH (LEATHER, CARMINE)
86	Y NON–RECL FRT BKT ST (A51), (652), (1ST DES)	14058524	RH	DISCON	COVER, P/SEAT BK CUSH (LEATHER W/GOLD METALLIC FLECKS, BRONZE)
86–88	Y (12C)	14090646	RH	DISCON	COVER, P/SEAT BK CUSH (GRAPHITE)
86–87	Y (15C)	14090648	RH	DISCON	COVER, P/SEAT BK CUSH (GRAY)
86–87	Y 21C	14090650	RH	DISCON	COVER, P/SEAT BK CUSH (BLUE)
86–87	Y (65C)	14090652	RH	DISCON	COVER, P/SEAT BK CUSH (BRONZE)
86–87	Y (62C)	14090654	RH	DISCON	COVER, P/SEAT BK CUSH (SADDLE)
86	Y NON–RECL FRT BKT ST (A51), (212)	14090660	RH	DISCON	COVER, P/SEAT BK CUSH (BLUE)
86	Y NON–RECL FRT BKT ST (A51), (732)	14090666	RH	DISCON	COVER, P/SEAT BK CUSH (RED)
87–88	Y MAN RECL FRT BKT ST (AR9), (122)	14058521	RH	DISCON	COVER, P/SEAT BK CUSH (LEATHER, GRAPHITE)
87	Y MAN RECL FRT BKT ST (AR9), (152)	14058522	RH	DISCON	COVER, P/SEAT BK CUSH (LEATHER, GRAY)
87	Y MAN RECL FRT BKT ST (AR9), (622)	14058525	RH	DISCON	COVER, P/SEAT BK CUSH (LEATHER, SADDLE)
87–88	Y MAN RECL FRT BKT ST (AR9), (212)	14090660	RH	DISCON	COVER, P/SEAT BK CUSH (BLUE)
87–88	Y MAN RECL FRT BKT ST (AR9), (732)	14090666	RH	DISCON	COVER, P/SEAT BK CUSH (RED)
88	Y MAN RECL FRT BKT ST (AR9), (192)	10076642	RH	DISCON	COVER, P/SEAT BK CUSH (BLACK)
88	Y MAN RECL FRT BKT ST (AR9), (602)	10076644	RH	DISCON	COVER, P/SEAT BK CUSH (COGNAC)
88	Y AR9 902	10076646	RH	DISCON	COVER, P/SEAT BK CUSH (GRAY)
88	Y (19C)	10076650	RH	DISCON	COVER, P/SEAT BK CUSH (BLACK)
88	Y (60C)	10076651	RH	DISCON	COVER, P/SEAT BK CUSH (COGNAC)
88	Y 35 ANNIVERSARY (Z01), (113)	10120970	RH	DISCON	COVER, P/SEAT BK CUSH (WHITE)

© 2000 GENERAL MOTORS SERVICE PARTS OPERATIONS

14.800 COVER – RING – TRIM, Front Seat Back and Back of Back(Con't)

89	Y MAN RECL FRT BKT ST (AR9), (212)	10125942	RH	DISCON	COVER, P/SEAT BK CUSH (BLUE)
89	Y MAN RECL FRT BKT ST (AR9), (732)	10125943	RH	756.20	COVER, P/SEAT BK CUSH (RED)
89	Y MAN RECL FRT BKT ST (AR9), (193)	10125944	RH	DISCON	COVER, P/SEAT BK CUSH (BLACK)
89	Y MAN RECL FRT BKT ST (AR9), (602)	10125945	RH	DISCON	COVER, P/SEAT BK CUSH (COGNAC)
89	Y AR9 902	10125946	RH	DISCON	COVER, P/SEAT BK CUSH (GRAY)
89	Y RECL FRT BKT ST (AQ9), (212)	10140651	RH	DISCON	COVER, P/SEAT BK CUSH (BLUE)
89	Y RECL FRT BKT ST (AQ9), (602)	10140652	RH	DISCON	COVER, P/SEAT BK CUSH (COGNAC)
89	Y RECL FRT BKT ST (AQ9), (732)	10140653	RH	DISCON	COVER, P/SEAT BK CUSH (RED)
89–90	Y MAN RECL FRT BKT ST (AR9), (60C)	12517333	RH	DISCON	COVER, P/SEAT BK CUSH (W/CUSH) (COGNAC)
90–93	Y MAN RECL FRT BKT ST (AR9), (19C)	12517331	RH	DISCON	COVER, P/SEAT BK CUSH (W/CUSH) (BLACK)
91–92	Y RECL FRT BKT ST (AQ9), (193)	12506479	RH	482.10	COVER, P/SEAT BK CUSH (BLACK)
91	Y RECL FRT BKT ST (AQ9), (223)	12506480	RH	DISCON	COVER, P/SEAT BK CUSH (BLUE)
91	Y RECL FRT BKT ST (AQ9), (603)	12506481	RH	DISCON	COVER, P/SEAT BK CUSH (COGNAC)
91	Y RECL FRT BKT ST (AQ9), (903)	12506483	RH	DISCON	COVER, P/SEAT BK CUSH (GRAY) (DURASTOP)
91–92	Y MAN RECL FRT BKT ST (AR9), (193)	12517330	RH	482.10	COVER, P/SEAT BK CUSH (W/CUSH) (BLACK)
91	Y MAN RECL FRT BKT ST (AR9), (603)	12517332	RH	DISCON	COVER, P/SEAT BK CUSH (W/CUSH) (COGNAC)
91	Y MAN RECL FRT BKT ST (AR9), (60C)	12517333	RH	DISCON	COVER, P/SEAT BK CUSH (W/CUSH) (COGNAC)
91	Y MAN RECL FRT BKT ST (AR9), (223)	12517334	RH	DISCON	COVER, P/SEAT BK CUSH (W/CUSH) (BLUE)
91	Y MAN RECL FRT BKT ST (AR9), (903)	12517335	RH	DISCON	COVER, P/SEAT BK CUSH (W/CUSH) (GRAY)
91–92	Y MAN RECL FRT BKT ST (AR9), (733)	12517336	RH	482.10	COVER, P/SEAT BK CUSH (W/CUSH) (RED)
92	Y RECL FRT BKT ST (AQ9), (103)	12510915	RH	482.10	COVER, P/SEAT BK CUSH (WHITE)
92	Y RECL FRT BKT ST (AQ9), (143)	12510916	RH	482.10	COVER, P/SEAT BK CUSH (GRAY)
92	Y RECL FRT BKT ST (AQ9), (643)	12510917	RH	482.10	COVER, P/SEAT BK CUSH (BEIGE)
92	Y MAN RECL FRT BKT ST (AR9), (103)	12517337	RH	482.10	COVER, P/SEAT BK CUSH (W/CUSH) (WHITE)
92	Y MAN RECL FRT BKT ST (AR9), (143)	12517338	RH	482.10	COVER, P/SEAT BK CUSH (W/CUSH) (GRAY)
92	Y MAN RECL FRT BKT ST (AR9), (643)	12517339	RH	576.50	COVER, P/SEAT BK CUSH (W/CUSH) (BEIGE)
93	Y MAN RECL FRT BKT ST (AR9), (193)	12521032	RH	482.10	COVER, P/SEAT BK CUSH (W/CUSH) (BLACK)
93	Y MAN RECL FRT BKT ST (AR9), (103)	12521033	RH	482.10	COVER, P/SEAT BK CUSH (W/CUSH) (WHITE)
93	Y MAN RECL FRT BKT ST (AR9), (143)	12521034	RH	482.10	COVER, P/SEAT BK CUSH (W/CUSH) (GRAY)
93	Y MAN RECL FRT BKT ST (AR9), (643)	12521035	RH	482.10	COVER, P/SEAT BK CUSH (W/CUSH) (BEIGE)
93	Y MAN RECL FRT BKT ST (AR9), (703)	12521036	RH	482.10	COVER, P/SEAT BK CUSH (W/CUSH) (RED)
93	Y RECL FRT BKT ST (AQ9), (193)	12521389	RH	482.10	COVER, P/SEAT BK CUSH (BLACK)
93	Y RECL FRT BKT ST (AQ9), (703)	12521390	RH	482.10	COVER, P/SEAT BK CUSH (RED)
93	Y RECL FRT BKT ST (AQ9), (793)	12521391	RH	482.10	COVER, P/SEAT BK CUSH (RED)
93	Y RECL FRT BKT ST (AQ9), (103)	12521392	RH	482.10	COVER, P/SEAT BK CUSH (WHITE)
93	Y RECL FRT BKT ST (AQ9), (143)	12521393	RH	482.10	COVER, P/SEAT BK CUSH (GRAY)
93	Y RECL FRT BKT ST (AQ9), (643)	12521394	RH	482.10	COVER. P/SEAT BK CUSH (BEIGE)
94–96	Y MAN RECL FRT BKT ST (AR9), (143)	10248450	1	554.70	COVER, P/SEAT BK CUSH (GRAY)

© 2000 GENERAL MOTORS SERVICE PARTS OPERATIONS

14.800 COVER – RING – TRIM, Front Seat Back and Back of Back(Con't)

94–96	Y MAN RECL FRT BKT ST (AR9), (643)	10248465	1	554.70	COVER, P/SEAT BK CUSH (BEIGE)
94–96	Y MAN RECL FRT BKT ST (AR9), (193)	10248467	1	554.70	COVER, P/SEAT BK CUSH (BLACK)
94–96	Y MAN RECL FRT BKT ST (AR9), (703)	10248469	1	554.70	COVER, P/SEAT BK CUSH (RED)
94	Y RECL FRT BKT ST (AQ9), (193)	10250850	1	DISCON	COVER, P/SEAT BK CUSH (BLACK)
94	Y RECL FRT BKT ST (AQ9), (703)	10250874	1	DISCON	COVER, P/SEAT BK CUSH (RED)
94	Y RECL FRT BKT ST (AQ9), (143)	10250878	1	DISCON	COVER, P/SEAT BK CUSH (GRAY)
94	Y RECL FRT BKT ST (AQ9), (643)	10250880	1	DISCON	COVER, P/SEAT BK CUSH (BEIGE)
95–96	Y RECL FRT BKT ST (AQ9), (193)	10262390	1	742.10	COVER, P/SEAT BK CUSH (BLACK) (WITH PAD)
95–96	Y RECL FRT BKT ST (AQ9), (703)	10262392	1	742.10	COVER, P/SEAT BK CUSH (RED) (WITH PAD)
95–96	Y RECL FRT BKT ST (AQ9), (143)	10262394	1	742.10	COVER, P/SEAT BK CUSH (GRAY) (WITH PAD)
95–96	Y RECL FRT BKT ST (AQ9), (643)	10262396	1	742.10	COVER, P/SEAT BK CUSH (BEIGE) (WITH PAD)
95	Y67 RECL FRT BKT ST (AQ9), (194)	12455823	1	722.60	COVER, P/SEAT BK CUSH (BLACK)
96	Y RECL FRT BKT ST (AQ9), COLLECTORS EDITION (Z15), (194)	10260194	1	742.10	COVER, P/SEAT BK CUSH (BLACK)
96	Y RECL FRT BKT ST (AQ9), COLLECTORS EDITION (Z15)	10262520	1	742.10	COVER, P/SEAT BK CUSH (RED)
96	Y RECL FRT BKT ST (AQ9), GRAND SPORT EDITION (Z16), (195)	10262536	1	742.10	COVER, P/SEAT BK CUSH (BLACK)
96	Y RECL FRT BKT ST (AQ9), GRAND SPORT EDITION (Z16)	10262542	1	742.10	COVER, P/SEAT BK CUSH (RED)
96	Y RECL FRT BKT ST (AQ9), COLLECTORS EDITION (Z15), (144)	10270160	1	742.10	COVER, P/SEAT BK CUSH (GRAY)
93	Y RECL FRT BKT ST (AQ9), MAN RECL FRT BKT ST (AR9)	04876466	1	*.12	RING, F/SEAT BK CUSH CVR HOG (08.934)
86–88	Y RECL FRT BKT ST (AQ9), (21I)	14094563	LH	DISCON	TRIM, BACKREST BOLSTER (BLUE)
86–88	Y RECL FRT BKT ST (AQ9), (21I)	14094564	RH	DISCON	TRIM, BACKREST BOLSTER (BLUE)
88	Y RECL FRT BKT ST (AQ9), (602)	10120957	LH	DISCON	TRIM, BACKREST BOLSTER (COGNAC)
88	Y RECL FRT BKT ST (AQ9), (602)	10120958	RH	DISCON	TRIM, BACKREST BOLSTER (COGNAC)
88	Y RECL FRT BKT ST (AQ9), (192)	10120951	1	DISCON	TRIM, BACKREST INSERT (BLACK)
88	Y AQ9 902	10120955	1	DISCON	TRIM, BACKREST INSERT (GRAY)
88	Y RECL FRT BKT ST (AQ9), (602)	10120959	1	DISCON	TRIM, BACKREST INSERT (COGNAC)
89	Y AQ9 902	10159580	1	DISCON	TRIM, BACKREST INSERT (GRAY)
87	Y MAN RECL FRT BKT ST (AR9), (652)	10048879	2	DISCON	TRIM, D/SEAT & P/SEAT BK CUSH (BRONZE, LEATHER)
89	Y RECL FRT BKT ST (AQ9), (192)	10140659	LH	DISCON	TRIM, D/SEAT BACKREST BOLSTER (BLACK)
86–87	Y RECL FRT BKT ST (AQ9), (652)	10048923	LH	DISCON	TRIM, D/SEAT BOLSTER (LEATHER, BRONZE)
85–87	Y RECL FRT BKT ST (AQ9), (152)	14089195	2	DISCON	TRIM, DRIVE & PASS BACKREST INSERT (LEATHER, GRAY)
84–85	Y RECL FRT BKT ST (AQ9), (12V)	14081129	2	DISCON	TRIM, DRIVER & PASS BACKREST INSERT (CLOTH, GRAPHITE)
84–85	Y RECL FRT BKT ST (AQ9), (65V)	14081133	2	DISCON	TRIM, DRIVER & PASS BACKREST INSERT (CLOTH, BRONZE)
84–85	Y RECL FRT BKT ST (AQ9), (62V)	14081137	2	DISCON	TRIM, DRIVER & PASS BACKREST INSERT (CLOTH, SADDLE)
84–85	Y RECL FRT BKT ST (AQ9), (15V)	14081141	2	DISCON	TRIM, DRIVER & PASS BACKREST INSERT (CLOTH, GRAY)

© 2000 GENERAL MOTORS SERVICE PARTS OPERATIONS

14.800 COVER – RING – TRIM, Front Seat Back and Back of Back(Con't)

84–85	Y RECL FRT BKT ST (AQ9), (28V) ..	14081145	2	DISCON	TRIM, DRIVER & PASS BACKREST INSERT (CLOTH, BLUE) .....
85–87	Y RECL FRT BKT ST (AQ9), (122) ..	14089191	2	DISCON	TRIM, DRIVER & PASS BACKREST INSERT (LEATHER, GRAPHITE) .....
85–87	Y RECL FRT BKT ST (AQ9), (622) ..	14089199	2	DISCON	TRIM, DRIVER & PASS BACKREST INSERT (LEATHER, SADDLE) .....
85–87	Y RECL FRT BKT ST (AQ9), (652) ..	14091303	2	DISCON	TRIM, DRIVER & PASS BACKREST INSERT (LEATHER, BRONZE) .....
85	Y RECL FRT BKT ST (AQ9), (282) ..	14091450	2	DISCON	TRIM, DRIVER & PASS BACKREST INSERT (LEATHER, BLUE) .....
86–88	Y RECL FRT BKT ST (AQ9), (211) ...	14094565	2	DISCON	TRIM, DRIVER & PASS BACKREST INSERT (BLUE) .....
86–88	Y RECL FRT BKT ST (AQ9), (732) ..	14094569	2	DISCON	TRIM, DRIVER & PASS BACKREST INSERT (RED) .....
85	Y NON–RECL FRT BKT ST (A51) ..	14090628	2	DISCON	TRIM, DRIVER & PASS ST BK (LEATHER, BLUE) .....
86	Y NON–RECL FRT BKT ST (A51), (652), (2ND DES)	10048879	2	DISCON	TRIM, DRIVER & PASS ST BK CUSH (BRONZE, LEATHER, NO METALLIC FLECKS .....
89	Y RECL FRT BKT ST (AQ9), (902) ..	10159578	LH	DISCON	TRIM, DRIVER BACKREST BOLS (GRAY) .....
84–85	Y RECL FRT BKT ST (AQ9), (12V) ..	14081127	LH	DISCON	TRIM, DRIVER BACKREST BOLSTER (CLOTH, GRAPHITE) .....
84–85	Y RECL FRT BKT ST (AQ9), (65V) ..	14081131	LH	DISCON	TRIM, DRIVER BACKREST BOLSTER (CLOTH, BRONZE) .....
84–85	Y RECL FRT BKT ST (AQ9), (62V) ..	14081135	LH	DISCON	TRIM, DRIVER BACKREST BOLSTER (CLOTH, SADDLE) .....
84–85	Y RECL FRT BKT ST (AQ9), (15V) ..	14081139	LH	DISCON	TRIM, DRIVER BACKREST BOLSTER (CLOTH, GRAY) .....
84–85	Y RECL FRT BKT ST (AQ9), (28V) ..	14081143	LH	DISCON	TRIM, DRIVER BACKREST BOLSTER (CLOTH, BLUE) .....
85–87	Y RECL FRT BKT ST (AQ9), (122) ..	14089189	LH	DISCON	TRIM, DRIVER BACKREST BOLSTER (LEATHER, GRAPHITE) .....
85–87	Y RECL FRT BKT ST (AQ9), (152) ..	14089193	LH	DISCON	TRIM, DRIVER BACKREST BOLSTER (LEATHER, GRAY) .....
85–87	Y RECL FRT BKT ST (AQ9), (622) ..	14089197	LH	DISCON	TRIM, DRIVER BACKREST BOLSTER (LEATHER, SADDLE) .....
85	Y RECL FRT BKT ST (AQ9), (652) ..	14091301	LH	DISCON	TRIM, DRIVER BACKREST BOLSTER (LEATHER, BRONZE) .....
85	Y RECL FRT BKT ST (AQ9), (742) ..	14091305	LH	DISCON	TRIM, DRIVER BACKREST BOLSTER (LEATHER, CARMINE) .....
86–88	Y RECL FRT BKT ST (AQ9), (732) ..	14094567	LH	DISCON	TRIM, DRIVER BACKREST BOLSTER (RED) .....
88	Y RECL FRT BKT ST (AQ9), (192) ..	10120949	LH	DISCON	TRIM, DRIVER BACKREST BOLSTER (BLACK) .....
88	Y RECL FRT BKT ST (AQ9), (902) ..	10120953	LH	DISCON	TRIM, DRIVER BACKREST BOLSTER (GRAY) .....
89	Y RECL FRT BKT ST (AQ9), (212) ..	10140660	RH	DISCON	TRIM, P&D/SEAT BACKREST BOLSTER (BLUE) .....
89	Y RECL FRT BKT ST (AQ9), (212) ..	10140661	LH	DISCON	TRIM, P&D/SEAT BACKREST BOLSTER (BLUE) .....
89	Y RECL FRT BKT ST (AQ9), (602) ..	10140662	RH	DISCON	TRIM, P&D/SEAT BACKREST BOLSTER (COGNAC) .....
89	Y RECL FRT BKT ST (AQ9), (602) ..	10140663	LH	DISCON	TRIM, P&D/SEAT BACKREST BOLSTER (COGNAC) .....
89	Y RECL FRT BKT ST (AQ9), (732) ..	10140664	RH	DISCON	TRIM, P&D/SEAT BACKREST BOLSTER (RED) .....
89	Y RECL FRT BKT ST (AQ9), (732) ..	10140665	LH	DISCON	TRIM, P&D/SEAT BACKREST BOLSTER (RED) .....
89	Y RECL FRT BKT ST (AQ9), (192) ..	10140650	2	DISCON	TRIM, P&D/SEAT BACKREST INS (BLACK) .....

© 2000 GENERAL MOTORS SERVICE PARTS OPERATIONS

14.800 COVER – RING – TRIM, Front Seat Back and Back of Back(Con't)

89	Y RECL FRT BKT ST (AQ9), (192) ..	10140658	RH	DISCON	TRIM, P/SEAT BACKREST BOLSTER (BLACK) .....
86–87	Y RECL FRT BKT ST (AQ9), (652) ..	10048924	RH	DISCON	TRIM, P/SEAT BOLSTER (LEATHER, BRONZE) .....
88	Y RECL FRT BKT ST (AQ9), (113) ..	10120968	2	DISCON	TRIM, P/SEAT INR, D/SEAT OTR BOLSTER (WHITE) .....
88	Y 35 ANNIVERSARY (Z01), (113) ...	10120969	2	DISCON	TRIM, P/SEAT OTR, D/SEAT INR BOLSTER (WHITE) .....
89	Y AQ9 902	10159579	RH	DISCON	TRIM, PASS BACKREST BOLS (GRAY) .
84–85	Y RECL FRT BKT ST (AQ9), (12V) ..	14081128	RH	DISCON	TRIM, PASS BACKREST BOLSTER (CLOTH, GRAPHITE) .....
84–85	Y RECL FRT BKT ST (AQ9), (65V) ..	14081132	RH	DISCON	TRIM, PASS BACKREST BOLSTER (CLOTH, BRONZE) .....
84–85	Y RECL FRT BKT ST (AQ9), (62V) ..	14081136	RH	DISCON	TRIM, PASS BACKREST BOLSTER (CLOTH, SADDLE) .....
84–85	Y RECL FRT BKT ST (AQ9), (15V) ..	14081140	RH	DISCON	TRIM, PASS BACKREST BOLSTER (CLOTH, GRAY) .....
84–85	Y RECL FRT BKT ST (AQ9), (28V) ..	14081144	RH	DISCON	TRIM, PASS BACKREST BOLSTER (CLOTH, BLUE) .....
85–87	Y RECL FRT BKT ST (AQ9), (122) ..	14089190	RH	DISCON	TRIM, PASS BACKREST BOLSTER (LEATHER, GRAPHITE) .....
85–87	Y RECL FRT BKT ST (AQ9), (152) ..	14089194	RH	DISCON	TRIM, PASS BACKREST BOLSTER (LEATHER, GRAY) .....
85–87	Y RECL FRT BKT ST (AQ9), (622) ..	14089198	RH	DISCON	TRIM, PASS BACKREST BOLSTER (LEATHER, SADDLE) .....
85	Y RECL FRT BKT ST (AQ9), (652) ..	14091302	RH	DISCON	TRIM, PASS BACKREST BOLSTER (LEATHER, BRONZE) .....
85	Y RECL FRT BKT ST (AQ9), (742) ..	14091306	RH	DISCON	TRIM, PASS BACKREST BOLSTER (LEATHER, CARMINE) .....
85	Y AQ9 282	14091448	RH	DISCON	TRIM, PASS BACKREST BOLSTER (LEATHER, BLUE) .....
86–88	Y RECL FRT BKT ST (AQ9), (732) ..	14094568	RH	DISCON	TRIM, PASS BACKREST BOLSTER (RED) .....
88	Y RECL FRT BKT ST (AQ9), (192) ..	10120950	RH	DISCON	TRIM, PASS BACKREST BOLSTER (BLACK) ....
88	Y AQ9 902	10120954	RH	DISCON	TRIM, PASS BACKREST BOLSTER (GRAY) .....
86–87	Y RECL FRT BKT ST (AQ9), (652) ..	10048925	2	DISCON	TRIM, ST BACKREST INSERT (LEATHER, BRONZE) .....
84–85	Y (12C)	14058509	2	DISCON	TRIM, ST BK (CLOTH, GRAPHITE) .....
84–85	Y (15C)	14058510	2	DISCON	TRIM, ST BK (CLOTH, GRAY) .....
84–85	Y 28C	14058511	2	DISCON	TRIM, ST BK (CLOTH, BLUE) .....
84–85	Y (65C)	14058512	2	DISCON	TRIM, ST BK (CLOTH, BRONZE) .....
84–85	Y (62C)	14058513	2	DISCON	TRIM, ST BK (CLOTH, SADDLE) .....

14.802 BACKREST – PAD, Front Seat Back

94	Y MAN RECL FRT BKT ST (AR9) ...	10262256	1	48.50	PAD, D/SEAT BK CUSH (W/WIRE) (USE ON VEHS W/STS W/WIRES IN ST BK UPR BOLSTER) .....
95–96	Y MAN RECL FRT BKT ST (AR9) ...	10262256	1	48.50	PAD, D/SEAT BK CUSH (W/WIRE) (PAD W/SLOT FOR WIRE STIFFNER) .....
89–90	Y RECL FRT BKT ST (AQ9)	10148080	LH	DISCON	PAD, D/SEAT BK CUSH SI BOLS .....
89–90	Y RECL FRT BKT ST (AQ9)	10148081	RH	DISCON	PAD, D/SEAT BK CUSH SI BOLS .....
91–93	Y RECL FRT BKT ST (AQ9)	12508090	LH	DISCON	PAD, D/SEAT BK CUSH SI BOLS .....
91–93	Y RECL FRT BKT ST (AQ9)	12508091	RH	DISCON	PAD, D/SEAT BK CUSH SI BOLS .....
94	Y MAN RECL FRT BKT ST (AR9) ...	10262256	1	48.50	PAD, P/SEAT BK CUSH (W/WIRE) (USE ON VEHS W/STS W/WIRES IN ST BK UPR BOLSTER) .....
95–06	Y MAN RECL FRT BKT ST (AR9) ...	10262256	1	48.50	PAD, P/SEAT BK CUSH (W/WIRE) (PAD W/SLOT FOR WIRE STIFFNER) .....

© 2000 GENERAL MOTORS SERVICE PARTS OPERATIONS

14.802 BACKREST – PAD, Front Seat Back(Con't)

91–93	Y RECL FRT BKT ST (AQ9)	12508090	LH	DISCON	PAD, P/SEAT BK CUSH SI BOLS .....
91–93	Y RECL FRT BKT ST (AQ9)	12508091	RH	DISCON	PAD, P/SEAT BK CUSH SI BOLS .....

14.865 BOLT – BRACKET – CLIP – COIL – COIL KIT – CONNECTOR – HARNESS – INSULATOR – MODULE – NUT – RESISTOR – RETAINER – SENSOR – SWITCH KIT – WASHER, Inflatable Restraint System

91	Y	11507066	AR	1.00	BOLT, F/END INFL RST DISCRM SEN (8 X 1.25 X 16) (08.900) (TORQ S25.0+/–3.0 NM) .....
92	Y	11507066	2	1.00	BOLT, F/END INFL RST DISCRM SEN (8 X 1.25 X 16) (08.900) .....
91–94	Y	15714276	2	.30	BOLT, F/END INFL RST DISCRM SEN BRKT (4.2X1.41X16MM HEX WSR HD 12.50 DIA TAPPING) (08.977) .....
94–96	Y	11508948	2	.46	BOLT, I/P INFL RST MDL TR CVR HGE (08.900) .....
91	Y	11507066	AR	1.00	BOLT, INFL RST ARMING SEN (8 X 1.25 X 16) (08.900) (TORQ S25.0+/–3.0 NM) .....
90–95	Y	11514623	2	*.96	BOLT, INFL RST CONT MDL BRKT LWR (M6X1X20) (HEX W/CON WA) (08.900) .....
90–95	Y	11514623	2	*.96	BOLT, INFL RST CONT MDL BRKT UPR (M6X1X20) (HEX W/CON WA) (08.900) .....
90–93	Y	12337892	4	*1.13	BOLT, INFL RST DIAGN ENGY RESV MDL (M5X.8X16 THD) (SPECIAL) (03.671) (AC–DELCO #12337892) ...
90–91	Y	12506006	2	DISCON	BOLT, STRG WHL INFL RST MDL .....
96	Y	10192577	4	1.30	BOLT, STRG WHL INFL RST MDL (M6X1.0X13.0) (METRIC TORX HD) (08.913) .....
91–93	Y	14062552	1	1.12	BRACKET, F/END INFL RST DISCRM SEN (02.559) .....
94–96	Y F/SEAT INFL RST SYS (AK5)	10161868	1	10.00	BRACKET, F/END INFL RST DISCRM SEN .....
94–96	Y F/SEAT INFL RST SYS (AK5)	14062552	1	1.12	BRACKET, F/END INFL RST DISCRM SEN (02.559) .....
90	Y	10085936	1	DISCON	BRACKET, INFL RST CONT MDL (2 WELDED NUTS & 6 STUDS) .....
90–93	Y	10086086	LH	1.50	BRACKET, INFL RST CONT MDL (4 HOLES, L–SHAPED, POSN #1) .....
90–93	Y	10086177	RH	1.50	BRACKET, INFL RST CONT MDL (4 HOLES, L–SHAPED, POSN #1) .....
91–93	Y	1019372[illegible]	1	DISCON	BRACKET, INFL RST CONT MDL (2 WELDED NUTS, 4 WELDED STUDS) .
93	Y	10211797	1	DISCON	BRACKET, INFL RST CONT MDL (10.235) .....
94–96	Y F/SEAT INFL RST SYS (AK5)	10086086	LH	1.50	BRACKET, INFL RST CONT MDL .....
94–96	Y F/SEAT INFL RST SYS (AK5)	10086177	RH	1.50	BRACKET, INFL RST CONT MDL .....
91–93	Y 4–SPD A/TRANS (MD8), 6–SPD M/TRANS (ML9)	26013854	1	177.00	COIL KIT, STRG WHL INFL RST MDL ...
94–96	Y 4–SPD A/TRANS (M30)	26041005	1	144.00	COIL KIT, STRG WHL INFL RST MDL ...
89	Y 6–SPD M/TRANS (ML9), ACTIVE SUSP (Z5Z)	26013920	1	214.00	COIL, STRG WHL INFL RST MDL .....
90	Y	26013920	1	214.00	COIL, STRG WHL INFL RST MDL .....
91–92	Y	12106550	1	DISCON	HARNESS, INFL RST WRG (ELEMENT)
96	Y	12163000	1	102.00	HARNESS, INFL RST WRG .....
94–96	Y RECL FRT BKT ST (AQ9), IL3	10250232	1	25.22	HARNESS, INFLR AIR WRG (PASS SEAT) .....

© 2000 GENERAL MOTORS SERVICE PARTS OPERATIONS

14.865 BOLT – BRACKET – CLIP – COIL – COIL KIT – CONNECTOR – HARNESS – INSULATOR – MODULE – NUT – RESISTOR – RETAINER – SENSOR – SWITCH KIT – WASHER, Inflatable Restraint System(Con't)

94	Y 4–SPD A/TRANS (M30), A/C MAN CONT (C60), A/C AUTO ELEC CONT (C68)	12143757	1	141.00	HARNESS, INFLR AIR WRG
95	Y 5.7P (LT1), 4–SPD A/TRANS (M30), 6–SPD M/TRANS (ML9), A/C MAN CONT (C60), A/C AUTO ELEC CONT (C68)	12143757	1	141.00	HARNESS, INFLR AIR WRG
95–96	Y	14064578	1	1.45	INSULATOR, INFL RST CONT MDL (09.665)
91–96	Y	03999572	3	4.98	INSULATOH, INFL RST DIAGN ENGY RESV MDL (09.260)
94–96	Y F/SEAT INFL RST SYS (AK5)	10252293	1	625.00	MODULE, I/P INFL RST
91	Y	01228874	1	418.35	MODULE, INFL RST DIAGN ENGY RESV (REMAN) (DERM) (AC–DELCO #1228874)
92	Y (1ST DES)	01228874	1	418.35	MODULE, INFL RST DIAGN ENGY RESV (REMAN) (DERM) (USE ON PROD UNITS W/16081221 ON LABEL) (AC–DELCO #1228874)
92	Y (2ND DES)	16177277	1	293.13	MODULE, INFL RST DIAGN ENGY RESV (REMAN) (USE ON PROD UNITS W/16176561 ON LABEL) (AC–DELCO #16177277)
93	Y	16177277	1	293.13	MODULE, INFL RST DIAGN ENGY RESV (REMAN) (AC–DELCO #16177277)
94–96	Y F/SEAT INFL RST SYS (AK5)	16176558	1	322.00	MODULE, INFL RST DIAGN ENGY RESV (REMAN)
90	Y	10094618	1	625.00	MODULE, INFL RST RESV ENGY
90	Y	10150008	1	625.00	MODULE, STRG WHL INFL RST (IF REPLC 1990, COIL 26013854 MUST REPLC EXISTING COIL & MUST ALSO REPLC WHEEL USING 10201320) (PROBE CONN IN OWN BOX)
91–93	Y	10158008	1	625.00	MODULE, STRG WHL INFL RST (PROBE CONN IN OWN BOX)
94–96	Y F/SEAT INFL RST SYS (AK5)	16752392	1	625.00	MODULE, STRG WHL INFL RST
90	Y	10094613	2	72.25	SENSOR, F/END INFL RST DISCRM
91–93	Y	10177901	1	72.25	SENSOR, F/END INFL RST DISCRM
94–96	Y F/SEAT INFL RST SYS (AK5)	10177901	1	72.25	SENSOR, F/END INFL RST DISCRM
91–93	Y	10177902	1	72.25	SENSOR, INFL RST ARMING
94–96	Y F/SEAT INFL RST SYS (AK5)	10143543	1	72.25	SENSOR, INFL RST ARMING
91–96	Y	26011609	1	7.15	WASHER, STRG WHL INFL RST MDL COIL
	*EXPORT*********EXPORT*********EXPORT*********EXPORT*********EXPORT*				
94–96	Y 6–SPD M/TRANS (ML9), EUROPEAN PROVISIONS (VD1) (EXPORT), VE1 (EXPORT)	26041005	1	144.00	COIL KIT, STRG WHL INFL RST MDL

14.880 COVER – TRIM, Front Seat Cushion

84–86	Y NON–RECL FRT BKT ST (A51), (122)	14058515	LH	DISCON	COVER, D/SEAT CUSH (GRAPHITE)
84–86	Y NON–RECL FRT BKT ST (A51), (152)	14058516	LH	DISCON	COVER, D/SEAT CUSH (LEATHER, GRAY)
84	Y (652)	14058518	LH	DISCON	COVER, D/SEAT CUSH (LEATHER, BRONZE)
84–86	Y NON–RECL FRT BKT ST (A51), (622)	14058519	LH	DISCON	COVER, D/SEAT CUSH (LEATHER, SADDLE)

© 2000 GENERAL MOTORS SERVICE PARTS OPERATIONS

14.880 COVER – TRIM, Front Seat Cushion(Con't)

84–85	Y (742)	14058520	LH	DISCON	COVER, D/SEAT CUSH (LEATHER, CARMINE)
84–85	Y AQ9 12V	14081126	LH	DISCON	COVER, D/SEAT CUSH (CLOTH, GRAPHITE)
84–85	Y AQ9 65V	14081130	LH	DISCON	COVER, D/SEAT CUSH (CLOTH, BRONZE)
84–85	Y RECL FRT BKT ST (AQ9), (62V)	14081134	LH	DISCON	COVER, D/SEAT CUSH (CLOTH, SADDLE)
84–85	Y AQ9 15V	14081138	LH	DISCON	COVER, D/SEAT CUSH (CLOTH, GRAY)
84–85	Y AQ9 28V	14081142	LH	DISCON	COVER, D/SEAT CUSH (CLOTH, BLUE)
85	Y NON–RECL FRT BKT ST (A51), (652)	14058518	LH	DISCON	COVER, D/SEAT CUSH (LEATHER, BRONZE)
85–87	Y RECL FRT BKT ST (AQ9), (122)	14089188	LH	DISCON	COVER, D/SEAT CUSH (LEATHER, GRAPHITE)
85–87	Y RECL FRT BKT ST (AQ9), (152)	14089192	LH	DISCON	COVER, D/SEAT CUSH (LEATHER, GRAY)
85–87	Y RECL FRT BKT ST (AQ9), (622)	14089196	LH	DISCON	COVER, D/SEAT CUSH (LEATHER, SADDLE)
85	Y RECL FRT BKT ST (AQ9), (652)	14089200	LH	DISCON	COVER, D/SEAT CUSH (LEATHER, BRONZE)
85	Y A51 282	14090627	LH	DISCON	COVER, D/SEAT CUSH (LEATHER, BLUE)
85	Y RECL FRT BKT ST (AQ9), (742)	14091304	LH	DISCON	COVER, D/SEAT CUSH (LEATHER, CARMINE)
85	Y AQ9 282	14091449	LH	DISCON	COVER, D/SEAT CUSH (LEATHER, BLUE)
86	Y NON–RECL FRT BKT ST (A51), (652), (2ND DES)	10048878	LH	DISCON	COVER, D/SEAT CUSH (LEATHER W/NO METALLIC FLECKS, BRONZE)
86–87	Y RECL FRT BKT ST (AQ9), (652)	10048922	LH	DISCON	COVER, D/SEAT CUSH (LEATHER, BRONZE)
86	Y NON–RECL FRT BKT ST (A51), (652), (1ST DES)	14058518	LH	DISCON	COVER, D/SEAT CUSH (LEATHER W/GOLD METALLIC FLECKS, BRONZE)
86–87	Y (12C)	14090645	LH	DISCON	COVER, D/SEAT CUSH (GRAPHITE)
86–87	Y (15C)	14090647	LH	DISCON	COVER, D/SEAT CUSH (GRAY)
86–87	Y 21C	14090649	LH	DISCON	COVER, D/SEAT CUSH (BLUE)
86–87	Y (65C)	14090651	LH	DISCON	COVER, D/SEAT CUSH (BRONZE)
86–87	Y (62C)	14090653	LH	DISCON	COVER, D/SEAT CUSH (SADDLE)
86	Y NON–RECL FRT BKT ST (A51), (212)	14090659	LH	DISCON	COVER, D/SEAT CUSH (BLUE)
86	Y NON–RECL FRT BKT ST (A51), (732)	14090665	LH	DISCON	COVER, D/SEAT CUSH (RED)
86–88	Y RECL FRT BKT ST (AQ9), (211)	14094562	LH	DISCON	COVER, D/SEAT CUSH (BLUE)
86–88	Y RECL FRT BKT ST (AQ9), (732)	14094566	LH	DISCON	COVER, D/SEAT CUSH (RED)
87	Y MAN RECL FRT BKT ST (AR9), (652)	10048878	LH	DISCON	COVER, D/SEAT CUSH (LEATHER, BRONZE)
87	Y MAN RECL FRT BKT ST (AR9), (122)	14058515	LH	DISCON	COVER, D/SEAT CUSH (GRAPHITE)
87	Y MAN RECL FRT BKT ST (AR9), (152)	14058516	LH	DISCON	COVER, D/SEAT CUSH (LEATHER, GRAY)
87	Y MAN RECL FRT BKT ST (AR9), (622)	14058519	LH	DISCON	COVER, D/SEAT CUSH (LEATHER, SADDLE)
87–88	Y MAN RECL FRT BKT ST (AR9), (212)	14090659	LH	DISCON	COVER, D/SEAT CUSH (BLUE)
87–88	Y MAN RECL FRT BKT ST (AR9), (732)	14090665	LH	DISCON	COVER, D/SEAT CUSH (RED)
88	Y MAN RECL FRT BKT ST (AR9), (192)	10076641	LH	DISCON	COVER, D/SEAT CUSH (BLACK)
88	Y MAN RECL FRT BKT ST (AR9), (602)	10076643	LH	DISCON	COVER, D/SEAT CUSH (COGNAC)
88	Y AR9 902	10076645	LH	DISCON	COVER, D/SEAT CUSH (GRAY)

© 2000 GENERAL MOTORS SERVICE PARTS OPERATIONS

14.880 COVER – TRIM, Front Seat Cushion(Con't)

88	Y (19C)	10076647	LH	DISCON	COVER, D/SEAT CUSH (BLACK)
88	Y (60C)	10076648	LH	DISCON	COVER, D/SEAT CUSH (COGNAC)
88	Y RECL FRT BKT ST (AQ9)	10120948	LH	DISCON	COVER, D/SEAT CUSH (BLACK)
88	Y RECL FRT BKT ST (AQ9)	10120952	LH	DISCON	COVER, D/SEAT CUSH (GRAY)
88	Y RECL FRT BKT ST (AQ9)	10120956	LH	DISCON	COVER, D/SEAT CUSH (COGNAC)
88	Y 35 ANNIVERSARY (Z01), (113)	10120967	LH	DISCON	COVER, D/SEAT CUSH (WHITE)
88	Y (123)	14058515	LH	DISCON	COVER, D/SEAT CUSH (GRAPHITE)
89	Y MAN RECL FRT BKT ST (AR9), (212)	10125935	LH	DISCON	COVER, D/SEAT CUSH (BLUE)
89	Y MAN RECL FRT BKT ST (AR9), (732)	10125936	LH	DISCON	COVER, D/SEAT CUSH (RED)
89	Y MAN RECL FRT BKT ST (AR9), (192)	10125937	LH	DISCON	COVER, D/SEAT CUSH (BLACK)
89	Y MAN RECL FRT BKT ST (AR9), (602)	10125938	LH	DISCON	COVER, D/SEAT CUSH (COGNAC)
89	Y MAN RECL FRT BKT ST (AR9), (902)	10125939	LH	DISCON	COVER, D/SEAT CUSH (GRAY)
89	Y RECL FRT BKT ST (AQ9), (192)	10140654	LH	DISCON	COVER, D/SEAT CUSH (BLACK)
89	Y RECL FRT BKT ST (AQ9), (212)	10140655	LH	DISCON	COVER, D/SEAT CUSH (BLUE)
89	Y RECL FRT BKT ST (AQ9), (602)	10140656	LH	DISCON	COVER, D/SEAT CUSH (COGNAC)
89	Y RECL FRT BKT ST (AQ9), (732)	10140657	LH	DISCON	COVER, D/SEAT CUSH (RED)
89	Y RECL FRT BKT ST (AQ9), (902)	10159577	1	DISCON	COVER, D/SEAT CUSH (GRAY)
90	Y MAN RECL FRT BKT ST (AR9), (223)	10137701	LH	DISCON	COVER, D/SEAT CUSH (BLUE)
90	Y MAN RECL FRT BKT ST (AR9), (733)	10137702	LH	DISCON	COVER, D/SEAT CUSH (RED)
90	Y MAN RECL FRT BKT ST (AR9), (193)	10137703	LH	DISCON	COVER, D/SEAT CUSH (BLACK)
90	Y MAN RECL FRT BKT ST (AR9), (603)	10137704	LH	DISCON	COVER, D/SEAT CUSH (COGNAC)
90	Y MAN RECL FRT BKT ST (AR9), (903)	10137705	LH	DISCON	COVER, D/SEAT CUSH (GRAY)
91–93	Y RECL FRT BKT ST (AQ9), (193)	12506457	LH	DISCON	COVER, D/SEAT CUSH (BLACK)
91	Y RECL FRT BKT ST (AQ9), (223)	12506459	LH	DISCON	COVER, D/SEAT CUSH (BLUE)
91	Y RECL FRT BKT ST (AQ9), (603)	12506461	LH	DISCON	COVER, D/SEAT CUSH (COGNAC)
91	Y RECL FRT BKT ST (AQ9), (903)	12506465	LH	DISCON	COVER, D/SEAT CUSH (GRAY)
91–93	Y MAN RECL FRT BKT ST (AR9), (193)	12517319	LH	615.00	COVER, D/SEAT CUSH (W/CUSH) (BLACK)
91–93	Y MAN RECL FRT BKT ST (AR9), (19C)	12517320	LH	DISCON	COVER, D/SEAT CUSH (W/CUSH) (BLACK)
91	Y MAN RECL FRT BKT ST (AR9), (603)	12517321	LH	DISCON	COVER, D/SEAT CUSH (W/CUSH) (COGNAC)
91	Y MAN RECL FRT BKT ST (AR9), (60C)	12517322	LH	DISCON	COVER, D/SEAT CUSH (W/CUSH) (COGNAC)
91	Y MAN RECL FRT BKT ST (AR9), (223)	12517323	LH	DISCON	COVER, D/SEAT CUSH (W/CUSH) (BLUE)
91	Y MAN RECL FRT BKT ST (AR9), (903)	12517324	LH	DISCON	COVER, D/SEAT CUSH (W/CUSH) (GRAY)
91–92	Y MAN RECL FRT BKT ST (AR9), (733)	12517325	LH	DISCON	COVER, D/SEAT CUSH (W/CUSH) (RED)
92–93	Y RECL FRT BKT ST (AQ9), (103)	12510909	LH	790.90	COVER, D/SEAT CUSH (WHITE)
92–93	Y RECL FRT BKT ST (AQ9), (143)	12510911	LH	790.90	COVER, D/SEAT CUSH (GRAY)
92–93	Y RECL FRT BKT ST (AQ9), (643)	12510913	LH	790.90	COVER, D/SEAT CUSH (BEIGE)
92–93	Y MAN RECL FRT BKT ST (AR9), (103)	12517326	LH	615.00	COVER, D/SEAT CUSH (W/CUSH) (WHITE)
92–93	Y MAN RECL FRT BKT ST (AR9), (143)	12517327	LH	615.00	COVER, D/SEAT CUSH (W/CUSH) (GRAY)
92–93	Y MAN RECL FRT BKT ST (AR9), (643)	12517328	LH	615.00	COVER, D/SEAT CUSH (W/CUSH) (BEIGE)

© 2000 GENERAL MOTORS SERVICE PARTS OPERATIONS

14.880 COVER – TRIM, Front Seat Cushion(Con't)

93	Y MAN RECL FRT BKT ST (AR9), (703)	12517329	LH	722.60	COVER, D/SEAT CUSH (W/CUSH) (RED)
93	Y RECL FRT BKT ST (AQ9), (703)	12518736	LH	722.60	COVER, D/SEAT CUSH (RED)
93	Y RECL FRT BKT ST (AQ9), (793)	12518738	LH	722.60	COVER, D/SEAT CUSH (RED)
94–96	Y MAN RECL FRT BKT ST (AR9), (143)	10248451	1	554.70	COVER, D/SEAT CUSH (GRAY)
94–96	Y MAN RECL FRT BKT ST (AR9), (643)	10248456	1	554.70	COVER, D/SEAT CUSH (BEIGE)
94–96	Y MAN RECL FRT BKT ST (AR9), (193)	10248468	1	554.70	COVER, D/SEAT CUSH (BLACK)
94–96	Y MAN RECL FRT BKT ST (AR9), (703)	10248470	1	554.70	COVER, D/SEAT CUSH (RED)
94	Y RECL FRT BKT ST (AQ9), (193)	10248475	1	DISCON	COVER, D/SEAT CUSH (BLACK)
94	Y RECL FRT BKT ST (AQ9), (703)	10248476	1	DISCON	COVER, D/SEAT CUSH (RED)
94	Y RECL FRT BKT ST (AQ9), (143)	10248477	1	DISCON	COVER, D/SEAT CUSH (GRAY)
94	Y RECL FRT BKT ST (AQ9), (643)	10248478	1	DISCON	COVER, D/SEAT CUSH (BEIGE)
95–96	Y RECL FRT BKT ST (AQ9), (193)	10262379	1	720.50	COVER, D/SEAT CUSH (BLACK)
95–96	Y RECL FRT BKT ST (AQ9), (703)	10262381	1	720.50	COVER, D/SEAT CUSH (RED)
95–96	Y RECL FRT BKT ST (AQ9), (143)	10262383	1	720.50	COVER, D/SEAT CUSH (GRAY)
95–96	Y RECL FRT BKT ST (AQ9), (643)	10262385	1	720.50	COVER, D/SEAT CUSH (BEIGE)
95	Y67 RECL FRT BKT ST (AQ9), (194)	12455826	1	720.50	COVER, D/SEAT CUSH (BLACK)
96	Y RECL FRT BKT ST (AQ9), COLLECTORS EDITION (Z15), GRAND SPORT EDITION (Z16)	10262525	1	720.50	COVER, D/SEAT CUSH (RED)
96	Y RECL FRT BKT ST (AQ9), GRAND SPORT EDITION (Z16), (195)	10262537	1	720.50	COVER, D/SEAT CUSH (BLACK)
96	Y RECL FRT BKT ST (AQ9), COLLECTORS EDITION (Z15), (194)	10262537	1	720.50	COVER, D/SEAT CUSH (BLACK)
96	Y RECL FRT BKT ST (AQ9), COLLECTORS EDITION (Z15), (144)	10270161	1	720.50	COVER, D/SEAT CUSH (GRAY)
84–85	Y (12C)	14058503	2	DISCON	COVER, F/SEAT CUSH (CLOTH, GRAPHITE)
84–85	Y (15C)	14058504	2	DISCON	COVER, F/SEAT CUSH (CLOTH, GRAY)
84–85	Y 28C	14058505	2	DISCON	COVER, F/SEAT CUSH (CLOTH, BLUE)
84–85	Y (65C)	14058506	2	DISCON	COVER, F/SEAT CUSH (CLOTH, BRONZE)
90	Y RECL FRT BKT ST (AQ9), (193)	10174813	2	DISCON	COVER, F/SEAT CUSH (BLACK)
90	Y RECL FRT BKT ST (AQ9), (223)	10174814	2	DISCON	COVER, F/SEAT CUSH (BLUE)
90	Y RECL FRT BKT ST (AQ9), (603)	10174815	2	DISCON	COVER, F/SEAT CUSH (COGNAC)
90	Y RECL FRT BKT ST (AQ9), (733)	10174816	2	DISCON	COVER, F/SEAT CUSH (RED)
90	Y RECL FRT BKT ST (AQ9), (903)	10174817	2	DISCON	COVER, F/SEAT CUSH (GRAY)
84–86	Y NON–RECL FRT BKT ST (A51), (122)	14058515	RH	DISCON	COVER, P/SEAT CUSH (GRAPHITE)
84–86	Y NON–RECL FRT BKT ST (A51), (152)	14058516	RH	DISCON	COVER, P/SEAT CUSH (LEATHER, GRAY)
84	Y (652)	14058518	RH	DISCON	COVER, P/SEAT CUSH (LEATHER, BRONZE)
84–86	Y NON–RECL FRT BKT ST (A51), (622)	14058519	RH	DISCON	COVER, P/SEAT CUSH (LEATHER, SADDLE)
84–85	Y (742)	14058520	RH	DISCON	COVER, P/SEAT CUSH (LEATHER, CARMINE)
84–85	Y AQ9 12V	14081126	RH	DISCON	COVER, P/SEAT CUSH (CLOTH, GRAPHITE)
84–85	Y AQ9 65V	14081130	RH	DISCON	COVER, P/SEAT CUSH (CLOTH, BRONZE)
84–85	Y RECL FRT BKT ST (AQ9), (62V)	14081134	RH	DISCON	COVER, P/SEAT CUSH (CLOTH, SADDLE)
84–85	Y AQ9 15V	14081138	RH	DISCON	COVER, P/SEAT CUSH (CLOTH, GRAY)

© 2000 GENERAL MOTORS SERVICE PARTS OPERATIONS

14.680 COVER – TRIM, Front Seat Cushion(Con't)

84–85	Y AQ9 28V	14081142	RH	DISCON	COVER, P/SEAT CUSH (CLOTH, BLUE)
85	Y NON–RECL FRT BKT ST (A51), (652)	14058518	RH	DISCON	COVER, P/SEAT CUSH (LEATHER, BRONZE)
85–87	Y RECL FRT BKT ST (AQ9), (122)	14089188	RH	DISCON	COVER, P/SEAT CUSH (LEATHER, GRAPHITE)
85–87	Y RECL FRT BKT ST (AQ9), (152)	14089192	RH	DISCON	COVER, P/SEAT CUSH (LEATHER, GRAY)
85–87	Y RECL FRT BKT ST (AQ9), (622)	14089196	RH	DISCON	COVER, P/SEAT CUSH (LEATHER, SADDLE)
85	Y RECL FRT BKT ST (AQ9), (652)	14089200	RH	DISCON	COVER, P/SEAT CUSH (LEATHER, BRONZE)
85	Y A51 282	14090627	RH	DISCON	COVER, P/SEAT CUSH (LEATHER, BLUE)
85	Y RECL FRT BKT ST (AQ9), (742)	14091304	RH	DISCON	COVER, P/SEAT CUSH (LEATHER, CARMINE)
85	Y AQ9 282	14091449	RH	DISCON	COVER, P/SEAT CUSH (LEATHER, BLUE)
86	Y NON–RECL FRT BKT ST (A51), (652), (2ND DES)	10048878	RH	DISCON	COVER, P/SEAT CUSH (LEATHER W/NO METALLIC FLECKS, BRONZE)
86–87	Y RECL FRT BKT ST (AQ9), (652)	10048922	RH	DISCON	COVER, P/SEAT CUSH (LEATHER, BRONZE)
86	Y NON–RECL FRT BKT ST (A51), (652), (1ST DES)	14058518	RH	DISCON	COVER, P/SEAT CUSH (LEATHER W/GOLD METALLIC FLECKS, BRONZE)
86–87	Y (12C)	14090645	RH	DISCON	COVER, P/SEAT CUSH (GRAPHITE)
86–87	Y (15C)	14090647	RH	DISCON	COVER, P/SEAT CUSH (GRAY)
86–87	Y 21C	14090649	RH	DISCON	COVER, P/SEAT CUSH (BLUE)
86–87	Y (65C)	14090651	RH	DISCON	COVER, P/SEAT CUSH (BRONZE)
86–87	Y (62C)	14090653	RH	DISCON	COVER, P/SEAT CUSH (SADDLE)
86	Y NON–RECL FRT BKT ST (A51), (212)	14090659	RH	DISCON	COVER, P/SEAT CUSH (BLUE)
86	Y NON–RECL FRT BKT ST (A51), (732)	14090665	RH	DISCON	COVER, P/SEAT CUSH (RED)
86–88	Y RECL FRT BKT ST (AQ9), (211)	14094562	RH	DISCON	COVER, P/SEAT CUSH (BLUE)
86–88	Y RECL FRT BKT ST (AQ9), (732)	14094566	RH	DISCON	COVER, P/SEAT CUSH (RED)
87	Y MAN RECL FRT BKT ST (AR9), (652)	10048878	RH	DISCON	COVER, P/SEAT CUSH (LEATHER, BRONZE)
87	Y MAN RECL FRT BKT ST (AR9), (122)	14058515	RH	DISCON	COVER, P/SEAT CUSH (GRAPHITE)
87	Y MAN RECL FRT BKT ST (AR9), (152)	14058516	RH	DISCON	COVER, P/SEAT CUSH (LEATHER, GRAY)
87	Y MAN RECL FRT BKT ST (AR9), (622)	14058519	RH	DISCON	COVER, P/SEAT CUSH (LEATHER, SADDLE)
87–88	Y MAN RECL FRT BKT ST (AR9), (212)	14090659	RH	DISCON	COVER, P/SEAT CUSH (BLUE)
87–88	Y MAN RECL FRT BKT ST (AR9), (732)	14090665	RH	DISCON	COVER, P/SEAT CUSH (RED)
88	Y MAN RECL FRT BKT ST (AR9), (192)	10076641	RH	DISCON	COVER, P/SEAT CUSH (BLACK)
88	Y MAN RECL FRT BKT ST (AR9), (602)	10076643	RH	DISCON	COVER, P/SEAT CUSH (COGNAC)
88	Y AR9 902	10076645	RH	DISCON	COVER, P/SEAT CUSH (GRAY)
88	Y (19C)	10076647	RH	DISCON	COVER, P/SEAT CUSH (BLACK)
88	Y (60C)	10076648	RH	DISCON	COVER, P/SEAT CUSH (COGNAC)
88	Y RECL FRT BKT ST (AQ9)	10120948	RH	DISCON	COVER, P/SEAT CUSH (BLACK)
88	Y RECL FRT BKT ST (AQ9)	10120952	RH	DISCON	COVER, P/SEAT CUSH (GRAY)
88	Y RECL FRT BKT ST (AQ9)	10120956	RH	DISCON	COVER, P/SEAT CUSH (COGNAC)
88	Y 35 ANNIVERSARY (Z01), (113)	10120967	RH	DISCON	COVER, P/SEAT CUSH (WHITE)
88	Y (122)	14058515	RH	DISCON	COVER, P/SEAT CUSH (GRAPHITE)

© 2000 GENERAL MOTORS SERVICE PARTS OPERATIONS

14.880 COVER – TRIM, Front Seat Cushion(Con't)

89	Y MAN RECL FRT BKT ST (AR9), (212)	10125935	RH	DISCON	COVER, P/SEAT CUSH (BLUE)
89	Y MAN RECL FRT BKT ST (AR9), (732)	10125936	RH	DISCON	COVER, P/SEAT CUSH (RED)
89	Y MAN RECL FRT BKT ST (AR9), (192)	10125937	RH	DISCON	COVER, P/SEAT CUSH (BLACK)
89	Y MAN RECL FRT BKT ST (AR9), (602)	10125938	RH	DISCON	COVER, P/SEAT CUSH (COGNAC)
89	Y AR9 902	10125939	RH	DISCON	COVER, P/SEAT CUSH (GRAY)
89	Y RECL FRT BKT ST (AQ9), (192)	10140654	RH	DISCON	COVER, P/SEAT CUSH (BLACK)
89	Y RECL FRT BKT ST (AQ9), (212)	10140655	RH	DISCON	COVER, P/SEAT CUSH (BLUE)
89	Y RECL FRT BKT ST (AQ9), (602)	10140656	RH	DISCON	COVER, P/SEAT CUSH (COGNAC)
89	Y RECL FRT BKT ST (AQ9), (732)	10140657	RH	DISCON	COVER, P/SEAT CUSH (RED)
89	Y RECL FRT BKT ST (AQ9), (902)	10159577	1	DISCON	COVER, P/SEAT CUSH (GRAY)
90	Y MAN RECL FRT BKT ST (AR9), (223)	10137701	RH	DISCON	COVER, P/SEAT CUSH (BLUE)
90	Y MAN RECL FRT BKT ST (AR9), (733)	10137702	RH	DISCON	COVER, P/SEAT CUSH (RED)
90	Y MAN RECL FRT BKT ST (AR9), (193)	10137703	RH	DISCON	COVER, P/SEAT CUSH (BLACK)
90	Y MAN RECL FRT BKT ST (AR9), (603)	10137704	RH	DISCON	COVER, P/SEAT CUSH (COGNAC)
90	Y MAN RECL FRT BKT ST (AR9), (903)	10137705	RH	DISCON	COVER, P/SEAT CUSH (GRAY)
91–93	Y RECL FRT BKT ST (AQ9), (193)	12506456	RH	790.90	COVER, P/SEAT CUSH (BLACK)
91	Y RECL FRT BKT ST (AQ9), (223)	12506458	RH	DISCON	COVER, P/SEAT CUSH (BLUE)
91	Y RECL FRT BKT ST (AQ9), (603)	12506460	RH	DISCON	COVER, P/SEAT CUSH (COGNAC)
91–92	Y RECL FRT BKT ST (AQ9), (733)	12506462	RH	790.90	COVER, P/SEAT CUSH (RED)
91	Y RECL FRT BKT ST (AQ9), (903)	12506464	RH	DISCON	COVER, P/SEAT CUSH (GRAY)
91–93	Y MAN RECL FRT BKT ST (AR9), (193)	12517319	RH	615.00	COVER, P/SEAT CUSH (W/CUSH) (BLACK)
91–93	Y MAN RECL FRT BKT ST (AR9), (190)	12517320	RH	DISCON	COVER, P/SEAT CUSH (W/CUSH) (BLACK)
91	Y MAN RECL FRT BKT ST (AR9), (603)	12517321	RH	DISCON	COVER, P/SEAT CUSH (W/CUSH) (COGNAC)
91	Y MAN RECL FRT BKT ST (AR9), (600)	12517322	RH	DISCON	COVER, P/SEAT CUSH (W/CUSH) (COGNAC)
91	Y MAN RECL FRT BKT ST (AR9), (223)	12517323	RH	DISCON	COVER, P/SEAT CUSH (W/CUSH) (BLUE)
91	Y MAN RECL FRT BKT ST (AR9), (903)	12517324	RH	DISCON	COVER, P/SEAT CUSH (W/CUSH) (GRAY)
91–92	Y MAN RECL FRT BKT ST (AR9), (733)	12517325	RH	DISCON	COVER, P/SEAT CUSH (W/CUSH) (RED)
92–93	Y RECL FRT BKT ST (AQ9), (103)	12510910	RH	790.90	COVER, P/SEAT CUSH (WHITE)
92–93	Y RECL FRT BKT ST (AQ9), (143)	12510912	RH	790.90	COVER, P/SEAT CUSH (GRAY)
92–93	Y RECL FRT BKT ST (AQ9), (643)	12510914	RH	790.90	COVER, P/SEAT CUSH (BEIGE)
92–93	Y MAN RECL FRT BKT ST (AR9), (103)	12517326	RH	615.00	COVER, P/SEAT CUSH (W/CUSH) (WHITE)
92–93	Y MAN RECL FRT BKT ST (AR9), (143)	12517327	RH	615.00	COVER, P/SEAT CUSH (W/CUSH) (GRAY)
92–93	Y MAN RECL FRT BKT ST (AR9), (643)	12517328	RH	615.00	COVER, P/SEAT CUSH (W/CUSH) (BEIGE)
93	Y MAN RECL FRT BKT ST (AR9), (703)	12517329	RH	722.60	COVER, P/SEAT CUSH (W/CUSH) (RED)
93	Y RECL FRT BKT ST (AQ9), (703)	12518735	RH	722.60	COVER, P/SEAT CUSH (RED)
93	Y RECL FRT BKT ST (AQ9), (793)	12518737	RH	722.60	COVER, P/SEAT CUSH (RED)
94–96	Y MAN RECL FRT BKT ST (AR9), (143)	10248451	1	554.70	COVER, P/SEAT CUSH (GRAY)
94–96	Y MAN RECL FRT BKT ST (AR9), (643)	10248466	1	554.70	COVER, P/SEAT CUSH (BEIGE)

© 2000 GENERAL MOTORS SERVICE PARTS OPERATIONS

14.880 COVER – TRIM, Front Seat Cushion(Con't)

94–96	Y MAN RECL FRT BKT ST (AR9), (193)	10248468	1	554.70	COVER, P/SEAT CUSH (BLACK)
94–96	Y MAN RECL FRT BKT ST (AR9), (703)	10248470	1	554.70	COVER, P/SEAT CUSH (RED)
94	Y RECL FRT BKT ST (AQ9), (193)	10250859	1	DISCON	COVER, P/SEAT CUSH (INCLUDES PAD) (BLACK)
94	Y RECL FRT BKT ST (AQ9), (703)	10250875	1	DISCON	COVER, P/SEAT CUSH (INCLUDES PAD) (RED)
94	Y RECL FRT BKT ST (AQ9), (143)	10250879	1	DISCON	COVER, P/SEAT CUSH (INCLUDES PAD) (GRAY)
94	Y RECL FRT BKT ST (AQ9), (643)	10250881	1	DISCON	COVER, P/SEAT CUSH (INCLUDES PAD) (BEIGE)
95–96	Y RECL FRT BKT ST (AQ9), (193)	10262380	1	720.50	COVER, P/SEAT CUSH (BLACK)
95–96	Y RECL FRT BKT ST (AQ9), (703)	10262382	1	720.50	COVER, P/SEAT CUSH (RED)
95–96	Y RECL FRT BKT ST (AQ9), (143)	10262384	1	720.50	COVER, P/SEAT CUSH (GRAY)
95–96	Y RECL FRT BKT ST (AQ9), (643)	10262386	1	720.50	COVER, P/SEAT CUSH (BEIGE)
95	Y67 RECL FRT BKT ST (AQ9), (194)	12455825	1	720.50	COVER, P/SEAT CUSH (BLACK)
96	Y RECL FRT BKT ST (AQ9), COLLECTORS EDITION (Z15)	10262524	1	720.50	COVER, P/SEAT CUSH (RED)
96	Y RECL FRT BKT ST (AQ9), GRAND SPORT EDITION (Z16)	10262524	1	720.50	COVER, P/SEAT CUSH (RED)
96	Y RECL FRT BKT ST (AQ9), COLLECTORS EDITION (Z15), (194)	10262538	1	720.50	COVER, P/SEAT CUSH (BLACK)
96	Y RECL FRT BKT ST (AQ9), GRAND SPORT EDITION (Z16), (195)	10262538	1	720.50	COVER, P/SEAT CUSH (BLACK)
96	Y RECL FRT BKT ST (AQ9), COLLECTORS EDITION (Z15), (144)	10270162	1	720.50	COVER, P/SEAT CUSH (GRAY)
91–93	Y RECL FRT BKT ST (AQ9), (193)	12506466	RH	172.30	TRIM, F/SEAT BOLS CUSH (BLACK)
91–93	Y RECL FRT BKT ST (AQ9), (193)	12506467	LH	DISCON	TRIM, F/SEAT BOLS CUSH (BLACK)
91	Y RECL FRT BKT ST (AQ9), (223)	12506468	RH	DISCON	TRIM, F/SEAT BOLS CUSH (BLUE)
91	Y RECL FRT BKT ST (AQ9), (223)	12506469	LH	DISCON	TRIM, F/SEAT BOLS CUSH (BLUE)
91	Y RECL FRT BKT ST (AQ9), (603)	12506470	RH	DISCON	TRIM, F/SEAT BOLS CUSH (COGNAC)
91	Y RECL FRT BKT ST (AQ9), (603)	12506471	LH	DISCON	TRIM, F/SEAT BOLS CUSH (COGNAC)
91–92	Y RECL FRT BKT ST (AQ9), (733)	12506472	RH	DISCON	TRIM, F/SEAT BOLS CUSH (RED)
91	Y RECL FRT BKT ST (AQ9), (903)	12506474	RH	172.30	TRIM, F/SEAT BOLS CUSH (GRAY)
91	Y RECL FRT BKT ST (AQ9), (903)	12506475	LH	172.30	TRIM, F/SEAT BOLS CUSH (GRAY)
92–93	Y RECL FRT BKT ST (AQ9), (103)	12510918	LH	172.30	TRIM, F/SEAT BOLS CUSH (WHITE)
92–93	Y RECL FRT BKT ST (AQ9), (103)	12510919	RH	172.30	TRIM, F/SEAT BOLS CUSH (WHITE)
92–93	Y RECL FRT BKT ST (AQ9), (143)	12510920	LH	172.30	TRIM, F/SEAT BOLS CUSH (GRAY)
92–93	Y RECL FRT BKT ST (AQ9), (143)	12510921	RH	172.30	TRIM, F/SEAT BOLS CUSH (GRAY)
92–93	Y RECL FRT BKT ST (AQ9), (643)	12510922	LH	172.30	TRIM, F/SEAT BOLS CUSH (BEIGE)
92–93	Y RECL FRT BKT ST (AQ9), (643)	12510923	RH	172.30	TRIM, F/SEAT BOLS CUSH (BEIGE)
93	Y RECL FRT BKT ST (AQ9), (703)	12518739	RH	172.30	TRIM, F/SEAT BOLS CUSH (RED)
93	Y RECL FRT BKT ST (AQ9), (703)	12518740	LH	172.30	TRIM, F/SEAT BOLS CUSH (RED)
93	Y RECL FRT BKT ST (AQ9), (793)	12518741	RH	172.30	TRIM, F/SEAT BOLS CUSH (RED)
93	Y RECL FRT BKT ST (AQ9), (793)	12518742	LH	172.30	TRIM, F/SEAT BOLS CUSH (RED)

14.890 PAD, Front Seat Cushion

92–93	Y RECL FRT BKT ST (AQ9)	12522165	1	DISCON	PAD, D/SEAT CUSH (W/WIRE)
94–96	Y MAN RECL FRT BKT ST (AR9)	10248424	1	50.10	PAD, D/SEAT CUSH
92–93	Y RECL FRT BKT ST (AQ9)	12522166	1	DISCON	PAD, P/SEAT CUSH (W/WIRE)
94–96	Y MAN RECL FRT BKT ST (AR9)	10248424	1	50.10	PAD, P/SEAT CUSH
84–88	Y RECL FRT BKT ST (AQ9)	14094551	1	DISCON	PAD, SEAT CUSH

© 2000 GENERAL MOTORS SERVICE PARTS OPERATIONS

MICROFICHE INDEX

GROUPS 12.000 THRU 13.000

FICHE 10 OF 11

GROUP	DESCRIPTION	STARTING GRID LOCATION PARTS	ILLUSTRATIONS
–	GENERAL INFORMATION	1–A2	1–G2
–	ALPHABETICAL INDEX	1–B13	N.A.
12.000	BODY MOLDINGS – SHEET METAL	10–A2	10–D2
13.000	BODY WIRING – VINYL TOP TRIM	10–C2	N.A.
–	OUT OF FICHE CALLS	N.A.	10–M22

10–A1

CHEVROLET
BODY GROUP 12.000

BODY MOLDINGS – SHEET METAL

ALPHABETICAL INDEX

A

ACTUATOR, Folding Top Compartment 12.170 10–A10
ASHTRAY, Instrument Panel Ashtray ... 12.009 10–A8

B

BARRIER, Rear Quarter Inner 12.941 10–A27
BARRIER, Windshield Frame 12.807 10–A17
BEZEL, Fuel Tank Filler Door 12.945 10–B3
BOLT, Body Rear End (Plastic Laminated) 12.986 10–B10
BOLT, Floor Pan 12.980 10–B5
BOLT, Folding Top Compartment 12.170 10–A10
BOLT, Luggage Carrier 12.815 10–A25
BOLT, Rear Compartment Floor 12.981 10–B7
BOLT, Rear Hatch Window 12.180 10–A13
BOLT, Rear Hatch Window 12.184 10–A14
BOLT, Rear Hatch Window 12.237 10–A15
BOLT, Roof Panel 12.810 10–A18
BOW, Roof 12.952 10–B4
BRACE, Body Lock Pillar 12.684 10–A16
BRACE, Body Rear End (Plastic Laminated) 12.986 10–B10
BRACE, Rear Wheelhouse 12.944 10–B2
BRACKET, Floor Pan 12.980 10–B5
BRACKET, Folding Top Compartment .. 12.170 10–A10
BRACKET, Luggage Carrier 12.815 10–A25
BRACKET, Luggage Compartment and Rear Seat to Window 12.971 10–B5
BRACKET, Rear Compartment Floor ... 12.981 10–B7
BRACKET, Rear Hatch Window 12.187 10–A14
BRACKET, Roof Panel 12.810 10–A18
BRACKET, Shroud and Dash and Vent Duct Panel 12.804 10–A16
BUMPER, Folding Top Compartment .. 12.170 10–A10
BUMPER, Fuel Tank Filler Door 12.945 10–B3
BUMPER, Rear Compartment Lid or Tailgate 12.212 10–A15
BUMPER, Roof Panel 12.810 10–A18
BUSHING, Rear Hatch Window 12.186 10–A14
BUSHING, Roof Panel 12.810 10–A18

C

CAP, Rear Hatch Window 12.249 10–A16
CLIP, Body Moldings 12.118 10–A10
CLIP, Roof Panel 12.810 10–A18
COMPARTMENT, Rear Compartment Floor 12.981 10–B7
CONNECTOR, Folding Top Compartment 12.170 10–A10
CONNECTOR, Rear Hatch Window 12.243 10–A15
COVER, Cowl Top Vent Louver 12.800 10–A16
COVER, Floor Pan 12.980 10–B5
COVER, Folding Top Compartment 12.170 10–A10
COVER, Instrument Panel Ashtray 12.009 10–A8
COVER, Roof Panel 12.810 10–A18
COVER, Windshield Frame 12.807 10–A17
CYLINDER KIT, Rear Compartment Floor 12.981 10–B7
CYLINDER, Rear Compartment Floor .. 12.981 10–B7

D

DECAL, Front Side Door 12.112 10–A8
DECAL, Rear Quarter Panel 12.116 10–A9
DEFLECTOR, Rear Body Lock Pillar ... 12.942 10–A28
DOOR & FRAME, Rear Compartment Floor 12.981 10–B7
DOOR, Fuel Tank Filler Door 12.945 10–B3
DOOR, Rear Compartment Floor 12.981 10–B7

E

EMBLEM, Fuel Tank Filler Door 12.945 10–B3
EXTENSION, Body Rear End (Plastic Laminated) 12.986 10–B10
EXTENSION, Floor Pan 12.980 10–B5

F

FASTENER, Roof Panel 12.810 10–A18
FILLER, Rear Body Lock Pillar 12.942 10–A28

FILLER, Rear Compartment Floor 12.981 10–B7
FRAME, Windshield Frame 12.807 10–A17

G

GASKET, Rear Compartment Floor 12.981 10–B7
GLASS, Rear Hatch Window 12.180 10–A13
GUIDE, Folding Top Compartment 12.170 10–A10
GUSSET, Front Body Hinge Pillar 12.659 10–A16
GUSSET, Windshield Frame 12.807 10–A17

H

HANDLE, Rear Compartment Floor 12.981 10–B7
HANDLE, Roof Panel 12.810 10–A18
HARDWARE KIT, Roof Panel 12.810 10–A18
HINGE KIT, Fuel Tank Filler Door 12.945 10–B3
HINGE, Folding Top Compartment 12.170 10–A10
HINGE, Rear Hatch Window 12.184 10–A14

I

INSULATOR, Floor Pan 12.980 10–B5
INSULATOR, Folding Top Compartment 12.170 10–A10
INSULATOR, Rear Body Lock Pillar 12.942 10–A28
INSULATOR, Rear Compartment Floor . 12.981 10–B7
INSULATOR, Roof Panel 12.810 10–A18
INSULATOR, Shroud and Dash and Vent Duct Panel 12.804 10–A16

L

LATCH, Folding Top Compartment 12.170 10–A10
LATCH, Rear Hatch Window 12.242 10–A15
LATCH, Roof Panel 12.810 10–A18
LEVER, Folding Top Compartment 12.170 10–A10
LID, Folding Top Compartment 12.170 10–A10
LINER, Rear Wheelhouse 12.944 10–B2
LOCATOR, Roof Panel 12.810 10–A18

M

MOLDING KIT, Front Side Door 12.112 10–A8
MOLDING KIT, Rear Quarter Panel 12.116 10–A9
MOLDING, Front Side Door 12.112 10–A8
MOLDING, Rear Quarter Panel 12.116 10–A9
MOLDING, Roof Drip 12.075 10–A8
MOLDING, Roof Panel 12.812 10–A24

N

NUT, Cowl Top Vent Louver 12.800 10–A16
NUT, Luggage Carrier 12.815 10–A25
NUT, Rear Hatch Window 12.187 10–A14
NUT, Rear Hatch Window 12.237 10–A15
NUT, Roof Panel 12.810 10–A18
NUT, Shroud and Dash and Vent Duct Panel 12.804 10–A16

P

PAD, Luggage Carrier 12.815 10–A25
PAD, Roof Panel 12.810 10–A18
PANEL PKG, Roof Panel (AD3–Hinged Roof Window–Glass) 12.810A 10–A24
PANEL PKG, Roof Panel 12.810 10–A18
PANEL, Door Opening Rocker Panel ... 12.934 10–A27
PANEL, Floor Pan 12.980 10–B5
PANEL, Folding Top Compartment 12.170 10–A10
PANEL, Front Door Inner/Outer Panel .. 12.895 10–A26
PANEL, Rear Body Lock Pillar 12.942 10–A28
PANEL, Rear Compartment Floor 12.981 10–B7
PANEL, Rear Quarter Outer 12.940 10–A27
PANEL, Rear Wheelhouse 12.944 10–B2
PANEL, Shroud and Dash and Vent Duct Panel 12.804 10–A16
PILLAR, Front Body Hinge Pillar 12.840 10–A26
PILLAR, Rear Body Lock Pillar 12.942 10–A28
PIN, Rear Hatch Window 12.186 10–A14
PIN, Roof Panel 12.810 10–A18
PLATE, Body Lock Pillar 12.684 10–A16
PLATE, Body Rear End (Plastic Laminated) 12.986 10–B10
PLATE, Floor Pan 12.980 10–B5
PLATE, Folding Top Compartment 12.170 10–A10
PLATE, Rear Body Lock Pillar 12.942 10–A28
PLATE, Rear Compartment Floor 12.981 10–B7
PLATE, Rear End 12.966 10–B4
PLATE, Rear Hatch Window 12.242 10–A15
PLATE, Roof Panel 12.810 10–A18
PLATE, Windshield Frame 12.807 10–A17
PLUG, Body Center Pillar 12.491 10–A16
PLUG, Floor Pan 12.980 10–B5
PLUG, Front Body Hinge Pillar 12.840 10–A26
PLUG, Rear Body Lock Pillar 12.942 10–A28
PLUG, Roof Panel 12.810 10–A18
PLUG, Roof 12.952 10–B4
PROTECTOR, Folding Top Compartment 12.170 10–A10
PROTECTOR, Rear End 12.966 10–B4
PROTECTOR, Roof Panel 12.810 10–A18

R

RAIL, Luggage Carrier 12.815 10–A25
REINFORCEMENT, Door Opening Rocker Panel 12.934 10–A27

REINFORCEMENT, Floor Pan 12.980 10–B5
REINFORCEMENT, Rear Body Lock Pillar 12.942 10–A28
REINFORCEMENT, Rear Compartment Floor 12.981 10–B7
REINFORCEMENT, Roof Panel 12.810 10–A18
REINFORCEMENT, Windshield Frame . 12.807 10–A17
RELAY, Folding Top Compartment 12.170 10–A10
RELAY, Rear Hatch Window 12.243 10–A15
REPAIR KIT, Roof Panel 12.810 10–A18
RETAINER, Cowl Ledge 12.801 10–A16
RETAINER, Floor Pan 12.980 10–B5
RETAINER, Folding Top Compartment . 12.170 10–A10
RETAINER, Rear Body Lock Pillar 12.942 10–A28
RETAINER, Rear Compartment Floor .. 12.981 10–B7
RETAINER, Rear Hatch Window 12.243 10–A15
RETAINER, Rear Quarter Outer 12.940 10–A27
RETAINER, Roof Panel 12.810 10–A18
RETAINER, Shroud and Dash and Vent Duct Panel 12.804 10–A16
ROD, Folding Top Compartment 12.170 10–A10

S

SCREEN, Cowl Top Vent Louver 12.800 10–A16
SCREW, Luggage Carrier 12.815 10–A25
SCREW, Roof Panel 12.810 10–A18
SEAL, Fuel Tank Filler Door 12.945 10–B3
SEAL, Rear Body Lock Pillar 12.942 10–A28
SEAL, Rear Hatch Window 12.187 10–A14
SEAL, Rear Hatch Window 12.269 10–A16
SEAL, Roof Panel 12.810 10–A18
SEAL, Shroud and Dash and Vent Duct Panel 12.804 10–A16
SEAL, Windshield Frame 12.807 10–A17
SHIM, Folding Top Compartment 12.170 10–A10
SHIM, Roof Panel 12.810 10–A18
SHUTTER, Fuel Tank Filler Door 12.945 10–B3
SHUTTER, Rear Hatch Window 12.249 10–A16
SLAT, Luggage Carrier 12.815 10–A25
SOLENOID, Rear Hatch Window 12.243 10–A15
SPACER, Body Rear End (Plastic Laminated) 12.986 10–B10
SPACER, Floor Pan 12.980 10–B5
SPACER, Folding Top Compartment ... 12.170 10–A10
SPACER, Luggage Carrier 12.815 10–A25
SPACER, Rear Hatch Window 12.184 10–A14
SPACER, Rear Hatch Window 12.187 10–A14
SPRING, Cargo Compartment and Floor 12.977 10–B5
SPRING, Fuel Tank Filler Door 12.945 10–B3
SPRING, Rear Compartment Floor 12.981 10–B7
SPRING, Rear Hatch Window 12.249 10–A16
STOP, Folding Top Compartment 12.170 10–A10
STRAP, Folding Top Compartment 12.170 10–A10
STRIKER, Folding Top Compartment ... 12.170 10–A10
STRIKER, Rear Compartment Floor 12.981 10–B7
STRIKER, Rear Hatch Window 12.237 10–A15
STRIP, Floor Pan 12.980 10–B5
STRIP, Rear Compartment Floor 12.981 10–B7
STRIPE, Folding Top Compartment 12.170 10–A10
STRIPE, Front Side Door 12.112 10–A8
STRIPE, Rear Compartment Lid, Rear End Panel and Tailgate 12.182 10–A14
STRIPE, Rear Quarter Panel 12.116 10–A9
STRIPE, Roof Panel 12.812 10–A24
STRUT, Rear Hatch Window 12.187 10–A14
STUD, Rear Hatch Window 12.187 10–A14
SUPPORT, Body Rear End (Plastic Laminated) 12.986 10–B10
SUPPORT, Floor Pan 12.980 10–B5
SUPPORT, Front Body Hinge Pillar 12.840 10–A26
SUPPORT, Rear Wheelhouse 12.944 10–B2
SWITCH, Rear Hatch Window 12.243 10–A15

T

TAPE, Roof Drip 12.075 10–A8
TRAY, Rear Compartment Floor 12.981 10–B7
TUBE, Shroud and Dash and Vent Duct Panel 12.804 10–A16
TUMBLER, Rear Compartment Floor ... 12.981 10–B7

V

VALVE, Rear Body Lock Pillar 12.942 10–A28

W

WASHER, Body Rear End (Plastic Laminated) 12.986 10–B10
WASHER, Folding Top Compartment .. 12.170 10–A10
WASHER, Rear Hatch Window 12.184 10–A14
WASHER, Roof Panel 12.810 10–A18
WASHER, Sunroof Frame 12.809 10–A17
WEATHERSTRIP, Folding Top Compartment 12.170 10–A10
WEATHERSTRIP, Rear Hatch Window .. 12.269 10–A16
WEATHERSTRIP, Roof Panel 12.810 10–A18
WEATHERSTRIP, Windshield Frame ... 12.807 10–A17
WINDOW PKG, Roof Panel 12.810 10–A18
WINDOW, Rear Hatch Window 12.180 10–A13
WRENCH, Roof Panel 12.810 10–A18

CHART INDEX

GROUP 12 GRID

ILLUS INDEX (GRP 12) 10–A7

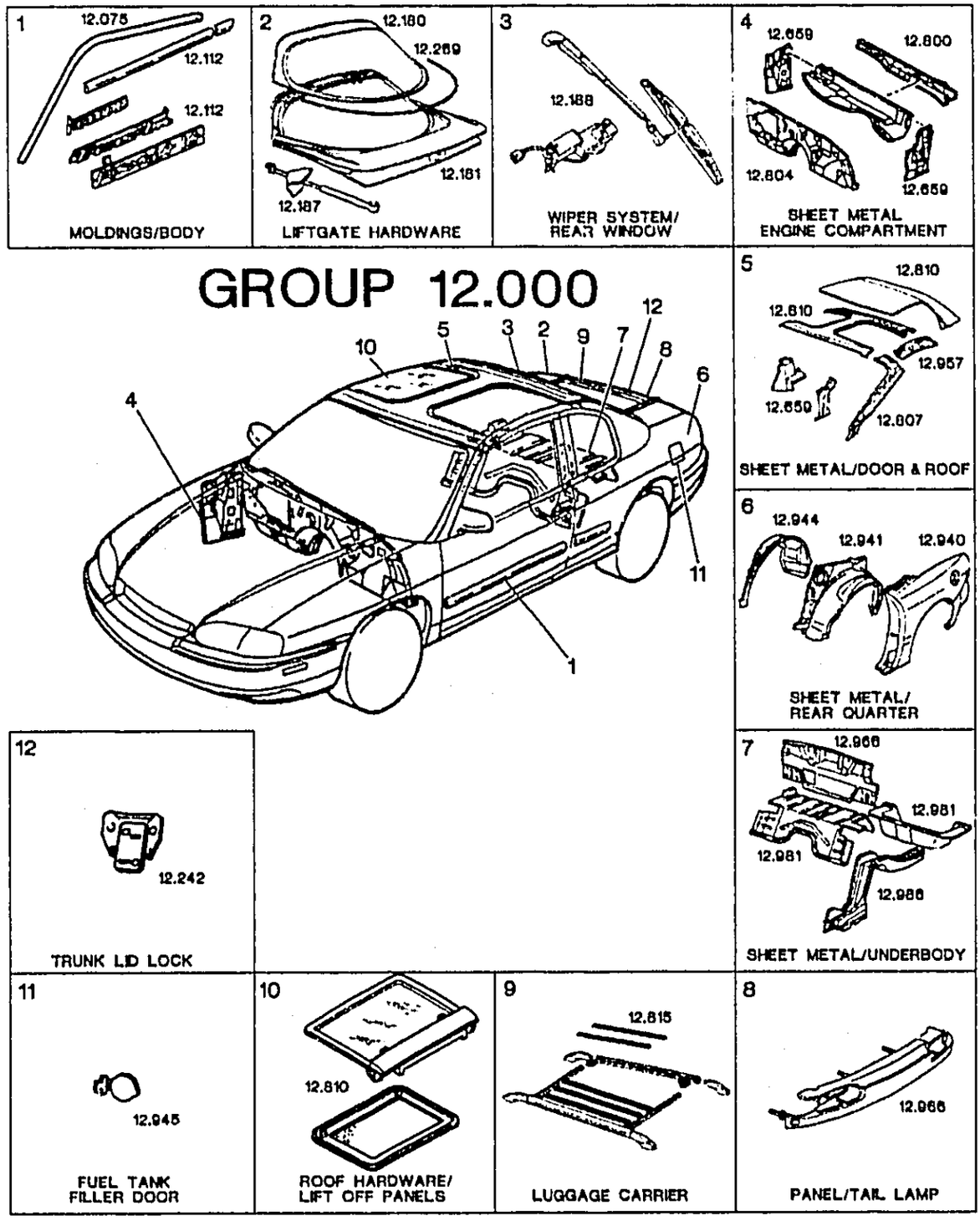

© 2000 GENERAL MOTORS SERVICE PARTS OPERATIONS-CHEVROLET-14Y

12.009 ASHTRAY – COVER, Instrument Panel Ashtray

84–96	Y	10213297	1	8.30	ASHTRAY, (BLACK) (IF USED IN PLC OF ASHTRAY W/CLIP 14046653, MAY NEED TO USE 10167113 CUP HOLDER MAT ALSO.)	9–G2,2
90–91	Y	10086104	1	22.80	COVER, ASHTRAY (GRAYMOON) (10.242)	9–F20,1
92–93	Y 4–SPD A/TRANS (MD8), 6–SPD M/TRANS (ML9)	10199767	1	48.50	COVER, ASHTRAY (BLACK)	9–G2,1
94–96	Y 4–SPD A/TRANS (M30), 6–SPD M/TRANS (ML9)	10199767	1	48.50	COVER, ASHTRAY (BLACK)	9–G2,1

12.075 MOLDING – TAPE, Roof Drip

84–96	Y07 REMOVABLE SUNROOF (CF7), DUAL REM RF (C2L)	10284148	1	31.70	MOLDING, RF LIFT OFF PNL/WDO RVL	10–F25,2
84–85	Y (EXC HATCH RF CC3)	14065048	5	DISCON	TAPE, RF PNL TR FSTN	

12.112 DECAL – MOLDING – MOLDING KIT – STRIPE, Front Side Door

86	Y67	10048895	LH	DISCON	DECAL, FRT F/D LWR NA (70TH INDY 500 MAY 25, 1986–GOLD)	
86	Y67	10048896	RH	DISCON	DECAL, FRT F/D LWR NA (70TH INDY 500 MAY 25, 1986–GOLD)	
86	Y67	10050933	LH	DISCON	DECAL, FRT F/D UPR NA (OFFICIAL PACE CAR–BLACK, RED)	
86	Y67	10050934	RH	DISCON	DECAL, FRT F/D UPR NA (OFFICIAL PACE CAR–BLACK, RED)	
86	Y67	10050935	LH	DISCON	DECAL, FRT F/D UPR NA (OFFICIAL PACE CAR–BLACK, SILVER)	
86	Y67	10050936	RH	DISCON	DECAL, FRT F/D UPR NA (OFFICIAL PACE CAR–BLACK, SILVER)	
86	Y67	10050937	LH	DISCON	DECAL, FRT F/D UPR NA (OFFICIAL PACE CAR–GOLD, BLACK)	
86	Y67	10050938	RH	DISCON	DECAL, FRT F/D UPR NA (OFFICIAL PACE CAR–GOLD, BLACK)	
86	Y67	10050939	LH	DISCON	DECAL, FRT F/D UPR NA (70TH INDY 500 MAY 25, 1986–BLACK)	
86	Y67	10050940	RH	DISCON	DECAL, FRT F/D UPR NA (70TH INDY 500 MAY 25, 1986–BLACK)	
91–96	Y	12520819	LH	76.50	MOLDING KIT, FRT S/D CTR (PAINT TO MATCH)	10–D10,12
91–96	Y	12520820	RH	76.50	MOLDING KIT, FRT S/D CTR (PAINT TO MATCH)	10–D10,12
84–87	Y	14043097	LH	67.00	MOLDING, FRT S/D (BLACK)	10–D5,6
84–87	Y	14043098	RH	67.00	MOLDING, FRT S/D (BLACK)	10–D5,6
88	Y 35 ANNIVERSARY (Z01)	10123007	LH	DISCON	MOLDING, FRT S/D (WHITE)	
88	Y 35 ANNIVERSARY (Z01)	10123008	RH	DISCON	MOLDING, FRT S/D (WHITE)	
88	Y (EXC DELUXE EXTR TR (B57)	14043097	LH	67.00	MOLDING, FRT S/D (BLACK)	10–D5,6
88	Y (EXC DELUXE EXTR TR (B57)	14043098	RH	67.00	MOLDING, FRT S/D (BLACK)	10–D5,6
89	Y	14043097	LH	67.00	MOLDING, FRT S/D (BLACK)	10–D5,6
89	Y	14043098	RH	67.00	MOLDING, FRT S/D (BLACK)	10–D5,6
90	Y SOFT RIDE SUSP (FE1), HVY DUTY SUSP (FE7)	14043097	LH	67.00	MOLDING, FRT S/D (BLACK)	10–D5,6

© 2000 GENERAL MOTORS SERVICE PARTS OPERATIONS–CHEVROLET–14Y

12.112 DECAL – MOLDING – MOLDING KIT – STRIPE, Front Side Door (Con't)

90	Y SOFT RIDE SUSP (FE1), HVY DUTY SUSP (FE7)	14043098	RH	67.00	MOLDING, FRT S/D (BLACK)	10–D5,6
95	Y INDY PACE CAR (Z4Z)	10278401	LH	99.80	STRIPE, BODY SI UPR (INCLUDES DOOR & FENDER COMPLETE) (08.132)	10–D17,3
95	Y INDY PACE CAR (Z4Z)	10278402	RH	DISCON	STRIPE, BODY SI UPR (INCLUDES DOOR & FENDER COMPLETE) (08.132)	
95	Y INDY PACE CAR (Z4Z)	10280476	LH	35.20	STRIPE, FRT S/D LWR (INDY 500 DECAL)	10–D17,4
95	Y INDY PACE CAR (Z4Z)	10280477	RH	35.20	STRIPE, FRT S/D LWR (I 500 DECAL)	10–D17,4
95	Y INDY PACE CAR (Z4Z)	12530664	1	51.80	STRIPE, FRT S/D LWR (OFFICIAL PACE CAR)	10–D17,4

12.116 DECAL – MOLDING – MOLDING KIT – STRIPE, Rear Quarter Panel

95	Y INDY PACE CAR (Z4Z)	10278790	2	35.20	DECAL, R/Q (WINGS & WHEELS LOGO)	10–D17,6
91–95	Y SPECIAL PERFORMANCE PKG (ZR1)	10174881	LH	32.40	MOLDING KIT, R/Q CTR FRT (PAINT TO MATCH)	10–D10,13
91–95	Y SPECIAL PERFORMANCE PKG (ZR1)	10174882	RH	32.40	MOLDING KIT, R/Q CTR FRT (PAINT TO MATCH)	10–D10,13
91–95	Y (EXC SPECIAL PERFORMANCE PKG (ZR1)	10174901	LH	32.40	MOLDING KIT, R/Q CTR FRT (PAINT TO MATCH)	10–D14,13
91–95	Y (EXC SPECIAL PERFORMANCE PKG (ZR1)	10174902	RH	32.40	MOLDING KIT, R/Q CTR FRT (PAINT TO MATCH)	10–D14,13
96	Y	10174901	LH	32.40	MOLDING KIT, R/Q CTR FRT (PAINT TO MATCH)	10–D14,13
96	Y	10174902	RH	32.40	MOLDING KIT, R/Q CTR FRT (PAINT TO MATCH)	10–D14,13
95–96	Y WHL OPG MLDG (BLACK) (B74)	12522084	RH	107.10	MOLDING KIT, RR WHL OPG (PAINT TO MATCH)	10–D14,18
95–96	Y WHL OPG MLDG (BLACK) (B74)	12522085	LH	107.10	MOLDING KIT, RR WHL OPG (PAINT TO MATCH)	10–D14,18
96	Y07 GRAND SPORT EDITION (Z16)	12522084	RH	107.10	MOLDING KIT, RR WHL OPG (PAINT TO MATCH)	10–D14,18
96	Y07 GRAND SPORT EDITION (Z16)	12522085	LH	107.10	MOLDING KIT, RR WHL OPG (PAINT TO MATCH)	10–D14,18
84–87	Y	14043099	LH	21.20	MOLDING, BODY SI RR (BLACK)	10–D5,5
84–87	Y	14043100	RH	21.20	MOLDING, BODY SI RR (BLACK)	10–D5,5
88	Y (EXC DELUXE EXTR TR (B57)	14043099	LH	21.20	MOLDING, BODY SI RR (BLACK)	10–D5,5
88	Y (EXC DELUXE EXTR TR (B57)	14043100	RH	21.20	MOLDING, BODY SI RR (BLACK)	10–D5,5
89	Y	14043099	LH	21.20	MOLDING, BODY SI RR (BLACK)	10–D5,5
89	Y	14043100	RH	21.20	MOLDING, BODY SI RR (BLACK)	10–D5,5
90	Y SOFT RIDE SUSP (FE1), HVY DUTY SUSP (FE7), (EXC SPECIAL PERFORMANCE PKG (ZR1)	14043099	LH	21.20	MOLDING, BODY SI RR (BLACK)	10–D5,5
90	Y SOFT RIDE SUSP (FE1), HVY DUTY SUSP (FE7), (EXC SPECIAL PERFORMANCE PKG (ZR1)	14043100	RH	21.20	MOLDING, BODY SI RR (BLACK)	10–D5,5
90	Y HVY DUTY SUSP (FE7), SPECIAL PERFORMANCE PKG (ZR1)	14104447	LH	11.60	MOLDING, BODY SI RR (FRT OF RR QTR PNL)	10–G22,31
90	Y HVY DUTY SUSP (FE7), SPECIAL PERFORMANCE PKG (ZR1)	14104448	RH	11.60	MOLDING, BODY SI RR (FRT OF RR QTR PNL)	10–G22,31

© 2000 GENERAL MOTORS SERVICE PARTS OPERATIONS–CHEVROLET–14Y

12.116 DECAL – MOLDING – MOLDING KIT – STRIPE, Rear Quarter Panel (Con't)

91–95	Y SPECIAL PERFORMANCE PKG (ZR1)	10135981	LH	47.00	MOLDING, R/Q CTR RR (MUST ORDER NUT 11516066 QTY–5) .	10–D10,18
91–95	Y SPECIAL PERFORMANCE PKG (ZR1)	10135982	RH	47.00	MOLDING, R/Q CTR RR (MUST ORDER NUT 11516066 QTY–5) .	10–D10,18
88	Y 35 ANNIVERSARY (Z01) ...	10123009	LH	DISCON	MOLDING, RR QTR (WHITE)	
88	Y 35 ANNIVERSARY (Z01) ...	10123010	RH	DISCON	MOLDING, RR QTR (WHITE)	
95	Y INDY PACE CAR (Z4Z)	10278404	LH	70.40	STRIPE, R/Q UPR	10–D17,5
95	Y INDY PACE CAR (Z4Z)	10278405	RH	70.40	STRIPE, R/Q UPR	10–D17,5
	*EXPORT**********EXPORT**********EXPORT**********EXPORT**********EXPORT*					
94	Y WHL OPG MLDG EXTRA WIDE (B74) (EXPORT)	12522084	RH	107.10	MOLDING KIT, RR WHL OPG (PAINT TO MATCH)	10–D14,18
94	Y WHL OPG MLDG EXTRA WIDE (B74) (EXPORT)	12522085	LH	107.10	MOLDING KIT, RR WHL OPG (PAINT TO MATCH)	10–D14,18

12.118 CLIP, Body Moldings

84	Y	14070267	2	DISCON	CLIP, FRT SI FASCIA DR MLDG ..	
91–96	Y	10167079	AR	2.50	CLIP, FRT S/D CTR MLDG (SPR CLIP)	

12.170 ACTUATOR – BOLT – BRACKET – BUMPER – CONNECTOR – COVER – GUIDE – HINGE – INSULATOR – LATCH – LEVER – LID – PANEL – PLATE – PROTECTOR – RELAY – RETAINER – ROD – SHIM – SPACER – STOP – STRAP – STRIKER – STRIPE – WASHER – WEATHERSTRIP, Folding Top Compartment

86–91	Y67	14092646	2	107.10	ACTUATOR, F/TOP STOW COMPT LID LAT REL	11–E26,24
92–96	Y67	10193606	1	56.70	ACTUATOR, F/TOP STOW COMPT LID LAT REL	11–F4,10
86	Y67	14081021	4	*1.25	BOLT, F/TOP STOW COMPT LID HGE (08.913)	11–E26,21
92	Y67 (2ND DES)	10198719	1	2.95	BOLT, F/TOP STOW COMPT LID HGE (HINGE HAS SQUARE ARM)	11–F8,22
93–96	Y67	10198719	4	2.95	BOLT, F/TOP STOW COMPT LID HGE	11–F8,22
86–90	Y	14100340	6	2.00	BOLT, F/TOP STOW COMPT LID LAT ACTR	11–E26,32
91–96	Y67	14100340	6	2.00	BOLT, F/TOP STOW COMPT LID LAT ACTR	11–E26,32
86–91	Y	14092733	LH	38.25	BRACKET, F/TOP STOW COMPT LID LAT	11–E26,35
86–91	Y	14092734	RH	38.25	BRACKET, F/TOP STOW COMPT LID LAT	11–E26,35
92–96	Y67	14092733	LH	38.25	BRACKET, F/TOP STOW COMPT LID LAT	11–E26,35
92–96	Y67	14092734	RH	38.25	BRACKET, F/TOP STOW COMPT LID LAT	11–E26,35
86–91	Y67	14105153	LH	DISCON	BRACKET, F/TOP STOW COMPT LID LAT REL ACTR LVR	
86–91	Y67	14105154	RH	DISCON	BRACKET, F/TOP STOW COMPT LID LAT REL ACTR LVR	
92–96	Y67	10193607	LH	36.75	BRACKET, F/TOP STOW COMPT LID LAT REL ACTR LVR	11–F4,30
92–96	Y67	10193608	RH	36.75	BRACKET, F/TOP STOW COMPT LID LAT REL ACTR LVR	11–F4,30
92	Y67 (2ND DES)	10198703	2	2.65	BRACKET, F/TOP STOW COMPT LID LAT REL ACTR LVR (HINGE HAS SQUARE ARM)	11–F8,38
93–96	Y67	10198703	2	2.65	BRACKET, F/TOP STOW COMPT LID LAT REL ACTR LVR	11–F8,38

© 2000 GENERAL MOTORS SERVICE PARTS OPERATIONS–CHEVROLET–14Y

12.170 ACTUATOR – BOLT – BRACKET – BUMPER – CONNECTOR – COVER – GUIDE – HINGE – INSULATOR – LATCH – LEVER – LID – PANEL – PLATE – PROTECTOR – RELAY – RETAINER – ROD – SHIM – SPACER – STOP – STRAP – STRIKER – STRIPE – WASHER – WEATHERSTRIP, Folding Top Compartment (Con't)

86–96	Y67	12338034	2	*2.70	BUMPER, F/TOP STOW COMPT LID (08.024)	
89	Y	10108000	1	DISCON	BUMPER, F/TOP STOW COMPT LID RR	
91	Y67	12101888	2	17.46	CONNECTOR, SOL–F/TOP LAT REL ACTR (BLACK) (2–WAY F) (W/LEADS) (02.535) (AC–DELCO #PT159)	
86–90	Y67	10137777	1	334.59	COVER, F/TOP STOW COMPT LID FIN	10–D24,5
91–96	Y67 AUX RF (CC2)	10137777	1	334.59	COVER, F/TOP STOW COMPT LID FIN	10–D24,5
86–91	Y67	14092657	2	DISCON	GUIDE, F/TOP STOW COMPT LID HGE	
92	Y67 (1ST DES)	14092657	2	DISCON	GUIDE, F/TOP STOW COMPT LID HGE (HINGE HAS FLAT ARM)	
86–96	Y67	10175549	LH	372.00	HINGE, F/TOP STOW COMPT LID	11–E26,20
86–96	Y67	10175550	RH	372.00	HINGE, F/TOP STOW COMPT LID	11–E26,20
86–91	Y67	14092656	RH	DISCON	HINGE, F/TOP STOW COMPT LID	
92	Y67	14092656	RH	DISCON	HINGE, F/TOP STOW COMPT LID (HAS A FLAT HINGE ARM)	
91–96	Y67	3999572	1	4.98	INSULATOR, F/TOP STOW COMPT LID HGE ROD (09.260)	11–F2,18
89–91	Y	10265173	2	1.20	INSULATOR, F/TOP STOW FRT	11–F4,39
92–96	Y67	10265173	2	1.20	INSULATOR, F/TOP STOW FRT	11–F4,39
86–96	Y67	14092743	LH	40.50	LATCH, F/TOP STOW COMPT LID	11–E26,33
86–96	Y67	14092744	RH	40.50	LATCH, F/TOP STOW COMPT LID	11–E26,33
86–88	Y67	14092661	LH	DISCON	LATCH, F/TOP STOW COMPT LID PRIM	
86–88	Y67	14092662	RH	DISCON	LATCH, F/TOP STOW COMPT LID PRIM	
86–91	Y67	14105151	LH	21.84	LEVER, F/TOP STOW COMPT LID LAT REL	11–E26,43
86–91	Y67	14105152	RH	DISCON	LEVER, F/TOP STOW COMPT LID LAT REL	
92–96	Y67	10175507	LH	5.92	LEVER, F/TOP STOW COMPT LID LAT REL ACTR (12.187)	11–F4,31
92–96	Y67	10175508	RH	5.92	LEVER, F/TOP STOW COMPT LID LAT REL ACTR (12.187)	11–F4,31
86–88	Y	14092653	1	DISCON	LID, F/TOP STOW COMPT	
89–92	Y67	10276994	1	771.90	LID, F/TOP STOW COMPT (IF SERVICE 1992 & PRIOR MODELS, MUST USE 10193665 T/W 10198642 RELEASE CABLE ASM)	10–G19,32
93–96	Y67	10276994	1	771.90	LID, F/TOP STOW COMPT	10–G19,32
86–88	Y	14092671	1	DISCON	PANEL, F/TOP STOW COMPT LID	
89–92	Y67 (19I)	10281070	1	368.00	PANEL, F/TOP STOW COMPT LID TR (BLACK)	10–G19,35
90–91	Y67 (60I)	10123062	1	DISCON	PANEL, F/TOP STOW COMPT LID TR (COGNAC)	
90–92	Y67 (73I)	10123063	1	DISCON	PANEL, F/TOP STOW COMPT LID TR (RED)	
90–91	Y67 (90I)	10123064	1	DISCON	PANEL, F/TOP STOW COMPT LID TR (GRAY)	

© 2000 GENERAL MOTORS SERVICE PARTS OPERATIONS–CHEVROLET–14Y

12.170 ACTUATOR – BOLT – BRACKET – BUMPER – CONNECTOR – COVER – GUIDE – HINGE – INSULATOR – LATCH – LEVER – LID – PANEL – PLATE – PROTECTOR – RELAY – RETAINER – ROD – SHIM – SPACER – STOP – STRAP – STRIKER – STRIPE – WASHER – WEATHERSTRIP, Folding Top Compartment (Con't)

90–91	Y67 (22I)	10123065	1	DISCON	PANEL, F/TOP STOW COMPT LID TR (BLUE)	
92–93	Y67 (10I)	10198711	1	DISCON	PANEL, F/TOP STOW COMPT LID TR (WHITE)	
92–96	Y67 (14I)	10281069	1	368.00	PANEL, F/TOP STOW COMPT LID TR (GRAY)	10–H5,15
92–96	Y67 (6[illegible]I)	10281071	1	368.00	PANEL, F/TOP STOW COMPT LID TR (BEIGE)	10–H6,15
93	Y67 (79I)	10198716	1	DISCON	PANEL, F/TOP STOW COMPT LID TR (RED)	
93–96	Y67 (19I)	10281070	1	368.00	PANEL, F/TOP STOW COMPT LID TR (BLACK)	10–G19,35
93–96	Y67 (70I)	10281072	1	368.00	PANEL, F/TOP STOW COMPT LID TR (RED)	10–H20,15
86–92	Y67 (1ST DES)	14100399	2	DISCON	PLATE, F/TOP STOW COMPT LID LAT ACTR MT (HINGE HAS FLAT ARM)	
86–89	Y	14092729	LH	DISCON	PLATE, F/TOP STOW COMPT LID LAT STKR	
86–89	Y	14092730	RH	DISCON	PLATE, F/TOP STOW COMPT LID LAT STKR	
86–89	Y	14092740	2	DISCON	PLATE, F/TOP STOW COMPT LID LAT STKR	
86–94	Y67	12524512	1	76.25	PROTECTOR, F/TOP STOW COMPT LID (W/CLEAR STRIPS)	11–E11,3
95–96	Y67	12524512	1	76.25	PROTECTOR, F/TOP STOW COMPT LID (W/CLEAR STRIPS)	11–E11,3
86–90	Y	12167112	1	51.50	RELAY, FLDG TOP STOW COMPT LID LAT ACTR (POWER) (1 BOLT HOLE) (09.277) (W/CONN & LEADS) (AC–DELCO #15–8264)	
86–91	Y	14100345	2	.52	RETAINER, F/TOP STOW COMPT LID HGE GDE	11–E26,17
92–96	Y67	14100345	2	.52	RETAINER, F/TOP STOW COMPT LID HGE GDE	11–E26,17
86–91	Y67	10077491	1	.11	RETAINER, F/TOP STOW COMPT LID LAT REL ACTR LVR (PUSH ON)	11–E16,31
92–96	Y67	10175798	1	2.14	RETAINER, F/TOP STOW COMPT LID LAT REL ACTR LVR (PUSH ON)	11–E16,31
86–92	Y67 (1ST DES)	14092663	2	DISCON	ROD, F/TOP STOW COMPT LID HGE (USE WITH HINGE WITH FLAT ARM)	
92	Y67 (2ND DES)	10175551	2	23.29	ROD, F/TOP STOW COMPT LID HGE TORQ (USE WITH SQUARE HINGE ARM)	11–E26,20
93–94	Y67	10175551	2	23.29	ROD, F/TOP STOW COMPT LID HGE TORQ (USE WITH SQUARE HINGE ARM)	11–E26,20
95	Y67	10175551	2	23.29	ROD, F/TOP STOW COMPT LID HGE TORQ	11–E26,20
96	Y (2ND DES)	10283724	2	23.29	ROD, F/TOP STOW COMPT LID HGE TORQ (POS #1) (41MM ROD LENGTH W/OUT HOLE)	11–F8,16

© 2000 GENERAL MOTORS SERVICE PARTS OPERATIONS–CHEVROLET–14Y

12.170 ACTUATOR – BOLT – BRACKET – BUMPER – CONNECTOR – COVER – GUIDE – HINGE – INSULATOR – LATCH – LEVER – LID – PANEL – PLATE – PROTECTOR – RELAY – RETAINER – ROD – SHIM – SPACER – STOP – STRAP – STRIKER – STRIPE – WASHER – WEATHERSTRIP, Folding Top Compartment (Con't)

96	Y67 (1ST DES)	10175551	2	23.29	ROD, F/TOP STOW COMPT LID HGE TORQ (W/2MM HOLE AT 31MM ROD LENGTH)	11–E26,20
93–96	Y67	10051895	4	9.45	SHIM, F/TOP STOW COMPT LID (0.5 THK)	11–E26,22
86–92	Y	10051397	9	DISCON	SPACER, F/TOP STOW COMPT LID	
89–91	Y67	10181383	2	7.61	SPACER, F/TOP STOW COMPT LID	11–E16,30
92–94	Y67	14038397	2	*1.00	SPACER, F/TOP STOW COMPT LID HGE TORQ ROD (M8.6X20X2.50) (08.929)	
86–88	Y67	10181383	2	7.61	SPACER, SOLENOID ASM F/TOP S/COMP	11–E16,30
86	Y	14092658	2	DISCON	STOP, F/TOP STOW COMPT LID HGE	
89–92	Y67	14092658	2	DISCON	STOP, F/TOP STOW COMPT LID HGE	
90–96	Y	25533564	1	DISCON	STRAP, F/TOP STOW COMPT LID HGE ROD (445 MM LONG) (09.786)	
86–96	Y67	10285920	LH	12.70	STRIKER, F/TOP STOW COMPT LID LAT	11–F2,12
86–96	Y67	10285921	RH	12.70	STRIKER, F/TOP STOW COMPT LID LAT	11–F2,12
96	Y67 GRAND SPORT EDITION (Z16)	10280189	1	40.17	STRIPE, F/TOP STOW COMPT LID	10–D19,14
86	Y67	14100339	1	DISCON	WASHER, F/TOP RR AT LAT LVR	
86–87	Y67	14038397	AR	*1.00	WASHER, F/TOP STOW COMPT LID HGE GDE (08.929)	
92–96	Y67	10175796	1	1.30	WASHER, F/TOP STOW COMPT LID LAT REL ACTR LVR	11–E16,30
86–96	Y67	14092675	1	114.00	WEATHERSTRIP, F/TOP STOW COMPT LID	10–G19,29

12.180 BOLT – GLASS – WINDOW, Rear Hatch Window

84–96	Y07	14049117	1	.97	BOLT, R/CMPT L/WDO (M6X1X16) (M6X1X14) (08.913)	
84–85	Y (EXC ELEC DEFG)	14070261	1	DISCON	GLASS, RR HATCH WDO	
84–85	Y07 ELEC RR WDO DEFG (C49), (EXC EUROPEAN WDO GLAZING (A26) (EXPORT)	12523677	1	1771.80	WINDOW, R/CMPT LIFT	10–D21,27
86–90	Y07 ELEC RR WDO DEFG (C49)	12523679	1	1640.20	WINDOW, R/CMPT LIFT	10–D21,27
86–88	Y07 (EXC ELEC RR WDO DEFG (C49)	14091500	1	DISCON	WINDOW, R/CMPT LIFT	
91–95	Y07 (EXC SPECIAL PERFORMANCE PKG (ZR1)	12523677	1	1771.80	WINDOW, R/CMPT LIFT	10–D21,27
91–95	Y07 SPECIAL PERFORMANCE PKG (ZR1)	12523679	1	1640.20	WINDOW, R/CMPT LIFT	10–D21,27
94–96	Y07 (EXC EUROPEAN WDO GLAZING (A26) (EXPORT)	12523677	1	1771.80	WINDOW, R/CMPT LIFT	10–D21,27
	*EXPORT**********EXPORT**********EXPORT**********EXPORT**********EXPORT*					
84–86	Y A26 (EXPORT)	14070263	1	DISCON	GLASS, RR HATCH WDO	
94–96	Y07 EUROPEAN WDO GLAZING (A26) (EXPORT)	12523678	1	2235.90	WINDOW, R/CMPT LIFT	10–D21,27

© 2000 GENERAL MOTORS SERVICE PARTS OPERATIONS–CHEVROLET–14Y

12.182 STRIPE, Rear Compartment Lid, Rear End Panel and Tailgate

96	Y67 GRAND SPORT EDITION (Z16)	10280190	1	126.50	STRIPE, BODY UPR RR PNL	10–D19,15
96	Y07 GRAND SPORT EDITION (Z16), (EXC EUROPEAN PROVISIONS (VD1) (EXPORT)	10279784	1	DISCON	STRIPE, R/END FIN PNL	

12.184 BOLT – HINGE – SPACER – WASHER, Rear Hatch Window

84–96	Y07	14049008	2	2.45	BOLT, R/CMPT L/WDO WDO SI HGE	10–D21,13
84–96	Y07	14067595	2	22.71	HINGE, R/CMPT L/WDO (BODY SI) (W/BUSH)	10–D21,22
84–96	Y07	14076562	2	*.46	SPACER, R/CMPT L/WDO BODY SI HGE	10–D21,23
84–96	Y07	14049007	3	.46	WASHER, R/CMPT L/WDO WDO SI HGE	10–D21,29

12.185 BUSHING – PIN, Rear Hatch Window

84–96	Y07	20284772	4	.36	BUSHING, R/CMPT L/WDO HGE PIN	10–D21,12
84–96	Y07	14049120	2	1.50	PIN, R/CMPT L/WDO HGE	10–D21,25

12.187 BRACKET – NUT – SEAL – SPACER – STRUT – STUD, Rear Hatch Window

84–96	Y07	14047461	2	11.76	BRACKET, R/CMPT L/WDO STRUT BODY SI	10–D21,14
84–96	Y07	14049021	LH	10.61	BRACKET, R/CMPT L/WDO STRUT WDO SI	10–D21,7
84–96	Y07	14049022	RH	10.61	BRACKET, R/CMPT L/WDO STRUT WDO SI	10–D21,7
84–96	Y07	14049173	2	8.10	NUT, R/CMPT L/WDO STRUT WDO SI BRKT	10–D21,4
84–90	Y	14049173	2	8.10	NUT, RR HATCH WDO ASST ROD RR BRKT	10–D21,4
84–96	Y07	14076561	2	.32	SEAL, R/CMPT L/WDO STRUT WDO SI BRKT NUT (12.2[illegible]9) ...	10–D21,31
84–96	Y07	14049023	2	.73	SPACER, R/CMPT L/WDO STRUT WDO SI BRKT	10–D21,5
84–96	Y07	14049027	1	.97	SPACER, RR HATCH WDO LAT STKR	10–D21,2
84–88	Y ELEC RR WDO DEFG (C49)	10255661	LH	47.52	STRUT, R/CMPT L/WDO (IF HATCH ASSIST ROD BEING REPLACED MEASURES 935MM, WILL NEED TO REPLACE BOTH RODS) ...	10–D21,6
84–88	Y ELEC RR WDO DEFG (C49)	10255662	RH	47.52	STRUT, R/CMPT L/WDO (IF HATCH ASSIST ROD BEING REPLACED MEASURES 935MM, WILL NEED TO REPLACE BOTH RODS) ...	10–D21,6
84–88	Y (EXC ELEC RR WDO DEFG (C49)	14047588	2	47.52	STRUT, R/CMPT L/WDO (IF HATCH ASSIST ROD BEING REPLACED MEASURES 935MM, WILL NEED TO REPLACE BOTH RODS) ...	10–D21,6
89–96	Y07	10255661	LH	47.52	STRUT, R/CMPT L/WDO	10–D21,6
89–96	Y07	10255662	RH	47.52	STRUT, R/CMPT L/WDO	10–D21,6
84–96	Y07	14049012	4	2.35	STUD, R/CMPT L/WDO STRUT ..	10–D21,8

© 2000 GENERAL MOTORS SERVICE PARTS OPERATIONS–CHEVROLET–14Y

12.212 BUMPER, Rear Compartment Lid or Tailgate

84–86	Y07	14091402	4	.50	BUMPER, R/CMPT L/WDO (11.120)	10–D21,33
87–95	Y07	10280811	1	.48	BUMPER, R/CMPT L/WDO (12.945)	10–D21,33
96	Y	16662198	1	.85	BUMPER, R/CMPT L/WDO RR TR FIN PNL (15.100)	

12.237 BOLT – NUT – STRIKER, Rear Hatch Window

84–96	Y07	14049114	2	*1.00	BOLT, RR HATCH WDO LAT STKR	10–D21,11
84–96	Y07	14049026	2	7.70	NUT, RR HATCH WDO LAT STKR	10–D21,1
84–96	Y07	10209087	1	12.50	STRIKER, RR HATCH WDO LAT	10–D21,3

12.242 LATCH – PLATE, Rear Hatch Window

84–96	Y07	14089676	1	34.17	LATCH, R/CMPT L/WDO (12.247)	10–D21,19
84–96	Y07	10241865	1	7.75	PLATE, R/CMPT L/WDO LAT STUD (SINGLE STUD PLATE) (12.243)	10–D21,18

12.243 CONNECTOR – RELAY – RETAINER – SOLENOID – SWITCH, Rear Hatch Window

91–93	Y07	12101821	1	17.28	CONNECTOR, SW–R/CMPT LID AJAR IND (NATURAL) (2–WAY F) (W/LEADS) (02.535) (AC–DELCO #PT213)	
86–91	Y	12117389	1	25.47	CONNECTOR, SW–R/CMPT LID REL (W/LEADS) (09.744) (AC–DELCO #PT521)	
87–95	Y	12085480	2	9.67	CONNECTOR, SW–R/CMPT LID REL (W/LEADS) (AC–DELCO #PT102)	
90–93	Y	12116958	1	20.24	CONNECTOR, SW–R/CMPT LID REL (GRAY) (2–WAY F) (W/LEADS) (02.535) (AC–DELCO #PT419)	
84–90	Y	25523703	1	12.20	RELAY, R/CMPT LID REL (02.815) (AC–DELCO #D1776)	10–D21,32
90–96	Y07	14100455	1	16.26	RELAY, R/CMPT LID REL (BLACK) (5–WAY) (09.277) (AC–DELCO #15–8426)	10–D21,32
84	Y	20664092	AR	*.40	RETAINER, R/WDO REL ACTR RLY (PUSH–IN) (01.276)	
84–96	Y07	10238313	1	65.76	SOLENOID, R/CMPT L/WDO LAT REL (W/CABLE)	10–D21,16
84–85	Y	14062518	2	15.45	SWITCH, LID LOCK REL	9–G10,44
86–87	Y	14093168	2	11.59	SWITCH, R/CMPT LID REL (AC–DELCO #14093168)	9–G10,44
88–89	Y	14104196	2	27.80	SWITCH, R/CMPT LID REL	9–G10,44
90–96	Y	1620478	1	2.24	SWITCH, R/CMPT LID REL (CTR CONSOLE) (AC–DELCO #D7048)	9–G2,7
90–92	Y	10098458	1	26.27	SWITCH, R/CMPT LID REL (DR JAMB)	9–H5,13
93	Y07	10098458	1	26.27	SWITCH, R/CMPT LID REL	9–H5,13
94–96	Y07	10210771	1	30.36	SWITCH, R/CMPT LID REL (AC–DELCO #D7015A)	9–H5,13
84–96	Y07	10283365	1	6.32	SWITCH, R/COMPT L/WDO AJAR IND (PLUNGER DIA 12MM) (AC–DELCO #D6065)	10–D21,30

© 2000 GENERAL MOTORS SERVICE PARTS OPERATIONS–CHEVROLET–14Y

12.249 CAP – SHUTTER – SPRING, Rear Hatch Window

84–90	Y	230018	1	*.73	CAP, R/CMPT LID LK CYL (BRIGHT) (10.552)	
84–90	Y	20496885	1	*2.04	CAP, R/CMPT LID LK CYL (BLACK) (10.552)	
84–92	Y	12503693	1	2.04	SHUTTER, L/GATE LK CYL (BLACK) (17MM DIA) (10.552)	
84–92	Y	12503692	1	2.04	SHUTTER, R/CMPT LID LK CYL (CHROME) (17MM DIA) (10.552)	9–G10,7
90–92	Y	12503691	1	.31	SPRING, E/GATE LK CYL SHUTTER (10.550)	10–I5,7

12.269 SEAL – WEATHERSTRIP, Rear Hatch Window

84–96	Y07	14076561	2	.32	SEAL, RR HATCH WDO LAT STKR SPCR	10–D21,31
84–96	Y07	9768068	1	138.80	WEATHERSTRIP, R/CMPT L/WDO	10–D21,9

12.491 PLUG, Body Center Pillar

89–91	Y	10118451	2	.28	PLUG, FRT S/D L/PLR HOLE (12.980)	10–E19,10
92–96	Y67	10118451	2	.28	PLUG, FRT S/D L/PLR HOLE (12.980)	10–E19,10

12.659 GUSSET, Front Body Hinge Pillar

84–96	Y	14058690	RH	10.73	GUSSET, BODY H/PLR FRT LWR	10–E5,47
84–96	Y	14090689	LH	9.61	GUSSET, BODY H/PLR FRT LWR	10–E5,47

12.684 BRACE – PLATE, Body Lock Pillar

84–86	Y	14076558	RH	DISCON	BRACE, SI F/D LK OTR PLR	
84–86	Y	14076559	2	DISCON	PLATE, SI F/D LK OTR PLR BR TAP	

12.800 COVER – NUT – SCREEN, Cowl Top Vent Louver

84–96	Y	14064560	1	2.95	COVER, PLNM PNL ACC HOLE	10–E8,39
90–96	Y	14013246	AR	*1.10	NUT, AIR INL SCRN (SPECIAL ANCHOR) (02.729)	10–E15,41
91–96	Y	14013246	2	*1.10	NUT, PLNM PNL ACC HOLE CVR (SPECIAL ANCHOR) (02.729)	10–E15,41
84–96	Y	14047583	LH	11.19	SCREEN, AIR INL	10–E8,41
84–96	Y	14047584	RH	11.09	SCREEN, AIR INL	10–E8,41

12.801 RETAINER, Cowl Ledge

84	Y	480534	AR	*.84	RETAINER, PNL HOLE (DIA. 250, THK. .03–.30) (11.419)	3–I20,32

12.804 BRACKET – INSULATOR – NUT – PANEL – RETAINER – SEAL – TUBE, Shroud and Dash and Vent Duct Panel

90–91	Y	10086018	RH	DISCON	BRACKET, DA PNL	
90–91	Y	10086019	LH	DISCON	BRACKET, DA PNL	
84–89	Y	14064526	2	.70	BRACKET, DA PNL INSL (10.230)	10–E8,27
84–88	Y	14104654	1	DISCON	INSULATOR, DA PNL (15.280) (MAY NEED TO REWK INSUL USING OLD PART AS REFERENCE)	
89	Y	14104654	1	DISCON	INSULATOR, DA PNL (15.280)	
90–96	Y	10224033	1	192.21	INSULATOR, DA PNL	10–E15,23
86–90	Y	14013246	AR	*1.10	NUT (M4.2 DIA SCR M7.8 RND HOLE) (02.729)	10–E8,38

© 2000 GENERAL MOTORS SERVICE PARTS OPERATIONS–CHEVROLET–14Y

12.804 BRACKET – INSULATOR – NUT – PANEL – RETAINER – SEAL – TUBE, Shroud and Dash and Vent Duct Panel (Con't)

89	Y	10234812	1	219.67	PANEL, DA (USE T/W A.C PROGRAMMER BRKT 10086302)	10–E8,29
90–96	Y	10234812	1	219.67	PANEL, DA	10–E8,29
84–88	Y	10234814	1	176.96	PANEL, PLNM (FRT) (USE T/W CURRENT DASH PANEL 10234812 & AC PROGRAMMER BRKT 10086302)	10–E8,37
89–96	Y	10234814	1	176.96	PANEL, PLNM (FRT)	10–E8,37
84–90	Y	14043131	2	4.55	RETAINER, DA PNL (15.280)	10–E8,31
84–88	Y	14046741	1	DISCON	SEAL, PLNM PNL	
89–96	Y	14104361	1	40.43	SEAL, PLNM PNL	10–E8,44
84–96	Y	14049215	1	6.46	TUBE, PLNM DRN (UPR)	10–E8,33
84–96	Y	14069688	1	6.41	TUBE, PLNM DRN (CTR)	10–E8,33
90–96	Y	10086015	2	6.46	TUBE, PLNM DRN (OTR HGE PLR)	10–E19,63
90–96	Y SOFT RIDE SUSP (FE1), HVY DUTY SUSP (FE7)	14047487	1	10.22	TUBE, PLNM DRN (LWR)	10–E8,32
84–89	Y	14047487	1	10.22	TUBE, PLNM PNL DRN (LWR)	10–E8,32

12.807 BARRIER – COVER – FRAME – GUSSET – PLATE – REINFORCEMENT – SEAL – WEATHERSTRIP, Windshield Frame

94–95	Y	11515174	2	*1.50	BARRIER, W/S LWR FRM SND (4 1/4"X7 1/2") (TRIM AS REQ'D) (15.492)	
90–96	Y	10086011	LH	2.49	COVER, W/S LWR FRM WLDG ACC HOLE	10–E19,56
90–96	Y	10086012	RH	2.08	COVER, W/S LWR FRM WLDG ACC HOLE	10–E19,56
86–89	Y	10048794	1	DISCON	FRAME, LWR	
90–96	Y	12512652	1	212.55	FRAME, W/S INR LWR	10–E19,38
84–96	Y	14069809	LH	50.85	FRAME, W/S INR UPR COR	10–E5,58
84–96	Y	14069810	RH	50.85	FRAME, W/S INR UPR COR	10–E5,58
84–89	Y	10048794	1	DISCON	FRAME, W/S LWR	
84–89	Y	14069807	LH	DISCON	FRAME, W/S OTR LWR COR	
84–89	Y	14069808	RH	DISCON	FRAME, W/S OTR LWR COR	
84–96	Y	10208501	1	48.05	FRAME, W/S UPR (DLR MAY NEED TO ORDER NEW MIRROR & BOLT 10167086 WHEN REPLG FRAME AS ON PAST MODEL VEH.)	10–E5,57
84–89	Y	14046719	LH	DISCON	GUSSET, LWR FRM	
84–89	Y	14046720	RH	DISCON	GUSSET, LWR FRM	
84–89	Y	14051109	4	DISCON	PLATE, W/S INR LWR FRM	
90–96	Y	10086136	RH	2.08	PLATE, W/S INR LWR FRM	10–E19,43
90–96	Y	10086137	LH	2.08	PLATE, W/S INR LWR FRM	10–E19,43
90–96	Y	10137761	1	56.44	REINFORCEMENT, W/S LWR FRM RR OTR	8–G8,3
90–96	Y	10217340	RH	33.05	REINFORCEMENT, W/S LWR FRM RR OTR	10–E19,50
90–96	Y	10153624	1	3.05	SEAL, W/S LWR FRM REINF	10–E19,37
84–87	Y	14064578	AR	1.45	SEAL, W/S OTR LWR FRAME COVER (CUT AS REQ) (09.665)	
84–96	Y	10268887	1	231.60	WEATHERSTRIP, W/S FRM (12.810)	10–E8,54

12.809 WASHER, Sunroof Frame

84–85	Y	14038397	2	*1.00	WASHER, RF PNL RR LOC BRKT (7.347) (08.929)	10–F25,7

© 2000 GENERAL MOTORS SERVICE PARTS OPERATIONS–CHEVROLET–14Y

12.810 BOLT – BRACKET – BUMPER – BUSHING – CLIP – COVER – FASTENER – HANDLE – HARDWARE KIT – INSULATOR – LATCH – LOCATOR – NUT – PAD – PANEL PKG – PIN – PLATE – PLUG – PROTECTOR – REINFORCEMENT – REPAIR KIT – RETAINER – SCREW – SEAL – SHIM – WASHER – WEATHERSTRIP – WINDOW PKG – WRENCH, Roof Panel

87–96	Y	14090607	2	4.15	BOLT, RF LIFT OFF PNL/WDO	10–G2,28
86–95	Y07	14081021	4	*1.25	BOLT, RF LIFT OFF PNL/WDO FRT MT PLT (M8X1.25X20) (TORX HD 8X1.25X20) (08.913)	10–D24,29
92–95	Y07 DUAL REM RF (C2L)	14081021	AR	*1.25	BOLT, RF LIFT OFF PNL/WDO FRT MT PLT (TORX HD 8X1.25X20) (08.913)	10–D24,29
94	Y07 DUAL REM RF (C2L), CLEAR RF PNL (CC3), REMOVABLE SUNROOF (CF7)	14081021	AR	*1.25	BOLT, RF LIFT OFF PNL/WDO FRT MT PLT (M8X1.25X20) (TORX HD 8X1.25X20) (08.913)	10–D24,29
96	Y07 DUAL REM RF (C2L), CLEAR RF PNL (CC3), REMOVABLE SUNROOF (CF7)	14081021	AR	*1.25	BOLT, RF LIFT OFF PNL/WDO FRT MT PLT (TORX HD 8X1.25X20) (08.913)	10–D24,29
89–95	Y07 DUAL REM RF (C2L), CLEAR RF PNL (CC3), REMOVABLE SUNROOF (CF7)	14084506	6	.67	BOLT, RF LIFT OFF PNL/WDO RR LOCR (PAN HE TORX 8X1.5X16, 9.8 PEOR FULL THD W/NYLOC)	10–G5,9
92–96	Y CLEAR RF PNL (CC3), REMOVABLE SUNROOF (CF7), DUAL REM RF (C2L)	14051183	2	3.20	BOLT, RF LIFT OFF PNL/WDO RR LOCR (M8X1.25X37) (12.815)	10–G5,9
86	Y07 (2ND DES)	14090607	2	4.15	BOLT, RF PNL FRT HOLDN (NO COMPARABLE 1ST DES) (W/RF PNL, ATCH BOLT IN CTR OF BRKT BETWEEN TWO LRG CLEARANCE HOLES)	10–G2,28
84–96	Y07	14051185	LH	87.02	BRACKET, RF LIFT OFF PNL/WDO RR LOCR	10–F25,9
84–96	Y07	14051186	RH	87.02	BRACKET, RF LIFT OFF PNL/WDO RR LOCR	10–F25,9
86–96	Y07	10256058	1	12.82	BRACKET, RF LIFT OFF PNL/WDO STOW RR (HAS FOUR ATTACHMENTS FOR TR PNL AT UPPER SURFACE NEAR LATCH)	10–I4,4
84–85	Y07	10256058	1	12.82	BRACKET, RF PNL STOR RR (HAS FOUR ATTACHMENTS FOR TR PNL AT UPPER SURFACE NEAR LATCH)	10–I4,4
84–85	Y	14051191	LH	DISCON	BRACKET, W/SLEEVE, RF PNL FRT HOLDN	
84–85	Y	14051192	RH	DISCON	BRACKET, W/SLEEVE, RF PNL FRT HOLDN	
86	Y07 (1ST DES)	14051191	LH	DISCON	BRACKET, W/SLEEVE, RF PNL FRT HOLDN (W/RF PNL, ATCH BOLT NEAR INSIDE EDGE OF BRACKET.)	
86	Y07 (1ST DES)	14051192	RH	DISCON	BRACKET, W/SLEEVE, RF PNL FRT HOLDN (W/RF PNL, ATCH BOLT NEAR INSIDE EDGE OF BRACKET.)	
86	Y07 (2ND DES)	14090605	LH	DISCON	BRACKET, W/SLEEVE, RF PNL FRT HOLDN (W/RF PNL, ATCH BOLT IN CTR OF BRKT BETWEEN TWO LRG CLEARANCE HOLES.)	

© 2000 GENERAL MOTORS SERVICE PARTS OPERATIONS–CHEVROLET–14Y

12.810 BOLT – BRACKET – BUMPER – BUSHING – CLIP – COVER – FASTENER – HANDLE – HARDWARE KIT – INSULATOR – LATCH – LOCATOR – NUT – PAD – PANEL PKG – PIN – PLATE – PLUG – PROTECTOR – REINFORCEMENT – REPAIR KIT – RETAINER – SCREW – SEAL – SHIM – WASHER – WEATHERSTRIP – WINDOW PKG – WRENCH, Roof Panel (Con't)

86	Y07 (2ND DES)	14090606	RH	116.03	BRACKET, W/SLEEVE, RF PNL FRT HOLDN (W/RF PNL, ATCH BOLT IN CTR OF BRKT BETWEEN TWO LRG CLEARANCE HOLES.) ...	10–F25,27
87–88	Y07	14090605	LH	DISCON	BRACKET, W/SLEEVE, RF PNL FRT HOLDN	
87–88	Y07	14090606	RH	116.03	BRACKET, W/SLEEVE, RF PNL FRT HOLDN	10–F25,27
84–92	Y07	14083567	1	1.80	BUMPER, RF PNL STOW (12.945) .	
93	Y	10193698	1	DISCON	BUSHING, RF LIFT OFF PNL BOLT	
90–96	Y	10086148	1	4.15	CLIP, RF LIFT OFF PNL/WDO WRENCH	9–G2,19
91–92	Y07 (73I)	10132951	LH	6.50	COVER, RF LIFT OFF PNL/WDO STOW FRT BRKT (RED)	10–I10,12
91–92	Y07 (73I)	10132952	RH	6.50	COVER, RF LIFT OFF PNL/WDO STOW FRT BRKT (RED)	10–I10,12
91	Y07 (19I)	10132961	LH	6.50	COVER, RF LIFT OFF PNL/WDO STOW FRT BRKT (BLACK)	10–I10,12
91	Y07 (19I)	10132962	RH	6.50	COVER, RF LIFT OFF PNL/WDO STOW FRT BRKT (BLACK)	10–I10,12
92–93	Y07 (10I), (19I)	10132961	LH	6.50	COVER, RF LIFT OFF PNL/WDO STOW FRT BRKT (BLACK)	10–I10,12
92–93	Y07 (10I), (19I)	10132962	RH	6.50	COVER, RF LIFT OFF PNL/WDO STOW FRT BRKT (BLACK)	10–I10,12
92–96	Y07 (64I)	10175677	LH	6.50	COVER, RF LIFT OFF PNL/WDO STOW FRT BRKT (BEIGE)	10–I10,12
92–96	Y07 (64I)	10175678	RH	6.50	COVER, RF LIFT OFF PNL/WDO STOW FRT BRKT (BEIGE)	10–I10,12
92–96	Y07 (14I)	10175679	LH	6.50	COVER, RF LIFT OFF PNL/WDO STOW FRT BRKT (GRAY)	10–I10,12
92–96	Y07 (14I)	10175680	RH	6.50	COVER, RF LIFT OFF PNL/WDO STOW FRT BRKT (GRAY)	10–I10,12
93	Y07 (79I)	10199532	RH	DISCON	COVER, RF LIFT OFF PNL/WDO STOW FRT BRKT (RED)	
93	Y07 (79I)	10199533	LH	6.50	COVER, RF LIFT OFF PNL/WDO STOW FRT BRKT (RED)	10–I10,12
93–95	Y07 (70I)	10199701	LH	6.50	COVER, RF LIFT OFF PNL/WDO STOW FRT BRKT (RED)	10–I10,12
93–95	Y07 (70I)	10199702	RH	DISCON	COVER, RF LIFT OFF PNL/WDO STOW FRT BRKT (RED)	
94–96	Y07 (19I)	10132961	LH	6.50	COVER, RF LIFT OFF PNL/WDO STOW FRT BRKT (BLACK)	10–I10,12
94–96	Y07 (19I)	10132962	RH	6.50	COVER, RF LIFT OFF PNL/WDO STOW FRT BRKT (BLACK)	10–I10,12
96	Y07 (70I), (EXC GRAND SPORT EDITION (Z16)	10199701	LH	6.50	COVER, RF LIFT OFF PNL/WDO STOW FRT BRKT (RED)	10–I10,12
96	Y07 (70I), (EXC GRAND SPORT EDITION (Z16)	10199702	RH	DISCON	COVER, RF LIFT OFF PNL/WDO STOW FRT BRKT (RED)	
84–85	Y	14049299	LH	DISCON	COVER, RF PNL FRT LAT	
84–85	Y	14049300	RH	DISCON	COVER, RF PNL FRT LAT	
86	Y (1ST DES)	14049299	LH	DISCON	COVER, RF PNL FRT LAT (W/RF PNL, ATCH BOLT NEAR INSIDE EDGE OF BRACKET)	
86	Y (1ST DES)	14049300	RH	DISCON	COVER, RF PNL FRT LAT (W/RF PNL, ATCH BOLT NEAR INSIDE EDGE OF BRACKET)	

© 2000 GENERAL MOTORS SERVICE PARTS OPERATIONS–CHEVROLET–14Y

12.810 BOLT – BRACKET – BUMPER – BUSHING – CLIP – COVER – FASTENER – HANDLE – HARDWARE KIT – INSULATOR – LATCH – LOCATOR – NUT – PAD – PANEL PKG – PIN – PLATE – PLUG – PROTECTOR – REINFORCEMENT – REPAIR KIT – RETAINER – SCREW – SEAL – SHIM – WASHER – WEATHERSTRIP – WINDOW PKG – WRENCH, Roof Panel (Con't)

86–87	Y07 (EXC CLEAR RF PNL (CC3) (2ND DES)	14089665	LH	DISCON	COVER, RF PNL FRT LAT (W/RF PNL, ATCH BOLT IN CTR OF BRKT BETWEEN 2 LRG CLEARANCE HOLES)	
86–87	Y07 (EXC CLEAR RF PNL (CC3) (2ND DES)	14089666	RH	DISCON	COVER, RF PNL FRT LAT (W/RF PNL, ATCH BOLT IN CTR OF BRKT BETWEEN 2 LRG CLEARANCE HOLES)	
86–88	Y67	14092641	LH	30.00	COVER, RF PNL FRT LAT	11–E4,40
86–88	Y67	14092642	RH	DISCON	COVER, RF PNL FRT LAT	
88	Y07	14089665	LH	DISCON	COVER, RF PNL FRT LAT	
88	Y07	14089666	RH	DISCON	COVER, RF PNL FRT LAT	
84–89	Y07	10074267	LH	7.88	COVER, RF PNL STOR FRT BRKT	10–I4,12
84–89	Y07	10074268	RH	7.88	COVER, RF PNL STOR FRT BRKT	10–I4,12
89	Y Z5Z	10132962	RH	6.50	COVER, RF PNL STOR FRT BRKT (BLACK)	10–I10,12
90–91	Y07 (22I)	10132947	LH	DISCON	COVER, RF PNL STOR FRT BRKT (BLUE)	
90–91	Y07 (22I)	10132948	RH	DISCON	COVER, RF PNL STOR FRT BRKT (BLUE)	
90–91	Y07 (60I)	10132949	LH	DISCON	COVER, RF PNL STOR FRT BRKT (COGNAC)	
90–91	Y07 (60I)	10132950	RH	DISCON	COVER, RF PNL STOR FRT BRKT (COGNAC)	
90	Y07 (73I)	10132951	LH	6.50	COVER, RF PNL STOR FRT BRKT (RED)	10–I10,12
90	Y07 (73I)	10132952	RH	6.50	COVER, RF PNL STOR FRT BRKT (RED)	10–I10,12
90–91	Y07 (90I)	10132953	LH	DISCON	COVER, RF PNL STOR FRT BRKT (GRAY)	
90–91	Y07 (90I)	10132954	RH	DISCON	COVER, RF PNL STOR FRT BRKT (GRAY)	
90	Y07 (19I)	10132961	LH	6.50	COVER, RF PNL STOR FRT BRKT (BLACK)	10–I10,12
90	Y07 (19I)	10132962	RH	6.50	COVER, RF PNL STOR FRT BRKT (BLACK)	10–I10,12
84–90	Y	20540336	2	.32	FASTENER, RF PNL FRT W/STR (14.630)	
92–96	Y07	10248663	1	2.77	HANDLE, RF LIFT OFF PNL/WDO STOW LAT	10–I4,16
84–91	Y07	10248663	1	2.77	HANDLE, RF PNL STOR HOLDN LAT	10–I4,16
84–85	Y CLEAR RF PNL (CC3)	12523045	1	86.45	HARDWARE KIT, RF LIFT OFF PNL	
86	Y CLEAR RF PNL (CC3) (1ST DES)	12523045	1	86.45	HARDWARE KIT, RF LIFT OFF PNL (W/RF PNL, ATCH BOLT NEAR INSIDE EDGE OF BRKT)	
88	Y67	10077470	AR	3.21	INSULATOR, RF FRT	10–G5,34
89	Y	10077470	AR	3.21	INSULATOR, RF FRT	10–G5,34
90–96	Y DUAL REM RF (C2L), CLEAR RF PNL (CC3), REMOVABLE SUNROOF (CF7)	10077470	AR	3.21	INSULATOR, RF FRT	10–G5,34

© 2000 GENERAL MOTORS SERVICE PARTS OPERATIONS–CHEVROLET–14Y

12.810 BOLT – BRACKET – BUMPER – BUSHING – CLIP – COVER – FASTENER – HANDLE – HARDWARE KIT – INSULATOR – LATCH – LOCATOR – NUT – PAD – PANEL PKG – PIN – PLATE – PLUG – PROTECTOR – REINFORCEMENT – REPAIR KIT – RETAINER – SCREW – SEAL – SHIM – WASHER – WEATHERSTRIP – WINDOW PKG – WRENCH, Roof Panel (Con't)

86	Y07 (2ND DES)	10218584	2	.81	INSULATOR, RF LIFT OFF PNL/WDO BOLT (NO COMPARABLE 1ST DES) (W/RF PNL, ATCH BOLT IN CTR OF BRKT BETWEEN TWO LRG CLEARANCE HOLES.)	10–G9,27
87–96	Y	10218584	2	.81	INSULATOR, RF LIFT OFF PNL/WDO BOLT	10–G9,27
85–90	Y07	14090613	LH	10.76	INSULATOR, RF LIFT OFF PNL/WDO FRM	10–F25,40
91–92	Y CLEAR RF PNL (CC3), REMOVABLE SUNROOF (CF7), DUAL REM RF (C2L) .	14090613	LH	10.76	INSULATOR, RF LIFT OFF PNL/WDO FRM	10–F25,40
91	Y07 CLEAR RF PNL (CC3), REMOVABLE SUNROOF (CF7)	14090613	LH	10.76	INSULATOR, RF LIFT OFF PNL/WDO FRM	10–F25,40
91–96	Y07	14049200	1	10.51	LATCH, RF LIFT OFF PNL/WDO STOW	10–I4,15
84–90	Y07	14049200	1	10.51	LATCH, RF PNL STOR HOLDN ..	10–I4,15
84–91	Y07	10193624	RH	15.30	LOCATOR, RF LIFT OFF PNL/WDO RR (LESS BRKT, SCREW & INSUL)	10–F25,10
92–96	Y CLEAR RF PNL (CC3), REMOVABLE SUNROOF (CF7), DUAL REM RF (C2L) .	10193623	LH	15.30	LOCATOR, RF LIFT OFF PNL/WDO RR	10–F25,10
92–96	Y CLEAR RF PNL (CC3), REMOVABLE SUNROOF (CF7), DUAL REM RF (C2L) .	10193624	RH	15.30	LOCATOR, RF LIFT OFF PNL/WDO RR	10–F25,10
92	Y07	11516075	AR	*.16	NUT, RF LIFT OFF PNL/WDO STOW LAT (M6X1 THD 9 PEORW/NYLON INSERT) (08.917)	
85–90	Y07	14090614	RH	10.76	PAD, RF PNL FRM (RR)	10–F25,40
86–92	Y	14100214	2	10.76	PAD, RF PNL FRM (SI)	10–F25,39
90	Y67 AUX RF (CC2)	14100214	4	10.76	PAD, RF PNL FRM (SI)	10–F25,39
91–92	Y DUAL REM RF (C2L), CLEAR RF PNL (CC3), REMOVABLE SUNROOF (CF7)	14090614	RH	10.76	PAD, RF PNL FRM (RR)	10–F25,40
86	Y	14090615	LH	DISCON	PAD, RF PNL FRM SI	
89–90	Y07	12344791	1	1217.14	PANEL PKG, RF LIFT OFF	
91–93	Y07 REMOVABLE SUNROOF (CF7), DUAL REM RF (C2L), (EXC CLEAR RF PNL (CC3)	12344791	1	1217.14	PANEL PKG, RF LIFT OFF	
94–96	Y07 REMOVABLE SUNROOF (CF7), DUAL REM RF (C2L) .	12344791	1	1217.14	PANEL PKG, RF LIFT OFF	
84–85	Y	14051195	2	13.05	PIN, RF PNL FRT HOLDN	10–F25,30
86	Y (1ST DES)	14051195	2	13.05	PIN, RF PNL FRT HOLDN (RF PNL ATTCH BOLT NEAR INSIDE EDGE OF FRT RF MTG BRKTS. NO COMPARABLE 2ND DES) .	10–F25,30
89–90	Y07	14105190	AR	6.46	PLATE, RF LIFT OFF PNL/WDO FRT MT	10–G5,33
91–96	Y07 DUAL REM RF (C2L) CLEAR RF PNL (CC3), REMOVABLE SUNROOF (CF7)	14105190	AR	6.46	PLATE, RF LIFT OFF PNL/WDO FRT MT	10–G5,33

© 2000 GENERAL MOTORS SERVICE PARTS OPERATIONS–CHEVROLET–14Y

12.810 BOLT – BRACKET – BUMPER – BUSHING – CLIP – COVER – FASTENER – HANDLE – HARDWARE KIT – INSULATOR – LATCH – LOCATOR – NUT – PAD – PANEL PKG – PIN – PLATE – PLUG – PROTECTOR – REINFORCEMENT – REPAIR KIT – RETAINER – SCREW – SEAL – SHIM – WASHER – WEATHERSTRIP – WINDOW PKG – WRENCH, Roof Panel (Con't)

91	Y67 AUX RF (CC2)	14105190	AR	6.46	PLATE, RF LIFT OFF PNL/WDO FRT MT	10–G5,33
89–96	Y07	10137201	2	4.02	PLATE, RF LIFT OFF PNL/WDO STOW FRT BRKT STUD	10–E5,9
86–96	Y07	14100260	2	4.02	PLATE, RF LIFT OFF PNL/WDO STOW RR BRKT STUD	10–E5,8
85–88	Y07	14089668	AR	5.88	PLATE, RF PNL FRT HOLDN	10–F25,41
84–85	Y	14051179	LH	DISCON	PLATE, RR RF CLOSEOUT	
84–86	Y	14051180	RH	DISCON	PLATE, RR RF CLOSEOUT	
91–94	Y07 REMOVABLE SUNROOF (CF7), DUAL REM RF (C2L), CLEAR RF PNL (CC3)	10275702	4	1.55	PLUG, RF LIFT OFF PNL/WDO FRM FIN	10–E19,1
95–96	Y07 REMOVABLE SUNROOF (CF7), DUAL REM RF (C2L) .	10275702	4	1.55	PLUG, RF LIFT OFF PNL/WDO FRM FIN	10–E19,1
84–88	Y (EXC CLEAR RF PNL CC3)	10275702	4	1.55	PLUG, RF PNL	10–E19,1
84	Y HATCH RF	14049810	AR	3.85	PLUG, RF PNL (16.547)	
89–91	Y07	10275702	4	1.55	PLUG, RF PNL	10–E19,1
84–91	Y	10217223	LH	16.13	PROTECTOR, FRT S/D WDO W/STR UPR FRT	10–D24,35
84–90	Y	10217224	RH	16.13	PROTECTOR, FRT S/D WDO W/STR UPR FRT	10–D24,35
91	Y07 DUAL REM RF (C2L), CLEAR RF PNL (CC3), REMOVABLE SUNROOF (CF7)	10217224	RH	16.13	PROTECTOR, FRT S/D WDO W/STR UPR FRT	10–D24,35
91–96	Y67 AUX RF (CC2)	10217223	LH	16.13	PROTECTOR, FRT S/D WDO W/STR UPR FRT	10–D24,35
91–96	Y67 AUX RF (CC2)	10217224	RH	16.13	PROTECTOR, FRT S/D WDO W/STR UPR FRT	10–D24,35
92–96	Y07	10217223	LH	16.13	PROTECTOR, FRT S/D WDO W/STR UPR FRT	10–D24,35
92–96	Y07	10217224	RH	16.13	PROTECTOR, FRT S/D WDO W/STR UPR FRT	10–D24,35
84–88	Y07	10137201	2	4.02	REINFORCEMENT, RF PNL STOR FRT BRKT	10–E5,9
84–85	Y07	14100260	2	4.02	REINFORCEMENT, RF PNL STOR RR BRKT	10–E5,8
84–85	Y	14084402	1	DISCON	REPAIR KIT, RF PNL FRT LOCATOR	
86–89	Y	20292751	3	2.15	RETAINER, LUG STOW STRAP ..	11–H23,2
86	Y07 (2ND DES)	10193699	2	3.46	RETAINER, RF LIFT OFF PNL/WDO BOLT (NO COMPARABLE 1ST DES) (W/RF PNL, ATCH BOLT IN CTR OF BRKT BETWEEN TWO LRG CLEARANCE HOLES.) ...	10–G2,27
87–96	Y	10193699	2	3.46	RETAINER, RF LIFT OFF PNL/WDO BOLT	10–G2,27
84–96	Y07 CLEAR RF PNL (CC3), REMOVABLE SUNROOF (CF7), DUAL REM RF (C2L) .	14051184	2	4.64	RETAINER, RF LIFT OFF PNL/WDO RR LOCR BOLT	10–F25,5
84–96	Y07	8731909	2	*.40	RETAINER, RF LIFT OFF PNL/WDO RR W/STR (PUSH IN) (FULL FLDG) (10.695)	10–E11,17
84–96	Y07	14049242	1	24.14	RETAINER, RF LIFT OFF PNL/WDO RR W/STR (TOP SI)	10–F25,25

© 2000 GENERAL MOTORS SERVICE PARTS OPERATIONS–CHEVROLET–14Y

12.810 BOLT – BRACKET – BUMPER – BUSHING – CLIP – COVER – FASTENER – HANDLE – HARDWARE KIT – INSULATOR – LATCH – LOCATOR – NUT – PAD – PANEL PKG – PIN – PLATE – PLUG – PROTECTOR – REINFORCEMENT – REPAIR KIT – RETAINER – SCREW – SEAL – SHIM – WASHER – WEATHERSTRIP – WINDOW PKG – WRENCH, Roof Panel (Con't)

84–96	Y07	14049247	LH	15.91	RETAINER, RF LIFT OFF PNL/WDO RR W/STR (TO W/STR MLDG) (W/SEAL STRP)	10–F25,19
84–96	Y07	14049248	RH	15.91	RETAINER, RF LIFT OFF PNL/WDO RR W/STR (TO W/STR MLDG) (W/SEAL STRP)	10–F25,19
84–85	Y	14060215	2	.70	RETAINER, RF PNL FRT LOCATOR (10.219)	
84–90	Y	14049243	LH	28.73	RETAINER, RF PNL FRT W/STR .	
84–90	Y	14049244	RH	28.73	RETAINER, RF PNL FRT W/STR .	
84–85	Y	14081900	2	1.45	SCREW, FRT RF MT	10–F25,26
86	Y07 (1ST DES)	14081900	2	1.45	SCREW, FRT RF MT (NO COMPARABLE 2ND DES) (W/RF PNL, ATCH BOLT NEAR INSIDE EDGE OF BRKT)	10–F25,26
84–95	Y07 CLEAR RF PNL (CC3)	14065047	1	22.60	SEAL, RF LIFT OFF PNL/WDO (14.640)	10–G9,45
92–96	Y07 DUAL REM RF (C2L), CLEAR RF PNL (CC3), REMOVABLE SUNROOF (CF7)	10217111	LH	2.45	SEAL, RF LIFT OFF PNL/WDO (FRT OF PANEL) (POS #1)	10–G9,45
92–96	Y07 DUAL REM RF (C2L), CLEAR RF PNL (CC3), REMOVABLE SUNROOF (CF7)	10217112	RH	DISCON	SEAL, RF LIFT OFF PNL/WDO (FRT OF PANEL) (POS #1)	
92–96	Y07 DUAL REM RF (C2L), CLEAR RF PNL (CC3), REMOVABLE SUNROOF (CF7)	10218029	LH	1.73	SEAL, RF LIFT OFF PNL/WDO (RR OF PANEL) (POS #2)	10–G9,45
92–94	Y67 AUX RF (CC2)	10217111	LH	2.45	SEAL, RF LIFT OFF PNL/WDO (FRT OF PANEL, TRIM AS REQ) (POS #1)	10–G9,45
92–94	Y67 AUX RF (CC2)	10217112	RH	DISCON	SEAL, RF LIFT OFF PNL/WDO (FRT OF PANEL, TRIM AS REQ) (POS #1)	
84–96	Y07	14051188	2	.78	SHIM, RF LIFT OFF PNL/WDO RR LOCR BRKT	10–F25,8
89–96	Y07	14038397	2	*1.00	WASHER, RF LIFT OFF PNL/WDO RR LOCR BRKT (M8.6X20X2.50) (08.929)	10–G2,4
87–95	Y	14046942	2	.73	WASHER, RF LIFT OFF PNL/WDO STOW RR BRKT (M13X24X2) (05.383)	10–I10,13
87–95	Y	14055822	2	.31	WASHER, RF LIFT OFF PNL/WDO STOW RR BRKT (24X22.50) (08.929)	10–I10,13
91–96	Y07	14051129	4	.63	WASHER, RF LIFT OFF PNL/WDO STOW RR BRKT (RECTANGULAR M24X39 W/7MM HOLE PC)	10–I4,11
95	Y07	10268936	2	.37	WASHER, RF LIFT OFF PNL/WDO STOW RR BRKT (FLAT, M13X23X3.3) (06.174)	10–I10,13
84	Y	3718496	1	.46	WASHER, RF PNL (00.662)	
84–90	Y07	14051129	4	.63	WASHER, RF PNL STOR BRKT	10–I4,11
84–94	Y07	10283997	1	219.30	WEATHERSTRIP, RF LIFT OFF PNL/WDO RR	10–F25,17

© 2000 GENERAL MOTORS SERVICE PARTS OPERATIONS–CHEVROLET–14Y

12.810 BOLT – BRACKET – BUMPER – BUSHING – CLIP – COVER – FASTENER – HANDLE – HARDWARE KIT – INSULATOR – LATCH – LOCATOR – NUT – PAD – PANEL PKG – PIN – PLATE – PLUG – PROTECTOR – REINFORCEMENT – REPAIR KIT – RETAINER – SCREW – SEAL – SHIM – WASHER – WEATHERSTRIP – WINDOW PKG – WRENCH, Roof Panel (Con't)

95–96	Y07	10283997	1	219.30	WEATHERSTRIP, RF LIFT OFF PNL/WDO RR (W/DEPRESSED SURFACE AT TOP CORNER)	10–F25,17
84–96	Y07	22112053	LH	79.60	WEATHERSTRIP, RF LIFT OFF PNL/WDO SI BODY (10.710)	10–F25,16
84–96	Y07	22112054	RH	79.60	WEATHERSTRIP, RF LIFT OFF PNL/WDO SI BODY (10.710)	10–F25,16
86	Y (64S), (1ST DES)	12370124	1	1191.66	WINDOW PKG, RF LIFT OFF (BRONZE) (1ST DES HAS 2 30MM HOLES IN RF PNL FRT LATCH CVRS. MUST ALSO ORDER HARDWEAR KIT 12523045 FOR 84–86 USAGE.)	10–E19,1
89–96	Y07 CLEAR RF PNL (CC3), DUAL REM RF (C2L), (24S)	12370123	1	1191.66	WINDOW PKG, RF LIFT OFF (BLUE)	10–E19,1
89–96	Y07 CLEAR RF PNL (CC3), DUAL REM RF (C2L), (64S)	12370124	1	1191.66	WINDOW PKG, RF LIFT OFF (BRONZE)	10–E19,1
84–96	Y07	10172311	1	66.30	WRENCH, RF LIFT OFF PNL/WDO (RATCHET)	10–F25,37
	*EXPORT**********EXPORT**********EXPORT**********EXPORT**********EXPORT*					
94–96	Y07 DUAL REM RF (C2L), EUROPEAN PROVISIONS (VD1) (EXPORT), VE1 (EXPORT)	10215333	LH	22.70	PROTECTOR, FRT S/D WDO W/STR UPR FRT	
94–96	Y07 CLEAR RF PNL (CC3), REMOVABLE SUNROOF (CF7), EUROPEAN PROVISIONS (VD1) (EXPORT), VE1 (EXPORT)	10215333	LH	22.70	PROTECTOR, FRT S/D WDO W/STR UPR FRT	
94–96	Y07 DUAL REM RF (C2L), EUROPEAN PROVISIONS (VD1) (EXPORT), VE1 (EXPORT)	10215334	RH	22.70	PROTECTOR, FRT S/D WDO W/STR UPR FRT	
94–96	Y07 CLEAR RF PNL (CC3), REMOVABLE SUNROOF (CF7), EUROPEAN PROVISIONS (VD1) (EXPORT), VE1 (EXPORT)	10215334	RH	22.70	PROTECTOR, FRT S/D WDO W/STR UPR FRT	
94–96	Y67 EUROPEAN PROVISIONS (VD1) (EXPORT), VE1 (EXPORT)	10215333	LH	22.70	PROTECTOR, FRT S/D WDO W/STR UPR FRT	
94–96	Y67 EUROPEAN PROVISIONS (VD1) (EXPORT), VE1 (EXPORT)	10215334	RH	22.70	PROTECTOR, FRT S/D WDO W/STR UPR FRT	

12.810A PANEL PKG, Roof Panel (AD3–Hinged Roof Window–Glass)

84–86	Y07	12344791	1	1217.14	PANEL PKG, RF LIFT OFF (T/W 12523045)	

12.812 MOLDING – STRIPE, Roof Panel

84–08	Y67	10284148	1	31.70	MOLDING, R/TOP UPR FRT RVL (12.075)	10–D24,1
89–96	Y67 AUX RF (CC2)	10284148	1	31.70	MOLDING, R/TOP UPR FRT RVL (12.075)	10–D24,1
96	Y07 GRAND SPORT EDITION (Z16)	10279782	1	68.10	STRIPE, RF PNL CTR	10–D19,8

© 2000 GENERAL MOTORS SERVICE PARTS OPERATIONS–CHEVROLET–14Y

12.812 MOLDING – STRIPE, Roof Panel (Con't)

96	Y07 GRAND SPORT EDITION (Z16)	10280903	1	12.10	STRIPE, RF PNL RR (TO HINGE PLATE COVER)	10–D19,9
96	Y07 GRAND SPORT EDITION (Z16)	10285096	1	11.50	STRIPE, RF PNL RR (TO ROOF PNL RR)	10–D19,7

12.815 BOLT – BRACKET – NUT – PAD – RAIL – SCREW – SLAT – SPACER, Luggage Carrier

89–93	Y67 PAINTED R/CMPT LUGG CARR (V56)	10137249	2	DISCON	BOLT, LUGG CARR RR RL INR SUPT	
86–91	Y07	14051183	2	3.20	BOLT, RF RR PNL LAT (M8X1.25X37)	10–F25,4
86–96	Y07	10242355	LH	9.00	BRACKET, RF LIFT OFF PNL/WDO STOW FRT (MAY NEED TO SHIM CVR TO BKT MTG SCREWS)	10–I4,10
86–96	Y07	10242356	RH	13.12	BRACKET, RF LIFT OFF PNL/WDO STOW FRT (MAY NEED TO SHIM CVR TO BRKT MTG SCREWS)	10–I4,10
84–85	Y07	10242355	LH	9.00	BRACKET, RF PNL STOR FRT (MAY NEED TO SHIM CVR TO BKT MTG SCREWS)	10–I4,10
84–85	Y07	10242356	RH	13.12	BRACKET, RF PNL STOR FRT (MAY NEED TO SHIM CVR TO BRKT MTG SCREWS)	10–I4,10
89–92	Y	10137292	3	*1.93	NUT, LUGG CARR CTR SLAT (PAINT TO MATCH)	10–G14,8
93	Y67 PAINTED R/CMPT LUGG CARR (V56)	10137292	2	*1.93	NUT, LUGG CARR CTR SLAT (PAINT TO MATCH)	10–G14,8
89–93	Y	10137292	8	*1.93	NUT, LUGG CARR INR SLAT (PAINT TO MATCH)	10–G14,8
89–93	Y	10137292	6	*1.93	NUT, LUGG CARR OTR SLAT (PAINT TO MATCH)	10–G14,8
89–91	Y PAINTED R/CMPT LUGG CARR (V56)	10028126	1	*1.00	NUT, LUGG CARR RR RL (CTR SUPT) (5MMX0.8THD)	10–G14,15
92–93	Y67 PAINTED R/CMPT LUGG CARR (V56)	10028126	2	*1.00	NUT, LUGG CARR RR RL (5MMX0.8THD)	10–G14,15
89–93	Y67 PAINTED R/CMPT LUGG CARR (V56)	10137247	1	2.19	PAD, LUGG CARR CTR SLAT (440.5 MM LONG)	10–G14,1
89–91	Y67 PAINTED R/CMPT LUGG CARR (V56)	10137247	2	2.19	PAD, LUGG CARR INR SLAT (CTR (CUT TO LENGTH) (440.5 MM LONG)	10–G14,1
89–93	Y67 PAINTED R/CMPT LUGG CARR (V56)	10137247	2	2.19	PAD, LUGG CARR INR SLAT (POS #2) (440.5 MM LONG)	10–G14,1
89–93	Y67 PAINTED R/CMPT LUGG CARR (V56)	10137247	2	2.19	PAD, LUGG CARR INR SLAT (POS #1) (440.5 MM LONG)	10–G14,1
89–91	Y67 PAINTED R/CMPT LUGG CARR (V56)	10137247	2	2.19	PAD, LUGG CARR OTR SLAT (CUT TO LENGTH) (440.5 MM LONG)	10–G14,1
89–93	Y67 PAINTED R/CMPT LUGG CARR (V56)	10137247	2	2.19	PAD, LUGG CARR OTR SLAT (440.5 MM LONG)	10–G14,1
89–91	Y67 PAINTED R/CMPT LUGG CARR (V56)	10137243	2	DISCON	RAIL, LUGG CARR RR	
92–93	Y67 PAINTED R/CMPT LUGG CARR (V56)	10137243	1	DISCON	RAIL, LUGG CARR RR	
84–85	Y	14051183	2	3.20	SCREW, RR RF LOC (M8X1.25X37)	10–F25,4
89–93	Y67 PAINTED R/CMPT LUGG CARR (V56)	10137240	1	DISCON	SLAT, LUGG CARR CTR	
89–91	Y PAINTED R/CMPT LUGG CARR (V56)	10137233	2	DISCON	SLAT, LUGG CARR INR (W/RAIL SUPT)	
89–93	Y67 PAINTED R/CMPT LUGG CARR (V56)	10137237	2	39.64	SLAT, LUGG CARR INR (FASTENS TO DECK LID)	10–G14,7
92–93	Y67 PAINTED R/CMPT LUGG CARR (V56)	10137233	2	DISCON	SLAT, LUGG CARR INR (W/RAIL SUPT)	

© 2000 GENERAL MOTORS SERVICE PARTS OPERATIONS–CHEVROLET–14Y

12.815 BOLT – BRACKET – NUT – PAD – RAIL – SCREW – SLAT – SPACER, Luggage Carrier (Con't)

89–91	Y PAINTED R/CMPT LUGG CARR (V56)	10212723	LH	DISCON	SLAT, LUGG CARR OTR	
89–91	Y PAINTED R/CMPT LUGG CARR (V56)	10212724	RH	56.18	SLAT, LUGG CARR OTR	10–G14,2
92–93	Y67 PAINTED R/CMPT LUGG CARR (V56)	10212723	LH	DISCON	SLAT, LUGG CARR OTR	
92–93	Y67 PAINTED R/CMPT LUGG CARR (V56)	10212724	RH	56.18	SLAT, LUGG CARR OTR	10–G14,2
89–91	Y PAINTED R/CMPT LUGG CARR (V56)	25527004	1	.81	SPACER, LUGG CARR SLAT (BRIGHT)	10–G14,14

12.840 PILLAR – PLUG – SUPPORT, Front Body Hinge Pillar

84–87	Y	14069819	LH	DISCON	PILLAR, SI DR HGE INR & OTR ..	
84–89	Y	14069820	RH	DISCON	PILLAR, SI DR HGE INR & OTR (WHEN USING ON VEHICLES W/HOOD ADJ BPR ON HOOD, USE LATCH SUPPORT 10225268; & WHEN HOOD ADJ BPR IS ON THE LATCH SUPPORT USE 14046734)	
88	Y	14069819	LH	DISCON	PILLAR, SI DR HGE INR & OTR (WHEN USING ON VEH WHEN HOOD ADJ BPR IS IN HOOD, USE 10123071–72, WHEN USING ON VEH WHEN HOOD ADJ BPR IS IN LAT, USE 14046733–34)	
89	Y	14069819	LH	DISCON	PILLAR, SI DR HGE INR & OTR ..	
90–96	Y	12512654	RH	226.79	PILLAR, BODY HGE (W/CORNER ASM)	10–E19,34
90–96	Y	12512655	LH	239.00	PILLAR, BODY HGE (W/CORNER ASM)	10–E19,34
89–96	Y	10118451	2	.28	PLUG, SI F/D HGE OTR PLR (12.980)	10–E19,10
84–88	Y	4805844	2	*1.70	PLUG, SI FRT DR HGE INR & OTR PNL (12.981)	10–E5,14
90–96	Y	10086025	LH	11.34	SUPPORT, PLNM PNL SI (12.804)	
90–96	Y	10086026	RH	11.34	SUPPORT, PLNM PNL SI (12.804)	

12.895 PANEL, Front Door Inner/Outer Panel

94–96	Y67	10208618	RH	40.43	PANEL, FRT S/D INR (LK) (12.942) .	
94–96	Y67	10208619	LH	40.43	PANEL, FRT S/D INR (LK) (12.942) .	
90–91	Y	10086185	LH	64.75	PANEL, FRT S/D INR MTG (DRILL TWO HOLES IN PLT FOR ELEC DR ACT.)	9–G18,32
90–91	Y	10086186	RH	64.75	PANEL, FRT S/D INR MTG (DRILL TWO HOLES IN PLT FOR ELEC DR ACT.)	9–G18,32
92–93	Y	10086185	LH	64.75	PANEL, FRT S/D INR MTG	9–G18,32
92–93	Y	10086186	RH	64.75	PANEL, FRT S/D INR MTG	9–G18,32
94–96	Y	10272377	LH	60.00	PANEL, FRT S/D INR MTG	9–G22,32
94–96	Y	10272378	RH	63.00	PANEL, FRT S/D INR MTG	9–G22,32
84–89	Y	14043105	LH	275.61	PANEL, FRT S/D OTR	9–G22,57
84–89	Y	14043106	RH	300.02	PANEL, FRT S/D OTR	9–G22,57
90–95	Y (EXC SPECIAL PERFORMANCE PKG (ZR1)	14043105	LH	275.61	PANEL, FRT S/D OTR	9–G22,57
90–95	Y (EXC SPECIAL PERFORMANCE PKG (ZR1)	14043106	RH	300.02	PANEL, FRT S/D OTR	9–G22,57

© 2000 GENERAL MOTORS SERVICE PARTS OPERATIONS–CHEVROLET–14Y

12.895 PANEL, Front Door Inner/Outer Panel (Con't)

96	Y	14043105	LH	275.61	PANEL, FRT S/D OTR	9–G22,57
96	Y	14043106	RH	300.02	PANEL, FRT S/D OTR	9–G22,57

12.934 PANEL – REINFORCEMENT, Door Opening Rocker Panel

84–89	Y	10288347	LH	106.79	PANEL, RKR OTR	10–D5,7
84–89	Y	10288348	RH	106.79	PANEL, RKR OTR	10–D5,7
90–95	Y (EXC SPECIAL PERFORMANCE PKG (ZR1)	10288347	LH	106.79	PANEL, RKR OTR	10–D5,7
90–95	Y (EXC SPECIAL PERFORMANCE PKG (ZR1)	10288348	RH	106.79	PANEL, RKR OTR	10–D5,7
90–95	Y SPECIAL PERFORMANCE PKG (ZR1)	14104173	LH	106.79	PANEL, RKR OTR	10–D10,14
90–95	Y SPECIAL PERFORMANCE PKG (ZR1)	14104174	RH	106.79	PANEL, RKR OTR	10–D10,14
96	Y	10288347	LH	106.79	PANEL, RKR OTR	10–D5,7
96	Y	10288348	RH	106.79	PANEL, RKR OTR	10–D5,7
84–96	Y	14051121	2	2.08	REINFORCEMENT, RKR OTR PNL (08.304)	10–D5,7

12.940 PANEL – RETAINER, Rear Quarter Outer

84–89	Y07	12522020	RH	646.81	PANEL, BODY UPR RR (HOLES FOR BUMPER FASCIA ATTACHMENT MUST BE LOCATED & DRILLED BY DLR)	10–G16,23
84–89	Y07	12522021	LH	646.81	PANEL, BODY UPR RR (HOLES FOR BUMPER FASCIA ATTACHMENT MUST BE LOCATED & DRILLED BY DLR)	10–G16,23
84–89	Y07	14104977	1	1347.53	PANEL, BODY UPR RR	10–G16,23
86–96	Y67	14092651	1	1774.67	PANEL, BODY UPR RR (12.986)	10–G19,5
90–95	Y07 (EXC SPECIAL PERFORMANCE PKG (ZR1)	12522020	RH	646.81	PANEL, BODY UPR RR (HOLES FOR BUMPER FASCIA ATTACHMENT MUST BE LOCATED & DRILLED BY DLR)	10–G16,23
90–95	Y07 (EXC SPECIAL PERFORMANCE PKG (ZR1)	12522021	LH	646.81	PANEL, BODY UPR RR (HOLES FOR BUMPER FASCIA ATTACHMENT MUST BE LOCATED & DRILLED BY DLR)	10–G16,23
90–95	Y07 (EXC SPECIAL PERFORMANCE PKG (ZR1)	14104977	1	1347.53	PANEL, BODY UPR RR	10–G16,23
90–95	Y07 SPECIAL PERFORMANCE PKG (ZR1)	14104978	1	1347.53	PANEL, BODY UPR RR	10–G22,4
96	Y07	12522020	RH	646.81	PANEL, BODY UPR RR (HOLES FOR BUMPER FASCIA ATTACHMENT MUST BE LOCATED & DRILLED BY DLR)	10–G16,23
96	Y07	12522021	LH	646.81	PANEL, BODY UPR RR	10–G16,23
96	Y07	14104977	1	1347.53	PANEL, BODY UPR RR	10–G16,23
84–89	Y	8732474	AR	1.27	RETAINER, QTR OTR PNL	

12.941 BARRIER, Rear Quarter Inner

86–90	Y	11515174	AR	*1.50	BARRIER, ST BELT SND (15.492)

© 2000 GENERAL MOTORS SERVICE PARTS OPERATIONS–CHEVROLET–14Y

12.942 DEFLECTOR – FILLER – INSULATOR – PANEL – PILLAR – PLATE – PLUG – REINFORCEMENT – RETAINER – SEAL – VALVE, Rear Body Lock Pillar

88–92	Y07	10054613	LH	DISCON	DEFLECTOR, BODY L/PLR PRESS RLF AIR	
88–92	Y07	10054614	RH	DISCON	DEFLECTOR, BODY L/PLR PRESS RLF AIR	
84–91	Y07 SOFT RIDE SUSP (FE1), HVY DUTY SUSP (FE7)	14043123	LH	11.32	FILLER, BODY L/PLR LWR	10–E5,16
84–91	Y07 SOFT RIDE SUSP (FE1), HVY DUTY SUSP (FE7)	14043124	RH	11.32	FILLER, BODY L/PLR LWR	10–E5,16
86–96	Y67	14092647	LH	25.68	FILLER, BODY L/PLR LWR	10–E11,21
86–96	Y67	14092648	RH	25.68	FILLER, BODY L/PLR LWR	10–E11,21
92–96	Y07	14043123	LH	11.32	FILLER, BODY L/PLR LWR	10–E5,16
92–96	Y07	14043124	RH	11.32	FILLER, BODY L/PLR LWR	10–E5,16
84–88	Y	14065008	2	3.56	INSULATOR, BODY L/PLR	10–H25,9
89–96	Y07	10137202	2	2.49	INSULATOR, BODY L/PLR (POSN #1)	10–H27,5
89–96	Y67	14065008	2	3.56	INSULATOR, BODY L/PLR (POSN #2)	10–H25,9
95–96	Y	11515174	2	*1.50	INSULATOR, BODY L/PLR (POS #3) (4 1/4"X7 1/2") (TRIM AS REQ'D) (15.492)	10–H27,5
89–91	Y07	10137202	2	2.49	INSULATOR, FRT S/D L/PLR	10–H27,5
84–96	Y07	10208618	RH	40.43	PANEL, BODY L/PLR INR	10–E5,39
84–96	Y07	10208619	LH	40.43	PANEL, BODY L/PLR INR	10–E5,39
86–96	Y67	10208620	RH	89.50	PANEL, BODY L/PLR INR	10–E11,18
86–96	Y67	10208621	LH	81.11	PANEL, BODY L/PLR INR	10–E11,18
86–93	Y67	14092637	LH	108.15	PANEL, BODY L/PLR OTR UPR	10–E11,20
86–93	Y67	14092638	RH	DISCON	PANEL, BODY L/PLR OTR UPR	
94–96	Y67	10250367	LH	96.11	PANEL, BODY L/PLR OTR UPR	10–F15,11
94–96	Y67	10250368	RH	96.11	PANEL, BODY L/PLR OTR UPR	10–F15,11
84–87	Y	14091023	LH	55.43	PILLAR, FRT S/D OTR LK	10–E5,38
84–87	Y	14091024	RH	55.43	PILLAR, FRT S/D OTR LK	10–E5,38
88–96	Y07	10051827	LH	55.43	PILLAR, FRT S/D OTR LK	10–E5,38
88–96	Y07	10051828	RH	55.43	PILLAR, FRT S/D OTR LK	10–E5,38
88–96	Y67	14091023	LH	55.43	PILLAR, FRT S/D OTR LK	10–E5,38
88–96	Y67	14091024	RH	55.43	PILLAR, FRT S/D OTR LK	10–E5,38
85–93	Y07	14091019	LH	DISCON	PLATE, FRT S/D L/PLR ANC	
85–93	Y07	14091020	RH	DISCON	PLATE, FRT S/D L/PLR ANC	
84–88	Y	4805844	1	*1.70	PLUG, OTR RR BODY LK PLR (12.981)	
89–96	Y	10118451	2	.28	PLUG, OTR RR BODY LK PLR (12.980)	10–E19,10
84–96	Y	10107829	LH	27.97	REINFORCEMENT, BODY L/PLR (INR)	10–E5,60
84–96	Y	10107830	RH	27.97	REINFORCEMENT, BODY L/PLR (INR)	10–E5,60
85–96	Y07	14091017	LH	14.95	REINFORCEMENT, BODY L/PLR (OTR)	10–E5,18
85–96	Y07	14091018	RH	14.95	REINFORCEMENT, BODY L/PLR (OTR)	10–E5,18
86–88	Y67	10051847	LH	DISCON	REINFORCEMENT, F/D L/PLR	
86–87	Y67	10051848	RH	DISCON	REINFORCEMENT, F/D L/PLR	
84–94	Y	10048891	LH	30.60	REINFORCEMENT, SI F/D INR L/PLR	10–E5,15
84–94	Y	10048892	RH	30.60	REINFORCEMENT, SI F/D INR L/PLR	10–E5,15
91–96	Y	10048891	LH	30.60	REINFORCEMENT, U/B RR S/RL FRT	10–E5,15

© 2000 GENERAL MOTORS SERVICE PARTS OPERATIONS–CHEVROLET–14Y

MICROFICHE INDEX

GROUPS 12.000 THRU 13.000

FICHE 10 OF 11

GROUP	DESCRIPTION	STARTING GRID LOCATION PARTS	ILLUSTRATIONS
–	GENERAL INFORMATION	1–A2	1–G2
–	ALPHABETICAL INDEX	1–B13	N.A.
12.000	BODY MOLDINGS – SHEET METAL	10–A2	10–D2
13.000	BODY WIRING – VINYL TOP TRIM	10–C2	N.A.
–	OUT OF FICHE CALLS	N.A.	10–M22

10–B1

12.942 DEFLECTOR – FILLER – INSULATOR – PANEL – PILLAR – PLATE – PLUG – REINFORCEMENT – RETAINER – SEAL – VALVE, Rear Body Lock Pillar(Con't)

91–96	Y	10048892	RH	30.60	REINFORCEMENT, U/B RR S/RL FRT	10–E5,15
90–96	Y67	8731909	AR	*.40	RETAINER, FRT S/D L/PLR UPR SEAL (FULL FLDG) (10.695)	7–H15,9
93–95	Y67	8731909	4	*.40	RETAINER, FRT S/D L/PLR UPR SEAL (FULL FLDG) (10.695)	7–H15,9
86–96	Y67	14092683	LH	47.25	SEAL, FRT S/D L/PLR UPR (FRT)	10–E11,15
86–96	Y67	14092684	RH	47.25	SEAL, FRT S/D L/PLR UPR (FRT)	10–E11,15
86–96	Y67	14100365	LH	38.00	SEAL, FRT S/D L/PLR UPR (RR)	10–E11,16
86–96	Y67	14100366	RH	41.70	SEAL, FRT S/D L/PLR UPR (RR)	10–E11,16
88–96	Y07	10054609	2	8.54	VALVE, FRT S/D PRESS RLF	9–G22,9

12.944 BRACE – LINER – PANEL – SUPPORT, Rear Wheelhouse

86–92	Y67	10125921	LH	25.15	BRACE, BODY UPR RR PNL FRT (WASHER MAY BE REQ AT FACIA END)	10–G19,14
86–92	Y67	10125922	RH	25.15	BRACE, BODY UPR RR PNL FRT (WASHER MAY BE REQ AT FACIA END)	10–G19,14
86–88	Y67	10051843	LH	DISCON	BRACE, BODY UPR RR PNL RR	
86–88	Y67	10051844	RH	DISCON	BRACE, BODY UPR RR PNL RR	
84–85	Y	14064519	LH	DISCON	BRACE, RR W/H PNL	
84–85	Y	14064520	RH	DISCON	BRACE, RR W/H PNL	
86	Y (3RD DES)	10051887	LH	9.61	BRACE, RR W/H PNL (TUBULAR SECTION 267MM LONG) (ALSO USE SUPT 14100241)	10–G16,19
86	Y (3RD DES)	10051888	RH	9.61	BRACE, RR W/H PNL (TUBULAR SECTION 267MM LONG) (ALSO USE SUPT 14100242)	10–G16,19
87–89	Y	10051887	LH	9.61	BRACE, RR W/H PNL	10–G16,19
87–89	Y	10051888	RH	9.61	BRACE, RR W/H PNL	10–G16,19
90–95	Y (EXC SPECIAL PERFORMANCE PKG (ZR1)	10051887	LH	9.61	BRACE, RR W/H PNL LNR RR	10–G16,19
90–95	Y SPECIAL PERFORMANCE PKG (ZR1)	14104631	LH	9.61	BRACE, RR W/H PNL LNR RR	10–G22,19
90–95	Y SPECIAL PERFORMANCE PKG (ZR1)	14104632	RH	9.61	BRACE, RR W/H PNL LNR RR	10–G22,19
91–95	Y (EXC SPECIAL PERFORMANCE PKG (ZR1)	10051888	RH	9.61	BRACE, RR W/H PNL LNR RR	10–G16,19
96	Y	10051887	LH	9.61	BRACE, RR W/H PNL LNR RR	10–G16,19
96	Y	10051888	RH	9.61	BRACE, RR W/H PNL LNR RR	10–G16,19
84–88	Y	10135988	RH	40.68	LINER, RR W/H PNL (CUT AS REQ)	10–G16,20
89–90	Y (EXC SPL PERF PKG ZR1)	10135987	LH	40.68	LINER, RR W/H PNL (CUT AS REQ)	10–G16,20
89–90	Y (EXC SPL PERF PKG ZR1)	10135988	RH	40.68	LINER, RR W/H PNL (CUT AS REQ)	10–G16,20
90–95	Y SPECIAL PERFORMANCE PKG (ZR1)	14104591	LH	36.61	LINER, RR W/H PNL	10–G22,22
90–95	Y SPECIAL PERFORMANCE PKG (ZR1)	14104592	RH	36.61	LINER, RR W/H PNL	10–G22,22
84–88	Y	10135987	LH	40.68	PANEL, RR (CUT AS REQ)	10–G16,20
91–95	Y (EXC SPECIAL PERFORMANCE PKG (ZR1)	10135987	LH	40.68	PANEL, RR W/H	10–G16,20
91–95	Y (EXC SPECIAL PERFORMANCE PKG (ZR1)	10135988	RH	40.68	PANEL, RR W/H	10–G16,20
96	Y	10135987	LH	40.68	PANEL, RR W/H	10–G16,20
96	Y	10135988	RH	40.68	PANEL, RR W/H	10–G16,20
86	Y (2ND DES)	14100241	LH	10.90	SUPPORT, RR BPR FASCIA (WELDED SPACER ON ONE END) (07.836)	

© 2000 GENERAL MOTORS SERVICE PARTS OPERATIONS–CHEVROLET–14Y

12.945 BEZEL – BUMPER – DOOR – EMBLEM – HINGE KIT – SEAL – SHUTTER – SPRING, Fuel Tank Filler Door

84–87	Y07 (EXC NM8 EXPORT)	10279992	1	112.00	BEZEL, F/TNK FIL DR (W/UNLEADED FUEL LABEL) .	10–G16,5
86–87	Y67 FED (NA5) (EXC NM8 EXPORT)	10125967	1	256.36	BEZEL, F/TNK FIL DR (W/UNLEADED FUEL LABEL) .	10–G19,3
88–93	Y07	10279992	1	112.00	BEZEL, F/TNK FIL DR (W/UNLEADED FUEL LABEL) .	10–G16,5
88–93	Y67	10125967	1	256.36	BEZEL, F/TNK FIL DR (W/UNLEADED FUEL LABEL) .	10–G19,3
94	Y07 (EXC LEADED FUEL EMIS EXPORT (NM8)	10279992	1	112.00	BEZEL, F/TNK FIL DR (W/UNLEADED FUEL LABEL) .	10–G16,5
94	Y67 (EXC LEADED FUEL EMIS EXPORT (NM8)	10125967	1	256.36	BEZEL, F/TNK FIL DR (W/UNLEADED FUEL LABEL) .	10–G19,3
94–96	Y67 LEADED FUEL EMIS EXPORT (NM8)	10279995	1	256.36	BEZEL, F/TNK FIL DR (W/O UNLEADED FUEL LABEL)	
95	Y07 5.7P (LT1), (EXC LEADED FUEL EMIS EXPORT (NM8) .	10279992	1	112.00	BEZEL, F/TNK FIL DR (W/UNLEADED FUEL LABEL) .	10–G16,5
95	Y07 5.7J (LT5)	10279994	1	112.00	BEZEL, F/TNK FIL DR (W/UNLEADED FUEL LABEL) .	10–H9,8
95	Y67 5.7P (LT1), (EXC LEADED FUEL EMIS EXPORT (NM8) .	10125967	1	256.36	BEZEL, F/TNK FIL DR (W/UNLEADED FUEL LABEL) .	10–G19,3
96	Y07 5.7P (LT1), (EXC LEADED FUEL EMIS EXPORT (NM8) .	10279992	1	112.00	BEZEL, F/TNK FIL DR (W/UNLEADED FUEL LABEL) .	10–G16,5
96	Y07 5.7–5 (LT4)	10279994	1	112.00	BEZEL, F/TNK FIL DR (W/UNLEADED FUEL LABEL) .	10–H9,8
96	Y67 5.7–5 (LT4)	10271452	1	199.92	BEZEL, F/TNK FIL DR (W/UNLEADED FUEL LABEL) .	10–H20,3
84–96	Y	10260811	4	.48	BUMPER, F/TNK FIL DR (RR)	10–G22,35
84	Y	12521930	1	5.49	BUMPER, F/TNK FIL DR (CLSD LOOP (NB1)	10–G16,5
84–87	Y07	12521930	1	5.49	BUMPER, F/TNK FIL DR (EXC NM8 EXPORT)	10–G16,5
84–91	Y07	12521930	2	5.49	BUMPER, F/TNK FIL DR (FRT) ...	10–G16,5
85	Y	12521930	1	5.49	BUMPER, F/TNK FIL DR (FED (NA5)	10–G16,5
92–96	Y	12521930	2	5.49	BUMPER, F/TNK FIL DR (FRT) ...	10–G16,5
84–96	Y07	14047485	1	130.18	DOOR, F/TNK FIL	10–G16,4
86–96	Y67	10107910	1	177.98	DOOR, F/TNK FIL	10–G19,2
84–87	Y	14060260	1	27.90	EMBLEM, F/TNK FIL DR	10–D5,11
86	Y67	14060260	1	27.90	EMBLEM, F/TNK FIL DR	10–D5,11
88	Y 35 ANNIV (Z01)	10123019	1	DISCON	EMBLEM, F/TNK FIL DR	
88	Y (EXC DLX EXT TR B57)	14060260	1	27.90	EMBLEM, F/TNK FIL DR	10–D5,11
89–90	Y SOFT RIDE SUSP (FE1), HVY DUTY SUSP (FE7)	14060260	1	27.90	EMBLEM, F/TNK FIL DR	10–D5,11
91–92	Y	10209061	1	20.60	EMBLEM, F/TNK FIL DR (BLACK)	10–D10,15
93	Y 40TH ANNIV (Z25)	10198700	1	20.60	EMBLEM, F/TNK FIL DR	10–D10,15
93	Y (EXC 40TH ANNIV (Z25) ...	10209061	1	20.60	EMBLEM, F/TNK FIL DR (BLACK)	10–D10,15
94	Y	10209061	1	20.60	EMBLEM, F/TNK FIL DR (BLACK)	10–D10,15
95	Y INDY PACE CAR (Z4Z)	10198700	1	20.60	EMBLEM, F/TNK FIL DR	10–D10,15
95	Y (EXC INDY PACE CAR (Z4Z)	10209061	1	20.60	EMBLEM, F/TNK FIL DR (BLACK)	10–D10,15
96	Y GRAND SPORT EDITION (Z16)	10198700	1	20.60	EMBLEM, F/TNK FIL DR	10–D10,15
96	Y (EXC COLLECTORS EDITION (Z15), GRAND SPORT EDITION (Z16)	10209061	1	20.60	EMBLEM, F/TNK FIL DR (BLACK)	10–D10,15
96	Y COLLECTORS EDITION (Z15)	10254345	1	25.80	EMBLEM, F/TNK FIL DR (COLLECTOR EDITION)	10–D14,15
86–92	Y	10146466	1	65.76	HINGE KIT, F/TNK FIL DR	10–G16,5

© 2000 GENERAL MOTORS SERVICE PARTS OPERATIONS–CHEVROLET–14Y

12.945 BEZEL – BUMPER – DOOR – EMBLEM – HINGE KIT – SEAL – SHUTTER – SPRING, Fuel Tank Filler Door (Con't)

84–96	Y	14064578	AR	1.45	SEAL, F/TNK FIL DR BZL NUT (09.665)	10–G16,6
84–91	Y	12503694	1	2.70	SHUTTER, F/TNK FIL DR LK CYL (CHROME) (15MM DIA)	
84–91	Y	12503693	1	2.70	SHUTTER, F/TNK FIL DR LK CYL	
84–92	Y	12503691	1	.31	SPRING, F/TNK FIL DR LK CYL SHUTTER (10.550)	
	*EXPORT*********EXPORT*********EXPORT*********EXPORT*********EXPORT*					
84	Y NM8 (EXPORT)	10279996	1	241.00	BEZEL, F/TNK FIL DR (W/O UNLEADED FUEL LABEL)	
85–87	Y07 LEADED FUEL EMIS EXPORT (NM8)	10279996	1	241.00	BEZEL, F/TNK FIL DR (W/O UNLEADED FUEL LABEL)	
86–87	Y67 NM5 (EXPORT, CANADA) (EXC NM8 EXPORT)	10125967	1	256.36	BEZEL, F/TNK FIL DR (W/UNLEADED FUEL LABEL)	10–G19,3
94–95	Y07 LEADED FUEL EMIS EXPORT (NM8)	10279996	1	241.00	BEZEL, F/TNK FIL DR (W/O UNLEADED FUEL LABEL)	
96	Y07 LEADED FUEL EMIS EXPORT (NM8)	10279996	1	241.00	BEZEL, F/TNK FIL DR (W/O UNLEADED FUEL LABEL)	

12.952 BOW – PLUG, Roof

84–90	Y	14091455	LH	DISCON	BOW, RF INR SI	
84–90	Y	14091456	RH	DISCON	BOW, RF INR SI	
91	Y (1ST DES)	14091455	LH	DISCON	BOW, RF INR SI (VIN BREAK THROUGH 100138)	
91	Y (1ST DES)	14091456	RH	DISCON	BOW, RF INR SI (VIN BREAK THROUGH 100138)	
91	Y07 (2ND DES)	12522408	RH	130.20	BOW, RF INR SI (VIN STARTS WITH #100139) (WHEN USING ON EARLY 1993 & PRIOR MODELS, USE 3–BOLTS 11504498 IN PLC OF STUD PLATE 14091019–20)	10–E19,4
91	Y07 (2ND DES)	12522409	LH	130.20	BOW, RF INR SI (VIN STARTS WITH #100139) (WHEN USING ON EARLY 1993 & PRIOR MODELS, USE 3–BOLTS 11504498 IN PLC OF STUD PLATE 14091019–20)	10–E19,4
92–93	Y07	12522408	RH	130.20	BOW, RF INR SI (WHEN USING ON EARLY 1993 & PRIOR MODELS, USE 3–BOLTS 11504498 IN PLC OF STUD PLATE 14091019–20)	10–E19,4
92–93	Y07	12522409	LH	130.20	BOW, RF INR SI (WHEN USING ON EARLY 1993 & PRIOR MODELS, USE 3–BOLTS 11504498 IN PLC OF STUD PLATE 14091019–20)	10–E19,4
94–96	Y07	12522809	LH	126.11	BOW, RF INR SI (LH–INR & OTR)	10–F20,4
94–96	Y07	12522810	RH	126.11	BOW, RF INR SI (RH–INR & OTR)	10–F20,4
84–88	Y	14091457	1	70.68	BOW, RF OTR CTR	10–E5,62
89–96	Y07	14091457	1	70.68	BOW, RF PNL OTR (CTR)	10–E5,62
85–87	Y	4805844	2	*1.70	PLUG, RF BOW INR/OTR SI (12.981)	

12.966 PLATE – PROTECTOR, Rear End

92–96	Y	14058658	2	1.68	PLATE, BODY UPR RR PNL SUPT ANC (12.986)	10–H6,22
86–87	Y67	10051881	LH	DISCON	PROTECTOR, BODY UPR RR PNL	
86–87	Y67	10051882	RH	DISCON	PROTECTOR, BODY UPR RR PNL	

© 2000 GENERAL MOTORS SERVICE PARTS OPERATIONS–CHEVROLET–14Y

12.971 BRACKET, Luggage Compartment and Rear Seat to Window

85–96	Y07	10272073	2	3.41	BRACKET, R/CMPT L/WDO RR TR PNL	10–G16,3

12.977 SPRING, Cargo Compartment and Floor

90–92	Y	12503691	1	.31	SPRING, LOAD FLR LK CYL SHUTTER (10.550)	

12.980 BOLT – BRACKET – COVER – EXTENSION – INSULATOR – PANEL – PLATE – PLUG – REINFORCEMENT – RETAINER – SPACER – STRIP – SUPPORT, Floor Pan

93–96	Y	10175814	9	.32	BOLT, FRT FLR PNL (12.981)	
84–89	Y	14060212	1	14.54	BRACKET, F/FLR PNL UPR (**VPI 1–877–846–8243)	
84–96	Y	14076517	1	13.78	BRACKET, FLR FRT PNL LWR	10–E8,49
90–96	Y	10086170	1	35.09	BRACKET, FLR FRT PNL UPR	10–E15,50
84–91	Y	14088439	1	DISCON	COVER, FLR RR PNL OPG	
84–88	Y07	14090688	1	DISCON	EXTENSION, INTER FLR PNL (12.981)	
86–96	Y67	14092607	1	265.44	EXTENSION, INTER FLR PNL (12.981)	10–E11,74
89–96	Y07	10161896	1	83.39	EXTENSION, INTER FLR PNL (12.981)	10–E5,56
90–96	Y	10086163	LH	13.00	INSULATOR, FLR (15.286)	10–H25,10
90–96	Y	10086164	RH	13.00	INSULATOR, FLR (15.286)	10–H25,10
84–89	Y	14104876	1	DISCON	INSULATOR, FLR PNL CTR	
84–87	Y	14060287	LH	DISCON	INSULATOR, FLR PNL FRT	
84–89	Y	14060288	RH	DISCON	INSULATOR, FLR PNL FRT	
88–89	Y	10064303	LH	DISCON	INSULATOR, FLR PNL FRT	
90–91	Y SOFT RIDE SUSP (FE1), HVY DUTY SUSP (FE7)	10193706	1	27.56	INSULATOR, FLR PNL FRT CTR	10–E15,2
92–93	Y	10193706	1	27.56	INSULATOR, FLR PNL FRT CTR	10–E15,2
92–96	Y	10284169	1	25.68	INSULATOR, FLR PNL FRT CTR	10–F7,2
84–85	Y	14088451	LH	DISCON	INSULATOR, FLR RR PNL	
84–85	Y	14088452	RH	DISCON	INSULATOR, FLR RR PNL	
85	Y07 (2ND DES)	14090612	1	2.54	INSULATOR, FLR RR PNL (AROUND WRG HARNESS) (NO COMPARABLE 1ST DES)	10–H27,3
86–87	Y07	14090609	LH	DISCON	INSULATOR, FLR RR PNL	
86–87	Y07	14090610	RH	DISCON	INSULATOR, FLR RR PNL	
90–91	Y67	10193757	LH	11.44	INSULATOR, FLR RR PNL (12.981)	
84–87	Y07	14086747	LH	DISCON	INSULATOR, FLR RR PNL FRT	
84–87	Y07	14086748	RH	DISCON	INSULATOR, FLR RR PNL FRT	
88–89	Y07 (EXC UQ4 BOSE)	14086747	LH	DISCON	INSULATOR, FLR RR PNL FRT	
88–89	Y07 (EXC UQ4 BOSE)	14086748	RH	DISCON	INSULATOR, FLR RR PNL FRT	
88–89	Y07 UQ4 (BOSE)	10077239	2	DISCON	INSULATOR, FLR RR PNL PKT	
84–85	Y	14076549	LH	DISCON	INSULATOR, FLR RR PNL UPR	
86–92	Y07	14090612	1	2.54	INSULATOR, FLR RR PNL UPR (CTR)	10–H27,3
86–89	Y07	14091013	LH	31.85	INSULATOR, FLR RR PNL UPR (RR)	
86–89	Y07	14091014	RH	DISCON	INSULATOR, FLR RR PNL UPR (RR)	
86–92	Y07	14091015	2	9.92	INSULATOR, FLR RR PNL UPR (SI)	10–H27,10
88–92	Y67	10103702	2	7.70	INSULATOR, FLR RR PNL UPR (SI)	10–H25,7
88–92	Y67	10103848	3	11.80	INSULATOR, FLR RR PNL UPR (INBOARD)	10–H25,4
88–91	Y67	10103849	2	DISCON	INSULATOR, FLR RR PNL UPR (OUTBOARD)	

© 2000 GENERAL MOTORS SERVICE PARTS OPERATIONS–CHEVROLET–14Y

12.980 BOLT – BRACKET – COVER – EXTENSION – INSULATOR – PANEL – PLATE – PLUG – REINFORCEMENT – RETAINER – SPACER – STRIP – SUPPORT, Floor Pan (Con't)

89–96	Y07	10132901	2	22.68	INSULATOR, FLR RR PNL UPR (POS #2)	10–H27,2
93–96	Y07	14090612	1	2.54	INSULATOR, FLR RR PNL UPR (POS #1)	10–H27,3
93–96	Y07	14091015	2	9.92	INSULATOR, FLR RR PNL UPR (POS #3)	10–H27,10
93–96	Y67	10103702	2	7.70	INSULATOR, FLR RR PNL UPR (POS #2)	10–H25,7
93–96	Y67	10103848	3	11.80	INSULATOR, FLR RR PNL UPR (POS #1)	10–H25,4
84–95	Y	14049195	1	9.40	INSULATOR, INTER FLR PNL EXTN (TRIM AS REQD)	10–H27,4
96	Y07	14049195	LH	9.40	INSULATOR, INTER FLR PNL EXTN	10–H27,4
88–89	Y67	10103703	LH	DISCON	INSULATOR, R/FLR PNL (12.981)	
88–89	Y67	10103704	RH	DISCON	INSULATOR, R/FLR PNL (12.981)	
88–91	Y07 SOFT RIDE SUSP (FE1), HVY DUTY SUSP (FE7)	10278111	RH	3.30	INSULATOR, R/FLR PNL RR	10–H27,9
92	Y07	10278111	LH	3.30	INSULATOR, R/FLR PNL RR	10–H27,9
93	Y07 (EXC SPECIAL PERFORMANCE PKG (ZR1)	10278111	LH	3.30	INSULATOR, R/FLR PNL RR	10–H27,9
94–96	Y07	10278111	2	3.30	INSULATOR, R/FLR PNL RR	10–H27,9
84–88	Y A/TRNS (MD8)	14100237	1	DISCON	PANEL, F/FLR	
84–88	Y M/TRNS (MH5, MK2)	14100238	1	DISCON	PANEL, F/FLR	
89	Y M/TRNS	14104869	1	DISCON	PANEL, F/FLR	
89	Y A/TRNS	14104870	1	DISCON	PANEL, F/FLR	
90–91	Y 4–SPD A/TRANS (MD8)	10248660	1	354.93	PANEL, F/FLR (WHEN USING ON 1990–91 EXC FOR ZR1, MUST DRILL HOLES FOR HEAT SHIELD, DIMPLES SUPPLIED ON PART)	10–E15,4
90–91	Y 6–SPD M/TRANS (ML9)	10248661	1	285.78	PANEL, F/FLR (PLASTIC W/STEEL REINFORCEMENTS) (WHEN USING ON 1990–91 EXC FOR ZR1, MUST DRILL HOLES FOR HEAT SHIELD, DIMPLES SUPPLIED ON PART)	10–E15,4
92–93	Y 4–SPD A/TRANS (MD8)	10248660	1	354.93	PANEL, F/FLR	10–E15,4
92	Y 6–SPD M/TRANS (ML9)	10248661	1	285.78	PANEL, F/FLR (EXC IP LWR BRKT STUD PLATE) (PLASTIC W/STEEL REINFORCEMENTS)	10–E15,4
93–96	Y 6–SPD M/TRANS (ML9)	10248661	1	285.78	PANEL, F/FLR (PLASTIC W/STEEL REINFORCEMENTS)	10–E15,4
94–96	Y 4–SPD A/TRANS (M30)	10248660	1	354.93	PANEL, F/FLR	10–E15,4
84–96	Y	14058658	LH	1.68	PLATE, FLR FRT PNL (12.986)	10–E19,33
88–89	Y	10098128	RH	2.95	PLATE, FLR FRT PNL	10–E19,33
90–96	Y	10098128	RH	2.95	PLATE, FLR FRT PNL	10–E19,33
84–95	Y	14088454	6	4.02	PLATE, FLR RR PNL OPG CVR STUD (12.981)	10–E5,28
96	Y	14088454	8	4.02	PLATE, FLR RR PNL OPG CVR STUD (12.981)	10–E5,28
89–96	Y	10118451	1	.28	PLUG, FLR RR PNL DRN	10–E5,14
84–91	Y	14049810	2	3.85	PLUG, INTER FLR PNL DRN (25MM) (ROUND) (16.547) (POS #2)	
89–96	Y	4805844	4	*1.70	PLUG, INTER FLR PNL DRN (12.981) (POS #1)	
92–96	Y	14049810	2	3.85	PLUG, INTER FLR PNL DRN (25MM) (ROUND) (16.547)	

© 2000 GENERAL MOTORS SERVICE PARTS OPERATIONS–CHEVROLET–14Y

12.980 BOLT – BRACKET – COVER – EXTENSION – INSULATOR – PANEL – PLATE – PLUG – REINFORCEMENT – RETAINER – SPACER – STRIP – SUPPORT, Floor Pan (Con't)

89–90	Y	10118451	1	.28	PLUG, OTR RR S/MBR	10–E5,14
89–91	Y	10118451	2	.28	PLUG, RF OTR SI BOW	10–E5,14
92–96	Y07	10118451	2	.28	PLUG, RF OTR SI BOW	10–E5,14
89–96	Y	10118451	2	.28	PLUG, SI F/D HGE INR PLR	10–E5,14
91–96	Y	10118451	2	.28	PLUG, U/B OTR RR S/RL GA HOLE	10–E5,14
84–85	Y	14065059	LH	DISCON	REINFORCEMENT, F/FLR PNL	
84–85	Y	14065060	RH	DISCON	REINFORCEMENT, F/FLR PNL	
90–96	Y67	10146450	1	20.44	REINFORCEMENT, FLR PNL #3 C/BAR	10–E24,15
86–89	Y67	10051839	LH	DISCON	REINFORCEMENT, R/FLR PNL INR	
86–89	Y67	10051840	RH	DISCON	REINFORCEMENT, R/FLR PNL INR	
86–89	Y07	14105595	1	DISCON	REINFORCEMENT, R/FLR PNL OPG	
86–96	Y67	10051841	2	20.44	REINFORCEMENT, R/FLR PNL OTR	10–E11,36
86–96	Y67	14092624	1	30.76	REINFORCEMENT, U/B BR	10–E11,49
93	Y 4–SPD A/TRANS (MD8)	11515174	1	*1.50	RETAINER, FLR FRT INSL (4 1/4"X7 1/2") (TRIM AS REQ'D) (15.492)	
94–96	Y 4–SPD A/TRANS (M30)	11515174	1	*1.50	RETAINER, FLR FRT INSL (4 1/4"X7 1/2") (TRIM AS REQ'D) (15.492)	
84–89	Y07	3962891	2	2.10	SPACER, FLR RR PNL ADJ (08.024)	7–H7,3
90–92	Y07 SOFT RIDE SUSP (FE1), HVY DUTY SUSP (FE7)	3962891	2	2.10	SPACER, FLR RR PNL ADJ (08.024)	7–H7,3
93–96	Y07	3962891	2	2.10	SPACER, FLR RR PNL ADJ (08.024)	7–H7,3
86–96	Y67	14092739	2	12.92	SPACER, R/FLR PNL INSL	10–E11,5
94–96	Y	20018342	6	.97	STRIP, FLR PNL DRN HOLE CVR MELT (12.981)	
90–91	Y	10086121	1	DISCON	SUPPORT, FLR FRT PNL	

12.981 BOLT – BRACKET – COMPARTMENT – CYLINDER – CYLINDER KIT – DOOR – DOOR & FRAME – FILLER – GASKET – HANDLE – INSULATOR – PANEL – PLATE – REINFORCEMENT – RETAINER – SPRING – STRIKER – STRIP – TRAY – TUMBLER, Rear Compartment Floor

91–96	Y07	10175814	12	.32	BOLT, RR U/B CLOSEOUT PNL	
88–96	Y07	14100206	2	2.85	BRACKET, FLR RR PNL CTR CPT	10–E5,5
86–89	Y67	14064526	2	.70	BRACKET, FLR RR PNL CTR CPT (10.230)	10–E5,5
90–96	Y67	14064526	3	.70	BRACKET, FLR RR PNL CTR CPT (10.230)	10–E5,5
86–96	Y67	14092735	LH	38.75	BRACKET, R/FLR PNL UPR FRT	11–E26,36
86–96	Y67	14092736	RH	38.75	BRACKET, R/FLR PNL UPR FRT	11–E26,36
89–92	Y67	10123005	LH	65.85	BRACKET, R/FLR PNL UPR FRT (14.310)	11–F4,26
84–85	Y	14065023	LH	DISCON	COMPARTMENT, R/FLR (BLACK)	
84–92	Y07	14065024	RH	43.89	COMPARTMENT, R/FLR (BLACK)	10–I5,14
90–92	Y67	10146483	1	DISCON	COMPARTMENT, R/FLR	
93	Y07	10218582	RH	41.50	COMPARTMENT, R/FLR	10–I8,10
93	Y67	10218581	1	41.50	COMPARTMENT, R/FLR	10–I13,7
91–96	Y	12507230	1	12.41	CYLINDER KIT, R/FLR COMPT DR LK (UNCODED)	10–I6,5
87–90	Y	10074166	1	DISCON	CYLINDER, R/FLR COMPT DR LK (10.266)	
84–89	Y07	10282260	1	144.41	DOOR & FRAME, RR FLR COMPT	10–I5,1
90–91	Y	10282260	1	144.41	DOOR, R/FLR COMPT	10–I5,1
92–96	Y07 SOFT RIDE SUSP (FE1), HVY DUTY SUSP (FE7)	10282260	1	144.41	DOOR, R/FLR COMPT	10–I5,1
92–96	Y67	10282260	1	144.41	DOOR, R/FLR COMPT	10–I5,1

© 2000 GENERAL MOTORS SERVICE PARTS OPERATIONS–CHEVROLET–14Y

12.981 BOLT – BRACKET – COMPARTMENT – CYLINDER – CYLINDER KIT – DOOR – DOOR & FRAME – FILLER – GASKET – HANDLE – INSULATOR – PANEL – PLATE – REINFORCEMENT – RETAINER – SPRING – STRIKER – STRIP – TRAY – TUMBLER, Rear Compartment Floor (Con't)

86–96	Y67	14100357	LH	25.32	FILLER, R/FLR PNL INTER	10–E11,26
86–96	Y67	14100358	RH	25.32	FILLER, R/FLR PNL INTER	10–E11,26
86–96	Y67	14092725	LH	38.65	FILLER, R/FLR PNL LWR	10–E24,75
86–96	Y67	14092726	RH	38.65	FILLER, R/FLR PNL LWR	10–E24,75
86–96	Y67	14092723	LH	26.70	FILLER, R/FLR PNL UPR	10–E11,72
86–96	Y67	14092724	RH	26.70	FILLER, R/FLR PNL UPR	10–E11,72
84–91	Y	14088442	1	DISCON	GASKET, FLR RR PNL OPG CVR	
88–89	Y07 UQ4 (BOSE)	10077237	LH	DISCON	GASKET, FLR RR PNL PKT INSL	
88–89	Y07 UQ4 (BOSE)	10077238	RH	DISCON	GASKET, FLR RR PNL PKT INSL	
84–89	Y07	14049096	2	DISCON	HANDLE, R/FLR COMPT DR (GRAPHITE)	
90–91	Y (22I)	10132956	2	DISCON	HANDLE, R/FLR COMPT DR (BLUE)	
90–91	Y (60I)	10132957	2	DISCON	HANDLE, R/FLR COMPT DR (COGNAC)	
90–91	Y (73I)	10132958	2	DISCON	HANDLE, R/FLR COMPT DR (COGNAC)	
90–91	Y (90I)	10132959	2	DISCON	HANDLE, R/FLR COMPT DR (GRAY)	
90–91	Y (19I)	10132960	2	8.57	HANDLE, R/FLR COMPT DR (BLACK)	10–H9,40
92	Y (73I)	10132958	1	DISCON	HANDLE, R/FLR COMPT DR (COGNAC)	
92–93	Y (10I), (19I)	10132960	1	8.57	HANDLE, R/FLR COMPT DR (BLACK)	10–H9,40
92–96	Y (64I)	10175645	1	7.29	HANDLE, R/FLR COMPT DR (BEIGE)	10–H9,40
92–96	Y (14I)	10175646	1	8.57	HANDLE, R/FLR COMPT DR (GRAY)	10–H9,40
93	Y (79I)	10199517	1	8.40	HANDLE, R/FLR COMPT DR (RED)	10–H9,40
93–95	Y (70I)	10199569	1	8.40	HANDLE, R/FLR COMPT DR (RED)	10–H9,40
94–96	Y (19I)	10132960	1	8.57	HANDLE, R/FLR COMPT DR (BLACK)	10–H9,40
96	Y (70I), (EXC GRAND SPORT EDITION (Z16)	10199569	1	8.40	HANDLE, R/FLR COMPT DR (RED)	10–H9,40
84–87	Y	14064513	LH	DISCON	INSULATOR, INR INTER SI MBR	
84–96	Y	14064514	RH	3.10	INSULATOR, INR INTER SI MBR	10–E8,4
88	Y	10094902	LH	DISCON	INSULATOR, INR INTER SI MBR	
89–96	Y	10137253	LH	1.05	INSULATOR, INR INTER SI MBR	10–E8,4
86–96	Y67	14092737	1	12.92	INSULATOR, R/FLR PNL (UPR)	10–H25,1
86–93	Y67	14092738	1	13.34	INSULATOR, R/FLR PNL (LWR)	10–H25,8
88–95	Y07	10054603	LH	26.00	INSULATOR, R/FLR PNL (12.980)	10–H27,1
88–96	Y07	10054604	RH	26.00	INSULATOR, R/FLR PNL (12.980)	10–H27,1
90–96	Y67	10193758	RH	11.44	INSULATOR, R/FLR PNL	10–H25,1
92–95	Y67	10193757	LH	11.44	INSULATOR, R/FLR PNL	10–I2,1
93–96	Y67	11515174	2	*1.50	INSULATOR, R/FLR PNL (POSN #1) (4 1/4"X7 1/2") (TRIM AS REQ'D) (15.492)	
96	Y07	10282261	LH	26.00	INSULATOR, R/FLR PNL	10–H27,1
96	Y67	10282262	LH	11.44	INSULATOR, R/FLR PNL	10–I2,1
86–96	Y07	10175524	1	29.24	INSULATOR, R/FLR PNL CTR	
90–96	Y67	10146480	1	29.24	INSULATOR, R/FLR PNL CTR	10–H25,2
90–96	Y67	10146449	1	13.63	PANEL, FLR RR FIL	10–E24,1

© 2000 GENERAL MOTORS SERVICE PARTS OPERATIONS–CHEVROLET–14Y

12.981 BOLT – BRACKET – COMPARTMENT – CYLINDER – CYLINDER KIT – DOOR – DOOR & FRAME – FILLER – GASKET – HANDLE – INSULATOR – PANEL – PLATE – REINFORCEMENT – RETAINER – SPRING – STRIKER – STRIP – TRAY – TUMBLER, Rear Compartment Floor (Cont)

84–87	Y	10067390	1	DISCON	PANEL, INTER FLR (DEALER TO REMOVE EXTENSION ASM WHEN INSTALLING ON Y07 (COUPE) CARS	
89–96	Y	10198704	1	147.47	PANEL, INTER FLR	10–E5,40
84–85	Y07	14104866	1	DISCON	PANEL, R/FLR (MUST ALSO ORDER (1) 14105595, (2) 14088454, (8) 2495701, (8) 11508426, (1) 14088439, (1) 14088442, (8) 1646714)	
86–89	Y07	14104866	1	DISCON	PANEL, R/FLR	
86–91	Y67	10193727	1	370.65	PANEL, R/FLR	10–E11,3
92–96	Y07	10280990	1	381.38	PANEL, R/FLR	10–F2,15
92–96	Y67	10280989	1	381.38	PANEL, R/FLR (PANEL HAS A SQUARE ARM, (DEALER TO CUT HOLE OUT ON INSIDE MARKED BY ETCHING WHEN USING ON 1992 AND PRIOR)	10–E24,1
84–89	Y	14104991	LH	DISCON	PANEL, R/FLR CLOSEOUT	
84–89	Y	14104992	RH	DISCON	PANEL, R/FLR CLOSEOUT	
84–96	Y07	14043111	LH	12.87	PANEL, R/FLR PNL UPR FRT CLOSEOUT	10–E5,25
84–96	Y07	14043112	RH	12.87	PANEL, R/FLR PNL UPR FRT CLOSEOUT	10–E5,25
84–89	Y07	14043113	LH	DISCON	PANEL, RR COMPT CLOSEOUT	
84–89	Y07	14043114	RH	DISCON	PANEL, RR COMPT CLOSEOUT	
86–91	Y	10045625	7	1.07	PLATE, R/FLR PNL STUD	10–E5,22
84–96	Y07	14043102	1	27.97	REINFORCEMENT, INTER FLR PNL EXTN	10–E5,61
84–89	Y	3937912	2	1.20	RETAINER, R/FLR COMPT DR LK (10.267)	10–I5,3
90–96	Y	3937912	2	1.20	RETAINER, R/FLR COMPT DR LK CYL (10.267)	10–I5,3
84–96	Y	6259315	5	*.58	SPRING, R/FLR COMPT DR LK CYL TUMB (SNAP IN) (10.268)	
84–89	Y07	14079326	1	1.94	STRIKER, R/FLR COMPT DR LK	10–I5,13
90–95	Y07 SOFT RIDE SUSP (FE1), HVY DUTY SUSP (FE7)	14079326	1	1.94	STRIKER, R/FLR COMPT DR LK	10–I5,13
92–96	Y67	14079326	1	1.94	STRIKER, R/FLR COMPT DR LK	10–I5,13
96	Y07	14079326	1	1.94	STRIKER, R/FLR COMPT DR LK	10–I5,13
84–86	Y	14079326	1	1.94	STRIKER, R/FLR COMPT LK	10–I5,13
93–96	Y	20018342	1	.97	STRIP, R/CMPT PNL DRN HOLE PLUG MELT	
84–89	Y07	14058699	LH	12.60	TRAY, R/FLR COMPT	10–I5,16
84–89	Y07	14058700	RH	11.44	TRAY, R/FLR COMPT	10–I5,16
90–91	Y07 SOFT RIDE SUSP (FE1), HVY DUTY SUSP (FE7)	14058699	LH	12.60	TRAY, R/FLR COMPT	10–I5,16
90–91	Y07 SOFT RIDE SUSP (FE1), HVY DUTY SUSP (FE7)	14058700	RH	11.44	TRAY, R/FLR COMPT	10–I5,16
90–96	Y67	10146484	RH	11.29	TRAY, R/FLR COMPT	10–I6,9
90–91	Y67	10149259	LH	DISCON	TRAY, R/FLR COMPT	
92–96	Y07	14058700	RH	11.44	TRAY, R/FLR COMPT	10–I5,16
84–96	Y	6259309	1	*.27	TUMBLER, R/FLR COMPT DR LK CYL (#1) (SNAP IN) (10.553)	
84–96	Y	6259310	1	*.27	TUMBLER, R/FLR COMPT DR LK CYL (#2) (SNAP IN) (10.266)	

© 2000 GENERAL MOTORS SERVICE PARTS OPERATIONS–CHEVROLET–14Y

12.981 BOLT – BRACKET – COMPARTMENT – CYLINDER – CYLINDER KIT – DOOR – DOOR & FRAME – FILLER – GASKET – HANDLE – INSULATOR – PANEL – PLATE – REINFORCEMENT – RETAINER – SPRING – STRIKER – STRIP – TRAY – TUMBLER, Rear Compartment Floor (Con't)

84–96	Y	6259311	1	*.27	TUMBLER, R/FLR COMPT DR LK CYL (#3) (SNAP IN) (10.266)	
84–96	Y	6259312	1	*.27	TUMBLER, R/FLR COMPT DR LK CYL (#4) (SNAP IN) (10.266)	
84–96	Y	6259313	1	*.27	TUMBLER, R/FLR COMPT DR LK CYL (#5) (SNAP IN) (10.266)	
91–96	Y	347120	1	.10	TUMBLER, R/FLR COMPT DR LK CYL RET (10.553)	

12.986 BOLT – BRACE – EXTENSION – PLATE – SPACER – SUPPORT – WASHER, Body Rear End (Plastic Laminated)

87–88	Y	14069669	8	*1.10	BOLT, U/B BR (M10–1.25X21.5) (07.039)	10–F10,39
89–96	Y67	14077729	8	.90	BOLT, U/B BR (04.083) (POS #2)	10–E24,39
93–96	Y67	14069669	8	*1.10	BOLT, U/B BR (M10X1.5X25 13HEX) (07.039) (POS #1)	10–F10,39
86–96	Y67	10143533	1	144.41	BRACE, U/B (LWR)	10–E11,48
86–96	Y67	10193674	1	166.79	BRACE, U/B (UPR)	10–E11,50
84–89	Y	10255085	LH	31.02	EXTENSION, BODY UPR RR PNL LWR FRT	10–G16,24
84–89	Y	10255086	RH	31.02	EXTENSION, BODY UPR RR PNL LWR FRT	10–G16,24
90–95	Y (EXC SPECIAL PERFORMANCE PKG (ZR1)	10255085	LH	31.02	EXTENSION, BODY UPR RR PNL LWR FRT	10–G16,24
90–95	Y (EXC SPECIAL PERFORMANCE PKG (ZR1)	10255086	RH	31.02	EXTENSION, BODY UPR RR PNL LWR FRT	10–G16,24
90–95	Y SPECIAL PERFORMANCE PKG (ZR1)	10255087	LH	28.22	EXTENSION, BODY UPR RR PNL LWR FRT	10–G22,29
90–95	Y SPECIAL PERFORMANCE PKG (ZR1)	10255088	RH	28.22	EXTENSION, BODY UPR RR PNL LWR FRT	10–G22,29
96	Y	10255085	LH	31.02	EXTENSION, BODY UPR RR PNL LWR FRT	10–G16,24
96	Y	10255086	RH	31.02	EXTENSION, BODY UPR RR PNL LWR FRT	10–G16,24
88–95	Y67	10153643	1	4.47	PLATE, U/B BR STUD	10–E24,65
96	Y67	10153643	2	4.47	PLATE, U/B BR STUD	10–E24,65
86–89	Y67	10153644	4	10.53	SPACER, U/B BR	10–E11,29
90–96	Y67	10153644	4	10.53	SPACER, U/B BR	10–E11,29
90–91	Y SPECIAL PERFORMANCE PKG (ZR1)	14104593	LH	22.37	SUPPORT, BODY UPR RR PNL	10–G22,20
90–91	Y SPECIAL PERFORMANCE PKG (ZR1)	14104594	RH	22.37	SUPPORT, BODY UPR RR PNL	10–G22,20
91	Y (EXC SPECIAL PERFORMANCE PKG (ZR1)	14100241	LH	10.90	SUPPORT, BODY UPR RR PNL (07.836)	10–H2,18
91	Y (EXC SPECIAL PERFORMANCE PKG (ZR1)	14100242	RH	DISCON	SUPPORT, BODY UPR RR PNL (07.836)	
92–96	Y07	10172499	2	3.97	SUPPORT, BODY UPR RR PNL	10–H9,34
92–96	Y67	10198696	2	3.97	SUPPORT, BODY UPR RR PNL	10–H6,17
86–92	Y67	14038397	8	*1.00	WASHER, U/B BR (M8.6X20X2.50) (08.929)	10–E11,47

© 2000 GENERAL MOTORS SERVICE PARTS OPERATIONS–CHEVROLET–14Y

MICROFICHE INDEX

GROUPS 12.000 THRU 13.000

FICHE 10 OF 11

GROUP	DESCRIPTION	STARTING GRID LOCATION PARTS	ILLUSTRATIONS
–	GENERAL INFORMATION	1–A2	1–G2
–	ALPHABETICAL INDEX	1–B13	N.A.
12.000	BODY MOLDINGS – SHEET METAL	10–A2	10–D2
13.000	BODY WIRING – VINYL TOP TRIM	10–C2	N.A.
–	OUT OF FICHE CALLS	N.A.	10–M22

10–C1

CHEVROLET
BODY GROUP 13.000

BODY WIRING – VINYL TOP TRIM

ALPHABETICAL INDEX

B

BAG, Convertible and Hard Top 13.346 10–C15
BOLT, Convertible and Hard Top 13.346 10–C15
BRACKET, Body Wiring 13.090 10–C7
BRACKET, Convertible and Hard Top .. 13.346 10–C15
BREAKER, Body Wiring 13.095 10–C10

C

CLIP, Body Wiring 13.090 10–C7
CONNECTOR, Body Wiring 13.095 10–C10
CONNECTOR, Body Wiring 13.100 10–C11
COVER KIT, Convertible Top Cover 13.347 10–C16
COVER, Convertible Top Cover 13.347 10–C16

E

ESCUTCHEON, Convertible and Hard Top 13.346 10–C15

F

FRAME, Folding Top 13.365 10–C17

G

GUIDE, Convertible and Hard Top 13.346 10–C15
GUIDE, Convertible Top Cover 13.347 10–C16
GUIDE, Folding Top Back Window 13.395 10–C17

H

HARDWARE KIT, Folding Top Back Window 13.395 10–C17
HARNESS, Body Wiring 13.090 10–C7
HEADLINER, Convertible and Hard Top 13.346 10–C15

M

MODULE, Body Wiring 13.090 10–C7

N

NUT, Convertible and Hard Top 13.346 10–C15

P

PAD, Convertible Top Cover 13.347 10–C16
PAD, Folding Top Back Window 13.395 10–C17
PANEL, Convertible Top Cover 13.347 10–C16
PANEL, Roof Panel Top Covering 13.250 10–C14
PLATE, Convertible and Hard Top 13.346 10–C15
PROTECTOR, Convertible and Hard Top 13.346 10–C15
PROTECTOR, Folding Top Back Window 13.395 10–C17

R

RELAY, Body Wiring 13.095 10–C10
RETAINER, Body Wiring 13.090 10–C7
RETAINER, Convertible and Hard Top .. 13.346 10–C15
RETAINER, Convertible Top Cover 13.347 10–C16
RETAINER, Folding Top Side Pad 13.349 10–C17
RIVET, Convertible and Hard Top 13.346 10–C15

S

SPACER, Convertible and Hard Top 13.346 10–C15
SPACER, Folding Top Back Window ... 13.395 10–C17
STRAP, Body Wiring 13.090 10–C7
STRIP, Convertible and Hard Top 13.346 10–C15
SUPPORT, Folding Top Back Window .. 13.395 10–C17

© GENERAL MOTORS SERVICE PARTS OPERATIONS–CHEVROLET–14Y

T

TAPE, Body Wiring 13.090 10–C7
TAPE, Convertible and Hard Top 13.346 10–C15
TAPE, Convertible Top Cover 13.347 10–C16
TOP, Convertible and Hard Top 13.346 10–C15

W

WASHER, Convertible and Hard Top ... 13.346 10–C15
WEATHERSTRIP, Convertible and Hard Top 13.346 10–C15
WIRE, Body Wiring 13.090 10–C7
WRENCH, Convertible and Hard Top .. 13.346 10–C15

CHART INDEX

GROUP 13 GRID

ILLUS INDEX (GRP 13) 10–C6

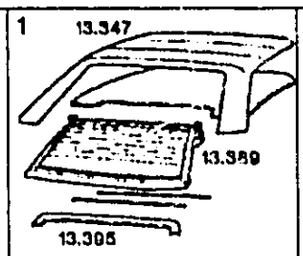

FOLDING TOP COVER

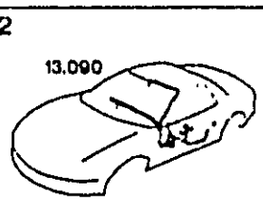

HARNESS/CROSSBODY

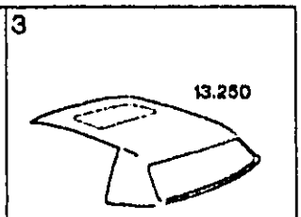

BONNETT/TRIM

GROUP 13.000

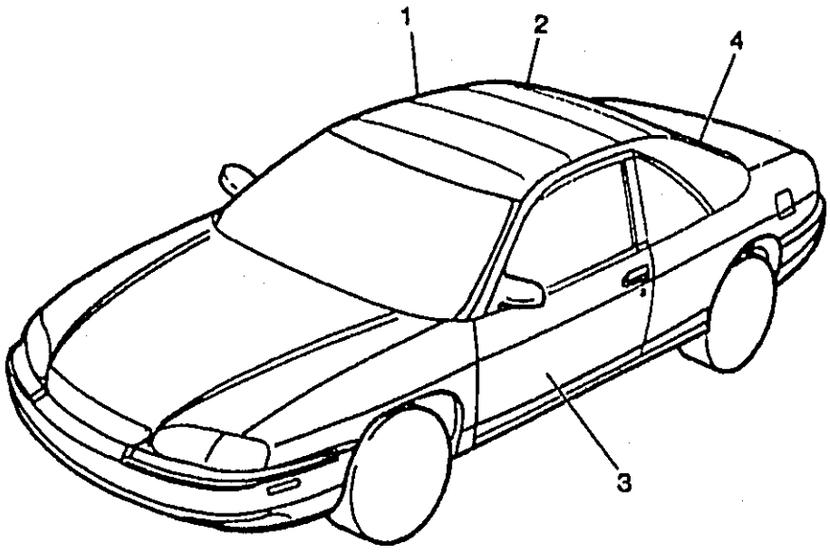

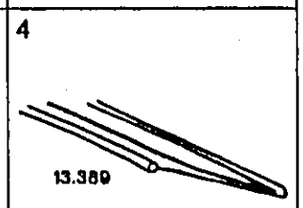

WINDOW

© 2000 GENERAL MOTORS SERVICE PARTS OPERATIONS-CHEVROLET-14Y

13.090 BRACKET – CLIP – HARNESS – MODULE – RETAINER – STRAP – TAPE – WIRE, Body Wiring

86–89	Y67	14100354	1	DISCON	BRACKET, BODY WRG HARN	
84–90	Y	14066514	2	DISCON	BRACKET, DR ELEC WRG LWR RR	
84–96	Y	14073415	2	.70	BRACKET, P/W DR WRG HARN	9–G22,4
94–95	Y	1864022	1	.77	CLIP, BODY FRT WRG HARN (BRK PRESS MOD VLV) (1/2 DIA HARD STL) (02.559)	
96	Y	1839906	2	*.13	CLIP, BODY RR WRG HARN (LARGE 3–5 WIRE) (08.965) (AC–DELCO #1839906)	
95–96	Y	21020632	2	.44	CLIP, BODY WRG HARN	
96	Y RECL FRT BKT ST (AQ9)	21020632	2	.44	CLIP, P/SEAT LUMBAR CONT WRG HARN	
89	Y07 STEREO (UU8)	12085454	1	DISCON	HARNESS, BODY FRT WRG	
89	Y67 STEREO (UM6)	12080872	1	DISCON	HARNESS, BODY FRT WRG	
89	Y67 STEREO (UU8)	12080873	1	DISCON	HARNESS, BODY FRT WRG	
90	Y STEREO (UU8)	12101487	1	DISCON	HARNESS, BODY FRT WRG	
90	Y STEREO (UM6)	12101488	1	DISCON	HARNESS, BODY FRT WRG	
90	Y67 STEREO (UM6)	12073787	1	DISCON	HARNESS, BODY FRT WRG	
90	Y67 STEREO (UU8, U1F)	12073788	1	DISCON	HARNESS, BODY FRT WRG	
91	Y07 STEREO CASSETTE (UM6)	12112419	1	DISCON	HARNESS, BODY FRT WRG	
91	Y07 CASSETTE STEREO (UU8), CASSETTE/CD PLAYER (U1F)	12112460	1	DISCON	HARNESS, BODY FRT WRG	
91	Y67 STEREO CASSETTE (UM6)	12090311	1	DISCON	HARNESS, BODY FRT WRG	
91	Y67 CASSETTE STEREO (UU8), CASSETTE/CD PLAYER (U1F)	12090312	1	DISCON	HARNESS, BODY FRT WRG	
92	Y07 CASSETTE STEREO (UU8), CASSETTE/CD PLAYER (U1F)	12125811	1	DISCON	HARNESS, BODY FRT WRG	
92	Y07 STEREO CASSETTE (UM6)	12125812	1	DISCON	HARNESS, BODY FRT WRG	
92	Y67 STEREO CASSETTE (UM6)	12106537	1	DISCON	HARNESS, BODY FRT WRG	
92	Y67 CASSETTE STEREO (UU8), CASSETTE/CD PLAYER (U1F)	12106538	1	DISCON	HARNESS, BODY FRT WRG	
93	Y07	12141786	1	780.00	HARNESS, BODY FRT WRG	9–J24,8
93	Y67	12130341	1	244.62	HARNESS, BODY FRT WRG	9–J24,2
94	Y07 SIG & MKR LP (T90) (EXPORT)	12141786	1	780.00	HARNESS, BODY FRT WRG	9–J24,8
94	Y07 (EXC SIG & MKR LP (T90) (EXPORT)	12141796	1	244.62	HARNESS, BODY FRT WRG	9–J24,8
94	Y67 (EXC SIG & MKR LP (T90) (EXPORT)	12130355	1	361.50	HARNESS, BODY FRT WRG	9–J24,2
95	Y07 (EXC SIG & MKR LP (T90) (EXPORT), SPECIAL PERFORMANCE PKG (ZR1)	12130403	1	244.62	HARNESS, BODY FRT WRG	9–J24,8
95	Y07 SPECIAL PERFORMANCE PKG (ZR1)	12141796	1	244.62	HARNESS, BODY FRT WRG	9–J24,8
95	Y67 (EXC SIG & MKR LP (T90) (EXPORT)	12130478	1	244.62	HARNESS, BODY FRT WRG	9–J24,2
96	Y07 (EXC SIG & MKR LP (T90) (EXPORT)	12130458	1	361.50	HARNESS, BODY FRT WRG	9–J24,8
96	Y67 (EXC SIG & MKR LP (T90) (EXPORT)	12130456	1	244.62	HARNESS, BODY FRT WRG	9–J24,2

© 2000 GENERAL MOTORS SERVICE PARTS OPERATIONS–CHEVROLET–14Y

13.090 BRACKET – CLIP – HARNESS – MODULE – RETAINER – STRAP – TAPE – WIRE, Body Wiring (Con't)

86–88	Y67 (EXC EXPORT T89, T90)	12073839	1	DISCON	HARNESS, BODY RR WRG (WHEN SERVICING 1986–87 VEH, MUST ALSO USE (4) CONN 8918527)	
87–88	Y07 (EXC TAIL & S/LP (T89) (EXPORT), SIG & MKR LP (T90) (EXPORT)	12067493	1	DISCON	HARNESS, BODY RR WRG (WHEN USED ON 1987 MODELS MUST USE 4 OF 8918527 SOCKETS)	
87	Y67 STEREO (UM6, UM7) (EXC T89, T90 EXPORT) ...	12080872	1	DISCON	HARNESS, BODY RR WRG (MAY NEED TO USE CONN 12126015 & 12085482)	
88	Y67 (EXC RDO, EXPORT T89, T90)	12080872	1	DISCON	HARNESS, BODY RR WRG (MAY NEED TO USE CONN 12126015 & 12085482)	
88	Y67 STEREO (UM6) (EXC EXPORT T89, T90)	12080872	1	DISCON	HARNESS, BODY RR WRG (MAY NEED TO USE CONN 12126015 & 12085482)	
89–90	Y07	12067493	1	DISCON	HARNESS, BODY RR WRG	
89–92	Y67	12073839	1	DISCON	HARNESS, BODY RR WRG	
91–92	Y07 SPECIAL PERFORMANCE PKG (ZR1)	12067493	1	DISCON	HARNESS, BODY RR WRG	
91–92	Y07 (EXC SPECIAL PERFORMANCE PKG (ZR1)	12090341	1	DISCON	HARNESS, BODY RR WRG	
93	Y (EXC SIG & MKR LP (T90) (EXPORT)	12130377	1	527.80	HARNESS, BODY RR WRG	8–L25,11
94–95	Y07 (EXC SIG & MKR LP (T90) (EXPORT), SPECIAL PERFORMANCE PKG (ZR1)	12130357	1	244.62	HARNESS, BODY RR WRG	3–G12,2
94–95	Y07 SPECIAL PERFORMANCE PKG (ZR1), (EXC SIG & MKR LP (T90) (EXPORT)	12130377	1	527.80	HARNESS, BODY RR WRG	8–L25,11
94–96	Y67 (EXC SIG & MKR LP (T90) (EXPORT)	12130356	1	527.80	HARNESS, BODY RR WRG	8–L25,11
96	Y07 (EXC SIG & MKR LP (T90) (EXPORT)	12130357	1	244.62	HARNESS, BODY RR WRG	3–G12,2
84	Y STEREO (UU8)	12036116	1	DISCON	HARNESS, BODY WRG	
84	Y STEREO (UM6, UM7), RDO UL5 (EXC EXPORT)	12036117	1	DISCON	HARNESS, BODY WRG	
85	Y STEREO (UU8)	12049881	1	DISCON	HARNESS, BODY WRG	
86	Y STEREO (UM6, UM7 (EXC EXPORT)	12048813	1	DISCON	HARNESS, BODY WRG	
86	Y07 STEREO (UU8)	12048812	1	DISCON	HARNESS, BODY WRG	
86	Y67 (EXC STEREO UU8)	12055600	1	DISCON	HARNESS, BODY WRG	
86	Y67 STEREO (UU8)	12055601	1	DISCON	HARNESS, BODY WRG	
87–88	Y07 STEREO (UU8)	12073831	1	DISCON	HARNESS, BODY WRG	
87	Y07 STEREO (UM6, UM7) (EXC EXPORT T89, T90) ...	12085453	1	DISCON	HARNESS, BODY WRG	
87–88	Y67 STEREO (UU8)	12073830	1	DISCON	HARNESS, BODY WRG	
88	Y STEREO (UM6) (EXC EXPORT T89, T90)	12085453	1	DISCON	HARNESS, BODY WRG	
89	Y07 STEREO (UM6)	12085453	1	DISCON	HARNESS, BODY WRG	
84–90	Y AQ9	14079490	2	DISCON	HARNESS, CUSH WRG	
91	Y RECL FRT BKT ST (AQ9) ..	12506477	1	DISCON	HARNESS, D/SEAT ADJR WRG .	
91	Y RECL FRT BKT ST (AQ9) ..	14079481	2	DISCON	HARNESS, D/SEAT ADJR WRG .	
92–93	Y RECL FRT BKT ST (AQ9) ..	12520129	1	52.27	HARNESS, D/SEAT ADJR WRG .	9–J2,48
88	Y	12055829	LH	DISCON	HARNESS, ELEC DR WRG	
88	Y	12055831	RH	DISCON	HARNESS, ELEC DR WRG	
94–96	Y RECL FRT BKT ST (AQ9) ..	12141781	1	477.00	HARNESS, P/SEAT ADJR & LUMBAR CONT WRG (INCLUDES RELAY CTR)	

© 2000 GENERAL MOTORS SERVICE PARTS OPERATIONS–CHEVROLET–14Y

13.090 BRACKET – CLIP – HARNESS – MODULE – RETAINER – STRAP – TAPE – WIRE, Body Wiring (Con't)

84–91	Y RECL FRT BKT ST (AQ9) ..	14079481	2	DISCON	HARNESS, P/SEAT ADJR & RECL WRG	
91	Y RECL FRT BKT ST (AQ9) ..	12506477	1	DISCON	HARNESS, P/SEAT ADJR WRG ..	
92–93	Y RECL FRT BKT ST (AQ9) ..	12520129	1	52.27	HARNESS, P/SEAT ADJR WRG ..	9–J2,48
84–85	Y (EXC ELEC DR LK AU3) ...	12016810	RH	DISCON	HARNESS, PWR WDO DR WRG .	
84–85	Y (EXC ELEC DR LK AU3) ...	12016811	LH	DISCON	HARNESS, PWR WDO DR WRG .	
84–85	Y ELEC DR LK (AU3)	12028821	LH	DISCON	HARNESS, PWR WDO DR WRG .	
84–85	Y ELEC DR LK (AU3)	12028822	RH	DISCON	HARNESS, PWR WDO DR WRG .	
86–87	Y	12069840	LH	DISCON	HARNESS, PWR WDO DR WRG .	
86–87	Y	12069841	RH	DISCON	HARNESS, PWR WDO DR WRG .	
93	Y67	12106561	1	34.26	HARNESS, R/CON DR LK RCVR ANT WRG	
94–96	Y67 (EXC EUROPEAN PROVISIONS (VD1) (EXPORT), VE1 (EXPORT) ..	12106561	1	34.26	HARNESS, R/CON DR LK RCVR ANT WRG	
88–96	Y	12073639	1	25.27	HARNESS, WSW & WSWA WRG	9–D11,14
84–87	Y	12016892	1	DISCON	HARNESS, WSW MTR AND WSWA PUMP WRG	
84–91	Y	12088529	1	22.29	MODULE, BODY WRG HARN (02.510) (IF USE IN PLC OF MDL W/DBL 4–WAY CONN, MUST ALSO ORDER 1–12116930 SINGLE ROW 4–WAY CONN) .	9–E8,52
91–92	Y07 STEREO CASSETTE (UM6), CASSETTE STEREO (UU8), CASSETTE/CD PLAYER (U1F)	12088529	1	22.29	MODULE, BODY WRG HARN (3 DIODE ARRAY) (02.510)	9–E8,52
93	Y07	12088529	1	22.29	MODULE, BODY WRG HARN (3 DIODE ARRAY) (02.510)	9–E8,52
94	Y	12088529	1	22.29	MODULE, BODY WRG HARN (3 DIODE ARRAY) (02.510)	9–E8,52
84–96	Y	14073416	1	1.94	RETAINER, BODY WRG HARN ..	
93–96	Y67	11515174	1	*1.50	RETAINER, BODY WRG HARN (4 1/4"X7 1/2") (TRIM AS REQ'D) (15.492)	
89–96	Y	12020833	1	*.73	RETAINER, BODY WRG HARN CONN (GRAY) (1" LONG) (PUSH–IN) (02.559)	3–H15,6
94	Y	20664092	2	*.40	RETAINER, F/TOP WRG HARN STRP (BLACK) (PUSH–IN) (01.276)	
95–96	Y RECL FRT BKT ST (AQ9) ..	20664092	1	*.40	RETAINER, F/TOP WRG HARN STRP (BLACK) (PUSH–IN) (01.276)	
94–95	Y RECL FRT BKT ST (AQ9) ..	11515174	1	*1.50	RETAINER, P/SEAT LUMBAR CONT WRG HARN (4 1/4"X7 1/2") (TRIM AS REQ'D) (15.492)	
88–89	Y07	3816659	1	*.87	STRAP, BODY FRT WRG HARN (08.965)	
94–96	Y RECL FRT BKT ST (AQ9), IL3	10250231	1	6.32	STRAP, ST INFLR FEED WRG HARN (DRVR SEAT)	9–J13,30
93–95	Y67	3999572	1	4.98	TAPE, F/TOP WIRE (09.260)	
96	Y67	3999572	2	4.98	TAPE, F/TOP WIRE (09.260)	
91–92	Y	12090348	1	DISCON	WIRE, CONV TOP	
93	Y67	12106597	LH	DISCON	WIRE, CONV TOP	
94–96	Y67	12130363	LH	59.12	WIRE, CONV TOP	3–G12,16
91	Y	12106563	1	DISCON	WIRE, PWR ST DIODE JPR	
90–92	Y67	12080875	1	DISCON	WIRE, R/CMPT LID LID REL	
89	Y67	12080874	1	DISCON	WIRE, R/COMPT LID LK REL	

© 2000 GENERAL MOTORS SERVICE PARTS OPERATIONS–CHEVROLET–14Y

13.090 BRACKET – CLIP – HARNESS – MODULE – RETAINER – STRAP – TAPE – WIRE, Body Wiring (Con't)

*EXPORT****************EXPORT****************EXPORT****************EXPORT****************EXPORT*

94–96	Y SIG & MKR LP (T90) (EXPORT)	1864022	1	.77	CLIP, BODY RR WRG HARN (1/2 DIA HARD STL) (02.559)	
94	Y67 SIG & MKR LP (T90) (EXPORT)	12130341	1	244.62	HARNESS, BODY FRT WRG	9–J24,2
95	Y07 SIG & MKR LP (T90) (EXPORT)	12130402	1	244.62	HARNESS, BODY FRT WRG	9–J24,8
95	Y67 SIG & MKR LP (T90) (EXPORT)	12130477	1	244.62	HARNESS, BODY FRT WRG	9–J24,2
96	Y07 SIG & MKR LP (T90) (EXPORT)	12130457	1	244.62	HARNESS, BODY FRT WRG	9–J24,8
96	Y67 SIG & MKR LP (T90) (EXPORT)	12130455	1	244.62	HARNESS, BODY FRT WRG	9–J24,2
87–88	Y07 T89, T90 (EXPORT)	12055823	1	137.03	HARNESS, BODY RR WRG	
93	Y07 SIG & MKR LP (T90) (EXPORT)	12130379	1	DISCON	HARNESS, BODY RR WRG	
93	Y67 SIG & MKR LP (T90) (EXPORT)	12130380	1	526.79	HARNESS, BODY RR WRG	8–L25,11
94–96	Y07 SIG & MKR LP (T90) (EXPORT)	12130335	1	526.79	HARNESS, BODY RR WRG	3–G12,2
94–96	Y67 SIG & MKR LP (T90) (EXPORT)	12130336	1	527.80	HARNESS, BODY RR WRG	8–L25,11
84–85	Y VB4, VD1, VE1, VT7 (EXPORT)	12043419	1	DISCON	HARNESS, BODY WRG	
86	Y EXPORT (VB4, VD1, VE1, VT7)	12048814	1	DISCON	HARNESS, BODY WRG	
87–88	Y07 T89, T90 (EXPORT)	12068375	1	DISCON	HARNESS, BODY WRG	
94–96	Y RH RULE OF ROAD HDLP (T84) (EXPORT), LH RULE OF ROAD HDLP (T85) (EXPORT), SIG & MKR LP (T90) (EXPORT)	11515174	2	*1.50	RETAINER, BODY RR WRG HARN (4 1/4"X7 1/2") (TRIM AS REQ'D) (15.492)	

13.095 BREAKER – CONNECTOR – RELAY, Body Wiring

85–90	Y ELEC R/CON HTD MIR (DL8)	14103366	1	4.04	BREAKER, R/WDO DEFG CIRC (12.5V) (30 AMP) (AC–DELCO #14103366)	9–E5,66
91–92	Y ELEC R/CON HTD MIR (DL8)	14103366	1	4.04	BREAKER, R/WDO DEFG CIRC (12.5V) (30 AMP) (AC–DELCO #14103366)	9–E5,66
93	Y67	12125650	1	19.00	CONNECTOR, C/LP RLY (2–WAY F) (11.927)	
95–96	Y67	12126460	1	20.00	CONNECTOR, RLY–F/TOP PUMP MOT (5–WAY F) (W/LEADS) (02.530) (AC–DELCO #PT730)	
94	Y RECL FRT BKT ST (AQ9) ..	12065125	1	16.73	RELAY, BODY WRG HARN (AC–DELCO #D1703A)	
90–94	Y	14100455	1	16.26	RELAY, C/LP (BLACK) (5–WAY) (09.277) (AC–DELCO #15–8426)	
94–95	Y	12065125	1	16.73	RELAY, C/LP (AC–DELCO #D1703A)	
95	Y 5.7P (LT1), 6–SPD M/TRANS (ML9), A/C MAN CONT (C60), A/C AUTO ELEC CONT (C68)	12135084	1	9.55	RELAY, C/LP (02.815) (AC–DELCO #D1719A)	
96	Y	12135084	1	9.55	RELAY, C/LP (02.815) (AC–DELCO #D1719A)	
84–85	Y ELEC S/D LK (AU3)	22544850	1	18.97	RELAY, DR LK (AC–DELCO #D1707A)	3–H18,39

© 2000 GENERAL MOTORS SERVICE PARTS OPERATIONS–CHEVROLET–14Y

13.095 BREAKER – CONNECTOR – RELAY, Body Wiring (Con't)

86–90	Y	22570060	1	16.26	RELAY, F/TOP RR LAT REL ACTR (POWER) (1 BOLT HOLE) (04.720) (AC–DELCO #15–8736)	11–F4,15
86–96	Y67	12167112	1	51.50	RELAY, F/TOP RR LAT REL ACTR (POWER) (RELAY & CONN W/LEADS) (09.277) (AC–DELCO #15–8264)	11–E26,28
86–96	Y67	22570060	1	16.26	RELAY, F/TOP RR LAT REL ACTR (POWER) (MATES W/CONNECTOR 12101882) (04.720) (AC–DELCO #15–8736)	11–F4,15
87	Y	12167112	1	51.50	RELAY, F/TOP RR LAT REL ACTR (POWER) (1 BOLT HOLE) (W/CONN & LEADS) (09.277) (AC–DELCO #15–8264)	11–E26,28

13.100 CONNECTOR, Body Wiring

90	Y 4–SPD A/TRANS (MD8), 6–SPD M/TRANS (ML9), A/C MAN CONT (C60)	12101899	2	17.95	CONNECTOR, DR AJAR WRNG LP WRG JPR (02.383) (AC–DELCO #PT169)	
90	Y 4–SPD A/TRANS (MD8), 6–SPD M/TRANS (ML9), A/C MAN CONT (C60)	12085481	1	17.56	CONNECTOR, INLINE–TO BODY HARN (2–WAY M, W/LEADS) (02.535) (AC–DELCO #PT103)	
90	Y	12085487	1	22.15	CONNECTOR, INLINE–TO BODY HARN (4 TERM FLAT, W/LEADS) (02.535) (AC–DELCO #PT109)	
90–96	Y	12101762	1	68.40	CONNECTOR, INLINE–TO BODY HARN (10–WAY F) (W/LEADS) (02.535) (AC–DELCO #PT150)	6–E11,17
90	Y 4–SPD A/TRANS (MD8), 6–SPD M/TRANS (ML9)	12101821	1	17.28	CONNECTOR, INLINE–TO BODY HARN (2–WAY F, W/LEADS) (02.535) (AC–DELCO #PT213)	
90	Y 6 SPKR SYS (UX0)	12101836	1	17.46	CONNECTOR, INLINE–TO BODY HARN (2–WAY M, W/LEADS) (02.535) (AC–DELCO #PT228)	6–E11,17
90	Y 6 SPKR SYS (UX0)	12112380	1	56.84	CONNECTOR, INLINE–TO BODY HARN (6 PIN M) (02.535) (AC–DELCO #PT383)	
90–92	Y	12125673	1	22.25	CONNECTOR, INLINE–TO BODY HARN (7–WAY M) (W/LEADS) (02.530) (AC–DELCO #PT585)	
90–92	Y	12125674	1	35.57	CONNECTOR, INLINE–TO BODY HARN (8–WAY M) (W/LEADS) (02.530) (AC–DELCO #PT586)	
90–92	Y67 STEREO CASSETTE (UM6), CASSETTE STEREO (UU8), CASSETTE/CD PLAYER (U1F)	12085481	1	17.56	CONNECTOR, INLINE–TO BODY HARN (BLACK) (2–WAY M) (W/LEADS) (02.535) (AC–DELCO #PT103)	
91–92	Y	12085487	1	22.15	CONNECTOR, INLINE–TO BODY HARN (4–WAY F) (W/LEADS) (02.535) (AC–DELCO #PT109)	
93	Y	12085208	1	28.39	CONNECTOR, INLINE–TO BODY HARN (BLACK) (4–WAY F) (W/LEADS) (02.535) (AC–DELCO #PT1232)	
93–96	Y	12101832	1	45.10	CONNECTOR, INLINE–TO BODY HARN (BLUE) (10–WAY F, W/LEADS) (02.535) (AC–DELCO #PT224)	6–E11,17

© 2000 GENERAL MOTORS SERVICE PARTS OPERATIONS–CHEVROLET–14Y

13.100 CONNECTOR, Body Wiring (Con't)

93–96	Y	12102750	1	9.43	CONNECTOR, INLINE–TO BODY HARN (1–WAY F) (W/LEADS) (09.778) (AC–DELCO #PT377)	6–E11,17
93–96	Y	12125605	1	28.96	CONNECTOR, INLINE–TO BODY HARN (GRAY) (6–WAY F) (W/LEADS) (04.663)	6–E11,17
93	Y07 6 SPKR SYS (UX0)	12101836	1	17.46	CONNECTOR, INLINE–TO BODY HARN (2–WAY M, W/LEADS) (02.535) (AC–DELCO #PT228)	6–E11,17
93–94	Y07 4 SPKR SYS (UY5)	12101836	1	17.46	CONNECTOR, INLINE–TO BODY HARN (2–WAY M, W/LEADS) (02.535) (AC–DELCO #PT228)	6–E11,17
93	Y67	12101836	1	17.46	CONNECTOR, INLINE–TO BODY HARN (2–WAY M, W/LEADS) (02.535) (AC–DELCO #PT228)	6–E11,17
95	Y 5.7J (LT5)	12085208	1	28.39	CONNECTOR, INLINE–TO BODY HARN (BLACK) (4–WAY F) (W/LEADS) (02.535) (AC–DELCO #PT1232)	
95–96	Y 4 SPKR SYS (UY5)	12101836	1	17.46	CONNECTOR, INLINE–TO BODY HARN (2–WAY M, W/LEADS) (02.535) (AC–DELCO #PT228)	6–E11,17
95–96	Y67 (EXC SIG & MKR LP (T90) (EXPORT)	12103188	1	1.82	CONNECTOR, INLINE–TO BODY HARN (BLUE) (10–WAY M, W/O LEADS) (02.530)	6–E11,17
96	Y	12101876	1	26.75	CONNECTOR, INLINE–TO BODY HARN (GRAY) (6–WAY M) (W/LEADS) (02.535) (AC–DELCO #PT267)	6–E11,17
94–96	Y	12085537	2	31.88	CONNECTOR, INLINE–TO C/LP (4–WAY F) (W/LEADS) (02.535) (AC–DELCO #PT147)	
90	Y 4–SPD A/TRANS (MD8), 6–SPD M/TRANS (ML9) ...	12085537	1	31.88	CONNECTOR, INLINE–TO DM & RDG LP HARN (02.535) (AC–DELCO #PT147)	
92–93	Y	12085537	2	31.88	CONNECTOR, INLINE–TO DR HARN (4–WAY F) (W/LEADS) (02.535) (AC–DELCO #PT147)	
93	Y	12102747	1	21.07	CONNECTOR, INLINE–TO HTD O/S RR VIEW MIR (BLACK) (2–WAY F) (W/LEADS) (03.670) (AC–DELCO #PT374)	
96	Y	12102747	1	21.07	CONNECTOR, INLINE–TO HTD O/S RR VIEW MIR (BLACK) (2–WAY F) (W/LEADS) (03.670) (AC–DELCO #PT374)	
86–91	Y	12101866	1	17.78	CONNECTOR, INLINE–TO O/S RR VIEW MIR (3–WAY M) (W/LEADS) (02.535) (AC–DELCO #PT258)	
94–95	Y	12102747	1	21.07	CONNECTOR, INLINE–TO O/S RR VIEW MIR (BLACK) (2–WAY F) (W/LEADS) (03.670) (AC–DELCO #PT374)	
95–96	Y	12117025	LH	21.82	CONNECTOR, INLINE–TO O/S RR VIEW MIR (BLACK) (3–WAY F) (W/LEADS) (02.383) (AC–DELCO #PT420)	

© 2000 GENERAL MOTORS SERVICE PARTS OPERATIONS–CHEVROLET–14Y

13.100 CONNECTOR, Body Wiring (Con't)

90–95	Y	12101866	1	17.78	CONNECTOR, INLINE–TO O/S RR VIEW MIR HARN (3–WAY M) (W/LEADS) (02.535) (AC–DELCO #PT258)	
90	Y 4–SPD A/TRANS (MD8), 6–SPD M/TRANS (ML9), A/C MAN CONT (C60)	12102747	2	21.07	CONNECTOR, INLINE–TO O/S RR VIEW MIR HARN (03.670) (AC–DELCO #PT374)	
91	Y 4–SPD A/TRANS (MD8), 6–SPD M/TRANS (ML9), A/C MAN CONT (C60), A/C AUTO ELEC CONT (C68) ...	12102747	2	21.07	CONNECTOR, INLINE–TO O/S RR VIEW MIR HARN (BLACK) (2–WAY F) (W/LEADS) (03.670) (AC–DELCO #PT374)	
94–95	Y	12085481	1	17.56	CONNECTOR, INLINE–TO O/S RR VIEW MIR HARN (BLACK) (2–WAY M) (W/LEADS) (02.535) (AC–DELCO #PT103)	
92–93	Y RECL FRT BKT ST (AQ9) ..	12101888	1	17.46	CONNECTOR, INLINE–TO PWR ST (BLACK) (2–WAY F) (W/LEADS) (02.535) (AC–DELCO #PT159)	
94–96	Y	12085482	AR	32.10	CONNECTOR, INLINE–TO PWR ST (6–WAY M) (W/LEADS) (02.535) (AC–DELCO #PT104)	
94–95	Y	12101864	1	17.62	CONNECTOR, INLINE–TO PWR ST (BLACK) (3–WAY F) (W/LEADS) (02.535) (AC–DELCO #PT256)	
94–95	Y	12101900	4	34.09	CONNECTOR, INLINE–TO PWR ST (FRT) (6–WAY F) (W/LEADS) (02.535) (AC–DELCO #PT171)	
96	Y RECL FRT BKT ST (AQ9) ..	12101900	2	34.09	CONNECTOR, INLINE–TO PWR ST (6–WAY F) (W/LEADS) (02.535) (AC–DELCO #PT171)	
94–96	Y	12116958	1	20.24	CONNECTOR, INLINE–TO R/CMPT LID LAT REL SOL (GRAY) (2–WAY F) (W/LEADS) (02.535) (AC–DELCO #PT419)	
96	Y	12085480	2	9.67	CONNECTOR, INLINE–TO R/CMPT LID LAT REL SOL (W/LEADS) (12.243) (AC–DELCO #PT102)	
90–91	Y	12125673	1	22.25	CONNECTOR, INLINE–TO RR BODY HARN (7–WAY M) (W/LEADS) (02.530) (AC–DELCO #PT585)	
90–91	Y STEREO CASSETTE (UM6), CASSETTE STEREO (UU8), CASSETTE/CD PLAYER (U1F)	12125674	1	35.57	CONNECTOR, INLINE–TO RR BODY HARN (8–WAY M) (W/LEADS) (02.530) (AC–DELCO #PT586)	
90	Y07 STEREO CASSETTE (UM6), CASSETTE STEREO (UU8), CASSETTE/CD PLAYER (U1F)	12085535	1	17.46	CONNECTOR, INLINE–TO RR BODY HARN (2 PIN F) (02.535) (AC–DELCO #PT146)	
92	Y67	12125673	1	22.25	CONNECTOR, INLINE–TO RR BODY HARN (7–WAY M) (W/LEADS) (02.530) (AC–DELCO #PT585)	
92	Y67 STEREO CASSETTE (UM6), CASSETTE STEREO (UU8), CASSETTE/CD PLAYER (U1F)	12125674	1	35.57	CONNECTOR, INLINE–TO RR BODY HARN (8–WAY M) (W/LEADS) (02.530) (AC–DELCO #PT586)	
93–94	Y67	12103188	1	1.82	CONNECTOR, INLINE–TO RR BODY HARN (BLUE) (10–WAY M, W/O LEADS) (02.530)	6–E11,17

© 2000 GENERAL MOTORS SERVICE PARTS OPERATIONS–CHEVROLET–14Y

13.100 CONNECTOR, Body Wiring (Con't)

94–95	Y	12101876	1	26.75	CONNECTOR, INLINE–TO RR BODY HARN (GRAY) (6–WAY M) (W/LEADS) (02.535) (AC–DELCO #PT267)	6–E11,17
90–95	Y	12085481	1	17.56	CONNECTOR, INLINE–TO S/S MIR LP (BLACK) (2–WAY M) (W/LEADS) (02.535) (AC–DELCO #PT103)	
96	Y	12085481	2	17.56	CONNECTOR, INLINE–TO S/S MIR LP (BLACK) (2–WAY M) (W/LEADS) (02.535) (AC–DELCO #PT103)	
90–95	Y	12085481	1	17.56	CONNECTOR, INLINE–TO ST BELT CR CAR HARN (BLACK) (2–WAY M) (W/LEADS) (02.535) (AC–DELCO #PT103)	
91–93	Y	12101821	1	17.28	CONNECTOR, INLINE–TO ST BELT CR CAR HARN (NATURAL) (2–WAY F) (W/LEADS) (02.535) (AC–DELCO #PT213)	
96	Y	12085481	2	17.56	CONNECTOR, INLINE–TO ST BELT SW (BLACK) (2–WAY M) (W/LEADS) (02.535) (AC–DELCO #PT103)	
90	Y 6–SPD M/TRANS (ML9), A/C AUTO ELEC CONT (C68), SOFT RIDE SUSP (FE1), HVY DUTY SUSP (FE7), (EXC DAYTIME RUNNING LGT (T61)	12126016	1	50.75	CONNECTOR, PWR ST ADJR RECL HARN (4–WAY M, W/LEADS) (11.556)	
90	Y 4–SPD A/TRANS (MD8), A/C AUTO ELEC CONT (C68)	12126016	1	50.75	CONNECTOR, PWR ST ADJR RECL HARN (4–WAY M, W/LEADS) (11.556)	
91	Y 4–SPD A/TRANS (MD8), 6–SPD M/TRANS (ML9), A/C MAN CONT (C60), A/C AUTO ELEC CONT (C68) ...	12126016	1	50.75	CONNECTOR, PWR ST ADJR RECL HARN (4–WAY M, W/LEADS) (11.556)	
94–96	Y	12101899	1	17.95	CONNECTOR, SW–DR AJAR IND (BLACK) (2–WAY F) (W/LEADS) (02.383) (AC–DELCO #PT169)	

*EXPORT*****************EXPORT*****************EXPORT*****************EXPORT*****************EXPORT*

91	Y 5.7J (LT5), 5.7–8 (L98), DAYTIME RUNNING LGT (T61)	12101917	2	20.58	CONNECTOR, PWR R/WDO CONT HARN (OVAL) (2–WAY F) (W/LEADS) (02.535) (AC–DELCO #PT189)	
90	Y 6–SPD M/TRANS (ML9), A/C AUTO ELEC CONT (C68), DAYTIME RUNNING LGT (T61)	12126016	1	50.75	CONNECTOR, PWR ST ADJR RECL HARN (4–WAY M, W/LEADS) (11.556)	

13.250 PANEL, Roof Panel Top Covering

92–96	Y07 REMOVABLE SUNROOF (CF7), DUAL REM RF (C2L) .	14081890	1	214.50	PANEL, RF TR (14.640)	10–G9,39

© 2000 GENERAL MOTORS SERVICE PARTS OPERATIONS–CHEVROLET–14Y

13.346 BAG – BOLT – BRACKET – ESCUTCHEON – GUIDE – HEADLINER – NUT – PLATE – PROTECTOR – RETAINER – RIVET – SPACER – STRIP – TAPE – TOP – WASHER – WEATHERSTRIP – WRENCH, Convertible and Hard Top

86–88	Y67	10149268	1	32.04	BAG, WRENCH RETAINER	
86–88	Y67	10137770	1	4.12	BOLT, HARDTOP RR (M6X1.0X65.0 HEX HD)	10–E2,12
89–96	Y67 AUX RF (CC2)	10175552	2	4.53	BOLT, R/TOP BODY L/PLR UPR BRKT (M8X1.25X24.25, 19OD)	10–E2,29
91–96	Y67 AUX RF (CC2)	10175553	2	4.53	BOLT, R/TOP BODY L/PLR UPR BRKT (M8X1.25X24.25;25.5OD)	10–E2,29
89–96	Y67 AUX RF (CC2)	14060161	4	*.86	BOLT, R/TOP NUT PLT (M8X1.25X15 POR) (03.023)	10–E2,7
89–91	Y67 AUX RF (CC2)	10137770	1	4.12	BOLT, REMOVABLE TOP (M6X1.0X65.0 HEX HD)	10–E2,12
89–91	Y67 AUX RF (CC2)	10175553	6	4.53	BOLT, REMOVABLE TOP (M8X1.25X24.25;25.5OD)	10–E2,29
92–96	Y67 AUX RF (CC2)	10137770	2	4.12	BOLT, REMOVABLE TOP	10–E2,12
86–88	Y67	10137785	LH	46.78	BRACKET, "B" PLR	10–E2,27
86–88	Y67	10137786	RH	46.78	BRACKET, "B" PLR	10–E2,27
89–96	Y67 AUX RF (CC2)	10137785	LH	46.78	BRACKET, R/TOP BODY L/PLR UPR	10–E2,27
89–96	Y67 AUX RF (CC2)	10137786	RH	46.78	BRACKET, R/TOP BODY L/PLR UPR	10–E2,27
89–96	Y67 AUX RF (CC2)	10123047	LH	13.07	BRACKET, R/TOP RR	10–E2,11
89–96	Y67 AUX RF (CC2)	10123048	RH	13.07	BRACKET, R/TOP RR	10–E2,11
86–88	Y67	10123047	LH	13.07	BRACKET, RR PIN HT	10–E2,11
86–88	Y67	10123048	RH	13.07	BRACKET, RR PIN HT	10–E2,11
86–93	Y67 CONV RF (C05)	10048841	1	8.60	ESCUTCHEON, F/TOP CVR LWR RR MLDG RR (BLACK) (10.219)	11–E7,25
86–94	Y67 CONV RF (C05)	10048843	1	8.60	ESCUTCHEON, F/TOP CVR LWR RR MLDG RR (SADDLE) (10.219)	11–E7,25
86–88	Y67	10137774	2	92.04	GUIDE, R/TOP BOLT	10–E2,15
89–96	Y67 AUX RF (CC2)	10137774	2	92.04	GUIDE, R/TOP BOLT	10–E2,15
86–88	Y67	10123059	1	272.56	HEADLINER, HARDTOP	
86–90	Y67	10051856	2	1.70	NUT, F/TOP FRT LAT LVR	11–E4,46
89–91	Y AUX RF (CC2)	10137771	AR	6.12	NUT, R/TOP BOLT GDE (M14X2.0–7.0 HEX JAM RR PIN MTG)	10–E2,13
92–96	Y67 AUX RF (CC2)	10137771	2	6.12	NUT, R/TOP BOLT GDE (M14X2.0–7.0 HEX JAM RR PIN MTG)	10–E2,13
91–96	Y67 AUX RF (CC2)	14105190	2	6.46	PLATE, R/TOP NUT (12.810)	10–E2,33
86–88	Y67	10137776	2	3.56	PROTECTOR, SPACER SLEEVE	10–E2,16
86–88	Y67	10123053	LH	36.87	RETAINER, "B" PLR	
86–88	Y67	10123054	RH	36.87	RETAINER, "B" PLR	
86–93	Y67 CONV RF (C05)	10051858	1	DISCON	RETAINER, F/TOP HDLNG TR FIN PNL #1 BOW	
94–96	Y67 CONV RF (C05)	10242136	1	60.51	RETAINER, F/TOP HDLNG TR FIN PNL #1 BOW	11–E16,7
86–88	Y67	10137751	LH	53.90	RETAINER, W/STR DR RAIL	
86–88	Y67	10137752	RH	53.90	RETAINER, W/STR DR RAIL	
86–90	Y67 CONV RF (C05)	10064339	4	2.15	RIVET, F/TOP RR LAT STKR BRKT	11–E4,6
91–96	Y67 CONV RF (C05)	10064339	10	2.15	RIVET, F/TOP RR LAT STKR BRKT	11–E4,6
89–96	Y67 AUX RF (CC2)	10137775	8	2.20	RIVET, R/TOP RR BRKT	10–E2,10
89–96	Y67 AUX RF (CC2)	10137776	2	3.56	SPACER, R/TOP BOLT GDE	10–E2,16
86–88	Y67	10123058	1	241.80	STRIP, WEATHER BELT	10–E2,8
86–89	Y67	10137781	1	DISCON	TAPE, FOAM B/L SEALING (6.35X10.0)	
86–90	Y67 (67T)	10153653	1	DISCON	TOP, FLDG (SADDLE)	

© 2000 GENERAL MOTORS SERVICE PARTS OPERATIONS–CHEVROLET–14Y

13.346 BAG – BOLT – BRACKET – ESCUTCHEON – GUIDE – HEADLINER – NUT – PLATE – PROTECTOR – RETAINER – RIVET – SPACER – STRIP – TAPE – TOP – WASHER – WEATHERSTRIP – WRENCH, Convertible and Hard Top (Con't)

86–93	Y67 CONV RF (C05), (10T) ..	10198721	1	DISCON	TOP, FLDG (WHITE)	
86–90	Y67 (19T)	10198725	1	3890.00	TOP, FLDG (BLACK)	11–E7,2
86–87	Y67 (19T)	14100301	1	3890.00	TOP, FLDG (BLACK)	
91	Y67 CONV RF (C05), (29T) ..	10198723	1	DISCON	TOP, FLDG (SAPPHIRE)	
91–93	Y67 CONV RF (C05), (41T) ..	10198725	1	3890.00	TOP, FLDG (BLACK)	11–E7,2
91–96	Y67 CONV RF (C05), (16T) ..	10276976	1	3930.00	TOP, FLDG (WHITE)	11–E16,2
92	Y67 CONV RF (C05), (29T) ..	10198723	1	DISCON	TOP, FLDG (SAPPHIRE)	
92–93	Y67 CONV RF (C05), (68T) ..	10198724	1	3890.00	TOP, FLDG (BEIGE)	11–E16,2
93	Y67 CONV RF (C05), (71T) ..	10208329	1	3890.00	TOP, FLDG (RED)	11–E16,2
94–96	Y67 CONV RF (C05), (41T) ..	10276972	1	3930.00	TOP, FLDG (BLACK)	
94	Y67 CONV RF (C05)	10276973	1	3930.00	TOP, FLDG (BEIGE)	11–E16,2
95–96	Y67 CONV RF (C05)	10276973	1	3930.00	TOP, FLDG (BEIGE)	11–E16,2
86–88	Y67	12508700	1	3930.00	TOP, REMOVABLE (PAINT TO MATCH) (RETROFIT PKG 12341183 USED TO COMPLETE INSTALLATION ON 1986–88 Y67 CONVERTIBLE MODELS, RR DEFG TO BE USED AS REQ) ..	10–E2,28
89–96	Y67 AUX RF (CC2)	12508700	1	3930.00	TOP, REMOVABLE (PAINT TO MATCH) (RR DEFG TO BE USED AS REQ)	10–E2,28
89–91	Y AUX RF (CC2)	10137772	AR	5.00	WASHER, R/TOP BOLT GDE (1.635X.661X.085)	10–E2,14
92–96	Y67 AUX RF (CC2)	10137772	2	5.00	WASHER, R/TOP BOLT GDE (1.635X.661X.085)	10–E2,14
86–91	Y67	14092676	1	59.90	WEATHERSTRIP, F/TOP RR	9–D7,9
92–96	Y67 CONV RF (C05)	14092676	1	59.90	WEATHERSTRIP, F/TOP RR	9–D7,9
89–96	Y67 AUX RF (CC2)	10123058	1	241.80	WEATHERSTRIP, R/TOP RR	10–E2,8
86–88	Y67	10137741	1	37.00	WRENCH, HARDTOP REMOVAL .	10–E2,18
84–88	Y67	10172311	1	66.30	WRENCH, R/TOP (12.810)	10–E2,18
89–96	Y67 AUX RF (CC2)	10137741	1	37.00	WRENCH, R/TOP (REMOVAL) (BOX END)	10–E2,18
89–96	Y67 AUX RF (CC2)	10172311	1	66.30	WRENCH, R/TOP (RATCHET) (12.810)	10–E2,18

13.347 COVER – COVER KIT – GUIDE – PAD – PANEL – RETAINER – TAPE, Convertible Top Cover

83–96	Y67 CONV RF (C05), (41T) ..	12529077	1	1150.00	COVER KIT, F/TOP (W/GLASS BACKLITE, ON INITIAL INSTALL MUST BE USED W/HARDWARE KIT 12522961) (BLACK)	11–E16,25
86–96	Y67 CONV RF (C05), (10T), (16T)	12529079	1	1150.00	COVER KIT, F/TOP (W/GLS BACKLITE, ON INITIAL INSTALL MUST USE T/W HARDWARE KIT 12522961) (WHITE)	11–E16,25
91–94	Y67 CONV RF (C05), (68T) ..	12529078	1	1150.00	COVER KIT, F/TOP (W/GLASS BACKLITE, ON INITIAL INSTALL MUST BE USED W/HARDWARE KIT 12522961) (BEIGE)	11–E16,25
95–96	Y67 CONV RF (C05)	12529078	1	1150.00	COVER KIT, F/TOP (BEIGE)	11–E16,25
86–90	Y67 (67T)	10153656	1	DISCON	COVER, F/TOP	
86–90	Y67	10198656	1	954.00	COVER, F/TOP (W/PLASTIC BACKLITE) (WHITE)	11–E7,25
86–90	Y67	10198659	1	954.00	COVER, F/TOP (W/PLASTIC BACKLITE) (BLACK)	11–E7,25

© 2000 GENERAL MOTORS SERVICE PARTS OPERATIONS–CHEVROLET–14Y

13.347 COVER – COVER KIT – GUIDE – PAD – PANEL – RETAINER – TAPE, Convertible Top Cover (Con't)

91–93	Y67 CONV RF (C05), (10T) ..	10198656	1	954.00	COVER, F/TOP (W/PLASTIC BACKLITE) (WHITE)	11–E7,25
91–92	Y67 CONV RF (C05), (29T) ..	10198658	1	DISCON	COVER, F/TOP (SAPPHIRE)	
91–93	Y67 CONV RF (C05), (41T) ..	10198659	1	954.00	COVER, F/TOP (W/PLASTIC BACKLITE) (BLACK)	11–E7,25
91–93	Y67 CONV RF (C05), (68T) ..	10198660	1	954.00	COVER, F/TOP (W/PLASTIC BACKLITE) (BEIGE)	11–E11,10
93	Y67 CONV RF (C05), (71T) ..	10210167	1	DISCON	COVER, F/TOP (RED)	
94–96	Y67 CONV RF (C05)	10239821	2	3.20	GUIDE, F/TOP CVR	
86–96	Y67 CONV RF (C05)	10048844	2	35.34	PAD, F/TOP #1, #2, #3, #4 BOW POSN	11–E7,16
86–90	Y67 CONV RF (C05)	10248379	1	200.00	PANEL, F/TOP HDLNG TR FIN (BLACK)	11–E7,26
91–96	Y67 CONV RF (C05)	10248379	1	200.00	PANEL, F/TOP HDLNG TR FIN (BLACK)	11–E7,26
86–90	Y67	10048847	1	27.50	RETAINER, F/TOP CVR #1 BOW	11–E7,21
91–96	Y67 CONV RF (C05)	10048847	1	27.50	RETAINER, F/TOP CVR #1 BOW	11–E7,21
86–94	Y67 CONV RF (C05)	10048848	2	DISCON	RETAINER, F/TOP CVR #2 BOW	
86–94	Y67 CONV RF (C05)	10048845	LH	5.00	RETAINER, F/TOP CVR OTR ARM .	11–E7,11
86–94	Y67 CONV RF (C05)	10048846	RH	5.00	RETAINER, F/TOP CVR OTR ARM .	11–E7,11
86–96	Y67 CONV RF (C05)	20498745	3	1.20	TAPE, F/TOP HDLNG TR FIN PNL FSTN (VELCRO TAPE, HOOK) (14.640)	11–E4,52

13.349 RETAINER, Folding Top Side Pad

86–96	Y67 CONV RF (C05)	10248370	1	26.00	RETAINER, F/TOP HDLNG TR FIN PNL #4 BOW	11–E7,17

13.365 FRAME, Folding Top

86–90	Y67	14100304	1	2623.00	FRAME, F/TOP (LESS TR & HEADLINER)	11–E7,2
91–93	Y67 CONV RF (C05)	14100304	1	2623.00	FRAME, F/TOP (LESS TR & HEADLINER)	11–E7,2
94	Y67 CONV RF (C05)	10276983	1	4006.00	FRAME, F/TOP	11–E16,2
95–96	Y67 CONV RF (C05)	10276983	1	4006.00	FRAME, F/TOP	11–E16,2

13.395 GUIDE – HARDWARE KIT – PAD – PROTECTOR – SPACER – SUPPORT, Folding Top Back Window

94–95	Y67 CONV RF (C05)	10239819	1	3.46	GUIDE, F/TOP R/WDO	
86–93	Y67 (10T)	12522961	1	169.32	HARDWARE KIT, F/TOP RR WDO (T/W 10233512)	
86–93	Y67 (41T)	12522961	1	169.32	HARDWARE KIT, F/TOP RR WDO (T/W 10233513)	
91–93	Y67 (68T)	12522961	1	169.32	HARDWARE KIT, F/TOP RR WDO (T/W 10233511)	
86–93	Y67	10248381	LH	31.50	PAD, F/TOP #4 & #5 BOW POSN	11–E7,8
86–90	Y67	10248382	RH	30.67	PAD, F/TOP #4 & #5 BOW POSN	11–E7,8
91–96	Y67 CONV RF (C05)	10248382	RH	30.67	PAD, F/TOP #4 & #5 BOW POSN	11–E7,8
94–96	Y67 CONV RF (C05)	10248381	LH	31.50	PAD, F/TOP #4 & #5 BOW POSN	11–E7,8
86–96	Y67 CONV RF (C05)	10051886	1	148.48	PROTECTOR, F/TOP R/WDO ...	11–E7,1
94–95	Y67 CONV RF (C05)	10255032	2	3.05	SPACER, F/TOP R/WDO GDE ...	
94–96	Y67 CONV RF (C05)	10239822	2	7.07	SUPPORT, F/TOP R/WDO	

© 2000 GENERAL MOTORS SERVICE PARTS OPERATIONS–CHEVROLET–14Y

MICROFICHE INDEX

GROUPS 12.000 THRU 13.000

FICHE 10 OF 11

GROUP	DESCRIPTION	STARTING GRID LOCATION PARTS	ILLUSTRATIONS
–	GENERAL INFORMATION	1–A2	1–G2
–	ALPHABETICAL INDEX	1–B13	N.A.
12.000	BODY MOLDINGS – SHEET METAL	10–A2	10–D2
13.000	BODY WIRING – VINYL TOP TRIM	10–C2	N.A.
–	OUT OF FICHE CALLS	N.A.	10–M22

10–D1

CHEVROLET
BODY GROUP 12.000

ILLUSTRATION INDEX

	TITLE	GRID
1984–1986	Y MOLDINGS/BODY	10–D5
1987–1990	Y MOLDINGS/BODY	10–D7
1988	Y MOLDINGS/BODY (Z01)	10–D9
1991–1995	Y MOLDINGS/BODY (ZR1)	10–D10
1991–1995	Y MOLDINGS/BODY (EXC ZR1)	10–D14
1996	Y MOLDINGS/BODY	10–D14
1995	Y STRIPES/BODY INDY PACE CAR(Z4Z)	10–D17
1996	Y STRIPES/BODY (Z16)	10–D19
1984–1996	Y SPOILER/REAR COMPARTMENT LID	10–D21
1986–1988	Y67 HARDTOP/REMOVABLE	10–D24
1989–1990	Y67 HARDTOP/REMOVABLE (CC2)	10–D24
1991–1996	Y67 HARDTOP/REMOVABLE	10–E2
1984–1989	Y07 SHEET METAL/BODY	10–E5
1984–1989	Y SHEET METAL/BODY FRONT END	10–E8
1986–1989	Y67 SHEET METAL/BODY	10–E11
1990–1991	Y SHEET METAL/BODY PART 1 BODY FRAME	10–E15
1990–1991	Y07 SHEET METAL/BODY PART 2 BODY FRAME	10–E19
1990–1992	Y67 SHEET METAL/BODY PART 2 FRAME	10–E24
1992–1993	Y07 SHEET METAL/BODY PART 2 BODY FRAME	10–F2
1992–1996	Y SHEET METAL/BODY PART 1 FRAME	10–F7
1993	Y67 SHEET METAL/BODY PART 2 FRAME	10–F10
1994–1996	Y67 SHEET METAL/BODY PART 2 FRAME	10–F15
1994–1996	Y07 SHEET METAL/BODY PART 2 BODY FRAME	10–F20
1984–1987	Y ROOF HARDWARE/LIFT OFF PANELS	10–F25
1988	Y ROOF HARDWARE/LIFT OFF PANELS (C2L,CC3,CF7)	10–G2
1989–1992	Y ROOF HARDWARE/LIFT OFF PANELS (C2L,CC3,CF7)	10–G5
1993–1996	Y ROOF HARDWARE/LIFT OFF PANELS (C2L,CC3,CF7)	10–G9
1989–1993	Y67 LUGGAGE CARRIER/REAR COMPARTMENT	10–G14
1984–1989	Y07 BODY/REAR OUTER	10–G16
1990	Y07 BODY/REAR (EXC ZR1)	10–G16
1986–1991	Y07 BODY/REAR OUTER	10–G19
1990–1991	Y07 BODY/REAR OUTER(ZR1)	10–G22
1991	Y07 BODY/REAR (EXC ZR1)	10–H2
1992	Y67 BODY/REAR OUTER	10–H6
1992–1995	Y07 BODY/REAR OUTER(ZR1)	10–H9
1992–1995	Y07 BODY/REAR (EXC ZR1)	10–H15
1996	Y07 BODY/REAR	10–H15
1993–1996	Y67 BODY/REAR OUTER	10–H20
1990–1991	Y67 INSULATOR/BODY	10–H25
1990–1996	Y07 INSULATOR/BODY	10–H27
1992–1996	Y67 INSULATOR/BODY	10–I2
1984–1989	Y07 COMPARTMENT/REAR STORAGE ROOF HARDWARE PANEL	10–I4
1984–1989	Y07 COMPARTMENT/REAR STORAGE	10–I5
1990–1992	Y67 COMPARTMENT/REAR STORAGE	10–I6
1990–1993	Y07 COMPARTMENT/REAR STORAGE	10–I8

ILLUSTRATION INDEX

	TITLE	GRID
1990–1996	Y07 COMPARTMENT/REAR STORAGE ROOF HARDWARE PANEL	10–I10
1993	Y67 COMPARTMENT/REAR STORAGE	10–I13
1994–1996	Y07 COMPARTMENT/REAR STORAGE	10–I15
1994–1996	Y67 COMPARTMENT/REAR STORAGE	10–I17

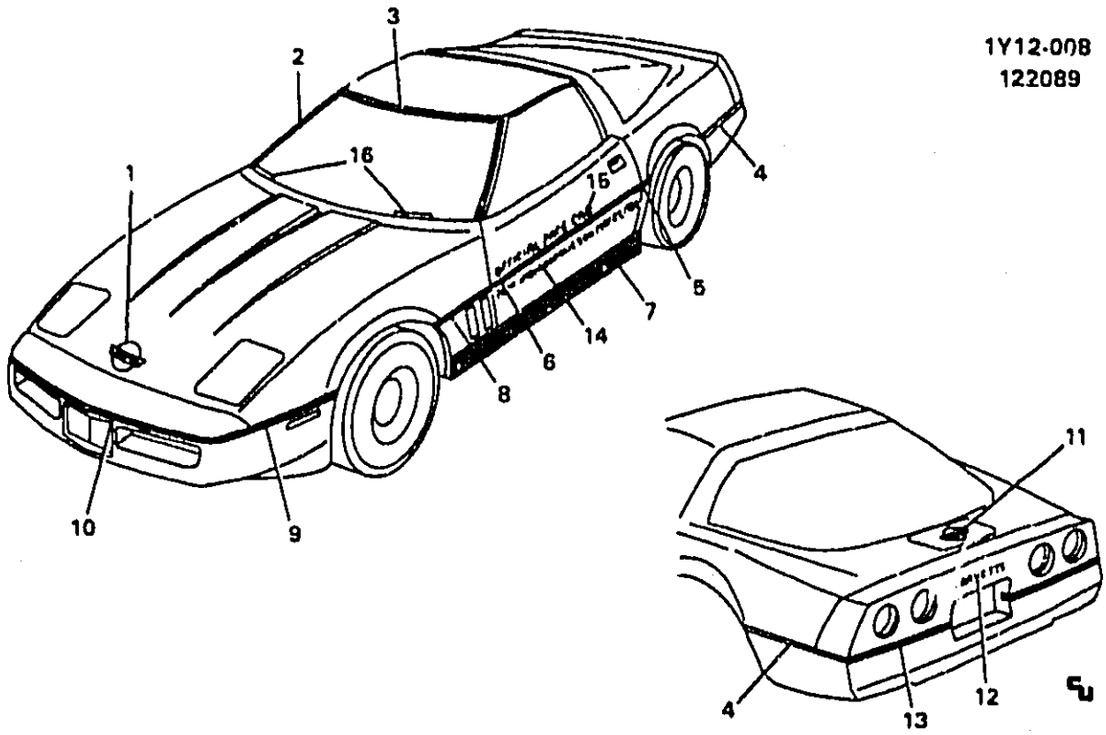

1984-1986 Y MOLDINGS/BODY

1.	10-N11	8.055	EMBLEM, HOOD (BOWTIE)	14060259
2.	10-N17	10.093	MOLDING, W/S SI RVL-RH	14049032
	10-N17	10.093	MOLDING, W/S SI RVL-LH	14049031
3.	10-N17	10.093	MOLDING, W/S UPR RVL	14049033
4.	10-N7	7.832	MOLDING, RR BPR FASCIA OTR-RH	14043134
	10-N7	7.832	MOLDING, RR BPR FASCIA OTR-LH	14043133
5.	10-A9	12.116	MOLDING, RR QTR-RH	14043100
	10-A9	12.116	MOLDING, RR QTR-LH	14043099
6.	10-A8	12.112	MOLDING, DR-RH	14043098
	10-A8	12.112	MOLDING, DR-LH	14043097
7.	10-A27	12.934	PANEL, RKR-RH	10288348
	10-A27	12.934	PANEL, RKR-LH	10288347
	10-A27	12.934	REINFORCEMENT, RKR PNL (LOCATED AT FRT OF RKR PNL)	14051121
8.		DISCON	MOLDING, F/FDR-RH (1984)	14043096
	10-N14	8.132	MOLDING, F/FDR-RH (1985-86)	14084410
	10-N14	8.132	MOLDING, F/FDR-LH (1984)	14043095
	10-N14	8.132	MOLDING, F/FDR-LH (1985-86)	14084409
9.	10-N7	7.832	MOLDING, FRT BPR FASCIA OTR-RH	14043090
	10-N7	7.832	MOLDING, FRT BPR FASCIA OTR-LH	14043089
10.	10-N7	7.832	MOLDING, FRT BPR FASCIA CTR	14043087
11.	10-B3	12.945	EMBLEM, F/TK FIL DR	14060260
12.	10-N7	7.832	PLATE, RR BPR FASCIA NA (BRI SILVER MET)	14058697
	10-N7	7.832	PLATE, RR BPR FASCIA NA (WHITE)	14064530
	10-N7	7.832	PLATE, RR BPR FASCIA NA (SPECTRA RED)	14064531
		DISCON	PLATE, RR BPR FASCIA NA (LT BLUE MET)	14064534
		DISCON	PLATE, RR BPR FASCIA NA (MED BLUE MET)	14064535
	10-N7	7.832	PLATE, RR BPR FASCIA NA (MED GRAY MET)	14064538
		DISCON	PLATE, RR BPR FASCIA NA (LT BRONZE MET)	14064539
		DISCON	PLATE, RR BPR FASCIA NA (DK BRONZE MET)	14064540
	10-N7	7.832	PLATE, RR BPR FASCIA NA (GOLD MET)	14064541

© 2000 GENERAL MOTORS SERVICE PARTS OPERATIONS-CHEVROLET-14Y

				1Y12-008
13.	10-N7	7.832	**MOLDING**, RR BPR FASCIA CTR-RH	14043140
	10-N7	7.832	**MOLDING**, RR BPR FASCIA CTR-LH	14043139
14.		DISCON	**DECAL**, DR LWR NA-RH "70TH INDY 500 MAY 25, 1986" (1986)	10048896
		DISCON	**DECAL**, DR LWR NA-LH "70TH INDY 500 MAY 25, 1986" (1986)	10048895
15.		DISCON	**DECAL**, DR UPR NA-RH "OFFICIAL PACE CAR" (BLACK, GOLD) (SEE PARTS SECTION FOR ADDITIONAL COLORS & TRIM COMBINATIONS)	10050932
		DISCON	**DECAL**, DR UPR NA-LH "OFFICIAL PACE CAR" (BLACK, GOLD) (SEE PARTS SECTION FOR ADDITOINAL COLORS & TRIM COMBINATIONS)	10050931
16.	10-N17	10.093	**MOLDING**, W/S (1986)	10045695

© 2000 GENERAL MOTORS SERVICE PARTS OPERATIONS-CHEVROLET-14Y

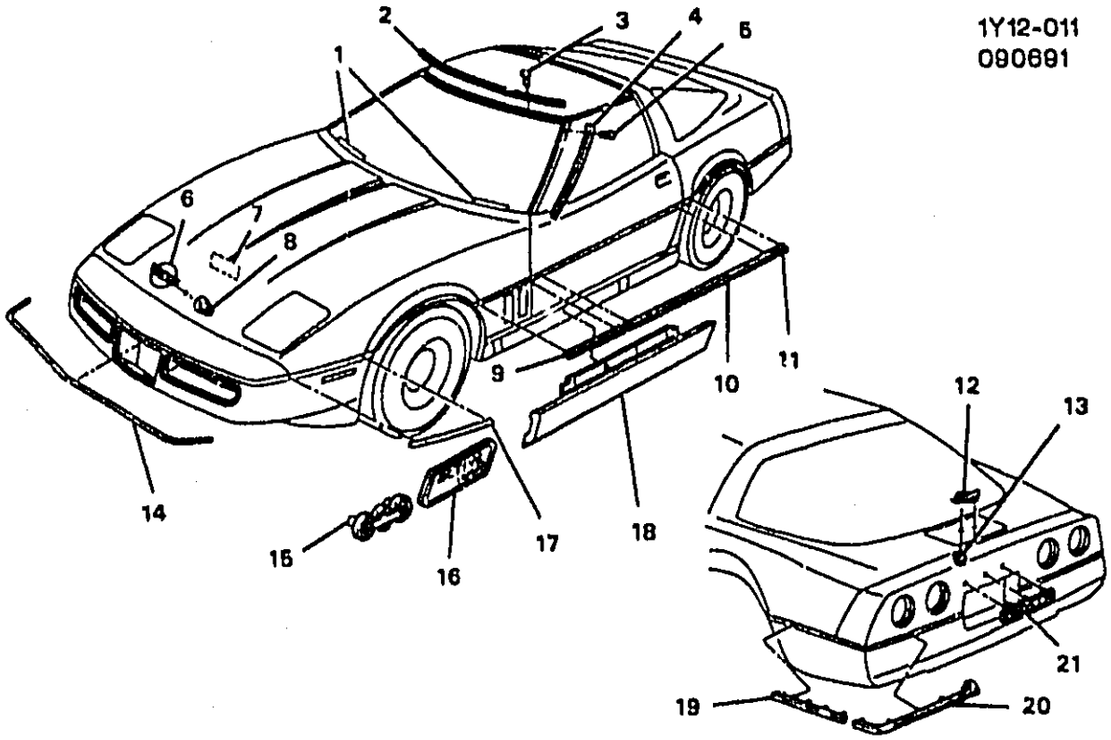

1Y12-011

1987-1990 Y MOLDINGS/BODY

1.	10-N17	10.093	MOLDING, W/S	10045695
2.	10-N17	10.093	MOLDING, W/S UPR	14049033
3.		8.977	SCREW, RD WA HD C/R TAP (M4.2X1.41X13) BLK ORG	10180421
4.	10-N17	10.093	MOLDING, W/S SI-RH	14049032
	10-N17	10.093	MOLDING, W/S SI-LH	14049031
5.		8.977	SCREW, OV HD C/R TAP (M4.2X1.41X13) ZN	11515037
6.	10-N11	8.055	EMBLEM, HOOD (BOWTIE) (1987, 1989-90) (1988 EXC B57)	14060259
	10-N11	8.055	EMBLEM, HOOD (BOWTIE) (1988 B57)	10123018
7.	10-N11	8.055	EMBLEM, HOOD UND SI NA "CHEVROLET CORVETTE BOWLING GREEN, KY"	10175789
8.		8.921	NUT, MET (5MM ID)	11501793
9.	10-N14	8.132	MOLDING, FDR-RH (1987, 1989-90) (1988 EXC B57)	14084410
		DISCON	MOLDING, FDR-RH (1988 B57)	10123038
	10-N14	8.132	MOLDING, FDR-LH (1987, 1989-90) (1988 EXC B57)	14084409
		DISCON	MOLDING, FDR-LH (1988 B57)	10123037
10.	10-A8	12.112	MOLDING, DR-RH (1987, 1989-90) (1988 EXC B57)	14043098
		DISCON	MOLDING, DR-RH (1988 B57)	10123008
	10-A8	12.112	MOLDING, DR-LH (1987, 1989-90) (1988 EXC B57)	14043097
		DISCON	MOLDING, DR-LH (1988 B57)	10123007
11.	10-A9	12.116	MOLDING, RR QTR-RH (1987, 1989-90) (1988 EXC B57)	14043100
		DISCON	MOLDING, RR QTR-RH (1988 B57)	10123010
	10-A9	12.116	MOLDING, RR QTR-LH (1987, 1989-90) (1988 EXC B57)	14043099
		DISCON	MOLDING, RR QTR-LH (1988 B57)	10123009
12.	10-B3	12.945	EMBLEM, F/TNK FIL DR (1987, 1989) (1988 EXC B57) (1990 FE1, FE7)	14060260

© 2000 GENERAL MOTORS SERVICE PARTS OPERATIONS-CHEVROLET-14Y

				1Y12-011
		DISCON	EMBLEM, F/TNK FIL DR (1988 B57)	10123019
13.		8.919	NUT, MET LOW CRN (M5X0.8) CHR	11503674
		8.929	WASHER, FLT (10MM) (11X40X3) THK STL	11500367
14.	10-N7	7.832	MOLDING, FRT BPR (CTR) (1987, 1989-90) (1988 EXC B57)	14043087
		DISCON	MOLDING, FRT BPR (CTR) (1988 B57)	10123017
15.		DISCON	EMBLEM, HOOD SI (FLAGS, BOWTIE, 35) (1988 B57)	10123021
16.		N.S.	EMBLEM, HOOD SI "ACTIVE SUSPENSION" (1990 FEO)	
17.	10-N7	7.832	MOLDING, FRT BPR-RH (OTR) (1987, 1989-90) (1988 EXC B57)	14043090
		DISCON	MOLDING, FRT BPR-RH (OTR) (1988 B57)	10123016
	10-N7	7.832	MOLDING, FRT BPR-LH (OTR) (1987, 1989-90) (1988 EXC B57)	14043089
		DISCON	MOLDING, FRT BPR-LH (OTR) (1988 B57)	10123015
18.	10-A27	12.934	PANEL, RKR-RH	10288348
	10-A27	12.934	PANEL, RKR-LH	10288347
19.	10-N7	7.832	MOLDING, RR BPR-RH (OTR) (1987, 1989-90) (1988 EXC B57)	14043134
		DISCON	MOLDING, RR BPR-RH (OTR) (1988 B57)	10123012
	10-N7	7.832	MOLDING, RR BPR-LH (OTR) (1987, 1989-90) (1988 EXC B57)	14043133
		DISCON	MOLDING, RR BPR-LH (OTR) (1988 B57)	10123011
20.	10-N7	7.832	MOLDING, RR BPR-RH (CTR) (1987, 1989-90) (1988 EXC B57)	14043140
		DISCON	MOLDING, RR BPR-RH (CTR) (1988 B57)	10123014
	10-N7	7.832	MOLDING, RR BPR-LH (CTR) (1987, 1989-90) (1988 EXC B57)	14043139
		DISCON	MOLDING, RR BPR-LH (CTR) (1988 B57)	10123013
21.	10-N7	7.832	PLATE, RR BPR NA "CORVETTE" (BLACK SILVER BORDER 13U, 28U, 96U) (SEE PARTS SECTION FOR ADDITIONAL COLORS & TRIM COMBINATIONS)	14058697
22.		8.921	NUT, U-TYPE (6.3X1.81) PZOR	11509582
23.		8.921	NUT, ANC (8X18) NY	1377030
24.		8.921	NUT, U-SHAPE (M4.2X1.41X.065) ZOR (AC-DELCO #15650655)	15650655

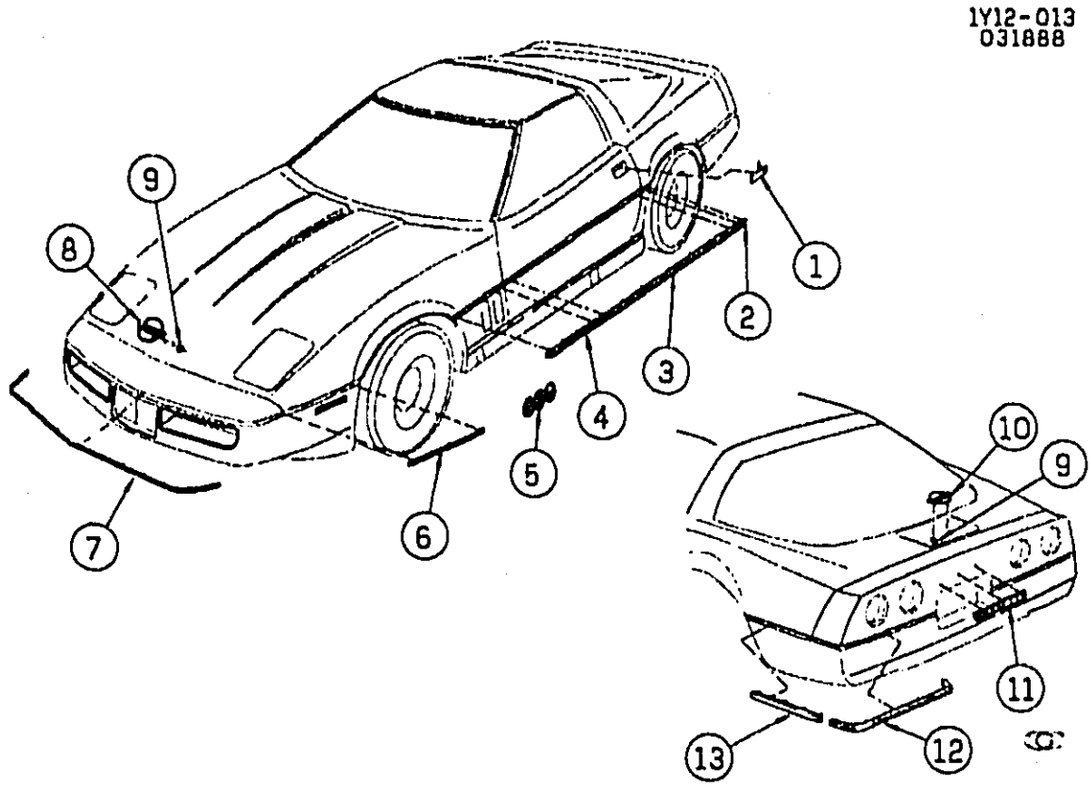

1Y12-013

1988 Y MOLDINGS/BODY (Z01)

1.		DISCON	HANDLE, FRT DR O/S-LH (WHITE)	10123041
		DISCON	HANDLE, FRT DR O/S-RH (WHITE)	10123042
2.		DISCON	MOLDING, RR QTR-LH	10123009
		DISCON	MOLDING, RR QTR-RH	10123010
3.		DISCON	MOLDING, F/D-LH	10123007
		DISCON	MOLDING, F/D-RH	10123008
4.		DISCON	MOLDING, F/FDR-LH	10123037
		DISCON	MOLDING, F/FDR-RH	10123038
5.		DISCON	EMBLEM, HOOD SIDE (FLAGS/BOWTIE/35)	10123021
6.		DISCON	MOLDING, FRT BPR FASCIA-LH (OTR)	10123015
		DISCON	MOLDING, FRT BPR FASCIA-RH (OTR)	10123016
7.		DISCON	MOLDING, FRT BPR FASCIA (CTR)	10123017
8.	10-N11	8.055	EMBLEM, HOOD TOPSIDE (BOWTIE)	10123018
9.		8.921	NUT, MET STAMPED 5 MM ID	11501793
10.		DISCON	EMBLEM, F/TNK FIL DR	10123019
11.		DISCON	PLATE, RR BPR FASCIA NA "CORVETTE"	10123020
12.		DISCON	MOLDING, RR BPR FASCIA-LH (CTR)	10123013
		DISCON	MOLDING, RR BPR FASCIA-RH (CTR)	10123014
13.		DISCON	MOLDING, RR BPR FASCIA-LH (OTR)	10123011
		DISCON	MOLDING, RR BPR FASCIA-RH (OTR)	10123012

© 2000 GENERAL MOTORS SERVICE PARTS OPERATIONS-CHEVROLET-14Y

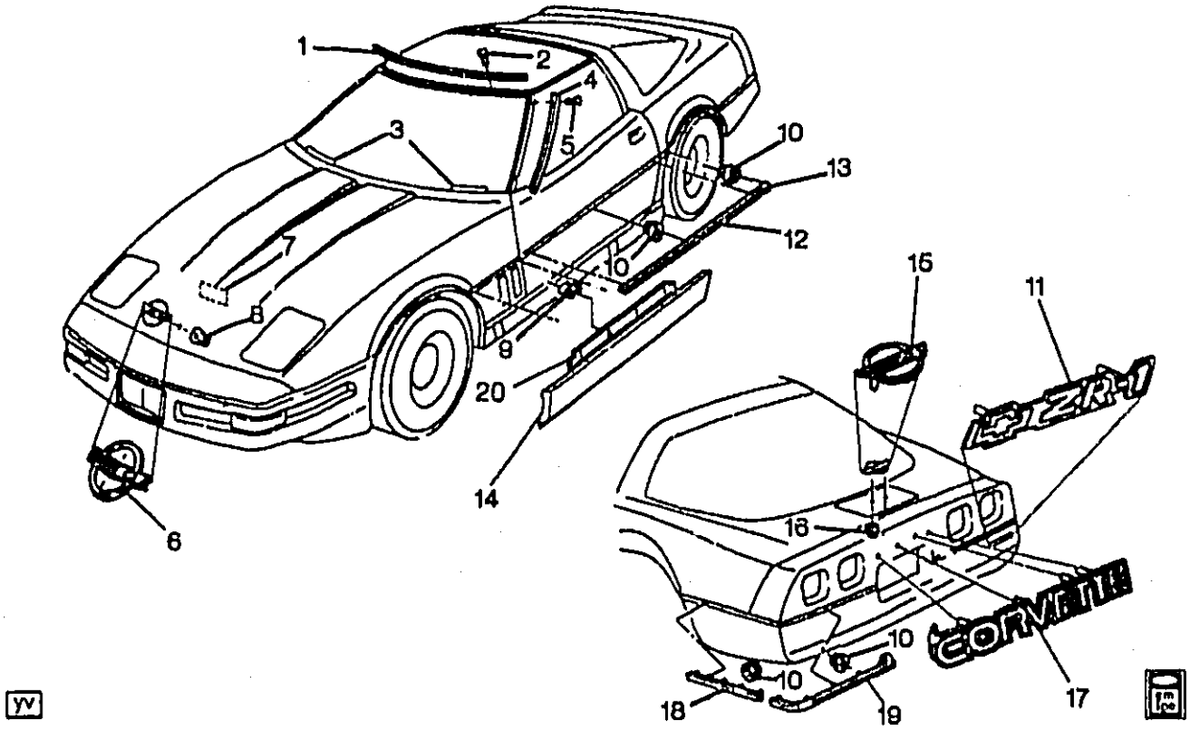

1Y12-025

1991-1995 Y MOLDINGS/BODY (ZR1)

1.	10-N17	10.093	**MOLDING**, W/S UPR RVL (INCLS UPR WEATHER STRIP RET)	91-95	Y	1	14049033
2.		8.977	**SCREW**, LG RND WA HD W/BLK NYL WA, 4.2X 1.41X13, 11-OD, DRILL PT, 6172, PEOR	91-95	.....	AR	10180421
3.	10-N17	10.093	**MOLDING**, W/S	93-95	Y	2	10045695
	10-N17	10.093	**MOLDING**, W/S (LWR CORNERS)	91-92	Y	2	10045695
4.	10-N17	10.093	**MOLDING**, W/S SI RVL	91-95	Y	LH	14049031
	10-N17	10.093	**MOLDING**, W/S SI RVL	91-95	Y	RH	14049032
5.		8.977	**SCREW**, OV HD C/R, M4.2X1.41X13, TYPE AB, NZ	91-95	.....	AR	11515037
6.	10-N11	8.055	**EMBLEM**, HOOD (CHROME) (BOWTIE)	95	Y (Z4Z)	1	10198699
	10-N11	8.055	**EMBLEM**, HOOD (TOP SIDE) (BLACK) (BOWTIE)	94	Y	1	10209060
	10-N11	8.055	**EMBLEM**, HOOD (TOPSIDE) (BLACK) (BOWTIE)	91	Y (FE1, FE7)	1	10209060
	10-N11	8.055	**EMBLEM**, HOOD (TOPSIDE) (BLACK) (BOWTIE)	92	Y	1	10209060
	10-N11	8.055	**EMBLEM**, HOOD (TOPSIDE) (CHROME) (BOWTIE)	93	Y (Z25)	1	10198699
	10-N11	8.055	**EMBLEM**, HOOD (TOPSIDE) (BLACK) (BOWTIE)	93	Y (EXC Z25)	1	10209060
	10-N11	8.055	**EMBLEM**, HOOD (TOPSIDE) (BLACK) (BOWTIE)	95	Y (EXC Z4Z)	1	10209060
7.	10-N11	8.055	**EMBLEM**, HOOD (UNDERSIDE) (CHEVROLET CORVETTE, BOWLING GREEN, KY)	91-93	Y	1	10175789

© 2000 GENERAL MOTORS SERVICE PARTS OPERATIONS-CHEVROLET-14Y

							1Y12-025
	10-N11	8.055	EMBLEM, HOOD (CHROME) (BOWTIE)	95	Y (Z4Z)	1	10198699
	10-N11	8.055	EMBLEM, HOOD (TOP SIDE) (BLACK) (BOWTIE)	94	Y	1	10209060
	10-N11	8.055	EMBLEM, HOOD (TOPSIDE) (BLACK) (BOWTIE)	91	Y (FE1, FE7)	1	10209060
	10-N11	8.055	EMBLEM, HOOD (TOPSIDE) (BLACK) (BOWTIE)	92	Y	1	10209060
	10-N11	8.055	EMBLEM, HOOD (TOPSIDE) (CHROME) (BOWTIE)	93	Y (Z25)	1	10198699
	10-N11	8.055	EMBLEM, HOOD (TOPSIDE) (BLACK) (BOWTIE)	93	Y (EXC Z25)	1	10209060
	10-N11	8.055	EMBLEM, HOOD (TOPSIDE) (BLACK) (BOWTIE)	95	Y (EXC Z4Z)	1	10209060
	10-N11	8.055	EMBLEM, HOOD (CHROME) (BOWTIE)	95	Y (Z4Z)	1	10198699
	10-N11	8.055	EMBLEM, HOOD (TOP SIDE) (BLACK) (BOWTIE)	94	Y	1	10209060
	10-N11	8.055	EMBLEM, HOOD (TOPSIDE) (BLACK) (BOWTIE)	91	Y (FE1, FE7)	1	10209060
	10-N11	8.055	EMBLEM, HOOD (TOPSIDE) (BLACK) (BOWTIE)	92	Y	1	10209060
	10-N11	8.055	EMBLEM, HOOD (TOPSIDE) (CHROME) (BOWTIE)	93	Y (Z25)	1	10198699
	10-N11	8.055	EMBLEM, HOOD (TOPSIDE) (BLACK) (BOWTIE)	93	Y (EXC Z25)	1	10209060
	10-N11	8.055	EMBLEM, HOOD (TOPSIDE) (BLACK) (BOWTIE)	95	Y (EXC Z4Z)	1	10209060
8.		8.921	NUT, MET STAMPED 5 MM ID	91-95		AR	11501793
9.		8.921	NUT, ANCHOR THD SIZE 8-18 NYLON	91-95		AR	1377030
10.		8.915	NUT, CONICAL SPR WA, M5X.8, 15OD, 9 ZF	91-95		AR	11516066
11.	10-N7	7.832	EMBLEM, R/END FASCIA (WHITE) (BOWTIE, ZR1)	91-95	Y (ZR1, 10U)	2	10146443
		DISCON	EMBLEM, R/END FASCIA (BOWTIE, ZR1) (COLOR CODE WA9238) (LIGHT RED)	91-92	Y (ZR1, 75U)	1	10146446
	10-N7	7.832	EMBLEM, R/END FASCIA (RED) (BOWTIE, ZR1)	91-92	Y (ZR1, 81U)	2	10146447
	10-N7	7.832	EMBLEM, R/END FASCIA (BLACK/GRAY) (BOWTIE, Z21)	91	Y (ZR1, 41U, 96U)	1	10146448
		DISCON	EMBLEM, R/END FASCIA (BLUE) (BOWTIE, ZR1)	91-93	Y (ZR1, 80U)	1	10153679
		DISCON	EMBLEM, R/END FASCIA (TURQUOISE) (BOWTIE, ZR1)	91	Y (ZR1, 42U)	1	10153700
		DISCON	EMBLEM, R/END FASCIA (BLUE STEEL) (BOWTIE, ZR1)	91	Y (ZR1, 25U)	1	10172309
	10-N7	7.832	EMBLEM, R/END FASCIA (BLACK/GRAY) (BOWTIE, Z21)	91	Y (ZR1, 19U)	1	10146448
	10-N7	7.832	EMBLEM, R/END FASCIA (YELLOW) (BOWTIE, ZR1)	91-92	Y (ZR1, 35U)	1	10167090
	10-N7	7.832	EMBLEM, R/END FASCIA (AQUA) (BOWTIE, ZR1)	92-95	Y (ZR1, 43U)	1	10175826
	10-N7	7.832	EMBLEM, R/END FASCIA (BLACK ROSE) (BOWTIE, ZR1)	92-94	Y (ZR1, 73U)	1	10198747
	10-N7	7.832	EMBLEM, R/END FASCIA (BLACK)	92-95	Y (ZR1, 41U)	1	10268455

© 2000 GENERAL MOTORS SERVICE PARTS OPERATIONS-CHEVROLET-14Y

							1Y12-025
	10-N7	7.832	EMBLEM, R/END FASCIA (MARBLEHEAD GRAY)	92-95	Y (ZR1, 45U)	1	10268456
		DISCON	EMBLEM, R/END FASCIA (BOWTIE, ZR1) (COLOR CODE WA9238) (LIGHT RED)	93	Y (ZR1, 75U) (1ST DES)	1	10146446
	10-N7	7.832	EMBLEM, R/END FASCIA (YELLOW) (BOWTIE, ZR1)	93-95	Y (ZR1, 53U)	1	10153678
	10-N7	7.832	EMBLEM, R/END FASCIA (RED) (BOWTIE, ZR1)	93-95	Y (ZR1, 70U)	1	10198688
	10-N7	7.832	EMBLEM, R/END FASCIA (BOWTIE, ZR1) (COLOR CODE WA213A) (DARK RED)	93	Y (ZR1, 68U) (2ND DES)	1	10228815
		DISCON	EMBLEM, R/END FASCIA (BOWTIE, ZR1)	94-95	Y (ZR1, 75U)	1	10146446
	10-N7	7.832	EMBLEM, R/END FASCIA (CLOISONNE BLUE)	94-95	Y (ZR1, 28U)	1	10210902
		DISCON	EMBLEM, R/END FASCIA (MELON)	94	Y (ZR1, 66U)	1	10210905
	10-N7	7.832	EMBLEM, R/END FASCIA (CYCLAMAN)	95	Y (ZR1, 05U)	1	10233119
12.	10-A8	12.112	MOLDING KIT, FRT S/D CTR (PAINT TO MATCH)	91-95	Y	LH	12520819
	10-A8	12.112	MOLDING KIT, FRT S/D CTR (PAINT TO MATCH)	91-95	Y	RH	12520820
13.	10-A9	12.116	MOLDING KIT, R/Q CTR FRT (PAINT TO MATCH)	91-95	Y (ZR1)	LH	10174881
	10-A9	12.116	MOLDING KIT, R/Q CTR FRT (PAINT TO MATCH)	91-95	Y (ZR1)	RH	10174882
14.	10-A27	12.934	PANEL, RKR OTR	91-95	Y (ZR1)	LH	14104173
	10-A27	12.934	PANEL, RKR OTR	91-95	Y (ZR1)	RH	14104174
15.	10-B3	12.945	EMBLEM, F/TNK FIL DR (BLACK)	91-92	Y	1	10209061
	10-B3	12.945	EMBLEM, F/TNK FIL DR	93	Y (Z25)	1	10198700
	10-B3	12.945	EMBLEM, F/TNK FIL DR (BLACK)	93	Y (EXC Z25)	1	10209061
	10-B3	12.945	EMBLEM, F/TNK FIL DR (BLACK)	94	Y	1	10209061
	10-B3	12.945	EMBLEM, F/TNK FIL DR	95	Y (Z4Z)	1	10198700
	10-B3	12.945	EMBLEM, F/TNK FIL DR (BLACK)	95	Y (EXC Z4Z)	1	10209061
16.		8.919	NUT, MET LOW CROWN M5-0.8 CHR	91-95	.....	AR	11503674
17.	10-N7	7.832	PLATE, R/END FASCIA NA (BLUE, PAINT TO MATCH) (CORVETTE)	91	Y (ZR1, 25U)	1	10172313
		DISCON	PLATE, R/END FASCIA NA (SMOKE GRAY) (CORVETTE)	[illegible]	Y (ZR1, 41U, 91U, 96U)	1	10172314
		DISCON	PLATE, R/END FASCIA NA (TURQUOISE) (CORVETTE)	91	Y (ZR1, 42U)	1	10172315
	10-N7	7.832	PLATE, R/END FASCIA NA (RED) (CORVETTE)	91-95	Y (ZR1, 75U)	1	10172317
		DISCON	PLATE, R/END FASCIA NA (QUASAR) (CORVETTE)	91-93	Y (ZR1, 80U)	1	10172318
		DISCON	PLATE, R/END FASCIA NA (RED) (CORVETTE)	91-92	Y (ZR1, 81U)	1	10172319
	10-N7	7.832	PLATE, R/END FASCIA NA (AQUA) (CORVETTE)	92-95	Y (ZR1, 43U)	1	10175824
	10-N7	7.832	PLATE, R/END FASCIA NA (GREEN) (CORVETTE)	92-95	Y (ZR1, 45U)	1	10198742
	10-N7	7.832	PLATE, R/END FASCIA NA (BLACK ROSE) (CORVETTE)	92-94	Y (ZR1, 73U)	1	10198743
	10-N7	7.832	PLATE, R/END FASCIA NA (BLACK)	92-95	Y (ZR1, 41U)	1	10268451

© 2000 GENERAL MOTORS SERVICE PARTS OPERATIONS-CHEVROLET-14Y

								1Y12-025
		DISCON	PLATE, R/END FASCIA NA (RED)	93-95	Y (ZR1, 70U)		1	10198686
	10-N7	7.832	PLATE, R/END FASCIA NA (RED)	93	Y (ZR1, 68U)		1	10228814
	10-N7	7.832	PLATE, R/END FASCIA NA (YELLOW)	94-95	Y (ZR1, 53U)		1	10167089
	10-N7	7.832	PLATE, R/END FASCIA NA (BLUE)	94-95	Y (ZR1, 28U)		1	10210889
	10-N7	7.832	PLATE, R/END FASCIA NA (MELON)	94	Y (ZR1, 66U)		1	10210892
	10-N7	7.832	PLATE, R/END FASCIA NA (CYCLAMEN)	95	Y (ZR1, 05U)		1	10233113
		DISCON	PLATE, R/END FASCIA NA (INDY MTR SPDWY, WINGS & WHL)	95	Y (Z4Z)		1	10278422
	10-N7	7.832	PLATE, R/END FASCIA NA (CORVETTE) (YELLOW)	91-93	Y (ZR1, 35U, 53U)		1	10167089
	10-N7	7.832	PLATE, R/END FASCIA NA (CORVETTE) (WHITE)	91-95	Y (ZR1, 10U)		1	10172312
18.	10-A9	12.116	MOLDING, R/Q CTR RR (MUST ORDER NUT 11516066 QTY-5)	91-95	Y (ZR1)		LH	10135981
	10-A9	12.116	MOLDING, R/Q CTR RR (MUST ORDER NUT 11516066 QTY-5)	91-95	Y (ZR1)		RH	10135982
19.	10-N7	7.832	MOLDING KIT, RR BPR FASCIA CTR (PAINT TO MATCH)	91-95	Y (ZR1)		LH	10174848
	10-N7	7.832	MOLDING KIT, RR BPR FASCIA CTR (PAINT TO MATCH)	91-95	Y (ZR1)		RH	10174849
20.	10-A27	12.934	REINFORCEMENT, RKR OTR PNL (8.304)	91-95	Y		2	14051121

RPO DEFINITIONS

FE1 – SUSPENSION SYSTEM,SOFT RIDE
FE7 – SUSPENSION SYSTEM,FRONT AND REAR,HEAVY DUTY(USED WITH PERFORMANCE HANDLING PACKAGE Z51)
ZR1 – PACKAGE,SPECIAL PERFORMANCE COUPE(1YY07 + ZR1 == 1YZ07)
Z25 – APPEARANCE PACKAGE 40TH ANNIVERSARY(LIMITED EDITION)
Z4Z – MERCHANDISED PKG INDY PACE CAR
05U – PRIMARY COLOR EXTERIOR, CYCLAMEN (95)
10U – EXTERIOR COLOR,ARTIC WHITE
19U – PRIMARY COLOR,EXTERIOR,BLACK
25U – EXTERIOR COLOR,PRIMARY,STEEL BLUE METALLIC
28U – EXTERIOR COLOR,PRIMARY,DK CLOISONNE BLUE MET
35U – EXTERIOR COLOR,PRIMARY,YELLOW
41U – EXTERIOR COLOR,PRIMARY,BLACK
42U – EXTERIOR COLOR,PRIMARY,TURQUOISE MET
43U – EXTERIOR COLOR,PRIMARY,BRT AQUA METALLIC
45U – EXTERIOR COLOR–MEDIUM GREEN METALLIC
53U – EXTERIOR COLOR,PRIMARY,COMPETITION YELLOW
66U – EXTERIOR COLOR,PRIMARY,LT MELON
68U – EXTERIOR COLOR,PRIMARY,BRILLIANT RED MET
70U – EXTERIOR COLOR,TORCH RED
73U – EXTERIOR COLOR,BLACK ROSE METALLIC
75U – EXTERIOR COLOR,PRIMARY,BRILLIANT RED METALLIC
80U – EXTERIOR COLOR,PRIMARY,MED QUASAR BLUE MET
81U – EXTERIOR COLOR,PRIMARY,BRIGHT RED
91U – EXTERIOR COLOR,PRIMARY,DARK ARGENT
96U – PRIMARY COLOR– EXTERIOR,DK. SMOKE GRAY MET.

© 2000 GENERAL MOTORS SERVICE PARTS OPERATIONS–CHEVROLET–14Y

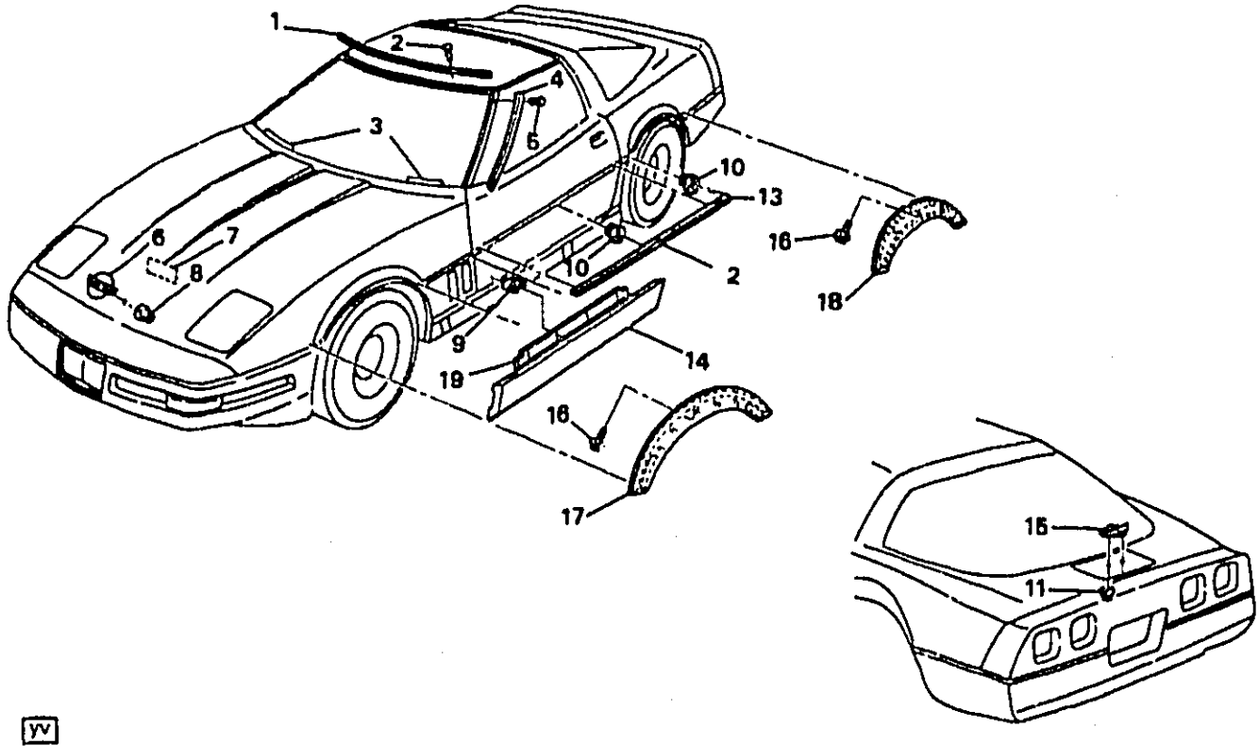

1Y12-026

1991-1995 Y MOLDINGS/BODY (EXC ZR1)
1996 Y MOLDINGS/BODY

1.	10-N17	10.093	**MOLDING**, W/S UPR RVL (INCLS UPR WEATHER STRIP RET)	91-96	Y	1	14049033
2.		8.977	**SCREW**, LG RND WA HD W/BLK NYL WA, 4.2X 1.41X13, 11-OD, DRILL PT, 6172, PEOR	91-96	.....	AR	10180421
3.	10-N17	10.093	**MOLDING**, W/S	93-96	Y	2	10045695
	10-N17	10.093	**MOLDING**, W/S (LWR CORNERS)	91-92	Y	2	10045695
4.	10-N17	10.093	**MOLDING**, W/S SI RVL	91-96	Y	LH	14049031
	10-N17	10.093	**MOLDING**, W/S SI RVL	91-96	Y	RH	14049032
5.		8.977	**SCREW**, OV HD C/R, M4.2X1.41X13, TYPE AB, NZ	91-96	.....	AR	11515037
6.	10-N11	8.055	**EMBLEM**, HOOD (CHROME) (BOWTIE)	95	Y (Z4Z)	1	10198699
	10-N11	8.055	**EMBLEM**, HOOD (CHROME) (BOWTIE)	96	Y (Z16)	1	10198699
	10-N11	8.055	**EMBLEM**, HOOD (BLACK) (BOWTIE)	96	Y (EXC Z15, Z16)	1	10209060
	10-N11	8.055	**EMBLEM**, HOOD (COLLECTORS EDITION)	96	Y (Z15)	1	10254346
	10-N11	8.055	**EMBLEM**, HOOD (TOP SIDE) (BLACK) (BOWTIE)	94	Y	1	10209060
	10-N11	8.055	**EMBLEM**, HOOD (TOPSIDE) (BLACK) (BOWTIE)	91	Y (FE1, FE7)	1	10209060
	10-N11	8.055	**EMBLEM**, HOOD (TOPSIDE) (BLACK) (BOWTIE)	92	Y	1	10209060
	10-N11	8.055	**EMBLEM**, HOOD (TOPSIDE) (CHROME) (BOWTIE)	93	Y (Z25)	1	10198699

© 2000 GENERAL MOTORS SERVICE PARTS OPERATIONS-CHEVROLET-14Y

							1Y12-026
	10-N11	8.055	EMBLEM, HOOD (TOPSIDE) (BLACK) (BOWTIE)	93	Y (EXC Z25)	1	10209060
	10-N11	8.055	EMBLEM, HOOD (TOPSIDE) (BLACK) (BOWTIE)	95	Y (EXC Z4Z)	1	10209060
7.	10-N11	8.055	EMBLEM, HOOD (UNDERSIDE) (CHEVROLET CORVETTE, BOWLING GREEN, KY)	91-93	Y	1	10175789
8.		8.921	NUT, MET STAMPED 5 MM ID ...	91-96	.....	AR	11501793
9.		8.921	NUT, ANCHOR THD SIZE 8-18 NYLON	91-96	.....	AR	1377030
10.		8.915	NUT, CONICAL SPR WA, M5X.8, 15OD, 9 ZF	91-96	.....	AR	11516066
11.		8.919	NUT, MET LOW CROWN M5-0.8 CHR	91-96	.....	AR	11503674
12.	10-A8	12.112	MOLDING KIT, FRT S/D CTR (PAINT TO MATCH)	91-96	Y	LH	12520819
	10-A8	12.112	MOLDING KIT, FRT S/D CTR (PAINT TO MATCH)	91-96	Y	RH	12520820
13.	10-A9	12.116	MOLDING KIT, R/Q CTR FRT (PAINT TO MATCH)	91-95	Y (EXC ZR1)	LH	10174901
	10-A9	12.116	MOLDING KIT, R/Q CTR FRT (PAINT TO MATCH)	91-95	Y (EXC ZR1)	RH	10174902
	10-A9	12.116	MOLDING KIT, R/Q CTR FRT (PAINT TO MATCH)	96	Y	LH	10174901
	10-A9	12.116	MOLDING KIT, R/Q CTR FRT (PAINT TO MATCH)	96	Y	RH	10174902
14.	10-A27	12.934	PANEL, RKR OTR	91-95	Y (EXC ZR1)	LH	10288347
	10-A27	12.934	PANEL, RKR OTR	91-95	Y (EXC ZR1)	RH	10288348
	10-A27	12.934	PANEL, RKR OTR	96	Y	LH	10288347
	10-A27	12.934	PANEL, RKR OTR	96	Y	RH	10288348
15.	10-B3	12.945	EMBLEM, F/TNK FIL DR (BLACK)	91-92	Y	1	10209061
	10-B3	12.945	EMBLEM, F/TNK FIL DR	93	Y (Z25)	1	10198700
	10-B3	12.945	EMBLEM, F/TNK FIL DR (BLACK)	93	Y (EXC Z25)	1	10209061
	10-B3	12.945	EMBLEM, F/TNK FIL DR (BLACK)	94	Y	1	10209061
	10-B3	12.945	EMBLEM, F/TNK FIL DR	95	Y (Z4Z)	1	10198700
	10-B3	12.945	EMBLEM, F/TNK FIL DR (BLACK)	95	Y (EXC Z4Z)	1	10209061
	10-B3	12.945	EMBLEM, F/TNK FIL DR	96	Y (Z16)	1	10198700
	10-B3	12.945	EMBLEM, F/TNK FIL DR (BLACK)	96	Y (EXC Z15, Z16)	1	10209061
	10-B3	12.945	EMBLEM, F/TNK FIL DR (COLLECTOR EDITION)	93	Y (Z15)	1	10254345
16.		8.900	BOLT, HEX W/FLAT WA, 12.5 OD, M4.2X1.4X13 HI-LO, 6010M, 7153M (8.977)	91-96	.....	AR	11509428
17.	10-N14	8.132	MOLDING KIT, F/FDR WHL OPG (INCL 16) (PAINT TO MATCH) ...	96	Y07 (Z16)	RH	12522082
	10-N14	8.132	MOLDING KIT, F/FDR WHL OPG (INCL 16) (PAINT TO MATCH) ...	96	Y07 (Z16)	LH	12522083
	10-N14	8.132	MOLDING KIT, F/FDR WHL OPG (INCL 16) (PAINT TO MATCH) ...	94-96	Y (B74) (EXPORT)	RH	12522082
	10-N14	8.132	MOLDING KIT, F/FDR WHL OPG (INCL 16) (PAINT TO MATCH) ...	94-96	Y (B74) (EXPORT)	LH	12522083
18.	10-A9	12.116	MOLDING KIT, RR WHL OPG (INCL 16) (PAINT TO MATCH) ...	95-96	Y (B74)	RH	12522084
	10-A9	12.116	MOLDING KIT, RR WHL OPG (INCL 16) (PAINT TO MATCH) ...	95-96	Y (B74)	LH	12522085
	10-A9	12.116	MOLDING KIT, RR WHL OPG (INCL 16) (PAINT TO MATCH) ...	96	Y07 (Z16)	RH	12522084
	10-A9	12.116	MOLDING KIT, RR WHL OPG (INCL 16) (PAINT TO MATCH) ...	96	Y07 (Z16)	LH	12522085

© 2000 GENERAL MOTORS SERVICE PARTS OPERATIONS-CHEVROLET-14Y

								1Y12-026
	10-A9	12.116	**MOLDING KIT**, RR WHL OPG (INCL 16) (PAINT TO MATCH) ...	94	Y (B74) (EXPORT)	RH	12522084
	10-A9	12.116	**MOLDING KIT**, RR WHL OPG (INCL 16) (PAINT TO MATCH) ...	94	Y (B74) (EXPORT)	LH	12522085
19.	10-A27	12.934	**REINFORCEMENT**, RKR OTR PNL (8.304)	91-96	Y	2	14051121

RPO DEFINITIONS

B74 – ORNAMENTATION,EXTERIOR WHEEL OPENING MOLDING(BLACK)
B74 – MOLDING WHEEL OPENING EXTRA WIDE(EXPORT)
FE1 – SUSPENSION SYSTEM,SOFT RIDE
FE7 – SUSPENSION SYSTEM,FRONT AND REAR,HEAVY DUTY(USED WITH PERFORMANCE HANDLING PACKAGE Z51)
ZR1 – PACKAGE,SPECIAL PERFORMANCE COUPE(1YY07 + ZR1 == 1YZ07)
Z15 – APPEARANCE PACKAGE,COLLECTORS EDITION
Z16 – APPEARANCE PACKAGE,GRAND SPORT EDITION
Z25 – APPEARANCE PACKAGE 40TH ANNIVERSARY(LIMITED EDITION)
Z4Z – MERCHANDISED PKG INDY PACE CAR

© 2000 GENERAL MOTORS SERVICE PARTS OPERATIONS–CHEVROLET–14Y

1Y12-047 06/07/95

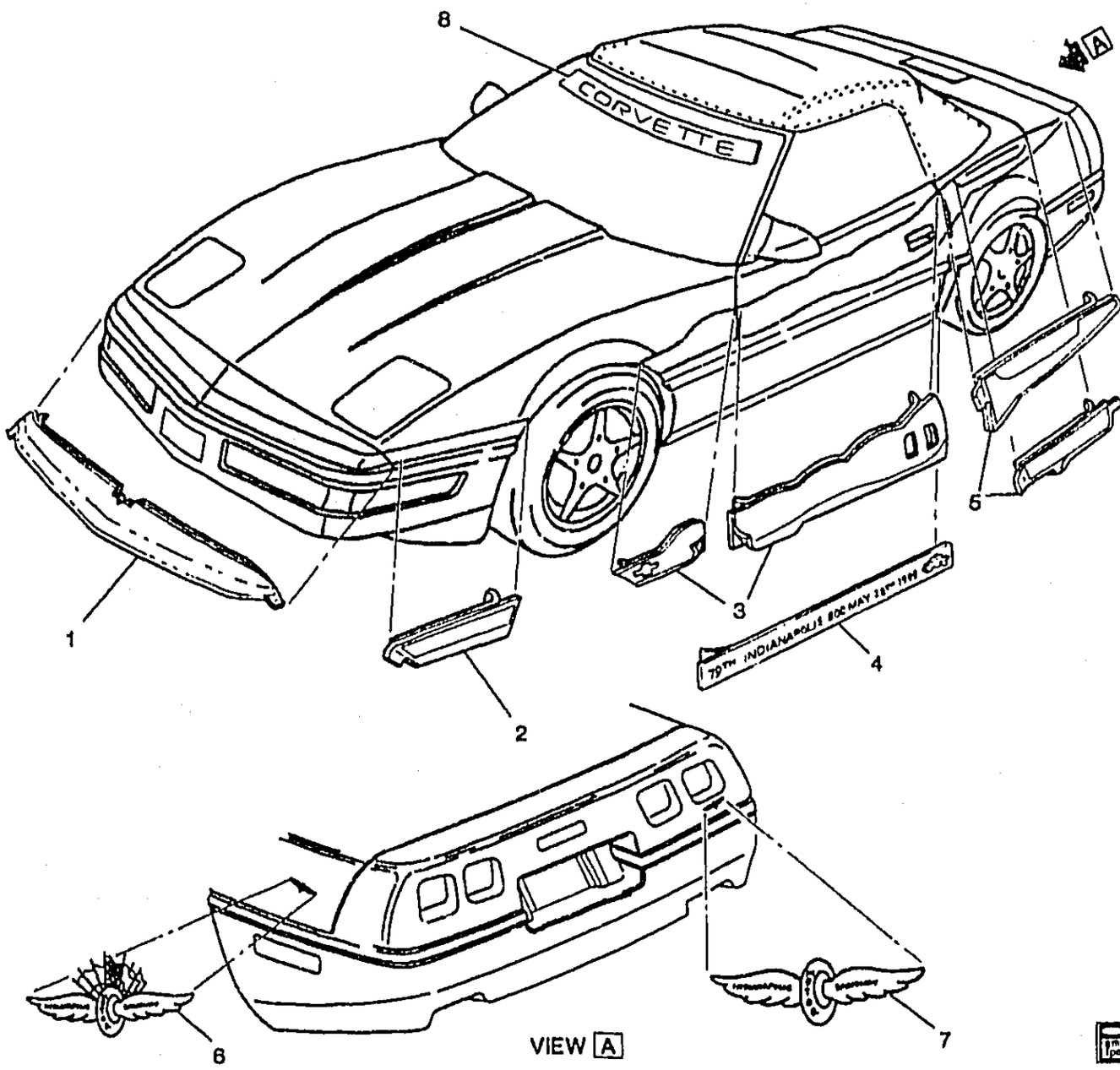

1Y12-047

1995 Y STRIPES/BODY INDY PACE CAR(Z4Z)

1.		DISCON	STRIPE, F/END FASCIA	95	Y (Z4Z)	1	10278398
2.		DISCON	STRIPE, HOOD FRT (8.055)	95	Y (Z4Z)	LH	10278399
	10-N11	8.055	STRIPE, HOOD FRT	95	Y (Z4Z)	RH	10278400
3.	10-N14	8.132	STRIPE, BODY SI UPR (INCLUDES DOOR & FENDER COMPLETE)	95	Y (Z4Z)	LH	10278401
	10-A8	12.112	STRIPE, BODY SI UPR (INCLUDES DOOR & FENDER COMPLETE) (8.132)	95	Y (Z4Z)	LH	10278401
		DISCON	STRIPE, BODY SI UPR (INCLUDES DOOR & FENDER COMPLETE)	95	Y (Z4Z)	RH	10278402

© 2000 GENERAL MOTORS SERVICE PARTS OPERATIONS-CHEVROLET-14Y

								1Y12–047
		DISCON	STRIPE, BODY SI UPR (INCLUDES DOOR & FENDER COMPLETE) (8.132)	95	Y (Z4Z)	.....	RH	10278402
4.	10–A8	12.112	STRIPE, FRT S/D LWR (I 500 DECAL)	95	Y (Z4Z)	.....	RH	10280477
	10–A8	12.112	STRIPE, FRT S/D LWR (INDY 500 DECAL)	95	Y (Z4Z)	.....	LH	10280476
	10–A8	12.112	STRIPE, FRT S/D LWR (OFFICIAL PACE CAR)	95	Y (Z4Z)	.....	1	12530664
5.	10–A9	12.116	STRIPE, R/Q UPR	95	Y (Z4Z)	.....	LH	10278404
	10–A9	12.116	STRIPE, R/Q UPR	95	Y (Z4Z)	.....	RH	102 405
6.	10–A9	12.116	DECAL, R/Q (WINGS & WHEELS LOGO)	95	Y (Z4Z)	.....	2	10278790
7.		DISCON	PLATE, R/END FASCIA NA (INDY MTR SPDWY, WINGS & WHL)	95	Y (Z4Z)	.....	1	10278422
8.	10–N17	10.027	DECAL, W/S NA	95	Y (Z4Z)	.....	1	10278406

RPO DEFINITIONS
Z4Z – MERCHANDISED PKG INDY PACE CAR

© 2000 GENERAL MOTORS SERVICE PARTS OPERATIONS–CHEVROLET–14Y

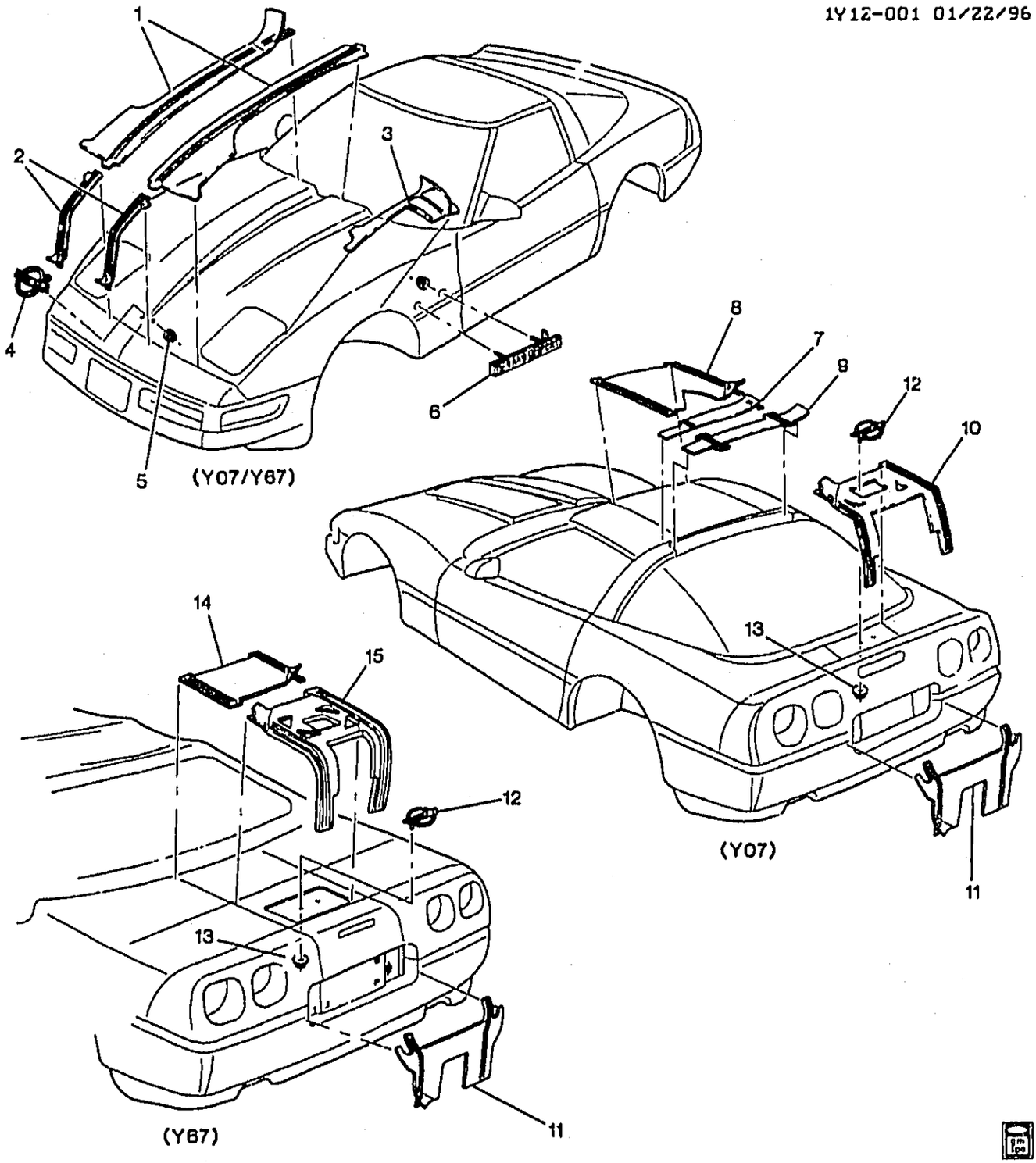

1Y12-001

1996 Y STRIPES/BODY (Z16)

1.	10-N11	8.055	STRIPE, HOOD CTR (POSN #1) .	96	Y (Z16)	RH	10280900
	10-N11	8.055	STRIPE, HOOD CTR (POSN #2) .	96	Y (Z16)	LH	10280901
2.	10-N7	7.832	STRIPE, FRT BPR FASCIA UPR ..	96	Y (Z16)	1	10279777
3.	10-N14	8.132	STRIPE, F/FDR WHL OPG	96	Y (Z16)	1	10279781
4.	10-N11	8.055	EMBLEM, HOOD (CHROME) (BOWTIE)	96	Y (Z16)	1	10198699

© 2000 GENERAL MOTORS SERVICE PARTS OPERATIONS - CHEVROLET - 14Y

							1Y12-001
	10-N11	8.055	EMBLEM, HOOD (BLACK) (BOWTIE)	96	Y (EXC Z15, Z16)	1	10209060
5.		8.915	NUT, 5MM STUD, 15 OD, TYPE SK (HOOD EMB)	96	.....	2	11516056
6.	10-N11	8.055	EMBLEM, HOOD SI (GRAND SPORT EDITION)	96	Y (Z16)	2	10254347
7.	10-A24	12.812	STRIPE, RF PNL RR	96	Y	1	10285096
8.	10-A24	12.812	STRIPE, RF PNL CTR	96	Y07 (Z16)	1	10279782
9.	10-A24	12.812	STRIPE, RF PNL RR	96	Y	1	10280903
10.		DISCON	STRIPE, R/END FIN PNL	96	Y07 (Z16) (EXC VD1) ..	1	10279784
11.	10-N7	7.832	STRIPE, RR BPR FASCIA LWR ..	96	Y (Z16) (EXC VD1)	1	10279786
	10-N7	7.832	STRIPE, RR BPR FASCIA LWR ..	96	Y67 (VD1, Z16) (EXPORT)	1	10279788
12	10-B3	12.945	EMBLEM, F/TNK FIL DR	96	Y (Z16)	1	10198700
	10-B3	12.945	EMBLEM, F/TNK FIL DR (BLACK)	96	Y (EXC Z15, Z16)	1	10209061
13.		8.915	NUT, 5MM STUD, 15 OD, TYPE SK (F/TNK FIL DR EMB)	96	.....	2	11516056
14.	10-A10	12.170	STRIPE, F/TOP STOW COMPT LID	96	Y67 (Z16)	1	10280189
15.	10-A14	12.182	STRIPE, BODY UPR RR PNL	96	Y67 (Z16)	1	10280190

RPO DEFINITIONS
VD1 – PROVISION OPTIONS,EUROPE(EXPORT)
Z15 – APPEARANCE PACKAGE,COLLECTORS EDITION
Z16 – APPEARANCE PACKAGE,GRAND SPORT EDITION

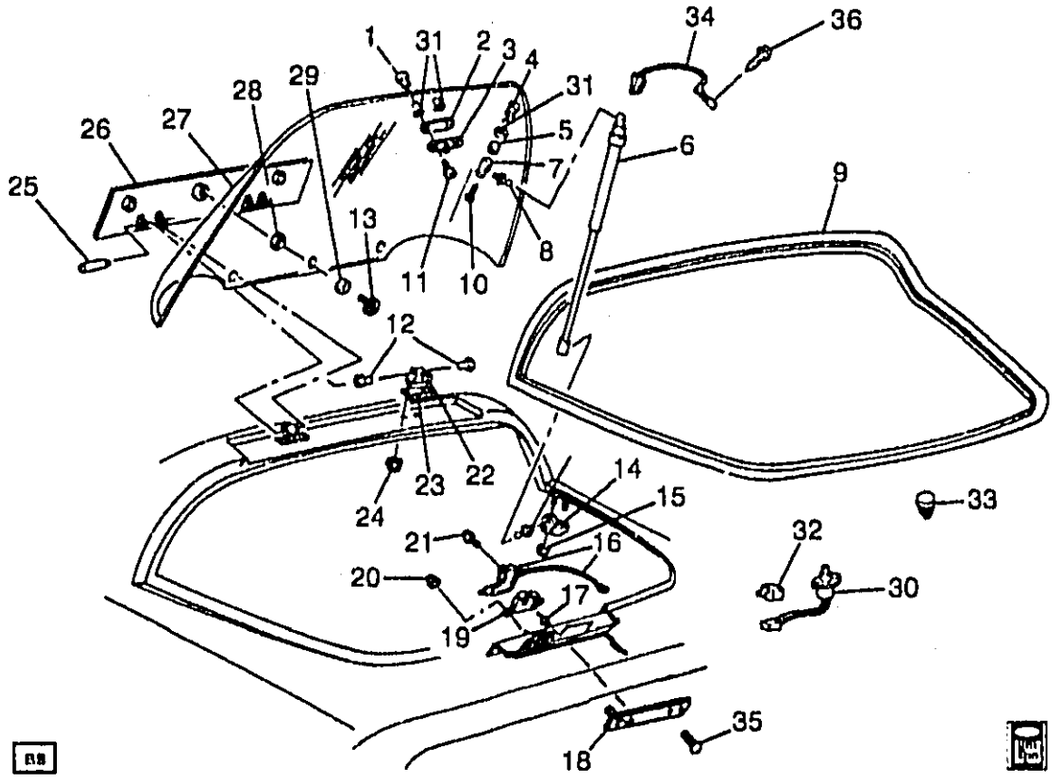

1Y12-044

1984-1996 Y SPOILER/REAR COMPARTMENT LID

1.	10-A15	12.237	NUT, RR HATCH WDO LAT STKR	84-96	Y07	2	14049026
2.	10-A14	12.187	SPACER, RR HATCH WDO LAT STKR	84-96	Y07	1	14049027
3.	10-A15	12.237	STRIKER, RR HATCH WDO LAT	84-96	Y07	1	10209087
4.	10-A14	12.187	NUT, R/CMPT L/WDO STRUT WDO SI BRKT	84-96	Y07	2	14049173
5.	10-A14	12.187	SPACER, R/CMPT L/WDO STRUT WDO SI BRKT	84-96	Y07	2	14049023
6.	10-A14	12.187	STRUT, R/CMPT L/WDO (IF HATCH ASSIST ROD BEING REPLACED MEASURES 935MM, WILL NEED TO REPLACE BOTH RODS)	84-88	Y (C49)	LH	10255661
	10-A14	12.187	STRUT, R/CMPT L/WDO (IF HATCH ASSIST ROD BEING REPLACED MEASURES 935MM, WILL NEED TO REPLACE BOTH RODS)	84-88	Y (C49)	RH	10255662
	10-A14	12.187	STRUT, R/CMPT L/WDO (IF HATCH ASSIST ROD BEING REPLACED MEASURES 935MM, WILL NEED TO REPLACE BOTH RODS)	84-88	Y (EXC C49)	2	14047588
	10-A14	12.187	STRUT, R/CMPT L/WDO	89-96	Y07	LH	10255661
	10-A14	12.187	STRUT, R/CMPT L/WDO	89-96	Y07	RH	10255662
7.	10-A14	12.187	BRACKET, R/CMPT L/WDO STRUT WDO SI	84-96	Y07	LH	14049021
	10-A14	12.187	BRACKET, R/CMPT L/WDO STRUT WDO SI	84-96	Y07	RH	14049022

© 2000 GENERAL MOTORS SERVICE PARTS OPERATIONS-CHEVROLET-14Y

							1Y12-044
8.	10-A14	12.187	STUD, R/CMPT L/WDO STRUT ..	84-96	Y07	4	14049012
9.	10-A16	12.269	WEATHERSTRIP, R/CMPT L/WDO	84-96	Y07	1	9768068
10.		8.913	BOLT, PAN HD C/R M6X1X14, 9.8, POR (R/CMPT L/WDO)	84-96	.....	AR	14049117
11.	10-A15	12.237	BOLT, RR HATCH WDO LAT STKR	84-96	Y07	2	14049114
12.	10-A14	12.186	BUSHING, R/CMPT L/WDO HGE PIN (PART OF 22)	84-96	Y07	4	20284772
13.	10-A14	12.184	BOLT, R/CMPT L/WDO WDO SI HGE (PART OF 27)	84-96	Y07	2	14049008
14.	10-A14	12.187	BRACKET, R/CMPT L/WDO STRUT BODY SI	84-96	Y07	2	14047461
15.		8.917	NUT, HEX W/CON WA M6X1X5.5 (9) 7111M 16-OD	84-96	.....	AR	11516793
16.	10-A15	12.243	SOLENOID, R/CMPT L/WDO LAT REL (W/CABLE)	84-96	Y07	1	10238313
17.		N.S.	RIVET, R/CMPT L/WDO LAT STUD PLT		.....		
18.	10-A15	12.242	PLATE, R/CMPT L/WDO LAT STUD (SINGLE STUD PLATE) (12.243)	84-96	Y07	1	10241865
19.	10-A15	12.242	LATCH, R/CMPT L/WDO (12.247)	84-96	Y07	1	14089676
20.		8.917	NUT, M8X1.25X7.1, ZC 10	84-96	.....	AR	11515748
21.		8.977	SCREW, HEX W/FLAT WA	84-96	.....	AR	12337828
22.	10-A14	12.184	HINGE, R/CMPT L/WDO (BODY SI) (W/BUSH) (INCLS 12)	84-96	Y07	2	14067595
23.	10-A14	12.184	SPACER, R/CMPT L/WDO BODY SI HGE	84-96	Y07	2	14076562
24.		8.915	NUT, HEX W/CON WA M8X1.25X9.5 19-OD 9 ZP (8.917)	84-96	.....	AR	11506117
25.	10-A14	12.186	PIN, R/CMPT L/WDO HGE	84-96	Y07	2	14049120
26.		N.S.	HINGE, R/COMPT L/WDO (PART OF 27)		.....		
27.	10-A13	12.180	WINDOW, R/CMPT LIFT (INCL 13, 26, 28, 29)	84-85	Y07 (C49) (EXC A26) ..	1	12523677
	10-A13	12.180	WINDOW, R/CMPT LIFT (INCL 13, 26, 28, 29)	86-90	Y07 (C49)	1	12523679
		DISCON	WINDOW, R/CMPT LIFT (INCL 13, 26, 28, 29)	86-88	Y07 (EXC C49)	1	14091500
	10-A13	12.180	WINDOW, R/CMPT LIFT (INCL 13, 26, 28, 29)	91-95	Y07 (EXC ZR1)	1	12523677
	10-A13	12.180	WINDOW, R/CMPT LIFT (INCL 13, 26, 28, 29)	91-95	Y07 (ZR1)	1	12523679
	10-A13	12.180	WINDOW, R/CMPT LIFT (INCL 13, 26, 28, 29)	94-96	Y07 (EXC A26)	1	12523677
	10-A13	12.180	WINDOW, R/CMPT LIFT (INCL 13, 26, 28, 29)	94-96	Y07 (A26) (EXPORT) ...	1	12523678
28.		N.S.	SPACER, R/CMPT L/WDO WDO SI HGE (PART OF 27)		.....		
29.	10-A14	12.184	WASHER, R/CMPT L/WDO WDO SI HGE (PART OF 27)	84-96	Y07	3	14049007
30.	10-A15	12.243	SWITCH, R/COMPT L/WDO AJAR IND (PLUNGER DIA 12MM) (AC-DELCO #D6065)	84-96	Y07	1	10283365
31.	10-A14	12.187	SEAL, R/CMPT L/WDO STRUT WDO SI BRKT NUT (12.269)	84-96	Y07	2	14076561

© 2000 GENERAL MOTORS SERVICE PARTS OPERATIONS-CHEVROLET-14Y

							1Y12-044
	10-A16	12.269	**SEAL**, RR HATCH WDO LAT STKR SPCR	84-96	Y07	2	14076561
32.	10-A15	12.243	**RELAY**, R/CMPT LID REL (2.815) (AC-DELCO #D1776)	84-90	Y	1	25523703
	10-A15	12.243	**RELAY**, R/CMPT LID REL (BLACK) (5-WAY) (9.277) (AC-DELCO #15-8426)	90-96	Y07	1	14100455
33.	10-A15	12.212	**BUMPER**, R/CMPT L/WDO (11.120)	84-86	Y07	4	14091402
	10-A15	12.212	**BUMPER**, R/CMPT L/WDO (12.945)	87-95	Y07	1	10280811
34.		N.S.	**WIRE**, R/WDO DEFG GND (SERVICE FROM BULK 12 GAGE CABLE & CONN 6288704 & 1/4" RING TERMINAL)		Y07		
		N.S.	**WIRE**, R/WDO DEFG GND (SERVICE FROM BULK 12 GAGE CABLE & CONN 8917583 & 1/4" RING TERMINAL)		Y67		
35.		N.S.	**STUD**, R/CMPT L/WDO LAT		.....		
36.		8.900	**BOLT**, HFH M8X1.25X21MM, 17 OD, 10.9 (R/WDO DEFG GND) ...	84-96	.....	1	12551177

RPO DEFINITIONS
A26 – WINDOW,UNITED KINGDOM AND EUROPEAN GLAZING(EXPORT)
C49 – DEFOGGER,REAR WINDOW,ELECTRIC
ZR1 – PACKAGE,SPECIAL PERFORMANCE COUPE(1YY07 + ZR1 == 1YZ07)

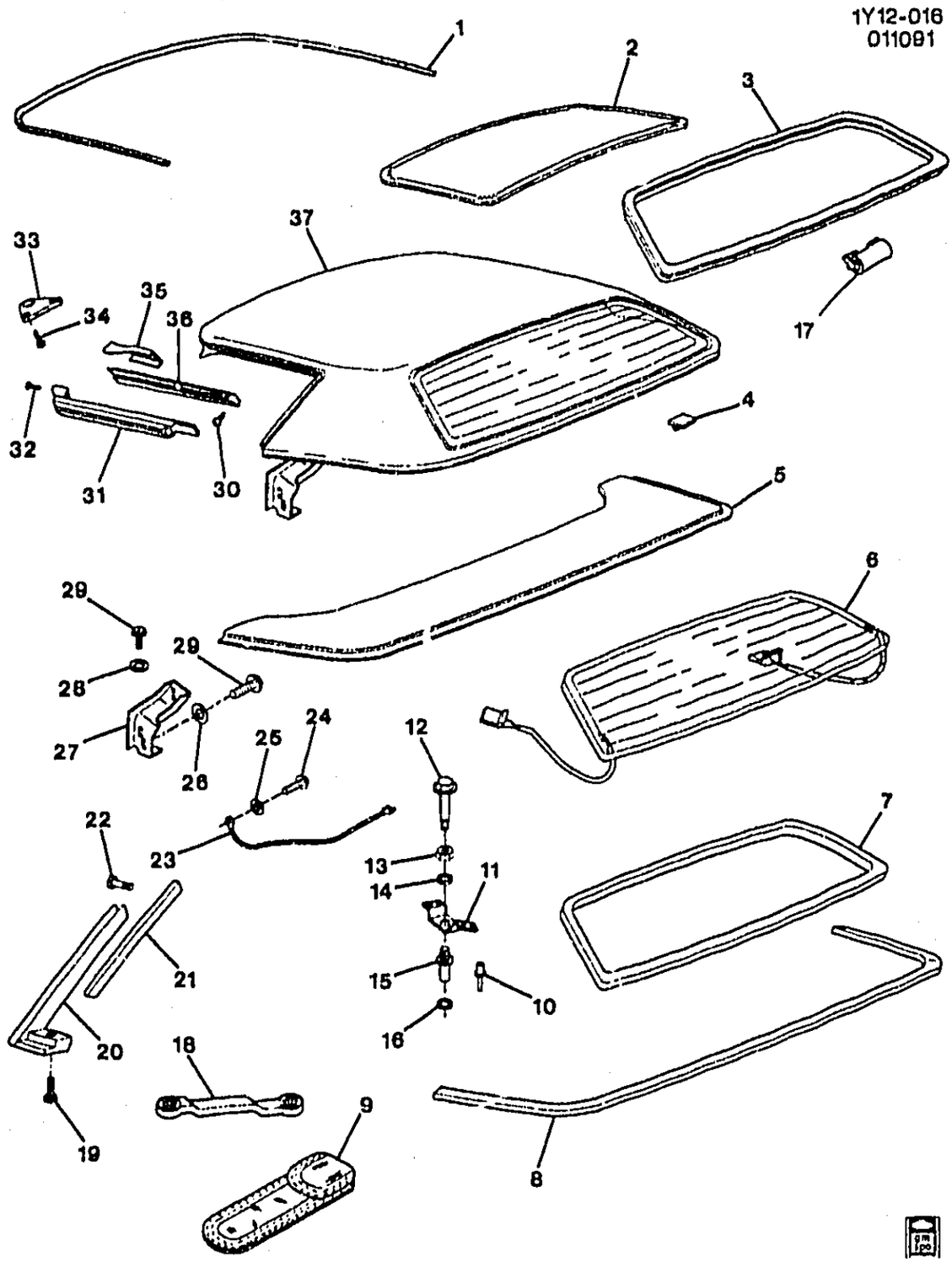

1986–1988 Y67 HARDTOP/REMOVABLE
1989–1990 Y67 HARDTOP/REMOVABLE (CC2)

1.	10–A24	12.812	MOLDING, R/TOP UPR FRT RVL (PART OF 37) (12.075)	86–90	Y67	1	10284148
2.	10–N24	14.640	PANEL, R/TOP HDLNG TR FIN (PART OF 37) (13.346)	86–90	Y67	1	10123059
3.	10–N24	11.208	MOLDING, R/TOP R/WDO RVL ..	86–90	Y67	1	10123057
4.		DISCON	CLIP, R/WDO DEFG WRG HARN .	89–90	Y67	1	10137779

© 2000 GENERAL MOTORS SERVICE PARTS OPERATIONS–CHEVROLET–14Y

						1Y12-016	
		8.950	CLIP, DELRIN, ADHESIVE (3.2 TO 12.7 DIA)	86-90		AR	555806
5.	10-A10	12.170	COVER, F/TOP STOW COMPT LID FIN (PART OF 37)	86-90	Y67	1	10137777
6.	10-N24	11.204	WINDOW, R/TOP RR (HTD W/HARN) (PART OF 37)	86-88	Y67	1	10123050
	10-N24	11.204	WINDOW, R/TOP RR (HTD W/HARN) (PART OF 37)	89-90	Y67 (CC2)	1	10123050
7.		DISCON	TAPE, FOAM B/L SEAL	86-90	Y67	1	10137781
8.	10-C15	13.346	WEATHERSTRIP, R/TOP RR (PART OF 37)	86-90	Y67	1	10123058
9.	10-N14	8.821	BAG, TOOL STOW (13.346)	86-90	Y67	1	10149268
10.	10-C15	13.346	RIVET, R/TOP RR BRKT	89-90	Y67	1	10137775
11.	10-C15	13.346	BRACKET, R/TOP RR (PART OF 37)	86-90	Y67	RH	10123048
	10-C15	13.346	BRACKET, R/TOP RR (PART OF 37)	86-90	Y67	LH	10123047
12.	10-C15	13.346	BOLT, REMOVABLE TOP (PART OF 37)	86-90	Y67	2	10137770
13.	10-C15	13.346	NUT, R/TOP BOLT GDE	89-90	Y67	2	10137771
14.	10-C15	13.346	WASHER, R/TOP BOLT GDE (1.635X.661X.085)	89-90	Y67	2	10137772
15.	10-C15	13.346	GUIDE, R/TOP BOLT (PART OF 37)	86-90	Y67	2	10137774
16.	10-C15	13.346	SPACER, R/TOP BOLT GDE (PART OF 37)	86-90	Y67	2	10137776
17.		N.S.	ESCUTCHEON, R/WDO LWR R/MLDG (BLACK)	89-90			
18.	10-C15	13.346	WRENCH, R/TOP (PART OF 37) (BOX END)	86-90	Y67	1	10137741
19.		N.S.	SCREW (M4.2X1.41X16.0)				
20.	10-N21	10.710	WEATHERSTRIP, FRT S/D WDO RR (PART OF 37) (B-PILLAR)	86-90	Y67	RH	10123056
	10-N21	10.710	WEATHERSTRIP, FRT S/D WDO RR (PART OF 37) (B-PILLAR)	86-90	Y67	LH	10123055
21.	10-N21	10.710	RETAINER, FRT S/D WDO RR W/STR (PART OF 37) (13.346)	86-90	Y67	RH	10123054
	10-N21	10.710	RETAINER, FRT S/D WDO RR W/STR (PART OF 37) (13.346)	86-90	Y67	LH	10123053
22.		N.S.	SCREW (M4.2X1.41X16.0)				
23.		N.S.	WIRE, R/WDO DEFG GND (PART OF 37)				
24.		8.977	SCREW, HEX W/FLAT WA	86-90		AR	12337828
25.		8.932	WASHER, LK I.S. TOOTH	86-90		AR	120423
26.		N.S.	WASHER (.406X1.00X.090)				
27.	10-C15	13.346	BRACKET, R/TOP BODY L/PLR UPR (PART OF 37)	86-90	Y67	RH	10137786
	10-C15	13.346	BRACKET, R/TOP BODY L/PLR UPR (PART OF 37)	86-90	Y67	LH	10137785
28.	10-C15	13.346	BOLT, R/TOP BODY L/PLR UPR BRKT (.390X.740X.080) (M8X1.25X24.25, 19OD)	89-90	Y67	AR	10175552
	10-C15	13.346	BOLT, REMOVABLE TOP (.406X1.00X.09) (M8X1.25X24.25;25.5OD)	89-90	Y67	2	10175553
29.	10-A18	12.810	BOLT, RF LIFT OFF PNL/WDO FRT MT PLT (M8X1.25X20) (TORX HD 8X1.25X20) (8.913)	86-90	Y07	4	14081021

© 2000 GENERAL MOTORS SERVICE PARTS OPERATIONS-CHEVROLET-14Y

							1Y12-016
30.	10-N21	10.710	**BOLT**, FRT S/D WDO UPR FRT W/STR RET (M4.2 X 1.41 X 16) ...	89-90	Y67 (CC2)	10	10137767
31.	10-N21	10.710	**WEATHERSTRIP**, FRT S/D WDO UPR FRT (PART OF 37) (13.346) .	86-90	Y67	RH	10123052
	10-N21	10.710	**WEATHERSTRIP**, FRT S/D WDO UPR FRT (PART OF 37) (13.346) .	86-90	Y67	LH	10123051
32.	10-N21	10.710	**BOLT**, FRT S/D WDO UPR FRT W/STR	89-90	Y67 (CC2)	2	10137780
33.	10-C15	13.346	**PLATE**, R/TOP NUT (PART OF 37) (12.810)	86-90	Y67	AR	14105190
34.	10-C15	13.346	**BOLT**, R/TOP NUT PLT (M8X1.25X15 POR) (3.023)	89-90	Y67	2	14060161
35.	10-A18	12.810	**PROTECTOR**, FRT S/D WDO W/STR UPR FRT (PART OF 37) ..	86-90	Y67	RH	10217224
	10-A18	12.810	**PROTECTOR**, FRT S/D WDO W/STR UPR FRT (PART OF 37) ..	86-90	Y67	LH	10217223
36.	10-N21	10.710	**RETAINER**, FRT S/D WDO UPR FRT W/STR (PART OF 37) (13.346)	86-90	Y67	RH	10137752
	10-N21	10.710	**RETAINER**, FRT S/D WDO UPR FRT W/STR (PART OF 37) (13.346)	86-90	Y67	LH	10137751
37.	10-C15	13.346	**TOP**, REMOVABLE (INCL 1, 2, 5, 6, 8, 11, 12, 15, 16, 18, 20, 21, 23, 27, 31, 33, 35, 36) (PAINT TO MATCH)	86-90	Y67	1	12508700

RPO DEFINITIONS
CC2 – ROOF,AUXILIARY

MICROFICHE INDEX

GROUPS 12.000 THRU 13.000

FICHE 10 OF 11

GROUP	DESCRIPTION	STARTING GRID LOCATION PARTS	ILLUSTRATIONS
--	GENERAL INFORMATION	1-A2	1-G2
–	ALPHABETICAL INDEX	1-B13	N.A.
12.000	BODY MOLDINGS – SHEET METAL	10-A2	10-D2
13.000	BODY WIRING – VINYL TOP TRIM	10-C2	N.A.
–	OUT OF FICHE CALLS	N.A.	10-M22

10-E1

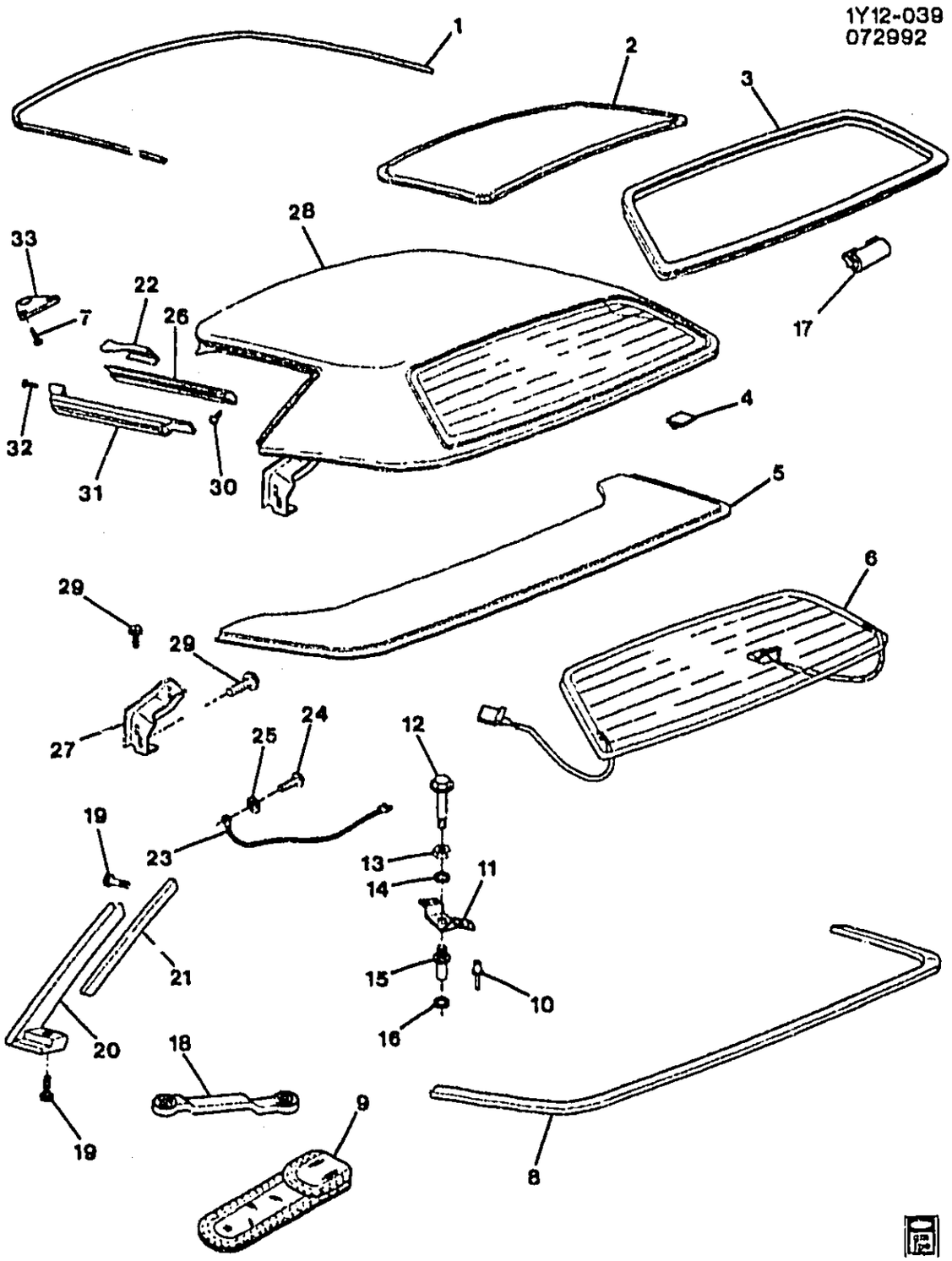

1Y12-039

1991-1996 Y67 HARDTOP/REMOVABLE

1.	10-A24	12.812	**MOLDING**, R/TOP UPR FRT RVL (12.075)	91-96	Y67 (CC2)	1	10284148
2.	10-N24	14.640	**PANEL**, R/TOP HDLNG TR FIN (13.346)	91-96	Y67 (CC2)	1	10123059
3.	10-N24	11.208	**MOLDING**, R/TOP R/WDO RVL ..	91-96	Y67 (CC2)	1	10123057
4.		8.950	**CLIP**, DELRIN, ADHESIVE (3.2 TO 12.7 DIA)	91-96	.....	AR	555806

© 2000 GENERAL MOTORS SERVICE PARTS OPERATIONS-CHEVROLET-14Y

							1Y12–039
5.	10–A10	12.170	COVER, F/TOP STOW COMPT LID FIN	91–96	Y67 (CC2)	1	10137777
6.	10–N24	11.204	WINDOW, R/TOP RR (HTD W/HARN)	91–96	Y67 (CC2)	1	10123050
7.	10–C15	13.346	BOLT, R/TOP NUT PLT (M8X1.25X15 POR) (3.023)	91–96	Y67 (CC2)	4	14060161
8.	10–C15	13.346	WEATHERSTRIP, R/TOP RR	91–96	Y67 (CC2)	1	10123058
9.	10–N14	8.821	BAG, TOOL STOW (13.346)	91–96	Y67 (CC2)	1	10149268
10.	10–C15	13.346	RIVET, R/TOP RR BRKT	91–96	Y67 (CC2)	8	10137775
11.	10–C15	13.346	BRACKET, R/TOP RR	91–96	Y67 (CC2)	LH	10123047
	10–C15	13.346	BRACKET, R/TOP RR	91–96	Y67 (CC2)	RH	10123048
12.	10–C15	13.346	BOLT, REMOVABLE TOP (M8X1.25X24.25;25.5OD)	91	Y67 (CC2)	6	10175553
	10–C15	13.346	BOLT, REMOVABLE TOP	92–96	Y67 (CC2)	2	10137770
	10–C15	13.346	BOLT, REMOVABLE TOP (M6X1.0X65.0 HEX HD)	91	Y67 (CC2)	1	10137770
13.	10–C15	13.346	NUT, R/TOP BOLT GDE (M14X2.0–7.0 HEX JAM RR PIN MTG)	91	Y (CC2)	AR	10137771
	10–C15	13.346	NUT, R/TOP BOLT GDE (M14X2.0–7.0 HEX JAM RR PIN MTG)	92–96	Y67 (CC2)	2	10137771
14.	10–C15	13.346	WASHER, R/TOP BOLT GDE (1.635X.661X.085)	91	Y (CC2)	AR	10137772
	10–C15	13.346	WASHER, R/TOP BOLT GDE (1.635X.661X.085)	92–96	Y67 (CC2)	2	10137772
15.	10–C15	13.346	GUIDE, R/TOP BOLT	91–96	Y67 (CC2)	2	10137774
16.	10–C15	13.346	SPACER, R/TOP BOLT GDE	91–96	Y67 (CC2)	2	10137776
17.	10–N24	11.209	ESCUTCHEON, R/WDO LWR R/MLDG (BLACK)	91–96	Y67 (CC2)	1	10092411
18.	10–C15	13.346	WRENCH, R/TOP (RATCHET) (12.810)	91–96	Y67 (CC2)	1	10172311
	10–C15	13.346	WRENCH, R/TOP (REMOVAL) (BOX END)	91–96	Y67 (CC2)	1	10137741
19.		N.S.	SCREW (M4.2X1.41X16.0)				
20.	10–N21	10.710	WEATHERSTRIP, FRT S/D WDO RR	91–96	Y67	LH	10273003
	10–N21	10.710	WEATHERSTRIP, FRT S/D WDO RR	91–96	Y67	RH	10273004
	10–N21	10.710	WEATHERSTRIP, FRT S/D WDO RR (PART OF REMOVEABLE HARD TOP) (B–PILLAR)	91–96	Y67 (CC2)	LH	10123055
	10–N21	10.710	WEATHERSTRIP, FRT S/D WDO RR (PART OF REMOVEABLE HARD TOP) (B–PILLAR)	91–96	Y67 (CC2)	RH	10123056
21.	10–N21	10.710	RETAINER, FRT S/D WDO RR W/STR (13.346)	91–96	Y67 (CC2)	LH	10123053
	10–N21	10.710	RETAINER, FRT S/D WDO RR W/STR (13.346)	91–96	Y67 (CC2)	RH	10123054
	10–N21	10.710	RETAINER, FRT S/D WDO RR W/STR (POS #1) (PAINT TO MATCH) (FITS .18 HOLE, .7 LG, .3 OD, NYLON) (14.630)	91–96	Y67	4	20540336
	10–N21	10.710	RETAINER, FRT S/D WDO RR W/STR (POSN #2) (14.260)	91–96	Y67	LH	14092709
	10–N21	10.710	RETAINER, FRT S/D WDO RR W/STR (POSN #2) (14.260)	91–96	Y67	RH	14092710
22.	10–A18	12.810	PROTECTOR, FRT S/D WDO W/STR UPR FRT	91	Y	LH	10217223

© 2000 GENERAL MOTORS SERVICE PARTS OPERATIONS–CHEVROLET–14Y

							1Y12-039
	10-A18	12.810	PROTECTOR, FRT S/D WDO W/STR UPR FRT	91-96	Y67 (CC2)	LH	10217223
	10-A18	12.810	PROTECTOR, FRT S/D WDO W/STR UPR FRT	91-96	Y67 (CC2)	RH	10217224
23.		N.S.	WIRE, R/WDO DEFG GND		.....		
24.		8.977	SCREW, HEX W/FLAT WA	91-96	.....	AR	12337828
25.		8.932	WASHER, LK I.S. TOOTH	91-96	.....	AR	120423
26.	10-N21	10.710	RETAINER, FRT S/D WDO UPR FRT W/STR (14.060)	91-96	Y67	LH	14092711
	10-N21	10.710	RETAINER, FRT S/D WDO UPR FRT W/STR (14.060)	91-96	Y67	RH	14092712
	10-N21	10.710	RETAINER, FRT S/D WDO UPR FRT W/STR (13.346)	91-96	Y67 (CC2)	LH	10137751
	10-N21	10.710	RETAINER, FRT S/D WDO UPR FRT W/STR (13.346)	91-96	Y67 (CC2)	RH	10137752
27.	10-C15	13.346	BRACKET, R/TOP BODY L/PLR UPR	91-96	Y67 (CC2)	LH	10137785
	10-C15	13.346	BRACKET, R/TOP BODY L/PLR UPR	91-96	Y67 (CC2)	RH	10137786
28.	10-C15	13.346	TOP, REMOVABLE (PAINT TO MATCH) (RR DEFG TO BE USED AS REQ)	91-96	Y67 (CC2)	1	12508700
29.	10-C15	13.346	BOLT, R/TOP BODY L/PLR UPR BRKT (M8X1.25X24.25, 19OD) ...	91-96	Y67 (CC2)	2	10175552
	10-C15	13.346	BOLT, R/TOP BODY L/PLR UPR BRKT (M8X1.25X24.25;25.5OD) ..	91-96	Y67 (CC2)	2	10175553
		N.S.	BOLT, RF LIFT OFF PNL/WDO FRT MT PLT (PART OF PLATE ASM)	96	.....		
30.	10-N21	10.710	BOLT, FRT S/D WDO UPR FRT W/STR RET (M4.2 X 1.41 X 16) ...	91-96	Y67 (CC2)	10	10137767
31.	10-N21	10.710	WEATHERSTRIP, FRT S/D WDO UPR FRT (13.346)	91-96	Y	RH	10123052
	10-N21	10.710	WEATHERSTRIP, FRT S/D WDO UPR FRT (13.346)	91-96	Y	LH	10123051
32.	10-N21	10.710	BOLT, FRT S/D WDO UPR FRT W/STR	91-96	Y67 (CC2)	2	10137780
33.	10-C15	13.346	PLATE, R/TOP NUT (12.810)	91-96	Y67 (CC2)	2	14105100

RPO DEFINITIONS
CC2 – ROOF,AUXILIARY

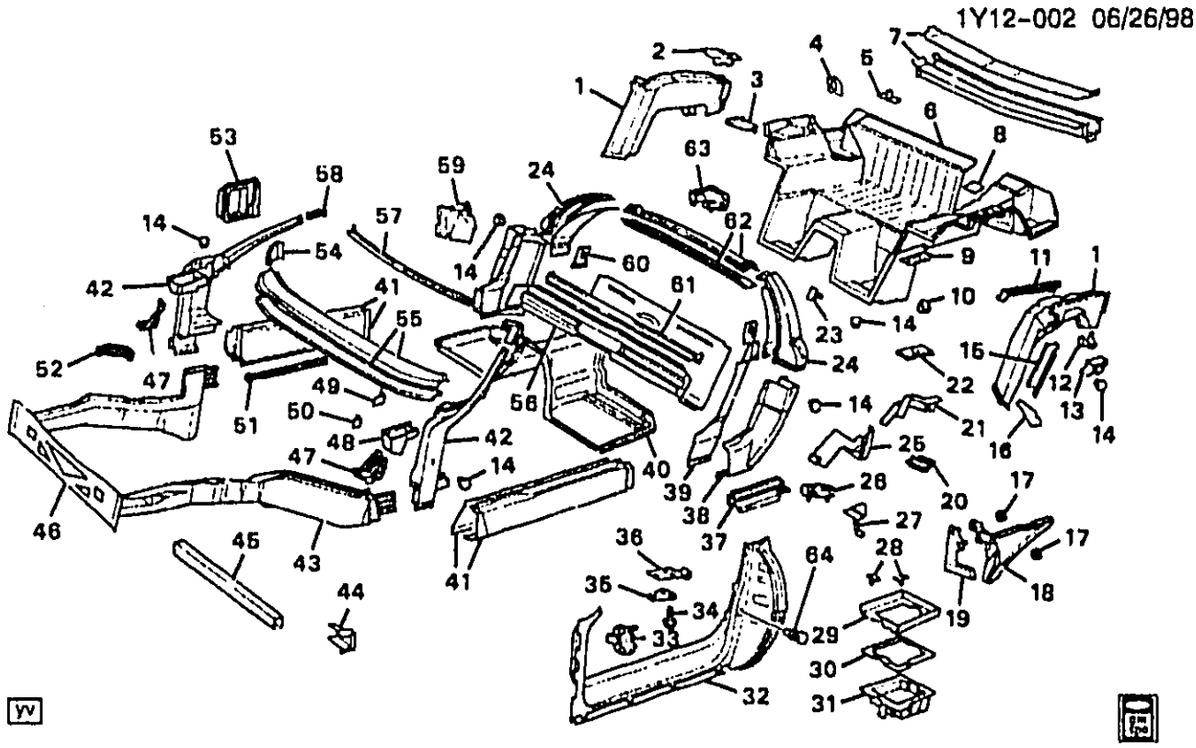

1Y12-002

1984-1989 Y07 SHEET METAL/BODY

1.		DISCON	MEMBER, RR SI-RH (1984-87)	14069822
	10-N2	7.006	MEMBER, RR SI-RH (1988-89)	12513816
		DISCON	MEMBER, RR SI-LH (1984-87)	14069821
	10-N2	7.006	MEMBER, INR RR SI (LH) (1988-89)	12513815
2.	10-N4	7.039	COVER, MBR RR SI-RH	14078628
	10-N4	7.039	COVER, MBR RR SI-LH	14078627
3.	10-N4	7.039	GUSSET, RR C/MBR-RH	14064524
	10-N4	7.039	GUSSET, RR C/MBR-LH	14064523
4.	10-N15	9.647	PLATE, HARN RET, RR BODY WRG (AC-DELCO #14049163)	14049163
5.	10-B7	12.981	BRACKET, FLR RR PNL CTR CPT (1984-85)	14064526
	10-B7	12.981	BRACKET, FLR RR PNL CTR CPT (1986-89)	14100206
6.		DISCON	PANEL, FLR RR (1984-85)	14104866
		DISCON	PANEL, FLR RR (1986-88)	14104866
7.		DISCON	MEMBER, RR CR LWR	14069823
8.	10-A18	12.810	REINFORCEMENT, RF PNL STOR RR BRKT	14100260
9.	10-A18	12.810	REINFORCEMENT, RF PNL STOR FRT BRKT	10137201
10.		8.917	NUT, HFH (M6X1X6.5)	
11.		DISCON	BRACE, OTR RR S/MBR-RH (1984-88)	14058686
	10-N2	7.006	BRACE, OTR RR S/MBR-RH (1989)	14104794
		DISCON	BRACE, OTR RR S/MBR-LH (1984-89)	14058685
	10-N2	7.006	BRACE, OTR RR S/MBR-LH (1989)	14104793
12.		DISCON	BRACKET, RR SUSP JOUNCE BPR (1984-88)	14064511
	10-N5	7.535	BUMPER, RR SUSP JOUNCE (1989)	14105140
13.		N.S.	BRACKET, DIFF CARR	
	10-N5	7.535	BUMPER, RR SUSP JOUNCE (1988)	14105140
14.	10-A26	12.840	PLUG, FLR RR PNL (1984-88)	4805844
	10-B5	12.980	PLUG, FLR RR PNL (1989)	10118451
15.	10-A28	12.942	REINFORCEMENT, SI DR INR L/PLR-RH	10048892
	10-A28	12.942	REINFORCEMENT, SI DR INR L/PLR-LH	10048891
16.	10-A28	12.942	FILLER, BODY L/PLR LWR (RH)	14043124

© 2000 GENERAL MOTORS SERVICE PARTS OPERATIONS-CHEVROLET-14Y

	10-A28	12.942	FILLER, BODY L/PLR LWR (LH)	14043123
17.		8.917	NUT, HFH (M8X1.25X7.5) 10 PEOR (AC-DELCO #11514596)	11514596
18.	10-A28	12.942	REINFORCEMENT, SI DR L/PLR-RH (1985-89)	14091018
	10-A28	12.942	REINFORCEMENT, SI DR L/PLR-LH (1985-89)	14091017
19.		DISCON	PLATE, SI DR L/FLR STUD-RH (1985-89)	14091020
		DISCON	PLATE, SI DR L/PLR STUD-LH (1985-89)	14091019
20.		DISCON	PLATE, RR RF CLOSEOUT-RH (1984-85)	14051180
		DISCON	PLATE, RR RF CLOSEOUT-LH (1984-86)	14051179
21.		DISCON	PANEL, RR COMPT CLOSEOUT-RH	14043114
		DISCON	PANEL, RR COMPT CLOSEOUT-LH	14043113
22.	10-B7	12.981	PLATE, RR FLR PNL STUD (1986-89)	10045625
23.	10-B7	12.981	PLATE, RR FLR PNL STUD (1986-89)	10045625
24.		DISCON	BOW, RF SI-LH (INR & OTR)	14091455
		DISCON	BOW, RF SI-RH (INR & OTR)	14091456
25.	10-B7	12.981	PANEL, R/FLR PNL UPR FRT CLOSEOUT (RH)	14043112
	10-B7	12.981	PANEL, R/FLR PNL UPR FRT CLOSEOUT (LH)	14043111
26.		DISCON	PLATE, DR LK OTR PLR BRACE TAP (1984-86)	14076559
27.		DISCON	BRACE, SI DR LK OTR PLR-RH (1984-86)	14076558
		DISCON	BRACE, SI DR LK OTR PLR-LH (1984-86)	14076557
28.	10-B5	12.980	PLATE, FLR RR PNL OPG CVR STUD (PART OF 63)	14088454
29.		N.S.	REINFORCEMENT, FLR RR PNL (1986-89) (SEE PARTS SECTION FOR ADDITIONAL USAGE)	
30.		DISCON	GASKET, FLR RR PNL OPG CVR (1986-89)	14088442
31.		DISCON	COVER, FLR RR PNL OPG (1986-89)	14088439
32.	10-N21	10.695	PANEL, FRT S/D OPG FIN (RH)	10287793
	10-N21	10.695	PANEL, FRT S/D OPG FIN (LH)	10287792
33.		DISCON	PIN, SI DR GDE	14060282
34.		8.900	BOLT, HFH (M6X1X20) (AC-DELCO #11508600)	11508600
35.	10-N20	10.571	REINFORCEMENT, SI DR GDE PIN LOC	14047542
36.	10-N20	10.571	LOCATOR, SI DR GDE PIN-RH	14046604
	10-N20	10.571	LOCATOR, SI DR GDE PIN-LH	14046603
37.	10-A28	12.942	REINFORCEMENT, SI DR INR LK PLR-RH (1984-85)	10048892
	10-A28	12.942	REINFORCEMENT, SI DR INR LK PLR-RH (1986-89)	10048892
	10-A28	12.942	REINFORCEMENT, SI DR INR LK PLR-LH (1984-85)	10048891
	10-A28	12.942	REINFORCEMENT, SI DR INR LK PLR-LH (1986-89)	10048891
38.	10-A28	12.942	PILLAR, SI DR LK OTR-RH (1984-87)	14091024
	10-A28	12.942	PILLAR, SI DR LK OTR-RH (1988-89)	10051828
	10-A28	12.942	PILLAR, SI DR LK OTR-LH (1984-87)	14091023
	10-A28	12.942	PILLAR, SI DR LK OTR-LH (1988-89)	10051827
39.	10-A28	12.942	PANEL, SI DR LK INR-RH	10208618
	10-A28	12.942	PANEL, SI DR LK INR-LH	10208619
40.		DISCON	PANEL, INR FLR (1984-87) (SEE PARTS SECTION FOR ADDITIONAL USAGE)	10067390
	10-B7	12.981	PANEL, INR FLR (1988) (SEE PARTS SECTION FOR ADDITIONAL USAGE)	10198704
	10-B7	12.981	PANEL, INR FLR (1989) (SEE PARTS SECTION FOR ADDITIONAL USAGE)	10198704
41.		DISCON	MEMBER, OTR INR SI-LH	14069825
		DISCON	MEMBER, OTR INR SI-RH	14069826
42.		DISCON	PILLAR, SI DR HGE INR & OTR-RH	14069820
		DISCON	PILLAR, SI DR HGE INR & OTR-LH	14069819
43.		DISCON	MEMBER, FRT SI-RH (1984)	14083504
		DISCON	MEMBER, FRT SI-RH (1985-87)	14089122
		DISCON	MEMBER, FRT SI-RH (1988)	10112670
		DISCON	MEMBER, FRT SI-RH (1989)	10132714
		DISCON	MEMBER, FRT SI-LH (1984)	14089121
		DISCON	MEMBER, FRT SI-LH (1985-87)	14089121

© 2000 GENERAL MOTORS SERVICE PARTS OPERATIONS-CHEVROLET-14Y

				1Y12-002
		DISCON	MEMBER, FRT SI-LH (1988)	10112669
		DISCON	MEMBER, FRT SI-LH (1989)	10132713
44.	10-N4	7.039	BRACKET, FRT C/MBR RR-RH (1987-88 Z51, Z52) (1989)	14092616
	10-N4	7.039	BRACKET, FRT C/MBR RR-LH (1987-88 Z51, Z52) (1989)	14092617
45.		DISCON	MEMBER, FRT CROSS (1984-86)	14090674
		DISCON	MEMBER, FRT CROSS (1987-88 EXC Z51, Z52)	14090674
		DISCON	MEMBER, FRT CROSS (1987 Z51, Z52)	10077390
		DISCON	MEMBER, FRT CROSS (1988 Z51, Z52)	10077390
	10-N3	7.010	CROSSMEMBER, FRT (#2) (1989)	10098200
46.	10-N3	7.010	SILL, U/B FRT CR	14090676
47.	10-A16	12.659	GUSSET, DR HGE PLR FRT LWR-RH	14058690
	10-A16	12.659	GUSSET, DR HGE PLR FRT LWR-LH	14090689
48.		DISCON	SUPPORT, HOOD PRIM LAT-RH (1984-88)	14046734
		DISCON	SUPPORT, HOOD PRIM LAT-RH (1989)	10225268
	10-N13	8.080	SUPPORT, HOOD PRIM LAT-LH (1984-88)	14046733
		DISCON	SUPPORT, HOOD PRIM LAT-LH (1989)	10123071
49.		N.S.	REINFORCEMENT, SI FRT DR PLR UPR	
50.		N.S.	REINFORCEMENT, SI FRT DR PLR LWR	
51.		N.S.	SUPPORT, FLR FRT PNL	
52.		DISCON	BRACKET, FRT C/MBR (1984-86)	14090675
		DISCON	BRACKET, FRT C/MBR (1987-88 EXC Z51, Z52)	14090675
53.		DISCON	DEFLECTOR, LK PLR PRESS REL AIR-RH (1988-89)	10054614
		DISCON	DEFLECTOR, LK PLR PRESS REL AIR-LH (1988-89)	10054613
54.		DISCON	FRAME, W/S LWR CORNER-RH	14069808
		DISCON	FRAME, W/S LWR CORNER-LH	14069807
55.		DISCON	FRAME, W/S LWR	10048794
56.		DISCON	EXTENSION, INTER FLR PNL (1984-88)	14090688
	10-B5	12.980	EXTENSION, INTER FLR PNL (1989)	10161396
57.	10-A17	12.807	FRAME, W/S UPR	10208501
58.	10-A17	12.807	FRAME, W/S UPR CORNER-RH	14069810
	10-A17	12.807	FRAME, W/S UPR CORNER-LH	14069809
59.		DISCON	SUPPORT, FLR PNL RR CPT-RH (1984-87)	14047550
	10-N27	15.222	SUPPORT, R/CMPT SI CPT (RH) (1988-89)	10239258
		DISCON	SUPPORT, FLR PNL RR CPT-LH (1984-87)	14047549
	10-N28	15.306	SUPPORT, FLR PNL RR CPT-LH (1988-89)	10239257
60.	10-A28	12.942	REINFORCEMENT, SI DR OTR L/PLR-RH (1984-87)	10107830
	10-A28	12.942	REINFORCEMENT, SI DR OTR L/PLR-RH (1988-89)	10107830
	10-A28	12.942	REINFORCEMENT, SI DR OTR L/PLR-LH	10107829
61.	10-B7	12.981	REINFORCEMENT, INTER FLR PNL EXT	14043102
62.	10-B4	12.952	BOW, RF CTR (LWR & UPR)	14091457
63.		DISCON	REINFORCEMENT, FLR RR PNL OPG (INCL 28)	14105595
64.	10-N21	10.695	RETAINER, FRT S/D OPG FIN PNL (PUSH IN) (1985-96)	20032850

© 2000 GENERAL MOTORS SERVICE PARTS OPERATIONS-CHEVROLET-14Y

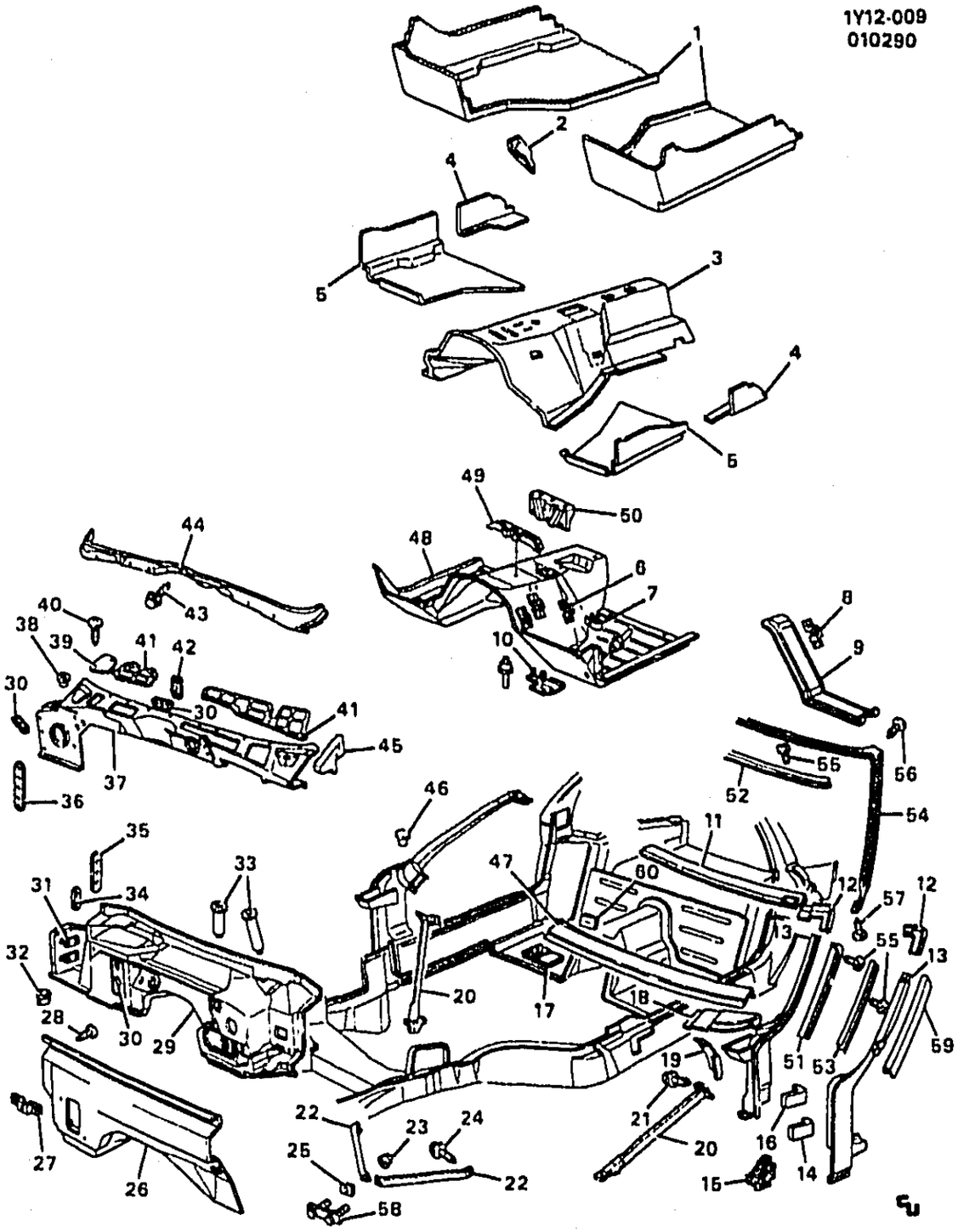

1Y12-009

1984-1989 Y SHEET METAL/BODY FRONT END

1.	DISCON	CARPET, FLR PNL-RH (1984-87) (GRAPHITE-12I) (SEE PARTS SECTION FOR ADDITIONAL COLORS & TRIM COMBINATIONS)	14060262
	DISCON	CARPET, FLR PNL-RH (1988-89) (MED COGNAC-60I) (SEE PARTS SECTION FOR ADDITIONAL COLORS & TRIM COMBINATIONS)	10089508
	DISCON	CARPET, FLR PNL-LH (1984-87) (GRAPHITE-12I) (SEE PARTS SECTION FOR ADDITIONAL COLORS & TRIM COMBINATIONS)	14060261

© 2000 GENERAL MOTORS SERVICE PARTS OPERATIONS-CHEVROLET-14Y

				1Y12-009
		DISCON	CARPET, FLR PNL-LH (1988-89) (MED COGNAC-60I) (SEE PARTS SECTION FOR ADDITIONAL COLORS & TRIM COMBINATIONS)	10089507
2.	10-N27	15.300	RETAINER, FLR CPT (PAINT TO MATCH)	10250703
3.		DISCON	INSULATOR, FLR PNL CTR	14104876
4.	10-B7	12.981	INSULATOR, INR INTER SI MBR-RH	14064514
		DISCON	INSULATOR, INR INTER SI MBR-LH (1984-87)	14064513
		DISCON	INSULATOR, INR INTER SI MBR-LH (1988)	10094902
	10-B7	12.981	INSULATOR, INR INTER SI MBR-LH (1989)	10137253
5.		DISCON	INSULATOR, FLR PNL-RH	14060288
		DISCON	INSULATOR, FLR PNL-LH (1984-87)	14060287
		DISCON	INSULATOR, FLR PNL-LH (1988-89)	10064303
6.	10-N27	15.300	BRACKET, FLR CPT RET	14060290
7.		8.921	NUT, U-SHAPE (M4.2X1.41X.065) (AC-DELCO #15650655)	15650655
8.	10-N20	10.240	BRACKET, FLR CNSL-RH	14049146
	10-N20	10.240	BRACKET, FLR CNSL INTER TO FLR PNL-RH	14049236
	10-N20	10.240	BRACKET, FLR CNSL INTER TO INTER FLR PNL-RH	14049238
	10-N20	10.240	BRACKET, FLR CNSL-LH	14065087
	10-N20	10.240	BRACKET, FLR CNSL INTER TO FLR PNL-LH	14049237
	10-N20	10.240	BRACKET, FLR CNSL INTER TO INTER FLR PNL-LH	10137744
9.		DISCON	REINFORCEMENT, FLR PNL-RH (1984-85)	14065060
		DISCON	REINFORCEMENT, FLR PNL-LH (1984-85)	14065059
10.		DISCON	PLATE, I/P LWR BRKT STUD (A.T.)	14046622
		DISCON	PLATE, I/P LWR BRKT STUD (1984-88 M.T.)	14046742
		DISCON	PLATE, I/P LWR BRKT STUD (1989 M.T.)	14104930
11.	10-A17	12.807	FRAME, W/S UPR	10208501
12.	10-A17	12.807	FRAME, W/S UPR COR-RH	14069810
	10-A17	12.807	FRAME, W/S UPR COR-LH	14069809
13.		DISCON	PILLAR, DR HGE INR/OTR-RH	14069820
		DISCON	PILLAR, DR HGE INR/OTR-LH	14069819
14.		N.S.	REINFORCEMENT, HGE PLR LWR	
15.	10-A16	12.659	GUSSET, DR HGE PLR FRT LWR-RH	14058690
	10-A16	12.659	GUSSET, DR HGE PLR FRT LWR-LH	14090689
16.		N.S.	REINFORCEMENT, HGE FLR UPR	
17.		DISCON	PLATE, W/S INR LWR FRM	14051109
18.		DISCON	FRAME, W/S INR/OTR LWR COR-RH	14069808
		DISCON	FRAME, W/S INR/OTR LWR COR-LH	14069807
19.		DISCON	GUSSET, W/S LWR FRM-RH	14046720
		DISCON	GUSSET, W/S LWR FRM-LH	14046719
20.	10-N4	7.039	BRACE, OTR SI MBR UPR-RH	10208440
		DISCON	BRACE, OTR SI MBR UPR-LH	14081859
21.		8.900	BOLT, HFH W/CON WA (M8X1.25X20)	11504611
22.		DISCON	BRACE, CR/MBR RR-RH (1984-85) (1986 Y07) (1987-88 Y07 EXC Z51, Z52)	14094300
	10-N4	7.039	BRACE, CR/MBR RR-RH (1986-88 Y67) (1987-88 Y07, Z51, Z52)	14092612
		DISCON	BRACE, CR/MBR RR-LH (1984-85) (1986 Y07) (1987-88 Y07 EXC Z51, Z52)	14094299
	10-N4	7.039	BRACE, CR/MBR RR-LH (1986-88 Y67) (1987-88 Y07, Z51, Z52)	14092611
23.		8.917	NUT, HEX FLG PREV TORQ (M12X1.75)	11502813
24.	10-N4	7.039	BOLT, CR/MBR (M10X1.5X21.5)	14069669
25.		DISCON	PLATE, CR/MBR BR (1984-88 Y07)	14060222
26.		DISCON	INSULATOR, DA PNL	14104654
27.	10-A16	12.804	BRACKET, DA PNL INSL	14064526
28.		8.950	RETAINER, PUSH-IN (.35X.25)	20064875
29.	10-A16	12.804	PANEL, DA	10234812
30.	10-N16	9.786	PLATE, HTR CASE & CORE MT (1984-87, 1989)	14046786
31.	10-A16	12.804	RETAINER, DA PNL	14043131

© 2000 GENERAL MOTORS SERVICE PARTS OPERATIONS-CHEVROLET-14Y

				1Y12-009
32.	10-A16	12.804	TUBE, PLNM PNL DRN (LWR)	14047487
33.	10-A16	12.804	TUBE, PLNM PNL DRN (UPR)	14049215
	10-A16	12.804	TUBE, PLNM PNL DRN (CTR)	14069668
34.	10-N16	9.786	PLATE, AIR INL VLV LWR RR TAP	14046783
35.	10-N16	9.786	PLATE, AIR INL VLV UPR RR TAP	14046784
36.	10-N16	9.786	PLATE, AIR INL VLV FRT TAP	14046785
37.	10-A16	12.804	PANEL, PLNM FRT (1984-88)	10234814
38.	10-A16	12.804	NUT, (M4.2 DIA SCR M7.8 RND HOLE) (2.729)	14013246
39.	10-A16	12.800	COVER, PLNM PNL ACC	14064560
40.		8.977	SCREW, PAN HD TORX W/FL WA (M4.2X1.41X20) (BLK)	11508561
41.	10-A16	12.800	SCREEN, PLNM PNL-RH	14047584
	10-A16	12.800	SCREEN, PLNM PNL-LH	14047583
42.	10-N15	9.211	PLATE, A/C EVAP & BLO MDL STUD	14046766
43.		8.977	SCREW, PAN HD TORX W/FL (M4.2X1.41X20) (BLK)	11508561
44.		DISCON	SEAL, PLNM PNL (1984-88)	14046741
	10-A16	12.804	SEAL, PLNM PNL (1989)	14104361
45.		N.S.	SUPPORT, PLNM PNL SI	
46.	10-A26	12.840	PLUG, DR L/PLR HOLE (1984-88) (12.981)	4805844
	10-B5	12.980	PLUG, DR L/PLR HOLE (1989)	10118451
47.		DISCON	FRAME, W/S LWR (1984-85)	10048794
		DISCON	FRAME, W/S LWR (1986-89)	10048794
48.		DISCON	PANEL, FLR (1984-88 A.T.)	14100237
		DISCON	PANEL, FLR (1989 A.T.)	14104870
		DISCON	PANEL, FLR (1984-88 M.T.)	14100238
		DISCON	PANEL, FLR (1989 M.T.)	14104869
49.	10-B5	12.980	BRACKET, FLR PNL LWR	14076517
50.		DISCON	BRACKET, FLR PNL UPR	14060212
51.	10-N17	10.093	MOLDING, W/S SI-RH	14049032
	10-N17	10.093	MOLDING, W/S SI-LH	14049031
52.	10-N17	10.093	MOLDING, W/S UPR	14049033
53.	10-N21	10.710	RETAINER, W/STR-RH	14049244
	10-N21	10.710	RETAINER, W/STR-LH	14049243
54.	10-A17	12.807	WEATHERSTRIP, W/S FRM	10268887
55.		8.977	SCREW, RD WA HD C/R TAP (M4.2X1.41X13) (BLK ORG)	10180421
56.		8.977	SCREW, PAN HD C/R TAP (M4.2X1.41X16)	11504736
57.	10-N21	10.695	RETAINER, FRT S/D WDO FRT W/STR RET (PUSH IN) (LWR)	8731909
58.		DISCON	REINFORCEMENT, CR/MBR LWR (1984-85)	14100201
		DISCON	REINFORCEMENT, CR/MBR LWR (1986-89)	14100201
59.		DISCON	PAD, RF PNL FRM SI (1986)	14090615
60.		DISCON	SEAL, W/S INR LWR FRM (1987-89)	3999512

© 2000 GENERAL MOTORS SERVICE PARTS OPERATIONS-CHEVROLET-14Y

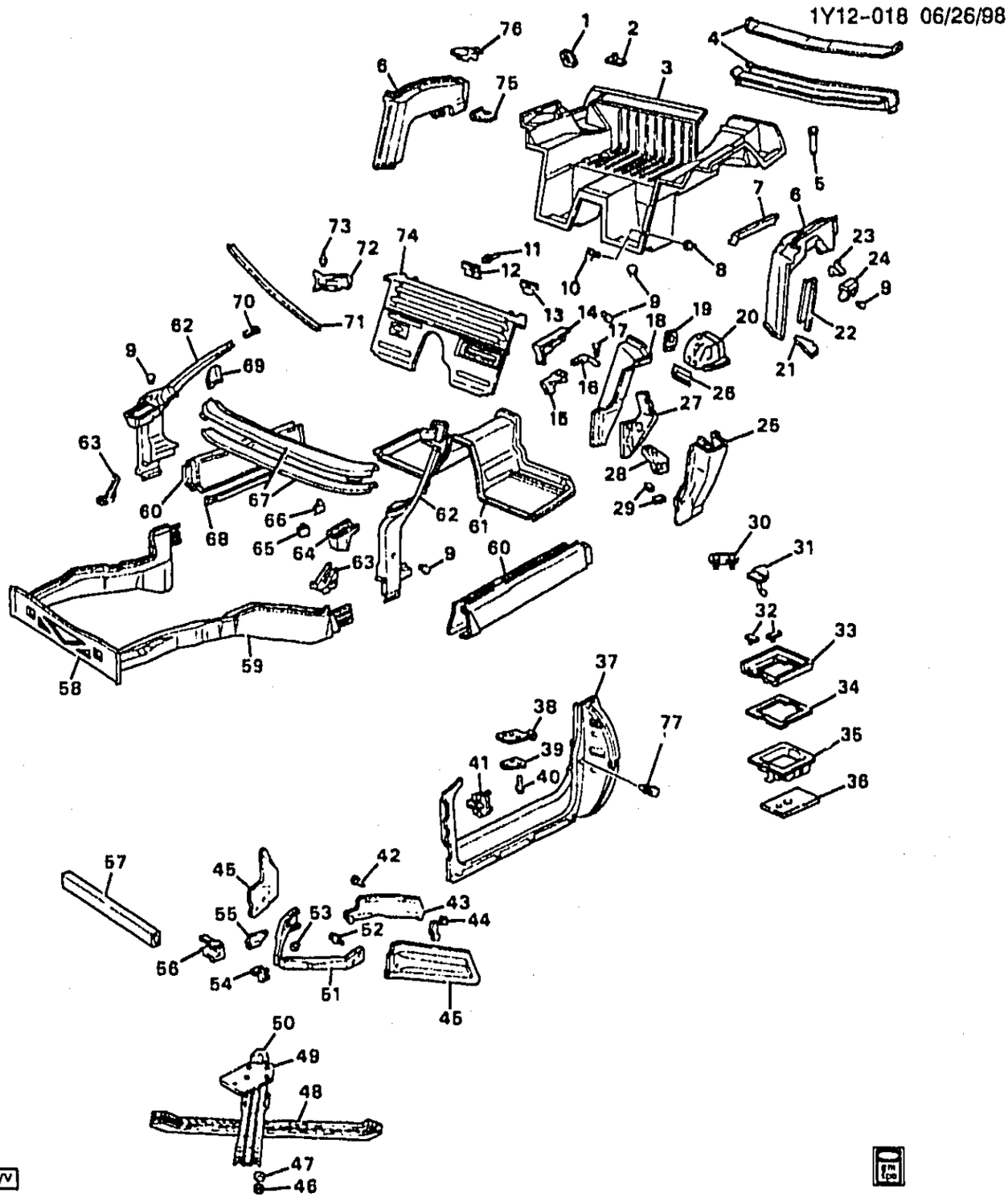

1Y12-018

1986-1989 Y67 SHEET METAL/BODY

1.	10-N15	9.647	PLATE, HARN RET, RR WRG (1986-87) (AC-DELCO #14049163) ..	14049163
2.	10-B7	12.981	BRACKET, FLR RR PNL CTR CPT (10.230)	14064526
3.	10-B7	12.981	PANEL, RR FLR (1986-88)	10193727
	10-B7	12.981	PANEL, RR FLR (1989)	10193727
4.		DISCON	MEMBER, RR CR (1986-87)	10048799
	10-N3	7.014	CROSSMEMBER, U/B RR UPR (1988-89)	12525521
5.	10-B5	12.980	SPACER, RR FLR PNL INSL	14092739

© 2000 GENERAL MOTORS SERVICE PARTS OPERATIONS-CHEVROLET-14Y

				1Y12-018
6.		DISCON	MEMBER, RR SI-RH (1986-87)	10048798
	10-N2	7.006	MEMBER, RR SI-RH (1988-89)	10112678
		DISCON	MEMBER, RR SI-LH (1986-87)	10048797
	10-N2	7.006	MEMBER, RR SI-LH (1988-89)	10112677
7.	10-N2	7.006	BRACE, SI MBR OTR RR-RH (1989)	14104794
	10-N2	7.006	BRACE, SI MBR OTR RR-LH (1969)	14104793
8.		8.917	NUT, HFH (M6X1X6.5) 9, ZOR	3530297
9.	10-A26	12.840	PLUG, DR HGE INR & OTR PNL (1986-88) (12.981)	4805844
	10-B5	12.980	PLUG, DR HGE INR & OTR PLR (1989)	10118451
	10-N3	7.009	PLUG, OTR RR SI MBR (1986-88)	4805844
10.	10-B7	12.981	PLATE, RR FLR PNL STUD	10045625
11.		8.967	RIVET, DM HD BLIND (.125X.312) AL	9424862
12.	10-M24	2.560	BRACKET, MULTIUSE RLY	14100353
13.		DISCON	BRACKET, BODY WRG HARN	14100354
14.	10-N24	14.731	PANEL, DR LK PLR UPR TR-RH	14100368
	10-N24	14.731	PANEL, DR LK PLR UPR TR-LH	14100367
15.	10-A28	12.942	SEAL, DR LK PLR UPR FRT-RH	14092684
	10-A28	12.942	SEAL, DR LK PLR UPR FRT-LH	14092683
16.	10-A28	12.942	SEAL, DR LK PLR UPR RR-RH	14100366
	10-A28	12.942	SEAL, DR LK PLR UPR RR-LH	14100365
17.	10-A18	12.810	RETAINER, RF LIFT OFF PNL/WDO RR W/STR (PUSH IN) (1986-89)	8731909
18.	10-A28	12.942	PANEL, DR LK INR-RH	10208620
	10-A28	12.942	PANEL, DR LK INR-LH	10208621
19.	10-A28	12.942	REINFORCEMENT, DR OTR LK PLR-RH (1986-87)	10107830
	10-A28	12.942	REINFORCEMENT, DR OTR LK PLR-RH (1988-89)	10107830
	10-A28	12.942	REINFORCEMENT, DR OTR LK PLR-LH (1986-89)	10107829
20.		DISCON	PANEL, BODY L/PLR OTR UPR (RH)	14092638
	10-A28	12.942	PANEL, BODY L/PLR OTR UPR (LH)	14092637
21.	10-A28	12.942	FILLER, BODY L/PLR LWR (LH) (PART OF 28)	14092647
	10-A28	12.942	FILLER, BODY L/PLR LWR (RH) (PART OF 28)	14092648
22.	10-A28	12.942	REINFORCEMENT, DR INR LK PLR-RH	10048892
	10-A28	12.942	REINFORCEMENT, DR INR LK PLR-LH	10048891
23.		DISCON	BRACKET, RR SUSP JOUNCE BPR (1986-88)	14064511
	10-N5	7.535	BUMPER, RR SUSP JOUNCE (1989)	14105140
24.		N.S.	BRACKET, DIFF CARR	
25.	10-A28	12.942	PILLAR, DR LK OTR-RH	14091024
	10-A28	12.942	PILLAR, DR LK OTR-LH	14091023
26.	10-B7	12.981	FILLER, FLR RR CLOSEOUT INTER-RH	14100358
	10-B7	12.981	FILLER, FLR RR CLOSEOUT INTER-LH	14100357
27.		DISCON	REINFORCEMENT, DR LK PLR-RH (1986-87)	10051848
		DISCON	REINFORCEMENT, DR LK PLR-LH (1986-88)	10051847
28.	10-A28	12.942	FILLER, BODY L/PLR LWR (RH) (INCLS 21)	14092648
	10-A28	12.942	FILLER, BODY L/PLR LWR (LH) (INCLS 21)	14092647
29.	10-B10	12.986	SPACER, U/B BR	10153644
30.		DISCON	PLATE, DR LK OTR PLR BR TAP (1986)	14076559
31.		DISCON	BRACE, DR LK OTR PLR-RH (1986)	14076558
		DISCON	BRACE, DR LK OTR PLR-LH (1986)	14076557
32.	10-B5	12.980	PLATE, FLR RR PNL OPG CVR STUD	14088454
33.		DISCON	REINFORCEMENT, RR FLR PNL INR-RH (1986-88)	10051840
		DISCON	REINFORCEMENT, RR FLR PNL INR-LH (1986-88)	10051839
	10-B5	12.980	REINFORCEMENT, RR FLR PNL INR (1989)	
34.		DISCON	GASKET, FLR RR PNL OPG CVR	14088442
35.		DISCON	COVER, FLR RR PNL OPG	14088439
36.	10-B5	12.980	REINFORCEMENT, RR FLR PNL OTR	10051841
37.	10-N21	10.695	PANEL, FRT S/D OPG FIN (RH)	10287793
	10-N21	10.695	PANEL, FRT S/D OPG FIN (LH)	10287792

				1Y12-018
38.		DISCON	LOCATOR, DR GDE PIN	14092601
39.	10-N20	10.571	REINFORCEMENT, DR GDE PIN LOC	14047542
40.		8.900	BOLT, HFH (M6X1X20) 9.8, PZOR (AC-DELCO #11508600)	11508600
41.		DISCON	PIN, DR GDE	14092602
42.		8.977	SCREW, SEMS HEX W/FL WA (M6.3X1.81X20) PZOR	12337828
43.	10-M26	3.145	SHIELD, BRK & FUEL VPR PIPE	14104690
44.	10-M26	3.145	BRACKET, BRK & FUEL VPR PIPE	14092701
45.		N.S.	REINFORCEMENT, SI RL	
46.		8.917	NUT, HFH (M8X1.25X7.5) 10, PEOR (AC-DELCO #11514596)	11514596
47.	10-B10	12.986	WASHER, U/B BR (7.347)	14038397
48.	10-B10	12.986	BRACE, U/B LWR	10143533
49.	10-B5	12.980	REINFORCEMENT, U/B BR	14092624
50.	10-B10	12.986	BRACE, U/B UPR	10193674
	10-B10	12.986	BRACE, U/B UPR (1989)	10193674
51.	10-N4	7.039	BRACE, FRT CR/MBR RR-RH	14092612
	10-N4	7.039	BRACE, FRT CR/MBR RR-LH	14092611
52.	10-N4	7.039	BOLT, FRT CR/MBR	14069669
53.		8.917	NUT, HEX FLGD PREV TORQ (M12X1.75) 10, CA	11502813
54.		DISCON	REINFORCEMENT, FRT CR/MBR UPR	14092613
55.		DISCON	SHIELD, FUEL FLTR (1986-88)	14092697
56.	10-N4	7.039	BRACKET, FRT CR/MBR RR-RH	14092618
	10-N4	7.039	BRACKET, FRT CR/MBR RR-LH	14092617
57.		DISCON	MEMBER, FRT CR (1986-87)	10077390
		DISCON	MEMBER, FRT CR (1988)	10077390
	10-N3	7.010	CROSSMEMBER/FRT (#2) (1989)	10098200
58.	10-N3	7.010	SILL, U/B FRT CR	14090676
59.		DISCON	MEMBER, FRT SI-RH (1986-88)	10048796
		DISCON	MEMBER, FRT SI-RH (1989)	10132714
		DISCON	MEMBER, FRT SI-LH (1986-88)	10048795
		DISCON	MEMBER, FRT SI-LH (1989)	10132713
60.		DISCON	MEMBER, OTR INTER SI-RH	14069826
		DISCON	MEMBER, OTR INTER SI-LH	14069825
61.		DISCON	PANEL, INTER FLR (1986-87)	10067390
	10-B7	12.981	PANEL, INTER FLR (1988)	10198704
	10-B7	12.981	PANEL, INTER FLR (1989)	10198704
62.		DISCON	PILLAR, DR HGE INR & OTR-RH (INCL 65, 66)	14069820
		DISCON	PILLAR, DR HGE INR & OTR-LH (INCL 65, 66)	14069819
63.	10-A16	12.659	GUSSET, DR HGE PLR FRT LWR-RH	14058690
	10-A16	12.659	GUSSET, DR HGE PLR FRT LWR-LH	14090689
64.		DISCON	SUPPORT, HOOD PRIM LAT-RH (1986-88)	14046734
		DISCON	SUPPORT, HOOD PRIM LAT-RH (1989)	10225268
	10-N13	8.080	SUPPORT, HOOD PRIM LAT-LH (1986-88)	14046733
		DISCON	SUPPORT, HOOD PRIM LAT-LH (1989)	10123071
65.		N.S.	REINFORCEMENT, HOOD PRIM LAT SUPT (PART OF 62)	
66.		N.S.	REINFORCEMENT, SI FRT DR PLR LER (PART OF 62)	
67.		DISCON	FRAME, W/S LWR	10048794
68.		N.S.	SUPPORT, FLR FRT PNL	
69.		DISCON	FRAME, W/S OTR LWR COR-RH	14069808
		DISCON	FRAME, W/S OTR LWR COR-LH	14069807
70.	10-A17	12.807	FRAME, W/S UPR COR-RH	14069810
	10-A17	12.807	FRAME, W/S UPR COR-LH	14069809
71.	10-A17	12.807	FRAME, W/S UPR	10208501
72.	10-B7	12.981	FILLER, FLR RR CLOSEOUT UPR-RH	14092724
	10-B7	12.981	FILLER, FLR RR CLOSEOUT UPR-LH	14092723
73.		N.S.	RIVET, DM HD TYPE	
74.	10-B5	12.980	EXTENSION, INTER FLR PNL	14092607
75.	10-N4	7.039	GUSSET, RR CR/MBR-RH	14064524

© 2000 GENERAL MOTORS SERVICE PARTS OPERATIONS-CHEVROLET-14Y

				1Y12-018
	10-N4	7.039	GUSSET, RR CR/MBR-LH	14064523
76.	10-N4	7.039	COVER, MBR RR SI-RH	14078628
	10-N4	7.039	COVER, MBR RR SI-LH	14078627
77.	10-N21	10.695	RETAINER, FRT S/D OPG FIN PNL (PUSH IN)	20032850

© 2000 GENERAL MOTORS SERVICE PARTS OPERATIONS-CHEVROLET-14Y

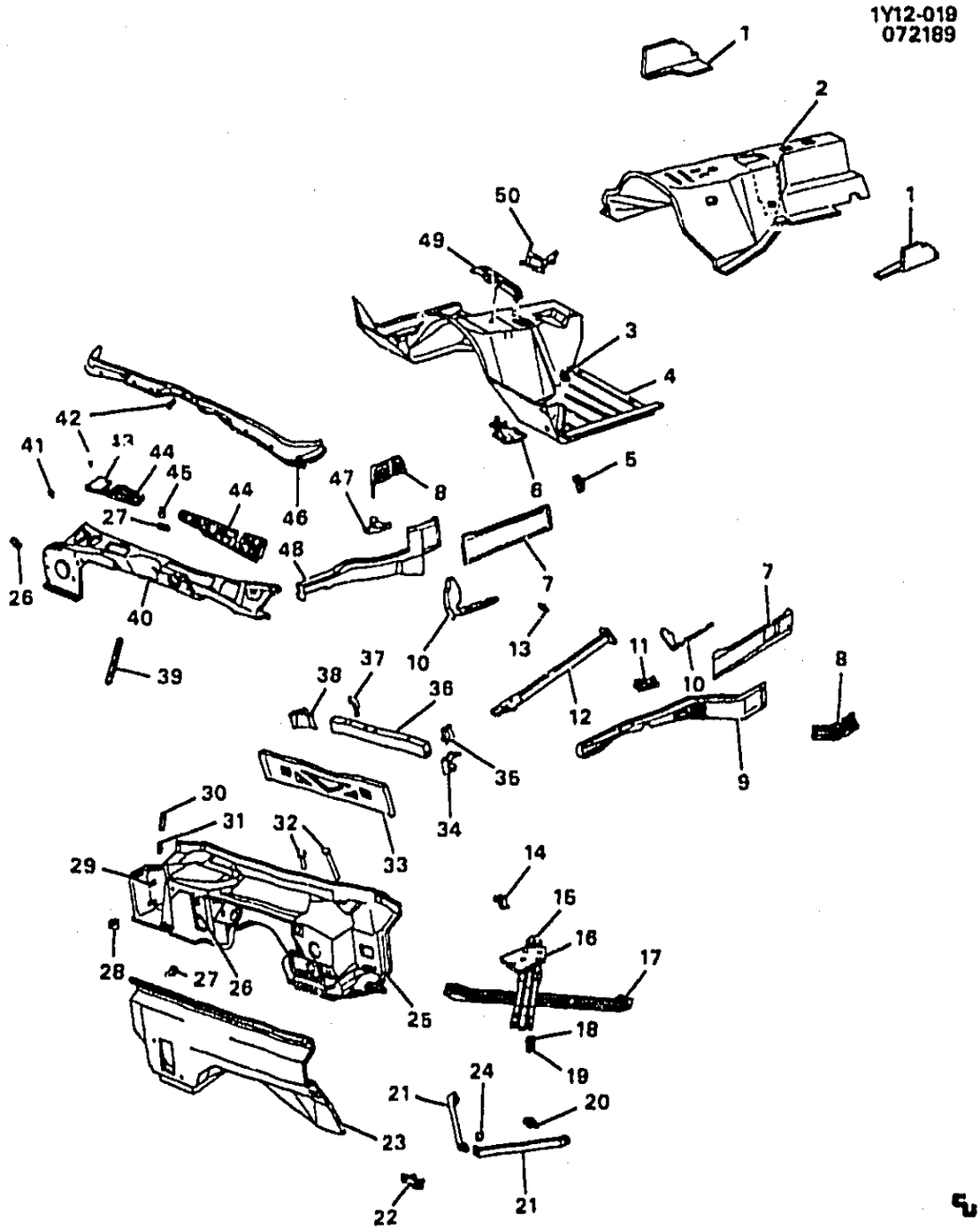

1Y12-019

1990-1991 Y SHEET METAL/BODY PART 1 BODY FRAME

1.	10-B7	12.981	INSULATOR, INR INTER SI MBR .	90-91	Y	RH	14064514
	10-B7	12.981	INSULATOR, INR INTER SI MBR .	90-91	Y	LH	10137253
2.	10-B5	12.[illegible]0	INSULATOR, FLR PNL FRT CTR .	90-91	Y (FE1, FE7)	1	10193706
3.		8.921	NUT, M4.2X1.4, 19.3X213.6.8.9 (AC-DELCO #15650655)	90-91	.....	AR	15650655

© 2000 GENERAL MOTORS SERVICE PARTS OPERATIONS-CHEVROLET-14Y

							1Y12-019
4.	10-B5	12.980	PANEL, F/FLR (WHEN USING ON 1990-91 EXC FOR ZR1, MUST DRILL HOLES FOR HEAT SHIELD, DIMPLES SUPPLIED ON PART)	90-91	Y (MD8)	1	10248660
	10-B5	12.980	PANEL, F/FLR (PLASTIC W/STEEL REINFORCEMENTS) (WHEN USING ON 1990-91 EXC FOR ZR1, MUST DRILL HOLES FOR HEAT SHIELD, DIMPLES SUPPLIED ON PART)	90-91	Y (ML9)	1	10248661
5.	10-N20	10.240	BRACKET, F/FLR CNSL FRT	90-91	Y	RH	14049146
	10-N20	10.240	BRACKET, F/FLR CNSL FRT	90-91	Y	LH	14065087
	10-N20	10.240	BRACKET, F/FLR CNSL INTER (FRT)	90-91	Y	RH	14049236
	10-N20	10.240	BRACKET, F/FLR CNSL INTER (FRT)	90-91	Y	LH	14049237
	10-N20	10.240	BRACKET, F/FLR CNSL INTER (RR)	90-91	Y	LH	10137744
	10-N20	10.240	BRACKET, F/FLR CNSL INTER (RR)	90-91	Y	RH	14049238
6.		DISCON	PLATE, I/P LWR BRKT STUD (10.230)	90-91	Y (ML9)	1	14104930
		DISCON	PLATE, I/P LWR BRKT STUD (1ST DESIGN HAS TWO 20MM STUDS) (10.230)	90-91	Y (MD8) (1ST DES)	1	14046622
7.	10-N2	7.006	MEMBER, INR RR SI	90-91	Y07	LH	12513815
	10-N2	7.006	MEMBER, INR RR SI	90-91	Y07	RH	12513816
	10-N2	7.006	MEMBER, INR RR SI	90-91	Y67	LH	10112677
	10-N2	7.006	MEMBER, INR RR SI	90-91	Y67	RH	10112678
8.		N.S.	REINFORCEMENT, INR FRT S/MBR				
9.	10-N2	7.006	RAIL, F/CMPT SI (INCL 11, 34) (IT MAYBE NECESSARY TO USE SELF TAPPING SCREWS TO ATTACH FRT & RR W/HSE PNLS, WSWA SOLV & COOLER CONT. & ANT. RESVR)	90-91	Y	LH	12529345
10.		DISCON	SUPPORT, FLR FRT PNL	90-91	Y	1	10086121
11.		N.S.	REINFORCEMENT, FRT S/ABS BRKT (PART OF 9)			LH	
12.	10-N4	7.039	BRACE, U/B FRT S/RL UPR	90-91	Y	RH	10208440
	10-N4	7.039	BRACE, U/B FRT S/RL UPR	90-91	Y	LH	10208441
13.		8.900	BOLT, HEX W/WA, M8X1.25X20, 8.8, PC	90-91		AR	11504611
14.		DISCON	REINFORCEMENT, FRT C/MBR (UPR)	90-91	Y (L98)	1	14092613
15.	10-B10	12.986	BRACE, U/B (UPR)	90-91	Y67	1	10193674
16.	10-B5	12.980	REINFORCEMENT, U/B BR	90-91	Y67	1	14092624
17.	10-B10	12.986	BRACE, U/B (LWR)	90-91	Y67	1	10143533
18.		8.917	NUT, HFH, M8X1.25, 17.9 OD, 738 THK, 13MM HEX, 10, ZF (8.915) (AC-DELCO #11514596)	90-91		AR	11514596
19.		8.929	WASHER, M8.9X20.4X2.5 ST CAD/ZP (7347) (U/B BR)	90-91		AR	14038397
20.	10-N4	7.039	BOLT, FRT C/MBR (M10X1.5X25 13HEX)	91	Y (L98)	4	14069669
	10-N4	7.039	BOLT, FRT C/MBR (M10-1.25X21.5)	90	Y (L98)	2	14069669

© 2000 GENERAL MOTORS SERVICE PARTS OPERATIONS-CHEVROLET-14Y

							1Y12-019
21.	10-N4	7.039	BRACE, FRT C/MBR RR	90-91	Y (L98)	LH	14092611
	10-N4	7.039	BRACE, FRT C/MBR RR	90-91	Y (L98)	RH	14092612
22.	10-N4	7.039	REINFORCEMENT, FRT C/MBR .	90-91	Y (LT5, FE1, FE7)	1	10098136
		DISCON	REINFORCEMENT, FRT C/MBR (LWR)	90-91	Y (L98)	1	14100201
23.	10-A16	12.804	INSULATOR, DA PNL	90-91	Y	1	10224033
24.		8.917	NUT-HFH LOCK, M12X1.75X13.4, 25.6 OD, ALL NEW METAL TORQ., 510M (10) CA	90-91	.....	AR	11502813
25.	10-A16	12.804	PANEL, DA (INCL 30)	90-91	Y	1	10234812
26.	10-N15	9.216	PLATE, A/C EVPR & BLO MDL TAP (PART OF 40) (9.786)	90-91	Y	2	14046786
27.		8.950	RETAINER, PUSH-IN, FITS .250 HOLE, 1.01LG.700-OD NYLON BLACK	90-91	.....	AR	10121502
28.	10-A16	12.804	TUBE, PLNM DRN (LWR)	90-92	Y	1	14047487
29.	10-A16	12.804	RETAINER, DA PNL (15.280)	90	Y	2	14043131
	10-N27	15.280	PLATE, F/FDR RR REINF NUT ...	91	Y	2	14043131
30.	10-N16	9.786	PLATE, AIR INL TAP (UPR RR) (PART OF 25)	90-91	Y	1	14046784
31.	10-N16	9.786	PLATE, AIR INL TAP (LWR RR) ...	90-91	Y	1	14046783
32.	10-A16	12.804	TUBE, PLNM DRN (CTR)	90-91	Y	1	14069688
	10-A16	12.804	TUBE, PLNM DRN (UPR)	90-91	Y	1	14049215
33.	10-N3	7.010	SILL, U/B FRT CR	90-91	Y	1	14090676
34.		N.S.	BRACKET, FRT C/MBR (PART OF 9)		.....	LH	
35.	10-N4	7.039	BRACKET, FRT C/MBR (RR)	90-91	Y	RH	14092618
36.	10-N3	7.010	CROSSMEMBER, FRT (#2)	90-91	Y	1	10098200
37.	10-N4	7.039	BRACKET, FRT C/MBR (RR)	90-91	Y	LH	14092617
38.		N.S.	BRACKET, FRT C/MBR		.....	RH	
39.	10-N16	9.786	PLATE, AIR INL TAP (FRT)	90-91	Y	1	14046785
40.	10-A16	12.804	PANEL, PLNM (FRT) (INCL 26, 41)	90-91	Y	1	10234814
41.	10-A16	12.800	NUT, AIR INL SCRN (PART OF 40) (SPECIAL ANCHOR) (2.729)	90-91	Y	AR	14013246
	10-A16	12.800	NUT, PLNM PNL ACC HOLE CVR (SPECIAL ANCHOR) (2.729)	91	Y	2	14013246
42.		8.977	SCREW, PAN HD TORX W/FL WA M4.2X1.41X20303 BLK	90-91	.....	AR	11508561
43.	10-A16	12.800	COVER, PLNM PNL ACC HOLE ..	90-91	Y	1	14064560
44.	10-A16	12.800	SCREEN, AIR INL	90-91	Y	RH	14047584
	10-A16	12.800	SCREEN, AIR INL	90-91	Y	LH	14047583
45.	10-N15	9.211	PLATE, A/C EVPR & BLO MDL STUD (9.262)	90-91	Y	1	14046766
46.	10-A16	12.804	SEAL, PLNM PNL	90-91	Y	1	14104361
47.		N.S.	REINFORCEMENT, FRT S/ABS BRKT		.....	RH	
48.	10-N2	7.006	RAIL, F/CMPT SI (WILL NEED TO USE SELF TAPPING SCREWS IN PLACE OF BOLTS FOR ATTACHING FRT & RR LWR W/HSE PNLS, WSWA SOLV CONT & COOLANT RECOVERY RESVR)	90-91	Y	RH	12529346
49.	10-B5	12.980	BRACKET, FLR FRT PNL LWR ...	90-91	Y	1	14076517
50.	10-B5	12.980	BRACKET, FLR FRT PNL UPR ...	90-91	Y	1	10086170

© 2000 GENERAL MOTORS SERVICE PARTS OPERATIONS-CHEVROLET-14Y

RPO DEFINITIONS
FE1 – SUSPENSION SYSTEM,SOFT RIDE
FE7 – SUSPENSION SYSTEM,FRONT AND REAR,HEAVY DUTY(USED WITH PERFORMANCE HANDLING PACKAGE Z51)
LT5 – ENGINE,5.7L(5.7J),TPI
L98 – ENGINE, 5.7L, (5.7–8) 350 CID, V8, TPI
MD8 – TRANSMISSION,AUTOMATIC 4–SPEED(THM700R4/4L60)
ML9 – TRANSMISSION,MANUAL 6–SPEED

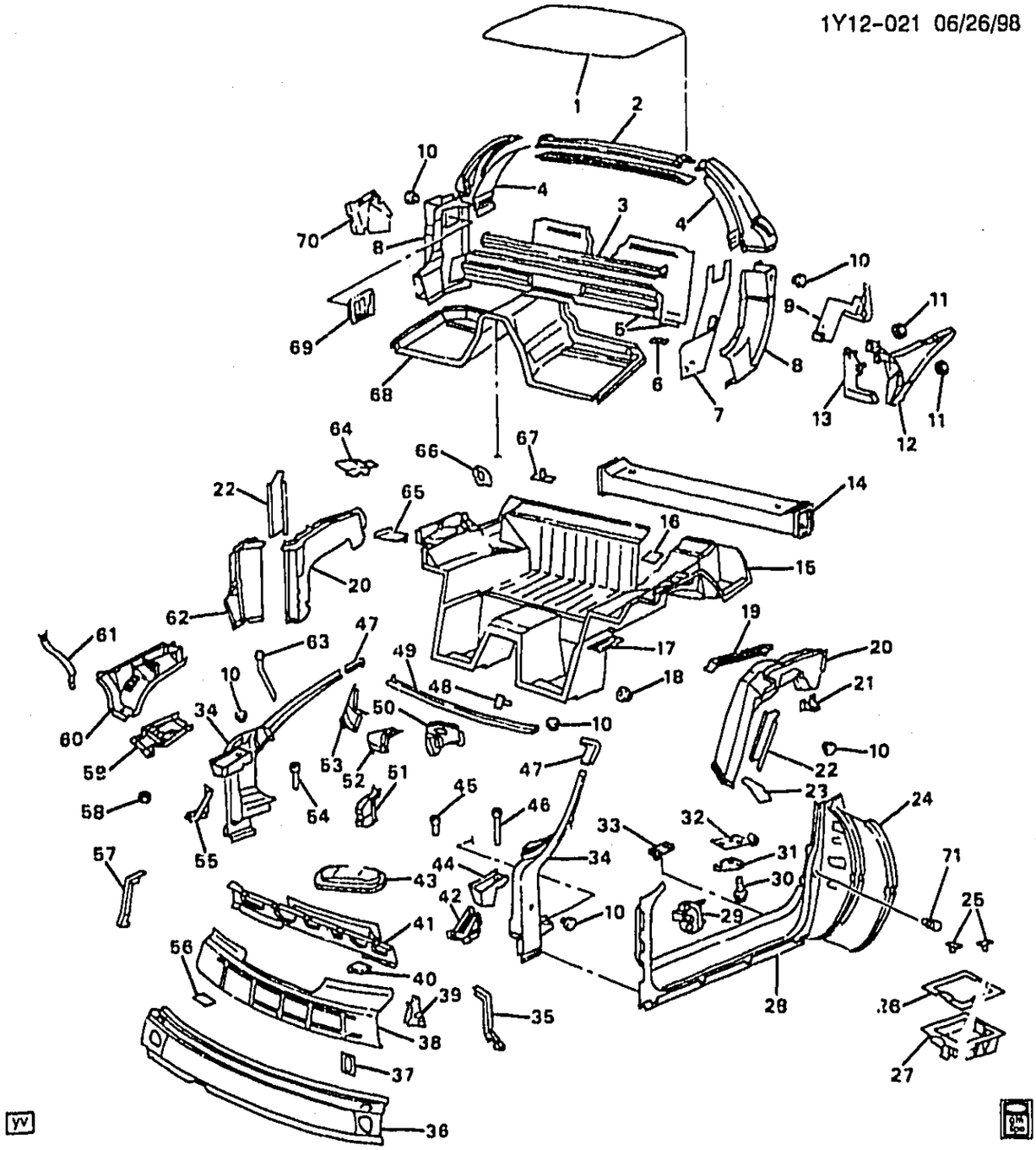

1990–1991 Y07 SHEET METAL/BODY PART 2 BODY FRAME

1.	10–A18	12.810	WINDOW PKG, RF LIFT OFF (BLUE) (CPS)	90–91	Y07 (CC3, C2L, 24S) ..	1	12370123
	10–M23	21.552 A	WINDOW PKG, RF LIFT OFF (BLUE) (CPS) (12.810)	90–91	Y07 (CC3, C2L, 24S) ..	1	12370123
	10–A18	12.810	WINDOW PKG, RF LIFT OFF (BRONZE) (CPS)	90–91	Y07 (CC3, C2L, 64S) ..	1	12370124
	10–M23	21.552 A	WINDOW PKG, RF LIFT OFF (BRONZE) (CPS) (12.810)	90–91	Y07 (CC3, C2L, 64S) ..	1	12370124
	10–A18	12.810	PLUG, RF PNL	90–91	Y07	4	10275702
2.	10–B4	12.952	BOW, RF PNL OTR (CTR)	90–91	Y07	1	14091457

© 2000 GENERAL MOTORS SERVICE PARTS OPERATIONS–CHEVROLET–14Y

							1Y12-021
3.	10-B7	12.981	REINFORCEMENT, INTER FLR PNL EXTN	90-91	Y07	1	14043102
4.		DISCON	BOW, RF INR SI	90	Y	RH	14091456
		DISCON	BOW, RF INR SI	90	Y	LH	14091455
		DISCON	BOW, RF INR SI (VIN BREAK THROUGH 100138)	91	Y (1ST DES)	LH	14091455
		DISCON	BOW, RF INR SI (VIN BREAK THROUGH 100138)	91	Y (1ST DES)	RH	14091456
	10-B4	12.952	BOW, RF INR SI (VIN STARTS WITH #100139) (WHEN USING ON EARLY 1993 & PRIOR MODELS, USE 3-BOLTS 11504498 IN PLC OF STUD PLATE 14091019-20)	91	Y07 (2ND DES)	RH	12522408
	10-B4	12.952	BOW, RF INR SI (VIN STARTS WITH #100139) (WHEN USING ON EARLY 1993 & PRIOR MODELS, USE 3-BOLTS 11504498 IN PLC OF STUD PLATE 14091019-20)	91	Y07 (2ND DES)	LH	12522409
5.	10-B5	12.980	EXTENSION, INTER FLR PNL (12.981)	90-91	Y07	1	10161896
6.	10-N26	14.875	PLATE, D/SEAT BELT ANC (BKL SI) (PART OF 7, 68) (OVAL) (16.714)	90-91	Y	2	15734139
	10-N26	14.875	PLATE, P/SEAT BELT ANC (BKL SI) (PART OF 7, 68) (OVAL) (16.714)	90-91	Y	2	15734139
	10-N26	14.875	PLATE, D/SEAT BELT RETR ANC (PART OF 7, 68) (OVAL) (16.714)	90-91	Y	2	15734139
	10-N26	14.875	PLATE, P/SEAT BELT RETR ANC (PART OF 7, 68) (OVAL) (16.714)	90-91	Y	2	15734139
7.	10-A28	12.942	REINFORCEMENT, BODY L/PLR (INR) (INCLS 6)	90-91	Y	LH	10107829
	10-A28	12.942	REINFORCEMENT, BODY L/PLR (INR) (INCLS 6)	90-91	Y	RH	10107830
8.	10-A28	12.942	PILLAR, FRT S/D OTR LK	90-91	Y07	LH	10051827
	10-A28	12.942	PILLAR, FRT S/D OTR LK	90-91	Y07	RH	10051828
9.	10-B7	12.981	PANEL, R/FLR PNL UPR FRT CLOSEOUT	90-91	Y07	LH	14043111
	10-B7	12.981	PANEL, R/FLR PNL UPR FRT CLOSEOUT	90-91	Y07	RH	14043112
10.	10-B5	12.980	PLUG, OTR RR S/MBR	90	Y	1	10118451
	10-B5	12.980	PLUG, SI F/D HGE INR PLR	90-91	Y	2	10118451
	10-A26	12.840	PLUG, SI F/D HGE OTR PLR (12.980)	90-91	Y	2	10118451
	10-B5	12.980	PLUG, FLR RR PNL DRN	90-91	Y	1	10118451
	10-B5	12.980	PLUG, RF OTR SI BOW	90-91	Y	2	10118451
	10-A16	12.491	PLUG, FRT S/D L/PLR HOLE (12.980)	90-91	Y	2	10118451
	10-A28	12.942	PLUG, OTR RR BODY LK PLR (12.980)	90-91	Y	2	10118451
	10-B5	12.980	PLUG, U/B OTR RR S/RL GA HOLE	91	Y	2	10118451
11.		8.917	NUT, HFH, M8X1.25, 17.9 OD, 738 THK, 13MM HEX, 10, ZF (8.915) (AC-DELCO #11514596)	90-91		AR	11514596
12.	10-A28	12.942	REINFORCEMENT, BODY L/PLR	90-91	Y07	RH	14091018
	10-A28	12.942	REINFORCEMENT, BODY L/PLR	90-91	Y07	LH	14091017

© 2000 GENERAL MOTORS SERVICE PARTS OPERATIONS-CHEVROLET-14Y

							1Y12-021
13.		DISCON	PLATE, FRT S/D L/PLR ANC	90-91	Y07	LH	14091019
		DISCON	PLATE, FRT S/D L/PLR ANC	90-91	Y07	RH	14091020
14.		N.S.	CROSSMEMBER, U/B RR LWR				
15.		DISCON	PANEL, R/FLR	90	Y07	1	10193725
		N.S.	PANEL, R/FLR	91			
16.		N.S.	REINFORCEMENT, RF PNL STOR RR BRKT (NOT AVAILABLE FOR 1990-1991)				
17.		N.S.	REINFORCEMENT, RF PNL STOR FRT BRKT (NOT AVAILABLE FOR 1990-1991)				
18.		8.917	NUT, HFH M6X1X6.5 ZOR 9	90-91		AR	3530297
19.	10-N2	7.006	BRACE, U/B OTR RR S/RL	90-91	Y07	LH	14104793
	10-N2	7.006	BRACE, U/B OTR RR S/RL	90-91	Y07	RH	14104794
20.	10-N2	7.006	MEMBER, INR RR SI (INCL 21)	90-91	Y07	LH	12513815
	10-N2	7.006	MEMBER, INR RR SI (INCL 21)	90-91	Y07	RH	12513816
21.		N.S.	BRACKET, RR SUSP JOUNCE BPR (PART OF 20))				
22.	10-A28	12.942	REINFORCEMENT, SI F/D INR L/PLR	90-91	Y	LH	10048891
	10-A28	12.942	REINFORCEMENT, SI F/D INR L/PLR	90-91	Y	RH	10048892
23.	10-A28	12.942	FILLER, BODY L/PLR LWR	90-91	Y07 (FE1, FE7)	LH	14043123
	10-A28	12.942	FILLER, BODY L/PLR LWR	90-91	Y07 (FE1, FE7)	RH	14043124
24.	10-N21	10.695	EXTENSION, FRT S/D OPG FIN PNL RR (12.942)	90-91	Y (ZR1)	LH	10175533
	10-N21	10.695	EXTENSION, FRT S/D OPG FIN PNL RR (12.942)	90-91	Y (ZR1)	RH	10175534
25.	10-B5	12.980	PLATE, FLR RR PNL OPG CVR STUD (12.981)	90-91	Y	6	14088454
26.		DISCON	GASKET, FLR RR PNL OPG CVR (12.981)	90-91	Y	1	14088442
27.		DISCON	COVER, FLR RR PNL OPG	90-91	Y	1	14088439
28.	10-N21	10.695	PANEL, FRT S/D OPG FIN (12.942) (ADD 16 MM X 48.5 MM SLOT FOR DOOR PIN LOCATOR USING OUTLINE MOLDED INTO PART FOR SLOT LOC)	90-91	Y	LH	10287792
	10-N21	10.695	PANEL, FRT S/D OPG FIN (12.942) (ADD 16MM X 48.5MM SLOT FOR DR PIN LOCATOR, USE OUTLINE MOLDED INTO PART FOR SLOT LOC)	90-91	Y	RH	10287793
29.		DISCON	PIN, FRT S/D LOC (10.466)	90	Y07	2	14060282
		DISCON	PIN, FRT S/D LOC (10.466)	91	Y	2	14060282
30.		8.977	SCREW, PAN HD TORX W/WA, M4.2X1.41X16, SST	90-91		AR	11508100
31.	10-N20	10.571	REINFORCEMENT, FRT S/D LOCR (10.450)	90-91	Y	2	14047542
32.	10-N20	10.571	LOCATOR, FRT S/D	90	Y07 (FE1, FE7)	LH	14046603
	10-N20	10.571	LOCATOR, FRT S/D	90	Y07 (FE1, FE7)	RH	14046604
	10-N20	10.571	LOCATOR, FRT S/D	91	Y	LH	14046603
	10-N20	10.571	LOCATOR, FRT S/D	91	Y	RH	14046604
33.	10-B5	12.980	PLATE, FLR FRT PNL (12.986)	90-91	Y	LH	14058658
	10-B5	12.980	PLATE, FLR FRT PNL	90-91	Y	RH	10098128
34.	10-A26	12.940	PILLAR, BODY HGE (W/CORNER ASM) (INCL 44, 47, 51, 52, 53, 57, 60)	90-91	Y	RH	12512654

© 2000 GENERAL MOTORS SERVICE PARTS OPERATIONS-CHEVROLET-14Y

							1Y12-021
	10-A26	12.840	PILLAR, BODY HGE (W/CORNER ASM) (INCL 35, 47, 52, 53, 60) ...	90-91	Y	LH	12512655
35.		N.S.	BRACKET, DA PNL (PART OF 34)		.....		
36.		N.S.	FRAME, W/S OTR LWR (PART OF FRAME ASM 12512652; INCLS 41)		.....		
37.	10-A17	12.807	SEAL, W/S LWR FRM REINF	90-91	Y	1	10153624
38.	10-A17	12.807	FRAME, W/S INR LWR (INCLS 39)	90-91	Y	1	12512652
39.		DISCON	SUPPORT, FLR FRT PNL	90-91	Y	1	10086121
		N.S.	SUPPORT, FLR FRT PNL (PART OF 36, 38)		.....		
40.	10-N17	10.092	SEAL, W/S INR LWR FRM (9.260)	90-91	Y	5	3099572
41.		N.S.	REINFORCEMENT, W/S LWR FRM CTR (PART OF 36)		.....		
42.	10-A16	12.659	GUSSET, BODY H/PLR FRT LWR	90-91	Y	LH	14090689
43.	10-A17	12.807	PLATE, W/S INR LWR FRM	90-91	Y	RH	10086136
	10-A17	12.807	PLATE, W/S INR LWR FRM	90-91	Y	LH	10086137
44.	10-N13	8.080	SUPPORT, HOOD PRIM LAT (PART OF 34)	90-91	Y (FE1, FE7)	LH	10225267
		DISCON	SUPPORT, HOOD PRIM LAT (PART OF 34)	90-91	Y (FE1, FE7)	RH	10225268
45.	10-A16	12.804	TUBE, PLNM DRN (CTR)	90-91	Y	1	14069688
46.	10-A16	12.804	TUBE, PLNM DRN (UPR)	90-91	Y	1	14049215
47.	10-A17	12.807	FRAME, W/S INR UPR COR (PART OF 34)	90-91	Y	LH	14069809
	10-A17	12.807	FRAME, W/S INR UPR COR (PART OF 34)	90-91	Y	RH	14069810
48.		N.S.	PLATE, R/FLR PNL STUD		.....		
49.	10-A17	12.807	FRAME, W/S UPR (DLR MAY NEED TO ORDER NEW MIRROR & BOLT 10167086 WHEN REPLG FRAME AS ON PAST MODEL VEH.)	90-91	Y	1	10208501
50.	10-A17	12.807	REINFORCEMENT, W/S LWR FRM RR OTR	90-91	Y	RH	10217340
	10-N13	8.075	PLATE, HOOD PRIM LAT REL CBL BRKT NUT	90-91	Y	1	10086014
	10-N2	6.760	REINFORCEMENT, STRG COL SUPT BRKT	90-91	Y	1	10086084
51.		DISCON	BRACKET, I/P UPR (PART OF 34)	90-91	Y	RH	10137758
52.		DISCON	FRAME, W/S INR LWR COR (PART OF 34)	90	.....	RH	10085996
		N.S.	FRAME, W/S INR LWR COR (PART OF 34)		.....		
53.		N.S.	FRAME, W/S OTR LWR COR (PART OF 34)		.....		
54.	10-A16	12.804	TUBE, PLNM DRN (LWR)	90-91	Y	1	14047487
55.	10-A16	12.659	GUSSET, BODY H/PLR FRT LWR	90-91	Y	RH	14058690
56.	10-A17	12.807	COVER, W/S LWR FRM WLDG ACC HOLE	90-91	Y	LH	10086011
	10-A17	12.807	COVER, W/S LWR FRM WLDG ACC HOLE	90-91	Y	RH	10086012
57.		DISCON	BRACKET, DA PNL (PART OF 34)	90-91	Y	RH	10086018
58.	10-N2	6.760	NUT, STRG COL SUPT BRKT SI BRKT (PART OF 59)	90-91	Y	2	10146441
59.	10-N2	6.760	BRACKET, STRG COL UPR SUPT (INCL 58)	90-91	Y	1	10086066

© 2000 GENERAL MOTORS SERVICE PARTS OPERATIONS-CHEVROLET-14Y

60.		N.S.	REINFORCEMENT, W/S LWR FRM FRT OTR (PART OF 34)				
61.	10-N18	10.230	BRACKET, I/P UPR	90-91	Y	LH	10086013
62.	10-A28	12.942	PANEL, BODY L/PLR INR	90-91	Y07	RH	10208618
	10-A28	12.942	PANEL, BODY L/PLR INR	90-91	Y07	LH	10208619
63.	10-A16	12.804	TUBE, PLNM DRN (OTR HGE PLR)	90-91	Y	2	10086015
64.	10-N4	7.039	COVER, RR SI MBR	90-91	Y	LH	14078627
	10-N4	7.039	COVER, RR SI MBR	90-91	Y	RH	14078628
65.	10-N4	7.039	GUSSET, U/B RR C/MBR	90-91	Y	LH	14064523
	10-N4	7.039	GUSSET, U/B RR C/MBR	90-91	Y	RH	14064524
66.	10-N15	9.647	PLATE, BODY WRG HARN RET (AC-DELCO #14049163)	90-91	Y07	1	14049163
67.	10-B7	12.981	BRACKET, FLR RR PNL CTR CPT	90-91	Y07	2	14100206
68.	10-B7	12.981	PANEL, INTER FLR (INCL 6)	90-91	Y	1	10198704
69.		DISCON	DEFLECTOR, BODY L/PLR PRESS RLF AIR (12.942)	90-91	Y07	LH	10054613
		DISCON	DEFLECTOR, BODY L/PLR PRESS RLF AIR (12.942)	90-91	Y07	RH	10054614
70.	10-N28	15.306	SUPPORT, FLR PNL RR CPT (15.222)	90-91	Y07	LH	10239257
71.	10-N21	10.695	RETAINER, FRT S/D OPG FIN PNL (PUSH IN) (14.683)	90-91	Y	2	20032850

RPO DEFINITIONS

CC3 – ROOF,SUN,REMOVEABLE PANELS(TRANSPARENT PLASTIC)
C2L – ROOF PACKAGE,DUAL REMOVEABLE
FE1 – SUSPENSION SYSTEM,SOFT RIDE
FE7 – SUSPENSION SYSTEM,FRONT AND REAR,HEAVY DUTY(USED WITH PERFORMANCE HANDLING PACKAGE Z51)
ZR1 – PACKAGE,SPECIAL PERFORMANCE COUPE(1YY07 + ZR1 == 1YZ07)
24S – ROOF COLOR,REMOVEABLE PANEL(BLUE)
64S – REMOVABLE ROOF PANEL COLOR,BRONZE

© 2000 GENERAL MOTORS SERVICE PARTS OPERATIONS-CHEVROLET-14Y

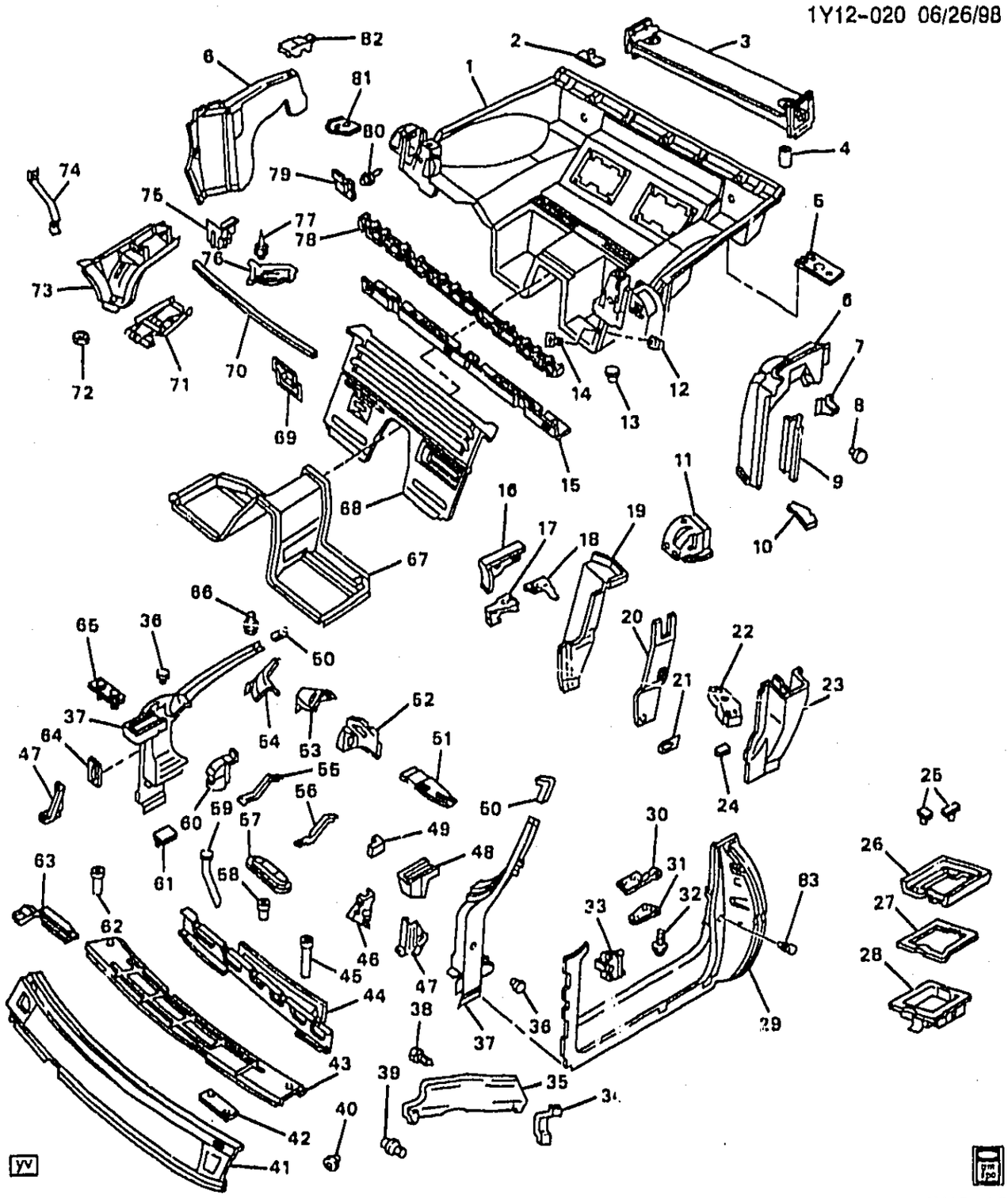

1990-1992 Y67 SHEET METAL/BODY PART 2 FRAME

1.	10-B7	12.981	PANEL, R/FLR	90-91	Y67	1	10193727
	10-B7	12.981	PANEL, R/FLR (PANEL HAS A SQUARE ARM, (DEALER TO CUT HOLE OUT ON INSIDE MARKED BY ETCHING WHEN USING ON 1992 AND PRIOR)	92	Y67	1	10280989
	10-B7	12.981	PANEL, FLR RR FIL	90-92	Y67	1	10146449

© 2000 GENERAL MOTORS SERVICE PARTS OPERATIONS-CHEVROLET-14Y

							1Y12-020
2.	10-B7	12.981	BRACKET, FLR RR PNL CTR CPT (10.230)	90-92	Y67	3	14064526
3.	10-N3	7.014	CROSSMEMBER, U/B RR UPR	90-92	Y67	1	12525521
4.	10-B5	12.980	SPACER, R/FLR PNL INSL	90-92	Y67	2	14092739
5.	10-B5	12.980	REINFORCEMENT, R/FLR PNL OTR	90-92	Y67	2	10051841
6.	10-N2	7.006	MEMBER, INR RR SI (INCL 7)	90-92	Y67	LH	10112677
	10-N2	7.006	MEMBER, INR RR SI (INCL 7)	90-92	Y67	RH	10112678
7.		N.S.	BRACKET, RR SUSP JOUNCE BPR (PART OF 6)				
8.	10-B5	12.980	PLUG, U/B OTR RR S/RL GA HOLE	91-92	Y	2	10118451
	10-B5	12.980	PLUG, OTR RR S/MBR	90	Y	1	10118451
9.	10-A28	12.942	REINFORCEMENT, SI F/D INR L/PLR	90-92	Y	LH	10048891
	10-A28	12.942	REINFORCEMENT, SI F/D INR L/PLR	90-92	Y	RH	10048892
10.		N.S.	FILLER, BODY L/PLR LWR (PART OF 22)				
11.	10-A28	12.942	PANEL, BODY L/PLR OTR UPR	90-92	Y67	LH	14092637
		DISCON	PANEL, BODY L/PLR OTR UPR	90-92	Y67	RH	14092638
12.		8.917	NUT, HFH M6X1X6.5 ZOR 9	90-92		AR	3530297
13.	10-B5	12.980	PLUG, FLR RR PNL DRN	90-92	Y	1	10118451
14.		DISCON	PLATE, ELEK BRK CONT WRG HARN CLIP TAP (U-SHAPE) (3.675)	90-91	Y	1	14091012
	10-M27	4.720	PLATE, ELEK BRK CONT WRG HARN CLIP TAP (W/STUD) (12.981)	92	Y	7	10045625
15.	10-B5	12.980	REINFORCEMENT, FLR PNL #3 C/BAR	90-92	Y67	1	10146450
16.	10-N24	14.731	PANEL, BODY L/PLR UPR TR (BLACK)	90-92	Y67 (19I)	RH	10103850
	10-N24	14.731	PANEL, BODY L/PLR UPR TR (BLACK)	90-92	Y67 (19I)	LH	10103851
		DISCON	PANEL, BODY L/PLR UPR TR (BLUE)	90-91	Y67 (22I)	RH	10103852
		DISCON	PANEL, BODY L/PLR UPR TR (BLUE)	90-91	Y67 (22I)	LH	10103853
	10-N24	14.731	PANEL, BODY L/PLR UPR TR (COGNAC)	90-91	Y67 (60I)	RH	10103854
	10-N24	14.731	PANEL, BODY L/PLR UPR TR (COGNAC)	90-91	Y67 (60I)	LH	10103855
	10-N24	14.731	PANEL, BODY L/PLR UPR TR (RED)	90-92	Y67 (73I)	RH	10103856
	10-N24	14.731	PANEL, BODY L/PLR UPR TR (RED)	90-92	Y67 (73I)	LH	10103857
	10-N24	14.731	PANEL, BODY L/PLR UPR TR (GRAY)	90-91	Y67 (90I)	RH	10103858
	10-N24	14.731	PANEL, BODY L/PLR UPR TR (GRAY)	90-91	Y67 (90I)	LH	10103859
		DISCON	PANEL, BODY L/PLR UPR TR (WHITE)	92	Y67 (10I)	LH	10167117
	10-N24	14.731	PANEL, BODY L/PLR UPR TR (WHITE)	92	Y67 (10I)	RH	10167118
	10-N24	14.731	PANEL, BODY L/PLR UPR TR (BEIGE)	92	Y67 (64I)	RH	10175618
	10-N24	14.731	PANEL, BODY L/PLR UPR TR (BEIGE)	92	Y67 (64I)	LH	10175619

© 2000 GENERAL MOTORS SERVICE PARTS OPERATIONS-CHEVROLET-14Y

							1Y12-020
		DISCON	PANEL, BODY L/PLR UPR TR (GRAY)	92	Y67 (14I)	RH	10175620
		DISCON	PANEL, BODY L/PLR UPR TR (GRAY)	92	Y67 (14I)	LH	10175621
17.	10-A28	12.942	SEAL, FRT S/D L/PLR UPR (FRT)	90-92	Y67	LH	14092683
	10-A28	12.942	SEAL, FRT S/D L/PLR UPR (FRT)	90-92	Y67	RH	14092684
18.	10-A28	12.942	SEAL, FRT S/D L/PLR UPR (RR)	90-92	Y67	LH	14100365
	10-A28	12.942	SEAL, FRT S/D L/PLR UPR (RR)	90-92	Y67	RH	14100366
19.	10-A28	12.942	PANEL, BODY L/PLR INR	90-92	Y67	RH	10208620
	10-A28	12.942	PANEL, BODY L/PLR INR	90-92	Y67	LH	10208621
20.	10-A28	12.942	REINFORCEMENT, BODY L/PLR (INR) (INCL 21)	90-92	Y	LH	10107829
	10-A28	12.942	REINFORCEMENT, BODY L/PLR (INR) (INCL 21)	90-92	Y	RH	10107830
21.		N.S.	PLATE, F/SEAT BELT ANC (PART OF 20, 67)				
22.	10-A28	12.942	FILLER, BODY L/PLR LWR (INCL 10)	90-92	Y67	LH	14092647
	10-A28	12.942	FILLER, BODY L/PLR LWR (INCL 10)	90-92	Y67	RH	14092648
23.	10-A28	12.942	PILLAR, FRT S/D OTR LK	90-92	Y67	LH	14091023
	10-A28	12.942	PILLAR, FRT S/D OTR LK	90-92	Y67	RH	14091024
24.	10-B10	12.986	SPACER, U/B BR	90-92	Y67	4	10153644
25.	10-B5	12.980	PLATE, FLR RR PNL OPG CVR STUD (12.981)	90-92	Y	6	14088454
26.		N.S.	REINFORCEMENT, R/FLR PNL INR				
27.		DISCON	GASKET, FLR RR PNL OPG CVR	90-91	Y	1	14088442
	10-M27	4.720	GASKET, ELEK BRK CONT MDL CVR	92	Y	1	10167107
28.		DISCON	COVER, FLR RR PNL OPG	90-91	Y	1	14088439
	10-M27	4.720	COVER, ELEK BRK CONT MDL	92	Y	1	10143537
29.	10-N21	10.695	PANEL, FRT S/D OPG FIN (12.942) (ADD 16 MM X 48.5 MM SLOT FOR DOOR PIN LOCATOR USING OUTLINE MOLDED INTO PART FOR SLOT LOC)	90-92	Y	LH	10287792
	10-N21	10.695	PANEL, FRT S/D OPG FIN (12.942) (ADD 16MM X 48.5MM SLOT FOR DR PIN LOCATOR, USE OUTLINE MOLDED INTO PART FOR SLOT LOC)	90-92	Y	RH	10287793
30.	10-N20	10.571	LOCATOR, FRT S/D	91-92	Y	LH	14046603
	10-N20	10.571	LOCATOR, FRT S/D	91-92	Y	RH	14046604
		DISCON	LOCATOR, FRT S/D (10.571)	90	Y67	2	14092601
31.	10-N20	10.571	REINFORCEMENT, FRT S/D LOCR (10.450)	90-92	Y	2	14047542
32.		8.900	BOLT, HFH (M8X1X20 9.8 PZOR (AC-DELCO #11508600)	90-92		AR	11508600
33.		DISCON	PIN, FRT S/D LOC	90	Y67	2	14092602
		DISCON	PIN, FRT S/D LOC (10.466)	91-92	Y	2	14060282
34.	10-M27	4.686	BRACKET, BRK PIPE (3.145)	90-92	Y	1	14092701
35.	10-M26	3.145	SHIELD, BRK & EVAP EMIS PIPE	90-92	Y	1	14104690
	10-M26	4.685	SHIELD, BRK & EVAP EMIS PIPE (3.145)	90-92	Y	1	14104690
36.	10-B5	12.980	PLUG, SI F/D HOLE INR PLR	90-92	Y	2	10118451

							1Y12-020
37.	10-A26	12.840	PILLAR, BODY HGE (W/CORNER ASM) (INCL 48-51, 53-56, 60, 63, 73)	90-92	Y	RH	12512654
	10-A26	12.840	PILLAR, BODY HGE (W/CORNER ASM) (INCL 48-51, 53-56, 60, 63, 73)	90-92	Y	LH	12512655
38.		8.977	SCREW, HEX W/FLAT WA	90-92		AR	12337828
39.	10-B10	12.986	BOLT, U/B BR (4.083) (POS #2)	90-92	Y67	8	14077729
40.		8.917	NUT-HFH LOCK, M12X1.75X13.4, 25.6 OD, ALI. NEW METAL TORQ., 510M (10) CA	90-92		AR	11502813
41.	10-A17	12.807	FRAME, W/S INR LWR (INCLS 46)	90-92	Y	1	12512652
42.	10-A17	12.807	COVER, W/S LWR FRM WLDG ACC HOLE	90-92	Y	LH	10086011
	10-A17	12.807	COVER, W/S LWR FRM WLDG ACC HOLE	90-92	Y	RH	10086012
43.		N.S.	FRAME, W/S INR LWR (FOR SERVICE USE ASM #10181239 FRAME, W/S LWR (12.807))				
44.		N.S.	REINFORCEMENT, W/S LWR FRM CTR (FOR SERVICE USE ASM. #10181239 FRAME, W/S LWR (12.807) .)				
45.	10-A16	12.804	TUBE, PLNM DRN (UPR)	90-92	Y	1	14049215
46.		DISCON	SUPPORT, FLR FRT PNL	90-91	Y	1	10086121
		N.S.	SUPPORT, FLR FRT PNL (PART OF 41)	92			
47.	10-A16	12.659	GUSSET, BODY H/PLR FRT LWR	90-92	Y	RH	14058690
	10-A16	12.659	GUSSET, BODY H/PLR FRT LWR	90-92	Y	LH	14090689
48.		N.S.	SUPPORT, HOOD PRIM LAT (PART OF 37)			1	
49.		N.S.	HINGE, FRT S/D LWR (DR SI) (PART OF 37)				
50.	10-A17	12.807	FRAME, W/S INR UPR COR (PART OF 37)	90-92	Y	LH	14069809
	10-A17	12.807	FRAME, W/S INR UPR COR (PART OF 37)	90-92	Y	RH	14069810
51.		N.S.	FRAME, W/S OTR LWR COR (PART OF 37)				
52.	10-A17	12.807	REINFORCEMENT, W/S LWR FRM RR OTR	90-92	Y	RH	10217340
53.		DISCON	FRAME, W/S INR LWR COR (PART OF 37)	90	Y	RH	10085996
		N.S.	FRAME, W/S INR LWR COR (PART OF 37)				
		N.S.	FRAME, W/S INR LWR COR (PART OF 37)				
54.		N.S.	FRAME, W/S OTR LWR COR (PART OF 37)				
55.		N.S.	BRACKET, DA PNL (PART OF 37)			RH	
56.		N.S.	BRACKET, DA PNL (PART OF 37)			LH	
57.	10-A17	12.807	PLATE, W/S INR LWR FRM	90-92	Y	RH	10086136
	10-A17	12.807	PLATE, W/S INR LWR FRM	90-92	Y	LH	10086137
58.	10-A16	12.804	TUBE, PLNM DRN (CTR)	90-92	Y	1	14069688
59.	10-A16	12.804	TUBE, PLNM DRN (OTR HGE PLR)	90-92	Y	2	10086015
60.		DISCON	BRACKET, I/P UPR (PART OF 37)	90-92	Y	RH	10137758

© 2000 GENERAL MOTORS SERVICE PARTS OPERATIONS-CHEVROLET-14Y

							1Y12-020
61.	10-N17	10.092	SEAL, W/S INR LWR FRM (9.260)	90-92	Y	5	3999572
62.	10-A16	12.804	TUBE, PLNM DRN (LWR)	90-92	Y	1	14047487
63.		N.S.	REINFORCEMENT, SI F/D HGE PLR UPR (PART OF 37)				
64.	10-A17	12.807	SEAL, W/S LWR FRM REINF	90-92	Y	1	10153624
65.	10-B10	12.986	PLATE, U/B BR STUD	90-92	Y67	1	10153643
66.	10-B10	12.986	BOLT, U/B BR (4.083) (POS #2)	90-92	Y67	8	14077729
67.	10-B7	12.981	PANEL, INTER FLR (INCL 21)	90-92	Y	1	10198704
68.	10-B5	12.980	EXTENSION, INTER FLR PNL (12.981)	90-92	Y67	1	14092607
69.	10-B7	12.981	FILLER, R/FLR PNL INTER	90-92	Y67	LH	14100357
	10-B7	12.981	FILLER, R/FLR PNL INTER	90-92	Y67	RH	14100358
70.	10-A17	12.807	FRAME, W/S UPR (DLR MAY NEED TO ORDER NEW MIRROR & BOLT 10167086 WHEN REPLG FRAME AS ON PAST MODEL VEH.)	90-92	Y	1	10208501
71.	10-N2	6.760	BRACKET, STRG COL UPR SUPT (INCL 72)	90-92	Y	1	10086066
72.	10-N2	6.760	NUT, STRG COL SUPT BRKT SI BRKT (PART OF 71)	90-92	Y	2	10146441
73.		N.S.	REINFORCEMENT, W/S LWR FRM FRT OTR (PART OF 37)				
		N.S.	REINFORCEMENT, W/S LWR FRM FRT OTR (PART OF 37)				
		N.S.	REINFORCEMENT, W/S LWR FRM FRT OTR (PART OF 37)				
74.	10-N16	10.230	BRACKET, I/P UPR	90-92	Y	LH	10086013
75.	10-B7	12.981	FILLER, R/FLR PNL LWR	90-92	Y67	LH	14092725
	10-B7	12.981	FILLER, R/FLR PNL LWR	90-92	Y67	RH	14092726
76.	10-B7	12.981	FILLER, R/FLR PNL UPR	90-92	Y67	LH	14092723
	10-B7	12.981	FILLER, R/FLR PNL UPR	90-92	Y67	RH	14092724
77.		N.S.	RIVET, FLR RR PNL CTR CPT BRKT				
78.	10-B7	12.981	PANEL, FLR RR FIL	90-92	Y67	1	10146449
79.	10-M23	2.483	BRACKET, MULTIUSE RLY (BLACK) (18.3", 465.0MM LONG) (PLASTIC)	90-92	Y	1	10240571
80.		8.967	RIVET, DOME HD BLIND/P/.125X.312 AL	90-92		AR	9424862
81.	10-N4	7.039	GUSSET, U/B RR C/MBR	90-92	Y	LH	14064523
	10-N4	7.039	GUSSET, U/B RR C/MBR	90-92	Y	RH	14064524
82.	10-N4	7.039	COVER, RR SI MBR	90-92	Y	LH	14078627
	10-N4	7.039	COVER, RR SI MBR	90-92	Y	RH	14078628
83.	10-N21	10.695	RETAINER, FRT S/D OPG FIN PNL (PUSH IN) (14.683)	90-92	Y	2	20032850

RPO DEFINITIONS

10I – INTERIOR TRIM– ARCTIC WHITE
14I – INTERIOR TRIM LT GRAY
19I – INTERIOR TRIM,BLACK
22I – INTERIOR TRIM,DARK ROYAL BLUE
60I – INTERIOR TRIM,DARK COGNAC
64I – INTERIOR TRIM,LIGHT BEIGE
73I – INTERIOR TRIM,FLAME RED
90I – INTERIOR TRIM,SMOKE GRAY

MICROFICHE INDEX

GROUPS 12.000 THRU 13.000

FICHE 10 OF 11

GROUP	DESCRIPTION	STARTING GRID LOCATION PARTS	ILLUSTRATIONS
–	GENERAL INFORMATION	1–A2	1–G2
–	ALPHABETICAL INDEX	1–[illegible]13	N.A.
12.000	BODY MOLDINGS – SHEET METAL	10–A2	10–D2
13.000	BODY WIRING – VINYL TOP TRIM	10–C2	N.A.
–	OUT OF FICHE CALLS	N.A.	10–M22

10–F1

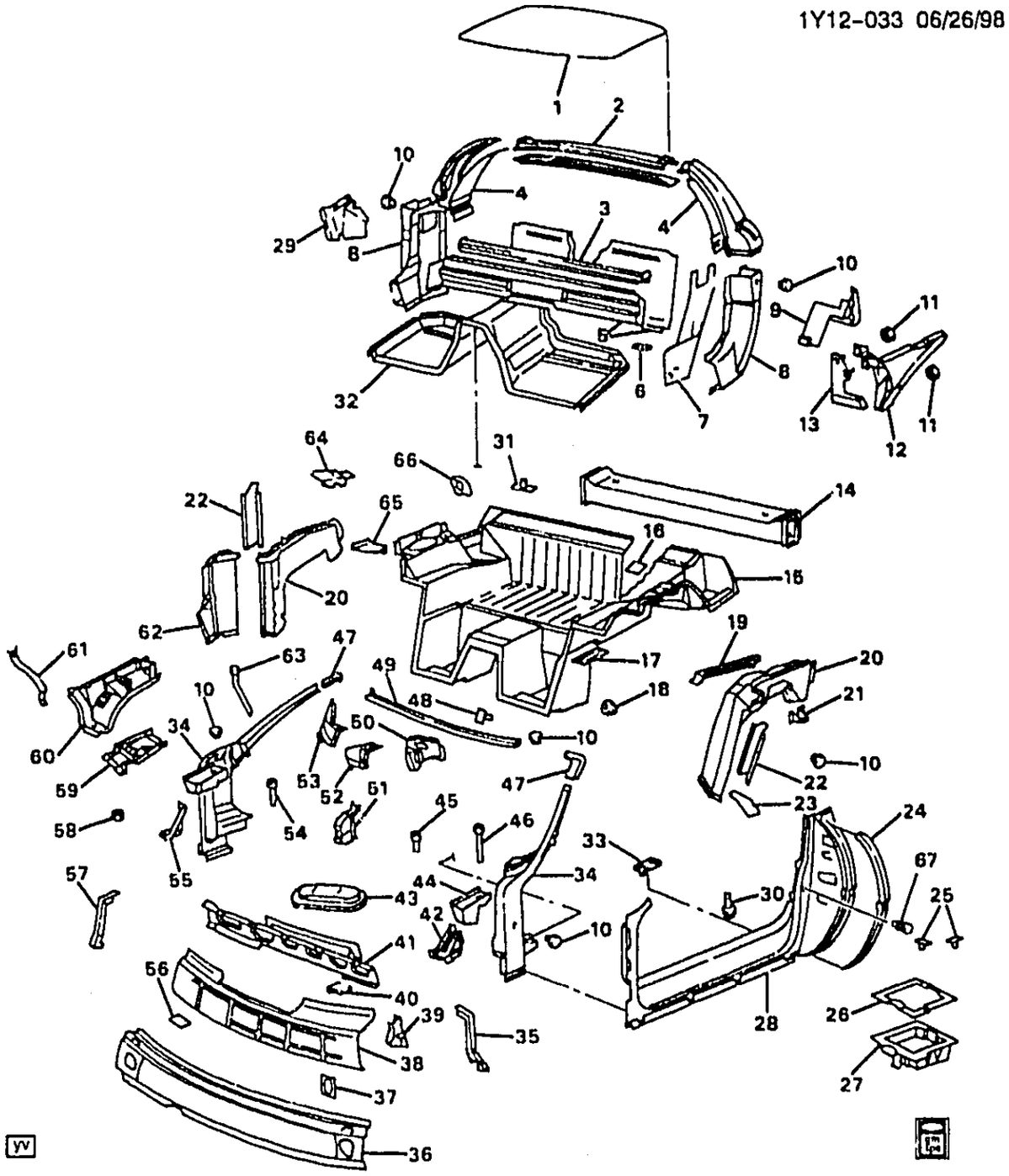

1Y12-033

1992-1993 Y07 SHEET METAL/BODY PART 2 BODY FRAME

1.	10-A18	12.810	WINDOW PKG, RF LIFT OFF (BLUE) (CPS (SEE GROUP 12.000 "ROOF HARDWARE/LIFTOFF PANELS" FOR DETAIL ILLUSTRATED VIEW))	92-93 Y07 (CC3, C2L, 24S) ..	1	12370123

© 2000 GENERAL MOTORS SERVICE PARTS OPERATIONS-CHEVROLET-14Y

							1Y12-033
	10-M23	21.552 A	**WINDOW PKG**, RF LIFT OFF (BLUE) (CPS (SEE GROUP 12.000 "ROOF HARDWARE/LIFTOFF PANELS" FOR DETAIL ILLUSTRATED VIEW)) (12.810)	92-93	Y07 (CC3, C2L, 24S) ..	1	12370123
	10-A18	12.810	**WINDOW PKG**, RF LIFT OFF (BRONZE) (CPS (SEE GROUP 12.000 "ROOF HARDWARE/LIFTOFF PANELS" FOR DETAIL ILLUSTRATED VIEW))	92-93	Y07 (CC3, C2L, 64S) ..	1	12370124
	10-M23	21.552 A	**WINDOW PKG**, RF LIFT OFF (BRONZE) (CPS (SEE GROUP 12.000 "ROOF HARDWARE/LIFTOFF PANELS" FOR DETAIL ILLUSTRATED VIEW)) (12.810)	92-93	Y07 (CC3, C2L, 64S) ..	1	12370124
2.	10-B4	12.952	**BOW**, RF PNL OTR (CTR)	92-93	Y07	1	14091457
3.	10-B7	12.981	**REINFORCEMENT**, INTER FLR PNL EXTN	92-93	Y07	1	14043102
4.	10-B4	12.952	**BOW**, RF INR SI (WHEN USING ON EARLY 1993 & PRIOR MODELS, USE 3-BOLTS 11504498 IN PLC OF STUD PLATE 14091019-20)	92-93	Y07	RH	12522408
	10-B4	12.952	**BOW**, RF INR SI (WHEN USING ON EARLY 1993 & PRIOR MODELS, USE 3-BOLTS 11504498 IN PLC OF STUD PLATE 14091019-20)	92-93	Y07	LH	12522409
5.	10-B5	12.980	**EXTENSION**, INTER FLR PNL (12.981)	92-93	Y07	1	10161896
6.	10-N26	14.875	**PLATE**, D/SEAT BELT RETR ANC (PART OF 7, 32) (OVAL) (16.714) .	92-93	Y	2	15734139
	10-N26	14.875	**PLATE**, P/SEAT BELT RETR ANC (PART OF 7, 32) (OVAL) (16.714) .	92-93	Y	2	15734139
7.	10-A28	12.942	**REINFORCEMENT**, BODY L/PLR (INR) (INCL 6)	92-93	Y	RH	10107829
	10-A28	12.942	**REINFORCEMENT**, BODY L/PLR (INR) (INCL 6)	92-93	Y	LH	10107830
8.	10-A28	12.942	**PILLAR**, FRT S/D OTR LK	92-93	Y07	LH	10051827
	10-A28	12.942	**PILLAR**, FRT S/D OTR LK	92-93	Y07	RH	10051828
9.	10-B7	12.981	**PANEL**, R/FLR PNL UPR FRT CLOSEOUT	92-93	Y07	LH	14043111
	10-B7	12.981	**PANEL**, R/FLR PNL UPR FRT CLOSEOUT	92-93	Y07	RH	14043112
10.	10-B5	12.980	**PLUG**, SI F/D HGE INR PLR	92-93	Y	2	10118451
	10-A26	12.840	**PLUG**, SI F/D HGE OTR PLR (12.980)	92-93	Y	2	10118451
	10-B5	12.980	**PLUG**, FLR RR PNL DRN	92-93	Y	1	10118451
	10-B5	12.980	**PLUG**, RF OTR SI BOW	92-93	Y07	2	10118451
	10-A28	12.942	**PLUG**, OTR RR BODY LK PLR (12.980)	92-93	Y	2	10118451
	10-B5	12.980	**PLUG**, U/B OTR RR S/RL GA HOLE	92-93	Y	2	10118451
11.		8.917	**NUT**, HFH, M8X1.25, 17.9 OD, 738 THK, 13MM HEX, 10, ZF (8.915) (AC-DELCO #11514596)	92-93	.....	AR	11514596

© 2000 GENERAL MOTORS SERVICE PARTS OPERATIONS-CHEVROLET-14Y

							1Y12-033
12.	10-A28	12.942	REINFORCEMENT, BODY L/PLR (OTR)	92-93	Y07	RH	14091018
	10-A28	12.942	REINFORCEMENT, BODY L/PLR (OTR)	92-93	Y07	LH	14091017
13.		DISCON	PLATE, FRT S/D L/PLR ANC	92-93	Y07	LH	14091019
		DISCON	PLATE, FRT S/D L/PLR ANC	92-93	Y07	RH	14091020
14.		N.S.	CROSSMEMBER, U/B RR LWR				
15.	10-B7	12.981	PANEL, R/FLR	92-93	Y07	1	10280990
16.	10-A18	12.810	PLATE, RF LIFT OFF PNL/WDO STOW RR BRKT STUD	92-93	Y07	2	14100260
17.	10-A18	12.810	PLATE, RF LIFT OFF PNL/WDO STOW FRT BRKT STUD	92-93	Y07	2	10137201
18.		8.917	NUT, HFH M6X1X6.5 ZOR 9	92-93		AR	3530297
19.	10-N2	7.006	BRACE, U/B OTR RR S/RL	92-93	Y07	LH	14104793
	10-N2	7.006	BRACE, U/B OTR RR S/RL	92-93	Y07	RH	14104794
20.	10-N2	7.006	MEMBER, INR RR SI (INCL 21)	92-93	Y07	LH	12513815
	10-N2	7.006	MEMBER, INR RR SI (INCL 21)	92-93	Y07	RH	12513816
21.		N.S.	BRACKET, RR SUSP JOUNCE BPR (PART OF 20)				
22.	10-A28	12.942	REINFORCEMENT, SI F/D INR L/PLR	92-93	Y	LH	10048891
	10-A28	12.942	REINFORCEMENT, SI F/D INR L/PLR	92-93	Y	RH	10048892
23.	10-A28	12.942	FILLER, BODY L/PLR LWR	92-93	Y07	LH	14043123
	10-A28	12.942	FILLER, BODY L/PLR LWR	92-93	Y07	RH	14043124
24.	10-N21	10.695	EXTENSION, FRT S/D OPG FIN PNL RR (12.942)	92-93	Y (ZR1)	LH	10175533
	10-N21	10.695	EXTENSION, FRT S/D OPG FIN PNL RR (12.942)	92-93	Y (ZR1)	RH	10175534
25.	10-B5	12.980	PLATE, FLR RR PNL OPG CVR STUD (12.981)	92-93	Y	6	14088454
26.	10-M27	4.720	GASKET, ELEK BRK CONT MDL CVR	92-93	Y	1	10167107
27.	10-M27	4.720	COVER, ELEK BRK CONT MDL	92-93	Y	1	10143537
28.	10-N21	10.695	PANEL, FRT S/D OPG FIN (12.942) (ADD 16 MM X 48.5 MM SLOT FOR DOOR PIN LOCATOR USING OUTLINE MOLDED INTO PART FOR SLOT LOC)	92-93	Y	LH	10287792
	10-N21	10.695	PANEL, FRT S/D OPG FIN (12.942) (ADD 16MM X 48.5MM SLOT FOR DR PIN LOCATOR, USE OUTLINE MOLDED INTO PART FOR SLOT LOC)	92-93	Y	RH	10287793
29.	10-N27	15.222	SUPPORT, R/CMPT SI CPT	92-93	Y07	RH	10239258
	10-N27	15.222	SUPPORT, R/CMPT SI CPT	92-93	Y07	LH	10239257
30.		8.977	SCREW, PAN HD TORX W/WA, M4.2X1.41X16, SST	92-93		AR	11508100
31.	10-B7	12.981	BRACKET, FLR RR PNL CTR CPT	92-93	Y07	2	14100206
32.	10-B7	12.981	PANEL, INTER FLR (INCL 6)	92-93	Y	1	10198704
33.	10-B5	12.980	PLATE, FLR FRT PNL (12.986)	92-93	Y	LH	14058658
	10-B5	12.980	PLATE, FLR FRT PNL	92-93	Y	RH	10098128
34.	10-A26	12.840	PILLAR, BODY HGE (W/CORNER ASM) (INCL 44, 47, 51, 52, 53, 57, 60)	92-93	Y	RH	12512654
	10-A26	12.840	PILLAR, BODY HGE (W/CORNER ASM) (INCL 35, 44, 47, 52, 53, 60)	92-93	Y	LH	12512655

© 2000 GENERAL MOTORS SERVICE PARTS OPERATIONS-CHEVROLET-14Y

							1Y12-033
35.		N.S.	BRACKET, DA PNL (PART OF 34)			LH	
36.	10-A17	12.807	FRAME, W/S INR LWR (INCLS 39)	92-93	Y	1	12512652
37.	10-A17	12.807	SEAL, W/S LWR FRM REINF	92-93	Y	1	10153624
38.	10-A17	12.807	FRAME, W/S INR LWR (INCLS 39)	92-93	Y	1	12512652
39.		N.S.	SUPPORT, FLR FRT PNL (PART OF 36, 38)				
40.	10-N17	10.092	SEAL, W/S INR LWR FRM (9.260)	92-93	Y	5	3999572
41.		N.S.	REINFORCEMENT, W/S LWR FRM CTR				
42.	10-A16	12.659	GUSSET, BODY H/PLR FRT LWR	92-93	Y	LH	14090689
43.	10-A17	12.807	PLATE, W/S INR LWR FRM	92-93	Y	RH	10086136
	10-A17	12.807	PLATE, W/S INR LWR FRM	92-93	Y	LH	10086137
44.	10-N13	8.080	SUPPORT, HOOD PRIM LAT (PART OF 34)	92-93	Y	LH	10225267
		DISCON	SUPPORT, HOOD PRIM LAT (PART OF 34)	92-93	Y	RH	10225268
45.	10-A16	12.804	TUBE, PLNM DRN (CTR)	92-93	Y	1	14069688
46.	10-A16	12.804	TUBE, PLNM DRN (UPR)	92-93	Y	1	14049215
47.	10-A17	12.807	FRAME, W/S INR UPR COR (PART OF 34)	92-93	Y	LH	14069809
	10-A17	12.807	FRAME, W/S INR UPR COR (PART OF 34)	92-93	Y	RH	14069810
48.	10-M27	4.720	PLATE, ELEK BRK CONT WRG HARN CLIP TAP (W/STUD) (12.981)	92-93	Y	7	10045625
49.	10-A17	12.807	FRAME, W/S UPR (DLR MAY NEED TO ORDER NEW MIRROR & BOLT 10167086 WHEN REPLG FRAME AS ON PAST MODEL VEH.)	92-93	Y	1	10208501
50.	10-A17	12.807	REINFORCEMENT, W/S LWR FRM RR OTR (CPS)	92-93	Y	RH	10217340
	10-A17	12.807	REINFORCEMENT, W/S LWR FRM RR OTR (CPS)	92-93	Y	RH	10217340
	10-N13	8.075	PLATE, HOOD PRIM LAT REL CBL BRKT NUT	92-93	Y	1	10086014
	10-N2	6.760	REINFORCEMENT, STRG COL SUPT BRKT	92-93	Y	1	10086084
51.		DISCON	BRACKET, I/P UPR (PART OF 34)	92-93	Y	RH	10137758
52.		N.S.	FRAME, W/S INR LWR COR (PART OF 34)				
53.		N.S.	FRAME, W/S OTR LWR COR (PART OF 34)				
54.	10-A16	12.804	TUBE, PLNM DRN (LWR)	92-93	Y	1	14047487
55.	10-A16	12.659	GUSSET, BODY H/PLR FRT LWR	92-93	Y	RH	14058690
56.	10-A17	12.807	COVER, W/S LWR FRM WLDG ACC HOLE	92-93	Y	LH	10086011
	10-A17	12.807	COVER, W/S LWR FRM WLDG ACC HOLE	92-93	Y	RH	10086012
57.		N.S.	BRACKET, DA PNL (PART OF 34)			RH	
58.	10-N2	6.760	NUT, STRG COL SUPT BRKT SI BRKT (PART OF 59)	92-93	Y	2	10146441
59.	10-N2	6.760	BRACKET, STRG COL UPR SUPT (INCL 58)	92-93	Y	1	10086066
60.		N.S.	REINFORCEMENT, W/S LWR FRM FRT OTR (PART OF 34)				
61.	10-N18	10.230	BRACKET, I/P UPR	92-93	Y	LH	10086013

© 2000 GENERAL MOTORS SERVICE PARTS OPERATIONS-CHEVROLET-14Y

							1Y12-033
62.	10-A28	12.942	PANEL, BODY L/PLR INR	92-93	Y07	RH	10208618
	10-A28	12.942	PANEL, BODY L/PLR INR	92-93	Y07	LH	10208619
63.	10-A16	12.804	TUBE, PLNM DRN (OTR HGE PLR)	92-93	Y	2	10086015
64.	10-N4	7.039	COVER, RR SI MBR	92-93	Y	LH	14078627
	10-N4	7.039	COVER, RR SI MBR	92-93	Y	RH	14078628
65.	10-N4	7.039	GUSSET, U/B RR C/MBR	92-93	Y	LH	14064523
	10-N4	7.039	GUSSET, U/B RR C/MBR	92-93	Y	RH	14064524
66.	10-N15	9.647	PLATE, BODY WRG HARN RET (AC-DELCO #14049163)	92-93	Y07	1	14049163
67.	10-N21	10.695	RETAINER, FRT S/D OPG FIN PNL (PUSH IN) (14.683)	92-93	Y	2	20032850

RPO DEFINITIONS

CC3 – ROOF,SUN,REMOVEABLE PANELS(TRANSPARENT PLASTIC)
C2L – ROOF PACKAGE,DUAL REMOVEABLE
ZR1 – PACKAGE,SPECIAL PERFORMANCE COUPE(1YY07 + ZR1 == 1YZ07)
24S – ROOF COLOR,REMOVEABLE PANEL(BLUE)
64S – REMOVABLE ROOF PANEL COLOR,BRONZE

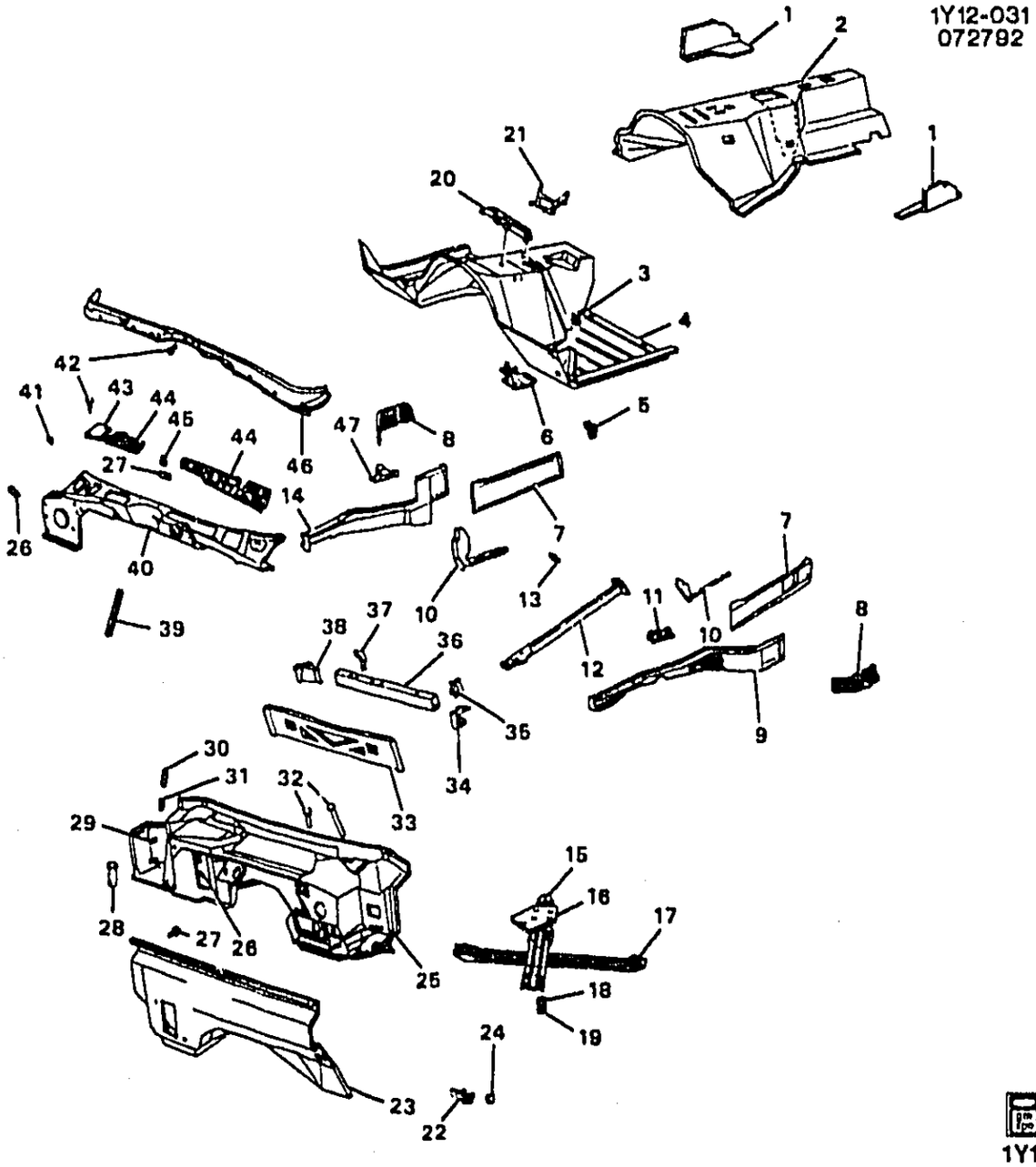

1992–1996 Y SHEET METAL/BODY PART 1 FRAME

1.	10–B7	12.981	INSULATOR, INR INTER SI MBR	92–96	Y	RH	14064514
	10–B7	12.981	INSULATOR, INR INTER SI MBR	92–96	Y	LH	10137253
2.	10–B5	12.980	INSULATOR, FLR PNL FRT CTR	92–93	Y	1	10193706
	10–B5	12.980	INSULATOR, FLR PNL FRT CTR	92–96	Y	1	10284169
3.		8.921	NUT, M4.2X1.4, 19.3X213.6.8.9 (AC–DELCO #15650655)	92–96		AR	15650655
4.	10–B5	12.980	PANEL, F/FLR	92–93	Y (MD8)	1	10248660
	10–B5	12.980	PANEL, F/FLR (PLASTIC W/STEEL REINFORCEMENTS)	93–96	Y (ML9)	1	10248661
	10–B5	12.980	PANEL, F/FLR	94–96	Y (M30)	1	10248660
	10–B5	12.980	PANEL, F/FLR (EXC IP LWR BRKT STUD PLATE) (PLASTIC W/STEEL REINFORCEMENTS)	92	Y (ML9)	1	10248661
5.	10–N20	10.240	BRACKET, F/FLR CNSL FRT	92–94	Y	RH	14049146
	10–N20	10.240	BRACKET, F/FLR CNSL FRT	92–94	Y	LH	14065087

© 2000 GENERAL MOTORS SERVICE PARTS OPERATIONS–CHEVROLET–14Y

								1Y12-031
	10-N20	10.240	BRACKET, F/FLR CNSL INTER (FRT)	92-94	Y		RH	14049236
	10-N20	10.240	BRACKET, F/FLR CNSL INTER (FRT)	92-94	Y		LH	14049237
	10-N20	10.240	BRACKET, F/FLR CNSL INTER (RR)	92-96	Y		LH	10137744
	10-N20	10.240	BRACKET, F/FLR CNSL INTER (RR)	92-96	Y		RH	14049238
6.		DISCON	PLATE, I/P LWR BRKT STUD	92	Y (ML9)		1	14104930
	10-N18	10.230	PLATE, I/P LWR BRKT STUD	93	Y (MD8)		1	10215425
	10-N18	10.230	PLATE, I/P LWR BRKT STUD	94-96	Y (M30)		1	10215425
		DISCON	PLATE, I/P LWR BRKT STUD (1ST DESIGN HAS TWO 20MM STUDS)	92	Y (MD8) (1ST DES)		1	14046622
	10-N18	10.230	PLATE, I/P LWR BRKT STUD (2ND DESIGN HAS NO STUDS)	92	Y (MD8) (2ND DES)		1	10215425
7.	10-N3	7.012	RAIL, U/B INR INTER SI (INCL 10) (7.006)	92-96	Y		RH	10148004
	10-N3	7.012	RAIL, U/B INR INTER SI (INCL 10) (7.006)	92-96	Y		LH	10148005
	10-N3	7.012	RAIL, U/B OTR INTER SI (INCL 10) (7.006)	92-96	Y		RH	10148004
	10-N3	7.012	RAIL, U/B OTR INTER SI (INCL 10) (7.006)	92-96	Y		LH	10148005
8.		N.S.	REINFORCEMENT, INR FRT S/MBR (PART OF 14)					
9.	10-N2	7.006	RAIL, F/CMPT SI (INCL 11, 34)	92-96	Y		LH	12529345
10.		N.S.	SUPPORT, FLR FRT PNL (PART OF 7)				RH	
		N.S.	SUPPORT, FLR FRT PNL (PART OF 7)				LH	
11.		N.S.	REINFORCEMENT, FRT S/ABS BRKT (PART OF 9)					
12.	10-N4	7.039	BRACE, U/B FRT S/RL UPR	92-96	Y		RH	10208440
	10-N4	7.039	BRACE, U/B FRT S/RL UPR	92-96	Y		LH	10208441
13.		8.900	BOLT, HEX W/WA, M8X1.25X20, 8.8, PC	92-96			AR	11504611
14.	10-N2	7.006	RAIL, F/CMPT SI (INCL 8, 38, 47) (WILL NEED TO USE SELF TAPPING SCREWS IN PLACE OF BOLTS FOR ATTACHING FRT & RR LWR W/HSE PNLS, WSWA SOLV CONT & COOLANT RECOVERY RESVR)	92-96	Y		RH	12529346
15.	10-B10	12.986	BRACE, U/B (UPR)	92-95	Y67		1	10193674
16.	10-B5	12.980	REINFORCEMENT, U/B BR	92-96	Y67		1	14092624
17.	10-B10	12.986	BRACE, U/B (LWR)	92-95	Y67		1	10143533
18.		8.917	NUT, HFH, M8X1.25, 17.9 OD, 738 THK, 13MM HEX, 10, ZF (8.915) (A.C-DELCO #11514596)	92-96			AR	11514596
19.		8.929	WASHER, M8.9X20.4X2.5 ST CAD/ZP (7347) (U/B BR)	92-96			AR	14038397
20.	10-B5	12.980	BRACKET, FLR FRT PNL LWR	92-96	Y		1	14076517
21.	10-B5	12.980	BRACKET, FLR FRT PNL UPR	92-96	Y		1	10086170
22.	10-N4	7.039	REINFORCEMENT, FRT C/MBR	92-96	Y		1	10098136
23.	10-A16	12.804	INSULATOR, DA PNL	92-96	Y		1	10224033

© 2000 GENERAL MOTORS SERVICE PARTS OPERATIONS-CHEVROLET-14Y

							1Y12-031
24.		8.917	NUT-HFH LOCK, M12X1.75X13.4, 25.6 OD, ALL NEW METAL TORQ., 510M (10) CA	92-96		AR	11502813
25.	10-A16	12.804	PANEL, DA (INCL 30)	92-96			
26.	10-N15	9.216	PLATE, A/C EVPR & BLO MDL TAP (PART OF 40) (9.786)	92-96	Y	2	14046786
27.		8.950	RETAINER, PUSH-IN, FITS .250 HOLE, 1.01LG.700-OD NYLON BLACK	92-96		AR	10121502
28.	10-A16	12.804	TUBE, PLNM DRN (LWR)	92-96	Y (FE1, FE7)	1	14047487
29.	10-N27	15.280	PLATE, F/FDR RR REINF NUT	92-96	Y	2	14043131
30.	10-N16	9.786	PLATE, AIR INL TAP (UPR RR) (PART OF 25)	92-95	Y	1	14046784
31.	10-N16	9.786	PLATE, AIR INL TAP (LWR RR)	92-95	Y	1	14046783
32.	10-A16	12.804	TUBE, PLNM DRN (CTR)	92-95	Y	1	14069688
	10-A16	12.804	TUBE, PLNM DRN (UPR)	92-95	Y	1	14049215
33.	10-N3	7.010	SILL, U/B FRT CR	92-96	Y	1	14090676
34.		N.S.	BRACKET, FRT C/MBR (PART OF 9)				
35.	10-N4	7.039	BRACKET, FRT C/MBR (RR)	92-96	Y	RH	14092618
36.	10-N3	7.010	CROSSMEMBER, FRT (#2)	92-96	Y	1	10098200
37.	10-N4	7.039	BRACKET, FRT C/MBR (RR)	92-96	Y	LH	14092617
38.		N.S.	BRACKET, FRT C/MBR (PART OF 14)				
39.	10-N16	9.786	PLATE, AIR INL TAP (FRT)	92-95	Y	1	14046785
40.	10-A16	12.804	PANEL, PLNM (FRT) (INCL 26, 41)	92-96	Y	1	10234814
41.	10-A16	12.800	NUT, AIR INL SCRN (PART OF 40) (SPECIAL ANCHOR) (2.729)	92-96	Y	AR	14013246
	10-A16	12.800	NUT, PLNM PNL ACC HOLE CVR (SPECIAL ANCHOR) (2.729)	92-96	Y	2	14013246
42.		8.977	SCREW, PAN HD TORX W/FL WA M4.2X1.41X20303 BLK	92-96		AR	11508561
43.	10-A16	12.800	COVER, PLNM PNL ACC HOLE	92-96	Y	1	14064560
44.	10-A16	12.800	SCREEN, AIR INL	92-96	Y	RH	14047584
	10-A16	12.800	SCREEN, AIR INL	92-96	Y	LH	14047583
45.	10-N15	9.211	PLATE, A/C EVPR & BLO MDL STUD (9.262)	92-96	Y	1	14046766
46.	10-A16	12.804	SEAL, PLNM PNL	92-96	Y	1	14104361
47.		N.S.	REINFORCEMENT, FRT S/ABS BRKT (PART OF 14)				

RPO DEFINITIONS

FE1 – SUSPENSION SYSTEM,SOFT RIDE
FE7 – SUSPENSION SYSTEM,FRONT AND REAR,HEAVY DUTY
MD8 – TRANSMISSION,AUTOMATIC 4-SPEED(THM700R4/4L60)
ML9 – TRANSMISSION,MANUAL 6-SPEED
M30 – TRANSMISSION,AUTOMATIC 4 SPEED,4L60E,ELECTRONIC

© 2000 GENERAL MOTORS SERVICE PARTS OPERATIONS-CHEVROLET-14Y

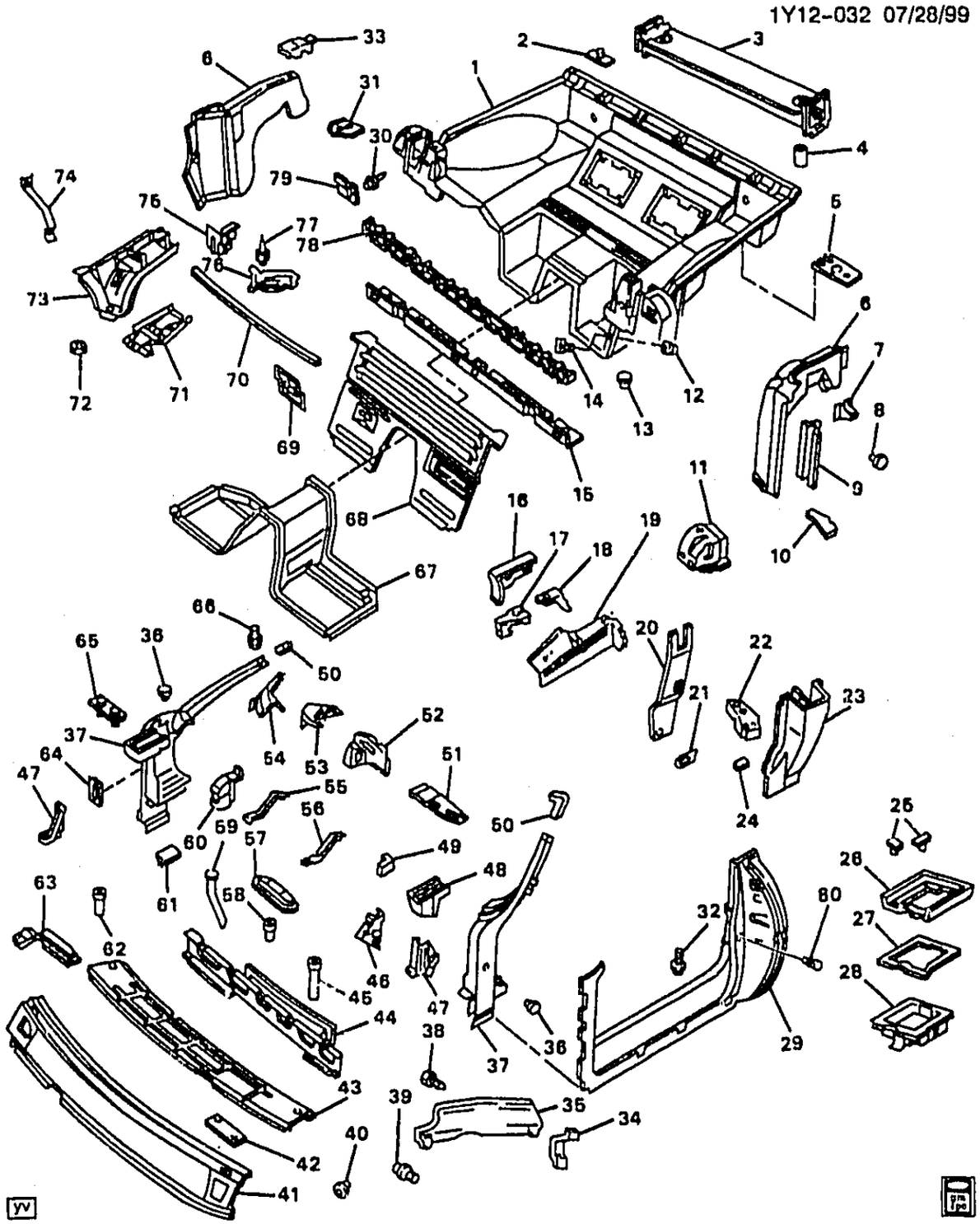

1993 Y67 SHEET METAL/BODY PART 2 FRAME

1.	10-B7	12.981	PANEL, R/FLR (PANEL HAS A SQUARE ARM, (DEALER TO CUT HOLE OUT ON INSIDE MARKED BY ETCHING WHEN USING ON 1992 AND PRIOR)	93 Y67	1	10280989
2.	10-B7	12.981	BRACKET, FLR RR PNL CTR CPT (10.230)	93 Y67	3	14064526

© 2000 GENERAL MOTORS SERVICE PARTS OPERATIONS-CHEVROLET-14Y

							1Y12-032
3.	10-N3	7.014	CROSSMEMBER, U/B RR UPR ..	93	Y67	1	12525521
4.	10-B5	12.980	SPACER R/FLR PNL INSL	93	Y67	2	14092739
5.	10-B5	12.980	REINFORCEMENT, R/FLR PNL OTR	93	Y67	2	10051841
6.	10-N2	7.006	MEMBER, INR RR SI (INCL 7) ...	93	Y67	LH	10112677
	10-N2	7.006	MEMBER, INR RR SI (INCL 7) ...	93	Y67	RH	10112678
7.		N.S.	BRACKET, RR SUSP JOUNCE BPR (PART OF 6)		.....		
8.	10-B5	12.980	PLUG, U/B OTR RR S/RL GA HOLE	93	Y	2	10118451
9.	10-A28	12.942	REINFORCEMENT, SI F/D INR L/PLR	93	Y	LH	10048891
	10-A28	12.942	REINFORCEMENT, SI F/D INR L/FLR	93	Y	RH	10048892
10.		N.S.	FILLER, BODY L/PLR LWR (PART OF 22)		.....		
11.	10-A28	12.942	PANEL, BODY L/PLR OTR UPR ..	93	Y67	LH	14092637
		DISCON	PANEL, BODY L/PLR OTR UPR ..	93	Y67	RH	14092638
12.		8.917	NUT, HFH M6X1X6.5 ZOR 9	93	.....	AR	3530297
13.	10-B5	12.980	PLUG, FLR RR PNL DRN	93	Y	1	10118451
14.	10-M27	4.720	PLATE, ELEK BRK CONT WRG HARN CLIP TAP (W/STUD) (12.981)	93	Y	7	10045625
15.	10-B5	12.980	REINFORCEMENT, FLR PNL #3 C/BAR	93	Y67	1	10146450
16.	10-N24	14.731	PANEL, BODY L/PLR UPR TR (BLACK)	93	Y67 (19I)	RH	10103850
	10-N24	14.731	PANEL, BODY L/PLR UPR TR (BLACK)	93	Y67 (19I)	LH	10103851
		DISCON	PANEL, BODY L/PLR UPR TR (WHITE)	93	Y67 (10I)	LH	10167117
	10-N24	14.731	PANEL, BODY L/PLR UPR TR (WHITE)	93	Y67 (10I)	RH	10167118
	10-N24	14.731	PANEL, BODY L/PLR UPR TR (BEIGE)	93	Y67 (64I)	RH	10175618
	10-N24	14.731	PANEL, BODY L/PLR UPR TR (BEIGE)	93	Y67 (64I)	LH	10175619
		DISCON	PANEL, BODY L/PLR UPR TR (GRAY)	93	Y67 (14I)	RH	10175620
		DISCON	PANEL, BODY L/PLR UPR TR (GRAY)	93	Y67 (14I)	LH	10175621
	10-N24	14.731	PANEL, BODY L/PLR UPR TR (RED)	93	Y67 (79I)	RH	10199556
		DISCON	PANEL, BODY L/PLR UPR TR (RED)	93	Y67 (79I)	LH	10199557
		DISCON	PANEL, BODY L/PLR UPR TR (RED)	93	Y67 (70I)	RH	10199722
		DISCON	PANEL, BODY L/PLR UPR TR (RED)	93	Y67 (70I)	LH	10199723
17.	10-A28	12.942	SEAL, FRT S/D L/PLR UPR (FRT)	93	Y67	LH	14092683
	10-A28	12.942	SEAL, FRT S/D L/PLR UPR (FRT)	93	Y67	RH	14092684
18.	10-A28	12.942	SEAL, FRT S/D L/PLR UPR (RR) .	93	Y67	LH	14100365
	10-A28	12.942	SEAL, FRT S/D L/PLR UPR (RR) .	93	Y67	RH	14100366
19.	10-A28	12.942	PANEL, BODY L/PLR INR	93	Y67	RH	10208620
	10-A28	12.942	PANEL, BODY L/PLR INR	93	Y67	LH	10208621
20.	10-A28	12.942	REINFORCEMENT, BODY L/PLR (INR) (INCL 21)	93	Y	LH	10107829
	10-A28	12.942	REINFORCEMENT, BODY L/PLR (INR) (INCL 21)	93	Y	RH	10107830

© 2000 GENERAL MOTORS SERVICE PARTS OPERATIONS--CHEVROLET-14Y

							1Y12-032
21.	10-N26	14.875	PLATE, D/SEAT BELT RETR ANC (PART OF 20, 67) (OVAL) (16.714)	93	Y	2	15734138
	10-N26	14.875	PLATE, P/SEAT BELT RETR ANC (PART OF 20, 67) (OVAL) (16.714)	93	Y	2	15734139
22.	10-A28	12.942	FILLER, BODY L/PLR LWR (INCL 10)	93	Y67	LH	14092647
	10-A28	12.942	FILLER, BODY L/PLR LWR (INCL 10)	93	Y67	RH	14092648
23.	10-A28	12.942	PILLAR, FRT S/D OTR LK	93	Y67	LH	14091023
	10-A28	12.942	PILLAR, FRT S/D OTR LK	93	Y67	RH	14091024
24.	10-B10	12.986	SPACER, U/B BR	93	Y67	4	10153644
25.	10-B5	12.980	PLATE, FLR RR PNL OPG CVR STUD (12.981)	93	Y	6	14088454
26.		N.S.	REINFORCEMENT, R/FLR PNL INR				
27.	10-M27	4.720	GASKET, ELEK BRK CONT MDL CVR	93	Y	1	10167107
28.	10-M27	4.720	COVER, ELEK BRK CONT MDL	93	Y	1	10143537
29.	10-N21	10.695	PANEL, FRT S/D OPG FIN (12.942)	93	Y	LH	10287792
	10-N21	10.695	PANEL, FRT S/D OPG FIN (12.942)	93	Y	RH	10287793
30.		8.967	RIVET, DOME HD BLIND/P/.125X.312 AL	93		AR	9424862
31.	10-N4	7.039	GUSSET, U/B RR C/MBR	93	Y	LH	14064523
	10-N4	7.039	GUSSET, U/B RR C/MBR	93	Y	RH	14064524
32.		8.900	BOLT, HFH (M6X1X20 9.8 PZOR (AC-DELCO #11508600)	93		AR	11508600
33.	10-N4	7.039	COVER, RR SI MBR	93	Y	LH	14078627
	10-N4	7.039	COVER, RR SI MBR	93	Y	RH	14078628
34.	10-M27	4.686	BRACKET, BRK PIPE (3.145)	93	Y	1	14092701
35.	10-M26	4.685	SHIELD, BRK & EVAP EMIS PIPE (3.145)	93	Y	1	14104690
36.	10-B5	12.980	PLUG, SI F/D HGE INR PLR	93	Y	2	10118451
37.	10-A26	12.840	PILLAR, BODY HGE (W/CORNER ASM) (INCL 48-51, 53-56, 60, 63, 73)	93	Y	RH	12512654
	10-A26	12.840	PILLAR, BODY HGE (W/CORNER ASM) (INCL 48-51, 53, 56, 63, 73)	93	Y	LH	12512655
38.		8.977	SCREW, HEX W/FLAT WA	93		AR	12337828
39.	10-B10	12.986	BOLT, U/B BR (4.083) (POS #2)	93	Y67	8	14077729
	10-B10	12.986	BOLT, U/B BR (M10X1.5X25 13HEX) (7.039) (POS #1)	93	Y67	8	14069669
40.		8.917	NUT-HFH LOCK, M12X1.75X13.4, 25.6 OD, ALL NEW METAL TORQ., 510M (10) CA	93		AR	11502813
41.	10-A17	12.807	FRAME, W/S INR LWR (INCLS 44, 46)	93	Y	1	12512652
42.	10-A17	12.807	COVER, W/S LWR FRM WLDG ACC HOLE	93	Y	LH	10086011
	10-A17	12.807	COVER, W/S LWR FRM WLDG ACC HOLE	93	Y	RH	10086012
43.		N.S.	FRAME, W/S INR LWR				
44.		N.S.	REINFORCEMENT, W/S LWR FRM CTR (PART OF 41)				
45.	10-A16	12.804	TUBE, PLNM DRN (UPR)	93	Y	1	14049215

46.		N.S.	SUPPORT, FLR , RT PNL (PART OF 41)				
47.	10-A16	12.659	GUSSET, BODY H/PLR FRT LWR	93	Y	RH	14058690
	10-A16	12.659	GUSSET, BODY H/PLR FRT LWR	93	Y	LH	14090689
48.		N.S.	SUPPORT, HOOD PRIM LAT (PART OF 37)				
49.		N.S.	HINGE, FRT S/D LWR (DR SI) (PART OF 37)				
50.	10-A17	12.807	FRAME, W/S INR UPR COR (PART OF 37)	93	Y	LH	14069809
	10-A17	12.807	FRAME, W/S INR UPR COR (PART OF 37)	93	Y	RH	14069810
51.		N.S.	FRAME, W/S OTR LWR COR (PART OF 37)				
52.	10-A17	12.807	REINFORCEMENT, W/S LWR FRM RR OTR	93	Y	RH	10217340
53.		N.S.	FRAME, W/S INR LWR COR (PART OF 37)				
54.		N.S.	FRAME, W/S OTR LWR COR (PART OF 37)				
55.		N.S.	BRACKET, DA PNL (PART OF 37)			RH	
56.		N.S.	BRACKET, DA PNL (PART OF 37)			LH	
57.	10-A17	12.807	PLATE, W/S INR LWR FRM	93	Y	RH	10086136
	10-A17	12.807	PLATE, W/S INR LWR FRM	93	Y	LH	10085137
58.	10-A16	12.804	TUBE, PLNM DRN (CTR)	93	Y	1	14069688
59.	10-A16	12.804	TUBE, PLNM DRN (OTR HGE PLR)	93	Y	2	10086015
60.		DISCON	BRACKET, I/P UPR (PART OF 37)	93	Y	RH	10137758
61.	10-N17	10.092	SEAL, W/S INR LWR FRM (9.260)	93	Y	5	3999572
62.	10-A16	12.804	TUBE, PLNM DRN (LWR)	93	Y	1	14047487
63.		N.S.	REINFORCEMENT, SI F/D HGE PLR UPR (PART OF 37)				
64.	10-A17	12.807	SEAL, W/S LWR FRM REINF	93	Y	1	10153624
65.	10-B10	12.986	PLATE, U/B BR STUD	93	Y67	1	10153643
66.	10-B10	12.986	BOLT, U/B BR (4.083) (POS #2)	93	Y67	8	14077729
	10-B10	12.986	BOLT, U/B BR (M10X1.5X25 13HEX) (7.039) (POS #1)	93	Y67	8	14069669
67.	10-B7	12.981	PANEL, INTER FLR (INCL 21)	93	Y	1	10198704
68.	10-B5	12.980	EXTENSION, INTER FLR PNL (12.981)	93	Y67	1	14092607
69.	10-B7	12.981	FILLER, R/FLR PNL INTER	93	Y67	LH	14100357
	10-B7	12.981	FILLER, R/FLR PNL INTER	93	Y67	RH	14100358
70.	10-A17	12.807	FRAME, W/S UPR (DLR MAY NEED TO ORDER NEW MIRROR & BOLT 10167036 WHEN REPLG FRAME AS ON PAST MODEL VEH.)	93	Y	1	10208501
71.	10-N2	6.760	BRACKET, STRG COL UPR SUPT (INCL 72)	93	Y	1	10086066
72.	10-N2	6.760	NUT, STRG COL SUPT BRKT SI BRKT (PART OF 71)	93	Y	2	10146441
73.		N.S.	REINFORCEMENT, W/S LWR FRM FRT OTR (PART OF 37)				
74.	10-N18	10.230	BRACKET, I/P UPR	93	Y	LH	10086013
75.	10-B7	12.981	FILLER, R/FLR PNL LWR	93	Y67	LH	14092725
	10-B7	12.981	FILLER, R/FLR PNL LWR	93	Y67	RH	14092726
76.	10-B7	12.981	FILLER, R/FLR PNL UPR	93	Y67	LH	14092723
	10-B7	12.981	FILLER, R/FLR PNL UPR	93	Y67	RH	14092724

© 2000 GENERAL MOTORS SERVICE PARTS OPERATIONS-CHEVROLET-14Y

							1Y12-032
77.		N.S.	RIVET, FLR RR PNL CTR CPT BRKT		.....		
78.	10-B7	12.981	PANEL, FLR RR FIL	93	Y67	1	10146449
79.	10-M23	2.483	BRACKET, MULTIUSE RLY (BLACK) (18.3", 465.0MM LONG) (PLASTIC)	93	Y	1	10240571
80.	10-N21	10.695	RETAINER, FRT S/D OPG FIN PNL (PUSH IN) (14.683)	93	Y	2	20032850

RPO DEFINITIONS

10I – INTERIOR TRIM– ARCTIC WHITE
14I – INTERIOR TRIM LT GRAY
19I – INTERIOR TRIM,BLACK
64I – INTERIOR TRIM,LIGHT BEIGE
70I – INTERIOR TRIM,TORCH RED
79I – INTERIOR TRIM,RUBY RED

© 2000 GENERAL MOTORS SERVICE PARTS OPERATIONS–CHEVROLET–14Y

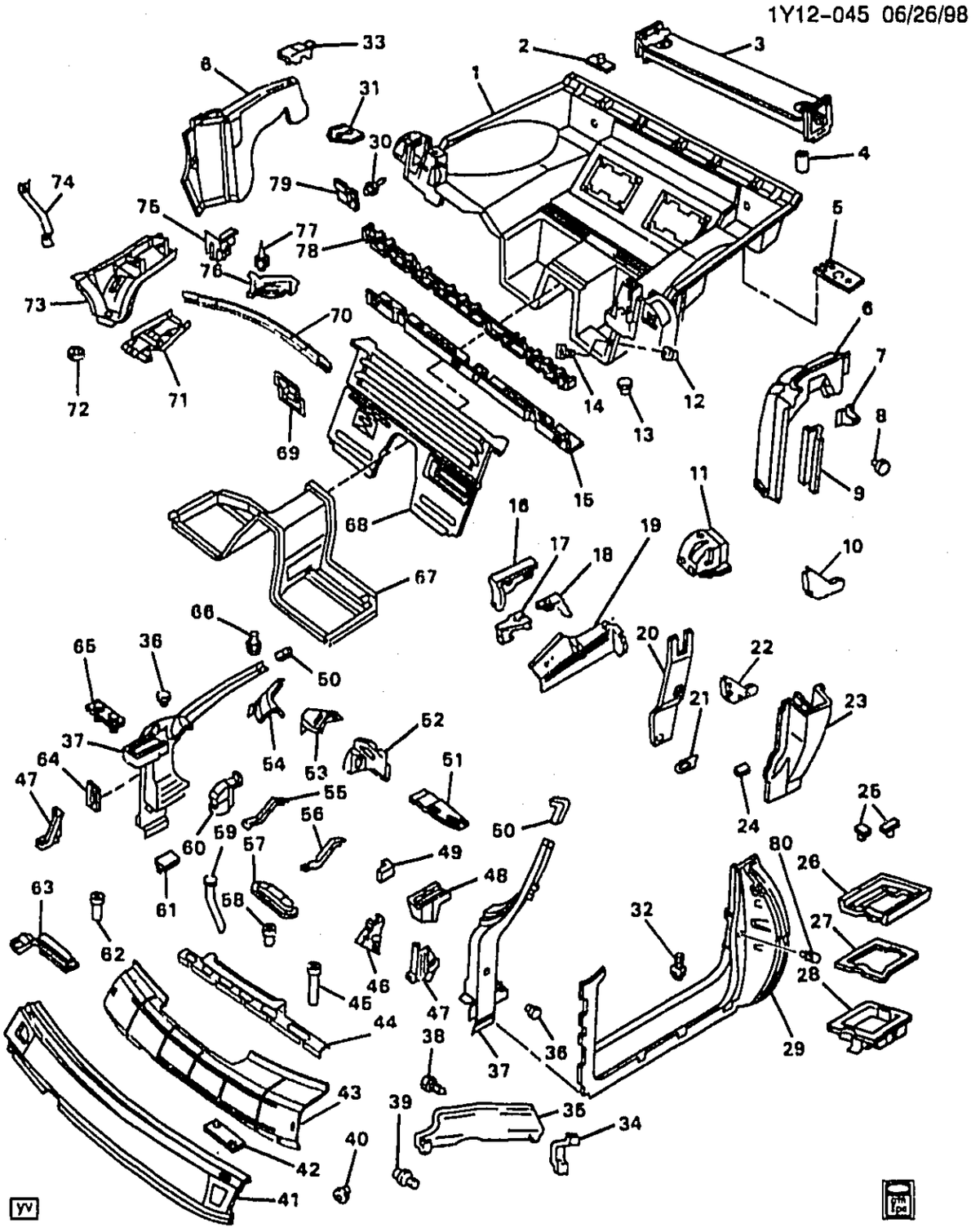

1994-1996 Y67 SHEET METAL/BODY PART 2 FRAME

1.	10-B7	12.981	PANEL, R/FLR (PANEL HAS A SQUARE ARM, (DEALER TO CUT HOLE OUT ON INSIDE MARKED BY ETCHING WHEN USING ON 1992 AND PRIOR)	94-96	Y67	1	10280989
2.	10-B7	12.981	BRACKET, FLR RR PNL CTR CPT (10.230)	94-96	Y67	3	14064526

© 2000 GENERAL MOTORS SERVICE PARTS OPERATIONS-CHEVROLET-14Y

							1Y12-045
3.		N.S.	CROSSMEMBER, U/B RR UPR ..		.....		
4.	10-B5	12.980	SPACER, R/FLR PNL INSL	94-96	Y67	2	14092739
5.	10-B5	12.980	REINFORCEMENT, R/FLR PNL OTR	94-96	Y67	2	10051841
6.	10-N2	7.006	MEMBER, INR RR SI	94-96	Y67	LH	10112677
	10-N2	7.006	MEMBER, INR RR SI	94-96	Y67	RH	10112678
7.		N.S.	BRACKET, RR SUSP JOUNCE BPR		.....		
8.	10-B5	12.980	PLUG, U/B OTR RR S/RL GA HOLE	94-96	Y	2	10118451
9.	10-A28	12.942	REINFORCEMENT, U/B RR S/RL FRT	94-96	Y	LH	10048891
	10-A28	12.942	REINFORCEMENT, U/B RR S/RL FRT	94-96	Y	RH	10048892
10.		N.S.	FILLER, BODY L/PLR LWR (PART OF 22)		.....		
11.	10-A28	12.942	PANEL, BODY L/PLR OTR UPR ..	94-96	Y67	LH	10250367
	10-A28	12.942	PANEL, BODY L/PLR OTR UPR ..	94-96	Y67	RH	10250368
12.		8.917	NUT, HFH M6X1X6.5 ZOR 9	94-96	.....	AR	3530297
13.	10-B5	12.980	PLUG, FLR RH PNL DRN	94-96	Y	1	10118451
14.	10-M27	4.720	PLATE, ELEK BRK CONT WRG HARN CLIP TAP (W/STUD) (12.981)	94-96	Y	7	10045625
15.	10-B5	12.980	REINFORCEMENT, FLR PNL #3 C/BAR	94-96	Y67	1	10146450
16.	10-N24	14.731	PANEL, BODY L/PLR UPR TR (BLACK)	94-96	Y67 (19I)	LH	10212821
	10-N24	14.731	PANEL, BODY L/PLR UPR TR (BLACK)	94-96	Y67 (19I)	RH	10212822
	10-N24	14.731	PANEL, BODY L/PLR UPR TR (RED)	94-96	Y67 (70I)	LH	10212825
	10-N24	14.731	PANEL, BODY L/PLR UPR TR (RED)	94-96	Y67 (70I)	RH	10212826
	10-N24	14.731	PANEL, BODY L/PLR UPR TR (BEIGE)	94-96	Y67 (64I)	LH	10212827
	10-N24	14.731	PANEL, BODY L/PLR UPR TR (BEIGE)	94-96	Y67 (64I)	RH	10212828
	10-N24	14.731	PANEL, BODY L/PLR UPR TR (GRAY)	94-96	Y67 (14I)	LH	10212829
	10-N24	14.731	PANEL, BODY L/PLR UPR TR (GRAY)	94-96	Y67 (14I)	RH	10212830
17.	10-A28	12.942	SEAL, FRT S/D L/PLR UPR (FRT)	94-96	Y67	LH	14092683
	10-A28	12.942	SEAL, FRT S/D L/PLR UPR (FRT)	94-96	Y67	RH	14092684
18.	10-A28	12.942	SEAL, FRT S/D L/PLR UPR (RR) .	94-96	Y67	LH	14100365
	10-A28	12.942	SEAL, FRT S/D L/PLR UPR (RR) .	94-96	Y67	RH	14100366
19.	10-A28	12.942	PANEL, BODY L/PLR INR	94-96	Y67	RH	10208620
	10-A28	12.942	PANEL, BODY L/PLR INR	94-96	Y67	LH	10208621
20.	10-A28	12.942	REINFORCEMENT, BODY L/PLR (INR) (INCL 21)	94-96	Y	LH	10107829
	10-A28	12.942	REINFORCEMENT, BODY L/PLR (INR) (INCL 21)	94-96	Y	RH	10107830
21.	10-N26	14.875	PLATE, D/SEAT BELT ANC (BKL SI) (PART OF 20, 67) (OVAL) (16.714)	94-96	Y	2	15734139
	10-N26	14.875	PLATE, D/SEAT BELT RETR ANC (PART OF 20, 67) (OVAL) (16.714)	94-96	Y	2	15734139
	10-N26	14.875	PLATE, P/SEAT BELT RETR ANC (PART OF 20, 67) (OVAL) (16.714)	94-96	Y	2	15734139

							1Y12-045
	10-N26	14.875	PLATE, P/SEAT BELT ANC (BKL SI) (PART OF 20, 67) (OVAL) (16.714)	94-96	Y	2	15734139
22.	10-A28	12.942	FILLER, BODY L/PLR LWR (INCL 10)	94-96	Y67	LH	14092647
	10-A28	12.942	FILLER, BODY L/PLR LWR (INCL 10)	94-96	Y67	RH	14092648
23.	10-A28	12.942	PILLAR, FRT S/D OTR LK	94-96	Y67	LH	14091023
	10-A28	12.942	PILLAR, FRT S/D OTR LK	94-96	Y67	RH	14091024
24.	10-B10	12.986	SPACER, U/B BR	94-96	Y67	4	10153644
25.	10-B5	12.980	PLATE, FLR RR PNL OPG CVR STUD (12.981)	94-96	Y	6	14088454
26.		N.S.	REINFORCEMENT, R/FLR PNL INR				
27.	10-M27	4.720	GASKET, ELEK BRK CONT MDL CVR	94-96	Y	1	10167107
28.	10-M27	4.720	COVER, ELEK BRK CONT MDL	94	Y	1	10143537
	10-M27	4.720	COVER, ELEK BRK CONT MDL	95	Y (ZR1)	1	10143537
	10-M27	4.720	COVER, ELEK BRK CONT MDL	95	Y (EXC ZR1)	1	10225919
	10-M27	4.720	COVER, ELEK BRK CONT MDL	96	Y	1	10225919
29.	10-N21	10.695	PANEL, FRT S/D OPG FIN (12.942)	94-96	Y	LH	10287792
	10-N21	10.695	PANEL, FRT S/D OPG FIN (12.942)	94-96	Y	RH	10287793
30.		8.967	RIVET, DOME HD BLIND/P/.125X.312 AL	94-96		AR	9424862
31.	10-N4	7.039	GUSSET, U/B RR C/MBR	94-96	Y	LH	14064523
	10-N4	7.039	GUSSET, U/B RR C/MBR	94-96	Y	RH	14064524
32.		8.900	BOLT, HFH (M6X1X20 9.8 PZOR (AC-DELCO #11508600)	94-96		AR	11508600
33.	10-N4	7.039	COVER, RR SI MBR	94-96	Y	LH	14078627
	10-N4	7.039	COVER, RR SI MBR	94-96	Y	RH	14078628
34.	10-M27	4.686	BRACKET, BRK PIPE (3.145)	94-96	Y	1	14092701
35.	10-M26	4.685	SHIELD, BRK & EVAP EMIS PIPE (3.145)	94-96	Y	1	14104690
36.	10-B5	12.980	PLUG, SI F/D HGE INR PLR	94-96	Y	2	10118451
37.	10-A26	12.840	PILLAR, BODY HGE (W/CORNER ASM) (INCL 48-50, 53-55, 60, 63, 73)	94-96	Y	RH	12512654
	10-A26	12.840	PILLAR, BODY HGE (W/CORNER ASM) (INCL 48-51, 53, 56, 63, 73)	94-96	Y	LH	12512655
38.		8.977	SCREW, HEX W/FLAT WA	94-96		AR	12337828
39.	10-B10	12.986	BOLT, U/B BR (4.083) (POS #2)	94-96	Y67	8	14077729
	10-B10	12.986	BOLT, U/B BR (M10X1.5X25 13HEX) (7.039) (POS #1)	94-96	Y67	8	14069669
40.		8.917	NUT-HFH LOCK, M12X1.75X13.4, 25.6 OD, ALL NEW METAL TORQ., 510M (10) CA	94-96		AR	11502813
41.		N.S.	FRAME, W/S OTR LWR (PART OF 43)				
42.	10-A17	12.807	COVER, W/S LWR FRM WLDG ACC HOLE	94-96	Y	LH	10086011
	10-A17	12.807	COVER, W/S LWR FRM WLDG ACC HOLE	94-96	Y	RH	10086012
43.	10-A17	12.807	FRAME, W/S INR LWR (INCL 41, 44, 46)	94-96	Y	1	12512652

© 2000 GENERAL MOTORS SERVICE PARTS OPERATIONS-CHEVROLET-14Y

							1Y12-045
44.		N.S.	REINFORCEMENT, W/S LWR FRM CTR (PART OF 43)				
45.	10-A16	12.804	TUBE, PLNM DRN (UPR)	94-96	Y	1	14049215
46.		N.S.	SUPPORT, FLR FRT PNL (PART OF 43)				
47.	10-A16	12.659	GUSSET, BODY H/PLR FRT LWR	94-96	Y	RH	14058690
	10-A16	12.659	GUSSET, BODY H/PLR FRT LWR	94-96	Y	LH	14090689
48.	10-N13	8.080	SUPPORT, HOOD PRIM LAT (PART OF 37)	94-96	Y	LH	10225267
		DISCON	SUPPORT, HOOD PRIM LAT (PART OF 37)	94-96	Y	RH	10225268
49.		N.S.	HINGE, FRT S/D LWR (DR SI) (PART OF 37)				
50.	10-A17	12.807	FRAME, W/S INR UPR COR (PART OF 37)	94-96	Y	LH	14069809
	10-A17	12.807	FRAME, W/S INR UPR COR (PART OF 37)	94-96	Y	RH	14069810
51.		N.S.	FRAME, W/S OTR LWR COR (PART OF 37)			LH	
52.	10-A17	12.807	REINFORCEMENT, W/S LWR FRM RR OTR	94-96	Y	RH	10217340
	10-A17	12.807	REINFORCEMENT, W/S LWR FRM RR OTR	94-96	Y	RH	10217340
53.		N.S.	FRAME, W/S INR LWR COR (PART OF 37)				
54.		N.S.	FRAME, W/S OTR LWR COR (PART OF 37)				
55.		N.S.	BRACKET, DA PNL (PART OF 37)			RH	
56.		N.S.	BRACKET, DA PNL (PART OF 37)			LH	
57.	10-A17	12.807	PLATE, W/S INR LWR FRM	94-96	Y	RH	10086136
	10-A17	12.807	PLATE, W/S INR LWR FRM	94-96	Y	LH	10086137
58.	10-A16	12.804	TUBE, PLNM DRN (CTR)	94-96	Y	1	14069688
59.	10-A16	12.804	TUBE, PLNM DRN (OTR HGE PLR)	94-96	Y	2	10086015
60.		N.S.	BRACKET, I/P UPR (PART OF 37)			RH	
61.	10-N17	10.092	SEAL, W/S INR LWR FRM (9.260)	94-96	Y	5	3999572
62.	10-A16	12.804	TUBE, PLNM DRN (LWR)	94-96	Y	1	14047487
63.		N.S.	REINFORCEMENT, SI F/D HGE PLR UPR (PART OF 37)				
64.	10-A17	12.807	SEAL, W/S LWR FRM REINF	94-96	Y	1	10153624
65.	10-B10	12.986	PLATE, U/B BR STUD	94-96	Y67	2	10153643
66.	10-B10	12.986	BOLT, U/B BR (4.083) (POS #2)	94-96	Y67	8	14077729
	10-B10	12.986	BOLT, U/B BR (M10X1.5X25 13HEX) (7.039) (POS #1)	94-96	Y67	8	14069669
67.	10-B7	12.981	PANEL, INTER FLR (INCL 21)	94-96	Y	1	10198704
68.	10-B5	12.980	EXTENSION, INTER FLR PNL (12.981)	94-96	Y67	1	14092607
69.	10-B7	12.981	FILLER, R/FLR PNL INTER	94-96	Y67	LH	14100357
	10-B7	12.981	FILLER, R/FLR PNL INTER	94-96	Y67	RH	14100358
70.	10-A17	12.807	FRAME, W/S UPR (DLR MAY NEED TO ORDER NEW MIRROR & BOLT 10167086 WHEN REPLG FRAME AS ON PAST MODEL VEH.)	94-96	Y	1	10208501
71.	10-N2	6.760	BRACKET, STRG COL UPR SUPT (INCL 72)	94-96	Y	1	10086066
72.	10-N2	6.760	NUT, STRG COL SUPT BRKT SI BRKT (PART OF 71)	94-96	Y	2	10146441

73.		N.S.	REINFORCEMENT, W/S LWR FRM FRT OTR (PART OF 37)		.....		
74.	10-N18	10.230	BRACKET, I/P UPR	94-96	Y	LH	10086013
75.	10-B7	12.981	FILLER, R/FLR PNL LWR	94-96	Y67	LH	14092725
	10-B7	12.981	FILLER, R/FLR PNL LWR	94-96	Y67	RH	14092726
76.	10-B7	12.981	FILLER, R/FLR PNL UPR	94-96	Y67	LH	14092723
	10-B7	12.981	FILLER, R/FLR PNL UPR	94-96	Y67	RH	14092724
77.		N.S.	RIVET, FLR RR PNL CTR CPT BRKT		.....		
78.	10-B7	12.981	PANEL, FLR RR FIL	94-96	Y67	1	10146449
79.	10-M23	2.483	BRACKET, MULTIUSE RLY	94-96	Y	1	10161867
80.	10-N21	10.695	RETAINER, FRT S/D OPG FIN PNL (PUSH IN) (14.683)	94-96	Y	2	20032850

RPO DEFINITIONS

ZR1 – PACKAGE,SPECIAL PERFORMANCE COUPE(1YY07 + ZR1 == 1YZ07)
14I – INTERIOR TRIM LT GRAY
19I – INTERIOR TRIM,BLACK
64I – INTERIOR TRIM,LIGHT BEIGE
70I – INTERIOR TRIM,TORCH RED

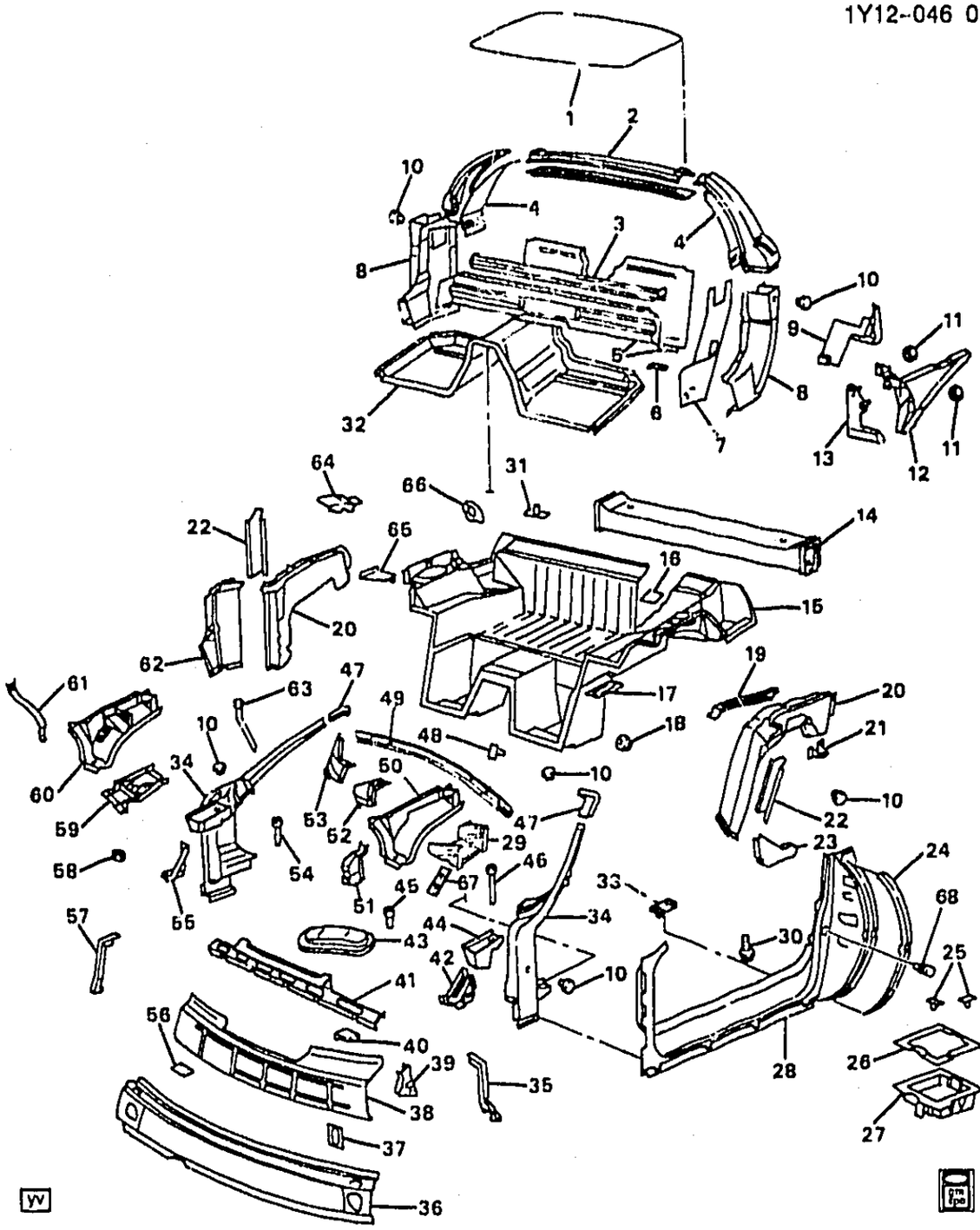

1994-1996 Y07 SHEET METAL/BODY PART 2 BODY FRAME

1.	10-A18	12.810	WINDOW PKG, RF LIFT OFF (BLUE) (SEE GROUP 12.000 "ROOF HARDWARE/LIFTOFF PANELS" FOR DETAILED ILLUSTRATED VIEW)	94-96	Y07 (CC3, C2L, 24S) ..	1	12370123
	10-M23	21.552 A	WINDOW PKG, RF LIFT OFF (BLUE) (SEE GROUP 12.000 "ROOF HARDWARE/LIFTOFF PANELS" FOR DETAILED ILLUSTRATED VIEW) (12.810) ...	94-96	Y07 (CC3, C2L, 24S) ..	1	12370123

© 2000 GENERAL MOTORS SERVICE PARTS OPERATIONS-CHEVROLET-14Y

							1Y12-046
	10-A18	12.810	WINDOW PKG, RF LIFT OFF (BRONZE) (SEE GROUP 12.000 "ROOF HARDWARE/LIFTOFF PANELS" FOR DETAILED ILLUSTRATED VIEW)	94-96	Y07 (CC3, C2L, 64S) ..	1	12370124
	10-M23	21.552 A	WINDOW PKG, RF LIFT OFF (BRONZE) (SEE GROUP 12.000 "ROOF HARDWARE/LIFTOFF PANELS" FOR DETAILED ILLUSTRATED VIEW) (12.810) ...	94-96	Y07 (CC3, C2L, 64S) ..	1	12370124
2.	10-B4	12.952	BOW, RF PNL OTR (CTR)	94-96	Y07	1	14091457
3.	10-B7	12.981	REINFORCEMENT, INTER FLR PNL EXTN	94-96	Y07	1	14043102
4.	10-B4	12.952	BOW, RF INR SI (LH-INR & OTR)	94-96	Y07	LH	12522809
	10-B4	12.952	BOW, RF INR SI (RH-INR & OTR)	94-96	Y07	RH	12522810
5.	10-B5	12.980	EXTENSION, INTER FLR PNL (12.981)	94-96	Y07	1	10161896
6.	10-N26	14.875	PLATE, D/SEAT BELT ANC (BKL SI) (PART OF 7, 32) (OVAL) (16.714)	94-96	Y	2	15734139
	10-N26	14.875	PLATE, D/SEAT BELT RETR ANC (PART OF 7, 32) (OVAL) (16.714) .	94-96	Y	2	15734139
	10-N26	14.875	PLATE, P/SEAT BELT RETR ANC (PART OF 7, 32) (OVAL) (16.714) .	94-96	Y	2	15734139
	10-N26	14.875	PLATE, P/SEAT BELT ANC (BKL SI) (PART OF 7, 32) (OVAL) (16.714)	94-96	Y	2	15734139
7.	10-A28	12.942	REINFORCEMENT, BODY L/PLR (INR) (INCL 6)	94-96	Y	RH	10107829
	10-A28	12.942	REINFORCEMENT, BODY L/PLR (INR) (INCL 6)	94-95	Y	LH	10107830
8.	10-A28	12.942	PILLAR, FRT S/D OTR LK	94-96	Y07	LH	10051827
	10-A28	12.942	PILLAR, FRT S/D OTR LK	94-96	Y07	RH	10051828
9.	10-B7	12.981	PANEL, R/FLR PNL UPR FRT CLOSEOUT	94-96	Y07	LH	14043111
	10-B7	12.981	PANEL, R/FLR PNL UPR FRT CLOSEOUT	94-96	Y07	RH	14043112
10.	10-B5	12.980	PLUG, SI F/D HGE INR PLR	94-96	Y	2	10118451
	10-A26	12.840	PLUG, SI F/D HGE OTR PLR (12.980)	94-96	Y	2	10118451
	10-B5	12.980	PLUG, FLR RR PNL DRN	94-96	Y	1	10118451
	10-B5	12.980	PLUG, RF OTR SI BOW	94-96	Y07	2	10118451
	10-A28	12.942	PLUG, OTR RR BODY LK PLR (12.980)	94-96	Y	2	10118451
	10-B5	12.980	PLUG, U/B OTR RR S/RL GA HOLE	94-96	Y	2	10118451
11.		8.917	NUT, HFH, M8X1.25, 17.9 OD, 738 THK, 13MM HEX, 10, ZF (8.915) (AC-DELCO #11514596)	94-96	.....	AR	11514596
12.	10-A28	12.942	REINFORCEMENT, BODY L/PLR (OTR)	94-96	Y07	RH	14091018
	10-A28	12.942	REINFORCEMENT, BODY L/PLR (OTR)	94-96	Y07	LH	14091017
13.		N.S.	PLATE, FRT S/D L/PLR ANC		.....		
14.		N.S.	CROSSMEMBER, U/B RR LWR ..		.....		
15.	10-B7	12.981	PANEL, R/FLR	94-96	Y07	1	10280990
16.	10-A18	12.810	PLATE, RF LIFT OFF PNL/WDO STOW RR BRKT STUD	94-96	Y07	2	14100260

© 2000 GENERAL MOTORS SERVICE PARTS OPERATIONS-CHEVROLET-14Y

							1Y12-046
17.	10-A18	12.810	PLATE, RF LIFT OFF PNL/WDO STOW FRT BRKT STUD	94-96	Y07	2	10137201
18.		8.917	NUT, HFH M6X1X6.5 ZOR 9	94-96		AR	3530297
19.	10-N2	7.006	BRACE, U/B OTR RR S/RL	94-96	Y07	LH	14104793
	10-N2	7.006	BRACE U/B OTR RR S/RL	94-96	Y07	RH	14104794
20.	10-N2	7.006	MEMBER, INR RR SI (INCL 21)	94-96	Y07	RH	12513816
	10-N2	7.006	MEMBER, INR RR SI (INCL 21)	94-96	Y07	LH	12513815
21.		N.S.	BRACKET, RR SUSP JOUNCE BPR (PART OF 20)				
22.	10-A28	12.942	REINFORCEMENT, U/B RR S/RL FRT	94-96	Y	LH	10048891
	10-A28	12.942	REINFORCEMENT, U/B RR S/RL FRT	94-96	Y	RH	10048892
23.	10-A28	12.942	FILLER, BODY L/PLR LWR	94-96	Y07	LH	14043123
	10-A28	12.942	FILLER, BODY L/PLR LWR	94-96	Y07	RH	14043124
24.	10-N21	10.695	EXTENSION, FRT S/D OPG FIN PNL RR (12.942)	94-95	Y (ZR1)	LH	10175533
	10-N21	10.695	EXTENSION, FRT S/D OPG FIN PNL RR (12.942)	94-95	Y (ZR1)	RH	10175534
25.	10-B5	12.980	PLATE, FLR RR PNL OPG CVR STUD (12.981)	94-96	Y	8	14088454
26.	10-M27	4.720	GASKET, ELEK BRK CONT MDL CVR	94-96	Y	1	10167107
27.	10-M27	4.720	COVER, ELEK BRK CONT MDL	94	Y	1	10143537
	10-M27	4.720	COVER, ELEK BRK CONT MDL	95	Y (ZR1)	1	10143537
	10-M27	4.720	COVER, ELEK BRK CONT MDL	95	Y (EXC ZR1)	1	10225919
	10-M27	4.720	COVER, ELEK BRK CONT MDL	96	Y	1	10225919
28.	10-N21	10.695	PANEL, FRT S/D OPG FIN (12.942)	94-96	Y	LH	10287792
	10-N21	10.695	PANEL, FRT S/D OPG FIN (12.942)	94-96	Y	RH	10287793
29.	10-N2	6.760	REINFORCEMENT, STRG COL SUPT BRKT	94-96	Y	1	10086084
30.		8.977	SCREW, PAN HD TORX W/WA, M4.2X1.41X16, SST	94-96		AR	11508100
31.	10-B7	12.981	BRACKET, FLR RR PNL CTR CPT	94-96	Y07	2	14100206
32.	10-B7	12.981	PANEL, INTER FLR (INCL 6)	94-96	Y	1	10198704
33.	10-B5	12.980	PLATE, FLR FRT PNL (12.986)	94-96	Y	LH	14058658
	10-B5	12.980	PLATE, FLR FRT PNL	94-96	Y	RH	10098128
34.	10-A26	12.840	PILLAR, BODY HGE (W/CORNER ASM) (INCL 44, 47, 51, 52, 53, 57, 60)	94-96	Y	RH	12512654
	10-A26	12.840	PILLAR, BODY HGE (W/CORNER ASM) (INCL 35, 44, 47, 52, 53, 60)	94-96	Y	LH	12512655
35.		N.S.	BRACKET, DA PNL (PART OF 34)			LH	
36.		N.S.	FRAME, W/S OTR LWR (PART OF 38)				
37.	10-A17	12.807	SEAL, W/S LWR FRM REINF	94-96	Y	1	10153624
38.	10-A17	12.807	FRAME, W/S INR LWR (INCL 36, 39, 41)	94-96	Y	1	12512652
39.		N.S.	SUPPORT, FLR FRT PNL (PART OF 38)				
40.	10-N17	10.092	SEAL, W/S INR LWR FRM (9.260)	94-96	Y	5	3999572
41.		N.S.	REINFORCEMENT, W/S LWR FRM CTR (PART OF 38)				
42.	10-A16	12.659	GUSSET, BODY H/PLR FRT LWR	94-96	Y	LH	14090369
43.	10-A17	12.807	PLATE, W/S INR LWR FRM	94-96	Y	RH	10086136

© 2000 GENERAL MOTORS SERVICE PARTS OPERATIONS-CHEVROLET-14Y

							1Y12-046
	10-A17	12.807	PLATE, W/S INR LWR FRM	94-96	Y	LH	10086137
44.	10-N13	8.080	SUPPORT, HOOD PRIM LAT (PART OF 34)	94-96	Y	LH	10225267
		DISCON	SUPPORT, HOOD PRIM LAT (PART OF 34)	94-96	Y	RH	10225268
45.	10-A16	12.804	TUBE, PLNM DRN (CTR)	94-96	Y	1	14069688
46.	10-A16	12.804	TUBE, PLNM DRN (UPR)	94-96	Y	1	14049215
47.	10-A17	12.807	FRAME, W/S INR UPR COR (PART OF 34)	94-96	Y	LH	14069809
	10-A17	12.807	FRAME, W/S INR UPR COR (PART OF 34)	94-96	Y	RH	14069810
48.	10-M27	4.720	PLATE, ELEK BRK CONT WRG HARN CLIP TAP (W/STUD) (12.981)	94-96	Y	7	10045625
49.	10-A17	12.807	FRAME, W/S UPR (DLR MAY NEED TO ORDER NEW MIRROR & BOLT 10167086 WHEN REPLG FRAME AS ON PAST MODEL VEH.)	94-96	Y	1	10208501
50.	10-A17	12.807	REINFORCEMENT, W/S LWR FRM RR OTR	94-96	Y	RH	102[illegible]7340
	10-A17	12.807	REINFORCEMENT, W/S LWR FRM RR OTR (INCL 29, 67)	94-96	Y	RH	10217340
51.		N.S.	BRACKET, I/P UPR (PART OF 34)		.....	RH	
52.		N.S.	FRAME, W/S INR LWR COR (PART OF 34)		.....		
53.		N.S.	FRAME, W/S OTR LWR COR (PART OF 34)		.....	RH	
54.	10-A16	12.804	TUBE, PLNM DRN (LWR)	94-96	Y	1	14047487
55.	10-A16	12.659	GUSSET, BODY H/PLR FRT LWR	94-96	Y	RH	14058690
56.	10-A17	12.807	COVER, W/S LWR FRM WLDG ACC HOLE	94-96	Y	LH	10086011
	10-A17	12.807	COVER, W/S LWR FRM WLDG ACC HOLE	94-96	Y	RH	10086012
57.		N.S.	BRACKET, DA PNL (PART OF 34)		.....	RH	
58.	10-N2	6.760	NUT, STRG COL SUPT BRKT SI BRKT (PART OF 59)	94-96	Y	2	10146401
59.	10-N2	6.760	BRACKET, STRG COL UPR SUPT (INCL 58)	94-96	Y	1	10086066
60.		N.S.	REINFORCEMENT, W/S LWR FRM FRT OTR (PART OF 34)		.....		
61.	10-N18	10.230	BRACKET, I/P UPR	94-96	Y	LH	10086013
62.	10-A28	12.942	PANEL, BODY L/PLR INR	94-96	Y07	RH	10208618
	10-A28	12.942	PANEL, BODY L/PLR INR	94-96	Y07	LH	10208619
63.	10-A16	12.804	TUBE, PLNM DRN (C[illegible]R HGE PLR)	94-96	Y	2	10086015
64.	10-N4	7.039	COVER, RR SI MBR	94-96	Y	LH	14078627
	10-N4	7.039	COVER, RR SI MBR	94-96	Y	RH	14078628
65.	10-N4	7.039	GUSSET, U/B RR C/MBR	94-96	Y	LH	14064523
	10-N4	7.039	GUSSET, U/B RR C/MBR	94-96	Y	RH	14064524
66.	10-N15	9.647	PLATE, BODY WRG HARN RET (AC-DELCO #14049163)	94-96	Y07	1	14049163
67.	10-N13	8.075	PLATE, HOOD PRIM LAT REL CBL BRKT NUT	94-96	Y	1	10086014
68.	10-N21	10.695	RETAINER, FRT S/D OPG FIN PNL (PUSH IN) (14.683)	94-96	Y	2	20032850

RPO DEFINITIONS

CC3 – ROOF,SUN,REMOVEABLE PANELS(TRANSPARENT PLASTIC)

© 2000 GENERAL MOTORS SERVICE PARTS OPERATIONS-CHEVROLET-14Y

C2L – ROOF PACKAGE,DUAL REMOVEABLE
ZR1 – PACKAGE,SPECIAL PERFORMANCE COUPE(1YY07 + ZR1 == 1YZ07)
24S – ROOF COLOR,REMOVEABLE PANEL(BLUE)
64S – REMOVABLE ROOF PANEL COLOR,BRONZE

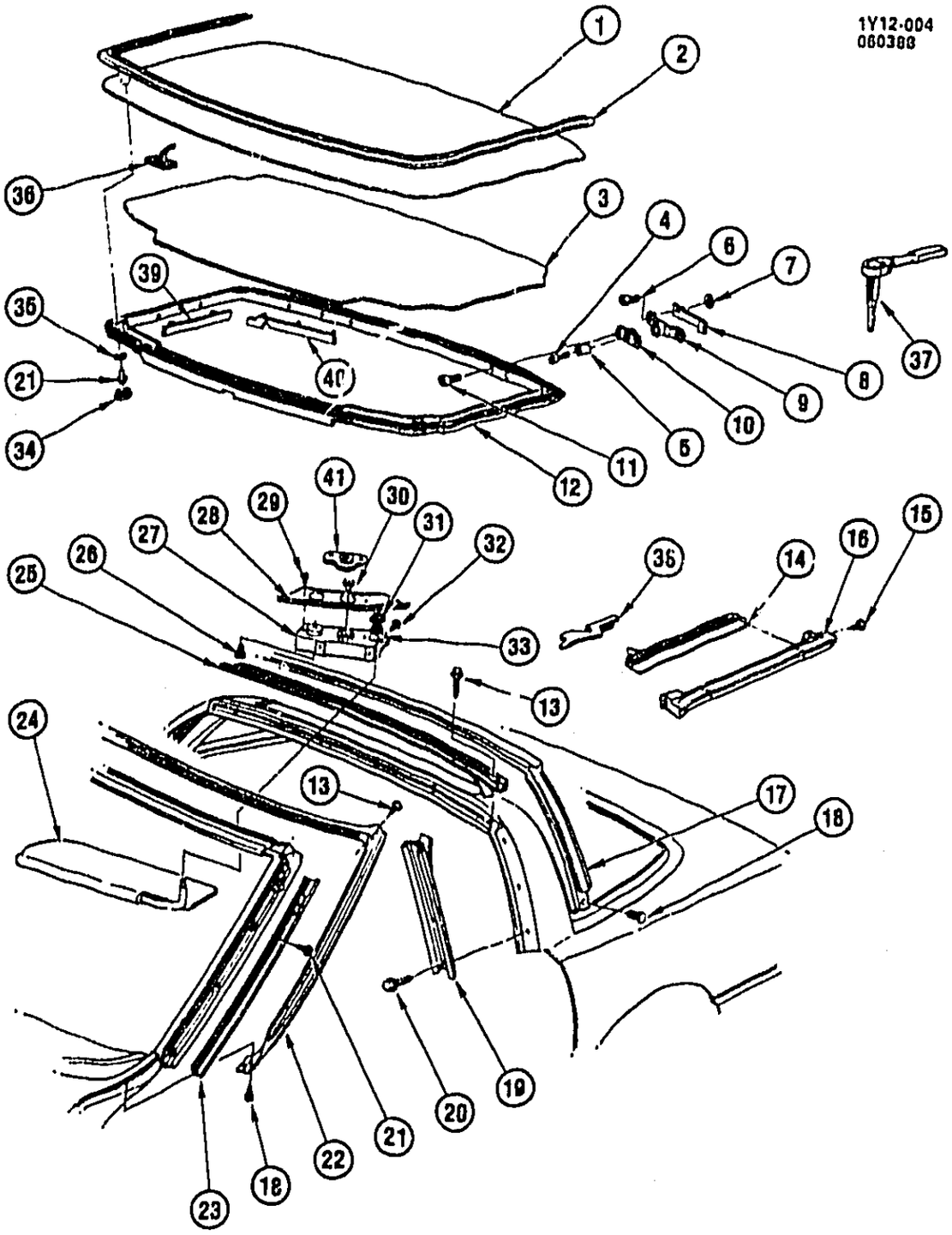

1Y12-004

1984-1987 Y ROOF HARDWARE/LIFT OFF PANELS

1.	10-M23	21.552	**WINDOW PKG**, RF LIFT OFF (1984-86 CC3) (BLUE 24S) (INCLS 12, 14, 16, 21, 34-36, 38) (1ST DES 1986 - TOP HAS TWO 30MM HOLES IN ROOF PNL FRT LATCH CVR..MUST ORDER 12523045 HARDWARE KIT)	12370123
		DISCON	**PANEL PKG**, RF LIFT OFF (84-86) (EXC CC3) (ALSO USE 12523045 HDWE) (INCLS 12, 14, 16, 21, 34-36, 38) (1ST DES 86 HAS ATTCH BOLT NEAR INSIDE EDGE OF BRKT) (12.810)	12344791

© 2000 GENERAL MOTORS SERVICE PARTS OPERATIONS-CHEVROLET-14Y

		DISCON	**PANEL PKG**, RF LIFT OFF (84-86) (EXC CC3) (ALSO USE 12523045 HDWE) (INCLS 12, 14, 16, 21, 34-36, 38) (1ST DES 86 HAS ATTCH BOLT NEAR INSIDE EDGE OF BRKT) (21552A)	12344791
	10-M23	21.552	**WINDOW PKG**, RF LIFT OFF (1985-86 CC3) (BRONZE 64S) (INCLS 12, 14, 16, 21, 34-36, 38) (1ST DES 1986 - TOP HAS TWO 30MM HOLES IN ROOF PNL FRONT LATCH COVERS)	12370124
		DISCON	**PANEL PKG**, RF LIFT OFF (86-87) (EXC CC3) (INCLS 12, 14, 16, 21, 34-36, 38) (2ND DES 86) HAS ATTCH BOLT IN CTR OF BRKT BETWEEN TWO LRG CLEARANCE HOLES) (12.810)	12344790
		DISCON	**PANEL PKG**, RF LIFT OFF (86-87) (EXC CC3) (INCLS 12, 14, 16, 21, 34-36, 38) (2ND DES 86) HAS ATTCH BOLT IN CTR OF BRKT BETWEEN TWO LRG CLEARANCE HOLES) (21552)	12344790
	10-M23	21.552	**WINDOW PKG**, RF LIFT OFF (1986-87 CC3) (BRONZE 64S) (INCLS 12, 14, 16, 21, 34-36, 38) (2ND DESIGN 1986 - HAS ONE 25MM HOLE IN LATCH COVERS)	12344793
	10-M23	21.552	**WINDOW PKG**, RF LIFT OFF (1986-87 CC3) (BLUE 24S) (INCLS 12, 14, 16, 21, 34-36, 38) (2ND DES 1986 - HAS ONE 25MM HOLE IN LATCH COVERS)	12344792
2.	10-A8	12.075	**MOLDING**, RF PNL (EXC CC3)	10284148
3.		DISCON	**PANEL**, RF TR (1984-85 EXC CC3) (1ST DESIGN 1985 - REAR CORNERS HAVE ROUNDED CUT OUT)	14088426
	10-N24	14.640	**PANEL**, RF TR (1986-87 EXC CC3) (2ND DESIGN 1985 - REAR CORNERS ARE CUT DIAGONALLY)	14041890
4.	10-A25	12.815	**SCREW**, RR RF LOC BRKT	14051183
5.	10-A18	12.810	**RETAINER**, RF LIFT OFF PNL/WDO RR LOC BOLT	14051184
6.		8.900	**BOLT**, HFH M8X1.25X21MM, 17 OD, 10.9 (AR)	12551177
7.	10-A17	12.809	**WASHER**, RF PNL RR LOC BRKT (7.347)	14038397
8.	10-A18	12.810	**SHIM**, RF PNL RR LOC	14051188
9.	10-A18	12.810	**BRACKET**, RR RF LOCATOR-RH	14051186
	10-A18	12.810	**BRACKET**, RR RF LOCATOR-LH	14051185
10.	10-A18	12.810	**LOCATOR**, RR RF-RH	10193624
	10-A18	12.810	**LOCATOR**, RR RF-LH	10193623
11.		8.977	**SCREW**, PAN HE TORX 8X1.5X16, 9.8 PEOR FULL THD W/NYLOC (AR)	14084506
12.		N.S.	**FRAME**, RF PNL (PART OF 1)	
13.		N.S.	**SCREW**, PAN HD C/R TAP (M4.2X1.41X16) POR	
14.	10-N21	10.710	**RETAINER**, RF PNL SI W/STR-RH (PART OF 1)	14049246
	10-N21	10.710	**RETAINER**, RF PNL SI W/STR-LH (PART OF 1)	14049245
15.		8.977	**SCREW**, RD WA HD C/R TAP (M4.2X1.41X20) BLK ORG	10180421
16.	10-A18	12.810	**WEATHERSTRIP**, RF LIFT OFF PNL/WDO SI BODY (RH) (PART OF 1)	22112054
	10-A18	12.810	**WEATHERSTRIP**, RF LIFT OFF PNL/WDO SI BODY (LH) (PART OF 1)	22112053
17.	10-A18	12.810	**WEATHERSTRIP**, RF PNL RR	10283997
18.	10-A18	12.810	**RETAINER**, RF LIFT OFF PNL/WDO RR W/STR (PUSH IN)	8731909
19.	10-A18	12.810	**RETAINER**, RF PNL RR W/STR-RH	14049248
	10-A18	12.810	**RETAINER**, RF PNL RR W/STR-LH	14049247
20.		8.977	**SCREW**, RD WA (M4.2X1.41X10, PS)	11509703
21.		8.977	**SCREW**, RD WA (M4.2X1.41X10, PS) (PART OF 1)	11509703
22.	10-A17	12.807	**WEATHERSTRIP**, W/S FRM	10268887
23.	10-N21	10.710	**RETAINER**, W/STR-RH	14049244
	10-N21	10.710	**RETAINER**, W/STR-LH	14049243
24.	10-N17	10.203	**SUNSHADE**, (RH) (1984-85 EXC VD1) (1986-87)	10199728
	10-N17	10.203	**SUNSHADE**, LH (EXC D74)	10051877
25.	10-A18	12.810	**RETAINER**, RF PNL RR W/STR	14049242
26.	10-A18	12.810	**SCREW**, RF FRT MTG (1984-86)	14081900
27.		DISCON	**BRACKET**, RF FRT MTG-RH (1984-86) (1ST DES) (INCL 30)	14051192
	10-A18	12.810	**BRACKET**, RF FRT MTG-RH (1986-87) (2ND DES) (INCL 30)	14090606

© 2000 GENERAL MOTORS SERVICE PARTS OPERATIONS-CHEVROLET-14Y

		DISCON	BRACKET, RF FRT MTG-LH (1984-86) (1ST DES) (INCL 30)	14051191
		DISCON	BRACKET, RF FRT MTG-LH (1986-87) (2ND DES) (INCL 30)	14090605
28.		DISCON	COVER, RF PNL FRT LAT-RH (1984-86) (1ST DES) (1ST DES HAS 2 LARGER CLEARANCE HOLES, 2ND DES HAS 3 LARGE CLEARANCE HOLES)	14049300
		DISCON	COVER, RF PNL FRT LAT-RH (1986-87) (2ND DES) (1ST DES HAS 2 LARGER CLEARANCE HOLES, 2ND DES HAS 3 LARGE CLEARANCE HOLES)	14089666
		DISCON	COVER, RF PNL FRT LAT-LH (1984-86) (1ST DES) (1ST DES HAS 2 LARGER CLEARANCE HOLES, 2ND DES HAS 3 LARGE CLEARANCE HOLES)	14049299
		DISCON	COVER, RF PNL FRT LAT-LH (1986-87) (2ND DES) (1ST DES HAS 2 LARGER CLEARANCE HOLES, 2ND DES HAS 3 LARGE CLEARANCE HOLES)	14089665
29.		8.977	SCREW, RD WA HD C/R TAP (M4.2X1.41X20) BLK ORG	10180421
30.	10-A18	12.810	PIN, RF PNL FRT HOLDN (1984-86) (1ST DES) (PART OF 27)	14051195
31.	10-N17	10.219	RETAINER, S/S	14060215
32.	10-A18	12.810	BOLT, RF PNL FRT HOLDN PLT	14081021
33.	10-N17	10.219	SPRING, S/S SUPPORT	14060216
34.	10-A18	12.810	PLUG, RUBBER (1") (PART OF 1)	10275702
35.		8.929	WASHER, FLAT (M6.3X16.75X1.5) (PART OF 1)	
36.		DISCON	TAPE, RF PNL TRM FSTN (1984-85 EXC CC3) (PART OF 1)	14065048
37.	10-A18	12.810	WRENCH, RF PNL	10172311
38.	10-A18	12.810	PROTECTOR, FRT S/D WDO W/STR UPR FRT (PART OF 1	10217224
	10-A18	12.810	PROTECTOR, RF PNL SI W/STR-LH (PART OF 1)	10217223
39.	10-A18	12.810	PAD, RF PNL FRM SI	14100214
40.	10-A18	12.810	PAD, RF PNL FRM RR-RH	14090614
	10-A18	12.810	INSULATOR, RF LIFT OFF PNL/WDO FRM	14090613
41.	10-A18	12.810	PLATE, RF PNL FRT HOLDN	14089668

© 2000 GENERAL MOTORS SERVICE PARTS OPERATIONS-CHEVROLET-14Y

MICROFICHE INDEX

GROUPS 12.000 THRU 13.000

FICHE 10 OF 11

GROUP	DESCRIPTION	STARTING GRID LOCATION PARTS	ILLUSTRATIONS
–	GENERAL INFORMATION	1–A2	1–G2
–	ALPHABETICAL INDEX	1–B13	N.A.
12.000	BODY MOLDINGS – SHEET METAL	10–A2	10–D2
13.000	BODY WIRING – VINYL TOP TRIM	10–C2	N.A.
–	OUT OF FICHE CALLS	N.A.	10–M22

10–G1

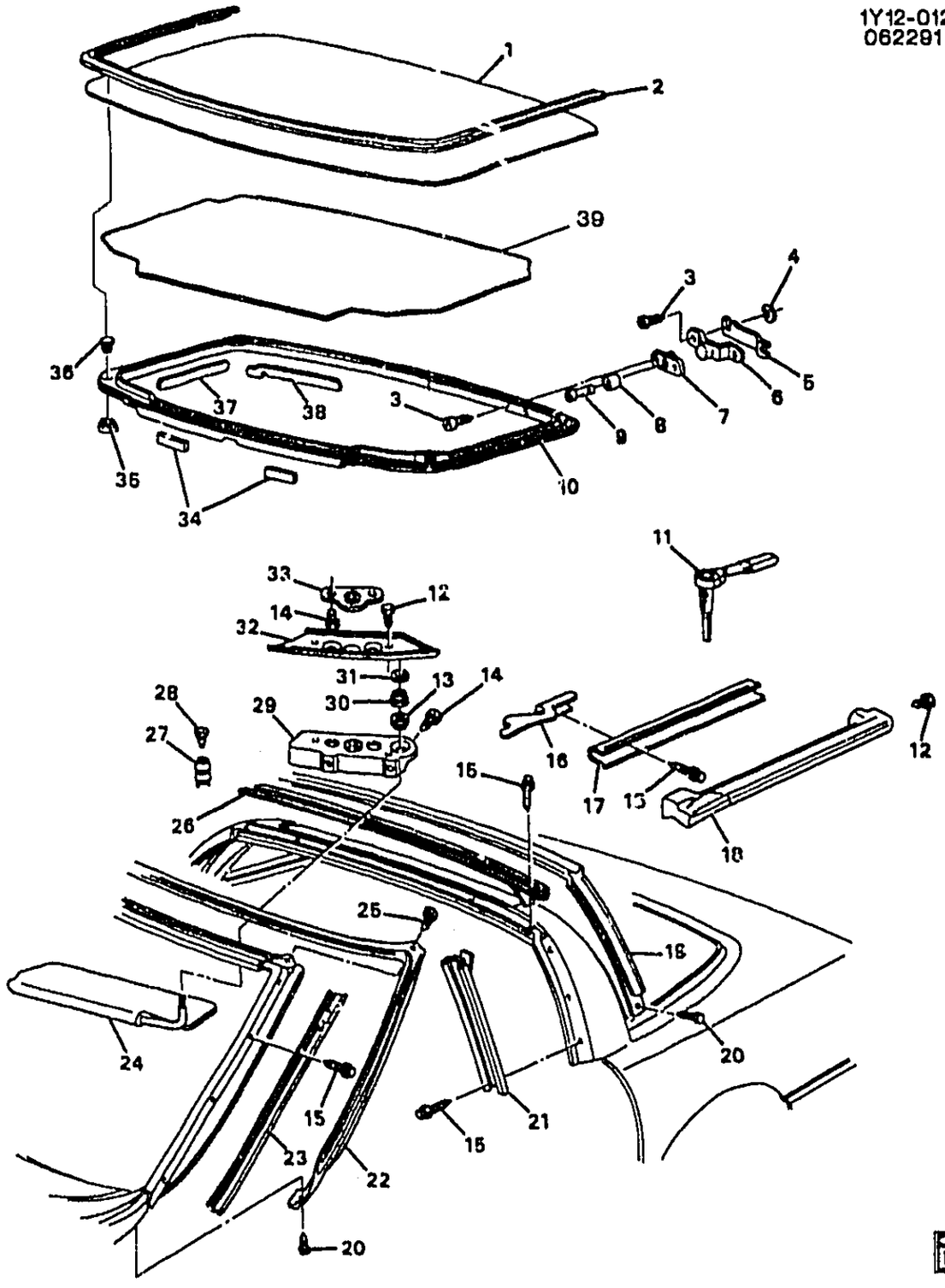

1988 Y ROOF HARDWARE/LIFT OFF PANELS (C2L,CC3,CF7)

1.	10-M23	21.552	**WINDOW PKG**, RF LIFT OFF (BLUE) (CC3, 24S) (1988)	12344792
	10-M23	21.552	**WINDOW PKG**, RF LIFT OFF (BRONZE) (CC3, 64S)	12344793
2.	10-A8	12.075	**MOLDING**, RF LIFT OFF PNL/WDO RVL	10284148
3.		8.977	**SCREW**, PAN HE TORX 8X1.5X16, 9.8 PEOR FULL THD W/NYLOC (AR)	14084506
4.	10-A18	12.810	**WASHER**, RF LIFT OFF PNL/WDO RR LOCR BRKT	14038397

© 2000 GENERAL MOTORS SERVICE PARTS OPERATIONS-CHEVROLET-14Y

				1Y12-012
5.	10-A18	12.810	SHIM, RF LIFT OFF PNL/WDO RR LOCR BRKT	14051188
6.	10-A18	12.810	BRACKET, RF LIFT OFF PNL/WDO RR LOCR (RH)	14051186
	10-A18	12.810	BRACKET, RF LIFT OFF PNL/WDO RR LOCR (LH)	14051185
7.	10-A18	12.810	LOCATOR, RF LIFT OFF PNL/WDO RR (RH)	10193624
	10-A18	12.810	LOCATOR, RF LIFT OFF PNL/WDO RR (LH)	10193623
8.	10-A18	12.810	RETAINER, RF LIFT OFF PNL/WDO RR LOCR BOLT	14051184
9.	10-A25	12.815	BOLT, RF RR PNL LAT	14051183
10.		N.S.	FRAME, RF PNL	
11.	10-A18	12.810	WRENCH, RF LIFT OFF PNL/WDO	10172311
12.		8.977	SCREW, LG RND WA HD W/BLK NYL WA, 4.2X 1.41X13, 11-OD, DRILL PT, 6172, PEOR (M4.2X1.41X13) (AR)	10180421
13.	10-N17	10.219	SPRING, S/S	14060216
14.	10-A18	12.810	BOLT, RF LIFT OFF PNL/WDO FRT MT PLT	14081021
15.		8.977	BOLT, RD CROWNED WA HD C/R M4.2X1.41X16POR (M4.2X1.41X10 PS) (AR)	11508231
16.	10-A18	12.810	PROTECTOR, FRT S/D WDO W/STR UPR FRT (RH)	10217224
	10-A18	12.810	PROTECTOR, FRT S/D WDO W/STR UPR FRT (LH)	10217223
17.	10-N21	10.710	RETAINER, FRT S/D WDO UPR W/STR (RH)	14049246
	10-N21	10.710	RETAINER, FRT S/D WDO UPR W/STR (LH)	14049245
18.	10-A18	12.810	WEATHERSTRIP, RF LIFT OFF PNL/WDO SI BODY (RH)	22112054
	10-A18	12.810	WEATHERSTRIP, RF LIFT OFF PNL/WDO SI BODY (LH)	22112053
19.	10-A18	12.810	WEATHERSTRIP, RF LIFT OFF PNL/WDO RR	10283997
20.	10-N21	10.695	RETAINER, FRT S/D WDO FRT W/STR RET (PUSH IN) (LOWER)	8731909
	10-A18	12.810	RETAINER, RF LIFT OFF PNL/WDO RR W/STR (PUSH IN)	8731909
21.	10-A18	12.810	RETAINER, RF LIFT OFF PNL/WDO RR W/STR (RH)	14049248
	10-A18	12.810	RETAINER, RF LIFT OFF PNL/WDO RR W/STR (LH)	14049247
22.	10-A17	12.807	WEATHERSTRIP, W/S FRM	10268887
23.	10-N21	10.710	RETAINER, FRT S/D WDO FRT W/STR (RH)	14049244
	10-N21	10.710	RETAINER, FRT S/D WDO FRT W/STR (LH)	14049243
24.	10-N17	10.203	SUNSHADE, (RH)	10199728
	10-N17	10.203	SUNSHADE, (LH) (D74)	10199727
	10-N17	10.203	SUNSHADE, (LH) (EXC D74)	10051877
25.	10-N21	10.695	RETAINER, FRT S/D WDO FRT W/STR RET (PUSH IN) (UPPER (PAINT TO MATCH))	20540336
26.	10-A18	12.810	RETAINER, RF LIFT OFF PNL/WDO RR W/STR (TOP SI)	14049242
27.	10-A18	12.810	RETAINER, RF LIFT OFF PNL/WDO BOLT (PART OF 29)	10193699
28.	10-A18	12.810	BOLT, RF LIFT OFF PNL/WDO (PART OF 29)	14090607
29.	10-A18	12.810	BRACKET, RF PNL FRT HOLDN (W/SLEV) (RH) (INCL 27, 28)	14090606
		DISCON	BRACKET, RF PNL FRT HOLDN (W/SLEV) (LH) (INCL 27, 28)	14090605
30.	10-N17	10.219	RETAINER, S/S	14060215
31.		8.921	NUT-PUSH ON SPRING FOR .153 TO .159 INCH DIA STUD, .70 OD, .35 THK, SAE1050 CRB .SPR .STL, PC (AR) (AC-DELCO #11501937)	11501937
32.		DISCON	COVER, RF PNL FRT LAT (RH)	14089666
		DISCON	COVER, RF PNL FRT LAT (LH)	14089665
33.	10-A18	12.810	PLATE, RF LIFT OFF PNL/WDO FRT MT	14089668
34.		N.S.	INSULATOR, RF FRT	
35.	10-A18	12.810	PLUG, RF LIFT OFF PNL/WDO FRM FIN	10275702
36.		N.S.	SPACER, FRT HLDN	
37.	10-A18	12.810	PAD, RF PNL FRM	14100214
38.	10-A18	12.810	PAD, RF PNL FRM (RH)	14090614
	10-A18	12.810	INSULATOR, RF LIFT OFF PNL/WDO FRM (LH)	14090613
39.	10-N24	14.640	PANEL, RF INR TR (CF7, C2L)	14081890

RPO DEFINITIONS
CC3 – ROOF,SUN,REMOVEABLE PANELS(TRANSPARENT PLASTIC)
CF7 – ROOF,SUN,REMOVABLE,NON-TRANSPARENT
C2L – ROOF PACKAGE,DUAL REMOVEABLE

© 2000 GENERAL MOTORS SERVICE PARTS OPERATIONS-CHEVROLET-14Y

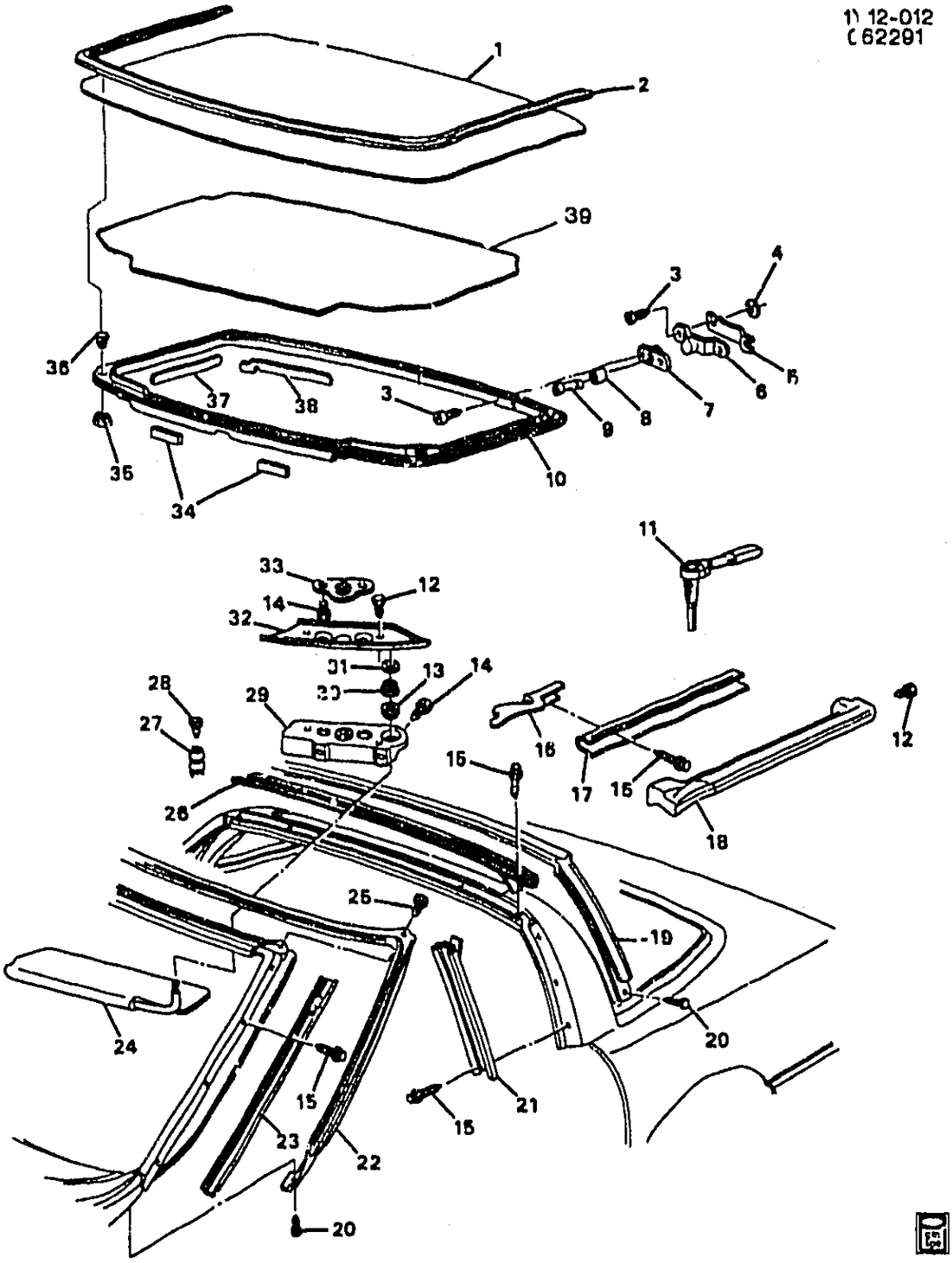

1989–1992 Y ROOF HARDWARE/LIFT OFF PANELS (C2L,CC3,CF7)

1.	10–A18	12.810	WINDOW PKG, RF LIFT OFF (BLUE) (INCL 10, 35, 36)	89–92	Y07 (CC3, C2L, 24S) ..	1	12370123
	10–M23	21.552 A	WINDOW PKG, RF LIFT OFF (BLUE) (INCL 10, 35, 36) (12.810)	89–92	Y07 (CC3, C2L, 24S) ..	1	12370123
	10–A18	12.810	WINDOW PKG, RF LIFT OFF (BRONZE) (INCL 10, 35, 36)	89–92	Y07 (CC3, C2L, 64S) ..	1	12370124

© 2000 GENERAL MOTORS SERVICE PARTS OPERATIONS–CHEVROLET–14Y

							1Y12-0121
	10-M23	21.552 A	**WINDOW PKG**, RF LIFT OFF (BRONZE) (INCL 10, 35, 36) (12.810)	89-92	Y07 (CC3, C2L, 64S) ..	1	12370124
2.	10-A8	12.075	**MOLDING**, RF LIFT OFF PNL/WDO RVL (PART OF 1)	89-92	Y07 (CF7, C2L)	1	10284148
3.		8.977	**SCREW**, PAN HE TORX 8X1.5X16, 9.8 PEOR FULL THD W/NYLOC (RF LIFT OFF PNL/WDO RR LOC) (12.810)	89-92	Y	AR	14084506
4.		8.929	**WASHER**, M8.9X20.4X2.5 ST CAD/ZP (7347) (RF LIFT OFF PNL/WDO RR LOC BRKT)	89-92	.....	AR	14038397
5.	10-A18	12.810	**SHIM**, RF LIFT OFF PNL/WDO RR LOCR BRKT	89-92	Y07	2	14051188
6.	10-A18	12.810	**BRACKET**, RF LIFT OFF PNL/WDO RR LOCR	89-92	Y07	LH	14051185
	10-A18	12.810	**BRACKET**, RF LIFT OFF PNL/WDO RR LOCR	89-92	Y07	RH	14051186
7.	10-A18	12.810	**LOCATOR**, RF LIFT OFF PNL/WDO RR (LESS BRKT, SCREW & INSUL)	89-91	Y07	RH	10193624
	10-A18	12.810	**LOCATOR**, RF LIFT OFF PNL/WDO RR	92	Y (CC3, CF7, C2L)	LH	10193623
	10-A18	12.810	**LOCATOR**, RF LIFT OFF PNL/WDO RR	92	Y (CC3, CF7, C2L)	RH	10193624
8.	10-A18	12.810	**RETAINER**, RF LIFT OFF PNL/WDO RR LOCR BOLT	89-92	Y07 (CC3, CF7, C2L) ..	2	14051184
9.	10-A18	12.810	**BOLT**, RF LIFT OFF PNL/WDO RR LOCR (M8X1.25X37) (12.815)	92	Y (CC3, CF7, C2L)	2	14051183
	10-A18	12.810	**BOLT**, RF LIFT OFF PNL/WDO RR LOCR (PAN HE TORX 8X1.5X16, 9.8 PEOR FULL THD W/NYLOC) .	89-92	Y07 (C2L, CC3, CF7) ..	8	14084506
10.		N.S.	**FRAME**, RF PNL (PART OF 1) ...		.....		
11.	10-A18	12.810	**WRENCH**, RF LIFT OFF PNL/WDO (RATCHET)	89-92	Y07	1	10172311
12.		8.977	**SCREW**, LG RND WA HD W/BLK NYL WA, 4.2X 1.41X13, 11-OD, DRILL PT, 6172, PEOR	89-92	.....	AR	10180421
13.	10-N17	10.219	**SPRING**, S/S	89-92	Y	2	14060216
14.	10-A18	12.810	**BOLT**, RF LIFT OFF PNL/WDO FRT MT PLT (TORX HD 8X1.25X20) (8.913)	92	Y07 (C2L)	AR	14081021
	10-A18	12.810	**BOLT**, RF LIFT OFF PNL/WDO FRT MT PLT (M8X1.25X20) (TORX HD 8X1.25X20) (8.913)	89-92	Y07	4	14081021
15.		8.977	**SCREW**, TORX, RND WA, M4.2X1.41X10, PS	89-92	.....	AR	11509703
16.	10-A18	12.810	**PROTECTOR**, FRT S/D WDO W/STR UPR FRT	89-91	Y	LH	10217223
	10-A18	12.810	**PROTECTOR**, FRT S/D WDO W/STR UPR FRT	89-90	Y	RH	10217224
	10-A18	12.810	**PROTECTOR**, FRT S/D WDO W/STR UPR FRT	91	Y07 (C2L, CC3, CF7) ..	RH	10217224
	10-A18	12.810	**PROTECTOR**, FRT S/D WDO W/STR UPR FRT	92	Y07	LH	10217223
	10-A18	12.810	**PROTECTOR**, FRT S/D WDO W/STR UPR FRT	92	Y07	RH	10217224
17.	10-N21	10.710	**RETAINER**, FRT S/D WDO UPR W/STR (12.810)	89-92	Y07	LH	14049245

© 2000 GENERAL MOTORS SERVICE PARTS OPERATIONS - CHEVROLET-14Y

							1Y12-0121
	10-N21	10.710	RETAINER, FRT S/D WDO UPR W/STR (12.810)	89-92	Y07	RH	14049246
18.	10-A18	12.810	WEATHERSTRIP, RF LIFT OFF PNL/WDO SI BODY (10.710)	89-92	Y07	LH	22112053
	10-A18	12.810	WEATHERSTRIP, RF LIFT OFF PNL/WDO SI BODY (10.710)	89-92	Y07	RH	22112054
19.	10-A18	12.810	WEATHERSTRIP, RF LIFT OFF PNL/WDO RR	89-92	Y07	1	10283997
20.	10-A18	12.810	RETAINER, RF LIFT OFF PNL/WDO RR W/STR (PUSH IN) (FULL FLDG) (10.695)	89-90	Y	AR	8731909
	10-A18	12.810	RETAINER, RF LIFT OFF PNL/WDO RR W/STR (PUSH IN) (FULL FLDG) (10.695)	91	Y07	AR	8731909
	10-N21	10.695	RETAINER, FRT S/D WDO FRT W/STR RET (PUSH IN) (LWR) (FULL FLDG)	91-92	Y07	4	8731909
	10-A18	12.810	RETAINER, RF LIFT OFF PNL/WDO RR W/STR (PUSH IN) (FULL FLDG) (10.695)	92	Y07	4	8731909
21.	10-A18	12.810	RETAINER, RF LIFT OFF PNL/WDO RR W/STR (TO W/STR MLDG)	89-92	Y07	RH	14049248
	10-A18	12.810	RETAINER, RF LIFT OFF PNL/WDO RR W/STR (TO W/STR MLDG)	89-92	Y07	LH	14049247
22.	10-A17	12.807	WEATHERSTRIP, W/S FRM (12.810)	89-92	Y	1	10268887
23.	10-N21	10.710	RETAINER, FRT S/D WDO FRT W/STR (12.810)	89-92	Y	LH	14049243
	10-N21	10.710	RETAINER, FRT S/D WDO FRT W/STR (12.810)	89-92	Y	RH	14049244
24.	10-N17	10.203	SUNSHADE, (BLACK)	89-92	Y (EXC D74)	RH	10199728
	10-N17	10.203	SUNSHADE, (BLACK)	89-92	Y (D74)	LH	10199727
	10-N17	10.203	SUNSHADE,	89	Y (EXC D74)	LH	10051877
	10-N17	10.203	SUNSHADE, (BLACK)	89-92	Y	RH	10199728
	10-N17	10.203	SUNSHADE,	89	Y (D74, 19I)	LH	10199727
	10-N17	10.203	SUNSHADE, (BLACK)	90-92	Y	LH	10199727
25.	10-N21	10.695	RETAINER, FRT S/D WDO FRT W/STR RET (PUSH IN) (UPR) (PAINT TO MATCH) (FITS .18 HOLE, .7 LG, .43 OD, NYLON) (14.630)	89-92	Y	4	20540336
26.	10-A18	12.810	RETAINER, RF LIFT OFF PNL/WDO RR W/STR (TOP SI)	89-92	Y07	1	14049242
27.	10-A18	12.810	RETAINER, RF LIFT OFF PNL/WDO BOLT (PART OF 29)	89-92	Y	2	10193699
28.	10-A18	12.810	BOLT, RF LIFT OFF PNL/WDO (PART OF 29)	89-92	Y	2	14090607
29.	10-N17	10.219	SUPPORT, S/S (INCL 27, 28)	89-92	Y	LH	10198727
	10-N17	10.219	SUPPORT, S/S (INCL 27, 28)	89-92	Y	RH	10198728
30.	10-N17	10.219	RETAINER, S/S	89-92	Y	2	14060215
31.		8.917	NUT, HEX M5X0.8 PREV TORQ INSERT 9 ZC (S/S SUPT)	89-92		AR	11504568
32.	10-N17	10.219	COVER, S/S SUPT TR	89-92	Y	LH	10219601
	10-N17	10.219	COVER, S/S SUPT TR	89-92	Y	RH	10219602
33.	10-A18	12.810	PLATE, RF LIFT OFF PNL/WDO FRT MT	89-90	Y07	AR	14105190

© 2000 GENERAL MOTORS SERVICE PARTS OPERATIONS-CHEVROLET-14Y

							1Y12-0121
	10-A18	12.810	PLATE, RF LIFT OFF PNL/WDO FRT MT	91-92	Y07 (C2L, CC3, CF7)	AR	14105190
34.	10-A18	12.810	INSULATOR, RF FRT	89	Y	AR	10077470
	10-A18	12.810	INSULATOR, RF FRT	90-92	Y (C2L, CC3, CF7)	AR	10077470
35.	10-A18	12.810	PLUG, RF LIFT OFF PNL/WDO FRM FIN (PART OF 1)				10275702
36.		N.S.	SPACER, RF LIFT OFF PNL/WDO FRM (PART OF 1)				
37.	10-A18	12.810	PAD, RF PNL FRM	88-92	Y	2	14100214
38.	10-A18	12.810	PAD, RF PNL FRM	88-90	Y07	RH	14090614
	10-A18	12.810	PAD, RF PNL FRM	91-92	Y (C2L, CC3, CF7)	RH	14090614
	10-A18	12.810	INSULATOR, RF LIFT OFF PNL/WDO FRM	88-90	Y07	LH	14090613
	10-A18	12.810	INSULATOR, RF LIFT OFF PNL/WDO FRM	91-92	Y (CC3, CF7, C2L)	LH	14090613
	10-A18	12.810	INSULATOR, RF LIFT OFF PNL/WDO FRM	91	Y07 (CC3, CF7)	LH	14090613
39.	10-N24	14.640	PANEL, RF INR TR	90	Y	1	14081890
	10-N24	14.640	PANEL, RF INR TR	89-90	Y07 (CF7)	1	14081890
	10-N24	14.640	PANEL, RF INR TR	91-92	Y07 (CF7, C2L)	1	14081890

RPO DEFINITIONS

CC3 – ROOF,SUN,REMOVEABLE PANELS(TRANSPARENT PLASTIC)
CF7 – ROOF,SUN,REMOVABLE,NON-TRANSPARENT
C2L – ROOF PACKAGE,DUAL REMOVEABLE
D74 – MIRROR,INSIDE,LH VISOR VANITY,ILLUMINATED
19I – INTERIOR TRIM,BLACK
24S – ROOF COLOR,REMOVEABLE PANEL(BLUE)
64S – REMOVABLE ROOF PANEL COLOR,BRONZE

© 2000 GENERAL MOTORS SERVICE PARTS OPERATIONS-CHEVROLET-14Y

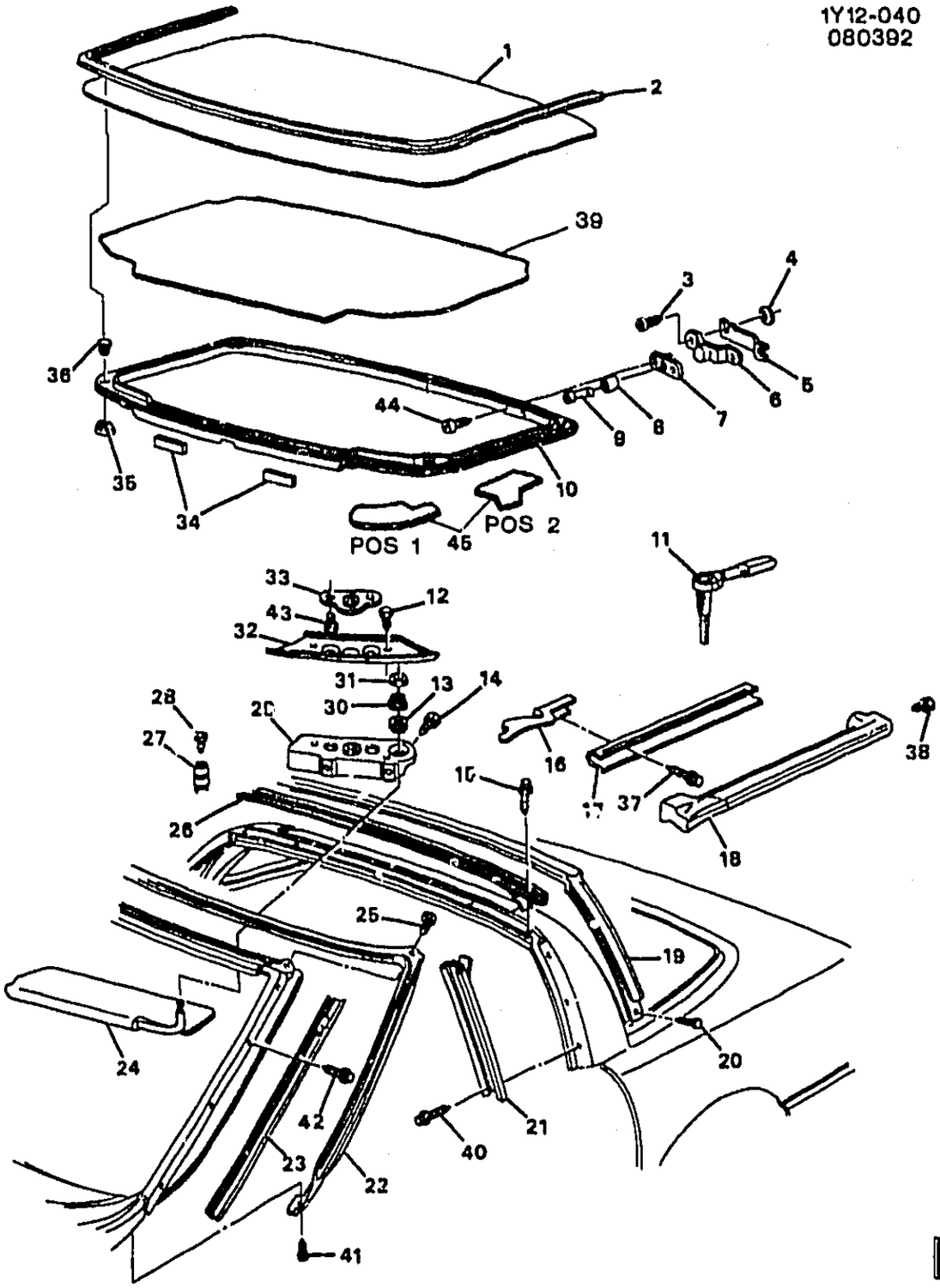

1993–1996 Y ROOF HARDWARE/LIFT OFF PANELS (C2L,CC3,CF7)

1.	10–A18	12.810	WINDOW PKG, RF LIFT OFF (BLUE) (CPS)	93–96	Y07 (CC3, C2L, 24S) ..	1	12370123
	10–M23	21.552 A	WINDOW PKG, RF LIFT OFF (BLUE) (CPS) (12.810)	93–96	Y07 (CC3, C2L, 24S) ..	1	12370123
	10–A18	12.810	WINDOW PKG, RF LIFT OFF (BRONZE) (CPS)	93–96	Y07 (CC3, C2L, 64S) ..	1	12370124

© 2000 GENERAL MOTORS SERVICE PARTS OPERATIONS–CHEVROLET–14Y

							1Y12-040
	10-M23	21.552 A	**WINDOW PKG**, RF LIFT OFF (BRONZE) (CPS) (12.810)	93-96	Y07 (CC3, C2L, 64S) ..	1	12370124
	10-A18	12.810	**PLUG**, RF LIFT OFF PNL/WDO FRM FIN	93-94	Y07 (CF7, C2L, CC3) ..	4	10275702
	10-A18	12.810	**PLUG**, RF LIFT OFF PNL/WDO FRM FIN	95-96	Y07 (CF7, C2L)	4	10275702
2.	10-A8	12.075	**MOLDING**, RF LIFT OFF PNL/WDO RVL	93-96	Y07 (CF7, C2L)	1	10284148
3.		8.900	**BOLT**, HFH M8X1.25X21MM, 17 OD, 10.9 (RF LIFT OFF PNL/WDO RR LOC BRKT)	93-96	.....	4	12551177
4.	10-A18	12.810	**WASHER**, RF LIFT OFF PNL/WDO RR LOCR BRKT (M8.6X20X2.50) (8.929)	93-96	Y07	2	14038397
5.	10-A18	12.810	**SHIM**, RF LIFT OFF PNL/WDO RR LOCR BRKT	93-96	Y07	2	14051188
6.	10-A18	12.810	**BRACKET**, RF LIFT OFF PNL/WDO RR LOCR	93-96	Y07	LH	14051185
	10-A18	12.810	**BRACKET**, RF LIFT OFF PNL/WDO RR LOCR	93-96	Y07	RH	14051186
7.	10-A18	12.810	**LOCATOR**, RF LIFT OFF PNL/WDO RR	93-96	Y (CC3, CF7, C2L)	LH	10193623
	10-A18	12.810	**LOCATOR**, RF LIFT OFF PNL/WDO RR	93-96	Y (CC3, CF7, C2L)	RH	10193624
8.	10-A18	12.810	**RETAINER**, RF LIFT OFF PNL/WDO RR LOCR BOLT	93-96	Y07 (CC3, CF7, C2L) ..	2	14051184
9.	10-A18	12.810	**BOLT**, RF LIFT OFF PNL/WDO RR LOCR (M8X1.25X37) (12.815)	93-96	Y (CC3, CF7, C2L)	2	14051183
	10-A18	12.810	**BOLT**, RF LIFT OFF PNL/WDO RR LOCR (PAN HE TORX 8X1.5X16, 9.8 PEOR FULL THD W/NYLOC) .	93-95	Y07 (C2L, CC3, CF7) ..	8	14084506
10.		N.S.	**FRAME**, RF PNL (PART OF 1) ...		.....		
11.	10-A18	12.810	**WRENCH**, RF LIFT OFF PNL/WDO (RATCHET)	93-96	Y07	1	10172311
12.		8.977	**SCREW**, LG RND WA HD W/BLK NYL WA, 4.2X 1.41X13, 11-OD, DRILL PT, 6172, PEOR (S/S SUPT TR CVR)	93-96	.....	4	10180421
13.	10-N17	10.219	**SPRING**, S/S	93-96	Y	2	14060216
14.	10-N17	10.219	**BOLT**, S/S SUPT (TORX HD 8X1.25X20) (8.913)	93-96	Y	4	14081021
15.		8.977	**BOLT**, RD CROWNED WA HD C/R M4.2X1.41X16POR (RR LIFT OFF PNL/WDO RR W/STR RET UPPER)	93-96	.....	6	11508231
16.	10-A18	12.810	**PROTECTOR**, FRT S/D WDO W/STR UPR FRT	93-96	Y07	LH	10217223
	10-A18	12.810	**PROTECTOR**, FRT S/D WDO W/STR UPR FRT	93-96	Y07	RH	10217224
17.	10-N21	10.710	**RETAINER**, FRT S/D WDO UPR W/STR (12.810)	93-96	Y07	LH	14049245
	10-N21	10.710	**RETAINER**, FRT S/D WDO UPR W/STR (12.810)	93-96	Y07	RH	14049246
18.	10-A18	12.810	**WEATHERSTRIP**, RF LIFT OFF PNL/WDO SI BODY (10.710)	93-96	Y07	LH	22112053
	10-A18	12.810	**WEATHERSTRIP**, RF LIFT OFF PNL/WDO SI BODY (10.710)	93-96	Y07	RH	22112054
19.	10-A18	12.810	**WEATHERSTRIP**, RF LIFT OFF PNL/WDO RR	93-96	Y07	1	10283997

© 2000 GENERAL MOTORS SERVICE PARTS OPERATIONS-CHEVROLET-14Y

							1Y12-040
20.	10-N21	10.695	**RETAINER**, FRT S/D WDO FRT W/STR RET (PUSH IN) (LWR) (LWR) (FULL FLDG)	93-96	Y	4	8731909
	10-N21	10.695	**RETAINER**, FRT S/D WDO FRT W/STR RET (PUSH IN) (UPR) (LWR) (PAINT TO MATCH) (FITS .18 HOLE, .7 LG, .43 OD, NYLON) (14.630)	93-96	Y	2	20540336
21.	10-A18	12.810	**RETAINER**, RF LIFT OFF PNL/WDO RR W/STR (TO W/STR MLDG) (W/SEAL STRP)	93-96	Y07	RH	14049248
	10-A18	12.810	**RETAINER**, RF LIFT OFF PNL/WDO RR W/STR (TO W/STR MLDG) (W/SEAL STRP)	93-96	Y07	LH	14049247
22.	10-A17	12.807	**WEATHERSTRIP**, W/S FRM (12.810)	93-96	Y	1	10268887
23.	10-N21	10.710	**RETAINER**, FRT S/D WDO FRT W/STR (12.810)	93-96	Y	LH	14049243
	10-N21	10.710	**RETAINER**, FRT S/D WDO FRT W/STR (12.810)	93-96	Y	RH	14049244
24.	10-N17	10.203	**SUNSHADE**, (BLACK)	93	Y	RH	10199728
	10-N17	10.203	**SUNSHADE**, (BLACK)	93	Y	LH	10199727
	10-N17	10.203	**SUNSHADE**, (SEE KIT 12459827) (BLACK)	94-96	Y (EXC VD1)	LH	12453667
	10-N17	10.203	**SUNSHADE**, (SEE KIT 12459827) (BLACK)	94-96	Y (EXC VD1)	RH	12453668
	10-N17	10.203	**SUNSHADE**, (BLACK)	94-96	Y (VD1) (EXPORT)	LH	10251051
	10-N17	10.203	**SUNSHADE**, (BLACK)	94-96	Y (VD1) (EXPORT)	RH	10251052
25.	10-N21	10.695	**RETAINER**, FRT S/D WDO FRT W/STR RET (PUSH IN) (UPR) (PAINT TO MATCH) (FITS .18 HOLE, .7 LG, .43 OD, NYLON) (14.630)	93-95	Y	2	20540336
26.	10-A18	12.810	**RETAINER**, RF LIFT OFF PNL/WDO RR W/STR (TOP SI) ...	93-95	Y07	1	14049242
27.	10-A18	12.810	**RETAINER**, RF LIFT OFF PNL/WDO BOLT (PART OF 29) ...	93-96	Y	2	10193699
	10-A18	12.810	**INSULATOR**, RF LIFT OFF PNL/WDO BOLT (PART OF 29) ...	93-96	Y	2	10218584
28.	10-A18	12.810	**BOLT**, RF LIFT OFF PNL/WDO (PART OF 29)	93-96	Y	2	14090607
29.	10-N17	10.219	**SUPPORT**, S/S (INCL 27, 28)	93-96	Y	LH	10198727
	10-N17	10.219	**SUPPORT**, S/S (INCL 27, 28)	93-96	Y	RH	10198728
30.	10-N17	10.219	**RETAINER**, S/S	93-96	Y	2	14060215
31.		6.317	**NUT**, HEX M5X0.8 PREV TORQ INSERT 9 ZC (S/S SUPT)	93-96	.....	AR	11504568
32.	10-N17	10.219	**COVER**, S/S SUPT TR	93-96	Y	LH	10219601
	10-N17	10.219	**COVER**, S/S SUPT TR	93-96	Y	RH	10219602
33.	10-A18	12.810	**PLATE**, RF LIFT OFF PNL/WDO FRT MT	93-96	Y07 (C2L, CC3, CF7) ..	AR	14105190
34.	10-A18	12.810	**INSULATOR**, RF FRT	93-96	Y (C2L, CC3, CF7)	AR	10077470
35.	10-A18	12.810	**PLUG**, RF LIFT OFF PNL/WDO FRM FIN	93-94	Y07 (CF7, C2L, CC3) ..	4	10275702
	10-A18	12.810	**PLUG**, RF LIFT OFF PNL/WDO FRM FIN	95-96	Y07 (CF7, C2L)	4	10275702
36.		N.S.	**SPACER**, RF LIFT OFF PNL/WDO FRM		.....		

© 2000 GENERAL MOTORS SERVICE PARTS OPERATIONS-CHEVROLET-14Y

							1Y12-040
37.		8.977	SCREW, LG RND WA HD W/BLK NYL WA, 4.2X 1.41X13, 11-OD, DRILL PT, 6172, PEOR (FRT S/D WDO UPR W/STR RET)	93-96	.....	20	10180421
38.		8.977	SCREW, LG RND WA HD W/BLK NYL WA, 4.2X 1.41X13, 11-OD, DRILL PT, 6172, PEOR (FRT S/D WDO UPR W/STR)	93-96	.....	4	10180421
39.	10-N24	14.640	PANEL, RF INR TR	93	Y07 (CF7, C2L)	1	14081890
	10-C14	13.250	PANEL, RF TR (14.640)	93-96	Y07 (CF7, C2L)	1	14081890
40.		8.977	SCREW, LG RND WA HD W/BLK NYL WA, 4.2X 1.41X13, 11-OD, DRILL PT, 6172, PEOR (RF LIFT OFF PNL/WDO RR W/STR RET SIDE)	93-96	.....	6	10180421
41.	10-N21	10.695	RETAINER, FRT S/D WDO FRT W/STR RET (PUSH IN) (LWR) (FULL FLDG)	93-96	Y	4	8731909
	10-N21	10.695	RETAINER, FRT S/D WDO FRT W/STR RET (PUSH IN) (UPR) (PAINT TO MATCH) (FITS .18 HOLE, .7 LG, .43 OD, NYLON) (14.630)	93-96	Y	2	20540336
42.		8.977	SCREW, TORX, RND WA, M4.2X1.41X10, PS (FRT S/D WDO FRT W/STR RET)	93-96	.....	8	11509703
43.	10-A18	12.810	BOLT, RF LIFT OFF PNL/WDO FRT MT PLT (TORX HD 8X1.25X20) (8.913)	93-95	Y07 (C2L)	AR	14081021
	10-A18	12.810	BOLT, RF LIFT OFF PNL/WDO FRT MT PLT (TORX HD 8X1.25X20) (8.913)	96	Y07 (C2L, CC3, CF7) ..	AR	14081021
	10-A18	12.810	BOLT, RF LIFT OFF PNL/WDO FRT MT PLT (M8X1.25X20) (TORX HD 8X1.25X20) (8.913)	93-95	Y07	4	14081021
	10-A18	12.810	BOLT, RF LIFT OFF PNL/WDO FRT MT PLT (M8X1.25X20) (TORX HD 8X1.25X20) (8.913)	94	Y07 (C2L, CC3, CF7) ..	AR	14081021
	10-A18	12.810	BOLT, RF LIFT OFF PNL/WDO FRT MT PLT (TORX HD 8X1.25X20) (8.913)	93-95	Y07 (C2L)	AR	14081021
	10-A18	12.810	BOLT, RF LIFT OFF PNL/WDO FRT MT PLT (TORX HD 8X1.25X20) (8.913)	96	Y07 (C2L, CC3, CF7) ..	AR	14081021
	10-A18	12.810	BOLT, RF LIFT OFF PNL/WDO FRT MT PLT (M8X1.25X20) (TORX HD 8X1.25X20) (8.913)	93-95	Y07	4	14081021
	10-A18	12.810	BOLT, RF LIFT OFF PNL/WDO FRT MT PLT (M8X1.25X20) (TORX HD 8X1.25X20) (8.913)	94	Y07 (C2L, CC3, CF7) ..	AR	14081021
44.		8.977	SCREW, PAN HE TORX 8X1.5X16, 9.8 PEOR FULL THD W/NYLOC (RF LIFT OFF PNL/WDO RR LOC) (PART OF 1) (12.810)	93-96	.....	8	14084506
45.	10-A18	12.810	SEAL, RF LIFT OFF PNL/WDO (14.640)	93-95	Y07 (CC3)	1	14065047
	10-A18	12.810	SEAL, RF LIFT OFF PNL/WDO (FRT OF PANEL) (POS #1)	93-96	Y07 (C2L, CC3, CF7) ..	LH	10217111

© 2000 GENERAL MOTORS SERVICE PARTS OPERATIONS-CHEVROLET-14Y

						1Y12-040
	DISCON	SEAL, RF LIFT OFF PNL/WDO (FRT OF PANEL) (POS #1)	93-96	Y07 (C2L, CC3, CF7) ..	RH	10217112
10-A18	12.810	SEAL, RF LIFT OFF PNL/WDO (FRT OF PANEL, TRIM AS REQ) (POS #1)	93-94	Y67 (CC2)	LH	10217111
	DISCON	SEAL, RF LIFT OFF PNL/WDO (FRT OF PANEL, TRIM AS REQ) (POS #1)	93-94	Y67 (CC2)	RH	10217112
10-A18	12.810	SEAL, RF LIFT OFF PNL/WDO (RR OF PANEL) (POS #2)	93-96	Y07 (C2L, CC3, CF7) ..	LH	10218029

RPO DEFINITIONS
CC2 – ROOF,AUXILIARY
CC3 – ROOF,SUN,REMOVEABLE PANELS(TRANSPARENT PLASTIC)
CF7 – ROOF,SUN,REMOVABLE,NON-TRANSPARENT
C2L – ROOF PACKAGE,DUAL REMOVEABLE
VD1 – PROVISION OPTIONS,EUROPE(EXPORT)
24S – ROOF COLOR,REMOVEABLE PANEL(BLUE)
64S – REMOVABLE ROOF PANEL COLOR,BRONZE

1Y12-017
073092

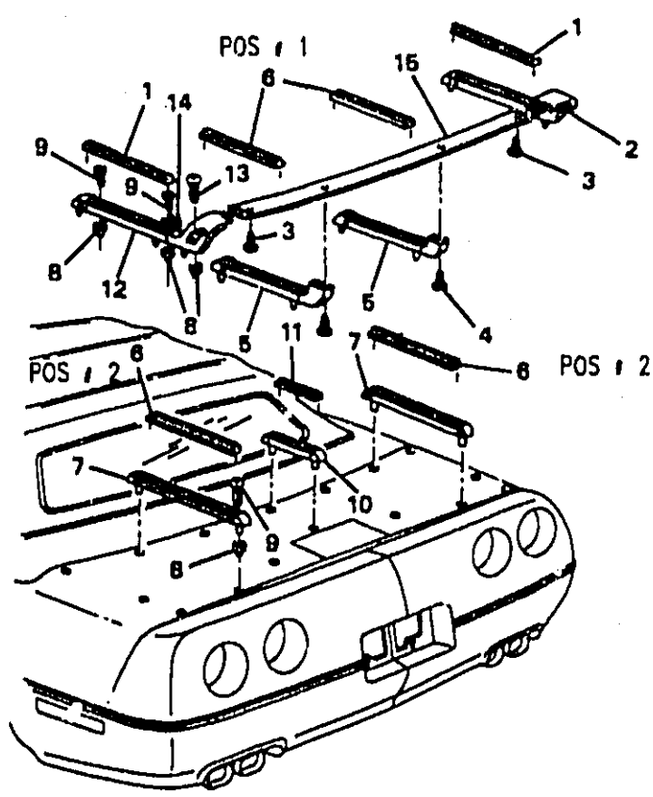

1Y12-017

1989-1993 Y67 LUGGAGE CARRIER/REAR COMPARTMENT

1.	10-A25	12.815	PAD, LUGG CARR OTR SLAT (440.5 MM LONG)	89-93	Y67 (V56)	2	10137247
	10-A25	12.815	PAD, LUGG CARR OTR SLAT (CUT TO LENGTH) (440.5 MM LONG)	89-91	Y67 (V56)	2	10137247
2.	10-A25	12.815	SLAT, LUGG CARR OTR (INCL 8, 9, 13)	89-91	Y (V56)	RH	10212724
	10-A25	12.815	SLAT, LUGG CARR OTR (INCL 8, 9, 13)	92-93	Y67 (V56)	RH	10212724
3.		8.908	SCR LGE WASHER HEAD HI-LO BHL (LUGG CARR RR RL OTR SUPT) (8.977)	89-93	.....	2	11509231
4.		DISCON	BOLT, LUGG CARR RR RL INR SUPT	89-93	Y67 (V56)	2	10137249
5.		DISCON	SLAT, LUGG CARR INR (INCL 8, 9)	89-91	Y (V56)	2	10137233
		DISCON	SLAT, LUGG CARR INR (INCL 8, 9)	92-93	Y67 (V56)	2	10137233
6.	10-A25	12.815	PAD, LUGG CARR INR SLAT (CTR (CUT TO LENGTH) (440.5 MM LONG)	89-91	Y67 (V56)	2	10137247
	10-A25	12.815	PAD, LUGG CARR INR SLAT (POS #1) (440.5 MM LONG)	89-93	Y67 (V56)	2	10137247
	10-A25	12.815	PAD, LUGG CARR INR SLAT (POS #2) (440.5 MM LONG)	89-93	Y67 (V56)	2	10137247
7.	10-A25	12.815	SLAT, LUGG CARR INR (INCL 8, 9)	89-93	Y	2	10137237
8.	10-A25	12.815	NUT, LUGG CARR OTR SLAT (PART OF 2, 5, 7, 10, 12) (PAINT TO MATCH)	89-93	Y	6	10137292

© 2000 GENERAL MOTORS SERVICE PARTS OPERATIONS-CHEVROLET-14Y

								1Y12-017
	10-A25	12.815	NUT, LUGG CARR CTR SLAT (PART OF 2, 5, 7, 10, 12) (PAINT TO MATCH)	89-92	Y	3	10137292
	10-A25	12.815	NUT, LUGG CARR CTR SLAT (PART OF 2, 5, 7, 10, 12) (PAINT TO MATCH)	93	Y67 (V56)	2	10137292
	10-A25	12.815	NUT, LUGG CARR INR SLAT (PART OF 2, 5, 7, 10, 12) (PAINT TO MATCH)	89-93	Y	8	10137292
9.		N.S.	BOLT, LUGG CARR SLAT (PART OF 2, 5, 7, 10, 12)				
10.		DISCON	SLAT, LUGG CARR CTR (INCL 8, 9)	89-93	Y67 (V56)	1	10137240
11.	10-A25	12.815	PAD, LUGG CARR CTR SLAT (440.5 MM LONG)	89-93	Y67 (V56)	1	10137247
12.		DISCON	SLAT, LUGG CARR OTR (INCL 8, 9, 13)	89-91	Y (V56)	LH	10212723
		DISCON	SLAT, LUGG CARR OTR (INCL 8, 9, 13)	92-93	Y67 (V56)	LH	10212723
13.		8.913	SCREW, MACH PAN HD, M5X.8X30, C/SUNK HD TORX, BO (LUGG CARR RR RL OTR SUPT) (PART OF 2, 12)	89-93		AR	11515973
14.	10-A25	12.815	SPACER, LUGG CARR SLAT (BRIGHT)	89-91			25527004
15.		DISCON	RAIL, LUGG CARR RR (CPS) (12.815)	89-91	Y67 (V56)	2	10137243
		DISCON	RAIL, LUGG CARR RR (CPS)	92-93	Y67 (V56)	1	10137243
	10-A25	12.815	NUT, LUGG CARR RR RL (5MMX0.8THD)	92-93	Y67 (V56)	2	10028126
	10-A25	12.815	NUT, LUGG CARR RR RL (CTR SUPT) (5MMX0.8THD)	89-91	Y (V56)	1	10028126

RPO DEFINITIONS
V56 – CARRIER,REAR COMPARTMENT LID LUGGAGE(PAINTED)

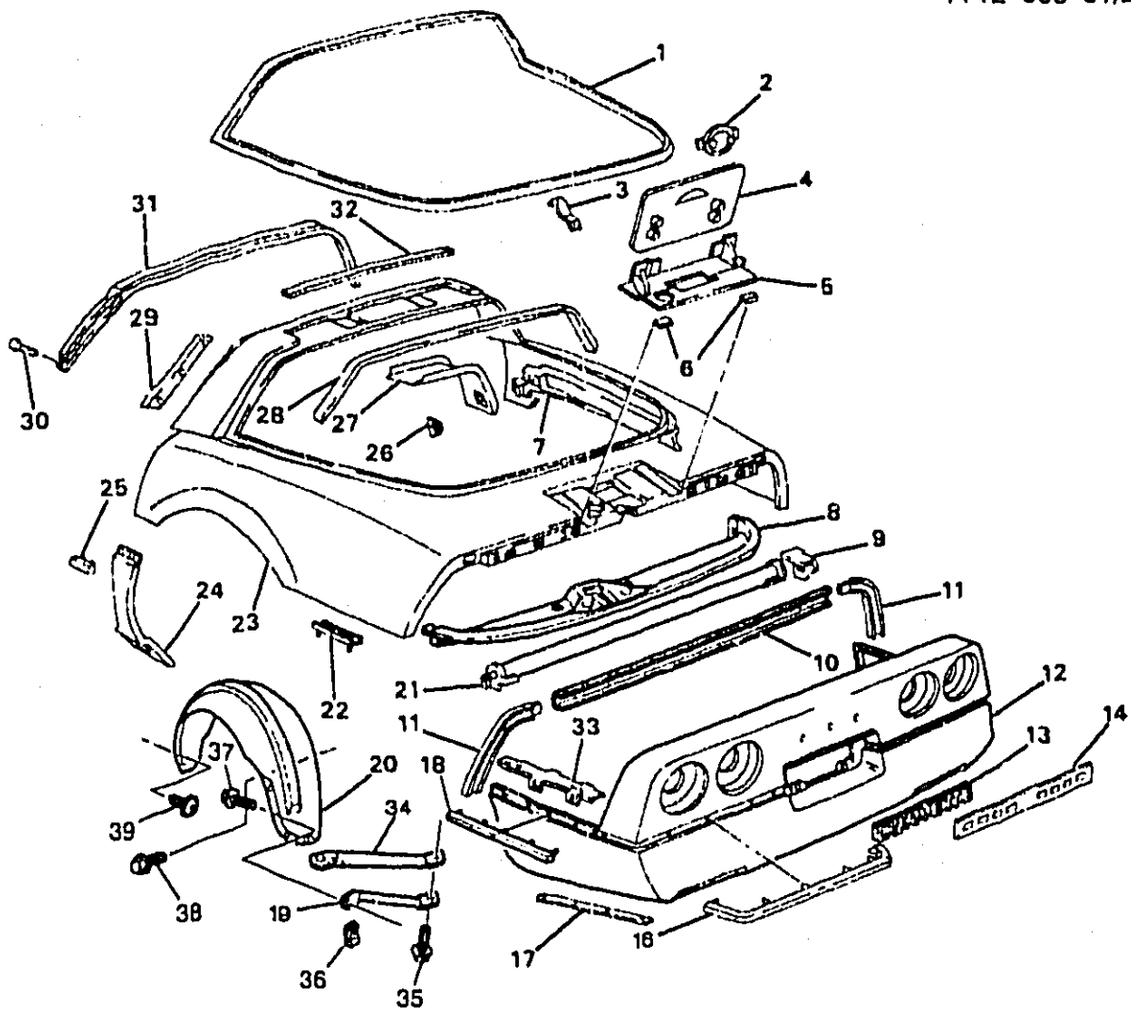

1Y12-006

1984-1989 Y07 BODY/REAR OUTER
1990 Y07 BODY/REAR (EXC ZR1)

1.	10-A16	12.269	WEATHERSTRIP, R/CMPT L/WDO	9768068
2.	10-B3	12.945	EMBLEM, F/TNK FIL DR (1984-87) (1988 EXC B57) (1989-90)	14060260
3.	10-B5	12.971	BRACKET, RR HATCH WDO RR TR PNL (1985-90)	10272073
4.	10-B3	12.945	DOOR, F/TNK FIL	14047485
5.	10-B3	12.945	BEZEL, F/TNK FIL DR (W/UNLEADED FUEL LABEL) (CPS)	10279992
	10-B3	12.945	HINGE KIT, F/TNK FIL DR RPR (KIT CONTAINS PIN, RETAINER, LINK, SPRING)	10146466
	10-B3	12.945	BUMPER, F/TNK FIL DR	12521930
6.	10-B3	12.945	SEAL, F/TNK FIL DR BZL NUT (CUT AS REQUIRED)	14064578
7.	10-N27	15.222	PANEL, R/CMPT SI TR (RH)	10193738
	10-N27	15.222	PANEL, R/CMPT SI TR (LH)	10193737
8.	10-N23	11.120	PANEL, RR HATCH WDO RR TR (W/SEAL)	10282934
9.	10-N27	15.024	SUPPORT, LUGG SHADE-RH (RH)	14049030
	10-N27	15.024	SUPPORT, LUGG SHADE-LH	14049029
10.	10-N5	7.831	RETAINER, R/END FASCIA UPR CTR	14046629
11.	10-N5	7.831	RETAINER, R/END FASCIA UPR OTR-RH	10272908
	10-N5	7.831	RETAINER, R/END FASCIA UPR OTR-LH	10272907
12.	10-N5	7.831	FASCIA, BPR (DEALER IS TO CUT HOLE FOR HIGH MOUNTED STOP LAMP)	14030202

© 2000 GENERAL MOTORS SERVICE PARTS OPERATIONS-CHEVROLET-14Y

				1Y12-006
13.	10-N7	7.832	PLATE, BPR FASCIA NA (CORVETTE) (1984-87) (1988 EXC B57) (SEE PARTS SECTION FOR ADDITIONAL COLORS & TRIM COMBINATIONS) (40U)	14064530
		DISCON	PLATE, BPR FASCIA NA (CORVETTE) (1988 B57) (SEE PARTS SECTION FOR ADDITIONAL COLORS & TRIM COLORS) (40U)	10123020
		DISCON	PLATE, BPR FASCIA NA (CORVETTE) (1989-90) (SEE PARTS SECTION FOR ADDITIONAL COLORS & TRIM COMBINATION) (10U)	10137293
14.	10-N5	7.831	REINFORCEMENT, R/END FASCIA LWR CTR (1989-90)	10132965
16.	10-N7	7.832	MOLDING, BPR FASCIA-RH (CTR) (1984-87) (1988 EXC B57) (1989-90)	14043140
		DISCON	MOLDING, BPR FASCIA-RH (CTR) (1988 B57)	10123014
	10-N7	7.832	MOLDING, BPR FASCIA-LH (CTR) (1984-87) (1988 EXC B57) (1989-90)	14043139
		DISCON	MOLDING, BPR FASCIA-LH (CTR) (1988 B57)	10123013
17.	10-N5	7.831	REINFORCEMENT, BPR FASCIA-RH (LWR)	14069614
	10-N5	7.831	REINFORCEMENT, BPR FASCIA-LH (LWR)	14069615
18.	10-N7	7.832	MOLDING, BPR FASCIA-RH (OTR) (1984-87) (1988 EXC B57) (1989-90)	14043134
		DISCON	MOLDING, BPR FASCIA-RH (OTR) (1988 B57)	10123012
	10-N7	7.832	MOLDING, BPR FASCIA-LH (OTR) (1984-87) (1988 EXC B57) (1989-90)	14043133
		DISCON	MOLDING, BPR FASCIA-LH (OTR) (1988 B57)	10123011
19.		DISCON	BRACE, W/H PNL-RH (1984-86) (1ST DESIGN 1986 - HAS TUBULAR SECTION 221MM LONG)	14064520
	10-B2	12.944	BRACE, RR W/H PNL LNR RR ((3RD DESIGN 1986 - HAS TUBULAR SECTION 267MM LONG)) (RH) (1986-90)	10051888
		DISCON	BRACE, W/H PNL-LH (1984-86) (1ST DESIGN 1986 - HAS TUBULAR SECTION 221MM LONG)	14064519
	10-B2	12.944	BRACE, RR W/H PNL LNR RR ((3RD DESIGN 1986 - HAS TUBULAR SECTION 267MM LONG)) (LH) (1986-90)	10051887
20.	10-B2	12.944	LINER, W/H PNL-RH (CUT AS REQUIRED)	10135988
	10-B2	12.944	LINER, W/H PNL-LH (CUT AS REQUIRED)	10135987
21.	10-N27	15.024	SHADE, LUGG (CPS)	10251020
	10-N27	15.024	HANDLE, LUGG SHADE	14063620
	10-N27	15.024	BUMPER, LUGG SHADE HDL	365641
		8.977	SCREW, FL TRIM HD C/R TAP 18-18X3.8 CR (AR)	9415944
22.	10-N5	7.831	RETAINER, R/END FASCIA SI CTR	14100248
23.	10-A27	12.940	PANEL, BODY UPR RR	14104977
	10-A27	12.940	PANEL, UPR LWR-RH (HOLES FOR BUMPER FASCIA ATTACHMENT MUST BE LOCATED AND DRILLED BY DEALER)	12522020
	10-A27	12.940	PANEL, UPR LWR-LH (HOLES FOR BUMPER FASCIA ATTACHMENT MUST BE LOCATED AND DRILLED BY DEALER)	12522021
24.	10-B10	12.986	EXTENSION, BODY UPR RR PNL LWR FRT-RH	10255086
	10-B10	12.986	EXTENSION, BODY UPR RR PNL LWR FT-LH	10255085
25.	10-A9	12.116	MOLDING, QTR-RH (1984-87) (1988 EXC B57) (1989-90)	14043100
		DISCON	MOLDING, QTR-RH (1988 B57)	10123010
	10-A9	12.116	MOLDING, QTR-LH (1984-87) (1988 EXC B57) (1989-90)	14043099
		DISCON	MOLDING, QTR-LH (1988 B57)	10123009
		8.915	NUT, CONICAL SPR WA, M5X.8, 15OD, 9 ZF (AR)	11516066
26.	10-N27	15.024	HOOK, LUGG SHADE CVR (RH)	14049016
	10-N27	15.024	HOOK, LUGG SHADE CVR (LH)	14049015
27.	10-N23	11.120	PANEL, HATCH WDO FRT TR-RH (1984-89)	12508348
	10-N23	11.120	PANEL, RR HATCH WDO FRT TR (RH) (1990) SEE PARTS SECTION FOR ADDITIONAL COLORS & TRIM COMBINATIONS) (19I)	12509348
	10-N23	11.120	PANEL, HATCH WDO FRT TR-LH (1984-89)	12508061
	10-N23	11.120	PANEL, HATCH WDO FRT TR-LH (1990) (SEE PARTS SECTION FOR ADDITIONAL COLORS & TRIM COMBINATIONS) (19I)	12508061
28.	10-N22	11.089	WINDLACE, R/CMPT L/WDO FRT TR PNL	10104026

© 2000 GENERAL MOTORS SERVICE PARTS OPERATIONS-CHEVROLET-14Y

				1Y12-006
29.	10-A18	12.810	RETAINER, RF LIFT OFF PNL/WDO RR W/STR TO W/STR MLDG-RH (RH)	14049248
	10-A18	12.810	RETAINER, RF LIFT OFF PNL/WDO RR W/SR TO W/STR MLDG-LH	14049247
30.	10-N21	10.695	RETAINER, RF LIFT OFF PNL/WDO RR W/STR (PUSH IN)	9731909
31.	10-A18	12.810	WEATHERSTRIP, RF LIFT OFF PNL/WDO	10283997
32.	10-A18	12.810	RETAINER, RF LIFT OFF PNL/WDO RR W/STR TOP SI	14049242
33.	10-N5	7.831	RETAINER, RR BPR FASCIA (LWR) (1984-89)	14046704
	10-N5	7.831	RETAINER, RR BPR FASCIA-RH (1990)	10149276
	10-N5	7.831	RETAINER, RR BPR FASCIA-LH (1990)	10149275
34.		DISCON	SUPPORT, RR BPR FASIA-RH (EXC ZR1) (1986-90)	14100242
	10-N11	7.833	SUPPORT, RR BPR FASIA-LH (EXC ZR1) (1986-90)	14100241
35.		8.900	SCREW, (BOLT, RR BPR FASCIA SUPT) (2)	11505209
36.		8.921	NUT, TYPE P-WU SPR M6.3X1.81 PHOS ORG (NUT, RR W/H PNL (POSN #5)) (2)	11504035
37.		8.977	SCREW, PAN HD TORX W/FL WA TAP M6.3X 1.81X20 SS BLK 17 OD (BOLT, RR W/H PNL (POSN #3)) (2)	11508762
38.		8.900	BOLT, HEX W/WA (M6X1X20) (BOLT, RR W/H PNL (POSN #1)) (AR)	10077321
39.		8.977	SCREW, PAN HD TORX W/WA, M4.2X1.41X16, SST (BOLT, RR W/H PNL (POSN #2)) (AR)	11508100

RPO DEFINITIONS
ZR1 – PACKAGE,SPECIAL PERFORMANCE COUPE(1YY07 + ZR1 == 1YZ07)
10U – EXTERIOR COLOR,ARTIC WHITE
19I – INTERIOR TRIM,BLACK
40U – EXTERIOR COLOR,PRIMARY,WHITE

© 2000 GENERAL MOTORS SERVICE PARTS OPERATIONS-CHEVROLET-14Y

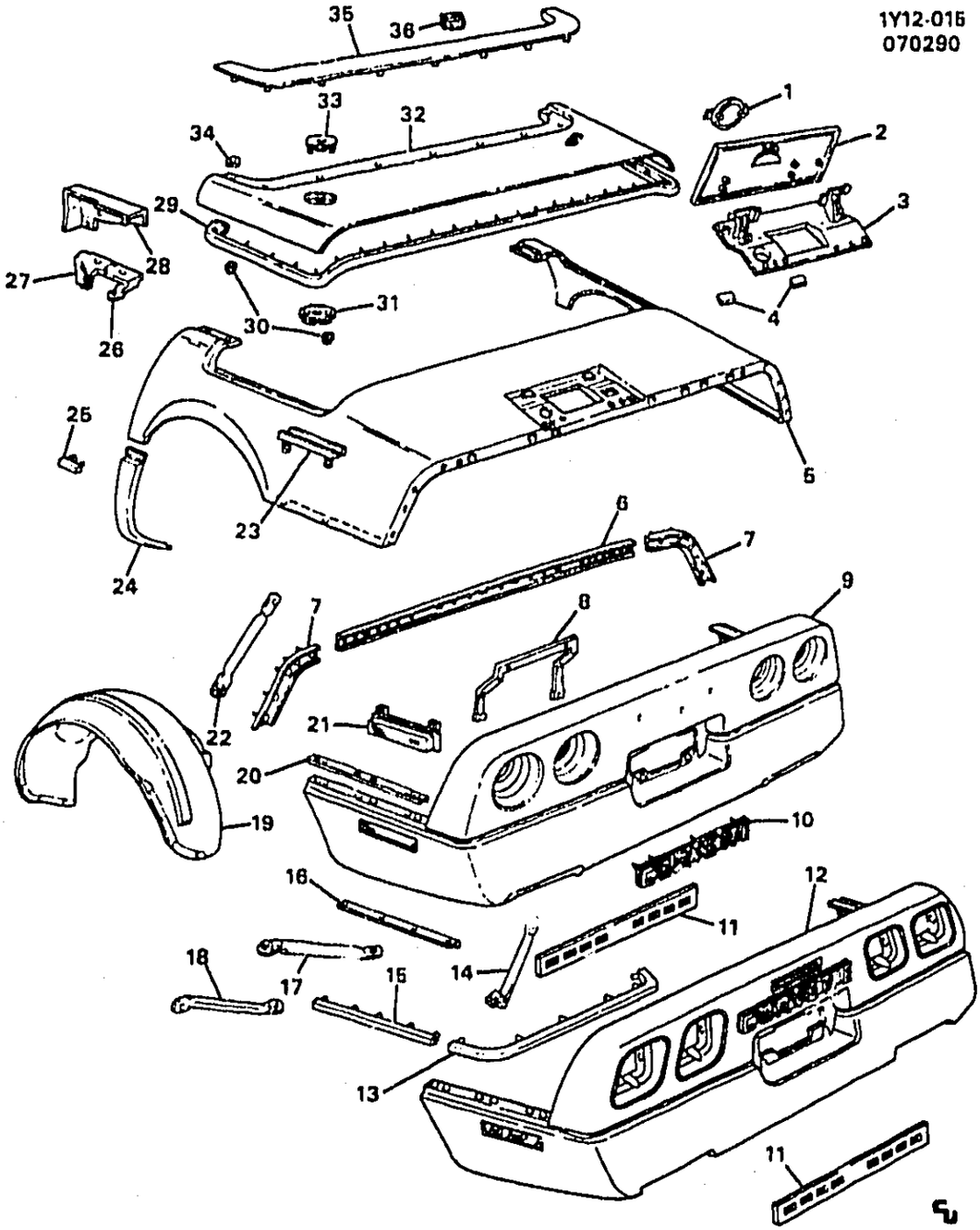

1Y12–015

1986–1991 Y67 BODY/REAR OUTER

1.	10–B3	12.945	EMBLEM, F/TNK FIL DR (1986–87) (1988 EXC B57) (1989–90)	14060260
		DISCON	EMBLEM, F/TNK FIL DR (1988 Z01)	10123019
	10–B3	12.945	EMBLEM, F/TNK FIL DR (1991)	10209061
2.	10–B3	12.945	DOOR, F/TNK FIL	10107910
3.	10–B3	12.945	BEZEL, F/TNK FIL DR (W/UNLEADED FUEL LABEL) (CPS)	10125967
	10–B3	12.945	HINGE KIT, F/TNK FIL DR RPR (KIT CONTAINS PIN, RETAINER, LINK, SPRING)	10146466
4.	10–B3	12.945	SEAL, F/TNK FIL DR BZL NUT (9.665 (CUT AS REQUIRED))	14064578
5.	10–A27	12.940	PANEL, BODY UPR RR	14092651

© 2000 GENERAL MOTORS SERVICE PARTS OPERATIONS–CHEVROLET–14Y

				1Y12-015
6.	10-N5	7.831	RETAINER, R/END FASCIA UPR CTR	14046629
7.	10-N5	7.831	RETAINER, R/END FASCIA UPR OTR (RH)	10272908
	10-N5	7.831	RETAINER, R/END FASCIA UPR OTR (LH)	10272907
8.	10-N5	7.831	REINFORCEMENT, BPR FASCIA (UPR) (1986-90)	14069614
9.	10-N5	7.831	FASCIA, BPR (1986-90) (DEALER TO CUT HOLE FOR HIGH MOUNTED STOP LAMP)	14030202
10.	10-N7	7.832	PLATE, FASCIA NA (CORVETTE) (1986-90) (SEE PARTS SECTION FOR ADDITIONAL COLORS & TRIM COMBINATIONS) (81U)	14089662
11.	10-N5	7.831	REINFORCEMENT, R/END FASCIA LWR CTR (1989-91)	10132965
12.	10-N5	7.831	FASCIA, R/END (1991)	10135972
13.	10-N7	7.832	MOLDING, BPR FASCIA-RH (CTR) (1986-87) (1988 EXC B57) (1989-90)	14043140
		DISCON	MOLDING, BPR FASCIA-RH (CTR) (1988 Z01)	10123014
	10-N7	7.832	MOLDING, BPR FASCIA-LH (CTR) (1986-87) (1988 EXC B57) (1989-90)	14043139
		DISCON	MOLDING, BPR FASCIA-LH (CTR) (1988 Z01)	10123013
14.	10-B2	12.944	BRACE, BODY UPR RR PNL FRT (RH)	10125922
	10-B2	12.944	BRACE, BODY UPR RR PNL FRT (LH)	10125921
15.	10-N7	7.832	MOLDING, BPR FASCIA-RH (OTR) (1986-87) (1988 EXC B57) (1989-90)	14043134
		DISCON	MOLDING, BPR FASCIA-RH (OTR) (1988 Z01)	10123012
	10-N7	7.832	MOLDING, BPR FASCIA-LH (OTR) (1986-87) (1988 EXC B57) (1989-90)	14043133
		DISCON	MOLDING, BPR FASCIA-LH (OTR) (1988 Z01)	10123011
16.	10-N5	7.831	REINFORCEMENT, BPR FASCIA-RH (LWR) (1986-90)	14069616
	10-N5	7.831	REINFORCEMENT, BPR FASCIA-LH (LWR) (1986-90)	14069615
	10-N5	7.831	REINFORCEMENT, R/END FASCIA SI LWR (1991)	14104202
17.		DISCON	SUPPORT, UPR PNL -RH (1986-91) (2ND DESIGN 1986 - HAS WELDED SPACER ON ONE END)	14100242
	10-N11	7.836	SUPPORT, UPR PNL-LH (1986-91) (2ND DESIGN 1986 - HAS WELDED SPACER ON ONE END)	14100241
18.		DISCON	BRACE, W/H PNL-RH (1986) (1ST DESIGN 1986 - HAS TUBULAR SECTION 221MM LONG)	14064520
	10-B2	12.944	BRACE, RR W/H PNL LNR RR ((3RD DESIGN 1986 - HAS TUBULAR SECTION 267MM LONG)) (RH) (1986-91)	10051888
		DISCON	BRACE, W/H PNL-LH (1986) (1ST DESIGN 1986 - HAS TUBULAR SECTION 221MM LONG)	14064519
	10-B2	12.944	BRACE, RR W/H PNL LNR RR ((3RD DESIGN 1986 - HAS TUBULAR SECTION 267MM LONG)) (LH) (1986-91)	10051887
19.	10-B2	12.944	LINER, W/H PNL-RH (1986-90) (CUT AS REQUIRED FOR 1990 AND PRIOR)	10135988
	10-B2	12.944	PANEL, RR W/H (RH) (1991)	10135988
	10-B2	12.944	LINER, W/H PNL-LH (1986-90) (CUT AS REQUIRED FOR 1990 AND PRIOR)	10135987
	10-B2	12.944	PANEL, RR W/H (LH) (1991)	10135987
20.	10-N5	7.831	RETAINER, BPR FASCIA LWR (1986-89)	14046704
	10-N5	7.831	RETAINER, R/END FASCIA SI CTR (1990) (RH)	10149276
	10-N5	7.831	RETAINER, R/END FASCIA SI CTR (RH) (1991)	10149214
	10-N5	7.831	RETAINER, R/END FASCIA SI CTR (1990) (LH)	10149275
	10-N5	7.831	RETAINER, R/END FASCIA SI CTR (LH) (1991)	10149213
21.	10-M25	2.575	LAMP, SI MKR-RH (1986-87)	917902
	10-M25	2.575	LAMP, SI MKR & SI B/U-RH (1988-90)	16508518
	10-M25	2.575	LAMP, RR SI MKR & SI B/U (RH) (1991)	16514358
	10-M25	2.575	LAMP, SI MKR-LH (1986-87)	917901
	10-M25	2.575	LAMP, SI MKR & SI B/U-LH (1988-90)	16508517
	10-M25	2.575	LAMP, RR SI MKR & SI B/U (LH) (1991)	16514357
22.		DISCON	BRACE, UPR PNL RR-RH (1986-88)	10051844
		DISCON	BRACE, UPR PNL RR-LH (1986-88)	10051843

© 2000 GENERAL MOTORS SERVICE PARTS OPERATIONS-CHEVROLET-14Y

				1Y12-015
23.	10-N5	7.831	RETAINER, R/END FASCIA SI CTR	14100248
24.	10-B10	12.986	EXTENSION, BODY UPR RR PNL LWR FRT (RH)	10255086
	10-B10	12.986	EXTENSION, BODY UPR RR PNL LWR FRT (LH)	10255085
25.	10-A9	12.116	MOLDING, QTR-RH (1986-87) (1988 EXC B57) (1989-90)	14043100
		DISCON	MOLDING, QTR-RH (1988 B57)	10123010
	10-A9	12.116	MOLDING KIT, R/Q CTR FRT ((PAINT TO MATCH)) (RH) (1991)	10174902
	10-A9	12.116	MOLDING, QTR-LH (1986-87) (1988 EXC B57) (1989-90)	14043099
		DISCON	MOLDING, QTR-LH (1988 B57)	10123009
	10-A9	12.116	MOLDING KIT, R/Q CTR FRT ((PAINT TO MATCH)) (LH) (1991)	10174901
		8.915	NUT, CONICAL SPR WA, M5X.8, 15OD, 9 ZF (AR)	11516066
26.	10-A28	12.942	SEAL, FRT S/D L/PLR UPR (RR) (RH)	14100366
	10-A28	12.942	SEAL, FRT S/D L/PLR UPR (RR) (LH)	14100365
27.	10-A28	12.942	SEAL, FRT S/D L/PLR UPR (FRT) (RH)	14092684
	10-A28	12.942	SEAL, FRT S/D L/PLR UPR (FRT) (LH)	14092683
28.	10-N24	14.731	PANEL, DR L/PLR UPR TR-RH (1986-89) (DUE TO APPEARANCE DIFFERENCE, IT IS ADVISED THAT THE CUSTOMER REPLACE BOTH SIDES)	14100368
	10-N24	14.731	PANEL, BODY L/PLR UPR TR ((SEE PARTS SECTION FOR ADDITIONAL COLORS & TRIM COMBINATIONS)) (RH) (1990-91) (19I)	10103850
	10-N24	14.731	PANEL, DR L/PLR UPR TR-LH (1986-89) (DUE TO APPEARANCE DIFFERENCE, IT IS ADVISED THAT THE CUSTOMER REPLACE BOTH SIDES)	14100367
	10-N24	14.731	PANEL, BODY L/PLR UPR TR ((SEE PARTS SECTION FOR ADDITIONAL COLORS & TRIM COMBINATIONS)) (LH) (1990-91) (19I)	10103851
29.	10-A10	12.170	WEATHERSTRIP, F/TOP STOW COMPT LID	14092675
30.		8.917	NUT, HEX W/CON WA M6X1X5.5 (9) 7111M 16-OD (AR)	11516793
31.		DISCON	LATCH, F/TOP STOW COMPT LID PRIM-RH (1986-88)	14092662
		DISCON	LATCH, F/TOP STOW COMPT LID PRIM-LH (1986-88)	14092661
	10-N24	14.340	LATCH, F/TOP RR (1989-90)	10198616
	10-N24	14.340	LATCH, F/TOP RR (1991)	10195316
32.		DISCON	LID, F/TOP STOW COMPT (1986-88)	14092653
	10-A10	12.170	LID, F/TOP STOW COMPT (1989-91)	10276994
33.	10-N24	14.340	BEZEL, F/TOP RR LAT (1986-88) (DEALER TO GRIND OFF 3MM OF INTER TANGS THAT ARE AROUND THE PIN HOLE)	10132716
	10-N24	14.340	BEZEL, F/TOP RR LAT (1989-91)	10107833
34.		DISCON	SPACER, F/TOP STOW COMPT LID (1986-88)	10051897
		N.S.	SPACER, F/TOP STOW COMPT LID T/PNL (1989-91)	
35.		DISCON	PANEL, F/TOP STOW COMPT LID TR (1986-88)	14092671
	10-A10	12.170	PANEL, F/TOP STOW COMPT LID TR ((SEE PARTS SECTION FOR ADDITIONAL COLORS & TRIM COMBINATIONS)) (1989-91) (19I)	10281070
36.		DISCON	GRILLE, I/S AIR TEMP SEN (1986-89)	14083706

RPO DEFINITIONS
19I – INTERIOR TRIM,BLACK
81U – EXTERIOR COLOR,PRIMARY,BRIGHT RED

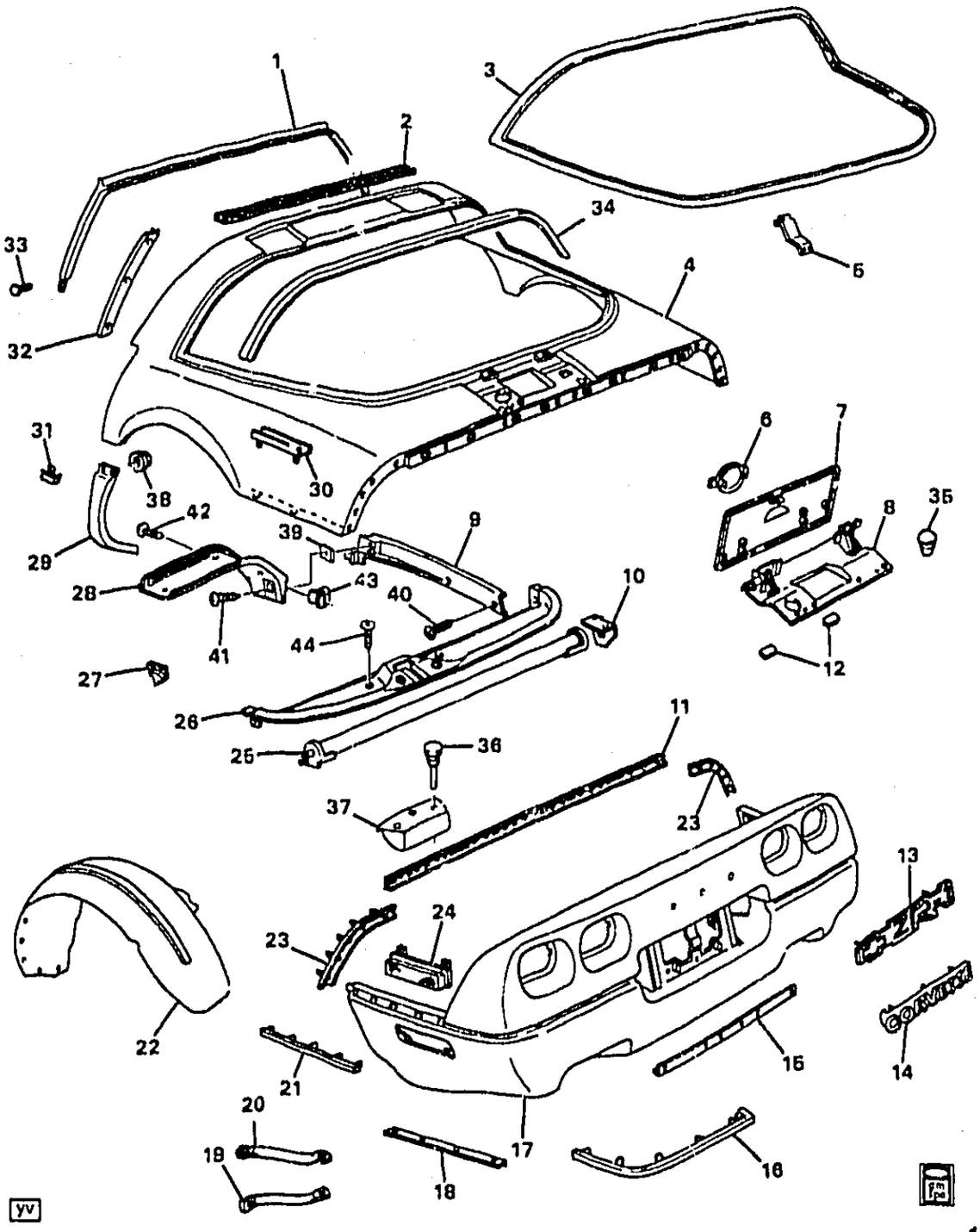

1990-1991 Y07 BODY/REAR OUTER(ZR1)

1.	10-A16	12.810	WEATHERSTRIP, RF LIFT OFF PNL/WDO RR	90-91	Y07	1	10283997
2.	10-A18	12.810	RETAINER, RF LIFT OFF PNL/WDO RR W/STR (TOP SI) ...	90-91	Y07	1	14049242
3.	10-A16	12.269	WEATHERSTRIP, R/CMPT L/WDO	90-91	Y07	1	9768068
4.	10-A27	12.940	PANEL, BODY UPR RR	90-91	Y07 (ZR1)	1	14104978
5.	10-B5	12.971	BRACKET, R/CMPT L/WDO RR TR PNL	90-91	Y07	2	10272073

© 2000 GENERAL MOTORS SERVICE PARTS OPERATIONS-CHEVROLET-14Y

							1Y12-014
6.	10-B3	12.945	EMBLEM, F/TNK FIL DR	90	Y (FE1, FE7)	1	14060260
	10-B3	12.945	EMBLEM, F/TNK FIL DR (BLACK)	91	Y	1	10209061
7.	10-B3	12.945	DOOR, F/TNK FIL	90-91	Y07	1	14047455
8.	10-B3	12.945	BEZEL, F/TNK FIL DR (W/UNLEADED FUEL LABEL) (CPS) (INCL 35)	90-91	Y07	1	10279992
	10-B3	12.945	BUMPER, F/TNK FIL DR (FRT)	90-91	Y07	2	12521930
	10-B3	12.945	HINGE KIT, F/TNK FIL DR	90-91	Y	1	10146466
9.	10-N27	15.222	PANEL, R/CMPT SI TR (11.120) (IF REPLACING THIS PART, MUST ALSO REPLACE RH SI PNL W/10193738 & RR PNL W/10193707)	90-91	Y07	LH	10193737
	10-N27	15.222	PANEL, R/CMPT SI TR (11.120) (IF REPLACING THIS PART, MUST ALSO REPLACE LH SI PNL W/10193737 & RR PNL W/10193707)	90-91	Y07	RH	10193738
10.	10-N27	15.024	SUPPORT, LUGG SHADE (12.981)	90-91	Y07	RH	14049030
	10-N27	15.024	SUPPORT, LUGG SHADE (12.981)	90-91	Y07	LH	14049029
11.	10-N5	7.831	RETAINER, R/END FASCIA UPR CTR	90-91	Y (ZR1)	1	14104190
12.	10-B3	12.945	SEAL, F/TNK FIL DR BZL NUT (9.665)	90-91	Y	AR	14064578
13.	10-N7	7.832	EMBLEM, R/END FASCIA (WHITE) (BOWTIE, ZR1)	90-91	Y (ZR1, 10U)	2	10146443
		DISCON	EMBLEM, R/END FASCIA (BOWTIE, ZR1) (COLOR CODE WA9238) (LIGHT RED)	90-91	Y (ZR1, 75U)	1	10146446
	10-N7	7.832	EMBLEM, R/END FASCIA (RED) (BOWTIE, ZR1)	90-91	Y (ZR1, 81U)	2	10146447
	10-N7	7.832	EMBLEM, R/END FASCIA (BLACK/GRAY) (BOWTIE, Z21)	90-91	Y (ZR1, 41U, 96U)	1	10146448
		DISCON	EMBLEM, R/END FASCIA (BLUE) (BOWTIE, ZR1)	90-91	Y (ZR1, 80U)	1	10153679
		DISCON	EMBLEM, R/END FASCIA (TURQUOISE) (BOWTIE, ZR1)	90-91	Y (ZR1, 42U)	1	10153700
		DISCON	EMBLEM, R/END FASCIA (BLUE STEEL) (BOWTIE, ZR1)	90-91	Y (ZR1, 25U)	1	10172309
	10-N7	7.832	EMBLEM, R/END FASCIA (BLACK/GRAY) (BOWTIE, Z21)	91	Y (ZR1, 19U)	1	10146448
	10-N7	7.832	EMBLEM, R/END FASCIA (YELLOW) (BOWTIE, ZR1)	91	Y (ZR1, 35U)	1	10167090
	10-N7	7.832	EMBLEM, R/END FASCIA (ZR1, YELLOW)	90	Y (ZR1, 53U)	1	10153678
14.	10-N7	7.832	PLATE, R/END FASCIA NA (BLUE, PAINT TO MATCH) (CORVETTE)	91	Y (ZR1, 25U)	1	10172313
		DISCON	PLATE, R/END FASCIA NA (SMOKE GRAY) (CORVETTE)	91	Y (ZR1, 41U, 91U, 96U)	1	10172314
		DISCON	PLATE, R/END FASCIA NA (TURQUOISE) (CORVETTE)	91	Y (ZR1, 42U)	1	10172315
	10-N7	7.832	PLATE, R/END FASCIA NA (RED) (CORVETTE)	91	Y (ZR1, 75U)	1	10172317
		DISCON	PLATE, R/END FASCIA NA (QUASAR) (CORVETTE)	91	Y (ZR1, 80U)	1	10172318

© 2000 GENERAL MOTORS SERVICE PARTS OPERATIONS-CHEVROLET-14Y

								1Y12-014
		DISCON	PLATE, R/END FASCIA NA (RED) (CORVETTE)	91	Y (ZR1, 81U)	1	10172319
		DISCON	PLATE, R/END FASCIA NA (BOWTIE) (BLUE)	90	Y (ZR1, 20U)	1	10146444
	10-N7	7.832	PLATE, R/END FASCIA NA (CORVETTE)	90	Y (81U)	1	14089662
	10-N7	7.832	PLATE, R/END FASCIA NA (CORVETTE)	90	Y (68U)	1	10125923
		DISCON	PLATE, R/END FASCIA NA (CORVETTE)	90	Y (10U)	1	10137293
	10-N7	7.832	PLATE, R/END FASCIA NA (CORVETTE) (YELLOW)	91	Y (ZR1, 35U, 53U)	1	10167009
	10-N7	7.832	PLATE, R/END FASCIA NA (CORVETTE) (WHITE)	91	Y (ZR1, 10U)	1	10172312
	10-N7	7.832	PLATE, R/END FASCIA NA (CORVETTE) (BLACK W/SILVER BORDER)	90	Y (13U, 28U, 96U)	1	14058697
	10-N7	7.832	PLATE, R/END FASCIA NA (CORVETTE) (NASSAU BLUE) ...	90	Y (20U)	1	14105571
	10-N7	7.832	PLATE, R/END FASCIA NA (CORVETTE) (SMOKE GRAY)	90	Y (96U)	1	10072149
	10-N7	7.832	PLATE, R/END FASCIA NA (CORVETTE) (SMOKE GRAY)	90	Y (FE1, FE7, 41U)	1	10072149
	10-N7	7.832	PLATE, R/END FASCIA NA (CORVETTE, SMOKE GRAY)	90	Y (91U)	1	10072149
		DISCON	PLATE, R/END FASCIA NA (QUASAR BLUE)	90	Y (80U)	1	10153699
		DISCON	PLATE, R/END FASCIA NA (STEEL BLUE)	90	Y (25U)	1	10172308
		DISCON	PLATE, R/END FASCIA NA (TURQUOISE)	90	Y (42U)	1	10153697
		DISCON	PLATE, R/END FASCIA NA (YELLOW)	90	Y (53U)	1	10153698
	10-N7	7.832	PLATE, R/END FASCIA NA (CORVETTE) (BRIGHT RED) (SEE PARTS SECTION FOR ADDITIONAL COLORS & TRIM COMBINATIONS) (RED)	90	Y (81U)	1	14089662
15.	10-N5	7.831	REINFORCEMENT, R/END FASCIA LWR CTR	90-91	Y	1	10132965
16.	10-N7	7.832	MOLDING, RR BPR FASCIA CTR	90	Y SOFT RIDE SUSP (FE1) (EXC SPL PERF PKG ZR1)	LH	14043139
	10-N7	7.832	MOLDING, RR BPR FASCIA CTR	90	Y SOFT RIDE SUSP (FE1) (EXC SPL PERF PKG ZR1)	RH	14043140
	10-N7	7.832	MOLDING, RR BPR FASCIA CTR	90	Y H.D. SUSP (FE7), SPL PERF PKG (ZR1) ..	LH	14104449
	10-N7	7.832	MOLDING, RR BPR FASCIA CTR	90	Y H.D. SUSP (FE7), SPL PERF PKG (ZR1) ..	RH	14104450
	10-N7	7.832	MOLDING KIT, RR BPR FASCIA CTR (PAINT TO MATCH)	91	Y (ZR1)	LH	10174848
	10-N7	7.832	MOLDING KIT, RR BPR FASCIA CTR (PAINT TO MATCH)	91	Y (ZR1)	RH	10174849
17.	10-N5	7.831	FASCIA, R/END	90-91	Y (ZR1)	1	10153675
18.	10-N5	7.831	RETAINER, R/END FASCIA SI CTR	[illegible]	Y	LH	10149275
	10-N5	7.831	RETAINER, R/END FASCIA SI CTR	90	Y	RH	10149276

© 2000 GENERAL MOTORS SERVICE PARTS OPERATIONS-CHEVROLET-14Y

	10-N5	7.831	RETAINER, R/END FASCIA SI CTR	91	Y (ZR1)	LH	10149275
	10-N5	7.831	RETAINER, R/END FASCIA SI CTR	91	Y (ZR1)	RH	10149276
19.	10-B2	12.944	BRACE, RR W/H PNL LNR RR	90-91	Y (ZR1)	LH	14104631
	10-B2	12.944	BRACE, RR W/H PNL LNR RR	90-91	Y (ZR1)	RH	14104632
20.	10-B10	12.986	SUPPORT, BODY UPR RR PNL	90-91	Y (ZR1)	LH	14104593
	10-B10	12.986	SUPPORT, BODY UPR RR PNL	90-91	Y (ZR1)	RH	14104594
21.	10-N7	7.832	MOLDING, RR BPR FASCIA OTR	90	Y H .D. SUSP (FE7), SPL PERF PKG (ZR1)	LH	14104451
	10-N7	7.832	MOLDING, RR BPR FASCIA OTR	90	Y H .D. SUSP (FE7), SPL PERF PKG (ZR1)	RH	14104452
	10-A9	12.116	MOLDING, R/Q CTR RR (MUST ORDER NUT 11516066 QTY-5)	91	Y (ZR1)	LH	10135981
	10-A9	12.116	MOLDING, R/Q CTR RR (MUST ORDER NUT 11516066 QTY-5)	91	Y (ZR1)	RH	10135982
22.	10-B2	12.944	LINER, RR W/H PNL	90-91	Y (ZR1)	LH	14104591
	10-B2	12.944	LINER, RR W/H PNL	90-91	Y (ZR1)	RH	14104592
	10-B2	12.944	LINER, RR W/H PNL (CUT AS REQ)	90	Y (EXC SPL PERF PKG ZR1)	LH	10135987
	10-B2	12.944	LINER, RR W/H PNL (CUT AS REQ)	90	Y (EXC SPL PERF PKG ZR1)	RH	10135988
23.	10-N5	7.831	RETAINER, R/END FASCIA UPR OTR	90-91	Y (ZR1)	LH	14104193
	10-N5	7.831	RETAINER, R/END FASCIA UPR OTR	90-91	Y (ZR1)	RH	14104194
24.	10-M25	2.575	LAMP, RR SI MKR & SI B/U	90	Y	LH	16508517
	10-M25	2.575	LAMP, RR SI MKR & SI B/U	90	Y	RH	16508518
	10-M25	2.575	LAMP, RR SI MKR & SI B/U	91	Y	LH	16514357
	10-M25	2.575	LAMP, RR SI MKR & SI B/U	91	Y	RH	16514358
25.	10-N27	15.024	SHADE, LUGG (INCL 36, 37)	90-91	Y07	1	10251020
26.	10-N23	11.120	PANEL, R/CMPT L/WDO RR TR (TAKES BUMPER 16662198)	91	Y07	1	10282934
	10-N23	11.120	PANEL, R/CMPT L/WDO RR TR (W/SEAL) (MUST ALSO REPL LH/RH SI PNLS-P/N 10193737-38) (IF USING ON MODELS WHERE SOME HOLES ARE NOT USED, FILL HOLES W/BLACK FINISH SCREWS OF APPROPRIATE SIZE)	90	Y07	1	10282934
27.	10-N27	15.024	HOOK, LUGG SHADE CVR	90-91	Y07	RH	14049016
	10-N27	15.024	HOOK, LUGG SHADE CVR (12.981)	90-91	Y07	LH	14049015
28.	10-N23	11.120	PANEL, RR HATCH WDO FRT TR (BLACK) (DRILL ST BELT ATCH HOLE AS REQ)	90-91	Y07 (19I)	LH	12508061
	10-N23	11.120	PANEL, RR HATCH WDO FRT TR (BLACK) (DRILL ST BELT ATCH HOLE AS REQ)	90-91	Y07 (19I)	RH	12509348
		DISCON	PANEL, RR HATCH WDO FRT TR (BLUE) (LESS ST BELT ATTACHMENT HOLE, DRILL AS REQ)	90-91	Y07 (22I)	LH	12508063
		DISCON	PANEL, RR HATCH WDO FRT TR (COGNAC) (DRILL ST BELT ATCH HOLE AS REQ)	90-91	Y07 (60I)	LH	12508065

							1Y12-014
	10-N23	11.120	PANEL, RR HATCH WDO FRT TR (RED) (DRILL ST BELT ATCH HOLE AS REQ)	90-91	Y07 (73I)	LH	12508067
		DISCON	PANEL, RR HATCH WDO FRT TR (GRAY) (DRILL ST BELT ATCH HOLE AS REQ)	90-91	Y07 (90I)	LH	12508069
		DISCON	PANEL, RR HATCH WDO FRT TR (COGNAC) (DRILL ST BELT ATCH HOLE AS REQ)	90-91	Y07 (60I)	RH	12509350
		DISCON	PANEL, RR HATCH WDO FRT TR (BLUE) (DRILL ST BELT ATCH HOLE AS REQ)	91	Y07 (22I)	RH	12509349
		DISCON	PANEL, RR HATCH WDO FRT TR (RED) (LESS ST BELT ATTACHMENT HOLE, DRILL AS REQ)	91	Y07 (73I)	RH	12509351
		DISCON	PANEL, RR HATCH WDO FRT TR (GRAY) (DRILL ST BELT ATCH HOLE AS REQ)	91	Y07 (90I)	RH	12509352
		DISCON	PANEL, RR HATCH WDO FRT TR (DRILL ST BELT ATCH HOLE AS REQ'D) (DK BLUESTEEL)	90	Y07 (22I)	RH	12509349
		DISCON	PANEL, RR HATCH WDO FRT TR (FLAME RED) (LESS ST BELT ATTACHMENT HOLE-DRILL AS REQUIRED)	90	Y07 (73I)	RH	12509351
		DISCON	PANEL, RR HATCH WDO FRT TR (LESS ST BELT ATTACHMENT HOLE - DRILL AS REQUIRED) ..	90	Y07 (90I)	RH	12509352
29.	10-B10	12.986	EXTENSION, BODY UPR RR PNL LWR FRT	90-91	Y (ZR1)	LH	10255087
	10-B10	12.986	EXTENSION, BODY UPR RR PNL LWR FRT	90-91	Y (ZR1)	RH	10255088
30.	10-N5	7.831	RETAINER, R/END FASCIA SI CTR	90	Y	LH	10149275
	10-N5	7.831	RETAINER, R/END FASCIA SI CTR	90	Y	RH	10149276
	10-N5	7.831	RETAINER, R/END FASCIA SI CTR	91	Y (ZR1)	LH	10149275
	10-N5	7.831	RETAINER, R/END FASCIA SI CTR	91	Y (ZR1)	RH	10149276
31.	10-A9	12.116	MOLDING, BODY SI RR (FRT OF RR QTR PNL) (CPS)	90	Y (ZR1)	RH	14104448
	10-A9	12.116	MOLDING, BODY SI RR (FRT OF RR QTR PNL) (CPS)	90	Y (ZR1)	LH	14104447
		DISCON	CLIP, BODY SI MLDG	90	Y	2	14070266
	10-A9	12.116	MOLDING KIT, R/Q CTR FRT (PAINT TO MATCH)	91	Y (ZR1)	LH	10174881
	10-A9	12.116	MOLDING KIT, R/Q CTR FRT (PAINT TO MATCH)	91	Y (ZR1)	RH	10174882
32.	10-A18	12.810	RETAINER, RF LIFT OFF PNL/WDO RR W/STR (TO W/STR MLDG) (W/SEAL STRP)	90-91	Y07	RH	14049248
	10-A18	12.810	RETAINER, RF LIFT OFF PNL/WDO RR W/STR (TO W/STR MLDG) (W/SEAL STRP)	90-91	Y07	LH	14049247
33.		8.900	SCREW, ...	90-91	.....	AR	11505209

© 2000 GENERAL MOTORS SERVICE PARTS OPERATIONS-CHEVROLET-14Y

							1Y12-014
34.	10-N22	11.089	**WINDLACE**, R/CMPT L/WDO FRT TR PNL (W/THREE LARGE HOLES AT ENDS)	90-91	Y07	1	10104026
35.	10-B3	12.945	**BUMPER**, F/TNK FIL DR (PART OF 8) (RR)	90-91	Y	1	10280811
36.	10-N27	15.024	**BUMPER**, LUGG SHADE HDL (PART OF 25) (12.986)	90-91	Y07	3	365641
37.	10-N27	15.024	**HANDLE**, LUGG SHADE (PART OF 25)	90-91	Y07	1	14063620
38.		8.915	**NUT**, CONICAL SPR WA, M5X.8, 15OD, 9 ZF (A/CL INT SCOOP) ..	90-91	Y	2	11516066
39.		8.921	**NUT**, U-TYPE, 4.2X1.41, DIM A-15, DIM B-14 DIM C-8.65, 1050, PZOR (R/CMPT L/WDO SI TR PNL)	90-91	.....	4	12338121
40.		8.977	**SCREW**, M4.2X1.41X25 OV HD C/R ORG BLK (R/CMPT L/WDO SI TR PNL)	90-91	.....	4	11503566
41.		8.977	**SCREW**, M4.2X1.41X25 OV HD C/R ORG BLK (RR HATCH WDO FRT TR PNL) (POSN #2)	90-91	.....	10	11503566
42.		8.977	**SCREW**, M4.2X1.41X16 OV CSK TR HD C/R TAP, PEOR (RR HATCH WDO FRT TR PNL) (POSN #1) (16.650)	90-91	.....	2	11503446
43.		8.921	**NUT**, U-TYPE, 4.2X1.41, DIM A-15, DIM B-14 DIM C-8.65, 1050, PZOR (RR HATCH WDO FRT TR PNL)	90-91	.....	9	12338121
44.		8.977	**SCREW**, M4.2X1.41X25 OV HD C/R ORG BLK (R/CMPT L/WDO RR TR PNL)	90-91	.....	6	11503566

RPO DEFINITIONS

FE1 – SUSPENSION SYSTEM,SOFT RIDE
FE7 – SUSPENSION SYSTEM,FRONT AND REAR,HEAVY DUTY(USED WITH PERFORMANCE HANDLING PACKAGE Z51)
ZR1 – PACKAGE,SPECIAL PERFORMANCE COUPE(1YY07 + ZR1 == 1YZ07)
10U – EXTERIOR COLOR,ARTIC WHITE
13U – EXTERIOR COLOR,SILVER METALLIC
19I – INTERIOR TRIM,BLACK
19U – PRIMARY COLOR,EXTERIOR,BLACK
20U – EXTERIOR COLOR,PRIMARY,BLACK
22I – INTERIOR TRIM,DARK ROYAL BLUE
25U – EXTERIOR COLOR,PRIMARY,STEEL BLUE METALLIC
28U – EXTERIOR COLOR,PRIMARY,BLACK SAPPHIRE METALLIC
35U – EXTERIOR COLOR,PRIMARY,YELLOW
41U – EXTERIOR COLOR,PRIMARY,BLACK
42U – EXTERIOR COLOR,PRIMARY,TURQUOISE MET
53U – EXTERIOR COLOR,PRIMARY,COMPETITION YELLOW
60I – INTERIOR TRIM,DARK COGNAC
68U – EXTERIOR COLOR,PRIMARY,BRILLIANT RED MET
73I – INTERIOR TRIM,FLAME RED
75U – EXTERIOR COLOR,PRIMARY,BRILLIANT RED METALLIC
80U – EXTERIOR COLOR,PRIMARY,MED QUASAR BLUE MET
81U – EXTERIOR COLOR,PRIMARY,BRIGHT RED
90I – INTERIOR TRIM,SMOKE GRAY
91U – EXTERIOR COLOR,PRIMARY,DARK POLO GREEN METALLIC
91U – EXTERIOR COLOR,PRIMARY,DARK ARGENT
96U – PRIMARY COLOR– EXTERIOR,DK. SMOKE GRAY MET.

© 2000 GENERAL MOTORS SERVICE PARTS OPERATIONS-CHEVROLET-14Y

MICROFICHE INDEX

GROUPS 12.000 THRU 13.000

FICHE 10 OF 11

GROUP	DESCRIPTION	STARTING GRID LOCATION PARTS	ILLUSTRATIONS
–	GENERAL INFORMATION	1–A2	1–G2
–	ALPHABETICAL INDEX	1–B13	N.A.
12.000	BODY MOLDINGS – SHEET METAL	10–A2	10–D2
13.000	BODY WIRING – VINYL TOP TRIM	10–C2	N.A.
–	OUT OF FICHE CALLS	N.A.	10–M22

10–H1

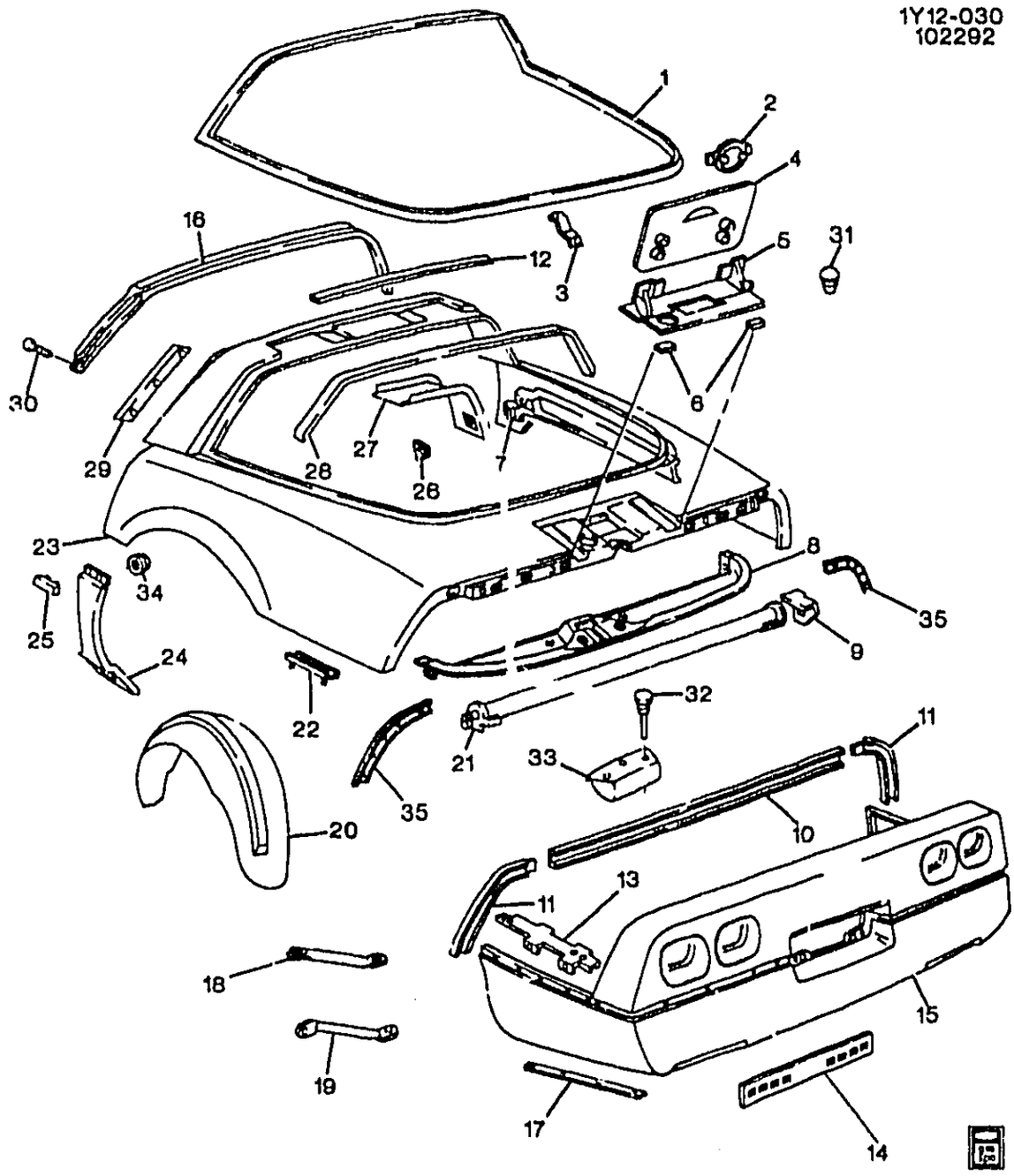

1Y12-030

1991 Y07 BODY/REAR (EXC ZR1)

1.	10-A16	12.269	WEATHERSTRIP, R/CMPT L/WDO	91	Y07	1	9768068
2.	10-B3	12.945	EMBLEM, F/TNK FIL DR (BLACK)	91	Y	1	10209061
3.	10-B5	12.971	BRACKET, R/CMPT L/W/DO RR TR PNL	91	Y07	2	10272073
4.	10-B3	12.945	DOOR, F/TNK FIL	91	Y07	1	14047485
5.	10-B3	12.945	BEZEL, F/TNK FIL DR (W/UNLEADED FUEL LABEL) (CPS) (INCL 31)	91	Y07	1	10279992
	10-B3	12.945	HINGE KIT, F/TNK FIL DR	91	Y	1	10146466
	10-B3	12.945	BUMPER, F/TNK FIL DR (FRT)	91	Y07	2	12521930

© 2000 GENERAL MOTORS SERVICE PARTS OPERATIONS-CHEVROLET-14Y

							1Y12-030
6.	10-B3	12.945	SEAL, F/TNK FIL DR BZL NUT (9.665)	91	Y	AR	14064578
7.	10-N27	15.222	PANEL, R/CMPT SI TR (11.120)	91	Y07	LH	10193737
	10-N27	15.222	PANEL, R/CMPT SI TR (11.120)	91	Y07	RH	10193738
8.	10-N23	11.120	PANEL, R/CMPT L/WDO RR TR (TAKES BUMPER 16662198)	91	Y07	1	10282934
9.	10-N27	15.024	SUPPORT, LUGG SHADE (12.981)	91	Y07	LH	14049029
	10-N27	15.024	SUPPORT, LUGG SHADE (12.981)	91	Y07	RH	14049030
10.	10-N5	7.831	RETAINER, R/END FASCIA UPR CTR	91	Y (EXC ZR1)	1	14046629
11.	10-N5	7.831	RETAINER, R/END FASCIA UPR OTR (4 STUDS)	91	Y (EXC ZR1)	LH	10272907
	10-N5	7.831	RETAINER, R/END FASCIA UPR OTR (4 STUDS)	91	Y (EXC ZR1)	RH	10272908
12.	10-A18	12.810	RETAINER, RF LIFT OFF PNL/WDO RR W/STR (TOP SI)	91	Y07	1	14049242
13.	10-N5	7.831	RETAINER, R/END FASCIA SI CTR	91	Y (EXC ZR1)	LH	10149213
	10-N5	7.831	RETAINER, R/END FASCIA SI CTR	91	Y (EXC ZR1)	RH	10149214
14.	10-N5	7.831	REINFORCEMENT, R/END FASCIA LWR CTR	91	Y	1	10132965
15.	10-N5	7.831	FASCIA, R/END	91	Y (EXC ZR1)	1	10135972
16.	10-A18	12.810	WEATHERSTRIP, RF LIFT OFF PNL/WDO RR	91	Y07	1	10283997
17.	10-N5	7.831	REINFORCEMENT, R/END FASCIA SI LWR (OTR)	91	Y	2	14104202
18.	10-B10	12.986	SUPPORT, BODY UPR RR PNL (7.836)	91	Y (EXC ZR1)	LH	14100241
		DISCON	SUPPORT, BODY UPR RR PNL	91	Y (EXC ZR1)	RH	14100242
19.	10-B2	12.944	BRACE, RR W/H PNL LNR RR	91	Y (EXC ZR1)	LH	10051887
	10-B2	12.944	BRACE, RR W/H PNL LNR RR	91	Y (EXC ZR1)	RH	10051888
20.	10-B2	12.944	PANEL, RR W/H	91	Y (EXC ZR1)	LH	10135987
	10-B2	12.944	PANEL, RR W/H	91	Y (EXC ZR1)	RH	10135988
21.	10-N27	15.024	SHADE, LUGG (INCL 32, 33)	91	Y07	1	10251020
22.	10-N5	7.831	RETAINER, R/END FASCIA SI CTR	91	Y (EXC ZR1)	LH	10149213
	10-N5	7.831	RETAINER, R/END FASCIA SI CTR	91	Y (EXC ZR1)	RH	10149214
	10-N5	7.831	RETAINER, R/END FASCIA SI CTR	91	Y (ZR1)	LH	10149275
	10-N5	7.831	RETAINER, R/END FASCIA SI CTR	91	Y (ZR1)	RH	10149276
23.	10-A27	12.940	PANEL, BODY UPR RR (INCL 35) (HOLES FOR BUMPER FASCIA ATTACHMENT MUST BE LOCATED & DRILLED BY DLR)	91	Y07 (EXC ZR1)	RH	12522020
	10-A27	12.940	PANEL, BODY UPR RR (INCL 35) (HOLES FOR BUMPER FASCIA ATTACHMENT MUST BE LOCATED & DRILLED BY DLR)	91	Y07 (EXC ZR1)	LH	12522021
	10-A27	12.940	PANEL, BODY UPR RR (INCL 35)	91	Y07 (EXC ZR1)	1	14104977
24.	10-B10	12.986	EXTENSION, BODY UPR RR PNL LWR FRT	91	Y (EXC ZR1)	LH	10255085
	10-B10	12.986	EXTENSION, BODY UPR RR PNL LWR FRT	91	Y (EXC ZR1)	RH	10255086

© 2000 GENERAL MOTORS SERVICE PARTS OPERATIONS-CHEVROLET-14Y

							1Y12-030
25.	10-A9	12.116	MOLDING KIT, R/Q CTR FRT (PAINT TO MATCH)	91	Y (EXC ZR1)	LH	10174901
	10-A9	12.116	MOLDING KIT, R/Q CTR FRT (PAINT TO MATCH)	91	Y (EXC ZR1)	RH	10174902
26.	10-N27	15.024	HOOK, LUGG SHADE CVR	91	Y07	RH	14049016
	10-N27	15.024	HOOK, LUGG SHADE CVR (12.981)	91	Y07	LH	14049015
27.	10-N23	11.120	PANEL, RR HATCH WDO FRT TR (BLACK) (DRILL ST BELT ATCH HOLE AS REQ)	91	Y07 (19I)	LH	12500061
	10-N23	11.120	PANEL, RR HATCH WDO FRT TR (BLACK) (DRILL ST BELT ATCH HOLE AS REQ)	91	Y07 (19I)	RH	12509348
		DISCON	PANEL, RR HATCH WDO FRT TR (BLUE) (LESS ST BELT ATTACHMENT HOLE, DRILL AS REQ)	91	Y07 (22I)	LH	12508063
		DISCON	PANEL, RR HATCH WDO FRT TR (COGNAC) (DRILL ST BELT ATCH HOLE AS REQ)	91	Y07 (60I)	LH	12508065
	10-N23	11.120	PANEL, RR HATCH WDO FRT TR (RED) (DRILL ST BELT ATCH HOLE AS REQ)	91	Y07 (73I)	LH	12508067
		DISCON	PANEL, RR HATCH WDO FRT TR (GRAY) (DRILL ST BELT ATCH HOLE AS REQ)	91	Y07 (90I)	LH	12508069
		DISCON	PANEL, RR HATCH WDO FRT TR (COGNAC) (DRILL ST BELT ATCH HOLE AS REQ)	91	Y07 (60I)	RH	12509350
		DISCON	PANEL, RR HATCH WDO FRT TR (BLUE) (DRILL ST BELT ATCH HOLE AS REQ)	91	Y07 (22I)	RH	12509349
		DISCON	PANEL, RR HATCH WDO FRT TR (RED) (LESS ST BELT ATTACHMENT HOLE, DRILL AS REQ)	91	Y07 (73I)	RH	12509351
		DISCON	PANEL, RR HATCH WDO FRT TR (GRAY) (DRILL ST BELT ATCH HOLE AS REQ)	91	Y07 (90I)	RH	12509352
28.	10-N22	11.089	WINDLACE, R/CMPT L/WDO FRT TR PNL (W/THREE LARGE HOLES AT ENDS)	91	Y07	1	10104026
29.	10-A18	12.810	RETAINER, RF LIFT OFF PNL/WDO RR W/STR (TO W/STR MLDG) (W/SEAL STRP)	91	Y07	RH	14049248
	10-A18	12.810	RETAINER, RF LIFT OFF PNL/WDO RR W/STR (TO W/STR MLDG) (W/SEAL STRP)	91	Y07	LH	14049247
30.	10-A18	12.810	RETAINER, RF LIFT OFF PNL/WDO RR W/STR (PUSH IN) (FULL FLDG) (10.695)	91	Y07	2	8731909
31.	10-B3	12.945	BUMPER, F/TNK FIL DR (RR) (PART OF 5)	91	Y	1	10280811
32.	10-N27	15.024	BUMPER, LUGG SHADE HDL (PART OF 21) (12.986)	91	Y07	3	365641
33.	10-N27	15.024	HANDLE, LUGG SHADE (PART OF 21)	91	Y07	1	14063620
34.		8.915	NUT, CONICAL SPR WA, M5X.8, 15OD, 9 ZF (A/CL INT SCOOP) ..	91	Y	2	11516066

© 2000 GENERAL MOTORS SERVICE PARTS OPERATIONS - CHEVROLET - 14Y

							1Y12-030
35.	10-A27	12.940	PANEL, BODY UPR RR (PART OF 23) (HOLES FOR BUMPER FASCIA ATTACHMENT MUST BE LOCATED & DRILLED BY DLR) ..	91	Y07 (EXC ZR1)	RH	12522020
	10-A27	12.940	PANEL, BODY UPR RR (PART OF 23) (HOLES FOR BUMPER FASCIA ATTACHMENT MUST BE LOCATED & DRILLED BY DLR) ..	91	Y07 (EXC ZR1)	LH	12522021
	10-A27	12.940	PANEL, BODY UPR RR (PART OF 23)	91	Y07 (EXC ZR1)	1	14104977
	10-A27	12.940	PANEL, BODY UPR RR (PART OF 23)	01	Y07 (ZR1)	1	14104978

RPO DEFINITIONS

ZR1 – PACKAGE,SPECIAL PERFORMANCE COUPE(1YY07 + ZR1 == 1YZ07)
19I – INTERIOR TRIM,BLACK
22I – INTERIOR TRIM,DARK ROYAL BLUE
60I – INTERIOR TRIM,DARK COGNAC
73I – INTERIOR TRIM,FLAME RED
90I – INTERIOR TRIM,SMOKE GRAY

© 2000 GENERAL MOTORS SERVICE PARTS OPERATIONS-CHEVROLET-14Y

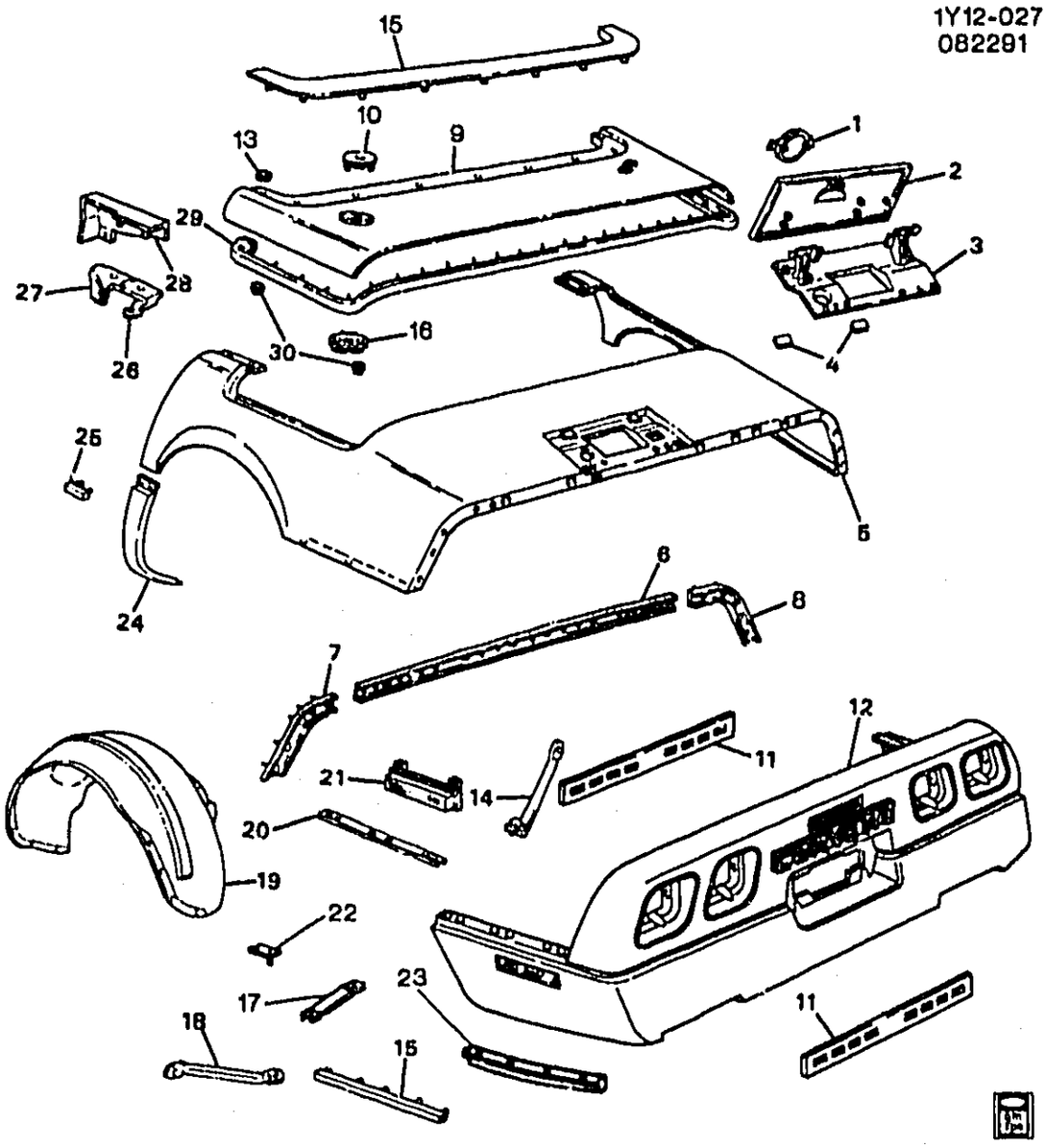

1Y12-027

1992 Y67 BODY/REAR OUTER

1.	10-B3	12.945	**EMBLEM**, F/TNK FIL DR (BLACK)	92	Y	1	10209061
2.	10-B3	12.945	**DOOR**, F/TNK FIL	92	Y67	1	10107910
3.	10-B3	12.945	**BEZEL**, F/TNK FIL DR (W/UNLEADED FUEL LABEL)	92	Y67	1	10125967
	10-B3	12.945	**HINGE KIT**, F/TNK FIL DR	92	Y	1	10146466
4.	10-B3	12.945	**SEAL**, F/TNK FIL DR BZL NUT (9.665)	92	Y	AR	14064578
5.	10-A27	12.940	**PANEL**, BODY UPR RR (12.986)	92	Y67	1	14092351
6.	10-N5	7.831	**RETAINER**, R/END FASCIA UPR CTR	92	Y (EXC ZR1)	1	14046629
7.	10-N5	7.831	**RETAINER**, R/END FASCIA UPR OTR (4 STUDS)	92	Y (EXC ZR1)	RH	10272908
8.	10-N5	7.831	**RETAINER**, R/END FASCIA UPR OTR (4 STUDS)	92	Y (EXC ZR1)	LH	10272907

© 2000 GENERAL MOTORS SERVICE PARTS OPERATIONS-CHEVROLET-14Y

							1Y12-027
9.	10-A10	12.170	LID, F/TOP STOW COMPT (IF SERVICE 1992 & PRIOR MODELS, MUST USE 10193665 T/W 10198642 RELEASE CABLE ASM)	92	Y67	1	10276994
10.	10-N24	14.340	BEZEL, F/TOP RR LAT	92	Y67	1	10107833
11.	10-N5	7.831	REINFORCEMENT, R/END FASCIA LWR CTR	92	Y	1	10132965
12.	10-N5	7.831	FASCIA, R/END	92	Y (EXC ZR1)	1	10135972
13.		N.S.	SPACER, F/TOP STOW COMPT LID T/PNL				
14.	10-B2	12.944	BRACE, BODY UPR RR PNL FRT (WASHER MAY BE REQ AT FACIA END)	92	Y67	LH	10125921
	10-B2	12.944	BRACE, BODY UPR RR PNL FRT (WASHER MAY BE REQ AT FACIA END)	92	Y67	RH	10125922
15.	10-A10	12.170	PANEL, F/TOP STOW COMPT LID TR (BLACK)	92	Y67 (19I)	1	10281070
		DISCON	PANEL, F/TOP STOW COMPT LID TR (RED)	92	Y67 (73I)	1	10123063
		DISCON	PANEL, F/TOP STOW COMPT LID TR (WHITE)	92	Y67 (10I)	1	10198711
	10-A10	12.170	PANEL, F/TOP STOW COMPT LID TR (GRAY)	92	Y67 (14I)	1	10281069
	10-A10	12.170	PANEL, F/TOP STOW COMPT LID TR (BEIGE)	92	Y67 (64I)	1	10281071
16.	10-N24	14.340	LATCH, F/TOP RR	92	Y67	2	10198616
17.	10-B10	12.986	SUPPORT, BODY UPR RR PNL	92	Y67	2	10198696
18.	10-B2	12.944	BRACE, RR W/H PNL LNR RR	92	Y (EXC ZR1)	LH	10051887
	10-B2	12.944	BRACE, RR W/H PNL LNR RR	92	Y (EXC ZR1)	RH	10051888
19.	10-B2	12.944	PANEL, RR W/H	92	Y (EXC ZR1)	LH	10135987
	10-B2	12.944	PANEL, RR W/H	92	Y (EXC ZR1)	RH	10135988
20.	10-N5	7.831	RETAINER, R/END FASCIA SI CTR	92	Y (EXC ZR1)	LH	10149213
	10-N5	7.831	RETAINER, R/END FASCIA SI CTR	92	Y (EXC ZR1)	RH	10149214
21.	10-M25	2.575	LAMP, RR SI MKR & SI B/U	92	Y	LH	16514357
	10-M25	2.575	LAMP, RR SI MKR & SI B/U	92	Y	RH	16514358
22.	10-B4	12.966	PLATE, BODY UPR RR PNL SUPT ANC (12.986)	92	Y	2	14058658
23.	10-N5	7.831	REINFORCEMENT, R/END FASCIA SI LWR (OTR)	92	Y	2	14104202
24.	10-B10	12.986	EXTENSION, BODY UPR RR PNL LWR FRT	92	Y (EXC ZR1)	LH	10255085
	10-B10	12.986	EXTENSION, BODY UPR RR PNL LWR FRT	92	Y (EXC ZR1)	RH	10255086
25.	10-A9	12.116	MOLDING KIT, R/Q CTR FRT (PAINT TO MATCH)	92	Y (EXC ZR1)	LH	10174901
	10-A9	12.116	MOLDING KIT, R/Q CTR FRT (PAINT TO MATCH)	92	Y (EXC ZR1)	RH	10174902
		8.915	NUT, CONICAL SPR WA, M5X.8, 15OD, 9 ZF	92		AR	11516066
26.	10-A28	12.942	SEAL, FRT S/D L/PLR UPR (RR)	92	Y67	LH	14100365
	10-A28	12.942	SEAL, FRT S/D L/PLR UPR (RR)	92	Y67	RH	14100366
27.	10-A28	12.942	SEAL, FRT S/D L/PLR UPR (FRT)	92	Y67	LH	14092683
	10-A28	12.942	SEAL, FRT S/D L/PLR UPR (FRT)	92	Y67	RH	14092684

© 2000 GENERAL MOTORS SERVICE PARTS OPERATIONS-CHEVROLET-14Y

							1Y12-027	
28.	10-N24	14.731	PANEL, BODY L/PLR UPR TR (BLACK)	92	Y67 (19I)		RH	10103850
	10-N24	14.731	PANEL, BODY L/PLR UPR TR (BLACK)	92	Y67 (19I)		LH	10103851
	10-N24	14.731	PANEL, BODY L/PLR UPR TR (RED)	92	Y67 (73I)		RH	10103856
	10-N24	14.731	PANEL, BODY L/PLR UPR TR (RED)	92	Y67 (73I)		LH	10103857
		DISCON	PANEL, BODY L/PLR UPR TR (WHITE)	92	Y67 (10I)		LH	10167117
	10-N24	14.731	PANEL, BODY L/PLR UPR TR (WHITE)	92	Y67 (10I)		RH	10167118
	10-N24	14.731	PANEL, BODY L/PLR UPR TR (BEIGE)	92	Y67 (64I)		RH	10175618
	10-N24	14.731	PANEL, BODY L/PLR UPR TR (BEIGE)	92	Y67 (64I)		LH	10175619
		DISCON	PANEL, BODY L/PLR UPR TR (GRAY)	92	Y67 (14I)		RH	10175620
		DISCON	PANEL, BODY L/PLR UPR TR (GRAY)	92	Y67 (14I)		LH	10175621
29.	10-A10	12.170	WEATHERSTRIP, F/TOP STOW COMPT LID	92	Y67		1	14092675
30.		8.917	NUT, HEX W/CON WA M6X1X5.5 (9) 7111M 16-OD	92	.....		AR	11516793

RPO DEFINITIONS

ZR1 – PACKAGE,SPECIAL PERFORMANCE COUPE(1YY07 + ZR1 == 1YZ07)
10I – INTERIOR TRIM– ARCTIC WHITE
14I – INTERIOR TRIM LT GRAY
19I – INTERIOR TRIM,BLACK
64I – INTERIOR TRIM,LIGHT BEIGE
73I – INTERIOR TRIM,FLAME RED

1Y12-041 07/02/98

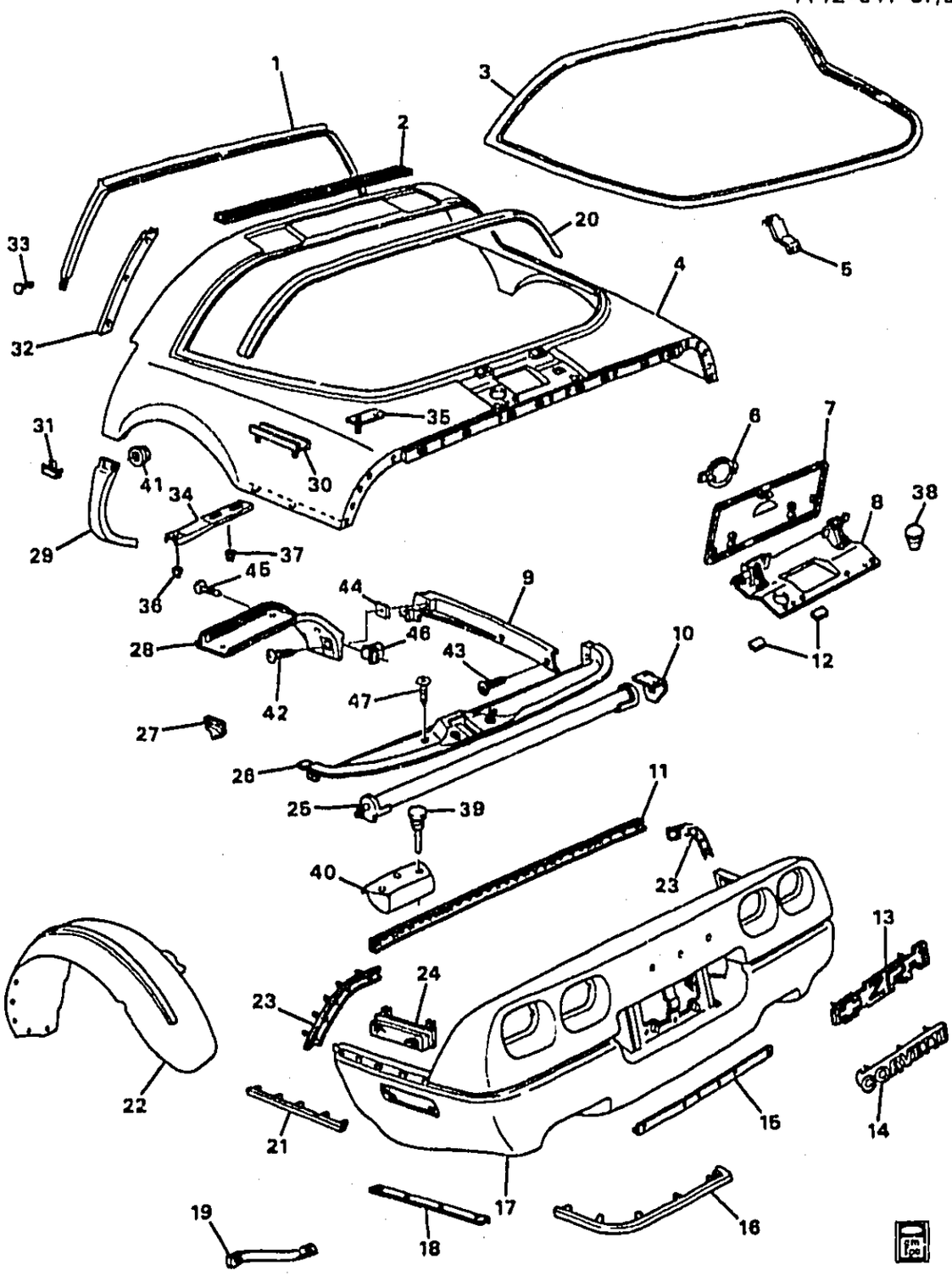

1Y12-041

1992-1995 Y07 BODY/REAR OUTER(ZR1)

1.	10-A18	12.810	WEATHERSTRIP, RF LIFT OFF PNL/WDO RR	92-95	Y07	1	10283997
2.	10-A18	12.810	RETAINER, RF LIFT OFF PNL/WDO RR W/STR (TO W/STR MLDG) (W/SEAL STRP)	92-95	Y07	LH	14049247

© 2000 GENERAL MOTORS SERVICE PARTS OPERATIONS-CHEVROLET-14Y

							1Y12-041
	10-A18	12.810	RETAINER, RF LIFT OFF PNL/WDO RR W/STR (TO W/STR MLDG) (W/SEAL STRP)	92-95	Y07	RH	14049248
	10-A18	12.810	RETAINER, RF LIFT OFF PNL/WDO RR W/STR (TOP SI)	92-95	Y07	1	14049242
3.	10-A16	12.269	WEATHERSTRIP, R/CMPT L/WDO	92-95	Y07	1	9768068
4.	10-A27	12.940	PANEL, BODY UPR RR	92-95	Y07 (ZR1)	1	14104978
5.	10-B5	12.971	BRACKET, R/CMPT L/WDO RR TR PNL	92-95	Y07	2	10272073
6.	10-B3	12.945	EMBLEM, F/TNK FIL DR (BLACK)	92	Y	1	10209061
	10-B3	12.945	EMBLEM, F/TNK FIL DR	93	Y (Z25)	1	10198700
	10-B3	12.945	EMBLEM, F/TNK FIL DR (BLACK)	93	Y (EXC Z25)	1	10209061
	10-B3	12.945	EMBLEM, F/TNK FIL DR (BLACK)	94	Y	1	10209061
	10-B3	12.945	EMBLEM, F/TNK FIL DR	95	Y (Z4Z)	1	10198700
	10-B3	12.945	EMBLEM, F/TNK FIL DR (BLACK)	95	Y (EXC Z4Z)	1	10209061
7.	10-B3	12.945	DOOR, F/TNK FIL	92-95	Y07	1	14047485
8.	10-B3	12.945	BEZEL, F/TNK FIL DR (W/UNLEADED FUEL LABEL) (CPS) (INCLS 38)	92-93	Y07	1	10279992
	10-B3	12.945	BEZEL, F/TNK FIL DR (W/UNLEADED FUEL LABEL) (CPS) (INCLS 38)	94	Y07 (EXC NM8)	1	10279992
	10-B3	12.945	BEZEL, F/TNK FIL DR (W/UNLEADED FUEL LABEL) (CPS) (INCLS 38)	95	Y07 (LT1) (EXC NM8)	1	10279992
	10-B3	12.945	BEZEL, F/TNK FIL DR (W/UNLEADED FUEL LABEL) (CPS) (INCLS 38)	95	Y07 (LT5)	1	10279994
	10-B3	12.945	BUMPER, F/TNK FIL DR (FRT)	92-95	Y07	2	12521930
	10-B3	12.945	HINGE KIT, F/TNK FIL DR	92	Y	1	10146466
9.	10-N27	15.222	PANEL, R/CMPT SI TR (11.120)	92-95	Y07	LH	10193737
	10-N27	15.222	PANEL, R/CMPT SI TR (11.120)	92-95	Y07	RH	10193736
10.	10-N27	15.024	SUPPORT, LUGG SHADE (12.981)	92-95	Y07	RH	14049030
	10-N27	15.024	SUPPORT, LUGG SHADE (12.981)	92-95	Y07	LH	14049029
11.	10-N5	7.831	RETAINER, R/END FASCIA UPR CTR	92-95	Y (ZR1)	1	14104190
12.	10-B3	12.945	SEAL, F/TNK FIL DR BZL NUT (9.665)	92-95	Y	AR	14064578
13.	10-N7	7.832	EMBLEM, R/END FASCIA (WHITE) (BOWTIE, ZR1)	92-95	Y (ZR1, 10U)	2	10146443
		DISCON	EMBLEM, R/END FASCIA (BOWTIE, ZR1) (COLOR CODE WA9238) (LIGHT RED)	92	Y (ZR1, 75U)	1	10146446
	10-N7	7.832	EMBLEM, R/END FASCIA (RED) (BOWTIE, ZR1)	92	Y (ZR1, 81U)	2	10146447
		DISCON	EMBLEM, R/END FASCIA (BLUE) (BOWTIE, ZR1)	92-93	Y (ZR1, 80U)	1	10153579
	10-N7	7.832	EMBLEM, R/END FASCIA (YELLOW) (BOWTIE, ZR1)	92	Y (ZR1, 35U)	1	10167090
	10-N7	7.832	EMBLEM, R/END FASCIA (AQUA) (BOWTIE, ZR1)	92-95	Y (ZR1, 43U)	1	10175826
	10-N7	7.832	EMBLEM, R/END FASCIA (BLACK ROSE) (BOWTIE, ZR1)	92-94	Y (ZR1, 73U)	1	10198747
	10-N7	7.832	EMBLEM, R/END FASCIA (BLACK)	92-95	Y (ZR1, 41U)	1	10268455

							1Y12-041
	10-N7	7.832	**EMBLEM**, R/END FASCIA (MARBLEHEAD GRAY)	92-95	Y (ZR1, 45U)	1	10268456
		DISCON	**EMBLEM**, R/END FASCIA (BOWTIE, ZR1) (COLOR CODE WA9238) (LIGHT RED)	93	Y (ZR1, 75U) (1ST DES)	1	10146446
	10-N7	7.832	**EMBLEM**, R/END FASCIA (YELLOW) (BOWTIE, ZR1)	93-95	Y (ZR1, 53U)	1	10153678
	10-N7	7.832	**EMBLEM**, R/END FASCIA (RED) (BOWTIE, ZR1)	93-95	Y (ZR1, 70U)	1	10198688
	10-N7	7.832	**EMBLEM**, R/END FASCIA (BOWTIE, ZR1) (COLOR CODE WA213A) (DARK RED)	93	Y (ZR1, 68U) (2ND DES)	1	10228815
		DISCON	**EMBLEM**, R/END FASCIA (BOWTIE, ZR1)	94-95	Y (ZR1, 75U)	1	10146446
	10-N7	7.832	**EMBLEM**, R/END FASCIA (CLOISONNE BLUE)	94-95	Y (ZR1, 28U)	1	10210902
		DISCON	**EMBLEM**, R/END FASCIA (MELON)	94	Y (ZR1, 66U)	1	10210905
	10-N7	7.832	**EMBLEM**, R/END FASCIA (CYCLAMAN)	95	Y (ZR1, 05U)	1	10233119
14.	10-N7	7.832	**PLATE**, R/END FASCIA NA (RED) (CORVETTE)	92-95	Y (ZR1, 75U)	1	10172317
		DISCON	**PLATE**, R/END FASCIA NA (QUASAR) (CORVETTE)	92-93	Y (ZR1, 80U)	1	10172318
		DISCON	**PLATE**, R/END FASCIA NA (RED) (CORVETTE)	92	Y (ZR1, 81U)	1	10172319
	10-N7	7.832	**PLATE**, R/END FASCIA NA (AQUA) (CORVETTE)	92-95	Y (ZR1, 43U)	1	10175824
	10-N7	7.832	**PLATE**, R/END FASCIA NA (GREEN) (CORVETTE)	92-95	Y (ZR1, 45U)	1	10198742
	10-N7	7.832	**PLATE**, R/END FASCIA NA (BLACK ROSE) (CORVETTE)	92-94	Y (ZR1, 73U)	1	10198743
	10-N7	7.832	**PLATE**, R/END FASCIA NA (BLACK)	92-95	Y (ZR1, 41U)	1	10268451
		DISCON	**PLATE**, R/END FASCIA NA (RED)	93-95	Y (ZR1, 70U)	1	10198686
	10-N7	7.832	**PLATE**, R/END FASCIA NA (RED)	93	Y (ZR1, 68U)	1	10228814
	10-N7	7.832	**PLATE**, R/END FASCIA NA (YELLOW)	94-95	Y (ZR1, 53U)	1	10167089
	10-N7	7.832	**PLATE**, R/END FASCIA NA (BLUE)	94-95	Y (ZR1, 26U)	1	10210889
	10-N7	7.832	**PLATE**, R/END FASCIA NA (MELON)	94	Y (ZR1, 66U)	1	10210892
	10-N7	7.832	**PLATE**, R/END FASCIA NA (CYCLAMEN)	95	Y (ZR1, 05U)	1	10233113
		DISCON	**PLATE**, R/END FASCIA NA (INDY MTR SPDWY, WINGS & WHL)	95	Y (Z4Z)	1	10278422
	10-N7	7.832	**PLATE**, R/END FASCIA NA (CORVETTE) (YELLOW)	92-93	Y (ZR1, 35U, 53U)	1	10167089
	10-N7	7.832	**PLATE**, R/END FASCIA NA (CORVETTE) (WHITE)	92-95	Y (ZR1, 10U)	1	10172312
15.	10-N5	7.831	**REINFORCEMENT**, R/END FASCIA LWR CTR	92-95	Y	1	10132965
16.	10-N7	7.832	**MOLDING KIT**, RR BPR FASCIA CTR (PAINT TO MATCH)	92-95	Y (ZR1)	LH	10174848
	10-N7	7.832	**MOLDING KIT**, RR BPR FASCIA CTR (PAINT TO MATCH)	92-95	Y (ZR1)	RH	10174849
17.	10-N5	7.831	**FASCIA**, R/END	92-95	Y (ZR1)	1	10153675
18.	10-N5	7.831	**RETAINER**, R/END FASCIA SI CTR	92-95	Y (ZR1)	LH	10149275

© 2000 GENERAL MOTORS SERVICE PARTS OPERATIONS-CHEVROLET-14Y

							1Y12-041
	10-N5	7.831	RETAINER, R/END FASCIA SI CTR	92-95	Y (ZR1)	RH	10149276
	10-N5	7.831	RETAINER, R/END FASCIA SI CTR	94-95	Y (T90) (EXPORT)	LH	10149275
	10-N5	7.831	RETAINER, R/END FASCIA SI CTR	94-95	Y (T90) (EXPORT)	RH	10149276
19.	10-B2	12.944	BRACE, RR W/H PNL LNR RR	92-95	Y (ZR1)	LH	14104631
	10-B2	12.944	BRACE, RR W/H PNL LNR RR	92-95	Y (ZR1)	RH	14104632
20.	10-N22	11.089	WINDLACE, R/CMPT L/WDO FRT TR PNL (W/THREE LARGE HOLES AT ENDS)	92-95	Y07	1	10104026
21.	10-A9	12.116	MOLDING, R/Q CTR RR (MUST ORDER NUT 11516066 QTY-5)	92-95	Y (ZR1)	LH	10135981
	10-A9	12.116	MOLDING, R/Q CTR RR (MUST ORDER NUT 11516066 QTY-5)	92-95	Y (ZR1)	RH	10135982
22.	10-B2	12.944	LINER, RR W/H PNL	92-95	Y (ZR1)	LH	14104591
	10-B2	12.944	LINER, RR W/H PNL	92-95	Y (ZR1)	RH	14104592
23.	10-N5	7.831	RETAINER, R/END FASCIA UPR OTR	92-95	Y (ZR1)	LH	14104193
	10-N5	7.831	RETAINER, R/END FASCIA UPR OTR	92-95	Y (ZR1)	RH	14104194
24.	10-M25	2.575	LAMP, RR SI MKR & SI B/U	92-93	Y	LH	16514357
	10-M25	2.575	LAMP, RR SI MKR & SI B/U	92-93	Y	RH	16514358
	10-M25	2.575	LAMP, RR SI MKR & SI B/U	94-95	Y (EXC T90)	LH	16514357
	10-M25	2.697	LAMP, RR SI MKR & SI B/U (2.575)	94-95	Y (EXC T90)	LH	16514357
	10-M25	2.575	LAMP, RR SI MKR & SI B/U	94-95	Y (EXC T90)	RH	16514358
	10-M25	2.697	LAMP, RR SI MKR & SI B/U (2.575)	94-95	Y (EXC T90)	RH	16514358
25.	10-N27	15.024	SHADE, LUGG (INCL 39, 40)	92-95	Y07	1	10251020
26.	10-N23	11.120	PANEL, R/CMPT L/WDO RR TR (TAKES BUMPER 16662198)	92-95	Y07		10282934
27.	10-N27	15.024	HOOK, LUGG SHADE CVR	92-95	Y07	[illegible]	14049016
	10-N27	15.024	HOOK, LUGG SHADE CVR (12.981)	92-95	Y07	LH	14049015
28.	10-N23	11.120	PANEL, RR HATCH WDO FRT TR (RED) (DRILL ST BELT ATCH HOLE AS REQ)	92	Y07 (73I)	LH	12508067
		DISCON	PANEL, RR HATCH WDO FRT TR (RED) (LESS ST BELT ATTACHMENT HOLE, DRILL AS REQ)	92	Y07 (73I)	RH	12509351
	10-N23	11.120	PANEL, RR HATCH WDO FRT TR (BLACK) (DRILL ST BELT ATCH HOLE AS REQ)	92-93	Y07 (10I, 19I)	LH	12508061
	10-N23	11.120	PANEL, RR HATCH WDO FRT TR (BLACK) (DRILL ST BELT ATCH HOLE AS REQ)	92-93	Y07 (10I, 19I)	RH	12509348
	10-N23	11.120	PANEL, RR HATCH WDO FRT TR (BEIGE)	92-93	Y07 (64I)	RH	12509353
	10-N23	11.120	PANEL, RR HATCH WDO FRT TR (GRAY)	92-93	Y07 (14I)	RH	12509354
	10-N23	11.120	PANEL, RR HATCH WDO FRT TR (BEIGE)	92-93	Y07 (64I)	LH	12509714
	10-N23	11.120	PANEL, RR HATCH WDO FRT TR (GRAY)	92-93	Y07 (14I)	LH	12509715
	10-N23	11.120	PANEL, RR HATCH WDO FRT TR (RED)	93	Y07 (79I)	RH	10199558

© 2000 GENERAL MOTORS SERVICE PARTS OPERATIONS-CHEVROLET--14Y

							1Y12-041
	10-N23	11.120	PANEL, RR HATCH WDO FRT TR (RED)	93	Y07 (79I)	LH	10199559
		DISCON	PANEL, RR HATCH WDO FRT TR (RED)	93	Y07 (70I)	RH	10199724
		DISCON	PANEL, RR HATCH WDO FRT TR (RED)	93	Y07 (70I)	LH	10199725
	10-N23	11.120	PANEL, RR HATCH WDO FRT TR (BLACK) (DRILL ST BELT ATCH HOLE AS REQ)	94-95	Y07 (14I, 19I, 64I, 70I)	LH	12508061
	10-N23	11.120	PANEL, RR HATCH WDO FRT TR (BLACK) (DRILL ST BELT ATCH HOLE AS REQ)	94-95	Y07 (14I, 19I, 64I, 70I)	RH	12509348
29.	10-B10	12.986	EXTENSION, BODY UPR RR PNL LWR FRT	92-95	Y (ZR1)	LH	10255087
	10-B10	12.986	EXTENSION, BODY UPR RR PNL LWR FRT	92-95	Y (ZR1)	RH	10255088
30.	10-N5	7.831	RETAINER, R/END FASCIA SI CTR	92-95	Y (ZR1)	LH	10149275
	10-N5	7.831	RETAINER, R/END FASCIA SI CTR	92-95	Y (ZR1)	RH	10149276
	10-N5	7.831	RETAINER, R/END FASCIA SI CTR	94-95	Y (T90) (EXPORT)	LH	10149275
	10-N5	7.831	RETAINER, R/END FASCIA SI CTR	94-95	Y (T90) (EXPORT)	RH	10149276
31.	10-A9	12.116	MOLDING KIT, R/Q CTR FRT (PAINT TO MATCH)	92-95	Y (ZR1)	LH	10174881
	10-A9	12.116	MOLDING KIT, R/Q CTR FRT (PAINT TO MATCH)	92-95	Y (ZR1)	RH	10174882
32.	10-A18	12.810	RETAINER, RF LIFT OFF PNL/WDO RR W/STR (TO W/STR MLDG) (W/SEAL STRP)	92-95	Y07	RH	14049248
	10-A18	12.810	RETAINER, RF LIFT OFF PNL/WDO RR W/STR (TO W/STR MLDG) (W/SEAL STRP)	92-95	Y07	LH	14049247
33.		8.900	SCREW,	92-95		AR	11505209
34.	10-B10	12.986	SUPPORT, BODY UPR RR PNL	92-95	Y07	2	10172499
35.	10-B4	12.966	PLATE, BODY UPR RR PNL SUPT ANC (12.986)	92-95	Y	2	14058658
36.		8.921	NUT, (SPRING, TYPE C, U-SHAPED, MULTI THD) (M6X1, 1060 PEOR)	92-95		AR	12337917
37.		8.917	NUT, HFH M6X1X6.5 ZOR 9	92-95		AR	3530297
38.	10-B3	12.945	BUMPER, F/TNK FIL DR (FRT) (PART OF 8)	92-95	Y	2	12521930
	10-B3	12.945	BUMPER, F/TNK FIL DR (RR) (PART OF 8)	92-95	Y	4	10280811
39.	10-N27	15.024	BUMPER, LUGG SHADE HDL (PART OF 25) (12.986)	92-95	Y07	3	365641
40.		DISCON	HANDLE, R/FLR COMPT DR (PART OF 25) (COGNAC)	92	Y (73I)	1	10132958
	10-B7	12.981	HANDLE, R/FLR COMPT DR (PART OF 25) (BLACK)	92-93	Y (10I, 19I)	1	10132960
	10-B7	12.981	HANDLE, R/FLR COMPT DR (PART OF 25) (BEIGE)	92-95	Y (64I)	1	10175645
	10-B7	12.981	HANDLE, R/FLR COMPT DR (PART OF 25) (GRAY)	92-95	Y (14I)	1	10175646
	10-B7	12.981	HANDLE, R/FLR COMPT DR (PART OF 25) (RED)	93	Y (79I)	1	10199517

							1Y12-041
	10-B7	12.981	HANDLE, R/FLR COMPT DR (PART OF 25) (RED)	93-95	Y (70I)	1	10199569
	10-B7	12.981	HANDLE, R/FLR COMPT DR (PART OF 25) (BLACK)	94-95	Y (19I)	1	10132960
41.		8.915	NUT, CONICAL SPR WA, M5X.8, 15OD, 9 ZF (A/CL INT SCOOP) ..	92-95	Y	2	11516066
42.		8.977	SCREW, M4.2X1.41X25 OV HD C/R ORG BLK (RR HATCH WDO FRT TR PNL) (POSN #2)	92-95	.....	10	11503566
43.		8.977	SCREW, M4.2X1.41X25 OV HD C/R ORG BLK (R/CMPT L/WDO SI TR PNL)	92-95	.....	4	11503566
44.		8.921	NUT, U-TYPE, 4.2X1.41, DIM A-15, DIM B-14 DIM C-8.65, 1050, PZOR (R/CMPT L/WDO SI TR PNL)	92-95	.....	4	12338121
45.		8.977	SCREW, M4.2X1.41X16 OV CSK TR HD C/R TAP, PEOR (RR HATCH WDO FRT TR PNL) (POSN #1) (16.650)	92-95	.....	2	11503446
46.		8.921	NUT, U-TYPE, 4.2X1.41, DIM A-15, DIM B-14 DIM C-8.65, 1050, PZOR (RR HATCH WDO FRT TR PNL)	92-95	.....	9	12338121
47.		8.977	SCREW, M4.2X1.41X25 OV HD C/R ORG BLK (R/CMPT L/WDO RR TR PNL)	92-95	.....	6	11503566

RPO DEFINITIONS

LT1 – ENGINE-GAS, 8 CYL, 5.7L(5.7P),MFI,HO
LT5 – ENGINE,5.7L(5.7J),TPI
NM8 – EMISSION SYSTEM,LEADED FUEL(EXPORT)
T90 – LAMP,SIGNALING AND MARKER(EXPORT)
ZR1 – PACKAGE,SPECIAL PERFORMANCE COUPE(1YY07 + ZR1 == 1YZ07)
Z25 – APPEARANCE PACKAGE 40TH ANNIVERSARY(LIMITED EDITION)
Z4Z – MERCHANDISED PKG INDY PACE CAR
05U – PRIMARY COLOR EXTERIOR, CYCLAMEN (95)
10I – INTERIOR TRIM– ARCTIC WHITE
10U – EXTERIOR COLOR,ARTIC WHITE
14I – INTERIOR TRIM LT GRAY
19I – INTERIOR TRIM,BLACK
28U – EXTERIOR COLOR,PRIMARY,DK CLOISONNE BLUE MET
35U – EXTERIOR COLOR,PRIMARY,YELLOW
41U – EXTERIOR COLOR,PRIMARY,BLACK
43U – EXTERIOR COLOR,PRIMARY,BRT AQUA METALLIC
45U – EXTERIOR COLOR–MEDIUM GREEN METALLIC
53U – EXTERIOR COLOR,PRIMARY,COMPETITION YELLOW
64I – INTERIOR TRIM,LIGHT BEIGE
66U – EXTERIOR COLOR,PRIMARY,LT MELON
68U – EXTERIOR COLOR,PRIMARY,BRILLIANT RED MET
70I – INTERIOR TRIM,TORCH RED
70U – EXTERIOR COLOR,TORCH RED
73I – INTERIOR TRIM,FLAME RED
73U – EXTERIOR COLOR,BLACK ROSE METALLIC
75U – EXTERIOR COLOR,PRIMARY,BRILLIANT RED METALLIC
79I – INTERIOR TRIM,RUBY RED
80U – EXTERIOR COLOR,PRIMARY,MED QUASAR BLUE MET
81U – EXTERIOR COLOR,PRIMARY,BRIGHT RED

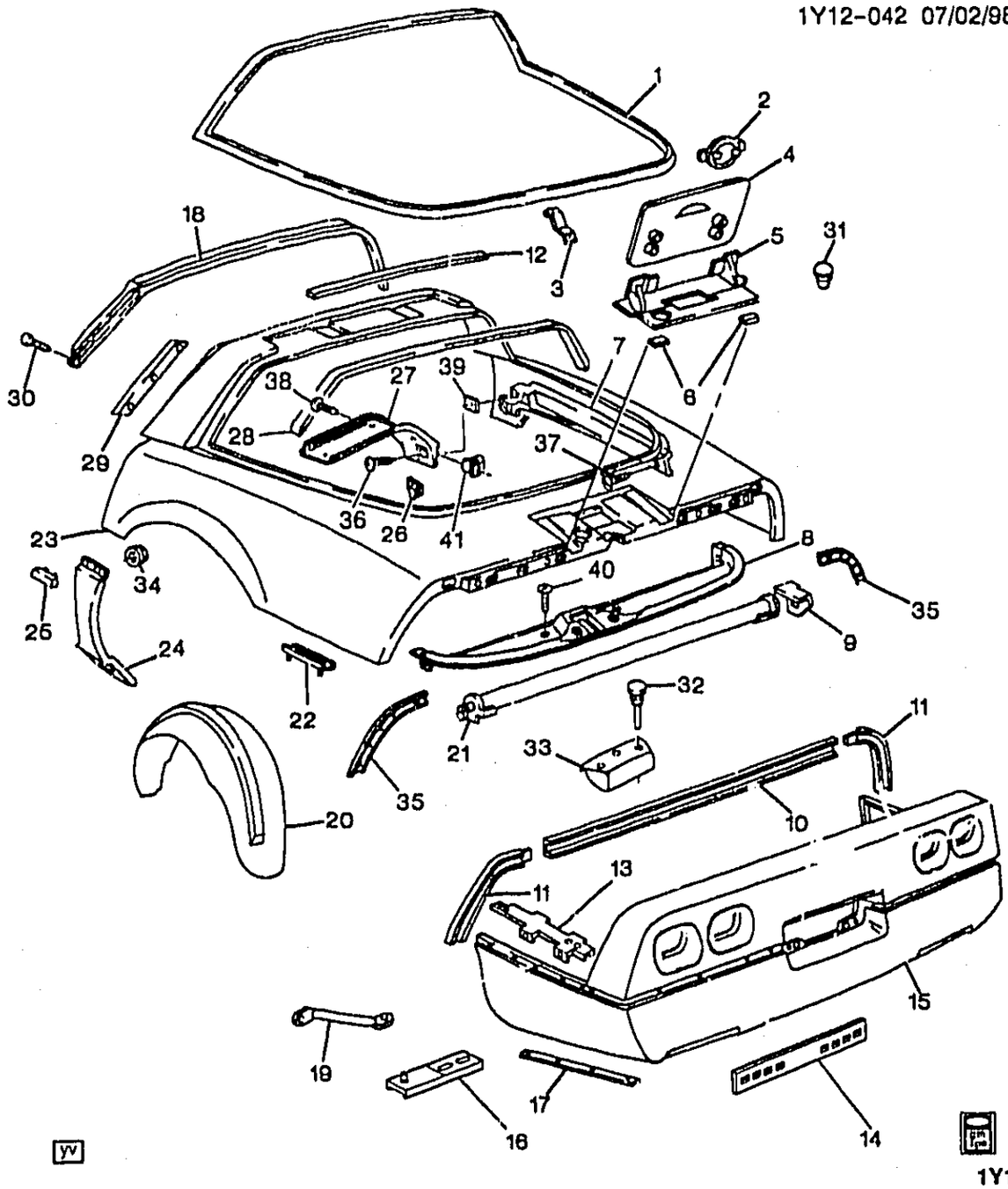

1Y12-042

1992-1995 Y07 BODY/REAR (EXC ZR1)
1996 Y07 BODY/REAR

1.	10-A16	12.269	WEATHERSTRIP, R/CMPT L/WDO	92-96	Y07	1	9768069
2.	10-B3	12.945	EMBLEM, F/TNK FIL DR (BLACK)	92	Y	1	10209061
	10-B3	12.945	EMBLEM, F/TNK FIL DR	93	Y (Z25)	1	10198700
	10-B3	12.945	EMBLEM, F/TNK FIL DR (BLACK)	93	Y (EXC Z25)	1	10209061
	10-B3	12.945	EMBLEM, F/TNK FIL DR (BLACK)	94	Y	1	10209061
	10-B3	12.945	EMBLEM, F/TNK FIL DR	95	Y (Z4Z)	1	10198700
	10-B3	12.945	EMBLEM, F/TNK FIL DR (BLACK)	95	Y (EXC Z4Z)	1	10209061
	10-B3	12.945	EMBLEM, F/TNK FIL DR	96	Y (Z16)	1	10198700
	10-B3	12.945	EMBLEM, F/TNK FIL DR (BLACK)	96	Y (EXC Z15, Z16)	1	10209061
	10-B3	12.945	EMBLEM, F/TNK FIL DR (COLLECTOR EDITION)	96	Y (Z15)	1	10254345

© 2000 GENERAL MOTORS SERVICE PARTS OPERATIONS-CHEVROLET-14Y

							1Y12-042
3.	10-B5	12.971	BRACKET, R/CMPT L/WDO RR TR PNL	92-96	Y07	2	10272073
4.	10-B3	12.945	DOOR, F/TNK FIL	92-96	Y07	1	14047485
5.	10-B3	12.945	BEZEL, F/TNK FIL DR (W/UNLEADED FUEL LABEL) (CPS) (INCL 31)	92-93	Y07	1	10279992
	10-B3	12.945	BEZEL, F/TNK FIL DR (W/UNLEADED FUEL LABEL) (CPS) (INCL 31)	94	Y07 (EXC NM8)	1	10279992
	10-B3	12.945	BEZEL, F/TNK FIL DR (W/UNLEADED FUEL LABEL) (CPS) (INCL 31)	95-96	Y07 (LT1) (EXC NM8)	1	10279992
	10-B3	12.945	BEZEL, F/TNK FIL DR (W/UNLEADED FUEL LABEL) (CPS) (INCL 31)	95	Y07 (LT5)	1	10279994
	10-B3	12.945	BEZEL, F/TNK FIL DR (W/UNLEADED FUEL LABEL) (CPS) (INCL 31)	96	Y07 (LT4)	1	10279994
	10-B3	12.945	BUMPER, F/TNK FIL DR (FRT)	92-94	Y	2	12521930
6.	10-B3	12.945	SEAL, F/TNK FIL DR BZL NUT (9.665)	92-96	Y	AR	14064578
7.	10-N27	15.222	PANEL, R/CMPT SI TR (11.120)	92-96	Y07	LH	10193737
	10-N27	15.222	PANEL, R/CMPT SI TR (11.120)	92-96	Y07	RH	10193738
8.	10-N23	11.120	PANEL, R/CMPT L/WDO RR TR (TAKES BUMPER 16662198)	92-96	Y07	1	10282934
9.	10-N27	15.024	SUPPORT, LUGG SHADE (12.981)	92-96	Y07	LH	14049029
	10-N27	15.024	SUPPORT, LUGG SHADE (12.981)	92-96	Y07	RH	14049030
10.	10-N5	7.831	RETAINER, R/END FASCIA UPR CTR	92-95	Y (EXC ZR1)	1	14046629
	10-N5	7.831	RETAINER, R/END FASCIA UPR CTR	96	Y	1	14046629
11.	10-N5	7.831	RETAINER, R/END FASCIA UPR OTR (4 STUDS)	92-95	Y (EXC ZR1)	LH	10272907
	10-N5	7.831	RETAINER, R/END FASCIA UPR OTR (4 STUDS)	92-95	Y (EXC ZR1)	RH	10272908
	10-N5	7.831	RETAINER, R/END FASCIA UPR OTR (4 STUDS)	96	Y	LH	10272907
	10-N5	7.831	RETAINER, R/END FASCIA UPR OTR (4 STUDS)	96	Y	RH	10272908
12.	10-A18	12.810	RETAINER, RF LIFT OFF PNL/WDO RR W/STR	92-96	Y07	1	14049242
13.	10-N5	7.831	RETAINER, R/END FASCIA SI CTR	92-96	Y	1	10149213
	10-N5	7.831	RETAINER, R/END FASCIA SI CTR	92-96	Y	1	10149214
14.	10-N5	7.831	REINFORCEMENT, R/END FASCIA LWR CTR	92-96	Y	1	10132965
15.	10-N5	7.831	FASCIA, R/END	92-93	Y (EXC ZR1)	1	10135972
	10-N5	7.831	FASCIA, R/END	94-95	Y (EXC T90, ZR1)	1	10135972
	10-N5	7.831	FASCIA, R/END	96	Y	1	10135972
	10-N5	7.831	FASCIA, R/END	94	Y (T90) (EXC ZR1) (EXPORT)	1	10204700
	10-N5	7.831	FASCIA, R/END	95	Y (T90) (EXC ZR1) (EXPORT)	1	10261523
	10-N5	7.831	FASCIA, R/END	96	Y (T90) (EXPORT)	1	10261523
16.	10-B10	12.986	SUPPORT, BODY UPR RR PNL	92-96	Y07	2	10172499

© 2000 GENERAL MOTORS SERVICE PARTS OPERATIONS-CHEVROLET-14Y

							1Y12-042
17.	10-N5	7.831	REINFORCEMENT, R/END FASCIA SI LWR (OTR)	92-96	Y	2	14104202
18.	10-A18	12.810	WEATHERSTRIP, RF LIFT OFF PNL/WDO RR (W/DEPRESSED SURFACE AT TOP CORNER)	96	Y07	1	10283997
	10-A18	12.810	WEATHERSTRIP, RF LIFT OFF PNL/WDO RR (W/DEPRESSED SURFACE AT TOP CORNER)	92-95	Y07	1	10283997
19.	10-B2	12.944	BRACE, RR W/H PNL LNR RR ...	92-95	Y (EXC ZR1)	LH	10051887
	10-B2	12.944	BRACE, RR W/H PNL LNR RR ...	92-95	Y (EXC ZR1)	RH	10051888
	10-B2	12.944	BRACE, RR W/H PNL LNR RR ...	96	Y	LH	10051887
	10-B2	12.944	BRACE, RR W/H PNL LNR RR ...	96	Y	RH	10051888
20.	10-B2	12.944	PANEL, RR W/H	92-95	Y (EXC ZR1)	LH	10135987
	10-B2	12.944	PANEL, RR W/H	92-95	Y (EXC ZR1)	RH	10135988
	10-B2	12.944	PANEL, RR W/H	96	Y	LH	10135987
	10-B2	12.944	PANEL, RR W/H	96	Y	RH	10135988
21.	10-N27	15.024	SHADE, LUGG (W/HDL)	92-96	Y07	1	10251020
	10-N27	15.024	HANDLE, LUGG SHADE	92-93	Y07	1	14063620
22.	10-N5	7.831	RETAINER, R/END FASCIA SI CTR (M62X22 W/2 STUDS)	92-96	Y	2	14100248
23.	10-A27	12.940	PANEL, BODY UPR RR (INCL 35) (HOLES FOR BUMPER FASCIA ATTACHMENT MUST BE LOCATED & DRILLED BY DLR) ..	92-95	Y07 (EXC ZR1)	RH	12522020
	10-A27	12.940	PANEL, BODY UPR RR (INCL 35) (HOLES FOR BUMPER FASCIA ATTACHMENT MUST BE LOCATED & DRILLED BY DLR) ..	92-95	Y07 (EXC ZR1)	LH	12522021
	10-A27	12.940	PANEL, BODY UPR RR (INCL 35)	92-95	Y07 (EXC ZR1)	1	14104977
	10-A27	12.940	PANEL, BODY UPR RR (INCL 35) (HOLES FOR BUMPER FASCIA ATTACHMENT MUST BE LOCATED & DRILLED BY DLR) ..	96	Y07	RH	12522020
	10-A27	12.940	PANEL, BODY UPR RR (INCL 35)	96	Y07	LH	12522021
	10-A27	12.940	PANEL, BODY UPR RR (INCL 35)	96	Y07	1	14104977
24.	10-B10	12.986	EXTENSION, BODY UPR RR PNL LWR FRT	92-95	Y (EXC ZR1)	LH	10255085
	10-B10	12.986	EXTENSION, BODY UPR RR PNL LWR FRT	92-95	Y (EXC ZR1)	RH	10255086
	10-B10	12.986	EXTENSION, BODY UPR RR PNL LWR FRT	96	Y	LH	10255085
	10-B10	12.986	EXTENSION, BODY UPR RR PNL LWR FRT	96	Y	RH	10255086
25.	10-A9	12.116	MOLDING KIT, R/Q CTR FRT (PAINT TO MATCH)	92-95	Y (EXC ZR1)	LH	10174901
	10-A9	12.116	MOLDING KIT, R/Q CTR FRT (PAINT TO MATCH)	92-95	Y (EXC ZR1)	RH	10174902
	10-A9	12.116	MOLDING KIT, R/Q CTR FRT (PAINT TO MATCH)	96	Y	LH	10174901
	10-A9	12.116	MOLDING KIT, R/Q CTR FRT (PAINT TO MATCH)	96	Y	RH	10174902
26.	10-N27	15.024	HOOK, LUGG SHADE CVR	92-96	Y07	RH	14049016
	10-N27	15.024	HOOK, LUGG SHADE CVR (12.981)	92-96	Y07	LH	14049015
27.	10-N23	11.120	PANEL, RR HATCH WDO FRT TR (RED) (DRILL ST BELT ATCH HOLE AS REQ)	92	Y07 (73I)	LH	12508067

						1Y12-042	
		DISCON	PANEL, RR HATCH WDO FRT TR (RED) (LFSS ST BELT ATTACHMENT HOLE, DRILL AS REQ)	92	Y07 (73I)	RH	12509351
	10-N23	11.120	PANEL, RR HATCH WDO FRT TR (BLACK) (DRILL ST BELT ATCH HOLE AS REQ)	92-93	Y07 (10I, 19I)	LH	12508061
	10-N23	11.120	PANEL, RR HATCH WDO FRT TR (BLACK) (DRILL ST BELT ATCH HOLE AS REQ)	92-93	Y07 (10I, 19I)	RH	12509348
	10-N23	11.120	PANEL, RR HATCH WDO FRT TR (BEIGE)	92-93	Y07 (64I)	RH	12509353
	10-N23	11.120	PANEL, RR HATCH WDO FRT TR (GRAY)	92-93	Y07 (14I)	RH	12509354
	10-N23	11.120	PANEL, RR HATCH WDO FRT TR (BEIGE)	92-93	Y07 (64I)	LH	12509714
	10-N23	11.120	PANEL, RR HATCH WDO FRT TR (GRAY)	92-93	Y07 (14I)	LH	12509715
	10-N23	11.120	PANEL, RR HATCH WDO FRT TR (RED)	93	Y07 (79I)	RH	10199558
	10-N23	11.120	PANEL, RR HATCH WDO FRT TR (RED)	93	Y07 (79I)	LH	10199559
		DISCON	PANEL, RR HATCH WDO FRT TR (RED)	93	Y07 (70I)	RH	10199724
		DISCON	PANEL, RR HATCH WDO FRT TR (RED)	93	Y07 (70I)	LH	10199725
	10-N23	11.120	PANEL, RR HATCH WDO FRT TR (BLACK) (DRILL ST BELT ATCH HOLE AS REQ)	94-96	Y07 (14I, 19I, 64I, 70I)	LH	12508061
	10-N23	11.120	PANEL, RR HATCH WDO FRT TR (BLACK) (DRILL ST BELT ATCH HOLE AS REQ)	94-96	Y07 (14I, 19I, 64I, 70I)	RH	12509348
28.	10-N22	11.089	WINDLACE, R/CMPT L/WDO FRT TR PNL (W/THREE LARGE HOLES AT ENDS)	92-96	Y07	1	10104026
29.	10-A18	12.810	RETAINER, RF LIFT OFF PNL/WDO RR W/STR (TO W/STR MLDG) (W/SEAL STRP)	92-96	Y07	RH	14049248
	10-A18	12.810	RETAINER, RF LIFT OFF PNL/WDO RR W/STR (TO W/STR MLDG) (W/SEAL STRP)	92-96	Y07	LH	14049247
30.	10-A18	12.810	RETAINER, RF LIFT OFF PNL/WDO RR W/STR (PUSH IN) (FULL FLDG) (10.695)	92-96	Y07	2	8731909
31.	10-B3	12.945	BUMPER, F/TNK FIL DR (FRT) (RR) (PART OF 5)	92-96	Y	2	12521930
	10-B3	12.945	BUMPER, F/TNK FIL DR (RR) (RR) (PART OF 5)	92-96	Y	4	10280811
32.	10-N27	15.024	BUMPER, LUGG SHADE HDL (PART OF 21) (12.986)	92-96	Y07	3	365641
33.		DISCON	HANDLE, R/FLR COMPT DR (COGNAC)	92	Y (73I)	1	10132958
	10-B7	12.981	HANDLE, R/FLR COMPT DR (BLACK)	92-93	Y (10I, 19I)	1	10132960
	10-B7	12.981	HANDLE, R/FLR COMPT DR (BEIGE)	92-96	Y (64I)	1	10175645
	10-B7	12.981	HANDLE, R/FLR COMPT DR (GRAY)	92-96	Y (14I)	1	10175646

© 2000 GENERAL MOTORS SERVICE PARTS OPERATIONS-CHEVROLET-14Y

								1Y12-042
	10-B7	12.981	HANDLE, R/FLR COMPT DR (RED)	93	Y (79I)	1	10199517
	10-B7	12.981	HANDLE, R/FLR COMPT DR (RED)	93-95	Y (70I)	1	10199569
	10-B7	12.981	HANDLE, R/FLR COMPT DR (BLACK)	94-96	Y (19I)	1	10132960
	10-B7	12.981	HANDLE, R/FLR COMPT DR (RED)	96	Y (70I) (EXC Z16)	1	10199569
34.		8.915	NUT, CONICAL SPR WA, M5X.8, 15OD, 9 ZF (A/CL INT SCOOP) ..	92-96	Y	2	11516066
35.		N.S.	PANEL, RR UPR BODY LWR (PART OF 23)		.....		
36.		8.977	SCREW, M4.2X1.41X25 OV HD C/R ORG BLK (RR HATCH WDO FRT TR PNL) (R/CMPT L/WDO) (POSN #2)	92-96	.....	10	11503566
37.		8.977	SCREW, M4.2X1.41X25 OV HD C/R ORG BLK (R/CMPT L/WDO SI TR PNL)	92-96	.....	4	11503566
38.		8.977	SCREW, M4.2X1.41X16 OV CSK TR HD C/R TAP, PEOR (RR HATCH WDO FRT TR PNL) (R/CMPT L/WDO) (POSN #1) (16.650)	92-96	.....	2	11503446
39.		8.921	NUT, U-TYPE, 4.2X1.41, DIM A-15, DIM B-14 DIM C-8.65, 1050, PZOR (R/CMPT L/WDO SI TR PNL)	92-96	.....	4	12338121
40.		8.977	SCREW, M4.2X1.41X25 OV HD C/R ORG BLK (RR HATCH WDO RR TR PNL)	92-96	.....	6	11503566
41.		8.921	NUT, U-TYPE, 4.2X1.41, DIM A-15, DIM B-14 DIM C-8.65, 1050, PZOR (RR HATCH WDO FRT TR PNL)	92-96	.....	9	12338121

RPO DEFINITIONS

LT1 – ENGINE-GAS, 8 CYL, 5.7L(5.7P),MFI,HO
LT4 – ENGINE GAS, 8 CYL, 5.7L, MFI, HIGH OUTPUT
LT5 – ENGINE,5.7L(5.7J),TPI
NM8 – EMISSION SYSTEM,LEADED FUEL(EXPORT)
T90 – LAMP,SIGNALING AND MARKER(EXPORT)
ZR1 – PACKAGE,SPECIAL PERFORMANCE COUPE(1YY07 + ZR1 == 1YZ07)
Z15 – APPEARANCE PACKAGE,COLLECTORS EDITION
Z16 – APPEARANCE PACKAGE,GRAND SPORT EDITION
Z25 – APPEARANCE PACKAGE 40TH ANNIVERSARY(LIMITED EDITION)
Z4Z – MERCHANDISED PKG INDY PACE CAR
10I – INTERIOR TRIM– ARCTIC WHITE
14I – INTERIOR TRIM LT GRAY
19I – INTERIOR TRIM,BLACK
64I – INTERIOR TRIM,LIGHT BEIGE
70I – INTERIOR TRIM,TORCH RED
73I – INTERIOR TRIM,FLAME RED
79I – INTERIOR TRIM,RUBY RED

© 2000 GENERAL MOTORS SERVICE PARTS OPERATIONS-CHEVROLET-14Y

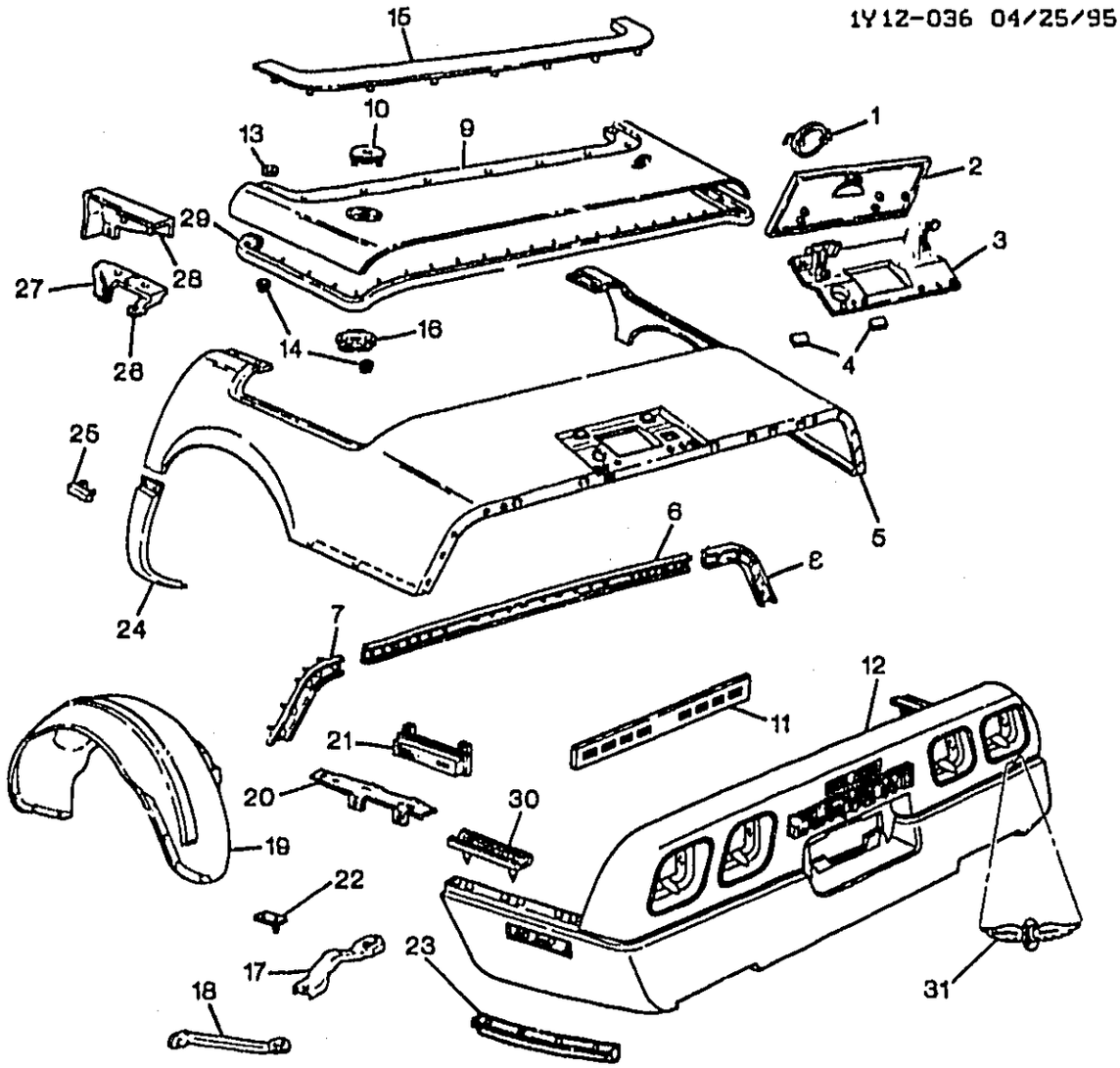

1Y12-036

1993-1996 Y67 BODY/REAR OUTER

1.	10-B3	12.945	EMBLEM, F/TNK FIL DR	93	Y (Z25)	1	10198700
	10-B3	12.945	EMBLEM, F/TNK FIL DR (BLACK)	93	Y (EXC Z25)	1	10209061
	10-B3	12.945	EMBLEM, F/TNK FIL DR (BLACK)	94	Y	1	10209061
	10-B3	12.945	EMBLEM, F/TNK FIL DR	95	Y (Z4Z)	1	10198700
	10-B3	12.945	EMBLEM, F/TNK FIL DR (BLACK)	95	Y (EXC Z4Z)	1	10209061
	10-B3	12.945	EMBLEM, F/TNK FIL DR	96	Y (Z16)	1	10198700
	10-B3	12.945	EMBLEM, F/TNK FIL DR (BLACK)	96	Y (EXC Z15, Z16)	1	10209061
	10-B3	12.945	EMBLEM, F/TNK FIL DR (COLLECTOR EDITION)	96	Y (Z15)	1	10254345
2.	10-B3	12.945	DOOR, F/TNK FIL	93-96	Y67	1	10107910
3.	10-B3	12.945	BEZEL, F/TNK FIL DR (W/UNLEADED FUEL LABEL)	93	Y67	1	10125967
	10-B3	12.945	BEZEL, F/TNK FIL DR (W/UNLEADED FUEL LABEL)	94	Y67 (EXC NM8)	1	10125967
	10-B3	12.945	BEZEL, F/TNK FIL DR (W/UNLEADED FUEL LABEL)	95	Y67 (LT1) (EXC NM8) ..	1	10125967

© 2000 GENERAL MOTORS SERVICE PARTS OPERATIONS-CHEVROLET-14Y

							1Y12-036
	10-B3	12.945	BEZEL, F/TNK FIL DR (W/UNLEADED FUEL LABEL)	96	Y67 (LT4)	1	10271452
4.	10-B3	12.945	SEAL, F/TNK FIL DR BZL NUT (9.665)	93-96	Y	AR	14064578
5.	10-A27	12.940	PANEL, BODY UPR RR (12.985) .	93-96	Y67	1	14092651
6.	10-N5	7.831	RETAINER, R/END FASCIA UPR CTR	93-95	Y (EXC ZR1)	1	14046629
	10-N5	7.831	RETAINER, R/END FASCIA UPR CTR	96	Y	1	14046629
7.	10-N5	7.831	RETAINER, R/END FASCIA UPR OTR (4 STUDS)	93-95	Y (EXC ZR1)	LH	10272907
	10-N5	7.831	RETAINER, R/END FASCIA UPR OTR (4 STUDS)	96	Y	LH	10272907
8.	10-N5	7.831	RETAINER, R/END FASCIA UPR CTR (4 STUDS)	93-95	Y (EXC ZR1)	RH	10272908
	10-N5	7.831	RETAINER, R/END FASCIA UPR OTR (4 STUDS)	96	Y	RH	10272908
9.	10-A10	12.170	LID, F/TOP STOW COMPT	93-96	Y67	1	10276994
10.	10-N24	14.340	BEZEL, F/TOP RR LAT	93-96	Y67	1	10107833
11.	10-N5	7.831	REINFORCEMENT, R/END FASCIA LWR CTR	93-96	Y	1	10132965
12.	10-N5	7.831	FASCIA, R/END	93	Y (EXC ZR1)	1	10135972
	10-N5	7.831	FASCIA, R/END	94-95	Y (EXC T90, ZR1)	1	10135972
	10-N5	7.831	FASCIA, R/END	96	Y	1	10135972
	10-N5	7.831	FASCIA, R/END	94	Y (T90) (EXC ZR1) (EXPORT)	1	10204700
	10-N5	7.831	FASCIA, R/END	95	Y (T90) (EXC ZR1) (EXPORT)	1	10261523
	10-N5	7.831	FASCIA, R/END	96	Y (T90) (EXPORT)	1	10261523
13.		N.S.	SPACER, F/TOP STOW COMPT LID T/PNL		.....		
14.		8.917	NUT, HEX W/CON WA M6X1X5.5 (9) 7111M 16-OD	93-96	.....	AR	11516793
15.		DISCON	PANEL, F/TOP STOW COMPT LID TR (WHITE)	93	Y67 (10I)	1	10198711
	10-A10	12.170	PANEL, F/TOP STOW COMPT LID TR (GRAY)	93-96	Y67 (14I)	1	10281069
	10-A10	12.170	PANEL, F/TOP STOW COMPT LID TR (BEIGE)	93-96	Y67 (64I)	1	10281071
		DISCON	PANEL, F/TOP STOW COMPT LID TR (RED)	93	Y67 (79I)	1	10198716
	10-A10	12.170	PANEL, F/TOP STOW COMPT LID TR (BLACK)	93-96	Y67 (19I)	1	10281070
	10-A10	12.170	PANEL, F/TOP STOW COMPT LID TR (RED)	93-96	Y67 (70I)	1	10281072
16.	10-N24	14.340	LATCH, F/TOP RR	93-96	Y67	2	10198616
17.	10-B10	12.8[illegible]	SUPPORT, BODY UPR RR PNL ..	93-96	Y67	2	10198696
18.	10-B2	12.944	BRACE, RR W/H PNL LNR RR ...	93-95	Y (EXC ZR1)	LH	10051887
	10-B2	12.944	BRACE, RR W/H PNL LNR RR ...	93-95	Y (EXC ZR1)	RH	10051888
	10-B2	12.944	BRACE, RR W/H PNL LNR RR ...	96	Y	LH	10051887
	10-B2	12.944	BRACE, RR W/H PNL LNR RR ...	96	Y	RH	10051888
19.	10-B2	12.944	PANEL, RR W/H	93-95	Y (EXC ZR1)	LH	10135987
	10-B2	12.944	PANEL, RR W/H	93-95	Y (EXC ZR1)	RH	10135988
	10-B2	12.944	PANEL, RR W/H	96	Y	LH	10135987
	10-B2	12.944	PANEL, RR W/H	96	Y	RH	10135988
20.	10-N5	7.831	RETAINER, R/END FASCIA SI CTR	93	Y (EXC ZR1)	LH	10149213
	10-N5	7.831	RETAINER, R/END FASCIA SI CTR	93	Y (EXC ZR1)	RH	10149214

© 2000 GENERAL MOTORS SERVICE PARTS OPERATIONS-CHEVROLET-14Y

							1Y12-036
	10-N5	7.831	RETAINER, R/END FASCIA SI CTR	94-95	Y (EXC T90, ZR1)	LH	10149213
	10-N5	7.831	RETAINER, R/END FASCIA SI CTR	94-95	Y (EXC T90, ZR1)	RH	10149214
	10-N5	7.831	RETAINER, R/END FASCIA SI CTR	96	Y (EXC T90)	LH	10149213
	10-N5	7.831	RETAINER, R/END FASCIA SI CTR	96	Y (EXC T90)	RH	10149214
	10-N5	7.831	RETAINER, R/END FASCIA SI CTR	94-96	Y (T90) (EXPORT)	LH	10149275
	10-N5	7.831	RETAINER, R/END FASCIA SI CTR	94-96	Y (T90) (EXPORT)	RH	10149276
21.	10-M25	2.575	LAMP, RR SI MKR & SI B/U	93	Y	LH	16514357
	10-M25	2.575	LAMP, RR SI MKR & SI B/U	93	Y	RH	16514358
	10-M25	2.575	LAMP, RR SI MKR & SI B/U	94-96	Y (EXC T90)	LH	16514357
	10-M25	2.697	LAMP, RR SI MKR & SI B/U (2.575)	94-96	Y (EXC T90)	LH	16514357
	10-M25	2.575	LAMP, RR SI MKR & SI B/U	94-96	Y (EXC T90)	RH	16514358
	10-M25	2.697	LAMP, RR SI MKR & SI B/U (2.575)	94-96	Y (EXC T90)	RH	16514358
22.	10-B4	12.966	PLATE, BODY UPR RR PNL SUPT ANC (12.986)	93-96	Y	2	14058658
23.	10-N5	7.831	REINFORCEMENT, R/END FASCIA SI LWR (OTR)	93-96	Y	2	14104202
24.	10-B10	12.986	EXTENSION, BODY UPR RR PNL LWR FRT	93-95	Y (EXC ZR1)	LH	10255085
	10-B10	12.986	EXTENSION, BODY UPR RR PNL LWR FRT	93-95	Y (EXC ZR1)	RH	10255086
	10-B10	12.986	EXTENSION, BODY UPR RR PNL LWR FRT	96	Y	LH	10255085
	10-B10	12.986	EXTENSION, BODY UPR RR PNL LWR FRT	96	Y	RH	10255086
25.	10-A9	12.116	MOLDING KIT, R/Q CTR FRT (PAINT TO MATCH)	93-95	Y (EXC ZR1)	LH	10174901
	10-A9	12.116	MOLDING KIT, R/Q CTR FRT (PAINT TO MATCH)	93-95	Y (EXC ZR1)	RH	10174902
	10-A9	12.116	MOLDING KIT, R/Q CTR FRT (PAINT TO MATCH)	96	Y	LH	10174901
	10-A9	12.116	MOLDING KIT, R/Q CTR FRT (PAINT TO MATCH)	96	Y	RH	10174902
		8.915	NUT, CONICAL SPR WA, M5X.8, 15OD, 9 ZF	93-96		AR	11516066
26.	10-A28	12.942	SEAL, FRT S/D L/PLR UPR (RR)	93-95	Y67	LH	14100365
	10-A28	12.942	SEAL, FRT S/D L/PLR UPR (RR)	93-95	Y67	RH	14100366
27.	10-A28	12.942	SEAL, FRT S/D L/PLR UPR (FRT)	93-95	Y67	LH	14092683
	10-A28	12.942	SEAL, FRT S/D L/PLR UPR (FRT)	93-95	Y67	RH	14092684
28.	10-N24	14.731	PANEL, BODY L/PLR UPR TR (BLACK)	93	Y67 (19I)	RH	10103850
	10-N24	14.731	PANEL, BODY L/PLR UPR TR (BLACK)	93	Y67 (19I)	LH	10103851
		DISCON	PANEL, BODY L/PLR UPR TR (WHITE)	93	Y67 (10I)	LH	10167117
	10-N24	14.731	PANEL, BODY L/PLR UPR TR (WHITE)	93	Y67 (10I)	RH	10167118
	10-N24	14.731	PANEL, BODY L/PLR UPR TR (BEIGE)	93	Y67 (64I)	RH	10175618
	10-N24	14.731	PANEL, BODY L/PLR UPR TR (BEIGE)	93	Y67 (64I)	LH	10175619

© 2000 GENERAL MOTORS SERVICE PARTS OPERATIONS-CHEVROLET-14Y

								1Y12-036
		DISCON	PANEL, BODY L/PLR UPR TR (GRAY)	93	Y67 (14I)	RH	10175620
		DISCON	PANEL, BODY L/PLR UPR TR (GRAY)	93	Y67 (14I)	LH	10175621
	10-N24	14.731	PANEL, BODY L/PLR UPR TR (RED)	93	Y67 (79I)	RH	10199556
		DISCON	PANEL, BODY L/PLR UPR TR (RED)	93	Y67 (79I)	LH	10199557
		DISCON	PANEL, BODY L/PLR UPR TR (RED)	93	Y67 (70I)	RH	10199722
		DISCON	PANEL, BODY L/PLR UPR TR (RED)	93	Y67 (70I)	LH	10199723
	10-N24	14.731	PANEL, BODY L/PLR UPP TR (BLACK)	94-96	Y67 (19I)	LH	10212821
	10-N24	14.731	PANEL, BODY L/PLR UPR TR (BLACK)	94-96	Y67 (19I)	RH	10212822
	10-N24	14.731	PANEL, BODY L/PLR UPR TR (RED)	94-96	Y67 (70I)	LH	10212825
	10-N24	14.731	PANEL, BODY L/PLR UPR TR (RED)	94-96	Y67 (70I)	RH	10212826
	10-N24	14.731	PANEL, BODY L/PLR UPR TR (BEIGE)	94-96	Y67 (64I)	LH	10212827
	10-N24	14.731	PANEL, BODY L/PLR UPR TR (BEIGE)	94-96	Y67 (64I)	RH	10212828
	10-N24	14.731	PANEL, BODY L/PLR UPR TR (GRAY)	94-96	Y67 (14I)	LH	10212829
	10-N24	14.731	PANEL, BODY L/PLR UPR TR (GRAY)	94-96	Y67 (14I)	RH	10212830
29.	10-A10	12.170	WEATHERSTRIP, F/TOP STOW COMPT LID	93-96	Y67	1	14092675
30.	10-N5	7.831	RETAINER, R/END FASCIA SI CTR	93	Y (EXC ZR1)	LH	10149213
	10-N5	7.831	RETAINER, R/END FASCIA SI CTR	93	Y (EXC ZR1)	RH	10149214
	10-N5	7.831	RETAINER, R/END FASCIA SI CTR	94-95	Y (EXC T90, ZR1)	LH	10149213
	10-N5	7.831	RETAINER, R/END FASCIA SI CTR	94-95	Y (EXC T90, ZR1)	RH	10149214
	10-N5	7.831	RETAINER, R/END FASCIA SI CTR	94-95	Y (T90) (EXPORT)	LH	10149275
	10-N5	7.831	RETAINER, R/END FASCIA SI CTR	94-95	Y (T90) (EXPORT)	RH	10149276
31.		DISCON	PLATE, R/END FASCIA NA (INDY MTR SPDWY, WINGS & WHL)	95	Y (Z4Z)	1	10278422

RPO DEFINITIONS

LT1 – ENGINE–GAS, 8 CYL, 5.7L(5.7P),MFI,HO
LT4 – ENGINE GAS, 8 CYL, 5.7L, MFI, HIGH OUTPUT
NM8 – EMISSION SYSTEM,LEADED FUEL(EXPORT)
T90 – LAMP,SIGNALING AND MARKER(EXPORT)
ZR1 – PACKAGE,SPECIAL PERFORMANCE COUPE(1YY07 + ZR1 == 1YZ07)
Z15 – APPEARANCE PACKAGE,COLLECTORS EDITION
Z16 – APPEARANCE PACKAGE,GRAND SPORT EDITION
Z25 – APPEARANCE PACKAGE 40TH ANNIVERSARY(LIMITED EDITION)
Z4Z – MERCHANDISED PKG INDY PACE CAR
10I – INTERIOR TRIM– ARCTIC WHITE
14I – INTERIOR TRIM LT GRAY
19I – INTERIOR TRIM,BLACK
64I – INTERIOR TRIM,LIGHT BEIGE
70I – INTERIOR TRIM,TORCH RED

© 2000 GENERAL MOTORS SERVICE PARTS OPERATIONS–CHEVROLET–14Y

© 2000 GENERAL MOTORS SERVICE PARTS OPERATIONS–CHEVROLET–14Y

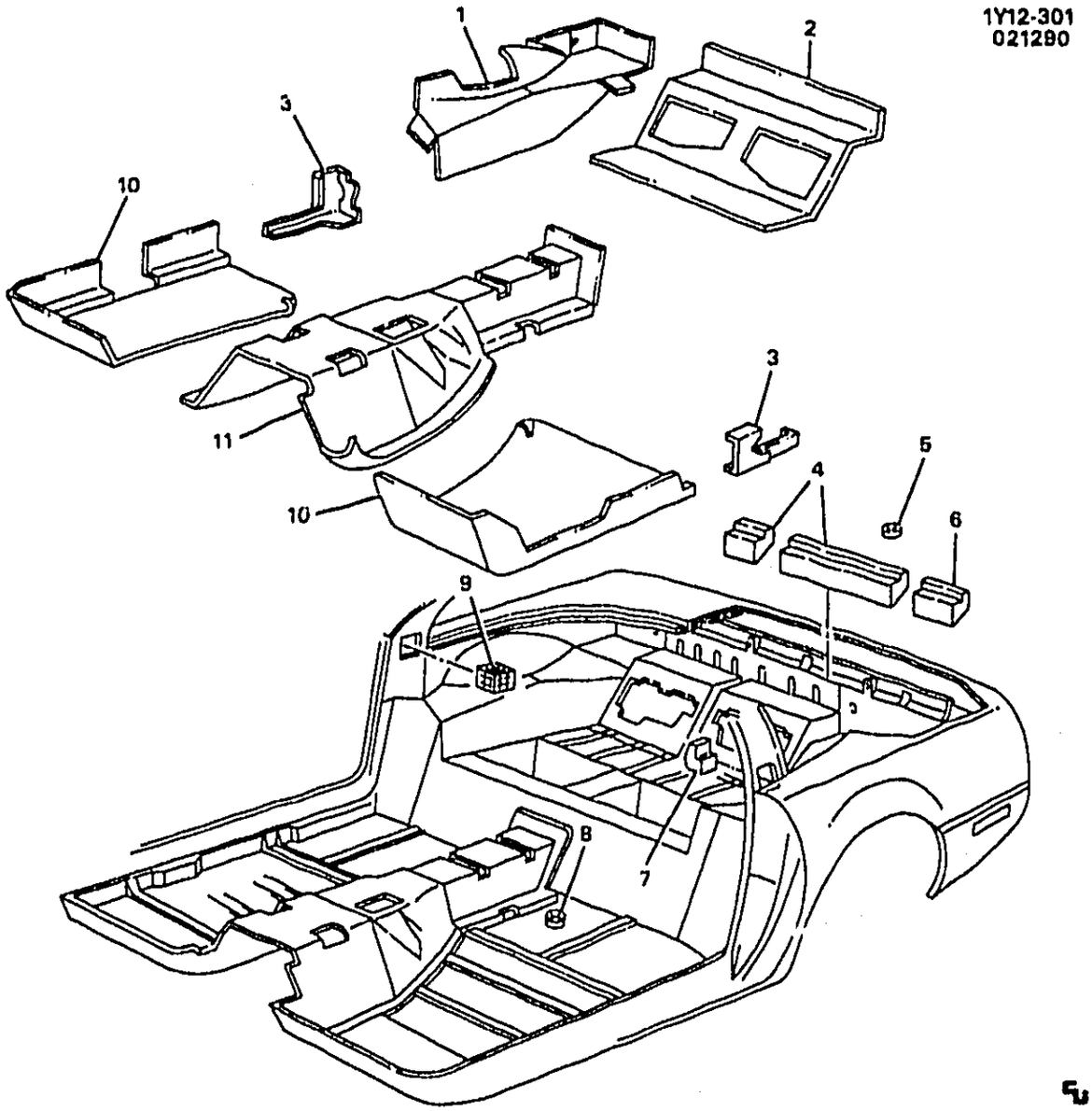

1Y12-301

1990-1991 Y67 INSULATOR/BODY

1.	10-B7	12.981	INSULATOR, R/FLR PNL	90-91	Y67	RH	10193758
	10-B7	12.981	INSULATOR, R/FLR PNL (LWR) ..	90-91	Y67	1	14092738
	10-B7	12.981	INSULATOR, R/FLR PNL (UPR) ..	90-91	Y67	1	14092737
2.	10-B7	12.981	INSULATOR, R/FLR PNL CTR ...	90-91	Y67	1	10146480
3.	10-B7	12.981	INSULATOR, INR INTER SI MBR .	90-91	Y	RH	14064514
	10-B7	12.981	INSULATOR, INR INTER SI MBR .	90-91	Y	LH	10137253
	10-N28	15.492	INSULATOR, FLR INTER (4 1/4"X7 1/2") (TRIM AS REQ'D) ...	90-91	Y67	AR	11515174
4.	10-B5	12.980	INSULATOR, FLR RR PNL UPR (INBOARD)	90-91	Y67	2	10103848
5.	10-B7	12.981	INSULATOR, R/FLR PNL (UPR) ..	90-91	Y67	1	14092737
6.		DISCON	INSULATOR, FLR RR PNL UPR (OUTBOARD)	90-91	Y67	2	10103849
7.	10-B5	12.980	INSULATOR, FLR RR PNL UPR (SI)	90-91	Y67	2	10103702
8.	10-B7	12.981	INSULATOR, R/FLR PNL (LWR) ..	90-91	Y67	1	14092738

© 2000 GENERAL MOTORS SERVICE PARTS OPERATIONS-CHEVROLET-14Y

							1Y12-301
9.	10-A28	12.942	INSULATOR, BODY L/PLR (POSN #2)	90-91	Y67	2	14065008
10.	10-B5	12.980	INSULATOR, FLR (15.286)	90-91	Y	LH	10086163
	10-B5	12.980	INSULATOR, FLR (15.286)	90-91	Y	RH	10086164
11.	10-B5	12.980	INSULATOR, FLR PNL FRT CTR .	90-91	Y (FE1, FE7)	1	10193706

RPO DEFINITIONS

FE1 – SUSPENSION SYSTEM,SOFT RIDE

FE7 – SUSPENSION SYSTEM,FRONT AND REAR,HEAVY DUTY(USED WITH PERFORMANCE HANDLING PACKAGE Z51)

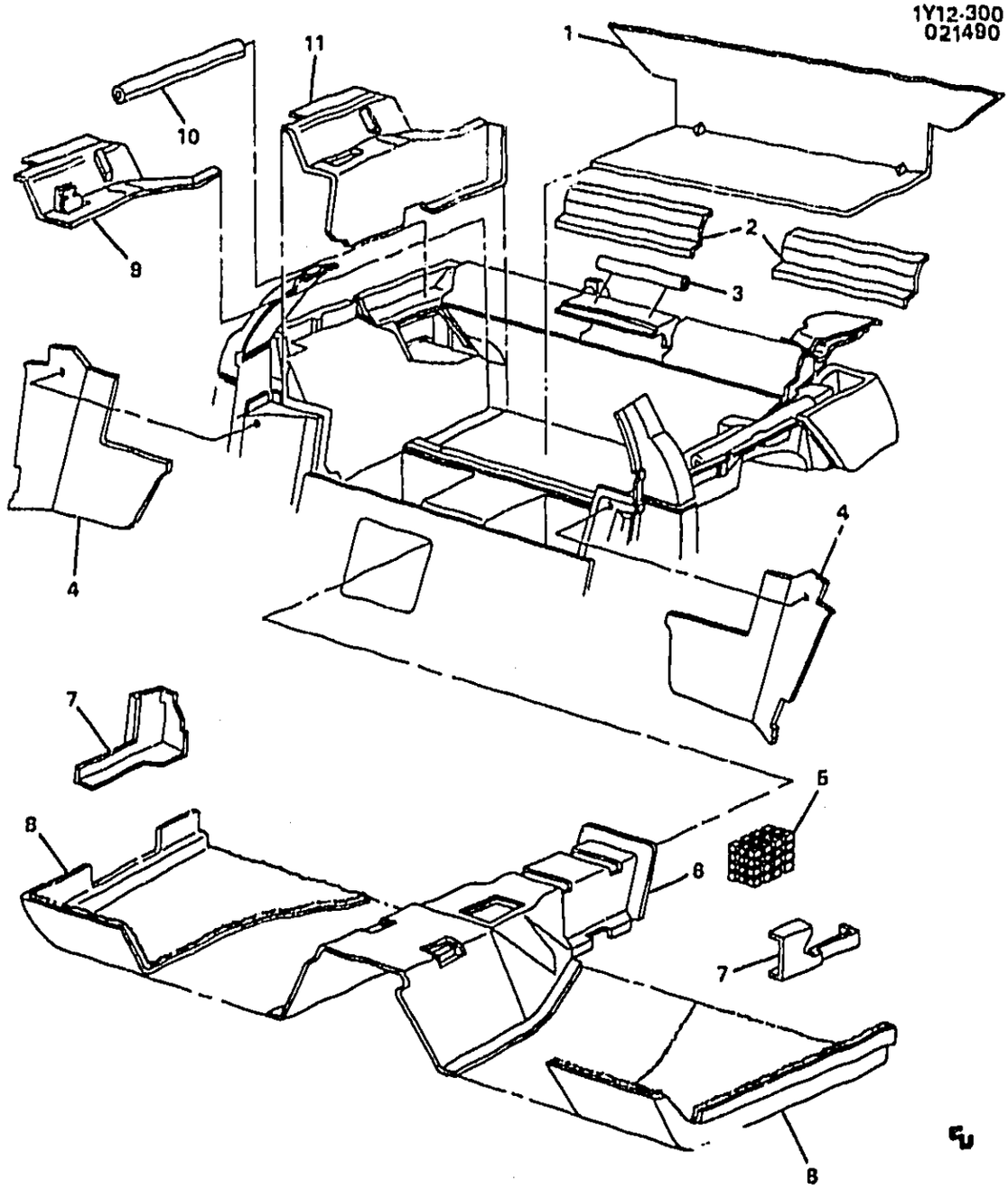

1Y12-300

1990-1996 Y07 INSULATOR/BODY

1.	10-B7	12.981	INSULATOR, R/FLR PNL (12.980)	90-95	Y07	LH	10054603
	10-B7	12.981	INSULATOR, R/FLR PNL (12.980)	90-96	Y07	RH	10054604
	10-B7	12.981	INSULATOR, R/FLR PNL	96	Y07	LH	10282261
2.	10-B5	12.980	INSULATOR, FLR RR PNL UPR (POSN #2)	90-95	Y07	2	10132901
3.	10-B5	12.980	INSULATOR, FLR RR PNL UPR (CTR) (POSN #1)	93-94	Y07	1	14090612
4.	10-B5	12.980	INSULATOR, INTER FLR PNL EXTN	96	Y07	LH	14049195
	10-B5	12.980	INSULATOR, INTER FLR PNL EXTN (TRIM AS REQD)	90-95	Y	1	14049195
5.	10-A28	12.942	INSULATOR, FRT S/D L/PLR	90-91	Y07	2	10137202

© 2000 GENERAL MOTORS SERVICE PARTS OPERATIONS-CHEVROLET-14Y

							1Y12-300
	10-A28	12.942	INSULATOR, BODY L/PLR (POS #3) (4 1/4"X7 1/2") (TRIM AS REQ'D) (15.492)	95-96	Y	2	11515174
	10-A28	12.942	INSULATOR, BODY L/PLR (POSN #1)	90-96	Y07	2	10137202
6.	10-B5	12.980	INSULATOR, FLR PNL FRT CTR .	90-91	Y (FE1, FE7)	1	10193706
	10-B5	12.980	INSULATOR, FLR PNL FRT CTR .	92-93	Y	1	10193706
	10-B5	12.980	INSULATOR, FLR PNL FRT CTR .	92-96	Y	1	10284169
7.	10-B7	12.981	INSULATOR, INR INTER SI MBR .	90-96	Y	RH	14064514
	10-B7	12.981	INSULATOR, INR INTER SI MBR .	90-96	Y	LH	10137253
8.	10-B5	12.980	INSULATOR, FLR (15.286)	90-96	Y	LH	10086163
	10-B5	12.980	INSULATOR, FLR (15.286)	90-96	Y	RH	10086164
9.	10-B5	12.980	INSULATOR, R/FLR PNL RR	90-91	Y07 (FE1, FE7)	RH	10278111
	10-B5	12.980	INSULATOR, R/FLR PNL RR	92	Y07	LH	10278111
	10-B5	12.980	INSULATOR, R/FLR PNL RR	93	Y07 (EXC ZR1)	LH	10278111
	10-B5	12.980	INSULATOR, R/FLR PNL RR	94-96	Y07	2	10278111
10.	10-B5	12.980	INSULATOR, FLR RR PNL UPR (SI) (POSN #3)	90-95	Y07	2	14091015
11.	10-B7	12.981	INSULATOR, R/FLR PNL (12.980)	90-95	Y07	LH	10054603
	10-B7	12.981	INSULATOR, R/FLR PNL (12.980)	90-96	Y07	RH	10054604
	10-B7	12.981	INSULATOR, R/FLR PNL	96	Y07	LH	10282261

RPO DEFINITIONS

FE1 – SUSPENSION SYSTEM,SOFT RIDE

FE7 – SUSPENSION SYSTEM,FRONT AND REAR,HEAVY DUTY(USED WITH PERFORMANCE HANDLING PACKAGE Z51)

ZR1 – PACKAGE,SPECIAL PERFORMANCE COUPE(1YY07 + ZR1 == 1YZ07)

© 2000 GENERAL MOTORS SERVICE PARTS OPERATIONS-CHEVROLET-14Y

MICROFICHE INDEX

GROUPS 12.000 THRU 13.000

FICHE 10 OF 11

GROUP	DESCRIPTION	STARTING GRID LOCATION PARTS	ILLUSTRATIONS
–	GENERAL INFORMATION	1–A2	1–G2
–	ALPHABETICAL INDEX	1–B13	N.A.
12.000	BODY MOLDINGS – SHEET METAL	10–A2	10–D2
13.000	BODY WIRING – VINYL TOP TRIM	10–C2	N.A.
–	OUT OF FICHE CALLS	N.A.	10–M22

10–11

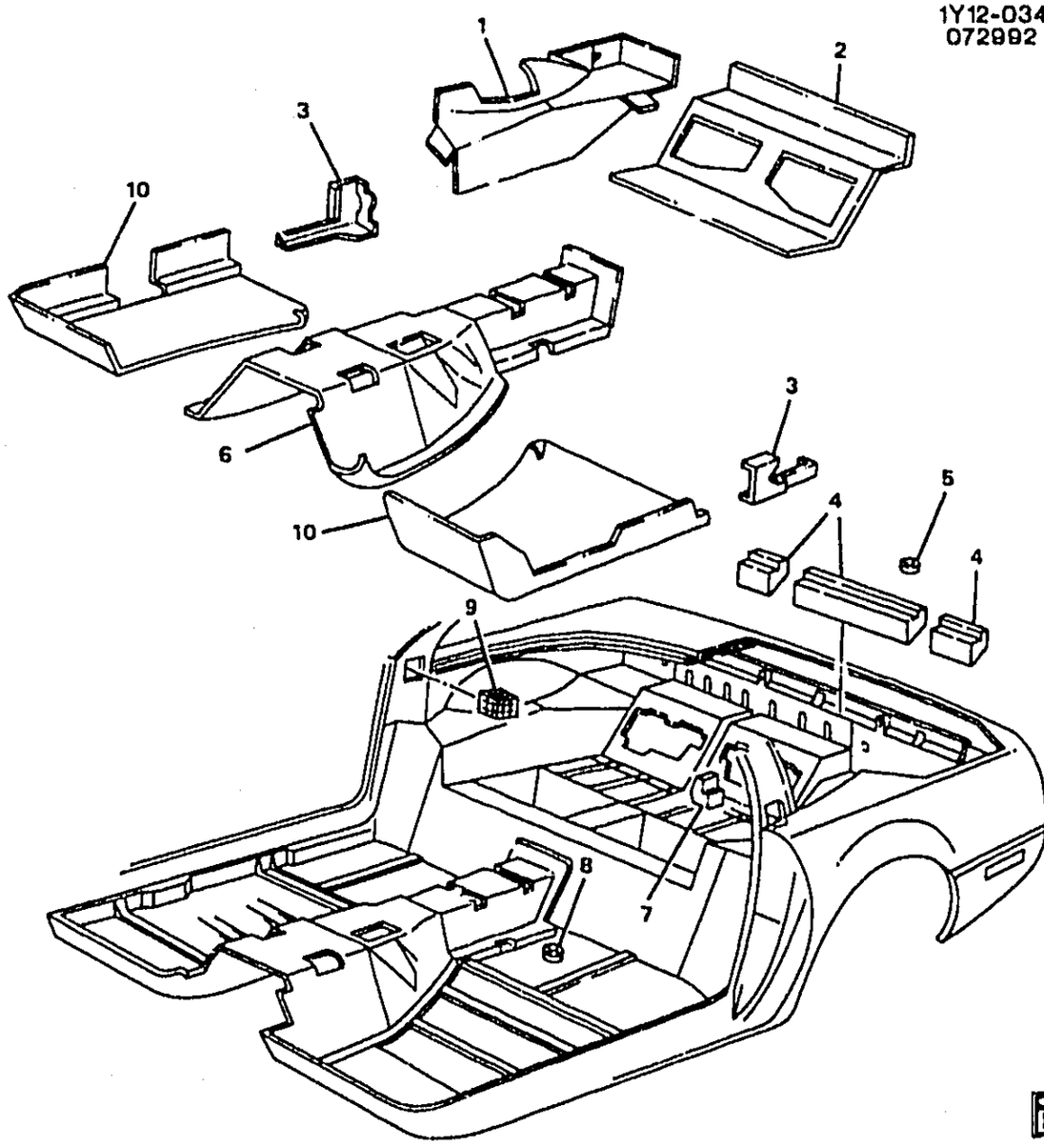

1Y12-034

1992-1996 Y67 INSULATOR/BODY

1.	10-B7	12.981	INSULATOR, R/FLR PNL	92-96	Y67	RH	10193758
	10-B7	12.981	INSULATOR, R/FLR PNL	92-95	Y67	LH	10193757
	10-B7	12.981	INSULATOR, R/FLR PNL	96	Y67	LH	10282262
2.	10-B7	12.981	INSULATOR, R/FLR PNL CTR ...	92-96	Y67	1	10146480
3.	10-B7	12.981	INSULATOR, INR INTER SI MBR .	92-96	Y	RH	14064514
	10-B7	12.981	INSULATOR, INR INTER SI MBR .	92-96	Y	LH	10137253
	10-N28	15.492	INSULATOR, FLR INTER (4 1/4"X7 1/2") (TRIM AS REQ'D) ...	92-96	Y67	AR	11515174
4.	10-B5	12.980	INSULATOR, FLR RR PNL UPR (INBOARD)	92-93	Y67	3	10103848
5.	10-B7	12.981	INSULATOR, R/FLR PNL (UPR) ..	92-93	Y67	1	14092737
6.	10-B5	12.980	INSULATOR, FLR PNL FRT CTR. .	92-93	Y	1	10193706
	10-B5	12.980	INSULATOR, FLR PNL FRT CTR .	92-96	Y	1	10284169
7.	10-B5	12.980	INSULATOR, FLR RR PNL UPR (SI)	92-93	Y67	2	10103702
8.	10-B7	12.981	INSULATOR, R/FLR PNL (LWR) ..	92-93	Y67	1	14092738

© 2000 GENERAL MOTORS SERVICE PARTS OPERATIONS-CHEVROLET-14Y

								1Y12-034
9.	10-A28	12.942	INSULATOR, BODY L/PLR (POS #3) (4 1/4"X7 1/2") (TRIM AS REQ'D) (15.492)	95-96	Y	2	11515174
	10-A28	12.942	INSULATOR, BODY L/PLR (POSN #2)	92-96	Y67	2	14065008
10.	10-B5	12.980	INSULATOR, FLR (15.286)	92-96	Y	LH	10086163
	10-B5	12.980	INSULATOR, FLR (15.286)	92-96	Y	RH	10086164

1Y12-005 09/29/97

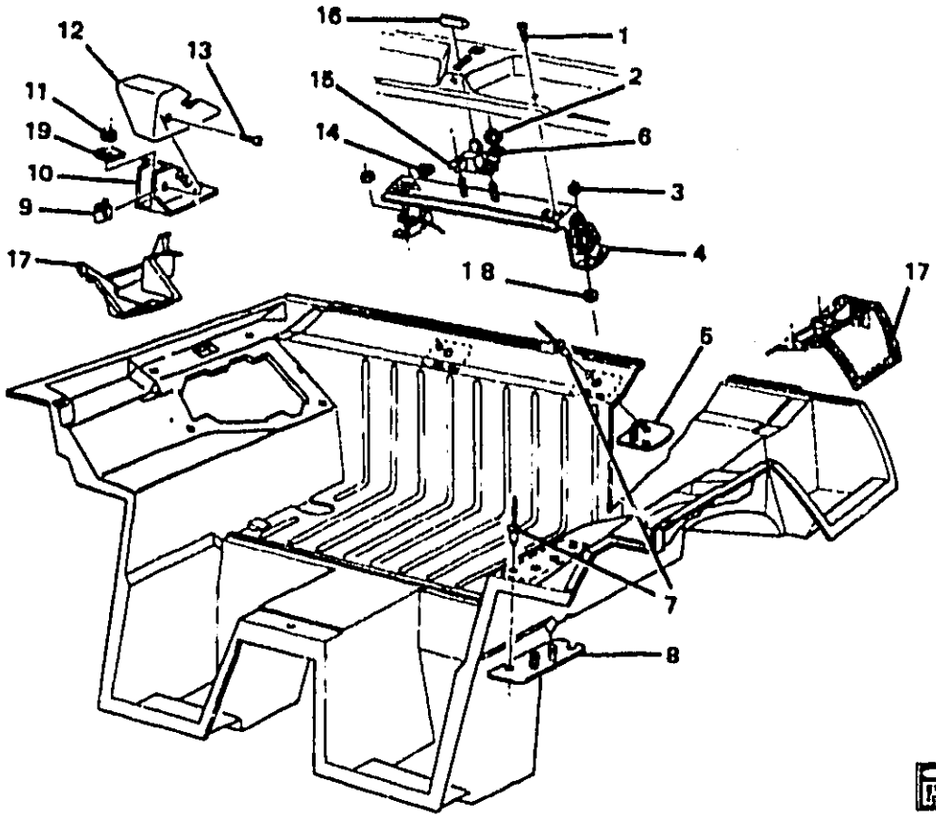

1Y12-005

1984-1989 Y07 COMPARTMENT/REAR STORAGE ROOF HARDWARE PANEL

1.		8.977	SCREW, M4.2X1.41X25 OV HD C/R ORG BLK (AR)	11503566
2.		8.917	NUT, HFH 6X1X7 SELF LK 14.2-OD (9) 7111M ALL MET PREV TORQ (AR)	11516075
3.		8.917	NUT, HEX W/CON WA M6X1X5.5 (9) 7111M 16-OD (AR)	11516793
4.	10-A18	12.810	BRACKET, RF PNL STOR RR	10256058
5.	10-A18	12.810	REINFORCEMENT, RF PNL STOR RR BRKT	14100260
6.		8.929	WASHER, M6.3X16.75X1.5 PH (AR)	11500322
7.		N.S.	RIVET, DOME HD BLIND	
8.	10-A18	12.810	REINFORCEMENT, FRT BRKT	10137201
9.		8.921	NUT, U-TYPE, 4.2X1.41, DIM A-15, DIM B-14 DIM C-8.65, 1050, PZOR (AR)	12338121
10.	10-A25	12.815	BRACKET, RF PNL STOR FRT ((IT MAY BE REQUIRED TO SHIM COVER TO BRACKET MOUNTING SCREWS)) (RH)	10242356
	10-A25	12.815	BRACKET, RF PNL STOR FRT ((IT MAY BE REQUIRED TO SHIM COVER TO BRACKET MOUNTING SCREWS)) (LH)	10242355
11.	10-A18	12.810	WASHER, RF LIFT OFF PNL/WDO STOW RR BRKT	14051129
12.	10-A18	12.810	COVER, FRT BRKT-RH	10074268
	10-A18	12.810	COVER, FRT BRKT-LH	10074267
13.		8.977	SCREW, M4.2-1.41X30 OV HD (AR)	11503409
14.		8.921	NUT, M4.2X1.4, 19.3X213.6.8.9 (AR) (AC-DELCO #15650655)	15650655
15.	10-A18	12.810	LATCH, RF LIFT OFF PNL/WDO STOW	14049200
16.	10-A18	12.810	HANDLE, RF LIFT OFF PNL/WDO STOW LAT	10248663
17.		DISCON	PANEL, RR FLR CLOSEOUT-RH	14104992
		DISCON	PANEL, RR FLR CLOSEOUT-LH	14104991
18.	10-A18	12.810	WASHER, RF LIFT OFF PNL/WDO RR LOCR BRKT	14038397
19.	10-A18	12.810	SHIM, RF LIFT OFF PNL/WDO RR LOCR BRKT	14051188

© 2000 GENERAL MOTORS SERVICE PARTS OPERATIONS-CHEVROLET-14Y

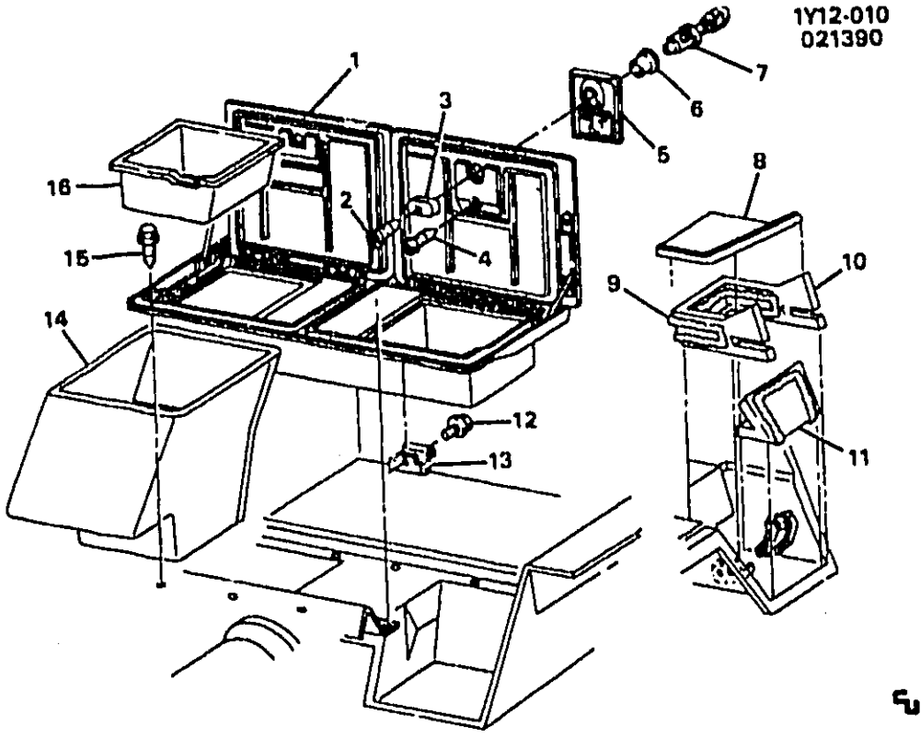

1Y12-010

1984-1989 Y07 COMPARTMENT/REAR STORAGE

1.	10-B7	12.981	DOOR, R/FLR COMPT (INCL 12)	10282260
2.		N.S.	BOLT, R/FLR COMPT DR LK CYL RET	
3.	10-B7	12.981	RETAINER, R/FLR COMPT DR LK CYL	3937912
4.		8.977	SCREW, HEX W/WA, M4.2X1.41X16, TAP, AB PT, 6010M, POR (AR)	25512804
5.		DISCON	HANDLE, FLR DR	14049096
	10-B7	12.981	HANDLE, R/FLR COMPT DR (73I)	
6.		N.S.	CASE, U/B COMPT LK	
7.	10-N20	10.266	LOCK PKG, U/B STOR COMPT (UNCODED) (1984-86) (B&S 609542-2)	14075365
		DISCON	CYLINDER, R/FLR COMPT DR LK (1987-89)	10074166
	10-N27	15.100	SHUTTER, QTR STOW COMPT LK CYL (CHROME)	12503694
	10-N27	15.100	SHUTTER, QTR STOW COMPT LK CYL (BLACK)	12503695
	10-A16	12.249	SPRING, R/CMPT LID LK CYL SHUTTER	12503691
8.		N.S.	INSULATOR, R/FLR COMPT (UPR)	
9.		N.S.	CEMENT, INSULATOR	
10.		N.S.	INSULATOR, R/FLR COMPT (RR)	
11.		N.S.	INSULATOR, R/FLR COMPT	
12.		8.977	SCREW, LG RND WA HD W/BLK NYL WA, 4.2X 1.41X13, 11-OD, DRILL PT, 6172, PEOR (PART OF 1) (AR)	10180421
13.	10-B7	12.981	STRIKER, FLR LK (1984-86)	14079326
14.	10-B7	12.981	COMPARTMENT, R/FLR (RH)	14065024
		DISCON	COMPARTMENT, FLR-LH (1984-85)	14065023
15.		8.977	SCREW, HWH, 9.2OD, 13.8 THD (AR)	16516859
16.	10-B7	12.981	TRAY, R/FLR COMPT (RH)	14058700
	10-B7	12.981	TRAY, FLR-LH	14058699

RPO DEFINITIONS
73I - INTERIOR TRIM,FLAME RED

© 2000 GENERAL MOTORS SERVICE PARTS OPERATIONS-CHEVROLET-14Y

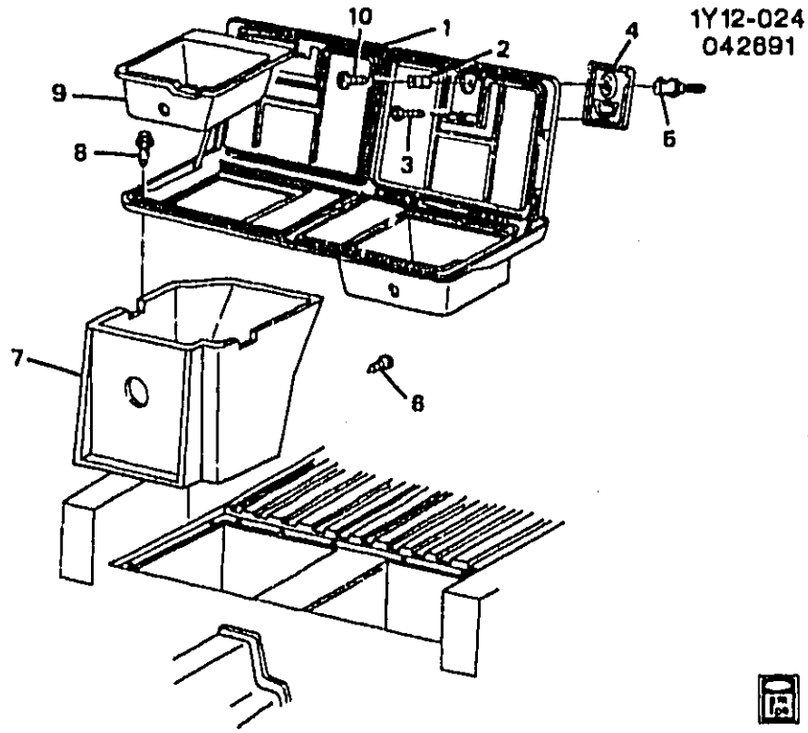

1Y12-024

1990-1992 Y67 COMPARTMENT/REAR STORAGE

1.	10-B7	12.981	DOOR, R/FLR COMPT (INCL 6)	90-91	Y	1	10282260
	10-B7	12.981	DOOR, R/FLR COMPT (INCL 6)	92	Y67	1	10282260
2.	10-B7	12.981	RETAINER, R/FLR COMPT DR LK CYL (10.267)	90-92	Y	2	3937912
3.		8.977	SCREW, HEX W/WA, M4.2X1.41X16, TAP, AB PT, 6010M, POR	90-92		AR	25512804
4.		DISCON	HANDLE, R/FLR COMPT DR (BLUE)	90-91	Y (22I)	2	10132956
		DISCON	HANDLE, R/FLR COMPT DR (COGNAC)	90-91	Y (60I)	2	10132957
		DISCON	HANDLE, R/FLR COMPT DR (GRAY)	90-91	Y (90I)	2	10132959
	10-B7	12.981	HANDLE, R/FLR COMPT DR (BLACK)	90-91	Y (19I)	2	10132960
		DISCON	HANDLE, R/FLR COMPT DR (COGNAC)	90-92	Y (73I)	1	10132958
	10-B7	12.981	HANDLE, R/FLR COMPT DR (BLACK)	92	Y (10I, 19I)	1	10132960
	10-B7	12.981	HANDLE, R/FLR COMPT DR (BEIGE)	92	Y (64I)	1	10175645
	10-B7	12.981	HANDLE, R/FLR COMPT DR (GRAY)	92	Y (14I)	1	10175646
5.		DISCON	CYLINDER, R/FLR COMPT DR LK (10.266)	90	Y	1	10074166
	10-B7	12.981	CYLINDER KIT, R/FLR COMPT DR LK (UNCODED)	91-92	Y	1	12507230
	10-A16	12.249	SPRING, E/GATE LK CYL SHUTTER (10.550)	90-92	Y	1	12503691

© 2000 GENERAL MOTORS SERVICE PARTS OPERATIONS-CHEVROLET-14Y

							1Y12–024
6.		8.977	SCREW, LG RND WA HD W/BLK NYL WA, 4.2X 1.41X13, 11–OD, DRILL PT, 6172, PEOR (PART OF 1)	90–92	.....	AR	10180421
7.		DISCON	COMPARTMENT, R/FLR (12.981)	90–92	Y67	1	10146483
8.		8.977	SCREW, HWH, 9.2OD, 13.8 THD .	90–92	.....	AR	16516859
9.	10–B7	12.981	TRAY, R/FLR COMPT	90–92	Y67	RH	10146484
		DISCON	TRAY, R/FLR COMPT	90–91	Y67	LH	10149259
10.		N.S.	BOLT, R/FLR COMPT DR LK CYL RET		.....		

RPO DEFINITIONS

101 – INTERIOR TRIM – ARCTIC WHITE
141 – INTERIOR TRIM LT GRAY
191 – INTERIOR TRIM,BLACK
221 – INTERIOR TRIM,DARK ROYAL BLUE
601 – INTERIOR TRIM,DARK COGNAC
641 – INTERIOR TRIM,LIGHT BEIGE
731 – INTERIOR TRIM,FLAME RED
901 – INTERIOR TRIM,SMOKE GRAY

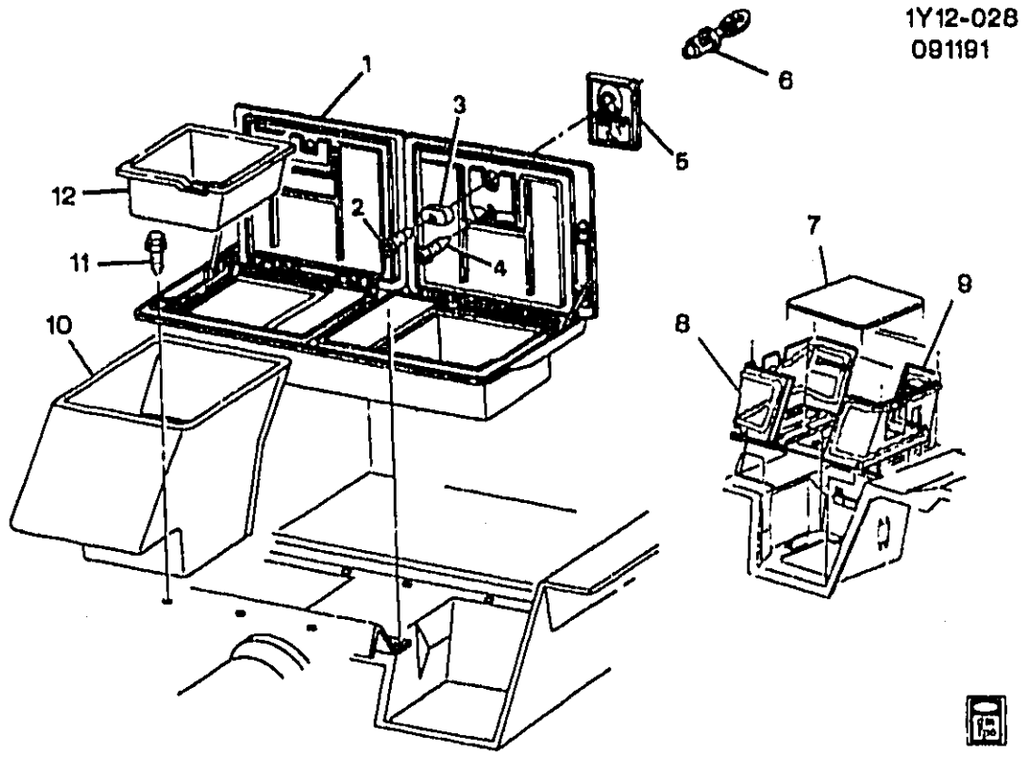

1990–1993 Y07 COMPARTMENT/REAR STORAGE

1.	10–B7	12.981	DOOR, R/FLR COMPT (INCL 4) ..	90–91	Y	1	10282260
	10–B7	12.981	DOOR, R/FLR COMPT (INCL 4) ..	92–93	Y07 (FE1, FE7)	1	10282260
2.		N.S.	BOLT, R/FLR COMPT DR LK CYL RET		.....		
3.	10–B7	12.981	RETAINER, R/FLR COMPT DR LK CYL (10.267)	90–93	Y	2	3937912
4.		8.977	SCREW, LG RND WA HD W/BLK NYL WA, 4.2X 1.41X13, 11–OD, DRILL PT, 6172, PEOR (PART OF 1)	90–93	.....	AR	10180421
5.		DISCON	HANDLE, R/FLR COMPT DR (BLUE)	90–91	Y (22I)	2	10132956
		DISCON	HANDLE, R/FLR COMPT DR (COGNAC)	90–91	Y (60I)	2	10132957
		DISCON	HANDLE, R/FLR COMPT DR (COGNAC)	90–92	Y (73I)	2	10132958
		DISCON	HANDLE, R/FLR COMPT DR (GRAY)	90–91	Y (90I)	2	10132959
	10–B7	12.981	HANDLE, R/FLR COMPT DR (BLACK)	90–91	Y (19I)	2	10132960
	10–B7	12.981	HANDLE, R/FLR COMPT DR (BLACK)	92–93	Y (10I, 19I)	1	10132960
	10–B7	12.981	HANDLE, R/FLR COMPT DR (BEIGE)	92–93	Y (64I)	1	10175645
	10–B7	12.981	HANDLE, R/FLR COMPT DR (GRAY)	92–93	Y (14I)	1	10175646
	10–B7	12.981	HANDLE, R/FLR COMPT DR (RED)	93	Y (79I)	1	10199517
	10–B7	12.981	HANDLE, R/FLR COMPT DR (RED)	93	Y (70I)	1	10199569
6.		DISCON	CYLINDER, R/FLR COMPT DR LK	90	Y	1	10074166

© 2000 GENERAL MOTORS SERVICE PARTS OPERATIONS–CHEVROLET–14Y

								1Y12-028
	10-B7	12.981	CYLINDER KIT, R/FLR COMPT DR LK (UNCODED)	91-93	Y		1	12507230
	10-A16	12.249	SPRING, E/GATE LK CYL SHUTTER (10.550)	90-92	.....			12503691
7.		N.S.	INSULATOR, R/FLR COMPT (POSN #3)		.....			
8.		N.S.	INSULATOR, R/FLR COMPT (POSN #2)		.....			
9.		N.S.	INSULATOR, R/FLR COMPT (POSN #1)		.....			
10.	10-B7	12.981	COMPARTMENT, R/FLR	93	Y07		RH	10218582
	10-B7	12.981	COMPARTMENT, R/FLR (BLACK)	90-92	Y07		RH	14065024
11.		8.977	SCREW, HWH, 9.2OD, 13.8 THD .	90-93	.....		RR	16516859
12.	10-B7	12.981	TRAY, R/FLR COMPT	90-91	Y07 (FE1, FE7)		LH	14058699
	10-B7	12.981	TRAY, R/FLR COMPT	90-91	Y07 (FE1, FE7)		RH	14058700
	10-B7	12.981	TRAY, R/FLR COMPT	92-93	Y07		RH	14058700

RPO DEFINITIONS

FE1 – SUSPENSION SYSTEM,SOFT RIDE
FE7 – SUSPENSION SYSTEM,FRONT AND REAR,HEAVY DUTY(USED WITH PERFORMANCE HANDLING PACKAGE Z51)
10I – INTERIOR TRIM – ARCTIC WHITE
14I – INTERIOR TRIM LT GRAY
19I – INTERIOR TRIM,BLACK
22I – INTERIOR TRIM,DARK ROYAL BLUE
60I – INTERIOR TRIM,DARK COGNAC
64I – INTERIOR TRIM,LIGHT BEIGE
70I – INTERIOR TRIM,TORCH RED
73I – INTERIOR TRIM,FLAME RED
79I – INTERIOR TRIM,RUBY RED
90I – INTERIOR TRIM,SMOKE GRAY

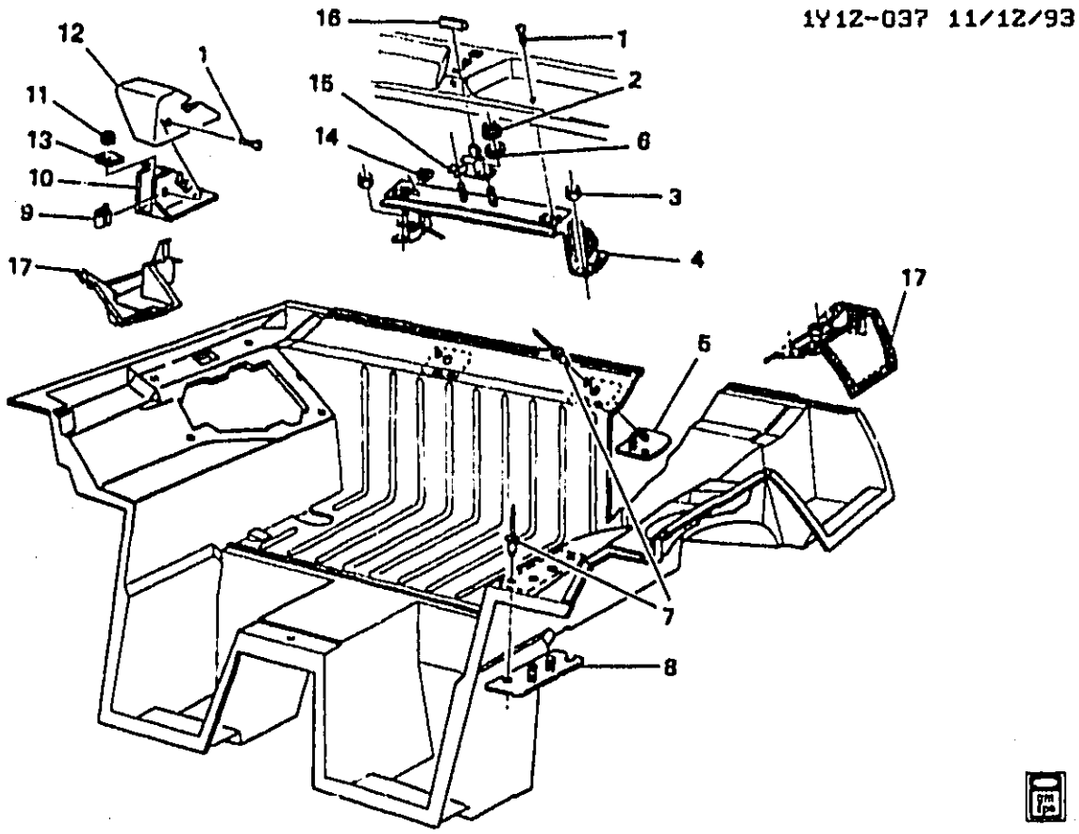

1Y12-037

1990-1996 Y07 COMPARTMENT/REAR STORAGE ROOF HARDWARE PANEL

1.		8.977	**SCREW**, M4.2X1.41X25 OV HD C/R ORG BLK (RR HATCH WDO RR TR PNL)	90-96	.....	6	11503566
		8.977	**SCREW**, M4.2X1.41X25 OV HD C/R ORG BLK (RF LIFT OFF PNL/WDO STOW FRT BRKT CVR)	90-96	.....	4	11503566
2.		8.917	**NUT**, HFH 6X1X7 SELF LK 14.2-OD (9) 7111M ALL MET PREV TORQ (RF LIFT OFF PNL/WDO STOW LAT)	90-96	.....	2	11516075
3.		8.917	**NUT**, HEX W/CON WA M6X1X5.5 (9) 7111M 16-OD (RF LIFT OFF PNL/WDO STOW RR BRKT)	90-96	.....	4	11516793
4.	10-A18	12.810	**BRACKET**, RF LIFT OFF PNL/WDO STOW RR (HAS FOUR ATTACHMENTS FOR TR PNL AT UPPER SURFACE NEAR LATCH)	90-96	Y07	1	10256058
5.	10-A18	12.810	**PLATE**, RF LIFT OFF PNL/WDO STOW RR BRKT STUD	90-96	Y07	2	14100260
6.		8.929	**WASHER**, M6.3X16.75X1.5 PH (RF LIFT OFF PNL/WDO STOW LAT)	90-96	.....	2	11500322
7.		N.S.	**RIVET**, RF LIFT OFF PNL/WDO STOW FRT BRKT STUD		.....		
8.	10-A18	12.810	**PLATE**, RF LIFT OFF PNL/WDO STOW FRT BRKT STUD	90-96	Y07	2	10137201

© 2000 GENERAL MOTORS SERVICE PARTS OPERATIONS-CHEVROLET-14Y

								1Y12-037
9.		8.921	NUT, U-TYPE, 4.2X1.41, DIM A-15, DIM B-14 DIM C-8.65, 1050, PZOR (RF LIFT OFF PNL/WDO STOW FRT BRKT CVR)	90-96			4	12338121
10.	10--A25	12.815	BRACKET, RF LIFT OFF PNL/WDO STOW FRT (MAY NEED TO SHIM CVR TO BKT MTG SCREWS)	90-96	Y07		LH	10242355
	10-A25	12.815	BRACKET, RF LIFT OFF PNL/WDO STOW FRT (MAY NEED TO SHIM CVR TO BRKT MTG SCREWS)	90-96	Y07		RH	10242356
11.		DISCON	RF LIFT OFF PNL/WDO STOW RR BRKT (8.900)				4	11500963
12.		DISCON	COVER, RF PNL STOR FRT BRKT (BLUE) (12.810)	90	Y07 (22I)		LH	10132947
		DISCON	COVER, RF PNL STOR FRT BRKT (BLUE) (12.810)	90	Y07 (22I)		RH	10132948
		DISCON	COVER, RF PNL STOR FRT BRKT (COGNAC) (12.810)	90	Y07 (60I)		LH	10132949
		DISCON	COVER, RF PNL STOR FRT BRKT (COGNAC) (12.810)	90	Y07 (60I)		RH	10132950
		DISCON	COVER, RF PNL STOR FRT BRKT (GRAY)	90	Y07 (90I)		LH	10132953
		DISCON	COVER, RF PNL STOR FRT BRKT (GRAY)	90	Y07 (90I)		RH	10132954
	10-A18	12.810	COVER, RF PNL STOR FRT BRKT (BLACK)	90	Y07 (19I)		LH	10132961
	10-A18	12.810	COVER, RF PNL STOR FRT BRKT (BLACK)	90	Y07 (19I)		RH	10132962
	10-A18	12.810	COVER, RF PNL STOR FRT BRKT (RED)	90	Y07 (73I)		LH	10132951
	10-A18	12.810	COVER, RF PNL STOR FRT BRKT (RED)	90	Y07 (73I)		RH	10132952
	10-A18	12.810	COVER, RF LIFT OFF PNL/WDO STOW FRT BRKT (RED)	91-92	Y07 (73I)		LH	10132951
	10-A18	12.810	COVER, RF LIFT OFF PNL/WDO STOW FRT BRKT (RED)	91-92	Y07 (73I)		RH	10132952
	10-A18	12.810	COVER, RF LIFT OFF PNL/WDO STOW FRT BRKT (BLACK)	91	Y07 (19I)		LH	10132961
	10-A18	12.810	COVER, RF LIFT OFF PNL/WDO STOW FRT BRKT (BLACK)	91	Y07 (19I)		RH	10132962
	10-A18	12.810	COVER, RF LIFT OFF PNL/WDO STOW FRT BRKT (BLACK)	92-93	Y07 (10I, 19I)		LH	10132961
	10-A18	12.810	COVER, RF LIFT OFF PNL/WDO STOW FRT BRKT (BLACK)	92-93	Y07 (10I, 19I)		RH	10132962
	10-A18	12.810	COVER, RF LIFT OFF PNL/WDO STOW FRT BRKT (BEIGE)	92-96	Y07 (64I)		LH	10175677
	10-A18	12.810	COVER, RF LIFT OFF PNL/WDO STOW FRT BRKT (BEIGE)	92-96	Y07 (64I)		RH	10175678
	10-A18	12.810	COVER, RF LIFT OFF PNL/WDO STOW FRT BRKT (GRAY)	92-96	Y07 (14I)		LH	10175679
	10-A18	12.810	COVER, RF LIFT OFF PNL/WDO STOW FRT BRKT (GRAY)	92-96	Y07 (14I)		RH	10175680
		DISCON	COVER, RF LIFT OFF PNL/WDO STOW FRT BRKT (RED)	93	Y07 (79I)		RH	10199532
	10-A18	12.810	COVER, RF LIFT OFF PNL/WDO STOW FRT BRKT (RED)	93	Y07 (79I)		LH	10199533

© 2000 GENERAL MOTORS SERVICE PARTS OPERATIONS-CHEVROLET-14Y

								1Y12-037
	10-A18	12.810	COVER, RF LIFT OFF PNL/WDO STOW FRT BRKT (RED)	93-95	Y07 (70I)	LH	10199701
		DISCON	COVER, RF LIFT OFF PNL/WDO STOW FRT BRKT (RED)	93-95	Y07 (70I)	RH	10199702
	10-A18	12.810	COVER, RF LIFT OFF PNL/WDO STOW FRT BRKT (BLACK)	94-96	Y07 (19I)	LH	10132961
	10-A18	12.810	COVER, RF LIFT OFF PNL/WDO STOW FRT BRKT (BLACK)	94-96	Y07 (19I)	RH	10132962
	10-A18	12.810	COVER, RF LIFT OFF PNL/WDO STOW FRT BRKT (RED)	96	Y07 (70I) (EXC Z16) ...	LH	10199701
		DISCON	COVER, RF LIFT OFF PNL/WDO STOW FRT BRKT (RED)	96	Y07 (70I) (EXC Z16) ...	RH	10199702
13.	10-A18	12.810	WASHER, RF PNL STOR BRKT ..	90	Y07	4	14051129
	10-A18	12.810	WASHER, RF LIFT OFF PNL/WDO STOW RR BRKT (M13X24X2) (5.393)	91-95	Y	2	14046942
	10-A18	12.810	WASHER, RF LIFT OFF PNL/WDO STOW RR BRKT (24X22.50) (8.929)	91-95	Y	2	14055822
	10-A18	12.810	WASHER, RF LIFT OFF PNL/WDO STOW RR BRKT (RECTANGULAR M24X39 W/7MM HOLE PC)	91-96	Y07	4	14051129
	10-A18	12.810	WASHER, RF LIFT OFF PNL/WDO STOW RR BRKT (FLAT, M13X23X3.3) (6.174)	95	Y07	2	10268936
14.		8.921	NUT, M4.2X1.4, 19.3X213.6.8.9 (AC-DELCO #15650655)	90-96	.....	AR	15650655
15.	10-A18	12.810	LATCH, RF PNL STOR HOLDN ..	90	Y07	1	14049200
	10-A18	12.810	LATCH, RF LIFT OFF PNL/WDO STOW	91-96	Y07	1	14049200
16.	10-A18	12.810	HANDLE, RF PNL STOR HOLDN LAT	90-91	Y07	1	10248663
	10-A18	12.810	HANDLE, RF LIFT OFF PNL/WDO STOW LAT	92-96	Y07	1	10248663
17.	10-N15	9.665	HOUSING, RDO RR SPKR (12.981)	90-96	Y07	LH	10193609
	10-N15	9.665	HOUSING, RDO RR SPKR (12.981)	90-96	Y07	RH	10193610

RPO DEFINITIONS

Z16 – APPEARANCE PACKAGE,GRAND SPORT EDITION
10I – INTERIOR TRIM– ARCTIC WHITE
14I – INTERIOR TRIM LT GRAY
19I – INTERIOR TRIM,BLACK
22I – INTERIOR TRIM,DARK ROYAL BLUE
60I – INTERIOR TRIM,DARK COGNAC
64I – INTERIOR TRIM,LIGHT BEIGE
70I – INTERIOR TRIM,TORCH RED
73I – INTERIOR TRIM,FLAME RED
79I – INTERIOR TRIM,RUBY RED
90I – INTERIOR TRIM,SMOKE GRAY

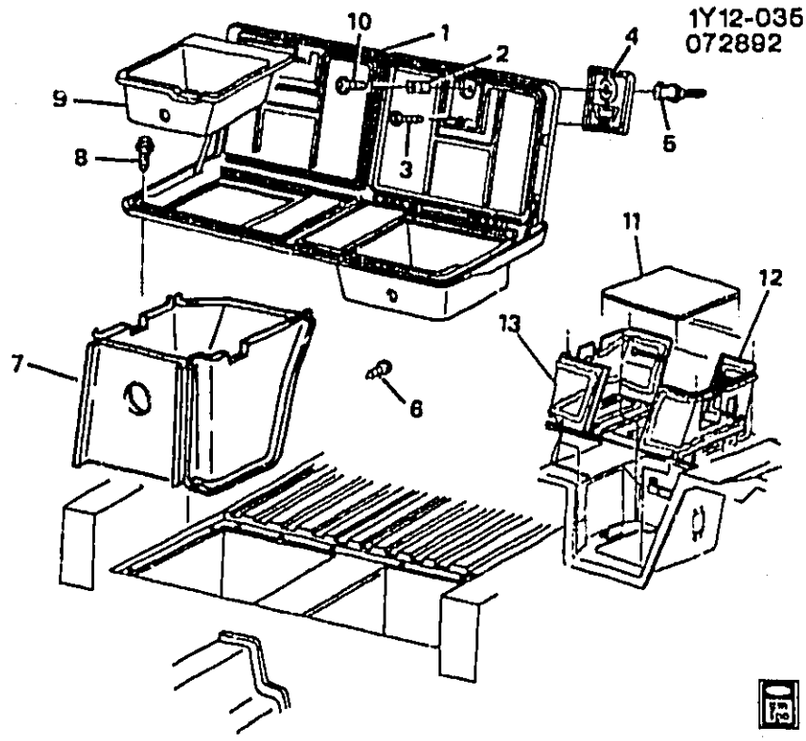

1Y12-035

1993 Y67 COMPARTMENT/REAR STORAGE

1.	10-B7	12.981	DOOR, R/FLR COMPT (INCL 6)	93	Y67	1	10282260
2.	10-B7	12.981	RETAINER, R/FLR COMPT DR LK CYL (10.267)	93	Y	2	3937912
3.		8.977	SCREW, HEX W/WA, M4.2X1.41X16, TAP, AB PT, 6010M, POR	93		AR	25512804
4.	10-B7	12.981	HANDLE, R/FLR COMPT DR (BLACK)	93	Y (10I, 19I)	1	10132960
	10-B7	12.981	HANDLE, R/FLR COMPT DR (BEIGE)	93	Y (64I)	1	10175645
	10-B7	12.981	HANDLE, R/FLR COMPT DR (GRAY)	93	Y (14I)	1	10175646
	10-B7	12.981	HANDLE, R/FLR COMPT DR (RED)	93	Y (79I)	1	10199517
	10-B7	12.981	HANDLE, R/FLR COMPT DR (RED)	93	Y (70I)	1	10199569
5.	10-B7	12.981	CYLINDER KIT, R/FLR COMPT DR LK (UNCODED)	93	Y	1	12507230
6.		8.977	SCREW, LG RND WA HD W/BLK NYL WA, 4.2X 1.41X13, 11-OD, DRILL PT, 6172, PEOR (R/FLR COMPT DR) (PART OF 1)	93		2	10180421
7.	10-B7	12.981	COMPARTMENT, R/FLR	93	Y67	1	10218581
8.		8.977	SCREW, HWH, 9.2OD, 13.8 THD	93		AR	16516859
9.	10-B7	12.981	TRAY, R/FLR COMPT	93	Y67	RH	10146484
10.		N.S.	BOLT, R/FLR COMPT DR LK CYL RET				
11.		N.S.	INSULATOR, R/FLR COMPT (POSN #3)				

© 2000 GENERAL MOTORS SERVICE PARTS OPERATIONS-CHEVROLET-14Y

12.	N.S.	**INSULATOR**, R/FLR COMPT (POSN #1)	.....
13.	N.S.	**INSULATOR**, R/FLR COMPT (POSN #2)	.....

RPO DEFINITIONS

10I – INTERIOR TRIM – ARCTIC WHITE
14I – INTERIOR TRIM LT GRAY
19I – INTERIOR TRIM,BLACK
64I – INTERIOR TRIM,LIGHT BEIGE
70I – INTERIOR TRIM,TORCH RED
79I – INTERIOR TRIM,RUBY RED

© 2000 GENERAL MOTORS SERVICE PARTS OPERATIONS–CHEVROLET–14Y

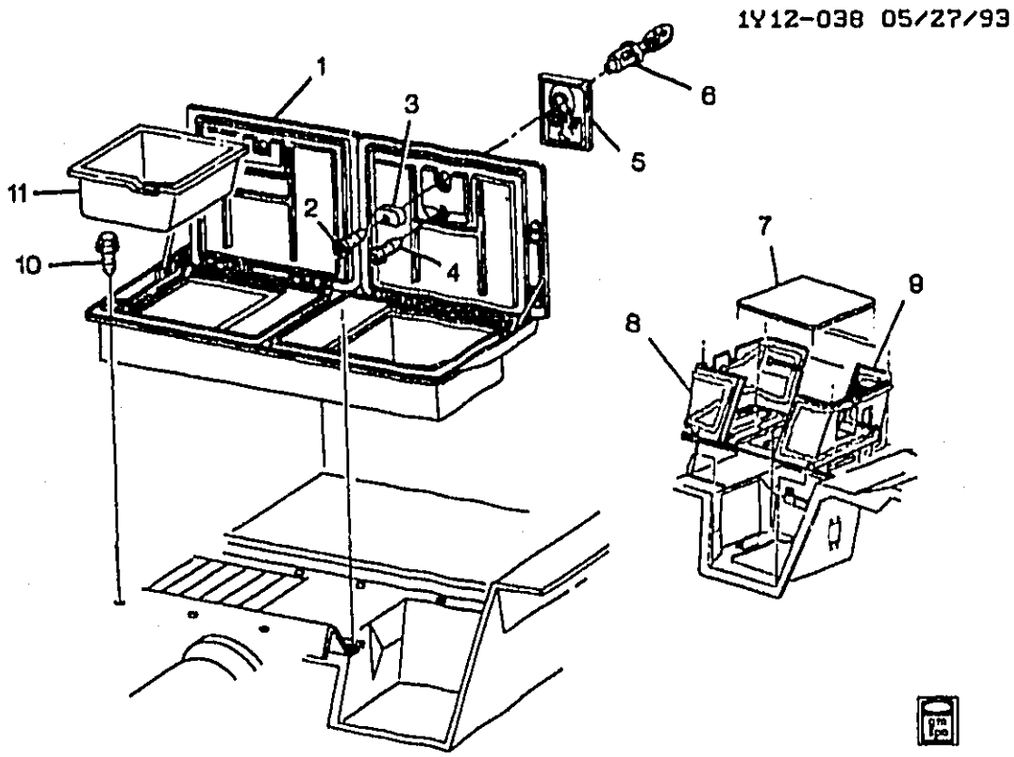

1Y12-038

1994-1996 Y07 COMPARTMENT/REAR STORAGE

1.	10-B7	12.981	**DOOR**, R/FLR COMPT (INCL 4)	94-96	Y07 (FE1, FE7)	1	10282260
2.		N.S.	**BOLT**, R/FLR COMPT DR LK CYL RET				
3.	10-B7	12.981	**RETAINER**, R/FLR COMPT DR LK CYL. (10.267)	94-96	Y	2	3937912
4.		8.977	**SCREW**, LG RND WA HD W/BLK NYL WA, 4.2X 1.41X13, 11-OD, DRILL PT, 6172, PEOR (PART OF 1)	94-96		AR	10180421
5.	10-B7	12.981	**HANDLE**, R/FLR COMPT DR (BEIGE)	94-96	Y (64I)	1	10175645
	10-B7	12.981	**HANDLE**, R/FLR COMPT DR (GRAY)	94-96	Y (14I)	1	10175646
	10-B7	12.981	**HANDLE**, R/FLR COMPT DR (RED)	94-95	Y (70I)	1	10199569
	10-B7	12.981	**HANDLE**, R/FLR COMPT DR (BLACK)	94-96	Y (19I)	1	10132960
	10-B7	12.981	**HANDLE**, R/FLR COMPT DR (RED)	96	Y (70I) (EXC Z16)	1	10199569
6.	10-B7	12.981	**CYLINDER KIT**, R/FLR COMPT DR LK (UNCODED)	94-96	Y	1	12507230
7.		N.S.	**INSULATOR**, R/FLR COMPT (POSN #3)				
8.		N.S.	**INSULATOR**, R/FLR COMPT (POSN #2)				
9.		N.S.	**INSULATOR**, R/FLR COMPT (POSN #1)				
10.		8.977	**SCREW**, HWH, 9.2OD, 13.8 THD	94-96		AR	16516859
11.	10-B7	12.981	**TRAY**, R/FLR COMPT	94-96	Y07	RH	14058700

RPO DEFINITIONS
FE1 – SUSPENSION SYSTEM,SOFT RIDE

© 2000 GENERAL MOTORS SERVICE PARTS OPERATIONS-CHEVROLET-14Y

FE7 – SUSPENSION SYSTEM,FRONT AND REAR,HEAVY DUTY
Z16 – APPEARANCE PACKAGE,GRAND SPORT EDITION
141 – INTERIOR TRIM LT GRAY
191 – INTERIOR TRIM,BLACK
341 – INTERIOR TRIM,LIGHT BEIGE
701 – INTERIOR TRIM,TORCH RED

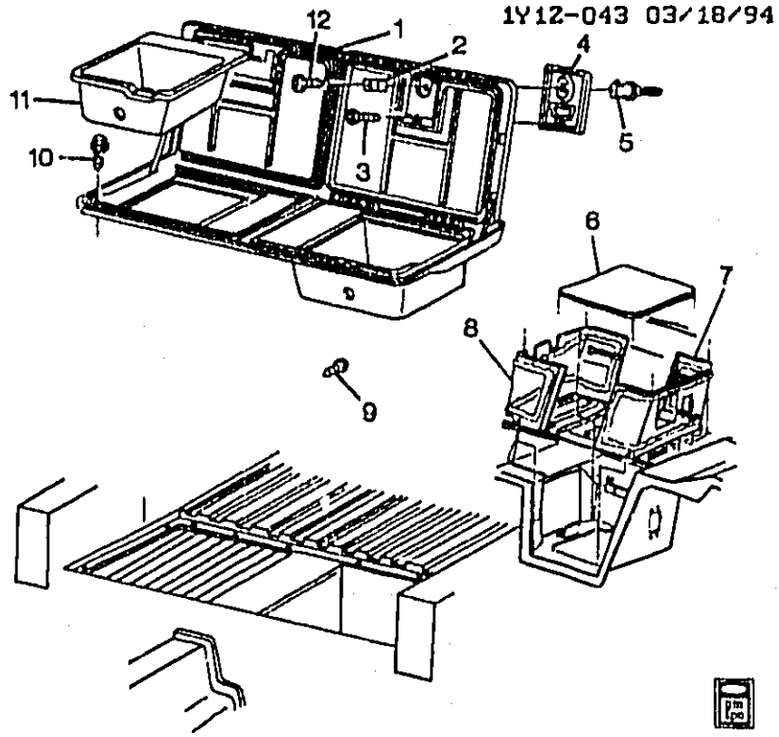

1Y12-043

1994-1996 Y67 COMPARTMENT/REAR STORAGE

1.	10-B7	12.981	**DOOR**, R/FLR COMPT (INCL 9)	94-96	Y67	1	10282260
2.	10-B7	12.981	**RETAINER**, R/FLR COMPT DR LK CYL (10.267)	94-96	Y	2	3937912
3.		8.977	**SCREW**, HEX W/WA, M4.2X1.41X16, TAP, AB PT, 6010M, POR	94-96		AR	25512804
4.	10-B7	12.981	**HANDLE**, R/FLR COMPT DR (BEIGE)	94-96	Y (64I)	1	10175645
	10-B7	12.981	**HANDLE**, R/FLR COMPT DR (GRAY)	94-96	Y (14I)	1	10175646
	10-B7	12.981	**HANDLE**, R/FLR COMPT DR (RED)	94-95	Y (70I)	1	10199569
	10-B7	12.981	**HANDLE**, R/FLR COMPT DR (BLACK)	94-96	Y (19I)	1	10132960
	10-B7	12.981	**HANDLE**, R/FLR COMPT DR (RED)	96	Y (70I) (EXC Z16)	1	10199569
5.	10-B7	12.981	**CYLINDER KIT**, R/FLR COMPT DR LK (UNCODED)	94-96	Y	1	12507230
6.		N.S.	**INSULATOR**, R/FLR COMPT (POSN #3)				
7.		N.S.	**INSULATOR**, R/FLR COMPT (POSN #1)				
8.		N.S.	**INSULATOR**, R/FLR COMPT (POSN #2)				
9.		8.977	**SCREW**, LG RND WA HD W/BLK NYL WA, 4.2X 1.41X13, 11-OD, DRILL PT, 6172, PEOR (R/FLR COMPT DR) (PART OF 1)	94-96		2	10180421
10.		8.977	**SCREW**, HWH, 9.2OD, 13.8 THD	94-96		AR	16516859
11.	10-B7	12.981	**TRAY**, R/FLR COMPT	94-96	Y67	RH	10146484
12.		N.S.	**BOLT**, R/FLR COMPT DR LK CYL RET				

© 2000 GENERAL MOTORS SERVICE PARTS OPERATIONS-CHEVROLET-14Y

RPO DEFINITIONS
Z16 – APPEARANCE PACKAGE,GRAND SPORT EDITION
14I – INTERIOR TRIM LT GRAY
19I – INTERIOR TRIM,BLACK
64I – INTERIOR TRIM,LIGHT BEIGE
70I – INTERIOR TRIM,TORCH RED

MICROFICHE INDEX

GROUPS 12.000 THRU 13.000

FICHE 10 OF 11

GROUP	DESCRIPTION	STARTING GRID LOCATION PARTS	ILLUSTRATIONS
–	GENERAL INFORMATION	1–A2	1–G2
–	ALPHABETICAL INDEX	1–B13	N.A.
12.000	BODY MOLDINGS – SHEET METAL	10–A2	10–D2
13.000	BODY WIRING – VINYL TOP TRIM	10–C2	N.A.
–	OUT OF FICHE CALLS	N.A.	10–M22

10–J1

MICROFICHE INDEX

GROUPS 12.000 THRU 13.000

FICHE 10 OF 11

GROUP	DESCRIPTION	STARTING GRID LOCATION PARTS	ILLUSTRATIONS
–	GENERAL INFORMATION	1–A2	1–G2
–	ALPHABETICAL INDEX	1–B13	N.A.
12.000	BODY MOLDINGS – SHEET METAL	10–A2	10–D2
13.000	BODY WIRING – VINYL TOP TRIM	10–C2	N.A.
–	OUT OF FICHE CALLS	N.A.	10–M22

10–K1

MICROFICHE INDEX

GROUPS 12.000 THRU 13.000

FICHE 10 OF 11

GROUP	DESCRIPTION	STARTING GRID LOCATION PARTS	ILLUSTRATIONS
–	GENERAL INFORMATION	1–A2	1–G2
–	ALPHABETICAL INDEX	1–B13	N.A.
12.000	BODY MOLDINGS – SHEET METAL	10–A2	10–D2
13.000	BODY WIRING – VINYL TOP TRIM	10–C2	N.A.
–	OUT OF FICHE CALLS	N.A.	10–M22

10–L1

MICROFICHE INDEX

GROUPS 12.000 THRU 13.000

FICHE 10 OF 11

GROUP	DESCRIPTION	STARTING GRID LOCATION PARTS	ILLUSTRATIONS
–	GENERAL INFORMATION	1–A2	1–G2
–	ALPHABETICAL INDEX	1–B13	N.A.
12.000	BODY MOLDINGS -- SHEET METAL	10–A2	10–D2
13.000	BODY WIRING – VINYL TOP TRIM	10–C2	N.A.
–	OUT OF FICHE CALLS	N.A.	10–M22

10–M1

21.552 WINDOW PKG, Roof

84–85	Y (24S)	12370123	1	1191.66	WINDOW PKG, RF LIFT OFF (BLUE) (ALSO ORDER HARDWARE KIT 12523045 FOR 84–86 USAGES) (12.810)
85	Y (64S)	12370124	1	1191.66	WINDOW PKG, RF LIFT OFF (MUST ALSO ORDER HARDWARE KIT 12523045) (12.810)
86	Y (24S), (1ST DES)	12370123	1	1191.66	WINDOW PKG, RF LIFT OFF (BLUE) (2–3MM HOLES IN ROOF FRT LATCH CVRS, ALSO ORDER HARDWARE KIT 12523045 FOR 84–86 USAGES) (12.810)

21.552A PANEL PKG – WINDOW PKG, Roof (Production)

84–85	Y (24S)	12370123	1	1191.66	WINDOW PKG, RF LIFT OFF (BLUE) (ALSO ORDER HARDWARE KIT 12523045 FOR 84–86 USAGES) (12.810)
84–85	Y (64S)	12370124	1	1191.66	WINDOW PKG, RF LIFT OFF (BRONZE) (MUST ALSO ORDER HARDWARE KIT 12523045) (12.810)
86	Y (2ND DES)	12344792	1	1191.66	WINDOW PKG, RF LIFT OFF (BLUE) (HAS ONE 245MM HOLE IN LATCH COVERS) (12.810)
86	Y (2ND DES)	12344793	1	1191.66	WINDOW PKG, RF LIFT OFF (BRONZE) (HAS ONE 25MM HOLE IN LATCH COVERS) (12.810)
86	Y (24S), (1ST DES)	12370123	1	1191.66	WINDOW PKG, RF LIFT OFF (BLUE) (2–30MM HOLES IN RF PNL FRT LATCH CVRS, ALSO ORDER HARDWARE KIT 12523045 FOR 84–86 USAGES) (12.810)
86	Y (64S), (1ST DES)	12370124	1	1191.66	WINDOW PKG, RF LIFT OFF (BRONZE) (HAS 2 30MM HOLES IN RF PNL FRT LATCH CVRS. MUST ORDER HARDWARE KIT 12523045 FOR 84–86.) (12.810)
87–88	Y	12344792	1	1191.66	WINDOW PKG, RF LIFT OFF (BLUE) (12.810)
87	Y	12344793	1	1191.66	WINDOW PKG, RF LIFT OFF (BRONZE) (12.810)
89–96	Y07 CLEAR RF PNL (CC3), DUAL REM RF (C2L), (24S)	12370123	1	1191.66	WINDOW PKG, RF LIFT OFF (BLUE) (12.810)
89–96	Y07 CLEAR RF PNL (CC3), DUAL REM RF (C2L), (64S)	12370124	1	1191.66	WINDOW PKG, RF LIFT OFF (BRONZE) (12.810)

2.483 BLOCK – BRACKET – BREAKER – CLIP – CONNECTOR – COVER – HOUSING – INSULATOR – LABEL – NUT – PULLER – RETAINER – RIVET, Main Wiring Junction and Fuse Block

93	Y	10165399	1	4.34	BRACKET, ENG WRG HARN FUSE BLK (LOCATED BEHIND BATT)
94–95	Y 5.7J (LT5)	10165399	1	4.34	BRACKET, ENG WRG HARN FUSE BLK (LOCATED BEHIND BATT)
94–96	Y 5.7F (LT1)	10252093	1	4.34	BRACKET, ENG WRG HARN FUSE BLK (LOCATED BEHIND BATT)
86–92	Y	14093148	1	DISCON	BRACKET, ENG WRG HARN J/BLK
93–96	Y	10202843	1	4.34	BRACKET, FWD LP WRG HARN FUSE BLK (LOCATED ON WHL/HSE PNL)
84–96	Y	14062568	1	3.72	BRACKET, I/P WRG HARN FUSE BLK
84–85	Y	14062512	1	DISCON	BRACKET, MULTIUSE RLY

© 2000 GENERAL MOTORS SERVICE PARTS OPERATIONS

2.483 BLOCK – BRACKET – BREAKER – CLIP – CONNECTOR – COVER – HOUSING – INSULATOR – LABEL – NUT – PULLER – RETAINER – RIVET, Main Wiring Junction and Fuse Block(Con't)

90–96	Y	10172488	1	6.58	BRACKET, MULTIUSE RLY (RIGHT BRKT) (4.0", 102.0 MM LG) (PLASTIC)
90–91	Y	10175542	LH	22.29	BRACKET, MULTIUSE RLY (LEFT BRKT) (5.2", 132.0 MM LG) (PLASTIC)
90–93	Y	10240571	1	11.58	BRACKET, MULTIUSE RLY (BLACK) (18.3", 465.0MM LONG) (PLASTIC)
90	Y 5.7J (LT5), A/C MAN CONT (C60)	14104778	1	3.06	BRACKET, MULTIUSE RLY (STEEL) (8.7"X3.5") (220.0MMX88.5MM)
92	Y 5.7P (LT1), 6–SPD M/TRANS (ML9), A/C MAN CONT (C60)	10165350	1	6.58	BRACKET, MULTIUSE RLY (7.4", 188.0 MM LG) (STEEL)
92	Y 5.7J (LT5)	10165350	1	6.58	BRACKET, MULTIUSE RLY (7.4", 188.0 MM LG) (STEEL)
92	Y 5.7P (LT1), 4–SPD A/TRANS (MD8), A/C MAN CONT (C60)	10165387	1	DISCON	BRACKET, MULTIUSE RLY (5.4", 136.0 MM LG) (STEEL)
92–96	Y	10167109	1	11.58	BRACKET, MULTIUSE RLY (5.2", 132 MM LG) (PLASTIC)
92	Y 5.7P (LT1), 6–SPD M/TRANS (ML9), A/C AUTO ELEC CONT (C68)	14104140	1	1.88	BRACKET, MULTIUSE RLY (STEEL) (3.0"X2.0") (76.7MMX51.0MM)) (01.055)
93–95	Y 5.7J (LT5)	10204735	1	6.58	BRACKET, MULTIUSE RLY
93–95	Y 5.7P (LT1), A/C AUTO ELEC CONT (C68)	10214029	1	6.58	BRACKET, MULTIUSE RLY
93–95	Y 5.7P (LT1), A/C MAN CONT (C60)	10214030	1	6.58	BRACKET, MULTIUSE RLY
94–96	Y	10161867	1	11.58	BRACKET, MULTIUSE RLY
96	Y A/C AUTO ELEC CONT (C68)	10214029	1	6.58	BRACKET, MULTIUSE RLY
96	Y A/C MAN CONT (C60)	10214030	1	6.58	BRACKET, MULTIUSE RLY
84–89	Y	14062543	1	DISCON	COVER, F/FLR CNSL COMPT LP
93–96	Y	12077538	2	5.57	COVER, FUSE BLK
84–89	Y	14047597	1	7.29	COVER, FUSE BOX ACC HOLE (SCREW LOCK IS PART OF ASM)
90–92	Y	10172478	1	22.38	COVER, I/P FUSE BLK ACC HOLE
93	Y	10221936	1	22.38	COVER, I/P FUSE BLK ACC HOLE
94	Y	10257359	1	19.23	COVER, I/P FUSE BLK ACC HOLE (BLACK)
95	Y	10257359	1	19.23	COVER, I/P FUSE BLK ACC HOLE (BLACK)
96	Y	10280357	1	22.38	COVER, I/P FUSE BLK ACC HOLE (BLACK)
94	Y 4–SPD A/TRANS (M30), A/C MAN CONT (C60), A/C AUTO ELEC CONT (C68)	12077573	1	3.80	COVER, MULTIUSE RLY & FUSE (PART OF HARN) (FROM I/P HARNESS)
95	Y 6–SPD M/TRANS (ML9), A/C MAN CONT (C60), A/C AUTO ELEC CONT (C68)	12077573	1	3.80	COVER, MULTIUSE RLY & FUSE (PART OF HARN) (FROM I/P HARNESS)
96	Y	12077573	1	3.80	COVER, MULTIUSE RLY & FUSE (FROM I/P HARNESS)
84–92	Y	14049066	1	1.05	NUT, I/P FUSE BLK ACC HOLE CVR

2.560 BOLT – BRACKET – INSULATOR – MODULE – NUT, Body Multifunction Electric Computer

91–96	Y	12337892	4	*1.13	BOLT, BCM BRKT (POSN #2) (M[illegible].8X16 THD) (SPECIAL) (03.671) (AC–DELCO #12337892)
90–96	Y	10085989	1	3.37	BRACKET, BCM BRKT
86–90	Y67	14100353	1	12.80	BRACKET, MULTIUSE RLY
93–95	Y	03999572	2	4.98	INSULATOR, BCM (09.260)

© 2000 GENERAL MOTORS SERVICE PARTS OPERATIONS

2.560 BOLT – BRACKET – INSULATOR – MODULE – NUT, Body Multifunction Electric Computer(Con't)

96	Y	03999572	1	4.98	INSULATOR, BCM (09.260)
90	Y	16146688	1	172.55	MODULE, BODY CONT (REMAN)
91	Y	16155502	1	172.55	MODULE, BODY CONT (REMAN)
92–93	Y	16193458	1	168.00	MODULE, BODY CONT (REMAN)
94	Y	16212971	1	210.70	MODULE, BODY CONT (REMAN) (AC–DELCO #16212971)
95	Y	16223622	1	473.80	MODULE, BODY CONT (REMAN) (AC–DELCO #16223622)
96	Y	16230561	1	399.83	MODULE, BODY CONT
90–96	Y	10027015	2	.53	NUT, BCM (PUSH–ON) (OVERALL LENGTH 1.25") (03.671) (AC–DELCO #10027015)

2.575 BRACKET – BUTTON – CLIP – CONNECTOR – FILLER – FLASHER – KNOB – LAMP – PUSHBUTTON – SOCKET – SPRING, Side Marker and Hazard Flasher

Note: IT IS NECESSARY TO CAREFULLY CHECK THE PARTS CATALOGS FOR CORRECT APPLICATION WHEN REPLACING LAMP SOCKET ASM. IF INCORRECT SOCKETS ARE USED FOR REPLACEMENT, THE BULB FILAMENT WILL BE IN THE WRONG LOCATION WITH RESPECT TO THE LENS AND/OR REFLECTOR. AS A RESULT, THE LAMP MAY FAIL TO MEET STANDAR

Note: FOR USAGE REFER TO LAMP SOCKET CHART GRP 2.999

84–94	Y	25534019	2	*.60	CLIP, HAZARD LP FLSHR (02.892)
95–96	Y	25534019	1	*.60	CLIP, HAZARD LP FLSHR (02.892)
84–96	Y	00491391	1	8.20	FLASHER, HAZARD LP (1 1/2" DIA) (6 LP FLSHR) (AC–DELCO #SF552)
86	Y (EXC EXPORT VB4, VD1, VE1, VT7)	10039390	1	7.09	FLASHER, HAZARD LP
94–96	Y (EXC SIG & MKR LP (T90) (EXPORT)	05975793	LH	62.70	LAMP, FRT SI MKR & COR (02.585)
94–96	Y (EXC SIG & MKR LP (T90) (EXPORT)	05975794	RH	62.70	LAMP, FRT SI MKR & COR (02.585)
84–87	Y	00917901	LH	44.10	LAMP, RR SI MKR
84–87	Y	00917902	RH	44.10	LAMP, RR SI MKR
88–90	Y	16508517	LH	44.10	LAMP, RR SI MKR & SI B/U
88–90	Y	16508518	RH	44.10	LAMP, RR SI MKR & SI B/U
91–93	Y	16514357	LH	44.10	LAMP, RR SI MKR & SI B/U
91–93	Y	16514358	RH	44.10	LAMP, RR SI MKR & SI B/U
94–96	Y (EXC SIG & MKR LP (T90) (EXPORT)	16514357	LH	44.10	LAMP, RR SI MKR & SI B/U
94–96	Y (EXC SIG & MKR LP (T90) (EXPORT)	16514358	RH	44.10	LAMP, RR SI MKR & SI B/U
	*EXPORT**********EXPORT**********EXPORT**********EXPORT**********EXPORT*				
84–86	Y VB4, VD1, VE1, VT7 (EXPORT)	00491391	1	8.20	FLASHER, HAZARD LP (FLASHER, T/SIG LP) (AC–DELCO #SF552)
87–88	Y T72, T84 (EXPORT)	00491391	1	8.20	FLASHER, HAZARD LP (FLASHER, T/SIG LP) (AC–DELCO #SF552)

2.697 BULB – LAMP – SOCKET, Back Up Lamp

Note: IT IS NECESSARY TO CAREFULLY CHECK THE PARTS CATALOGS FOR CORRECT APPLICATION WHEN REPLACING LAMP SOCKET ASM. IF INCORRECT SOCKETS ARE USED FOR REPLACEMENT, THE BULB FILAMENT WILL BE IN WRONG LOCATION WITH RESPECT TO THE LENS AND/OR REFLECTOR. AS A RESULT, THE LAMP MAY FAIL TO MEET STANDARDS

Note: FOR USAGE REFER TO LAMP SOCKET CHART GRP 2.999

84–88	Y (EXC EXPORT T90)	00917889	LH	30.90	LAMP, B/U
84–88	Y (EXC EXPORT T90)	00917890	RH	30.90	LAMP, B/U
89	Y	00917889	LH	30.90	LAMP, B/U
89	Y	00917890	RH	30.90	LAMP, B/U
90	Y (EXC SPL TAIL & STOP LP T93)	00917889	LH	30.90	LAMP, B/U

© 2000 GENERAL MOTORS SERVICE PARTS OPERATIONS

2.697 BULB – LAMP – SOCKET, Back Up Lamp(Con't)

90	Y (EXC SPL TAIL & STOP LP T93) ..	00917890	RH	30.90	LAMP, B/U .....
90	Y SPL TAIL & STOP LP (T93)	05975069	LH	30.90	LAMP, B/U .....
90	Y SPL TAIL & STOP LP (T93)	05975070	RH	30.90	LAMP, B/U .....
91–93	Y	05975069	LH	30.90	LAMP, B/U .....
91–93	Y	05975070	RH	30.90	LAMP, B/U .....
94–96	Y (EXC SIG & MKR LP (T90) (EXPORT)	05975069	LH	30.90	LAMP, B/U .....
94–96	Y (EXC SIG & MKR LP (T90) (EXPORT)	05975070	RH	30.90	LAMP, B/U .....
94–96	Y (EXC SIG & MKR LP (T90) (EXPORT)	16514357	LH	44.10	LAMP, RR SI MKR & SI B/U (02.575) ....
94–96	Y (EXC SIG & MKR LP (T90) (EXPORT)	16514358	RH	44.10	LAMP, RR SI MKR & SI B/U (02.575) ....
	*EXPORT**********EXPORT**********EXPORT**********EXPORT**********EXPORT*				
84–88	Y T90 (EXPORT)	00929396	1	DISCON	LAMP, B/U .....
94–96	Y SIG & MKR LP (T90) (EXPORT) ..	05976821	2	30.90	LAMP, B/U .....

3.145 BRACKET – CLAMP – CLIP – CONNECTOR – HARNESS – HOSE – PIPE – SHIELD – TUBE, Early Fuel Evaporation

86–89	Y67	14092701	1	7.75	BRACKET, BRK & FUEL VPR PIPE .....
87	Y07 1BL (PERF HDLG PKG Z51), B2B (SPORT HDLG PKG Z52)	14092701	1	7.75	BRACKET, BRK & FUEL VPR PIPE .....
88–89	Y07 PERF HDLG PKG (Z51), SPORT HDLG PKG (Z52)	14092701	1	7.75	BRACKET, BRK & FUEL VPR PIPE .....
90–91	Y	14092701	1	7.75	BRACKET, FUEL VPR PIPE .....
96	Y 5.7P (LT1), 5.7–5 (LT4)	12555830	1	.75	CONNECTOR, EVAP EMIS CNSTR PURGE HOSE (90 DEG ELBOW) ....
91–95	Y	10046084	1	.77	CONNECTOR, EVAP EMIS HOSE (03.130) .....
96	Y 5.7P (LT1), 5.7–5 (LT4)	10046084	1	.77	CONNECTOR, EVAP EMIS HOSE (03.130) .....
84–96	Y	00474793	1	13.42	CONNECTOR, EVAP EMIS INTER HOSE (THREADS MUST BE SEALED W/THREAD SEALANT 12346004.) (03.680) .....
85–86	Y	10496984	1	DISCON	CONNECTOR, TEE .....
87	Y	10046010	1	DISCON	HARNESS, FUEL VPR CNSTR .....
88–89	Y	10055891	1	23.36	HARNESS, FUEL VPR CNSTR .....
90	Y (5.7–8)	10055891	1	23.36	HARNESS, FUEL VPR CNSTR .....
90	Y (5.7J) SOFT RIDE SUSP (FE1), H .D .SUSP (FE7)	14104815	1	33.66	HARNESS, FUEL VPR CNSTR .....
91–95	Y	10105300	1	43.35	HOSE, EVAP EMIS CNSTR PURGE ....
96	Y 5.7P (LT1), 5.7–5 (LT4)	12552593	1	32.39	HOSE, EVAP EMIS CNSTR PURGE ....
92–95	Y 5.7P (LT1)	10105299	1	3.67	HOSE, EVAP EMIS CNSTR PURGE SOL VLV .....
96	Y 5.7P (LT1), 4–SPD A/TRANS (M30)	12551611	1	3.16	PIPE, EVAP EMIS CNSTR PURGE SOL VLV .....
96	Y 5.7–5 (LT4), 6–SPD M/TRANS (ML9)	12551611	1	3.16	PIPE, EVAP EMIS CNSTR PURGE SOL VLV .....
86–96	Y	14104690	1	18.26	SHIELD, BRK & EVAP EMIS PIPE .....
88–90	Y 5.7–8	10055892	1	5.41	TUBE, EVAP EMIS CNSTR PURGE .....
96	Y 5.7P (LT1), 4–SPD A/TRANS (M30)	12551608	1	3.25	TUBE, EVAP EMIS CNSTR PURGE .....
96	Y 5.7–5 (LT4), 6–SPD M/TRANS (ML9)	12551608	1	3.25	TUBE, EVAP EMIS CNSTR PURGE .....
87	Y	10046011	1	DISCON	TUBE, FUEL VPR CNSTR .....

4.685 PIPE – SHIELD, Hydraulic Brake

86–96	Y	14104690	1	18.26	SHIELD, BRK & EVAP EMIS PIPE (03.145) .....

© 2000 GENERAL MOTORS SERVICE PARTS OPERATIONS

4.686 BOLT – BRACKET – CLIP – FITTING – GASKET – NUT – RETAINER – SPACER, Hydraulic Brake Pipe

92–96	Y	11515397	2	.22	BOLT, BRK PIPE RET (10.685)
90–96	Y	14092701	1	7.75	BRACKET, BRK PIPE (03.145)
86–91	Y	14094289	1	DISCON	RETAINER, BRK PIPE
92–96	Y	10218188	1	2.70	RETAINER, BRK PIPE

4.720 BOLT – BRACKET – CLIP – CONNECTOR – COVER – DIODE – GASKET – HARNESS – MODULE – PLATE – RELAY – RETAINER – SUPPORT – WIRE, Electronic Brake Control

92–94	Y	10143546	1	3.26	BRACKET, ELEK BRK & TRACT CONT MDL
95	Y 5.7J (LT5)	10143546	1	3.26	BRACKET, ELEK BRK & TRACT CONT MDL
86–91	Y	14088443	1	DISCON	BRACKET, ELEK BRK CONT MDL (RR)
86–91	Y	14088444	1	DISCON	BRACKET, ELEK BRK CONT MDL (FRT)
96	Y (EXC DAYTIME RUNNING LGT (T61), HDLP (T72) (EXPORT), RH RULE OF ROAD HDLP (T84) (EXPORT), LH RULE OF ROAD HDLP (T85) (EXPORT), SIG & MKR LP (T90) (EXPORT)	12129073	1	.45	BRACKET, ELEK BRK CONT RLY (BLACK) (AC–DELCO #12129073)
87–95	Y	14062552	2	1.12	BRACKET, WHL SPD SEN WRG HARN CLIP (02.559)
96	Y	14062552	1	1.12	BRACKET, WHL SPD SEN WRG HARN CLIP (02.559)
92–94	Y	10143537	1	21.78	COVER, ELEK BRK CONT MDL
95	Y SPECIAL PERFORMANCE PKG (ZR1)	10143537	1	21.78	COVER, ELEK BRK CONT MDL
95	Y (EXC SPECIAL PERFORMANCE PKG (ZR1)	10225919	1	23.31	COVER, ELEK BRK CONT MDL
96	Y	10225919	1	23.31	COVER, ELEK BRK CONT MDL
92–96	Y	10167107	1	4.13	GASKET, ELEK BRK CONT MDL CVR
86	Y (2ND DES)	12046596	1	DISCON	HARNESS, BRK PRESS MOD VLV WRG (HAS 3 CONNECTORS FOR WHL SPD SEN HARNESS)
86	Y (1ST DES)	12048601	1	DISCON	HARNESS, BRK PRESS MOD VLV WRG (HAS 2 CONNECTORS FOR WHL SPD SEN HARNESS)
87	Y	12067433	1	DISCON	HARNESS, BRK PRESS MOD VLV WRG
88	Y	12083507	1	DISCON	HARNESS, BRK PRESS MOD VLV WRG
89	Y	12083507	1	DISCON	HARNESS, BRK PRESS MOD VLV WRG
90	Y (EXC FX3)	12080844	1	DISCON	HARNESS, BRK PRESS MOD VLV WRG
90	Y RIDE & HDLG (FX3)	12080845	1	DISCON	HARNESS, BRK PRESS MOD VLV WRG
91	Y (EXC ELEK RIDE & HANDLING (FX3)	12112465	1	DISCON	HARNESS, BRK PRESS MOD VLV WRG
91	Y ELEK RIDE & HANDLING (FX3)	12112466	1	DISCON	HARNESS, BRK PRESS MOD VLV WRG
93	Y (EXC ELEK RIDE & HANDLING (FX3)	12106505	1	260.86	HARNESS, BRK PRESS MOD VLV WRG
93	Y ELEK RIDE & HANDLING (FX3)	12106507	1	DISCON	HARNESS, BRK PRESS MOD VLV WRG
94	Y (EXC ELEK RIDE & HANDLING (FX3)	12130360	1	260.86	HARNESS, BRK PRESS MOD VLV WRG

© 2000 GENERAL MOTORS SERVICE PARTS OPERATIONS

4.720 BOLT – BRACKET – CLIP – CONNECTOR – COVER – DIODE – GASKET – HARNESS – MODULE – PLATE – RELAY – RETAINER – SUPPORT – WIRE, Electronic Brake Control(Con't)

94	Y ELEK RIDE & HANDLING (FX3) ..	12130361	1	260.86	HARNESS, BRK PRESS MOD VLV WRG .....
95	Y 5.7J (LT5)	12130361	1	260.86	HARNESS, BRK PRESS MOD VLV WRG .....
86–90	Y	12055840	1	DISCON	HARNESS, BRK PRESS MOD VLV WRG HARN GRD .....
92	Y (EXC ELEK RIDE & HANDLING (FX3)	12106545	1	390.00	HARNESS, ELEK BRK CONT & ELEC TRACT CONT WRG (CONT MDL TO WHL SEN HARN) .....
92	Y (EXC ELEK RIDE & HANDLING (FX3)	12106546	1	260.86	HARNESS, ELEK BRK CONT & ELEC TRACT CONT WRG (FRT & RR WHL SEN TO CONT HARN) .....
93–94	Y ELEK RIDE & HANDLING (FX3) ..	12130313	1	522.73	HARNESS, ELEK BRK CONT & ELEC TRACT CONT WRG .....
93–94	Y (EXC ELEK RIDE & HANDLING (FX3)	12130314	1	260.86	HARNESS, ELEK BRK CONT & ELEC TRACT CONT WRG .....
95	Y 5.7J (LT5)	12130313	1	522.73	HARNESS, ELEK BRK CONT & ELEC TRACT CONT WRG .....
95	Y 5.7P (LT1)	12130367	1	772.50	HARNESS, ELEK BRK CONT & ELEC TRACT CONT WRG .....
96	Y CHASSIS, REALTIME DAMPING (F45)	12130459	1	522.73	HARNESS, ELEK BRK CONT & ELEC TRACT CONT WRG .....
96	Y (EXC CHASSIS, REALTIME DAMPING (F45)	12130496	1	522.73	HARNESS, ELEK BRK CONT & ELEC TRACT CONT WRG .....
92	Y ELEK RIDE & HANDLING (FX3) ..	12106547	1	DISCON	HARNESS, ELEK BRK CONT & ELEK SUSP & TRACTION CONT WRG (CONT MDL TO WHL SEN HARN) ....
92	Y ELEK RIDE & HANDLING (FX3) ..	12106548	1	DISCON	HARNESS, ELEK BRK CONT & ELEK SUSP & TRACTION CONT WRG (FRT & RR WHL SEN TO CONT HARN) ....
86	Y07 (1ST DES)	12048802	1	DISCON	HARNESS, WHL SPD SEN WRG (2 CONNECTORS FOR BRK MODULE HARN) .....
86	Y07 (2ND DES)	12055921	1	DISCON	HARNESS, WHL SPD SEN WRG (3 CONNECTORS FOR BRK MODULE HARN) .....
86	Y67 (1ST DES)	12048803	1	DISCON	HARNESS, WHL SPD SEN WRG (HAS 2 CONNECTORS FOR BRK MODULE HARN) .....
86	Y67 (2ND DES)	12055922	1	DISCON	HARNESS, WHL SPD SEN WRG (HAS 3 CONNECTORS FOR BRK MODULE HARN) .....
87	Y07 (EXC 1BL PERF HDLG PKG Z51, B2B SPORT HDLG PKG Z52) .	12046597	1	DISCON	HARNESS, WHL SPD SEN WRG .....
87	Y07 1BL (PERF HDLG PKG Z51), B2B (SPORT HDLG PKG Z52)	12067499	1	DISCON	HARNESS, WHL SPD SEN WRG .....
87	Y67	12046598	1	DISCON	HARNESS, WHL SPD SEN WRG .....
88–90	Y	12073494	1	385.50	HARNESS, WHL SPD SEN WRG .....
91	Y (EXC ELEK RIDE & HANDLING (FX3)	12090313	1	260.86	HARNESS, WHL SPD SEN WRG .....
91	Y ELEK RIDE & HANDLING (FX3) ..	12090314	1	260.86	HARNESS, WHL SPD SEN WRG .....
91–96	Y	12090339	2	80.25	HARNESS, WHL SPD SEN WRG HARN EXTN .....
92–94	Y	10241014	1	1030.00	MODULE, ELEK BRK & TRACT CONT (AC–DELCO #10241014) .....
95	Y 5.7J (LT5)	10241014	1	1030.00	MODULE, ELEK BRK & TRACT CONT (AC–DELCO #10241014) .....

© 2000 GENERAL MOTORS SERVICE PARTS OPERATIONS

MICROFICHE INDEX

GROUPS 12.000 THRU 13.000

FICHE 10 OF 11

GROUP	DESCRIPTION	STARTING GRID LOCATION PARTS	ILLUSTRATIONS
–	GENERAL INFORMATION	1–A2	1–G2
–	ALPHABETICAL INDEX	1–B13	N.A.
12.000	BODY MOLDINGS – SHEET METAL	10–A2	10–D2
13.000	BODY WIRING – VINYL TOP TRIM	10–C2	N.A.
–	OUT OF FICHE CALLS	N.A.	10–M22

10–N1

4.720 BOLT – BRACKET – CLIP – CONNECTOR – COVER – DIODE – GASKET – HARNESS – MODULE – PLATE – RELAY – RETAINER – SUPPORT – WIRE, Electronic Brake Control(Con't)

86–89	Y	14103343	1	990.05	MODULE, ELEK BRK CONT (MODULE, ELEK BRK CONT) (AC–DELCO #14103343)
90–91	Y	10223326	1	1030.00	MODULE, ELEK BRK CONT (AC–DELCO #10223326)
95	Y 5.7P (LT1)	12521972	1	643.62	MODULE, ELEK BRK CONT (& TRACT CONT)
96	Y	12525023	1	857.82	MODULE, ELEK BRK CONT
92–94	Y	14058658	2	1.68	PLATE, ELEK BRK & TRACT CONT MDL BRKT STUD (12.986)
95	Y 5.7J (LT5)	14058658	1	1.68	PLATE, ELEK BRK & TRACT CONT MDL BRKT STUD (12.986)
86–91	Y	14091012	1	DISCON	PLATE, ELEK BRK CONT WRG HARN CLIP TAP (U–SHAPE) (03.675)
92–96	Y	10045625	7	1.07	PLATE, ELEK BRK CONT WRG HARN CLIP TAP (W/STUD) (12.981)
92–96	Y	14090618	1	7.05	PLATE, ELEK BRK CONT WRG HARN GROM TAP (03.675)
92–94	Y	10143547	1	2.19	SUPPORT, ELEK BRK & TRACT CONT MDL
95	Y 5.7J (LT5)	10143547	1	2.19	SUPPORT, ELEK BRK & TRACT CONT MDL
91–96	Y	12080879	1	9.90	WIRE, BRK PRESS MOD VLV WRG HARN GND

6.760 BRACKET – NUT – REINFORCEMENT – WASHER, Steering Column Attaching

90–96	Y	10086066	1	67.20	BRACKET, STRG COL UPR SUPT
90–96	Y	10146441	2	2.85	NUT, STRG COL SUPT BRKT SI BRKT
90–96	Y	10086084	1	12.67	REINFORCEMENT, STRG COL SUPT BRKT

7.006 BRACE – MEMBER – RAIL, Frame Side

84–88	Y07	14058685	LH	DISCON	BRACE, OTR RR SI MBR
84–88	Y07	14058686	RH	DISCON	BRACE, OTR RR SI MBR
89–96	Y07	14104793	LH	14.20	BRACE, U/B OTR RR S/RL
89–96	Y07	14104794	RH	14.20	BRACE, U/B OTR RR S/RL
90–91	Y	10174972	RH	998.20	MEMBER, FRT FRM SI
84	Y	14089121	LH	DISCON	MEMBER, FRT SI
85–86	Y07	14089121	LH	DISCON	MEMBER, FRT SI
85	Y07	14089122	RH	DISCON	MEMBER, FRT SI
86–87	Y07 (EXC PERF HDLG PKG Z51, SPORT HDLG PKG Z52)	14089122	RH	DISCON	MEMBER, FRT SI
86–87	Y67	10048795	LH	DISCON	MEMBER, FRT SI (ALSO REQD FOR INSTALLATION: 14105144, 14105145 T/W 10098137 (EXC FE7, F58) OR 10098138 (W/FE7, F58))
86–87	Y67	10048796	RH	DISCON	MEMBER, FRT SI (ALSO REQD FOR INSTALLATION: 14105144, 14105145 T/W 10098137 (EXC FE7, F58) OR 10098138 (W/FE7, F58))
87	Y07 PERF HDLG PKG (Z51), SPORT HDLG PKG (Z52)	10048795	LH	DISCON	MEMBER, FRT SI (ALSO REQD FOR INSTALLATION: 14105144, 14105145 T/W 10098137 (EXC FE7, F58) OR 10098138 (W/FE7, F58))

© 2000 GENERAL MOTORS SERVICE PARTS OPERATIONS

7.006 BRACE – MEMBER – RAIL, Frame Side(Con't)

87	Y07 PERF HDLG PKG (Z51), SPORT HDLG PKG (Z52)	10048796	RH	DISCON	MEMBER, FRT SI (ALSO REQD FOR INSTALLATION: 14105144, 14105145 T/W 10098137 (EXC FE7, F58) OR 10098138 (W/FE7, F58))
87	Y07 (EXC PERF HDLG PKG Z51, SPORT HDLG PKG Z52)	14089121	LH	DISCON	MEMBER, FRT SI
88	Y07 (EXC PERF HDLG PKG Z51, SPORT HDLG PKG Z52)	10112669	LH	DISCON	MEMBER, FRT SI (INR)
88	Y07 (EXC PERF HDLG PKG Z51, SPORT HDLG PKG Z52)	10112670	RH	DISCON	MEMBER, FRT SI (INR)
88	Y07 PERF HDLG PKG Z51, SPORT HDLG PKG Z52	10112671	LH	DISCON	MEMBER, FRT SI (INR)
88	Y07 PERF HDLG PKG Z51, SPORT HDLG PKG Z52	10112672	RH	DISCON	MEMBER, FRT SI (INR)
88	Y67	10112671	LH	DISCON	MEMBER, FRT SI
88	Y67	10112672	RH	DISCON	MEMBER, FRT SI
89	Y	10132713	LH	DISCON	MEMBER, FRT SI
89	Y	10132714	RH	DISCON	MEMBER, FRT SI
88-89	Y	10112673	LH	DISCON	MEMBER, INR INTER SI
88-89	Y	10112674	RH	DISCON	MEMBER, INR INTER SI
88-93	Y07	12513815	LH	333.60	MEMBER, INR RR SI
88-96	Y07	12513816	RH	333.60	MEMBER, INR RR SI
88-96	Y67	10112677	LH	333.60	MEMBER, INR RR SI
88-96	Y67	10112678	RH	333.60	MEMBER, INR RR SI
94-96	Y07	12513815	LH	333.60	MEMBER, INR RR SI
84-87	Y	14069825	LH	DISCON	MEMBER, INTER SI
84-87	Y	14069826	RH	DISCON	MEMBER, INTER SI
84-87	Y07	14069821	LH	DISCON	MEMBER, RR SI
84-87	Y07	14069822	RH	DISCON	MEMBER, RR SI
86-87	Y67	10048797	LH	DISCON	MEMBER, RR SI
86-87	Y67	10048798	RH	DISCON	MEMBER, RR SI
90-95	Y	12529345	LH	967.00	RAIL, F/CMPT SI
90-95	Y	12529346	RH	967.00	RAIL, F/CMPT SI (WILL NEED TO USE SELF TAPPING SCREWS IN PLACE OF BOLTS FOR ATTACHING FRT & RR LWR W/HSE PNLS, W/SWA SOLV CONT & COOLANT RECOVERY RESVR)
96	Y	12529345	LH	967.00	RAIL, F/CMPT SI
96	Y	12529346	RH	967.00	RAIL, F/CMPT SI

7.009 PLUG, Frame Cross Member

85-88	Y	04805844	2	*1.70	PLUG, OTR RR SI MBR (12.981)

7.010 CROSSMEMBER – MEMBER – SILL, Front Frame Cross Member

89-96	Y	10098200	1	95.20	CROSSMEMBER, FRT (#2)
84-96	Y	14090676	1	45.90	SILL, U/B FRT CR

7.012 RAIL, Frame Cross, Intermediate

90-96	Y	10148004	RH	276.50	RAIL, U/B INR INTER SI (07.006)
90-96	Y	10148005	LH	276.50	RAIL, U/B INR INTER SI (07.006)
90-96	Y	10148004	RH	276.50	RAIL, U/B OTR INTER SI (07.006)
90-96	Y	10148005	LH	276.50	RAIL, U/B OTR INTER SI (07.006)

7.014 CROSSMEMBER – MEMBER, Rear Frame Cross

88-96	Y07	12525520	1	113.30	CROSSMEMBER U/B RR UPR (INCLS LWR MEMBER)
88-94	Y67	12525521	1	111.20	CROSSMEMBER, U/B RR UPR
95-96	Y67	12525521	1	111.20	CROSSMEMBER, U/B RR UPR

© 2000 GENERAL MOTORS SERVICE PARTS OPERATIONS

7.039 BOLT – BRACE – BRACKET – COVER – GUSSET – NUT – PLATE – REINFORCEMENT – SHIM – SPACER, Frame Front Cross Member

91–96	Y	11508331	8	1.80	BOLT, DRIVETRAIN & FRT SUSP FRM (M10X1.5X45) (TO RR) (08.900)
84–88	Y	14069669	2	*1.10	BOLT, FRT C/MBR (M10–1.25X21.5)
89–90	Y 5.7–8 (L98)	14069669	2	*1.10	BOLT, FRT C/MBR (M10–1.25X21.5)
91	Y 5.7–8 (L98)	14069669	4	*1.10	BOLT, FRT C/MBR (M10X1.5X25 13HEX)
90	Y	11516186	AR	*.70	BOLT, OTR FRT SI MBR UPR BR (M8X1.25X16) (08.900)
91–95	Y	11504611	2	2.10	BOLT, U/B FRT S/RL UPR BR (08.900)
95–96	Y	14088310	4	*1.30	BOLT, U/B RR C/MBR GUSS (M8X1.25X24) (03.671)
84–85	Y	14094299	LH	DISCON	BRACE, FRT C/MBR RR
84–85	Y	14094300	RH	DISCON	BRACE, FRT C/MBR RR
36	Y07	14094299	LH	DISCON	BRACE, FRT C/MBR RR
86	Y07	14094300	RH	DISCON	BRACE, FRT C/MBR RR
86–88	Y67	14092611	LH	43.20	BRACE, FRT C/MBR RR
86–88	Y67	14092612	RH	43.20	BRACE, FRT C/MBR RR
87	Y07 1BL (PERF HDLG PKG Z51), B2B (SPORT HDLG PKG Z52)	14092611	LH	43.20	BRACE, FRT C/MBR RR
87	Y07 1BL (PERF HDLG PKG Z51), B2B (SPORT HDLG PKG Z52)	14092612	RH	43.20	BRACE, FRT C/MBR RR
87–88	Y07 (EXC 1BL PERF HDLG PKG Z51, B2B SPORT HDLG PKG Z52)	14094299	LH	DISCON	BRACE, FRT C/MBR RR
87–88	Y07 (EXC 1BL PERF HDLG PKG Z51, B2B SPORT HDLG PKG Z52)	14094300	RH	DISCON	BRACE, FRT C/MBR RR
88	Y07 PERF HDLG PKG (Z51), SPORT HDLG PKG (Z52)	14092611	LH	43.20	BRACE, FRT C/MBR RR
88	Y07 PERF HDLG PKG (Z51), SPORT HDLG PKG (Z52)	14092612	RH	43.20	BRACE, FRT C/MBR RR
89–91	Y 5.7–8 (L98)	14092611	LH	43.20	BRACE, FRT C/MBR RR
89–91	Y 5.7–8 (L98)	14092612	RH	43.20	BRACE, FRT C/MBR RR
84–89	Y	10208440	RH	31.90	BRACE, OTR FRT S/MBR UPR
84–89	Y	14081859	LH	DISCON	BRACE, OTR FRT S/MBR UPR
90–96	Y	10208440	RH	31.90	BRACE, U/B FRT S/RL UPR
90–96	Y	10208441	LH	31.90	BRACE, U/B FRT S/RL UPR
84–86	Y07	14090675	2	DISCON	BRACKET, FRT C/MBR
86–88	Y67	14092617	LH	40.80	BRACKET, FRT C/MBR (RR)
86–88	Y67	14092618	RH	40.80	BRACKET, FRT C/MBR (RR)
87–88	Y07 (EXC 1BL PERF HDLG PKG Z51, B2B SPORT HDLG PKG Z52)	14090675	2	DISCON	BRACKET, FRT C/MBR
87	Y07 1BL (PERF HDLG PKG Z51), B2B (SPORT HDLG PKG Z52)	14092617	LH	40.80	BRACKET, FRT C/MBR (RR)
87	Y07 1BL (PERF HDLG PKG Z51), B2B (SPORT HDLG PKG Z52)	14092618	RH	40.80	BRACKET, FRT C/MBR (RR)
88	Y07 PERF HDLG PKG (Z51), SPORT HDLG PKG (Z52)	14092617	LH	40.80	BRACKET, FRT C/MBR (RR)
88	Y07 PERF HDLG PKG (Z51), SPORT HDLG PKG (Z52)	14092618	RH	40.80	BRACKET, FRT C/MBR (RR)
89–96	Y	14092617	LH	40.80	BRACKET, FRT C/MBR (RR)
89–96	Y	14092618	RH	40.80	BRACKET, FRT C/MBR (RR)
84–96	Y	14078627	LH	6.60	COVER, RR SI MBR
84–96	Y	14078628	RH	6.60	COVER, RR SI MBR
84–96	Y	14064523	LH	11.40	GUSSET, U/B RR C/MBR
84–96	Y	14064524	RH	11.40	GUSSET, U/B RR C/MBR
84–85	Y	14100201	1	DISCON	REINFORCEMENT, FRT C/MBR (LWR)
86	Y07	14100201	1	DISCON	REINFORCEMENT, FRT C/MBR (LWR)
86–88	Y67	14092613	1	DISCON	REINFORCEMENT, FRT C/MBR (UPR)

© 2000 GENERAL MOTORS SERVICE PARTS OPERATIONS

7.039 BOLT – BRACE – BRACKET – COVER – GUSSET – NUT – PLATE – REINFORCEMENT – SHIM – SPACER, Frame Front Cross Member(Con't)

87	Y07 1BL (PERF HDLG PKG Z51), B2B (SPORT HDLG PKG Z52)	14092613	1	DISCON	REINFORCEMENT, FRT C/MBR (UPR) .
87	Y07 (EXC 1BL PERF HDLG PKG Z51, B2B SPORT HDLG PKG Z52) .	14100201	1	DISCON	REINFORCEMENT, FRT C/MBR (LWR) .
88	Y PERF HDLG PKG (Z51), SPORT HDLG PKG (Z52)	14092613	1	DISCON	REINFORCEMENT, FRT C/MBR (UPR) .
88	Y07 (EXC PERF HDLG PKG Z51, SPORT HDLG PKG Z52)	14100201	1	DISCON	REINFORCEMENT, FRT C/MBR (LWR) .
89–90	Y (5.7–8)	14092613	1	DISCON	REINFORCEMENT, FRT C/MBR (UPR) .
89–90	Y (5.7–8)	14100201	1	DISCON	REINFORCEMENT, FRT C/MBR (LWR) .
90–91	Y 5.7J (LT5)	10098136	1	32.40	REINFORCEMENT, FRT C/MBR .....
91	Y 5.7–8 (L98)	14092613	1	DISCON	REINFORCEMENT, FRT C/MBR (UPR) .
91	Y 5.7–8 (L98)	14100201	1	DISCON	REINFORCEMENT, FRT C/MBR (LWR) .
92–96	Y	10098136	1	32.40	REINFORCEMENT, FRT C/MBR .....
84–88	Y	14060122	AR	1.60	SHIM, DRIVETRAIN AND FRT SUSP FRM .....
84–96	Y	14044588	4	1.10	SPACER, DRIVETRAIN & FRT SUSP FRM .....

7.535 BRACKET – BUMPER – SPACER, Rear Spring

88–96	Y	14105140	2	8.40	BUMPER, RR SUSP JOUNCE .....

7.831 BAR – BRACKET – COVER – EXTENSION – FASCIA – NUT – REINFORCEMENT – RETAINER – RIVET – SPACER – STIFFENER, Bumper/Fascia Face

84–90	Y	14030201	1	399.00	FASCIA, FRT BPR .....
91–96	Y	10285643	1	420.00	FASCIA, FRT BPR (PAINT TO MATCH) .
90–95	Y SPECIAL PERFORMANCE PKG (ZR1)	10153675	1	832.00	FASCIA, R/END .....
91–93	Y (EXC SPECIAL PERFORMANCE PKG (ZR1)	10135972	1	750.60	FASCIA, R/END .....
94–95	Y (EXC SIG & MKR LP (T90) (EXPORT), SPECIAL PERFORMANCE PKG (ZR1)	10135972	1	750.60	FASCIA, R/END .....
96	Y	10135972	1	750.60	FASCIA, R/END .....
84–88	Y (EXC EXPORT)	14030202	1	858.90	FASCIA, RR BPR (ON 86–90 Y67, NEED TO CUT OUT OPENING FOR HI–MOUNT STOP LAMP) .....
89	Y	14030202	1	858.90	FASCIA, RR BPR (ON 86–90 Y67, NEED TO CUT OUT OPENING FOR HI–MOUNT STOP LAMP .....
90	Y (EXC SPL PERF PKG ZR1)	1403 202	1	858.90	FASCIA, RR BPR (ON 86–90 Y67, NEED TO CUT OUT OPENING FOR HI–MOUNT STOP LAMP .....
84–96	Y	10149203	LH	60.10	REINFORCEMENT, FRT BPR FASCIA (OTR) .....
84–96	Y	10149204	RH	61.10	REINFORCEMENT, FRT BPR FASCIA (OTR) .....
84–88	Y	14049010	1	91.80	REINFORCEMENT, FRT BPR FASCIA (CTR) .....
84–90	Y	10135949	LH	20.60	REINFORCEMENT, FRT BPR FASCIA CTR .....
84–90	Y	10135950	RH	20.60	REINFORCEMENT, FRT BPR FASCIA CTR .....
91–96	Y	10149201	1	26.00	REINFORCEMENT, FRT BPR FASCIA CTR .....
89–96	Y	10132965	1	3.60	REINFORCEMENT, R/END FASCIA LWR CTR .....

© 2000 GENERAL MOTORS SERVICE PARTS OPERATIONS

7.831 BAR – BRACKET – COVER – EXTENSION – FASCIA – NUT – REINFORCEMENT – RETAINER – RIVET – SPACER – STIFFENER, Bumper/Fascia Face(Con't)

90	Y SPECIAL PERFORMANCE PKG (ZR1)	14104202	2	4.90	REINFORCEMENT, R/END FASCIA SI LWR (OTR)
91–96	Y	14104202	2	4.90	REINFORCEMENT, R/END FASCIA SI LWR (OTR)
84–89	Y	14069614	1	9.70	REINFORCEMENT, RR BPR FASCIA (UPR)
84–88	Y	14069615	LH	6.90	REINFORCEMENT, RR BPR FASCIA (LWR)
84–89	Y	14069616	RH	6.90	REINFORCEMENT, RR BPR FASCIA (LWR)
89–90	Y (EXC SPL PERF PKG ZR1)	14069615	LH	6.90	REINFORCEMENT, RR BPR FASCIA (LWR)
90	Y (EXC SPL PERF PKG ZR1)	14069614	1	9.70	REINFORCEMENT, RR BPR FASCIA (UPR)
90	Y (EXC SPL PERF PKG ZR1)	14069616	RH	6.90	REINFORCEMENT, RR BPR FASCIA (LWR)
84–88	Y	10149282	2	9.50	RETAINER, FRT BPR FASCIA (OTR)
84–90	Y	14046637	1	16.30	RETAINER, FRT BPR FASCIA (CTR)
89–90	Y	10149282	2	9.50	RETAINER, FRT BPR FASCIA
91–96	Y	10146408	1	22.10	RETAINER, FRT BPR FASCIA (22.4" LONG) (STRAIGHT)
91–96	Y	10149202	2	3.60	RETAINER, FRT BPR FASCIA (AIR DEFLECTOR) (17.8" LONG) (CURVED)
84–86	Y	05973400	AR	*.70	RETAINER, PUSH IN RR BPR FASCIA (SNAP–IN PIN LOCK) (22.5MM LONG) (01.269)
84–96	Y	14100248	2	9.80	RETAINER, R/END FASCIA SI CTR (M62X22 W/2 STUDS)
90	Y	10149275	LH	9.40	RETAINER, R/END FASCIA SI CTR
90	Y	10149276	RH	9.40	RETAINER, R/END FASCIA SI CTR
91–93	Y (EXC SPECIAL PERFORMANCE PKG (ZR1)	10149213	LH	9.40	RETAINER, R/END FASCIA SI CTR
91–93	Y (EXC SPECIAL PERFORMANCE PKG (ZR1)	10149214	RH	9.40	RETAINER, R/END FASCIA SI CTR
91–95	Y SPECIAL PERFORMANCE PKG (ZR1)	10149275	LH	9.40	RETAINER, R/END FASCIA SI CTR
91–95	Y SPECIAL PERFORMANCE PKG (ZR1)	10149276	RH	9.40	RETAINER, R/END FASCIA SI CTR
94–95	Y (EXC SIG & MKR LP (T90) (EXPORT), SPECIAL PERFORMANCE PKG (ZR1)	10149213	LH	9.40	RETAINER, R/END FASCIA SI CTR
94–95	Y (EXC SIG & MKR LP (T90) (EXPORT), SPECIAL PERFORMANCE PKG (ZR1)	10149214	RH	9.40	RETAINER, R/END FASCIA SI CTR
96	Y (EXC SIG & MKR LP (T90) (EXPORT)	10149213	LH	9.40	RETAINER, R/END FASCIA SI CTR
96	Y (EXC SIG & MKR LP (T90) (EXPORT)	10149214	RH	9.40	RETAINER, R/END FASCIA SI CTR
90–95	Y (EXC SPECIAL PERFORMANCE PKG (ZR1)	14046629	1	27.00	RETAINER, R/END FASCIA UPR CTR
90–95	Y SPECIAL PERFORMANCE PKG (ZR1)	14104190	1	14.10	RETAINER, R/END FASCIA UPR CTR
96	Y	14046629	1	27.00	RETAINER, R/END FASCIA UPR CTR
84–89	Y	10272907	LH	18.60	RETAINER, R/END FASCIA UPR OTR (4 STUDS)
84–89	Y	10272908	RH	18.60	RETAINER, R/END FASCIA UPR OTR (4 STUDS)

© 2000 GENERAL MOTORS SERVICE PARTS OPERATIONS

7.831 BAR – BRACKET – COVER – EXTENSION – FASCIA – NUT – REINFORCEMENT – RETAINER – RIVET – SPACER – STIFFENER, Bumper/Fascia Face(Con't)

90–95	Y (EXC SPECIAL PERFORMANCE PKG (ZR1)	10272907	LH	18.60	RETAINER, R/END FASCIA UPR OTR (4 STUDS)
90–95	Y (EXC SPECIAL PERFORMANCE PKG (ZR1)	10272908	RH	18.60	RETAINER, R/END FASCIA UPR OTR (4 STUDS)
90–95	Y SPECIAL PERFORMANCE PKG (ZR1)	14104193	LH	10.20	RETAINER, R/END FASCIA UPR OTR
90–95	Y SPECIAL PERFORMANCE PKG (ZR1)	14104194	RH	10.20	RETAINER, R/END FASCIA UPR OTR
96	Y	10272907	LH	18.60	RETAINER, R/END FASCIA UPR OTR (4 STUDS)
96	Y	10272908	RH	18.60	RETAINER, R/END FASCIA UPR OTR (4 STUDS)
84–89	Y	14046629	1	27.00	RETAINER, RR BPR FASCIA (CTR)
84–89	Y	14046704	2	11.80	RETAINER, RR BPR FASCIA (LWR)
	*EXPORT**********EXPORT**********EXPORT**********EXPORT**********EXPORT*				
94	Y SIG & MKR LP (T90) (EXPORT), (EXC SPECIAL PERFORMANCE PKG (ZR1)	10204700	1	789.20	FASCIA, R/END
95	Y SIG & MKR LP (T90) (EXPORT), (EXC SPECIAL PERFORMANCE PKG (ZR1)	10261523	1	832.00	FASCIA, R/END
96	Y SIG & MKR LP (T90) (EXPORT)	10261523	1	832.00	FASCIA, R/END
84–88	Y EXPORT	14049139	1	DISCON	FASCIA, RR BPR
94–96	Y SIG & MKR LP (T90) (EXPORT)	10149275	LH	9.40	RETAINER, R/END FASCIA SI CTR
94–96	Y SIG & MKR LP (T90) (EXPORT)	10149276	RH	9.40	RETAINER, R/END FASCIA SI CTR

7.832 CLIP – EMBLEM – MOLDING – MOLDING KIT – PLATE – SPACER – STRIPE – TAPE, Bumper/Fascia

90–95	Y SPECIAL PERFORMANCE PKG (ZR1), (10U)	10146443	2	25.80	EMBLEM, R/END FASCIA (WHITE) (BOWTIE, ZR1)
90–92	Y SPECIAL PERFORMANCE PKG (ZR1), (75U)	10146446	1	DISCON	EMBLEM, R/END FASCIA (BOWTIE, ZR1) (COLOR CODE WA9238) (LIGHT RED)
90–92	Y SPECIAL PERFORMANCE PKG (ZR1), (81U)	10146447	2	25.80	EMBLEM, R/END FASCIA (RED) (BOWTIE, ZR1)
90–91	Y SPECIAL PERFORMANCE PKG (ZR1), (41U), (96U)	10146448	1	25.80	EMBLEM, R/END FASCIA (BLACK/GRAY) (BOWTIE, Z21)
90	Y SPECIAL PERFORMANCE PKG (ZR1), (53U)	10153678	1	25.80	EMBLEM, R/END FASCIA (ZR1, YELLOW)
90–93	Y SPECIAL PERFORMANCE PKG (ZR1), (80U)	10153679	1	DISCON	EMBLEM, R/END FASCIA (BLUE) (BOWTIE, ZR1)
90–91	Y SPECIAL PERFORMANCE PKG (ZR1), (42U)	10153700	1	DISCON	EMBLEM, R/END FASCIA (TURQUOISE) (BOWTIE, ZR1)
90–91	Y SPECIAL PERFORMANCE PKG (ZR1), (25U)	10172309	1	DISCON	EMBLEM, R/END FASCIA (BLUE STEEL) (BOWTIE, ZR1)
91	Y SPECIAL PERFORMANCE PKG (ZR1), (19U)	10146448	1	25.80	EMBLEM, R/END FASCIA (BLACK/GRAY) (BOWTIE, Z21)
91–92	Y SPECIAL PERFORMANCE PKG (ZR1), (35U)	10167090	1	13.10	EMBLEM, R/END FASCIA (YELLOW) (BOWTIE, ZR1)
92–95	Y SPECIAL PERFORMANCE PKG (ZR1), (43U)	10175826	1	25.80	EMBLEM, R/END FASCIA (AQUA) (BOWTIE, ZR1)
92–94	Y SPECIAL PERFORMANCE PKG (ZR1), (73U)	10198747	1	10.50	EMBLEM, R/END FASCIA (BLACK ROSE) (BOWTIE, ZR1)
92–95	Y SPECIAL PERFORMANCE PKG (ZR1), (41U)	10268455	1	10.50	EMBLEM, R/END FASCIA (BLACK)
9[illegible]–95	Y SPECIAL PERFORMANCE PKG (ZR1), (45U)	10268456	1	10.50	EMBLEM, R/END FASCIA (MARBLEHEAD GRAY)

© 2000 GENERAL MOTORS SERVICE PARTS OPERATIONS

7.832 CLIP – EMBLEM – MOLDING – MOLDING KIT – PLATE – SPACER – STRIPE – TAPE, Bumper/Fascia(Con't)

93	Y SPECIAL PERFORMANCE PKG (ZR1), (75U), (1ST DES)	10146446	1	DISCON	EMBLEM, R/END FASCIA (BOWTIE, ZR1) (COLOR CODE WA9238) (LIGHT RED)
93–95	Y SPECIAL PERFORMANCE PKG (ZR1), (53U)	10153678	1	25.80	EMBLEM, R/END FASCIA (YELLOW) (BOWTIE, ZR1)
93–95	Y SPECIAL PERFORMANCE PKG (ZR1), (70U)	10198688	1	25.80	EMBLEM, R/END FASCIA (RED) (BOWTIE, ZR1)
93	Y SPECIAL PERFORMANCE PKG (ZR1), (68U), (2ND DES)	10228815	1	10.90	EMBLEM, R/END FASCIA (BOWTIE, ZR1) (COLOR CODE WA213A) (DARK RED)
94–95	Y SPECIAL PERFORMANCE PKG (ZR1), (75U)	10146446	1	DISCON	EMBLEM, R/END FASCIA (BOWTIE, ZR1)
94–95	Y SPECIAL PERFORMANCE PKG (ZR1), (28U)	10210902	1	25.80	EMBLEM, R/END FASCIA (CLOISONNE BLUE)
94	Y SPECIAL PERFORMANCE PKG (ZR1), (66U)	10210905	1	DISCON	EMBLEM, R/END FASCIA (MELON)
95	Y SPECIAL PERFORMANCE PKG (ZR1), (05U)	10233119	1	25.80	EMBLEM, R/END FASCIA (CYCLAMAN)
91–95	Y SPECIAL PERFORMANCE PKG (ZR1)	10174848	LH	77.80	MOLDING KIT, RR BPR FASCIA CTR (PAINT TO MATCH)
91–95	Y SPECIAL PERFORMANCE PKG (ZR1)	10174849	RH	77.80	MOLDING KIT, RR BPR FASCIA CTR (PAINT TO MATCH)
88	Y 35 ANNIV (Z01)	10123015	LH	DISCON	MOLDING, FRT BPR FASCIA (OTR)
88	Y 35 ANNIV (Z01)	10123016	RH	DISCON	MOLDING, FRT BPR FASCIA (OTR)
88	Y 35 ANNIV (Z01), W/DLX EXTR TR (B57)	10123017	1	DISCON	MOLDING, FRT BPR FASCIA (CTR)
84–88	Y (EXC DLX EXTR TR B57)	14043087	1	53.60	MOLDING, FRT BPR FASCIA CTR
89–90	Y	14043087	1	53.60	MOLDING, FRT BPR FASCIA CTR
84–88	Y (EXC DLX EXTR TR B57)	14043089	LH	21.90	MOLDING, FRT BPR FASCIA OTR
84–88	Y (EXC DLX EXTR TR B57)	14043090	RH	21.90	MOLDING, FRT BPR FASCIA OTR
89–90	Y	14043089	LH	21.90	MOLDING, FRT BPR FASCIA OTR
89–90	Y	14043090	RH	21.90	MOLDING, FRT BPR FASCIA OTR
88	Y 35 ANNIV (Z01)	10123011	LH	DISCON	MOLDING, RR BPR FASCIA (OTR)
88	Y 35 ANNIV (Z01)	10123012	RH	DISCON	MOLDING, RR BPR FASCIA (OTR)
88	Y 35 ANNIV (Z01) (EXC T89, T90 EXPORT)	10123013	LH	DISCON	MOLDING, RR BPR FASCIA (CTR)
88	Y 35 ANNIV (Z01) (EXC T89, T90 EXPORT)	10123014	RH	DISCON	MOLDING, RR BPR FASCIA (CTR)
84–86	Y (EXC VB4, VD1, VE1, VT7 EXPORT)	14043139	LH	31.10	MOLDING, RR BPR FASCIA CTR
84–86	Y (EXC VB4, VD1, VE1, VT7 EXPORT)	14043140	RH	31.10	MOLDING, RR BPR FASCIA CTR
87	Y (EXC T89, T90 EXPORT)	14043139	LH	31.10	MOLDING, RR BPR FASCIA CTR
87	Y (EXC T89, T90 EXPORT)	14043140	RH	31.10	MOLDING, RR BPR FASCIA CTR
88	Y (EXC DLX EXTR TR B57, T89, T90 EXPORT)	14043139	LH	31.10	MOLDING, RR BPR FASCIA CTR
88	Y (EXC DLX EXTR TR B57, T89, T90 EXPORT)	14043140	RH	31.10	MOLDING, RR BPR FASCIA CTR
89	Y	14043139	LH	31.10	MOLDING, RR BPR FASCIA CTR
89	Y	14043140	RH	31.10	MOLDING, RR BPR FASCIA CTR
90	Y SOFT RIDE SUSP (FE1) (EXC SPL PERF PKG ZR1)	14043139	LH	31.10	MOLDING, RR BPR FASCIA CTR
90	Y SOFT RIDE SUSP (FE1) (EXC SPL PERF PKG ZR1)	14043140	RH	31.10	MOLDING, RR BPR FASCIA CTR
90	Y H.D. SUSP (FE7), SPL PERF PKG (ZR1)	14104449	LH	51.50	MOLDING, RR BPR FASCIA CTR
90	Y H.D. SUSP (FE7), SPL PERF PKG (ZR1)	14104450	RH	51.50	MOLDING, RR BPR FASCIA CTR
84–87	Y	14043133	LH	17.20	MOLDING, RR BPR FASCIA OTR

© 2000 GENERAL MOTORS SERVICE PARTS OPERATIONS

7.832 CLIP – EMBLEM – MOLDING – MOLDING KIT – PLATE – SPACER – STRIPE – TAPE, Bumper/Fascia(Con't)

84–87	Y	14043134	RH	17.20	MOLDING, RR BPR FASCIA OTR
88	Y (EXC DLX EXTR TR B57)	14043133	LH	17.20	MOLDING, RR BPR FASCIA OTR
88	Y (EXC DLX EXTR TR B57)	14043134	RH	17.20	MOLDING, RR BPR FASCIA OTR
89	Y	14043133	LH	17.20	MOLDING, RR BPR FASCIA OTR
89	Y	14043134	RH	17.20	MOLDING, RR BPR FASCIA OTR
90	Y SOFT RIDE SUSP (FE1), HVY DUTY SUSP (FE7), (EXC SPECIAL PERFORMANCE PKG (ZR1)	14043133	LH	17.20	MOLDING, RR BPR FASCIA OTR
90	Y SOFT RIDE SUSP (FE1), HVY DUTY SUSP (FE7), (EXC SPECIAL PERFORMANCE PKG (ZR1)	14043134	RH	17.20	MOLDING, RR BPR FASCIA OTR
90	Y H.D. SUSP (FE7), SPL PERF PKG (ZR1)	14104451	LH	37.80	MOLDING, RR BPR FASCIA OTR
90	Y H.D. SUSP (FE7), SPL PERF PKG (ZR1)	14104452	RH	37.80	MOLDING, RR BPR FASCIA OTR
85–90	Y (81U)	14089662	1	28.70	PLATE, R/END FASCIA NA (CORVETTE)
87–90	Y (20U)	14105571	1	28.70	PLATE, R/END FASCIA NA (CORVETTE) (NASSAU BLUE)
88–90	Y (96U)	10072149	1	28.70	PLATE, R/END FASCIA NA (CORVETTE) (SMOKE GRAY)
88–90	Y (13U), (28U), (96U)	14058697	1	30.40	PLATE, R/END FASCIA NA (CORVETTE) (BLACK W/SILVER BORDER)
89–90	Y (68U)	10125923	1	28.70	PLATE, R/END FASCIA NA (CORVETTE)
89–90	Y (10U)	10137293	1	DISCON	PLATE, R/END FASCIA NA (CORVETTE)
90	Y SOFT RIDE SUSP (FE1), HVY DUTY SUSP (FE7), (41U)	10072149	1	28.70	PLATE, R/END FASCIA NA (CORVETTE) (SMOKE GRAY)
90	Y (91U)	10072149	1	28.70	PLATE, R/END FASCIA NA (CORVETTE, SMOKE GRAY)
90	Y SPECIAL PERFORMANCE PKG (ZR1), (20U)	10146444	1	DISCON	PLATE, R/END FASCIA NA (BOWTIE) (BLUE)
90	Y (42U)	10153697	1	DISCON	PLATE, R/END FASCIA NA (TURQUOISE)
90	Y (53U)	10153698	1	DISCON	PLATE, R/END FASCIA NA (YELLOW)
90	Y (80U)	10153699	1	DISCON	PLATE, R/END FASCIA NA (QUASAR BLUE)
90	Y (25U)	10172308	1	DISCON	PLATE, R/END FASCIA NA (STEEL BLUE)
91–93	Y SPECIAL PERFORMANCE PKG (ZR1), (35U), (53U)	10167089	1	18.40	PLATE, R/END FASCIA NA (CORVETTE) (YELLOW)
91–95	Y SPECIAL PERFORMANCE PKG (ZR1), (10U)	10172312	1	18.40	PLATE, R/END FASCIA NA (CORVETTE) (WHITE)
91	Y SPECIAL PERFORMANCE PKG (ZR1), (25U)	10172313	1	18.40	PLATE, R/END FASCIA NA (BLUE, PAINT TO MATCH) (CORVETTE)
91	Y SPECIAL PERFORMANCE PKG (ZR1), (41U), (91U), (96U)	10172314	1	DISCON	PLATE, R/END FASCIA NA (SMOKE GRAY) (CORVETTE)
91	Y SPECIAL PERFORMANCE PKG (ZR1), (42U)	10172315	1	DISCON	PLATE, R/END FASCIA NA (TURQUOISE) (CORVETTE)
91–95	Y SPECIAL PERFORMANCE PKG (ZR1), (75U)	10172317	1	18.40	PLATE, R/END FASCIA NA (RED) (CORVETTE)
91–93	Y SPECIAL PERFORMANCE PKG (ZR1), (80U)	10172318	1	DISCON	PLATE, R/END FASCIA NA (QUASAR) (CORVETTE)
91–92	Y SPECIAL PERFORMANCE PKG (ZR1), (81U)	10172319	1	DISCON	PLATE, R/END FASCIA NA (RED) (CORVETTE)
92–95	Y SPECIAL PERFORMANCE PKG (ZR1), (43U)	10175824	1	18.40	PLATE, R/END FASCIA NA (AQUA) (CORVETTE)

© 2000 GENERAL MOTORS SERVICE PARTS OPERATIONS

7.832 CLIP – EMBLEM – MOLDING – MOLDING KIT – PLATE – SPACER – STRIPE – TAPE, Bumper/Fascia(Con't)

92–95	Y SPECIAL PERFORMANCE PKG (ZR1), (45U)	10198742	1	25.10	PLATE, R/END FASCIA NA (GREEN) (CORVETTE)
92–94	Y SPECIAL PERFORMANCE PKG (ZR1), (73U)	10198743	1	25.10	PLATE, R/END FASCIA NA (BLACK ROSE) (CORVETTE)
92–95	Y SPECIAL PERFORMANCE PKG (ZR1), (41U)	10268451	1	25.10	PLATE, R/END FASCIA NA (BLACK)
93–95	Y SPECIAL PERFORMANCE PKG (ZR1), (70U)	10198686	1	DISCON	PLATE, R/END FASCIA NA (RED)
93	Y SPECIAL PERFORMANCE PKG (ZR1), (68U)	10228814	1	26.80	PLATE, R/END FASCIA NA (RED)
94–95	Y SPECIAL PERFORMANCE PKG (ZR1), (53U)	10167089	1	18.40	PLATE, R/END FASCIA NA (YELLOW)
94–95	Y SPECIAL PERFORMANCE PKG (ZR1), (28U)	10210889	1	18.40	PLATE, R/END FASCIA NA (BLUE)
94	Y SPECIAL PERFORMANCE PKG (ZR1), (66U)	10210892	1	18.40	PLATE, R/END FASCIA NA (MELON)
95	Y SPECIAL PERFORMANCE PKG (ZR1), (05U)	10233113	1	18.40	PLATE, R/END FASCIA NA (CYCLAMEN)
95	Y INDY PACE CAR (Z4Z)	10278422	1	DISCON	PLATE, R/END FASCIA NA (INDY MTR SPDWY, WINGS & WHL)
84	Y (70L), (70U)	14064531	1	27.40	PLATE, RR BPR FASCIA (SPECTRA RED)
84–87	Y (13U)	14058697	1	30.40	PLATE, RR BPR FASCIA NA (CORVETTE, BLACK W/SILVER BORDER
84–87	Y (40U)	14064530	1	28.70	PLATE, RR BPR FASCIA NA (CORVETTE) (WHITE)
84–85	Y	14064534	1	DISCON	PLATE, RR BPR FASCIA NA (CORVETTE) (LT BLUE MET)
84–85	Y	14064535	1	DISCON	PLATE, RR BPR FASCIA NA (CORVETTE) (MED BLUE MET)
84–87	Y (18U), (41U)	14064538	1	28.70	PLATE, RR BPR FASCIA NA (CORVETTE) (GRAY
84–85	Y	14064539	1	DISCON	PLATE, RR BPR FASCIA NA (CORVETTE) (LT BRONZE MET)
84–85	Y	14064540	1	DISCON	PLATE, RR BPR FASCIA NA (CORVETTE) (DK BRONZE MET)
84–87	Y	14064541	1	28.70	PLATE, RR BPR FASCIA NA (CORVETTE) (GOLD MET)
86–87	Y (59U)	14094259	1	DISCON	PLATE, RR BPR FASCIA NA (CORVETTE) (SILVER BEIGE)
86–89	Y (35U)	14094260	1	DISCON	PLATE, RR BPR FASCIA NA (CORVETTE) (YELLOW)
86–87	Y (69U)	14094261	1	DISCON	PLATE, RR BPR FASCIA NA (CORVETTE) (DK BEIGE)
86–88	Y	14094262	1	DISCON	PLATE, RR BPR FASCIA NA (CORVETTE) (FLAME RED)
87	Y (66U)	10069884	1	DISCON	PLATE, RR BPR FASCIA NA (CORVETTE) (RUSSET)
88	Y (28U)	10072148	1	DISCON	PLATE, RR BPR FASCIA NA (SAPPHIRE)
88	Y (96U)	10072150	1	DISCON	PLATE, RR BPR FASCIA NA (DK GRAY SMOKE)
88	Y 35 ANNIVERSARY (Z01), (40U)	10123020	1	DISCON	PLATE, RR BPR FASCIA NA (CORVETTE) (WHITE)
88	Y (40U), (EXC DELUXE EXTR TR (B57)	14064530	1	28.70	PLATE, RR BPR FASCIA NA (CORVETTE) (WHITE)
88–89	Y (28U), (41U), (96U)	14064538	1	28.70	PLATE, RR BPR FASCIA NA (CORVETTE) (GRAY
96	Y GRAND SPORT EDITION (Z16)	10279777	1	15.30	STRIPE, FRT BPR FASCIA UPR

© 2000 GENERAL MOTORS SERVICE PARTS OPERATIONS

7.832 CLIP – EMBLEM – MOLDING – MOLDING KIT – PLATE – SPACER – STRIPE – TAPE, Bumper/Fascia(Con't)

96	Y GRAND SPORT EDITION (Z16), (EXC EUROPEAN PROVISIONS (VD1) (EXPORT)	10279786	1	34.70	STRIPE, RR BPR FASCIA LWR .....
	*EXPORT***************EXPORT***************EXPORT***************EXPORT***************EXPORT*				
84–88	Y EXPORT	14049255	LH	DISCON	MOLDING, RR BPR FASCIA (CTR INR) .
84–88	Y EXPORT	14049256	RH	DISCON	MOLDING, RR BPR FASCIA (CTR INR) .
84–88	Y EXPORT	14049257	LH	DISCON	MOLDING, RR BPR FASCIA (CTR OTR)
84–88	Y EXPORT	14049258	RH	DISCON	MOLDING, RR BPR FASCIA (CTR OTR)
96	Y67 EUROPEAN PROVISIONS (VD1) (EXPORT), GRAND SPORT EDITION (Z16)	10279788	1	67.90	STRIPE, RR BPR FASCIA LWR .....

7.833 BRACE – BRACKET – RETAINER – SHIM – STUD – SUPPORT – WASHER, Bumper/Fascia

87–89	Y	14100241	LH	10.90	SUPPORT, RR BPR FASCIA (07.836) ...
87–89	Y	14100242	RH	DISCON	SUPPORT, RR BPR FASCIA (07.836) ...
90	Y (EXC SPECIAL PERFORMANCE PKG (ZR1)	14100241	LH	10.90	SUPPORT, RR BPR FASCIA (TO BODY) (07.836) .....
90	Y (EXC SPECIAL PERFORMANCE PKG (ZR1)	14100242	RH	DISCON	SUPPORT, RR BPR FASCIA (TO BODY) (07.836) .....

7.836 BAR – BOLT – BRACKET – PLATE – SUPPORT, Bumper/Fascia

84–96	Y	14060231	2	13.80	SUPPORT, FRT BPR IMP BAR SKID PLT
86	Y (2ND DES)	14100241	LH	10.90	SUPPORT, RR BPR FASCIA (WELDED SPACER ON ONE END) . .....
86	Y (1ST DES)	14064519	LH	DISCON	SUPPORT, RR W/H PNL (TUBULAR SECTION 221MM LONG) (12.944) ...
86	Y (1ST DES)	14064520	RH	DISCON	SUPPORT, RR W/H PNL (TUBULAR SECTION 221MM LONG) (12.944) ...
86	Y	14100242	RH	DISCON	SUPPORT, RR WHL HSE PNL (WELDED SPACER ON ONE END) ...

8.055 EMBLEM – STRIPE, Hood Panel Ornamentation

84–93	Y	10175789	1	22.60	EMBLEM, HOOD (UNDERSIDE) (CHEVROLET CORVETTE, BOWLING GREEN, KY) .....
84–87	Y	14060259	1	19.70	EMBLEM, HOOD (TOPSIDE) (BOWTIE)
88	Y 35 ANNIVERSARY (Z01)	10123018	1	48.20	EMBLEM, HOOD (TOPSIDE) .....
88	Y (EXC DELUXE EXTR TR (B57)	14060259	1	19.70	EMBLEM, HOOD (TOPSIDE) (BOWTIE)
89–90	Y	14060259	1	19.70	EMBLEM, HOOD (TOPSIDE) .....
91	Y SOFT RIDE SUSP (FE1), HVY DUTY SUSP (FE7)	10209060	1	20.10	EMBLEM, HOOD (TOPSIDE) (BLACK) (BOWTIE) .....
92	Y	10209060	1	20.10	EMBLEM, HOOD (TOPSIDE) (BLACK) (BOWTIE) .....
93	Y 40TH ANNIV (Z25)	10198699	1	25.80	EMBLEM, HOOD (TOPSIDE) (CHROME) (BOWTIE) .....
93	Y (EXC 40TH ANNIV (Z25)	10209060	1	20.10	EMBLEM, HOOD (TOPSIDE) (BLACK) (BOWTIE) .....
94	Y	10209060	1	20.10	EMBLEM, HOOD (TOP SIDE) (BLACK) (BOWTIE) .....
95	Y INDY PACE CAR (Z4Z)	10198699	1	25.80	EMBLEM, HOOD (CHROME) (BOWTIE)
95	Y (EXC INDY PACE CAR (Z4Z)	10209060	1	20.10	EMBLEM, HOOD (TOPSIDE) (BLACK) (BOWTIE) .....
96	Y GRAND SPORT EDITION (Z16) ..	10198699	1	25.80	EMBLEM, HOOD (CHROME) (BOWTIE)
96	Y (EXC COLLECTORS EDITION (Z15), GRAND SPORT EDITION (Z16)	10209060	1	20.10	EMBLEM, HOOD (BLACK) (BOWTIE) ...
96	Y COLLECTORS EDITION (Z15) ...	10254346	1	25.80	EMBLEM, HOOD (COLLECTORS EDITION) .....

© 2000 GENERAL MOTORS SERVICE PARTS OPERATIONS

8.055 EMBLEM – STRIPE, Hood Panel Ornamentation(Con't)

88	Y 35 ANNIVERSARY (Z01)	10123021	1	DISCON	EMBLEM, HOOD SI (FLAGS/BOWTIE/35)
92–95	Y SPECIAL PERFORMANCE PKG (ZR1), (10U)	10146443	2	25.80	EMBLEM, HOOD SI (WHITE) (BOWTIE, ZR1) (07.832)
92	Y SPECIAL PERFORMANCE PKG (ZR1), (81U)	10146447	2	25.80	EMBLEM, HOOD SI (RED) (BOWTIE, ZR1) (07.832)
92	Y SPECIAL PERFORMANCE PKG (ZR1), (80U)	10153679	2	DISCON	EMBLEM, HOOD SI (BLUE) (BOWTIE, ZR1) (07.832)
92	Y SPECIAL PERFORMANCE PKG (ZR1), (35U)	10167090	2	13.10	EMBLEM, HOOD SI (YELLOW) (BOWTIE, ZR1) (07.832)
92	Y SPECIAL PERFORMANCE PKG (ZR1), (43U)	10175826	2	25.80	EMBLEM, HOOD SI (AQUA) (BOWTIE, ZR1) (07.832)
92	Y SPECIAL PERFORMANCE PKG (ZR1), (73U)	10198747	2	10.50	EMBLEM, HOOD SI (BLACK ROSE) (BOWTIE, ZR1) (07.832)
92	Y SPECIAL PERFORMANCE PKG (ZR1), (41U)	10268455	2	10.50	EMBLEM, HOOD SI (BLACK) (07.832)
92	Y SPECIAL PERFORMANCE PKG (ZR1), (45U)	10268456	2	10.50	EMBLEM, HOOD SI (MARBLEHEAD GRAY) (07.832)
93	Y SPECIAL PERFORMANCE PKG (ZR1), (53U), (EXC 40TH ANNIV (Z25)	10153678	2	25.80	EMBLEM, HOOD SI (YELLOW) (BOWTIE, ZR1) (07.832)
93	Y SPECIAL PERFORMANCE PKG (ZR1), (80U), (EXC 40TH ANNIV (Z25)	10153679	2	DISCON	EMBLEM, HOOD SI (BLUE) (BOWTIE, ZR1) (07.832)
93	Y 40TH ANNIV (Z25), (EXC SPECIAL PERFORMANCE PKG (ZR1)	10172390	2	33.30	EMBLEM, HOOD SI (40–W/O ZR1)
93	Y SPECIAL PERFORMANCE PKG (ZR1), (43U), (EXC 40TH ANNIV (Z25)	10175826	2	25.80	EMBLEM, HOOD SI (AQUA) (BOWTIE, ZR1) (07.832)
93	Y SPECIAL PERFORMANCE PKG (ZR1), 40TH ANNIV (Z25)	10193602	2	38.90	EMBLEM, HOOD SI (40–W/ZR1)
93	Y SPECIAL PERFORMANCE PKG (ZR1), (70U), (EXC 40TH ANNIV (Z25)	10198688	2	25.80	EMBLEM, HOOD SI (RED) (BOWTIE, ZR1) (07.832)
93	Y SPECIAL PERFORMANCE PKG (ZR1), (73U), (EXC 40TH ANNIV (Z25)	10198747	2	10.50	EMBLEM, HOOD SI (BLACK ROSE) (BOWTIE, ZR1) (07.832)
93	Y SPECIAL PERFORMANCE PKG (ZR1), (41U), (EXC 40TH ANNIV (Z25)	10268455	2	10.50	EMBLEM, HOOD SI (BLACK) (07.832)
93	Y SPECIAL PERFORMANCE PKG (ZR1), (45U), (EXC 40TH ANNIV (Z25)	10268456	2	10.50	EMBLEM, HOOD SI (MARBLEHEAD GRAY) (07.832)
94–95	Y SPECIAL PERFORMANCE PKG (ZR1), (75U)	10146446	1	DISCON	EMBLEM, HOOD SI (BOWTIE, ZR1) (07.832)
94–95	Y SPECIAL PERFORMANCE PKG (ZR1), (53U)	10153678	2	25.80	EMBLEM, HOOD SI (YELLOW) (BOWTIE, ZR1) (07.832)
94–95	Y SPECIAL PERFORMANCE PKG (ZR1), (43U)	10175826	2	25.80	EMBLEM, HOOD SI (AQUA) (BOWTIE, ZR1) (07.832)
94–95	Y SPECIAL PERFORMANCE PKG (ZR1), (70U)	10198608	2	25.80	EMBLEM, HOOD SI (RED) (BOWTIE, ZR1) (07.832)
94	Y SPECIAL PERFORMANCE PKG (ZR1), (73U)	10198747	2	10.50	EMBLEM, HOOD SI (BLACK ROSE) (BOWTIE, ZR1) (07.832)
94–95	Y SPECIAL PERFORMANCE PKG (ZR1), (28U)	10210902	2	25.80	EMBLEM, HOOD SI (CLOISONNE BLUE) (07.832)
94	Y SPECIAL PERFORMANCE PKG (ZR1), (66U)	10210905	2	DISCON	EMBLEM, HOOD SI (MELON) (07.832)
94–95	Y SPECIAL PERFORMANCE PKG (ZR1), (41U)	10268455	2	10.50	EMBLEM, HOOD SI (BLACK) (07.832)
94–95	Y SPECIAL PERFORMANCE PKG (ZR1), (45U)	10268456	2	10.50	EMBLEM, HOOD SI (MARBLEHEAD GRAY) (07.832)

© 2000 GENERAL MOTORS SERVICE PARTS OPERATIONS

8.055 EMBLEM – STRIPE, Hood Panel Ornamentation(Con't)

95	Y SPECIAL PERFORMANCE PKG (ZR1), (05U)	10233119	2	25.80	EMBLEM, HOOD SI (CYCLAMAN) (07.832)
96	Y COLLECTORS EDITION (Z15)	10254344	2	19.40	EMBLEM, HOOD SI (COLLECTORS EDITION)
96	Y GRAND SPORT EDITION (Z16)	10254347	2	22.30	EMBLEM, HOOD SI (GRAND SPORT EDITION)
96	Y GRAND SPORT EDITION (Z16)	10280900	RH	32.40	STRIPE, HOOD CTR (POSN #1)
96	Y GRAND SPORT EDITION (Z16)	10280901	LH	32.40	STRIPE, HOOD CTR (POSN #2)
95	Y INDY PACE CAR (Z4Z)	10278399	LH	DISCON	STRIPE, HOOD FRT
95	Y INDY PACE CAR (Z4Z)	10278400	RH	32.40	STRIPE, HOOD FRT

8.075 BEZEL – BOLT – BUMPER – CABLE – CAP – HANDLE – PLATE – RETAINER, Hood Latch

84–89	Y (12I)	14047492	1	8.36	BEZEL, PRIM LAT REL CBL HDL (GRAPHITE) (PAINT TO MATCH)
84–87	Y (15I)	14058618	1	DISCON	BEZEL, PRIM LAT REL CBL HDL (MED GRAY)
84–85	Y (28I)	14058619	1	DISCON	BEZEL, PRIM LAT REL CBL HDL (BLUE)
84–87	Y (65I)	14058620	1	DISCON	BEZEL, PRIM LAT REL CBL HDL (BRONZE)
84–87	Y (62I)	14058621	1	DISCON	BEZEL, PRIM LAT REL CBL HDL (SADDLE)
84–85	Y	14058622	1	DISCON	BEZEL, PRIM LAT REL CBL HDL (CARMINE)
90–96	Y	10086014	1	6.14	PLATE, HOOD PRIM LAT REL CBL BRKT NUT

8.080 BOLT – BRACKET – BUSHING – COVER – LATCH KIT – NUT – PLATE – SUPPORT, Hood Latch

84–93	Y	10243052	2	6.53	BOLT, HOOD PRIM LAT (TO HOOD)
94–96	Y	11503800	6	*.12	BOLT, HOOD PRIM LAT (08.900)
96	Y	11513703	AR	*.61	BOLT, HOOD PRIM LAT BRKT (M8X1.25X18) (08.900)
92–95	Y	11508600	6	1.82	BOLT, HOOD PRIM LAT CTH (TO CAR) (HFH M6X1X20 9.8 PZOR) (08.900) (AC–DELCO #11508600)
94–96	Y	10243052	2	6.53	BOLT, HOOD PRIM LAT CTH (TO HOOD)
90–93	Y 4–SPD A/TRANS (MD8)	14088310	2	*1.30	BOLT, HOOD PRIM LAT REL CBL BRKT (M8X1.25X24) (03.671)
94	Y 4–SPD A/TRANS (M30)	14088310	2	*1.30	BOLT, HOOD PRIM LAT REL CBL BRKT (M8X1.25X24) (03.671)
84–87	Y	14046733	LH	14.23	SUPPORT, HOOD PRIM LAT
84–87	Y	14046734	RH	DISCON	SUPPORT, HOOD PRIM LAT
88	Y	10123071	LH	DISCON	SUPPORT, HOOD PRIM LAT (HOOD ADJR BPR IN HOOD)
88	Y	14046733	LH	14.23	SUPPORT, HOOD PRIM LAT (HOOD ADJR BPR IN LAT)
88	Y	14046734	RH	DISCON	SUPPORT, HOOD PRIM LAT (HOOD ADJR BPR IN LAT)
89	Y	10123071	LH	DISCON	SUPPORT, HOOD PRIM LAT
89	Y	10225268	RH	DISCON	SUPPORT, HOOD PRIM LAT
90–91	Y SOFT RIDE SUSP (FE1), HVY DUTY SUSP (FE7)	10225267	LH	14.95	SUPPORT, HOOD PRIM LAT
90–91	Y SOFT RIDE SUSP (FE1), HVY DUTY SUSP (FE7)	10225268	RH	DISCON	SUPPORT, HOOD PRIM LAT
92–96	Y	10225267	LH	14.95	SUPPORT, HOOD PRIM LAT

© 2000 GENERAL MOTORS SERVICE PARTS OPERATIONS

8.080 BOLT – BRACKET – BUSHING – COVER – LATCH KIT – NUT – PLATE – SUPPORT, Hood Latch(Con't)

92–96	Y	10225268	RH	DISCON	SUPPORT, HOOD PRIM LAT
88	Y	10225268	RH	DISCON	SUPPORT, HOOD PRIM LATCH (HOOD ADJR BPR IN HOOD)

8.132 DECAL – MOLDING – MOLDING KIT – STRIPE, Front Fender and Body Ornamentation

96	Y07 GRAND SPORT EDITION (Z16)	12522082	RH	112.20	MOLDING KIT, F/FDR WHL OPG (PAINT TO MATCH)
96	Y07 GRAND SPORT EDITION (Z16)	12522083	LH	112.20	MOLDING KIT, F/FDR WHL OPG (PAINT TO MATCH)
84	Y	14043095	LH	47.40	MOLDING, F/FDR SI (READS:CROSS–FIRE INJECTION)
84	Y	14043096	RH	DISCON	MOLDING, F/FDR SI (READS:CROSS–FIRE INJECTION)
85–87	Y	14084409	LH	31.70	MOLDING, F/FDR SI (READS:TUNED PORT INJECTION, W/GRAY LETTERING)
85–87	Y	14084410	RH	31.70	MOLDING, F/FDR SI (READS:TUNED PORT INJECTION, W/GRAY LETTERING)
88	Y 35 ANNIVERSARY (Z01)	10123037	LH	DISCON	MOLDING, F/FDR SI (READS:TUNED PORT INJECTION, W/WHITE LETTERING)
88	Y 35 ANNIVERSARY (Z01)	10123038	RH	DISCON	MOLDING, F/FDR SI (READS:TUNED PORT INJECTION, W/WHITE LETTERING)
88	Y (EXC DELUXE EXTR TR (B57)	14084409	LH	31.70	MOLDING, F/FDR SI (READS:TUNED PORT INJECTION, W/GRAY LETTERING)
88	Y (EXC DELUXE EXTR TR (B57)	14084410	RH	31.70	MOLDING, F/FDR SI (READS:TUNED PORT INJECTION, W/GRAY LETTERING)
89–90	Y SOFT RIDE SUSP (FE1), HVY DUTY SUSP (FE7)	14084409	LH	31.70	MOLDING, F/FDR SI (READS:TUNED PORT INJECTION, W/GRAY LETTERING)
89–90	Y SOFT RIDE SUSP (FE1), HVY DUTY SUSP (FE7)	14084410	RH	31.70	MOLDING, F/FDR SI (READS:TUNED PORT INJECTION, W/GRAY LETTERING)
95	Y INDY PACE CAR (Z4Z)	10278401	LH	99.80	STRIPE, BODY SI UPR (INCLUDES DOOR & FENDER COMPLETE)
95	Y INDY PACE CAR (Z4Z)	10278402	RH	DISCON	STRIPE, BODY SI UPR (INCLUDES DOOR & FENDER COMPLETE)
96	Y GRAND SPORT EDITION (Z16)	10279781	1	29.60	STRIPE, F/FDR WHL OPG
	*EXPORT**********EXPORT**********EXPORT**********EXPORT**********EXPORT*				
94–96	Y WHL OPG MLDG (BLACK) (B74)	12522082	RH	112.20	MOLDING KIT, F/FDR WHL OPG (PAINT TO MATCH)
94–96	Y WHL OPG MLDG (BLACK) (B74)	12522083	LH	112.20	MOLDING KIT, F/FDR WHL OPG (PAINT TO MATCH)

8.821 BAG – CLIP – HANDLE – PLATE – WRENCH, Wheel, Jack and Miscellaneous Wrench

89–96	Y67 AUX RF (CC2)	10149268	1	32.04	BAG, TOOL STOW (13.346)
84–96	Y	14050029	1	16.07	HANDLE, JK/WHL WRENCH (INCLUDES WRENCH FOR 84–90) (08.820)
91–96	Y	10180890	1	29.84	WRENCH, WHL

© 2000 GENERAL MOTORS SERVICE PARTS OPERATIONS

9.211 BOLT – BRACKET – CASE – GASKET – NUT – PLATE – SEAL – STUD, A/C Evaporator

Note: FOR 1986–1991 USAGE REFER TO HEATER MODULE CHART GRP 8.857
Note: FOR 1986–1991 USAGE REFER TO AIR CONDITIONING MODULE CHART GRP 9.169
Note: FOR 1986–1991 USAGE REFER TO AIR CONDITIONING BLOWER CHART GRP 9.215

84–86	Y	03052533	1	7.80	GASKET, HTR & A/C EVPR & BLO MDL
84–96	Y	14046766	1	2.22	PLATE, A/C EVPR & BLO MDL STUD (09.262)
84	Y	03022672	1	14.12	PLATE, EVAP CASE BACKUP

9.216 GASKET – IMPELLER – PLATE, A/C Evaporator Blower

Note: FOR 1986–1991 USAGE REFER TO AIR CONDITIONING BLOWER CHART GRP 9.215
Note: IMPELLERS MAY BE REPLACED BY A PRESS–ON TYPE IMPELLER THAT REQUIRES A NEW CORRESPONDING MOTOR
Note: FOR ADDITIONAL INFORMATION, SEE BLOWER MOTOR AND IMPELLER APPLICATION CHARTS IN THE REFERENCE CATALOG (CODE 88R).

90–96	Y	14046786	2	.82	PLATE, A/C EVPR & BLO MDL TAP (09.786)

9.647 ARMATURE KIT – BEZEL – BOLT – BOLT KIT – BRACKET – CABLE – CONNECTOR – FINIAL – INSULATOR – NUT – PLATE – RELAY – SPLITTER – STRAP, Radio Antenna

Note: FOR 1985–1991 USAGE REFER TO ELECTRIC ANTENNA CHART GRP 9.645

88–96	Y07	14049163	1	.38	PLATE, BODY WRG HARN RET (AC–DELCO #14049163)
84–87	Y	14049163	1	.38	PLATE, HARN RET, RR BODY WRG (AC–DELCO #14049163)

9.665 BRACKET – GASKET – GRILLE – HOUSING – INSULATOR – NUT – PLATE – REINFORCEMENT – SEAL – SPEAKER, Radio Auxiliary Speakers

84–87	Y07	14057533	LH	37.25	GRILLE, RDO RR SPKR (PAINT TO MATCH)
84–87	Y07	14057534	RH	37.25	GRILLE, RDO RR SPKR (PAINT TO MATCH)
86–89	Y67	14092707	2	DISCON	GRILLE, RDO RR SPKR
88–89	Y07	10054605	LH	33.00	GRILLE, RDO RR SPKR
88–89	Y07	10054606	RH	33.00	GRILLE, RDO RR SPKR
90–91	Y07 (22I)	10132937	LH	DISCON	GRILLE, RDO RR SPKR (BLUE)
90–91	Y07 (22I)	10132938	RH	DISCON	GRILLE, RDO RR SPKR (BLUE)
90–91	Y07 (60I)	10132939	LH	DISCON	GRILLE, RDO RR SPKR (COGNAC)
90–91	Y07 (60I)	10132940	RH	DISCON	GRILLE, RDO RR SPKR (COGNAC)
90–92	Y07 (73I)	10132941	LH	DISCON	GRILLE, RDO RR SPKR (RED)
90–92	Y07 (73I)	10132942	RH	22.05	GRILLE, RDO RR SPKR (RED)
90–91	Y07 (90I)	10132943	LH	DISCON	GRILLE, RDO RR SPKR (GRAY)
90–91	Y07 (90I)	10132944	RH	DISCON	GRILLE, RDO RR SPKR (GRAY)
90–93	Y07 (10I), (19I)	10219851	LH	DISCON	GRILLE, RDO RR SPKR (BLACK)
90–93	Y07 (10I), (19I)	10219852	RH	DISCON	GRILLE, RDO RR SPKR (BLACK)
90–91	Y67 (22I)	10123083	2	DISCON	GRILLE, RDO RR SPKR (BLUE)
90–91	Y67 (60I)	10123085	2	DISCON	GRILLE, RDO RR SPKR (COGNAC)
90–92	Y67 (73I)	10123087	2	DISCON	GRILLE, RDO RR SPKR (RED)
90–91	Y67 (90I)	10123089	2	DISCON	GRILLE, RDO RR SPKR (GRAY)
92–93	Y07 (64I)	10219853	LH	30.00	GRILLE, RDO RR SPKR (BEIGE)
92–93	Y07 (64I)	10219854	RH	24.73	GRILLE, RDO RR SPKR (BEIGE)
92–93	Y07 (14I)	10219855	LH	27.68	GRILLE, RDO RR SPKR (GRAY)
92–93	Y07 (14I)	10219856	RH	28.72	GRILLE, RDO RR SPKR (GRAY)
92–93	Y67 (64I)	10175628	2	33.25	GRILLE, RDO RR SPKR (BEIGE)
92–93	Y67 (10I), (19I)	10219863	2	DISCON	GRILLE, RDO RR SPKR (BLACK)
92–93	Y67 (14I)	10219865	2	28.98	GRILLE, RDO RR SPKR (GRAY)

© 2000 GENERAL MOTORS SERVICE PARTS OPERATIONS

9.665 BRACKET – GASKET – GRILLE – HOUSING – INSULATOR – NUT – PLATE – REINFORCEMENT – SEAL – SPEAKER, Radio Auxiliary Speakers(Con't)

93	Y07 (79I)	10219859	LH	28.20	GRILLE, RDO RR SPKR (RED)
93	Y07 (79I)	10219860	RH	28.20	GRILLE, RDO RR SPKR (RED)
93	Y07 (70I)	10219861	LH	DISCON	GRILLE, RDO RR SPKR (RED)
93	Y07 (70I)	10219862	RH	28.20	GRILLE, RDO RR SPKR (RED)
93	Y67 (79I)	10219866	2	23.05	GRILLE, RDO RR SPKR (RED)
94–96	Y07 (19I)	10238611	LH	22.05	GRILLE, RDO RR SPKR (BLACK)
94–96	Y07 (19I)	10238612	RH	28.50	GRILLE, RDO RR SPKR (BLACK)
94–96	Y07 (64I)	10238613	LH	28.50	GRILLE, RDO RR SPKR (BEIGE)
94–96	Y07 (64I)	10238614	RH	28.50	GRILLE, RDO RR SPKR (BEIGE)
94–96	Y07 (14I)	10238615	LH	28.50	GRILLE, RDO RR SPKR (GRAY)
94–96	Y07 (14I)	10238616	RH	28.50	GRILLE, RDO RR SPKR (GRAY)
94–95	Y07 (70I)	10238617	LH	28.50	GRILLE, RDO RR SPKR (RED)
94–95	Y07 (70I)	10238618	RH	28.50	GRILLE, RDO RR SPKR (RED)
94–96	Y67 (19I)	10238620	2	28.50	GRILLE, RDO RR SPKR (BLACK)
94–96	Y67 (64I)	10238621	2	28.50	GRILLE, RDO RR SPKR (BEIGE)
94–96	Y67 (14I)	10238622	2	28.50	GRILLE, RDO RR SPKR (GRAY)
94–95	Y67 (70I)	10238623	2	28.50	GRILLE, RDO RR SPKR (RED)
96	Y07 GRAND SPORT EDITION (Z16), (70I)	10238611	LH	22.05	GRILLE, RDO RR SPKR (BLACK)
96	Y07 GRAND SPORT EDITION (Z16), (70I)	10238612	RH	28.50	GRILLE, RDO RR SPKR (BLACK)
96	Y07 (70I), (EXC GRAND SPORT EDITION (Z16)	10238617	LH	28.50	GRILLE, RDO RR SPKR (RED)
96	Y07 (70I), (EXC GRAND SPORT EDITION (Z16)	10238618	RH	28.50	GRILLE, RDO RR SPKR (RED)
96	Y67 (70I), (EXC GRAND SPORT EDITION (Z16)	10238623	2	28.50	GRILLE, RDO RR SPKR (RED)
84–89	Y UQ4 (BOSE)	14049217	2	33.25	GRILLE, SI FRT DR SPKR (PAINT TO MATCH)
90–96	Y07	10193609	LH	24.41	HOUSING, RDO RR SPKR (12.981)
90–96	Y07	10193610	RH	24.41	HOUSING, RDO RR SPKR (12.981)
90–96	Y67	10218349	1	31.68	HOUSING, RDO RR SPKR (AC–DELCO #10218349)
90–91	Y	09415253	AR	.33	NUT, RDO FRT S/D SPKR GRL
93–96	Y	09415253	7	.33	NUT, RDO FRT S/D SPKR GRL
84–86	Y STEREO (UM6, UM7)	14064578	2	1.45	SEAL, DR RADIO SPKR OPG CVR
87–89	Y (EXC UQ4 BOSE)	14064578	2	1.45	SEAL, DR RADIO SPKR OPG CVR

9.786 BAFFLE – CASE – CONNECTOR – COUPLING – COVER – DUCT – INSULATOR – LEVER – LINK – OUTLET – PLATE – RETAINER – SEAL – SHAFT – STRAP – VALVE, Air Distributor

Note: FOR 1986–1991 USAGE REFER TO HEATER MODULE CHART GRP 8.845

Note: FOR 1986–1991 USAGE REFER TO AIR CONDITIONING MODULE CHART GRP 9.169

84–86	Y	01224062	1	4.32	CONNECTOR, LINK ADJ
86–89	Y A/C (C68)	14089386	1	.73	CONNECTOR, TEMP VLV LINK
92–96	Y A/C MAN CONT (C60)	14089386	1	.73	CONNECTOR, TEMP VLV LINK
92–96	Y A/C AUTO ELEC CONT (C68)	52452752	1	1.22	COUPLING, TEMP VLV ACTR
90	Y	10100159	1	DISCON	DUCT, AIR DISTR
91	Y (1ST DES)	10100159	1	DISCON	DUCT, AIR DISTR (W/LAP COOLER DUCTS)
91	Y (2ND DES)	10157937	1	52.07	DUCT, AIR DISTR (NO LAP COOLER DUCTS)
92–96	Y	10157937	1	52.07	DUCT, AIR DISTR (NO LAP COOLER DUCTS)
92–96	Y A/C MAN CONT (C60)	52452746	1	2.12	LEVER, TEMP VLV (SLAVE) (W/PIN)
92–96	Y A/C MAN CONT (C60)	52452748	1	2.12	LEVER, TEMP VLV (W/O SLAVE) (PLAS)

© 2000 GENERAL MOTORS SERVICE PARTS OPERATIONS

9.786 BAFFLE – CASE – CONNECTOR – COUPLING – COVER – DUCT – INSULATOR – LEVER – LINK – OUTLET – PLATE – RETAINER – SEAL – SHAFT – STRAP – VALVE, Air Distributor(Con't)

84–96	Y	03052308	1	1.08	LINK, AIR INL VLV
84–86	Y	03038869	1	.85	LINK, DVTR VLV
92–96	Y A/C MAN CONT (C60)	52452747	1	2.70	LINK, TEMP VLV (FORMED)
84–96	Y	14046783	1	.92	PLATE, AIR INL TAP (LWR RR)
84–96	Y	14046784	1	1.07	PLATE, AIR INL TAP (UPR RR)
84–96	Y	14046785	1	1.22	PLATE, AIR INL TAP (FRT)
84–90	Y	14046786	2	.82	PLATE, HTR CASE & CORE MT
91–96	Y	14046786	2	.82	PLATE, HTR NUT
84–86	Y	20007898	1	1.80	RETAINER, TEMP VLV LINK (PLSTC)
	*EXPORT**********EXPORT**********EXPORT**********EXPORT**********EXPORT*				
89	Y A/C (C60), EXPORT (L98)	20007898	1	1.80	RETAINER, TEMP VLV LINK (PLSTC)

10.027 DECAL – WINDSHIELD, Windshield Glass

95	Y INDY PACE CAR (Z4Z)	10278406	1	52.60	DECAL, W/S NA

10.092 SEAL, Windshield

84–96	Y	10236368	1	17.30	SEAL, W/S (BLACK)
87–96	Y	03999572	5	4.98	SEAL, W/S INR LWR FRM (09.260)

10.093 MOLDING, Windshield Reveal Molding

86–92	Y	10045695	2	9.30	MOLDING, W/S (LWR CORNERS)
93–96	Y	10045695	2	9.30	MOLDING, W/S
84–96	Y	14049031	LH	30.60	MOLDING, W/S SI RVL
84–96	Y	14049032	RH	30.60	MOLDING, W/S SI RVL
84–96	Y	14049033	1	37.50	MOLDING, W/S UPR RVL (INCLS UPR WEATHER STRIP RET)

10.203 SUNSHADE – SUNSHADE KIT, Windshield Sunshade

84–85	Y	10051877	LH	62.90	SUNSHADE
86–89	Y (EXC ILLUM S/S MIR (D74)	10051877	LH	62.90	SUNSHADE
86	Y	10199727	LH	67.20	SUNSHADE
87–89	Y ILLUM S/S MIR (D74), (19I)	10199727	LH	67.20	SUNSHADE
84–85	Y (EXC EUROPEAN PROVISIONS (VD1) (EXPORT)	10199728	RH	67.20	SUNSHADE, (MAY NEED TO REPLACE BODY SIDE CONNECTOR THAT MATES W/SUNSHADE HARNESS; USE CONN PKG 12085481)
86–93	Y	10199728	RH	67.20	SUNSHADE, (BLACK)
90–93	Y	10199727	LH	67.20	SUNSHADE, (BLACK)
94–96	Y (EXC EUROPEAN PROVISIONS (VD1) (EXPORT)	12453667	LH	67.20	SUNSHADE, (SEE KIT 12459827) (BLACK)
94–96	Y (EXC EUROPEAN PROVISIONS (VD1) (EXPORT)	12453668	RH	67.20	SUNSHADE, (SEE KIT 12459827) (BLACK)
	*EXPORT**********EXPORT**********EXPORT**********EXPORT**********EXPORT*				
84–87	Y (VD1) EXPORT	10051880	RH	DISCON	SUNSHADE
94–96	Y EUROPEAN PROVISIONS (VD1) (EXPORT)	10251051	LH	67.20	SUNSHADE, (BLACK)
94–96	Y EUROPEAN PROVISIONS (VD1) (EXPORT)	10251052	RH	67.20	SUNSHADE, (BLACK)

10.219 BOLT – CLIP – COVER – RETAINER – SPRING – SUPPORT, Windshield Sunshade

92–96	Y	14081021	4	*1.25	BOLT, S/S SUPT (TORX HD 8X1.25X20) (08.913)
89–96	Y	10219601	LH	6.40	COVER, S/S SUPT TR
89–96	Y	10219602	RH	6.40	COVER, S/S SUPT TR

© 2000 GENERAL MOTORS SERVICE PARTS OPERATIONS

10.219 BOLT – CLIP – COVER – RETAINER – SPRING – SUPPORT, Windshield Sunshade(Con't)

84–96	Y	14060215	2	.70	RETAINER, S/S
84–96	Y	14060216	2	1.30	SPRING, S/S
89–96	Y	10198727	LH	91.72	SUPPORT, S/S
89–96	Y	10198728	RH	91.72	SUPPORT, S/S

10.230 BRACE – BRACKET – INSULATOR – NUT – PANEL – PLATE – REINFORCEMENT – RETAINER – SHIM – SUPPORT, Instrument Panel

84–89	Y	14046649	1	DISCON	BRACE, I/P LWR
84–89	Y	14047477	2	DISCON	BRACE, I/P LWR
89–92	Y	10085905	LH	DISCON	BRACE, I/P LWR
89–92	Y	10085906	RH	DISCON	BRACE, I/P LWR
84–89	Y	14060213	LH	DISCON	BRACE, I/P REINF
84–89	Y	14060214	RH	DISCON	BRACE, I/P REINF
84–85	Y	14046644	LH	DISCON	BRACE, I/P UPR
84–89	Y	14049198	RH	DISCON	BRACE, I/P UPR
86–89	Y	14078645	LH	DISCON	BRACE, I/P UPR
90–96	Y	10085903	LH	3.60	BRACE, I/P UPR
84–94	Y	14104971	1	2.70	BRACKET, I/P INSL
84–85	Y	14046650	1	DISCON	BRACKET, I/P REINF
86–89	Y	14078646	1	DISCON	BRACKET, I/P REINF
89–96	Y	10085902	1	3.60	BRACKET, I/P REINF
84–89	Y	14047445	LH	DISCON	BRACKET, I/P UPR
84–89	Y	14047446	RH	DISCON	BRACKET, I/P UPR
90–96	Y	10086013	LH	12.90	BRACKET, I/P UPR
90–93	Y	10137758	RH	DISCON	BRACKET, I/P UPR
94–96	Y	10251278	LH	3.60	BRACKET, I/P UPR T/PNL
84–89	Y	10125970	LH	32.50	INSULATOR, I/P (TRIM AS REQ)
84–89	Y	14051132	RH	67.20	INSULATOR, I/P
86–89	Y	10045697	1	DISCON	INSULATOR, I/P (WRG HARN FUSE)
90–96	Y	03999572	1	4.98	INSULATOR, I/P (09.260)
94–96	Y	10077470	1	3.21	INSULATOR, I/P (12.810)
90–93	Y	10086210	RH	29.60	PANEL, I/P LWR TR (PAINT TO MATCH)
90	Y 6–SPD M/TRANS (ML9), (73I)	10132978	LH	100.50	PANEL, I/P LWR TR (FLAME RED)
90	Y 6–SPD M/TRANS (ML9), (90I)	10132979	LH	100.50	PANEL, I/P LWR TR (MED GRAYSMOKE)
90	Y 4–SPD A/TRANS (MD8), (73I)	10132983	LH	100.50	PANEL, I/P LWR TR (FLAME RED)
90	Y 4–SPD A/TRANS (MD8), (90I)	10132984	LH	100.50	PANEL, I/P LWR TR (MED GRAYSMOKE)
90	Y 6–SPD M/TRANS (ML9), (19I)	10193746	1	133.30	PANEL, I/P LWR TR (BLACK)
90	Y 6–SPD M/TRANS (ML9), (22I)	10193747	1	133.30	PANEL, I/P LWR TR (BLUE)
90	Y 6–SPD M/TRANS (ML9), (60I)	10193748	1	133.30	PANEL, I/P LWR TR (COGNAC)
90	Y 3–SPD A/TRANS (MD9), (22I)	10193753	1	133.30	PANEL, I/P LWR TR (BLUE)
90	Y 3–SPD A/TRANS (MD9), 6–SPD M/TRANS (ML9), (60I)	12523669	1	DISCON	PANEL, I/P LWR TR (10.252)
90	Y 3–SPD A/TRANS (MD9), 6–SPD M/TRANS (ML9), (90I)	12523671	1	DISCON	PANEL, I/P LWR TR (GRAY) (10.252)
90–91	Y 4–SPD A/TRANS (MD8), (19I)	12523674	1	DISCON	PANEL, I/P LWR TR (CUT HOLES FOR LAP DUCTS AS REQ) (BLACK)
90–91	Y 6–SPD M/TRANS (ML9), (19I)	12523674	1	DISCON	PANEL, I/P LWR TR (BLACK)
91	Y 6–SPD M/TRANS (ML9), (73I)	10132978	LH	100.50	PANEL, I/P LWR TR (HAS HOLES FOR LAP DUCTS) (RED)
91	Y 6–SPD M/TRANS (ML9), (90I)	10132979	LH	100.50	PANEL, I/P LWR TR (HAS HOLES FOR LAP DUCTS) (GRAY)
91	Y 4–SPD A/TRANS (MD8), (73I)	10132983	LH	100.50	PANEL, I/P LWR TR (HAS HOLES FOR LAP DUCTS) (RED)

© 2000 GENERAL MOTORS SERVICE PARTS OPERATIONS

10.230 BRACE – BRACKET – INSULATOR – NUT – PANEL – PLATE – REINFORCEMENT – RETAINER – SHIM – SUPPORT, Instrument Panel(Con't)

91	Y 4–SPD A/TRANS (MD8), (90I) ...	10132984	LH	100.50	PANEL, I/P LWR TR (HAS HOLES FOR LAP DUCTS) (GRAY) .....
91	Y 6–SPD M/TRANS (ML9), (19I) ...	10193746	1	133.30	PANEL, I/P LWR TR (CUT HOLES FOR LAP DUCTS AS REQ) (BLACK) .....
91	Y 6–SPD M/TRANS (ML9), (22I) ...	10193747	1	133.30	PANEL, I/P LWR TR (CUT HOLES FOR LAP DUCTS AS REQ) (BLUE) .....
91	Y 6–SPD M/TRANS (ML9), (60I) ...	10193748	1	133.30	PANEL, I/P LWR TR (CUT HOLES FOR LAP DUCTS AS REQ) (COGNAC) ....
91	Y 4–SPD A/TRANS (MD8), (22I) ...	10193753	1	133.30	PANEL, I/P LWR TR (CUT HOLES FOR LAP DUCTS AS REQ) (BLUE) .....
91	Y 4–SPD A/TRANS (MD8), 6–SPD M/TRANS (ML9), (60I)	12523669	1	DISCON	PANEL, I/P LWR TR (CUT HOLES FOR LAP DUCTS AS REQ, D) (MED COGNAC) (10.252) .....
91	Y 4–SPD A/TRANS (MD8), 6–SPD M/TRANS (ML9), (73I)	12523670	1	DISCON	PANEL, I/P LWR TR (CUT HOLES FOR LAP DUCTS AS REQ) (RED) (10.252) .
91	Y 4–SPD A/TRANS (MD8), 6–SPD M/TRANS (ML9), (90I)	12523671	1	DISCON	PANEL, I/P LWR TR (CUT HOLES FOR LAP DUCTS AS REQ) (GRAY) (10.252) .....
92–93	Y 6–SPD M/TRANS (ML9), (10I), (19I)	10193746	LH	133.30	PANEL, I/P LWR TR (BLACK) .....
92	Y (73I)	12523670	LH	DISCON	PANEL, I/P LWR TR (RED) (10.252) ....
92–93	Y (64I)	12523672	LH	DISCON	PANEL, I/P LWR TR (BEIGE) .....
92–93	Y 4–SPD A/TRANS (MD8), (14I) ...	12523673	LH	DISCON	PANEL, I/P LWR TR (GRAY) .....
92–93	Y 4–SPD A/TRANS (MD8), (10I), (19I)	12523674	LH	DISCON	PANEL, I/P LWR TR (BLACK) .....
92–93	Y 6–SPD M/TRANS (ML9), (10I), (19I)	12523674	1	DISCON	PANEL, I/P LWR TR (BLACK) .....
93	Y 4–SPD A/TRANS (MD8), 6–SPD M/TRANS (ML9), (79I)	12523675	LH	DISCON	PANEL, I/P LWR TR (RED) .....
93	Y 4–SPD A/TRANS (MD8), 6–SPD M/TRANS (ML9), (70I)	12523676	LH	DISCON	PANEL, I/P LWR TR (RED) .....
94	Y (64I)	10256832	RH	126.80	PANEL, I/P LWR TR (BEIGE) (MAY NEED TO ENLARGE 7MM HOLE & 10X7.6MM SLOT AT RH RR OF PNL TO OBTAIN PROPER FIT) .....
94	Y (70I)	10256834	RH	126.80	PANEL, I/P LWR TR (RED) (MAY NEED TO ENLARGE 7MM HOLE & 10X7.6MM SLOT AT RH RR OF PNL TO OBTAIN PROPER FIT) .....
94	Y (14I)	10256836	RH	126.80	PANEL, I/P LWR TR (GRAY) (MAY NEED TO ENLARGE 7MM HOLE & 10X7.6MM SLOT AT RH RR OF PNL TO OBTAIN PROPER FIT) .....
94	Y (19I)	10256838	RH	126.80	PANEL, I/P LWR TR (BLACK) (MAY NEED TO ENLARGE 7MM HOLE & 10X7.6MM SLOT AT RH RR OF PNL TO OBTAIN PROPER FIT) .....
94–96	Y (14I)	10268023	LH	133.30	PANEL, I/P LWR TR (GRAY) .....
94–96	Y (19I)	10268024	LH	126.80	PANEL, I/P LWR TR (BLACK) .....
94–96	Y (64I)	10268025	LH	133.30	PANEL, I/P LWR TR (BEIGE) .....
94–96	Y (70I)	10268026	LH	133.30	PANEL, I/P LWR TR (RED) .....
95–96	Y (64I)	10256832	RH	126.80	PANEL, I/P LWR TR (BEIGE) .....
95–96	Y (70I)	10256834	RH	126.80	PANEL, I/P LWR TR (RED) .....
95–96	Y (14I)	10256836	RH	126.80	PANEL, I/P LWR TR (GRAY) .....
95–96	Y (19I)	10256838	RH	126.80	PANEL, I/P LWR TR (BLACK) .....
84–85	Y	14046643	1	DISCON	PANEL, INST .....
86–89	Y	10064350	1	DISCON	PANEL, INST .....
90–91	Y	10167108	1	175.50	PANEL, INST .....

© 2000 GENERAL MOTORS SERVICE PARTS OPERATIONS

10.230 BRACE – BRACKET – INSULATOR – NUT – PANEL – PLATE – REINFORCEMENT – RETAINER – SHIM – SUPPORT, Instrument Panel(Con't)

92–93	Y	10167108	1	175.50	PANEL, INST
94–96	Y	10285922	1	166.90	PANEL, INST
84–92	Y 4–SPD A/TRANS (MD8), (1ST DES)	14046622	1	DISCON	PLATE, I/P LWR BRKT STUD (1ST DESIGN HAS TWO 20MM STUDS)
84–88	Y M/TRNS	14046742	1	DISCON	PLATE, I/P LWR BRKT STUD
89–92	Y 6–SPD M/TRANS (ML9)	14104930	1	DISCON	PLATE, I/P LWR BRKT STUD
92	Y 4–SPD A/TRANS (MD8), (2ND DES)	10215425	1	13.80	PLATE, I/P LWR BRKT STUD (2ND DESIGN HAS NO STUDS)
93	Y 4–SPD A/TRANS (MD8)	10215425	1	13.80	PLATE, I/P LWR BRKT STUD
94–96	Y 4–SPD A/TRANS (M30)	10215425	1	13.80	PLATE, I/P LWR BRKT STUD
84–89	Y	14092605	1	DISCON	REINFORCEMENT, I/P CTR
90–96	Y	10086173	1	9.30	REINFORCEMENT, I/P CTR LWR SUPT
84–89	Y	14047475	RH	DISCON	SUPPORT, I/P CTR
89–96	Y	10086085	1	12.90	SUPPORT, I/P CTR LWR
89–93	Y	10175530	1	25.80	SUPPORT, I/P LWR T/PNL

10.240 APPLIQUE – BRACKET – CLIP – CONSOLE – COVER – EMBLEM – FILLER – HOLDER – MAT – NUT – PANEL – PLATE – PROTECTOR – RETAINER – SPACER, Floor Console

Note: FOR 1985–1991 USAGE REFER TO INSTRUMENT CLUSTER CHART GRP 9.735

84–96	Y	14046621	2	2.00	BRACKET, F/FLR CNSL
84–94	Y	14049146	RH	.70	BRACKET, F/FLR CNSL FRT
84–94	Y	14065087	LH	.47	BRACKET, F/FLR CNSL FRT
84–96	Y	10137744	LH	.80	BRACKET, F/FLR CNSL INTER (RR)
84–94	Y	14049236	RH	.70	BRACKET, F/FLR CNSL INTER (FRT)
84–88	Y A/TRNS	14049237	LH	.70	BRACKET, F/FLR CNSL INTER (FRT)
84–96	Y	14049238	RH	.70	BRACKET, F/FLR CNSL INTER (RR)
89–94	Y	14049237	LH	.70	BRACKET, F/FLR CNSL INTER (FRT)

10.266 CYLINDER – CYLINDER KIT – LOCK – LOCK PKG – NUT – SPRING – TUMBLER, Instrument Panel Compartment Door Lock

84–86	Y	14075364	1	19.23	LOCK PKG, F/FLR CNSL COMPT DR (UNCODED) (B&S 609541–2) (CONSISTS OF LK CYLINDER, SPR WA, CASE, MTG NUT, LEVER & SEM SCREW)
84–86	Y07	14075365	2	22.44	LOCK PKG, U/B STOR COMPT (UNCODED) (B&S 609542–2) (CONSISTS OF LK CYLINDER, CASE & BOLT, & SCREW)

10.571 LOCATOR – PLATE – REINFORCEMENT – SEAL – WASHER, Door Lock Striker

84–89	Y07	14046603	LH	18.11	LOCATOR, FRT S/D
84–89	Y07	14046604	RH	18.11	LOCATOR, FRT S/D
86–90	Y67	14092601	2	DISCON	LOCATOR, FRT S/D
90	Y07 SOFT RIDE SUSP (FE1), HVY DUTY SUSP (FE7)	14046603	LH	18.11	LOCATOR, FRT S/D
90	Y07 SOFT RIDE SUSP (FE1), HVY DUTY SUSP (FE7)	14046604	RH	18.11	LOCATOR, FRT S/D
91–92	Y	14046603	LH	18.11	LOCATOR, FRT S/D
91–92	Y	14046604	RH	18.11	LOCATOR, FRT S/D
84–92	Y	14047542	2	.90	REINFORCEMENT, FRT S/D LOCR (10.450)

© 2000 GENERAL MOTORS SERVICE PARTS OPERATIONS

10.695 BOLT – EXTENSION – GUARD – INSULATOR – PANEL – RETAINER – RIVET – SEALING STRIP, Door Opening

90–95	Y SPECIAL PERFORMANCE PKG (ZR1)	10175533	LH	24.26	EXTENSION, FRT S/D OPG FIN PNL RR (12.942)
90–95	Y SPECIAL PERFORMANCE PKG (ZR1)	10175534	RH	23.49	EXTENSION, FRT S/D OPG FIN PNL RR (12.942)
84–92	Y	10287792	LH	115.94	PANEL, FRT S/D OPG FIN (12.942) (ADD 16 MM X 48.5 MM SLOT FOR DOOR PIN LOCATOR USING OUTLINE MOLDED INTO PART FOR SLOT LOC)
84–92	Y	10287793	RH	111.87	PANEL, FRT S/D OPG FIN (12.942) (ADD 16MM X 48.5MM SLOT FOR DR PIN LOCATOR, USE OUTLINE MOLDED INTO PART FOR SLOT LOC)
93–96	Y	10287792	LH	115.94	PANEL, FRT S/D OPG FIN (12.942)
93–96	Y	10287793	RH	111.87	PANEL, FRT S/D OPG FIN (12.942)
88–96	Y07	08731909	2	*.40	RETAINER, FLR PNL RR CPT SUPT (FULL FLDG)
85–96	Y	20032850	2	*.64	RETAINER, FRT S/D OPG FIN PNL (PUSH IN) (14.683)
84–96	Y	08731909	4	*.40	RETAINER, FRT S/D WDO FRT W/STR RET (PUSH IN) (LWR) (FULL FLDG)
84–96	Y	20540336	2	.32	RETAINER, FRT S/D WDO FRT W/STR RET (PUSH IN) (UPR) (PAINT TO MATCH) (FITS .18 HOLE, .7 LG, .43 OD, NYLON) (14.630)

10.710 BOLT – GUARD – RETAINER – SEALING STRIP – WEATHERSTRIP, Front Door Window Glass Channel (Outer & Inner)

89–95	Y67 AUX RF (CC2)	10137767	10	.80	BOLT, FRT S/D WDO RR W/STR RET (M4.2X1.41X16) (M4.2 X 1.41 X 16)
89–96	Y67 AUX RF (CC2)	10137780	2	3.30	BOLT, FRT S/D WDO UPR FRT W/STR
89–96	Y67 AUX RF (CC2)	10137767	10	.80	BOLT, FRT S/D WDO UPR FRT W/STR RET (M4.2 X 1.41 X 16)
84–96	Y	14049243	LH	28.73	RETAINER, FRT S/D WDO FRT W/STR (12.810)
84–96	Y	14049244	RH	28.73	RETAINER, FRT S/D WDO FRT W/STR (12.810)
84–95	Y07	08731909	AR	*.40	RETAINER, FRT S/D WDO INR S/STR RR FIL (FULL FLDG) (10.695)
86–95	Y67	14092709	LH	54.60	RETAINER, FRT S/D WDO RR W/STR (POSN #2) (14.260)
86–96	Y67	14092710	RH	54.60	RETAINER, FRT S/D WDO RR W/STR (POSN #2) (14.260)
87–96	Y67	20540336	4	.32	RETAINER, FRT S/D WDO RR W/STR (POS #1) (PAINT TO MATCH) (FITS .18 HOLE, .7 LG, .43 OD, NYLON) (14.630)
89–96	Y67 AUX RF (CC2)	10123053	LH	36.87	RETAINER, FRT S/D WDO RR W/STR (13.346)
89–96	Y67 AUX RF (CC2)	10123054	RH	36.87	RETAINER, FRT S/D WDO RR W/STR (13.346)
91–95	Y67	08731909	2	DISCON	RETAINER, FRT S/D WDO RR W/STR (LWR) (FULL FLDG) (10.695)
86–96	Y67	14092711	LH	53.10	RETAINER, FRT S/D WDO UPR FRT W/STR (14.060)
86–96	Y67	14092712	RH	53.10	RETAINER, FRT S/D WDO UPR FRT W/STR (14.060)

© 2000 GENERAL MOTORS SERVICE PARTS OPERATIONS

10.710 BOLT – GUARD – RETAINER – SEALING STRIP – WEATHERSTRIP, Front Door Window Glass Channel (Outer & Inner)(Con't)

87–96	Y	20540336	2	.32	RETAINER, FRT S/D WDO UPR FRT W/STR (PAINT TO MATCH) (FITS .18 HOLE, .7 LG, .43 OD, NYLON) (14.630)
89–96	Y67 AUX RF (CC2)	10137751	LH	53.90	RETAINER, FRT S/D WDO UPR FRT W/STR (13.346)
89–96	Y67 AUX RF (CC2)	10137752	RH	53.90	RETAINER, FRT S/D WDO UPR FRT W/STR (13.346)
84–96	Y07	14049245	LH	20.01	RETAINER, FRT S/D WDO UPR W/STR (12.810)
84–96	Y07	14049246	RH	20.01	RETAINER, FRT S/D WDO UPR W/STR (12.810)
86–96	Y67	10269867	LH	40.30	WEATHERSTRIP, FRT S/D WDO UPR RR
86–96	Y67	10269868	RH	40.30	WEATHERSTRIP, FRT S/D WDO UPR RR
86–90	Y67	10123055	LH	152.00	WEATHERSTRIP, FRT S/D WDO RR (PART OF REMOVEABLE HARD TOP)
86–90	Y67	10123056	RH	152.00	WEATHERSTRIP, FRT S/D WDO RR (PART OF REMOVEABLE HARD TOP)
86–96	Y67	10273003	LH	45.20	WEATHERSTRIP, FRT S/D WDO RR
86–96	Y67	10273004	RH	45.20	WEATHERSTRIP, FRT S/D WDO RR
91–96	Y67 AUX RF (CC2)	10123055	LH	152.00	WEATHERSTRIP, FRT S/D WDO RR (PART OF REMOVEABLE HARD TOP) (B–PILLAR)
91–96	Y67 AUX RF (CC2)	10123056	RH	152.00	WEATHERSTRIP, FRT S/D WDO RR (PART OF REMOVEABLE HARD TOP) (B–PILLAR)
86–88	Y67	10123051	LH	207.50	WEATHERSTRIP, FRT S/D WDO UPR FRT (PART OF REMOVEABLE HARD TOP) (13.346)
86–88	Y67	10123052	RH	207.50	WEATHERSTRIP, FRT S/D WDO UPR FRT (PART OF REMOVEABLE HARD TOP) (13.346)
86–96	Y67	17987731	LH	42.10	WEATHERSTRIP, FRT S/D WDO UPR FRT (14.120)
86–96	Y67	17987732	RH	42.10	WEATHERSTRIP, FRT S/D WDO UPR FRT (14.120)
89–96	Y67 AUX RF (CC2)	10123051	LH	207.50	WEATHERSTRIP, FRT S/D WDO UPR FRT (PART OF REMOVEABLE HARD TOP) (13.346)
89–96	Y67 AUX RF (CC2)	10123052	RH	207.50	WEATHERSTRIP, FRT S/D WDO UPR FRT (PART OF REMOVEABLE HARD TOP) (13.346)
	*EXPORT**********EXPORT**********EXPORT**********EXPORT**********EXPORT*				
94–96	Y67 EUROPEAN PROVISIONS (VD1) (EXPORT)	12512656	2	1.10	GUARD, FRT S/D WDO UPR FRT W/STR RET EDGE (10.695)
94–96	Y67 EUROPEAN PROVISIONS (VD1) (EXPORT)	12512656	2	1.10	GUARD, FRT S/D WDO UPR RR W/STR RET EDGE (10.695)

11.089 WINDLACE, Rear Door Belt Trim Finish & Window Garnish

84–96	Y07	10104026	1	21.10	WINDLACE, R/CMPT L/WDO FRT TR PNL (W/THREE LARGE HOLES AT ENDS)

© 2000 GENERAL MOTORS SERVICE PARTS OPERATIONS

11.120 PANEL, Rear Hatch Window

84–90	Y07	10282934	1	38.00	PANEL, R/CMPT L/WDO RR TR (W/SEAL) (MUST ALSO REPL LH/RH SI PNLS–P/N 10193737–38) (IF USING ON MODELS WHERE SOME HOLES ARE NOT USED, FILL HOLES W/BLACK FINISH SCREWS OF APPROPRIATE SIZE)
91–96	Y07	10282934	1	38.00	PANEL, R/CMPT L/WDO RR TR (TAKES BUMPER 16662198)
84–91	Y07 (19I)	12508061	LH	40.10	PANEL, RR HATCH WDO FRT TR (BLACK) (DRILL ST BELT ATCH HOLE AS REQ)
84–91	Y07 (19I)	12509348	RH	71.30	PANEL, RR HATCH WDO FRT TR (BLACK) (DRILL ST BELT ATCH HOLE AS REQ)
90–91	Y07 (22I)	12508063	LH	DISCON	PANEL, RR HATCH WDO FRT TR (BLUE) (LESS ST BELT ATTACHMENT HOLE, DRILL AS REQ)
90–91	Y07 (60I)	12508065	LH	DISCON	PANEL, RR HATCH WDO FRT TR (COGNAC) (DRILL ST BELT ATCH HOLE AS REQ)
90–92	Y07 (73I)	12508067	LH	40.10	PANEL, RR HATCH WDO FRT TR (RED) (DRILL ST BELT ATCH HOLE AS REQ)
90–91	Y07 (90I)	12508069	LH	DISCON	PANEL, RR HATCH WDO FRT TR (GRAY) (DRILL ST BELT ATCH HOLE AS REQ)
90	Y07 (22I)	12509349	RH	DISCON	PANEL, RR HATCH WDO FRT TR (DRILL ST BELT ATCH HOLE AS REQ'D) (DK BLUESTEEL)
90–91	Y07 (60I)	12509350	RH	DISCON	PANEL, RR HATCH WDO FRT TR (COGNAC) (DRILL ST BELT ATCH HOLE AS REQ)
90	Y07 (73I)	12509351	RH	DISCON	PANEL, RR HATCH WDO FRT TR (FLAME RED) (LESS ST BELT ATTACHMENT HOLE–DRILL AS REQUIRED)
90	Y07 (90I)	12509352	RH	DISCON	PANEL, RR HATCH WDO FRT TR (LESS ST BELT ATTACHMENT HOLE – DRILL AS REQUIRED)
91	Y07 (22I)	12509349	RH	DISCON	PANEL, RR HATCH WDO FRT TR (BLUE) (DRILL ST BELT ATCH HOLE AS REQ)
91–92	Y07 (73I)	12509351	RH	DISCON	PANEL, RR HATCH WDO FRT TR (RED) (LESS ST BELT ATTACHMENT HOLE, DRILL AS REQ)
91	Y07 (90I)	12509352	RH	DISCON	PANEL, RR HATCH WDO FRT TR (GRAY) (DRILL ST BELT ATCH HOLE AS REQ)
92–93	Y07 (10I), (19I)	12508061	LH	40.10	PANEL, RR HATCH WDO FRT TR (BLACK) (DRILL ST BELT ATCH HOLE AS REQ)
92–93	Y07 (10I), (19I)	12509348	RH	71.30	PANEL, RR HATCH WDO FRT TR (BLACK) (DRILL ST BELT ATCH HOLE AS REQ)
92–93	Y07 (64I)	12509353	RH	71.30	PANEL, RR HATCH WDO FRT TR (BEIGE)
92–93	Y07 (14I)	12509354	RH	71.30	PANEL, RR HATCH WDO FRT TR (GRAY)
92–93	Y07 (64I)	12509714	LH	54.50	PANEL, RR HATCH WDO FRT TR (BEIGE)

© 2000 GENERAL MOTORS SERVICE PARTS OPERATIONS

11.120 PANEL, Rear Hatch Window(Con't)

92–93	Y07 (14I)	12509715	LH	54.50	PANEL, RR HATCH WDO FRT TR (GRAY)
93	Y07 (79I)	10199558	RH	50.10	PANEL, RR HATCH WDO FRT TR (RED)
93	Y07 (79I)	10199559	LH	35.80	PANEL, RR HATCH WDO FRT TR (RED)
93	Y07 (70I)	10199724	RH	DISCON	PANEL, RR HATCH WDO FRT TR (RED)
93	Y07 (70I)	10199725	LH	DISCON	PANEL, RR HATCH WDO FRT TR (RED)
94–96	Y07 (14I), (19I), (64I), (70I)	12508061	LH	40.10	PANEL, RR HATCH WDO FRT TR (BLACK) (DRILL ST BELT ATCH HOLE AS REQ)
94–96	Y07 (14I), (19I), (64I), (70I)	12509348	RH	71.30	PANEL, RR HATCH WDO FRT TR (BLACK) (DRILL ST BELT ATCH HOLE AS REQ)

11.204 WINDOW, Rear Window

86–88	Y67	10123050	1	278.50	WINDOW, R/TOP RR (HTD W/HARN)
89–96	Y67 AUX RF (CC2)	10123050	1	278.50	WINDOW, R/TOP RR (HTD W/HARN)

11.208 MOLDING, Rear Window Reveal Molding

86–88	Y67	10123057	1	45.70	MOLDING, R/TOP R/WDO RVL
89–96	Y67 AUX RF (CC2)	10123057	1	45.70	MOLDING, R/TOP R/WDO RVL

11.209 ESCUTCHEON, Rear Window Reveal Molding

89–96	Y67 AUX RF (CC2)	10092411	1	9.40	ESCUTCHEON, R/WDO LWR R/MLDG (BLACK)

14.340 BEZEL – BOLT – BOW – BRACKET – BUSHING – LATCH – LEVER – LINK – SILENCER, Folding Top

86–88	Y67	10132716	2	39.90	BEZEL, F/TOP RR LAT (DEALER TO GRIND OFF 2MM OFF OF RECEIVER BARREL HOLE FLANGE)
89–94	Y67	10107833	1	33.05	BEZEL, F/TOP RR LAT
95–96	Y67	10107833	2	33.05	BEZEL, F/TOP RR LAT
89–96	Y67	10198616	2	36.10	LATCH, F/TOP RR

14.640 PANEL Roof Headlining

89–96	Y67 AUX RF (CC2)	10123059	1	272.56	PANEL, R/TOP HDLNG TR FIN (13.346)
84	Y (EXC CLEAR RF PNL (CC3)	14088426	1	DISCON	PANEL, RF INR TR
85	Y (EXC CLEAR RF PNL (CC3), (2ND DES)	14081890	1	214.50	PANEL, RF INR TR (RR CORNERS ARE CUT OFF DIAGONALLY.)
85	Y (EXC CLEAR RF PNL (CC3), (1ST DES)	14088426	1	DISCON	PANEL, RF INR TR (RR CORNERS HAVE ROUNDED CUT–OUT.)
86–87	Y07 (EXC CLEAR RF PNL (CC3)	14081890	1	214.50	PANEL, RF INR TR
88–90	Y07 REMOVABLE SUNROOF (CF7)	14081890	1	214.50	PANEL, RF INR TR
91–93	Y07 REMOVABLE SUNROOF (CF7), DUAL REM RF (C2L)	14081890	1	214.50	PANEL, RF INR TR

14.731 BOLT – CARPET – PANEL, Lock Pillar Trim

86–87	Y67 (12I)	10051861	LH	DISCON	CARPET, FRT S/D L/PLR (GRAPHITE)
86–87	Y67 (12I)	10051862	RH	DISCON	CARPET, FRT S/D L/PLR (GRAPHITE)
86–87	Y67 (15I)	10051863	LH	DISCON	CARPET, FRT S/D L/PLR (GRAY)
86–87	Y67 (15I)	10051864	RH	DISCON	CARPET, FRT S/D L/PLR (GRAY)
86–87	Y67 (21I)	10051865	LH	DISCON	CARPET, FRT S/D L/PLR (BLUE)
86–87	Y67 (21I)	10051866	RH	DISCON	CARPET, FRT S/D L/PLR (BLUE)
86–87	Y67 (62I)	10051867	LH	DISCON	CARPET, FRT S/D L/PLR (SADDLE)
86–87	Y67 (62I)	10051868	RH	DISCON	CARPET, FRT S/D L/PLR (SADDLE)
86–87	Y67 (65I)	10051869	LH	DISCON	CARPET, FRT S/D L/PLR (BRONZE)
86–87	Y67 (65I)	10051870	RH	DISCON	CARPET, FRT S/D L/PLR (BRONZE)

© 2000 GENERAL MOTORS SERVICE PARTS OPERATIONS

14.731 BOLT – CARPET – PANEL, Lock Pillar Trim(Con't)

86–87	Y67 (73I)	10051871	LH	DISCON	CARPET, FRT S/D L/PLR (RED)
86–87	Y67 (73I)	10051872	RH	DISCON	CARPET, FRT S/D L/PLR (RED)
88–89	Y67 (90I)	10089583	LH	12.10	CARPET, FRT S/D L/PLR (GRAY)
88–89	Y67 (90I)	10089584	RH	11.90	CARPET, FRT S/D L/PLR (GRAY)
88–89	Y67 (21I)	10137211	LH	DISCON	CARPET, FRT S/D L/PLR (BLUE)
88–89	Y67 (21I)	10137212	RH	DISCON	CARPET, FRT S/D L/PLR (BLUE)
88–91	Y67 (60I)	10137213	LH	DISCON	CARPET, FRT S/D L/PLR (COGNAC)
83–91	Y67 (60I)	10137214	RH	DISCON	CARPET, FRT S/D L/PLR (COGNAC)
88–92	Y67 (73I)	10137215	LH	DISCON	CARPET, FRT S/D L/PLR (RED)
88–92	Y67 (73I)	10137216	RH	12.10	CARPET, FRT S/D L/PLR (RED)
88–91	Y67 (90I)	10137217	LH	DISCON	CARPET, FRT S/D L/PLR (GRAY)
88–91	Y67 (90I)	10137218	RH	DISCON	CARPET, FRT S/D [illegible] (GRAY)
88–91	Y67 (19I)	10219787	LH	11.50	CARPET, FRT S/D [illegible] (BLACK)
88–91	Y67 (19I)	10219788	RH	12.10	CARPET, FRT S/D [illegible] (BLACK)
90–91	Y67 (22I)	10137251	LH	DISCON	CARPET, FRT S/D L/PLR (BLUE)
90–91	Y67 (22I)	10137252	RH	DISCON	CARPET, FRT S/D L/PLR (BLUE)
92–93	Y67 (64I)	10175681	LH	12.10	CARPET, FRT S/D L/PLR (BEIGE)
92–93	Y67 (64I)	10175682	RH	12.10	CARPET, FRT S/D L/PLR (BEIGE)
92–93	Y67 (10I), (19I)	10219787	LH	11.50	CARPET, FRT S/D L/PLR (BLACK)
92–93	Y67 (10I), (19I)	10219788	RH	12.10	CARPET, FRT S/D L/PLR (BLACK)
93	Y67 (79I)	10219793	LH	DISCON	CARPET, FRT S/D L/PLR (RED)
93	Y67 (79I)	10219794	RH	DISCON	CARPET, FRT S/D L/PLR (RED)
93	Y67 (70I)	10219795	LH	DISCON	CARPET, FRT S/D L/PLR (RED)
93	Y67 (70I)	10219796	RH	DISCON	CARPET, FRT S/D L/PLR (RED)
94–96	Y67 (19I)	10238599	LH	12.10	CARPET, FRT S/D L/PLR (BLACK)
94–96	Y67 (19I)	10238600	RH	12.10	CARPET, FRT S/D L/PLR (BLACK)
94–96	Y67 (64I)	10238601	LH	12.10	CARPET, FRT S/D L/PLR (BEIGE)
94–96	Y67 (64I)	10238602	RH	12.10	CARPET, FRT S/D L/PLR (BEIGE)
94–96	Y67 (14I)	10238603	LH	12.10	CARPET, FRT S/D L/PLR (GRAY)
94–96	Y67 (14I)	10238604	RH	12.10	CARPET, FRT S/D L/PLR (GRAY)
94–95	Y67 (70I)	10238605	LH	12.10	CARPET, FRT S/D L/PLR (RED)
94–95	Y67 (70I)	10238606	RH	12.10	CARPET, FRT S/D L/PLR (RED)
96	Y67 (70I), (EXC GRAND SPORT EDITION (Z16)	10238605	LH	12.10	CARPET, FRT S/D L/PLR (RED)
96	Y67 (70I), (EXC GRAND SPORT EDITION (Z16)	10238606	RH	12.10	CARPET, FRT S/D L/PLR (RED)
86–89	Y67	14100367	LH	47.20	PANEL, BODY L/PLR UPR TR
86–89	Y67	14100368	RH	47.20	PANEL, BODY L/PLR UPR TR
90–93	Y67 (19I)	10103850	RH	47.20	PANEL, BODY L/PLR UPR TR (BLACK)
90–93	Y67 (19I)	10103851	LH	47.20	PANEL, BODY L/PLR UPR TR (BLACK)
90–91	Y67 (22I)	10103852	RH	DISCON	PANEL, BODY L/PLR UPR TR (BLUE)
90–91	Y67 (22I)	10103853	LH	DISCON	PANEL, BODY L/PLR UPR TR (BLUE)
90–91	Y67 (60I)	10103854	RH	47.20	PANEL, BODY L/PLR UPR TR (COGNAC)
90–91	Y67 (60I)	10103855	LH	47.20	PANEL, BODY L/PLR UPR TR (COGNAC)
90–92	Y67 (73I)	10103856	RH	47.20	PANEL, BODY L/PLR UPR TR (RED)
90–92	Y67 (73I)	10103857	LH	47.20	PANEL, BODY L/PLR UPR TR (RED)
90–91	Y67 (90I)	10103858	RH	47.20	PANEL, BODY L/PLR UPR TR (GRAY)
90–91	Y67 (90I)	10103859	LH	47.20	PANEL, BODY L/PLR UPR TR (GRAY)
92–93	Y67 (10I)	10167117	LH	DISCON	PANEL, BODY L/PLR UPR TR (WHITE)
92–93	Y67 (10I)	10167118	RH	47.20	PANEL, BODY L/PLR UPR TR (WHITE)
92–93	Y67 (64I)	10175618	RH	47.20	PANEL, BODY L/PLR UPR TR (BEIGE)
92–93	Y67 (64I)	10175619	LH	47.20	PANEL, BODY L/PLR UPR TR (BEIGE)
92–93	Y67 (14I)	10175620	RH	DISCON	PANEL, BODY L/PLR UPR TR (GRAY)
92–93	Y67 (14I)	10175621	LH	DISCON	PANEL, BODY L/PLR UPR TR (GRAY)
93	Y67 (79I)	10199556	RH	47.20	PANEL, BODY L/PLR UPR TR (RED)

© 2000 GENERAL MOTORS SERVICE PARTS OPERATIONS

14.731 BOLT – CARPET – PANEL, Lock Pillar Trim(Con't)

93	Y67 (79I)	10199557	LH	DISCON	PANEL, BODY L/PLR UPR TR (RED)
93	Y67 (70I)	10199722	RH	DISCON	PANEL, BODY L/PLR UPR TR (RED)
93	Y67 (70I)	10199723	LH	DISCON	PANEL, BODY L/PLR UPR TR (RED)
94–96	Y67 (19I)	10212821	LH	4.30	PANEL, BODY L/PLR UPR TR (BLACK)
94–96	Y67 (19I)	10212822	RH	4.30	PANEL, BODY L/PLR UPR TR (BLACK)
94–96	Y67 (70I)	10212825	LH	4.30	PANEL, BODY L/PLR UPR TR (RED)
94–96	Y67 (70I)	10212826	RH	4.30	PANEL, BODY L/PLR UPR TR (RED)
94–96	Y67 (64I)	10212827	LH	4.30	PANEL, BODY L/PLR UPR TR (BEIGE)
94–96	Y67 (64I)	10212828	RH	4.30	PANEL, BODY L/PLR UPR TR (BEIGE)
94–96	Y67 (14I)	10212829	LH	4.30	PANEL, BODY L/PLR UPR TR (GRAY)
94–96	Y67 (14I)	10212830	RH	4.30	PANEL, BODY L/PLR UPR TR (GRAY)

14.875 BELT – BELT KIT – BOLT – BRACKET – BUSHING – CARPET – COVER – EXTENSION KIT – NUT – PANEL – PLATE – SEAL – SEALING STRIP – WASHER, Seat Belt

Note: FOR USAGE REFER TO SEAT BELT CHART GROUP 14.875

86–87	Y67	14100311	LH	DISCON	CARPET, F/ST BELT ANC REINF (GRAPHITE–12I)
86–87	Y67	14100312	RH	DISCON	CARPET, F/ST BELT ANC REINF (GRAPHITE–12I)
86–87	Y67	14100313	LH	DISCON	CARPET, F/ST BELT ANC REINF (GRAY–15I)
86–87	Y67	14100314	RH	DISCON	CARPET, F/ST BELT ANC REINF (GRAY–15I)
86–87	Y67	14100315	LH	DISCON	CARPET, F/ST BELT ANC REINF (BLUE–21I)
86–87	Y67	14100316	RH	DISCON	CARPET, F/ST BELT ANC REINF (BLUE–21I)
86–87	Y67	14100317	LH	DISCON	CARPET, F/ST BELT ANC REINF (SADDLE–62I)
86–87	Y67	14100318	RH	DISCON	CARPET, F/ST BELT ANC REINF (SADDLE–62I)
86–87	Y67	14100319	LH	DISCON	CARPET, F/ST BELT ANC REINF (BRONZE–65I)
86–87	Y67	14100320	RH	DISCON	CARPET, F/ST BELT ANC REINF (BRONZE–65I)
86–87	Y67	14100321	LH	DISCON	CARPET, F/ST BELT ANC REINF (RED–73I)
86–87	Y67	14100322	RH	DISCON	CARPET, F/ST BELT ANC REINF (RED–73I)
88–89	Y67	10089515	LH	15.25	CARPET, F/ST BELT ANC REINF (BLACK–19I)
88–89	Y67	10089516	RH	15.25	CARPET, F/ST BELT ANC REINF (BLACK–19I)
88–89	Y67	10089517	LH	15.25	CARPET, F/ST BELT ANC REINF (BLUE–21I)
88–89	Y67	10089518	RH	DISCON	CARPET, F/ST BELT ANC REINF (BLUE–21I)
88–89	Y67	10089519	LH	DISCON	CARPET, F/ST BELT ANC REINF (COGNAC–60I)
88–89	Y67	10089520	RH	15.25	CARPET, F/ST BELT ANC REINF (COGNAC–60I)
88–89	Y67	10089521	LH	15.25	CARPET, F/ST BELT ANC REINF (RED–73I)
88–89	Y67	10089522	RH	DISCON	CARPET, F/ST BELT ANC REINF (RED–73I)
88–89	Y67	10089523	LH	15.25	CARPET, F/ST BELT ANC REINF (GRAY–90I)
88–89	Y67	10089524	RH	DISCON	CARPET, F/ST BELT ANC REINF (GRAY–90I)

© 2000 GENERAL MOTORS SERVICE PARTS OPERATIONS

14.875 BELT -- BELT KIT – BOLT – BRACKET – BUSHING – CARPET – COVER – EXTENSION KIT – NUT – PANEL – PLATE – SEAL – SEALING STRIP – WASHER, Seat Belt(Con't)

84–95	Y	15734139	2	4.35	PLATE, D/SEAT BELT ANC (BKL SI) (OVAL) (16.714)
84–96	Y	15734139	2	4.35	PLATE, D/SEAT BELT RETR ANC (OVAL) (16.714)
94–96	Y	15734139	2	4.35	PLATE, F/SEAT BELT ANC (OVAL) (16.714)
84–96	Y	15734139	2	4.35	PLATE, P/SEAT BELT ANC (BKL SI) (OVAL) (16.714)
84–96	Y	15734139	2	4.35	PLATE, P/SEAT BELT RETR ANC (OVAL) (16.714)

15.024 BUMPER – HANDLE – HOOK – INSULATOR – SHADE – SUPPORT, Rear Seat to Back Window Panel

84–96	Y07	00365641	3	.39	BUMPER, LUGG SHADE HDL (12.986)
84–94	Y07	14063620	1	7.50	HANDLE, LUGG SHADE
84–96	Y07	14049015	LH	2.19	HOOK, LUGG SHADE CVR (12.981)
84–96	Y07	14049016	RH	2.20	HOOK, LUGG SHADE CVR
84–96	Y07	10251020	1	141.00	SHADE, LUGG
84–96	Y07	14049029	LH	9.72	SUPPORT, LUGG SHADE (12.981)
84–96	Y07	14049030	RH	9.72	SUPPORT, LUGG SHADE (12.981)

15.100 BUMPER – SHUTTER, Rear Quarter

84–91	Y	12503694	1	2.70	SHUTTER, QTR STOW COMPT LK CYL (CHROME) (15MM DIA) (12.945)
84–91	Y	12503695	1	2.70	SHUTTER, QTR STOW COMPT LK CYL (12.945)

15.222 PANEL – PLATE – STRAP – SUPPORT, Rear Compartment Trim

84–90	Y07	10193737	LH	36.10	PANEL, R/CMPT SI TR (11.120) (IF REPLACING THIS PART, MUST ALSO REPLACE RH SI PNL W/10193738 & RR PNL W/10193707)
84–90	Y07	10193738	RH	33.25	PANEL, R/CMPT SI TR (11.120) (IF REPLACING THIS PART, MUST ALSO REPLACE LH SI PNL W/10193737 & RR PNL W/10193707)
91–96	Y07	10193737	LH	36.10	PANEL, R/CMPT SI TR (11.120)
91–96	Y07	10193738	RH	33.25	PANEL, R/CMPT SI TR (11.120)
88–96	Y07	10239258	RH	10.40	SUPPORT, R/CMPT SI CPT
92–96	Y07	10239257	LH	10.40	SUPPORT, R/CMPT SI CPT

15.280 PLATE, Dash Panel

91–96	Y	14043131	2	4.55	PLATE, F/FDR RR REINF NUT

15.300 BRACKET – HOOK – RETAINER, Front Floor Carpet

84–96	Y	1[illegible]0290	3	.50	BRACKET, F/FLR CPT RET
84–96	Y (19I)	10[illegible]50703	1	8.30	RETAINER, F/FLR CPT (BLACK)
86–89	Y (21I)	14100251	1	DISCON	RETAINER, F/FLR CPT (BLUE)
89–91	Y (60I)	10076654	1	DISCON	RETAINER, F/FLR CPT (COGNAC)
89–91	Y (90I)	10076655	1	DISCON	RETAINER, F/FLR CPT (GRAY)
89–92	Y (73I)	14094220	1	DISCON	RETAINER, F/FLR CPT (RED)
90–91	Y (22I)	10135940	1	DISCON	RETAINER, F/FLR CPT (BLUE)
92–93	Y (10I)	10250703	1	8.30	RETAINER, F/FLR CPT (BLACK)
92–96	Y (14I)	10250704	1	8.30	RETAINER, F/FLR CPT (GRAY)
92–96	Y (64I)	10250705	1	8.30	RETAINER, F/FLR CPT (BEIGE)
93	Y (70I)	10250706	1	8.30	RETAINER, F/FLR CPT (RED)

© 2000 GENERAL MOTORS SERVICE PARTS OPERATIONS

15.300 BRACKET – HOOK – RETAINER, Front Floor Carpet(Con't)

94–95	Y (70l)	10250706	1	8.30	RETAINER, F/FLR CPT (RED)
96	Y (70l), (EXC GRAND SPORT EDITION (Z16)	10250706	1	8.30	RETAINER, F/FLR CPT (RED)
94	Y	00480534	AR	*.84	RETAINER, F/FLR CPT RET (11.419)
95	Y	00480534	1	*.84	RETAINER, F/FLR CPT RET (11.419)

15.306 CARPET – INSULATOR – SUPPORT, Rear Floor

84–87	Y07	14047549	LH	DISCON	SUPPORT, FLR PNL RR CPT
84–87	Y07	14047550	RH	DISCON	SUPPORT, FLR PNL RR CPT
88–94	Y07	10239257	LH	10.40	SUPPORT, FLR PNL RR CPT (15.222)

15.492 INSULATOR, Floor Pan

90–94	Y67	11515174	AR	*1.50	INSULATOR, FLR INTER (4 1/4"X7 1/2") (TRIM AS REQ'D)
95–96	Y67	11515174	8	*1.50	INSULATOR, FLR INTER (4 1/4"X7 1/2") (TRIM AS REQ'D)
89–96	Y07	11515174	1	*1.50	INSULATOR, RF INR CTR BOW (4 1/4"X7 1/2") (TRIM AS REQ'D)
89–96	Y07	11515174	2	*1.50	INSULATOR, RF INR SI BOW (4 1/4"X7 1/2") (TRIM AS REQ'D)
91–96	Y07	11515174	AR	*1 50	INSULATOR, RF PNL SND (POSN #1, 2) (4 1/4"X7 1/2") (TRIM AS REQ'D)

© 2000 GENERAL MOTORS SERVICE PARTS OPERATIONS

MICROFICHE INDEX

GROUPS 14.000 THRU 15.000

FICHE 11 OF 11

GROUP	DESCRIPTION	STARTING GRID LOCATION PARTS	ILLUSTRATIONS
–	GENERAL INFORMATION	1–A2	1–G2
–	ALPHABETICAL INDEX	1–B13	N.A.
14.000	INTERIOR TRIM – SEAT BELTS	11–A2	11–E2
15.000	REAR SEAT TRIM – CARPETS – YARDAGE	11–D2	11–H2
–	OUT OF FICHE CALLS	N.A.	11–M16

11–A1

CHEVROLET
BODY GROUP 14.000

INTERIOR TRIM – SEAT BELTS

ALPHABETICAL INDEX

A

ARM, Folding Top Hinge 14.310 11–A21
ARMREST, Front Door Armrest 14.686 11–A25

B

BACKREST, Front Seat Back 14.802 11–B10
BELT KIT, Seat Belt 14.875 11–B14
BELT, Seat Belt 14.875 11–B14
BEZEL, Folding Top 14.340 11–A22
BEZEL, Front Door Armrest 14.688 11–A27
BOLT, Folding and Hard Top Front Rail . 14.080 11–A18
BOLT, Folding Top Assist 14.475 11–A22
BOLT, Folding Top Center 14.215 11–A20
~~BOLT, Folding Top Front Bow~~ ..... ~~14.130 11–A19~~
BOLT, Folding Top Hinge 14.310 11–A21
BOLT, Folding Top Side Roof Rail Control Link 14.155 11–A19
BOLT, Folding Top Side Roof Rail Rear . 14.260 11–A21
BOLT, Folding Top 14.340 11–A22
BOLT, Front Door Trim 14.683 11–A23
BOLT, Inflatable Restraint System 14.865 11–B11
BOLT, Lock Pillar Trim 14.731 11–A27
BOLT, Seat Belt 14.875 11–B14
BOW, Folding Top Center 14.215 11–A20
BOW, Folding Top Front Bow 14.130 11–A19
BOW, Folding Top 14.340 11–A22
BRACKET, Door Arm Rest Mounting ... 14.690 11–A27
BRACKET, Folding and Hard Top Front Rail 14.080 11–A18
BRACKET, Folding Top Center 14.215 11–A20
BRACKET, Folding Top Hinge 14.310 11–A21
BRACKET, Folding Top Trim Hold Down 14.102 11–A18
BRACKET, Folding Top 14.340 11–A22
BRACKET, Inflatable Restraint System .. 14.865 11–B11
BRACKET, Seat Belt 14.875 11–B14
BUMPER, Folding Top Front Bow 14.130 11–A19
BUSHING, Folding Top Center 14.215 11–A20
BUSHING, Folding Top Hinge 14.310 11–A21
BUSHING, Folding Top Side Roof Rail . 14.160 11–A19
BUSHING, Folding Top 14.340 11–A22
BUSHING, Seat Belt 14.875 11–B14

C

CABLE, Folding Top Assist 14.475 11–A22
CABLE, Folding Top Trim Hold Down .. 14.102 11–A18
CARPET, Lock Pillar Trim 14.731 11–A27
CARPET, Seat Belt 14.875 11–D14
CLIP, Folding Top Assist 14.475 11–A22
CLIP, Front Door Armrest 14.686 11–A25
CLIP, Inflatable Restraint System 14.865 11–B11
COIL KIT, Inflatable Restraint System ... 14.865 11–B11
COIL, Inflatable Restraint System 14.865 11–B11
CONNECTOR, Front Door Trim 14.691 11–A27
CONNECTOR, Inflatable Restraint System 14.865 11–B11
COVER, Front Door Trim 14.685 11–A23
COVER, Front Door Trim 14.691 11–A27
COVER, Front Seat Back and Back of Back 14.800 11–B2
COVER, Front Seat Cushion 14.880 11–C3
COVER, Seat Belt 14.875 11–B14
CUSHION, Front/Rear 14.896 11–C10

E

EXTENSION KIT, Seat Belt 14.875 11–B14
EXTENSION, Folding Top Hinge 14.310 11–A21

F

FASTENER, Folding Top Side Roof Rail Rear 14.260 11–A21
FASTENER, Folding Top Side Roof Rail 14.120 11–A18
FILLER, Front Door Armrest 14.686 11–A25

H

HANDLE, Folding and Hard Top Front Rail 14.080 11–A18
HARNESS, Inflatable Restraint System . 14.865 11–B11

HINGE, Folding Top Hinge 14.310 11–A21
HINGE, Front Door Armrest 14.686 11–A25

I

INSERT, Front Door Trim 14.685 11–A23
INSULATOR, Folding Top Side Roof Rail 14.140 11–A19
INSULATOR, Front Door Trim 14.685 11–A23
INSULATOR, Inflatable Restraint System 14.865 11–B11

L

LACE, Side Door Opening Trim 14.665 11–A23
LATCH, Folding Top 14.340 11–A22
LEVER, Folding Top 14.340 11–A22
LINK, Folding Top Side Roof Rail 14.140 11–A19
LINK, Folding Top 14.340 11–A22

M

MODULE, Inflatable Restraint System .. 14.865 11–B11

N

NUT, Folding and Hard Top Front Rail .. 14.080 11–A18
NUT, Inflatable Restraint System 14.865 11–B11
NUT, Seat Belt 14.875 11–B14

P

PAD, Front Seat Back 14.802 11–B10
PAD, Front Seat Cushion 14.890 11–C10
PANEL, Front Door Armrest 14.686 11–A25
PANEL, Front Door Trim 14.685 11–A23
PANEL, Lock Pillar Trim 14.731 11–A27
PANEL, Roof Headlining 14.640 11–A22
PANEL, Seat Belt 14.875 11–B14
PIN, Folding and Hard Top Front Rail .. 14.080 11–A18
PLATE, Front Door Trim 14.683 11–A23
PLATE, Front Door Trim 14.691 11–A27
PLATE, Seat Belt 14.875 11–B14

R

RAIL, Folding Top Side Roof–Center .. 14.170 11–A20
REPAIR KIT, Folding and Hard Top Front Rail 14.080 11–A18
RESISTOR, Inflatable Restraint System . 14.865 11–B11
RETAINER, Folding Top Side Roof Rail . 14.120 11–A18
RETAINER, Front Door Trim 14.683 11–A23
RETAINER, Inflatable Restraint System . 14.865 11–B11
RING, Front Seat Back and Back of Back 14.800 11–B2
RIVET, Folding Top Center 14.215 11–A20

S

SEAL, Bottom of Top Front Roof Rail to Windshield 14.060 11–A18
SEAL, Seat Belt 14.875 11–B14
SEALING STRIP, Seat Belt 14.875 11–B14
SENSOR, Inflatable Restraint System .. 14.865 11–B11
SILENCER, Folding Top 14.340 11–A22
SPRING, Folding Top Center 14.215 11–A20
STOP, Folding Top Hinge 14.310 11–A21
STRAP, Folding Top Assist 14.475 11–A22
STRIKER, Folding Top Hinge 14.310 11–A21
SWITCH KIT, Inflatable Restraint System 14.865 11–B11
SWITCH, Folding Top 14.483 11–A22

T

TRIM, Front Door Trim 14.685 11–A23
TRIM, Front Seat Back and Back of Back 14.800 11–B2
TRIM, Front Seat Cushion 14.880 11–C3

W

WASHER, Folding and Hard Top Front Rail 14.080 11–A18
WASHER, Folding Top Hinge 14.310 11–A21
WASHER, Folding Top Side Roof Rail .. 14.162 11–A20
WASHER, Inflatable Restraint System .. 14.865 11–B11
WASHER, Seat Belt 14.875 11–B14
WEATHERSTRIP, Folding Top Side Roof Rail Rear 14.260 11–A21
WINDLACE, Side Door Opening Trim .. 14.665 11–A23

© GENERAL MOTORS SERVICE PARTS OPERATIONS–CHEVROLET–14Y

CHART INDEX

GROUP 14 GRID

ILLUS INDEX (GRP 14) 11–A6
TRIM COMB 11–A7
PAINT 11–A8
SEAT BELT 11–B24

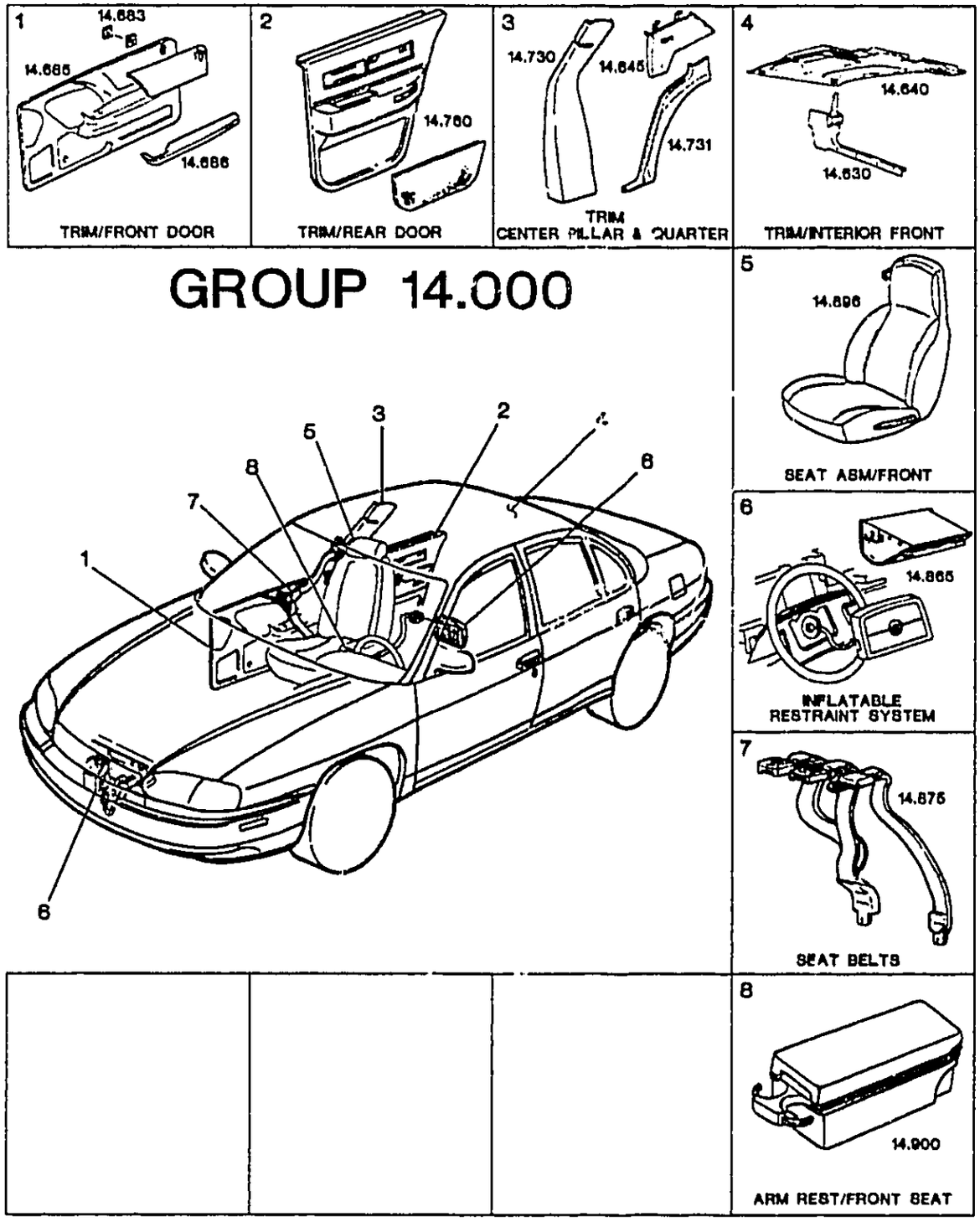
1
14.683
14.665
14.686
TRIM/FRONT DOOR
2
14.760
TRIM/REAR DOOR
3
14.730
14.645
14.731
TRIM
CENTER PILLAR & QUARTER
4
14.640
14.630
TRIM/INTERIOR FRONT
GROUP 14.000
5
14.696
SEAT ASM/FRONT
6
14.865
INFLATABLE
RESTRAINT SYSTEM
7
14.875
SEAT BELTS
8
14.900
ARM REST/FRONT SEAT
1
2
3
4
5
6
7
8
6

1985 CORVETTE TRIM CHART

SEAT TRUNS	COLOR	LEATHER	INTERIOR TRIM	SEAT R.P.O
Graphite	12C	122	Graphite	A51
Graphite	12V	-	Graphite	AQ9
Medium Gray	15C	152	Medium Gray	A51
Medium Gray	15V	-	Medium Gray	AQ9
Medium Blue	28C	-	Medium Blue	A51
Medium Blue	28V	-	Medium Blue	AQ9
Light Saddle	62C	622	Light Saddle	A51
Light Saddle	62V	-	Light Saddle	AQ9
Dark Bronze	65C	652	Dark Bronze	A51
Dark Bronze	65V	-	Dark Bronze	AQ9
Carmine	-	742	Carmine	A51

© 2000 GENERAL MOTORS SERVICE PARTS OPERATIONS-CHEVROLET-14Y

1990 CHEVROLET EXTERIOR COLORS

COLOR BY FAMILY	PRODUCTION COLOR	COLOR CODE
WHITE	WHITE	10,11,40
GRAY	SILVER METALLIC MEDIUM GRAY METALLIC CHARCOAL METALLIC	12,13 15,85,87,90 96
BLACK	BLACK METALLIC BLACK	14 19,41
BLUE	MEDIUM BLUE METALLIC LIGHT BLUE METALLIC BRIGHT BLUE METALLIC DARK BLUE METALLIC AQUA METALLIC MALACHITE METALLIC	20,24,27 22,23,26 24,98 26,29 39 44
RED	DARK RED METALLIC BRIGHT RED MAROON METALLIC RED MEDIUM MAROON METALLIC DARK MAROON METALLIC	68,75,89 70,71,81 72 74 78 79
YELLOW	BRIGHT YELLOW	53
BROWN	BEIGE LIGHT BROWN METALLIC DARK BROWN METALLIC DARK CHESTNUT METALLIC	52 57 59 64
GREEN	POLO GREEN METALLIC	91

1990 CHEVROLET INTERIOR COLORS

COLOR BY FAMILY	PRODUCTION COLOR	SALES COLOR	COLOR CODE
GRAY	MEDIUM SLATE GRAY CHARCOAL DARK SMOKE GRAY MEDIUM DARK GRAY MEDIUM GRAYSMOKE	GRAY GRAY GRAY GRAY GRAY	15 17 82 82 90
BLACK	BLACK	BLACK	19
BLUE	DARK SAPPHIRE VERY DARK SAPPHIRE VERY DARK SAPPHIRE DARK BLUESTEEL DARK ROYAL BLUE DARK BLUE	BLUE BLUE DARK BLUE BLUE BLUE BLUE	20 20 20 22 22 28
RED	DARK MAPLE RED RED FLAME GARNET RED	MAROON RED MAROON	70 73 78
BROWN	LIGHT DRIFTWOOD MEDIUM COGNAC MEDIUM BEECHWOOD DARK ANTELOPE	BEIGE SADDLE LIGHT BROWN BROWN	60 60 66 69

© 2000 GENERAL MOTORS SERVICE PARTS OPERATIONS–CHEVROLET–14Y

1991 CHEVROLET EXTERIOR COLORS

COLOR BY FAMILY	PRODUCTION COLOR	COLOR CODE
WHITE	ARCTIC WHITE CORVETTE WHITE WHITE	10 10 40
GRAY	SILVER METALLIC MEDIUM GRAY METALLIC CORVETTE CHARCOAL METALLIC	12,13 15,85,87 96
BLACK	BLACK	41
BLUE	LIGHT SAPPHIRE BLUE METALLIC LIGHT BLUE METALLIC STEEL BLUE METALLIC MEDIUM SAPPHIRE BLUE METALLIC DARK SAPPHIRE BLUE METALLIC DARK TEAL METALLIC MALACHITE METALLIC MEDIUM QUASAR BLUE METALLIC ULTRA BLUE METALLIC	22 23,24 25 27 28,29 37 44 80 98
RED	CORVETTE DARK RED METALLIC TORCH RED MEDIUM GARNET RED METALLIC DARK RED METALLIC DARK MAPLE RED METALLIC BRIGHT RED AUTUMN MAPLE RED METALLIC	68 70 72 75 78 81 89
BROWN	LIGHT BEIGE LIGHT GOLD METALLIC	57 67
GREEN	TURQUOISE METALLIC CORVETTE POLO GREEN METALLIC	42 91

1991 CHEVROLET INTERIOR COLORS

COLOR BY FAMILY	PRODUCTION COLOR	SALES COLOR	COLOR CODE
GRAY	MEDIUM SLATE GRAY MEDIUM DARK GRAY SMOKE GRAY	GRAY GRAY GRAY	15 82 90
BLACK	BLACK	BLACK	19
BLUE	VERY DARK SAPPHIRE STEEL BLUE	DARK BLUE BLUE	20 22
RED	DARK MAPLE RED RED FLAME GARNET RED	MAROON RED GARNET RED	70 73 78
BROWN	COGNAC MEDIUM BEECHWOOD CAMEL LIGHT/MEDIUM/DARK CAMEL MEDIUM CAMEL	SADDLE LIGHT BROWN CAMEL CAMEL LIGHT BROWN	60 66 67 67 67

© 2000 GENERAL MOTORS SERVICE PARTS OPERATIONS–CHEVROLET–14Y

1992 CHEVROLET EXTERIOR COLORS

COLOR BY FAMILY	PRODUCTION COLOR	COLOR CODE
WHITE	ARCTIC WHITE	10
	BRIGHT WHITE	16
	WHITE	16,40
GRAY	SILVER METALLIC	12,13
	QUICKSILVER MICA	13
	LIGHT GRAY METALLIC	14
	MEDIUM GRAY METALLIC	15
	DARK GREEN-GRAY METALLIC	18
	MALACHITE METALLIC	44
	MEDIUM GRAY METALLIC	87
BLACK	BLACK	41
BLUE	LIGHT SAPPHIRE BLUE METALLIC	22
	MAUI BLUE METALLIC	23
	COMPETITION BLUE	26
	FRENCH BLUE MICA	27
	DARK SAPPHIRE BLUE METALLIC	28
	GULFSTREAM TEAL METALLIC	36
	DARK TEAL METALLIC	37
	BRIGHT AQUA METALLIC	43
	BENNINGTON BLUE MICA	47
	DARK BLUE METALLIC	47
	LIGHT BLUE METALLIC	49
	MEDIUM QUASAR BLUE METALLIC	80
RED	TORCH RED	70
	CRIMSON CLOAK MICA	72
	MEDIUM GARNET RED METALLIC	72
	FLAME RED METALLIC	74
	BRILLIANT RED METALLIC	75
	DARK RED METALLIC	75
	DARK GARNET RED METALLIC	76
	DARK MAPLE RED METALLIC	78
	BRIGHT RED	81
	FLAMEDANCE	81
	CRYSTAL ROSE MICA	84
	AUTUMN MAPLE RED METALLIC	89
PURPLE	BLACK ROSE METALLIC	73
	PURPLE HAZE METALLIC	84
YELLOW	FLASH YELLOW	35
	YELLOW	35
BROWN	LIGHT DRIFTWOOD METALLIC	33
	LIGHT GOLD METALLIC	67
GREEN	TURQUOISE METALLIC	42
	POLO GREEN II METALLIC	45

© 2000 GENERAL MOTORS SERVICE PARTS OPERATIONS–CHEVROLET–14Y

1992 CHEVROLET INTERIOR COLORS

COLOR BY FAMILY	PRODUCTION COLOR	SALES COLOR	COLOR CODE
WHITE	ARCTIC WHITE WHITE	ARCTIC WHITE WHITE	10 11
GRAY	GRAPHITE LIGHT SMOKE GRAY LIGHT GRAY MEDIUM DARK GRAY MEDIUM SMOKE GRAY	GRAPHITE GRAY GRAY/LIGHT GRAY GRAY GRAY	12 13 14 82 90
BLACK	BLACK	BLACK	19
BLUE	VERY DARK SAPPHIRE LIGHT BLUE MEDIUM BLUE	DARK BLUE BLUE BLUE	20 23 28
RED	DARK MAPLE RED RED FLAME GARNET RED	MAROON RED GARNET RED	70 73 78
BROWN	LIGHT BEIGE LIGHT CAMEL	BEIGE/LIGHT BEIGE CAMEL	64 67

1993 CHEVROLET EXTERIOR COLORS

COLOR BY FAMILY	PRODUCTION COLOR	COLOR CODE
WHITE	ARCTIC WHITE BRIGHT WHITE WHITE	10 16 40
GRAY	SILVER METALLIC LIGHT GRAY METALLIC DARK GREEN-GRAY METALLIC MEDIUM GRAY METALLIC	13 14 18 87
BLACK	BLACK	41
BLUE	LIGHT SAPPHIRE BLUE METALLIC MAUI BLUE METALLIC DARK SAPPHIRE BLUE METALLIC MEDIUM ADRIATIC BLUE METALLIC LIGHT TEAL METALLIC BRIGHT AQUA METALLIC MEDIUM QUASAR BLUE METALLIC	22 23 28 30 34 43 80
RED	RUBY RED METALLIC TORCH RED MEDIUM PATRIOT RED MEDIUM GARNET RED METALLIC DARK RED METALLIC DARK GARNET RED METALLIC DARK CHERRY METALLIC BRIGHT RED AUTUMN MAPLE RED METALLIC	68 70 71 72 75 76 77 81 89
PURPLE	BLACK ROSE METALLIC PURPLE PEARL METALLIC	73 91
YELLOW	COMPETITION YELLOW SUNFIRE YELLOW	53 54
BROWN	LIGHT DRIFTWOOD METALLIC	33
GREEN	POLO GREEN II METALLIC	45

© 2000 GENERAL MOTORS SERVICE PARTS OPERATIONS–CHEVROLET–14Y

1993 CHEVROLET INTERIOR COLORS

COLOR BY FAMILY	PRODUCTION COLOR	SALES COLOR	COLOR CODE
WHITE	ARCTIC WHITE	ARCTIC WHITE	10
GRAY	GRAPHITE LIGHT GRAY MEDIUM DARK GRAY	GRAPHITE/GRAY GRAY/MEDIUM GRAY GRAY	12 14 82
BLACK	BLACK	BLACK	19
BLUE	VERY DARK SAPPHIRE	DARK BLUE	20
RED	TORCH RED GARNET RED RUBY RED	TORCH RED GARNET RED RUBY	70 78 79
BROWN	LIGHT BEIGE	BEIGE/LIGHT BEIGE	64

© 2000 GENERAL MOTORS SERVICE PARTS OPERATIONS–CHEVROLET–14Y

1994 CHEVROLET EXTERIOR COLORS

COLOR BY FAMILY	PRODUCTION COLOR	COLOR CODE
WHITE	ARCTIC WHITE	10
	BRIGHT WHITE	16
	WHITE	40
GRAY	SILVER METALLIC	13
	LIGHT GRAY METALLIC	14
	SHADOW GRAY METALLIC	15
	MEDIUM GRAY METALLIC	87
BLACK	BLACK LICORICE	19
	BLACK	41
	BLACK MIST METALLIC	41
BLUE	SLATE BLUE MICA	24
	MEDIUM BRIGHT BLUE METALLIC	26
	ADMIRAL BLUE METALLIC	28
	MEDIUM ADRIATIC BLUE METALLIC	30
	LIGHT TEAL METALLIC	34
	LIGHT ADRIATIC BLUE METALLIC	36
	GULFSTREAM TEAL METALLIC	36
	BRIGHT TEAL METALLIC	37
	ICE BLUE MICA	42
	BRIGHT AQUA METALLIC	43
	SKY BLUE METALLIC	49
	MEDIUM QUASAR BLUE METALLIC	80
RED	MYSTIC MAGENTA METALLIC	38
	TORCH RED	70
	MEDIUM PATRIOT RED METALLIC	71
	CRIMSON CLOAK MICA	72
	MEDIUM GARNET RED METALLIC	72
	BLACK ROSE METALLIC	73
	BRILLIANT RED METALLIC	75
	DARK GARNET RED METALLIC	76
	DARK CHERRY METALLIC	77
	BRIGHT RED METALLIC	81
PURPLE	HAWAIIAN ORCHID METALLIC	84
	PURPLE PEARL METALLIC	91
YELLOW	COMPETITION YELLOW	53
BROWN	LIGHT DRIFTWOOD METALLIC	33
	COPPER METALLIC	66
	CHAMPAGNE METALLIC	68
GREEN	DARK GREEN-GRAY METALLIC	18
	POLYNESIAN GREEN METALLIC	18
	POLO GREEN II METALLIC	45
	TROPICAL GREEN METALLIC	45
	POLO GREEN METALLIC	48

© 2000 GENERAL MOTORS SERVICE PARTS OPERATIONS–CHEVROLET–14Y

1994 CHEVROLET INTERIOR COLORS

COLOR BY FAMILY	PRODUCTION COLOR	SALES COLOR	COLOR CODE
WHITE	ARCTIC WHITE	ARCTIC WHITE	10
GRAY	GRAPHITE LIGHT GRAY LIGHT GRAY LIGHT GRAY	GRAPHITE GRAY LIGHT GRAY MEDIUM GRAY	12 14 14 14
BLACK	BLACK	BLACK	19
BLUE	VERY DARK SAPPHIRE ADRIATIC BLUE DARK ADRIATIC BLUE	MEDIUM BLUE MEDIUM BLUE MEDIUM BLUE	20 30 30
RED	TORCH RED FLAME RED GARNET RED RUBY RED	TORCH RED FLAME RED GARNET RED RUBY	70 73 78 79
BROWN	LIGHT BEIGE LIGHT BEIGE LIGHT BEIGE	BEIGE LIGHT BEIGE MEDIUM BEIGE	64 64 64

© 2000 GENERAL MOTORS SERVICE PARTS OPERATIONS–CHEVROLET–14Y

1995 CHEVROLET EXTERIOR COLORS

COLOR BY FAMILY	PRODUCTION COLOR	COLOR CODE
WHITE	ARCTIC WHITE BRIGHT WHITE	10 16
GRAY	GRANITE SILVER METALLIC SEBRING SILVER LIGHT GRAY METALLIC MEDIUM GRAY METALLIC	3 13 13 14 87
BLACK	BLACK	41
BLUE	MEDIUM BRIGHT BLUE METALLIC ADMIRAL BLUE METALLIC MEDIUM ADRIATIC BLUE METALLIC LIGHT ADRIATIC BLUE METALLIC BRIGHT TEAL METALLIC BRIGHT AQUA METALLIC MEDIUM QUASAR BLUE METALLIC	26 28 30 36 37 43 80
RED	TORCH RED MEDIUM PATRIOT RED METALLIC MEDIUM GARNET RED METALLIC BLACKROSE METALLIC DARK RED METALLIC DARK CHERRY METALLIC BRIGHT RED CAYENNE RED METALLIC	70 71 72 73 75 77 81 96
PURPLE	DARK PURPLE METALLIC HAWAIIAN ORCHID METALLIC PURPLE PEARL METALLIC RASBERRY METALLIC	5 84 91 98
YELLOW	COMPETITION YELLOW	53
BROWN	LIGHT DRIFTWOOD METALLIC LIGHT AUTUMNWOOD METALLIC	33 55
GREEN	DARK GREEN-GRAY METALLIC SHERWOOD GREEN METALLIC POLO GREEN II METALLIC POLO GREEN METALLIC MYSTIC TEAL METALLIC	18 19 45 48 79

© 2000 GENERAL MOTORS SERVICE PARTS OPERATIONS–CHEVROLET–14Y

1995 CHEVROLET INTERIOR COLORS

COLOR BY FAMILY	PRODUCTION COLOR	SALES COLOR	COLOR CODE
WHITE	WHITE	ARCTIC WHITE	10
GRAY	GRAPHITE LIGHT GRAY LIGHT GRAY LIGHT GRAY	GRAPHITE GRAY LIGHT GRAY MEDIUM GRAY	12 14 14 14
BLACK	BLACK	BLACK	19
BLUE	MEDIUM DARK ADRIATIC BLUE	MEDIUM BLUE	30
RED	TORCH RED FLAME RED GARNET RED RUBY RED	TORCH RED FLAME RED GARNET RED RUBY	70 73 78 79
BROWN	LIGHT NEUTRAL LIGHT BEIGE LIGHT BEIGE LIGHT BEIGE	NEUTRAL BEIGE LIGHT BEIGE MEDIUM BEIGE	52 64 64 64

© 2000 GENERAL MOTORS SERVICE PARTS OPERATIONS–CHEVROLET–14Y

14.060 SEAL, Bottom of Top Front Roof Rail to Windshield

94–96	Y67 CONV RF (C05)	10217111	LH	2.45	SEAL, F/TOP FRT (12.810)	
94–96	Y67 CONV RF (C05)	10217112	RH	DISCON	SEAL, F/TOP FRT (12.810)	

14.080 BOLT – BRACKET – HANDLE – NUT – PIN – REPAIR KIT – WASHER, Folding and Hard Top Front Rail

87–96	Y67	10069877	2	.53	BOLT, F/TOP (M8 X 1.25 X 20) ...	11–E22,7
86–90	Y67	15544718	AR	*.42	BOLT, F/TOP FRT LAT BRKT (10.474)	11–E4,34
86–96	Y67	10048806	2	47.54	BRACKET, F/TOP FRT LAT PIN ..	11–E4,43
86–90	Y67 (67T)	10048801	LH	DISCON	HANDLE, F/TOP FRT LAT PIN (ANTELOPE)	
86–90	Y67 (67T)	10048802	RH	112.35	HANDLE, F/TOP FRT LAT PIN (ANTELOPE)	11–E4,42
91–93	Y67 CONV RF (C05)	10048801	LH	DISCON	HANDLE, F/TOP FRT LAT PIN (ANTELOPE)	
91–93	Y67 CONV RF (C05)	10048802	RH	112.35	HANDLE, F/TOP FRT LAT PIN (ANTELOPE)	11–E4,42
94–96	Y CONV RF (C05)	10240339	LH	105.81	HANDLE, F/TOP FRT LAT PIN (BLACK)	11–E22,42
94–96	Y CONV RF (C05)	10240340	RH	105.81	HANDLE, F/TOP FRT LAT PIN (BLACK)	11–E22,42
91–96	Y67 CONV RF (C05)	10051856	2	1.70	NUT, F/TOP FRT LAT PIN (20X.380) (13.346)	11–E11,46
86–90	Y67 (67T)	10048803	LH	98.39	PIN, F/TOP FRT LAT (ANTELOPE)	11–E4,41
86–90	Y67 (67T)	10048804	RH	98.39	PIN, F/TOP FRT LAT (ANTELOPE)	11–E4,41
91–96	Y67 CONV RF (C05)	10048803	LH	98.39	PIN, F/TOP FRT LAT (ANTELOPE)	11–E4,41
91–96	Y67 CONV RF (C05)	10048804	RH	98.39	PIN, F/TOP FRT LAT (ANTELOPE)	11–E4,41
86–88	Y67	10070300	1	DISCON	REPAIR KIT, F/TOP #5 BOW LATCH	
84–90	Y67	10051857	4	5.00	WASHER, F/TOP FRT LAT PIN (STRAIGHT) (M25.4X11.5X.76) (13.346)	11–E4,45
84–90	Y67	20496842	2	2.15	WASHER, F/TOP FRT LAT PIN (WAVED)	11–E4,44
91–96	Y67 CONV RF (C05)	10051857	4	5.00	WASHER, F/TOP FRT LAT PIN (STRAIGHT) (M25.4X11.5X.76) (13.346)	11–E4,45
91–96	Y67 CONV RF (C05)	20496842	2	2.15	WASHER, F/TOP FRT LAT PIN (WAVED)	11–E4,44

14.102 BRACKET – CABLE, Folding Top Trim Hold Down

86–88	Y67	14092643	LH	DISCON	BRACKET, F/TOP HOLDN	
86–88	Y67	14092644	RH	DISCON	BRACKET, F/TOP HOLDN	
86–90	Y67	10074298	2	23.34	CABLE, F/TOP CVR FRT SI TENS (PAINT TO MATCH)	11–E4,28
91–96	Y67 CONV RF (C05)	10074298	2	23.34	CABLE, F/TOP CVR FRT SI TENS (PAINT TO MATCH)	11–E4,28
95–96	Y67 CONV RF (C05)	10273026	1	35.19	CABLE, F/TOP CVR RR SI TENS .	
86–90	Y67	10048849	2	23.34	CABLE, F/TOP HDLNG TR FIN PNL	11–E7,19
91–96	Y67 CONV RF (C05)	10048849	2	23.34	CABLE, F/TOP HDLNG TR FIN PNL	11–E7,19

14.120 FASTENER – RETAINER, Folding Top Side Roof Rail

87–90	Y	20540336	2	.32	FASTENER, F/TOP SI FRT W/STR (14.630)	
86–96	Y67	14092713	LH	45.20	RETAINER, FRT S/D WDO UPR RR W/STR	11–E7,15
86–96	Y67	14092714	RH	45.20	RETAINER, FRT S/D WDO UPR RR W/STR	11–E7,15

14.130 BOLT – BOW – BUMPER, Folding Top Front Bow

86–90	Y67	10048834	2	*3.10	BOLT, F/TOP #2 & #3 BOW LINK	11–E4,54
91–96	Y67 CONV RF (C05)	10048834	2	*3.10	BOLT, F/TOP #2 & #3 BOW LINK	11–E4,54
86–96	Y67 CONV RF (C05)	10048835	2	4.05	BOLT, F/TOP #2 BOW	11–E4,51
86–90	Y67	10048807	1	615.30	BOW, F/TOP #1	11–E4,47
91–93	Y67 CONV RF (C05)	10048807	1	615.30	BOW, F/TOP #1	11–E4,47
94	Y CONV RF (C05)	10276985	1	492.23	BOW, F/TOP #1	11–E22,47
95–96	Y CONV RF (C05)	10276985	1	492.23	BOW, F/TOP #1	11–E22,47
92–96	Y CONV RF (C05)	3634915	2	.48	BUMPER, F/TOP #1 BOW	

14.140 INSULATOR – LINK, Folding Top Side Roof Rail

91–94	Y67 CONV RF (C05)	10051859	2	5.97	INSULATOR, F/TOP #1 BOW LINK	11–E4,49
86–96	Y67 CONV RF (C05)	10259057	LH	59.40	LINK, F/TOP #1 BOW	11–E4,48
86–96	Y67 CONV RF (C05)	10259058	RH	59.40	LINK, F/TOP #1 BOW	11–E4,48
86–91	Y67 CONV RF (C05)	10259057	LH	59.40	LINK, F/TOP #2 & #3 BOW	11–E4,48
86–91	Y67	10259058	RH	59.40	LINK, F/TOP #2 & #3 BOW	11–E4,48

14.155 BOLT, Folding Top Side Roof Rail Control Link

86–90	Y67	10048832	2	6.15	BOLT, F/TOP PIV BRKT (RR RL TO MAIN) (14.310)	11–E4,31
90	Y67	10051852	2	4.12	BOLT, F/TOP PIV BRKT (LINK TO MAIN)	11–E4,23
91–94	Y67 CONV RF (C05)	10048832	2	6.15	BOLT, F/TOP PIV BRKT (RR RL TO MAIN) (14.310)	11–E4,31
91–94	Y67 CONV RF (C05)	10051852	2	4.12	BOLT, F/TOP PIV BRKT (LINK TO MAIN) (M8X1.25–6)	11–E4,23
95–96	Y67 CONV RF (C05)	12533329	2	6.15	BOLT, F/TOP PIV BRKT (LINK TO MAIN)	11–E22,23
95–96	Y67 CONV RF (C05)	12533330	2	4.12	BOLT, F/TOP PIV BRKT (RR RL TO MAIN)	11–E22,23
86–90	Y67	10051852	2	4.12	BOLT, F/TOP RR RAIL LWR (M8X1.25–6)	11–E4,23
91–96	Y67 CONV RF (C05)	10048836	4	4.15	BOLT, F/TOP RR S/RL (M6 X 1 X 36.5 TR HD SHLDR) (14.190)	11–E22,27
91–96	Y67 CONV RF (C05)	10051850	2	1.05	BOLT, F/TOP RR S/RL (M5X0.8X10) (PAN HEAD)	11–E22,11

14.160 BUSHING, Folding Top Side Roof Rail

90	Y67	14100338	1	1.48	BUSHING, F/TOP #1 BOW LINK FRT PIV (14.340)	11–E4,8
91–96	Y67 CONV RF (C05)	14100338	1	1.48	BUSHING, F/TOP #1 BOW LINK FRT PIV (14.340)	11–E4,8
90	Y67	14100338	1	1.48	BUSHING, F/TOP #1 BOW LINK RR PIV (14.340)	11–E4,8
91–96	Y67 CONV RF (C05)	14100338	1	1.48	BUSHING, F/TOP #1 BOW LINK RR PIV (14.340)	11–E4,8
90	Y67	14100338	1	1.48	BUSHING, F/TOP #1 BOW PIV (14.340)	11–E4,8
91–96	Y67 CONV RF (C05)	14100338	1	1.48	BUSHING, F/TOP #1 BOW PIV (14.340)	11–E4,8
90	Y67	14100338	1	1.48	BUSHING, F/TOP #4 BOW PIV (14.340)	11–E4,8
91–96	Y67 CONV RF (C05)	14100338	1	1.48	BUSHING, F/TOP #4 BOW PIV (14.340)	11–E4,8
90	Y67	14100338	1	1.48	BUSHING, F/TOP #5 BOW HGE PIV (14.340)	11–E4,8
91–96	Y67 CONV RF (C05)	14100338	1	1.48	BUSHING, F/TOP #5 BOW HGE PIV (14.340)	11–E4,8

© 2000 GENERAL MOTORS SERVICE PARTS OPERATIONS–CHEVROLET–14Y

14.160 BUSHING, Folding Top Side Roof Rail (Con't)

90	Y67	14100338	1	1.48	BUSHING, F/TOP #5 BOW PIV (14.340)	11–E4,8
91–96	Y67 CONV RF (C05)	14100338	1	1.48	BUSHING, F/TOP #5 BOW PIV (14.340)	11–E4,8

14.162 WASHER, Folding Top Side Roof Rail

86–90	Y67	14100364	10	.61	WASHER, F/TOP #2 BOW PIV (14.310)	11–E4,20
91–95	Y67 CONV RF (C05)	14100364	10	.61	WASHER, F/TOP #2 BOW PIV (14.310)	11–E4,20
92–96	Y67 CONV RF (C05)	14100364	10	.61	WASHER, F/TOP #4 BOW PIV (14.310)	11–E4,20

14.170 RAIL, Folding Top Side Roof–Center

86–90	Y67	10048811	LH	DISCON	RAIL, F/TOP RR SI (14.190)	
86–90	Y67	10048812	RH	DISCON	RAIL, F/TOP RR SI (14.190)	
91–93	Y67 CONV RF (C05)	10048811	LH	DISCON	RAIL, F/TOP RR SI (14.190)	
91–93	Y67 CONV RF (C05)	10048812	RH	DISCON	RAIL, F/TOP RR SI (14.190)	
94–96	Y CONV RF (C05)	10240343	LH	153.57	RAIL, F/TOP RR SI	11–E22,9
94–96	Y CONV RF (C05)	10240344	RH	153.57	RAIL, F/TOP RR SI	11–E22,9

14.215 BOLT – BOW – BRACKET – BUSHING – RIVET – SPRING, Folding Top Center

86–90	Y67	10048837	2	9.00	BOLT, F/TOP #3 BOW	11–E4,7
86–90	Y67	10051850	2	1.05	BOLT, F/TOP #3 BOW (M5X0.8X10) (PAN HEAD) (14.155)	11–E4,57
91–96	Y67 CONV RF (C05)	10048837	2	9.00	BOLT, F/TOP #3 BOW (M6X1.0X34) (TRUSS HD)	11–E4,7
91–92	Y67 CONV RF (C05)	10051850	2	1.05	BOLT, F/TOP #3 BOW (M5X0.8X10) (PAN HEAD) (14.155)	11–E4,57
86–90	Y67	10064336	4	1.45	BOLT, F/TOP #4 BOW (14.340)	11–E4,5
91–96	Y67 CONV RF (C05)	10064336	4	1.45	BOLT, F/TOP #4 BOW (14.340)	11–E4,5
86–90	Y67	10048817	1	229.95	BOW, F/TOP #2 (FRT)	11–E4,53
91–93	Y67 CONV RF (C05)	10048817	1	229.95	BOW, F/TOP #2 (FRT)	11–E4,53
94–96	Y67 CONV RF (C05)	10240745	1	102.72	BOW, F/TOP #2	11–E22,53
86–90	Y67	10048818	1	268.52	BOW, F/TOP #3	11–E4,56
91–93	Y67 CONV RF (C05)	10048818	1	268.52	BOW, F/TOP #3	11–E4,56
94–96	Y67 CONV RF (C05)	10240746	1	99.41	BOW, F/TOP #3	11–E22,45
86–90	Y67	10248371	1	148.48	BOW, F/TOP #4 (RR)	11–E4,58
91–06	Y67 CONV RF (C05)	10248371	1	148.48	BOW, F/TOP #4 (RR)	11–E4,58
86–90	Y67	10048819	LH	28.48	BRACKET, F/TOP #2 BOW	11–E4,50
86–90	Y67	10048820	RH	28.48	BRACKET, F/TOP #2 BOW	11–E4,50
91–96	Y67 CONV RF (C05)	10048819	LH	28.48	BRACKET, F/TOP #2 BOW	11–E4,50
91–96	Y67 CONV RF (C05)	10048820	RH	28.48	BRACKET, F/TOP #2 BOW	11–E4,50
86–90	Y67	10248373	LH	11.75	BRACKET, F/TOP #3 BOW	11–E4,55
86–90	Y67	10248374	RH	11.75	BRACKET, F/TOP #3 BOW	11–E4,55
91–96	Y67 CONV RF (C05)	10248373	LH	11.75	BRACKET, F/TOP #3 BOW	11–E4,55
91–96	Y67 CONV RF (C05)	10248374	RH	11.75	BRACKET, F/TOP #3 BOW	11–E4,55
86–87	Y67	10048814	2	DISCON	BRACKET, F/TOP #4 BOW	
88–96	Y67 CONV RF (C05)	10107823	2	12.10	BRACKET, F/TOP #4 BOW (14.310)	11–E4,25
90	Y67	14100338	1	1.48	BUSHING, F/TOP #2 BOW PIV (14.340)	11–E4,8
91–96	Y67 CONV RF (C05)	14100338	1	1.48	BUSHING, F/TOP #2 BOW PIV (14.340)	11–E4,8
94–96	Y CONV RF (C05)	10239823	1	*.83	RIVET, F/TOP #4 BOW ASST SPR	
94–96	Y67 CONV RF (C05)	10239820	2	6.41	SPRING, F/TOP #4 BOW ASST	11–E[illegible]57

© 2000 GENERAL MOTORS SERVICE PARTS OPERATIONS–CHEVROLET–14Y

14.260 BOLT – FASTENER – WEATHERSTRIP, Folding Top Side Roof Rail Rear

86–87	Y67	10048836	2	4.15	BOLT, F/TOP #5 SI BOW (14.190)	11–E4,27
88–92	Y67 CONV RF (C05)	3634892	2	4.41	BOLT, F/TOP #5 SI BOW	11–E4,27
87–90	Y	20540336	4	.32	FASTENER, F/TOP RR W/STR (14.630)	
86–90	Y67	14100349	LH	8.50	WEATHERSTRIP, F/TOP RR S/RL	11–E4,10
86–90	Y67	14100350	RH	6.60	WEATHERSTRIP, F/TOP RR S/RL	11–E4,10
91–96	Y67 CONV RF (C05)	14100349	LH	8.50	WEATHERSTRIP, F/TOP RR S/RL	11–E4,10
91–96	Y67 CONV RF (C05)	14100350	RH	6.60	WEATHERSTRIP, F/TOP RR S/RL	11–E4,10

14.310 ARM – BOLT – BRACKET – BUSHING – EXTENSION – HINGE – STOP – STRIKER – WASHER, Folding Top Hinge

86–90	Y67	10273035	LH	32.29	ARM, F/TOP INR	11–E4,16
86–90	Y67	10273036	RH	32.29	ARM, F/TOP INR	11–E4,16
91–96	Y67 CONV RF (C05)	10273035	LH	32.29	ARM, F/TOP INR	11–E4,16
91–94	Y67 CONV RF (C05)	10273036	RH	32.29	ARM, F/TOP INR	11–E4,16
95–96	Y67 CONV RF (C05)	10273036	RH	32.29	ARM, F/TOP INR	11–E4,16
86–90	Y67	10107819	LH	342.30	ARM, F/TOP OTR (14.170)	11–E4,32
86–90	Y67	10107820	RH	342.30	ARM, F/TOP OTR (14.190)	11–E4,32
91–93	Y67 CONV RF (C05)	10107819	LH	342.30	ARM, F/TOP OTR (14.170)	11–E4,32
91–93	Y67 CONV RF (C05)	10107820	RH	342.30	ARM, F/TOP OTR (14.190)	11–E4,32
94–96	Y	10242123	LH	180.01	ARM, F/TOP OTR	11–E22,32
94–96	Y	10242124	RH	180.01	ARM, F/TOP OTR	11–E22,32
93	Y67 CONV RF (C05)	14100364	2	.61	BOLT, F/TOP #4 BOW PIV	11–E4,20
86–90	Y67	10048829	LH	70.68	BRACKET, F/TOP #5 BOW PIV	11–E4,12
86–90	Y67	10048830	RH	70.68	BRACKET, F/TOP #5 BOW PIV	11–E4,12
91–96	Y67 CONV RF (C05)	10048829	LH	70.68	BRACKET, F/TOP #5 BOW PIV	11–E4,12
91–96	Y67 CONV RF (C05)	10048830	RH	70.68	BRACKET, F/TOP #5 BOW PIV	11–E4,12
86–90	Y67	10123005	LH	65.85	BRACKET, F/TOP PIV	11–E4,29
86–90	Y67	10123006	RH	65.85	BRACKET, F/TOP PIV	11–E4,29
91–96	Y67 CONV RF (C05)	10123005	LH	65.85	BRACKET, F/TOP PIV	11–E4,29
91–96	Y67 CONV RF (C05)	10123006	RH	65.85	BRACKET, F/TOP PIV	11–E4,29
90	Y67	14100338	1	1.48	BUSHING, F/TOP INR ARM UPR PIV (14.340)	11–E4,8
91–96	Y67 CONV RF (C05)	14100338	1	1.48	BUSHING, F/TOP INR ARM UPR PIV (14.340)	11–E4,8
86–90	Y67	10048833	4	2.91	BUSHING, F/TOP OTR ARM PIV (14.160)	11–E4,30
91–96	Y67 CONV RF (C05)	10048833	4	2.91	BUSHING, F/TOP OTR ARM PIV (14.160)	11–E4,30
86–88	Y67	10064337	LH	DISCON	EXTENSION, F/TOP #5 BOW (14.215)	
86–88	Y67	10064338	RH	DISCON	EXTENSION, F/TOP #5 BOW (14.215)	
86–90	Y67	10048827	LH	36.61	HINGE, F/TOP #5 BOW	11–E4,19
86–90	Y67	10048828	RH	36.61	HINGE, F/TOP #5 BOW	11–E4,19
91–96	Y67 CONV RF (C05)	10048827	LH	36.61	HINGE, F/TOP #5 BOW	11–E4,19
91–96	Y67 CONV RF (C05)	10048828	RH	36.61	HINGE, F/TOP #5 BOW	11–E4,19
95–96	Y67 CONV RF (C05)	10276987	2	13.16	STOP, F/TOP OTR ARM UP	
86–90	Y67	10258675	2	13.42	STRIKER, F/TOP RR LAT	11–E4,15
91–96	Y67 CONV RF (C05)	10258675	2	13.42	STRIKER, F/TOP RR LAT	11–E4,15
86–96	Y67	14100364	10	.61	WASHER, F/TOP INR ARM LWR PIV	11–E4,20
91–92	Y67 CONV RF (C05)	14100364	10	.61	WASHER, F/TOP INR ARM LWR PIV	11–E4,20
87–90	Y67	10064340	4	.56	WASHER, F/TOP INR ARM UPR PIV (14.260)	11–E4,17
91–96	Y67 CONV RF (C05)	10064340	4	.56	WASHER, F/TOP INR ARM UPR PIV (.340 X .687 X .060) (14.260)	11–E4,17
86–88	Y67	3875565	1	1.00	WASHER, F/TOP RR LAT LVR	11–E26,16

© 2000 GENERAL MOTORS SERVICE PARTS OPERATIONS–CHEVROLET–14Y

14.340 BEZEL – BOLT – BOW – BRACKET – BUSHING – LATCH – LEVER – LINK – SILENCER, Folding Top

86–88	Y67	10132716	2	39.90	BEZEL, F/TOP RR LAT (DEALER TO GRIND OFF 2MM OFF OF RECEIVER BARREL HOLE FLANGE)	11–E26,3
89–94	Y67	10107833	1	33.05	BEZEL, F/TOP RR LAT	11–E22,2
95–96	Y67	10107833	2	33.05	BEZEL, F/TOP RR LAT	11–E22,2
86–90	Y67	10048836	4	4.15	BOLT, F/TOP #5 BOW (M6 X 1 X 36.5 TR HD SHLDR) (14.190)	
91	Y67 CONV RF (C05)	10048836	4	4.15	BOLT, F/TOP #5 BOW (M6 X 1 X 36.5 TR HD SHLDR) (14.190)	
90–93	Y67 CONV RF (C05)	3634892	2	4.41	BOLT, F/TOP #5 BOW HGE PIV (14.260)	11–E11,27
86–88	Y67	14100337	1	DISCON	BOLT, F/TOP RR LAT LVR	
86–96	Y CONV RF (C05)	12529214	1	492.23	BOW, F/TOP #5	11–E4,13
89–90	Y67	10172355	LH	296.10	BOW, F/TOP #5 SI (14.260)	11–E11,26
89–90	Y67	10172356	RH	296.10	BOW, F/TOP #5 SI	11–E11,26
91–93	Y67 CONV RF (C05)	10172355	LH	296.10	BOW, F/TOP #5 SI (14.260)	11–E11,26
91–93	Y67 CONV RF (C05)	10172356	RH	296.10	BOW, F/TOP #5 SI	11–E11,26
94–96	Y CONV RF (C05)	10240341	LH	121.02	BOW, F/TOP #5 SI	11–E22,26
94–96	Y CONV RF (C05)	10240342	RH	121.02	BOW, F/TOP #5 SI	11–E22,26
86–88	Y67	10051874	1	DISCON	BRACKET, F/TOP RR LAT LVR	
86–96	Y67 CONV RF (C05)	14100338	1	1.48	BUSHING, F/TOP RR LAT LVR	11–E4,8
89–96	Y67	10198616	2	36.10	LATCH, F/TOP RR	11–E22,4
86–88	Y67	10051873	1	DISCON	LEVER, F/TOP RR LAT	
86–95	Y67	10248375	RH	12.51	LINK, F/TOP #4 BOW	11–E4,4
86–90	Y67	10248376	LH	11.95	LINK, F/TOP #4 BOW	11–E4,4
91–95	Y67 CONV RF (C05)	10248376	LH	11.95	LINK, F/TOP #4 BOW	11–E4,4
87–88	Y67	10062166	1	DISCON	SILENCER, FRT TOP RR LATCH LVR	

14.475 BOLT – CABLE – CLIP – STRAP, Folding Top Assist

93–96	Y67	10204044	2	.44	BOLT, F/TOP RR LAT REL CBL (M4 X .7 X 13) (POS #3)	
86–91	Y	14100347	2	32.55	CABLE, F/TOP RR LAT REL (12.170)	11–E26,30
86–88	Y67	14100336	1	38.95	CABLE, F/TOP RR LAT REL	11–E26,7
89–92	Y67	10107832	1	23.61	CABLE, F/TOP RR LAT REL	11–F2,5
93–96	Y67	10278305	1	23.61	CABLE, F/TOP RR LAT REL (INCLUDES HANDLE)	11–F8,6
92–93	Y67	10213425	2	1.22	CLIP, F/TOP RR LAT REL CBL	11–F4,35
86–89	Y67	3816659	2	*.87	STRAP, F/TOP RR LAT REL CBL (08.965)	11–E26,38

14.483 SWITCH, Folding Top

89–96	Y67	1626530	1	2.81	SWITCH, F/TOP STOW COMPT LID REL (BUTTON IN GLOVE BOX) (12.243)	11–F4,41

14.640 PANEL, Roof Headlining

89–96	Y67 AUX RF (CC2)	10123059	1	272.56	PANEL, R/TOP HDLNG TR FIN (13.346)	10–E2,2
84	Y (EXC CLEAR RF PNL (CC3)	14088426	1	DISCON	PANEL, RF INR TR	
85	Y (EXC CLEAR RF PNL (CC3), (2ND DES)	14081890	1	214.50	PANEL, RF INR TR (RR CORNERS ARE CUT OFF DIAGONALLY.)	10–G9,39
85	Y (EXC CLEAR RF PNL (CC3), (1ST DES)	14088426	1	DISCON	PANEL, RF INR TR (RR CORNERS HAVE ROUNDED CUT–OUT.)	

© 2000 GENERAL MOTORS SERVICE PARTS OPERATIONS–CHEVROLET–14Y

14.640 PANEL, Roof Headlining (Con't)

86–87	Y07 (EXC CLEAR RF PNL (CC3)	14081890	1	214.50	PANEL, RF INR TR	10–G9,39
88–90	Y07 REMOVABLE SUNROOF (CF7)	14081890	1	214.50	PANEL, RF INR TR	10–G9,39
91–93	Y07 REMOVABLE SUNROOF (CF7), DUAL REM RF (C2L)	14081890	1	214.50	PANEL, RF INR TR	10–G9,39

14.665 LACE – WINDLACE, Side Door Opening Trim

90–94	Y	10278971	LH	38.00	LACE, FRT S/D OPG FRT	9–H5,4
90–94	Y	10278972	RH	38.00	LACE, FRT S/D OPG FRT	9–H5,4
95–96	Y	10278971	LH	38.00	LACE, FRT S/D OPG FRT	9–H5,4
95–96	Y	10278972	RH	38.00	LACE, FRT S/D OPG FRT	9–H5,4
84–89	Y	14060205	LH	38.00	WINDLACE, F/D SI OPG	9–H2,33
84–89	Y	14060206	RH	38.00	WINDLACE, F/D SI OPG	9–H2,33

14.683 BOLT – PLATE – RETAINER, Front Door Trim

90–93	Y	11515187	2	*.42	BOLT, FRT S/D T/PNL (4.2X1.41X50) (08.977) (POS #3)	
95–96	Y	10281485	4	.31	BOLT, FRT S/D TR	
84–85	Y (EXC ELEC S/D LK (AU3)	14043200	RH	67.50	PLATE, SI F/D ACSRY MT	
84–86	Y07	10045632	RH	DISCON	PLATE, SI F/D ACSRY MT	
86–89	Y	10045631	LH	DISCON	PLATE, SI F/D ACSRY MT	
86	Y67	10045632	RH	DISCON	PLATE, SI F/D ACSRY MT	
87–89	Y	10045632	RH	DISCON	PLATE, SI F/D ACSRY MT	
84–89	Y	10082828	RH	1.30	RETAINER, F/D TR PNL	
84–89	Y	10082829	LH	1.30	RETAINER, F/D TR PNL	
94–96	Y (19I)	10248245	10	*.44	RETAINER, FRT S/D T/PNL (PUSH IN) (BLACK)	9–H5,19
94–96	Y (70I)	10248246	10	.44	RETAINER, FRT S/D T/PNL (PUSH IN) (RED)	9–H5,19
94–96	Y (64I)	10248247	10	.44	RETAINER, FRT S/D T/PNL (PUSH IN) (BEIGE)	9–H5,19
94–96	Y (14I)	10248248	10	.44	RETAINER, FRT S/D T/PNL (PUSH IN) (GRAY)	9–H5,19

14.685 COVER – INSERT – INSULATOR – PANEL – TRIM, Front Door Trim

90–91	Y (22I)	10135915	LH	DISCON	COVER, FRT S/D T/PNL INS (BLUE)
90–91	Y (22I)	10135916	RH	DISCON	COVER, FRT S/D T/PNL INS (BLUE)
90–91	Y (60I)	10135921	LH	DISCON	COVER, FRT S/D T/PNL INS (COGNAC)
90–91	Y (60I)	10135922	RH	DISCON	COVER, FRT S/D T/PNL INS (COGNAC)
90–92	Y (73I)	10135927	LH	DISCON	COVER, FRT S/D T/PNL INS (RED)
90–92	Y (73I)	10135928	RH	DISCON	COVER, FRT S/D T/PNL INS (RED)
90–91	Y (90I)	10135933	LH	DISCON	COVER, FRT S/D T/PNL INS (GRAY)
90–91	Y (90I)	10135934	RH	DISCON	COVER, FRT S/D T/PNL INS (SMOKE GRAY)
92–93	Y (64I)	10220033	LH	DISCON	COVER, FRT S/D T/PNL INS (BEIGE)
92–93	Y (64I)	10220034	RH	DISCON	COVER, FRT S/D T/PNL INS (BEIGE)
92–93	Y (14I)	10220035	LH	DISCON	COVER, FRT S/D T/PNL INS (GRAY)
92–93	Y (14I)	10220036	RH	DISCON	COVER, FRT S/D T/PNL INS (GRAY)
93	Y (79I)	10220027	LH	DISCON	COVER, FRT S/D T/PNL INS (RED)
93	Y (79I)	10220028	RH	DISCON	COVER, FRT S/D T/PNL INS (RED)
93	Y (70I)	10220029	LH	DISCON	COVER, FRT S/D T/PNL INS (RED)
93	Y (70I)	10220030	RH	DISCON	COVER, FRT S/D T/PNL INS (RED)

© 2000 GENERAL MOTORS SERVICE PARTS OPERATIONS–CHEVROLET–14Y

14.685 COVER – INSERT – INSULATOR – PANEL – TRIM, Front Door Trim (Con't)

84–96	Y	10248659	2	10.80	INSERT, FRT S/D T/PNL (BLACK) (PAINT TO MATCH)	9–H5,17
95–96	Y	3999572	1	4.98	INSULATOR, FRT S/D TR FIN PNL (09.260)	
84–86	Y (15I)	10048903	LH	509.20	PANEL, FRT S/D TR (GRAY)	
84–87	Y (12I)	10104498	LH	525.50	PANEL, FRT S/D TR (GRAPHITE)	9–H2,9
84–87	Y (12I)	10104499	RH	DISCON	PANEL, FRT S/D TR (GRAPHITE)	
84–85	Y (28I)	14058247	LH	DISCON	PANEL, FRT S/D TR (BLUE)	
84–85	Y (28I)	14058248	RH	DISCON	PANEL, FRT S/D TR (BLUE)	
84–85	Y (74I)	14058253	LH	DISCON	PANEL, FRT S/D TR (CARMINE)	
84–85	Y (74I)	14058254	RH	DISCON	PANEL, FRT S/D TR (CARMINE)	
86–87	Y (21I)	10112607	RH	DISCON	PANEL, FRT S/D TR (BLUE)	
86	Y67 (21I)	10048909	LH	525.50	PANEL, FRT S/D TR (BLUE)	
87	Y (15I)	10104500	LH	DISCON	PANEL, FRT S/D TR (GRAY)	
87	Y (62I)	10112604	LH	DISCON	PANEL, FRT S/D TR (SADDLE)	
87	Y (21I)	10112606	LH	DISCON	PANEL, FRT S/D TR (BLUE)	
87	Y (73I)	10112608	LH	DISCON	PANEL, FRT S/D TR (RED)	
88	Y 35 ANNIVERSARY (Z01), (11I)	10120971	LH	DISCON	PANEL, FRT S/D TR (WHITE) (LESS TR FIN PNL & SPKR GRILLS)	
88	Y 35 ANNIVERSARY (Z01), (11I)	10120972	RH	DISCON	PANEL, FRT S/D TR (WHITE) (LESS TR FIN PNL & SPKR GRILLS)	
88	Y (11I)	10123027	LH	DISCON	PANEL, FRT S/D TR (WHITE) (COMPLETE)	
88	Y (11I)	10123028	RH	DISCON	PANEL, FRT S/D TR (WHITE) (COMPLETE)	
88–89	Y (19I)	10149227	LH	DISCON	PANEL, FRT S/D TR (BLACK)	
88–89	Y (21I)	10149229	LH	DISCON	PANEL, FRT S/D TR (BLUE)	
88–89	Y (60I)	10149232	RH	DISCON	PANEL, FRT S/D TR (COGNAC)	
88–89	Y (73I)	10149233	LH	DISCON	PANEL, FRT S/D TR (RED)	
88–89	Y (90I)	10149235	LH	DISCON	PANEL, FRT S/D TR (GRAY)	
88–89	Y (90I)	10149236	RH	DISCON	PANEL, FRT S/D TR (GRAY)	
84–87	Y	10112602	LH	DISCON	PANEL, SI F/D TR (BRONZE–65I)	
90–91	Y (22I)	10167183	LH	DISCON	TRIM, FRT S/D (BLUE)	
90	Y (22I)	10167184	RH	DISCON	TRIM, FRT S/D (BLUE)	
90–91	Y (60I)	10167185	LH	DISCON	TRIM, FRT S/D (COGNAC)	
90	Y (60I)	10167186	RH	DISCON	TRIM, FRT S/D (COGNAC)	
90–91	Y (90I)	10167189	LH	DISCON	TRIM, FRT S/D (GRAY)	
90	Y (90I)	10167190	RH	DISCON	TRIM, FRT S/D (GRAY)	
90	Y (73I)	10199736	RH	DISCON	TRIM, FRT S/D (RED)	
90–93	Y (19I)	10240803	LH	525.50	TRIM, FRT S/D (BLACK)	9–H5,34
91	Y (22I)	10167184	RH	DISCON	TRIM, FRT S/D (BLUE)	
91	Y (60I)	10167186	RH	DISCON	TRIM, FRT S/D (COGNAC)	
91	Y (90I)	10167190	RH	DISCON	TRIM, FRT S/D (GRAY)	
91–92	Y (73I)	10199735	LH	DISCON	TRIM, FRT S/D (RED)	
91	Y (73I)	10199736	RH	DISCON	TRIM, FRT S/D (RED)	
92	Y (73I)	10199736	RH	DISCON	TRIM, FRT S/D (RED)	
92–93	Y (64I)	10240807	LH	DISCON	TRIM, FRT S/D (BEIGE)	
92–93	Y (64I)	10240808	RH	DISCON	TRIM, FRT S/D (BEIGE)	
92–93	Y (14I)	10240809	LH	DISCON	TRIM, FRT S/D (GRAY)	
92–93	Y (14I)	10240810	RH	DISCON	TRIM, FRT S/D (GRAY)	
92–93	Y (10I)	10240811	LH	DISCON	TRIM, FRT S/D (WHITE)	
92–93	Y (10I)	10240812	RH	DISCON	TRIM, FRT S/D (WHITE)	
93	Y (79I)	10240799	LH	DISCON	TRIM, FRT S/D (RED)	
93	Y (79I)	10240800	RH	DISCON	TRIM, FRT S/D (RED)	
93	Y (70I)	10240801	LH	DISCON	TRIM, FRT S/D (RED)	
93	Y (70I)	10240802	RH	DISCON	TRIM, FRT S/D (RED)	
94	Y (19I)	10278979	LH	525.50	TRIM, FRT S/D (BLACK)	9–H5,34
94	Y (70I)	10278980	LH	525.50	TRIM, FRT S/D (RED)	9–H5,34

© 2000 GENERAL MOTORS SERVICE PARTS OPERATIONS–CHEVROLET–14Y

14.685 COVER – INSERT – INSULATOR – PANEL – TRIM, Front Door Trim (Con't)

94	Y (64I)	10278981	LH	525.50	TRIM, FRT S/D (BEIGE)	9–H5,34
94	Y (14I)	10278982	LH	525.50	TRIM, FRT S/D (GRAY)	9–H5,34
94	Y (19I)	10278984	RH	525.50	TRIM, FRT S/D (BLACK)	9–H5,20
94	Y (70I)	10278985	RH	463.70	TRIM, FRT S/D (RED)	9–H5,20
94	Y (64I)	10278986	RH	525.50	TRIM, FRT S/D (BEIGE)	9–H5,20
94	Y (14I)	10278987	RH	525.50	TRIM, FRT S/D (GRAY)	9–H5,20
95	Y (19I)	10278979	LH	525.50	TRIM, FRT S/D (4"X4" FOAM PATCH BY HNDL, 2"X4" FOAM AT BTM RR) (BLACK)	9–H5,34
95	Y (70I)	10278980	LH	525.50	TRIM, FRT S/D (4"X4" FOAM PATCH BY HNDL, 2"X4" FOAM AT BTM RR) (RED)	9–H5,34
95	Y (64I)	10278981	LH	525.50	TRIM, FRT S/D (4"X4" FOAM PATCH BY HNDL, 2"X4" FOAM AT BTM RR) (BEIGE)	9–H5,34
95	Y (14I), (2ND DES)	10278982	LH	525.50	TRIM, FRT S/D (4"X4" FOAM PATCH BY HNDL, 2"X4" FOAM AT BTM RR) (GRAY)	9–H5,34
95	Y (19I), (2ND DES)	10278984	RH	525.50	TRIM, FRT S/D (4"X4" FOAM PATCH BY HNDL, 2"X4" FOAM AT BTM RR) (BLACK)	9–H5,20
95	Y (70I)	10278985	RH	463.70	TRIM, FRT S/D (4"X4" FOAM PATCH BY HNDL, 2"X4" FOAM AT BTM RR) (RED)	9–H5,20
95	Y (64I), (2ND DES)	10278986	RH	525.50	TRIM, FRT S/D (4"X4" FOAM PATCH BY HNDL, 2"X4" FOAM AT BTM RR) (BEIGE)	9–H5,20
95	Y (14I), (2ND DES)	10278987	RH	525.50	TRIM, FRT S/D (4"X4" FOAM PATCH BY HNDL, 2"X4" FOAM AT BTM RR) (GRAY)	9–H5,20
96	Y (19I)	10278979	LH	525.50	TRIM, FRT S/D (W/HTCH REL SW MUST CUT HOLE) (BLACK)	9–H5,34
96	Y (70I)	10278980	LH	525.50	TRIM, FRT S/D (RED)	9–H5,34
96	Y (64I)	10278981	LH	525.50	TRIM, FRT S/D (BEIGE)	9–H5,34
96	Y (14I)	10278982	LH	525.50	TRIM, FRT S/D (GRAY)	9–H5,34
96	Y (19I)	10278984	RH	525.50	TRIM, FRT S/D (BLACK)	9–H5,20
96	Y (70I)	10278985	RH	463.70	TRIM, FRT S/D (RED)	9–H5,20
96	Y (64I)	10278986	RH	525.50	TRIM, FRT S/D (BEIGE)	9–H5,20
96	Y (14I)	10278987	RH	525.50	TRIM, FRT S/D (GRAY)	9–H5,20

14.686 ARMREST – CLIP – FILLER – HINGE – PANEL, Front Door Armrest

84–87	Y (12I)	14049159	LH	DISCON	ARMREST, FRT S/D (GRAPHITE)
84–87	Y (15I)	14058233	LH	DISCON	ARMREST, FRT S/D (GRAY)
84–85	Y (28I)	14058235	LH	DISCON	ARMREST, FRT S/D (BLUE)
84–85	Y (28I)	14058236	RH	DISCON	ARMREST, FRT S/D (BLUE)
84–87	Y (65I)	14058237	LH	DISCON	ARMREST, FRT S/D (BRONZE)
84–87	Y (65I)	14058238	RH	DISCON	ARMREST, FRT S/D (BRONZE)
84–87	Y (62I)	14058240	RH	DISCON	ARMREST, FRT S/D (SADDLE)
84–85	Y (74I)	14058241	LH	DISCON	ARMREST, FRT S/D (CARMINE)
84–85	Y (74I)	14058242	RH	DISCON	ARMREST, FRT S/D (CARMINE)
86–89	Y (21I)	14094263	LH	DISCON	ARMREST, FRT S/D (BLUE)
86–89	Y (21I)	14094264	RH	DISCON	ARMREST, FRT S/D (BLUE)
86–89	Y (73I)	14094265	LH	DISCON	ARMREST, FRT S/D (RED)
86–89	Y (73I)	14094266	RH	DISCON	ARMREST, FRT S/D (RED)
88–89	Y (19I)	10076631	LH	DISCON	ARMREST, FRT S/D (BLACK)
88–89	Y (19I)	10076632	RH	DISCON	ARMREST, FRT S/D (BLACK)
88–89	Y (60I)	10076633	LH	DISCON	ARMREST, FRT S/D (COGNAC)
88–89	Y (60I)	10076634	RH	DISCON	ARMREST, FRT S/D (COGNAC)

© 2000 GENERAL MOTORS SERVICE PARTS OPERATIONS–CHEVROLET–14Y

14.686 ARMREST – CLIP – FILLER – HINGE – PANEL, Front Door Armrest (Con't)

88–89	Y (90I)	10076635	LH	DISCON	ARMREST, FRT S/D (GRAY)	
88–89	Y (90I)	10076636	RH	DISCON	ARMREST, FRT S/D (GRAY)	
88	Y 35 ANNIVERSARY (Z01), (11I)	10149223	LH	DISCON	ARMREST, FRT S/D (WHITE)	
88	Y 35 ANNIVERSARY (Z01), (11I)	10149224	RH	DISCON	ARMREST, FRT S/D (WHITE)	
90–93	Y	10085969	LH	DISCON	ARMREST, FRT S/D	
90	Y (19I)	10135908	RH	DISCON	ARMREST, FRT S/D (BLACK)	
90	Y (22I)	10135914	RH	DISCON	ARMREST, FRT S/D (BLUE)	
90	Y (60I)	10135920	RH	DISCON	ARMREST, FRT S/D (COGNAC)	
90	Y (73I)	10135926	RH	DISCON	ARMREST, FRT S/D (RED)	
90	Y (90I)	10135932	RH	DISCON	ARMREST, FRT S/D (GRAY)	
91	Y (19I), (1ST DES)	10135908	RH	DISCON	ARMREST, FRT S/D (BLACK) (W/VIN PRIOR TO 102411)	
91	Y (22I), (1ST DES)	10135914	RH	DISCON	ARMREST, FRT S/D (BLUE) (W/VIN PRIOR TO 102411)	
91	Y (60I), (1ST DES)	10135920	RH	DISCON	ARMREST, FRT S/D (MED COGNAC) (W/VIN PRIOR TO 102411)	
91	Y (73I)	10135926	RH	DISCON	ARMREST, FRT S/D (FLAME RED) (W/VIN PRIOR TO 102411)	
91	Y (90I), (1ST DES)	10135932	RH	DISCON	ARMREST, FRT S/D (GRAY) (W/VIN PRIOR TO 102411)	
91	Y (19I), (2ND DES)	10167130	RH	236.20	ARMREST, FRT S/D (BLACK) (STARTING W/VIN #102411)	9–H5,35
91	Y (22I), (2ND DES)	10167136	RH	DISCON	ARMREST, FRT S/D (BLUE) (STARTING W/VIN #102411)	
91	Y (60I), (2ND DES)	10167142	RH	DISCON	ARMREST, FRT S/D (COGNAC) (STARTING W/VIN #102411)	
91	Y (73I), (2ND DES)	10167148	RH	DISCON	ARMREST, FRT S/D (RED) (STARTING W/VIN #102411)	
91	Y (90I)	10167154	RH	DISCON	ARMREST, FRT S/D (GRAY) (STARTING W/VIN #102411)	
92–93	Y (19I)	10167130	RH	236.20	ARMREST, FRT S/D (BLACK)	9–H5,35
92	Y (73I)	10167148	RH	DISCON	ARMREST, FRT S/D (RED)	
92–93	Y (14I)	10175702	RH	DISCON	ARMREST, FRT S/D (GRAY)	
92–93	Y (64I)	10175722	RH	DISCON	ARMREST, FRT S/D (BEIGE)	
92–93	Y (10I)	10175728	RH	DISCON	ARMREST, FRT S/D (WHITE)	
93	Y (79I)	10199750	RH	DISCON	ARMREST, FRT S/D (RED)	
93	Y (70I)	10199752	RH	DISCON	ARMREST, FRT S/D (RED)	
94–96	Y	12522295	LH	60.70	ARMREST, FRT S/D	9–H5,36
94–96	Y	12522296	RH	60.70	ARMREST, FRT S/D	9–H5,36
96	Y	12522296	1	60.70	ARMREST, FRT S/D	9–H5,36
90–96	Y	10086313	1	1.10	CLIP, FRT S/D A/RST FIL	9–H5,9
84–89	Y	14069625	LH	19.80	FILLER, FRT S/D A/RST	9–H2,12
84–89	Y	14069626	RH	19.80	FILLER, FRT S/D A/RST	9–H2,12
90–91	Y	10085953	LH	19.80	FILLER, FRT S/D A/RST (GRAY)	9–H5,8
90–93	Y (19I)	10167170	RH	DISCON	FILLER, FRT S/D A/RST (BLACK)	
90–91	Y (22I)	10167172	RH	DISCON	FILLER, FRT S/D A/RST (BLUE)	
90–91	Y (60I)	10167174	RH	DISCON	FILLER, FRT S/D A/RST (COGNAC)	
90–92	Y (73I)	10167176	RH	DISCON	FILLER, FRT S/D A/RST (RED)	
90–91	Y (90I)	10167178	RH	DISCON	FILLER, FRT S/D A/RST (GRAY)	
92–93	Y (64I)	10175686	RH	DISCON	FILLER, FRT S/D A/RST (BEIGE)	
92–93	Y (14I)	10175688	RH	DISCON	FILLER, FRT S/D A/RST (GRAY)	
92–93	Y (10I)	10175738	RH	DISCON	FILLER, FRT S/D A/RST (WHITE)	
92–93	Y	12512653	LH	21.40	FILLER, FRT S/D A/RST (BLACK)	9–H5,8
93	Y (79I)	10199542	RH	DISCON	FILLER, FRT S/D A/RST (RED)	
93	Y (70I)	10199710	RH	DISCON	FILLER, FRT S/D A/RST (RED)	
94–96	Y	10245573	RH	5.75	FILLER, FRT S/D A/RST (BLACK)	9–H5,21

© 2000 GENERAL MOTORS SERVICE PARTS OPERATIONS–CHEVROLET–14Y

14.686 ARMREST – CLIP – FILLER – HINGE – PANEL, Front Door Armrest (Con't)

94–96	Y	12514441	LH	21.40	FILLER, FRT S/D A/RST (BLACK)	9–H5,8
94–96	Y	12532158	2	11.70	HINGE, FRT S/D A/RST (14.762)	9–H5,40
94–96	Y	12522859	LH	9.20	PANEL, FRT S/D A/RST STOW COMPT (14.692)	9–H5,41
94–96	Y	12522860	RH	9.20	PANEL, FRT S/D A/RST STOW COMPT (14.692)	9–H5,41

14.688 BEZEL, Front Door Armrest

94–96	Y	12522861	LH	9.00	BEZEL, FRT S/D A/RST (14.686)	9–H5,37
94–96	Y	12522862	RH	9.00	BEZEL, FRT S/D A/RST (14.686)	9–H5,37

14.690 BRACKET, Door Arm Rest Mounting

90–93	Y	10086269	1	DISCON	BRACKET, FRT S/D A/RST	

14.691 CONNECTOR – COVER – PLATE, Front Door Trim

91	Y 4–SPD A/TRANS (MD8), 6–SPD M/TRANS (ML9), A/C MAN CONT (C60), A/C AUTO ELEC CONT (C68)	12085537	AR	31.88	CONNECTOR, FRT S/D C/LP (4–WAY F) (W/LEADS) (02.535) (AC–DELCO #PT147)	
84–89	Y07	14094585	LH	74.80	COVER, DR TR PNL UPR	9–H2,8
84–89	Y07	14094586	RH	74.80	COVER, DR TR PNL UPR	9–H2,8
86–89	Y67	14092749	LH	132.20	COVER, TR PNL	9–H2,8
86–89	Y67	14092750	RH	132.20	COVER, TR PNL	9–H2,8
84–85	Y ELEC S/D LK (AU3)	14076584	RH	DISCON	PLATE, FRT S/D ACSRY TR	
84–85	Y (EXC ELEC S/D LK (AU3)	14076586	RH	DISCON	PLATE, FRT S/D ACSRY TR	
86–87	Y (EXC ELEC S/D LK (AU3)	14088467	LH	DISCON	PLATE, FRT S/D ACSRY TR	
86–87	Y (EXC ELEC S/D LK (AU3)	14088468	RH	DISCON	PLATE, FRT S/D ACSRY TR	
86–87	Y ELEC S/D LK (AU3)	14088469	LH	22.90	PLATE, FRT S/D ACSRY TR	9–H2,24
86–87	Y ELEC S/D LK (AU3)	14088470	RH	22.90	PLATE, FRT S/D ACSRY TR	9–H2,24
88–89	Y	14088469	LH	22.90	PLATE, FRT S/D ACSRY TR	9–H2,24
88–89	Y	14088470	RH	22.90	PLATE, FRT S/D ACSRY TR	9–H2,24

14.731 BOLT – CARPET – PANEL, Lock Pillar Trim

94–96	Y67 (70I)	10247847	4	*.40	BOLT, BODY L/PLR UPR T/PNL (11.175)	
94–96	Y67 (64I)	10247848	4	*.40	BOLT, BODY L/PLR UPR T/PNL (11.175)	
94–96	Y67 (14I)	10247849	4	*.40	BOLT, BODY L/PLR UPR T/PNL (11.175)	
86–87	Y67 (12I)	10051861	LH	DISCON	CARPET, FRT S/D L/PLR (GRAPHITE)	
86–87	Y67 (12I)	10051862	RH	DISCON	CARPET, FRT S/D L/PLR (GRAPHITE)	
86–87	Y67 (15I)	10051863	LH	DISCON	CARPET, FRT S/D L/PLR (GRAY)	
86–87	Y67 (15I)	10051864	RH	DISCON	CARPET, FRT S/D L/PLR (GRAY)	
86–87	Y67 (21I)	10051865	LH	DISCON	CARPET, FRT S/D L/PLR (BLUE)	
86–87	Y67 (21I)	10051866	RH	DISCON	CARPET, FRT S/D L/PLR (BLUE)	
86–87	Y67 (62I)	10051867	LH	DISCON	CARPET, FRT S/D L/PLR (SADDLE)	
86–87	Y67 (62I)	10051868	RH	DISCON	CARPET, FRT S/D L/PLR (SADDLE)	
86–87	Y67 (65I)	10051869	LH	DISCON	CARPET, FRT S/D L/PLR (BRONZE)	
86–87	Y67 (65I)	10051870	RH	DISCON	CARPET, FRT S/D L/PLR (BRONZE)	
86–87	Y67 (73I)	10051871	LH	DISCON	CARPET, FRT S/D L/PLR (RED)	
86–87	Y67 (73I)	10051872	RH	DISCON	CARPET, FRT S/D L/PLR (RED)	
88–89	Y67 (90I)	10089583	LH	12.10	CARPET, FRT S/D L/PLR (GRAY)	
88–89	Y67 (90I)	10089584	RH	11.90	CARPET, FRT S/D L/PLR (GRAY)	
80–89	Y67 (21I)	10137211	LH	DISCON	CARPET, FRT S/D L/PLR (BLUE)	
88–89	Y67 (21I)	10137212	RH	DISCON	CARPET, FRT S/D L/PLR (BLUE)	

© 2000 GENERAL MOTORS SERVICE PARTS OPERATIONS–CHEVROLET–14Y

14.731 BOLT – CARPET – PANEL, Lock Pillar Trim (Con't)

88–91	Y67 (60I)	10137213	LH	DISCON	CARPET, FRT S/D L/PLR (COGNAC)	
88–91	Y67 (60I)	10137214	RH	DISCON	CARPET, FRT S/D L/PLR (COGNAC)	
88–92	Y67 (73I)	10137215	LH	DISCON	CARPET, FRT S/D L/PLR (RED)	
88–92	Y67 (73I)	10137216	RH	12.10	CARPET, FRT S/D L/PLR (RED)	11–H16,16
88–91	Y67 (90I)	10137217	LH	DISCON	CARPET, FRT S/D L/PLR (GRAY)	
88–91	Y67 (90I)	10137218	RH	DISCON	CARPET, FRT S/D L/PLR (GRAY)	
88–91	Y67 (19I)	10219787	LH	11.50	CARPET, FRT S/D L/PLR (BLACK)	11–H16,16
88–91	Y67 (19I)	10219788	RH	12.10	CARPET, FRT S/D L/PLR (BLACK)	11–H16,16
90–91	Y67 (22I)	10137251	LH	DISCON	CARPET, FRT S/D L/PLR (BLUE)	
90–91	Y67 (22I)	10137252	RH	DISCON	CARPET, FRT S/D L/PLR (BLUE)	
92–93	Y67 (64I)	10175681	LH	12.10	CARPET, FRT S/D L/PLR (BEIGE)	11–H16,16
92–93	Y67 (64I)	10175682	RH	12.10	CARPET, FRT S/D L/PLR (BEIGE)	11–H16,16
92–93	Y67 (10I), (19I)	10219787	LH	11.50	CARPET, FRT S/D L/PLR (BLACK)	11–H16,16
92–93	Y67 (10I), (19I)	10219788	RH	12.10	CARPET, FRT S/D L/PLR (BLACK)	11–H16,16
93	Y67 (79I)	10219793	LH	DISCON	CARPET, FRT S/D L/PLR (RED)	
93	Y67 (79I)	10219794	RH	DISCON	CARPET, FRT S/D L/PLR (RED)	
93	Y67 (70I)	10219795	LH	DISCON	CARPET, FRT S/D L/PLR (RED)	
93	Y67 (70I)	10219796	RH	DISCON	CARPET, FRT S/D L/PLR (RED)	
94–96	Y67 (19I)	10238599	LH	12.10	CARPET, FRT S/D L/PLR (BLACK)	11–H16,16
94–96	Y67 (19I)	10238600	RH	12.10	CARPET, FRT S/D L/PLR (BLACK)	11–H16,16
94–96	Y67 (64I)	10238601	LH	12.10	CARPET, FRT S/D L/PLR (BEIGE)	11–H16,16
94–96	Y67 (64I)	10238602	RH	12.10	CARPET, FRT S/D L/PLR (BEIGE)	11–H16,16
94–96	Y67 (14I)	10238603	LH	12.10	CARPET, FRT S/D L/PLR (GRAY)	11–H16,16
94–96	Y67 (14I)	10238604	RH	12.10	CARPET, FRT S/D L/PLR (GRAY)	11–H16,16
94–95	Y67 (70I)	10238605	LH	12.10	CARPET, FRT S/D L/PLR (RED)	11–H16,16
94–95	Y67 (70I)	10238606	RH	12.10	CARPET, FRT S/D L/PLR (RED)	11–H16,16
96	Y67 (70I), (EXC GRAND SPORT EDITION (Z16)	10238605	LH	12.10	CARPET, FRT S/D L/PLR (RED)	11–H16,16
96	Y67 (70I), (EXC GRAND SPORT EDITION (Z16)	10238606	RH	12.10	CARPET, FRT S/D L/PLR (RED)	11–H16,16
86–89	Y67	14100367	LH	47.20	PANEL, BODY L/PLR UPR TR	11–E7,5
86–89	Y67	14100368	RH	47.20	PANEL, BODY L/PLR UPR TR	11–E7,5
90–93	Y67 (19I)	10103850	RH	47.20	PANEL, BODY L/PLR UPR TR (BLACK)	11–E7,5
90–93	Y67 (19I)	10103851	LH	47.20	PANEL, BODY L/PLR UPR TR (BLACK)	11–E7,5
90–91	Y67 (22I)	10103852	RH	DISCON	PANEL, BODY L/PLR UPR TR (BLUE)	
90–91	Y67 (22I)	10103853	LH	DISCON	PANEL, BODY L/PLR UPR TR (BLUE)	
90–91	Y67 (60I)	10103854	RH	47.20	PANEL, BODY L/PLR UPR TR (COGNAC)	11–E7,5
90–91	Y67 (60I)	10103855	LH	47.20	PANEL, BODY L/PLR UPR TR (COGNAC)	11–E7,5
90–92	Y67 (73I)	10103856	RH	47.20	PANEL, BODY L/PLR UPR TR (RED)	11–E7,5
90–92	Y67 (73I)	10103857	LH	47.20	PANEL, BODY L/PLR UPR TR (RED)	11–E7,5
90–91	Y67 (90I)	10103858	RH	47.20	PANEL, BODY L/PLR UPR TR (GRAY)	11–E7,5
90–91	Y67 (90I)	10103859	LH	47.20	PANEL, BODY L/PLR UPR TR (GRAY)	11–E7,5
92–93	Y67 (10I)	10167117	LH	DISCON	PANEL, BODY L/PLR UPR TR (WHITE)	
92–93	Y67 (10I)	10167118	RH	47.20	PANEL, BODY L/PLR UPR TR (WHITE)	11–E16,5
92–93	Y67 (64I)	10175618	RH	47.20	PANEL, BODY L/PLR UPR TR (BEIGE)	11–E16,5

© 2000 GENERAL MOTORS SERVICE PARTS OPERATIONS–CHEVROLET–14Y

MICROFICHE INDEX

GROUPS 14.000 THRU 15.000

FICHE 11 OF 11

GROUP	DESCRIPTION	STARTING GRID LOCATION PARTS	ILLUSTRATIONS
–	GENERAL INFORMATION	1–A2	1–G2
–	ALPHABETICAL INDEX	1–B13	N.A.
14.000	INTERIOR TRIM – SEAT BELTS	11–A2	11–E2
15.000	REAR SEAT TRIM – CARPETS – YARDAGE	11–D2	11–H2
–	OUT OF FICHE CALLS	N.A.	11–M16

11–B1

14.731 BOLT – CARPET – PANEL, Lock Pillar Trim(Con't)

92–93	Y67 (64I)	10175619	LH	47.20	PANEL, BODY L/PLR UPR TR (BEIGE)	11–E16,5
92–93	Y67 (14I)	10175620	RH	DISCON	PANEL, BODY L/PLR UPR TR (GRAY)	
92–93	Y67 (14I)	10175621	LH	DISCON	PANEL, BODY L/PLR UPR TR (GRAY)	
93	Y67 (79I)	10199556	RH	47.20	PANEL, BODY L/PLR UPR TR (RED)	11–E16,5
93	Y67 (79I)	10199557	LH	DISCON	PANEL, BODY L/PLR UPR TR (RED)	
93	Y67 (70I)	10199722	RH	DISCON	PANEL, BODY L/PLR UPR TR (RED)	
93	Y67 (70I)	10199723	LH	DISCON	PANEL, BODY L/PLR UPR TR (RED)	
94–96	Y67 (19I)	10212821	LH	4.30	PANEL, BODY L/PLR UPR TR (BLACK)	11–E16,5
94–96	Y67 (19I)	10212822	RH	4.30	PANEL, BODY L/PLR UPR TR (BLACK)	11–E16,5
94–96	Y67 (70I)	10212825	LH	4.30	PANEL, BODY L/PLR UPR TR (RED)	11–E16,5
94–96	Y67 (70I)	10212826	RH	4.30	PANEL, BODY L/PLR UPR TR (RED)	11–E16,5
94–96	Y67 (64I)	10212827	LH	4.30	PANEL, BODY L/PLR UPR TR (BEIGE)	11–E16,5
94–96	Y67 (64I)	10212828	RH	4.30	PANEL, BODY L/PLR UPR TR (BEIGE)	11–E16,5
94–96	Y67 (14I)	10212829	LH	4.30	PANEL, BODY L/PLR UPR TR (GRAY)	11–E16,5
94–96	Y67 (14I)	10212830	RH	4.30	PANEL, BODY L/PLR UPR TR (GRAY)	11–E16,5

14.800 COVER – RING – TRIM, Front Seat Back and Back of Back

84–86	Y NON–RECL FRT BKT ST (A51), (122)	14058521	LH	DISCON	COVER, D/SEAT BK CUSH (LEATHER, GRAPHITE)
84–86	Y NON–RECL FRT BKT ST (A51), (152)	14058522	LH	DISCON	COVER, D/SEAT BK CUSH (LEATHER, GRAY)
84–85	Y NON–RECL FRT BKT ST (A51), (652)	14058524	LH	DISCON	COVER, D/SEAT BK CUSH (LEATHER, BRONZE)
84–86	Y NON–RECL FRT BKT ST (A51), (622)	14058525	LH	DISCON	COVER, D/SEAT BK CUSH (LEATHER, SADDLE)
84–85	Y NON–RECL FRT BKT ST (A51), (742)	14058526	LH	DISCON	COVER, D/SEAT BK CUSH (LEATHER, CARMINE)
86	Y NON–RECL FRT BKT ST (A51), (652), (1ST DES)	14058524	LH	DISCON	COVER, D/SEAT BK CUSH (LEATHER W/GOLD METALLIC FLECKS, BRONZE)
86–88	Y (12C)	14090646	LH	DISCON	COVER, D/SEAT BK CUSH (GRAPHITE)
86–87	Y (15C)	14090648	LH	DISCON	COVER, D/SEAT BK CUSH (GRAY)
86–87	Y 21C	14090650	LH	DISCON	COVER, D/SEAT BK CUSH (BLUE)
86–87	Y (65C)	14090652	LH	DISCON	COVER, D/SEAT BK CUSH (BRONZE)
86–87	Y (62C)	14090654	LH	DISCON	COVER, D/SEAT BK CUSH (SADDLE)
86	Y NON–RECL FRT BKT ST (A51), (212)	14090660	LH	DISCON	COVER, D/SEAT BK CUSH (BLUE)
86	Y NON–RECL FRT BKT ST (A51), (732)	14090666	LH	DISCON	COVER, D/SEAT BK CUSH (RED)
87–88	Y MAN RECL FRT BKT ST (AR9), (122)	14058521	LH	DISCON	COVER, D/SEAT BK CUSH (LEATHER, GRAPHITE)
87	Y MAN RECL FRT BKT ST (AR9), (152)	14058522	LH	DISCON	COVER, D/SEAT BK CUSH (LEATHER, GRAY)
87	Y MAN RECL FRT BKT ST (AR9), (622)	14058525	LH	DISCON	COVER, D/SEAT BK CUSH (LEATHER, SADDLE)
87–88	Y MAN RECL FRT BKT ST (AR9), (212)	14090660	LH	DISCON	COVER, D/SEAT BK CUSH (BLUE)

© 2000 GENERAL MOTORS SERVICE PARTS OPERATIONS–CHEVROLET–14Y

14.800 COVER – RING – TRIM, Front Seat Back and Back of Back (Con't)

87–88	Y MAN RECL FRT BKT ST (AR9), (732)	14090666	LH	DISCON	COVER, D/SEAT BK CUSH (RED)	
88	Y MAN RECL FRT BKT ST (AR9), (192)	10076642	LH	DISCON	COVER, D/SEAT BK CUSH (BLACK)	
88	Y MAN RECL FRT BKT ST (AR9), (602)	10076644	LH	DISCON	COVER, D/SEAT BK CUSH (COGNAC)	
88	Y AR9 902	10076646	LH	DISCON	COVER, D/SEAT BK CUSH (GRAY)	
88	Y (19C)	10076650	LH	DISCON	COVER, D/SEAT BK CUSH (BLACK)	
88	Y (60C)	10076651	LH	DISCON	COVER, D/SEAT BK CUSH (COGNAC)	
88	Y 35 ANNIVERSARY (Z01), (113)	10120970	LH	DISCON	COVER, D/SEAT BK CUSH (WHITE)	
89	Y MAN RECL FRT BKT ST (AR9), (212)	10125942	LH	DISCON	COVER, D/SEAT BK CUSH (BLUE)	
89	Y MAN RECL FRT BKT ST (AR9), (732)	10125943	LH	756.20	COVER, D/SEAT BK CUSH (RED)	9–I12,31
89	Y MAN RECL FRT BKT ST (AR9), (192)	10125944	LH	DISCON	COVER, D/SEAT BK CUSH (BLACK)	
89	Y MAN RECL FRT BKT ST (AR9), (602)	10125945	LH	DISCON	COVER, D/SEAT BK CUSH (COGNAC)	
89	Y AR9 902	10125946	LH	DISCON	COVER, D/SEAT BK CUSH (GRAY)	
89	Y RECL FRT BKT ST (AQ9), (212)	10140651	LH	DISCON	COVER, D/SEAT BK CUSH (BLUE)	
89	Y RECL FRT BKT ST (AQ9), (602)	10140652	LH	DISCON	COVER, D/SEAT BK CUSH (COGNAC)	
89	Y RECL FRT BKT ST (AQ9), (732)	10140653	LH	DISCON	COVER, D/SEAT BK CUSH (RED)	
89–91	Y MAN RECL FRT BKT ST (AR9), (60C)	12517333	LH	DISCON	COVER, D/SEAT BK CUSH (W/CUSH) (COGNAC)	
90–93	Y MAN RECL FRT BKT ST (AR9), (19C)	12517331	LH	DISCON	COVER, D/SEAT BK CUSH (W/CUSH) (BLACK)	
91–92	Y RECL FRT BKT ST (AQ9), (193)	12506479	LH	482.10	COVER, D/SEAT BK CUSH (BLACK)	9–J2,57
91	Y RECL FRT BKT ST (AQ9), (223)	12506480	LH	DISCON	COVER, D/SEAT BK CUSH (BLUE)	
91	Y RECL FRT BKT ST (AQ9), (603)	12506481	LH	DISCON	COVER, D/SEAT BK CUSH (COGNAC)	
91	Y RECL FRT BKT ST (AQ9), (903)	12506483	LH	DISCON	COVER, D/SEAT BK CUSH (GRAY) (DURASTOP)	
91–92	Y MAN RECL FRT BKT ST (AR9), (193)	12517330	LH	482.10	COVER, D/SEAT BK CUSH (W/CUSH) (BLACK)	9–I24,13
91	Y MAN RECL FRT BKT ST (AR9), (603)	12517332	LH	DISCON	COVER, D/SEAT BK CUSH (W/CUSH) (COGNAC)	
91	Y MAN RECL FRT BKT ST (AR9), (223)	12517334	LH	DISCON	COVER, D/SEAT BK CUSH (W/CUSH) (BLUE)	
91	Y MAN RECL FRT BKT ST (AR9), (903)	12517335	LH	DISCON	COVER, D/SEAT BK CUSH (W/CUSH) (GRAY)	
91–92	Y MAN RECL FRT BKT ST (AR9), (733)	12517336	LH	482.10	COVER, D/SEAT BK CUSH (W/CUSH) (RED)	9–I24,13
92	Y RECL FRT BKT ST (AQ9), (103)	12510915	LH	482.10	COVER, D/SEAT BK CUSH (WHITE)	9–J2,57
92	Y RECL FRT BKT ST (AQ9), (143)	12510916	LH	482.10	COVER, D/SEAT BK CUSH (GRAY)	9–J2,57
92	Y RECL FRT BKT ST (AQ9), (643)	12510917	LH	482.10	COVER, D/SEAT BK CUSH (BEIGE)	9–J2,57
92	Y MAN RECL FRT BKT ST (AR9), (103)	12517337	LH	482.10	COVER, D/SEAT BK CUSH (W/CUSH) (WHITE)	9–I24,13
92	Y MAN RECL FRT BKT ST (AR9), (143)	12517338	LH	482.10	COVER, D/SEAT BK CUSH (W/CUSH) (GRAY)	9–I24,13
92	Y MAN RECL FRT BKT ST (AR9), (643)	12517339	LH	576.50	COVER, D/SEAT BK CUSH (W/CUSH) (BEIGE)	9–I24,13

© 2000 GENERAL MOTORS SERVICE PARTS OPERATIONS–CHEVROLET–14Y

14.800 COVER – RING – TRIM, Front Seat Back and Back of Back (Con't)

93	Y MAN RECL FRT BKT ST (AR9), (193)	12521032	LH	482.10	COVER, D/SEAT BK CUSH (W/CUSH) (BLACK)	9–I24,13
93	Y MAN RECL FRT BKT ST (AR9), (103)	12521033	LH	482.10	COVER, D/SEAT BK CUSH (W/CUSH) (WHITE)	9–I24,13
93	Y MAN RECL FRT BKT ST (AR9), (143)	12521034	LH	482.10	COVER, D/SEAT BK CUSH (W/CUSH) (GRAY)	9–I24,13
93	Y MAN RECL FRT BKT ST (AR9), (643)	12521035	LH	482.10	COVER, D/SEAT BK CUSH (W/CUSH) (BEIGE)	9–I24,13
93	Y MAN RECL FRT BKT ST (AR9), (703)	12521036	LH	482.10	COVER, D/SEAT BK CUSH (W/CUSH) (RED)	9–I24,13
93	Y RECL FRT BKT ST (AQ9), (193)	12521389	LH	482.10	COVER, D/SEAT BK CUSH (BLACK)	9–J2,57
93	Y RECL FRT BKT ST (AQ9), (703)	12521390	LH	482.10	COVER, D/SEAT BK CUSH (RED)	9–J2,57
93	Y RECL FRT BKT ST (AQ9), (793)	12521391	LH	482.10	COVER, D/SEAT BK CUSH (RED)	9–J2,57
93	Y RECL FRT BKT ST (AQ9), (103)	12521392	LH	482.10	COVER, D/SEAT BK CUSH (WHITE)	9–J2,57
93	Y RECL FRT BKT ST (AQ9), (143)	12521393	LH	482.10	COVER, D/SEAT BK CUSH (GRAY) .	9–J2,57
93	Y RECL FRT BKT ST (AQ9), (643)	12521394	LH	482.10	COVER, D/SEAT BK CUSH (BEIGE)	9–J2,57
94–96	Y MAN RECL FRT BKT ST (AR9), (143)	10248450	1	554.70	COVER, D/SEAT BK CUSH (GRAY) .	9–J8,24
94–96	Y MAN RECL FRT BKT ST (AR9), (643)	10248465	1	554.70	COVER, D/SEAT BK CUSH (BEIGE)	9–J8,24
94–96	Y MAN RECL FRT BKT ST (AR9), (193)	10248467	1	554.70	COVER, D/SEAT BK CUSH (BLACK)	9–J8,24
94–96	Y MAN RECL FRT BKT ST (AR9), (703)	10248469	1	554.70	COVER, D/SEAT BK CUSH (RED)	9–J8,24
94	Y RECL FRT BKT ST (AQ9), (193)	10248471	1	DISCON	COVER, D/SEAT BK CUSH (BLACK)	
94	Y RECL FRT BKT ST (AQ9), (703)	10248472	1	554.70	COVER, D/SEAT BK CUSH (RED)	9–J13,25
94	Y RECL FRT BKT ST (AQ9), (143)	10248473	1	DISCON	COVER, D/SEAT BK CUSH (GRAY) .	
94	Y RECL FRT BKT ST (AQ9), (643)	10248474	1	DISCON	COVER, D/SEAT BK CUSH (BEIGE)	
95–96	Y RECL FRT BKT ST (AQ9), (193)	10262389	1	742.10	COVER, D/SEAT BK CUSH (BLACK) (WITH PAD)	9–J13,25
95–96	Y RECL FRT BKT ST (AQ9), (703)	10262391	1	742.10	COVER, D/SEAT BK CUSH (RED) (WITH PAD)	9–J13,25
95–96	Y RECL FRT BKT ST (AQ9), (143)	10262393	1	742.10	COVER, D/SEAT BK CUSH (GRAY) (WITH PAD)	9–J13,25
95–96	Y RECL FRT BKT ST (AQ9), (643)	10262395	1	742.10	COVER, D/SEAT BK CUSH (BEIGE) (WITH PAD)	9–J13,25
95	Y67 RECL FRT BKT ST (AQ9), (194)	12455824	1	614.00	COVER, D/SEAT BK CUSH (BLACK)	9–J13,25
96	Y RECL FRT BKT ST (AQ9), COLLECTORS EDITION (Z15), (194)	10260195	1	742.10	COVER, D/SEAT BK CUSH (BLACK)	9–J13,25
96	Y RECL FRT BKT ST (AQ9), COLLECTORS EDITION (Z15)	10262523	1	742.10	COVER, D/SEAT BK CUSH (RED)	9–J13,25
96	Y RECL FRT BKT ST (AQ9), GRAND SPORT EDITION (Z16), (195)	10262535	1	742.10	COVER, D/SEAT BK CUSH (BLACK)	9–J13,25
96	Y RECL FRT BKT ST (AQ9), GRAND SPORT EDITION (Z16)	10262541	1	742.10	COVER, D/SEAT BK CUSH (RED)	9–J13,25

© 2000 GENERAL MOTORS SERVICE PARTS OPERATIONS–CHEVROLET–14Y

14.800 COVER – RING – TRIM, Front Seat Back and Back of Back (Con't)

96	Y RECL FRT BKT ST (AQ9), COLLECTORS EDITION (Z15), (144)	10270159	1	742.10	COVER, D/SEAT BK CUSH (GRAY)	9–J13,25
90	Y RECL FRT BKT ST (AQ9), (193)	10174818	2	DISCON	COVER, F/SEAT BK CUSH (BLACK)	
90	Y RECL FRT BKT ST (AQ9), (223)	10174819	1	DISCON	COVER, F/SEAT BK CUSH (BLUE)	
90	Y RECL FRT BKT ST (AQ9), (603)	10174820	1	DISCON	COVER, F/SEAT BK CUSH (COGNAC)	
90	Y RECL FRT BKT ST (AQ9), (733)	10174821	1	DISCON	COVER, F/SEAT BK CUSH (RED)	
90	Y RECL FRT BKT ST (AQ9), (903)	10174822	1	DISCON	COVER, F/SEAT BK CUSH (GRAY)	
90	Y RECL FRT BKT ST (AQ9), (193)	10174823	RH	DISCON	COVER, F/SEAT BK CUSH (BOLS, BLACK)	
90	Y RECL FRT BKT ST (AQ9), (223)	10174824	RH	DISCON	COVER, F/SEAT BK CUSH (BOLS, BLUE)	
90	Y RECL FRT BKT ST (AQ9), (603)	10174825	RH	DISCON	COVER, F/SEAT BK CUSH (BOLS, COGNAC)	
90	Y RECL FRT BKT ST (AQ9), (733)	10174826	RH	DISCON	COVER, F/SEAT BK CUSH (BOLS, RED)	
90	Y RECL FRT BKT ST (AQ9), (903)	10174827	RH	DISCON	COVER, F/SEAT BK CUSH (BOLS, GRAY)	
90	Y RECL FRT BKT ST (AQ9), (193)	10174828	LH	DISCON	COVER, F/SEAT BK CUSH (BOLS, BLACK)	
90	Y RECL FRT BKT ST (AQ9), (223)	10174829	LH	DISCON	COVER, F/SEAT BK CUSH (BOLS, BLUE)	
90	Y RECL FRT BKT ST (AQ9), (603)	10174830	LH	DISCON	COVER, F/SEAT BK CUSH (BOLS, COGNAC)	
90	Y RECL FRT BKT ST (AQ9), (733)	10174831	LH	DISCON	COVER, F/SEAT BK CUSH (BOLS, RED)	
90	Y RECL FRT BKT ST (AQ9), (903)	10174832	LH	DISCON	COVER, F/SEAT BK CUSH (BOLS, GRAY)	
34–86	Y NON–RECL FRT BKT ST (A51), (122)	14058521	RH	DISCON	COVER, P/SEAT BK CUSH (LEATHER, GRAPHITE)	
84–86	Y NON–RECL FRT BKT ST (A51), (152)	14058522	RH	DISCON	COVER, P/SEAT BK CUSH (LEATHER, GRAY)	
84–85	Y NON–RECL FRT BKT ST (A51), (652)	14058524	RH	DISCON	COVER, P/SEAT BK CUSH (LEATHER, BRONZE)	
84–86	Y NON–RECL FRT BKT ST (A51), (622)	14058525	RH	DISCON	COVER, P/SEAT BK CUSH (LEATHER, SADDLE)	
84–85	Y NON–RECL FRT BKT ST (A51), (742)	14058526	RH	DISCON	COVER, P/SEAT BK CUSH (LEATHER, CARMINE)	
86	Y NON–RECL FRT BKT ST (A51), (652), (1ST DES)	14058524	RH	DISCON	COVER, P/SEAT BK CUSH (LEATHER W/GOLD METALLIC FLECKS, BRONZE)	
86–88	Y (12C)	14090646	RH	DISCON	COVER, P/SEAT BK CUSH (GRAPHITE)	
86–87	Y (15C)	14090648	RH	DISCON	COVER, P/SEAT BK CUSH (GRAY)	
86–87	Y 21C	14090650	RH	DISCON	COVER, P/SEAT BK CUSH (BLUE)	
86–87	Y (65C)	14090652	RH	DISCON	COVER, P/SEAT BK CUSH (BRONZE)	
86–87	Y (62C)	14090654	RH	DISCON	COVER, P/SEAT BK CUSH (SADDLE)	
86	Y NON–RECL FRT BKT ST (A51), (212)	14090660	RH	DISCON	COVER, P/SEAT BK CUSH (BLUE)	
86	Y NON–RECL FRT BKT ST (A51), (732)	14090666	RH	DISCON	COVER, P/SEAT BK CUSH (RED)	
87–88	Y MAN RECL FRT BKT ST (AR9), (122)	14058521	RH	DISCON	COVER, P/SEAT BK CUSH (LEATHER, GRAPHITE)	

© 2000 GENERAL MOTORS SERVICE PARTS OPERATIONS–CHEVROLET–14Y

14.800 COVER – RING – TRIM, Front Seat Back and Back of Back (Con't)

87	Y MAN RECL FRT BKT ST (AR9), (152)	14058522	RH	DISCON	COVER, P/SEAT BK CUSH (LEATHER, GRAY)	
87	Y MAN RECL FRT BKT ST (AR9), (622)	14058525	RH	DISCON	COVER, P/SEAT BK CUSH (LEATHER, SADDLE)	
87–88	Y MAN RECL FRT BKT ST (AR9), (212)	14090660	RH	DISCON	COVER, P/SEAT BK CUSH (BLUE)	
87–88	Y MAN RECL FRT BKT ST (AR9), (732)	14090666	RH	DISCON	COVER, P/SEAT BK CUSH (RED)	
88	Y MAN RECL FRT BKT ST (AR9), (192)	10076642	RH	DISCON	COVER, P/SEAT BK CUSH (BLACK)	
88	Y MAN RECL FRT BKT ST (AR9), (602)	10076644	RH	DISCON	COVER, P/SEAT BK CUSH (COGNAC)	
88	Y AR9 902	10076646	RH	DISCON	COVER, P/SEAT BK CUSH (GRAY)	
88	Y (19C)	10076650	RH	DISCON	COVER, P/SEAT BK CUSH (BLACK)	
88	Y (60C)	10076651	RH	DISCON	COVER, P/SEAT BK CUSH (COGNAC)	
88	Y 35 ANNIVERSARY (Z01), (113)	10120970	RH	DISCON	COVER, P/SEAT BK CUSH (WHITE)	
89	Y MAN RECL FRT BKT ST (AR9), (212)	10125942	RH	DISCON	COVER, P/SEAT BK CUSH (BLUE)	
89	Y MAN RECL FRT BKT ST (AR9), (732)	10125943	RH	756.20	COVER, P/SEAT BK CUSH (RED)	9–I12,31
89	Y MAN RECL FRT BKT ST (AR9), (192)	10125944	RH	DISCON	COVER, P/SEAT BK CUSH (BLACK)	
89	Y MAN RECL FRT BKT ST (AR9), (602)	10125945	RH	DISCON	COVER, P/SEAT BK CUSH (COGNAC)	
89	Y AR9 902	10125946	RH	DISCON	COVER, P/SEAT BK CUSH (GRAY)	
89	Y RECL FRT BKT ST (AQ9), (212)	10140651	RH	DISCON	COVER, P/SEAT BK CUSH (BLUE)	
89	Y RECL FRT BKT ST (AQ9), (602)	10140652	RH	DISCON	COVER, P/SEAT BK CUSH (COGNAC)	
89	Y RECL FRT BKT ST (AQ9), (732)	10140653	RH	DISCON	COVER, P/SEAT BK CUSH (RED)	
89–90	Y MAN RECL FRT BKT ST (AR9), (60C)	12517333	RH	DISCON	COVER, P/SEAT BK CUSH (W/CUSH) (COGNAC)	
90–93	Y MAN RECL FRT BKT ST (AR9), (19C)	12517331	RH	DISCON	COVER, P/SEAT BK CUSH (W/CUSH) (BLACK)	
91–92	Y RECL FRT BKT ST (AQ9), (193)	12506479	RH	482.10	COVER, P/SEAT BK CUSH (BLACK)	9–J2,57
91	Y RECL FRT BKT ST (AQ9), (223)	12506480	RH	DISCON	COVER, P/SEAT BK CUSH (BLUE)	
91	Y RECL FRT BKT ST (AQ9), (603)	12506481	RH	DISCON	COVER, P/SEAT BK CUSH (COGNAC)	
91	Y RECL FRT BKT ST (AQ9), (903)	12506483	RH	DISCON	COVER, P/SEAT BK CUSH (GRAY) (DURASTOP)	
91–92	Y MAN RECL FRT BKT ST (AR9), (193)	12517330	RH	482.10	COVER, P/SEAT BK CUSH (W/CUSH) (BLACK)	9–I24,13
91	Y MAN RECL FRT BKT ST (AR9), (603)	12517332	RH	DISCON	COVER, P/SEAT BK CUSH (W/CUSH) (COGNAC)	
91	Y MAN RECL FRT BKT ST (AR9), (60C)	12517333	RH	DISCON	COVER, P/SEAT BK CUSH (W/CUSH) (COGNAC)	
91	Y MAN RECL FRT BKT ST (AR9), (223)	12517334	RH	DISCON	COVER, P/SEAT BK CUSH (W/CUSH) (BLUE)	
91	Y MAN RECL FRT BKT ST (AR9), (903)	12517335	RH	DISCON	COVER, P/SEAT BK CUSH (W/CUSH) (GRAY)	
91–92	Y MAN RECL FRT BKT ST (AR9), (733)	12517336	RH	482.10	COVER, P/SEAT BK CUSH (W/CUSH) (RED)	9–I24,13
92	Y RECL FRT BKT ST (AQ9), (103)	12510915	RH	482.10	COVER, P/SEAT BK CUSH (WHITE)	9–J2,57
92	Y RECL FRT BKT ST (AQ9), (143)	12510916	RH	482.10	COVER, P/SEAT BK CUSH (GRAY)	9–J2,57

© 2000 GENERAL MOTORS SERVICE PARTS OPERATIONS–CHEVROLET–14Y

14.800 COVER – RING – TRIM, Front Seat Back and Back of Back (Con't)

92	Y RECL FRT BKT ST (AQ9), (643)	12510917	RH	482.10	COVER, P/SEAT BK CUSH (BEIGE)	9–J2,57
92	Y MAN RECL FRT BKT ST (AR9), (103)	12517337	RH	482.10	COVER, P/SEAT BK CUSH (W/CUSH) (WHITE)	9–I24,13
92	Y MAN RECL FRT BKT ST (AR9), (143)	12517338	RH	482.10	COVER, P/SEAT BK CUSH (W/CUSH) (GRAY)	9–I24,13
92	Y MAN RECL FRT BKT ST (AR9), (643)	12517339	RH	576.50	COVER, P/SEAT BK CUSH (W/CUSH) (BEIGE)	9–I24,13
93	Y MAN RECL FRT BKT ST (AR9), (193)	12521032	RH	482.10	COVER, P/SEAT BK CUSH (W/CUSH) (BLACK)	9–I24,13
93	Y MAN RECL FRT BKT ST (AR9), (103)	12521033	RH	482.10	COVER, P/SEAT BK CUSH (W/CUSH) (WHITE)	9–I24,13
93	Y MAN RECL FRT BKT ST (AR9), (143)	12521034	RH	482.10	COVER, P/SEAT BK CUSH (W/CUSH) (GRAY)	9–I24,13
93	Y MAN RECL FRT BKT ST (AR9), (643)	12521035	RH	482.10	COVER, P/SEAT BK CUSH (W/CUSH) (BEIGE)	9–I24,13
93	Y MAN RECL FRT BKT ST (AR9), (703)	12521036	RH	482.10	COVER, P/SEAT BK CUSH (W/CUSH) (RED)	9–I24,13
93	Y RECL FRT BKT ST (AQ9), (193)	12521389	RH	482.10	COVER, P/SEAT BK CUSH (BLACK)	9–J2,57
93	Y RECL FRT BKT ST (AQ9), (703)	12521390	RH	482.10	COVER, P/SEAT BK CUSH (RED)	9–J2,57
93	Y RECL FRT BKT ST (AQ9), (793)	12521391	RH	482.10	COVER, P/SEAT BK CUSH (RED)	9–J2,57
93	Y RECL FRT BKT ST (AQ9), (103)	12521392	RH	482.10	COVER, P/SEAT BK CUSH (WHITE)	9–J2,57
93	Y RECL FRT BKT ST (AQ9), (143)	12521393	RH	482.10	COVER, P/SEAT BK CUSH (GRAY) .	9–J2,57
93	Y RECL FRT BKT ST (AQ9), (643)	12521394	RH	482.10	COVER, P/SEAT BK CUSH (BEIGE)	9–J2,57
94–96	Y MAN RECL FRT BKT ST (AR9), (143)	10248450	1	554.70	COVER, P/SEAT BK CUSH (GRAY) .	9–J8,24
94–96	Y MAN RECL FRT BKT ST (AR9), (643)	10248465	1	554.70	COVER, P/SEAT BK CUSH (BEIGE)	9–J8,24
94–96	Y MAN RECL FRT BKT ST (AR9), (193)	10248467	1	554.70	COVER, P/SEAT BK CUSH (BLACK)	9–J8,24
94–96	Y MAN RECL FRT BKT ST (AR9), (703)	10248469	1	554.70	COVER, P/SEAT BK CUSH (RED)	9–J8,24
94	Y RECL FRT BKT ST (AQ9), (193)	10250850	1	DISCON	COVER, P/SEAT BK CUSH (BLACK)	
94	Y RECL FRT BKT ST (AQ9), (703)	10250874	1	DISCON	COVER, P/SEAT BK CUSH (RED)	
94	Y RECL FRT BKT ST (AQ9), (143)	10250878	1	DISCON	COVER, P/SEAT BK CUSH (GRAY) .	
94	Y RECL FRT BKT ST (AQ9), (643)	10250880	1	DISCON	COVER, P/SEAT BK CUSH (BEIGE)	
95–96	Y RECL FRT BKT ST (AQ9), (193)	10262390	1	742.10	COVER, P/SEAT BK CUSH (BLACK) (WITH PAD)	9–J13,25
95–96	Y RECL FRT BKT ST (AQ9), (703)	10262392	1	742.10	COVER, P/SEAT BK CUSH (RED) (WITH PAD)	9–J13,25
95–96	Y RECL FRT BKT ST (AQ9), (143)	10262394	1	742.10	COVER, P/SEAT BK CUSH (GRAY) (WITH PAD)	9–J13,25
95–96	Y RECL FRT BKT ST (AQ9), (643)	10262396	1	742.10	COVER, P/SEAT BK CUSH (BEIGE) (WITH PAD)	9–J13,25
95	Y67 RECL FRT BKT ST (AQ9), (194)	12455823	1	722.60	COVER, P/SEAT BK CUSH (BLACK)	9–J13,25
96	Y RECL FRT BKT ST (AQ9), COLLECTORS EDITION (Z15), (194)	10260194	1	742.10	COVER, P/SEAT BK CUSH (BLACK)	9–J13,25

© 2000 GENERAL MOTORS SERVICE PARTS OPERATIONS–CHEVROLET–14Y

14.800 COVER – RING – TRIM, Front Seat Back and Back of Back (Con't)

96	Y RECL FRT BKT ST (AQ9), COLLECTORS EDITION (Z15)	10262520	1	742.10	COVER, P/SEAT BK CUSH (RED)	9–J13,25
96	Y RECL FRT BKT ST (AQ9), GRAND SPORT EDITION (Z16), (195)	10262536	1	742.10	COVER, P/SEAT BK CUSH (BLACK)	9–J13,25
96	Y RECL FRT BKT ST (AQ9), GRAND SPORT EDITION (Z16)	10262542	1	742.10	COVER, P/SEAT BK CUSH (RED)	9–J13,25
96	Y RECL FRT BKT ST (AQ9), COLLECTORS EDITION (Z15), (144)	10270160	1	742.10	COVER, P/SEAT BK CUSH (GRAY)	9–J13,25
93	Y RECL FRT BKT ST (AQ9), MAN RECL FRT BKT ST (AR9)	4876466	1	*.12	RING, F/SEAT BK CUSH CVR HOG (08.934)	9–I9,61
86–88	Y RECL FRT BKT ST (AQ9), (21I)	14094563	LH	DISCON	TRIM, BACKREST BOLSTER (BLUE)	
86–88	Y RECL FRT BKT ST (AQ9), (21I)	14094564	RH	DISCON	TRIM, BACKREST BOLSTER (BLUE)	
88	Y RECL FRT BKT ST (AQ9), (602)	10120957	LH	DISCON	TRIM, BACKREST BOLSTER (COGNAC)	
88	Y RECL FRT BKT ST (AQ9), (602)	10120958	RH	DISCON	TRIM, BACKREST BOLSTER (COGNAC)	
88	Y RECL FRT BKT ST (AQ9), (192)	10120951	1	DISCON	TRIM, BACKREST INSERT (BLACK)	
88	Y AQ9 902	10120955	1	DISCON	TRIM, BACKREST INSERT (GRAY)	
88	Y RECL FRT BKT ST (AQ9), (602)	10120959	1	DISCON	TRIM, BACKREST INSERT (COGNAC)	
89	Y AQ9 902	10159580	1	DISCON	TRIM, BACKREST INSERT (GRAY)	
87	Y MAN RECL FRT BKT ST (AR9), (652)	10048879	2	DISCON	TRIM, D/SEAT & P/SEAT BK CUSH (BRONZE, LEATHER)	
89	Y RECL FRT BKT ST (AQ9), (192)	10140659	LH	DISCON	TRIM, D/SEAT BACKREST BOLSTER (BLACK)	
86–87	Y RECL FRT BKT ST (AQ9), (652)	10048923	LH	DISCON	TRIM, D/SEAT BOLSTER (LEATHER, BRONZE)	
85–87	Y RECL FRT BKT ST (AQ9), (152)	14089195	2	DISCON	TRIM, DRIVE & PASS BACKREST INSERT (LEATHER, GRAY)	
84–85	Y RECL FRT BKT ST (AQ9), (12V)	14081129	2	DISCON	TRIM, DRIVER & PASS BACKREST INSERT (CLOTH, GRAPHITE)	
84–85	Y RECL FRT BKT ST (AQ9), (65V)	14081133	2	DISCON	TRIM, DRIVER & PASS BACKREST INSERT (CLOTH, BRONZE)	
84–85	Y RECL FRT BKT ST (AQ9), (62V)	14081137	2	DISCON	TRIM, DRIVER & PASS BACKREST INSERT (CLOTH, SADDLE)	
84–85	Y RECL FRT BKT ST (AQ9), (15V)	14081141	2	DISCON	TRIM, DRIVER & PASS BACKREST INSERT (CLOTH, GRAY)	
84–85	Y RECL FRT BKT ST (AQ9), (28V)	14081145	2	DISCON	TRIM, DRIVER & PASS BACKREST INSERT (CLOTH, BLUE)	
85–87	Y RECL FRT BKT ST (AQ9), (122)	14089191	2	DISCON	TRIM, DRIVER & PASS BACKREST INSERT (LEATHER, GRAPHITE)	
85–87	Y RECL FRT BKT ST (AQ9), (622)	14089199	2	DISCON	TRIM, DRIVER & PASS BACKREST INSERT (LEATHER, SADDLE)	
85–87	Y RECL FRT BKT ST (AQ9), (652)	14091303	2	DISCON	TRIM, DRIVER & PASS BACKREST INSERT (LEATHER, BRONZE)	
85	Y RECL FRT BKT ST (AQ9), (282)	14091450	2	DISCON	TRIM, DRIVER & PASS BACKREST INSERT (LEATHER, BLUE)	
86–88	Y RECL FRT BKT ST (AQ9), (21I)	14094565	2	DISCON	TRIM, DRIVER & PASS BACKREST INSERT (BLUE)	
86–88	Y RECL FRT BKT ST (AQ9), (732)	14094569	2	DISCON	TRIM, DRIVER & PASS BACKREST INSERT (RED)	
85	Y NON–RECL FRT BKT ST (A51)	14090628	2	DISCON	TRIM, DRIVER & PASS ST BK (LEATHER, BLUE)	

© 2000 GENERAL MOTORS SERVICE PARTS OPERATIONS–CHEVROLET–14Y

14.800 COVER – RING – TRIM, Front Seat Back and Back of Back (Con't)

86	Y NON–RECL FRT BKT ST (A51), (652), (2ND DES)	10048879	2	DISCON	TRIM, DRIVER & PASS ST BK CUSH (BRONZE, LEATHER, NO METALLIC FLECKS .....
89	Y RECL FRT BKT ST (AQ9), (902)	10159578	LH	DISCON	TRIM, DRIVER BACKREST BOLS (GRAY) .....
84–85	Y RECL FRT BKT ST (AQ9), (12V)	14081127	LH	DISCON	TRIM, DRIVER BACKREST BOLSTER (CLOTH, GRAPHITE)
84–85	Y RECL FRT BKT ST (AQ9), (65V)	14081131	LH	DISCON	TRIM, DRIVER BACKREST BOLSTER (CLOTH, BRONZE) .
84–85	Y RECL FRT BKT ST (AQ9), (62V)	14081135	LH	DISCON	TRIM, DRIVER BACKREST BOLSTER (CLOTH, SADDLE) ..
84–85	Y RECL FRT BKT ST (AQ9), (15V)	14081139	LH	DISCON	TRIM, DRIVER BACKREST BOLSTER (CLOTH, GRAY) ....
84–85	Y RECL FRT BKT ST (AQ9), (28V)	14081143	LH	DISCON	TRIM, DRIVER BACKREST BOLSTER (CLOTH, BLUE) ....
85–87	Y RECL FRT BKT ST (AQ9), (122)	14089189	LH	DISCON	TRIM, DRIVER BACKREST BOLSTER (LEATHER, GRAPHITE)
85–87	Y RECL FRT BKT ST (AQ9), (152)	14089193	LH	DISCON	TRIM, DRIVER BACKREST BOLSTER (LEATHER, GRAY) ..
85–87	Y RECL FRT BKT ST (AQ9), (622)	14089197	LH	DISCON	TRIM, DRIVER BACKREST BOLSTER (LEATHER, SADDLE)
85	Y RECL FRT BKT ST (AQ9), (652)	14091301	LH	DISCON	TRIM, DRIVER BACKREST BOLSTER (LEATHER, BRONZE) .
85	Y RECL FRT BKT ST (AQ9), (742)	14091305	LH	DISCON	TRIM, DRIVER BACKREST BOLSTER (LEATHER, CARMINE)
86–88	Y RECL FRT BKT ST (AQ9), (732)	14094567	LH	DISCON	TRIM, DRIVER BACKREST BOLSTER (RED) .....
88	Y RECL FRT BKT ST (AQ9), (192)	10120949	LH	DISCON	TRIM, DRIVER BACKREST BOLSTER (BLACK) .....
88	Y RECL FRT BKT ST (AQ9), (902)	10120953	LH	DISCON	TRIM, DRIVER BACKREST BOLSTER (GRAY) .....
89	Y RECL FRT BKT ST (AQ9), (212)	10140660	RH	DISCON	TRIM, P&D/SEAT BACKREST BOLSTER (BLUE) .....
89	Y RECL FRT BKT ST (AQ9), (212)	10140661	LH	DISCON	TRIM, P&D/SEAT BACKREST BOLSTER (BLUE) .....
89	Y RECL FRT BKT ST (AQ9), (602)	10140662	RH	DISCON	TRIM, P&D/SEAT BACKREST BOLSTER (COGNAC) .....
89	Y RECL FRT BKT ST (AQ9), (602)	10140663	LH	DISCON	TRIM, P&D/SEAT BACKREST BOLSTER (COGNAC) .....
89	Y RECL FRT BKT ST (AQ9), (732)	10140664	RH	DISCON	TRIM, P&D/SEAT BACKREST BOLSTER (RED) .....
89	Y RECL FRT BKT ST (AQ9), (732)	10140665	LH	DISCON	TRIM, P&D/SEAT BACKREST BOLSTER (RED) .....
89	Y RECL FRT BKT ST (AQ9), (192)	10140650	2	DISCON	TRIM, P&D/SEAT BACKREST INS (BLACK) .....
89	Y RECL FRT BKT ST (AQ9), (192)	10140658	RH	DISCON	TRIM, P/SEAT BACKREST BOLSTER (BLACK) .....
86–87	Y RECL FRT BKT ST (AQ9), (652)	10048924	RH	DISCON	TRIM, P/SEAT BOLSTER (LEATHER, BRONZE) .....
88	Y RECL FRT BKT ST (AQ9), (113)	10120968	2	DISCON	TRIM, P/SEAT INR, D/SEAT OTR BOLSTER (WHITE) .....
88	Y 35 ANNIVERSARY (Z01), (113)	10120969	2	DISCON	TRIM, P/SEAT OTR, D/SEAT INR BOLSTER (WHITE) .....
89	Y AQ9 902	10159579	RH	DISCON	TRIM, PASS BACKREST BOLS (GRAY) .....
84–85	Y RECL FRT BKT ST (AQ9), (12V)	14081128	RH	DISCON	TRIM, PASS BACKREST BOLSTER (CLOTH, GRAPHITE) .....
84–85	Y RECL FRT BKT ST (AQ9), (65V)	14081132	RH	DISCON	TRIM, PASS BACKREST BOLSTER (CLOTH, BRONZE) .....
84–85	Y RECL FRT BKT ST (AQ9), (62V)	14081136	RH	DISCON	TRIM, PASS BACKREST BOLSTER (CLOTH, SADDLE) .....

© 2000 GENERAL MOTORS SERVICE PARTS OPERATIONS–CHEVROLET–14Y

14.800 COVER – RING – TRIM, Front Seat Back and Back of Back (Con't)

84–85	Y RECL FRT BKT ST (AQ9), (15V)	14081140	RH	DISCON	TRIM, PASS BACKREST BOLSTER (CLOTH, GRAY)	
84–85	Y RECL FRT BKT ST (AQ9), (28V)	14081144	RH	DISCON	TRIM, PASS BACKREST BOLSTER (CLOTH, BLUE)	
85–87	Y RECL FRT BKT ST (AQ9), (122)	14089190	RH	DISCON	TRIM, PASS BACKREST BOLSTER (LEATHER, GRAPHITE)	
85–87	Y RECL FRT BKT ST (AQ9), (152)	14089194	RH	DISCON	TRIM, PASS BACKREST BOLSTER (LEATHER, GRAY)	
85–87	Y RECL FRT BKT ST (AQ9), (622)	14089198	RH	DISCON	TRIM, PASS BACKREST BOLSTER (LEATHER, SADDLE)	
85	Y RECL FRT BKT ST (AQ9), (652)	14091302	RH	DISCON	TRIM, PASS BACKREST BOLSTER (LEATHER, BRONZE)	
85	Y RECL FRT BKT ST (AQ9), (742)	14091306	RH	DISCON	TRIM, PASS BACKREST BOLSTER (LEATHER, CARMINE)	
85	Y AQ9 282	14091448	RH	DISCON	TRIM, PASS BACKREST BOLSTER (LEATHER, BLUE)	
86–88	Y RECL FRT BKT ST (AQ9), (732)	14094568	RH	DISCON	TRIM, PASS BACKREST BOLSTER (RED)	
88	Y RECL FRT BKT ST (AQ9), (192)	10120950	RH	DISCON	TRIM, PASS BACKREST BOLSTER (BLACK)	
88	Y AQ9 902	10120954	RH	DISCON	TRIM, PASS BACKREST BOLSTER (GRAY)	
86–87	Y RECL FRT BKT ST (AQ9), (652)	10046925	2	DISCON	TRIM, ST BACKREST INSERT (LEATHER, BRONZE)	
84–85	Y (12C)	14058509	2	DISCON	TRIM, ST BK (CLOTH, GRAPHITE)	
84–85	Y (15C)	14058510	2	DISCON	TRIM, ST BK (CLOTH, GRAY)	
84–85	Y 28C	14058511	2	DISCON	TRIM, ST BK (CLOTH, BLUE)	
84–85	Y (65C)	14058512	2	DISCON	TRIM, ST BK (CLOTH, BRONZE)	
84–85	Y (62C)	14058513	2	DISCON	TRIM, ST BK (CLOTH, SADDLE)	

14.802 BACKREST – PAD, Front Seat Back

89–90	Y RECL FRT BKT ST (AQ9)	10148093	LH	DISCON	BACKREST, D/SEAT FOAM & WIRE	
89–90	Y RECL FRT BKT ST (AQ9)	10148093	RH	DISCON	BACKREST, P/SEAT FOAM & WIRE	
94	Y MAN RECL FRT BKT ST (AR9)	10262256	1	48.50	PAD, D/SEAT BK CUSH (W/WIRE) (USE ON VEHS W/STS W/WIRES IN ST BK UPR BOLSTER)	9–J8,18
95–96	Y MAN RECL FRT BKT ST (AR9)	10262256	1	48.50	PAD, D/SEAT BK CUSH (W/WIRE) (PAD W/SLOT FOR WIRE STIFFNER)	9–J8,18
89–90	Y RECL FRT BKT ST (AQ9)	10148080	LH	DISCON	PAD, D/SEAT BK CUSH SI BOLS	
89–90	Y RECL FRT BKT ST (AQ9)	10148081	RH	DISCON	PAD, D/SEAT BK CUSH SI BOLS	
91–93	Y RECL FRT BKT ST (AQ9)	12508090	LH	DISCON	PAD, D/SEAT BK CUSH SI BOLS	
91–93	Y RECL FRT BKT ST (AQ9)	12508091	RH	DISCON	PAD, D/SEAT BK CUSH SI BOLS	
94	Y MAN RECL FRT BKT ST (AR9)	10262256	1	48.50	PAD, P/SEAT BK CUSH (W/WIRE) (USE ON VEHS W/STS W/WIRES IN ST BK UPR BOLSTER)	9–J8,18
95–96	Y MAN RECL FRT BKT ST (AR9)	10262256	1	48.50	PAD, P/SEAT BK CUSH (W/WIRE) (PAD W/SLOT FOR WIRE STIFFNER)	9–J8,18
91–93	Y RECL FRT BKT ST (AQ9)	12508090	LH	DISCON	PAD, P/SEAT BK CUSH SI BOLS	
91–93	Y RECL FRT BKT ST (AQ9)	12508091	RH	DISCON	PAD, P/SEAT BK CUSH SI BOLS	

© 2000 GENERAL MOTORS SERVICE PARTS OPERATIONS–CHEVROLET–14Y

14.865 BOLT – BRACKET – CLIP – COIL – COIL KIT – CONNECTOR – HARNESS – INSULATOR – MODULE – NUT – RESISTOR – RETAINER – SENSOR – SWITCH KIT – WASHER, Inflatable Restraint System

91	Y	11507066	AR	1.00	BOLT, F/END INFL RST DISCRM SEN (8 X 1.25 X 16) (08.900) (TORQ S25.0+/–3.0 NM)	
92	Y	11507066	2	1.00	BOLT, F/END INFL RST DISCRM SEN (8 X 1.25 X 16) (08.900)	
91–94	Y	15714276	2	.30	BOLT, F/END INFL RST DISCRM SEN BRKT (4.2X1.41X16MM HEX WSR HD 12.50 DIA TAPPING) (08.977)	
94–96	Y	11508948	2	.46	BOLT, I/P INFL RST MDL TR CVR HGE (08.900)	
91	Y	11507066	AR	1.00	BOLT, INFL RST ARMING SEN (8 X 1.25 X 16) (08.900) (TORQ S25.0+/–3.0 NM)	
90–95	Y	11514623	2	*.96	BOLT, INFL RST CONT MDL BRKT LWR (M6X1X20) (HEX W/CON WA) (08.900)	7–F7,5
90–95	Y	11514623	2	*.96	BOLT, INFL RST CONT MDL BRKT UPR (M6X1X20) (HEX W/CON WA) (08.900)	7–F7,5
90–93	Y	12337892	4	*1.13	BOLT, INFL RST DIAGN ENGY RESV MDL (M5X.8X16 THD) (SPECIAL) (03.671) (AC–DELCO #12337892)	11–F13,24
90–91	Y	12506006	2	DISCON	BOLT, STRG WHL INFL RST MDL	
96	Y	10192577	4	1.30	BOLT, STRG WHL INFL RST MDL (M6X1.0X13.0) (METRIC TORX HD) (08.913)	
91–93	Y	14062552	1	1.12	BRACKET, F/END INFL RST DISCRM SEN (02.559)	11–F13,11
94–96	Y F/SEAT INFL RST SYS (AK5)	10161868	1	10.00	BRACKET, F/END INFL RST DISCRM SEN	11–F19,20
94–96	Y F/SEAT INFL RST SYS (AK5)	14062552	1	1.12	BRACKET, F/END INFL RST DISCRM SEN (02.559)	11–F13,11
90	Y	10085936	1	DISCON	BRACKET, INFL RST CONT MDL (2 WELDED NUTS & 6 STUDS)	
90–93	Y	10086086	LH	1.50	BRACKET, INFL RST CONT MDL (4 HOLES, L–SHAPED, POSN #1)	11–F12,3
90–93	Y	10086177	RH	1.50	BRACKET, INFL RST CONT MDL (4 HOLES, L–SHAPED, POSN #1)	11–F12,3
91–93	Y	10193723	1	DISCON	BRACKET, INFL RST CONT MDL (2 WELDED NUTS, 4 WELDED STUDS)	
93	Y	10211797	1	DISCON	BRACKET, INFL RST CONT MDL (10.235)	
94–96	Y F/SEAT INFL RST SYS (AK5)	10086086	LH	1.50	BRACKET, INFL RST CONT MDL	11–F12,3
94–96	Y F/SEAT INFL RST SYS (AK5)	10086177	RH	1.50	BRACKET, INFL RST CONT MDL	11–F12,3
90	Y	10098447	2	DISCON	CLIP, F/END INFL RST DISCRM SEN	
90–91	Y	12020081	2	1.70	CLIP, INFL RST RESV ENGY MDL WRG HARN	11–F13,14
92	Y	12020081	1	1.70	CLIP, INFL RST RESV ENGY MDL WRG HARN	11–F13,14
91–93	Y 4–SPD A/TRANS (MD8), 6–SPD M/TRANS (ML9)	26013854	1	177.00	COIL KIT, STRG WHL INFL RST MDL	7–F13,4
94–96	Y 4–SPD A/TRANS (M30)	26041005	1	144.00	COIL KIT, STRG WHL INFL RST MDL	7–F21,3

© 2000 GENERAL MOTORS SERVICE PARTS OPERATIONS–CHEVROLET–14Y

14.865 BOLT – BRACKET – CLIP – COIL – COIL KIT – CONNECTOR – HARNESS – INSULATOR – MODULE – NUT – RESISTOR – RETAINER – SENSOR – SWITCH KIT – WASHER, Inflatable Restraint System (Con't)

89	Y 6–SPD M/TRANS (ML9), ACTIVE SUSP (Z5Z)	26013920	1	214.00	COIL, STRG WHL INFL RST MDL	7–F13,3
90	Y	26013920	1	214.00	COIL, STRG WHL INFL RST MDL	7–F13,3
91–93	Y	12116928	2	37.03	CONNECTOR, INFL RST F/END DISCM SEN (3–WAY M, W/LEADS) (AC–DELCO #PT417)	
94–96	Y	12126498	1	43.11	CONNECTOR, INLINE–TO INFL RST I/P MDL (2–WAY F) (W/LEADS) (AC–DELCO #PT767)	
94–96	Y	12167137	1	59.09	CONNECTOR, INLINE–TO INFL RST I/P MDL (2–WAY M) (W/4 LEADS) (AC–DELCO #PT802)	
94–96	Y	12116928	2	37.03	CONNECTOR, INLINE–TO INFL RST SEN (3–WAY M, W/LEADS) (AC–DELCO #PT417)	
91–93	Y	12085215	1	21.02	CONNECTOR, INLINE–TO INFL RST STRG WHL MDL COIL (2–WAY M) (W/THREE LEADS..ONE IN CAV A...TWO IN CAB B)	
94–96	Y	12126494	1	46.34	CONNECTOR, INLINE–TO INFL RST STRG WHL MDL COIL (2–WAY M) (W/4 LEADS, IF 2 LEADS REQ USE 12126039) (AC–DELCO #PT764)	
94–96	Y	12167125	2	12.47	CONNECTOR, MDL–I/P INFL RST (2–WAY M, W/LEADS) (AC–DELCO #PT791)	
91–93	Y	12085218	1	80.25	CONNECTOR, MDL–INFL RST DIAGN ENGY RESV (24–WAY F) (W/LEADS) (AC–DELCO #12085218)	
94–96	Y	12167101	1	176.35	CONNECTOR, MDL–INFL RST DIAGN ENGY RESV (24–WAY F) (W/LEADS) (AC–DELCO #PT1216)	
91–93	Y	12085214	1	34.07	CONNECTOR, MDL–INFL RST RES (6–WAY F) (W/LEADS) ...	
91–93	Y	12116927	1	26.75	CONNECTOR, SEN–INFL RST ARMING (3–WAY F, W/LEADS) (AC–DELCO #PT416)	
94–96	Y	12167107	1	50.64	CONNECTOR, SEN–INFL RST ARMING (AC–DELCO #PT773)	
91–92	Y	12106550	1	DISCON	HARNESS, INFL RST WRG (ELEMENT)	
96	Y	12163006	1	102.00	HARNESS, INFL RST WRG	
94–96	Y RECL FRT BKT ST (AQ9), IL3	10250232	1	25.22	HARNESS, INFLR AIR WRG (PASS SEAT)	9–J13,40
94	Y 4–SPD A/TRANS (M30), A/C MAN CONT (C60), A/C AUTO ELEC CONT (C68) ...	12143757	1	141.00	HARNESS, INFLR AIR WRG	9–J13,40
95	Y 5.7P (LT1), 4–SPD A/TRANS (M30), 6–SPD M/TRANS (ML9), A/C MAN CONT (C60), A/C AUTO ELEC CONT (C68)	12143757	1	141.00	HARNESS, INFLR AIR WRG	9–J13,40
95–96	Y	14064578	1	1.45	INSULATOR, INFL RST CONT MDL (09.665)	

© 2000 GENERAL MOTORS SERVICE PARTS OPERATIONS–CHEVROLET–14Y

14.865 BOLT – BRACKET – CLIP – COIL – COIL KIT – CONNECTOR – HARNESS – INSULATOR – MODULE – NUT – RESISTOR – RETAINER – SENSOR – SWITCH KIT – WASHER, Inflatable Restraint System (Con't)

91–96	Y	3999572	3	4.98	INSULATOR, INFL RST DIAGN ENGY RESV MDL (09.260)	11–F13,20
94–96	Y F/SEAT INFL RST SYS (AK5)	10252293	1	625.00	MODULE, I/P INFL RST	11–F19,9
91	Y	1228874	1	418.35	MODULE, INFL RST DIAGN ENGY RESV (REMAN) (DERM) (AC–DELCO #1228874)	11–F13,16
92	Y (1ST DES)	1228874	1	418.35	MODULE, INFL RST DIAGN ENGY RESV (REMAN) (DERM) (USE ON PROD UNITS W/16081221 ON LABEL) (AC–DELCO #1228874)	11–F13,16
92	Y (2ND DES)	16177277	1	293.13	MODULE, INFL RST DIAGN ENGY RESV (REMAN) (USE ON PROD UNITS W/16176561 ON LABEL) (AC–DELCO #16177277)	11–F13,16
93	Y	16177277	1	293.13	MODULE, INFL RST DIAGN ENGY RESV (REMAN) (AC–DELCO #16177277)	11–F13,16
94–96	Y F/SEAT INFL RST SYS (AK5)	16176558	1	322.00	MODULE, INFL RST DIAGN ENGY RESV (REMAN)	11–F19,11
90	Y	10094618	1	625.00	MODULE, INFL RST RESV ENGY	11–F12,7
90	Y	10158008	1	625.00	MODULE, STRG WHL INFL RST (IF REPLC 1990, COIL 26013854 MUST REPLC EXISTING COIL & MUST ALSO REPLC WHEEL USING 10201320) (PROBE CONN IN OWN BOX)	7–F7,5
91–93	Y	10158008	1	625.00	MODULE, STRG WHL INFL RST (PROBE CONN IN OWN BOX)	7–F7,5
94–96	Y F/SEAT INFL RST SYS (AK5)	16752392	1	625.00	MODULE, STRG WHL INFL RST	11–F19,22
92–96	Y	11516075	AR	*.16	NUT, INFL RST ARMING SEN (M6X1 THD 9 PEOR W/NYLON INSERT) (08.917)	
91–92	Y	12085219	1	16.70	RESISTOR, INFL RST DIAGN (5 RES ARRAY)	11–F13,26
94–96	Y	12077979	1	*.71	RETAINER, INFL RST ARMING SEN WRG HARN CONN	11–F16,14
91–93	Y	14101807	4	.13	RETAINER, INFL RST DIAGN ENGY RESV MDL (PUSH ON) (0.75 IN) (09.667) (AC–DELCO #14101807)	11–F13,23
91–93	Y	12077979	1	*.71	RETAINER, STRG WHL INFL RST MDL WRG HARN CONN	11–F16,14
90	Y	10094613	2	72.25	SENSOR, F/END INFL RST DISCRM	11–F12,9
91–93	Y	10177901	1	72.25	SENSOR, F/END INFL RST DISCRM	11–F13,9
94–96	Y F/SEAT INFL RST SYS (AK5)	10177901	1	72.25	SENSOR, F/END INFL RST DISCRM	11–F13,9
91–93	Y	10177902	1	72.25	SENSOR, INFL RST ARMING	11–F13,5
94–96	Y F/SEAT INFL RST SYS (AK5)	10143543	1	72.25	SENSOR, INFL RST ARMING	11–F19,18
94–96	Y	12453830	1	130.00	SWITCH KIT, I/P INFL RST MDL (AIR BAG ON–OFF) (AC–DELCO #12453830)	

© 2000 GENERAL MOTORS SERVICE PARTS OPERATIONS–CHEVROLET–14Y

14.865 BOLT – BRACKET – CLIP – COIL – COIL KIT – CONNECTOR – HARNESS – INSULATOR – MODULE – NUT – RESISTOR – RETAINER – SENSOR – SWITCH KIT – WASHER, Inflatable Restraint System (Con't)

90–93	Y	12453816	1	130.00	SWITCH KIT, STRG WHL INFL RST MDL (DISABLE AIR BAG–ON/OFF) (AC–DELCO #12453816)	
94–96	Y	12453822	1	130.00	SWITCH KIT, STRG WHL INFL RST MDL (AIR BAG ON–OFF) (AC–DELCO #12453822)	
91–96	Y	26011609	1	7.15	WASHER, STRG WHL INFL RST MDL COIL	7–F21,4
	*EXPORT**********EXPORT**********EXPORT**********EXPORT**********EXPORT*					
94–96	Y 6–SPD M/TRANS (ML9), EUROPEAN PROVISIONS (VD1) (EXPORT), VE1 (EXPORT)	26041005	1	144.00	COIL KIT, STRG WHL INFL RST MDL	7–F21,3

14.875 BELT – BELT KIT – BOLT – BRACKET – BUSHING – CARPET – COVER – EXTENSION KIT – NUT – PANEL – PLATE – SEAL – SEALING STRIP – WASHER, Seat Belt

NOTE: FOR USAGE REFER TO SEAT BELT CHART GROUP 14.875

86–87	Y07 (21I), (EXC MAN RST SYS (AX4) (EXPORT)	12516958	1	85.00	BELT KIT, D/SEAT (BLUE)	11–F24,9
87–89	Y07 (21I)	12516958	1	85.00	BELT KIT, D/SEAT (BLUE)	11–F24,9
88–89	Y67 (90I)	12516995	1	85.00	BELT KIT, D/SEAT	
90	Y07 (229)	12516962	1	85.00	BELT KIT, D/SEAT (DLX 1) (BLUE)	
91	Y07 (229)	12510326	1	85.00	BELT KIT, D/SEAT (BLUE) (DLX 1)	11–F26,1
91	Y07 (909)	12510330	1	85.00	BELT KIT, D/SEAT (GRAY) (DLX 1)	11–F26,1
91	Y07 (609)	12510332	1	85.00	BELT KIT, D/SEAT (COGNAC) (DLX 1)	11–F26,1
91–92	Y07 (739)	12518231	1	85.00	BELT KIT, D/SEAT (RED) (DLX 1)	11–F26,1
91–92	Y07 (199)	12521659	1	85.00	BELT KIT, D/SEAT (BLACK) (DLX 1)	11–F26,1
91	Y67 (229)	12510336	1	85.00	BELT KIT, D/SEAT (BLUE) (DLX 1)	
91	Y67 (909)	12510340	1	85.00	BELT KIT, D/SEAT (GRAY) (DLX 1)	
91	Y67 (609)	12510342	1	85.00	BELT KIT, D/SEAT (COGNAC) (DLX 1)	
91–92	Y67 (739)	12518235	1	85.00	BELT KIT, D/SEAT (RED) (DLX 1)	11–G2,9
91–92	Y67 (10I), (19I)	12521669	1	85.00	BELT KIT, D/SEAT (BLACK) (DLX 1)	11–G2,9
92	Y07 (149)	12521657	1	85.00	BELT KIT, D/SEAT (GRAY) (DLX 1)	11–F26,1
92	Y07 (649)	12521661	1	85.00	BELT KIT, D/SEAT (BEIGE) (DLX 1)	11–F26,1
92	Y67 (149)	12509783	1	85.00	BELT KIT, D/SEAT (GRAY) (DLX 1)	11–G2,9
92	Y67 (649)	12521671	1	85.00	BELT KIT, D/SEAT (BEIGE) (DLX 1)	11–G2,9
93	Y07 INFL RST SYS (AJ3), (14I), (EXC MAN RST SYS (AX4) (EXPORT)	12521657	1	85.00	BELT KIT, D/SEAT (GRAY) (DLX 1)	11–F26,1
93	Y07 INFL RST SYS (AJ3), (10I), (19I), (EXC MAN RST SYS (AX4) (EXPORT)	12521659	1	85.00	BELT KIT, D/SEAT (BLACK) (DLX 1)	11–F26,1
93	Y07 INFL RST SYS (AJ3), (64I), (EXC MAN RST SYS (AX4) (EXPORT)	12521661	1	85.00	BELT KIT, D/SEAT (BEIGE) (DLX 1)	11–F26,1
93	Y07 INFL RST SYS (AJ3), (70I), (EXC MAN RST SYS (AX4) (EXPORT)	12521663	1	85.00	BELT KIT, D/SEAT (RED) (DLX 1)	11–F26,1
93	Y07 INFL RST SYS (AJ3), (79I), (EXC MAN RST SYS (AX4) (EXPORT)	12521665	1	85.00	BELT KIT, D/SEAT (RED) (DLX 1)	11–F26,1

© 2000 GENERAL MOTORS SERVICE PARTS OPERATIONS–CHEVROLET–14Y

14.875 BELT – BELT KIT – BOLT – BRACKET – BUSHING – CARPET – COVER – EXTENSION KIT – NUT – PANEL – PLATE – SEAL – SEALING STRIP – WASHER, Seat Belt (Con't)

93	Y67 INFL RST SYS (AJ3), (14I), (EXC MAN RST SYS (AX4) (EXPORT)	12521667	1	85.00	BELT KIT, D/SEAT (GRAY) (DLX 1) .	11–G2,9
93	Y67 INFL RST SYS (AJ3), (10I), (19I), (EXC MAN RST SYS (AX4) (EXPORT)	12521669	1	85.00	BELT KIT, D/SEAT (BLACK) (DLX 1)	11–G2,9
93	Y67 INFL RST SYS (AJ3), (64I), (EXC MAN RST SYS (AX4) (EXPORT)	12521671	1	85.00	BELT KIT, D/SEAT (BEIGE) (DLX 1) .	11–G2,9
93	Y67 INFL RST SYS (AJ3), (70I), (EXC MAN RST SYS (AX4) (EXPORT)	12521673	1	85.00	BELT KIT, D/SEAT (RED) (DLX 1)	11–G2,9
93	Y67 INFL RST SYS (AJ3), (79I), (EXC MAN RST SYS (AX4) (EXPORT)	12521675	1	85.00	BELT KIT, D/SEAT (RED) (DLX 1)	11–G2,9
94	Y07 F/SEAT INFL RST SYS (AK5), (14I), (EXC MAN RST SYS (AX4) (EXPORT)	12514496	1	85.00	BELT KIT, D/SEAT (GRAY)	11–G5,4
94	Y07 F/SEAT INFL RST SYS (AK5), (64I), (EXC MAN RST SYS (AX4) (EXPORT)	12514497	1	85.00	BELT KIT, D/SEAT (BEIGE)	11–G5,4
94	Y07 F/SEAT INFL RST SYS (AK5), (70I), (EXC MAN RST SYS (AX4) (EXPORT)	12514498	1	85.00	BELT KIT, D/SEAT (RED)	11–G5,4
94	Y07 F/SEAT INFL RST SYS (AK5), (19I), (EXC MAN RST SYS (AX4) (EXPORT)	12514499	1	85.00	BELT KIT, D/SEAT (BLACK)	11–G5,4
94	Y67 F/SEAT INFL RST SYS (AK5), (14I), (EXC MAN RST SYS (AX4) (EXPORT)	12514509	1	85.00	BELT KIT, D/SEAT (GRAY)	11–G8,9
94	Y67 F/SEAT INFL RST SYS (AK5), (64I), (EXC MAN RST SYS (AX4) (EXPORT)	12514510	1	85.00	BELT KIT, D/SEAT (BEIGE)	11–G8,9
94	Y67 F/SEAT INFL RST SYS (AK5), (70I), (EXC MAN RST SYS (AX4) (EXPORT)	12514511	1	85.00	BELT KIT, D/SEAT (RED)	11–G8,9
94	Y67 F/SEAT INFL RST SYS (AK5), (19I), (EXC MAN RST SYS (AX4) (EXPORT)	12514512	1	85.00	BELT KIT, D/SEAT (BLACK)	11–G8,9
95–96	Y07 F/SEAT INFL RST SYS (AK5), (14I), (EXC MAN RST SYS (AX4) (EXPORT)	12524343	1	85.00	BELT KIT, D/SEAT (GRAY)	11–G5,4
95–96	Y07 F/SEAT INFL RST SYS (AK5), (64I), (EXC MAN RST SYS (AX4) (EXPORT)	12524345	1	85.00	BELT KIT, D/SEAT (BEIGE)	11–G5,4
95–96	Y07 F/SEAT INFL RST SYS (AK5), (70I), (EXC MAN RST SYS (AX4) (EXPORT)	12524347	1	85.00	BELT KIT, D/SEAT (RED)	11–G5,4
95–96	Y07 F/SEAT INFL RST SYS (AK5), (19I), (EXC MAN RST SYS (AX4) (EXPORT)	12524349	1	85.00	BELT KIT, D/SEAT (BLACK)	11–G5,4
95–96	Y67 F/SEAT INFL RST SYS (AK5), (19I), (EXC MAN RST SYS (AX4) (EXPORT)	12524335	1	85.00	BELT KIT, D/SEAT (BLACK)	11–G8,9
95–96	Y67 F/SEAT INFL RST SYS (AK5), (64I), (EXC MAN RST SYS (AX4) (EXPORT)	12524337	1	85.00	BELT KIT, D/SEAT (BEIGE)	11–G8,9

© 2000 GENERAL MOTORS SERVICE PARTS OPERATIONS–CHEVROLET–14Y

14.875 BELT – BELT KIT – BOLT – BRACKET – BUSHING – CARPET – COVER – EXTENSION KIT – NUT – PANEL – PLATE – SEAL – SEALING STRIP – WASHER, Seat Belt (Con't)

95–96	Y67 F/SEAT INFL RST SYS (AK5), (14I), (EXC MAN RST SYS (AX4) (EXPORT)	12524339	1	85.00	BELT KIT, D/SEAT (GRAY)	11–G8,9
95–96	Y67 F/SEAT INFL RST SYS (AK5), (70I), (EXC MAN RST SYS (AX4) (EXPORT)	12524341	1	85.00	BELT KIT, D/SEAT (RED)	11–G8,9
86–89	Y67 (21I)	12516961	1	85.00	BELT KIT, P/SEAT (BLUE)	11–F24,9
91	Y07 (229)	12510327	1	85.00	BELT KIT, P/SEAT (BLUE) (DLX 1)	11–F26,5
91	Y07 (909)	12510331	1	85.00	BELT KIT, P/SEAT (GRAY) (DLX 1) .	11–F26,5
91	Y07 (609)	12510333	1	85.00	BELT KIT, P/SEAT (COGNAC) (DLX 1)	11–F26,5
91–92	Y07 (739)	12518230	1	85.00	BELT KIT, P/SEAT (RED) (DLX 1) .	11–F26,5
91–92	Y07 (199)	12521660	1	85.00	BELT KIT, P/SEAT (BLACK) (DLX 1)	11–F26,5
91	Y67 (229)	12510337	1	85.00	BELT KIT, P/SEAT (BLUE) (DLX 1)	
91	Y67 (909)	12510341	1	85.00	BELT KIT, P/SEAT (GRAY) (DLX 1) .	
91	Y67 (609)	12510343	1	85.00	BELT KIT, P/SEAT (COGNAC) (DLX 1)	
91–92	Y67 INFL RST SYS (AJ3), (739)	12518234	1	85.00	BELT KIT, P/SEAT (RED) (DLX 1) .	11–G2,9
91–92	Y67 (199)	12521670	1	85.00	BELT KIT, P/SEAT (BLACK) (DLX 1)	11–G2,9
92	Y07 (149)	12509780	1	85.00	BELT KIT, P/SEAT (GRAY) (DLX 1) .	11–F26,5
92	Y07 (649)	12521662	1	85.00	BELT KIT, P/SEAT (BEIGE) (DLX 1) .	11–F26,5
92	Y67 (649)	12509782	1	85.00	BELT KIT, P/SEAT (BEIGE) (DLX 1) .	11–G2,9
92	Y67 (149)	12509784	1	85.00	BELT KIT, P/SEAT (GRAY) (DLX 1) .	11–G2,9
93	Y07 INFL RST SYS (AJ3), (14I), (EXC MAN RST SYS (AX4) (EXPORT)	12521658	1	85.00	BELT KIT, P/SEAT (GRAY) (DLX 1) .	11–F26,5
93	Y07 INFL RST SYS (AJ3), (10I), (19I), (EXC MAN RST SYS (AX4) (EXPORT)	12521660	1	85.00	BELT KIT, P/SEAT (BLACK) (DLX 1)	11–F26,5
93	Y07 INFL RST SYS (AJ3), (64I), (EXC MAN RST SYS (AX4) (EXPORT)	12521662	1	85.00	BELT KIT, P/SEAT (BEIGE) (DLX 1) .	11–F26,5
93	Y07 INFL RST SYS (AJ3), (70I), (EXC MAN RST SYS (AX4) (EXPORT)	12521664	1	85.00	BELT KIT, P/SEAT (RED) (DLX 1) .	11–F26,5
93	Y07 INFL RST SYS (AJ3), (79I), (EXC MAN RST SYS (AX4) (EXPORT)	12521666	1	85.00	BELT KIT, P/SEAT (RED) (DLX 1) .	11–F26,5
93	Y67 INFL RST SYS (AJ3), (14I), (EXC MAN RST SYS (AX4) (EXPORT)	12521668	1	85.00	BELT KIT, P/SEAT (GRAY) (DLX 1) .	11–G2,9
93	Y67 INFL RST SYS (AJ3), (10I), (19I), (EXC MAN RST SYS (AX4) (EXPORT)	12521670	1	85.00	BELT KIT, P/SEAT (BLACK) (DLX 1)	11–G2,9
93	Y67 INFL RST SYS (AJ3), (64I), (EXC MAN RST SYS (AX4) (EXPORT)	12521672	1	85.00	BELT KIT, P/SEAT (BEIGE) (DLX 1) .	11–G2,9
93	Y67 INFL RST SYS (AJ3), (70I), (EXC MAN RST SYS (AX4) (EXPORT)	12521674	1	85.00	BELT KIT, P/SEAT (RED) (DLX 1) .	11–G2,9
93	Y67 INFL RST SYS (AJ3), (79I), (EXC MAN RST SYS (AX4) (EXPORT)	12521676	1	85.00	BELT KIT, P/SEAT (RED) (DLX 1) .	11–G2,9
94	Y07 F/SEAT INFL RST SYS (AK5), (19I), (EXC MAN RST SYS (AX4) (EXPORT)	12512692	1	85.00	BELT KIT, P/SEAT (BLACK)	11–G5,9

© 2000 GENERAL MOTORS SERVICE PARTS OPERATIONS–CHEVROLET–14Y

14.875 BELT – BELT KIT – BOLT – BRACKET – BUSHING – CARPET – COVER – EXTENSION KIT – NUT – PANEL – PLATE – SEAL – SEALING STRIP – WASHER, Seat Belt (Con't)

94	Y07 F/SEAT INFL RST SYS (AK5), (64I), (EXC MAN RST SYS (AX4) (EXPORT)	12512694	1	85.00	BELT KIT, P/SEAT (BEIGE)	11–G5,9
94	Y07 F/SEAT INFL RST SYS (AK5), (14I), (EXC MAN RST SYS (AX4) (EXPORT)	12512696	1	85.00	BELT KIT, P/SEAT (GRAY)	11–G5,9
94	Y07 F/SEAT INFL RST SYS (AK5), (70I), (EXC MAN RST SYS (AX4) (EXPORT)	12512698	1	85.00	BELT KIT, P/SEAT (RED)	11–G5,9
94	Y67 F/SEAT INFL RST SYS (AK5), (19I), (EXC MAN RST SYS (AX4) (EXPORT)	12512700	1	85.00	BELT KIT, P/SEAT (BLACK)	11–G8,9
94	Y67 F/SEAT INFL RST SYS (AK5), (64I), (EXC MAN RST SYS (AX4) (EXPORT)	12512702	1	85.00	BELT KIT, P/SEAT (BEIGE)	11–G8,9
94	Y67 F/SEAT INFL RST SYS (AK5), (14I), (EXC MAN RST SYS (AX4) (EXPORT)	12512704	1	85.00	BELT KIT, P/SEAT (GRAY)	11–G8,9
94	Y67 F/SEAT INFL RST SYS (AK5), (70I), (EXC MAN RST SYS (AX4) (EXPORT)	12512706	1	85.00	BELT KIT, P/SEAT (RED)	11–G8,9
95–96	Y07 F/SEAT INFL RST SYS (AK5), (14I), (EXC MAN RST SYS (AX4) (EXPORT)	12524344	1	85.00	BELT KIT, P/SEAT (GRAY)	11–G5,9
95–96	Y07 F/SEAT INFL RST SYS (AK5), (64I), (EXC MAN RST SYS (AX4) (EXPORT)	12524346	1	85.00	BELT KIT, P/SEAT (BEIGE)	11–G5,9
95–96	Y07 F/SEAT INFL RST SYS (AK5), (70I), (EXC MAN RST SYS (AX4) (EXPORT)	12524348	1	85.00	BELT KIT, P/SEAT (RED)	11–G5,9
95–96	Y07 F/SEAT INFL RST SYS (AK5), (19I), (EXC MAN RST SYS (AX4) (EXPORT)	12524350	1	85.00	BELT KIT, P/SEAT (BLACK)	11–G5,9
95–96	Y67 F/SEAT INFL RST SYS (AK5), (19I), (EXC MAN RST SYS (AX4) (EXPORT)	12524336	1	85.00	BELT KIT, P/SEAT (BLACK)	11–G8,9
95–96	Y67 F/SEAT INFL RST SYS (AK5), (64I), (EXC MAN RST SYS (AX4) (EXPORT)	12524338	1	85.00	BELT KIT, P/SEAT (BEIGE)	11–G8,9
95–96	Y67 F/SEAT INFL RST SYS (AK5), (14I), (EXC MAN RST SYS (AX4) (EXPORT)	12524340	1	85.00	BELT KIT, P/SEAT (GRAY)	11–G8,9
95–96	Y67 F/SEAT INFL RST SYS (AK5), (70I), (EXC MAN RST SYS (AX4) (EXPORT)	12524342	1	85.00	BELT KIT, P/SEAT (RED)	11–G8,9
84–85	Y (EXC AX4 EXPORT)	12516966	1	85.00	BELT, D/SEAT (BLUE–28I)	
84–85	Y (EXC AX4 EXPORT)	12516992	1	DISCON	BELT, D/SEAT (CARMINE–74I) ..	
84–86	Y07 (EXC AX4 EXPORT)	12517092	1	85.00	BELT, D/SEAT (GRAPHITE–12I) .	11–F23,1
84–86	Y07 (EXC AX4 EXPORT)	12517094	1	85.00	BELT, D/SEAT (GRAY–15I)	
84–86	Y07 (EXC AX4 EXPORT)	12517098	1	59.00	BELT, D/SEAT (SADDLE–62I) ...	
84–86	Y07 (EXC AX4 EXPORT)	12517100	1	59.00	BELT, D/SEAT (BRONZE–65I) ...	
86–87	Y07 (EXC AX4 EXPORT)	12516984	1	85.00	BELT, D/SEAT (RED–73I)	
86	Y07 (EXC AX4 EXPORT)	12517096	1	85.00	BELT, D/SEAT (BLUE–21I)	
86	Y07 (EXC AX4 EXPORT)	12517102	1	85.00	BELT, D/SEAT (RED–73I)	
88–89	Y67	12516959	1	35.00	BELT, D/SEAT (BLUE–21I)	
86–89	Y67	12516985	1	85.00	BELT, D/SEAT (RED–73I)	
86	Y67	12517093	1	85.00	BELT, D/SEAT (GRAPHITE–12I) .	
86	Y67	12517095	1	85.00	BELT, D/SEAT (GRAY–15I)	

© 2000 GENERAL MOTORS SERVICE PARTS OPERATIONS–CHEVROLET–14Y

14.875 BELT – BELT KIT – BOLT – BRACKET – BUSHING – CARPET – COVER – EXTENSION KIT – NUT – PANEL – PLATE – SEAL – SEALING STRIP – WASHER, Seat Belt (Con't)

86	Y67	12517097	1	85.00	BELT, D/SEAT (BLUE–21I)	
86	Y67	12517099	1	85.00	BELT, D/SEAT (SADDLE–62I)	
86	Y67	12517101	1	85.00	BELT, D/SEAT (BRONZE–65I)	
86	Y67	12517103	1	85.00	BELT, D/SEAT (RED–73I)	
87	Y07	12516942	1	85.00	BELT, D/SEAT (GRAPHITE–12I)	11–F23,1
87	Y07	12516946	1	85.00	BELT, D/SEAT (GRAY–15I)	
87	Y07	12516976	1	85.00	BELT, D/SEAT (SADDLE–62I)	
87	Y07	12516980	1	85.00	BELT, D/SEAT (BRONZE–65I)	
87	Y67	12516943	1	85.00	BELT, D/SEAT (GRAPHITE–12I)	
87	Y67	12516947	1	85.00	BELT, D/SEAT (GRAY–15I)	
87	Y67	12516977	1	85.00	BELT, D/SEAT (SADDLE–62I)	
87	Y67	12516981	1	85.00	BELT, D/SEAT (BRONZE–65I)	
88	Y	12516940	1	85.00	BELT, D/SEAT (WHITE–11I)	
88–89	Y07	12516950	1	85.00	BELT, D/SEAT (BLACK–19I)	
88–89	Y07	12516968	1	85.00	BELT, D/SEAT (COGNAC–60I)	
88–89	Y07	12516984	1	85.00	BELT, D/SEAT (RED–73I)	
88–89	Y07	12516994	1	85.00	BELT, D/SEAT (GRAY–90I)	
88–89	Y67	12516951	1	85.00	BELT, D/SEAT (BLACK–19I)	
88–89	Y67	12516969	1	85.00	BELT, D/SEAT (COGNAC–60I)	
88–90	Y07	12516986	LH	85.00	BELT, D/SEAT COMPL (DLX 1) (RED–73I)	
88–90	Y07	12516971	LH	85.00	BELT, D/SEAT COMPL (DLX 1) (COGNAC–60I)	
90	Y07	12516970	LH	85.00	BELT, D/SEAT COMPL (DLX 1) (COGNAC–60I)	
90	Y07	12516996	LH	85.00	BELT, D/SEAT COMPL (DLX 1) (GRAY–90I)	11–F23,1
90	Y67	12516963	LH	85.00	BELT, D/SEAT COMPL (DLX 1) (BLUE–22I)	
90	Y67	12516987	LH	DISCON	BELT, D/SEAT COMPL (DLX 1) (RED–73I)	
90	Y67	12516997	LH	85.00	BELT, D/SEAT COMPL (DLX 1) (MED SMOKE GRAY) (90)	
90	Y07	12516952	LH	85.00	BELT, D/SI COMPL (DLX 1) BLACK–19I)	
90	Y67	12516953	LH	85.00	BELT, D/SI COMPL (DLX 1) (BLACK–19I)	
84–85	Y (EXC AX4 EXPORT)	12516967	1	85.00	BELT, P/SEAT (BLUE–28I)	
84–85	Y (EXC AX4 EXPORT)	12516993	1	85.00	BELT, P/SEAT (CARMINE–74I)	
84–87	Y07 (EXC AX4 EXPORT)	12516944	1	85.00	BELT, P/SEAT (GRAPHITE–12I)	11–F23,7
84–87	Y07 (EXC AX4 EXPORT)	12516948	1	85.00	BELT, P/SEAT (GRAY–15I)	
84–87	Y07 (EXC AX4 EXPORT)	12516978	1	59.00	BELT, P/SEAT (SADDLE–62I)	
84–87	Y07 (EXC AX4 EXPORT)	12516982	1	85.00	BELT, P/SEAT (BRONZE–65I)	
86–87	Y07 (EXC AX4 EXPORT)	12516960	1	85.00	BELT, P/SEAT (BLUE–21I)	
86–87	Y07 (EXC AX4 EXPORT)	12516988	1	85.00	BELT, P/SEAT (RED–73I)	
86–87	Y67	12516945	1	85.00	BELT, P/SEAT (GRAPHITE–12I)	
86–87	Y67	12516949	1	85.00	BELT, P/SEAT (GRAY–15I)	
86–87	Y67	12516979	1	85.00	BELT, P/SEAT (SADDLE–62I)	
86–87	Y67	12516983	1	85.00	BELT, P/SEAT (BRONZE–65I)	
86–89	Y67	12516989	1	85.00	BELT, P/SEAT (RED–73I)	
88	Y	12516941	1	85.00	BELT, P/SEAT (WHITE–11I)	
88–89	Y07	12516954	1	85.00	BELT, P/SEAT (BLACK–19I)	
88–89	Y07	12516960	1	85.00	BELT, P/SEAT (BLUE–21I)	
88–89	Y07	12516972	1	85.00	BELT, P/SEAT (COGNAC–60I)	
88–89	Y07	12516988	1	85.00	BELT, P/SEAT (RED–73I)	
88–89	Y07	12516998	1	85.00	BELT, P/SEAT (GRAY–90I)	

© 2000 GENERAL MOTORS SERVICE PARTS OPERATIONS–CHEVROLET–14Y

14.875 BELT – BELT KIT – BOLT – BRACKET – BUSHING – CARPET – COVER – EXTENSION KIT – NUT – PANEL – PLATE – SEAL – SEALING STRIP – WASHER, Seat Belt (Con't)

88–89	Y67	12516955	1	85.00	BELT, P/SEAT (BLACK–19I)	
88–89	Y67	12516973	1	85.00	BELT, P/SEAT (COGNAC–60I)	
88–89	Y67	12516999	1	85.00	BELT, P/SEAT (GRAY–90I)	
88–90	Y07	12516990	RH	85.00	BELT, P/SEAT COMPL (DLX 1) (RED–73I)	
88–90	Y67	12516975	RH	85.00	BELT, P/SEAT COMPL (DLX 1) (COGNAC–60I)	
88–90	Y67	12516991	RH	85.00	BELT, P/SEAT COMPL (DLX 1) (RED–73I)	
90	Y07	12516964	RH	85.00	BELT, P/SEAT COMPL (DLX 1) (BLUE–22I)	
90	Y07	12516974	RH	85.00	BELT, P/SEAT COMPL (DLX 1) (COGNAC–60I)	
90	Y07	12517001	RH	85.00	BELT, P/SEAT COMPL (DLX 1) (GRAY–90I)	11–F23,7
90	Y67	12516965	RH	85.00	BELT, P/SEAT COMPL (DLX 1) (BLUE–22I)	
90	Y67	12517002	RH	85.00	BELT, P/SEAT COMPL (DLX 1) (GRAY–90I)	
90	Y07	12516956	RH	85.00	BELT, P/SI COMPL (DLX 1) (BLACK–19I)	
90	Y67	12516957	RH	85.00	BELT, P/SI COMPL (DLX 1) (BLACK–19I)	
93	Y INFL RST SYS (AJ3), (EXC MAN RST SYS (AX4) (EXPORT)	20247351	2	3.95	BOLT, D/SEAT BELT BRKT (M12 X 1.75 X 35MM)	11–F23,3
94–96	Y F/SEAT INFL RST SYS (AK5), (EXC MAN RST SYS (AX4) (EXPORT)	20247351	1	3.95	BOLT, D/SEAT BELT BRKT (M12 X 1.75 X 35MM)	11–F23,3
93	Y INFL RST SYS (AJ3)	20229360	2	3.95	BOLT, D/SEAT BELT RETR (M12 X 1.75 X 36MM)	11–F23,2
94–96	Y (EXC MAN RST SYS (AX4) (EXPORT)	20229360	1	3.95	BOLT, D/SEAT BELT RETR (M12 X 1.75 X 36MM)	11–F23,2
93	Y INFL RST SYS (AJ3)	15674851	1	*1.50	BOLT, D/SEAT SHLDR BELT GDE (M12X1.75X43, 18 THD, 14.2X25 SHLDR, TRI–LOBE TAP, STL, PAN HD) (16.714)	11–F23,8
94–96	Y F/SEAT INFL RST SYS (AK5)	15674851	1	*1.50	BOLT, D/SEAT SHLDR BELT GDE (M12X1.75X43, 18 THD, 14.2X25 SHLDR, TRI–LOBE TAP, STL, PAN HD) (16.714)	11–F23,8
92–93	Y67	20229360	1	3.95	BOLT, D/SEAT SHLDR BELT GDE BRKT (POSN #2) (M12 X 1.75 X 36MM)	11–F23,2
94–96	Y67	20229360	1	3.95	BOLT, D/SEAT SHLDR BELT GDE BRKT (POSN #3) (M12 X 1.75 X 36MM)	11–F23,2
84–92	Y	15674851	2	*1.50	BOLT, F/SEAT BELT (SHLDR STRP GDE) (M12X1.75X43, 18 THD, 14.2X25 SHLDR, TRI–LOBE TAP, STL, PAN HD) (16.714)	11–F23,8
84–94	Y	20247351	2	3.95	BOLT, F/SEAT BELT BRKT (M12 X 1.75 X 35MM)	11–F23,3
93	Y INFL RST SYS (AJ3), (EXC MAN RST SYS (AX4) (EXPORT)	20247351	1	3.95	BOLT, P/SEAT BELT BRKT (M12 X 1.75 X 35MM)	11–F23,3
94–96	Y F/SEAT INFL RST SYS (AK5), (EXC MAN RST SYS (AX4) (EXPORT)	20247351	1	3.95	BOLT, P/SEAT BELT BRKT (M12 X 1.75 X 35MM)	11–F23,3

© 2000 GENERAL MOTORS SERVICE PARTS OPERATIONS–CHEVROLET–14Y

14.875 BELT – BELT KIT – BOLT – BRACKET – BUSHING – CARPET – COVER – EXTENSION KIT – NUT – PANEL – PLATE – SEAL – SEALING STRIP – WASHER, Seat Belt (Con't)

94–96	Y (EXC MAN RST SYS (AX4) (EXPORT)	20229360	1	3.95	BOLT, P/SEAT BELT RETR (M12 X 1.75 X 36MM)	11–F23,2
93	Y INFL RST SYS (AJ3)	15674851	1	*1.50	BOLT, P/SEAT SHLDR BELT GDE (M12X1.75X43, 18 THD, 14.2X25 SHLDR, TRI–LOBE TAP, STL, PAN HD) (16.714)	11–F23,8
94–96	Y F/SEAT INFL RST SYS (AK5)	15674851	1	*1.50	BOLT, P/SEAT SHLDR BELT GDE (M12X1.75X43, 18 THD, 14.2X25 SHLDR, TRI–LOBE TAP, STL, PAN HD) (16.714)	11–F23,8
92–93	Y67	20229360	1	3.95	BOLT, P/SEAT SHLDR BELT GDE BRKT (POSN #2) (M12 X 1.75 X 36MM)	11–F23,2
94–96	Y67	20229360	1	3.95	BOLT, P/SEAT SHLDR BELT GDE BRKT (POSN #3) (M12 X 1.75 X 36MM)	11–F23,2
84–94	Y	20229360	2	3.95	BOLT, ST BELT ANC PLT (M12 X 1.75 X 36MM)	11–F23,2
87–91	Y67	11504595	AR	*1.55	BOLT, ST BELT ANC PLT (M10X1.5X20, 10.9 POR) (HEX, STEEL) (08.900)	
86–94	Y67	20229360	2	3.95	BOLT, ST BELT UPR ANC PLT REINF (M12 X 1.75 X 36MM) ..	11–F23,2
86–96	Y67 (EXC EUROPEAN PROVISIONS (VD1) (EXPORT)	10153663	LH	17.95	BRACKET, D/SEAT SHLDR BELT GDE (REINF–UPR ANC PLT) ..	11–F24,11
86–93	Y67	10165400	RH	17.95	BRACKET, P/SEAT SHLDR BELT GDE (REINF–UPR ANC PLT) ..	11–F24,11
94–96	Y67 (EXC EUROPEAN PROVISIONS (VD1) (EXPORT)	10165400	RH	17.95	BRACKET, P/SEAT SHLDR BELT GDE (REINF–UPR ANC PLT) ..	11–F24,11
94–96	Y F/SEAT INFL RST SYS (AK5)	10122201	2	.17	BUSHING, D/SEAT SHLDR BELT GDE	
94	Y F/SEAT INFL RST SYS (AK5)	10122201	2	.17	BUSHING, P/SEAT SHLDR BELT GDE	
95–96	Y67 F/SEAT INFL RST SYS (AK5)	10122201	2	.17	BUSHING, P/SEAT SHLDR BELT GDE	
86–87	Y67	14100311	LH	DISCON	CARPET, F/ST BELT ANC REINF (GRAPHITE–12I)	
86–87	Y67	14100312	RH	DISCON	CARPET, F/ST BELT ANC REINF (GRAPHITE–12I)	
86–87	Y67	14100313	LH	DISCON	CARPET, F/ST BELT ANC REINF (GRAY–15I)	
86–87	Y67	14100314	RH	DISCON	CARPET, F/ST BELT ANC REINF (GRAY–15I)	
86–87	Y67	14100315	LH	DISCON	CARPET, F/ST BELT ANC REINF (BLUE–21I)	
86–87	Y67	14100316	RH	DISCON	CARPET, F/ST BELT ANC REINF (BLUE–21I)	
86–87	Y67	14100317	LH	DISCON	CARPET, F/ST BELT ANC REINF (SADDLE–62I)	
86–87	Y67	14100318	RH	DISCON	CARPET, F/ST BELT ANC REINF (SADDLE–62I)	
86–87	Y67	14100319	LH	DISCON	CARPET, F/ST BELT ANC REINF (BRONZE–65I)	
86–87	Y67	14100320	RH	DISCON	CARPET, F/ST BELT ANC REINF (BRONZE–65I)	
86–87	Y67	14100321	LH	DISCON	CARPET, F/ST BELT ANC REINF (RED–73I)	

© 2000 GENERAL MOTORS SERVICE PARTS OPERATIONS–CHEVROLET–14Y

14.875 BELT – BELT KIT – BOLT – BRACKET – BUSHING – CARPET – COVER – EXTENSION KIT – NUT – PANEL – PLATE – SEAL – SEALING STRIP – WASHER, Seat Belt (Con't)

86–87	Y67	14100322	RH	DISCON	CARPET, F/ST BELT ANC REINF (RED–73I)	
88–89	Y67	10089515	LH	15.25	CARPET, F/ST BELT ANC REINF (BLACK–19I)	
88–89	Y67	10089516	RH	15.25	CARPET, F/ST BELT ANC REINF (BLACK–19I)	
88–89	Y67	10089517	LH	15.25	CARPET, F/ST BELT ANC REINF (BLUE–21I)	
88–89	Y67	10089518	RH	DISCON	CARPET, F/ST BELT ANC REINF (BLUE–21I)	
88–89	Y67	10089519	LH	DISCON	CARPET, F/ST BELT ANC REINF (COGNAC–60I)	
88–89	Y67	10089520	RH	15.25	CARPET, F/ST BELT ANC REINF (COGNAC–60I)	
88–89	Y67	10089521	LH	15.25	CARPET, F/ST BELT ANC REINF (RED–73I)	
88–89	Y67	10089522	RH	DISCON	CARPET, F/ST BELT ANC REINF (RED–73I)	
88–89	Y67	10089523	LH	15.25	CARPET, F/ST BELT ANC REINF (GRAY–90I)	11–F24,1
88–89	Y67	10089524	RH	DISCON	CARPET, F/ST BELT ANC REINF (GRAY–90I)	
84–87	Y07	14065011	LH	2.25	COVER, ST BELT RETRACTOR	11–F23,6
84–87	Y07	14065012	RH	2.25	COVER, ST BELT RETRACTOR	11–F23,6
85–93	Y (EXC MAN RST SYS (AX4) (EXPORT)	20293352	1	4.75	COVER, D/SEAT SHLDR BELT GDE TR (PAINT TO MATCH)	11–F23,9
94–96	Y67 F/SEAT INFL RST SYS (AK5), (EXC MAN RST SYS (AX4) (EXPORT)	10254501	1	1.40	COVER, D/SEAT SHLDR BELT GDE TR (BLACK)	11–G8,3
85–93	Y (EXC MAN RST SYS (AX4) (EXPORT)	20293352	1	4.75	COVER, P/SEAT SHLDR BELT GDE TR (PAINT TO MATCH)	11–F23,9
94–96	Y67 F/SEAT INFL RST SYS (AK5), (EXC MAN RST SYS (AX4) (EXPORT)	10254501	1	1.40	COVER, P/SEAT SHLDR BELT GDE TR (BLACK)	11–G8,3
84	Y (1ST DES)	14065086	2	DISCON	COVER, ST BELT UPR ANC PLT (89MM WIDE)	
84	Y (EXC AX4 EXPORT) (2ND DES)	20293352	2	4.75	COVER, ST BELT UPR ANC PLT (50MM WIDE)	11–F23,9
87–94	Y	12514180	AR		EXTENSION KIT, ST BELT (REFER TO GMSPO INFORMATION BULLETIN ON SEAT BELT EXTENDERS FOR DETAILED INFORMATION) (BLACK) (9") (TYPE 1)	
87–94	Y	12514187	AR		EXTENSION KIT, ST BELT (REFER TO GMSPO INFORMATION BULLETIN ON SEAT BELT EXTENDERS FOR DETAILED INFORMATION) (BLACK) (15") (TYPE 1)	
95–96	Y	12514185	AR		EXTENSION KIT, ST BELT (REFER TO GMSPO INFORMATION BULLETIN ON SEAT BELT EXTENDERS FOR DETAILED INFORMATION) (BLACK) (9") (TYPE 11) (2.5MM THK LATCH)	

© 2000 GENERAL MOTORS SERVICE PARTS OPERATIONS–CHEVROLET–14Y

14.875 BELT – BELT KIT – BOLT – BRACKET – BUSHING – CARPET – COVER – EXTENSION KIT – NUT – PANEL – PLATE – SEAL – SEALING STRIP – WASHER, Seat Belt (Con't)

95–96	Y	12514192	AR		EXTENSION KIT, ST BELT (REFER TO GMSPO INFORMATION BULLETIN ON SEAT BELT EXTENDERS FOR DETAILED INFORMATION) (BLACK) (15") (TYPE 11) (2.5MM THK LATCH)	
84–87	Y	10019719	2	*1.80	NUT, F/SEAT BELT BRKT (03.023)	11–F23,5
84–85	Y	11515750	2	*1.05	NUT, P&D ST BELT ANC PLT INR (08.917)	
86–89	Y67	14100309	LH	20.85	PANEL, F/SEAT BELT ANC REINF	11–F24,13
86–89	Y67	14100310	RH	20.85	PANEL, F/SEAT BELT ANC REINF	11–F24,13
84–96	Y	15734139	2	4.35	PLATE, D/SEAT BELT ANC (BKL SI) (OVAL) (16.714)	11–F24,7
84–96	Y	15734139	2	4.35	PLATE, D/SEAT BELT RETR ANC (OVAL) (16.714)	11–F24,7
94–96	Y	15734139	2	4.35	PLATE, F/SEAT BELT ANC (OVAL) (16.714)	11–F24,7
84–96	Y	15734139	2	4.35	PLATE, P/SEAT BELT ANC (BKL SI) (OVAL) (16.714)	11–F24,7
84–96	Y	15734139	2	4.35	PLATE, P/SEAT BELT RETR ANC (OVAL) (16.714)	11–F24,7
93–94	Y	11515174	AR	*1.50	SEAL, D/SEAT BKL BELT BOLT HOLE (BKL SI) (4 1/4"X7 1/2") (TRIM AS REQ'D) (15.492)	11–F23,4
95–96	Y	11515174	1	*1.50	SEAL, D/SEAT BKL BELT BOLT HOLE (BKL SI) (4 1/4"X7 1/2") (TRIM AS REQ'D) (15.492)	11–F23,4
93–94	Y	11515174	AR	*1.50	SEAL, P/SEAT BELT BOLT HOLE (BKL SI) (4 1/4"X7 1/2") (TRIM AS REQ'D) (15.492)	11–F23,4
95–96	Y	11515174	1	*1.50	SEAL, P/SEAT BELT BOLT HOLE (BKL SI) (4 1/4"X7 1/2") (TRIM AS REQ'D) (15.492)	11–F23,4
86–94	Y	11515174	2	*1.50	SEALING STRIP, F/SEAT BELT ANC PLT (4 1/4"X7 1/2") (TRIM AS REQ'D) (15.492)	11–F23,4
90–91	Y AJ3	14047778	AR	.63	WASHER, ST BELT ANC PLT (M15X26X2) (06.178)	
	*EXPORT***********	*EXPORT***********		*EXPORT***********	*EXPORT***********	*EXPORT*
93	Y INFL RST SYS (AJ3), MAN RST SYS (AX4) (EXPORT)	12529317	1	85.00	BELT KIT, D/SEAT	11–F26,1
94–96	Y F/SEAT INFL RST SYS (AK5), MAN RST SYS (AX4) (EXPORT), (14I), (19I), (64I), (70I)	12529317	1	85.00	BELT KIT, D/SEAT	11–F26,1
84–86	Y AX4 (EXPORT)	14091378	1	DISCON	BELT KIT, DR & PASS ST	
93	Y INFL RST SYS (AJ3), MAN RST SYS (AX4) (EXPORT)	12529316	1	85.00	BELT KIT, P/SEAT (BLACK)	11–F26,5
94–96	Y F/SEAT INFL RST SYS (AK5), MAN RST SYS (AX4) (EXPORT), (14I), (19I), (64I), (70I)	12529316	1	85.00	BELT KIT, P/SEAT (BLACK)	11–F26,5
93	Y INFL RST SYS (AJ3)	20229360	2	3.95	BOLT, D/SEAT BELT BRKT (M12 X 1.75 X 36MM)	11–F23,2
93–94	Y INFL RST SYS (AJ3), MAN RST SYS (AX4) (EXPORT)	20229360	2	3.95	BOLT, P/SEAT BELT BRKT (M12 X 1.75 X 36MM)	11–F23,2
84–87	Y AX4 (EXPORT)	11508931	2	1.82	BOLT, ST BELT UPR ANC PLT (08.900)	

© 2000 GENERAL MOTORS SERVICE PARTS OPERATIONS–CHEVROLET–14Y

14.875 BELT – BELT KIT – BOLT – BRACKET – BUSHING – CARPET – COVER – EXTENSION KIT – NUT – PANEL – PLATE – SEAL – SEALING STRIP – WASHER, Seat Belt (Con't)

94–96	Y67 EUROPEAN PROVISIONS (VD1) (EXPORT)	10220997	LH	17.95	BRACKET, D/SEAT SHLDR BELT GDE	11–G8,14
84–86	Y MAN RST SYS (AX4) (EXPORT)	14065083	LH	DISCON	BRACKET, F/SEAT BELT	
84–86	Y MAN RST SYS (AX4) (EXPORT)	14065084	RH	DISCON	BRACKET, F/SEAT BELT	
94–96	Y67 EUROPEAN PROVISIONS (VD1) (EXPORT)	10220998	RH	17.95	BRACKET, P/SEAT SHLDR BELT GDE	11–G8,14
94–96	Y F/SEAT INFL RST SYS (AK5), MAN RST SYS (AX4) (EXPORT)	10243733	1	8.30	COVER, D/SEAT SHLDR BELT GDE TR	11–G5,2
94–96	Y F/SEAT INFL RST SYS (AK5), MAN RST SYS (AX4) (EXPORT)	10243734	1	3.30	COVER, P/SEAT SHLDR BELT GDE TR	11–G5,2
84–86	Y AX4 (EXPORT)	14069605	1	DISCON	COVER, SEAT BELT TR	
84–87	Y AX4 (EXPORT)	14065079	LH	9.60	COVER, ST BELT RETRACTOR HOLE (**VPI 1–877–846–8243)	
84–87	Y AX4 (EXPORT)	14065080	RH	DISCON	COVER, ST BELT RETRACTOR HOLE	
85–86	Y AX4 (EXPORT)	14065086	2	DISCON	COVER, ST BELT UPR ANC PLT .	
84–85	Y AX4 (EXPORT)	11515750	2	*1.05	NUT, P&D/SEAT BELT ANC PLT INR (08.917)	

© 2000 GENERAL MOTORS SERVICE PARTS OPERATIONS–CHEVROLET–14Y

1982 - 93 SEAT BELT BUCKLES

CC14-001
122192

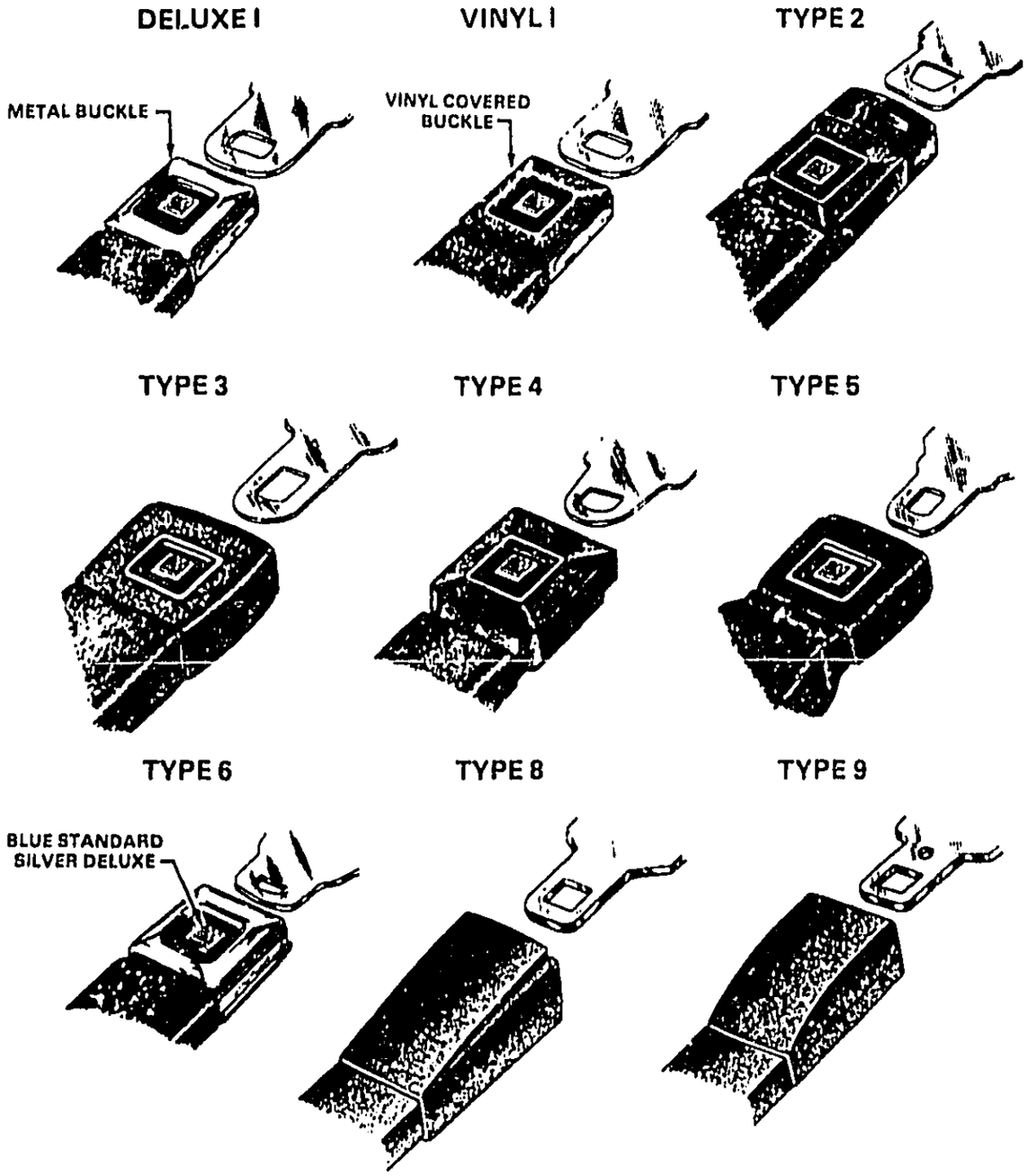

This illustration provides visual identification of the various types of production installed seat belts. The best distinguishing feature is the configuration of the metal "D" ring that inserts into the buckle. The different buckle designs can also be utilized in conjunction with their respective "D" ring to correctly identify the seat belt type. Not all types are available on each model.

NOTE: BUCKLE SIDE INCLUDES CENTER PASSENGER PROVISIONS WHEN APPLICABLE.

© 2000 GENERAL MOTORS SERVICE PARTS OPERATIONS–CHEVROLET–14Y

Y -- 1984 SEAT BELT CHART -- 14.875

NOTE: AN ASTERISK (*) DESIGNATES THAT ONE OR MORE PART NUMBERS IN THAT LINE ARE EITHER REPLACED OR DISCONTINUED. SEAT BELTS ARE OFTEN REPLACED BY A BELT OF A DIFFERENT COLOR AS STOCK IS EXHAUSTED. CHECK AVAILABILITY IN EITHER THE PRICE SCHEDULE OR PARTS HISTORY CATALOG BEFORE ORDERING.

MODEL & RPO	SERVICE	PROD	LOCATION	COLOR
		FRONT		
Y	* 14091378	20444306	D/SEAT (LH)	BLACK
Y	12516992	14058209	D/SEAT (LH)	CARMINE-74I
Y	12517098	14058207	D/SEAT (LH)	LT SADDLE-62I
Y	12516966	14058203	D/SEAT (LH)	MED BLUE-28I
Y	* 14091378	20444306	P/SEAT (RH)	BLACK
Y	12516993	14058210	P/SEAT (RH)	CARMINE-74I
Y	12516967	14058204	P/SEAT (RH)	MED BLUE-28I
Y07	12517100	14058205	D/SEAT (LH)	DK BRONZE-65I
Y07	12517092	14049229	D/SEAT (LH)	GRAPHITE-12I
Y07	12517094	14058201	D/SEAT (LH)	MED GRAY-15I
Y07	12516982	14058206	P/SEAT (RH)	DK BRONZE-65I
Y07	12516944	14049230	P/SEAT (RH)	GRAPHITE-12I
Y07	12516978	14058208	P/SEAT (RH)	LT SADDLE-62I
Y07	12516948	14058202	P/SEAT (RH)	MED GRAY-15I

Y -- 1985 SEAT BELT CHART -- 14.875

MODEL & RPO	SERVICE	PROD	LOCATION	COLOR
		FRONT		
Y	* 14091378	20444306	D/SEAT (LH)	BLACK
Y	12516992	14058209	D/SEAT (LH)	CARMINE-74I
Y	12517098	14058207	D/SEAT (LH)	LT SADDLE-62I
Y	12516966	14058203	D/SEAT (LH)	MED BLUE-28I
Y	* 14091378	20444306	P/SEAT (RH)	BLACK
Y	12516993	14058210	P/SEAT (RH)	CARMINE-74I
Y	12516967	14058204	P/SEAT (RH)	MED BLUE-28I
Y07	12517100	14058205	D/SEAT (LH)	DK BRONZE-65I
Y07	12517092	14049229	D/SEAT (LH)	GRAPHITE-12I
Y07	12517094	14058201	D/SEAT (LH)	MED GRAY-15I
Y07	12516982	14058206	P/SEAT (RH)	DK BRONZE-65I
Y07	12516944	14049230	P/SEAT (RH)	GRAPHITE-12I
Y07	12516978	14058208	P/SEAT (RH)	LT SADDLE-62I
Y07	12516948	14058202	P/SEAT (RH)	MED GRAY-15I

Y -- 1986 SEAT BELT CHART -- 14.875

MODEL & RPO	SERVICE	PROD	LOCATION	COLOR
		FRONT		
Y	* 14091378	20444306	D/SEAT (LH)	BLACK
Y	12517098	14058207	D/SEAT (LH)	LT SADDLE-62I
Y	* 14091378	20444306	P/SEAT (RH)	BLACK
Y07	12517100	14058205	D/SEAT (LH)	DK BRONZE-65I
Y07	12517102	14094251	D/SEAT (LH)	FLAME RED-73I
Y07	12517092	14049229	D/SEAT (LH)	GRAPHITE-12I
Y07	12517096	14094249	D/SEAT (LH)	MED BLUE-21I
Y07	12517094	14058201	D/SEAT (LH)	MED GRAY-15I
Y07	12516982	14058206	P/SEAT (RH)	DK BRONZE-65I
Y07	12516988	14094252	P/SEAT (RH)	FLAME RED-73I
Y07	12516944	14049230	P/SEAT (RH)	GRAPHITE-12I
Y07	12516978	14058208	P/SEAT (RH)	LT SADDLE-62I
Y07	12516960	14094250	P/SEAT (RH)	MED BLUE-21I
Y07	12516948	14058202	P/SEAT (RH)	MED GRAY-15I
Y67	12517101	14092787	D/SEAT (LH)	DK BRONZE-65I
Y67	12517103	14092789	D/SEAT (LH)	FLAME RED-73I
Y67	12517093	14092779	D/SEAT (LH)	GRAPHITE-12I
Y67	12517099	14092785	D/SEAT (LH)	LT SADDLE-62I
Y67	12517097	14092783	D/SEAT (LH)	MED BLUE-21I
Y67	12517095	14092781	D/SEAT (LH)	MED GRAY-15I
Y67	12516983	14092788	P/SEAT (RH)	DK BRONZE-65I
Y67	12516989	14092790	P/SEAT (RH)	FLAME RED-73I
Y67	12516945	14092780	P/SEAT (RH)	GRAPHITE-12I
Y67	12516979	14092786	P/SEAT (R	LT SADDLE-62I
Y67	12516961	14092784	P/SEAT (RH)	MED BLUE-21I
Y67	12516949	14092782	P/SEAT (RH)	MED-GRAY-15I

© 2000 GENERAL MOTORS SERVICE PARTS OPERATIONS-CHEVROLET-14Y

Y -- 1987 SEAT BELT CHART -- 14.875

MODEL & RPO	SERVICE	PROD	LOCATION	COLOR
			FRONT	
Y07	12516980	10064355	D/SEAT (LH)	DK BRONZE-65I
Y07	12516984	10064357	D/SEAT (LH)	FLAME RED-73I
Y07	12516942	10064347	D/SEAT (LH)	GRAPHITE-12I
Y07	12516976	10064353	D/SEAT (LH)	LT SADDLE-62I
Y07	12516958	10064351	D/SEAT (LH)	MED BLUE-21I
Y07	12516946	10064349	D/SEAT (LH)	MED GRAY-15I
Y07	12516982	14058206	P/SEAT (RH)	DK BRONZE-65I
Y07	12516988	14094252	P/SEAT (RH)	FLAME RED-73I
Y07	12516944	14049230	P/SEAT (RH)	GRAPHITE-12I
Y07	12516978	14058208	P/SEAT (RH)	LT SADDLE-62I
Y07	12516960	14094250	P/SEAT (RH)	MED BLUE-21I
Y07	12516948	14058202	P/SEAT (RH)	MED GRAY-15I
Y67	12516981	10064367	D/SEAT (LH)	DK BRONZE-65I
Y67	12516985	10064369	D/SEAT (LH)	FLAME RED-73I
Y67	12516943	10064359	D/SEAT (LH)	GRAPHITE-12I
Y67	12516977	10064365	D/SEAT (LH)	LT SADDLE-62I
Y67	12516959	10064363	D/SEAT (LH)	MED BLUE-21I
Y67	12516947	10064361	D/SEAT (LH)	MED GRAY-15I
Y67	12516983	14092788	P/SEAT (RH)	DK BRONZE-65I
Y67	12516989	14092790	P/SEAT (RH)	FLAME RED-73I
Y67	12516945	14092780	P/SEAT (RH)	GRAPHITE-12I
Y67	12516979	14092786	P/SEAT (RH)	LT SADDLE-62I
Y67	12516961	14092784	P/SEAT (RH)	MED BLUE-21I
Y67	12516949	14092782	P/SEAT (RH)	MED-GRAY-15I

Y -- 1988 SEAT BELT CHART -- 14.875

MODEL & RPO	SERVICE	PROD	LOCATION	COLOR
			FRONT	
Y	12516940	10126643	D/SEAT (LH)	WHITE-11I
Y	12516941	10126644	P/SEAT (RH)	WHITE-11I
Y07	12516950	10126645	D/SEAT (LH)	BLACK-19I
Y07	12516984	10126651	D/SEAT (LH)	FLAME RED-73I
Y07	12516958	10126647	D/SEAT (LH)	MED BLUE-21I
Y07	12516968	10126649	D/SEAT (LH)	MED COGNAC-60I
Y07	12516994	10126653	D/SEAT (LH)	MED SMOKE GRAY-90I
Y07	12516954	10126646	P/SEAT (RH)	BLACK-19I
Y07	12516988	10126652	P/SEAT (RH)	FLAME RED-73I
Y07	12516960	10126648	P/SEAT (RH)	MED BLUE-21I
Y07	12516972	10126650	P/SEAT (RH)	MED COGNAC-60I
Y07	12516998	10126654	P/SEAT (RH)	MED SMOKE GRAY-90I
Y67	12516951	10126631	D/SEAT (LH)	BLACK-19I
Y67	12516985	10126637	D/SEAT (LH)	FLAME RED-73I
Y67	12516959	10126633	D/SEAT (LH)	MED BLUE-21I
Y67	12516969	10126655	D/SEAT (LH)	MED COGNAC-60I
Y67	12516995	10126639	D/SEAT (LH)	MED SMOKE GRAY-90I
Y67	12516955	10126632	P/SEAT (RH)	BLACK-19I
Y67	12516989	10126638	P/SEAT (RH)	FLAME RED-73I
Y67	12516961	10126634	P/SEAT (RH)	MED BLUE-21I
Y67	12516973	10126636	P/SEAT (RH)	MED COGNAC-60I
Y67	12516999	10126640	P/SEAT (RH)	MED SMOKE GRAY-90I

1989 CORVETTE - SEAT BELTS

MODEL	COLOR	SEAT	PROD #	SERVICE #
Y07	BLACK(19)	P/SEAT(RH)	10126646	12516954
Y07	BLACK(19)	D/SEAT(LH)	10126645	12516950
Y07	MED BLUE(21)	P/SEAT(RH)	10126648	12516960
Y07	MED BLUE(21)	D/SEAT(LH)	10126647	12516958
Y07	MED COGNAC(60)	P/SEAT(RH)	10126650	12516972
Y07	MED COGNAC(60)	D/SEAT(LH)	10126649	12516968
Y07	FLAME RED(73)	P/SEAT(RH)	10126652	12516988
Y07	FLAME RED(73)	D/SEAT(LH)	10126651	12516984
Y07	MED SMOKE GRAY(90)	P/SEAT(RH)	10126654	12516998
Y07	MED SMOKE GRAY(90)	D/SEAT(LH)	10126653	12516994
Y67	BLACK(19)	P/SEAT(RH)	10126632	12516955
Y67	BLACK(19)	D/SEAT(LH)	10126631	12516951
Y67	MED BLUE(21)	P/SEAT(RH)	10126634	12516961
Y67	MED BLUE(21)	D/SEAT(LH)	10126633	12516959
Y67	MED COGNAC(60)	P/SEAT(RH)	10126636	12516973
Y67	MED COGNAC(60)	D/SEAT(LH)	10126635	12516967
Y67	FLAME RED(73)	P/SEAT(RH)	10126638	12516989
Y67	FLAME RED(73)	D/SEAT(LH)	10126637	12516985
Y67	MED SMOKE GRAY(90)	P/SEAT(RH)	10126640	12516999
Y67	MED SMOKE GRAY(90)	D/SEAT(LH)	10126639	12516995

1990

MODEL	COLOR	SEAT	PROD #	SERVICE #
Y07	BLACK(19)	P/SEAT(RH)	10155296	12516956
Y07	BLACK(19)	D/SEAT(LH)	10155295	12516952
Y07	DK STEEL BLUE(22)	P/SEAT(RH)	10149178	12516964
Y07	DK STEEL BLUE(22)	D/SEAT(LH)	10149185	12516962
Y07	MED COGNAC(60)	P/SEAT(RH)	10149180	12516974
Y07	MED COGNAC(60)	D/SEAT(LH)	10148187	12516970
Y07	FLAME RED(73)	P/SEAT(RH)	10149182	12516990
Y07	FLAME RED(73)	D/SEAT(LH)	10149189	12516986
Y07	MED SMOKE GRAY(90)	P/SEAT(RH)	10149184	12517001
Y07	MED SMOKE GRAY(90)	D/SEAT(LH)	10149183	12516996
Y67	BLACK(19)	P/SEAT(RH)	10155298	12516957
Y67	BLACK(19)	D/SEAT(LH)	10155297	12516953
Y67	DK STEEL BLUE(22)	P/SEAT(RH)	10149178	12516965
Y67	DK STEEL BLUE(22)	D/SEAT(LH)	10149185	12516963
Y67	MED COGNAC(60)	P/SEAT(RH)	10149180	12516975
Y67	MED COGNAC(60)	D/SEAT(LH)	10149187	12516971
Y67	FLAME RED(73)	P/SEAT(RH)	10149182	12516991
Y67	FLAME RED(73)	D/SEAT(LH)	10149189	12516987
Y67	MED SMOKE GRAY(90)	P/SEAT(RH)	10149184	12517002
Y67	MED SMOKE GRAY(90)	D/SEAT(LH)	10149191	12516997

1991

MODEL	COLOR	SEAT	PROD #	SERVICE #
Y07	BLACK(19)	P/SEAT(RH)	10193768	12521660
Y07	BLACK(19)	D/SEAT(LH)	10193767	12521659
Y07	DK STEEL BLUE(22)	P/SEAT(RH)	10193770	12510327
Y07	DK STEEL BLUE(22)	D/SEAT(LH)	10193769	12510326
Y07	MED COGNAC(60)	P/SEAT(RH)	10193776	12510333
Y07	MED COGNAC(60)	D/SEAT(LH)	10193775	12510332
Y07	FLAME RED(73)	P/SEAT(RH)	10193772	12518230
Y07	FLAME RED(73)	D/SEAT(LH)	10193771	12518231
Y07	MED SMOKE GRAY(90)	P/SEAT(RH)	10193774	12510331
Y07	MED SMOKE GRAY(90)	D/SEAT(LH)	10193773	12510330
Y67	BLACK(19)	P/SEAT(RH)	10193780	12521670
Y67	BLACK(19)	D/SEAT(LH)	10193779	12521669
Y67	DK STEEL BLUE(22)	P/SEAT(RH)	10193782	12510337
Y67	DK STEEL BLUE(22)	D/SEAT(LH)	10193781	12510336
Y67	MED COGNAC(60)	P/SEAT(RH)	10193788	12510343
Y67	MED COGNAC(60)	D/SEAT(LH)	10193787	12510342
Y67	FLAME RED(73)	P/SEAT(RH)	10193784	12518234
Y67	FLAME RED(73)	D/SEAT(LH)	10193783	12518235
Y67	MED SMOKE GRAY(90)	P/SEAT(RH)	10193786	12510341
Y67	MED SMOKE GRAY(90)	D/SEAT(LH)	10193785	12510340

© 2000 GENERAL MOTORS SERVICE PARTS OPERATIONS-CHEVROLET-14Y

1992 CORVETTE - SEAT BELTS

MODEL	COLOR	SEAT	PROD #	SERVICE #
Y07	BLACK(199)	P/SEAT(RH)	10193768	12521660
Y07	BLACK(199)	D/SEAT(LH)	10193767	12521659
Y07	MED GRAY(149)	P/SEAT(RH)	10193792	12509780
Y07	MED GRAY(149)	D/SEAT(LH)	10193791	12521657
Y07	MED BEIGE(649)	P/SEAT(RH)	10193790	12521662
Y07	MED BEIGE(649)	D/SEAT(LH)	10193789	12521661
Y07	FLAME RED(739)	P/SEAT(RH)	10193772	12518230
Y07	FLAME RED(739)	D/SEAT(LH)	10193771	12518231
Y67	BLACK(199)	P/SEAT(RH)	10193780	12521670
Y67	BLACK(199)	D/SEAT(LH)	10193779	12521669
Y67	MED GRAY(149)	P/SEAT(RH)	10193796	12509784
Y67	MED GRAY(149)	D/SEAT(LH)	10193795	12509783
Y67	MED BEIGE(649)	P/SEAT(RH)	10193794	12509782
Y67	MED BEIGE(649)	D/SEAT(LH)	10193793	12521671
Y67	FLAME RED(739)	P/SEAT(RH)	10193784	12518234
Y67	FLAME RED(739)	D/SEAT(LH)	10193783	12518235

1993 CORVETTE - SEAT BELTS

MODEL	COLOR	SEAT	PROD #	SERVICE #
Y07	BLACK(199)	P/SEAT(RH)	10218196	12521660
Y07	BLACK(199)	D/SEAT(LH)	10218197	12521659
Y07	MED GRAY(149)	P/SEAT(RH)	10218206	12521658
Y07	MED GRAY(149)	D/SEAT(LH)	10218207	12521657
Y07	MED BEIGE(649)	P/SEAT(RH)	10218204	12521662
Y07	MED BEIGE(649)	D/SEAT(LH)	10218205	12521661
Y07	TORCH RED(709)	P/SEAT(RH)	10218212	12521664
Y07	TORCH RED(709)	D/SEAT(LH)	10218213	12521663
Y07	RUBY RED(799)	P/SEAT(RH)	10218216	12521666
Y07	RUBY RED(799)	D/SEAT(LH)	10218217	12521665
Y67	BLACK(199)	P/SEAT(RH)	10218200	12521670
Y67	BLACK(199)	D/SEAT(LH)	10218201	12521669
Y67	MED GRAY(149)	P/SEAT(RH)	10218210	12521668
Y67	MED GRAY(149)	D/SEAT(LH)	10218211	12521667
Y67	MED BEIGE(649)	P/SEAT(RH)	10218208	12521672
Y67	MED BEIGE(649)	D/SEAT(LH)	10218209	12521671
Y67	TORCH RED(709)	P/SEAT(RH)	10218214	12521674
Y67	TORCH RED(709)	D/SEAT(LH)	10218215	12521673
Y67	RUBY RED(749)	P/SEAT(RH)	10218218	12521676
Y67	RUBY RED(749)	D/SEAT(LH)	10218219	12521675

© 2000 GENERAL MOTORS SERVICE PARTS OPERATIONS-CHEVROLET-14Y

MICROFICHE INDEX

GROUPS 14.000 THRU 15.000

FICHE 11 OF 11

GROUP	DESCRIPTION	STARTING GRID LOCATION PARTS	ILLUSTRATIONS
–	GENERAL INFORMATION	1–A2	1–G2
–	ALPHABETICAL INDEX	1–B13	N.A.
14.000	INTERIOR TRIM – SEAT BELTS	11–A2	11–E2
15.000	REAR SEAT TRIM – CARPETS – YARDAGE	11–D2	11–H2
–	OUT OF FICHE CALLS	N.A.	11–M16

11–C1

1994 CORVETTE - SEAT BELTS

SEAT BELT CHARTS HAVE BEEN ELIMINATED EFFECTIVE WITH THE 1994 MODEL YEAR.

PLEASE REFER TO GROUP 14.875 OR ILLUSTRATION SECTION 14 FOR SEAT BELT INFORMATION.

© 2000 GENERAL MOTORS SERVICE PARTS OPERATIONS-CHEVROLET-14Y

14.880 COVER – TRIM, Front Seat Cushion

84–86	Y NON–RECL FRT BKT ST (A51), (122)	14058515	LH	DISCON	COVER, D/SEAT CUSH (GRAPHITE)
84–86	Y NON–RECL FRT BKT ST (A51), (152)	14058516	LH	DISCON	COVER, D/SEAT CUSH (LEATHER, GRAY)
84	Y (652)	14058518	LH	DISCON	COVER, D/SEAT CUSH (LEATHER, BRONZE)
84–86	Y NON–RECL FRT BKT ST (A51), (622)	14058519	LH	DISCON	COVER, D/SEAT CUSH (LEATHER, SADDLE)
84–85	Y (742)	14058520	LH	DISCON	COVER, D/SEAT CUSH (LEATHER, CARMINE)
84–85	Y AQ9 12V	14081126	LH	DISCON	COVER, D/SEAT CUSH (CLOTH, GRAPHITE)
84–85	Y AQ9 65V	14081130	LH	DISCON	COVER, D/SEAT CUSH (CLOTH, BRONZE)
84–85	Y RECL FRT BKT ST (AQ9), (62V)	14081134	LH	DISCON	COVER, D/SEAT CUSH (CLOTH, SADDLE)
84–85	Y AQ9 15V	14081138	LH	DISCON	COVER, D/SEAT CUSH (CLOTH, GRAY)
84–85	Y AQ9 28V	14081142	LH	DISCON	COVER, D/SEAT CUSH (CLOTH, BLUE)
85	Y NON–RECL FRT BKT ST (A51), (652)	14058518	LH	DISCON	COVER, D/SEAT CUSH (LEATHER, BRONZE)
85–87	Y RECL FRT BKT ST (AQ9), (122)	14089188	LH	DISCON	COVER, D/SEAT CUSH (LEATHER, GRAPHITE)
85–87	Y RECL FRT BKT ST (AQ9), (152)	14089192	LH	DISCON	COVER, D/SEAT CUSH (LEATHER, GRAY)
85–87	Y RECL FRT BKT ST (AQ9), (622)	14089196	LH	DISCON	COVER, D/SEAT CUSH (LEATHER, SADDLE)
85	Y RECL FRT BKT ST (AQ9), (652)	14089200	LH	DISCON	COVER, D/SEAT CUSH (LEATHER, BRONZE)
85	Y A51 282	14090627	LH	DISCON	COVER, D/SEAT CUSH (LEATHER, BLUE)
85	Y RECL FRT BKT ST (AQ9), (742)	14091304	LH	DISCON	COVER, D/SEAT CUSH (LEATHER, CARMINE)
85	Y AQ9 282	14091449	LH	DISCON	COVER, D/SEAT CUSH (LEATHER, BLUE)
86	Y NON–RECL FRT BKT ST (A51), (652), (2ND DES)	10048878	LH	DISCON	COVER, D/SEAT CUSH (LEATHER W/NO METALLIC FLECKS, BRONZE)
86–87	Y RECL FRT BKT ST (AQ9), (652)	10048922	LH	DISCON	COVER, D/SEAT CUSH (LEATHER, BRONZE)
86	Y NON–RECL FRT BKT ST (A51), (652), (1ST DES)	14058518	LH	DISCON	COVER, D/SEAT CUSH (LEATHER W/GOLD METALLIC FLECKS, BRONZE)
86–87	Y (12C)	14090645	LH	DISCON	COVER, D/SEAT CUSH (GRAPHITE)
86–87	Y (15C)	14090647	LH	DISCON	COVER, D/SEAT CUSH (GRAY)
86–87	Y 21C	14090649	LH	DISCON	COVER, D/SEAT CUSH (BLUE)
86–87	Y (65C)	14090651	LH	DISCON	COVER, D/SEAT CUSH (BRONZE)
86–87	Y (62C)	14090653	LH	DISCON	COVER, D/SEAT CUSH (SADDLE)
86	Y NON–RECL FRT BKT ST (A51), (212)	14090659	LH	DISCON	COVER, D/SEAT CUSH (BLUE)
86	Y NON–RECL FRT BKT ST (A51), (732)	14090665	LH	DISCON	COVER, D/SEAT CUSH (RED)
86–88	Y RECL FRT BKT ST (AQ9), (21I)	14094562	LH	DISCON	COVER, D/SEAT CUSH (BLUE)
86–88	Y RECL FRT BKT ST (AQ9), (732)	14094566	LH	DISCON	COVER, D/SEAT CUSH (RED)
87	Y MAN RECL FRT BKT ST (AR9), (652)	10048878	LH	DISCON	COVER, D/SEAT CUSH (LEATHER, BRONZE)

© 2000 GENERAL MOTORS SERVICE PARTS OPERATIONS–CHEVROLET–14Y

14.880 COVER – TRIM, Front Seat Cushion (Con't)

87	Y MAN RECL FRT BKT ST (AR9), (122)	14058515	LH	DISCON	COVER, D/SEAT CUSH (GRAPHITE)
87	Y MAN RECL FRT BKT ST (AR9), (152)	14058516	LH	DISCON	COVER, D/SEAT CUSH (LEATHER, GRAY)
87	Y MAN RECL FRT BKT ST (AR9), (622)	14058519	LH	DISCON	COVER, D/SEAT CUSH (LEATHER, SADDLE)
87–88	Y MAN RECL FRT BKT ST (AR9), (212)	14090659	LH	DISCON	COVER, D/SEAT CUSH (BLUE)
87–88	Y MAN RECL FRT BKT ST (AR9), (732)	14090665	LH	DISCON	COVER, D/SEAT CUSH (RED)
88	Y MAN RECL FRT BKT ST (AR9), (192)	10076641	LH	DISCON	COVER, D/SEAT CUSH (BLACK)
88	Y MAN RECL FRT BKT ST (AR9), (602)	10076643	LH	DISCON	COVER, D/SEAT CUSH (COGNAC)
88	Y AR9 902	10076645	LH	DISCON	COVER, D/SEAT CUSH (GRAY)
88	Y (19C)	10076647	LH	DISCON	COVER, D/SEAT CUSH (BLACK)
88	Y (60C)	10076648	LH	DISCON	COVER, D/SEAT CUSH (COGNAC)
88	Y RECL FRT BKT ST (AQ9)	10120948	LH	DISCON	COVER, D/SEAT CUSH (BLACK)
88	Y RECL FRT BKT ST (AQ9)	10120952	LH	DISCON	COVER, D/SEAT CUSH (GRAY)
88	Y RECL FRT BKT ST (AQ9)	10120956	LH	DISCON	COVER, D/SEAT CUSH (COGNAC)
88	Y 35 ANNIVERSARY (Z01), (113)	10120967	LH	DISCON	COVER, D/SEAT CUSH (WHITE)
88	Y (122)	14058515	LH	DISCON	COVER, D/SEAT CUSH (GRAPHITE)
89	Y MAN RECL FRT BKT ST (AR9), (212)	10125935	LH	DISCON	COVER, D/SEAT CUSH (BLUE)
89	Y MAN RECL FRT BKT ST (AR9), (732)	10125936	LH	DISCON	COVER, D/SEAT CUSH (RED)
89	Y MAN RECL FRT BKT ST (AR9), (192)	10125937	LH	DISCON	COVER, D/SEAT CUSH (BLACK)
89	Y MAN RECL FRT BKT ST (AR9), (602)	10125938	LH	DISCON	COVER, D/SEAT CUSH (COGNAC)
89	Y MAN RECL FRT BKT ST (AR9), (902)	10125939	LH	DISCON	COVER, D/SEAT CUSH (GRAY)
89	Y RECL FRT BKT ST (AQ9), (192)	10140654	LH	DISCON	COVER, D/SEAT CUSH (BLACK)
89	Y RECL FRT BKT ST (AQ9), (212)	10140655	LH	DISCON	COVER, D/SEAT CUSH (BLUE)
89	Y RECL FRT BKT ST (AQ9), (602)	10140656	LH	DISCON	COVER, D/SEAT CUSH (COGNAC)
89	Y RECL FRT BKT ST (AQ9), (732)	10140657	LH	DISCON	COVER, D/SEAT CUSH (RED)
89	Y RECL FRT BKT ST (AQ9), (902)	10159577	1	DISCON	COVER, D/SEAT CUSH (GRAY)
90	Y MAN RECL FRT BKT ST (AR9), (223)	10137701	LH	DISCON	COVER, D/SEAT CUSH (BLUE)
90	Y MAN RECL FRT BKT ST (AR9), (733)	10137702	LH	DISCON	COVER, D/SEAT CUSH (RED)
90	Y MAN RECL FRT BKT ST (AR9), (193)	10137703	LH	DISCON	COVER, D/SEAT CUSH (BLACK)
90	Y MAN RECL FRT BKT ST (AR9), (603)	10137704	LH	DISCON	COVER, D/SEAT CUSH (COGNAC)
90	Y MAN RECL FRT BKT ST (AR9), (903)	10137705	LH	DISCON	COVER, D/SEAT CUSH (GRAY)
91–93	Y RECL FRT BKT ST (AQ9), (193)	12506457	LH	DISCON	COVER, D/SEAT CUSH (BLACK)
91	Y RECL FRT BKT ST (AQ9), (223)	12506459	LH	DISCON	COVER, D/SEAT CUSH (BLUE)
91	Y RECL FRT BKT ST (AQ9), (603)	12506461	LH	DISCON	COVER, D/SEAT CUSH (COGNAC)

© 2000 GENERAL MOTORS SERVICE PARTS OPERATIONS–CHEVROLET–14Y

14.880 COVER – TRIM, Front Seat Cushion (Con't)

91	Y RECL FRT BKT ST (AQ9), (903)	12506465	LH	DISCON	COVER, D/SEAT CUSH (GRAY)	
91–93	Y MAN RECL FRT BKT ST (AR9), (193)	12517319	LH	615.00	COVER, D/SEAT CUSH (W/CUSH) (BLACK)	9–I24,19
91–93	Y MAN RECL FRT BKT ST (AR9), (19C)	12517320	LH	DISCON	COVER, D/SEAT CUSH (W/CUSH) (BLACK)	
91	Y MAN RECL FRT BKT ST (AR9), (603)	12517321	LH	DISCON	COVER, D/SEAT CUSH (W/CUSH) (COGNAC)	
91	Y MAN RECL FRT BKT ST (AR9), (60C)	12517322	LH	DISCON	COVER, D/SEAT CUSH (W/CUSH) (COGNAC)	
91	Y MAN RECL FRT BKT ST (AR9), (223)	12517323	LH	DISCON	COVER, D/SEAT CUSH (W/CUSH) (BLUE)	
91	Y MAN RECL FRT BKT ST (AR9), (903)	12517324	LH	DISCON	COVER, D/SEAT CUSH (W/CUSH) (GRAY)	
91–92	Y MAN RECL FRT BKT ST (AR9), (733)	12517325	LH	DISCON	COVER, D/SEAT CUSH (W/CUSH) (RED)	
92–93	Y RECL FRT BKT ST (AQ9), (103)	12510909	LH	790.90	COVER, D/SEAT CUSH (WHITE)	9–J2,50
92–93	Y RECL FRT BKT ST (AQ9), (143)	12510911	LH	790.90	COVER, D/SEAT CUSH (GRAY)	9–J2,50
92–93	Y RECL FRT BKT ST (AQ9), (643)	12510913	LH	790.90	COVER, D/SEAT CUSH (BEIGE)	9–J2,50
92–93	Y MAN RECL FRT BKT ST (AR9), (103)	12517326	LH	615.00	COVER, D/SEAT CUSH (W/CUSH) (WHITE)	9–I24,19
92–93	Y MAN RECL FRT BKT ST (AR9), (143)	12517327	LH	615.00	COVER, D/SEAT CUSH (W/CUSH) (GRAY)	9–I24,19
92–93	Y MAN RECL FRT BKT ST (AR9), (643)	12517328	LH	615.00	COVER, D/SEAT CUSH (W/CUSH) (BEIGE)	9–I24,19
93	Y MAN RECL FRT BKT ST (AR9), (703)	12517329	LH	722.60	COVER, D/SEAT CUSH (W/CUSH) (RED)	9–I24,19
93	Y RECL FRT BKT ST (AQ9), (703)	12518736	LH	722.60	COVER, D/SEAT CUSH (RED)	9–J2,50
93	Y RECL FRT BKT ST (AQ9), (793)	12518738	LH	722.60	COVER, D/SEAT CUSH (RED)	9–J2,50
94–96	Y MAN RECL FRT BKT ST (AR9), (143)	10248451	1	554.70	COVER, D/SEAT CUSH (GRAY)	9–J8,23
94–96	Y MAN RECL FRT BKT ST (AR9), (643)	10248466	1	554.70	COVER, D/SEAT CUSH (BEIGE)	9–J8,23
94–96	Y MAN RECL FRT BKT ST (AR9), (193)	10248468	1	554.70	COVER, D/SEAT CUSH (BLACK)	9–J8,23
94–96	Y MAN RECL FRT BKT ST (AR9), (703)	10248470	1	554.70	COVER, D/SEAT CUSH (RED)	9–J8,23
94	Y RECL FRT BKT ST (AQ9), (193)	10248475	1	DISCON	COVER, D/SEAT CUSH (BLACK)	
94	Y RECL FRT BKT ST (AQ9), (703)	10248476	1	DISCON	COVER, D/SEAT CUSH (RED)	
94	Y RECL FRT BKT ST (AQ9), (143)	10248477	1	DISCON	COVER, D/SEAT CUSH (GRAY)	
94	Y RECL FRT BKT ST (AQ9), (643)	10248478	1	DISCON	COVER, D/SEAT CUSH (BEIGE)	
95–96	Y RECL FRT BKT ST (AQ9), (193)	10262379	1	720.50	COVER, D/SEAT CUSH (BLACK)	9–J13,29
95–96	Y RECL FRT BKT ST (AQ9), (703)	10262381	1	720.50	COVER, D/SEAT CUSH (RED)	9–J13,29
95–96	Y RECL FRT BKT ST (AQ9), (143)	10262383	1	720.50	COVER, D/SEAT CUSH (GRAY)	9–J13,29
95–96	Y RECL FRT BKT ST (AQ9), (643)	10262385	1	720.50	COVER, D/SEAT CUSH (BEIGE)	9–J13,29
95	Y67 RECL FRT BKT ST (AQ9), (194)	12455826	1	720.50	COVER, D/SEAT CUSH (BLACK)	9–J13,29

© 2000 GENERAL MOTORS SERVICE PARTS OPERATIONS–CHEVROLET–14Y

14.880 COVER – TRIM, Front Seat Cushion (Con't)

96	Y RECL FRT BKT ST (AQ9), COLLECTORS EDITION (Z15), GRAND SPORT EDITION (Z16)	10262525	1	720.50	COVER, D/SEAT CUSH (RED) ...	9–J13,29
96	Y RECL FRT BKT ST (AQ9), GRAND SPORT EDITION (Z16), (195)	10262537	1	720.50	COVER, D/SEAT CUSH (BLACK) .	9–J13,29
96	Y RECL FRT BKT ST (AQ9), COLLECTORS EDITION (Z15), (194)	10262537	1	720.50	COVER, D/SEAT CUSH (BLACK) .	9–J13,29
96	Y RECL FRT BKT ST (AQ9), COLLECTORS EDITION (Z15), (144)	10270161	1	720.50	COVER, D/SEAT CUSH (GRAY) ..	9–J13,29
84–85	Y (12C)	14058503	2	DISCON	COVER, F/SEAT CUSH (CLOTH, GRAPHITE)	
84–85	Y (15C)	14058504	2	DISCON	COVER, F/SEAT CUSH (CLOTH, GRAY)	
84–85	Y 28C	14058505	2	DISCON	COVER, F/SEAT CUSH (CLOTH, BLUE)	
84–85	Y (65C)	14058506	2	DISCON	COVER, F/SEAT CUSH (CLOTH, BRONZE)	
90	Y RECL FRT BKT ST (AQ9), (193)	10174813	2	DISCON	COVER, F/SEAT CUSH (BLACK) .	
90	Y RECL FRT BKT ST (AQ9), (223)	10174814	2	DISCON	COVER, F/SEAT CUSH (BLUE) ..	
90	Y RECL FRT BKT ST (AQ9), (603)	10174815	2	DISCON	COVER, F/SEAT CUSH (COGNAC) .	
90	Y RECL FRT BKT ST (AQ9), (733)	10174816	2	DISCON	COVER, F/SEAT CUSH (RED) ...	
90	Y RECL FRT BKT ST (AQ9), (903)	10174817	2	DISCON	COVER, F/SEAT CUSH (GRAY) ..	
84–86	Y NON–RECL FRT BKT ST (A51), (122)	14058515	RH	DISCON	COVER, P/SEAT CUSH (GRAPHITE)	
84–86	Y NON–RECL FRT BKT ST (A51), (152)	14058516	RH	DISCON	COVER, P/SEAT CUSH (LEATHER, GRAY)	
84	Y (652)	14058518	RH	DISCON	COVER, P/SEAT CUSH (LEATHER, BRONZE)	
84–86	Y NON–RECL FRT BKT ST (A51), (622)	14053519	RH	DISCON	COVER, P/SEAT CUSH (LEATHER, SADDLE)	
84–85	Y (742)	14058520	RH	DISCON	COVER, P/SEAT CUSH (LEATHER, CARMINE)	
84–85	Y AQ9 12V	14081126	RH	DISCON	COVER, P/SEAT CUSH (CLOTH, GRAPHITE)	
84–85	Y AQ9 65V	14081130	RH	DISCON	COVER, P/SEAT CUSH (CLOTH, BRONZE)	
84–85	Y RECL FRT BKT ST (AQ9), (62V)	14081134	RH	DISCON	COVER, P/SEAT CUSH (CLOTH, SADDLE)	
84–85	Y AQ9 15V	14081138	RH	DISCON	COVER, P/SEAT CUSH (CLOTH, GRAY)	
84–85	Y AQ9 28V	14081142	RH	DISCON	COVER, P/SEAT CUSH (CLOTH, BLUE)	
85	Y NON–RECL FRT BKT ST (A51), (652)	14058518	RH	DISCON	COVER, P/SEAT CUSH (LEATHER, BRONZE)	
85–87	Y RECL FRT BKT ST (AQ9), (122)	14089188	RH	DISCON	COVER, P/SEAT CUSH (LEATHER, GRAPHITE)	
85–87	Y RECL FRT BKT ST (AQ9), (152)	14089192	RH	DISCON	COVER, P/SEAT CUSH (LEATHER, GRAY)	
85–87	Y RECL FRT BKT ST (AQ9), (622)	14089196	RH	DISCON	COVER, P/SEAT CUSH (LEATHER, SADDLE)	
85	Y RECL FRT BKT ST (AQ9), (652)	14089200	RH	DISCON	COVER, P/SEAT CUSH (LEATHER, BRONZE)	

© 2000 GENERAL MOTORS SERVICE PARTS OPERATIONS–CHEVROLET–14Y

14.880 COVER – TRIM, Front Seat Cushion (Con't)

85	Y A51 282	14090627	RH	DISCON	COVER, P/SEAT CUSH (LEATHER, BLUE)
85	Y RECL FRT BKT ST (AQ9), (742)	14091304	RH	DISCON	COVER, P/SEAT CUSH (LEATHER, CARMINE)
85	Y AQ9 282	14091449	RH	DISCON	COVER, P/SEAT CUSH (LEATHER, BLUE)
86	Y NON–RECL FRT BKT ST (A51), (652), (2ND DES)	10048878	RH	DISCON	COVER, P/SEAT CUSH (LEATHER W/NO METALLIC FLECKS, BRONZE)
86–87	Y RECL FRT BKT ST (AQ9), (652)	10048922	RH	DISCON	COVER, P/SEAT CUSH (LEATHER, BRONZE)
86	Y NON–RECL FRT BKT ST (A51), (652), (1ST DES)	14058518	RH	DISCON	COVER, P/SEAT CUSH (LEATHER W/GOLD METALLIC FLECKS, BRONZE)
86–87	Y (12C)	14090646	RH	DISCON	COVER, P/SEAT CUSH (GRAPHITE)
86–87	Y (15C)	14090647	RH	DISCON	COVER, P/SEAT CUSH (GRAY)
86–87	Y 21C	14090649	RH	DISCON	COVER, P/SEAT CUSH (BLUE)
86–87	Y (65C)	14090651	RH	DISCON	COVER, P/SEAT CUSH (BRONZE)
86–87	Y (62C)	14090653	RH	DISCON	COVER, P/SEAT CUSH (SADDLE)
86	Y NON–RECL FRT BKT ST (A51), (212)	14090659	RH	DISCON	COVER, P/SEAT CUSH (BLUE)
86	Y NON–RECL FRT BKT ST (A51), (732)	14090665	RH	DISCON	COVER, P/SEAT CUSH (RED)
86–88	Y RECL FRT BKT ST (AQ9), (211)	14094562	RH	DISCON	COVER, P/SEAT CUSH (BLUE)
86–88	Y RECL FRT BKT ST (AQ9), (732)	14094566	RH	DISCON	COVER, P/SEAT CUSH (RED)
87	Y MAN RECL FRT BKT ST (AR9), (652)	10048878	RH	DISCON	COVER, P/SEAT CUSH (LEATHER, BRONZE)
87	Y MAN RECL FRT BKT ST (AR9), (122)	14058515	RH	DISCON	COVER, P/SEAT CUSH (GRAPHITE)
87	Y MAN RECL FRT BKT ST (AR9), (152)	14058516	RH	DISCON	COVER, P/SEAT CUSH (LEATHER, GRAY)
87	Y MAN RECL FRT BKT ST (AR9), (622)	14058519	RH	DISCON	COVER, P/SEAT CUSH (LEATHER, SADDLE)
87–88	Y MAN RECL FRT BKT ST (AR9), (212)	14090659	RH	DISCON	COVER, P/SEAT CUSH (BLUE)
87–88	Y MAN RECL FRT BKT ST (AR9), (732)	14090665	RH	DISCON	COVER, P/SEAT CUSH (RED)
88	Y MAN RECL FRT BKT ST (AR9), (192)	10076641	RH	DISCON	COVER, P/SEAT CUSH (BLACK)
88	Y MAN RECL FRT BKT ST (AR9), (602)	10076643	RH	DISCON	COVER, P/SEAT CUSH (COGNAC)
88	Y AR9 902	10076645	RH	DISCON	COVER, P/SEAT CUSH (GRAY)
88	Y (19C)	10076647	RH	DISCON	COVER, P/SEAT CUSH (BLACK)
88	Y (60C)	10076648	RH	DISCON	COVER, P/SEAT CUSH (COGNAC)
88	Y RECL FRT BKT ST (AQ9)	10120948	RH	DISCON	COVER, P/SEAT CUSH (BLACK)
88	Y RECL FRT BKT ST (AQ9)	10120952	RH	DISCON	COVER, P/SEAT CUSH (GRAY)
88	Y RECL FRT BKT ST (AQ9)	10120956	RH	DISCON	COVER, P/SEAT CUSH (COGNAC)
88	Y 35 ANNIVERSARY (Z01), (113)	10120967	RH	DISCON	COVER, P/SEAT CUSH (WHITE)
88	Y (122)	14058515	RH	DISCON	COVER, P/SEAT CUSH (GRAPHITE)
89	Y MAN RECL FRT BKT ST (AR9), (212)	10125935	RH	DISCON	COVER, P/SEAT CUSH (BLUE)
89	Y MAN RECL FRT BKT ST (AR9), (732)	10125936	RH	DISCON	COVER, P/SEAT CUSH (RED)
89	Y MAN RECL FRT BKT ST (AR9), (192)	10125937	RH	DISCON	COVER, P/SEAT CUSH (BLACK)
89	Y MAN RECL FRT BKT ST (AR9), (602)	10125938	RH	DISCON	COVER, P/SEAT CUSH (COGNAC)

© 2000 GENERAL MOTORS SERVICE PARTS OPERATIONS–CHEVROLET–14Y

14.880 COVER – TRIM, Front Seat Cushion (Con't)

89	Y AR9 902	10125939	RH	DISCON	COVER, P/SEAT CUSH (GRAY)	
89	Y RECL FRT BKT ST (AQ9), (192)	10140654	RH	DISCON	COVER, P/SEAT CUSH (BLACK)	
89	Y RECL FRT BKT ST (AQ9), (212)	10140655	RH	DISCON	COVER, P/SEAT CUSH (BLUE)	
89	Y RECL FRT BKT ST (AQ9), (602)	10140656	RH	DISCON	COVER, P/SEAT CUSH (COGNAC)	
89	Y RECL FRT BKT ST (AQ9), (732)	10140657	RH	DISCON	COVER, P/SEAT CUSH (RED)	
89	Y RECL FRT BKT ST (AQ9), (902)	10159577	1	DISCON	COVER, P/SEAT CUSH (GRAY)	
90	Y MAN RECL FRT BKT ST (AR9), (223)	10137701	RH	DISCON	COVER, P/SEAT CUSH (BLUE)	
90	Y MAN RECL FRT BKT ST (AR9), (733)	10137702	RH	DISCON	COVER, P/SEAT CUSH (RED)	
90	Y MAN RECL FRT BKT ST (AR9), (193)	10137703	RH	DISCON	COVER, P/SEAT CUSH (BLACK)	
90	Y MAN RECL FRT BKT ST (AR9), (603)	10137704	RH	DISCON	COVER, P/SEAT CUSH (COGNAC)	
90	Y MAN RECL FRT BKT ST (AR9), (903)	10137705	RH	DISCON	COVER, P/SEAT CUSH (GRAY)	
91–93	Y RECL FRT BKT ST (AQ9), (193)	12506456	RH	790.90	COVER, P/SEAT CUSH (BLACK)	9–J2,50
91	Y RECL FRT BKT ST (AQ9), (223)	12506458	RH	DISCON	COVER, P/SEAT CUSH (BLUE)	
91	Y RECL FRT BKT ST (AQ9), (603)	12506460	RH	DISCON	COVER, P/SEAT CUSH (COGNAC)	
91–92	Y RECL FRT BKT ST (AQ9), (733)	12506462	RH	790.90	COVER, P/SEAT CUSH (RED)	9–J2,50
91	Y RECL FRT BKT ST (AQ9), (903)	12506464	RH	DISCON	COVER, P/SEAT CUSH (GRAY)	
91–93	Y MAN RECL FRT BKT ST (AR9), (193)	12517319	RH	615.00	COVER, P/SEAT CUSH (W/CUSH) (BLACK)	9–I24,19
91–93	Y MAN RECL FRT BKT ST (AR9), (19C)	12517320	RH	DISCON	COVER, P/SEAT CUSH (W/CUSH) (BLACK)	
91	Y MAN RECL FRT BKT ST (AR9), (603)	12517321	RH	DISCON	COVER, P/SEAT CUSH (W/CUSH) (COGNAC)	
91	Y MAN RECL FRT BKT ST (AR9), (60C)	12517322	RH	DISCON	COVER, P/SEAT CUSH (W/CUSH) (COGNAC)	
91	Y MAN RECL FRT BKT ST (AR9), (223)	12517323	RH	DISCON	COVER, P/SEAT CUSH (W/CUSH) (BLUE)	
91	Y MAN RECL FRT BKT ST (AR9), (903)	12517324	RH	DISCON	COVER, P/SEAT CUSH (W/CUSH) (GRAY)	
91–92	Y MAN RECL FRT BKT ST (AR9), (733)	12517325	RH	DISCON	COVER, P/SEAT CUSH (W/CUSH) (RED)	
92–93	Y RECL FRT BKT ST (AQ9), (103)	12510910	RH	790.90	COVER, P/SEAT CUSH (WHITE)	9–J2,50
92–93	Y RECL FRT BKT ST (AQ9), (143)	12510912	RH	790.90	COVER, P/SEAT CUSH (GRAY)	9–J2,50
92–93	Y RECL FRT BKT ST (AQ9), (643)	12510914	RH	790.90	COVER, P/SEAT CUSH (BEIGE)	9–J2,50
92–93	Y MAN RECL FRT BKT ST (AR9), (103)	12517326	RH	615.00	COVER, P/SEAT CUSH (W/CUSH) (WHITE)	9–I24,19
92–93	Y MAN RECL FRT BKT ST (AR9), (143)	12517327	RH	615.00	COVER, P/SEAT CUSH (W/CUSH) (GRAY)	9–I24,19
92–93	Y MAN RECL FRT BKT ST (AR9), (643)	12517328	RH	615.00	COVER, P/SEAT CUSH (W/CUSH) (BEIGE)	9–I24,19
93	Y MAN RECL FRT BKT ST (AR9), (703)	12517329	RH	722.60	COVER, P/SEAT CUSH (W/CUSH) (RED)	9–I24,19
93	Y RECL FRT BKT ST (AQ9), (703)	12518735	RH	722.60	COVER, P/SEAT CUSH (RED)	9–J2,50

© 2000 GENERAL MOTORS SERVICE PARTS OPERATIONS–CHEVROLET–14Y

14.880 COVER – TRIM, Front Seat Cushion (Con't)

93	Y RECL FRT BKT ST (AQ9), (793)	12518737	RH	722.60	COVER, P/SEAT CUSH (RED) ...	9–J2,50
94–96	Y MAN RECL FRT BKT ST (AR9), (143)	10248451	1	554.70	COVER, P/SEAT CUSH (GRAY) ..	9–J8,23
94–96	Y MAN RECL FRT BKT ST (AR9), (643)	10248466	1	554.70	COVER, P/SEAT CUSH (BEIGE) .	9–J8,23
94–96	Y MAN RECL FRT BKT ST (AR9), (193)	10248468	1	554.70	COVER, P/SEAT CUSH (BLACK) .	9–J8,23
94–96	Y MAN RECL FRT BKT ST (AR9), (703)	10248470	1	554.70	COVER, P/SEAT CUSH (RED) ...	9–J8,23
94	Y RECL FRT BKT ST (AQ9), (193)	10250859	1	DISCON	COVER, P/SEAT CUSH (INCLUDES PAD) (BLACK)	
94	Y RECL FRT BKT ST (AQ9), (703)	10250875	1	DISCON	COVER, P/SEAT CUSH (INCLUDES PAD) (RED)	
94	Y RECL FRT BKT ST (AQ9), (143)	10250879	1	DISCON	COVER, P/SEAT CUSH (INCLUDES PAD) (GRAY)	
94	Y RECL FRT BKT ST (AQ9), (643)	10250881	1	DISCON	COVER, P/SEAT CUSH (INCLUDES PAD) (BEIGE)	
95–96	Y RECL FRT BKT ST (AQ9), (193)	10262380	1	720.50	COVER, P/SEAT CUSH (BLACK) .	9–J13,29
95–96	Y RECL FRT BKT ST (AQ9), (703)	10262382	1	720.50	COVER, P/SEAT CUSH (RED) ...	9–J13,29
95–96	Y RECL FRT BKT ST (AQ9), (143)	10262384	1	720.50	COVER, P/SEAT CUSH (GRAY) ..	9–J13,29
95–96	Y RECL FRT BKT ST (AQ9), (643)	10262386	1	720.50	COVER, P/SEAT CUSH (BEIGE) .	9–J13,29
95	Y67 RECL FRT BKT ST (AQ9), (194)	12455825	1	720.50	COVER, P/SEAT CUSH (BLACK) .	9–J13,29
96	Y RECL FRT BKT ST (AQ9), COLLECTORS EDITION (Z15)	10262524	1	720.50	COVER, P/SEAT CUSH (RED) ...	9–J13,29
96	Y RECL FRT BKT ST (AQ9), GRAND SPORT EDITION (Z16)	10262524	1	720.50	COVER, P/SEAT CUSH (RED) ...	9–J13,29
96	Y RECL FRT BKT ST (AQ9), COLLECTORS EDITION (Z15), (194)	10262538	1	720.50	COVER, P/SEAT CUSH (BLACK) .	9–J13,29
96	Y RECL FRT BKT ST (AQ9), GRAND SPORT EDITION (Z16), (195)	10262538	1	720.50	COVER, P/SEAT CUSH (BLACK) .	9–J13,29
96	Y RECL FRT BKT ST (AQ9), COLLECTORS EDITION (Z15), (144)	10270162	1	720.50	COVER, P/SEAT CUSH (GRAY) ..	9–J13,29
91–93	Y RECL FRT BKT ST (AQ9), (193)	12506466	RH	172.30	TRIM, F/SEAT BOLS CUSH (BLACK)	9–J2,59
91–93	Y RECL FRT BKT ST (AQ9), (193)	12506467	LH	DISCON	TRIM, F/SEAT BOLS CUSH (BLACK)	
91	Y RECL FRT BKT ST (AQ9), (223)	12506468	RH	DISCON	TRIM, F/SEAT BOLS CUSH (BLUE)	
91	Y RECL FRT BKT ST (AQ9), (223)	12506469	LH	DISCON	TRIM, F/SEAT BOLS CUSH (BLUE)	
91	Y RECL FRT BKT ST (AQ9), (603)	12506470	RH	DISCON	TRIM, F/SEAT BOLS CUSH (COGNAC)	
91	Y RECL FRT BKT ST (AQ9), (603)	12506471	LH	DISCON	TRIM, F/SEAT BOLS CUSH (COGNAC)	
91–92	Y RECL FRT BKT ST (AQ9), (733)	12506472	RH	DISCON	TRIM, F/SEAT BOLS CUSH (RED) .	
91	Y RECL FRT BKT ST (AQ9), (903)	12506474	RH	172.30	TRIM, F/SEAT BOLS CUSH (GRAY)	9–I19,59
91	Y RECL FRT BKT ST (AQ9), (903)	12506475	LH	172.30	TRIM, F/SEAT BOLS CUSH (GRAY)	9–I19,17

© 2000 GENERAL MOTORS SERVICE PARTS OPERATIONS–CHEVROLET–14Y

14.880 COVER – TRIM, Front Seat Cushion (Con't)

92–93	Y RECL FRT BKT ST (AQ9), (103)	12510918	LH	172.30	TRIM, F/SEAT BOLS CUSH (WHITE)	9–J2,17
92–93	Y RECL FRT BKT ST (AQ9), (103)	12510919	RH	172.30	TRIM, F/SEAT BOLS CUSH (WHITE)	9–J2,59
92–93	Y RECL FRT BKT ST (AQ9), (143)	12510920	LH	172.30	TRIM, F/SEAT BOLS CUSH (GRAY)	9–J2,17
92–93	Y RECL FRT BKT ST (AQ9), (143)	12510921	RH	172.30	TRIM, F/SEAT BOLS CUSH (GRAY)	9–J2,59
92–93	Y RECL FRT BKT ST (AQ9), (643)	12510922	LH	172.30	TRIM, F/SEAT BOLS CUSH (BEIGE)	9–J2,17
92–93	Y RECL FRT BKT ST (AQ9), (643)	12510923	RH	172.30	TRIM, F/SEAT BOLS CUSH (BEIGE)	9–J2,59
93	Y RECL FRT BKT ST (AQ9), (703)	12518739	RH	172.30	TRIM, F/SEAT BOLS CUSH (RED)	9–J2,59
93	Y RECL FRT BKT ST (AQ9), (703)	12518740	LH	172.30	TRIM, F/SEAT BOLS CUSH (RED)	9–J2,17
93	Y RECL FRT BKT ST (AQ9), (793)	12518741	RH	172.30	TRIM, F/SEAT BOLS CUSH (RED)	9–J2,59
93	Y RECL FRT BKT ST (AQ9), (793)	12518742	LH	172.30	TRIM, F/SEAT BOLS CUSH (RED)	9–J2,17

14.890 PAD, Front Seat Cushion

92–93	Y RECL FRT BKT ST (AQ9)	12522165	1	DISCON	PAD, D/SEAT CUSH (W/WIRE)	
94–96	Y MAN RECL FRT BKT ST (AR9)	10248424	1	50.10	PAD, D/SEAT CUSH	9–J8,19
92–93	Y RECL FRT BKT ST (AQ9)	12522166	1	DISCON	PAD, P/SEAT CUSH (W/WIRE)	
94–96	Y MAN RECL FRT BKT ST (AR9)	10248424	1	50.10	PAD, P/SEAT CUSH	9–J8,19
84–88	Y RECL FRT BKT ST (AQ9)	14094551	1	DISCON	PAD, SEAT CUSH	

14.896 CUSHION, Front/Rear

91	Y RECL FRT BKT ST (AQ9)	12506455	LH	DISCON	CUSHION, D/SEAT (14.880)	
89–90	Y RECL FRT BKT ST (AQ9)	10148086	2	DISCON	CUSHION, D/SEAT BK (FOAM & WIRE) (14.890)	
90	Y MAN RECL FRT BKT ST (AR9), (223)	10137706	LH	DISCON	CUSHION, D/SEAT BK (BLUE)	
90	Y MAN RECL FRT BKT ST (AR9), (733)	10137707	LH	DISCON	CUSHION, D/SEAT BK (RED)	
90	Y MAN RECL FRT BKT ST (AR9), (193)	10137708	LH	DISCON	CUSHION, D/SEAT BK (BLACK)	
90	Y MAN RECL FRT BKT ST (AR9), (603)	10137709	LH	DISCON	CUSHION, D/SEAT BK (COGNAC)	
90	Y MAN RECL FRT BKT ST (AR9), (903)	10137710	LH	DISCON	CUSHION, D/SEAT BK (GRAY)	
91–93	Y RECL FRT BKT ST (AQ9)	12506478	1	DISCON	CUSHION, F/SEAT BK (PAD)	
91	Y RECL FRT BKT ST (AQ9)	12506454	RH	DISCON	CUSHION, P/SEAT (14.880)	
89–90	Y RECL FRT BKT ST (AQ9)	10148086	2	DISCON	CUSHION, P/SEAT BK (FOAM & WIRE) (14.890)	
90	Y MAN RECL FRT BKT ST (AR9), (223)	10137706	RH	DISCON	CUSHION, P/SEAT BK (BLUE)	
90	Y MAN RECL FRT BKT ST (AR9), (733)	10137707	RH	DISCON	CUSHION, P/SEAT BK (RED)	
90	Y MAN RECL FRT BKT ST (AR9), (193)	10137708	RH	DISCON	CUSHION, P/SEAT BK (BLACK)	
90	Y MAN RECL FRT BKT ST (AR9), (603)	10137709	RH	DISCON	CUSHION, P/SEAT BK (COGNAC)	
90	Y MAN RECL FRT BKT ST (AR9), (903)	10137710	RH	DISCON	CUSHION, P/SEAT BK (GRAY)	

© 2000 GENERAL MOTORS SERVICE PARTS OPERATIONS–CHEVROLET–14Y

MICROFICHE INDEX

GROUPS 14.000 THRU 15.000

FICHE 11 OF 11

GROUP	DESCRIPTION	STARTING GRID LOCATION PARTS	ILLUSTRATIONS
–	GENERAL INFORMATION	1–A2	1–G2
–	ALPHABETICAL INDEX	1–B13	N.A.
14.000	INTERIOR TRIM – SEAT BELTS	11–A2	11–E2
15.000	REAR SEAT TRIM – CARPETS – YARDAGE	11–D2	11–H2
–	OUT OF FICHE CALLS	N.A.	11–M16

11–D1

CHEVROLET
BODY GROUP 15.000

REAR SEAT TRIM – CARPETS – YARDAGE

ALPHABETICAL INDEX

B

BRACKET, Front Floor Carpet 15.300 11–D10
BUMPER, Rear Quarter 15.100 11–D6
BUMPER, Rear Seat to Back Window Panel 15.024 11–D6

C

CARPET, Front/Complete Floor 15.286 11–D6
CARPET, Rear Floor 15.306 11–D10

H

HANDLE, Rear Seat to Back Window Panel 15.024 11–D6
HOOK, Coat 15.386 11–D13
HOOK, Front Floor Carpet 15.300 11–D10
HOOK, Rear Seat to Back Window Panel 15.024 11–D6

I

INSULATOR, Floor Pan 15.492 11–D14
INSULATOR, Rear Floor 15.306 11–D10
INSULATOR, Rear Seat to Back Window Panel 15.024 11–D6

M

MATERIAL, Bulk Material 15.500 11–D14

P

PAD, Rear Seat Back 15.002 11–D6
PANEL, Rear Compartment Trim 15.222 11–D6
PLATE, Dash Panel 15.280 11–D6
PLATE, Rear Compartment Trim 15.222 11–D6

R

RETAINER, Front Floor Carpet 15.300 11–D10

S

SHADE, Rear Seat to Back Window Panel 15.024 11–D6
SHUTTER, Rear Quarter 15.100 11–D6
STRAP, Rear Compartment Trim 15.222 11–D6
SUPPORT, Rear Compartment Trim 15.222 11–D6
SUPPORT, Rear Floor 15.306 11–D10
SUPPORT, Rear Seat to Back Window Panel 15.024 11–D6

© GENERAL MOTORS SERVICE PARTS OPERATIONS–CHEVROLET–14Y

CHART INDEX

GROUP 15 GRID

ILLUS INDEX (GRP 15) 11–D5
CARPET I.D. 11–D15

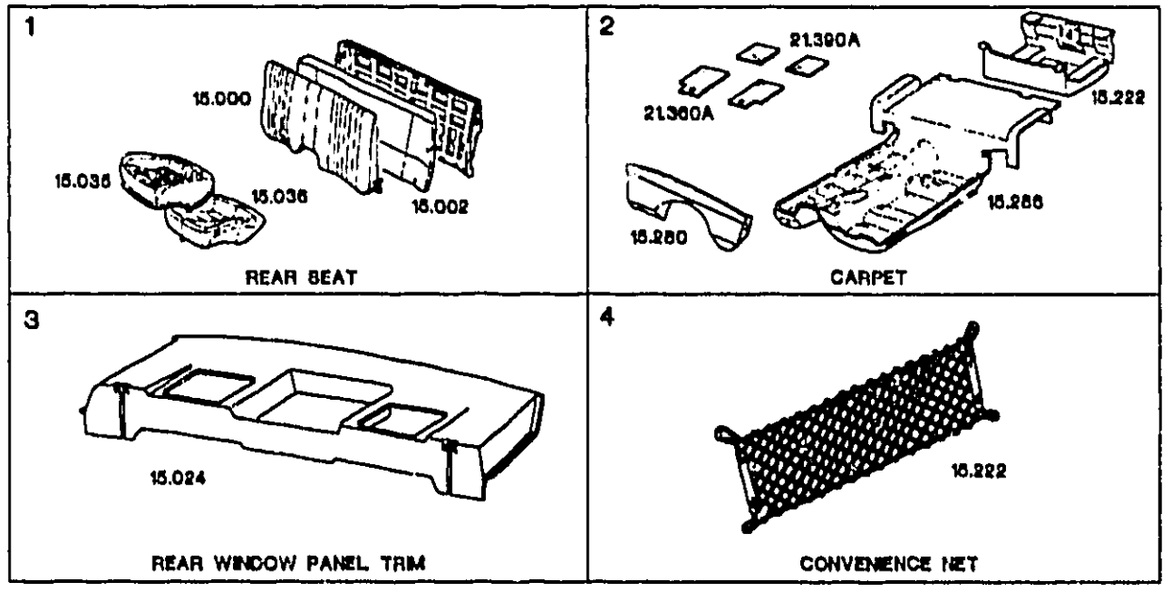

GROUP 15.000

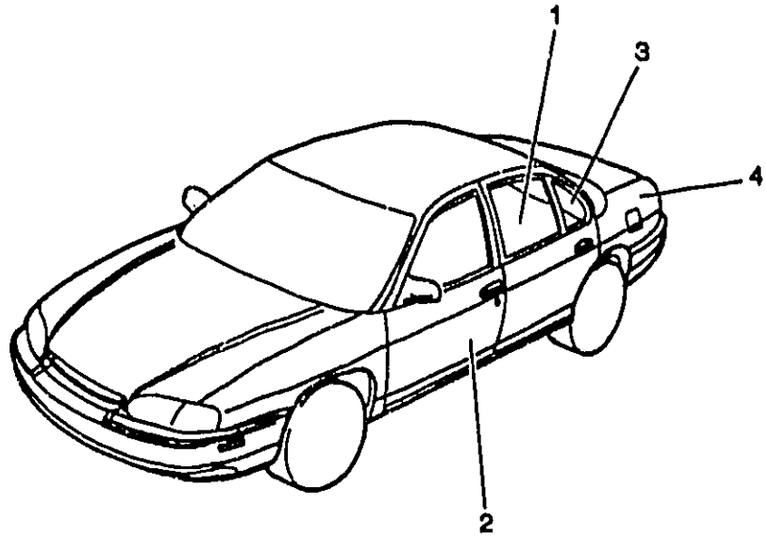

© 2000 GENERAL MOTORS SERVICE PARTS OPERATIONS-CHEVROLET-14Y

15.002 PAD, Rear Seat Back

84–88	Y AQ9	14079495	1	DISCON	PAD, BACKREST CUSH	

15.024 BUMPER – HANDLE – HOOK – INSULATOR – SHADE – SUPPORT, Rear Seat to Back Window Panel

84–96	Y07	365641	3	.39	BUMPER, LUGG SHADE HDL (12.986)	10–H15,32
84–94	Y07	14063620	1	7.50	HANDLE, LUGG SHADE	10–H15,21
84–96	Y07	14049015	LH	2.19	HOOK, LUGG SHADE CVR (12.981)	10–H15,26
84–96	Y07	14049016	RH	2.20	HOOK, LUGG SHADE CVR	10–H15,26
84–85	Y	14084406	1	DISCON	INSULATOR, LUGG SHADE CVR	
84–96	Y07	10251020	1	141.00	SHADE, LUGG	10–H15,21
84–96	Y07	14049029	LH	9.72	SUPPORT, LUGG SHADE (12.981)	10–H15,9
84–96	Y07	14049030	RH	9.72	SUPPORT, LUGG SHADE (12.981)	10–H15,9

15.100 BUMPER – SHUTTER, Rear Quarter

92–95	Y	16662198	2	.85	BUMPER, QTR INR TR FIN PNL	
96	Y07	16662198	4	.85	BUMPER, QTR INR TR FIN PNL	
84–91	Y	12503694	1	2.70	SHUTTER, QTR STOW COMPT LK CYL (CHROME) (15MM DIA) (12.945)	10–I5,7
84–91	Y	12503695	1	2.70	SHUTTER, QTR STOW COMPT LK CYL (12.945)	10–I5,7

15.222 PANEL – PLATE – STRAP – SUPPORT, Rear Compartment Trim

84–90	Y07	10193737	LH	36.10	PANEL, R/CMPT SI TR (11.120) (IF REPLACING THIS PART, MUST ALSO REPLACE RH SI PNL W/10193738 & RR PNL W/10193707)	10–H15,7
84–90	Y07	10193738	RH	33.25	PANEL, R/CMPT SI TR (11.120) (IF REPLACING THIS PART, MUST ALSO REPLACE LH SI PNL W/10193737 & RR PNL W/10193707)	10–H15,7
91–96	Y07	10193737	LH	36.10	PANEL, R/CMPT SI TR (11.120)	10–H15,7
91–96	Y07	10193738	RH	33.25	PANEL, R/CMPT SI TR (11.120)	10–H15,7
84–96	Y07	14049017	LH	13.60	PLATE, FLR PNL RR CPT TR	11–H7,19
84–96	Y07	14049018	RH	13.60	PLATE, FLR PNL RR CPT TR	11–H7,19
86–87	Y67 (12I)	14092791	1	DISCON	STRAP, LUGG STOW (GRAPHITE)	
86–87	Y67 (15I)	14092792	1	DISCON	STRAP, LUGG STOW (GRAY)	
86–87	Y67 (62I)	14092794	1	DISCON	STRAP, LUGG STOW (SADDLE)	
86–87	Y67 (65I)	14092795	1	DISCON	STRAP, LUGG STOW (BRONZE)	
88	Y (12I)	14092791	1	DISCON	STRAP, LUGG STOW (GRAPHITE)	
88–89	Y67 (60I)	10135991	1	DISCON	STRAP, LUGG STOW (COGNAC)	
88–96	Y07	10239258	RH	10.40	SUPPORT, R/CMPT SI CPT	11–H10,14
92–96	Y07	10239257	LH	10.40	SUPPORT, R/CMPT SI CPT	11–H10,14

15.280 PLATE, Dash Panel

91–96	Y	14043131	2	4.55	PLATE, F/FDR RR REINF NUT	10–F7,29

15.286 CARPET, Front/Complete Floor

84–87	Y (12I)	14060261	LH	DISCON	CARPET, F/FLR (GRAPHITE)
84–87	Y (12I)	14060262	RH	DISCON	CARPET, F/FLR (GRAPHITE)
84–87	Y (15I)	14060263	LH	DISCON	CARPET, F/FLR (GRAY)
84–87	Y (15I)	14060264	RH	DISCON	CARPET, F/FLR (GRAY)
84–87	Y (65I)	14060267	LH	DISCON	CARPET, F/FLR (GRAY)

© 2000 GENERAL MOTORS SERVICE PARTS OPERATIONS–CHEVROLET–14Y

15.286 CARPET, Front/Complete Floor (Con't)

84–87	Y (65I)	14060268	RH	DISCON	CARPET, F/FLR (GRAY)	
84–87	Y (62I)	14060269	LH	DISCON	CARPET, F/FLR (GRAY)	
84–87	Y (62I)	14060270	RH	DISCON	CARPET, F/FLR (GRAY)	
84–85	Y (74I)	14060271	LH	DISCON	CARPET, F/FLR (GRAY)	
84–85	Y (74I)	14060272	RH	DISCON	CARPET, F/FLR (GRAY)	
86–87	Y (21I)	14094211	LH	DISCON	CARPET, F/FLR (BLUE)	
86–87	Y (21I)	14094212	RH	DISCON	CARPET, F/FLR (BLUE)	
86–87	Y (73I)	14094213	LH	DISCON	CARPET, F/FLR (RED)	
86–87	Y (73I)	14094214	RH	DISCON	CARPET, F/FLR (RED)	
88	Y (11I), (19I)	10089503	LH	DISCON	CARPET, F/FLR (BLACK)	
88	Y (11I), (19I)	10089504	RH	DISCON	CARPET, F/FLR (BLACK)	
88–89	Y (21I)	10089505	LH	DISCON	CARPET, F/FLR (BLUE)	
88–89	Y (21I)	10089506	RH	DISCON	CARPET, F/FLR (BLUE)	
88–89	Y (60I)	10089507	LH	DISCON	CARPET, F/FLR (COGNAC)	
38–89	Y (60I)	10089508	RH	DISCON	CARPET, F/FLR (COGNAC)	
88–89	Y (73I)	10089509	LH	DISCON	CARPET, F/FLR (RED)	
88–89	Y (73I)	10089510	RH	DISCON	CARPET, F/FLR (RED)	
88–89	Y (90I)	10089511	LH	DISCON	CARPET, F/FLR (GRAY)	
88–89	Y (90I)	10089512	RH	DISCON	CARPET, F/FLR (GRAY)	
89	Y (19I)	10089503	LH	DISCON	CARPET, F/FLR (BLACK)	
89	Y (19I)	10089504	RH	DISCON	CARPET, F/FLR (BLACK)	
90–91	Y (22I)	10132917	LH	DISCON	CARPET, F/FLR (BLUE)	
90–91	Y (22I)	10132918	RH	DISCON	CARPET, F/FLR (BLUE)	
90–91	Y (60I)	10132919	LH	DISCON	CARPET, F/FLR (COGNAC)	
90–91	Y (60I)	10132920	RH	DISCON	CARPET, F/FLR (COGNAC)	
90–92	Y (73I)	10132921	LH	DISCON	CARPET, F/FLR (RED)	
90–92	Y (73I)	10132922	RH	DISCON	CARPET, F/FLR (RED)	
90–91	Y (90I)	10132923	LH	DISCON	CARPET, F/FLR (GRAY)	
90–91	Y (90I)	10132924	RH	DISCON	CARPET, F/FLR (GRAY)	
90–91	Y (19I)	10219729	LH	DISCON	CARPET, F/FLR (BLACK)	
90–91	Y (19I)	10219730	RH	DISCON	CARPET, F/FLR (BLACK)	
92–93	Y (10I), (19I)	10219729	LH	DISCON	CARPET, F/FLR (BLACK)	
92–93	Y (10I), (19I)	10219730	RH	DISCON	CARPET, F/FLR (BLACK)	
92–93	Y (64I)	10219731	LH	134.40	CARPET, F/FLR (BEIGE)	11–H10,10
92–93	Y (34I)	10219732	RH	DISCON	CARPET, F/FLR (BEIGE)	
92–93	Y (14I)	10219733	LH	DISCON	CARPET, F/FLR (GRAY)	
92–93	Y (14I)	10219734	RH	DISCON	CARPET, F/FLR (GRAY)	
93	Y (79I)	10219735	LH	DISCON	CARPET, F/FLR (RED)	
93	Y (79I)	10219736	RH	DISCON	CARPET, F/FLR (RED)	
93	Y (70I)	10219737	LH	DISCON	CARPET, F/FLR (RED)	
93	Y (70I)	10219738	RH	DISCON	CARPET, F/FLR (RED)	
94–96	Y (19I)	10238533	LH	151.70	CARPET, F/FLR (BLACK)	11–H10,10
94–96	Y (19I)	10238534	RH	151.70	CARPET, F/FLR (BLACK)	11–H10,10
94–96	Y (64I)	10238535	LH	151.70	CARPET, F/FLR (PIERCE HOLE FOR GROM IF REQ) (BEIGE)	11–H10,10
94–96	Y (64I)	10238536	RH	151.70	CARPET, F/FLR (BEIGE)	11–H10,10
94–96	Y (14I)	10238537	LH	151.70	CARPET, F/FLR (PIERCE HOLE FOR GROM IF REQ) (GRAY)	11–H10,10
94–96	Y (14I)	10238538	RH	151.70	CARPET, F/FLR (GRAY)	11–H10,10
94–95	Y (70I)	10238539	LH	151.70	CARPET, F/FLR (PIERCE HOLE FOR GROM IF REQ) (RED)	11–H10,10
94–95	Y (70I)	10238540	RH	151.70	CARPET, F/FLR (RED)	11–H10,10
96	Y (70I), (EXC GRAND SPORT EDITION (Z16)	10238539	LH	151.70	CARPET, F/FLR (RED)	11–H10,10
96	Y (70I), (EXC GRAND SPORT EDITION (Z16)	10238540	RH	151.70	CARPET, F/FLR (RED)	11–H10,10
84–85	Y (28I)	14060265	LH	DISCON	CARPET, FLR PNL (BLUE)	

© 2000 GENERAL MOTORS SERVICE PARTS OPERATIONS–CHEVROLET–14Y

15.286 CARPET, Front/Complete Floor (Con't)

84–85	Y (23I)	14058395	1	DISCON	CARPET, INTER FLR (PNL EXT) (BLUE)	
84–85	Y (74I)	14058398	1	DISCON	CARPET, INTER FLR (PNL EXT) (CARMINE)	
84–87	Y07 (12I)	14049065	1	DISCON	CARPET, INTER FLR (PNL EXT) (GRAPHITE)	
84–87	Y07 (15I)	14058394	1	DISCON	CARPET, INTER FLR (PNL EXT) (GRAY)	
84–87	Y07 (65I)	14058396	1	DISCON	CARPET, INTER FLR (PNL EXT) (BRONZE)	
84–87	Y07 (62I)	14058397	1	DISCON	CARPET, INTER FLR (PNL EXT) (SADDLE)	
86–87	Y07 (21I)	14094223	1	DISCON	CARPET, INTER FLR (PNL EXT) (BLUE)	
86–87	Y07 (73I)	14094224	1	DISCON	CARPET, INTER FLR (PNL EXT) (RED)	
86–87	Y67 (12I)	14092773	1	DISCON	CARPET, INTER FLR (PNL EXT) (GRAPHITE)	
86–87	Y67 (15I)	14092774	1	DISCON	CARPET, INTER FLR (PNL EXT) (GRAY)	
86–87	Y67 (21I)	14092775	1	DISCON	CARPET, INTER FLR (PNL EXT) (BLUE)	
86–87	Y67 (62I)	14092776	1	DISCON	CARPET, INTER FLR (PNL EXT) (SADDLE)	
86–87	Y67 (65I)	14092777	1	DISCON	CARPET, INTER FLR (PNL EXT) (BRONZE)	
86–87	Y67 (73I)	14092778	1	DISCON	CARPET, INTER FLR (PNL EXT) (RED)	
88–89	Y07 (21I)	10089539	1	DISCON	CARPET, INTER FLR (PNL EXT) (BLUE)	
88–89	Y07 (60I)	10089540	1	DISCON	CARPET, INTER FLR (PNL EXT) (COGNAC)	
88–89	Y07 (73I)	10089541	1	DISCON	CARPET, INTER FLR (PNL EXT) (RED)	
88–89	Y07 (90I)	10089542	1	DISCON	CARPET, INTER FLR (PNL EXT) (SMOKE GRAY)	
88	Y07 (11I), (19I)	10219709	1	DISCON	CARPET, INTER FLR (PNL EXT) (BLACK)	
88	Y67 (21I)	10089551	1	140.90	CARPET, INTER FLR (PNL EXT) (BLUE)	11–H4,12
88–89	Y67 (19I)	10125916	1	DISCON	CARPET, INTER FLR (PNL EXT) (BLACK)	
89	Y07 (73I)	10103709	1	DISCON	CARPET, INTER FLR (PNL EXT) (RED)	
89	Y07 (19I)	10219709	1	DISCON	CARPET, INTER FLR (PNL EXT) (BLACK)	
89	Y67 (19I)	10137727	1	DISCON	CARPET, INTER FLR (PNL EXT) (BLACK)	
89	Y67 (21I)	10137728	1	DISCON	CARPET, INTER FLR (PNL EXT) (BLUE)	
89	Y67 (73I)	10137730	1	DISCON	CARPET, INTER FLR (PNL EXT) (RED)	
89	Y67 (90I)	10137731	1	DISCON	CARPET, INTER FLR (PNL EXT) (GRAY)	
90–91	Y07 (60I), (EXC SPECIAL PERFORMANCE PKG (ZR1)	10089540	1	DISCON	CARPET, INTER FLR (PNL EXT) (COGNAC)	
90–92	Y07 (73I), (EXC SPECIAL PERFORMANCE PKG (ZR1)	10089541	1	DISCON	CARPET, INTER FLR (PNL EXT) (RED)	
90–91	Y07 (90I), (EXC SPECIAL PERFORMANCE PKG (ZR1)	10089542	1	DISCON	CARPET, INTER FLR (PNL EXT) (GRAY)	

© 2000 GENERAL MOTORS SERVICE PARTS OPERATIONS–CHEVROLET–14Y

15.286 CARPET, Front/Complete Floor (Con't)

90–91	Y07 SPECIAL PERFORMANCE PKG (ZR1), (60I)	10103708	1	DISCON	CARPET, INTER FLR (PNL EXT) (COGNAC)	
90–92	Y07 SPECIAL PERFORMANCE PKG (ZR1), (73I)	10103709	1	DISCON	CARPET, INTER FLR (PNL EXT) (RED)	
90–91	Y07 SPECIAL PERFORMANCE PKG (ZR1), (90I)	10103710	1	DISCON	CARPET, INTER FLR (PNL EXT) (GRAY)	
90–91	Y07 SPECIAL PERFORMANCE PKG (ZR1), (22I)	10135958	1	DISCON	CARPET, INTER FLR (PNL EXT) (BLUE)	
90–91	Y07 (22I), (EXC SPECIAL PERFORMANCE PKG (ZR1)	10135959	1	DISCON	CARPET, INTER FLR (PNL EXT) (BLUE)	
90–91	Y07 (19I), (EXC SPECIAL PERFORMANCE PKG (ZR1)	10219700	1	DISCON	CARPET, INTER FLR (PNL EXT) (BLACK)	
90–91	Y67 (60I)	10149219	1	DISCON	CARPET, INTER FLR (PNL EXT) (COGNAC)	
90–92	Y67 (73I)	10149220	1	DISCON	CARPET, INTER FLR (PNL EXT) (RED)	
90–91	Y67 (90I)	10149221	1	DISCON	CARPET, INTER FLR (PNL EXT) (GRAY)	
90–91	Y67 (22I)	10149222	1	DISCON	CARPET, INTER FLR (PNL EXT) (BLUE)	
90–91	Y67 (19I)	10219721	1	DISCON	CARPET, INTER FLR (PNL EXT) (BLACK)	
92–93	Y07 (10I), (19I), (EXC SPECIAL PERFORMANCE PKG (ZR1)	10219709	1	DISCON	CARPET, INTER FLR (PNL EXT) (BLACK)	
92–93	Y07 (64I), (EXC SPECIAL PERFORMANCE PKG (ZR1)	10219710	1	DISCON	CARPET, INTER FLR (PNL EXT) (BEIGE)	
92–93	Y07 (14I), (EXC SPECIAL PERFORMANCE PKG (ZR1)	10219711	1	DISCON	CARPET, INTER FLR (PNL EXT) (GRAY)	
92–93	Y07 SPECIAL PERFORMANCE PKG (ZR1), (64I)	10219716	1	DISCON	CARPET, INTER FLR (PNL EXT) (BEIGE)	
92–93	Y07 SPECIAL PERFORMANCE PKG (ZR1), (14I)	10219717	1	DISCON	CARPET, INTER FLR (PNL EXT) (GRAY)	
92–93	Y67 (10I), (19I)	10219721	1	DISCON	CARPET, INTER FLR (PNL EXT) (BLACK)	
92–93	Y67 (64I)	10219722	1	DISCON	CARPET, INTER FLR (PNL EXT) (BEIGE)	
92–93	Y67 (14I)	10219723	1	DISCON	CARPET, INTER FLR (PNL EXT) (GRAY)	
93	Y07 (70I), (EXC SPECIAL PERFORMANCE PKG (ZR1)	10219713	1	DISCON	CARPET, INTER FLR (PNL EXT) (RED)	
93	Y07 SPECIAL PERFORMANCE PKG (ZR1), (70I)	10219719	1	DISCON	CARPET, INTER FLR (PNL EXT) (RED)	
93	Y67 (70I)	10219725	1	DISCON	CARPET, INTER FLR (PNL EXT) (RED)	
88	Y67 (73I)	10125919	1	DISCON	CARPET, INTER FLR PNL EXT (RED)	
94–95	Y07 (19I), (EXC SPECIAL PERFORMANCE PKG (ZR1)	10238500	1	101.10	CARPET, INTER FLR PNL EXTN (BLACK)	11–H10,16
94–95	Y07 (64I), (EXC SPECIAL PERFORMANCE PKG (ZR1)	10238501	1	101.10	CARPET, INTER FLR PNL EXTN (BEIGE)	11–H10,16
94–95	Y07 (14I), (EXC SPECIAL PERFORMANCE PKG (ZR1)	10238502	1	101.10	CARPET, INTER FLR PNL EXTN (GRAY)	11–H10,16

© 2000 GENERAL MOTORS SERVICE PARTS OPERATIONS–CHEVROLET–14Y

15.286 CARPET, Front/Complete Floor (Con't)

94–95	Y07 (70I), (EXC SPECIAL PERFORMANCE PKG (ZR1)	10238503	1	101.10	CARPET, INTER FLR PNL EXTN (RED)	11–H10,16
94–95	Y07 SPECIAL PERFORMANCE PKG (ZR1), (19I)	10238505	1	88.60	CARPET, INTER FLR PNL EXTN (BLACK)	11–H10,16
94–95	Y07 SPECIAL PERFORMANCE PKG (ZR1), (64I)	10238506	1	DISCON	CARPET, INTER FLR PNL EXTN (BEIGE)	
94–95	Y07 SPECIAL PERFORMANCE PKG (ZR1), (14I)	10238507	1	DISCON	CARPET, INTER FLR PNL EXTN (GRAY)	
94–95	Y07 SPECIAL PERFORMANCE PKG (ZR1), (70I)	10238508	1	DISCON	CARPET, INTER FLR PNL EXTN (RED)	
94–96	Y67 (19I)	10238510	1	101.10	CARPET, INTER FLR PNL EXTN (BLACK)	11–H16,12
94–96	Y67 (64I)	10238511	1	101.10	CARPET, INTER FLR PNL EXTN (BEIGE)	11–H16,12
94–96	Y67 (14I)	10238512	1	101.10	CARPET, INTER FLR PNL EXTN (GRAY)	11–H16,12
94–95	Y67 (70I)	10238513	1	101.10	CARPET, INTER FLR PNL EXTN (RED)	11–H16,12
96	Y07 (19I), (EXC GRAND SPORT EDITION (Z16)	10238500	1	101.10	CARPET, INTER FLR PNL EXTN (BLACK)	11–H10,16
96	Y07 (64I)	10238501	1	101.10	CARPET, INTER FLR PNL EXTN (BEIGE)	11–H10,16
96	Y07 (14I)	10238502	1	101.10	CARPET, INTER FLR PNL EXTN (GRAY)	11–H10,16
96	Y07 (70I), (EXC GRAND SPORT EDITION (Z16)	10238503	1	101.10	CARPET, INTER FLR PNL EXTN (RED)	11–H10,16
96	Y07 GRAND SPORT EDITION (Z16), (19I), (70I)	10238505	1	88.60	CARPET, INTER FLR PNL EXTN (BLACK)	11–H10,16
96	Y67 (70I), (EXC GRAND SPORT EDITION (Z16)	10238513	1	101.10	CARPET, INTER FLR PNL EXTN (RED)	11–H16,12

15.300 BRACKET – HOOK – RETAINER, Front Floor Carpet

84–96	Y	14060290	3	.50	BRACKET, F/FLR CPT RET	11–H4,15
95–96	Y	10275204	LH	.60	HOOK, F/FLR CPT	
84–86	Y (19I)	10250703	1	8.30	RETAINER, F/FLR CPT (BLACK)	11–H4,14
86–89	Y (21I)	14100251	1	DISCON	RETAINER, F/FLR CPT (BLUE)	
89–91	Y (60I)	10076654	1	DISCON	RETAINER, F/FLR CPT (COGNAC)	
89–91	Y (90I)	10076655	1	DISCON	RETAINER, F/FLR CPT (GRAY)	
89–92	Y (73I)	14094220	1	DISCON	RETAINER, F/FLR CPT (RED)	
90–91	Y (22I)	10135940	1	DISCON	RETAINER, F/FLR CPT (BLUE)	
92–93	Y (10I)	10250703	1	8.30	RETAINER, F/FLR CPT (BLACK)	11–H4,14
92–96	Y (14I)	10250704	1	8.30	RETAINER, F/FLR CPT (GRAY)	11–H10,12
92–96	Y (64I)	10250705	1	8.30	RETAINER, F/FLR CPT (BEIGE)	11–H10,12
93	Y (70I)	10250706	1	8.30	RETAINER, F/FLR CPT (RED)	11–H10,12
94–95	Y (70I)	10250706	1	8.30	RETAINER, F/FLR CPT (RED)	11–H10,12
96	Y (70I), (EXC GRAND SPORT EDITION (Z16)	10250706	1	8.30	RETAINER, F/FLR CPT (RED)	11–H10,12
94	Y	480534	AR	*.84	RETAINER, F/FLR CPT RET (11.419)	
95	Y	480534	1	*.84	RETAINER, F/FLR CPT RET (11.419)	

15.306 CARPET – INSULATOR – SUPPORT, Rear Floor

88–89	Y67 (19I)	10104225	LH	DISCON	CARPET, FLR PNL RR (BLACK)
88–89	Y67 (60I)	10104229	LH	DISCON	CARPET, FLR PNL RR (COGNAC)

© 2000 GENERAL MOTORS SERVICE PARTS OPERATIONS–CHEVROLET–14Y

15.306 CARPET – INSULATOR – SUPPORT, Rear Floor (Con't)

88–89	Y67 (90I)	10104233	LH	DISCON	CARPET, FLR PNL RR (GRAY)
84–86	Y (28I)	14076535	1	DISCON	CARPET, FLR RR (CTR) (BLUE)
84–85	Y (47I)	14076538	1	DISCON	CARPET, FLR RR (CTR) (CARMINE)
84–85	Y (28I)	14078691	LH	DISCON	CARPET, FLR RR (BLUE)
84–85	Y (28I)	14078692	RH	DISCON	CARPET, FLR RR (BLUE)
84–85	Y (74I)	14078699	LH	DISCON	CARPET, FLR RR (CARMINE)
84–85	Y (74I)	14078700	RH	DISCON	CARPET, FLR RR (CARMINE)
84–87	Y07 (12I)	14076533	1	DISCON	CARPET, FLR RR (CTR) (GRAPHITE)
84–87	Y07 (15I)	14076534	1	DISCON	CARPET, FLR RR (CTR) (GRAY)
84–87	Y07 (65I)	14076536	1	DISCON	CARPET, FLR RR (CTR) (BRONZE)
84–87	Y07 (62I)	14076537	1	DISCON	CARPET, FLR RR (CTR) (SADDLE)
84–87	Y07 (12I)	14078689	LH	DISCON	CARPET, FLR RR (GRAPHITE)
84–87	Y07 (12I)	14078690	RH	DISCON	CARPET, FLR RR (GRAPHITE)
84–87	Y07 (62I)	14078693	LH	DISCON	CARPET, FLR RR (SADDLE)
84–87	Y07 (62I)	14078694	RH	DISCON	CARPET, FLR RR (SADDLE)
84–87	Y07 (65I)	14078695	LH	DISCON	CARPET, FLR RR (BRONZE)
84–87	Y07 (65I)	14078696	RH	DISCON	CARPET, FLR RR (BRONZE)
84–87	Y07 (15I)	14076697	LH	DISCON	CARPET, FLR RR (GRAY)
84–87	Y07 (15I)	14078698	RH	DISCON	CARPET, FLR RR (GRAY)
86–87	Y07 (21I)	14094215	LH	DISCON	CARPET, FLR RR (BLUE)
86–87	Y07 (21I)	14094216	RH	DISCON	CARPET, FLR RR (BLUE)
86–87	Y07 (73I)	14094217	LH	DISCON	CARPET, FLR RR (RED)
86–87	Y07 (73I)	14094218	RH	DISCON	CARPET, FLR RR (RED)
86–87	Y07 (73I)	14094222	1	DISCON	CARPET, FLR RR (RED)
86–87	Y07 (21I)	14100221	1	DISCON	CARPET, FLR RR (CTR) (BLUE)
86–87	Y67 (12I)	14092755	LH	DISCON	CARPET, FLR RR (GRAPHITE)
86–87	Y67 (12I)	14092756	RH	DISCON	CARPET, FLR RR (GRAPHITE)
86–87	Y67 (15I)	14092757	LH	DISCON	CARPET, FLR RR (GRAY)
86–87	Y67 (15I)	14092758	RH	DISCON	CARPET, FLR RR (GRAY)
86–87	Y67 (21I)	14092759	LH	DISCON	CARPET, FLR RR (BLUE)
86–87	Y67 (21I)	14092760	RH	DISCON	CARPET, FLR RR (BLUE)
86–87	Y67 (62I)	14092761	LH	DISCON	CARPET, FLR RR (SADDLE)
86–87	Y67 (62I)	14092762	RH	DISCON	CARPET, FLR RR (SADDLE)
86–87	Y67 (65I)	14092763	LH	DISCON	CARPET, FLR RR (BRONZE)
86–87	Y67 (65I)	14092764	RH	DISCON	CARPET, FLR RR (BRONZE)
86–87	Y67 (73I)	14092765	LH	DISCON	CARPET, FLR RR (RED)
86–87	Y67 (73I)	14092766	RH	DISCON	CARPET, FLR RR (RED)
86–87	Y67 (12I)	14092767	1	DISCON	CARPET, FLR RR (CTR) (GRAPHITE)
86–87	Y67 (15I)	14092768	1	DISCON	CARPET, FLR RR (CTR) (GRAY)
86–87	Y67 (21I)	14092769	1	DISCON	CARPET, FLR RR (CTR) (BLUE)
86–87	Y67 (62I)	14092770	1	DISCON	CARPET, FLR RR (CTR) (SADDLE)
86–87	Y67 (65I)	14092771	1	DISCON	CARPET, FLR RR (CTR) (BRONZE)
86–87	Y67 (73I)	14092772	1	DISCON	CARPET, FLR RR (CTR) (RED)
88–89	Y07 (21I)	10089529	LH	DISCON	CARPET, FLR RR (BLUE)
88–89	Y07 (21I)	10089530	RH	DISCON	CARPET, FLR RR (BLUE)
88–91	Y07 (60I)	10089531	LH	DISCON	CARPET, FLR RR (COGNAC)
88–91	Y07 (60I)	10089532	RH	DISCON	CARPET, FLR RR (COGNAC)
88–92	Y07 (73I)	10089533	LH	DISCON	CARPET, FLR RR (RED)
88–92	Y07 (73I)	10089534	RH	DISCON	CARPET, FLR RR (RED)
88–91	Y07 (90I)	10089535	LH	DISCON	CARPET, FLR RR (GRAY)
88–91	Y07 (90I)	10089536	RH	DISCON	CARPET, FLR RR (GRAY)
88	Y07 (11I), (19I)	10089544	1	DISCON	CARPET, FLR RR (CTR) (BLACK)
88–89	Y07 (21I)	10089545	1	DISCON	CARPET, FLR RR (CTR) (BLUE)
88–91	Y07 (60I)	10089546	1	DISCON	CARPET, FLR RR (CTR) (COGNAC)
88–91	Y07 (73I)	10089547	1	DISCON	CARPET, FLR RR (CTR) (RED)

© 2000 GENERAL MOTORS SERVICE PARTS OPERATIONS–CHEVROLET–14Y

15.306 CARPET – INSULATOR – SUPPORT, Rear Floor (Con't)

88–91	Y07 (90I)	10089548	1	DISCON	CARPET, FLR RR (CTR) (GRAY)	
88	Y07 (11I), (19I)	10219761	LH	80.20	CARPET, FLR RR (BLACK)	11–H10,7
88	Y07 (11I), (19I)	10219762	RH	DISCON	CARPET, FLR RR (BLACK)	
88–89	Y67 (19I)	10089558	RH	136.50	CARPET, FLR RR (BLACK)	
88–89	Y67 (60I)	10089562	RH	136.50	CARPET, FLR RR (COGNAC)	
88–89	Y67 (19I)	10089568	1	DISCON	CARPET, FLR RR (CTR) (BLACK)	
88–89	Y67 (21I)	10089569	1	DISCON	CARPET, FLR RR (CTR) (BLUE)	
88–89	Y67 (60I)	10089570	1	DISCON	CARPET, FLR RR (CTR) (COGNAC)	
88–89	Y67 (73I)	10089571	1	DISCON	CARPET, FLR RR (CTR) (RED)	
88–89	Y67 (90I)	10089572	1	DISCON	CARPET, FLR RR (CTR) (GRAY)	
88–89	Y67 (21I)	10104228	RH	DISCON	CARPET, FLR RR (BLUE)	
88–89	Y67 (73I)	10104231	LH	DISCON	CARPET, FLR RR (RED)	
88–89	Y67 (73I)	10104232	RH	DISCON	CARPET, FLR RR (RED)	
89–91	Y07 (19I)	10089544	1	DISCON	CARPET, FLR RR (CTR) (BLACK)	
89–91	Y07 (19I)	10219761	LH	80.20	CARPET, FLR RR (BLACK)	11–H10,7
89–91	Y07 (19I)	10219762	RH	DISCON	CARPET, FLR RR (BLACK)	
90–91	Y07 (22I)	10135955	LH	DISCON	CARPET, FLR RR (BLUE)	
90–91	Y07 (22I)	10135956	RH	DISCON	CARPET, FLR RR (BLUE)	
90–91	Y07 (22I)	10135960	1	DISCON	CARPET, FLR RR (CTR) (BLUE)	
90–91	Y67 (22I)	10123095	LH	DISCON	CARPET, FLR RR (BLUE)	
90–91	Y67 (22I)	10123096	RH	DISCON	CARPET, FLR RR (BLUE)	
90–91	Y67 (60I)	10123097	LH	DISCON	CARPET, FLR RR (COGNAC)	
90–91	Y67 (60I)	10123098	RH	DISCON	CARPET, FLR RR (COGNAC)	
90–91	Y67 (90I)	10125901	LH	DISCON	CARPET, FLR RR (GRAY)	
90–91	Y67 (90I)	10125902	RH	DISCON	CARPET, FLR RR (GRAY)	
90–91	Y67 (19I)	10125903	1	DISCON	CARPET, FLR RR (CTR) (BLACK)	
90–91	Y67 (22I)	10125904	1	DISCON	CARPET, FLR RR (CTR) (BLUE)	
90–91	Y67 (60I)	10125905	1	DISCON	CARPET, FLR RR (CTR) (COGNAC)	
90–91	Y67 (73I)	10125906	1	DISCON	CARPET, FLR RR (CTR) (RED)	
90–91	Y67 (90I)	10125907	1	DISCON	CARPET, FLR RR (CTR) (GRAY)	
90–91	Y67 (19I)	10193761	LH	136.50	CARPET, FLR RR (BLACK) (15.300)	11–H16,18
90–92	Y67 (73I)	10193763	LH	DISCON	CARPET, FLR RR (RED) (15.300)	
90–92	Y67 (73I)	10193764	RH	DISCON	CARPET, FLR RR (RED) (15.300)	
90–91	Y67 (19I)	10219778	RH	DISCON	CARPET, FLR RR (BLACK)	
92–93	Y07 (10I), (19I)	10219761	LH	80.20	CARPET, FLR RR (BLACK)	11–H10,7
92–93	Y07 (10I), (19I)	10219762	RH	DISCON	CARPET, FLR RR (BLACK)	
92–93	Y67 (64I)	10175605	LH	136.50	CARPET, FLR RR (BEIGE) (15.300)	11–H16,18
92–93	Y67 (64I)	10175606	RH	136.50	CARPET, FLR RR (BEIGE) (15.300)	11–H16,18
92–93	Y67 (10I), (19I)	10193761	LH	136.50	CARPET, FLR RR (BLACK) (15.300)	11–H16,18
93	Y07 (79I)	10219767	LH	DISCON	CARPET, FLR RR (RED)	
93	Y07 (79I)	10219768	RH	DISCON	CARPET, FLR RR (RED)	
93	Y67 (79I)	10219779	LH	DISCON	CARPET, FLR RR (RED)	
94–96	Y07 (19I)	10238543	LH	80.20	CARPET, FLR RR (BLACK)	11–H10,7
94–96	Y07 (19I)	10238544	RH	80.20	CARPET, FLR RR (BLACK)	11–H10,7
94–96	Y07 (64I)	10238545	LH	80.20	CARPET, FLR RR (BEIGE)	11–H10,7
94–96	Y07 (64I)	10238546	RH	80.20	CARPET, FLR RR (BEIGE)	11–H10,7
94–96	Y07 (14I)	10238547	LH	80.20	CARPET, FLR RR (GRAY)	11–H10,7
94–96	Y07 (14I)	10238548	RH	80.20	CARPET, FLR RR (GRAY)	11–H10,7
94–95	Y07 (70I)	10238549	LH	80.20	CARPET, FLR RR (RED)	11–H10,7
94–95	Y07 (70I)	10238550	RH	80.20	CARPET, FLR RR (RED)	11–H10,7
94–96	Y67 (64I)	10238553	LH	80.20	CARPET, FLR RR (BEIGE)	11–H16,18
94–96	Y67 (64I)	10238554	RH	80.20	CARPET, FLR RR (BEIGE)	11–H16,18
94–96	Y67 (14I)	10238555	LH	80.20	CARPET, FLR RR (GRAY)	11–H16,18
94–96	Y67 (14I)	10238556	RH	80.20	CARPET, FLR RR (GRAY)	11–H16,18
94–96	Y67 (19I)	10238557	LH	80.20	CARPET, FLR RR (BLACK)	11–H16,18
94–96	Y67 (19I)	10238558	RH	80.20	CARPET, FLR RR (BLACK)	11–H16,18
94–95	Y67 (70I)	10238559	LH	80.20	CARPET, FLR RR (RED)	11–H16,18

© 2000 GENERAL MOTORS SERVICE PARTS OPERATIONS–CHEVROLET–14Y

15.306 CARPET – INSULATOR – SUPPORT, Rear Floor (Con't)

94–95	Y67 (70I)	10238560	RH	80.20	CARPET, FLR RR (RED)	11–H16,18
96	Y07 (70I), (EXC GRAND SPORT EDITION (Z16)	10238549	LH	80.20	CARPET, FLR RR (RED)	11–H10,7
96	Y07 (70I), (EXC GRAND SPORT EDITION (Z16)	10238550	RH	80.20	CARPET, FLR RR (RED)	11–H10,7
96	Y67 (70I), (EXC GRAND SPORT EDITION (Z16)	10238559	LH	80.20	CARPET, FLR RR (RED)	11–H16,18
96	Y67 (70I), (EXC GRAND SPORT EDITION (Z16)	10238560	RH	80.20	CARPET, FLR RR (RED)	11–H16,18
92	Y07 (73I)	10175657	1	DISCON	CARPET, FLR RR PNL CTR (RED)	
92–93	Y07 (10I), (19I)	10219674	1	DISCON	CARPET, FLR RR PNL CTR (BLACK)	
92–93	Y07 (64I)	10219675	1	DISCON	CARPET, FLR RR PNL CTR (BEIGE)	
92–93	Y07 (14I)	10219676	1	DISCON	CARPET, FLR RR PNL CTR (GRAY)	
92–93	Y07 (64I)	10219763	LH	DISCON	CARPET, FLR RR PNL CTR (BEIGE)	
92–93	Y07 (64I)	10219764	RH	DISCON	CARPET, FLR RR PNL CTR (BEIGE)	
92–93	Y07 (14I)	10219765	LH	DISCON	CARPET, FLR RR PNL CTR (GRAY)	
92–93	Y07 (14I)	10219766	RH	DISCON	CARPET, FLR RR PNL CTR (GRAY)	
92–93	Y67 (10I), (19I)	10219668	1	DISCON	CARPET, FLR RR PNL CTR (PNL CTR) (BLACK)	
92–93	Y67 (14I)	10219670	1	DISCON	CARPET, FLR RR PNL CTR (PNL CTR) (GRAY)	
92–93	Y67 (14I)	10219775	LH	DISCON	CARPET, FLR RR PNL CTR (GRAY)	
92–93	Y67 (10I), (19I)	10219778	RH	DISCON	CARPET, FLR RR PNL CTR (BLACK)	
93	Y07 (79I)	10219677	1	DISCON	CARPET, FLR RR PNL CTR (RED)	
93	Y07 (70I)	10219678	1	DISCON	CARPET, FLR RR PNL CTR (RED)	
93	Y07 (70I)	10219769	LH	DISCON	CARPET, FLR RR PNL CTR (RED)	
93	Y07 (70I)	10219770	RH	DISCON	CARPET, FLR RR PNL CTR (RED)	
93	Y67 (70I)	10219671	1	DISCON	CARPET, FLR RR PNL CTR (PNL CTR) (RED)	
93	Y67 (79I)	10219672	1	DISCON	CARPET, FLR RR PNL CTR (PNL CTR) (RED)	
93	Y67 (79I)	10219780	RH	DISCON	CARPET, FLR RR PNL CTR (RED)	
93	Y67 (70I)	10219781	LH	DISCON	CARPET, FLR RR PNL CTR (RED)	
93	Y67 (70I)	10219782	RH	DISCON	CARPET, FLR RR PNL CTR (RED)	
94–96	Y07 (19I)	10238495	1	136.50	CARPET, FLR RR PNL CTR (BLACK)	11–H10,1
94–96	Y07 (64I)	10238496	1	136.50	CARPET, FLR RR PNL CTR (BEIGE)	11–H10,1
94–96	Y07 (14I)	10238497	1	136.50	CARPET, FLR RR PNL CTR (GRAY)	11–H10,1
94–95	Y07 (70I)	10238498	1	136.50	CARPET, FLR RR PNL CTR (RED)	11–H10,1
94–96	Y67 (19I)	10239490	1	136.50	CARPET, FLR RR PNL CTR (BLACK)	11–H16,19
94–96	Y67 (64I)	10238491	1	136.50	CARPET, FLR RR PNL CTR (BEIGE)	11–H16,19
94–96	Y67 (14I)	10238492	1	136.50	CARPET, FLR RR PNL CTR (GRAY)	11–H16,19
94–95	Y67 (70I)	10238493	1	136.50	CARPET, FLR RR PNL CTR (RED)	11–H16,19
96	Y07 (70I), (EXC GRAND SPORT EDITION (Z16)	10238498	1	136.50	CARPET, FLR RR PNL CTR (RED)	11–H10,1
96	Y67 (70I), (EXC GRAND SPORT EDITION (Z16)	10238493	1	136.50	CARPET, FLR RR PNL CTR (RED)	11–H16,19
92–96	Y	20464592	1	111.60	INSULATOR, R/FLR COMPT (POS#3) (15.492)	
84–87	Y07	14047549	LH	DISCON	SUPPORT, FLR PNL RR CPT	
84–87	Y07	14047550	RH	DISCON	SUPPORT, FLR PNL RR CPT	
88–94	Y07	10239257	LH	10.40	SUPPORT, FLR PNL RR CPT (15.222)	11–H7,14

15.388 HOOK, Coat

84–90	Y07	14049099	1	DISCON	HOOK, COAT (PAINT TO MATCH)	

© 2000 GENERAL MOTORS SERVICE PARTS OPERATIONS–CHEVROLET–14Y

15.492 INSULATOR, Floor Pan

90–94	Y67	11515174	AR	*1.50	INSULATOR, FLR INTER (4 1/4"X7 1/2") (TRIM AS REQ'D)	11–F26,7
95–96	Y67	11515174	8	*1.50	INSULATOR, FLR INTER (4 1/4"X7 1/2") (TRIM AS REQ'D)	11–F26,7
89–96	Y07	11515174	1	*1.50	INSULATOR, RF INR CTR BOW (4 1/4"X7 1/2") (TRIM AS REQ'D)	11–F26,7
89–96	Y07	11515174	2	*1.50	INSULATOR, RF INR SI BOW (4 1/4"X7 1/2") (TRIM AS REQ'D)	11–F26,7
91–96	Y07	11515174	AR	*1.50	INSULATOR, RF PNL SND (POSN #1, 2) (4 1/4"X7 1/2") (TRIM AS REQ'D)	11–F26,7

15.500 MATERIAL, Bulk Material

87	Y (62C)	20500455	AR	DISCON	MATERIAL, BULK FABRIC (HIGHLANDER, SADDLE)
87	Y (62C)	20502496	AR	DISCON	MATERIAL, BULK FABRIC (GILMORE, SADDLE)
87	Y (12C)	20504162	AR	DISCON	MATERIAL, BULK FABRIC (GILMORE, GRAPHITE)
87	Y (15C)	20504163	AR	DISCON	MATERIAL, BULK FABRIC (GILMORE, GRAY)
87	Y (65C)	20504164	AR	DISCON	MATERIAL, BULK FABRIC (GILMORE, BRONZE)
87	Y 21C	20504165	AR	DISCON	MATERIAL, BULK FABRIC (GILMORE, BLUE)
87	Y (12C)	20504166	AR	DISCON	MATERIAL, BULK FABRIC (HIGHLANDER, GRAPHITE)
87	Y (15C)	20504167	AR	DISCON	MATERIAL, BULK FABRIC (HIGHLANDER, GRAY)
87	Y (65C)	20504168	AR	DISCON	MATERIAL, BULK FABRIC (HIGHLANDER, BRONZE)
87	Y 21C	20504169	AR	DISCON	MATERIAL, BULK FABRIC (HIGHLANDER, BLUE)
88–89	Y (60C)	12391200	AR	DISCON	MATERIAL, BULK FABRIC (HIGHLANDER, COGNAC) (15.512)
88–89	Y (60C)	12391201	AR	DISCON	MATERIAL, BULK FABRIC (GILMORE, COGNAC) (15.512)
88–89	Y (19C)	12391202	AR	DISCON	MATERIAL, BULK FABRIC (GILMORE, BLACK) (15.512)
88–89	Y (19C)	20500395	AR	33.40	MATERIAL, BULK FABRIC (HIGHLANDER, BLACK)

© 2000 GENERAL MOTORS SERVICE PARTS OPERATIONS–CHEVROLET–14Y

1991 CARPET TYPE BY MODEL (15.512)

*Using Carpet Charts

1. Identify your model # and trim combination. (When viewing the trim combination, note that the chart provides only the last digit of the trim combination.)
2. View type of carpet material for proper location.
3. Return to catalog group for part # using type of material, color and model.

MODEL	TRIM COMB.	DOOR	MAP POCKET	TOE BAR	SEAT BACK	R/ST.TO R/WDO PNL	LOAD FLOOR
1YY07-67	C,3	TRURO	-	-	-	-	-

1992 - 93

MODEL	TRIM COMB.	DOOR	MAP POCKET	TOE BAR	SEAT BACK	R/ST.TO R/WDO PNL	LOAD FLOOR
1YY07-67	C,3	TRURO	-	-	-	-	-

1994

MODEL	TRIM COMB.	DOOR SILL PLATE	RR FLR PNL	I/P LWR TRIM(LH)	CONSOLE	SPEAKER GRILLES	FRT S/D L/PLR
1YY07-67	C,3	TRUVETTE	TRUVETTE	TRUVETTE	TRUVETTE	TONE	TRUVETTE

© 2000 GENERAL MOTORS SERVICE PARTS OPERATIONS-CHEVROLET-14Y

MICROFICHE INDEX

GROUPS 14.000 THRU 15.000

FICHE 11 OF 11

GROUP	DESCRIPTION	STARTING GRID LOCATION PARTS	ILLUSTRATIONS
–	GENERAL INFORMATION	1–A2	1–G2
–	ALPHABETICAL INDEX	1–B13	N.A.
14.000	INTERIOR TRIM – SEAT BELTS	11–A2	11–E2
15.000	REAR SEAT TRIM – CARPETS – YARDAGE	11–D2	11–H2
–	OUT OF FICHE CALLS	N.A.	11–M16

11–E1

CHEVROLET
BODY GROUP 14.000

ILLUSTRATION INDEX

	TITLE	GRID
1986–1988	Y67 FOLDING TOP ASM PART 2	11–E4
1986–1990	Y67 FOLDING TOP ASM PART 1	11–E7
1989–1992	Y67 FOLDING TOP ASM PART 2	11–E11
1991–1996	Y67 FOLDING TOP ASM PART 1	11–E16
1993–1996	Y67 FOLDING TOP ASM PART 2	11–E22
1986–1988	Y67 FOLDING TOP ASM/HARDWARE & STOWAGE COMPARTMENT	11–E26
1989–1991	Y67 FOLDING TOP ASM/HARDWARE & STOWAGE COMPARTMENT	11–F2
1992	Y67 FOLDING TOP ASM/HARDWARE & STOWAGE COMPARTMENT(1ST DES)	11–F4
1992	Y67 FOLDING TOP ASM/HARDWARE & STOWAGE COMPARTMENT(2ND DES)	11–F6
1993–1996	Y67 FOLDING TOP ASM/HARDWARE & STOWAGE COMPARTMENT	11–F8
1990	Y INFLATABLE RESTRAINT SYSTEM (AJ3)	11–F12
1991–1992	Y INFLATABLE RESTRAINT SYSTEM (AJ3)	11–F13
1993	Y INFLATABLE RESTRAINT SYSTEM	11–F16
1994–1996	Y INFLATABLE RESTRAINT SYSTEM (AK5)	11–F19
1984–1990	Y07 SEAT BELT HARDWARE	11–F23
1986–1991	Y67 SEAT BELT HARDWARE	11–F24
1991–1993	Y07 SEAT BELT HARDWARE	11–F26
1992–1993	Y67 SEAT BELT HARDWARE	11–G2
1994–1996	Y07 SEAT BELT HARDWARE	11–G5
1994–1996	Y67 SEAT BELT HARDWARE	11–G8

© GENERAL MOTORS SERVICE PARTS OPERATIONS–CHEVROLET–14Y

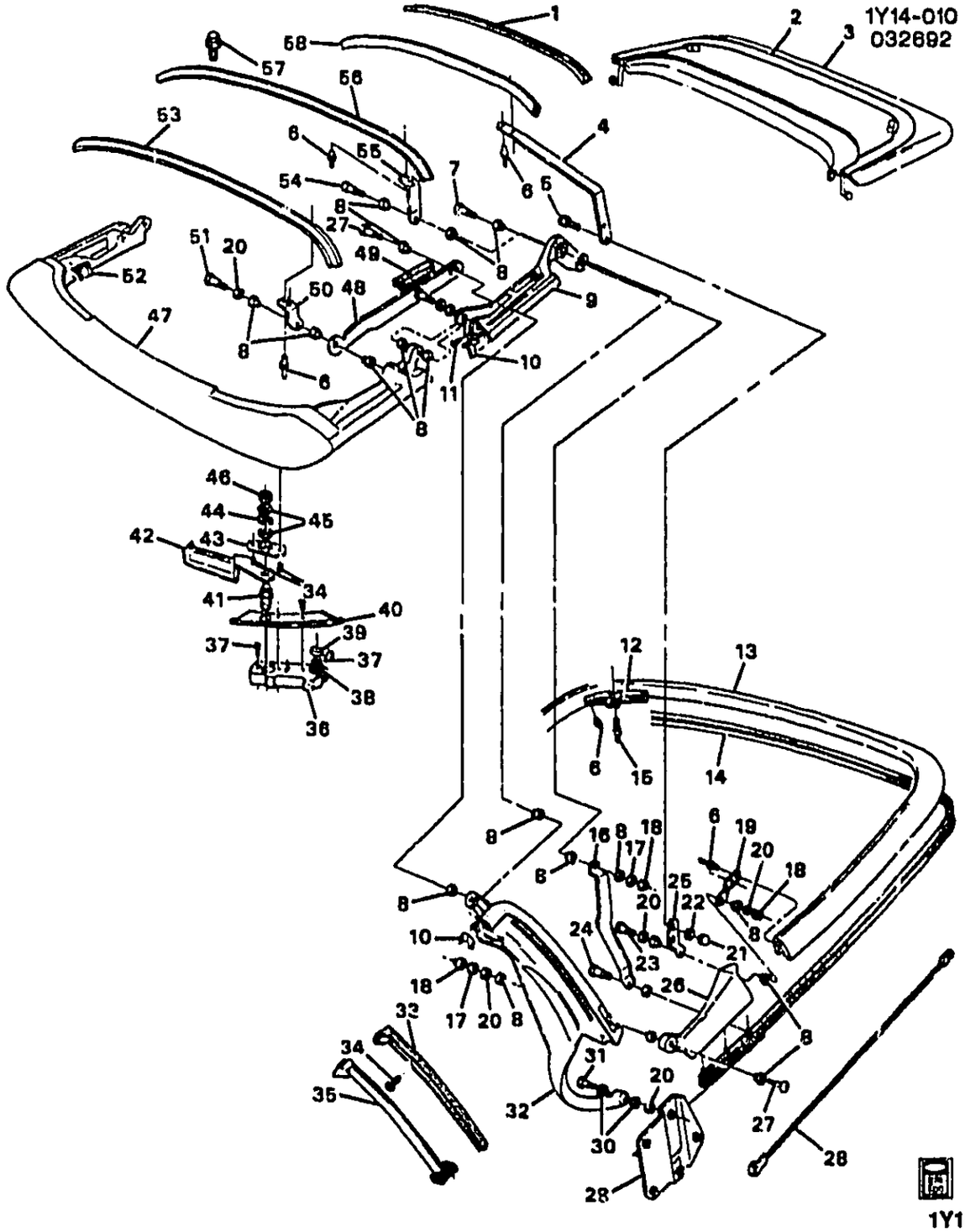

1986-1988 Y67 FOLDING TOP ASM PART 2

1.		DISCON	RETAINER, F/TOP HDLNG TR FIN PNL #1 BOW	10051858
2.	11-N14	12.170	PROTECTOR, F/TOP STOW COMPT LID	
3.		DISCON	LID, STOW COMPT	14092653
4.	11-A22	14.340	LINK, F/TOP #4 BOW (RH)	10248375
	11-A22	14.340	LINK, F/TOP #4 BOW (PART OF 59) (LH)	10248376
5.	11-A20	14.215	BOLT, F/TOP #4 BOW	10064336
6.	11-N25	13.246	RIVET, F/TOP RR LAT STKR BRKT	10064339
7.	11-A20	14.215	BOLT, F/TOP #3 BOW	10048837
8.	11-A19	14.130	BUSHING, F/TOP RR S/RL PIV	14100338

© 2000 GENERAL MOTORS SERVICE PARTS OPERATIONS-CHEVROLET-14Y

				1Y14-010
	11-A20	14.215	BUSHING, F/TOP #2 BOW PIV	14100338
	11-A19	14.160	BUSHING, F/TOP #1 BOW LINK FRT PIV	14100338
	11-A19	14.160	BUSHING, F/TOP #1 BOW PIV	14100338
	11-A19	14.160	BUSHING, F/TOP #1 BOW LINK RR PIV	14100338
	11-A22	14.340	BUSHING, F/TOP RR LAT LVR	14100338
	11-A21	14.310	BUSHING, F/TOP INR ARM UPR PIV	14100338
	11-A19	14.160	BUSHING, F/TOP #5 BOW PIV	14100338
	11-A10	14.160	BUSHING, F/TOP #4 BOW PIV	14100338
	11-A19	14.160	BUSHING, F/TOP #5 BOW HGE PIV	14100338
9.		DISCON	RAIL, F/TOP RR SI (RH)	10048812
		DISCON	RAIL, F/TOP RR SI (LH)	10048811
10.	11-A21	14.260	WEATHERSTRIP, F/TOP RR S/RL (RH)	14100350
	11-A21	14.260	WEATHERSTRIP, F/TOP RR S/RL (LH)	14100349
11.		8.977	SCREW, HWH, M5X.8X10, PC (AR)	11505536
12.	11-A21	14.310	BRACKET, F/TOP #5 BOW PIV (RH)	10048830
	11-A21	14.310	BRACKET, F/TOP #5 BOW PIV (LH)	10048829
13.	11-A22	14.340	BOW, F/TOP #5 (RR)	12529214
14.	11-N25	13.346	WEATHERSTRIP, F/TOP RR	14092676
15.	11-A21	14.310	STRIKER, F/TOP RR LAT	10258675
16.	11-A21	14.310	ARM, F/TOP INR (RH)	10273036
	11-A21	14.310	ARM, F/TOP INR (LH)	10273035
17.	11-A21	14.310	WASHER, F/TOP INR ARM UPR PIV	10064340
18.		8.917	NUT, HFH M6X1X6.5 ZOR 9 (AR)	3530297
19.	11-A21	14.310	HINGE, F/TOP #5 BOW (RH)	10048828
	11-A21	14.310	HINGE, F/TOP #5 BOW (LH)	10048827
20.	11-A21	14.310	WASHER, F/TOP INR ARM LWR PIV	14100364
	11-A20	14.162	WASHER, F/TOP #2 BOW PIV	14100364
21.		8.917	NUT, HFH M6X1X6.5 ZOR 9 (AR)	3530297
22.	11-A21	14.310	WASHER, F/TOP INR ARM LWR PIV	14100364
23.	11-A19	14.155	BOLT, F/TOP PIV BRKT (LINK TO MAIN) (C05)	10051852
24.	11-A19	14.155	BOLT, RR RL LWR	10051852
25.		DISCON	BRACKET, #4 BOW (1986-87)	10048814
	11-A20	14.215	BRACKET, F/TOP #4 BOW (1988)	10107823
26.		DISCON	EXTENSION, F/TOP #5 BOW (RH)	10064338
		DISCON	EXTENSION, F/TOP #5 BOW (LH)	10064337
27.	11-A21	14.260	BOLT, F/TOP #5 BOW (M6 X 1 X 36.5 TR HD SHLDR) (1986-87)	10048836
	11-A21	14.260	BOLT, F/TOP #5 BOW (1988)	3634892
28.	11-A18	14.102	CABLE, F/TOP CVR FRT SI TENS ((PAINT TO MATCH))	10074298
29.	11-A21	14.310	BRACKET, F/TOP PIV (RH)	10123006
	11-A21	14.310	BRACKET, F/TOP PIV (LH)	10123005
30.	11-A21	14.310	BUSHING, F/TOP OTR ARM PIV	10048833
31.	11-A19	14.155	BOLT, F/TOP PIV BRKT	10048832
32.	11-A21	14.310	ARM, F/TOP OTR (RH)	10107820
	11-A21	14.310	WASHER, F/TOP INR ARM UPR PIV	10064340
	11-A21	14.310	ARM, F/TOP OTR (LH)	10107819
	11-A21	14.310	WASHER, F/TOP INR ARM UPR PIV	10064340
33.	11-N9	10.710	RETAINER, FRT S/D WDO RR W/STR (RH)	14092710
	11-N9	10.710	RETAINER, FRT S/D WDO RR W/STR (LH)	14092709
34.	11-A18	14.080	BOLT, F/TOP FRT LAT LVR BRKT (10.474)	15544718
35.	11-N9	10.710	WEATHERSTRIP, FRT S/D WDO RR (RH)	10273004
	11-N9	10.710	WEATHERSTRIP, FRT S/D WDO RR (LH)	10273003
36.		DISCON	BRACKET, HOLDN-RH	14092644
		DISCON	BRACKET, HOLDN-LH	14092643
37.	11-N16	12.810	BOLT, RF LIFT OFF PNL/WDO FRT MT PLT	14081021
38.	11-N6	10.219	SPRING, S/S	14060216
39.	11-N6	10.219	RETAINER, S/S	14060215
40.		DISCON	COVER, RF PNL FRT LAT-RH	14092642

© 2000 GENERAL MOTORS SERVICE PARTS OPERATIONS-CHEVROLET-14Y

				1Y14-010
	11-N16	12.810	COVER, RF PNL FRT LAT-LH	14092641
41.	11-A18	14.080	PIN, F/TOP FRT LAT (RH)	10048804
	11-A18	14.080	PIN, F/TOP FRT LAT (LH)	10048803
42.	11-A18	14.080	HANDLE, F/TOP FRT LAT PIN (RH)	10048802
		DISCON	HANDLE, F/TOP FRT LAT PIN (LH)	10048801
43.	11-A18	14.080	BRACKET, F/TOP FRT LAT PIN	10048806
44.	11-A18	14.080	WASHER, F/TOP FRT LAT PIN (WAVED)	20496842
45.	11-A18	14.080	WASHER, F/TOP FRT LAT PIN (STRAIGHT)	10051857
46.	11-N25	13.346	NUT, F/TOP FRT LAT LVR	10051856
47.	11-A19	14.130	BOW, F/TOP #1	10048807
48.	11-A19	14.140	LINK, #2 & #3 BOW (RH)	10259058
	11-A19	14.140	LINK, #2 & #3 BOW (LH)	10259057
49.	11-A19	14.140	INSULATOR, F/TOP #1 BOW LINK	10051859
50.	11-A20	14.215	BRACKET, F/TOP #2 BOW (PART OF 53) (RH)	10048820
	11-A20	14.215	BRACKET, F/TOP #2 BOW (PART OF 53) (LH)	10048819
51.	11-A19	14.130	BOLT, F/TOP #2 BOW	10048835
52.	11-N27	13.347	TAPE, F/TOP	20498745
53.	11-A20	14.215	BOW, F/TOP #2 (INCL 50)	10048817
54.	11-A19	14.130	BOLT, F/TOP #2 & #3 BOW LINK	10048834
55.	11-A20	14.215	BRACKET, F/TOP #3 BOW (RH)	10248374
	11-A20	14.215	BRACKET, F/TOP #3 BOW (LH)	10248373
56.	11-A20	14.215	BOW, F/TOP #3	10048818
57.	11-A20	14.215	BOLT, F/TOP #3 BOW	10051850
58.	11-A20	14.215	BOW, F/TOP #4 (RR)	10248371

RPO DEFINITIONS
C05 – ROOF,CONVERTIBLE,FOLDING

© 2000 GENERAL MOTORS SERVICE PARTS OPERATIONS-CHEVROLET-14Y

1Y14-007 07/05/94

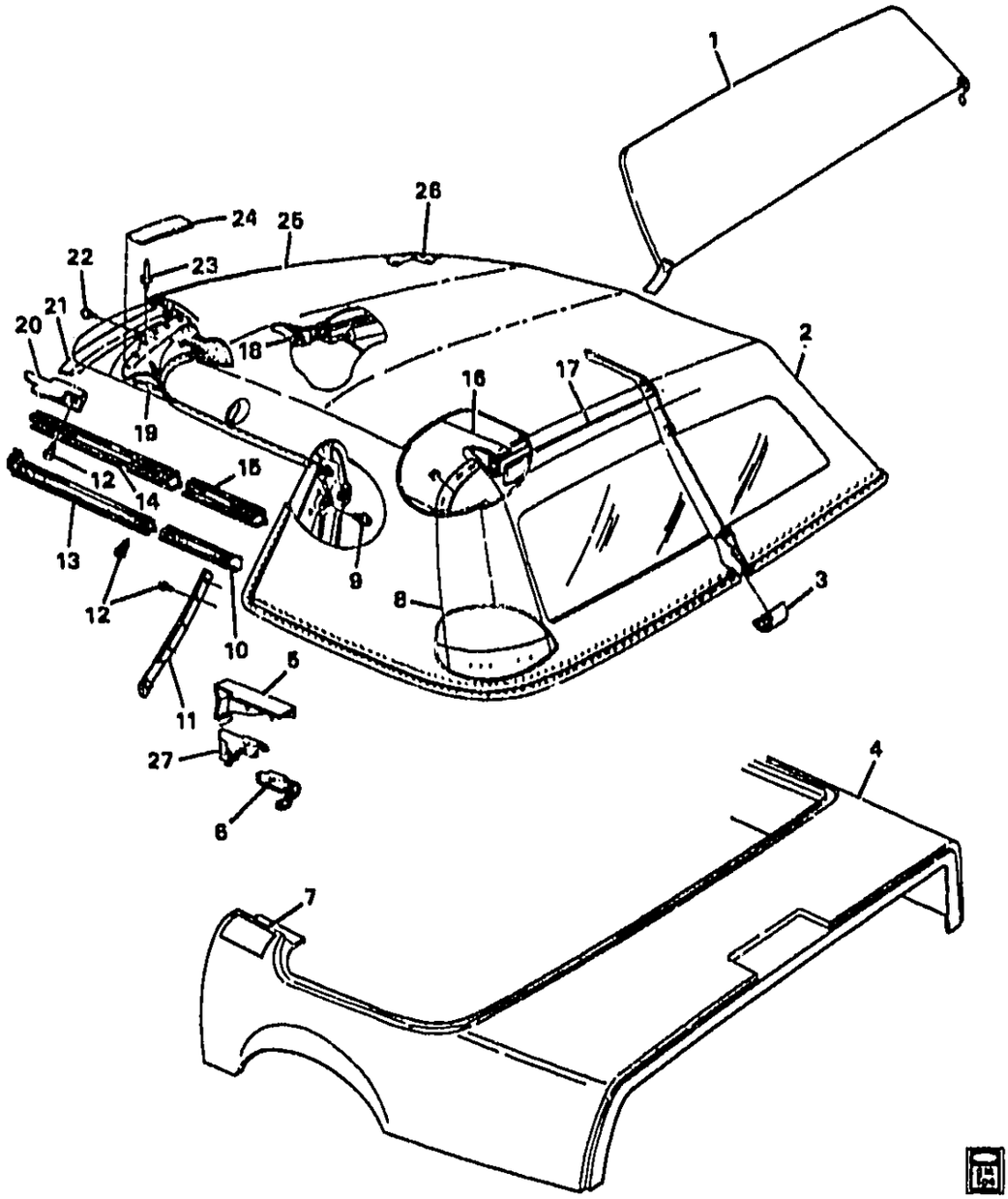

1Y14-007

1986-1990 Y67 FOLDING TOP ASM PART 1

1.	11-N28	13.395	PROTECTOR, F/TOP R/WDO (PART OF 25)	86-90	Y67 (C05)	1	10051886
2.		DISCON	TOP, FLDG (INCLS 25) (WHITE) ..	86-90	Y67 (C05, 10T)	1	10198721
	11-N25	13.346	TOP, FLDG (BLACK) (INCLS 25) .	86-90	Y67 (19T)	1	10198725
		DISCON	TOP, FLDG (SADDLE) (INCLS 25)	86-90	Y67 (67T)	1	10153653
	11-N28	13.365	FRAME, F/TOP (LESS TR & HEADLINER) (INCLS 8) (SEE GROUP 14 "FOLDING TOP ASM PART 2" FOR DETAIL ILLUSTRATED VIEW)	86-90	Y67	1	14100304
3.		DISCON	CLIP, S/S SUPT (WHITE) (10.219)	86-89	Y67 (11T)	1	10048842
	11-N6	10.219	RETAINER, S/S	90	Y	2	14060215
4.	11-N20	12.940	PANEL, BODY UPR RR (12.986) .	86-90	Y67	1	14092651

© 2000 GENERAL MOTORS SERVICE PARTS OPERATIONS-CHEVROLET-14Y

							1Y14-007
5.	11-A27	14.731	PANEL, BODY L/PLR UPR TR (DUE TO APPEARANCE DIFFERENCE, IT IS ADVISED TO REPLACE BOTH SIDES)	86-89	Y67	RH	14100368
	11-A27	14.731	PANEL, BODY L/PLR UPR TR (DUE TO APPEARANCE DIFFERENCE, IT IS ADVISED TO REPLACE BOTH SIDES) (BLACK)	90	Y67 (19I)	RH	10103850
		DISCON	PANEL, BODY L/PLR UPR TR (DUE TO APPEARANCE DIFFERENCE, IT IS ADVISED TO REPLACE BOTH SIDES) (BLUE) .	90	Y67 (22I)	RH	10103852
	11-A27	14.731	PANEL, BODY L/PLR UPR TR (DUE TO APPEARANCE DIFFERENCE, IT IS ADVISED TO REPLACE BOTH SIDES) (COGNAC)	90	Y67 (60I)	RH	10103854
	11-A27	14.731	PANEL, BODY L/PLR UPR TR (DUE TO APPEARANCE DIFFERENCE, IT IS ADVISED TO REPLACE BOTH SIDES) (RED) ..	90	Y67 (73I)	RH	10103856
	11-A27	14.731	PANEL, BODY L/PLR UPR TR (DUE TO APPEARANCE DIFFERENCE, IT IS ADVISED TO REPLACE BOTH SIDES) (GRAY) .	90	Y67 (90I)	RH	10103858
	11-A27	14.731	PANEL, BODY L/PLR UPR TR ((DUE TO APPEARANCE DIFFERENCE, IT IS ADVISED TO REPLACE BOTH SIDES))	86-89	Y67	LH	14100367
	11-A27	14.731	PANEL, BODY L/PLR UPR TR ((DUE TO APPEARANCE DIFFERENCE, IT IS ADVISED TO REPLACE BOTH SIDES)) (BLACK)	90	Y67 (19I)	LH	10103851
		DISCON	PANEL, BODY L/PLR UPR TR ((DUE TO APPEARANCE DIFFERENCE, IT IS ADVISED TO REPLACE BOTH SIDES)) (BLUE)	90	Y67 (22I)	LH	10103853
	11-A27	14.731	PANEL, BODY L/PLR UPR TR ((DUE TO APPEARANCE DIFFERENCE, IT IS ADVISED TO REPLACE BOTH SIDES)) (COGNAC)	90	Y67 (60I)	LH	10103855
	11-A27	14.731	PANEL, BODY L/PLR UPR TR ((DUE TO APPEARANCE DIFFERENCE, IT IS ADVISED TO REPLACE BOTH SIDES)) (RED) ..	90	Y67 (73I)	LH	10103857
	11-A27	14.731	PANEL, BODY L/PLR UPR TR ((DUE TO APPEARANCE DIFFERENCE, IT IS ADVISED TO REPLACE BOTH SIDES)) (GRAY)	90	Y67 (90I)	LH	10103859
6.	11-N20	12.942	SEAL, FRT S/D L/PLR UPR (RR) .	86-90	Y67	LH	14100365
	11-N20	12.942	SEAL, FRT S/D L/PLR UPR (RR) .	86-90	Y67	RH	14100366
7.		DISCON	PROTECTOR, BODY UPR RR PNL	86-87	Y	RH	10051882
		DISCON	PROTECTOR, BODY UPR RR PNL	86-87	Y	LH	10051881
8.	11-N28	13.395	PAD, F/TOP #4 & #5 BOW POSN (PART OF 2)	86-90	Y67	LH	10248381

							1Y14-007
	11-N28	13.395	PAD, F/TOP #4 & #5 BOW POSN (PART OF 2)	86-90	Y67	RH	10248382
9.		DISCON	(8.908)			AR	11505016
10.	11-N9	10.710	WEATHERSTRIP, FRT S/D WDO UPR RR	86-90	Y67	RH	10269868
	11-N9	10.710	WEATHERSTRIP, FRT S/D WDO UPR RR	86-90	Y67	LH	10269867
11.	11-N27	13.347	RETAINER, F/TOP CVR OTR ARM (PART OF 25)	86-90	Y67 (C05)	RH	10048846
	11-N27	13 347	RETAINER, F/TOP CVR OTR ARM (PART OF 25)	86-90	Y67 (C05)	LH	10048845
12.		8.900	BOLT, HFH M8X1.25X75, 33.2 THD, 9.8 PO (FRT S/D WDO UPR FRT W/STR) (AC-DELCO #10130949)	86-90		AR	10130949
13.	11-N9	10.710	WEATHERSTRIP, FRT S/D WDO UPR FRT (14.120)	86-90	Y67	RH	17987732
	11-N9	10.710	WEATHERSTRIP, FRT S/D WDO UPR FRT (14.120)	86-90	Y67	LH	17987731
	11-N9	10.710	WEATHERSTRIP, FRT S/D WDO UPR FRT (W/CC2) (13.346)	89-90	Y67	RH	10123052
	11-N9	10.710	WEATHERSTRIP, FRT S/D WDO UPR FRT (W/CC2) (13.346)	89-90	Y67	LH	10123051
14.	11-N9	10.710	RETAINER, FRT S/D WDO UPR FRT W/STR (14.060)	86-90	Y67	RH	14092712
	11-N9	10.710	RETAINER, FRT S/D WDO UPR FRT W/STR (13.346)	89-90	Y67 (CC2)	RH	10137752
	11-N9	10.710	RETAINER, FRT S/D WDO UPR FRT W/STR (14.060)	86-90	Y67	LH	14092711
	11-N9	10.710	RETAINER, FRT S/D WDO UPR FRT W/STR (13.346)	89-90	Y67 (CC2)	LH	10137751
15.	11-A18	14.120	RETAINER, FRT S/D WDO UPR RR W/STR	86-89	Y67	RH	14092714
	11-A18	14.120	RETAINER, FRT S/D WDO UPR RR W/STR	86-89	Y67	LH	14092713
	11-A18	14.120	RETAINER, FRT S/D WDO UPR RR W/STR	90	Y67	LH	14092713
	11-A18	14.120	RETAINER, FRT S/D WDO UPR RR W/STR	90	Y67	RH	14092714
16.	11-N27	13.347	PAD, F/TOP #1, #2, #3, #4 BOW POSN (PART OF 25)	86-90	Y67 (C05)	2	10048844
17.	11-N27	13.349	RETAINER, F/TOP HDLNG TR FIN PNL #4 BOW (PART OF 25)	86-90	Y67 (C05)	1	10248370
18.		DISCON	RETAINER, F/TOP CVR #2 BOW (PART OF 25) (13.347)	86-90	Y67 (C05)	2	10048848
19.	11-A18	14.102	CABLE, F/TOP HDLNG TR FIN PNL (PART OF 25)	86-90	Y67	2	10048849
20.	11-N16	12.810	PROTECTOR, FRT S/D WDO W/STR UPR FRT	86-90	Y	LH	10217223
	11-N16	12.810	PROTECTOR, FRT S/D WDO W/STR UPR FRT	86-90	Y	RH	10217224
21.	11-N27	13.347	RETAINER, F/TOP CVR #1 BOW (PART OF 25)	86-90	Y67	1	10048847
22.		N.S.	SCREW, RD SLOT HD 8-32X.50ZC			1	
23.	11-N25	13.346	RIVET, F/TOP RR LAT STKR BRKT (PART OF 25)	86-90	Y67 (C05)	4	10064339

© 2000 GENERAL MOTORS SERVICE PARTS OPERATIONS-CHEVROLET-14Y

							1Y14-007
24.	11-N27	13.347	**TAPE**, F/TOP HDLNG TR FIN PNL FSTN (PART OF 25) (VELCRO TAPE, HOOK) (14.640)	86-90	Y67 (C05)	3	20496745
25.	11-N27	13.347	**COVER**, F/TOP (W/PLASTIC BACKLITE) (WHITE) (PART OF 2) (INCLS 16-19, 21, 23-24)	86-90	Y67	1	10198656
	11-N27	13.347	**COVER**, F/TOP (W/PLASTIC BACKLITE) (BLACK) (PART OF 2) (INCLS 16-19, 21, 23-24)	86-90	Y67	1	10198659
	11-N25	13.346	**ESCUTCHEON**, F/TOP CVR LWR RR MLDG RR (BLACK) (10.219) ..	86-90	Y67 (C05)	1	10048841
	11-N25	13.346	**ESCUTCHEON**, F/TOP CVR LWR RR MLDG RR (SADDLE) (10.219)	86-90	Y67 (C05)	1	10048843
26.	11-N27	13.347	**PANEL**, F/TOP HDLNG TR FIN (BLACK)	86-90	Y67 (C05)	1	10248379
27.	11-N20	12.942	**SEAL**, FRT S/D L/PLR UPR (FRT)	86-90	Y67	LH	14092683
	11-N20	12.942	**SEAL**, FRT S/D L/PLR UPR (FRT)	86-90	Y67	RH	14092684

RPO DEFINITIONS
CC2 – ROOF,AUXILIARY
C05 – ROOF,CONVERTIBLE,FOLDING
10T – VINYL TOP COLOR,ARCTIC WHITE
11T – TOP COLOR,VINYL,WHITE
19I – INTERIOR TRIM,BLACK
19T – VINYL TOP COLOR,BLACK
22I – INTERIOR TRIM,DARK ROYAL BLUE
60I – INTERIOR TRIM,DARK COGNAC
67T – VINYL TOP COLOR,DARK ANTELOPE METALLIC
73I – INTERIOR TRIM,FLAME RED
90I – INTERIOR TRIM,SMOKE GRAY

© 2000 GENERAL MOTORS SERVICE PARTS OPERATIONS–CHEVROLET–14Y

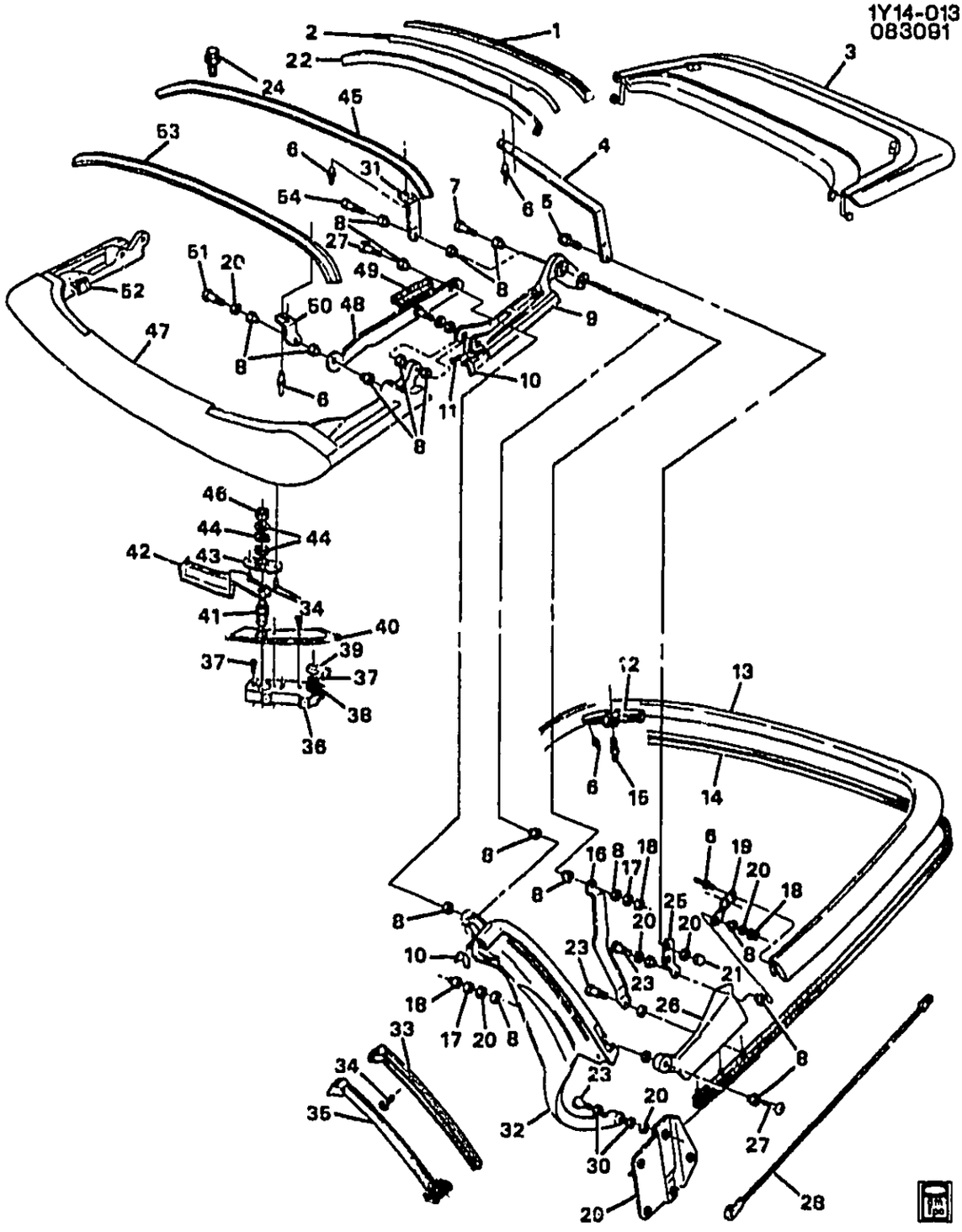

1Y14-013

1989-1992 Y67 FOLDING TOP ASM PART 2

	DISCON	RETAINER, F/TOP HDLNG TR FIN PNL #1 BOW	89-92 Y67 (C05)	1	10051858
2.	N.S.	PROTECTOR, F/TOP CVR #4 BOW (INCLS 4)	.....		

© 2000 GENERAL MOTORS SERVICE PARTS OPERATIONS-CHEVROLET-14Y

							1Y14-013
3.	11-N14	12.170	LID, F/TOP ST)W COMPT (IF SERVICE 1992 ? PRIOR MODELS, MUST USE 10193665 T/W 10198642 RELEASE CABLE ASM)	89-92	Y67	1	10276994
	11-N14	12.170	PROTECTOR, F/TOP STOW COMPT LID (W/CLEAR STRIPS) .	89-92	Y67	1	12524512
4.	11-A22	14.340	LINK, F/TOP #4 BOW (PART OF 2)	89-92	Y67	RH	10248375
	11-A22	14.340	LINK, F/TOP #4 BOW (PART OF 2)	89-90	Y67	LH	10248376
	11-A22	14.340	LINK, F/TOP #4 BOW (PART OF 2)	91-92	Y67 (C05)	LH	10248376
5.	11-A20	14.215	BOLT, F/TOP #4 BOW (14.340) ..	89-90	Y67	4	10064336
	11-A20	14.215	BOLT, F/TOP #4 BOW (14.340) ..	91-92	Y67 (C05)	4	10064336
6.	11-N25	13.346	RIVET, F/TOP RR LAT STKR BRKT	89-92	Y67 (C05)	4	10064339
7.	11-A20	14.215	BOLT, F/TOP #3 BOW (M6X1.0X34) (TRUSS HD)	89-92	Y67 (C05)	2	10048837
8.	11-A22	14.340	BUSHING, F/TOP RR LAT LVR ...	89-92	Y67 (C05)	1	14100338
	11-A20	14.215	BUSHING, F/TOP #2 BOW PIV (14.340)	90	Y67	1	14100338
	11-A20	14.215	BUSHING, F/TOP #2 BOW PIV (14.340)	91-92	Y67 (C05)	1	14100338
	11-A19	14.160	BUSHING, F/TOP #1 BOW LINK FRT PIV (14.340)	90	Y67	1	14100338
	11-A19	14.160	BUSHING, F/TOP #1 BOW LINK FRT PIV (14.340)	91-92	Y67 (C05)	1	14100330
	11-A19	14.160	BUSHING, F/TOP #1 BOW PIV (14.340)	90	Y67	1	14100338
	11-A19	14.160	BUSHING, F/TOP #1 BOW PIV (14.340)	91-92	Y67 (C05)	1	14100338
	11-A19	14.160	BUSHING, F/TOP #1 BOW LINK RR PIV (14.340)	90	Y67	1	14100338
	11-A19	14.160	BUSHING, F/TOP #1 BOW LINK RR PIV (14.340)	91-92	Y67 (C05)	1	14100338
	11-A21	14.310	BUSHING, F/TOP INR ARM UPR PIV (14.340)	90	Y67	1	14100338
	11-A21	14.310	BUSHING, F/TOP INR ARM UPR PIV (14.340)	91-92	Y67 (C05)	1	14100338
	11-A19	14.160	BUSHING, F/TOP #5 BOW PIV (14.340)	90	Y67	1	14100338
	11-A19	14.160	BUSHING, F/TOP #5 BOW PIV (14.340)	91-92	Y67 (C05)	1	14100338
	11-A19	14.160	BUSHING, F/TOP #4 BOW PIV (14.340)	90	Y67	1	14100338
	11-A19	14.160	BUSHING, F/TOP #4 BOW PIV (14.340)	91-92	Y67 (C05)	1	14100338
	11-A19	14.160	BUSHING, F/TOP #5 BOW HGE PIV (14.340)	90	Y67	1	14100338
	11-A19	14.160	BUSHING, F/TOP #5 BOW HGE PIV (14.340)	91-92	Y67 (C05)	1	14100338
9.		DISCON	RAIL, F/TOP RR SI (14.190)	89-90	Y67	LH	10048811
		DISCON	RAIL, F/TOP RR SI (14.190)	89-90	Y67	RH	10048812
		DISCON	RAIL, F/TOP RR SI	91-92	Y67 (C05)	LH	10048811
		DISCON	RAIL, F/TOP RR SI	91-92	Y67 (C05)	RH	10048812
10.		DISCON	COVER, F/TOP (SAPPHIRE)	91-92	Y67 (C05, 29T)	1	10198658
	11-N27	13.347	COVER, F/TOP (W/PLASTIC BACKLITE) (WHITE)	91-92	Y67 (C05, 10T)	1	10198656

© 2000 GENERAL MOTORS SERVICE PARTS OPERATIONS-CHEVROLET-14Y

								1Y14-013
	11-N27	13.347	COVER, F/TOP (W/PLASTIC BACKLITE) (BLACK)	91-92	Y67 (C05, 41T)	1	10198659
	11-N27	13.347	COVER, F/TOP (W/PLASTIC BACKLITE) (BEIGE)	91-92	Y67 (C05, 68T)	1	10198660
	11-N27	13.347	COVER, F/TOP (W/PLASTIC BACKLITE) (WHITE)	89-90	Y67	1	10198656
	11-N27	13.347	COVER, F/TOP (W/PLASTIC BACKLITE) (BLACK)	89-90	Y67	1	10198659
11.		8.977	SCREW, HWH, M5X.8X10, PC	89-92		AR	11505536
12.	11-A21	14.310	BRACKET, F/TOP #5 BOW PIV	89-92	Y67 (C05)	RH	10048830
	11-A21	14.310	BRACKET, F/TOP #5 BOW HGE	89-92	Y67 (C05)	LH	10048829
13.	11-A22	14.340	BOW, F/TOP #5	89-92	Y (C05)	1	12529214
14.	11-N25	13.346	WEATHERSTRIP, F/TOP RR	89-91	Y67	1	14092675
	11-N25	13.346	WEATHERSTRIP, F/TOP RR	92	Y67 (C05)	1	14092676
15.	11-A21	14.310	STRIKER, F/TOP RR LAT	89-90	Y67	2	10258675
	11-A21	14.310	STRIKER, F/TOP RR LAT	91-92	Y67 (C05)	2	10258675
16.	11-A21	14.310	ARM, F/TOP INR	89-90	Y67	LH	10273035
	11-A21	14.310	ARM, F/TOP INR	89-90	Y67	RH	10273036
	11-A21	14.310	ARM, F/TOP INR	91-92	Y67 (C05)	LH	10273035
	11-A21	14.310	ARM, F/TOP INR	91-92	Y67 (C05)	RH	10273036
17.	11-A21	14.310	WASHER, F/TOP INR ARM UPR PIV (14.260)	89-90	Y67	4	10064340
	11-A21	14.310	WASHER, F/TOP INR ARM UPR PIV (.340 X .687 X .060) (14.260)	91-92	Y67 (C05)	4	10064340
18.		8.917	NUT, HFH M6X1X6.5 ZOR 9	89-92		AR	3530297
19.	11-A21	14.310	HINGE, F/TOP #5 BOW	89-90	Y67	LH	10048827
	11-A21	14.310	HINGE, F/TOP #5 BOW	89-90	Y67	RH	10048828
	11-A21	14.310	HINGE, F/TOP #5 BOW	91-92	Y67 (C05)	LH	10048827
	11-A21	14.310	HINGE, F/TOP #5 BOW	91-92	Y67 (C05)	RH	10048828
20.	11-A21	14.310	WASHER, F/TOP INR ARM LWR PIV	89-92	Y67 (C05)	1	14100364
21.		8.917	NUT, HFH M6X1X6.5 ZOR 9	89-92		1	3530297
22.	11-A20	14.215	BOW, F/TOP #4 (RR)	89-90	Y67	1	10248371
	11-A20	14.215	BOW, F/TOP #4 (RR)	91-92	Y67 (C05)	1	10248371
23.	11-A19	14.155	BOLT, F/TOP PIV BRKT (RR RL TO MAIN) (14.310)	89-92	Y67 (C05)	2	10048832
24.	11-A20	14.215	BOLT, F/TOP #3 BOW (M6X1.0X34) (TRUSS HD)	89-91	Y67	2	10048837
25.	11-A20	14.215	BRACKET, F/TOP #4 BOW (14.310)	89-92	Y67 (C05)	2	10107823
26.	11-A22	14.340	BOW, F/TOP #5 SI (14.260)	89-90	Y67	LH	10172355
	11-A22	14.340	BOW, F/TOP #5 SI	89-90	Y67	RH	10172356
	11-A22	14.340	BOW, F/TOP #5 SI (14.260)	91-92	Y67 (C05)	LH	10172355
	11-A22	14.340	BOW, F/TOP #5 SI	91-92	Y67 (C05)	RH	10172356
27.	11-A21	14.260	BOLT, F/TOP #5 SI BOW	89-92	Y67 (C05)	2	3634892
	11-A22	14.340	BOLT, F/TOP #5 BOW HGE PIV (14.260)	91-93	Y67 (C05)	2	3634892
28.	11-A18	14.102	CABLE, F/TOP CVR FRT SI TENS (PAINT TO MATCH)	91-92	Y67 (C05)	2	10074298
	11-A18	14.102	CABLE, F/TOP CVR FRT SI TENS (PAINT TO MATCH)	89-90	Y67	2	10074298
29.	11-A21	14.310	BRACKET, F/TOP PIV	89-90	Y67	LH	10123005
	11-A21	14.310	BRACKET, F/TOP PIV	89-90	Y67	RH	10123006
	11-A21	14.310	BRACKET, F/TOP PIV	91-92	Y67 (C05)	LH	10123005
	11-A21	14.310	BRACKET, F/TOP PIV	91-92	Y67 (C05)	RH	10123006
30.	11-A21	14.310	BUSHING, F/TOP OTR ARM PIV (14.160)	89-90	Y67	4	10048833

© 2000 GENERAL MOTORS SERVICE PARTS OPERATIONS-CHEVROLET-14Y

							1Y14-013
	11-A21	14.310	BUSHING, F/TOP OTR ARM PIV (14.160)	91-92	Y67 (C05)	4	10048833
31.	11-A20	14.215	BRACKET, F/TOP #3 BOW	89-90	Y67	LH	10248373
	11-A20	14.215	BRACKET, F/TOP #3 BOW	89-90	Y67	RH	10248374
	11-A20	14.215	BRACKET, F/TOP #3 BOW	91-92	Y67 (C05)	LH	10248373
	11-A20	14.215	BRACKET, F/TOP #3 BOW	91-92	Y67 (C05)	RH	10248374
32.	11-A21	14.310	ARM, F/TOP OTR (14.170)	89-90	Y67	LH	10107819
	11-A21	14.310	ARM, F/TOP OTR (14.190)	89-90	Y67	RH	10107820
	11-A21	14.310	ARM, F/TOP OTR (14.170)	91-92	Y67 (C05)	LH	10107819
	11-A21	14.310	ARM, F/TOP OTR (14.190)	91-92	Y67 (C05)	RH	10107820
33.	11-N9	10.710	RETAINER, FRT S/D WDO RR W/STR (POS #1) (PAINT TO MATCH) (FITS .18 HOLE, .7 LG, .43 OD, NYLON) (14.630)	89-92	Y67	4	20540336
	11-N9	10.710	RETAINER, FRT S/D WDO RR W/STR (POSN #2) (14.260)	89-92	Y67	LH	14092709
	11-N9	10.710	RETAINER, FRT S/D WDO RR W/STR (POSN #2) (14.260)	89-92	Y67	RH	14092710
34.		8.977	SCREW, TORX, RND WA, M4.2X1.41X10, PS (F/TOP FRT LAT BRKT)	89-92		AR	11509703
		8.977	SCREW, LG RND WA HD W/BLK NYL WA, 4.2X 1.41X13, 11-OD, DRILL PT, 6172, PEOR	91-92		AR	10180421
35.	11-N9	10.710	WEATHERSTRIP, FRT S/D WDO RR	89-92	Y67	LH	10273003
	11-N9	10.710	WEATHERSTRIP, FRT S/D WDO RR	89-92	Y67	RH	10273004
	11-N9	10.710	WEATHERSTRIP, FRT S/D WDO RR (PART OF REMOVEABLE HARD TOP)	89-90	Y67	LH	10123055
	11-N9	10.710	WEATHERSTRIP, FRT S/D WDO RR (PART OF REMOVEABLE HARD TOP)	89-90	Y67	RH	10123056
36.	11-N6	10.219	SUPPORT, S/S (CPS)	89-92	Y	LH	10198727
	11-N6	10.219	SUPPORT, S/S (CPS)	89-92	Y	RH	10198728
	11-N16	12.810	BOLT, RF LIFT OFF PNL/WDO	89-92	Y	2	14090607
	11-N16	12.810	RETAINER, RF LIFT OFF PNL/WDO BOLT	89-92	Y	2	10193699
37.		N.S.	BOLT, RF LIFT OFF PNL/WDO FRT MT PLT (NOT REQD FOR Y67)				
38.	11-N6	10.219	SPRING, S/S	89-92	Y	2	14060216
39.	11-N6	10.219	RETAINER, S/S	89-92	Y	2	14060215
40.	11-N6	10.219	COVER, S/S SUPT TR	89-92	Y	LH	10219601
	11-N6	10.219	COVER, S/S SUPT TR	89-92	Y	RH	10219602
41.	11-A18	14.080	PIN, F/TOP FRT LAT (ANTELOPE)	91-92	Y67 (C05)	LH	10048803
	11-A18	14.080	PIN, F/TOP FRT LAT (ANTELOPE)	91-92	Y67 (C05)	RH	10048804
	11-A18	14.080	PIN, F/TOP FRT LAT (ANTELOPE)	89-90	Y67 (67T)	LH	10048803
	11-A18	14.080	PIN, F/TOP FRT LAT (ANTELOPE)	89-90	Y67 (67T)	RH	10048804
42.		DISCON	HANDLE, F/TOP FRT LAT PIN (ANTELOPE)	91-92	Y67 (C05)	LH	10048801
	11-A18	14.080	HANDLE, F/TOP FRT LAT PIN (ANTELOPE)	91-92	Y67 (C05)	RH	10048802
		DISCON	HANDLE, F/TOP FRT LAT PIN (ANTELOPE)	89-90	Y67 (67T)	LH	10048801
	11-A18	14.080	HANDLE, F/TOP FRT LAT PIN (ANTELOPE)	89-90	Y67 (67T)	RH	10048802

© 2000 GENERAL MOTORS SERVICE PARTS OPERATIONS-CHEVROLET-14Y

							1Y14-013
43.	11-A18	14.080	BRACKET, F/TOP FRT LAT PIN ..	89-92	Y67	2	10048806
44.	11-A18	14.080	WASHER, F/TOP FRT LAT PIN (STRAIGHT) (M25.4X11.5X.76) (13.346)	91-92	Y67 (C05)	4	10051857
	11-A18	14.080	WASHER, F/TOP FRT LAT PIN (STRAIGHT) (M25.4X11.5X.76) (13.346)	89-90	Y67	4	10051857
	11-A18	14.080	WASHER, F/TOP FRT LAT PIN (WAVED)	89-90	Y67	2	20496842
	11-A18	14.080	WASHER, F/TOP FRT LAT PIN (WAVED)	91-92	Y67 (C05)	2	20496842
45.	11-A20	14.215	BOW, F/TOP #3	89-90	Y67	1	10048818
	11-A20	14.215	BOW, F/TOP #3	91-92	Y67 (C05)	1	10048818
46.	11-N25	13.346	NUT, F/TOP FRT LAT LVR	89-90	Y67	2	10051856
	11-A18	14.080	NUT, F/TOP FRT LAT PIN (20X.380) (13.346)	91-92	Y67 (C05)	2	10051856
47.	11-A19	14.130	BOW, F/TOP #1	89-90	Y67	1	10048807
	11-A19	14.130	BOW, F/TOP #1	91-92	Y67 (C05)	1	10048807
48.	11-A19	14.140	LINK, F/TOP #1 BOW	89-92	Y67 (C05)	LH	10259057
	11-A19	14.140	LINK, F/TOP #1 BOW	89-92	Y67 (C05)	RH	10259058
49.	11-A19	14.140	INSULATOR, F/TOP #1 BOW LINK	89-92	Y67 (C05)	2	10051859
50.	11-A20	14.215	BRACKET, F/TOP #2 BOW (PART OF 53)	89-90	Y67	LH	10048819
	11-A20	14.215	BRACKET, F/TOP #2 BOW (PART OF 53)	89-90	Y67	RH	10048820
	11-A20	14.215	BRACKET, F/TOP #2 BOW (PART OF 53)	91-92	Y67 (C05)	LH	10048819
	11-A20	14.215	BRACKET, F/TOP #2 BOW (PART OF 53)	91-92	Y67 (C05)	RH	10048820
51.	11-A19	14.130	BOLT, F/TOP #2 BOW	89-92	Y67 (C05)	2	10048835
52.	11-N27	13.347	TAPE, F/TOP HDLNG TR FIN PNL FSTN (VELCRO TAPE, HOOK) (14.640)	89-92	Y67 (C05)	3	20498745
53.	11-A20	14.215	BOW, F/TOP #2 (FRT) (INCLS 50)	89-90	Y67	1	10048817
	11-A20	14.215	BOW, F/TOP #2 (FRT) (INCLS 50)	91-92	Y67 (C05)	1	10048817
54.	11-A19	14.130	BOLT, F/TOP #2 & #3 BOW LINK	89-90	Y67	2	10048834
	11-A19	14.130	BOLT, F/TOP #2 & #3 BOW LINK	91-92	Y67 (C05)	2	10048834

RPO DEFINITIONS
C05 – ROOF,CONVERTIBLE,FOLDING
10T – VINYL TOP COLOR,ARCTIC WHITE
29T – TOP COLOR – VINYL, DK SAPPHIRE
41T – VINYL TOP COLOR,BLACK
67T – VINYL TOP COLOR,DARK ANTELOPE METALLIC
68T – TOP COLOR–CLOTH NEUTRAL BEIGE

© 2000 GENERAL MOTORS SERVICE PARTS OPERATIONS–CHEVROLET–14Y

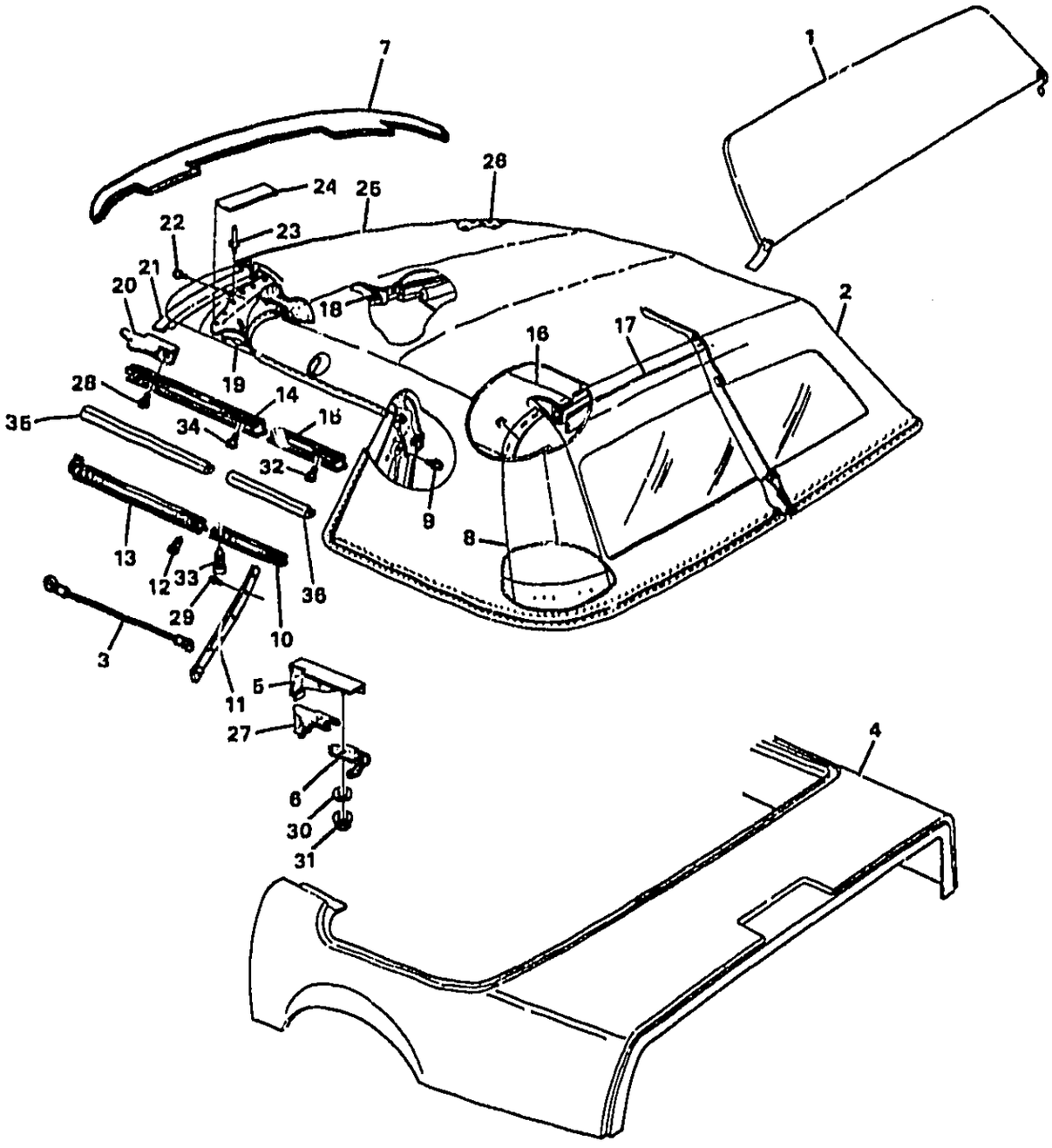

1Y14-004

1991-1996 Y67 FOLDING TOP ASM PART 1

1.	11-N28	13.395	PROTECTOR, F/TOP R/WDO ...	91-96	Y67 (C05)	1	10051896
2.		DISCON	TOP, FLDG (INCLS 11, 18, 24, 25) (WHITE)	91-93	Y67 (C05, 10T)	1	10198721
		DISCON	TOP, FLDG (INCLS 11, 18, 24, 25) (SAPPHIRE) (13.346)	91	Y67 (C05, 29T)	1	10198723
	11-N25	13.346	TOP, FLDG (INCLS 11, 18, 24, 25) (WHITE)	91-96	Y67 (C05, 16T)	1	10276976
		DISCON	TOP, FLDG (INCLS 11, 18, 24, 25) (SAPPHIRE)	92	Y67 (C05, 29T)	1	10198723
	11-N25	13.346	TOP, FLDG (INCLS 11, 18, 24, 25) (BEIGE)	92-93	Y67 (C05, 68T)	1	10198724

© 2000 GENERAL MOTORS SERVICE PARTS OPERATIONS-CHEVROLET-14Y

							1Y14-004
	11-N25	13.346	TOP, FLDG (INCLS 11, 18, 24, 25) (RED)	93	Y67 (C05, 71T)	1	10208329
	11-N25	13.346	TOP, FLDG (INCLS 11, 18, 24, 25) (BEIGE)	94-96	Y67 (C05)	1	10276973
	11-N28	13.365	FRAME, F/TOP (INCLS 8 (SEE GROUP 14.000 "FOLDING TOP ASM PART 2" FOR DETAILED ILLUSTRATED VIEW))	94-96	Y67 (C05)	1	10276983
	11-N28	13.365	FRAME, F/TOP (LESS TR & HEADLINER) (INCLS 8 (SEE GROUP 14.000 "FOLDING TOP ASM PART 2" FOR DETAILED ILLUSTRATED VIEW))	91-93	Y67 (C05)	1	14100304
3.	11-A18	14.102	CABLE, F/TOP CVR FRT SI TENS (PART OF 2) (PAINT TO MATCH)	91-96	Y67 (C05)	2	10074298
4.	11-H20	12.940	PANEL, BODY UPR RR (12.986)	91-96	Y67	1	14092651
5.	11-A27	14.731	PANEL, BODY L/PLR UPR TR (BLACK)	91-93	Y67 (19I)	RH	10103850
		DISCON	PANEL, BODY L/PLR UPR TR (BLUE)	91	Y67 (22I)	RH	10103852
	11-A27	14.731	PANEL, BODY L/PLR UPR TR (COGNAC)	91	Y67 (60I)	RH	10103854
	11-A27	14.731	PANEL, BODY L/PLR UPR TR (RED)	91-92	Y67 (73I)	RH	10103856
	11-A27	14.731	PANEL, BODY L/PLR UPR TR (GRAY)	91	Y67 (90I)	RH	10103858
	11-A27	14.731	PANEL, BODY L/PLR UPR TR (WHITE)	92-93	Y67 (10I)	RH	10167118
	11-A27	14.731	PANEL, BODY L/PLR UPR TR (BEIGE)	92-93	Y67 (64I)	RH	10175618
		DISCON	PANEL, BODY L/PLR UPR TR (GRAY)	92-93	Y67 (14I)	RH	10175620
	11-A27	14.731	PANEL, BODY L/PLR UPR TR (RED)	93	Y67 (79I)	RH	10199556
		DISCON	PANEL, BODY L/PLR UPR TR (RED)	93	Y67 (70I)	RH	10199722
	11-A27	14.731	PANEL, BODY L/PLR UPR TR (BLACK)	94-96	Y67 (19I)	RH	10212822
	11-A27	14.731	PANEL, BODY L/PLR UPR TR (RED)	94-96	Y67 (70I)	RH	10212826
	11-A27	14.731	PANEL, BODY L/PLR UPR TR (BEIGE)	94-96	Y67 (64I)	RH	10212828
	11-A27	14.731	PANEL, BODY L/PLR UPR TR (GRAY)	94-96	Y67 (14I)	RH	10212830
	11-A27	14.731	PANEL, BODY L/PLR UPR TR (BLACK)	91-93	Y67 (19I)	LH	10103851
		DISCON	PANEL, BODY L/PLR UPR TR (BLUE)	91	Y67 (22I)	LH	10103853
	11-A27	14.731	PANEL, BODY L/PLR UPR TR (COGNAC)	91	Y67 (60I)	LH	10103855
	11-A27	14.731	PANEL, BODY L/PLR UPR TR (RED)	91-92	Y67 (73I)	LH	10103857
	11-A27	14.731	PANEL, BODY L/PLR UPR TR (GRAY)	91	Y67 (90I)	LH	10103859
		DISCON	PANEL, BODY L/PLR UPR TR (WHITE)	92-93	Y67 (10I)	LH	10167117
	11-A27	14.731	PANEL, BODY L/PLR UPR TR (BEIGE)	92-93	Y67 (64I)	LH	10175619

© 2000 GENERAL MOTORS SERVICE PARTS OPERATIONS-CHEVROLET-14Y

							1Y14-004
		DISCON	PANEL, BODY L/PLR UPR TR (GRAY)	92-93	Y67 (14I)	LH	10175621
		DISCON	PANEL, BODY L/PLR UPR TR (RED)	93	Y67 (79I)	LH	10199557
		DISCON	PANEL, BODY L/PLR UPR TR (RED)	93	Y67 (70I)	LH	10199723
	11-A27	14.731	PANEL, BODY L/PLR UPR TR (BLACK)	94-96	Y67 (19I)	LH	10212821
	11-A27	14.731	PANEL, BODY L/PLR UPR TR (RED)	94-96	Y67 (70I)	LH	10212825
	11-A27	14.731	PANEL, BODY L/PLR UPR TR (BEIGE)	94-96	Y67 (64I)	LH	10212827
	11-A27	14.731	PANEL, BODY L/PLR UPR TR (GRAY)	94-96	Y67 (14I)	LH	10212829
6.	11-N20	12.942	SEAL, FRT S/D L/PLR UPR (RR)	91-96	Y67	LH	14100365
	11-N20	12.942	SEAL, FRT S/D L/PLR UPR (RR)	91-96	Y67	RH	14100366
7.		DISCON	RETAINER, F/TOP HDLNG TR FIN PNL #1 BOW (PART OF 25)	91-93	Y67 (C05)	1	10051858
	11-N25	13.346	RETAINER, F/TOP HDLNG TR FIN PNL #1 BOW (PART OF 25)	94-96	Y67 (C05)	1	10242136
8.	11-N28	13.395	PAD, F/TOP #4 & #5 BOW POSN (PART OF 2)	91-93	Y67	LH	10248381
	11-N28	13.395	PAD, F/TOP #4 & #5 BOW POSN (PART OF 2)	91-96	Y67 (C05)	RH	10248382
	11-N28	13.395	PAD, F/TOP #4 & #5 BOW POSN (PART OF 2)	94-96	Y67 (C05)	LH	10248381
9.		DISCON				AR	11505016
10.	11-N9	10.710	WEATHERSTRIP, FRT S/D WDO UPR RR	91-96	Y67	RH	10269868
	11-N9	10.710	WEATHERSTRIP, FRT S/D WDO UPR RR	91-96	Y67	LH	10269867
11.	11-N27	13.347	RETAINER, F/TOP CVR OTR ARM (PART OF 2)	91-94	Y67 (C05)	LH	10048845
	11-N27	13.347	RETAINER, F/TOP CVR OTR ARM (PART OF 2)	91-94	Y67 (C05)	RH	10048846
		N.S.	RETAINER, F/TOP CVR OTR ARM (NOT USED FOR 95-96)	95-96			
12.	11-N9	10.710	RETAINER, FRT S/D WDO UPR FRT W/STR (PAINT TO MATCH) (FITS .18 HOLE, .7 LG, .43 OD, NYLON) (14.630)	91-96	Y	2	20540336
13.	11-N9	10.710	WEATHERSTRIP, FRT S/D WDO UPR FRT (14.120)	91-96	Y67	RH	17987732
	11-N9	10.710	WEATHERSTRIP, FRT S/D WDO UPR FRT (PART OF REMOVEABLE HARD TOP) (13.346)	91-96	Y67 (CC2)	RH	10123052
	11-N9	10.710	WEATHERSTRIP, FRT S/D WDO UPR FRT (14.120)	91-96	Y67	LH	17987731
	11-N9	10.710	WEATHERSTRIP, FRT S/D WDO UPR FRT (PART OF REMOVEABLE HARD TOP) (13.346)	91-96	Y67 (CC2)	LH	10123051
14.	11-N9	10.710	RETAINER, FRT S/D WDO UPR FRT W/STR (14.060)	91-96	Y67	RH	14092712
	11-N9	10.710	RETAINER, FRT S/D WDO UPR FRT W/STR (13.346)	91-96	Y67 (CC2)	RH	10137752
	11-N9	10.710	RETAINER, FRT S/D WDO UPR FRT W/STR (14.060)	91-96	Y67	LH	14092711

© 2000 GENERAL MOTORS SERVICE PARTS OPERATIONS-CHEVROLET-14Y

							1Y14-004
	11-N9	10.710	RETAINER, FRT S/D WDO UPR FRT W/STR (13.346)	91-96	Y67 (CC2)	LH	10137751
		N.S.	SEALER, RF PNL FRT W/STR (NOT SERVICED-PROCURE LOCALLY)				
		8.600	ADHESIVE, WEATHERSTRIP, 2 OZ. TUBE, (FRT S/D WDO UPR FRT W/STR RET)	91-96		1	12345096
15.	11-A18	14.120	RETAINER, FRT S/D WDO UPR RR W/STR	91-96	Y67	RH	14092714
	11-A18	14.120	RETAINER, FRT S/D WDO UPR RR W/STR	91-96	Y67	LH	14092713
16.	11-N27	13.347	PAD, F/TOP #1, #2, #3, #4 BOW POSN	91-93	Y67 (C06)	2	10048844
	11-N28	13.395	PAD, F/TOP #4 & #5 BOW POSN	94-96	Y67 (C05)	RH	10248382
	11-N28	13.395	PAD, F/TOP #4 & #5 BOW POSN	94-96	Y67 (C05)	LH	10248381
17.	11-N27	13.349	RETAINER, F/TOP HDLNG TR FIN PNL #4 BOW (PART OF 25)	91-96	Y67 (C05)	1	10248370
18.		DISCON	RETAINER, F/TOP CVR #2 BOW (PART OF 2)	91-94	Y67 (C05)	2	10048848
		N.S.	RETAINER, F/TOP CVR #2 BOW (PART OF 2)	95-96			
19.	11-A18	14.102	CABLE, F/TOP HDLNG TR FIN PNL (PART OF 2)	91-96	Y67 (C05)	2	10048849
20.	11-N16	12.810	PROTECTOR, FRT S/D WDO W/STR UPR FRT	91-96	Y67 (CC2)	RH	10217224
	11-N16	12.810	PROTECTOR, FRT S/D WDO W/STR UPR FRT	91	Y	LH	10217223
	11-N16	12.810	PROTECTOR, FRT S/D WDO W/STR UPR FRT	91-96	Y67 (CC2)	LH	10217223
21.	11-N27	13.347	RETAINER, F/TOP CVR #1 BOW (PART OF 2)	91-96	Y67 (C05)	1	10048847
22.		N.S.	SCREW, RD SLOT HD 8-32X.50ZC			1	
23.	11-N25	13.346	RIVET, F/TOP RR LAT STKR BRKT	91-96	Y67 (C05)	10	10064339
24.	11-N27	13.347	TAPE, F/TOP HDLNG TR FIN PNL FSTN (PART OF 2) (VELCRO TAPE, HOOK) (14.640)	91-96	Y67 (C05)	3	20498745
25.		DISCON	COVER, F/TOP (PART OF 2) (INCLS 7, 17) (SAPPHIRE)	91-92	Y67 (C05, 29T)	1	10198658
		DISCON	COVER, F/TOP (PART OF 2) (INCLS 7, 17) (RED)	93	Y67 (C05, 71T)	1	10210167
	11-N27	13.347	COVER, F/TOP (W/PLASTIC BACKLITE) (PART OF 2) (INCLS 7, 17) (WHITE)	91-93	Y67 (C05, 10T)	1	10198656
	11-N27	13.347	COVER, F/TOP (W/PLASTIC BACKLITE) (PART OF 2) (INCLS 7, 17) (BLACK)	91-93	Y67 (C05, 41T)	1	10198659
	11-N27	13.347	COVER, F/TOP (W/PLASTIC BACKLITE) (PART OF 2) (INCLS 7, 17) (BEIGE)	91-93	Y67 (C05, 68T)	1	10198660
	11-N27	13.347	COVER KIT, F/TOP (BEIGE)	95-96	Y67 (C05)	1	12529078
	11-N27	13.347	COVER KIT, F/TOP (W/GLASS BACKLITE, ON INITIAL INSTALL MUST BE USED W/HARDWARE KIT 12522961) (BLACK)	91-96	Y67 (C05, 41T)	1	12529077

© 2000 GENERAL MOTORS SERVICE PARTS OPERATIONS-CHEVROLET-14Y

							1Y14-004
	11-N27	13.347	COVER KIT, F/TOP (W/GLASS BACKLITE, ON INITIAL INSTALL MUST BE USED W/HARDWARE KIT 12522961) (BEIGE)	91-94	Y67 (C05, 68T)	1	12529078
	11-N27	13.347	COVER KIT, F/TOP (W/GLS BACKLITE, ON INITIAL INSTALL MUST USE T/W HARDWARE KIT 12522961) (WHITE)	91-96	Y67 (C05, 10T, 16T) ...	1	12529079
	11-N25	13.346	ESCUTCHEON, F/TOP CVR LWR RR MLDG RR (BLACK) (10.219) ..	91-93	Y67 (C05)	1	10048841
	11-N25	13.346	ESCUTCHEON, F/TOP CVR LWR RR MLDG RR (SADDLE) (10.219)	91-94	Y67 (C05)	1	10048843
26.	11-N27	13.347	PANEL, F/TOP HDLNG TR FIN (BLACK)	91-96	Y67 (C05)	1	10248379
27.	11-N20	12.942	SEAL, FRT S/D L/PLR UPR (FRT)	91-96	Y67	LH	14092683
	11-N20	12.942	SEAL, FRT S/D L/PLR UPR (FRT)	91-96	Y67	RH	14092684
28.		8.977	SCREW, LG RND WA HD W/BLK NYL WA, 4.2X 1.41X13, 11-OD, DRILL PT, 6172, PEOR (FRT S/D WDO UPR FRT W/STR RET)	91-96	.....	6	10180421
29.		8.977	SCREW, LG RND WA HD W/BLK NYL WA, 4.2X 1.41X13, 11-OD, DRILL PT, 6172, PEOR (FRT S/D WDO RR W/STR RET)	91-96	.....	6	10180421
30.	11-N14	12.170	SPACER, F/TOP STOW COMPT LID	91	Y67	2	10181383
	11-N14	12.170	WASHER, F/TOP STOW COMPT LID LAT REL ACTR LVR	92-96	Y67	1	10175796
31.	11-N14	12.170	RETAINER, F/TOP STOW COMPT LID LAT REL ACTR LVR (PUSH ON)	91	Y67	1	10077491
	11-N14	12.170	RETAINER, F/TOP STOW COMPT LID LAT REL ACTR LVR (PUSH ON)	92-96	Y67	1	10175798
32.		8.977	SCREW, TORX, RND WA, M4.2X1.41X10, PS (FRT S/D WDO UPR RR W/STR RET)	91-96	.....	8	11509703
33.	11-N9	10.710	RETAINER, FRT S/D WDO RR W/STR (POSN #1) (PAINT TO MATCH) (FITS .18 HOLE, .7 LG, .43 OD, NYLON) (14.630)	91-96	Y	8	20540336
34.		8.977	SCREW-ROUNDWASHER M4.2X1.4X13, 8.63OD, 6010M, 6138M, C/R, TAP	91-96	.....	12	11515893
35.		N.S.	GUARD, FRT S/D WDO UPR FRT W/STR RET EDGE	91-93	.....		
	11-N9	10.710	GUARD, FRT S/D WDO UPR FRT W/STR RET EDGE (10.695)	94-96	Y67 (VD1) (EXPORT) ..	2	12512656
36.		N.S.	GUARD, FRT S/D WDO UPR RR W/STR RET EDGE	91-93	.....		
	11-N9	10.710	GUARD, FRT S/D WDO UPR RR W/STR RET EDGE (10.695)	94-96	Y67 (VD1) (EXPORT) ..	2	12512656

RPO DEFINITIONS
CC2 – ROOF,AUXILIARY
C05 – ROOF,CONVERTIBLE,FOLDING
VD1 – PROVISION OPTIONS,EUROPE(EXPORT)
10I – INTERIOR TRIM – ARCTIC WHITE
10T – VINYL TOP COLOR,ARCTIC WHITE

© 2000 GENERAL MOTORS SERVICE PARTS OPERATIONS-CHEVROLET-14Y

14I – INTERIOR TRIM LT GRAY
16T – TOP COLOR BRITE WHITE (94)
19I – INTERIOR TRIM,BLACK
22I – INTERIOR TRIM,DARK ROYAL BLUE
29T – TOP COLOR – VINYL, DK SAPPHIRE
41T – VINYL TOP COLOR,BLACK
60I – INTERIOR TRIM,DARK COGNAC
64I – INTERIOR TRIM,LIGHT BEIGE
68T – TOP COLOR–CLOTH NEUTRAL BEIGE
70I – INTERIOR TRIM,TORCH RED
71T – TOP COLOR RUBY RED (93)
73I – INTERIOR TRIM,FLAME RED
79I – INTERIOR TRIM,RUBY RED
90I – INTERIOR TRIM,SMOKE GRAY

© 2000 GENERAL MOTORS SERVICE PARTS OPERATIONS–CHEVROLET–14Y

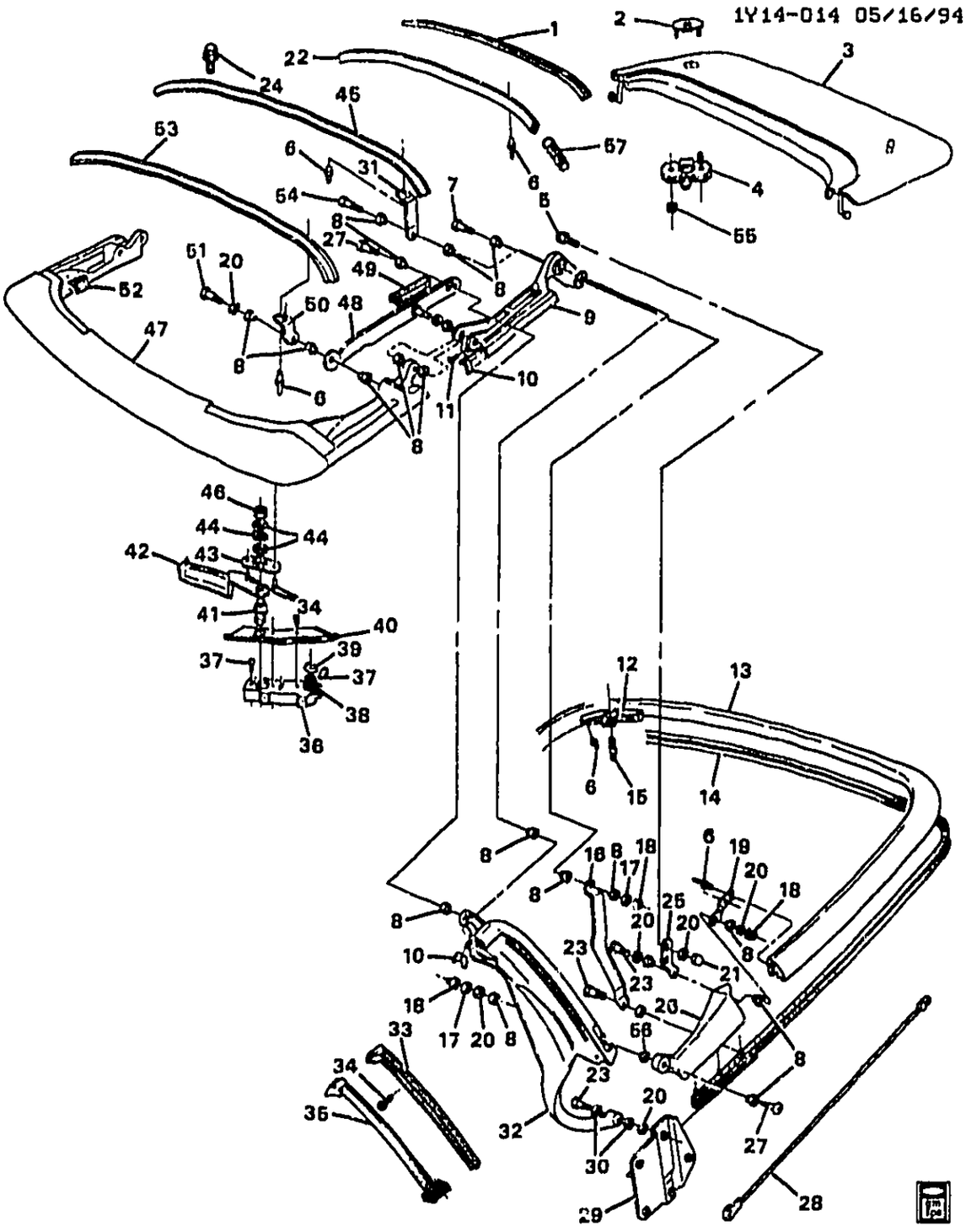

1993–1996 Y67 FOLDING TOP ASM PART 2

1.		DISCON	RETAINER, F/TOP HDLNG TR FIN PNL #1 BOW	93	Y67 (C05)	1	10051858
	11–N25	13.346	RETAINER, F/TOP HDLNG TR FIN PNL #1 BOW	94–96	Y67 (C05)	1	10242136
2.	11–A22	14.340	BEZEL, F/TOP RR LAT	93–96	Y67	1	10107833
3.	11–N14	12.170	LID, F/TOP STOW COMPT	93–96	Y67	1	10276994
	11–N14	12.170	PROTECTOR, F/TOP STOW COMPT LID (W/CLEAR STRIPS) .	93–96	Y67	1	12524512

© 2000 GENERAL MOTORS SERVICE PARTS OPERATIONS–CHEVROLET–14Y

							1Y14-014
4.	11-A22	14.340	LATCH, F/TOP RR	93-96	Y67	2	10198616
5.	11-A20	14.215	BOLT, F/TOP #4 BOW (14.340)	93-96	Y67 (C05)	4	10064336
6.	11-N25	13.346	RIVET, F/TOP RR LAT STKR BRKT	93-96	Y67 (C05)	10	10064339
7.	11-A18	14.030	BOLT, F/TOP (M8 X 1.25 X 20)	03-96	Y67	2	10069877
8.	11-A22	14.340	BUSHING, F/TOP RR LAT LVR	93-96	Y67 (C05)	1	14100338
	11-A20	14.215	BUSHING, F/TOP #2 BOW PIV (14.340)	93-96	Y67 (C05)	1	14100338
	11-A19	14.160	BUSHING, F/TOP #1 BOW LINK FRT PIV (14.340)	93-96	Y67 (C05)	1	14100338
	11-A19	14.160	BUSHING, F/TOP #1 BOW PIV (14.340)	93-96	Y67 (C05)	1	14100338
	11-A19	14.160	BUSHING, F/TOP #1 BOW LINK RR PIV (14.340)	93-96	Y67 (C05)	1	14100338
	11-A21	14.310	BUSHING, F/TOP INR ARM UPR PIV (14.340)	93-96	Y67 (C05)	1	14100338
	11-A19	14.160	BUSHING, F/TOP #5 BOW PIV (14.340)	93-96	Y67 (C05)	1	14100338
	11-A19	14.160	BUSHING, F/TOP #4 BOW PIV (14.340)	93-96	Y67 (C05)	1	14100338
	11-A19	14.160	BUSHING, F/TOP #5 BOW HGE PIV (14.340)	93-96	Y67 (C05)	1	14100338
9.		DISCON	RAIL, F/TOP RR SI	93	Y67 (C05)	LH	10048811
		DISCON	RAIL, F/TOP RR SI	93	Y67 (C05)	RH	10048812
	11-A20	14.170	RAIL, F/TOP RR SI	94-96	Y (C05)	LH	10240343
	11-A20	14.170	RAIL, F/TOP RR SI	94-96	Y (C05)	RH	10240344
10.	11-A21	14.260	WEATHERSTRIP, F/TOP RR S/RL	93-96	Y67 (C05)	LH	14100349
	11-A21	14.260	WEATHERSTRIP, F/TOP RR S/RL	93-96	Y67 (C05)	RH	14100350
11.	11-A19	14.155	BOLT, F/TOP RR S/RL (M5X0.8X10) (PAN HEAD)	93-96	Y67	2	10051850
12.	11-A21	14.310	BRACKET, F/TOP #5 BOW PIV	93-96	Y67 (C05)	LH	10048829
	11-A21	14.310	BRACKET, F/TOP #5 BOW PIV	93-96	Y67 (C05)	RH	10048830
13.	11-A22	14.340	BOW, F/TOP #5	93-96	Y (C05)	1	12529214
14.	11-N25	13.346	WEATHERSTRIP, F/TOP RR	93-96	Y67 (C05)	1	14092676
15.	11-A21	14.310	STRIKER, F/TOP RR LAT	93-96	Y67 (C05)	2	10258675
16.	11-A21	14.310	ARM, F/TOP INR	93-96	Y67 (C05)	LH	10273035
	11-A21	14.310	ARM, F/TOP INR	93-96	Y67 (C05)	RH	10273036
17.	11-A21	14.310	WASHER, F/TOP INR ARM UPR PIV (.340 X .687 X .060) (14.260)	93-96	Y67 (C05)	4	10064340
18.		8.915	NUT, HEX W/CON WA, M8X1.25, 7.32 THK, 9, ZF (F/TOP)	93-96		6	11514519
19.	11-A21	14.310	HINGE, F/TOP #5 BOW	93-96	Y67 (C05)	LH	10048827
	11-A21	14.310	HINGE, F/TOP #5 BOW	93-96	Y67 (C05)	RH	10048828
20.	11-A21	14.310	WASHER, F/TOP INR ARM LWR PIV	93-96	Y67	10	14100364
21.		8.921	RETAINER, PUSH-ON M8X1.25 THD ZOR (F/TOP)	93-96		6	10009923
22.	11-A20	14.215	BOW, F/TOP #4 (RR)	93-96	Y67 (C05)	1	10248371
23.	11-A19	14.155	BOLT, F/TOP PIV BRKT (LINK TO MAIN) (M8X1.25-6)	93-94	Y67 (C05)	2	10051852
	11-A19	14.155	BOLT, F/TOP PIV BRKT (LINK TO MAIN)	95-96	Y67 (C05)	2	12533329
	11-A19	14.155	BOLT, F/TOP PIV BRKT (RR RL TO MAIN) (14.310)	93-94	Y67 (C05)	2	10048832
	11-A19	14.155	BOLT, F/TOP PIV BRKT (RR RL TO MAIN)	95-96	Y67 (C05)	2	12533330
24.	11-A20	14.215	BOLT, F/TOP #3 BOW (M6X1.0X34) (TRUSS HD)	93-96	Y67 (C05)	2	10048837

© 2000 GENERAL MOTORS SERVICE PARTS OPERATIONS-CHEVROLET-14Y

							1Y14-014
25.	11-A20	14.215	BRACKET, F/TOP #4 BOW (14.310)	93-96	Y67 (C05)	2	10107823
26.	11-A22	14.340	BOW, F/TOP #5 SI (14.260)	93	Y67 (C05)	LH	10172355
	11-A22	14.340	BOW, F/TOP #5 SI	93	Y67 (C05)	RH	10172356
	11-A22	14.340	BOW, F/TOP #5 SI	94-96	Y (C05)	LH	10240341
	11-A22	14.340	BOW, F/TOP #5 SI	94-96	Y (C05)	RH	10240342
27.	11-A19	14.155	BOLT, F/TOP RR S/RL (M5X0.8X10) (PAN HEAD)	93-96	Y67 (C05)	2	10051850
	11-A19	14.155	BOLT, F/TOP RR S/RL (M6 X 1 X 36.5 TR HD SHLDR) (14.190)	93-96	Y67 (C05)	4	10048836
28.	11-A18	14.102	CABLE, F/TOP CVR FRT SI TENS (PAINT TO MATCH)	93-96	Y67 (C05)	2	10074298
29.	11-A21	14.310	BRACKET, F/TOP PIV	93-96	Y67 (C05)	LH	10123005
	11-A21	14.310	BRACKET, F/TOP PIV	93-96	Y67 (C05)	RH	10123006
30.	11-A19	14.160	BUSHING, F/TOP #1 BOW PIV (14.340)	93-96	Y67 (C05)	1	14100338
31.	11-A20	14.215	BRACKET, F/TOP #3 BOW	93-96	Y67 (C05)	LH	10246373
	11-A20	14.215	BRACKET, F/TOP #3 BOW	93-96	Y67 (C05)	RH	10246374
32.	11-A21	14.310	ARM, F/TOP OTR (14.170)	93	Y67 (C05)	LH	10107819
	11-A21	14.310	ARM, F/TOP OTR (14.190)	93	Y67 (C05)	RH	10107820
	11-A21	14.310	ARM, F/TOP OTR	94-96	Y	LH	10242123
	11-A21	14.310	ARM, F/TOP OTR	94-96	Y	RH	10242124
33.	11-N9	10.710	RETAINER, FRT S/D WDO RR W/STR (POS #1) (PAINT TO MATCH) (FITS .18 HOLE, .7 LG, .43 OD, NYLON) (14.630)	93-96	Y67	4	20540336
	11-N9	10.710	RETAINER, FRT S/D WDO RR W/STR (POSN #2) (14.260)	93-96	Y67	LH	14092709
	11-N9	10.710	RETAINER, FRT S/D WDO RR W/STR (POSN #2) (14.260)	93-96	Y67	RH	14092710
34.		8.977	SCREW, TORX, RND WA, M4.2X1.41X10, PS (FRT S/D WDO W/STR RET)	93-96	Y67	8	11509703
		8.977	SCREW, TORX, RND WA, M4.2X1.41X10, PS (FRT S/D WDO W/STR RET)	93-96	Y67	4	11509703
35.	11-N9	10.710	WEATHERSTRIP, FRT S/D WDO RR	93-96	Y67	LH	10273003
	11-N9	10.710	WEATHERSTRIP, FRT S/D WDO RR	93-96	Y67	RH	10273004
36.	11-N6	10.219	SUPPORT, S/S (CPS)	93-96	Y	LH	10198727
	11-N6	10.219	SUPPORT, S/S (CPS)	93-96	Y	RH	10198728
	11-N16	12.810	RETAINER, RF LIFT OFF PNL/WDO BOLT	93-96	Y	2	10193699
37.	11-N16	12.810	BOLT, RF LIFT OFF PNL/WDO	93-96	Y	2	14090607
38.	11-N6	10.219	SPRING, S/S	93-96	Y	2	14060216
39.	11-N6	10.219	RETAINER, S/S	93-96	Y	2	14060215
40.	11-N6	10.219	COVER, S/S SUPT TR	93-96	Y	LH	10219601
	11-N6	10.219	COVER, S/S SUPT TR	93-96	Y	RH	10219602
41.	11-A18	14.080	PIN, F/TOP FRT LAT (ANTELOPE)	93-96	Y67 (C05)	LH	10048803
	11-A18	14.080	PIN, F/TOP FRT LAT (ANTELOPE)	93-96	Y67 (C05)	RH	10048804
42.		DISCON	HANDLE, F/TOP FRT LAT PIN (ANTELOPE)	93	Y67 (C05)	LH	10048801
	11-A18	14.080	HANDLE, F/TOP FRT LAT PIN (ANTELOPE)	93	Y67 (C05)	RH	10048802
	11-A18	14.080	HANDLE, F/TOP FRT LAT PIN (BLACK)	94-96	Y (C05)	LH	10240339

© 2000 GENERAL MOTORS SERVICE PARTS OPERATIONS-CHEVROLET-14Y

							1Y14-014
	11-A18	14.080	HANDLE, F/TOP FRT LAT PIN (BLACK)	94-96	Y (C05)	RH	10240340
43.	11-A18	14.080	BRACKET, F/TOP FRT LAT PIN	93-96	Y67	2	10048806
44.	11-A18	14.080	WASHER, F/TOP FRT LAT PIN (STRAIGHT) (M25.4X11.5X.76) (13.346)	93-96	Y67 (C05)	4	10051857
	11-A18	14.080	WASHER, F/TOP FRT LAT PIN (WAVED)	93-96	Y67 (C05)	2	20496842
45.	11-A20	14.215	BOW, F/TOP #3	93	Y67 (C05)	1	10048818
	11-A20	14.215	BOW, F/TOP #3	94-96	Y67 (C05)	1	10240746
46.	11-A18	14.080	NUT, F/TOP FRT LAT PIN (20X.380) (13.346)	93-96	Y67 (C05)	2	10051856
47.	11-A19	14.130	BOW, F/TOP #1	93	Y67 (C05)	1	10048807
	11-A19	14.130	BOW, F/TOP #1	94-96	Y (C05)	1	10276985
48.	11-A19	14.140	LINK, F/TOP #1 BOW	93-96	Y67 (C05)	LH	10259057
	11-A19	14.140	LINK, F/TOP #1 BOW	93-96	Y67 (C05)	RH	10259058
49.	11-A19	14.140	INSULATOR, F/TOP #1 BOW LINK	93-94	Y67 (C05)	2	10051859
50.	11-A20	14.215	BRACKET, F/TOP #2 BOW (PART OF 53)	93-96	Y67 (C05)	LH	10048819
	11-A20	14.215	BRACKET, F/TOP #2 BOW (PART OF 53)	93-96	Y67 (C05)	RH	10048820
51.	11-A19	14.130	BOLT, F/TOP #2 BOW	93-96	Y67 (C05)	2	10048835
52.	11-N27	13.347	TAPE, F/TOP HDLNG TR FIN PNL FSTN (VELCRO TAPE, HOOK) (14.640)	93-96	Y67 (C05)	3	20498745
53.	11-A20	14.215	BOW, F/TOP #2 (INCLS 50)	94-96	Y67 (C05)	1	10240745
	11-A20	14.215	BOW, F/TOP #2 (FRT) (INCLS 50)	93	Y67 (C05)	1	10048817
54.	11-A19	14.130	BOLT, F/TOP #2 & #3 BOW LINK	93-96	Y67 (C05)	2	10048834
55.		8.917	NUT, HEX W/CON WA M6X1X5.5 (9) 7111M 16-OD (F/TOP RR LAT)	93-96		4	11516793
56.	11-A21	14.310	BUSHING, F/TOP OTR ARM PIV (14.160)	93-96	Y67 (C05)	4	10048833
57.	11-A20	14.215	SPRING, F/TOP #4 BOW ASST	94-96	Y67 (C05)	2	10239820

RPO DEFINITIONS
C05 – ROOF,CONVERTIBLE,FOLDING

© 2000 GENERAL MOTORS SERVICE PARTS OPERATIONS–CHEVROLET–14Y

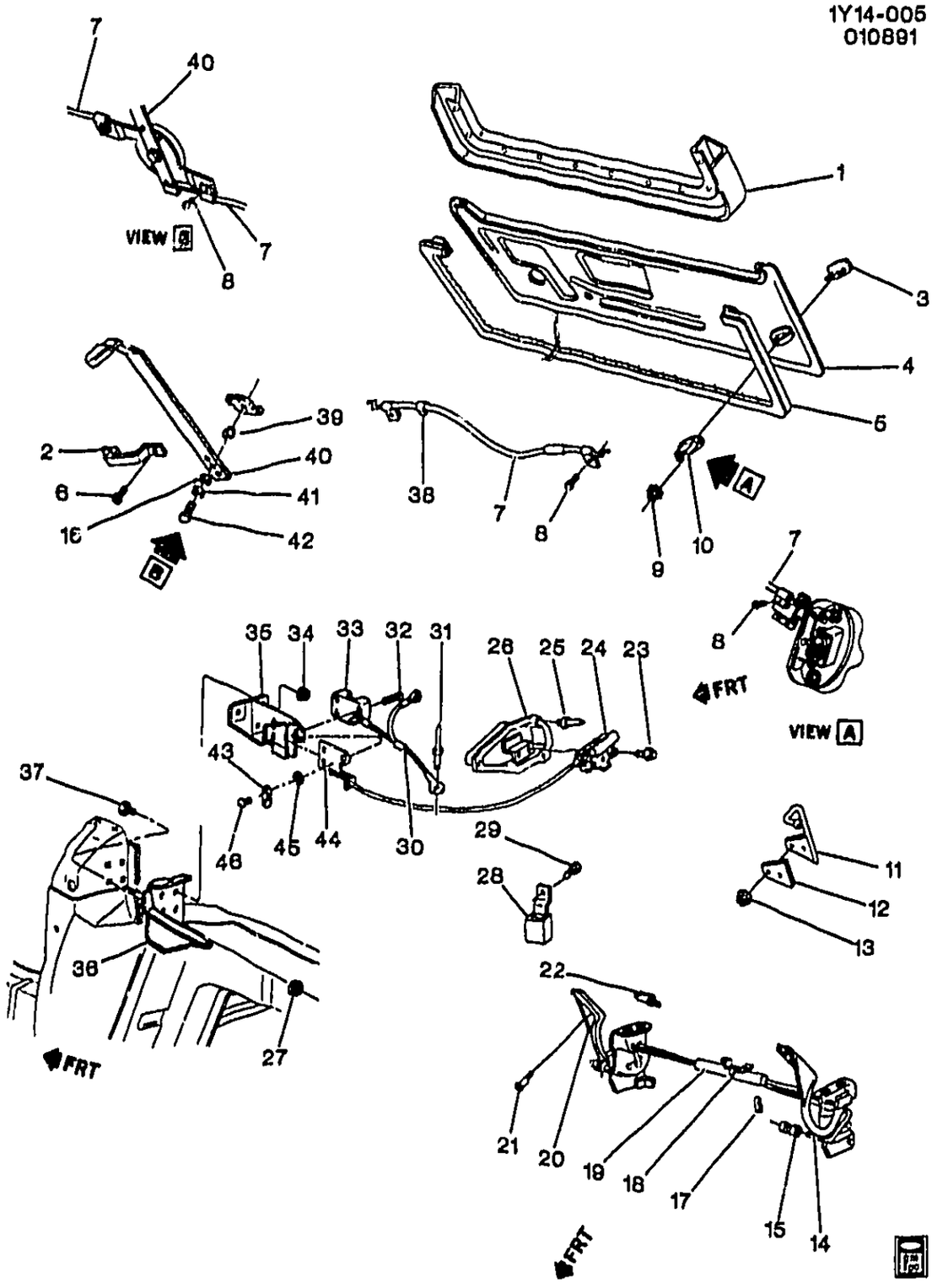

1986–1988 Y67 FOLDING TOP ASM/HARDWARE & STOWAGE COMPARTMENT

1.		DISCON	PANEL, F/TOP STOW COMPT LID	14092671
2.		DISCON	BRACKET, F/TOP RR LAT LVR	10051874
3.	11–A22	14.340	BEZEL, F/TOP RR LAT (1986)	10132716
	11–A22	14.340	BEZEL, F/TOP RR LAT (1987–88)	10132716
4.		DISCON	LID, F/TOP STOW COMPT	14092653
5.	11–N14	12.170	WEATHERSTRIP, F/TOP STOW COMPT LID	14092675

© 2000 GENERAL MOTORS SERVICE PARTS OPERATIONS–CHEVROLET–14Y

				1Y14-005
6.		8.977	SCREW, HWH TAP (M4.8X1.59X16) HI LO THD	11508428
7.	11-A22	14.475	CABLE, F/TOP RR LAT REL	1410033[illegible]
8.		8.977	SCREW, RD WA HD C/R TAP (M4.2X1.41X20) BLK ORG	10180421
9.		8.917	NUT, HEX W/CON WA (M6X1) ZOR	11516793
10.		DISCON	LATCH, F/TOP-RH	14092662
		DISCON	LATCH, F/TOP-LH	14092661
11.		DISCON	PLATE, F/TOP STOW COMPT LID LAT STKR-RH	14092730
		DISCON	PLATE, F/TOP STOW COMPT LID LAT STKR-LH	14092729
12.		DISCON	PLATE, F/TOP STOW COMPT LID LAT STKR	14092740
13.	11-M17	2.447	NUT, HEX (M8 X 1.25 X 7.8) (W/CAST IRON HD) (AC-DELCO #12337995)	12337995
14.		DISCON	ROD, F/TOP STOW COMPT LID HGE-RH	14092663
15.		DISCON	GUIDE, F/TOP STOW COMPT LID HGE	14092657
16.		DISCON	WASHER, SPECIAL (.5 ODX.358 IDX.015) (1986)	14100339
	11-A21	14.310	WASHER, F/TOP RR LAT LVR (16.069) (1987-88)	3875565
17.	11-N14	12.170	RETAINER, F/TOP STOW COMPT LID HGE GDE	14100345
18.		8.965	RETAINER, PLASTIC 7" ADJ STRAP	3816659
19.		DISCON	ROD, F/TOP STOW COMPT LID HGE-LH	14092663
20.	11-N14	12.170	HINGE, F/TOP STOW COMPT LID-RH	10175550
	11-N14	12.170	HINGE, F/TOP STOW COMPT LID-LH	10175549
	11-N14	12.170	ROD, F/TOP STOW COMPT LID HGE TORQ	10175551
21.	11-N14	12.170	BOLT, F/TOP STOW COMPT LID HGE (3.680)	14081021
22.	11-N14	12.170	SHIM, F/TOP STOW COMPT LID	10051895
23.		8.977	SCREW, HWH TAP (M4.2X1.41X16) PZOR	11509135
24.		N.S.	ACTUATOR (SERVICED BY)	
	11-N14	12.170	ACTUATOR, F/TOP STOW COMPT LID LAT REL	14092646
25.		N.S.	RIVET, F/TOP S/COMPT LID ACTU MTG PLT	
26.		DISCON	PLATE, F/TOP S/COMPT LID ACTU MTG	14100399
27.		8.917	NUT, HEX W/CON WA (M8X1.25X7.5) POR (9)	11506117
28.	11-N25	13.095	RELAY, FLDG TOP STOW COMPT LID LAT ACT (W/CONN & LEADS) (AC-DELCO #15-8264)	12167112
29.		8.977	SCREW, PN HD C/R TAP (M4.2-1.41X13) ZC	11502705
30.	11-A22	14.475	CABLE, F/TOP STOW COMPT LID LAT REL	14100347
31.		N.S.	RIVET, F/TOP STOW COMPT LID ACTU	
32.	11-N14	12.170	BOLT, F/TOP STOW COMPT LID LAT ACTR	14100340
33.	11-N14	12.170	LATCH, F/TOP STOW COMPT LID-RH	14092744
	11-N14	12.170	LATCH, F/TOP STOW COMPT LID-LH	14092743
34.		8.917	NUT, HEX W/CON WA (M8X1.25X7.5) POR (9)	11506117
		8.917	NUT, HEX W/CON WA (M8X1.25X7.8) PEOR (9)	11506117
35.	11-N14	12.170	BRACKET, F/TOP STOW COMPT LID LAT-RH	14092734
	11-N14	12.170	BRACKET, F/TOP STOW COMPT LID LAT-LH	14092733
36.	11-N21	12.981	BRACKET, R/FLR PNL UPR FRT (RH)	14092736
	11-N21	12.981	BRACKET, R/FLR PNL UPR FRT (LH)	14092735
37.		8.903	BOLT, (M8-1.25X20) CAP BU HD SH SQ NECK	12338141
38.	11-A22	14.475	STRAP, F/TOP RR LAT REL CBL	3816659
39.	11-A22	14.340	BUSHING, F/TOP PIV	14100338
40.		DISCON	LEVER, F/TOP RR LAT	10051873
41.	11-A21	14.310	WASHER, FL (.4 IDX.625 THK) NYLON	3875565
42.		DISCON	BOLT, SPECIAL (M6X1X20.0)	14100337
43.		DISCON	LEVER, FLDG TOP STOW COMPT LID REL-RH	14105152
	11-N14	12.170	LEVER, FLDG TOP STOW COMPT LID REL-LH	14105151
44.		DISCON	BRACKET, STOW COMPT LID LAT-RH	14105154
		DISCON	BRACKET, STOW COMPT LID LAT-LH	14105153
45.	11-N14	12.170	SPACER, F/TOP STOW COMPT LID	10181383
46.	11-N14	12.170	RETAINER, F/TOP STOW COMPT LID LAT REL ACTR LVR	10077491

© 2000 GENERAL MOTORS SERVICE PARTS OPERATIONS-CHEVROLET-14Y

MICROFICHE INDEX

GROUPS 14.000 THRU 15.000

FICHE 11 OF 11

GROUP	DESCRIPTION	STARTING GRID LOCATION PARTS	ILLUSTRATIONS
–	GENERAL INFORMATION	1–A2	1–G2
–	ALPHABETICAL INDEX	1–B13	N.A.
14.000	INTERIOR TRIM – SEAT BELTS	11–A2	11–E2
15.000	REAR SEAT TRIM – CARPETS – YARDAGE	11–D2	11–H2
–	OUT OF FICHE CALLS	N.A.	11–M16

11–F1

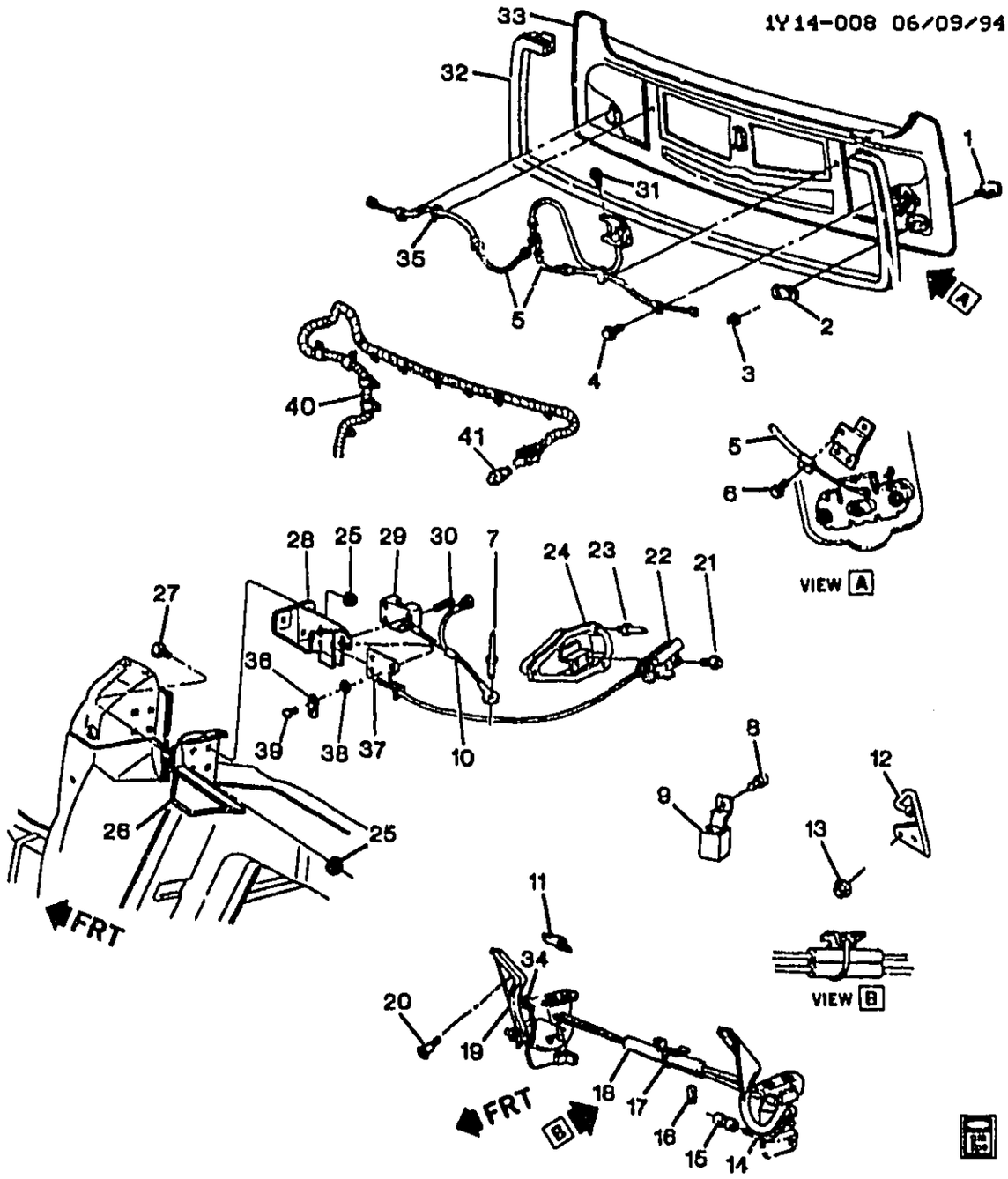

1Y14-008

1989-1991 Y67 FOLDING TOP ASM/HARDWARE & STOWAGE COMPARTMENT

1.	11-A22	14.340	BEZEL, F/TOP RR LAT	10107833
2.	11-A22	14.340	LATCH, F/TOP RR (1989-90)	10198616
	11-A22	14.340	LATCH, F/TOP RR (1991)	10198616
3.		8.917	NUT, HEX W/CON WA M6X1X5.5 (9) 7111M 16-OD (AR)	11516793
4.		8.977	SCREW, HWH TAP M4.2X1.41X16 9.2-OD DRILPT BLK PZOR (AR)	11509135
		8.929	WASHER, FL 7/32X1/2X5/8 1050 CAD HARD (AR)	2077521
5.	11-A22	14.475	CABLE, F/TOP RR LAT REL	10107832
6.		8.977	SCREW, HWH, 9.2OD, 13.8 THD (AR)	16516859
7.		N.S.	RIVET, F/TOP STOW COMPT LID LAT REL CBL	
8.		8.977	SCREW, PAN HD TORX TAP M4.2X1.41X13 CB (AR)	11504646
9.	11-N25	13.095	RELAY, F/TOP RR LAT REL ACTR (W/CONN & LEADS) (AC-DELCO #15-8264)	12167112

© 2000 GENERAL MOTORS SERVICE PARTS OPERATIONS-CHEVROLET-14Y

				1Y14-008
10.	11-A22	14.475	CABLE, F/TOP RR LAT REL	14100347
11.	11-N14	12.170	SHIM, F/TOP STOW COMPT LID	10051695
12.	11-N14	12.170	STRIKER, F/TOP STOW COMPT LID LAT (RH)	10285921
	11-N14	12.170	STRIKER, F/TOP STOW COMPT LID LAT (LH)	10285920
13.		8.915	NUT (AR) (AC-DELCO #12337995)	12337995
14.		DISCON	ROD, F/TOP STOW COMPT LID HGE	14092663
15.		DISCON	GUIDE, F/TOP STOW COMPT LID HGE	14092657
16.	11-N14	12.170	RETAINER, F/TOP STOW COMPT LID HGE GDE	14100345
17.		8.965	STRAP, ADJ TIE 3/4X9/32X255MM (AR) (AC-DELCO #12337820)	12337820
18.	11-N14	12.170	INSULATOR, F/TOP STOW COMPT LID HGE ROD ((CUT AS REQUIRED))	3999572
19.	11-N14	12.170	HINGE, F/TOP STOW COMPT LID (INCL 34) (RH)	10175550
	11-N14	12.170	HINGE, F/TOP STOW COMPT LID (INCL 34) (LH)	10175549
	11-N14	12.170	ROD, F/TOP STOW COMPT LID HGE TORQ	10175551
20.		8.900	BOLT, HFH M8X1.25X21MM, 17 OD, 10.9 (AR)	12551177
21.		8.977	SCREW, HWH TAP M4.2X1.41X16 9.2-OD DRILPT BLK PZOR (AR)	11509135
22.		N.S.	ACTUATOR, F/TOP STOW COMPT LID LAT REL (W/LVR) (SERVICED BY)	
	11-N14	12.170	ACTUATOR, F/TOP STOW COMPT LID LAT REL	14092646
	11-N14	12.170	SPACER, SOLENOID	10181383
23.		N.S.	RIVET, F/TOP STOW COMPT LID LAT ACTR MT PLT	
24.		DISCON	PLATE, F/TOP STOW COMPT LID LAT ACTR MT	14100399
25.		8.915	NUT, HEX W/CON WA M8X1.25X9.5 19-OD 9 ZP (AR)	11506117
26.	11-N21	12.981	BRACKET, R/FLR PNL UPR FRT (RH)	14092736
	11-N21	12.981	BRACKET, R/FLR PNL UPR FRT (LH)	14092735
27.		8.903	BOLT, RD HD SQ NK M8X1.25X25 PC W/SS CAP (AR)	12338141
28.	11-N14	12.170	BRACKET, F/TOP STOW COMPT LID LAT (RH)	14092734
	11-N14	12.170	BRACKET, F/TOP STOW COMPT LID LAT (LH)	14092733
29.	11-N14	12.170	LATCH, F/TOP STOW COMPT LID (RH)	14092744
	11-N14	12.170	LATCH, F/TOP STOW COMPT LID (LH)	14092743
30.	11-N14	12.170	BOLT, F/TOP STOW COMPT LID LAT ACTR	14100340
31.		8.977	SCREW, HWH, 9.2OD, 13.8 THD (AR)	16516859
32.	11-N14	12.170	WEATHERSTRIP, F/TOP STOW COMPT LID	14092675
33.	11-N14	12.170	LID, F/TOP STOW COMPT	10276994
34.		DISCON	STOP, F/TOP STOW COMPT LID HGE (PART OF 19)	14092658
35.		8.965	STRAP-TIE-7"ADJ (W/ROSEBUD FOR .25 DIA HOLE .031-.14 TH) (AR)	3816659
36.		DISCON	LEVER, F/TOP STOW COMPT LID LAT REL (RH)	14105152
	11-N14	12.170	LEVER, F/TOP STOW COMPT LID LAT REL (LH)	14105151
37.		DISCON	BRACKET, F/TOP STOW COMPT LID LAT REL ACTR LVR (RH)	14105154
		DISCON	BRACKET, F/TOP STOW COMPT LID LAT REL ACTR LVR (LH)	14105153
38.	11-N14	12.170	SPACER, SOLENOID ASM F/TOP S/COMP	10181383
39.	11-N14	12.170	RETAINER, F/TOP STOW COMPT LID LAT REL ACTR LVR	10077491
40.	11-N22	13.090	WIRE, CONV TOP	
41.	11-A22	14.483	SWITCH, F/TOP STOW COMPT LID REL	

© 2000 GENERAL MOTORS SERVICE PARTS OPERATIONS-CHEVROLET-14Y

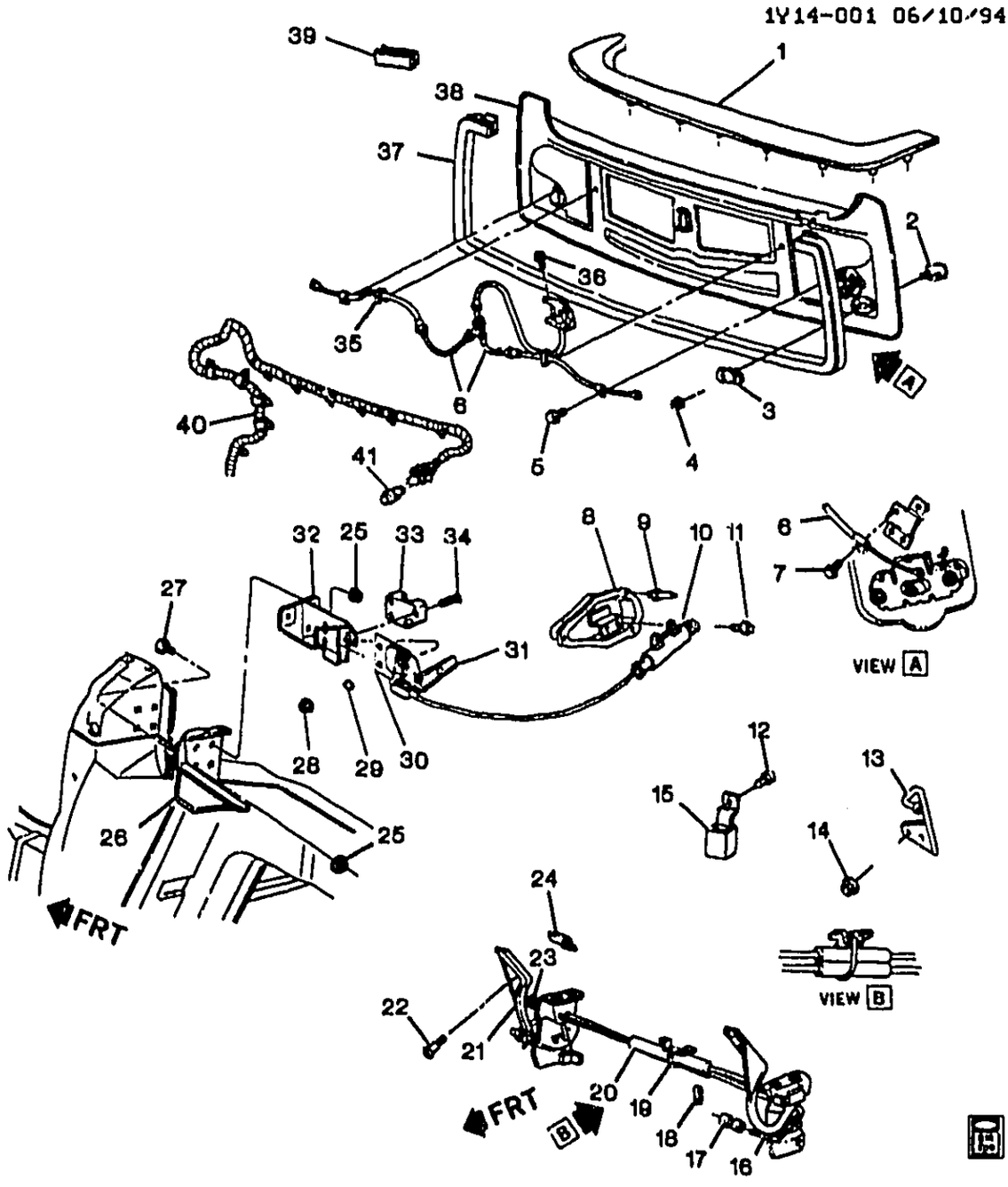

1Y14-001

1992 Y67 FOLDING TOP ASM/HARDWARE & STOWAGE COMPARTMENT(1ST DES)

1.	11-N14	12.170	PANEL, F/TOP STOW COMPT LID TR (BLACK)	92	Y67 (19I)	1	10281070
		DISCON	PANEL, F/TOP STOW COMPT LID TR (RED)	92	Y67 (73I)	1	10123063
		DISCON	PANEL, F/TOP STOW COMPT LID TR (WHITE)	92	Y67 (10I)	1	10198711
	11-N14	12.170	PANEL, F/TOP STOW COMPT LID TR (GRAY)	92	Y67 (14I)	1	10281069
	11-N14	12.170	PANEL, F/TOP STOW COMPT LID TR (BEIGE)	92	Y67 (64I)	1	10281071
2.	11-A22	14.340	BEZEL, F/TOP RR LAT	92	Y67	1	10107833
3.	11-A22	14.340	LATCH, F/TOP RR	92	Y67	2	10198616

© 2000 GENERAL MOTORS SERVICE PARTS OPERATIONS-CHEVROLET-14Y

							1Y14-001
4.		8.917	NUT, HEX W/CON WA M6X1X5.5 (9) 7111M 16-OD (F/TOP RR LAT)	92		4	11516793
5.		8.977	SCREW, HWH TAP M4.2X1.41X16 9.2-OD DRILPT BLK PZOR (POSN #2)	92		2	11509135
		8.929	WASHER, FL 7/32X1/2X5/8 1050 CAD HARD	92		2	2077521
6.	11-A22	14.475	CABLE, F/TOP RR LAT REL	92	Y67	1	10107832
7.		8.977	SCREW, HWH, 9.2OD, 13.8 THD (F/TOP RR LAT REL CBL)	92		2	16516859
8.		DISCON	PLATE, F/TOP STOW COMPT LID LAT ACTR MT (HINGE HAS FLAT ARM)	92	Y67 (1ST DES)	2	14100399
9.		N.S.	RIVET, F/TOP STOW COMPT LID LAT ACTR MT PLT				
10.	11-N14	12.170	ACTUATOR, F/TOP STOW COMPT LID LAT REL	92	Y67	1	10193606
11.		8.977	SCREW, M4.2-1.41X10 HEX LG WA HD W/SLR (F/TOP STOW COMPT LID LAT REL SOL)	92		4	11515959
12.		8.977	SCREW, PAN HD TORX TAP M4.2X1.41X13 CB (F/TOP RR LAT LVR)	92		1	11504646
		8.929	WASHER, FL 7/32X1/2X5/8 1050 CAD HARD	92		1	2077521
13.	11-N14	12.170	STRIKER, F/TOP STOW COMPT LID LAT	92	Y67	LH	10285920
	11-N14	12.170	STRIKER, F/TOP STOW COMPT LID LAT	92	Y67	RH	10285921
14.		8.929	WASHER, M10X 2.5 THK PHOS (F/TOP STOW COMPT LID LAT STKR) (AC-DELCO #11500324)	92		4	11500324
		8.917	NUT	92		4	11516071
15.	11-N25	13.095	RELAY, F/TOP RR LAT REL ACTR (MATES W/CONNECTOR 12101882) (4.720) (AC-DELCO #15-8736)	92	Y67	1	22570060
16.		DISCON	ROD, F/TOP STOW COMPT LID HGE (USE WITH HINGE WITH FLAT ARM)	92	Y67 (1ST DES)	2	14092663
17.		DISCON	GUIDE, F/TOP STOW COMPT LID HGE (HINGE HAS FLAT ARM)	92	Y67 (1ST DES)	2	14092657
18.	11-N14	12.170	RETAINER, F/TOP STOW COMPT LID HGE GDE	92	Y67	2	14100345
19.		DISCON	STRAP, F/TOP STOW COMPT LID HGE ROD (445 MM LONG)	92	Y	1	25533564
20.	11-N14	12.170	INSULATOR, F/TOP STOW COMPT LID HGE ROD (9.260)	92	Y67	1	3999572
21.	11-N14	12.170	HINGE, F/TOP STOW COMPT LID (INCLS 23)	92	Y67	LH	10175549
	11-N14	12.170	HINGE, F/TOP STOW COMPT LID (INCLS 23)	92	Y67	RH	10175550
		DISCON	HINGE, F/TOP STOW COMPT LID (HAS A FLAT HINGE ARM) (INCLS 23)	92	Y67	RH	14092656
22.		8.900	BOLT, HFH M8X1.25X21MM, 17 OD, 10.9	92		2	12551177

© 2000 GENERAL MOTORS SERVICE PARTS OPERATIONS-CHEVROLET-14Y

							1Y14-001
23.		DISCON	STOP, F/TOP STOW COMPT LID HGE (PART OF 21)	92	Y67	2	14092658
24.	11-N14	12.170	SHIM, F/TOP STOW COMPT LID (0.5 THK)	92	Y67	4	10051895
25.		8.917	NUT, HFH, M8X1.25, 17.9 OD, 738 THK, 13MM HEX, 10, ZF (F/TOP STOW COMPT LID LAT BRKT) (8.915) (AC-DELCO #11514596)	92		6	11514596
26.	11-N21	12.981	BRACKET, R/FLR PNL UPR FRT	92	Y67	LH	14092735
	11-N21	12.981	BRACKET, R/FLR PNL UPR FRT	92	Y67	RH	14092736
	11-N21	12.981	BRACKET, R/FLR PNL UPR FRT (14.310)	92	Y67	LH	10123005
27.		8.903	BOLT, RD HD SQ NK M8X1.25X25 PC W/SS CAP (R/FLR PNL UPR FRT BRKT)	92		8	12338141
28.	11-N14	12.170	RETAINER, F/TOP STOW COMPT LID LAT REL ACTR LVR (PUSH ON)	92	Y67	1	10175798
29.	11-N14	12.170	WASHER, F/TOP STOW COMPT LID LAT REL ACTR LVR	92	Y67	1	10175796
30.	11-N14	12.170	BRACKET, F/TOP STOW COMPT LID LAT REL ACTR LVR	92	Y67	LH	10193607
	11-N14	12.170	BRACKET, F/TOP STOW COMPT LID LAT REL ACTR LVR	92	Y67	RH	10193608
31.	11-N14	12.170	LEVER, F/TOP STOW COMPT LID LAT REL ACTR (12.187)	92	Y67	LH	10175507
	11-N14	12.170	LEVER, F/TOP STOW COMPT LID LAT REL ACTR (12.187)	92	Y67	RH	10175508
32.	11-N14	12.170	BRACKET, F/TOP STOW COMPT LID LAT	92	Y67	LH	14092733
	11-N14	12.170	BRACKET, F/TOP STOW COMPT LID LAT	92	Y67	RH	14092734
33.	11-N14	12.170	LATCH, F/TOP STOW COMPT LID	92	Y67	LH	14092743
	11-N14	12.170	LATCH, F/TOP STOW COMPT LID	92	Y67	RH	14092744
34.	11-N14	12.170	BOLT, F/TOP STOW COMPT LID LAT ACTR	92	Y67	6	14100340
35.	11-A22	14.475	CLIP, F/TOP RR LAT REL CBL	92	Y67	2	10213425
36.		8.977	SCREW, HWH, 9.2OD, 13.8 THD (POSN #1)	92		2	16516859
37.	11-N14	12.170	WEATHERSTRIP, F/TOP STOW COMPT LID	92	Y67	1	14092675
38.	11-N14	12.170	LID, F/TOP STOW COMPT (IF SERVICE 1992 & PRIOR MODELS, MUST USE 10193665 T/W 10198642 RELEASE CABLE ASM)	92	Y67	1	10276994
39.	11-N14	12.170	INSULATOR, F/TOP STOW FRT	92	Y67	2	10265173
40.		DISCON	WIRE, CONV TOP	92	Y	1	12090348
41.	11-A22	14.483	SWITCH, F/TOP STOW COMPT LID REL (BUTTON IN GLOVE BOX) (12.243)	92	Y67	1	1626530

RPO DEFINITIONS
10I – INTERIOR TRIM – ARCTIC WHITE
14I – INTERIOR TRIM LT GRAY
19I – INTERIOR TRIM,BLACK

© 2000 GENERAL MOTORS SERVICE PARTS OPERATIONS-CHEVROLET-14Y

641 – INTERIOR TRIM,LIGHT BEIGE
731 – INTERIOR TRIM,FLAME RED

© 2000 GENERAL MOTORS SERVICE PARTS OPERATIONS–CHEVROLET–14Y

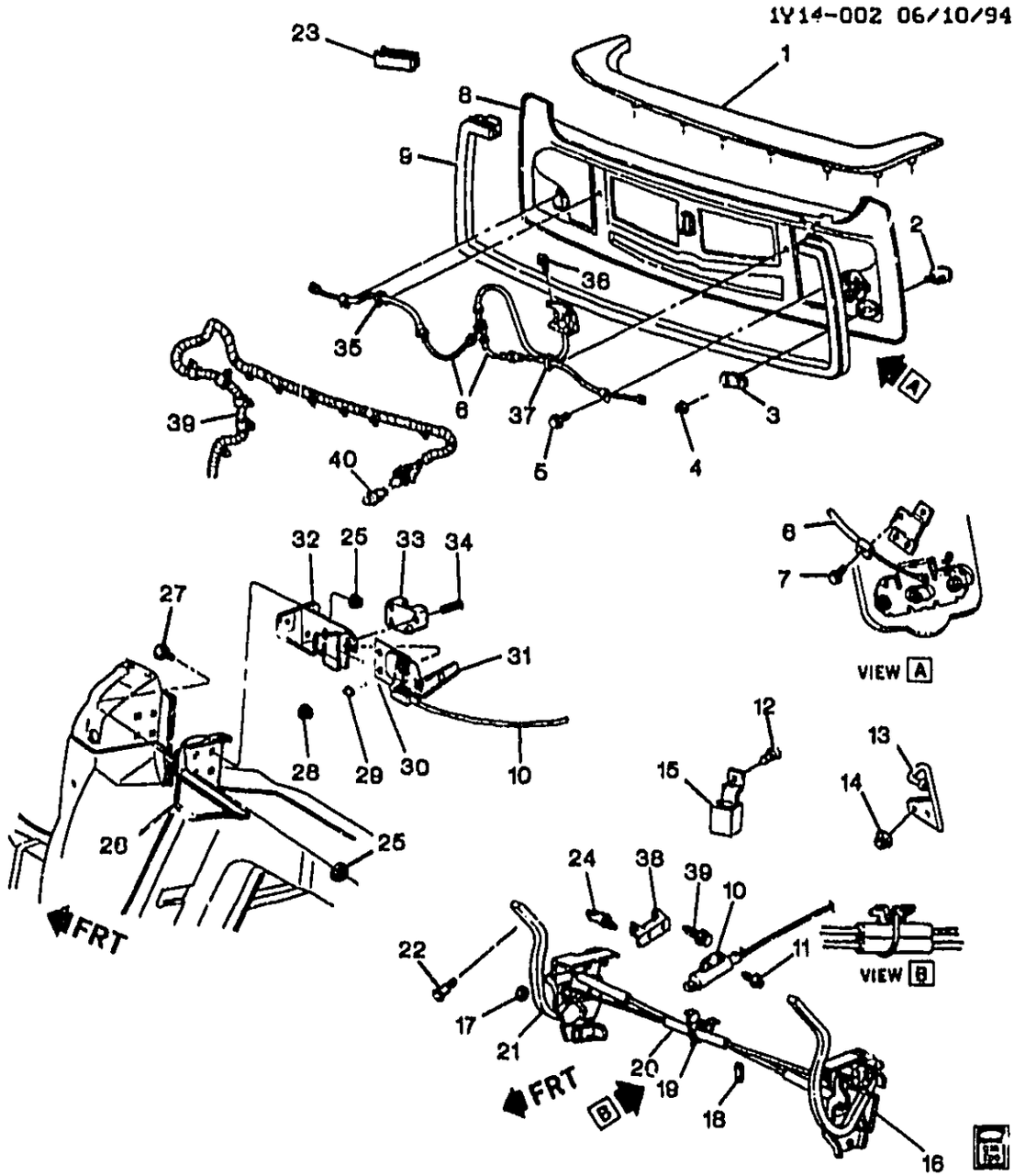

1Y14-002

1992 Y67 FOLDING TOP ASM/HARDWARE & STOWAGE COMPARTMENT(2ND DES)
1993-1996 Y67 FOLDING TOP ASM/HARDWARE & STOWAGE COMPARTMENT

1.	11-N14	12.170	PANEL, F/TOP STOW COMPT LID TR (BLACK)	92-96	Y67 (19I)	1	10281070
		DISCON	PANEL, F/TOP STOW COMPT LID TR (RED)	92	Y67 (73I)	1	10123063
		DISCON	PANEL, F/TOP STOW COMPT LID TR (WHITE)	92-93	Y67 (10I)	1	10198711
	11-N14	12.170	PANEL, F/TOP STOW COMPT LID TR (GRAY)	92-96	Y67 (14I)	1	10281069
	11-N14	12.170	PANEL, F/TOP STOW COMPT LID TR (BEIGE)	92-96	Y67 (64I)	1	10281071

© 2000 GENERAL MOTORS SERVICE PARTS OPERATIONS-CHEVROLET-14Y

							1Y14-002
		DISCON	PANEL, F/TOP STOW COMPT LID TR (RED)	93	Y67 (79I)	1	10198716
	11-N14	12.170	PANEL, F/TOP STOW COMPT LID TR (RED)	93-96	Y67 (70I)	1	10281072
2.	11-A22	14.340	BEZEL, F/TOP RR LAT	92-96	Y67	2	10107833
3.	11-A22	14.340	LATCH, F/TOP RR	92-96	Y67	2	10198616
4.		8.917	NUT, HEX W/CON WA M6X1X5.5 (9) 7111M 16-OD (F/TOP RR LAT)	92-96		4	11516793
5.		8.977	SCREW, HWH TAP M4.2X1.41X16 9.2-OD DRILPT BLK PZOR (POSN #2)	92-96		2	11509135
		8.929	WASHER, FL 7/32X1/2X5/8 1050 CAD HARD	92-96		2	2077521
6.	11-A22	14.475	CABLE, F/TOP RR LAT REL (INCLS HANDLE)	92	Y67	1	10107832
	11-A22	14.475	CABLE, F/TOP RR LAT REL (INCLS HANDLE) (INCLUDES HANDLE)	93-96	Y67	1	10276305
7.		8.977	SCREW, HWH, 9.2OD, 13.8 THD (F/TOP RR LAT REL CBL)	92-96	Y67	2	16516859
8.	11-N14	12.170	LID, F/TOP STOW COMPT	93-96	Y67	1	10276994
	11-N14	12.170	LID, F/TOP STOW COMPT (IF SERVICE 1992 & PRIOR MODELS, MUST USE 10193665 T/W 10198642 RELEASE CABLE ASM)	92	Y67	1	10276994
9.	11-N14	12.170	WEATHERSTRIP, F/TOP STOW COMPT LID	92-96	Y67	1	14092675
10.	11-N14	12.170	ACTUATOR, F/TOP STOW COMPT LID LAT REL	92-96	Y67	1	10193606
11.		8.977	SCREW, M4.2-1.41X10 HEX LG WA HD W/SLR (F/TOP STOW COMPT LID LAT REL SOL)	92-96		4	11515959
12.		8.977	SCREW, PAN HD TORX TAP M4.2X1.41X13 CB (F/TOP RR LAT LVR)	92-96	Y67	1	11504646
		8.929	WASHER, FL 7/32X1/2X5/8 1050 CAD HARD	92-96	Y67	1	2077521
13.	11-N14	12.170	STRIKER, F/TOP STOW COMPT LID LAT	92-96	Y67	LH	10285920
	11-N14	12.170	STRIKER, F/TOP STOW COMPT LID LAT	92-96	Y67	RH	10285921
14.		8.929	WASHER, M10X 2.5 THK PHOS (F/TOP STOW COMPT LID LAT STKR) (AC-DELCO #11500324)	92-96		4	11500324
		8.917	NUT	92-96		4	11516071
15.	11-N25	13.095	RELAY, F/TOP RR LAT REL ACTR (MATES W/CONNECTOR 12101882) (4.720) (AC-DELCO #15-8736)	92-96	Y67	1	22570060
16.	11-N14	12.170	ROD, F/TOP STOW COMPT LID HGE TORQ	95	Y67	2	10175551
	11-N14	12.170	ROD, F/TOP STOW COMPT LID HGE TORQ (POS #1) (41MM ROD LENGTH W/OUT HOLE)	96	Y (2ND DES)	2	10283724
	11-N14	12.170	ROD, F/TOP STOW COMPT LID HGE TORQ (USE WITH SQUARE HINGE ARM)	92	Y67 (2ND DES)	2	10175551

© 2000 GENERAL MOTORS SERVICE PARTS OPERATIONS-CHEVROLET-14Y

							1Y14-002
	11-N14	12.170	**ROD**, F/TOP STOW COMPT LID HGE TORQ (USE WITH SQUARE HINGE ARM)	93-94	Y67	2	10175551
17.		8.917	**NUT ASM**, CON TTH, M8X1.25 THD, 23.5 WA OD (F/TOP STOW COMPT LID HGE)	92-96	.....	6	20453625
18.	11-N14	12.170	**RETAINER**, F/TOP STOW COMPT LID HGE GDE	92-96	Y67	2	14100345
19.		DISCON	**STRAP**, F/TOP STOW COMPT LID HGE ROD (445 MM LONG) ..	92-96	Y	1	25533564
20.	11-N14	12.170	**INSULATOR**, F/TOP STOW COMPT LID HGE ROD (9.260) ...	92-96	Y67	1	3999572
21.	11-N14	12.170	**HINGE**, F/TOP STOW COMPT LID	92-96	Y67	LH	10175549
	11-N14	12.170	**HINGE**, F/TOP STOW COMPT LID	92-96	Y67	RH	10175550
		DISCON	**HINGE**, F/TOP STOW COMPT LID (HAS A FLAT HINGE ARM) ...	92	Y67	RH	14092656
22.	11-N14	12.170	**BOLT**, F/TOP STOW COMPT LID HGE	93-96	Y67	4	10198719
	11-N14	12.170	**BOLT**, F/TOP STOW COMPT LID HGE (HINGE HAS SQUARE ARM)	92	Y67 (2ND DES)	1	10198719
23.	11-N14	12.170	**INSULATOR**, F/TOP STOW FRT .	92-96	Y67	2	10265173
24.	11-N14	12.170	**SHIM**, F/TOP STOW COMPT LID (0.5 THK)	92-96	Y67	4	10051895
25.		8.917	**NUT**, HFH, M8X1.25, 17.9 OD, 738 THK, 13MM HEX, 10, ZF (F/TOP STOW COMPT LID LAT BRKT) (8.915) (AC-DELCO #11514596)	92-96	.....	6	11514596
26.	11-N21	12.981	**BRACKET**, R/FLR PNL UPR FRT .	92-96	Y67	LH	14092735
	11-N21	12.981	**BRACKET**, R/FLR PNL UPR FRT .	92-96	Y67	RH	14092736
	11-N21	12.981	**BRACKET**, R/FLR PNL UPR FRT (14.310)	92	Y67	LH	10123005
27.		8.903	**BOLT**, RD HD SQ NK M8X1.25X25 PC W/SS CAP (R/FLR PNL UPR FRT BRKT)	92-96	.....	8	12338141
28.	11-N14	12.170	**RETAINER**, F/TOP STOW COMPT LID LAT REL ACTR LVR (PUSH ON)	92-96	Y67	1	10175798
29.	11-N14	12.170	**WASHER**, F/TOP STOW COMPT LID LAT REL ACTR LVR	92-96	Y67	1	10175796
30.	11-N14	12.170	**BRACKET**, F/TOP STOW COMPT LID LAT REL ACTR LVR	92-96	Y67	LH	10193607
	11-N14	12.170	**BRACKET**, F/TOP STOW COMPT LID LAT REL ACTR LVR	92-96	Y67	RH	10193608
31.	11-N14	12.170	**LEVER**, F/TOP STOW COMPT LID LAT REL ACTR (12.187)	92-96	Y67	LH	10175507
	11-N14	12.170	**LEVER**, F/TOP STOW COMPT LID LAT REL ACTR (12.187)	92-96	Y67	RH	10175508
32.	11-N14	12.170	**BRACKET**, F/TOP STOW COMPT LID LAT	92-96	Y67	LH	14092733
	11-N14	12.170	**BRACKET**, F/TOP STOW COMPT LID LAT	92-96	Y67	RH	14092734
33.	11-N14	12.170	**LATCH**, F/TOP STOW COMPT LID	92-96	Y67	LH	14092743
	11-N14	12.170	**LATCH**, F/TOP STOW COMPT LID	92-96	Y67	RH	14092744

© 2000 GENERAL MOTORS SERVICE PARTS OPERATIONS-CHEVROLET-14Y

							1Y14-002
34.	11-N14	12.170	BOLT, F/TOP STOW COMPT LID LAT ACTR	92-96	Y67	6	14100340
35.	11-A22	14.475	CLIP, F/TOP RR LAT REL CBL ...	92-96	Y67	2	10213425
36.		8.977	SCREW, HWH, 9.2OD, 13.8 THD (POSN #1)	92-96	.....	2	16516859
37.	11-A22	14.475	CLIP, F/TOP RR LAT REL CBL ...	92-96	Y67	2	10213425
38.	11-N14	12.170	BRACKET, F/TOP STOW COMPT LID LAT REL ACTR LVR	93-96	Y67	2	10198703
	11-N14	12.170	BRACKET, F/TOP STOW COMPT LID LAT REL ACTR LVR (HINGE HAS SQUARE ARM)	92	Y67 (2ND DES)	2	10198703
39.		DISCON	WIRE, CONV TOP	92	Y	1	12090348
		DISCON	WIRE, CONV TOP	93	Y67	LH	12106597
	11-N22	13.090	WIRE, CONV TOP	94-96	Y67	LH	12130363
40.	11-A22	14.483	SWITCH, F/TOP STOW COMPT LID REL (BUTTON IN GLOVE BOX) (12.243)	92-96	Y67	1	1626530

RPO DEFINITIONS

10I – INTERIOR TRIM – ARCTIC WHITE
14I – INTERIOR TRIM LT GRAY
19I – INTERIOR TRIM,BLACK
64I – INTERIOR TRIM,LIGHT BEIGE
70I – INTERIOR TRIM,TORCH RED
73I – INTERIOR TRIM,FLAME RED
79I – INTERIOR TRIM,RUBY RED

© 2000 GENERAL MOTORS SERVICE PARTS OPERATIONS–CHEVROLET–14Y

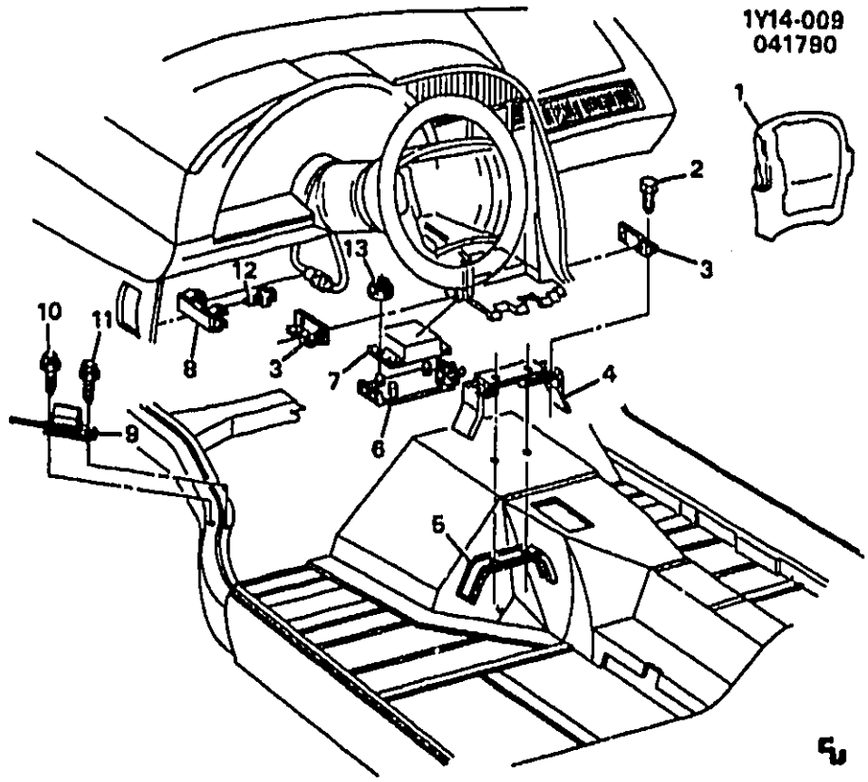

1Y14-009

1990 Y INFLATABLE RESTRAINT SYSTEM (AJ3)

1.	11-M28	6.512	MODULE, STRG WHL (14.865)	10158008
		DISCON	BOLT, INFL RST STRG WHL MODULE	12506006
2.		8.977	SCREW (M6X1X20)	11514623
3.	11-B11	14.865	BRACKET, CONT MDL-RH	10086177
	11-B11	14.865	BRACKET, CONT MDL-LH	10086086
4.	11-N6	10.230	SUPPORT, I/P CTR LWR	10086085
5.	11-N6	10.230	REINFORCEMENT, I/P CTR LWR SUPT	10086173
6.		DISCON	BRACKET, CONT MDL CTR	10085936
7.	11-B11	14.865	MODULE, RESV ENGY (DERM)	10094618
8.		DISCON	CLIP, F/END SH MET SEN	10098447
9.	11-B11	14.865	SENSOR, F/END SH MET	10094613
10.		8.900	BOLT, HWH (M8X1.25X15) 9.8, ZP	11507066
11.		8.900	BOLT, HEX (M6X1X16) 9.8, ZP (AC-DELCO #11500413)	11500413
12.		8.977	SCREW, HWH TAP (M4.2X1.41X25) ZC	1640810
13.		8.917	NUT, HEX W/CON WA (M6X1) 9, PEOR	11516793

© 2000 GENERAL MOTORS SERVICE PARTS OPERATIONS-CHEVROLET-14Y

1Y14-011 10/09/96

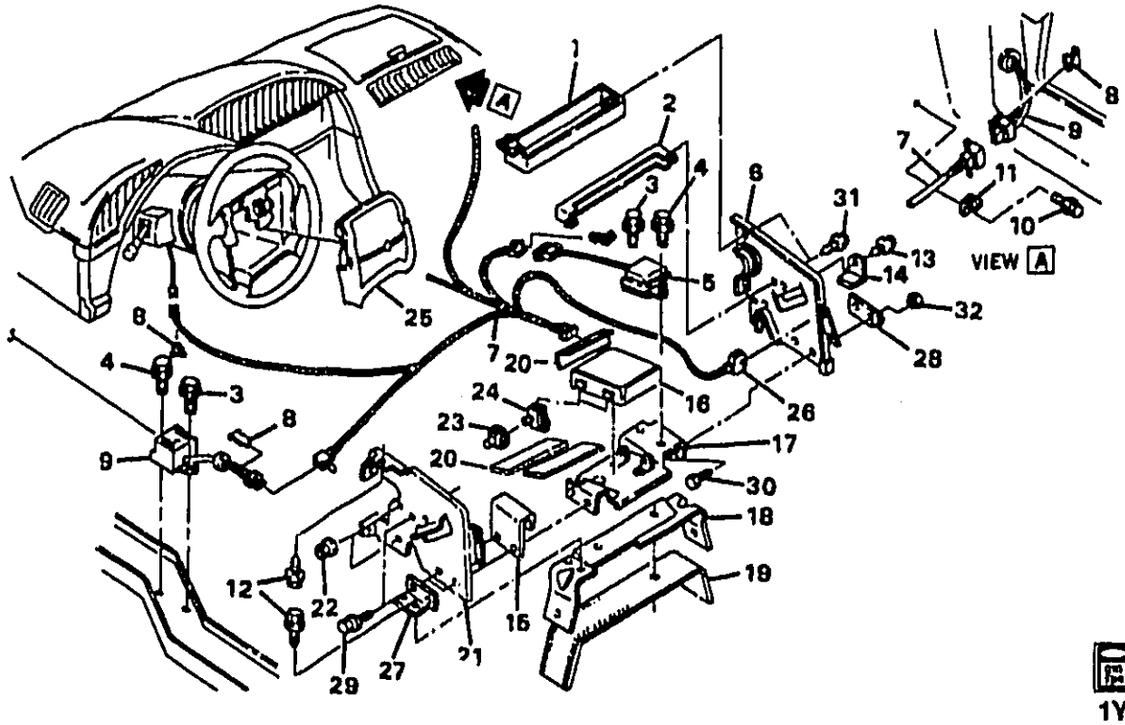

1Y14-011

1991-1992 Y INFLATABLE RESTRAINT SYSTEM (AJ3)

1.	11-N5	9.743	CARRIER, INST (UPR) (10.230) ..	91-92	Y	1	10086247
2.	11-N8	10.235	BRACE, I/P DRVR KNEE BOLS INR BRKT	91-92	Y	1	10259399
3.		8.900	BOLT, HEX M6X1X16, 13.5 THD, GM500 (9.8), ZP, MACH (F/END INFL RST DISCRM SEN) (AC-DELCO #11500413)	91-92	.....	1	11500413
		8.929	WASHER, 1/4X1/2X1/16 HARD ZP	91-92	.....	1	2436161
4.		8.900	BOLT, HWH, M8X1.25X16, 14.75 THD, 9.8, ZP (INFL RST F/END SH MET SEN)	91-92	.....	1	11507066
5.	11-B11	14.865	SENSOR, INFL RST ARMING	91-92	Y	1	10177902
6.		DISCON	BRACKET, I/P PASS KNEE BOLS INR	91-92	Y	1	10175591
7.		DISCON	HARNESS, INFL RST WRG (ELEMENT) (14.865)	91-92	Y	1	12106550
8.		8.950	RETAINER, ...	91-92	.....	2	12052834
9.	11-B11	14.865	SENSOR, F/END INFL RST DISCRM	91-92	Y	1	10177901
10.		8.977	SCREW, HWH TAP 4.2 X 1.41 X 25 (10.783)	91-92	.....	1	1640810
11.	11-B11	14.865	BRACKET, F/END INFL RST DISCRM SEN (2.559)	91-92	Y	1	14062552
12.		8.900	BOLT, HEX W/CON WA, M6X1X20 (I/P DRVR KNEE BOLS INR BRKT)	91-92	.....	2	11514623
13.		8.977	BOLT/SCREW ASM M4.2X1.41 #18 HEX HD GM71 (INFL RST RESV ENGY MDL WRG HARN CLIP)	91-92	.....	1	11515303
14.	11-B11	14.865	CLIP, INFL RST RESV ENGY MDL WRG HARN	91-92	Y	2	12020081

© 2000 GENERAL MOTORS SERVICE PARTS OPERATIONS-CHEVROLET-14Y

							1Y14-011
15.		DISCON	**BRACKET**, INFL RST CONT MDL (POSN #2)	91-92	Y	1	10211797
16.	11-B11	14.865	**MODULE**, INFL RST DIAGN ENGY RESV (REMAN) (DERM) (AC-DELCO #1228874)	91	Y	1	1228874
	11-B11	14.865	**MODULE**, INFL RST DIAGN ENGY RESV (REMAN) (DERM) (AC-DELCO #1228874) (USE ON PROD UNITS W/16081221 ON LABEL)	92	Y (1ST DES)	1	1228874
	11-B11	14.865	**MODULE**, INFL RST DIAGN ENGY RESV (REMAN) (AC-DELCO #16177277) (USE ON PROD UNITS W/16176561 ON LABEL)	92	Y (2ND DES)	1	16177277
17.		DISCON	**BRACKET**, INFL RST CONT MDL (2 WELDED NUTS, 4 WELDED STUDS)	91-92	Y	1	10193723
18.	11-N6	10.230	**SUPPORT**, I/P CTR LWR	91-92	Y	1	10086085
19.	11-N6	10.230	**REINFORCEMENT**, I/P CTR LWR SUPT	91-92	Y	1	10085173
20.	11-B11	14.865	**INSULATOR**, INFL RST DIAGN ENGY RESV MDL (9.260)	91-92	Y	3	3999572
21.		DISCON	**BRACKET**, I/P DRVR KNEE BOLS INR	91-92	Y	1	10211797
22.		8.917	**NUT**, CONICAL SPR WA HEX (METRIC STYLE 2) M5 X 0.8 (BCM BRKT)	91-92		2	11503647
23.	11-B11	14.865	**RETAINER**, INFL RST DIAGN ENGY RESV MDL (PUSH ON) (0.75 IN) (9.667) (AC-DELCO #14101807)	91-92	Y	4	14101807
24.	11-B11	14.865	**BOLT**, INFL RST DIAGN ENGY RESV MDL (M5X.8X16 THD) (SPECIAL) (3.671) (AC-DELCO #12337892)	91-92	Y	4	12337892
25.	11-M28	6.512	**MODULE**, STRG WHL INFL RST (PROBE CONN IN OWN BOX) (14.865)	91-92	Y	1	10158008
26.	11-B11	14.865	**RESISTOR**, INFL RST DIAGN (5 RES ARRAY)	91-92	Y	1	12085219
27.	11-B11	14.865	**BRACKET**, INFL RST CONT MDL (4 HOLES, L-SHAPED, POSN #1)	91-92	Y	LH	10086086
28.	11-B11	14.865	**BRACKET**, INFL RST CONT MDL (4 HOLES, L-SHAPED, POSN #1)	91-92	Y	RH	10086177
29.		8.900	**BOLT**, HEX W/CON WA, M6X1X20 (POSN #1 LH)	91-92		2	11514623
30.		8.900	**BOLT**, HEX W/CON WA, M6X1X20 (POSN #1 RH)	91-92		2	11514623
31.		8.900	**BOLT**, HEX W/CON WA, M3X1X20 (I/P PASS KNEE BOLS INR BRKT)	91-92		2	11514623
32.		8.917	**NUT**, HEX W/CON WA M6X1X5.5 (9) 7111M 16-OD (I/P PASS KNEE BOLS INR BRKT)	91-92		2	11516793

© 2000 GENERAL MOTORS SERVICE PARTS OPERATIONS-CHEVROLET-14Y

© 2000 GENERAL MOTORS SERVICE PARTS OPERATIONS–CHEVROLET–14Y

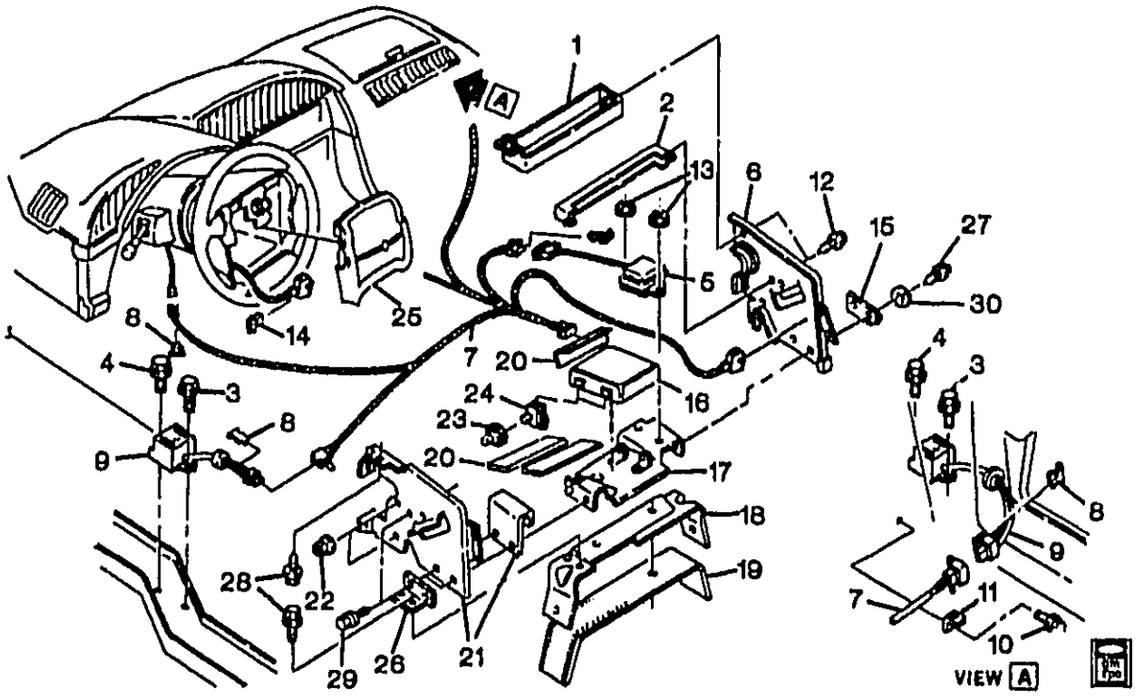

1Y14-016

1993 Y INFLATABLE RESTRAINT SYSTEM

1.	11-N5	9.743	CARRIER, INST (10.230)	93	Y (FE1, FE7)	1	10086247
2.	11-N8	10.235	BRACE, I/P DRVR KNEE BOLS INR BRKT	93	Y	1	10259389
3.		8.900	BOLT, M6X1X12, 10 THD, 11.6 OD, 9.8 GM500-M, POR, MACH (POSN #1) (AC-DELCO #11514149)	93	.....	2	11514149
4.		8.900	BOLT, HFH M8X1.25X21MM, 17 OD, 10.9 (POSN #2)	93	.....	2	12551177
		8.800	SEALANT	93	.....	1	12345493
5.	11-B11	14.865	SENSOR, INFL RST ARMING	93	Y	1	10177902
6.		DISCON	BRACKET, I/P PASS KNEE BOLS INR	93	Y	1	10175591
7.	11-M17	2.480	HARNESS, I/P WRG	93	Y (MD8, C60) (EXC T90)	1	12141443
	11-M17	2.480	HARNESS, I/P WRG (FOR VEH -DRL, SPLICE CAV D TO CAV E @ BLUE 8-WAY DRL MDL CONN.)	93	Y (ML9, C68) (EXC T90)	1	12141444
	11-M17	2.480	HARNESS, I/P WRG	93	Y (ML9, C60) (EXC T90)	1	12141445
	11-M17	2.480	HARNESS, I/P WRG (ON VEHS W/O DAYTIME RUNNING LPS SPLICE CAV D & E WIRES TOGETHER AT BLUE DRL MDL CONN.)	93	Y (MD8, C68) (EXC T90)	1	12141446
	11-M17	2.480	HARNESS, I/P WRG	93	Y (ML9, C68, T90) (EXPORT)	1	12141441
	11-M17	2.480	HARNESS, I/P WRG	93	Y (MD8, C68, T90) (EXPORT)	1	12141442
8.		8.950	RETAINER, (INFL RST ARMING SEN WRG HARN CONN)	93	.....	3	12052834
9.	11-B11	14.865	SENSOR, F/END INFL RST DISCRM	93	Y	1	10177901

© 2000 GENERAL MOTORS SERVICE PARTS OPERATIONS-CHEVROLET-14Y

							1Y14-016
10.		8.977	BOLT, SCR HEX W/FLAT WA 12 DIA TYPE AB (F/END INFL RST DISCRM SEN BRKT)	93		1	11509374
11.	11-B11	14.865	BRACKET, F/END INFL RST DISCRM SEN (2.559)	93	Y	1	14062552
12.		8.900	BOLT, HEX W/CON WA, M6X1X20 (I/P PASS KNEE BOLS INR BRKT)	93		2	11514623
13.		8.917	NUT, HEX FLGD PREV TORQ M6X1 9 CAD (INFL RST ARMING SEN)	93		2	11503750
14.	11-B11	14.865	RETAINER, STRG WHL INFL RST MDL WRG HARN CONN	93	Y	1	12077979
15.	11-B11	14.865	BRACKET, INFL RST CONT MDL (4 HOLES, L-SHAPED, POSN #1)	93	Y	RH	10086177
16.	11-B11	14.865	MODULE, INFL RST DIAGN ENGY RESV (REMAN) (AC-DELCO #16177277)	93	Y	1	16177277
17.		DISCON	BRACKET, INFL RST CONT MDL (2 WELDED NUTS, 4 WELDED STUDS)	93	Y	1	10193723
18.	11-N6	10.230	SUPPORT, I/P CTR LWR	93	Y	1	10086085
19.	11-N6	10.230	REINFORCEMENT, I/P CTR LWR SUPT	93	Y	1	10086173
20.	11-B11	14.865	INSULATOR, INFL RST DIAGN ENGY RESV MDL (9.260)	93	Y	3	3999572
21.		DISCON	BRACKET, I/P DRVR KNEE BOLS INR	93	Y	1	10211797
22.		8.921	NUT, U-TYPE, 4.2X1.41, DIM A-15, DIM B-14 DIM C-8.65, 1050, PZOR (I/P DRVR KNEE BOLS)	93		2	12338121
23.	11-B11	14.865	RETAINER, INFL RST DIAGN ENGY RESV MDL (PUSH ON) (0.75 IN) (9.667) (AC-DELCO #14101807)	93	Y	4	14101807
24.	11-B11	14.865	BOLT, INFL RST DIAGN ENGY RESV MDL (M5X.8X16 THD) (SPECIAL) (3.671) (AC-DELCO #12337892)	93	Y	4	12337892
25.	11-M28	6.512	MODULE, STRG WHL INFL RST (PROBE CONN IN OWN BOX) (14.865)	93	Y	1	10158008
26.	11-B11	14.865	BRACKET, INFL RST CONT MDL (4 HOLES, L-SHAPED, POSN #1)	93	Y	LH	10086086
27.		8.900	BOLT, HEX W/CON WA, M6X1X20 (POSN #1)	93		RH	11514623
28.		8.900	BOLT, HEX W/CON WA, M6X1X20 (I/P DRVR KNEE BOLS INR BRKT)	93		2	11514623
29.		8.900	BOLT, HEX W/CON WA, M6X1X20 (POSN #1)	93		LH	11514623
30.		8.917	NUT, HEX W/CON WA M6X1X5.5 (9) 7111M 16-OD (I/P PASS KNEE BOLS INR BRKT)	93		2	11516793

© 2000 GENERAL MOTORS SERVICE PARTS OPERATIONS-CHEVROLET-14Y

RPO DEFINITIONS
C60 – AIR CONDITIONER,FRONT,MANUAL CONTROLS
C68 – AIR CONDITIONER,FRONT,AUTOMATIC,ELECTRONIC CONTROLS
FE1 – SUSPENSION SYSTEM,SOFT RIDE
FE7 – SUSPENSION SYSTEM,FRONT AND REAR,HEAVY DUTY(USED WITH PERFORMANCE HANDLING PACKAGE Z51)
MD8 – TRANSMISSION,AUTOMATIC 4–SPEED(THM700R4/4L60)
ML9 – TRANSMISSION,MANUAL 6–SPEED
T90 – LAMP,SIGNALING AND MARKER(EXPORT)

© 2000 GENERAL MOTORS SERVICE PARTS OPERATIONS–CHEVROLET–14Y

1Y14-019 05/18/93

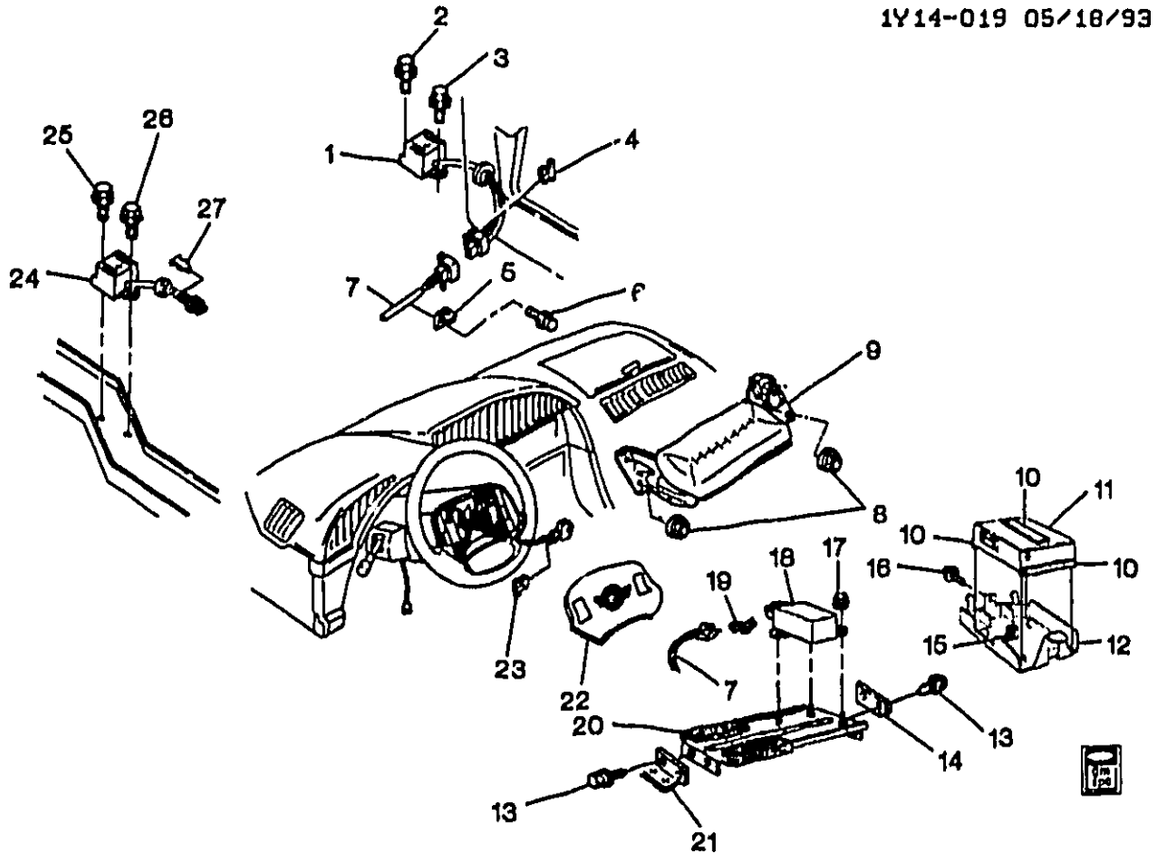

1Y14-019

1994-1996 Y INFLATABLE RESTRAINT SYSTEM (AK5)

1.	11-B11	14.865	SENSOR, F/END INFL RST DISCRM	94-96	Y (AK5)	1	10177901
2.		8.900	BOLT, HFH M8X1.25X21MM, 17 OD, 10.9 (F/END INFL RST DISCRM SEN)	94-96	.....	1	12551177
3.		8.900	BOLT, M6X1X12, 10 THD, 11.6 OD, 9.8 GM500-M, POR, MACH (F/END INFL RST DISCRM SEN) (AC-DELCO #11514149)	94-96	.....	1	11514149
4.		8.950	RETAINER, (F/END INFL RST DISCRM SEN WRG HARN CONN)	94-96	.....	1	12052834
5.	11-B11	14.865	BRACKET, F/END INFL RST DISCRM SEN (2.559)	94-96	Y (AK5)	1	14062552
6.		8.977	SCREW, HEX TAP M4.2X1.41X16 W/FL WA POR (F/END INFL RST DISCRM SEN BRKT)	94-96	.....	1	11504446
7.	11-M17	2.480	HARNESS, I/P WRG	94	Y (ML9, C60) (EXC T61, T72, T84, T85, T90)	1	12130324
	11-M17	2.480	HARNESS, I/P WRG	94	Y (ML9, C68) (EXC T61, T72, T84, T85, T90)	1	12130326
	11-M17	2.480	HARNESS, I/P WRG	94	Y (M30, C60) (EXC T61, T72, T84, T85, T90) (2ND DES)	1	12130491
	11-M17	2.480	HARNESS, I/P WRG	94	Y (M30, C60, T61) (EXC T72, T84, T85, T90)	1	12130492
	11-M17	2.480	HARNESS, I/P WRG	94	Y (M30, C68) (EXC T61, T72, T84, T85, T90)	1	12130493

© 2000 GENERAL MOTORS SERVICE PARTS OPERATIONS-CHEVROLET-14Y

						1Y14-019
11-M17	2.480	HARNESS, I/P WRG	94	Y (M30, C68, T61) (EXC T72, T84, T85, T90)	1	12130494
11-M17	2.480	HARNESS, I/P WRG (TAGGED 0322 OR 0323) (ON VEH W/DAYTIME RUNNING LGHTS, ADD 8-WAY BLUE CONN TO DAYTIME RUNNING LGHT, SPLICE CAV D & CAV E WIRES TOGETHER)	94	Y (M30, C68, T61) (EXC T72, T84, T85, T90) (1ST DES)	1	12141788
11-M17	2.480	HARNESS, I/P WRG	94	Y (ML9, C60, T61) (EXC T72, T84, T85, T90)	1	12141789
11-M17	2.480	HARNESS, I/P WRG	94	Y (ML9, C68, T61) (EXC T72, T84, T85, T90)	1	12141790
11-M17	2.480	HARNESS, I/P WRG	94	Y (ML9, C68) (EXC T72, T84, T85, T90)	1	12163703
11-M17	2.480	HARNESS, I/P WRG	95	Y (LT5, ML9, C68) (EXC T61)	1	12130326
11-M17	2.480	HARNESS, I/P WRG	95	Y (LT1, M30, C60, T61) (EXC T72, T84, T85, T90)	1	12130389
11-M17	2.480	HARNESS, I/P WRG (SPLICE CAV D & E WIRES @ BLUE DRL MDL CONN FOR VEH W/O DRL.)	95	Y (LT1, M30, C68, T61) (EXC T72, T84, T85, T90)	1	12130391
11-M17	2.480	HARNESS, I/P WRG	95	Y (LT5, ML9, C68, T61) .	1	12141790
11-M17	2.480	HARNESS, I/P WRG	95	Y (LT1, ML9, C60) (EXC T61, T72, T84, T85, T90)	1	12163700
11-M17	2.480	HARNESS, I/P WRG	95	Y (LT1, ML9, C68) (EXC T61, T72, T84, T85, T90)	1	12163702
11-M17	2.480	HARNESS, I/P WRG	95	Y (LT5, ML9, C68)	1	12163703
11-M17	2.480	HARNESS, I/P WRG (TAGGED 0320 OR 0321) (ON VEH W/O DRL, AT 8-WAY BLUE CONN TO DRL MDL SPLICE CAV D & CAV E LEADS TOGETHER.)	94	Y (M30, C60, T61) (EXC T72, T84, T85, T90) (1ST DES)	1	12141787
11-M17	2.480	HARNESS, I/P WRG (WHEN USE ON VEH W/O DAYTIME RUN LIGHTS, SPLICE CAV D&E TOGETHER @ BLUE 8-WAY DRL MOD CONN)	96	Y (M30, C60) (EXC T72, T84, T85, T90)	1	12130468
11-M17	2.480	HARNESS, I/P WRG (WHEN USE ON VEH W/O DAYTIME RUN LIGHTS, SPLICE CAV D&E TOGETHER @ BLUE 8-WAY DRL MOD CONN)	96	Y (M30, C68) (EXC T72, T84, T85, T90)	1	12130470
11-M17	2.480	HARNESS, I/P WRG (WHEN USE ON VEH W/O DAYTIME RUN LIGHTS, SPLICE CAV D&E TOGETHER @ BLUE 8-WAY DRL MOD CONN)	96	Y (ML9, C60) (EXC T72, T84, T85, T90)	1	12130472
11-M17	2.480	HARNESS, I/P WRG (WHEN USE ON VEH W/O DAYTIME RUN LIGHTS, SPLICE CAV D&E TOGETHER @ BLUE 8-WAY DRL MOD CONN)	96	Y (ML9, C68) (EXC T72, T84, T85, T90)	1	12130474
11-M17	2.480	HARNESS, I/P WRG	94	Y (M30, C68, T72, T84, T85, T90) (EXPORT) ...	1	12130495
11-M17	2.480	HARNESS, I/P WRG	94	Y (ML9, C38, T72, T84, T85, T90) (EXPORT) ...	1	12141792

© 2000 GENERAL MOTORS SERVICE PARTS OPERATIONS-CHEVROLET-14Y

							1Y14-019
	11-M17	2.480	HARNESS, I/P WRG	95	Y (LT1, M30, C68, T72, T84, T85, T90) (EXC T61) (EXPORT)	1	12130396
	11-M17	2.480	HARNESS, I/P WRG	95	Y (LT1, ML9, C60, T61) (EXC T72, T84, T85, T90) (EXPORT)	1	12163701
	11-M17	2.480	HARNESS, I/P WRG	95	Y (LT1, ML9, C68, T61) (EXC T72, T84, T85, T90) (EXPORT)	1	12163703
	11-M17	2.480	HARNESS, I/P WRG	95	Y (LT1, ML9, C68, T72, T84, T85, T90) (EXC T61) (EXPORT)	1	12163704
	11-M17	2.480	HARNESS, I/P WRG	96	Y (M30, C68, T72, T84, T85, T90) (EXC T61) (EXPORT)	1	12130475
	11-M17	2.480	HARNESS, I/P WRG	96	Y (LT4, ML9, C68, T72, T84, T85, T90) (EXC T61) (EXPORT)	1	12163715
	11-M17	2.480	HARNESS, I/P WRG (TAGGED 0328)	94	Y (M30, C68, T72, T84, T85, T90) (1ST DES) (EXPORT)	1	12141791
8.		8.917	NUT, HFH 6X1X7 SELF LK 14.2-OD (9) 7111M ALL MET PREV TORQ (I/P INFL RST MDL) .	94-96	.....	4	11516075
9.	11-B11	14.865	MODULE, I/P INFL RST	94-96	Y (AK5)	1	10252293
10.	11-B11	14.865	INSULATOR, INFL RST DIAGN ENGY RESV MDL (9.260)	94-96	Y	3	3999572
11.	11-B11	14.865	MODULE, INFL RST DIAGN ENGY RESV (REMAN)	94-96	Y (AK5)	1	16176558
12.	11-M26	2.559	BRACKET, I/P WRG HARN	94-96	Y	1	10251214
13.		8.900	BOLT, HEX W/CON WA, M6X1X20 (INFL RST CONT MDL BRKT LWR)	94-96	.....	4	11514623
14.	11-B11	14.865	BRACKET, INFL RST CONT MDL	94-96	Y (AK5)	RH	10086177
15.		8.921	NUT, U TYPE, MULTI THD, PREV TORQ, M4.2X1.41TAP, 8.1REACH, 0.65-3.80 PNLS 1065 PZOR (MULTIUSE RLY BRKT) (AC-DELCO #11513599)	94-96	.....	1	11513599
16.		8.977	BOLT/SCREW ASM M4.2X1.41 #18 HEX HD GM71	94-96	.....	1	11515303
17.		8.917	NUT, HFH 6X1X7 SELF LK 14.2-OD (9) 7111M ALL MET PREV TORQ (INFL RST ARMING SEN)	94-96	.....	3	11516075
18.	11-B11	14.865	SENSOR, INFL RST ARMING	94-96	Y (AK5)	1	10143543
19.		8.950	RETAINER, (INFL RST ARMING SEN WRG HARN CONN)	94-96	.....	1	12052834
20.	11-B11	14.865	BRACKET, F/END INFL RST DISCRM SEN	94-96	Y (AK5)	1	10161868
21.	11-B11	14.865	BRACKET, INFL RST CONT MDL	94-96	Y (AK5)	LH	10086086
22.	11-B11	14.865	MODULE, STRG WHL INFL RST .	94-96	Y (AK5)	1	16752392
23.		8.950	RETAINER, (INFL RST STRG WHL MDL WRG HARN CONN) ...	94-96	.....	1	12052834
24.	11-B11	14.865	SENSOR, F/END INFL RST DISCRM	94-96	Y (AK5)	1	10177901
25.		8.900	BOLT, HFH M8X1.25X21MM, 17 OD, 10.9 (F/END INFL RST DISCRM SEN)	94-96	.....	1	12551177

© 2000 GENERAL MOTORS SERVICE PARTS OPERATIONS-CHEVROLET-14Y

					1Y14-019
26.	8.900	BOLT, M6X1X12, 10 THD, 11.6 OD, 9.8 GM500-M, POR, MACH (F/END INFL RST DISCRM SEN) (AC-DELCO #11514149)	94-96	1	11514149
27.	8.950	RETAINER, (F/END INFL RST DISCRM SEN WRG HARN CONN)	94-96	1	12052834

RPO DEFINITIONS

AK5 – RESTRAINT SYSTEM,FRONT SEAT,INFLATABLE,DRIVER AND PASSENGER
C60 – AIR CONDITIONER,FRONT,MANUAL CONTROLS
C68 – AIR CONDITIONER,FRONT,AUTOMATIC,ELECTRONIC CONTROLS
LT1 – ENGINE-GAS, 8 CYL, 5.7L(5.7P),MFI,HO
LT4 – ENGINE GAS, 8 CYL, 5.7L, MFI, HIGH OUTPUT
LT5 – ENGINE,5.7L(5.7J),TPI
ML9 – TRANSMISSION,MANUAL 6-SPEED
M30 – TRANSMISSION,AUTOMATIC 4 SPEED,4L60E,ELECTRONIC
T61 – LIGHTING,DAYTIME RUNNING
T72 – HEADLAMPS,LH RULE OF THE ROAD(EXPORT)
T84 – HEADLAMPS,RH RULE OF THE ROAD,RECTANGULAR(MARKED E)(EXPORT)
T85 – HEADLAMPS,LH RULE OF THE ROAD,RECTANGULAR(MARKED E)(EXPORT)
T90 – LAMP,SIGNALING AND MARKER(EXPORT)

© 2000 GENERAL MOTORS SERVICE PARTS OPERATIONS-CHEVROLET-14Y

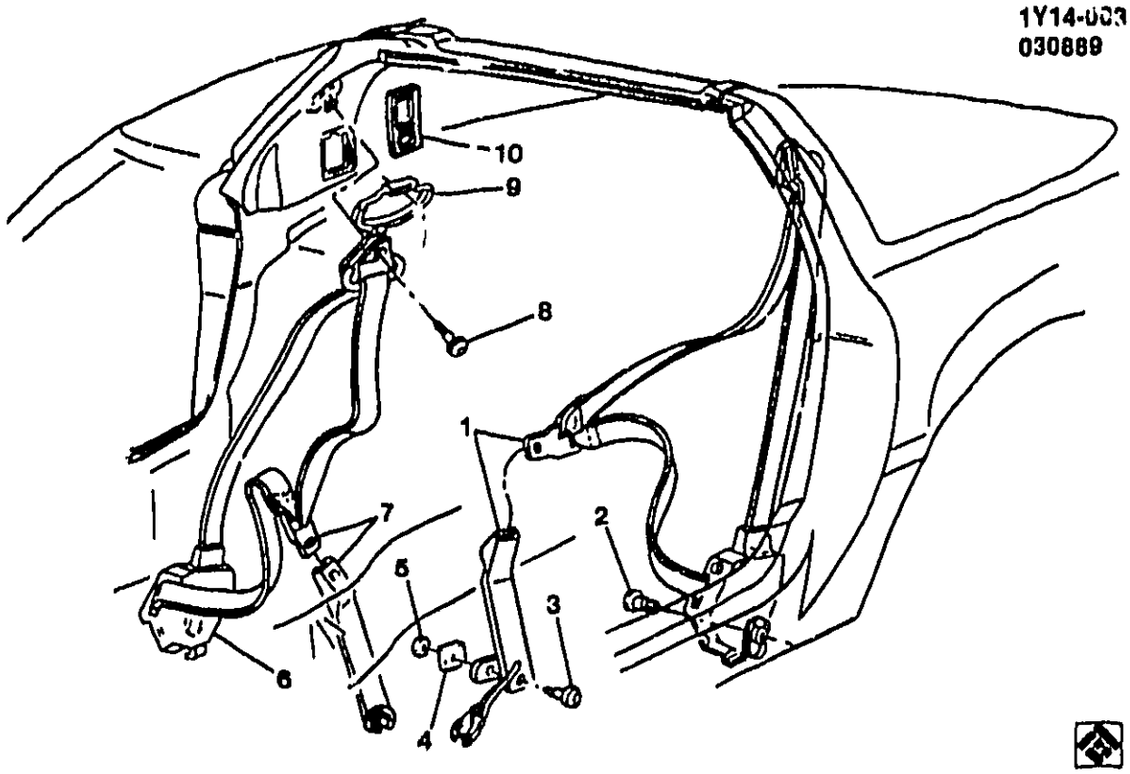

1984–1990 Y07 SEAT BELT HARDWARE

1.	11–B14	14.875	BELT, D/SEAT (1984–86) (SEE CHART IN GROUP FOR USAGE) (12I)	12517092
	11–B14	14.875	BELT, D/SEAT (1987) (SEE CHART IN GROUP FOR USAGE) (12I)	12516942
	11–B14	14.875	BELT, D/SEAT COMPL (DLX 1) (LH) (1988–90) (SEE CHART IN GROUP FOR USAGE) (909)	12516996
2.	11–B14	14.875	BOLT, ST BELT ANC PLT	20229360
3.	11–B14	14.875	BOLT, F/SEAT BELT BRKT	20247351
4.	11–B14	14.875	SEALING STRIP, F/SEAT BELT ANC PLT (1988–90)	11515174
5.	11–B14	14.875	NUT, BRKT (1984–87) (3.023)	10019719
6.	11–B14	14.875	COVER, RETR–RH (1984–87)	14065012
	11–B14	14.875	COVER, RETR–LH (1984–87)	14065011
7.	11–B14	14.875	BELT, P/SEAT (1984–87) (SEE CHART IN GROUP FOR USAGE) (12I)	12516944
	11–B14	14.875	BELT, P/SEAT COMPL (DLX 1) (RH) (1988–90) (SEE CHART IN GROUP FOR USAGE) (909)	12517001
8.	11–B14	14.875	BOLT, F/SEAT BELT	15674851
9.	11–B14	14.875	COVER, GDE (1984–88) (PAINT TO MATCH)	20293352
10.	11–D14	15.492	INSULATOR, RF INR SI BOW ((CUT AS REQUIRED)) (1989–90)	11515174

RPO DEFINITIONS
12I – INTERIOR TRIM GRAPHITE
909 – SEAT BELT COLOR,SMOKE GRAY

© 2000 GENERAL MOTORS SERVICE PARTS OPERATIONS–CHEVROLET–14Y

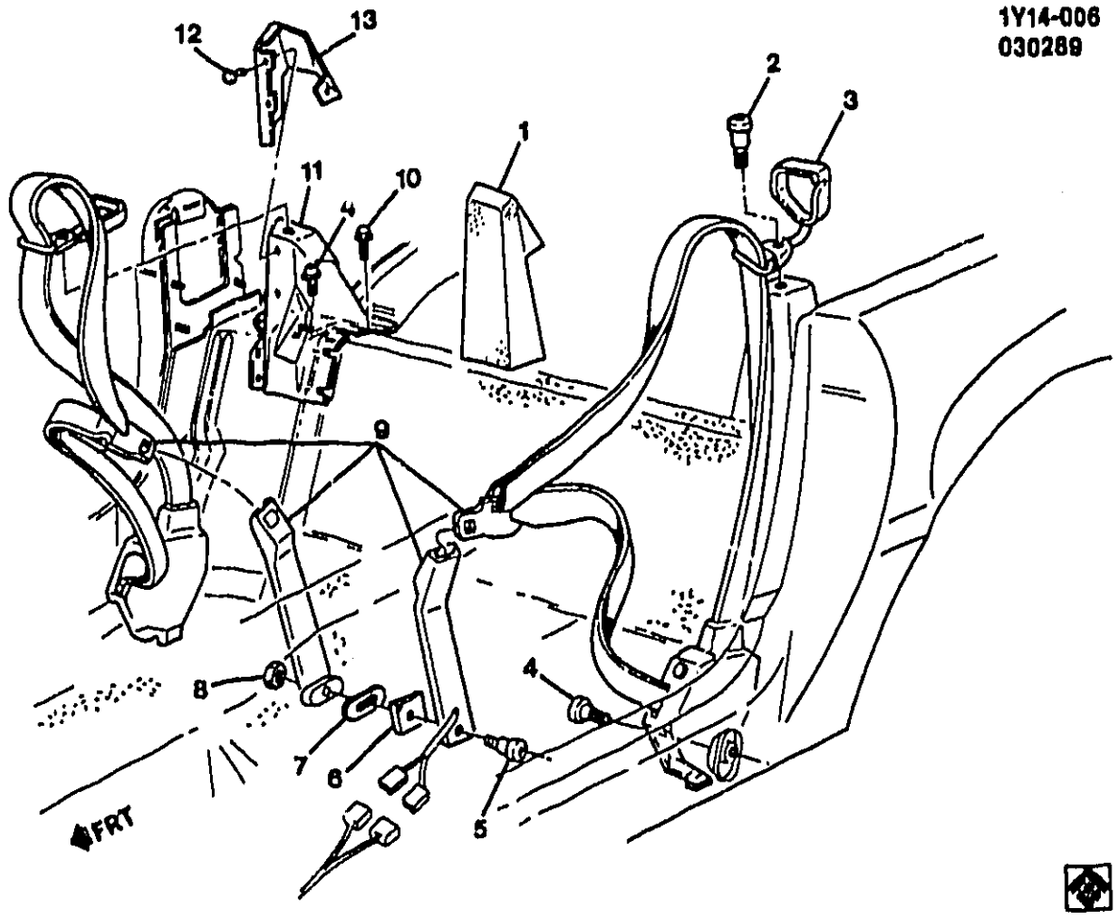

1Y14-006

1986-1991 Y67 SEAT BELT HARDWARE

1.		DISCON	CARPET, ANC REINF (GRAPHITE 12I) (SEE PARTS SECTION FOR ADDITIONAL COLORS & TRIM COMBINATIONS)	86-87	Y	RH	14100312
		DISCON	CARPET, ANC REINF (MED SMOKE GRAY 90I) (SEE PARTS SECTION FOR ADDITIONAL COLORS & TRIM COMBINATIONS)	88-89	Y	RH	10089524
		DISCON	CARPET, ANC REINF (GRAPHITE 12I) (SEE PARTS SECTION FOR ADDITIONAL COLORS & TRIM COMBINATIONS)	86-87	Y	LH	14100311
	11-B14	14.875	CARPET, ANC REINF (MED SMOKE GRAY 90I) (SEE PARTS SECTION FOR ADDITIONAL COLORS & TRIM COMBINATIONS) (GRAY)	88-89	Y	LH	10089523
2.	11-B14	14.875	BOLT, F/SEAT BELT (SHLDR STRP GDE) (M12X1.75X43, 18 THD, 14.2X25 SHLDR, TRI-LOBE TAP, STL, PAN HD) (16.714)	86-91	Y (AJ3)	2	15674851
3.	11-B14	14.875	COVER, D/SEAT SHLDR BELT GDE TR (PAINT TO MATCH)	86-91	Y (EXC AX4)	1	20293352

© 2000 GENERAL MOTORS SERVICE PARTS OPERATIONS-CHEVROLET-14Y

							1Y14-006
	11-B14	14.875	COVER, P/SEAT SHLDR BELT GDE TR (PAINT TO MATCH)	86-91	Y (EXC AX4)	1	20293352
4.	11-B14	14.875	BOLT, ST BELT ANC PLT (M12 X 1.75 X 36MM)	86-91	Y67	2	20229360
	11-B14	14.875	BOLT, ST BELT UPR ANC PLT REINF (M12 X 1.75 X 36MM)	86-91	Y67	2	20229360
5.	11-B14	14.875	BOLT, F/SEAT BELT BRKT (M12 X 1.75 X 35MM)	86-91	Y	2	20247351
6.	11-B14	14.875	SEALING STRIP, F/SEAT BELT ANC PLT (4 1/4"X7 1/2") (TRIM AS REQ'D) (15.492)	86-91	Y	2	11515174
7.	11-B14	14.875	PLATE, D/SEAT BELT ANC (BKL SI) (OVAL) (16.714)	86-91	Y	2	15734139
	11-B14	14.875	PLATE, P/SEAT BELT ANC (BKL SI) (OVAL) (16.714)	86-91	Y	2	15734139
8.	11-B14	14.875	NUT, BRKT (3.023)	86-87	Y	2	10019719
9.	11-B14	14.875	BELT KIT, D/SEAT (SEE CHART AT END OF GROUP 14.875 FOR ADDTIONAL USAGES AND COLORS) (BLUE)	86-87	.....		12516958
	11-B14	14.875	BELT KIT, P/SEAT (SEE CHART AT END OF GROUP 14.875 FOR ADDITIONAL USAGES AND COLORS)	86-89	.....		12516961
10.		8.900	BOLT, HEX M10X1.5X20, 10.9 POR (F/SEAT BELT ANC REINF) .	86-91	.....	12	11504595
11.	11-B14	14.875	BRACKET, D/SEAT SHLDR BELT GDE (REINF-UPR ANC PLT)	86-91	Y67 (EXC VD1)	LH	10153663
	11-B14	14.875	BRACKET, P/SEAT SHLDR BELT GDE (REINF-UPR ANC PLT)	86-91	Y67	RH	10165400
12.		8.977	[illegible], M4.2-1.41X10 HEX LG W[illegible] W/SLR	86-91	.....	6	11503617
13.	11-B14	14.875	PA[illegible], ANC REINF	86-89	Y	RH	14100310
	11-B14	14.875	PANEL, ANC REINF	86-89	Y	LH	14100309

RPO DEFINITIONS
AJ3 – RESTRAINT SYSTEM,FRONT SEAT INFLATABLE
AX4 – RESTRAINT SYSTEM,FRONT AND REAR SEAT,MANUAL(EUROPEAN)
VD1 – PROVISION OPTIONS,EUROPE(EXPORT)

© 2000 GENERAL MOTORS SERVICE PARTS OPERATIONS-CHEVROLET-14Y

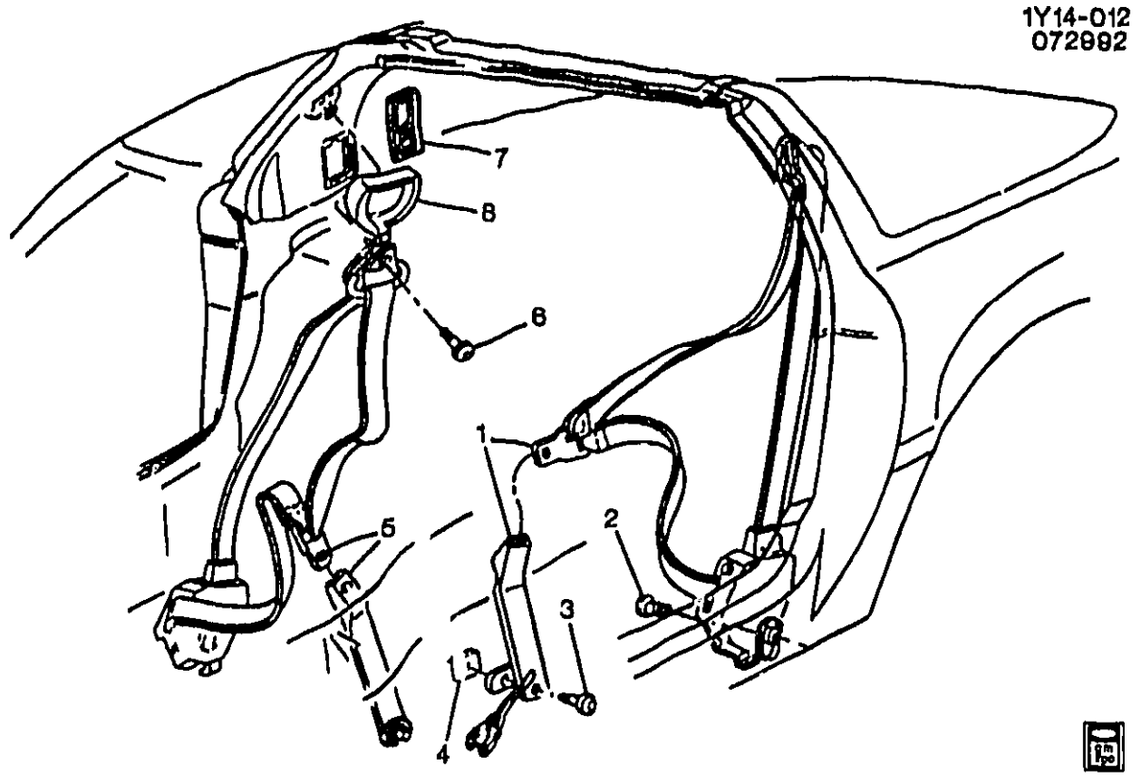

1991-1993 Y07 SEAT BELT HARDWARE

1.	11-B14	14.875	BELT KIT, D/SEAT (BLUE) (DLX 1)	91	Y07 (229)	1	12510326
	11-B14	14.875	BELT KIT, D/SEAT (GRAY) (DLX 1)	91	Y07 (909)	1	12510330
	11-B14	14.875	BELT KIT, D/SEAT (COGNAC) (DLX 1)	91	Y07 (609)	1	12510332
	11-B14	14.875	BELT KIT, D/SEAT (RED) (DLX 1)	91-92	Y07 (739)	1	12518231
	11-B14	14.875	BELT KIT, D/SEAT (BLACK) (DLX 1)	91-92	Y07 (199)	1	12521659
	11-B14	14.875	BELT KIT, D/SEAT (GRAY) (DLX 1)	92	Y07 (149)	1	12521657
	11-B14	14.875	BELT KIT, D/SEAT (BEIGE) (DLX 1)	92	Y07 (649)	1	12521661
	11-B14	14.875	BELT KIT, D/SEAT (GRAY) (DLX 1)	93	Y07 (AJ3, 14I) (EXC 1)	1	12521657
	11-B14	14.875	BELT KIT, D/SEAT (BLACK) (DLX 1)	93	[illegible] (AJ3, 10I, 19I) (EXC AX4)	1	12521659
	11-B14	14.875	BELT KIT, D/SEAT (BEIGE) (DLX 1)	93	Y07 (AJ3, 64I) (EXC AX4)	1	12521661
	11-B14	14.875	BELT KIT, D/SEAT (RED) (DLX 1)	93	Y07 (AJ3, 70I) (EXC AX4)	1	12521663
	11-B14	14.875	BELT KIT, D/SEAT (RED) (DLX 1)	93	Y07 (AJ3, 79I) (EXC AX4)	1	12521665
	11-B14	14.875	BELT KIT, D/SEAT	93	Y (AJ3, AX4) (EXPORT)	1	12529317
2.	11-B14	14.875	BOLT, ST BELT ANC PLT (M12 X 1.75 X 36MM)	91-93	Y	2	20229360
3.	11-B14	14.875	BOLT, F/SEAT BELT BRKT (M12 X 1.75 X 35MM)	91-93	Y	2	20247351
4.	11-B14	14.875	SEALING STRIP, F/SEAT BELT ANC PLT (4 1/4"X7 1/2") (TRIM AS REQ'D) (15.492)	91-93	Y	2	11515174

© 2000 GENERAL MOTORS SERVICE PARTS OPERATIONS-CHEVROLET-14Y

							1Y14-012
5.	11-B14	14.875	BELT KIT, P/SEAT (BLUE) (DLX 1)	91	Y07 (229)	1	12510327
	11-B14	14.875	BELT KIT, P/SEAT (GRAY) (DLX 1)	91	Y07 (909)	1	12510331
	11-B14	14.875	BELT KIT, P/SEAT (COGNAC) (DLX 1)	91	Y07 (609)	1	12510333
	11-B14	14.875	BELT KIT, P/SEAT (RED) (DLX 1) .	91-92	Y07 (739)	1	12518230
	11-B14	14.875	BELT KIT, P/SEAT (BLACK) (DLX 1)	91-92	Y07 (199)	1	12521660
	11-B14	14.875	BELT KIT, P/SEAT (GRAY) (DLX 1)	92	Y07 (149)	1	12509780
	11-B14	14.875	BELT KIT, P/SEAT (BEIGE) (DLX 1)	92	Y07 (649)	1	12521662
	11-B14	14.875	BELT KIT, P/SEAT (GRAY) (DLX 1)	93	Y07 (AJ3, 14I) (EXC AX4)	1	12521658
	11-B14	14.875	BELT KIT, P/SEAT (BLACK) (DLX 1)	93	Y07 (AJ3, 10I, 19I) (EXC AX4)	1	12521660
	11-B14	14.875	BELT KIT, P/SEAT (BEIGE) (DLX 1)	93	Y07 (AJ3, 64I) (EXC AX4)	1	12521662
	11-B14	14.875	BELT KIT, P/SEAT (RED) (DLX 1) .	93	Y07 (AJ3, 70I) (EXC AX4)	1	12521664
	11-B14	14.875	BELT KIT, P/SEAT (RED) (DLX 1) .	93	Y07 (AJ3, 79I) (EXC AX4)	1	12521666
	11-B14	14.875	BELT KIT, P/SEAT (BLACK)	93	Y (AJ3, AX4) (EXPORT)	1	12529316
6.	11-B14	14.875	BOLT, F/SEAT BELT (SHLDR STRP GDE) (M12X1.75X43, 18 THD, 14.2X25 SHLDR, TRI-LOBE TAP, STL, PAN HD) (16.714)	91-92	Y (AJ3)	2	15674851
	11-B14	14.875	BOLT, D/SEAT SHLDR BELT GDE (M12X1.75X43, 18 THD, 14.2X25 SHLDR, TRI-LOBE TAP, STL, PAN HD) (16.714)	93	Y (AJ3)	1	15674851
	11-B14	14.875	BOLT, P/SEAT SHLDR BELT GDE (M12X1.75X43, 18 THD, 14.2X25 SHLDR, TRI-LOBE TAP, STL, PAN HD) (16.714)	93	Y (AJ3)	1	15674851
7.	11-D14	15.402	INSULATOR, RF INR SI BOW (4 1/4"X7 1/2") (TRIM AS REQ'D) ...	91-93	Y07	2	11515174
8.	11-B14	14.875	COVER, D/SEAT SHLDR BELT GDE TR (PAINT TO MATCH)	91-93	Y (EXC AX4)	1	20293352
	11-B14	14.875	COVER, P/SEAT SHLDR BELT GDE TR (PAINT TO MATCH)	91-93	Y (EXC AX4)	1	20293352

RPO DEFINITIONS
AJ3 – RESTRAINT SYSTEM,FRONT SEAT INFLATABLE
AX4 – RESTRAINT SYSTEM,FRONT AND REAR SEAT,MANUAL(EUROPEAN)
10I – INTERIOR TRIM– ARCTIC WHITE
14I – INTERIOR TRIM LT GRAY
149 – SEAT BELT COLOR LT GRAY
19I – INTERIOR TRIM,BLACK
199 – SEAT BELTS COLOR BLACK (19)
229 – SEAT BELT COLOR– BLUE
609 – SEAT BELT COLOR– COGNAC
64I – INTERIOR TRIM,LIGHT BEIGE
649 – SEAT BELT COLOR,LIGHT BEIGE
70I – INTERIOR TRIM,TORCH RED
739 – SEAT BELT COLOR,FLAME RED
79I – INTERIOR TRIM,RUBY RED
909 – SEAT BELT COLOR,SMOKE GRAY

© 2000 GENERAL MOTORS SERVICE PARTS OPERATIONS–CHEVROLET–14Y

MICROFICHE INDEX

GROUPS 14.000 THRU 15.000

FICHE 11 OF 11

GROUP	DESCRIPTION	STARTING GRID LOCATION PARTS	ILLUSTRATIONS
–	GENERAL INFORMATION	1–A2	1–G2
–	ALPHABETICAL INDEX	1–B13	N.A.
14.000	INTERIOR TRIM – SEAT BELTS	11–A2	11–E2
15.000	REAR SEAT TRIM – CARPETS – YARDAGE	11–D2	11–H2
–	CUT OF FICHE CALLS	N.A.	11–M16

11–G1

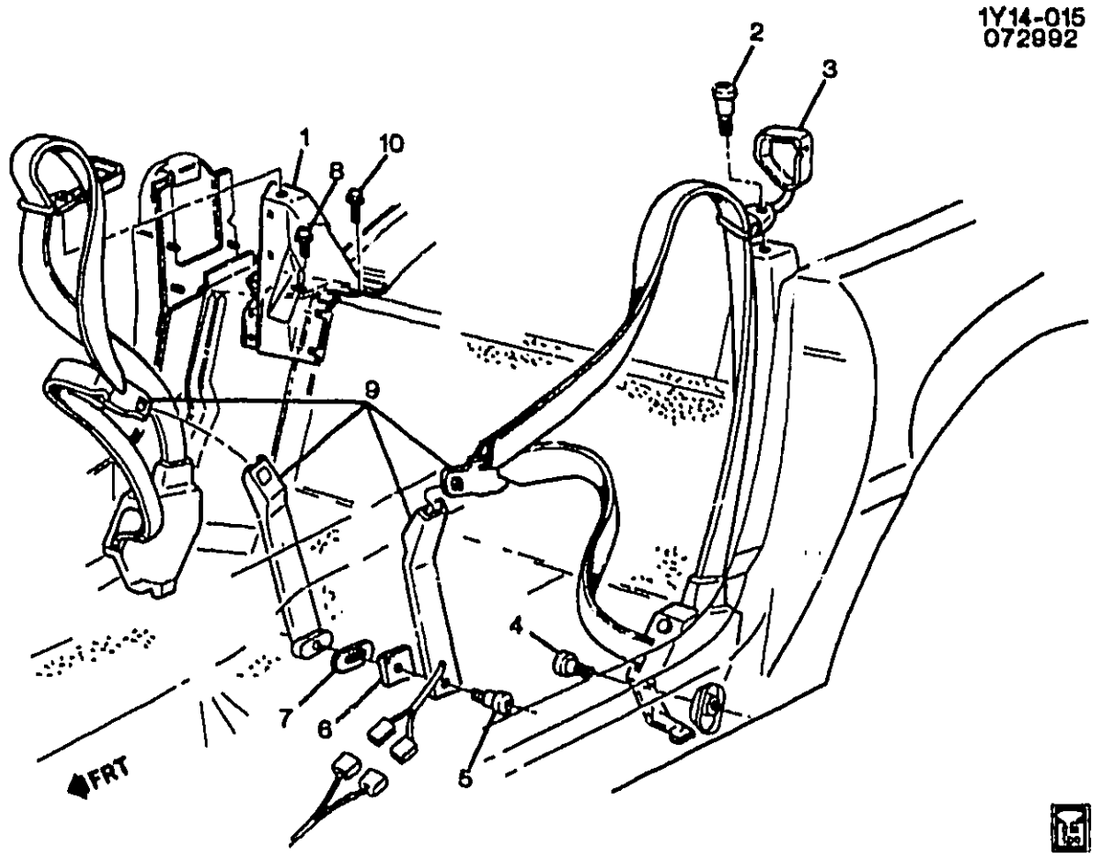

1Y14-015

1992-1993 Y67 SEAT BELT HARDWARE

1.	11-B14	14.875	BRACKET, D/SEAT SHLDR BELT GDE (REINF-UPR ANC PLT)	92-93	Y67 (EXC VD1)	LH	10153663
	11-B14	14.875	BRACKET, P/SEAT SHLDR BELT GDE (REINF-UPR ANC PLT)	92-93	Y67	RH	10165400
2.	11-B14	14.875	BOLT, F/SEAT BELT (SHLDR STRP GDE) (M12X1.75X43, 18 THD, 14.2X25 SHLDR, TRI-LOBE TAP, STL, PAN HD) (16.714)	92	Y (AJ3)	2	15674851
	11-B14	14.875	BOLT, D/SEAT SHLDR BELT GDE (M12X1.75X43, 18 THD, 14.2X25 SHLDR, TRI-LOBE TAP, STL, PAN HD) (16.714)	93	Y (AJ3)	1	15674851
	11-B14	14.875	BOLT, P/SEAT SHLDR BELT GDE (M12X1.75X43, 18 THD, 14.2X25 SHLDR, TRI-LOBE TAP, STL, PAN HD) (16.714)	93	Y (AJ3)	1	15674851
3.	11-B14	14.875	COVER, D/SEAT SHLDR BELT GDE TR (PAINT TO MATCH)	92-93	Y (EXC AX4)	1	20293352
	11-B14	14.875	COVER, P/SEAT SHLDR BELT GDE TR (PAINT TO MATCH)	92-93	Y (EXC AX4)	1	20293352
4.	11-B14	14.875	BOLT, ST BELT ANC PLT (M12 X 1.75 X 36MM)	92-93	Y	2	20229360
5.	11-B14	14.875	BOLT, F/SEAT BELT BRKT (M12 X 1.75 X 35MM)	92-93	Y	2	20247351
6.	11-B14	14.875	SEALING STRIP, F/SEAT BELT ANC PLT (4 1/4"X7 1/2") (TRIM AS REQ'D) (15.492)	92-93	Y	2	11515174

© 2000 GENERAL MOTORS SERVICE PARTS OPERATIONS-CHEVROLET-14Y

							1Y14-015
7.	11-B14	14.875	PLATE, D/SEAT BELT ANC (BKL SI) (OVAL) (16.714)	92-93	Y	2	15734139
	11-B14	14.875	PLATE, P/SEAT BELT ANC (BKL SI) (OVAL) (16.714)	92-93	Y	2	15734139
8.	11-B14	14.875	BOLT, D/SEAT SHLDR BELT GDE BRKT (POSN #2) (M12 X 1.75 X 36MM)	92-93	Y67	1	20229360
	11-B14	14.875	BOLT, P/SEAT SHLDR BELT GDE BRKT (POSN #2) (M12 X 1.75 X 36MM)	92-93	Y67	1	20229360
9.	11-B14	14.875	BELT KIT, D/SEAT (RED) (DLX 1)	92	Y67 (739)	1	12518235
	11-B14	14.875	BELT KIT, D/SEAT (BLACK) (DLX 1)	92	Y67 (10I, 19I)	1	12521669
	11-B14	14.875	BELT KIT, D/SEAT (GRAY) (DLX 1)	92	Y67 (149)	1	12501783
	11-B14	14.875	BELT KIT, D/SEAT (BEIGE) (DLX 1)	92	Y67 (649)	1	12521671
	11-B14	14.875	BELT KIT, D/SEAT (GRAY) (DLX 1)	93	Y67 (AJ3, 14I) (EXC AX4)	1	12521667
	11-B14	14.875	BELT KIT, D/SEAT (BLACK) (DLX 1)	93	Y67 (AJ3, 10I, 19I) (EXC AX4)	1	12521669
	11-B14	14.875	BELT KIT, D/SEAT (BEIGE) (DLX 1)	93	Y67 (AJ3, 64I) (EXC AX4)	1	12521671
	11-B14	14.875	BELT KIT, D/SEAT (RED) (DLX 1)	93	Y67 (AJ3, 70I) (EXC AX4)	1	12521673
	11-B14	14.875	BELT KIT, D/SEAT (RED) (DLX 1)	93	Y67 (AJ3, 79I) (EXC AX4)	1	12521675
	11-B14	14.875	BELT KIT, P/SEAT (RED) (DLX 1)	92	Y67 (AJ3, 739)	1	12518234
	11-B14	14.875	BELT KIT, P/SEAT (BLACK) (DLX 1)	92	Y67 (199)	1	12521670
	11-B14	14.875	BELT KIT, P/SEAT (BEIGE) (DLX 1)	92	Y67 (649)	1	12509782
	11-B14	14.875	BELT KIT, P/SEAT (GRAY) (DLX 1)	92	Y67 (149)	1	12509784
	11-B14	14.875	BELT KIT, P/SEAT (GRAY) (DLX 1)	93	Y67 (AJ3, 14I) (EXC AX4)	1	12521668
	11-B14	14.875	BELT KIT, P/SEAT (BLACK) (DLX 1)	93	Y67 (AJ3, 10I, 19I) (EXC AX4)	1	12521670
	11-B14	14.875	BELT KIT, P/SEAT (BEIGE) (DLX 1)	93	Y67 (AJ3, 64I) (EXC AX4)	1	12521672
	11-B14	14.875	BELT KIT, P/SEAT (RED) (DLX 1)	93	Y67 (AJ3, 70I) (EXC AX4)	1	12521674
	11-B14	14.875	BELT KIT, P/SEAT (RED) (DLX 1)	93	Y67 (AJ3, 79I) (EXC AX4)	1	12521676
	11-B14	14.875	BELT KIT, D/SEAT	93	Y (AJ3, AX4) (EXPORT)	1	12529317
	11-B14	14.875	BELT KIT, P/SEAT (BLACK)	93	Y (AJ3, AX4) (EXPORT)	1	12529316
10.		8.900	BOLT, HEX M10X1.5X20, 10.9 POR (POSN #1)	92-93		6	11504595
		8.900	BOLT, HEX M10X1.5X20, 10.9 POR (P/SEAT SHLDR BELT GDE BRKT)	92-93		6	11504595
		8.929	WASHER, FL-.406X.812X.065ZN	92-93		12	120394

RPO DEFINITIONS
AJ3 – RESTRAINT SYSTEM,FRONT SEAT INFLATABLE
AX4 – RESTRAINT SYSTEM,FRONT AND REAR SEAT,MANUAL(EUROPEAN)
VD1 – PROVISION OPTIONS,EUROPE(EXPORT)
10I – INTERIOR TRIM– ARCTIC WHITE
14I – INTERIOR TRIM LT GRAY
149 – SEAT BELT COLOR LT GRAY

© 2000 GENERAL MOTORS SERVICE PARTS OPERATIONS–CHEVROLET–14Y

19I – INTERIOR TRIM,BLACK
199 – SEAT BELTS COLOR BLACK (19)
64I – INTERIOR TRIM,LIGHT BEIGE
649 – SEAT BELT COLOR,LIGHT BEIGE
70I – INTERIOR TRIM,TORCH RED
739 – SEAT BELT COLOR,FLAME RED
79I – INTERIOR TRIM,RUBY RED

© 2000 GENERAL MOTORS SERVICE PARTS OPERATIONS–CHEVROLET–14Y

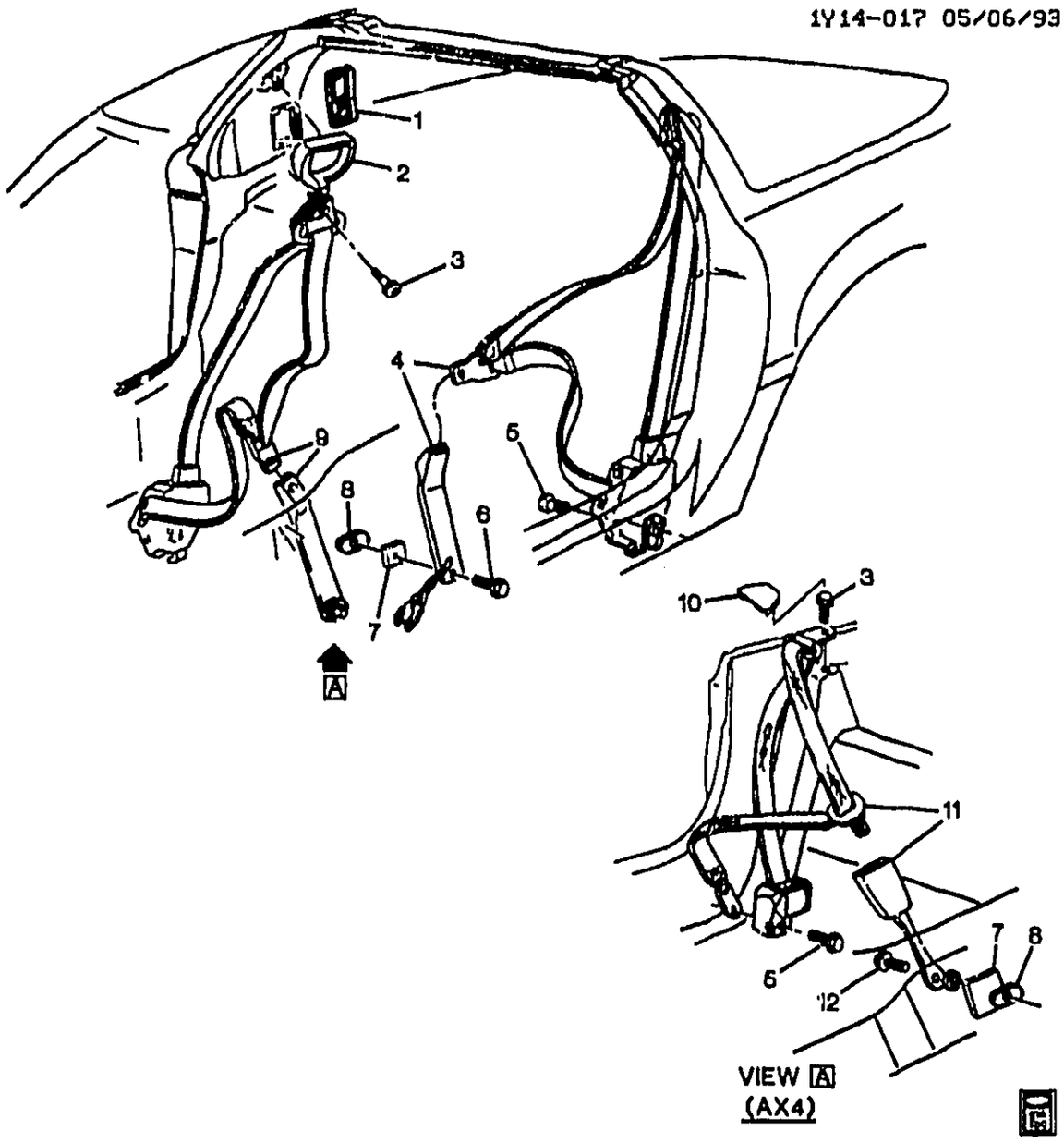

1Y14-017

1994-1996 Y07 SEAT BELT HARDWARE

1.		N.S.	SEALING STRIP, F/SEAT BELT ANC PLT		.....		
2.	11-B14	14.875	COVER, D/SEAT SHLDR BELT GDE TR	94-96	Y (AK5, AX4) (EXPORT)	1	10243733
	11-B14	14.875	COVER, P/SEAT SHLDR BELT GDE TR	94-96	Y (AK5, AX4) (EXPORT)	1	10243734
3.	11-B14	14.875	BOLT, P/SEAT SHLDR BELT GDE (M12X1.75X43, 18 THD, 14.2X25 SHLDR, TRI-LOBE TAP, STL, PAN HD) (16.714)	94-96	Y (AK5)	1	15674851
	11-B14	14.875	BOLT, D/SEAT SHLDR BELT GDE (M12X1.75X43, 18 THD, 14.2X25 SHLDR, TRI-LOBE TAP, STL, PAN HD) (16.714)	94-96	Y (AK5)	1	15674851

© 2000 GENERAL MOTORS SERVICE PARTS OPERATIONS-CHEVROLET-14Y

							1Y14-017
4.	11-B14	14.875	BELT KIT, D/SEAT (INCL 2) (GRAY)	94	Y07 (AK5, 14I) (EXC AX4)	1	12514496
	11-B14	14.875	BELT KIT, D/SEAT (INCL 2) (BEIGE)	94	Y07 (AK5, 64I) (EXC AX4)	1	12514497
	11-B14	14.875	BELT KIT, D/SEAT (INCL 2) (RED)	94	Y07 (AK5, 70I) (EXC AX4)	1	12514498
	11-B14	14.875	BELT KIT, D/SEAT (INCL 2) (BLACK)	94	Y07 (AK5, 19I) (EXC AX4)	1	12514499
	11-B14	14.875	BELT KIT, D/SEAT (INCL 2) (GRAY)	95-96	Y07 (AK5, 14I) (EXC AX4)	1	12524343
	11-B14	14.875	BELT KIT, D/SEAT (INCL 2) (BEIGE)	95-96	Y07 (AK5, 64I) (EXC AX4)	1	12524345
	11-B14	14.875	BELT KIT, D/SEAT (INCL 2) (RED)	95-96	Y07 (AK5, 70I) (EXC AX4)	1	12524347
	11-B14	14.875	BELT KIT, D/SEAT (INCL 2) (BLACK)	95-96	Y07 (AK5, 19I) (EXC AX4)	1	12524349
5.	11-B14	14.875	BOLT, D/SEAT BELT RETR (M12 X 1.75 X 36MM)	94-96	Y (EXC AX4)	1	20229360
	11-B14	14.875	BOLT, P/SEAT BELT RETR (M12 X 1.75 X 36MM)	94-96	Y (EXC AX4)	1	20229360
		N.S.	BOLT, D/SEAT BELT RETR (W/AX4)				
		N.S.	BOLT, P/SEAT BELT RETR (W/AX4)				
6.	11-B14	14.875	BOLT, D/SEAT BELT BRKT (M12 X 1.75 X 35MM)	94-96	Y (AK5) (EXC AX4)	1	20247351
	11-B14	14.875	BOLT, P/SEAT BELT BRKT (M12 X 1.75 X 35MM)	94-96	Y (AK5) (EXC AX4)	1	20247351
7.	11-B14	14.875	SEAL, P/SEAT BELT BOLT HOLE (BKL SI) (4 1/4"X7 1/2") (TRIM AS REQ'D) (15.492)	94-96	Y	1	11515174
	11-B14	14.875	SEAL, D/SEAT BKL BELT BOLT HOLE (BKL SI) (4 1/4"X7 1/2") (TRIM AS REQ'D) (15.492)	94-96	Y	AR	11515174
8.	11-B14	14.875	PLATE, D/SEAT BELT RETR ANC (OVAL) (16.714)	94-96	Y	2	15734139
	11-B14	14.875	PLATE, P/SEAT BELT RETR ANC (OVAL) (16.714)	94-96	Y	2	15734139
9.	11-B14	14.875	BELT KIT, P/SEAT (BLACK)	94	Y07 (AK5, 19I) (EXC AX4)	1	12512692
	11-B14	14.875	BELT KIT, P/SEAT (BEIGE)	94	Y07 (AK5, 64I) (EXC AX4)	1	12512694
	11-B14	14.875	BELT KIT, P/SEAT (GRAY)	94	Y07 (AK5, 14I) (EXC AX4)	1	12512696
	11-B14	14.875	BELT KIT, P/SEAT (RED)	94	Y07 (AK5, 70I) (EXC AX4)	1	12512698
	11-B14	14.875	BELT KIT, P/SEAT (GRAY)	95-96	Y07 (AK5, 14I) (EXC AX4)	1	12524344
	11-B14	14.875	BELT KIT, P/SEAT (BEIGE)	95-96	Y07 (AK5, 64I) (EXC AX4)	1	12524346
	11-B14	14.875	BELT KIT, P/SEAT (RED)	95-96	Y07 (AK5, 70I) (EXC AX4)	1	12524348
	11-B14	14.875	BELT KIT, P/SEAT (BLACK)	95-96	Y07 (AK5, 19I) (EXC AX4)	1	12524350
10.	11-B14	14.875	COVER, D/SEAT SHLDR BELT GDE TR	94-96	Y (AK5, AX4) (EXPORT)	1	10243733
	11-B14	14.875	COVER, P/SEAT SHLDR BELT GDE TR	94-96	Y (AK5, AX4) (EXPORT)	1	10243734
11.	11-B14	14.875	BELT KIT, D/SEAT	94-96	Y (AK5, AX4, 14I, 19I, 64I, 70I) (EXPORT)	1	12529317

© 2000 GENERAL MOTORS SERVICE PARTS OPERATIONS-CHEVROLET-14Y

							1Y14-017
	11-B14	14.675	BELT KIT, P/SEAT (BLACK)	94-96	Y (AK5, AX4, 14I, 19I, 64I, 70I) (EXPORT)	1	12529316
12.		N.S.	BOLT, D/SEAT BELT BRKT (W/AX4)		.....		
		N.S.	BOLT, P/SEAT BELT BRKT (W/AX4)		.....		

RPO DEFINITIONS

AK5 – RESTRAINT SYSTEM,FRONT SEAT,INFLATABLE,DRIVER AND PASSENGER
AX4 – RESTRAINT SYSTEM,FRONT AND REAR SEAT,MANUAL(EUROPEAN)
14I – INTERIOR TRIM LT GRAY
19I – INTERIOR TRIM,BLACK
64I – INTERIOR TRIM,LIGHT BEIGE
70I · INTERIOR TRIM,TORCH RED

© 2000 GENERAL MOTORS SERVICE PARTS OPERATIONS-CHEVROLET-14Y

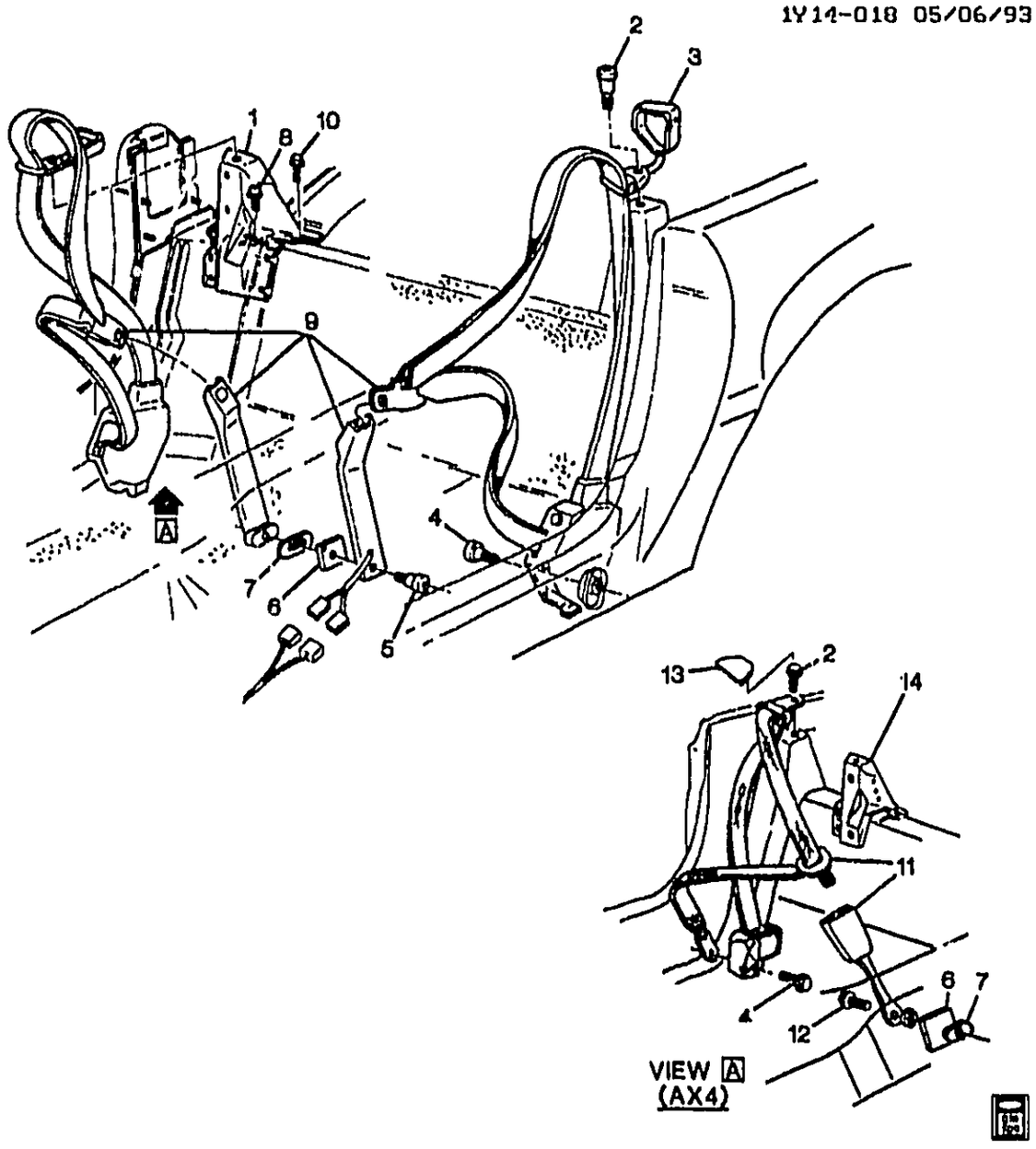

1Y14-018

1994-1996 Y67 SEAT BELT HARDWARE

1.	11-B14	14.875	BRACKET, P/SEAT SHLDR BELT GDE (REINF-UPR ANC PLT)	94-96	Y67 (EXC VD1)	RH	10165400
	11-B14	14.875	BRACKET, D/SEAT SHLDR BELT GDE (REINF-UPR ANC PLT)	94-96	Y67 (EXC VD1)	LH	10153663
2.	11-B14	14.875	BOLT, P/SEAT SHLDR BELT GDE (M12X1.75X43, 18 THD, 14.2X25 SHLDR, TRI-LOBE TAP, STL, PAN HD) (16.714)	94-96	Y (AK5)	1	15674851
	11-B14	14.875	BOLT, D/SEAT SHLDR BELT GDE (M12X1.75X43, 18 THD, 14.2X25 SHLDR, TRI-LOBE TAP, STL, PAN HD) (16.714)	94-96	Y (AK5)	1	15674851
3.	11-B14	14.875	COVER, P/SEAT SHLDR BELT GDE TR (BLACK)	94-96	Y67 (AK5) (EXC AX4) ..	1	10254501

© 2000 GENERAL MOTORS SERVICE PARTS OPERATIONS-CHEVROLET-14Y

							1Y14-018
	11-B14	14.875	COVER, D/SEAT SHLDR BELT GDE TR (BLACK)	94-96	Y67 (AK5) (EXC AX4) ..	1	10254501
4.	11-B14	14.875	BOLT, D/SEAT BELT RETR (M12 X 1.75 X 36MM)	94-96	Y (EXC AX4)	1	20229360
	11-B14	14.875	BOLT, P/SEAT BELT RETR (M12 X 1.75 X 36MM)	94-96	Y (EXC AX4)	1	20229360
		N.S.	BOLT, D/SEAT BELT RETR (W/AX4)		.....		
		N.S.	BOLT, P/SEAT BELT RETR (W/AX4)		.....		
5.	11-B14	14.875	BOLT, D/SEAT BELT BRKT (M12 X 1.75 X 35MM)	94-96	Y (AK5) (EXC AX4)	1	20247351
	11-B14	14.875	BOLT, P/SEAT BELT BRKT (M12 X 1.75 X 35MM)	94-96	Y (AK5) (EXC AX4)	1	20247351
6.	11-B14	14.875	SEAL, P/SEAT BELT BOLT HOLE (BKL SI) (4 1/4"X7 1/2") (TRIM AS REQ'D) (15.492)	94-96	Y	1	11515174
	11-B14	14.875	SEAL, D/SEAT BKL BELT BOLT HOLE (BKL SI) (4 1/4"X7 1/2") (TRIM AS REQ'D) (15.492)	94-96	Y	1	11515174
7.	11-B14	14.875	PLATE, D/SEAT BELT RETR ANC (OVAL) (16.714)	94-96	Y	2	15734139
	11-B14	14.875	PLATE, P/SEAT BELT RETR ANC (OVAL) (16.714)	94-96	Y	2	15734139
8.	11-B14	14.875	BOLT, P/SEAT SHLDR BELT GDE BRKT (POSN #3) (M12 X 1.75 X 36MM)	94-96	Y67	1	20229360
	11-B14	14.875	BOLT, D/SEAT SHLDR BELT GDE BRKT (POSN #3) (M12 X 1.75 X 36MM)	94-96	Y67	1	20229360
9.	11-B14	14.875	BELT KIT, D/SEAT (GRAY)	94	Y67 (AK5, 14I) (EXC AX4)	1	12514509
	11-B14	14.875	BELT KIT, D/SEAT (BEIGE)	94	Y67 (AK5, 64I) (EXC AX4)	1	12514510
	11-B14	14.875	BELT KIT, D/SEAT (RED)	94	Y67 (AK5, 70I) (EXC AX4)	1	12514511
	11-B14	14.875	BELT KIT, D/SEAT (BLACK)	94	Y67 (AK5, 19I) (EXC AX4)	1	12514512
	11-B14	14.875	BELT KIT, D/SEAT (BLACK)	95-96	Y67 (AK5, 19I) (EXC AX4)	1	12524335
	11-B14	14.875	BELT KIT, D/SEAT (BEIGE)	95-96	Y67 (AK5, 64I) (EXC AX4)	1	12524337
	11-B14	14.875	BELT KIT, D/SEAT (GRAY)	95-96	Y67 (AK5, 14I) (EXC AX4)	1	12524339
	11-B14	14.875	BELT KIT, D/SEAT (RED)	95-96	Y67 (AK5, 70I) (EXC AX4)	1	12524341
	11-B14	14.875	BELT KIT, P/SEAT (BLACK)	94	Y67 (AK5, 19I) (EXC AX4)	1	12512700
	11-B14	14.875	BELT KIT, P/SEAT (BEIGE)	94	Y67 (AK5, 64I) (EXC AX4)	1	12512702
	11-B14	14.875	BELT KIT, P/SEAT (GRAY)	94	Y67 (AK5, 14I) (EXC AX4)	1	12512704
	11-B14	14.875	BELT KIT, P/SEAT (RED)	94	Y67 (AK5, 70I) (EXC AX4)	1	12512706
	11-B14	14.875	BELT KIT, P/SEAT (BLACK)	95-96	Y67 (AK5, 19I) (EXC AX4)	1	12524336
	11-B14	14.875	BELT KIT, P/SEAT (BEIGE)	95-96	Y67 (AK5, 64I) (EXC AX4)	1	12524338
	11-B14	14.875	BELT KIT, P/SEAT (GRAY)	95-96	Y67 (AK5, 14I) (EXC AX4)	1	12524340

© 2000 GENERAL MOTORS SERVICE PARTS OPERATIONS-CHEVROLET-14Y

						1Y14-018	
	11-B14	14.875	BELT KIT, P/SEAT (RED)	95-96	Y67 (AK5, 70I) (EXC AX4)	1	12524342
10.		8.900	BOLT, HFH M10X1.5X30 10.9 FL BLK 21.5 OD 26MM THD POINTED (POSN #2)	94-96	.....	6	12337993
		8.900	BOLT, HFH M10X1.5X30 10.9 FL BLK 21.5 OD 26MM THD POINTED (POSN #2)	94-96	.....	6	12337993
11.	11-B14	14.875	BELT KIT, D/SEAT	94-96	Y (AK5, AX4, 14I, 19I, 64I, 70I) (EXPORT)	1	12529317
	11-B14	14.875	BELT KIT, P/SEAT (BLACK)	94-96	Y (AK5, AX4, 14I, 19I, 64I, 70I) (EXPORT)	1	12529316
12.		N.S.	BOLT, D/SEAT BELT BRKT (W/AX4)		.....		
		N.S.	BOLT, P/SEAT BELT BRKT (W/AX4)		.....		
13.	11-B14	14.875	COVER, D/SEAT SHLDR BELT GDE TR	94-96	Y (AK5, AX4) (EXPORT)	1	10243733
	11-B14	14.875	COVER, P/SEAT SHLDR BELT GDE TR	94-96	Y (AK5, AX4) (EXPORT)	1	10243734
14.	11-B14	14.875	BRACKET, P/SEAT SHLDR BELT GDE	94-96	Y67 (VD1) (EXPORT) ..	RH	10220998
	11-B14	14.875	BRACKET, D/SEAT SHLDR BELT GDE	94-96	Y67 (VD1) (EXPORT) ..	LH	10220997

RPO DEFINITIONS
AK5 – RESTRAINT SYSTEM,FRONT SEAT,INFLATABLE,DRIVER AND PASSENGER
AX4 – RESTRAINT SYSTEM,FRONT AND REAR SEAT,MANUAL(EUROPEAN)
VD1 – PROVISION OPTIONS,EUROPE(EXPORT)
14I – INTERIOR TRIM LT GRAY
19I – INTERIOR TRIM,BLACK
64I – INTERIOR TRIM,LIGHT BEIGE
70I – INTERIOR TRIM,TORCH RED

© 2000 GENERAL MOTORS SERVICE PARTS OPERATIONS–CHEVROLET–14Y

MICROFICHE INDEX

GROUPS 14.000 THRU 15.000

FICHE 11 OF 11

GROUP	DESCRIPTION	STARTING GRID LOCATION PARTS	ILLUSTRATIONS
–	GENERAL INFORMATION	1–A2	1–G2
–	ALPHABETICAL INDEX	1–B13	N.A.
14.000	INTERIOR TRIM – SEAT BELTS	11–A2	11–E2
15.000	REAR SEAT TRIM – CARPETS – YARDAGE	11–D2	11–H2
–	OUT OF FICHE CALLS	N.A.	11–M16

11–H1

CHEVROLET
BODY GROUP 15.000

ILLUSTRATION INDEX

	TITLE	GRID
1986–1991	Y67 CARPET/INTERIOR	11–H4
1986–1991	Y07 CARPET/INTERIOR	11–H7
1992–1996	Y07 CARPET/INTERIOR	11–H10
1992–1996	Y67 CARPET/INTERIOR	11–H16
1986–1989	Y67 STRAPS/CARGO	11–H23
1988	Y07 STRAPS/CARGO	11–H23

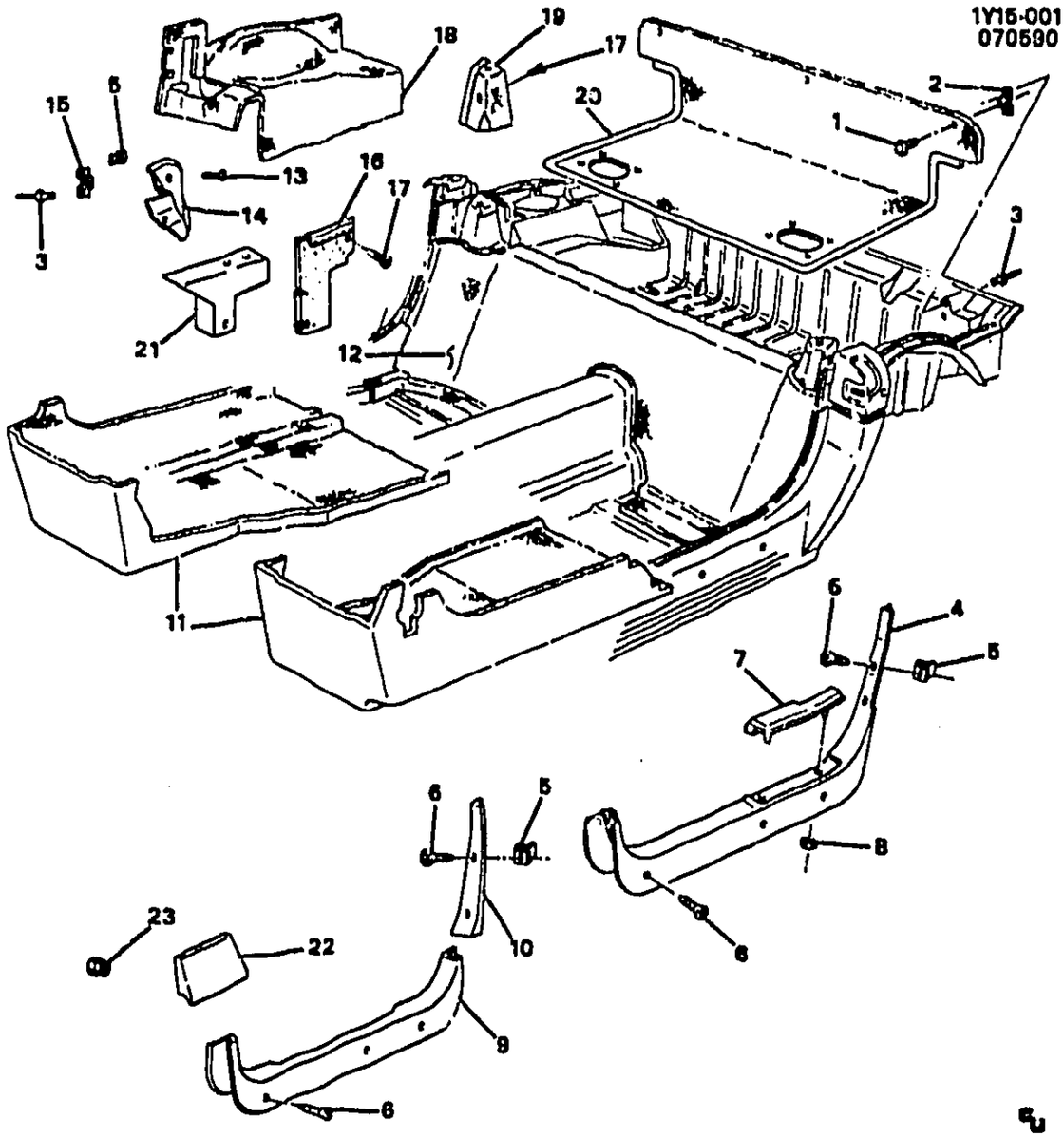

1Y15-001

1986-1991 Y67 CARPET/INTERIOR

NOTE: FOR INSULATOR USAGE SEE "INSULATOR/BODY" ILLUSTRATION IN GROUP 12.000.

1.		8.950	RETAINER, PUSH-IN 0.35-LEN 0.25 HOLE DIA 2.0 HD DIA PLASTIC (AR)	20064875
2.	11-N21	12.981	BRACKET, FLR RR PNL CTR CPT (10.230)	14064526
3.		8.977	SCREW, M4.2X1.41X16 OV CSK TR HD C/R TAP PEOR (AR)	11503446
4.		DISCON	PLATE, DR SILL-RH (1986-87) (SEE PARTS SECTION FOR ADDITIONAL COLORS & TRIM COMBINATIONS) (15I)	14058256
		DISCON	PLATE, DR SILL -LH (1986-87) (SEE PARTS SECTION FOR ADDITIONAL COLORS & TRIM COMBINATIONS) (15I)	14089603
5.		8.921	NUT, M4.2X1.4, 19.3X213.6.8.9 (AR) (AC-DELCO #15650655)	15650655
6.		8.977	SCREW, OVAL CSK TRIM HD W/WA TYPE AB (4.2X1.4X20) (AR)	12338093
7.	11-N10	11.175	MAT, FRT S/D STEP (EXIT ASST PAD) (RH) (1986-87) (PAINT TO MATCH)	14047500

© 2000 GENERAL MOTORS SERVICE PARTS OPERATIONS-CHEVROLET-14Y

		DISCON	MAT, FRT S/D STEP (EXIT ASST PAD) (LH) (1986-87) (PAINT TO MATCH)	14047499
8.		8.921	NUT, MET STAMPED 5 MM ID (AR)	11501790
9.		DISCON	PLATE, DR SILL TR-RH (1988-89) (SEE PARTS SECTION FOR ADDITIONAL COLORS & TRIM COMBINATIONS) (90I)	10095150
		DISCON	PLATE, DR SILL TR-RH (1990-91) (INCL 23) (SEE PARTS SECTION FOR ADDITIONAL COLORS & TRIM COMBINATIONS) (90I)	10172446
		DISCON	PLATE, DR SILL TR-LH (1988-89) (SEE PARTS SECTION FOR ADDITIONAL COLORS & TRIM COMBINATIONS) (90I)	10095149
		DISCON	PLATE, DR SILL TR-LH (1990-91) (INCL 23) (SEE PARTS SECTION FOR ADDITIONAL COLORS & TRIM COMBINATIONS) (90I)	10172445
10.	11-N10	11.175	PLATE, DR SILL RR TR-RH (1988-90) (SEE PARTS SECTION FOR ADDITIONAL COLORS & TRIM COMBINATIONS) (CUT TO FIT FOR CONVERTIBLE (Y67)) (90I)	10175780
	11-N10	11.175	PLATE, DR SILL RR TR-RH (1991) (SEE PARTS SECTION FOR ADDITIONAL COLORS & TRIM COMBINATIONS) (90I)	10175780
		DISCON	PLATE, DR SILL RR TR-LH (1988-90) (SEE PARTS SECTION FOR ADDITIONAL COLORS & TRIM COMBINATIONS) (CUT TO FIT FOR CONVERTIBLE (Y67)) (90I)	10175779
		DISCON	PLATE, DR SILL RR TR-LH (1991) (SEE PARTS SECTION FOR ADDITIONAL COLORS & TRIM COMBINATIONS) (90I)	10175779
11.		DISCON	CARPET, FLR PNL FRT-RH (1986-87) (SEE PARTS SECTION FOR ADDITIONAL COLORS & TRIM COMBINATIONS) (15I)	14060264
		DISCON	CARPET, FLR PNL FRT-RH (1988-89) (SEE PARTS SECTION FOR ADDITIONAL COLORS & TRIM COMBINATIONS) (90I)	10089512
		DISCON	CARPET, FLR PNL FRT-RH (1990-91) (SEE PARTS SECTION FOR ADDITIONAL COLORS & TRIM COMBINATIONS) (90I)	10132924
		DISCON	CARPET, FLR PNL FRT-LH (1986-87) (SEE PARTS SECTION FOR ADDITIONAL COLORS & TRIM COMBINATIONS) (15I)	14060263
		DISCON	CARPET, FLR PNL FRT-LH (1988-89) (SEE PARTS SECTION FOR ADDITIONAL COLORS & TRIM COMBINATIONS) (90I)	10089511
		DISCON	CARPET, FLR PNL FRT-LH (1990-91) (SEE PARTS SECTION FOR ADDITIONAL COLORS & TRIM COMBINATIONS) (90I)	10132923
12.		DISCON	CARPET, INTER FLR PNL EXT (1986-87) (SEE PARTS SECTION FOR ADDITIONAL COLORS & TRIM COMBINATIONS) (15I)	14092774
	11-D6	15.286	CARPET, INTER FLR (PNL EXT) (MED BLUE) (1988-89) SEE PARTS SECTION FOR ADDITIONAL COLORS & TRIM COMBINATIONS (90I)	10089551
		DISCON	CARPET, INTER FLR PNL EXT (1990-91) (SEE PARTS SECTION FOR ADDITIONAL COLORS & TRIM COMBINATIONS) (90I)	10149221
13.		8.977	SCREW, OV HD C/R, M4.2X1.41X13, TYPE AB, NZ (AR)	11515037
14.	11-D10	15.300	RETAINER, F/FLR CPT ((SEE PARTS SECTION FOR ADDITIONAL COLORS & TRIM COMBINATIONS)) (1989-91) (10I, 19I)	10250703
15.	11-D10	15.300	BRACKET, F/FLR CPT RET	14060290
16.		DISCON	CARPET, DR L/PLR-RH (1988-91) (SEE PARTS SECTION FOR ADDITIONAL COLORS & TRIM COMBINATIONS) (90I)	10137218
		DISCON	CARPET, DR L/PLR-LH (1988-91) (SEE PARTS SECTION FOR ADDITIONAL COLORS & TRIM COMBINATIONS) (90I)	10137217
17.		8.977	SCREW, LG RND WA HD W/BLK NYL WA, 4.2X 1.41X13, 11-OD, DRILL PT, 6172, PEOR (AR)	10180421
18.		DISCON	CARPET, FLR PNL RR-RH (1986-87) (SEE PARTS SECTION FOR ADDITIONAL COLORS & TRIM COMBINATIONS) (15I)	14092758
		DISCON	CARPET, FLR RR (RH) (1986-87) SEE PARTS SECTION FOR ADDITIONAL COLORS & TRIM COMBINATIONS (90I)	14092758
		DISCON	CARPET, FLR PNL RR-RH (1990-91) (SEE PARTS SECTION FOR ADDITIONAL COLORS & TRIM COMBINATIONS) (90I)	10125902
		DISCON	CARPET, FLR PNL RR-LH (1986-87) (SEE PARTS SECTION FOR ADDITIONAL COLORS & TRIM COMBINATIONS) (15I)	14092757

© 2000 GENERAL MOTORS SERVICE PARTS OPERATIONS-CHEVROLET-14Y

				1Y15-001
		DISCON	CARPET, FLR PNL RR-LH (1988-89) (SEE PARTS SECTION FOR ADDITIONAL COLORS & TRIM COMBINATIONS) (90I)	10104233
		DISCON	CARPET, FLR PNL RR-LH (1990-91) (SEE PARTS SECTION FOR ADDITIONAL COLORS & TRIM COMBINATIONS) (90I)	10125901
19.		DISCON	CARPET, ST BELT ANC REINF-RH (1986-87) (SEE PARTS SECTION FOR ADDITIONAL COLORS & TRIM COMBINATIONS) (15I)	14100314
		DISCON	CARPET, ST BELT ANC REINF-RH (1988-89) (SEE PARTS SECTION FOR ADDITIONAL COLORS & TRIM COMBINATIONS) (90I)	10089524
		DISCON	CARPET, ST BELT ANC REINF-LH (1986-87) (SEE PARTS SECTION FOR ADDITIONAL COLORS & TRIM COMBINATIONS) (15I)	14100313
	11-B14	14.875	CARPET, ST BELT ANC REINF-LH (1988-89) (SEE PARTS SECTION FOR ADDITIONAL COLORS & TRIM COMBINATIONS) (90I)	10089523
20.		DISCON	CARPET, FLR RR PNL CTR (1986-87) (SEE PARTS SECTION FOR ADDITIONAL COLORS & TRIM COMBINATIONS) (15I)	14092768
		DISCON	CARPET, FLR RR PNL CTR (1988-89) (SEE PARTS SECTION FOR ADDITIONAL COLORS & TRIM COMBINATIONS) (90I)	10089572
		DISCON	CARPET, FLR RR PNL CTR (1990-91) (SEE PARTS SECTION FOR ADDITIONAL COLORS & TRIM COMBINATIONS) (90I)	10125907
21.	11-A27	14.731	PANEL, DR L/PLR UPR TR-RH (1986-89) (DUE TO APPEARANCE DIFFERENCE, IT IS ADVISED THAT CUSTOMER REPLACE BOTH SIDES)	14100368
	11-A27	14.731	PANEL, DR L/PLR UPR TR-RH (1990-91) (SEE PARTS SECTION FOR ADDITIONAL COLORS & TRIM COMBINATIONS) (90I)	10103858
	11-A27	14.731	PANEL, DR L/PLR UPR TR-LH (1986-89) (DUE TO APPEARANCE DIFFERENCE, IT IS ADVISED THAT CUSTOMER REPLACE BOTH SIDES)	14100367
	11-A27	14.731	PANEL, DR L/PLR UPR TR-LH (1990-91) (SEE PARTS SECTION FOR ADDITIONAL COLORS & TRIM COMBINATIONS) (90I)	10103859
22.		DISCON	GRILLE, RDO FRT SPKR-RH (1990-91) (SEE PARTS SECTION FOR ADDITIONAL COLORS & TRIM COMBINATIONS) (90I)	10172456
		DISCON	GRILLE, RDO FRT SPKR (LH) (1990-91) (SEE PARTS SECTION FOR ADDITIONAL COLORS & TRIM COMBINATIONS) (90I)	10172455
23.	11-N4	9.665	NUT, RDO FRT S/D SPKR GRL (PART OF 9) (1990-91)	9415253

RPO DEFINITIONS
10I – INTERIOR TRIM– ARCTIC WHITE
15I – INTERIOR TRIM,MEDIUM SLATE GRAY
19I – INTERIOR TRIM,BLACK
90I – INTERIOR TRIM,SMOKE GRAY

© 2000 GENERAL MOTORS SERVICE PARTS OPERATIONS–CHEVROLET–14Y

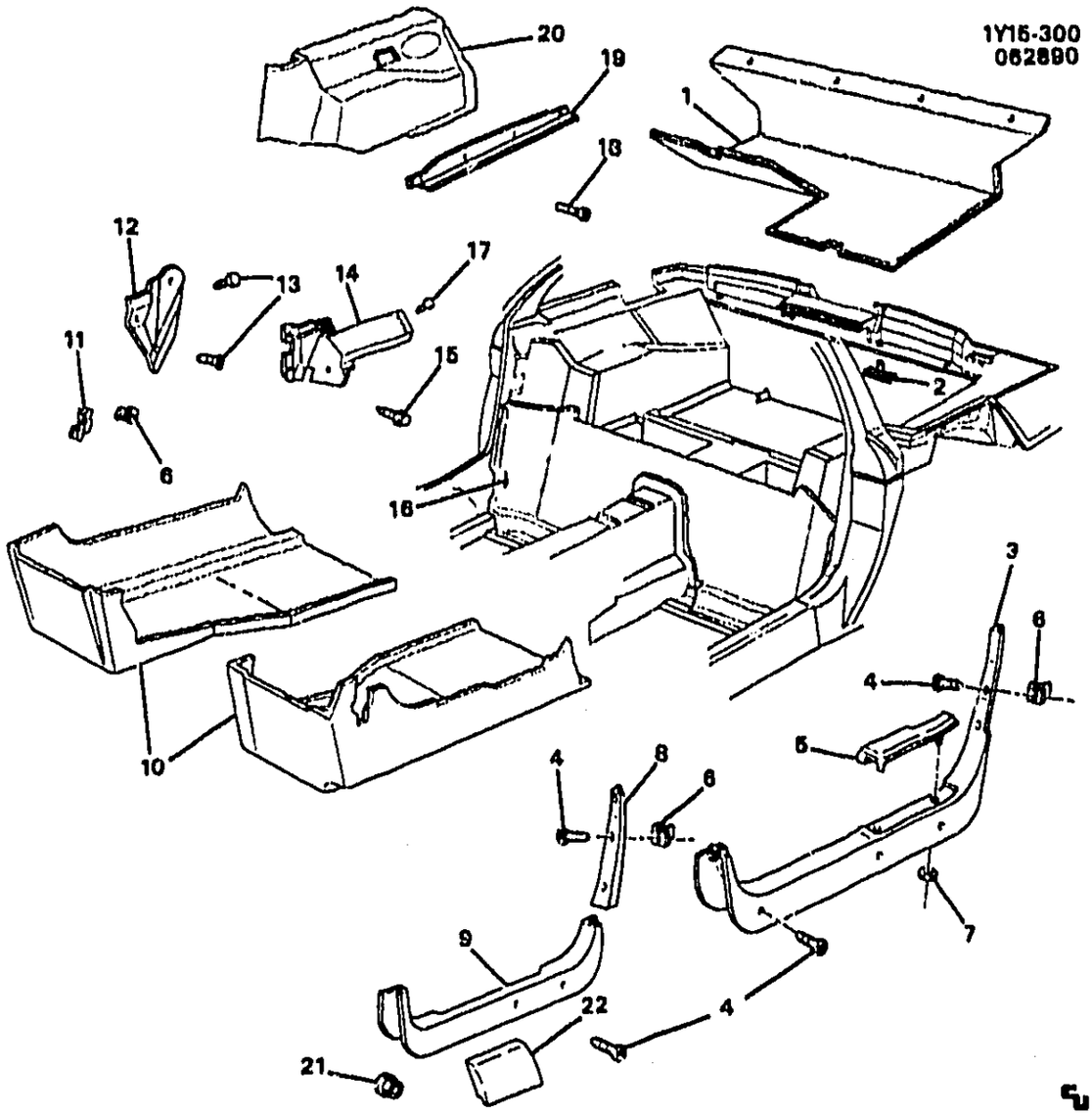

1986-1991 Y07 CARPET/INTERIOR

NOTE: FOR INSULATOR USAGE SEE "INSULATOR/BODY" ILLUSTRATION IN GROUP 12.000.

1.		DISCON	CARPET, FLR RR PNL CTR (1986-87) (SEE PARTS SECTION FOR ADDITIONAL COLORS & TRIM COMBINATIONS) (15I)	14076534
		DISCON	CARPET, FLR RR PNL CTR (1988-91) (SEE PARTS SECTION FOR ADDITIONAL COLORS & TRIM COMBINATIONS) (90I)	10089548
2.	11-N21	12.981	BRACKET, FLR RR PNL CTR CPT	14100206
3.		DISCON	PLATE, DR SILL-RH (1986-87) (SEE PARTS SECTION FOR ADDITIONAL COLORS & TRIM COMBINATIONS) (15I)	14058256
		DISCON	PLATE, DR SILL-LH (1986-87) (SEE PARTS SECTION FOR ADDITIONAL COLORS & TRIM COMBINATIONS) (15I)	14089603
4.		8.977	SCREW, OVAL CSK TRIM HD W/WA TYPE AB (4.2X1.4X20) (AR)	12338093
5.	11-N10	11.175	MAT, FRT S/D STEP (EXIT ASST PAD) (RH) (1986-87) (PAINT TO MATCH)	14047500
		DISCON	MAT, FRT S/D STEP (EXIT ASST PAD) (LH) (1986-87) (PAINT TO MATCH)	14047499
6.		8.921	NUT, M4.2X1.4, 19.3X213.6.8.9 (AR) (AC-DELCO #15650655)	15650655
7.		8.921	NUT, MET STAMPED 5 MM ID (AR)	11501793

© 2000 GENERAL MOTORS SERVICE PARTS OPERATIONS-CHEVROLET-14Y

8.	11-N10	11.175	PLATE, DR SILL RR TR-RH (1988-91) (SEE PARTS SECTION FOR ADDITIONAL COLORS & TRIM COMBINATIONS) (90I)	10175780
		DISCON	PLATE, DR SILL RR TR-LH (1988-91) (SEE PARTS SECTION FOR ADDITIONAL COLORS & TRIM COMBINATIONS) (90I)	10175779
9.		DISCON	PLATE, DR SILL-RH (1988-89) (SEE PARTS SECTION FOR ADDITIONAL COLORS & TRIM COMBINATIONS) (90I)	10095150
		DISCON	PLATE, DR SILL-RH (1990-91) (SEE PARTS SECTION FOR ADDITIONAL COLORS & TRIM COMBINATIONS) (90I)	10172446
		DISCON	PLATE, DR SILL-LH (1988-89) (SEE PARTS SECTION FOR ADDITIONAL COLORS & TRIM COMBINATIONS) (90I)	10095149
		DISCON	PLATE, DR SILL-LH (1990-91) (SEE PARTS SECTION FOR ADDITIONAL COLORS & TRIM COMBINATIONS) (90I)	10172445
10.		DISCON	CARPET, FLR PNL FRT-RH (1986-87) (SEE PARTS SECTION FOR ADDITIONAL COLORS & TRIM COMBINATIONS) (15I)	14060254
		DISCON	CARPET, FLR PNL FRT-RH (1988-89) (SEE PARTS SECTION FOR ADDITIONAL COLORS & TRIM COMBINATIONS) (90I)	10089512
		DISCON	CARPET, FLR PNL FRT-RH (1990-91) (SEE PARTS SECTION FOR ADDITIONAL COLORS & TRIM COMBINATIONS) (90I)	10132924
		DISCON	CARPET, FLR PNL FRT-LH (1986-87) (SEE PARTS SECTION FOR ADDITIONAL COLORS & TRIM COMBINATIONS) (15I)	14060253
		DISCON	CARPET, FLR PNL FRT-LH (1988-89) (SEE PARTS SECTION FOR ADDITIONAL COLORS & TRIM COMBINATIONS) (90I)	10089511
		DISCON	CARPET, FLR PNL FRT-LH (1990-91) (SEE PARTS SECTION FOR ADDITIONAL COLORS & TRIM COMBINATIONS) (90I)	10132923
11.	11-D10	15.300	BRACKET, F/FLR CPT RET	14030290
12.	11-D10	15.300	RETAINER, FRT FLR (PAINT TO MATCH)	10250703
13.		8.977	SCREW, OV HD C/R, M4.2X1.41X13, TYPE AB, NZ (AR)	11515037
14.		DISCON	SUPPORT, FLR PNL RR-RH (1986-87)	14047550
	11-D10	15.306	SUPPORT, FLR PNL RR CPT (1988-91)	10239257
		DISCON	SUPPORT, FLR PNL RR-LH (1986-87)	14047549
	11-D10	15.306	SUPPORT, FLR PNL RR CPT (LH) (1988-91)	10239257
15.		8.977	BOLT, HFH, W/FL WA, TAP, M4.2X1.41X16, 6172M, POR, 12.5MM FL WA, BSSD (AR)	11513942
16.		DISCON	CARPET, INTER FLR PNL EXT (1986-87) (SEE PARTS SECTION FOR ADDITIONAL COLORS & TRIM COMBINATIONS) (15I)	14058394
		DISCON	CARPET, INTER FLR PNL EXT (1988-89) (1990-91 EXC ZR1) (SEE PARTS SECTION FOR ADDITIONAL COLORS & TRIM COMBINATIONS) (90I)	10089542
		DISCON	CARPET, INTER FLR PNL EXT (1990-91 ZR1) (SEE PARTS SECTION FOR ADDITIONAL COLORS & TRIM COMBINATIONS) (90I)	10103710
17.	11-N9	10.695	RETAINER, FLR PNL RR CPT SUPT (1988-91)	8731909
18.		8.977	SCREW, PAN HD C/R TAP M4.2X1.41X16 B PTPOR (AR)	11504736
19.	11-D6	15.222	PLATE, FLR PNL RR CPT TR (RH)	14049018
	11-D6	15.222	PLATE, FLR PNL RR CPT TR (LH)	14049017
20.		DISCON	CARPET, FLR PNL RR-RH (1986-87) (SEE PARTS SECTION FOR ADDITIONAL COLORS & TRIM COMBINATIONS) (15I)	14078698
		DISCON	CARPET, FLR PNL RR-RH (1988-91) (SEE PARTS SECTION FOR ADDITIONAL COLORS & TRIM COMBINATIONS) (90I)	10089536
		DISCON	CARPET, FLR PNL RR-LH (1986-87) (SEE PARTS SECTION FOR ADDITIONAL COLORS & TRIM COMBINATIONS) (15I)	14078697
		DISCON	CARPET, FLR PNL RR-LH (1988-91) (SEE PARTS SECTION FOR ADDITIONAL COLORS & TRIM COMBINATIONS) (90I)	10089535
21.	11-N4	9.665	NUT, RDO FRT S/D SPKR GRL (1990-91)	9415253
22.		DISCON	GRILLE, RDO FRT SPKR-RH (1990-91) (SEE PARTS SECTION FOR ADDITIONAL COLORS & TRIM COMBINATIONS) (90I)	10172456
		DISCON	GRILLE, RDO FRT SPKR (LH) (1990-91) (SEE PARTS SECTION FOR ADDITIONAL COLORS & TRIM COMBINATIONS) (90I)	10172455

© 2000 GENERAL MOTORS SERVICE PARTS OPERATIONS-CHEVROLET-14Y

RPO DEFINITIONS
151 – INTERIOR TRIM,MEDIUM SLATE GRAY
901 – INTERIOR TRIM,SMOKE GRAY

© 2000 GENERAL MOTORS SERVICE PARTS OPERATIONS–CHEVROLET–14Y

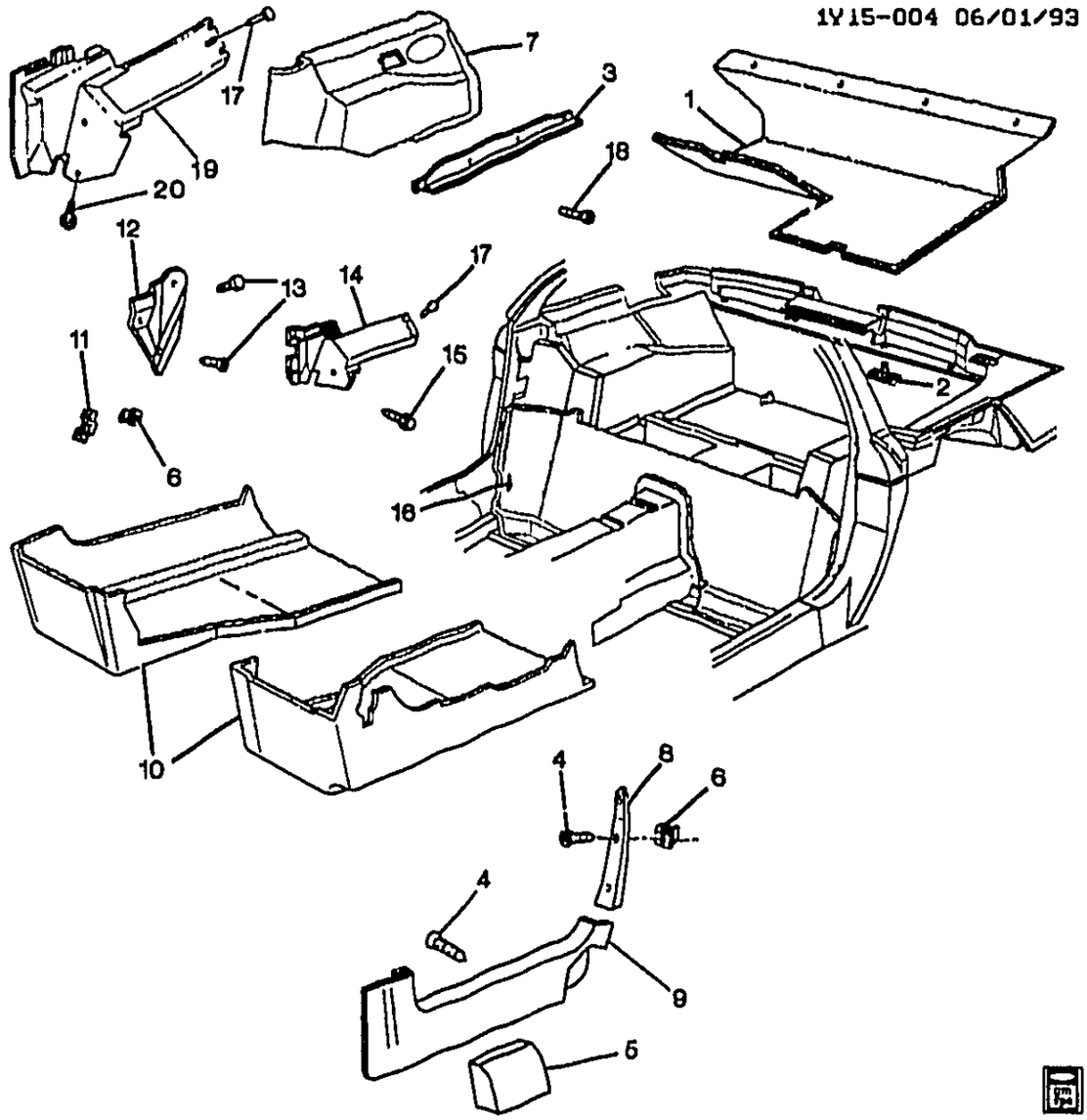

1992-1996 Y07 CARPET/INTERIOR

1.	DISCON	CARPET, FLR RR PNL CTR (RED) (15.306)	92	Y07 (73I)	1	10175657
	DISCON	CARPET, FLR RR PNL CTR (BLACK) (15.306)	92-93	Y07 (10I, 19I)	1	10219674
	DISCON	CARPET, FLR RR PNL CTR (BEIGE) (15.306)	92-93	Y07 (64I)	1	10219675
	DISCON	CARPET, FLR RR PNL CTR (GRAY) (15.306)	92-93	Y07 (14I)	1	10219676
	DISCON	CARPET, FLR RR PNL CTR (BEIGE) (15.306)	92-93	Y07 (64I)	LH	10219763
	DISCON	CARPET, FLR RR PNL CTR (BEIGE) (15.306)	92-93	Y07 (64I)	RH	10219764
	DISCON	CARPET, FLR RR PNL CTR (GRAY) (15.306)	92-93	Y07 (14I)	LH	10219765
	DISCON	CARPET, FLR RR PNL CTR (GRAY) (15.306)	92-93	Y07 (14I)	RH	10219766
	DISCON	CARPET, FLR RR PNL CTR (RED) (15.306)	93	Y07 (79I)	1	10219677

© 2000 GENERAL MOTORS SERVICE PARTS OPERATIONS-CHEVROLET-14Y

							1Y15-004	
		DISCON	CARPET, FLR RR PNL CTR (RED) (15.306)	93	Y07 (70I)		1	10219678
		DISCON	CARPET, FLR RR PNL CTR (RED) (15.306)	93	Y07 (70I)		LH	10219769
		DISCON	CARPET, FLR RR PNL CTR (RED) (15.306)	93	Y07 (70I)		RH	10219770
	11-D10	15.306	CARPET, FLR RR PNL CTR (BLACK)	94-96	Y07 (19I)		1	10238495
	11-D10	15.306	CARPET, FLR RR PNL CTR (BEIGE)	94-96	Y07 (64I)		1	10238496
	11-D10	15.306	CARPET, FLR RR PNL CTR (GRAY)	94-96	Y07 (14I)		1	10238497
	11-D10	15.306	CARPET, FLR RR PNL CTR (RED)	94-95	Y07 (70I)		1	10238498
	11-D10	15.306	CARPET, FLR RR PNL CTR (RED)	96	Y07 (70I) (EXC Z16)		1	10238498
2.	11-N21	12.081	BRACKET, FLR RR PNL CTR CPT	92-96	Y07		2	14100206
3.	11-D6	15.222	PLATE, FLR PNL RR CPT TR	92-96	Y07		LH	14049017
	11-D6	15.222	PLATE, FLR PNL RR CPT TR	92-96	Y07		RH	14049018
4.		8.977	SCREW, OVAL CSK TRIM HD W/WA TYPE AB (4.2X1.4X20) (16.682)	92-96			AR	12338093
5.		DISCON	GRILLE, RDO FRT SPKR (RED)	92	Y (73I)		LH	10172453
		DISCON	GRILLE, RDO FRT SPKR (RED)	92	Y (73I)		RH	10172454
	11-N2	9.655	GRILLE, RDO FRT SPKR (BLACK) (9.650)	92-93	Y (19I)		LH	10220615
	11-N2	9.655	GRILLE, RDO FRT SPKR (BLACK) (9.650)	92-93	Y (19I)		RH	10220616
	11-N2	9.655	GRILLE, RDO FRT SPKR (BLACK) (9.650)	92-93	Y (10I)		LH	10220615
	11-N2	9.655	GRILLE, RDO FRT SPKR (BLACK) (9.650)	92-93	Y (10I)		RH	10220616
		DISCON	GRILLE, RDO FRT SPKR (BEIGE)	92-93	Y (64I)		LH	10220617
	11-N2	9.655	GRILLE, RDO FRT SPKR (BEIGE) (9.650)	92-93	Y (64I)		RH	10220618
	11-N2	9.655	GRILLE, RDO FRT SPKR (GRAY) (9.650)	92-93	Y (14I)		LH	10220619
	11-N2	9.655	GRILLE, RDO FRT SPKR (GRAY) (9.650)	92-93	Y (14I)		RH	10220620
	11-N2	9.655	GRILLE, RDO FRT SPKR (RED) (9.650) (AC-DELCO #10220623)	93	Y (79I)		LH	10220623
	11-N2	9.655	GRILLE, RDO FRT SPKR (RED) (9.650)	93	Y (79I)		RH	10220624
	11-N2	9.655	GRILLE, RDO FRT SPKR (RED) (9.650)	93	Y (70I)		LH	10220625
	11-N2	9.655	GRILLE, RDO FRT SPKR (RED) (9.650)	93	Y (70I)		RH	10220626
	11-N2	9.655	GRILLE, RDO FRT SPKR (BLACK) (9.650)	94-96	Y (19I)		LH	10238587
	11-N2	9.655	GRILLE, RDO FRT SPKR (BLACK) (9.650)	94-96	Y (19I)		RH	10238588
		DISCON	GRILLE, RDO FRT SPKR (BEIGE)	94-96	Y (64I)		LH	10238589
	11-N2	9.655	GRILLE, RDO FRT SPKR (BEIGE) (9.650)	94-96	Y (64I)		RH	10238590
	11-N2	9.655	GRILLE, RDO FRT SPKR (GRAY) (9.650)	94-96	Y (14I)		LH	10238591
	11-N2	9.655	GRILLE, RDO FRT SPKR (GRAY) (9.650)	94-96	Y (14I)		RH	10238592
	11-N2	9.655	GRILLE, RDO FRT SPKR (RED) (9.650)	94-96	Y (70I)		LH	10238593
		DISCON	GRILLE, RDO FRT SPKR (RED)	94-96	Y (70I)		RH	10238594

© 2000 GENERAL MOTORS SERVICE PARTS OPERATIONS-CHEVROLET-14Y

								1Y15-004
6.		8.921	NUT, M4.2X1.4, 19.3X213.6.8.9 (AC-DELCO #15650655)	92-96	.....	AR	15650655
7.		DISCON	CARPET, FLR RR (RED) (15.306)	92	Y07 (73I)	LH	10089533
	11-D10	15.306	CARPET, FLR RR (BLACK)	92-93	Y07 (10I, 19I)	LH	10219761
		DISCON	CARPET, FLR RR (RED)	93	Y07 (79I)	LH	10219767
	11-D10	15.306	CARPET, FLR RR (BLACK)	94-96	Y07 (19I)	LH	10238543
	11-D10	15.306	CARPET, FLR RR (BEIGE)	94-96	Y07 (64I)	LH	10238545
	11-D10	15.306	CARPET, FLR RR (GRAY)	94-96	Y07 (14I)	LH	10238547
	11-D10	15.306	CARPET, FLR RR (RED)	94-95	Y07 (70I)	LH	10238549
	11-D10	15.306	CARPET, FLR RR (RED)	96	Y07 (70I) (EXC Z16) ...	LH	10238549
		DISCON	CARPET, FLR RR (RED) (15.306)	92	Y07 (73I)	RH	10089534
		DISCON	CARPET, FLR RR (BLACK)	92-93	Y07 (10I, 19I)	RH	10219762
		DISCON	CARPET, FLR RR (RED)	93	Y07 (79I)	RH	10219768
	11-D10	15.306	CARPET, FLR RR (BLACK)	94-96	Y07 (19I)	RH	10238544
	11-D10	15.306	CARPET, FLR RR (BEIGE)	94-96	Y07 (64I)	RH	10238546
	11-D10	15.306	CARPET, FLR RR (GRAY)	94-96	Y07 (14I)	RH	10238548
	11-D10	15.306	CARPET, FLR RR (RED)	94-95	Y07 (70I)	RH	10238550
	11-D10	15.306	CARPET, FLR RR (RED)	96	Y07 (70I) (EXC Z16) ...	RH	10238550
8.	11-N10	11.175	PLATE, FRT S/D SILL RR TR (BEIGE)	92-96	Y (64I)	RH	10175614
	11-N10	11.175	PLATE, FRT S/D SILL RR TR (BEIGE)	92-96	Y (64I)	LH	10175615
	11-N10	11.175	PLATE, FRT S/D SILL RR TR (GRAY)	92-96	Y (14I)	RH	10175616
	11-N10	11.175	PLATE, FRT S/D SILL RR TR (GRAY)	92-96	Y (14I)	LH	10175617
	11-N10	11.175	PLATE, FRT S/D SILL RR TR (BLACK)	92-93	Y (10I, 19I)	LH	10175773
	11-N10	11.175	PLATE, FRT S/D SILL RR TR (BLACK)	92-93	Y (10I, 19I)	RH	10175774
	11-N10	11.175	PLATE, FRT S/D SILL RR TR (RED)	93	Y (79I)	RH	10199552
	11-N10	11.175	PLATE, FRT S/D SILL RR TR (RED)	93	Y (79I)	LH	10199553
	11-N10	11.175	PLATE, FRT S/D SILL RR TR (RED)	93-95	Y (70I)	RH	10199718
	11-N10	11.175	PLATE, FRT S/D SILL RR TR (RED)	93-95	Y (70I)	LH	10199719
	11-N10	11.175	PLATE, FRT S/D SILL RR TR (BLACK)	94-96	Y (19I)	LH	10175773
	11-N10	11.175	PLATE, FRT S/D SILL RR TR (BLACK)	94-96	Y (19I)	RH	10175774
	11-N10	11.175	PLATE, FRT S/D SILL RR TR (RED)	96	Y (70I) (EXC Z16)	RH	10199718
	11-N10	11.175	PLATE, FRT S/D SILL RR TR (RED)	96	Y (70I) (EXC Z16)	LH	10199719
	11-N10	11.175	PLATE, FRT S/D SILL RR TR (PAINT TO MATCH) (BLACK)	92	Y (73I)	LH	10175773
	11-N10	11.175	PLATE, FRT S/D SILL RR TR (PAINT TO MATCH) (BLACK)	92	Y (73I)	RH	10175774
9.		DISCON	PLATE, FRT S/D SILL (BEIGE) (11.175)	92	Y (64I)	LH	10175667
		DISCON	PLATE, FRT S/D SILL (BEIGE) (11.175)	92	Y (64I)	RH	10175668
		DISCON	PLATE, FRT S/D SILL (GRAY) (11.175)	92	Y (14I)	LH	10175673
		DISCON	PLATE, FRT S/D SILL (GRAY) (11.175)	92	Y (14I)	RH	10175674

© 2000 GENERAL MOTORS SERVICE PARTS OPERATIONS-CHEVROLET-14Y

							1Y15-004
	11-N10	11.175	PLATE, FRT S/D SILL TR (RED) ..	92	Y (73I)	LH	10172443
	11-N10	11.175	PLATE, FRT S/D SILL TR (RED) ..	92	Y (73I)	RH	10172444
		DISCON	PLATE, FRT S/D SILL TR (BLACK) (11.175)	92	Y (10I, 19I)	LH	10172437
		DISCON	PLATE, FRT S/D SILL TR (BLACK) (11.175)	92	Y (10I, 19I)	RH	10172438
	11-N10	11.175	PLATE, FRT S/D SILL TR (BLACK)	93	Y (10I, 19I)	LH	10211921
		DISCON	PLATE, FRT S/D SILL TR (BLACK)	93	Y (10I, 19I)	RH	10211922
		DISCON	PLATE, FRT S/D SILL TR (BEIGE)	93	Y (64I)	LH	10211923
		DISCON	PLATE, FRT S/D SILL TR (BEIGE)	93	Y (64I)	RH	10211924
	11-N10	11.175	PLATE, FRT S/D SILL TR (GRAY)	93	Y (14I)	LH	10211925
		DISCON	PLATE, FRT S/D SILL TR (GRAY)	93	Y (14I)	RH	10211926
	11-N10	11.175	PLATE, FRT S/D SILL TR (RED) ..	93	Y (79I)	LH	10211947
		DISCON	PLATE, FRT S/D SILL TR (RED) ..	93	Y (79I)	RH	10211948
		DISCON	PLATE, FRT S/D SILL TR (RED) ..	93	Y (70I)	LH	10211949
	11-N10	11.175	PLATE, FRT S/D SILL TR (RED) ..	93	Y (70I)	RH	10211950
	11-N10	11.175	PLATE, FRT S/D SILL TR (BLACK)	94-96	Y (19I) (EXC AX4)	LH	10238577
	11-N10	11.175	PLATE, FRT S/D SILL TR (BLACK)	94-96	Y (19I) (EXC AX4)	RH	10238578
	11-N10	11.175	PLATE, FRT S/D SILL TR (BEIGE)	94-96	Y (64I) (EXC AX4)	LH	10238579
	11-N10	11.175	PLATE, FRT S/D SILL TR (BEIGE)	94-96	Y (64I) (EXC AX4)	RH	10238580
	11-N10	11.175	PLATE, FRT S/D SILL TR (GRAY)	94-96	Y (14I) (EXC AX4)	LH	10238581
	11-N10	11.175	PLATE, FRT S/D SILL TR (GRAY)	94-96	Y (14I) (EXC AX4)	RH	10238582
	11-N10	11.175	PLATE, FRT S/D SILL TR (RED) ..	94-95	Y (70I) (EXC AX4)	LH	10238583
	11-N10	11.175	PLATE, FRT S/D SILL TR (RED) ..	94-95	Y (70I) (EXC AX4)	RH	10238584
	11-N10	11.175	PLATE, FRT S/D SILL TR (RED) ..	96	Y (70I) (EXC AX4, Z16) .	LH	10238583
	11-N10	11.175	PLATE, FRT S/D SILL TR (RED) ..	96	Y (70I) (EXC AX4, Z16) .	RH	10238584
	11-N10	11.175	PLATE, FRT S/D SILL TR (BLACK)	94-96	Y (AX4, 19I) (EXPORT) .	LH	10239063
	11-N10	11.175	PLATE, FRT S/D SILL TR (BLACK)	94-96	Y (AX4, 19I) (EXPORT) .	RH	10239064
	11-N10	11.175	PLATE, FRT S/D SILL TR (BEIGE)	94-96	Y (AX4, 64I) (EXPORT) .	LH	10239065
	11-N10	11.175	PLATE, FRT S/D SILL TR (BEIGE)	94-96	Y (AX4, 64I) (EXPORT) .	RH	10239066
	11-N10	11.175	PLATE, FRT S/D SILL TR (GRAY)	94-96	Y (AX4, 14I) (EXPORT) .	LH	10239067
	11-N10	11.175	PLATE, FRT S/D SILL TR (GRAY)	94-96	Y (AX4, 14I) (EXPORT) .	RH	10239068
	11-N10	11.175	PLATE, FRT S/D SILL TR (RED) ..	94-95	Y (AX4, 70I) (EXPORT) .	LH	10239069
	11-N10	11.175	PLATE, FRT S/D SILL TR (RED) ..	94-95	Y (AX4, 70I) (EXPORT) .	RH	10239070
	11-N10	11.175	PLATE, FRT S/D SILL TR (RED) ..	96	Y07 (AX4, 70I) (EXPORT)	LH	10239069
	11-N10	11.175	PLATE, FRT S/D SILL TR (RED) ..	96	Y07 (AX4, 70I) (EXPORT)	RH	10239070
10.		DISCON	CARPET, F/FLR (RED) (15.286) ..	92	Y (73I)	LH	10132921
		DISCON	CARPET, F/FLR (RED) (15.286) ..	92	Y (73I)	RH	10132922
		DISCON	CARPET, F/FLR (BLACK) (15.286)	92-93	Y (10I, 19I)	LH	10219729
		DISCON	CARPET, F/FLR (BLACK) (15.286)	92-93	Y (10I, 19I)	RH	10219730
	11-D6	15.286	CARPET, F/FLR (BEIGE)	92-93	Y (64I)	LH	10219731
		DISCON	CARPET, F/FLR (BEIGE)	92-93	Y (64I)	RH	10219732
		DISCON	CARPET, F/FLR (GRAY)	92-93	Y (14I)	LH	10219733
		DISCON	CARPET, F/FLR (GRAY)	92-93	Y (14I)	RH	10219734
		DISCON	CARPET, F/FLR (RED)	93	Y (79I)	LH	10219735
		DISCON	CARPET, F/FLR (RED)	93	Y (79I)	RH	10219736
		DISCON	CARPET, F/FLR (RED)	93	Y (70I)	LH	10219737
		DISCON	CARPET, F/FLR (RED)	93	Y (70I)	RH	10219738

© 2000 GENERAL MOTORS SERVICE PARTS OPERATIONS-CHEVROLET-14Y

							1Y15-004
	11-D6	15.286	CARPET, F/FLR (BLACK)	94-96	Y (19I)	LH	10238533
	11-D6	15.286	CARPET, F/FLR (BLACK)	94-96	Y (19I)	RH	10238534
	11-D6	15.286	CARPET, F/FLR (BEIGE)	94-96	Y (64I)	RH	10238536
	11-D6	15.286	CARPET, F/FLR (GRAY)	94-96	Y (14I)	RH	10238538
	11-D6	15.286	CARPET, F/FLR (RED)	94-95	Y (70I)	RH	10238540
	11-D6	15.286	CARPET, F/FLR (RED)	96	Y (70I) (EXC Z16)	LH	10238539
	11-D6	15.286	CARPET, F/FLR (RED)	96	Y (70I) (EXC Z16)	RH	10238540
	11-D6	15.286	CARPET, F/FLR (PIERCE HOLE FOR GROM IF REQ) (BEIGE)	94-96	Y (64I)	LH	10238535
	11-D6	15.286	CARPET, F/FLR (PIERCE HOLE FOR GROM IF REQ) (GRAY)	94-96	Y (14I)	LH	10238537
	11-D6	15.286	CARPET, F/FLR (PIERCE HOLE FOR GROM IF REQ) (RED)	94-95	Y (70I)	LH	10238539
11.	11-D10	15.300	BRACKET, F/FLR CPT RET	92-96	Y	3	14060290
12.	11-D10	15.300	RETAINER, F/FLR CPT (BLACK) .	92-96	Y (19I)	1	10250703
		DISCON	RETAINER, F/FLR CPT (RED) ...	92	Y (73I)	1	14094220
	11-D10	15.300	RETAINER, F/FLR CPT (BLACK) .	92-93	Y (10I)	1	10250703
	11-D10	15.300	RETAINER, F/FLR CPT (GRAY) ..	92-96	Y (14I)	1	10250704
	11-D10	15.300	RETAINER, F/FLR CPT (BEIGE) .	92-96	Y (64I)	1	10250705
	11-D10	15.300	RETAINER, F/FLR CPT (RED) ...	93-95	Y (70I)	1	10250706
	11-D10	15.300	RETAINER, F/FLR CPT (RED) ...	96	Y (70I) (EXC Z16)	1	10250706
13.		8.977	SCREW, OV HD C/R, M4.2X1.41X13, TYPE AB, NZ	92-96	.....	AR	11515037
14.	11-D6	15.222	SUPPORT, R/CMPT SI CPT	92-96	Y07	RH	10239258
	11-D6	15.222	SUPPORT, R/CMPT SI CPT	92-96	Y07	LH	10239257
15.		8.977	BOLT, HFH, W/FL WA, TAP, M4.2X1.41X16, 6172M, POR, 12.5MM FL WA, BSSD	92-96	.....	AR	11513942
16.		DISCON	CARPET, INTER FLR (PNL EXT) (RED) (15.286)	92	Y07 (73I) (EXC ZR1) ...	1	10089541
		DISCON	CARPET, INTER FLR (PNL EXT) (RED) (15.286)	92	Y07 (ZR1, 73I)	1	10103709
		DISCON	CARPET, INTER FLR (PNL EXT) (BLACK) (15.286)	92-93	Y07 (10I, 19I) (EXC ZR1)	1	10219709
		DISCON	CARPET, INTER FLR (PNL EXT) (BEIGE) (15.286)	92-93	Y07 (64I) (EXC ZR1) ...	1	10219710
		DISCON	CARPET, INTER FLR (PNL EXT) (GRAY) (15.286)	92-93	Y07 (14I) (EXC ZR1) ...	1	10219711
		DISCON	CARPET, INTER FLR (PNL EXT) (BEIGE) (15.286)	92-93	Y07 (ZR1, 64I)	1	10219716
		DISCON	CARPET, INTER FLR (PNL EXT) (GRAY) (15.286)	92-93	Y07 (ZR1, 14I)	1	10219717
		DISCON	CARPET, INTER FLR (PNL EXT) (RED) (15.286)	93	Y07 (70I) (EXC ZR1) ...	1	10219713
		DISCON	CARPET, INTER FLR (PNL EXT) (RED) (15.286)	93	Y07 (ZR1, 70I)	1	10219719
	11-D6	15.286	CARPET, INTER FLR PNL EXTN (BLACK)	94-95	Y07 (19I) (EXC ZR1) ...	1	10238500
	11-D6	15.286	CARPET, INTER FLR PNL EXTN (BEIGE)	94-95	Y07 (64I) (EXC ZR1) ...	1	10238501
	11-D6	15.286	CARPET, INTER FLR PNL EXTN (GRAY)	94-95	Y07 (14I) (EXC ZR1) ...	1	10238502
	11-D6	15.286	CARPET, INTER FLR PNL EXTN (RED)	94-95	Y07 (70I) (EXC ZR1) ...	1	10238503
	11-D6	15.286	CARPET, INTER FLR PNL EXTN (BLACK)	94-95	Y07 (ZR1, 19I)	1	10238505
		DISCON	CARPET, INTER FLR PNL EXTN (BEIGE)	94-95	Y07 (ZR1, 64I)	1	10238506

© 2000 GENERAL MOTORS SERVICE PARTS OPERATIONS-CHEVROLET-14Y

							1Y15-004
		DISCON	CARPET, INTER FLR PNL EXTN (GRAY)	94-95	Y07 (ZR1, 14I)	1	10238507
		DISCON	CARPET, INTER FLR PNL EXTN (RED)	94-95	Y07 (ZR1, 70I)	1	10238508
	11-D6	15.286	CARPET, INTER FLR PNL EXTN (BLACK)	96	Y07 (19I) (EXC Z16) ...	1	10238500
	11-D6	15.286	CARPET, INTER FLR PNL EXTN (BEIGE)	96	Y07 (64I)	1	10238501
	11-D6	15.286	CARPET, INTER FLR PNL EXTN (GRAY)	96	Y07 (14I)	1	10238502
	11-D6	15.286	CARPET, INTER FLR PNL EXTN (RED)	96	Y07 (70I) (EXC Z16) ...	1	10238503
	11-D6	15.286	CARPET, INTER FLR PNL EXTN (BLACK)	96	Y07 (Z16, 19I, 70I)	1	10238505
17.	11-N9	10.695	RETAINER, FLR PNL RR CPT SUPT (FULL FLDG)	92-96	Y07	2	8731909
18.		8.977	SCREW, PAN HD C/R TAP M4.2X1.41X16 B PTPOR	92-96	.....	AR	11504736
19.	11-D6	15.222	SUPPORT, R/CMPT SI CPT	92-96	Y07	RH	10239258
	11-D6	15.222	SUPPORT, R/CMPT SI CPT	92-96	Y07	LH	10239257
20.		8.977	BOLT, HFH, W/FL WA, TAP, M4.2X1.41X16, 6172M, POR, 12.5MM FL WA, BSSD (R/CMPT SI CPT)	92-96	.....	1	11513942

RPO DEFINITIONS

AX4 – RESTRAINT SYSTEM,FRONT AND REAR SEAT,MANUAL(EUROPEAN)
ZR1 – PACKAGE,SPECIAL PERFORMANCE COUPE(1YY07 + ZR1 == 1YZ07)
Z16 – APPEARANCE PACKAGE,GRAND SPORT EDITION
10I – INTERIOR TRIM– ARCTIC WHITE
14I – INTERIOR TRIM LT GRAY
19I – INTERIOR TRIM,BLACK
64I – INTERIOR TRIM,LIGHT BEIGE
70I – INTERIOR TRIM,TORCH RED
73I – INTERIOR TRIM,FLAME RED
79I – INTERIOR TRIM,RUBY RED

© 2000 GENERAL MOTORS SERVICE PARTS OPERATIONS–CHEVROLET–14Y

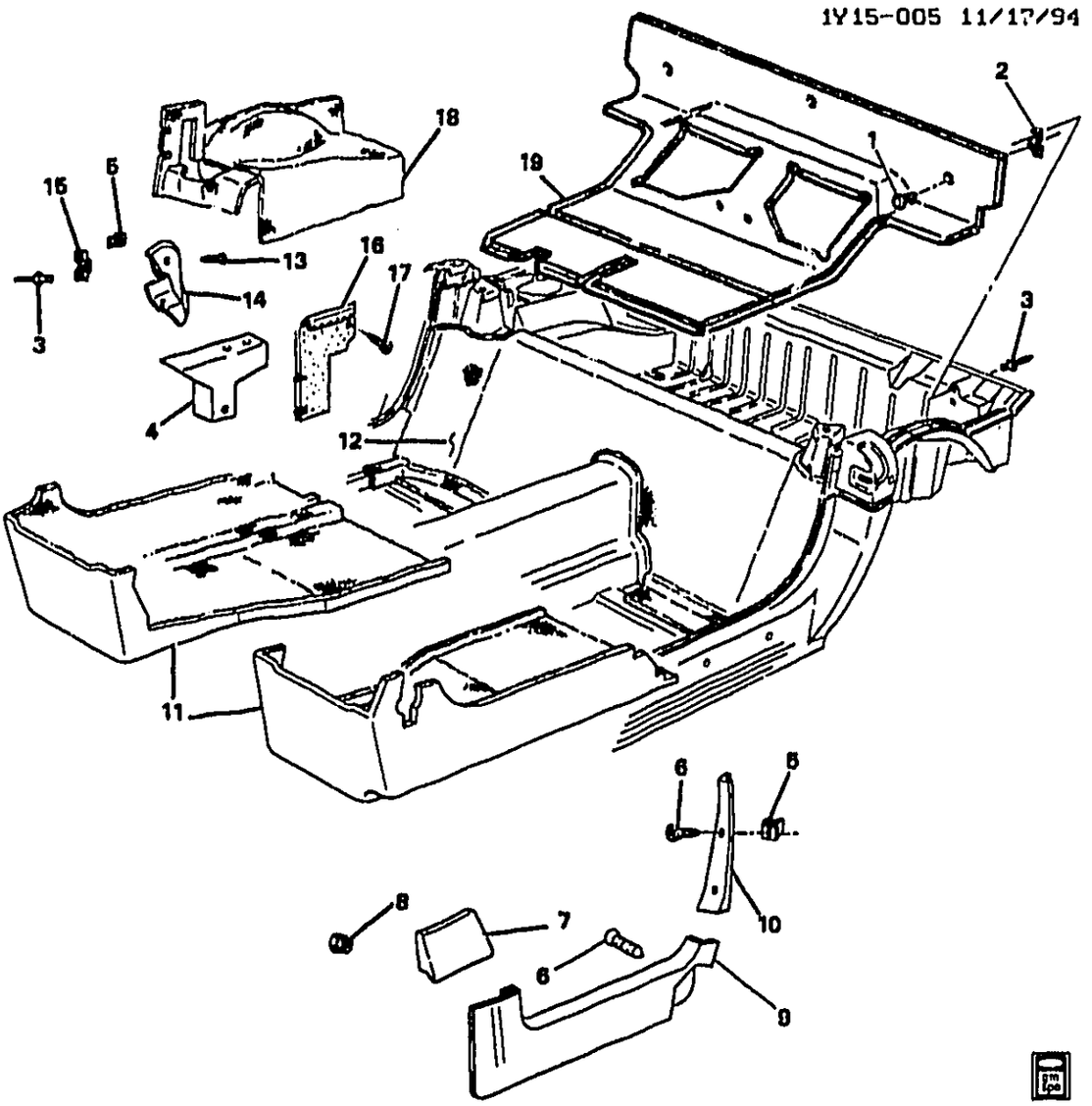

1Y15-005

1992-1996 Y67 CARPET/INTERIOR

1.		6.950	RETAINER, PUSH-IN 0.35-LEN 0.25 HOLE DIA 2.0 HD DIA PLASTIC (8.021)	92-96		AR	20064875
2.	11-N21	12.981	BRACKET, FLR RR PNL CTR CPT (10.230)	92-96	Y67	3	14064526
3.		8.977	SCREW, M4.2X1.41X16 OV CSK TR HD C/R TAP, PEOR (16.650)	92-96		AR	11503446
4.	11-A27	14.731	PANEL, BODY L/PLR UPR TR (BLACK)	92-93	Y67 (19I)	RH	10103850
	11-A27	14.731	PANEL, BODY L/PLR UPR TR (BLACK)	92-93	Y67 (19I)	LH	10103851
	11-A27	14.731	PANEL, BODY L/PLR UPR TR (RED)	92	Y67 (73I)	RH	10103856
	11-A27	14.731	PANEL, BODY L/PLR UPR TR (RED)	92	Y67 (73I)	LH	10103857
		DISCON	PANEL, BODY L/PLR UPR TR (WHITE)	92-93	Y67 (10I)	LH	10167117

© 2000 GENERAL MOTORS SERVICE PARTS OPERATIONS-CHEVROLET-14Y

							1Y15-005
	11-A27	14.731	PANEL, BODY L/PLR UPR TR (WHITE)	92-93	Y67 (10I)	RH	10167118
	11-A27	14.731	PANEL, BODY L/PLR UPR TR (BEIGE)	92-93	Y67 (64I)	RH	10175618
	11-A27	14.731	PANEL, BODY L/PLR UPR TR (BEIGE)	92-93	Y67 (64I)	LH	10175619
		DISCON	PANEL, BODY L/PLR UPR TR (GRAY)	92-93	Y67 (14I)	RH	10175620
		DISCON	PANEL, BODY L/PLR UPR TR (GRAY)	92-93	Y67 (14I)	LH	10175621
	11-A27	14.731	PANEL, BODY L/PLR UPR TR (RED)	93	Y67 (79I)	RH	10199556
		DISCON	PANEL, BODY L/PLR UPR TR (RED)	93	Y67 (79I)	LH	10199557
		DISCON	PANEL, BODY L/PLR UPR TR (RED)	93	Y67 (70I)	RH	10199722
		DISCON	PANEL, BODY L/PLR UPR TR (RED)	93	Y67 (70I)	LH	10199723
	11-A27	14.731	PANEL, BODY L/PLR UPR TR (BLACK)	94-96	Y67 (19I)	LH	10212821
	11-A27	14.731	PANEL, BODY L/PLR UPR TR (BLACK)	94-96	Y67 (19I)	RH	10212822
	11-A27	14.731	PANEL, BODY L/PLR UPR TR (RED)	94-96	Y67 (70I)	LH	10212825
	11-A27	14.731	PANEL, BODY L/PLR UPR TR (RED)	94-96	Y67 (70I)	RH	10212826
	11-A27	14.731	PANEL, BODY L/PLR UPR TR (BEIGE)	94-96	Y67 (64I)	LH	10212827
	11-A27	14.731	PANEL, BODY L/PLR UPR TR (BEIGE)	94-96	Y67 (64I)	RH	10212828
	11-A27	14.731	PANEL, BODY L/PLR UPR TR (GRAY)	94-96	Y67 (14I)	LH	10212829
	11-A27	14.731	PANEL, BODY L/PLR UPR TR (GRAY)	94-96	Y67 (14I)	RH	10212830
5.		8.921	NUT, M4.2X1.4, 19.3X213.6.8.9 (AC-DELCO #15650655)	92-96		AR	15650655
6.		8.977	SCREW, OVAL CSK TRIM HD W/WA TYPE AB (4.2X1.4X20) (16.682)	92-96		AR	12338093
7.		DISCON	GRILLE, RDO FRT SPKR (PART OF 9) (RED)	92	Y (73I)	LH	10172453
		DISCON	GRILLE, RDO FRT SPKR (PART OF 9) (RED)	92	Y (73I)	RH	10172454
	11-N2	9.655	GRILLE, RDO FRT SPKR (PART OF 9) (BLACK) (9.650)	92-93	Y (19I)	LH	10220615
	11-N2	9.655	GRILLE, RDO FRT SPKR (PART OF 9) (BLACK) (9.650)	92-93	Y (19I)	RH	10220616
	11-N2	9.655	GRILLE, RDO FRT SPKR (PART OF 9) (BLACK) (9.650)	92-93	Y (10I)	LH	10220615
	11-N2	9.655	GRILLE, RDO FRT SPKR (PART OF 9) (BLACK) (9.650)	92-93	Y (10I)	RH	10220616
		DISCON	GRILLE, RDO FRT SPKR (PART OF 9) (BEIGE)	92-93	Y (64I)	LH	10220617
	11-N2	9.655	GRILLE, RDO FRT SPKR (PART OF 9) (BEIGE) (9.650)	92-93	Y (64I)	RH	10220618
	11-N2	9.655	GRILLE, RDO FRT SPKR (PART OF 9) (GRAY) (9.650)	92-93	Y (14I)	LH	10220619
	11-N2	9.655	GRILLE, RDO FRT SPKR (PART OF 9) (GRAY) (9.650)	92-93	Y (14I)	RH	10220620

© 2000 GENERAL MOTORS SERVICE PARTS OPERATIONS-CHEVROLET-14Y

							1Y15–005
	11–N2	9.655	GRILLE, RDO FRT SPKR (PART OF 9) (RED) (9.650) (AC–DELCO #10220623)	93	Y (79I)	LH	10220623
	11–N2	9.655	GRILLE, RDO FRT SPKR (PART OF 9) (RED) (9.650)	93	Y (79I)	RH	10220624
	11–N2	9.655	GRILLE, RDO FRT SPKR (PART OF 9) (RED) (9.650)	93	Y (70I)	LH	10220625
	11–N2	9.655	GRILLE, RDO FRT SPKR (PART OF 9) (RED) (9.650)	93	Y (70I)	RH	10220626
	11–N2	9.655	GRILLE, RDO FRT SPKR (PART OF 9) (BLACK) (9.650)	94–96	Y (19I)	LH	10238587
	11–N2	9.655	GRILLE, RDO FRT SPKR (PART OF 9) (BLACK) (9.650)	94–96	Y (19I)	RH	10238588
		DISCON	GRILLE, RDO FRT SPKR (PART OF 9) (BEIGE)	94–96	Y (64I)	LH	10238589
	11–N2	9.655	GRILLE, RDO FRT SPKR (PART OF 9) (BEIGE) (9.650)	94–96	Y (64I)	RH	10238590
	11–N2	9.655	GRILLE, RDO FRT SPKR (PART OF 9) (GRAY) (9.650)	94–96	Y (14I)	LH	10238591
	11–N2	9.655	GRILLE, RDO FRT SPKR (PART OF 9) (GRAY) (9.650)	94–96	Y (14I)	RH	10238592
	11–N2	9.655	GRILLE, RDO FRT SPKR (PART OF 9) (RED) (9.650)	94–96	Y (70I)	LH	10238593
		DISCON	GRILLE, RDO FRT SPKR (PART OF 9) (RED)	94–96	Y (70I)	RH	10238594
8.	11–N4	9.665	NUT, STAMPED/SK/SELF THD .187 PC (PART OF #9)	92–96	.....	AR	9415253
9.		DISCON	PLATE, FRT S/D SILL (INCL 7) (BEIGE)	92	Y (64I)	LH	10175667
		DISCON	PLATE, FRT S/D SILL (INCL 7) (BEIGE)	92	Y (64I)	RH	10175668
		DISCON	PLATE, FRT S/D SILL (INCL 7) (GRAY)	92	Y (14I)	LH	10175673
		DISCON	PLATE, FRT S/D SILL (INCL 7) (GRAY)	92	Y (14I)	RH	10175674
	11–N10	11.175	PLATE, FRT S/D SILL TR (INCL 7, 8) (BLACK)	93	Y (10I, 19I)	LH	10211921
		DISCON	PLATE, FRT S/D SILL TR (INCL 7, 8) (BLACK)	93	Y (10I, 19I)	RH	10211922
		DISCON	PLATE, FRT S/D SILL TR (INCL 7, 8) (BEIGE)	93	Y (64I)	LH	10211923
		DISCON	PLATE, FRT S/D SILL TR (INCL 7, 8) (BEIGE)	93	Y (64I)	RH	10211924
	11–N10	11.175	PLATE, FRT S/D SILL TR (INCL 7, 8) (GRAY)	93	Y (14I)	LH	10211925
		DISCON	PLATE, FRT S/D SILL TR (INCL 7, 8) (GRAY)	93	Y (14I)	RH	10211926
	11–N10	11.175	PLATE, FRT S/D SILL TR (INCL 7, 8) (RED)	93	Y (79I)	LH	10211947
		DISCON	PLATE, FRT S/D SILL TR (INCL 7, 8) (RED)	93	Y (79I)	RH	10211948
		DISCON	PLATE, FRT S/D SILL TR (INCL 7, 8) (RED)	93	Y (70I)	LH	10211949
	11–N10	11.175	PLATE, FRT S/D SILL TR (INCL 7, 8) (RED)	93	Y (70I)	RH	10211950
	11–N10	11.175	PLATE, FRT S/D SILL TR (INCL 7, 8) (BLACK)	94–96	Y (19I) (EXC AX4)	LH	10238577
	11–N10	11.175	PLATE, FRT S/D SILL TR (INCL 7, 8) (BLACK)	94–96	Y (19I) (EXC AX4)	RH	10238578

© 2000 GENERAL MOTORS SERVICE PARTS OPERATIONS–CHEVROLET–14Y

	11-N10	11.175	PLATE, FRT S/D SILL TR (INCL 7, 8) (BEIGE)	94-96	Y (64I) (EXC AX4)	LH	10238579
	11-N10	11.175	PLATE, FRT S/D SILL TR (INCL 7, 8) (BEIGE)	94-96	Y (64I) (EXC AX4)	RH	10238580
	11-N10	11.175	PLATE, FRT S/D SILL TR (INCL 7, 8) (GRAY)	94-96	Y (14I) (EXC AX4)	LH	10238581
	11-N10	11.175	PLATE, FRT S/D SILL TR (INCL 7, 8) (GRAY)	94-96	Y (14I) (EXC AX4)	RH	10238582
	11-N10	11.175	PLATE, FRT S/D SILL TR (INCL 7, 8) (RED)	94-95	Y (70I) (EXC AX4)	LH	10238583
	11-N10	11.175	PLATE, FRT S/D SILL TR (INCL 7, 8) (RED)	94-95	Y (70I) (EXC AX4)	RH	10238584
	11-N10	11.175	PLATE, FRT S/D SILL TR (INCL 7, 8) (RED)	96	Y (70I) (EXC AX4, Z16)	LH	10238583
	11-N10	11.175	PLATE, FRT S/D SILL TR (INCL 7, 8) (RED)	96	Y (70I) (EXC AX4, Z16)	RH	10238584
	11-N10	11.175	PLATE, FRT S/D SILL TR (INCL 7, 8) (BLACK)	94-96	Y (AX4, 19I) (EXPORT)	LH	10239063
	11-N10	11.175	PLATE, FRT S/D SILL TR (INCL 7, 8) (BLACK)	94-96	Y (AX4, 19I) (EXPORT)	RH	10239064
	11-N10	11.175	PLATE, FRT S/D SILL TR (INCL 7, 8) (BEIGE)	94-96	Y (AX4, 64I) (EXPORT)	LH	10239065
	11-N10	11.175	PLATE, FRT S/D SILL TR (INCL 7, 8) (BEIGE)	94-96	Y (AX4, 64I) (EXPORT)	RH	10239066
	11-N10	11.175	PLATE, FRT S/D SILL TR (INCL 7, 8) (GRAY)	94-96	Y (AX4, 14I) (EXPORT)	LH	10239067
	11-N10	11.175	PLATE, FRT S/D SILL TR (INCL 7, 8) (GRAY)	94-96	Y (AX4, 14I) (EXPORT)	RH	10239068
	11-N10	11.175	PLATE, FRT S/D SILL TR (INCL 7, 8) (RED)	94-95	Y (AX4, 70I) (EXPORT)	LH	10239069
	11-N10	11.175	PLATE, FRT S/D SILL TR (INCL 7, 8) (RED)	94-95	Y (AX4, 70I) (EXPORT)	RH	10239070
	11-N10	11.175	PLATE, FRT S/D SILL TR (INCL 7, 8) (BLACK)	96	Y67 (AX4, Z16, 70I) (EXPORT)	LH	10239063
	11-N10	11.175	PLATE, FRT S/D SILL TR (INCL 7, 8) (BLACK)	96	Y67 (AX4, Z16, 70I) (EXPORT)	RH	10239064
	11-N10	11.175	PLATE, FRT S/D SILL TR (INCL 7, 8) (RED)	96	Y67 (AX4, 70I) (EXC Z16) (EXPORT)	LH	10239069
	11-N10	11.175	PLATE, FRT S/D SILL TR (INCL 7, 8) (RED)	96	Y67 (AX4, 70I) (EXC Z16) (EXPORT)	RH	10239070
10.	11-N10	11.175	PLATE, FRT S/D SILL RR TR (BEIGE)	92-96	Y (64I)	RH	10175614
	11-N10	11.175	PLATE, FRT S/D SILL RR TR (BEIGE)	92-96	Y (64I)	LH	10175615
	11-N10	11.175	PLATE, FRT S/D SILL RR TR (GRAY)	92-96	Y (14I)	RH	10175616
	11-N10	11.175	PLATE, FRT S/D SILL RR TR (GRAY)	92-96	Y (14I)	LH	10175617
	11-N10	11.175	PLATE, FRT S/D SILL RR TR (BLACK)	92-93	Y (10I, 19I)	LH	10175773
	11-N10	11.175	PLATE, FRT S/D SILL RR TR (BLACK)	92-93	Y (10I, 19I)	RH	10175774
	11-N10	11.175	PLATE, FRT S/D SILL RR TR (RED)	93	Y (79I)	RH	10199552
	11-N10	11.175	PLATE, FRT S/D SILL RR TR (RED)	93	Y (79I)	LH	10199553
	11-N10	11.175	PLATE, FRT S/D SILL RR TR (RED)	93-95	Y (70I)	RH	10199718

© 2000 GENERAL MOTORS SERVICE PARTS OPERATIONS-CHEVROLET-14Y

							1Y15-005
	11-N10	11.175	PLATE, FRT S/D SILL RR TR (RED)	93-95	Y (70I)	LH	10199719
	11-N10	11.175	PLATE, FRT S/D SILL RR TR (BLACK)	94-96	Y (19I)	LH	10175773
	11-N10	11.175	PLATE, FRT S/D SILL RR TR (BLACK)	94-96	Y (19I)	RH	10175774
	11-N10	11.175	PLATE, FRT S/D SILL RR TR (RED)	96	Y (70I) (EXC Z16)	RH	10199718
	11-N10	11.175	PLATE, FRT S/D SILL RR TR (RED)	96	Y (70I) (EXC Z16)	LH	10199719
	11-N10	11.175	PLATE, FRT S/D SILL RR TR (PAINT TO MATCH) (BLACK)	92	Y (73I)	LH	10175773
	11-N10	11.175	PLATE, FRT S/D SILL RR TR (PAINT TO MATCH) (BLACK)	92	Y (73I)	RH	10175774
11.		DISCON	CARPET, F/FLR (RED)	92	Y (73I)	LH	10132921
		DISCON	CARPET, F/FLR (RED)	92	Y (73I)	RH	10132922
		DISCON	CARPET, F/FLR (BLACK)	92-93	Y (10I, 19I)	LH	10219729
		DISCON	CARPET, F/FLR (BLACK)	92-93	Y (10I, 19I)	RH	10219730
	11-D6	15.286	CARPET, F/FLR (BEIGE)	92-93	Y (64I)	LH	10219731
		DISCON	CARPET, F/FLR (BEIGE)	92-93	Y (64I)	RH	10219732
		DISCON	CARPET, F/FLR (GRAY)	92-93	Y (14I)	LH	10219733
		DISCON	CARPET, F/FLR (GRAY)	92-93	Y (14I)	RH	10219734
		DISCON	CARPET, F/FLR (RED)	93	Y (79I)	LH	10219735
		DISCON	CARPET, F/FLR (RED)	93	Y (79I)	RH	10219736
		DISCON	CARPET, F/FLR (RED)	93	Y (70I)	LH	10219737
		DISCON	CARPET, F/FLR (RED)	93	Y (70I)	RH	10219738
	11-D6	15.286	CARPET, F/FLR (BLACK)	94-96	Y (19I)	LH	10238533
	11-D6	15.286	CARPET, F/FLR (BLACK)	94-96	Y (19I)	RH	10238534
	11-D6	15.286	CARPET, F/FLR (BEIGE)	94-96	Y (64I)	RH	10238536
	11-D6	15.286	CARPET, F/FLR (GRAY)	94-96	Y (14I)	RH	10238538
	11-D6	15.286	CARPET, F/FLR (RED)	94-95	Y (70I)	RH	10238540
	11-D6	15.286	CARPET, F/FLR (RED)	96	Y (70I) (EXC Z16)	LH	10238539
	11-D6	15.286	CARPET, F/FLR (RED)	96	Y (70I) (EXC Z16)	RH	10238540
	11-D6	15.286	CARPET, F/FLR (PIERCE HOLE FOR GROM IF REQ) (BEIGE)	94-96	Y (64I)	LH	10238535
	11-D6	15.286	CARPET, F/FLR (PIERCE HOLE FOR GROM IF REQ) (GRAY)	94-96	Y (14I)	LH	10238537
	11-D6	15.286	CARPET, F/FLR (PIERCE HOLE FOR GROM IF REQ) (RED)	94-95	Y (70I)	LH	10238539
12.		DISCON	CARPET, INTER FLR (PNL EXT) (RED) (15.286)	92	Y67 (73I)	1	10149220
		DISCON	CARPET, INTER FLR (PNL EXT) (BLACK) (15.286)	92-93	Y67 (10I, 19I)	1	10219721
		DISCON	CARPET, INTER FLR (PNL EXT) (BEIGE) (15.286)	92-93	Y67 (64I)	1	10219722
		DISCON	CARPET, INTER FLR (PNL EXT) (GRAY) (15.286)	92-93	Y67 (14I)	1	10219723
		DISCON	CARPET, INTER FLR (PNL EXT) (RED) (15.286)	93	Y67 (70I)	1	10219725
	11-D6	15.286	CARPET, INTER FLR PNL EXTN (BLACK)	94-96	Y67 (19I)	1	10238510
	11-D6	15.286	CARPET, INTER FLR PNL EXTN (BEIGE)	94-96	Y67 (64I)	1	10238511
	11-D6	15.286	CARPET, INTER FLR PNL EXTN (GRAY)	94-96	Y67 (14I)	1	10238512
	11-D6	15.286	CARPET, INTER FLR PNL EXTN (RED)	94-95	Y67 (70I)	1	10238513

© 2000 GENERAL MOTORS SERVICE PARTS OPERATIONS-CHEVROLET-14Y

							1Y15-005
	11-D6	15.286	CARPET, INTER FLR PNL EXTN (RED)	96	Y67 (70I) (EXC Z16)	1	10238513
13.		8.977	SCREW, OV HD C/R, M4.2X1.41X13, TYPE AB, NZ	92-96		AR	11515037
14.	11-D10	15.300	RETAINER, F/FLR CPT (BLACK)	92-96	Y (19I)	1	10250703
		DISCON	RETAINER, F/FLR CPT (RED)	92	Y (73I)	1	14[illegible]220
	11-D10	15.300	RETAINER, F/FLR CPT (BLACK)	92-93	Y (10I)	1	10250703
	11-D10	15.300	RETAINER, F/FLR CPT (GRAY)	92-96	Y (14I)	1	10250704
	11-D10	15.300	RETAINER, F/FLR CPT (BEIGE)	92-96	Y (64I)	1	10250705
	11-D10	15.300	RETAINER, F/FLR CPT (RED)	93-95	Y (70I)	1	10250706
	11-D10	15.300	RETAINER, F/FLR CPT (RED)	96	Y (70I) (EXC Z16)	1	10250706
15.	11-D10	15.300	BRACKET, F/FLR CPT RET	92-96	Y	3	14[illegible]0290
16.		DISCON	CARPET, FRT S/D L/PLR (RED) (14.731)	92	Y67 (73I)	LH	10137215
	11-A27	14.731	CARPET, FRT S/D L/PLR (RED)	92	Y67 (73I)	RH	10137216
	11-A27	14.731	CARPET, FRT S/D L/PLR (BEIGE)	92-93	Y67 (64I)	LH	10175681
	11-A27	14.731	CARPET, FRT S/D L/PLR (BEIGE)	92-93	Y67 (64I)	RH	10175682
	11-A27	14.731	CARPET, FRT S/D L/PLR (BLACK)	92-93	Y67 (10I, 19I)	LH	10219787
	11-A27	14.731	CARPET, FRT S/D L/PLR (BLACK)	92-93	Y67 (10I, 19I)	RH	10219788
		DISCON	CARPET, FRT S/D L/PLR (RED)	93	Y67 (79I)	LH	10219793
		DISCON	CARPET, FRT S/D L/PLR (RED)	93	Y67 (79I)	RH	10219794
		DISCON	CARPET, FRT S/D L/PLR (RED)	93	Y67 (70I)	LH	10219795
		DISCON	CARPET, FRT S/D L/PLR (RED)	93	Y67 (70I)	RH	10219796
	11-A27	14.731	CARPET, FRT S/D L/PLR (BLACK)	94-96	Y67 (19I)	LH	10238599
	11-A27	14.731	CARPET, FRT S/D L/PLR (BLACK)	94-96	Y67 (19I)	RH	10238600
	11-A27	14.731	CARPET, FRT S/D L/PLR (BEIGE)	94-96	Y67 (64I)	LH	10238601
	11-A27	14.731	CARPET, FRT S/D L/PLR (BEIGE)	94-96	Y67 (64I)	RH	10238602
	11-A27	14.731	CARPET, FRT S/D L/PLR (GRAY)	94-96	Y67 (14I)	LH	10238603
	11-A27	14.731	CARPET, FRT S/D L/PLR (GRAY)	94-96	Y67 (14I)	RH	10238604
	11-A27	14.731	CARPET, FRT S/D L/PLR (RED)	94-95	Y67 (70I)	LH	10238605
	11-A27	14.731	CARPET, FRT S/D L/PLR (RED)	94-95	Y67 (70I)	RH	10238606
	11-A27	14.731	CARPET, FRT S/D L/PLR (RED)	96	Y67 (70I) (EXC Z16)	LH	10238605
	11-A27	14.731	CARPET, FRT S/D L/PLR (RED)	96	Y67 (70I) (EXC Z16)	RH	10238606
17.		8.977	SCREW, LG RND WA HD W/BLK NYL WA, 4.2X 1.41X13, 11-OD, DRILL PT, 6172, PEOR	92-96		AR	10180421
18.		DISCON	CARPET, FLR RR (RED) (15.300)	92	Y67 (73I)	LH	10193763
		DISCON	CARPET, FLR RR (RED) (15.300)	92	Y67 (73I)	RH	10193764
	11-D10	15.306	CARPET, FLR RR (BEIGE) (15.300)	92-93	Y67 (64I)	LH	10175605
	11-D10	15.306	CARPET, FLR RR (BEIGE) (15.300)	92-93	Y67 (64I)	RH	10175606
	11-D10	15.306	CARPET, FLR RR (BLACK) (15.300)	92-93	Y67 (10I, 19I)	LH	10193761
		DISCON	CARPET, FLR RR (RED)	93	Y67 (79I)	LH	10219779
	11-D10	15.306	CARPET, FLR RR (BEIGE)	94-96	Y67 (64I)	LH	10238553
	11-D10	15.306	CARPET, FLR RR (BEIGE)	94-96	Y67 (64I)	RH	10238554
	11-D10	15.306	CARPET, FLR RR (GRAY)	94-96	Y67 (14I)	LH	10238555
	11-D10	15.306	CARPET, FLR RR (GRAY)	94-96	Y67 (14I)	RH	10238556
	11-D10	15.306	CARPET, FLR RR (BLACK)	94-96	Y67 (19I)	LH	10238557
	11-D10	15.306	CARPET, FLR RR (BLACK)	94-96	Y67 (19I)	RH	10238558
	11-D10	15.306	CARPET, FLR RR (RED)	94-95	Y67 (70I)	LH	10238559
	11-D10	15.306	CARPET, FLR RR (RED)	94-95	Y67 (70I)	RH	10238560
	11-D10	15.306	CARPET, FLR RR (RED)	96	Y67 (70I) (EXC Z16)	LH	10238559

© 2000 GENERAL MOTORS SERVICE PARTS OPERATIONS-CHEVROLET-14Y

								1Y15-005
	11-D10	15.306	CARPET, FLR RR (RED)	96	Y67 (70I) (EXC Z16) ...	RH	10238560
19.		DISCON	CARPET, FLR RR PNL CTR (GRAY)	92-93	Y67 (14I)	LH	10219775
		DISCON	CARPET, FLR RR PNL CTR (BLACK)	92-93	Y67 (10I, 19I)	RH	10219778
		DISCON	CARPET, FLR RR PNL CTR (RED)	93	Y67 (79I)	RH	10219780
		DISCON	CARPET, FLR RR PNL CTR (RED)	93	Y67 (70I)	LH	10219781
		DISCON	CARPET, FLR RR PNL CTR (RED)	93	Y67 (70I)	RH	10219782
	11-D10	15.306	CARPET, FLR RR PNL CTR (BLACK)	94-96	Y67 (19I)	1	10238490
	11-D10	15.306	CARPET, FLR RR PNL CTR (BEIGE)	94-96	Y67 (64I)	1	10238491
	11-D10	15.306	CARPET, FLR RR PNL CTR (GRAY)	94-96	Y67 (14I)	1	10238492
	11-D10	15.306	CARPET, FLR RR PNL CTR (RED)	94-95	Y67 (70I)	1	10238493
	11-D10	15.306	CARPET, FLR RR PNL CTR (RED)	96	Y67 (70I) (EXC Z16) ...	1	10238493
		DISCON	CARPET, FLR RR PNL CTR (PNL CTR) (BLACK)	92-93	Y67 (10I, 19I)	1	10219668
		DISCON	CARPET, FLR RR PNL CTR (PNL CTR) (GRAY)	92-93	Y67 (14I)	1	10219670
		DISCON	CARPET, FLR RR PNL CTR (PNL CTR) (RED)	93	Y67 (70I)	1	10219671
		DISCON	CARPET, FLR RR PNL CTR (PNL CTR) (RED)	93	Y67 (79I)	1	10219672

RPO DEFINITIONS

AX4 – RESTRAINT SYSTEM,FRONT AND REAR SEAT,MANUAL(EUROPEAN)
Z16 – APPEARANCE PACKAGE,GRAND SPORT EDITION
10I – INTERIOR TRIM – ARCTIC WHITE
14I – INTERIOR TRIM LT GRAY
19I – INTERIOR TRIM,BLACK
64I – INTERIOR TRIM,LIGHT BEIGE
70I – INTERIOR TRIM,TORCH RED
73I – INTERIOR TRIM,FLAME RED
79I – INTERIOR TRIM,RUBY RED

© 2000 GENERAL MOTORS SERVICE PARTS OPERATIONS-CHEVROLET-14Y

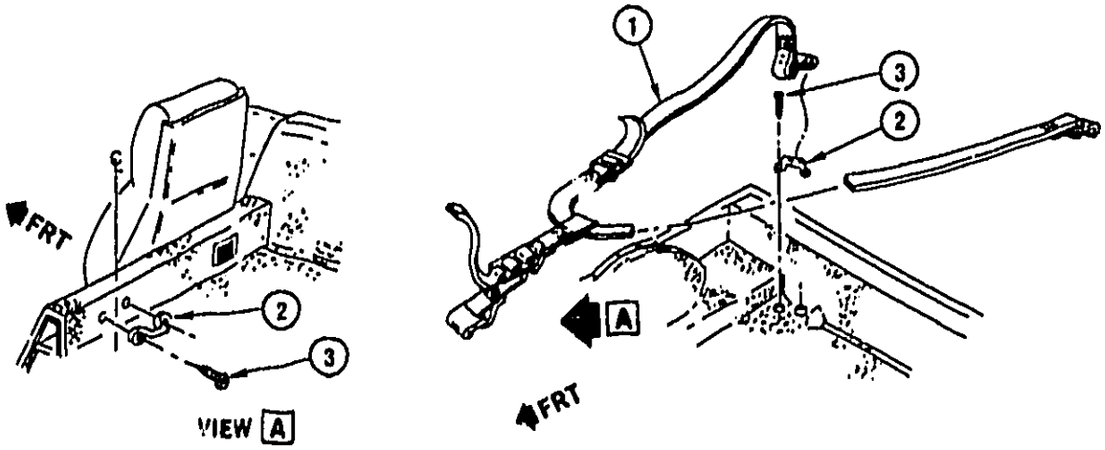

1Y15-003

1986–1989 Y67 STRAPS/CARGO
1988 Y07 STRAPS/CARGO

1.		DISCON	STRAP, LUGG STOW (GRAPHITE 12I) (1986–88)	14092791
		DISCON	STRAP, LUGG STOW (MED GRAY 15I) (1986–87)	14092792
		DISCON	STRAP, LUGG STOW (MED BLUE 21I) (Y67)	10135986
		DISCON	STRAP, LUGG STOW (LT SADDLE 62I) (1986–87)	14092794
		DISCON	STRAP, LUGG STOW (DK BRONZE 65I) (1986–87)	14092795
		DISCON	STRAP, LUGG STOW (RED 73I) (Y67)	14092796
	11–M20	7.629	STRAP, LUGG & SPA WHL STOW (BLACK 19I) (1988–89 Y67)	10135966
		DISCON	STRAP, LUGG STOW (COGNAC 60I) (1988–89 Y67)	10135991
		DISCON	STRAP, LUGG STOW (SMOKE GRAY 90I) (1988–89 Y67)	10135993
2.	11–N16	12.810	RETAINER, LUG STOW STRAP	20292751
3.		8.977	SCREW, (RR) OV HD CSK C/R (M4.2X1.41X30) ORG BLK	11503409
		8.977	SCREW, (FRT) OV CSK TR HD C/R TAP (M4.2X1.41X16) PEOR	11503446

© 2000 GENERAL MOTORS SERVICE PARTS OPERATIONS–CHEVROLET–14Y

MICROFICHE INDEX

GROUPS 14.000 THRU 15.000

FICHE 11 OF 11

GROUP	DESCRIPTION	STARTING GRID LOCATION PARTS	ILLUSTRATIONS
–	GENERAL INFORMATION	1–A2	1–G2
–	ALPHABETICAL INDEX	1–B13	N.A.
14.000	INTERIOR TRIM – SEAT BELTS	11–A2	11–E2
15.000	REAR SEAT TRIM – CARPETS – YARDAGE	11–D2	11–H2
–	OUT OF FICHE CALLS	N.A.	11–M16

MICROFICHE INDEX

GROUPS 14.000 THRU 15.000

FICHE 11 OF 11

GROUP	DESCRIPTION	STARTING GRID LOCATION PARTS	ILLUSTRATIONS
–	GENERAL INFORMATION	1–A2	1–G2
–	ALPHABETICAL INDEX	1–B13	N.A.
14.000	INTERIOR TRIM – SEAT BELTS	11–A2	11–E2
15.000	REAR SEAT TRIM – CARPETS – YARDAGE	11–D2	11–H2
–	OUT OF FICHE CALLS	N.A.	11–M16

11–J1

MICROFICHE INDEX

GROUPS 14.000 THRU 15.000

FICHE 11 OF 11

GROUP	DESCRIPTION	STARTING GRID LOCATION PARTS	ILLUSTRATIONS
–	GENERAL INFORMATION	1–A2	1–G2
–	ALPHABETICAL INDEX	1–B13	N.A.
14.000	INTERIOR TRIM – SEAT BELTS	11–A2	11–E2
15.000	REAR SEAT TRIM – CARPETS – YARDAGE	11–D2	11–H2
–	OUT OF FICHE CALLS	N.A.	11–M16

11–K1

MICROFICHE INDEX

GROUPS 14.000 THRU 15.000

FICHE 11 OF 11

GROUP	DESCRIPTION	STARTING GRID LOCATION PARTS	ILLUSTRATIONS
–	GENERAL INFORMATION	1–A2	1–G2
–	ALPHABETICAL INDEX	1–B13	N.A.
14.000	INTERIOR TRIM – SEAT BELTS	11–A2	11–E2
15.000	REAR SEAT TRIM – CARPETS – YARDAGE	11–D2	11–H2
–	OUT OF FICHE CALLS	N.A.	11–M16

11–L1

MICROFICHE INDEX

GROUPS 14.000 THRU 15.000

FICHE 11 OF 11

GROUP	DESCRIPTION	STARTING GRID LOCATION PARTS	ILLUSTRATIONS
–	GENERAL INFORMATION	1–A2	1–G2
–	ALPHABETICAL INDEX	1–B13	N.A.
14.000	INTERIOR TRIM – SEAT BELTS	11–A2	11–E2
15.000	REAR SEAT TRIM – CARPETS – YARDAGE	11–D2	11–H2
–	OUT OF FICHE CALLS	N.A.	11–M16

11–M1

2.447 ACTUATOR – BRACKET – CONNECTOR – NUT – RETAINER – SWITCH, Stop Lamp Switch

84–89	Y	14053686	1	3.72	BRACKET, S/LP SW
90–91	Y	10097689	1	7.55	BRACKET, S/LP SW
92	Y 6–SPD M/TRANS (ML9)	10097689	1	7.55	BRACKET, S/LP SW
92	Y 5.7P (LT1), 3–SPD A/TRANS (MD9)	10097689	1	7.55	BRACKET, S/LP SW
93	Y 5.7P (LT1), 4–SPD A/TRANS (MD8)	10214036	1	7.55	BRACKET, S/LP SW
93–96	Y 6–SPD M/TRANS (ML9)	10214036	1	7.55	BRACKET, S/LP SW
94–96	Y 5.7P (LT1), 4–SPD A/TRANS (M30)	10214036	1	7.55	BRACKET, S/LP SW
84–87	Y	12337995	1	*.46	NUT, S/LP SW ACTR (00.334) (AC–DELCO #12337995)
93–96	Y	10211657	1	24.54	SWITCH, ELEK BRK CONT BRK PED (W/ S/LP SW) (04.710) (AC–DELCO #10211657)
84–86	Y (EXC CRCONT (K34), (M/TRNS)	25524844	1	8.22	SWITCH, S/LP (AC–DELCO #D889)
84–86	Y CRCONT (K34)	25524845	1	13.46	SWITCH, S/LP (AC–DELCO #D850A)
84–86	Y (EXC CRCONT (K34), (A/TRNS)	25524848	1	11.63	SWITCH, S/LP (AC–DELCO #D851A)
87	Y A/TRNS (EXC CRUISE CONT K34)	25529861	1	15.40	SWITCH, S/LP (AC–DELCO #D853A)
87	Y (EXC CRCONT (K34), (M/TRNS)	25529862	1	5.81	SWITCH, S/LP (AC–DELCO #D854A)
89–92	Y	25529860	1	11.69	SWITCH, S/LP (AC–DELCO #D852A)
87–88	Y 3–SPD A/TRANS (MD9), (EXC CRCONT (K34)	25523465	1	6.17	SWITCH, S/LP & TCC
87–88	Y CRUISE CONT (K34)	25523463	1	6.94	SWITCH, STOP LP

2.480 BRACKET – CONNECTOR – HARNESS – WIRE, Chassis Wiring

94	Y 4–SPD A/TRANS (M30)	15320479	1	119.63	HARNESS, A/TRNS WRG (AC–DELCO #15320479)
95	Y 4–SPD A/TRANS (M30)	15320477	1	75.73	HARNESS, A/TRNS WRG (INCLS TCC SOLENOID W/TCC DRAINDOWN FEATURE) (AC–DELCO #15320477)
96	Y 4–SPD A/TRANS (M30)	15320476	1	81.04	HARNESS, A/TRNS WRG (INCLS TCC SOL VLV) (AC–DELCO #15320476)
85	Y A/TRNS (MD8)	12048732	1	DISCON	HARNESS, E.C.M.
85	Y M/TRNS (MH5, MK2) W/FED (NA5)	12048733	1	DISCON	HARNESS, E.C.M.
84	Y A/TRNS, FED, CALIF (1ST DES)	12028754	1	DISCON	HARNESS, ELEK CONT MDL WRG (SGL WIRE OIL PRESS SW CONN)
84	Y M/TRNS, FED, CALIF (1ST DES)	12029199	1	DISCON	HARNESS, ELEK CONT MDL WRG (SGL WIRE OIL PRESS SW CONN)
84	Y M/TRNS, FED, CALIF (2ND DES)	12029216	1	DISCON	HARNESS, ELEK CONT MDL WRG (DBL WIRE OIL PRESS SW CONN)
84	Y A/TRNS, FED, CALIF (2ND DES)	12029217	1	DISCON	HARNESS, ELEK CONT MDL WRG (DBL WIRE OIL PRESS SW CONN)
89	Y (5.7–8) A/TRNS, A/C (C68)	12090323	1	1266.25	HARNESS, ENG & ECM (02.525)
86	Y M/TRNS, A/C (C60), FED (NA5) (EXC NM8 EXPORT)	12048815	1	DISCON	HARNESS, ENG & ECM WRG (02.525)
86	Y A/TRNS, A/C (C60) (EXC NM8 EXPORT)	12048817	1	DISCON	HARNESS, ENG & ECM WRG (02.525)
86	Y A/TRNS, A/C (C68) (EXC NM8 EXPORT)	12048818	1	DISCON	HARNESS, ENG & ECM WRG (02.525)
86	Y07 M/TRNS, A/C (C68), FED (NA5) (EXC NM8 EXPORT)	12048816	1	DISCON	HARNESS, ENG & ECM WRG (02.525)
87	Y M/TRNS, A/C (C60)	12067670	1	DISCON	HARNESS, ENG & ECM WRG (02.525)
87	Y M/TRNS, A/C (C68)	12067671	1	DISCON	HARNESS, ENG & ECM WRG (02.525)
87	Y A/TRNS, A/C, FED (NA5) (EXC NM8 EXPORT)	12067672	1	DISCON	HARNESS, ENG & ECM WRG (02.525)
87	Y A/TRNS, A/C (C68), FED (NA5) (EXC NM8 EXPORT)	12067673	1	DISCON	HARNESS, ENG & ECM WRG (02.525)

© 2000 GENERAL MOTORS SERVICE PARTS OPERATIONS

2.480 BRACKET – CONNECTOR – HARNESS – WIRE, Chassis Wiring(Con't)

88	Y A/TRNS, A/C (C60)	12055808	1	DISCON	HARNESS, ENG & ECM WRG (02.525)
88	Y A/TRNS, A/C (C68)	12055809	1	DISCON	HARNESS, ENG & ECM WRG (02.525)
88	Y M/TRNS, A/C (C60)	12080840	1	DISCON	HARNESS, ENG & ECM WRG (02.525)
88	Y M/TRNS, A/C (C68)	12080841	1	DISCON	HARNESS, ENG & ECM WRG (02.525)
89	Y (5.7–8) M/TRNS, A/C (C60) (2ND DES)	12090320	1	1266.25	HARNESS, ENG & ECM WRG (02.525) (ORANGE WIRE IN B–8 CAV OF VATS MDL CONN)
89	Y (5.7–8) M/TRNS, A/C (C68)	12090321	1	1266.25	HARNESS, ENG & ECM WRG (02.525)
89	Y (5.7–8) A/TRNS, A/C (C60) (2ND DES)	12090322	1	1266.25	HARNESS, ENG & ECM WRG (02.525) (ORANGE WIRE IN B–8 CAV OF VATS MDL CONN)
89	Y (5.7J)	12090324	1	1266.25	HARNESS, ENG & ECM WRG (02.525)
91	Y 5.7J (LT5)	12106549	1	26.14	HARNESS, ENG PWR SW WRG (I/P TO VALET MODE SW) (USE W/4 PIN ENG PWR SW CONN)
87–89	Y	12067418	1	DISCON	HARNESS, F/FLR CNSL
84–86	Y	12029153	1	DISCON	HARNESS, FRT FLR CNSL WRG
85	Y (EXC VB4, VD1, VE1, VT7 EXPORT)	12050645	1	DISCON	HARNESS, FWD LP
86	Y (EXC VB4, VD1, VE1, VT7 EXPORT)	12048809	1	DISCON	HARNESS, FWD LP
87	Y (EXC T72, T84 EXPORT)	12067732	1	DISCON	HARNESS, FWD LP
84	Y	12028953	1	DISCON	HARNESS, FWD LP WRG
88	Y (EXC T72, T84 EXPORT)	12073487	1	666.86	HARNESS, FWD LP WRG
89	Y (5.7–8)	12073487	1	666.86	HARNESS, FWD LP WRG
90	Y (5.7–8) (EXC CANADIAN T61)	12073776	1	666.86	HARNESS, FWD LP WRG
90	Y (5.7J) SOFT RIDE SUSP (FE1), H .D .SUSP (EXC CANADIAN T61)	12090331	1	985.50	HARNESS, FWD LP WRG
91	Y 5.7–8 (L98), (EXC DAYTIME RUNNING LGT (T61)	12080863	1	985.50	HARNESS, FWD LP WRG
91	Y 5.7J (LT5), SOFT RIDE SUSP (FE1), HVY DUTY SUSP (FE7), (EXC DAYTIME RUNNING LGT (T61)	12080864	1	666.86	HARNESS, FWD LP WRG
92	Y 5.7P (LT1), (EXC DAYTIME RUNNING LGT (T61)	12090371	1	292.85	HARNESS, FWD LP WRG
92	Y 5.7J (LT5), (EXC DAYTIME RUNNING LGT (T61)	12090372	1	315.14	HARNESS, FWD LP WRG
93	Y 5.7P (LT1), (EXC DIAGNOSTIC SYSTEM (BAK), DAYTIME RUNNING LGT (T61)	12106580	1	816.00	HARNESS, FWD LP WRG
93–94	Y 5.7J (LT5), (EXC DAYTIME RUNNING LGT (T61)	12106583	1	985.50	HARNESS, FWD LP WRG
93	Y 5.7P (LT1), DIAGNOSTIC SYSTEM (BAK), (EXC DAYTIME RUNNING LGT (T61)	12141822	1	292.85	HARNESS, FWD LP WRG
94	Y 5.7P (LT1), (EXC HDLP (T72) (EXPORT), RH RULE OF ROAD HDLP (T84) (EXPORT), LH RULE OF ROAD HDLP (T85) (EXPORT), SIG & MKR LP (T90) (EXPORT)	12130480	1	292.85	HARNESS, FWD LP WRG
94	Y 5.7J (LT5), (EXC HDLP (T72) (EXPORT), RH RULE OF ROAD HDLP (T84) (EXPORT), LH RULE OF ROAD HDLP (T85) (EXPORT), SIG & MKR LP (T90) (EXPORT)	12154336	1	292.85	HARNESS, FWD LP WRG
95	Y 5.7P (LT1), (EXC HDLP (T72) (EXPORT), RH RULE OF ROAD HDLP (T84) (EXPORT), LH RULE OF ROAD HDLP (T85) (EXPORT), SIG & MKR LP (T90) (EXPORT)	12130484	1	292.85	HARNESS, FWD LP WRG

© 2000 GENERAL MOTORS SERVICE PARTS OPERATIONS

2.480 BRACKET – CONNECTOR – HARNESS – WIRE, Chassis Wiring(Con't)

95	Y 5.7J (LT5), (EXC HDLP (T72) (EXPORT), RH RULE OF ROAD HDLP (T84) (EXPORT), LH RULE OF ROAD HDLP (T85) (EXPORT), SIG & MKR LP (T90) (EXPORT) ...	12130486	1	292.85	HARNESS, FWD LP WRG .....
96	Y (EXC HDLP (T72) (EXPORT), RH RULE OF ROAD HDLP (T84) (EXPORT), LH RULE OF ROAD HDLP (T85) (EXPORT), SIG & MKR LP (T90) (EXPORT)	12163717	1	292.85	HARNESS, FWD LP WRG .....
85	Y A/TRNS (MD8), A/C (C60)	12048741	1	DISCON	HARNESS, I/P .....
85	Y M/TRNS (MH5, MK2), A/C (C60) ..	12048742	1	DISCON	HARNESS, I/P .....
86	Y M/TRNS, A/C (C60)	12048793	1	DISCON	HARNESS, I/P .....
86	Y A/TRNS, A/C (C60)	12048794	1	DISCON	HARNESS, I/P .....
86	Y M/TRNS, A/C (C68)	12048795	1	DISCON	HARNESS, I/P .....
86	Y A/TRNS, A/C (C68)	12048796	1	DISCON	HARNESS, I/P .....
87	Y A/TRNS, A/C (C68)	12068102	1	1257.59	HARNESS, I/P .....
87	Y M/TRNS, A/C (C68)	12068103	1	1257.59	HARNESS, I/P .....
87	Y A/TRNS, A/C (C60)	12073820	1	DISCON	HARNESS, I/P .....
84	Y A/TRNS (1ST DES)	12036383	1	DISCON	HARNESS, I/P WRG (BLACK 5–WAY AC CONN W/2 DBL WIRES IN CAVS C & D) .....
84	Y M/TRNS	12043083	1	DISCON	HARNESS, I/P WRG .....
84	Y A/TRNS (2ND DES)	12043276	1	DISCON	HARNESS, I/P WRG (1 DBL WIRE IN CAV D) .....
87	Y M/TRNS (MH5, MK2), A/C (C60) ..	12073821	1	DISCON	HARNESS, I/P WRG .....
88	Y (5.7–8) M/TRNS, A/C (C60)	12073824	1	DISCON	HARNESS, I/P WRG .....
88	Y (5.7–8) A/TRNS, A/C (C60)	12073825	1	DISCON	HARNESS, I/P WRG .....
88	Y (5.7–8) M/TRNS, A/C (C68)	12073826	1	DISCON	HARNESS, I/P WRG .....
88	Y (5.7–8) A/TRNS, A/C (C68)	12073827	1	DISCON	HARNESS, I/P WRG .....
89	Y (5.7–8) ML9, A/C (C60) (1ST DES)	12073507	1	1548.75	HARNESS, I/P WRG (PINK WIRE IN B–8 CAV OF VATS MDL CONN) .....
89	Y (5.7–8) A/TRNS (MD8), A/C (C60) (1ST DES)	12073509	1	1548.75	HARNESS, I/P WRG (PINK WIRE IN B–8 CAV OF VATS MDL CONN) .....
89	Y (5.7–8) M/TRNS (ML9), A/C (C68) (1ST DES)	12073511	1	1548.75	HARNESS, I/P WRG (PINK WIRE IN B–8 CAV OF VATS MDL CONN) .....
89	Y (5.7–8) A/TRNS (MD8), A/C (C68) (1ST DES)	12073513	1	1548.75	HARNESS, I/P WRG (PINK WIRE IN B–8 CAV OF VATS MDL CONN) .....
89	Y (5.7–8) ML9, A/C (C60) (2ND DES)	12090315	1	1548.75	HARNESS, I/P WRG (ORANGE WIRE IN B–8 CAV OF VATS MDL CONN) .....
89	Y (5.7–8) A/TRNS (MD8), A/C (C60) (2ND DES)	12090316	1	1257.59	HARNESS, I/P WRG (ORANGE WIRE IN B–8 CAV OF VATS MDL CONN) .....
89	Y (5.7–8) M/TRNS (ML9), A/C (C68) (2ND DES)	12090318	1	1548.75	HARNESS, I/P WRG (ORANGE WIRE IN B–8 CAV OF VATS MDL CONN) .....
89	Y (5.7–8) A/TRNS (MD8), A/C (C68) (2ND DES)	12090319	1	1266.25	HARNESS, I/P WRG (ORANGE WIRE IN B–8 CAV OF VATS MDL CONN) .....
90	Y M/TRNS (ML9), A/C (C60) (EXC CANADIAN T61)	12101432	1	1239.00	HARNESS, I/P WRG (**VPI 1–877–846–8243) .....
90	Y M/TRNS (ML9), A/C (C68) (EXC CANADIAN T61)	12101434	1	1548.75	HARNESS, I/P WRG .....
90	Y 4–SPD A/TRANS (MD8), A/C MAN CONT (C60), (EXC DAYTIME RUNNING LGT (T61)	12102274	1	1257.59	HARNESS, I/P WRG .....
90	Y A/TRNS (MD8), A/C (C68) (EXC CANADIAN T61)	12102538	1	1257.59	HARNESS, I/P WRG .....
91	Y 4–SPD A/TRANS (MD8), A/C MAN CONT (C60), (EXC DAYTIME RUNNING LGT (T61)	12116436	1	1028.20	HARNESS, I/P WRG .....

© 2000 GENERAL MOTORS SERVICE PARTS OPERATIONS

2.480 BRACKET – CONNECTOR – HARNESS – WIRE, Chassis Wiring(Con't)

91	Y 6–SPD M/TRANS (ML9), A/C MAN CONT (C60), (EXC DAYTIME RUNNING LGT (T61)	12116438	1	1028.20	HARNESS, I/P WRG .....
91	Y 4–SPD A/TRANS (MD8), A/C AUTO ELEC CONT (C68), (EXC DAYTIME RUNNING LGT (T61)	12116500	1	1266.25	HARNESS, I/P WRG (MAY REQ 12106563 WIRE IF JMPR PRESENT AT THE PWR SEAT FEED) .....
91	Y 6–SPD M/TRANS (ML9), A/C AUTO ELEC CONT (C68), (EXC DAYTIME RUNNING LGT (T61)	12116502	1	1028.20	HARNESS, I/P WRG .....
92	Y 4–SPD A/TRANS (MD8), A/C MAN CONT (C60), (EXC DAYTIME RUNNING LGT (T61)	12125005	1	1020.20	HARNESS, I/P WRG .....
92	Y 6–SPD M/TRANS (ML9), A/C MAN CONT (C60), (EXC DAYTIME RUNNING LGT (T61)	12125007	1	1257.59	HARNESS, I/P WRG .....
92	Y 4–SPD A/TRANS (MD8), A/C AUTO ELEC CONT (C68), (EXC DAYTIME RUNNING LGT (T61)	12125813	1	881.59	HARNESS, I/P WRG .....
92	Y 6–SPD M/TRANS (ML9), A/C AUTO ELEC CONT (C68), (EXC DAYTIME RUNNING LGT (T61)	12125815	1	881.59	HARNESS, I/P WRG .....
93	Y 4–SPD A/TRANS (MD8), A/C MAN CONT (C60), (EXC SIG & MKR LP (T90) (EXPORT)	12141443	1	1257.59	HARNESS, I/P WRG .....
93	Y 6–SPD M/TRANS (ML9), A/C AUTO ELEC CONT (C68), (EXC SIG & MKR LP (T90) (EXPORT) ...	12141444	1	1257.59	HARNESS, I/P WRG (FOR VEH –DRL, SPLICE CAV D TO CAV E @ BLUE 8–WAY DRL MDL CONN.) .....
93	Y 6–SPD M/TRANS (ML9), A/C MAN CONT (C60), (EXC SIG & MKR LP (T90) (EXPORT)	12141445	1	1257.59	HARNESS, I/P WRG .....
93	Y 4–SPD A/TRANS (MD8), A/C AUTO ELEC CONT (C68), (EXC SIG & MKR LP (T90) (EXPORT) ...	12141446	1	1257.59	HARNESS, I/P WRG (ON VEHS W/O DAYTIME RUNNING LPS SPLICE CAV D & E WIRES TOGETHER AT BLUE DRL MDL CONN.) .....
94	Y 6–SPD M/TRANS (ML9), A/C MAN CONT (C60), (EXC DAYTIME RUNNING LGT (T61), HDLP (T72) (EXPORT), RH RULE OF ROAD HDLP (T84) (EXPORT), LH RULE OF ROAD HDLP (T85) (EXPORT), SIG & MKR LP (T90) (EXPORT) ...	12130324	1		HARNESS, I/P WRG .....
94	Y 6–SPD M/TRANS (ML9), A/C AUTO ELEC CONT (C68), (EXC DAYTIME RUNNING LGT (T61), HDLP (T72) (EXPORT), RH RULE OF ROAD HDLP (T84) (EXPORT), LH RULE OF ROAD HDLP (T85) (EXPORT), SIG & MKR LP (T90) (EXPORT)	12130326	1	1548.75	HARNESS, I/P WRG .....
94	Y 4–SPD A/TRANS (M30), A/C MAN CONT (C60), (EXC DAYTIME RUNNING LGT (T61), HDLP (T72) (EXPORT), RH RULE OF ROAD HDLP (T84) (EXPORT), LH RULE OF ROAD HDLP (T85) (EXPORT), SIG & MKR LP (T90) (EXPORT), (2ND DES)	12130491	1		HARNESS, I/P WRG .....

© 2000 GENERAL MOTORS SERVICE PARTS OPERATIONS

2.480 BRACKET – CONNECTOR – HARNESS – WIRE, Chassis Wiring(Con't)

94	Y 4-SPD A/TRANS (M30), A/C MAN CONT (C60), DAYTIME RUNNING LGT (T61), (EXC HDLP (T72) (EXPORT), RH RULE OF ROAD HDLP (T84) (EXPORT), LH RULE OF ROAD HDLP (T85) (EXPORT), SIG & MKR LP (T90) (EXPORT) ...	12130492	1		HARNESS, I/P WRG .....
94	Y 4-SPD A/TRANS (M30), A/C AUTO ELEC CONT (C68), (EXC DAYTIME RUNNING LGT (T61), HDLP (T72) (EXPORT), RH RULE OF ROAD HDLP (T84) (EXPORT), LH RULE OF ROAD HDLP (T85) (EXPORT), SIG & MKR LP (T90) (EXPORT)	12130493	1	1488.75	HARNESS, I/P WRG .....
94	Y 4-SPD A/TRANS (M30), A/C AUTO ELEC CONT (C68), DAYTIME RUNNING LGT (T61), (EXC HDLP (T72) (EXPORT), RH RULE OF ROAD HDLP (T84) (EXPORT), LH RULE OF ROAD HDLP (T85) (EXPORT), SIG & MKR LP (T90) (EXPORT)	12130494	1		HARNESS, I/P WRG .....
94	Y 4-SPD A/TRANS (M30), A/C MAN CONT (C60), DAYTIME RUNNING LGT (T61), (EXC HDLP (T72) (EXPORT), RH RULE OF ROAD HDLP (T84) (EXPORT), LH RULE OF ROAD HDLP (T85) (EXPORT), SIG & MKR LP (T90) (EXPORT), (1ST DES)	12141787	1		HARNESS, I/P WRG (TAGGED 0320 OR 0321) (ON VEH W/O DRL, AT 8-WAY BLUE CONN TO DRL MDL SPLICE CAV D & CAV E LEADS TOGETHER.) .....
94	Y 4-SPD A/TRANS (M30), A/C AUTO ELEC CONT (C68), DAYTIME RUNNING LGT (T61), (EXC HDLP (T72) (EXPORT), RH RULE OF ROAD HDLP (T84) (EXPORT), LH RULE OF ROAD HDLP (T85) (EXPORT), SIG & MKR LP (T90) (EXPORT), (1ST DES) ...	12141788	1		HARNESS, I/P WRG (TAGGED 0322 OR 0323) (ON VEH W/DAYTIME RUNNING LGHTS, ADD 8-WAY BLUE CONN TO DAYTIME RUNNING LGHT, SPLICE CAV D & CAV E WIRES TOGETHER) .....
94	Y 6-SPD M/TRANS (ML9), A/C MAN CONT (C60), DAYTIME RUNNING LGT (T61), (EXC HDLP (T72) (EXPORT), RH RULE OF ROAD HDLP (T84) (EXPORT), LH RULE OF ROAD HDLP (T85) (EXPORT), SIG & MKR LP (T90) (EXPORT) ...	12141789	1		HARNESS, I/P WRG .....
94	Y 6-SPD M/TRANS (ML9), A/C AUTO ELEC CONT (C68), DAYTIME RUNNING LGT (T61), (EXC HDLP (T72) (EXPORT), RH RULE OF ROAD HDLP (T84) (EXPORT), LH RULE OF ROAD HDLP (T85) (EXPORT), SIG & MKR LP (T90) (EXPORT)	12141790	1		HARNESS, I/P WRG .....
94	Y 6-SPD M/TRANS (ML9), A/C AUTO ELEC CONT (C68), (EXC HDLP (T72) (EXPORT), RH RULE OF ROAD HDLP (T84) (EXPORT), LH RULE OF ROAD HDLP (T85) (EXPORT), SIG & MKR LP (T90) (EXPORT)	12163703	1	1257.59	HARNESS, I/P WRG .....

© 2000 GENERAL MOTORS SERVICE PARTS OPERATIONS

2.480 BRACKET – CONNECTOR – HARNESS – WIRE, Chassis Wiring(Con't)

95	Y 5.7J (LT5), 6–SPD M/TRANS (ML9), A/C AUTO ELEC CONT (C68), (EXC DAYTIME RUNNING LGT (T61)	12130326	1	1548.75	HARNESS, I/P WRG .....
95	Y 5.7P (LT1), 4–SPD A/TRANS (M30), A/C MAN CONT (C60), DAYTIME RUNNING LGT (T61), (EXC HDLP (T72) (EXPORT), RH RULE OF ROAD HDLP (T84) (EXPORT), LH RULE OF ROAD HDLP (T85) (EXPORT), SIG & MKR LP (T90) (EXPORT)	12130389	1	1424.85	HARNESS, I/P WRG .....
95	Y 5.7P (LT1), 4–SPD A/TRANS (M30), A/C AUTO ELEC CONT (C68), DAYTIME RUNNING LGT (T61), (EXC HDLP (T72) (EXPORT), RH RULE OF ROAD HDLP (T84) (EXPORT), LH RULE OF ROAD HDLP (T85) (EXPORT), SIG & MKR LP (T90) (EXPORT)	12130391	1	1424.85	HARNESS, I/P WRG (SPLICE CAV D & E WIRES @ BLUE DRL MDL CONN FOR VEH W/O DRL.) .....
95	Y 5.7J (LT5), 6–SPD M/TRANS (ML9), A/C AUTO ELEC CONT (C68), DAYTIME RUNNING LGT (T61)	12141790	1		HARNESS, I/P WRG .....
95	Y 5.7P (LT1), 6–SPD M/TRANS (ML9), A/C MAN CONT (C60), (EXC DAYTIME RUNNING LGT (T61), HDLP (T72) (EXPORT), RH RULE OF ROAD HDLP (T84) (EXPORT), LH RULE OF ROAD HDLP (T85) (EXPORT), SIG & MKR LP (T90) (EXPORT)	12163700	1	1548.75	HARNESS, I/P WRG .....
95	Y 5.7P (LT1), 6–SPD M/TRANS (ML9), A/C AUTO ELEC CONT (C68), (EXC DAYTIME RUNNING LGT (T61), HDLP (T72) (EXPORT), RH RULE OF ROAD HDLP (T84) (EXPORT), LH RULE OF ROAD HDLP (T85) (EXPORT), SIG & MKR LP (T90) (EXPORT)	12163702	1	1257.59	HARNESS, I/P WRG .....
95	Y 5.7J (LT5), 6–SPD M/TRANS (ML9), A/C AUTO ELEC CONT (C68)	12163703	1	1257.59	HARNESS, I/P WRG .....
96	Y 4–SPD A/TRANS (M30), A/C MAN CONT (C60), (EXC HDLP (T72) (EXPORT), RH RULE OF ROAD HDLP (T84) (EXPORT), LH RULE OF ROAD HDLP (T85) (EXPORT), SIG & MKR LP (T90) (EXPORT) ...	12130468	1	1548.75	HARNESS, I/P WRG (WHEN USE ON VEH W/O DAYTIME RUN LIGHTS, SPLICE CAV D&E TOGETHER @ BLUE 8–WAY DRL MOD CONN) .....
96	Y 4–SPD A/TRANS (M30), A/C AUTO ELEC CONT (C68), (EXC HDLP (T72) (EXPORT), RH RULE OF ROAD HDLP (T84) (EXPORT), LH RULE OF ROAD HDLP (T85) (EXPORT), SIG & MKR LP (T90) (EXPORT)	12130470	1	1061.69	HARNESS, I/P WRG (WHEN USE ON VEH W/O DAYTIME RUN LIGHTS, SPLICE CAV D&E TOGETHER @ BLUE 8–WAY DRL MOD CONN) .....
96	Y 6–SPD M/TRANS (ML9), A/C MAN CONT (C60), (EXC HDLP (T72) (EXPORT), RH RULE OF ROAD HDLP (T84) (EXPORT), LH RULE OF ROAD HDLP (T85) (EXPORT), SIG & MKR LP (T90) (EXPORT) ...	12130472	1	1257.59	HARNESS, I/P WRG (WHEN USE ON VEH W/O DAYTIME RUN LIGHTS, SPLICE CAV D&E TOGETHER @ BLUE 8–WAY DRL MOD CONN) .....

© 2000 GENERAL MOTORS SERVICE PARTS OPERATIONS

2.480 BRACKET – CONNECTOR – HARNESS – WIRE, Chassis Wiring(Con't)

96	Y 6–SPD M/TRANS (ML9), A/C AUTO ELEC CONT (C68), (EXC HDLP (T72) (EXPORT), RH RULE OF ROAD HDLP (T84) (EXPORT), LH RULE OF ROAD HDLP (T85) (EXPORT), SIG & MKR LP (T90) (EXPORT)	12130474	1	1257.59	HARNESS, I/P WRG (WHEN USE ON VEH W/O DAYTIME RUN LIGHTS, SPLICE CAV D&E TOGETHER @ BLUE 8–WAY DRL MOD CONN) .....
84–91	Y RECL FRT BKT ST (AQ9)	12028999	1	DISCON	HARNESS, I/P WRG HARN EXTN .....
91	Y	12126533	1	DISCON	HARNESS, I/P WRG HARN EXTN (VALET MODE) (USE W/4 PIN ENG PWR SW CONN) .....
92–93	Y RECL FRT BKT ST (AQ9)	12106560	1	47.45	HARNESS, I/P WRG HARN EXTN .....
85–91	Y	12029463	1	25.75	HARNESS, INT AIR TEMP SEN WRG ...
84–85	Y	12028667	1	DISCON	HARNESS, MIR LP WRG .....
	*EXPORT**********EXPORT**********EXPORT**********EXPORT**********EXPORT*				
84	Y NM5 (EXPORT CANADA) (2ND DES)	12029435	1	DISCON	HARNESS, ELEK CONT MDL (OIL PRESS SW HAS 3 SINGLE WIRES) ..
84	Y NM5 (EXPORT, CANADA) (1ST DES)	12029044	1	DISCON	HARNESS, ELEK CONT MDL WRG (OIL PRESS SW CONN HAS 1 DBL WIRE & 1 SGL WIRE) .....
86	Y M/TRNS, A/C (C60), (NM5) EXPORT, CANADA (EXC NM8 EXPORT)	12048815	1	DISCON	HARNESS, ENG & ECM WRG (02.525) .
86	Y A/TRNS, NM8 (EXPORT)	12048819	1	DISCON	HARNESS, ENG & ECM WRG (02.525) .
86	Y07 M/TRNS, A/C (C68), (NM5) EXPORT, CANADA (EXC NM8 EXPORT)	12048816	1	DISCON	HARNESS, ENG & ECM WRG (02.525) .
87	Y A/TRNS, A/C, NM5 (EXPORT, CANADA) (EXC NM8 EXPORT)	12067672	1	DISCON	HARNESS, ENG & ECM WRG (02.525) .
87	Y A/TRNS, A/C (C68), NM5 (EXPORT, CANADA) (EXC NM8 EXPORT)	12067673	1	DISCON	HARNESS, ENG & ECM WRG (02.525) .
87	Y A/TRNS, NM8 (EXPORT)	12067674	1	DISCON	HARNESS, ENG & ECM WRG (02.525) .
84	Y VB4, VD1, VE1, VT7 (EXPORT) ...	12029218	1	DISCON	HARNESS, FWD LP .....
85	Y VB4, VD1, VE1, VT7 (EXPORT) ...	12050642	1	DISCON	HARNESS, FWD LP .....
86	Y VB4, VD1, VE1, VT7 (EXPORT) ...	12055776	1	DISCON	HARNESS, FWD LP ....
87	Y T72, T84 (EXPORT)	12067734	1	DISCON	HARNESS, FWD LP .....
88	Y T72, T84 (EXPORT)	12055815	1	DISCON	HARNESS, FWD LP WRG .....
90	Y (5.7–8) T61 (CANADIAN)	12090336	1	667.87	HARNESS, FWD LP WRG .....
90	Y (5.7J) T61 (CANADIAN)	12090337	1	987.00	HARNESS, FWD LP WRG .....
91	Y 5.7–8 (L98), DAYTIME RUNNING LGT (T61)	12090346	1	667.87	HARNESS, FWD LP WRG .....
91	Y 5.7J (LT5), DAYTIME RUNNING LGT (T61)	12090347	1	667.87	HARNESS, FWD LP WRG .....
92	Y 5.7P (LT1), DAYTIME RUNNING LGT (T61)	12090373	1	667.87	HARNESS, FWD LP WRG .....
92	Y 5.7J (LT5), DAYTIME RUNNING LGT (T61)	12090374	1	667.87	HARNESS, FWD LP WRG .....
93	Y 5.7P (LT1), DAYTIME RUNNING LGT (T61)	12106581	1	666.86	HARNESS, FWD LP WRG .....
93	Y 5.7J (LT5), DAYTIME RUNNING LGT (T61)	12106582	1	611.03	HARNESS, FWD LP WRG .....
94	Y 5.7P (LT1), HDLP (T72) (EXPORT), RH RULE OF ROAD HDLP (T84) (EXPORT), LH RULE OF ROAD HDLP (T85) (EXPORT), SIG & MKR LP (T90) (EXPORT)	12130481	1		HARNESS, FWD LP WRG .....

© 2000 GENERAL MOTORS SERVICE PARTS OPERATIONS

2.480 BRACKET – CONNECTOR – HARNESS – WIRE, Chassis Wiring(Con't)

94	Y 5.7J (LT5), HDLP (T72) (EXPORT), RH RULE OF ROAD HDLP (T84) (EXPORT), LH RULE OF ROAD HDLP (T85) (EXPORT), SIG & MKR LP (T90) (EXPORT)	12154337	1		HARNESS, FWD LP WRG .....
95	Y 5.7P (LT1), HDLP (T72) (EXPORT), RH RULE OF ROAD HDLP (T84) (EXPORT), LH RULE OF ROAD HDLP (T85) (EXPORT), SIG & MKR LP (T90) (EXPORT)	12130485	1	292.85	HARNESS, FWD LP WRG .....
96	Y HDLP (T72) (EXPORT), RH RULE OF ROAD HDLP (T84) (EXPORT), LH RULE OF ROAD HDLP (T85) (EXPORT), SIG & MKR LP (T90) (EXPORT)	12163718	1	272.58	HARNESS, FWD LP WRG .....
94–96	Y HDLP (T72) (EXPORT), RH RULE OF ROAD HDLP (T84) (EXPORT), LH RULE OF ROAD HDLP (T85) (EXPORT), SIG & MKR LP (T90) (EXPORT)	12130344	2	40.09	HARNESS, FWD LP WRG HARN EXTN .
90	Y M/TRNS (ML9), A/C (C60), T61 (CANADIAN)	12101433	1	1266.25	HARNESS, I/P WRG .....
90	Y M/TRNS (ML9), A/C (C68), T61 (CANADIAN)	12101435	1	1266.25	HARNESS, I/P WRG .....
90	Y A/TRNS (MD8), A/C (C68), T61 (CANADIAN)	12102273	1	1028.20	HARNESS, I/P WRG .....
90	Y A/TRNS (MD8), A/C (C60), T61 (CANADIAN)	12102537	1		HARNESS, I/P WRG .....
91	Y 4–SPD A/TRANS (MD8), A/C MAN CONT (C60), DAYTIME RUNNING LGT (T61)	12116437	1	1028.20	HARNESS, I/P WRG .....
91	Y 6–SPD M/TRANS (ML9), A/C MAN CONT (C60), DAYTIME RUNNING LGT (T61)	12116439	1	1028.20	HARNESS, I/P WRG .....
91	Y 4–SPD A/TRANS (MD8), A/C AUTO ELEC CONT (C68), DAYTIME RUNNING LGT (T61)	12116501	1	1028.20	HARNESS, I/P WRG .....
91	Y 6–SPD M/TRANS (ML9), A/C AUTO ELEC CONT (C68), DAYTIME RUNNING LGT (T61)	12116503	1	1028.20	HARNESS, I/P WRG .....
92	Y 4–SPD A/TRANS (MD8), A/C MAN CONT (C60), DAYTIME RUNNING LGT (T61)	12125006	1	1028.20	HARNESS, I/P WRG .....
92	Y 6–SPD M/TRANS (ML9), A/C MAN CONT (C60), DAYTIME RUNNING LGT (T61)	12125008	1	1028.20	HARNESS, I/P WRG .....
92	Y 4–SPD A/TRANS (MD8), A/C AUTO ELEC CONT (C68), DAYTIME RUNNING LGT (T61)	12125814	1	1028.20	HARNESS, I/P WRG .....
92	Y 6–SPD M/TRANS (ML9), A/C AUTO ELEC CONT (C68), DAYTIME RUNNING LGT (T61)	12125816	1	1028.20	HARNESS, I/P WRG .....
93	Y 6–SPD M/TRANS (ML9), A/C AUTO ELEC CONT (C68), SIG & MKR LP (T90) (EXPORT)	12141441	1	1547.50	HARNESS, I/P WRG .....
93	Y 4–SPD A/TRANS (MD8), A/C AUTO ELEC CONT (C68), SIG & MKR LP (T90) (EXPORT)	12141442	1	1256.57	HARNESS, I/P WRG .....

© 2000 GENERAL MOTORS SERVICE PARTS OPERATIONS

2.480 BRACKET – CONNECTOR – HARNESS – WIRE, Chassis Wiring(Con't)

94	Y 4–SPD A/TRANS (M30), A/C AUTO ELEC CONT (C68), HDLP (T72) (EXPORT), RH RULE OF ROAD HDLP (T84) (EXPORT), LH RULE OF ROAD HDLP (T85) (EXPORT), SIG & MKR LP (T90) (EXPORT)	12130495	1		HARNESS, I/P WRG .....
94	Y 4–SPD A/TRANS (M30), A/C AUTO ELEC CONT (C68), HDLP (T72) (EXPORT), RH RULE OF ROAD HDLP (T84) (EXPORT), LH RULE OF ROAD HDLP (T85) (EXPORT), SIG & MKR LP (T90) (EXPORT), (1ST DES)	12141791	1		HARNESS, I/P WRG (TAGGED 0328) ...
94	Y 6–SPD M/TRANS (ML9), A/C AUTO ELEC CONT (C68), HDLP (T72) (EXPORT), RH RULE OF ROAD HDLP (T84) (EXPORT), LH RULE OF ROAD HDLP (T85) (EXPORT), SIG & MKR LP (T90) (EXPORT)	12141792	1		HARNESS, I/P WRG .....
95	Y 5.7P (LT1), 4–SPD A/TRANS (M30), A/C AUTO ELEC CONT (C68), HDLP (T72) (EXPORT), RH RULE OF ROAD HDLP (T84) (EXPORT), LH RULE OF ROAD HDLP (T85) (EXPORT), SIG & MKR LP (T90) (EXPORT), (EXC DAYTIME RUNNING LGT (T61)	12130396	1	1257.59	HARNESS, I/P WRG .....
95	Y 5.7P (LT1), 6–SPD M/TRANS (ML9), A/C MAN CONT (C60), DAYTIME RUNNING LGT (T61), (EXC HDLP (T72) (EXPORT), RH RULE OF ROAD HDLP (T84) (EXPORT), LH RULE OF ROAD HDLP (T65) (EXPORT), SIG & MKR LP (T90) (EXPORT)	12163701	1	1257.59	HARNESS, I/P WRG .....
95	Y 5.7P (LT1), 6–SPD M/TRANS (ML9), A/C AUTO ELEC CONT (C68), DAYTIME RUNNING LGT (T61), (EXC HDLP (T72) (EXPORT), RH RULE OF ROAD HDLP (T84) (EXPORT), LH RULE OF ROAD HDLP (T85) (EXPORT), SIG & MKR LP (T90) (EXPORT)	12163703	1	1257.59	HARNESS, I/P WRG .....
95	Y 5.7P (LT1), 6–SPD M/TRANS (ML9), A/C AUTO ELEC CONT (C68), HDLP (T72) (EXPORT), RH RULE OF ROAD HDLP (T84) (EXPORT), LH RULE OF ROAD HDLP (T85) (EXPORT), SIG & MKR LP (T90) (EXPORT), (EXC DAYTIME RUNNING LGT (T61)	12163704	1	1257.59	HARNESS, I/P WRG .....

© 2000 GENERAL MOTORS SERVICE PARTS OPERATIONS

2.480 BRACKET – CONNECTOR – HARNESS – WIRE, Chassis Wiring(Con't)

96	Y 4–SPD A/TRANS (M30), A/C AUTO ELEC CONT (C68), HDLP (T72) (EXPORT), RH RULE OF ROAD HDLP (T84) (EXPORT), LH RULE OF ROAD HDLP (T85) (EXPORT), SIG & MKR LP (T90) (EXPORT), (EXC DAYTIME RUNNING LGT (T61)	12130475	1	1257.59	HARNESS, I/P WRG .....
96	Y 5.7–5 (LT4), 6–SPD M/TRANS (ML9), A/C AUTO ELEC CONT (C68), HDLP (T72) (EXPORT), RH RULE OF ROAD HDLF (T84) (EXPORT), LH RULE OF ROAD HDLP (T85) (EXPORT), SIG & MKR LP (T90) (EXPORT), (EXC DAYTIME RUNNING LGT (T61)	12163715	1	1257.59	HARNESS, I/P WRG .....

2.559 BOLT – BRACKET – CLIP – COVER – INSULATOR – PLATE – RETAINER – SHIELD – SPACER – STRAP – STUD – WASHER, Chassis/Engine Wiring Harness

84–89	Y 5.7–8	14062552	1	1.12	BRACKET, ECM WRG HARN .....
90–91	Y 5.7–8 (L98)	14062552	1	1.12	BRACKET, ECM WRG HARN .....
84	Y	14066570	2	DISCON	BRACKET, ELEC CONT MDL HARN (TO ENG HD CVR) .....
84	Y	14057560	1	DISCON	BRACKET, ENG WRG HARN (TO CASE) .....
84–91	Y	14062511	AR	2.04	BRACKET, ENG WRG HARN (R/SI RR) .
84–85	Y	14062552	1	1.12	BRACKET, ENG WRG HARN (TO OIL PAN) .....
84–88	Y	14062599	AR	.68	BRACKET, ENG WRG HARN (ABOVE LH ENG MT) .....
84–88	Y	14073493	1	2.04	BRACKET, ENG WRG HARN (L/SI RR) ..
85–87	Y	14100810	1	DISCON	BRACKET, ENG WRG HARN (RH SI INT MANIF) .....
89–91	Y 5.7–8 (L98)	14062599	AR	.68	BRACKET, ENG WRG HARN (ABOVE LH ENG MT) .....
89–91	Y 5.7–8 (L98), 4–SPD A/TRANS (MD8)	14073493	1	2.04	BRACKET, ENG WRG HARN (L/SI RR) ..
89	Y M/TRNS	14104953	1	DISCON	BRACKET, ENG WRG HARN (L/SI RR) ..
90	Y 5.7J (LT5), A/C MAN CONT (C60), A/C AUTO ELEC CONT (C68), SOFT RIDE SUSP (FE1), HVY DUTY SUSP (FE7)	14104749	1	2.04	BRACKET, ENG WRG HARN (ALUM, LOC AT RR OF ENG) .....
90–91	Y 5.7J (LT5)	14104938	1	35.45	BRACKET, ENG WRG HARN (AT OXY & KNOCK SEN CABLES) (STEEL) (LWR LH SI OF BLK NEAR OIL PAN) .....
91–95	Y 5.7J (LT5)	14104749	1	2.04	BRACKET, ENG WRG HARN (ALUM, LOC AT RR OF ENG) .....
91–92	Y 5.7J (LT5)	14104941	1	12.90	BRACKET, ENG WRG HARN (TO OIL PAN) (03.682) .....
91	Y 5.7–8 (L98)	15664822	1	1.05	BRACKET, ENG WRG HARN (01.166) ..
92–95	Y 5.7J (LT5)	10098912	1	12.90	BRACKET, ENG WRG HARN (03.682) ..
92–95	Y 5.7P (LT1)	12553341	4	1.12	BRACKET, ENG WRG HARN .....
92–95	Y 5.7J (LT5)	14104938	1	35.45	BRACKET, ENG WRG HARN (STEEL) (LWR LH SI OF BLK NEAR OIL PAN) ..
96	Y	12553341	5	1.12	BRACKET, ENG WRG HARN (POS#RH–3, 6, 8, LH–6, 7) .....
89	Y A/C MAN CONT (C60), A/C AUTO ELEC CONT (C68), SOFT RIDE SUSP (FE1), HVY DUTY SUSP (FE7)	14104961	1	11.32	BRACKET, ENG WRG HARN SHLD ....

© 2000 GENERAL MOTORS SERVICE PARTS OPERATIONS

2.559 BOLT – BRACKET – CLIP – COVER – INSULATOR – PLATE – RETAINER – SHIELD – SPACER – STRAP – STUD – WASHER, Chassis/Engine Wiring Harness(Con't)

90–91	Y 5.7J (LT5), A/C MAN CONT (C60), A/C AUTO ELEC CONT (C68), SOFT RIDE SUSP (FE1), HVY DUTY SUSP (FE7)	14104961	1	11.32	BRACKET, ENG WRG HARN SHLD
92–95	Y 5.7J (LT5)	14104961	1	11.32	BRACKET, ENG WRG HARN SHLD
84–86	Y	14066531	LH	DISCON	BRACKET, FWD LP WRG HARN (TO FRT BPR IMPACT BAR)
84–86	Y	14066532	RH	DISCON	BRACKET, FWD LP WRG HARN (TO FRT BPR IMPACT BAR)
84–90	Y	14091207	LH	7.55	BRACKET, FWD LP WRG HARN (TO REINFORCEMENT OTR)
84–89	Y	14091208	RH	7.55	BRACKET, FWD LP WRG HARN (TO REINFORCEMENT OTR)
90	Y SOFT RIDE SUSP (FE1), H .D .SUSP (FE7)	14091208	RH	7.55	BRACKET, FWD LP WRG HARN (TO REINFORCEMENT OTR)
84–86	Y	14062523	1	DISCON	BRACKET, I/P WRG HARN
90–93	Y	10165378	1	DISCON	BRACKET, I/P WRG HARN
94–96	Y	10251214	1	6.03	BRACKET, I/P WRG HARN
84–96	Y	14066583	2	3.26	BRACKET, I/P WRG HARN DR LEAD
84–88	Y M/TRNS	14081179	1	DISCON	BRACKET, TBI HARNESS CLIP
88–89	Y A/C (C68)	09798835	1	1.20	CLIP, A .C. DA WIRE TO EVAP HSNG
84–93	Y 4–SPD A/TRANS (MD8)	08673068	2	1.82	CLIP, A/TRNS WRG HARN (04.197) (AC–DELCO #8673068)
90–91	Y 5.7J (LT5), A/C MAN CONT (C60), A/C AUTO ELEC CONT (C68), SOFT RIDE SUSP (FE1), HVY DUTY SUSP (FE7)	14104936	1	.94	CLIP, ENG WRG HARN (2 HOLES) (FRT CVR CYL CASE)
90–95	Y 5.7J (LT5)	14104937	1	.94	CLIP, ENG WRG HARN (1 HOLE) (OIL FILTER HSG)
92–95	Y 5.7J (LT5)	14104936	1	.94	CLIP, ENG WRG HARN (2 HOLES) (FRT CVR CYL CASE)
93–95	Y 5.7P (LT1)	01864022	1	.77	CLIP, ENG WRG HARN (1/2 DIA HARD STL)
93–94	Y 5.7P (LT1)	01864022	1	.77	CLIP, FWD LP WRG HARN (1/2 DIA HARD STL)
93–94	Y	03816659	AR	*.87	CLIP, FWD LP WRG HARN (7" ADJ, W/ROSEBUD FOR .25 DIA HOLE .031–.14 TH) (08.965) (STRAP)
94	Y 5.7J (LT5)	01864022	1	.77	CLIP, FWD LP WRG HARN (1/2 DIA HARD STL)
85	Y	09798835	1	1.20	CLIP, I/P WRG HARN
93–94	Y	01839906	1	*.13	CLIP, I/P WRG HARN (LARGE 3–5 WIRE) (08.965) (AC–DELCO #1839906)
93	Y	01864022	1	.77	CLIP, I/P WRG HARN (1/2 DIA HARD STL)
92–93	Y RECL FRT BKT ST (AQ9)	01864022	1	.77	CLIP, I/P WRG HARN EXTN HARN (1/2 DIA HARD STL)
94–95	Y	01864022	1	.77	CLIP, WRG HARN (BRK PRESS MOD VLV) (1/2 DIA HARD STL)
86–96	Y	14090618	1	7.05	PLATE, ECM WRG HARN GROM RET STUD (03.675)
92–96	Y	10086254	1	3.37	PLATE, ELEK BRK CONT WRG HARN GROM MT
90–96	Y	10086254	1	3.37	PLATE, ENG WRG HARN GROM BKG
84–87	Y	00480534	AR	*.84	RETAINER, PNL HOLE (DIA.250, THK .03–.30) (11.419)

© 2000 GENERAL MOTORS SERVICE PARTS OPERATIONS

2.559 BOLT – BRACKET – CLIP – COVER – INSULATOR – PLATE – RETAINER – SHIELD – SPACER – STRAP – STUD – WASHER, Chassis/Engine Wiring Harness(Con't)

93	Y 5.7P (LT1), 6–SPD M/TRANS (ML9), DIAGNOSTIC SYSTEM (BAK), A/C MAN CONT (C60)	12129021	4	1.52	RETAINER, ECM WRG HARN (BLACK) (32–WAY F) .....
93	Y 5.7P (LT1), 6–SPD M/TRANS (ML9), DIAGNOSTIC SYSTEM (BAK), A/C MAN CONT (C60)	12129022	4	1.52	RETAINER, ECM WRG HARN (CLEAR) (USE W/32–WAY CONN) .....
93	Y 5.7P (LT1), 6–SPD M/TRANS (ML9), DIAGNOSTIC SYSTEM (BAK), A/C MAN CONT (C60)	12129023	4	1.52	RETAINER, ECM WRG HARN (BLUE) (USE W/32–WAY CONN) .....
94	Y 5.7P (LT1)	12129021	4	1.52	RETAINER, ECM WRG HARN (BLACK) (32–WAY F) .....
94	Y 5.7P (LT1)	12129022	4	1.52	RETAINER, ECM WRG HARN (CLEAR) (USE W/32–WAY CONN) .....
94	Y 5.7P (LT1)	12129023	4	1.52	RETAINER, ECM WRG HARN (BLUE) (USE W/32–WAY CONN) .....
89–91	Y	12020833	1	*.73	RETAINER, ECM WRG HARN CONN (GRAY) (1" LONG) (PUSH–IN) .....
94–96	Y	12129030	2	2.50	RETAINER, ECM WRG HARN CONN (GRAY) (STRAIN RELIEF) .....
96	Y	12129021	4	1.52	RETAINER, ECM WRG HARN CONN (BLACK) (32–WAY F) .....
96	Y	12129022	4	1.52	RETAINER, ECM WRG HARN CONN (CLEAR) (USE W/32–WAY CONN) ...
96	Y	12129023	4	1.52	RETAINER, ECM WRG HARN CONN (BLUE) (USE W/32–WAY CONN) ....
96	Y	12129024	3	2.50	RETAINER, ECM WRG HARN CONN (RED) (USE W/32–WAY CONN) .....
96	Y	12129028	2	2.50	RETAINER, ECM WRG HARN CONN (GRAY) (32–WAY) .....
84–88	Y	14066575	1	DISCON	RETAINER, ENG WRG HARN .....
89–91	Y 5.7–8 (L98)	14104541	1	4.13	RETAINER, ENG WRG HARN .....
92–95	Y 5.7P (LT1)	14104541	1	4.13	RETAINER, ENG WRG HARN .....
96	Y	14104541	1	4.13	RETAINER, ENG WRG HARN .....
90–91	Y	12077996	1	.52	RETAINER, F/INJR WRG HARN CONN (02.535) .....
84	Y 5.7–8 (L83)	08917236	1	1.45	RETAINER, OXY SEN CONN .....
85–91	Y 5.7–8 (L98)	08917236	1	1.45	RETAINER, OXY SEN CONN .....
92–94	Y 5.7P (LT1), (EXC LEADED FUEL EMIS EXPORT (NM8)	08917236	1	1.45	RETAINER, OXY SEN CONN .....

6.512 MODULE – SPRING, Steering Wheel

90	Y	10158008	1	625.00	MODULE, STRG WHL INFL RST (IF REPLC 1990, COIL 26013854 MUST REPLC EXISTING COIL & MUST ALSO REPLC WHEEL USING 10201320) (14.865) (PROBE CONN IN OWN BOX) .....
91–93	Y	10158008	1	625.00	MODULE, STRG WHL INFL RST (PROBE CONN IN OWN BOX) (14.865) .....
94–96	Y F/SEAT INFL RST SYS (AK5)	16752392	1	625.00	MODULE, STRG WHL INFL RST (14.865) .....

7.629 BAG – BOLT – BRACKET – CARRIER – HOOK – NUT – PLATE – RETAINER – STRAP, Spare Wheel

88–89	Y67 (19I)	10135966	1	56.61	STRAP, LUGG & SPA WHL STOW (BLACK) .....
90–91	Y SPECIAL PERFORMANCE PKG (ZR1), (60I)	10135991	1	DISCON	STRAP, SPA WHL STOW (COGNAC) (15.222) .....

© 2000 GENERAL MOTORS SERVICE PARTS OPERATIONS

MICROFICHE INDEX

GROUPS 14.000 THRU 15.000

FICHE 11 OF 11

GROUP	DESCRIPTION	STARTING GRID LOCATION PARTS	ILLUSTRATIONS
–	GENERAL INFORMATION	1–A2	1–G2
–	ALPHABETICAL INDEX	1–B13	N.A.
14.000	INTERIOR TRIM – SEAT BELTS	11–A2	11–E2
15.000	REAR SEAT TRIM – CARPETS – YARDAGE	11–D2	11–H2
–	OUT OF FICHE CALLS	N.A.	11–M16

11–N1

7.629 BAG – BOLT – BRACKET – CARRIER – HOOK – NUT – PLATE – RETAINER – STRAP, Spare Wheel(Con't)

90–91	Y SPECIAL PERFORMANCE PKG (ZR1), (90I)	10135993	1	DISCON	STRAP, SPA WHL STOW (15.222)
90–91	Y SPECIAL PERFORMANCE PKG (ZR1), (22I)	10135994	1	56.62	STRAP, SPA WHL STOW (STEEL BLUE)
90	Y07 HVY DUTY SUSP (FE7), SPECIAL PERFORMANCE PKG (ZR1), (19I)	10135966	1	56.61	STRAP, SPA WHL STOW (BLACK)
91–92	Y07 SPECIAL PERFORMANCE PKG (ZR1), (19I)	10135966	1	56.61	STRAP, SPA WHL STOW (BLACK)
92–95	Y SPECIAL PERFORMANCE PKG (ZR1), (64I)	10175709	1	56.61	STRAP, SPA WHL STOW (BEIGE)
92–95	Y SPECIAL PERFORMANCE PKG (ZR1), (14I)	10175710	1	56.61	STRAP, SPA WHL STOW (GRAY)
93	Y07 SPECIAL PERFORMANCE PKG (ZR1), (10I), (19I)	10135966	1	56.61	STRAP, SPA WHL STOW (BLACK)
93	Y07 SPECIAL PERFORMANCE PKG (ZR1), (79I)	10199545	1	56.61	STRAP, SPA WHL STOW (RED)
93–95	Y07 SPECIAL PERFORMANCE PKG (ZR1), (70I)	10199586	1	56.61	STRAP, SPA WHL STOW (RED)
94–95	Y07 SPECIAL PERFORMANCE PKG (ZR1), (19I)	10135966	1	56.61	STRAP, SPA WHL STOW (BLACK)
96	Y07 GRAND SPORT EDITION (Z16), (19I)	10135966	1	56.61	STRAP, SPA WHL STOW (BLACK)

9.655 BRACKET – GRILLE – PLATE, Radio Speaker

90	Y (22I)	10172449	LH	DISCON	GRILLE, RDO FRT SPKR (09.650) (VEH W/L98 & BEFORE VIN 116467 OR W/LT5 & BEFORE VIN 800158 MUST USE SILL PLATE 10172439, VEH W/SAME VINS & LATER DO NOT REQ PLATE)
90	Y (22I)	10172450	RH	DISCON	GRILLE, RDO FRT SPKR (09.650) (VEH W/L98 & BEFORE VIN 116467 OR W/LT5 & BEFORE VIN 800158 MUST USE SILL PLATE 10172440, VEH W/SAME VINS & LATER DO NOT REQ PLATE)
90	Y (60I)	10172451	LH	35.00	GRILLE, RDO FRT SPKR (09.650) (VEH W/L98 & BEFORE VIN 116467 OR W/LT5 & BEFORE VIN 800158 MUST USE SILL PLATE 10172441, VEH W/SAME VINS & LATER DO NOT REQ PLATE)
90	Y (60I)	10172452	RH	DISCON	GRILLE, RDO FRT SPKR (09.650) (VEH W/L98 & BEFORE VIN 116467 OR W/LT5 & BEFORE VIN 800158 MUST USE SILL PLATE 10172442, VEH W/SAME VINS & LATER DO NOT REQ PLATE)
90	Y (73I)	10172453	LH	DISCON	GRILLE, RDO FRT SPKR (09.650) (VEH W/L98 & BEFORE VIN 116467 OR W/LT5 & BEFORE VIN 300158 MUST USE SILL PLATE 10172443, VEH W/SAME VINS & LATER DO NOT REQ PLATE)
90	Y (73I)	10172454	RH	DISCON	GRILLE, RDO FRT SPKR (09.650)

© 2000 GENERAL MOTORS SERVICE PARTS OPERATIONS

9.655 BRACKET – GRILLE – PLATE, Radio Speaker(Con't)

90	Y (90I)	10172455	LH	DISCON	GRILLE, RDO FRT SPKR (09.650) (VEH W/L98 & BEFORE VIN 116467 OR W/LT5 & BEFORE VIN 800158 MUST USE SILL PLATE 10172445, VEH W/SAME VINS & LATER DO NOT REQ PLATE)
90	Y (90I)	10172456	RH	DISCON	GRILLE, RDO FRT SPKR (09.650) (VEH W/L98 & BEFORE VIN 116467 OR W/LT5 & BEFORE VIN 800158 MUST USE SILL PLATE 10172446, VEH W/SAME VINS & LATER DO NOT REQ PLATE)
90	Y (19I)	10220615	LH	29.75	GRILLE, RDO FRT SPKR (09.650) (VEH W/L98 & BEFORE VIN 116467 OR W/LT5 & BEFORE VIN 800158 MUST USE SILL PLATE 10172437, VEH W/SAME VINS & LATER DO NOT REQ PLATE)
90	Y (19I)	10220616	RH	29.75	GRILLE, RDO FRT SPKR (09.650) (VEH W/L98 & BEFORE VIN 116467 OR W/LT5 & BEFORE VIN 800158 MUST USE SILL PLATE 10172438, VEH W/SAME VINS & LATER DO NOT REQ PLATE)
91	Y (22I)	10172449	LH	DISCON	GRILLE, RDO FRT SPKR (BLUE) (09.650)
91	Y (22I)	10172450	RH	DISCON	GRILLE, RDO FRT SPKR (BLUE) (09.650)
91	Y (60I)	10172451	LH	35.00	GRILLE, RDO FRT SPKR (COGNAC) (09.650)
91	Y (60I)	10172452	RH	DISCON	GRILLE, RDO FRT SPKR (COGNAC) (09.650)
91–92	Y (73I)	10172453	LH	DISCON	GRILLE, RDO FRT SPKR (RED) (09.650)
91–92	Y (73I)	10172454	RH	DISCON	GRILLE, RDO FRT SPKR (RED) (09.650)
91	Y (90I)	10172455	LH	DISCON	GRILLE, RDO FRT SPKR (GRAYSMOKE) (09.650)
91	Y (90I)	10172456	RH	DISCON	GRILLE, RDO FRT SPKR (GRAYSMOKE) (09.650)
91–93	Y (19I)	10220615	LH	29.75	GRILLE, RDO FRT SPKR (BLACK) (09.650)
91–93	Y (19I)	10220616	RH	29.75	GRILLE, RDO FRT SPKR (BLACK) (09.650)
92–93	Y (10I)	10220615	LH	29.75	GRILLE, RDO FRT SPKR (BLACK) (09.650)
92–93	Y (10I)	10220616	RH	29.75	GRILLE, RDO FRT SPKR (BLACK) (09.650)
92–93	Y (64I)	10220617	LH	DISCON	GRILLE, RDO FRT SPKR (BEIGE) (09.650)
92–93	Y (64I)	10220618	RH	29.75	GRILLE, RDO FRT SPKR (BEIGE) (09.650)
92–93	Y (14I)	10220619	LH	21.05	GRILLE, RDO FRT SPKR (GRAY) (09.650)
92–93	Y (14I)	10220620	RH	20.65	GRILLE, RDO FRT SPKR (GRAY) (09.650)
93	Y (79I)	10220623	LH	21.22	GRILLE, RDO FRT SPKR (RED) (09.650) (AC–DELCO #10220623)
93	Y (79I)	10220624	RH	22.00	GRILLE, RDO FRT SPKR (RED) (09.650)
93	Y (70I)	10220625	LH	28.20	GRILLE, RDO FRT SPKR (RED) (09.650)

© 2000 GENERAL MOTORS SERVICE PARTS OPERATIONS

9.655 BRACKET – GRILLE – PLATE, Radio Speaker(Con't)

93	Y (70I)	10220626	RH	28.20	GRILLE, RDO FRT SPKR (RED) (09.650)
94–96	Y (19I)	10238587	LH	31.50	GRILLE, RDO FRT SPKR (BLACK) (09.650)
94–96	Y (19I)	10238588	RH	31.50	GRILLE, RDO FRT SPKR (BLACK) (09.650)
94–96	Y (64I)	10238589	LH	DISCON	GRILLE, RDO FRT SPKR (BEIGE) (09.650)
94–96	Y (64I)	10238590	RH	31.50	GRILLE, RDO FRT SPKR (BEIGE) (09.650)
94–96	Y (14I)	10238591	LH	31.50	GRILLE, RDO FRT SPKR (GRAY) (09.650)
94–96	Y (14I)	10238592	RH	31.50	GRILLE, RDO FRT SPKR (GRAY) (09.650)
94–96	Y (70I)	10238593	LH	31.50	GRILLE, RDO FRT SPKR (RED) (09.650)
94–96	Y (70I)	10238594	RH	DISCON	GRILLE, RDO FRT SPKR (RED) (09.650)
90–96	Y STEREO CASSETTE (UM6)	10098450	RH	5.55	PLATE, RDO FRT SPKR MT
90–96	Y STEREO CASSETTE (UM6)	10098451	LH	5.55	PLATE, RDO FRT SPKR MT
90–96	Y CASSETTE STEREO (UU8), CASSETTE/CD PLAYER (U1F)	10146468	2	5.55	PLATE, RDO SPKR NA (GOLD SERIES)
90–96	Y STEREO CASSETTE (UM6)	14057530	2	8.20	PLATE, RDO SPKR NA (09.665)

9.665 BRACKET – GASKET – GRILLE – HOUSING – INSULATOR – NUT – PLATE – REINFORCEMENT – SEAL – SPEAKER, Radio Auxiliary Speakers

84–87	Y07	14057533	LH	37.25	GRILLE, RDO RR SPKR (PAINT TO MATCH)
84–87	Y07	14057534	RH	37.25	GRILLE, RDO RR SPKR (PAINT TO MATCH)
86–89	Y67	14092707	2	DISCON	GRILLE, RDO RR SPKR
88–89	Y07	10054605	LH	33.00	GRILLE, RDO RR SPKR
88–89	Y07	10054606	RH	33.00	GRILLE, RDO RR SPKR
90–91	Y07 (22I)	10132937	LH	DISCON	GRILLE, RDO RR SPKR (BLUE)
90–91	Y07 (22I)	10132938	RH	DISCON	GRILLE, RDO RR SPKR (BLUE)
90–91	Y07 (60I)	10132939	LH	DISCON	GRILLE, RDO RR SPKR (COGNAC)
90–91	Y07 (60I)	10132940	RH	DISCON	GRILLE, RDO RR SPKR (COGNAC)
90–92	Y07 (73I)	10132941	LH	DISCON	GRILLE, RDO RR SPKR (RED)
90–92	Y07 (73I)	10132942	RH	22.05	GRILLE, RDO RR SPKR (RED)
90–91	Y07 (90I)	10132943	LH	DISCON	GRILLE, RDO RR SPKR (GRAY)
90–91	Y07 (90I)	10132944	RH	DISCON	GRILLE, RDO RR SPKR (GRAY)
90–93	Y07 (10I), (19I)	10219851	LH	DISCON	GRILLE, RDO RR SPKR (BLACK)
90–93	Y07 (10I), (19I)	10219852	RH	DISCON	GRILLE, RDO RR SPKR (BLACK)
90–91	Y67 (22I)	10123083	2	DISCON	GRILLE, RDO RR SPKR (BLUE)
90–91	Y67 (60I)	10123085	2	DISCON	GRILLE, RDO RR SPKR (COGNAC)
90–92	Y67 (73I)	10123087	2	DISCON	GRILLE, RDO RR SPKR (RED)
90–91	Y67 (90I)	10123089	2	DISCON	GRILLE, RDO RR SPKR (GRAY)
92–93	Y07 (64I)	10219853	LH	30.00	GRILLE, RDO RR SPKR (BEIGE)
92–93	Y07 (64I)	10219854	RH	24.73	GRILLE, RDO RR SPKR (BEIGE)
92–93	Y07 (14I)	10219855	LH	27.68	GRILLE, RDO RR SPKR (GRAY)
92–93	Y07 (14I)	10219856	RH	28.72	GRILLE, RDO RR SPKR (GRAY)
92–93	Y67 (64I)	10175628	2	33.25	GRILLE, RDO RR SPKR (BEIGE)
92–93	Y67 (10I), (19I)	10219863	2	DISCON	GRILLE, RDO RR SPKR (BLACK)
92–93	Y67 (14I)	10219865	2	28.98	GRILLE, RDO RR SPKR (GRAY)
93	Y07 (79I)	10219859	LH	28.20	GRILLE, RDO RR SPKR (RED)
93	Y07 (79I)	10219860	RH	28.20	GRILLE, RDO RR SPKR (RED)
93	Y07 (70I)	10219861	LH	DISCON	GRILLE, RDO RR SPKR (RED)
93	Y07 (70I)	10219862	RH	28.20	GRILLE, RDO RR SPKR (RED)

© 2000 GENERAL MOTORS SERVICE PARTS OPERATIONS

9.665 BRACKET – GASKET – GRILLE – HOUSING – INSULATOR – NUT – PLATE – REINFORCEMENT – SEAL – SPEAKER, Radio Auxiliary Speakers(Con't)

93	Y67 (79I)	10219866	2	23.05	GRILLE, RDO RR SPKR (RED)
94–95	Y07 (19I)	10238611	LH	22.05	GRILLE, RDO RR SPKR (BLACK)
94–96	Y07 (19I)	10238612	RH	28.50	GRILLE, RDO RR SPKR (BLACK)
94–96	Y07 (64I)	10238613	LH	28.50	GRILLE, RDO RR SPKR (BEIGE)
94–96	Y07 (64I)	10238614	RH	28.50	GRILLE, RDO RR SPKR (BEIGE)
94–96	Y07 (14I)	10238615	LH	28.50	GRILLE, RDO RR SPKR (GRAY)
94–96	Y07 (14I)	10238616	RH	28.50	GRILLE, RDO RR SPKR (GRAY)
94–95	Y07 (70I)	10238617	LH	28.50	GRILLE, RDO RR SPKR (RED)
94–95	Y07 (70I)	10238618	RH	28.50	GRILLE, RDO RR SPKR (RED)
94–96	Y67 (19I)	10238620	2	28.50	GRILLE, RDO RR SPKR (BLACK)
94–96	Y67 (64I)	10238621	2	28.50	GRILLE, RDO RR SPKR (BEIGE)
94–96	Y67 (14I)	10238622	2	28.50	GRILLE, RDO RR SPKR (GRAY)
94–95	Y67 (70I)	10238623	2	28.50	GRILLE, RDO RR SPKR (RED)
96	Y07 GRAND SPORT EDITION (Z16), (70I)	10238611	LH	22.05	GRILLE, RDO RR SPKR (BLACK)
96	Y07 GRAND SPORT EDITION (Z16), (70I)	10238612	RH	28.50	GRILLE, RDO RR SPKR (BLACK)
96	Y07 (70I), (EXC GRAND SPORT EDITION (Z16)	10238617	LH	28.50	GRILLE, RDO RR SPKR (RED)
96	Y07 (70I), (EXC GRAND SPORT EDITION (Z16)	10238618	RH	28.50	GRILLE, RDO RR SPKR (RED)
96	Y67 (70I), (EXC GRAND SPORT EDITION (Z16)	10238623	2	28.50	GRILLE, RDO RR SPKR (RED)
84–89	Y UQ4 (BOSE)	14049217	2	33.25	GRILLE, SI FRT DR SPKR (PAINT TO MATCH)
90–96	Y07	10193609	LH	24.41	HOUSING, RDO RR SPKR (12.981)
90–96	Y07	10193610	RH	24.41	HOUSING, RDO RR SPKR (12.981)
90–96	Y67	10218349	1	31.68	HOUSING, RDO RR SPKR (AC–DELCO #10218349)
90–91	Y	09415253	AR	.33	NUT, RDO FRT S/D SPKR GRL
93–96	Y	09415253	7	.33	NUT, RDO FRT S/D SPKR GRL
84–86	Y STEREO (UM6, UM7)	14064578	2	1.45	SEAL, DR RADIO SPKR OPG CVR
87–89	Y (EXC UQ4 BOSE)	14064578	2	1.45	SEAL, DR RADIO SPKR OPG CVR

9.743 BEZEL – CARRIER – CASE – PLATE – SCREW, Instrument Cluster

Note: FOR 1985–1991 USAGE REFER TO INSTRUMENT CLUSTER CHART GRP 9.735

90–91	Y FOR MOD APPL & POA SEE INST CSTR CHT	25084950	1	49.02	BEZEL, INST CSTR (AC–DELCO #25084950)
92	Y 5.7J (LT5), ELEK GA CSTR (U52), (EXC MODIFICATION–NOISE CONTROL (B4H) (EXPORT)	25084950	1	49.02	BEZEL, INST CSTR (AC–DELCO #25084950)
92–93	Y 5.7P (LT1), ELEK GA CSTR (U52)	25084950	1	49.02	BEZEL, INST CSTR (AC–DELCO #25084950)
93	Y 5.7J (LT5), ELEK GA CSTR (U52)	25084950	1	49.02	BEZEL, INST CSTR (AC–DELCO #25084950)
95–96	Y 5.7P (LT1), ELEK GA CSTR (U52), (EXC SPEEDO (U19) (EXPORT)	25084950	1	49.02	BEZEL, INST CSTR (AC–DELCO #25084950)
96	Y 5.7–5 (LT4), ELEK GA CSTR (U52)	25084950	1	49.02	BEZEL, INST CSTR (AC–DELCO #25084950)
90–92	Y	10086247	1	14.50	CARRIER, INST (UPR) (10.230)
93–96	Y SOFT RIDE SUSP (FE1), HVY DUTY SUSP (FE7)	10086247	1	14.50	CARRIER, INST (10.230)
84–85	Y	25083758	1	78.04	CASE, CSTR CNSL (**VPI 1–877–846–8243)
86–89	Y FOR MOD APPL & POA SEE INST CSTR CHT	25083758	1	78.04	CASE, CSTR (**VPI 1–877–846–8243)

© 2000 GENERAL MOTORS SERVICE PARTS OPERATIONS

9.743 BEZEL – CARRIER – CASE – PLATE – SCREW, Instrument Cluster(Con't)

90-91	Y	25088424	1	15.00	CASE, DRVR INFO DISPLAY (AC-DELCO #25088424)
84-85	Y	14047529	1	DISCON	PLATE, CSTR TR
86-89	Y	14078656	1	86.50	PLATE, CSTR TR
90-96	Y	10253257	1	36.00	PLATE, I/P CSTR TR

10.219 BOLT – CLIP – COVER – RETAINER – SPRING – SUPPORT, Windshield Sunshade

92-96	Y	14081021	4	*1.25	BOLT, S/S SUPT (TORX HD 8X1.25X20) (08.913)
89-96	Y	10219601	LH	6.40	COVER, S/S SUPT TR
89-96	Y	10219602	RH	6.40	COVER, S/S SUPT TR
84-96	Y	14060215	2	.70	RETAINER, S/S
84-96	Y	14060216	2	1.30	SPRING, S/S
89-96	Y	10198727	LH	91.72	SUPPORT, S/S
89-96	Y	10198728	RH	91.72	SUPPORT, S/S

10.230 BRACE – BRACKET – INSULATOR – NUT – PANEL – PLATE – REINFORCEMENT – RETAINER – SHIM – SUPPORT, Instrument Panel

84-89	Y	14046649	1	DISCON	BRACE, I/P LWR
84-89	Y	14047477	2	DISCON	BRACE, I/P LWR
89-92	Y	10085905	LH	DISCON	BRACE, I/P LWR
89-92	Y	10085906	RH	DISCON	BRACE, I/P LWR
84-89	Y	14060213	LH	DISCON	BRACE, I/P REINF
84-89	Y	14060214	RH	DISCON	BRACE, I/P REINF
84-85	Y	14046644	LH	DISCON	BRACE, I/P UPR
84-89	Y	14049198	RH	DISCON	BRACE, I/P UPR
86-89	Y	14078645	LH	DISCON	BRACE, I/P UPR
90-96	Y	10085903	LH	3.60	BRACE, I/P UPR
84-94	Y	14104971	1	2.70	BRACKET, I/P INSL
84-85	Y	14046650	1	DISCON	BRACKET, I/P REINF
86-89	Y	14078646	1	DISCON	BRACKET, I/P REINF
89-96	Y	10085902	1	3.60	BRACKET, I/P REINF
84-89	Y	14047445	LH	DISCON	BRACKET, I/P UPR
84-89	Y	14047446	RH	DISCON	BRACKET, I/P UPR
90-96	Y	10086013	LH	12.90	BRACKET, I/P UPR
90-93	Y	10137758	RH	DISCON	BRACKET, I/P UPR
94-96	Y	10251278	LH	3.60	BRACKET, I/P UPR T/PNL
84-89	Y	10125970	LH	32.50	INSULATOR, I/P (TRIM AS REQ)
84-89	Y	14051132	RH	67.20	INSULATOR, I/P
86-89	Y	10045697	1	DISCON	INSULATOR, I/P (WRG HARN FUSE)
90-96	Y	03899572	1	4.98	INSULATOR, I/P (09.260)
94-96	Y	10077470	1	3.21	INSULATOR, I/P (12.810)
90-93	Y	10086210	RH	29.60	PANEL, I/P LWR TR (PAINT TO MATCH)
90	Y 6-SPD M/TRANS (ML9), (73I)	10132978	LH	100.50	PANEL, I/P LWR TR (FLAME RED)
90	Y 6-SPD M/TRANS (ML9), (90I)	10132979	LH	100.50	PANEL, I/P LWR TR (MED GRAYSMOKE)
90	Y 4-SPD A/TRANS (MD8), (73I)	10132983	LH	100.50	PANEL, I/P LWR TR (FLAME RED)
90	Y 4-SPD A/TRANS (MD8), (90I)	10132984	LH	100.50	PANEL, I/P LWR TR (MED GRAYSMOKE)
90	Y 6-SPD M/TRANS (ML9), (19I)	10193746	1	133.30	PANEL, I/P LWR TR (BLACK)
90	Y 6-SPD M/TRANS (ML9), (22I)	10193747	1	133.30	PANEL, I/P LWR TR (BLUE)
90	Y 6-SPD M/TRANS (ML9), (60I)	10193748	1	133.30	PANEL, I/P LWR TR (COGNAC)
90	Y 3-SPD A/TRANS (MD9), (22I)	10193753	1	133.30	PANEL, I/P LWR TR (BLUE)
90	Y 3-SPD A/TRANS (MD9), 6-SPD M/TRANS (ML9), (60I)	12523669	1	DISCON	PANEL, I/P LWR TR (10.252)

© 2000 GENERAL MOTORS SERVICE PARTS OPERATIONS

10.230 BRACE – BRACKET – INSULATOR – NUT – PANEL – PLATE – REINFORCEMENT – RETAINER – SHIM – SUPPORT, Instrument Panel(Con't)

90	Y 3–SPD A/TRANS (MD9), 6–SPD M/TRANS (ML9), (90I)	12523671	1	DISCON	PANEL, I/P LWR TR (GRAY) (10.252)
90–91	Y 4–SPD A/TRANS (MD8), (19I)	12523674	1	DISCON	PANEL, I/P LWR TR (CUT HOLES FOR LAP DUCTS AS REQ) (BLACK)
90–91	Y 6–SPD M/TRANS (ML9), (19I)	12523674	1	DISCON	PANEL, I/P LWR TR (BLACK)
91	Y 6–SPD M/TRANS (ML9), (73I)	10132978	LH	100.50	PANEL, I/P LWR TR (HAS HOLES FOR LAP DUCTS) (RED)
91	Y 6–SPD M/TRANS (ML9), (90I)	10132979	LH	100.50	PANEL, I/P LWR TR (HAS HOLES FOR LAP DUCTS) (GRAY)
91	Y 4–SPD A/TRANS (MD8), (73I)	10132983	LH	100.50	PANEL, I/P LWR TR (HAS HOLES FOR LAP DUCTS) (RED)
91	Y 4–SPD A/TRANS (MD8), (90I)	10132984	LH	100.50	PANEL, I/P LWR TR (HAS HOLES FOR LAP DUCTS) (GRAY)
91	Y 6–SPD M/TRANS (ML9), (19I)	10193746	1	133.30	PANEL, I/P LWR TR (CUT HOLES FOR LAP DUCTS AS REQ) (BLACK)
91	Y 6–SPD M/TRANS (ML9), (22I)	10193747	1	133.30	PANEL, I/P LWR TR (CUT HOLES FOR LAP DUCTS AS REQ) (BLUE)
91	Y 6–SPD M/TRANS (ML9), (60I)	10193748	1	133.30	PANEL, I/P LWR TR (CUT HOLES FOR LAP DUCTS AS REQ) (COGNAC)
91	Y 4–SPD A/TRANS (MD8), (22I)	10193753	1	133.30	PANEL, I/P LWR TR (CUT HOLES FOR LAP DUCTS AS REQ) (BLUE)
91	Y 4–SPD A/TRANS (MD8), 6–SPD M/TRANS (ML9), (60I)	12523669	1	DISCON	PANEL, I/P LWR TR (CUT HOLES FOR LAP DUCTS AS REQ. D) (MED COGNAC) (10.252)
91	Y 4–SPD A/TRANS (MD8), 6–SPD M/TRANS (ML9), (73I)	12523670	1	DISCON	PANEL, I/P LWR TR (CUT HOLES FOR LAP DUCTS AS REQ) (RED) (10.252)
91	Y 4–SPD A/TRANS (MD8), 6–SPD M/TRANS (ML9), (90I)	12523671	1	DISCON	PANEL, I/P LWR TR (CUT HOLES FOR LAP DUCTS AS REQ) (GRAY) (10.252)
92–93	Y 6–SPD M/TRANS (ML9), (10I), (19I)	10193746	LH	133.30	PANEL, I/P LWR TR (BLACK)
92	Y (73I)	12523670	LH	DISCON	PANEL, I/P LWR TR (RED) (10.252)
92–93	Y (64I)	12523672	LH	DISCON	PANEL, I/P LWR TR (BEIGE)
92–93	Y 4–SPD A/TRANS (MD8), (14I)	12523673	LH	DISCON	PANEL, I/P LWR TR (GRAY)
92–93	Y 4–SPD A/TRANS (MD8), (10I), (19I)	12523674	LH	DISCON	PANEL, I/P LWR TR (BLACK)
92–93	Y 6–SPD M/TRANS (ML9), (10I), (19I)	12523674	1	DISCON	PANEL, I/P LWR TR (BLACK)
93	Y 4–SPD A/TRANS (MD8), 6–SPD M/TRANS (ML9), (79I)	12523675	LH	DISCON	PANEL, I/P LWR TR (RED)
93	Y 4–SPD A/TRANS (MD8), 6–SPD M/TRANS (ML9), (70I)	12523676	LH	DISCON	PANEL, I/P LWR TR (RED)
94	Y (64I)	10256832	RH	126.80	PANEL, I/P LWR TR (BEIGE) (MAY NEED TO ENLARGE 7MM HOLE & 10X7.6MM SLOT AT RH RR OF PNL TO OBTAIN PROPER FIT)
94	Y (70I)	10256834	RH	126.80	PANEL, I/P LWR TR (RED) (MAY NEED TO ENLARGE 7MM HOLE & 10X7.6MM SLOT AT RH RR OF PNL TO OBTAIN PROPER FIT)
94	Y (14I)	10256836	RH	126.80	PANEL, I/P LWR TR (GRAY) (MAY NEED TO ENLARGE 7MM HOLE & 10X7.6MM SLOT AT RH RR OF PNL TO OBTAIN PROPER FIT)
94	Y (19I)	10256838	RH	126.80	PANEL, I/P LWR TR (BLACK) (MAY NEED TO ENLARGE 7MM HOLE & 10X7.6MM SLOT AT RH RR OF PNL TO OBTAIN PROPER FIT)
94–96	Y (14I)	10266023	LH	133.30	PANEL, I/P LWR TR (GRAY)

© 2000 GENERAL MOTORS SERVICE PARTS OPERATIONS

10.230 BRACE – BRACKET – INSULATOR – NUT – PANEL – PLATE – REINFORCEMENT – RETAINER – SHIM – SUPPORT, Instrument Panel(Con't)

94–96	Y (19I)	10268024	LH	126.80	PANEL, I/P LWR TR (BLACK)
94–96	Y (64I)	10268025	LH	133.30	PANEL, I/P LWR TR (BEIGE)
94–96	Y (70I)	10268026	LH	133.30	PANEL, I/P LWR TR (RED)
95–96	Y (64I)	10256832	RH	126.80	PANEL, I/P LWR TR (BEIGE)
95–96	Y (70I)	10256834	RH	126.80	PANEL, I/P LWR TR (RED)
95–96	Y (14I)	10256836	RH	126.80	PANEL, I/P LWR TR (GRAY)
95–96	Y (19I)	10256838	RH	126.80	PANEL, I/P LWR TR (BLACK)
84–85	Y	14046643	1	DISCON	PANEL, INST
86–89	Y	10064350	1	DISCON	PANEL, INST
90–91	Y	10167108	1	175.50	PANEL, INST
92–93	Y	10167108	1	175.50	PANEL, INST
94–96	Y	10285922	1	166.90	PANEL, INST
84–92	Y 4–SPD A/TRANS (MD8), (1ST DES)	14046622	1	DISCON	PLATE, I/P LWR BRKT STUD (1ST DESIGN HAS TWO 20MM STUDS)
84–88	Y M/TRNS	14046742	1	DISCON	PLATE, I/P LWR BRKT STUD
89–92	Y 6–SPD M/TRANS (ML9)	14104930	1	DISCON	PLATE, I/P LWR BRKT STUD
92	Y 4–SPD A/TRANS (MD8), (2ND DES)	10215425	1	13.80	PLATE, I/P LWR BRKT STUD (2ND DESIGN HAS NO STUDS)
93	Y 4–SPD A/TRANS (MD8)	10215425	1	13.80	PLATE, I/P LWR BRKT STUD
94–96	Y 4–SPD A/TRANS (M3C)	10215425	1	13.80	PLATE, I/P LWR BRKT STUD
84–89	Y	14092605	1	DISCON	REINFORCEMENT, I/P CTR
90–96	Y	10086173	1	9.30	REINFORCEMENT, I/P CTR LWR SUPT
84–89	Y	14047475	RH	DISCON	SUPPORT, I/P CTR
89–96	Y	10086085	1	12.90	SUPPORT, I/P CTR LWR
89–93	Y	10175530	1	25.80	SUPPORT, I/P LWR T/PNL

10.235 ABSORBER – BOLSTER – BOLT – BRACE – BRACKET – CARPET – CLIP – INSULATOR – PAD – REINFORCEMENT – SEAL, Instrument Panel Pad

90–94	Y	10259399	1	7.70	BRACE, I/P DRVR KNEE BOLS INR BRKT
95–96	Y	10259399	1	7.70	BRACE, I/P DRVR KNEE BOLS INR BRKT
90–93	Y	10251817	1	8.70	BRACKET, I/P DRVR KNEE BOLS CTR
94–96	Y	10251817	1	8.70	BRACKET, I/P DRVR KNEE BOLS CTR
89–90	Y	10175531	LH	DISCON	BRACKET, I/P DRVR KNEE BOLS INR (10.230)
91–93	Y	10211797	1	DISCON	BRACKET, I/P DRVR KNEE BOLS INR
94–96	Y	10250909	1	19.30	BRACKET, I/P DRVR KNEE BOLS INR
90–92	Y	10085943	LH	27.90	BRACKET, I/P DRVR KNEE BOLS OTR (10.230)
93–96	Y	10085943	1	27.90	BRACKET, I/P DRVR KNEE BOLS OTR (10.230)
86–89	Y	14078662	2	DISCON	BRACKET, I/P LWR TR PAD (10.230)
89–90	Y	10175532	RH	DISCON	BRACKET, I/P PASS KNEE BOLS INR (10.230)
91–93	Y	10175591	1	DISCON	BRACKET, I/P PASS KNEE BOLS INR
94–96	Y	10250910	1	19.30	BRACKET, I/P PASS KNEE BOLS INR
90–92	Y	10085944	RH	DISCON	BRACKET, I/P PASS KNEE BOLS OTR
93	Y	10085944	1	DISCON	BRACKET, I/P PASS KNEE BOLS OTR
94–96	Y	10251492	1	27.90	BRACKET, I/P PASS KNEE BOLS OTR

© 2000 GENERAL MOTORS SERVICE PARTS OPERATIONS

10.695 BOLT – EXTENSION – GUARD – INSULATOR – PANEL – RETAINER – RIVET – SEALING STRIP, Door Opening

90–95	Y SPECIAL PERFORMANCE PKG (ZR1)	10175533	LH	24.26	EXTENSION, FRT S/D OPG FIN PNL RR (12.942)
90–95	Y SPECIAL PERFORMANCE PKG (ZR1)	10175534	RH	23.49	EXTENSION, FRT S/D OPG FIN PNL RR (12.942)
84–92	Y	10287792	LH	115.94	PANEL, FRT S/D OPG FIN (12.942) (ADD 16 MM X 48.5 MM SLOT FOR DOOR PIN LOCATOR USING OUTLINE MOLDED INTO PART FOR SLOT LOC)
84–92	Y	10287793	RH	111.87	PANEL, FRT S/D OPG FIN (12.942) (ADD 16MM X 46.5MM SLOT FOR DR PIN LOCATOR, USE OUTLINE MOLDED INTO PART FOR SLOT LOC)
93–96	Y	10287792	LH	115.94	PANEL, FRT S/D OPG FIN (12.942)
93–96	Y	10287793	RH	111.87	PANEL, FRT S/D OPG FIN (12.942)
88–96	Y07	08731909	2	*.40	RETAINER, FLR PNL RR CPT SUPT (FULL FLDG)
85–96	Y	20032850	2	*.64	RETAINER, FRT S/D OPG FIN PNL (PUSH IN) (14.683)
84–96	Y	08731909	4	*.40	RETAINER, FRT S/D WDO FRT W/STR RET (PUSH IN) (LWR) (FULL FLDG)
84–96	Y	20540336	2	.32	RETAINER, FRT S/D WDO FRT W/STR RET (PUSH IN) (UPR) (PAINT TO MATCH) (FITS .18 HOLE, .7 LG, .43 OD, NYLON) (14.630)

10.710 BOLT – GUARD – RETAINER – SEALING STRIP – WEATHERSTRIP, Front Door Window Glass Channel (Outer & Inner)

89–95	Y67 AUX RF (CC2)	10137767	10	.80	BOLT, FRT S/D WDO RR W/STR RET (M4.2X1.41X16) (M4.2 X 1.41 X 16)
89–96	Y67 AUX RF (CC2)	10137780	2	3.30	BOLT, FRT S/D WDO UPR FRT W/STR
89–96	Y67 AUX RF (CC2)	10137767	10	.80	BOLT, FRT S/D WDO UPR FRT W/STR RET (M4.2 X 1.41 X 16)
84–96	Y	14049243	LH	28.73	RETAINER, FRT S/D WDO FRT W/STR (12.810)
84–96	Y	14049244	RH	28.73	RETAINER, FRT S/D WDO FRT W/STR (12.810)
84–95	Y07	08731909	AR	*.40	RETAINER, FRT S/D WDO INR S/STR RR FIL (FULL FLDG) (10.695)
86–96	Y67	14092709	LH	54.60	RETAINER, FRT S/D WDO RR W/STR (POSN #2) (14.260)
86–96	Y67	14092710	RH	54.60	RETAINER, FRT S/D WDO RR W/STR (POSN #2) (14.260)
87–96	Y67	20540336	4	.32	RETAINER, FRT S/D WDO RR W/STR (POS #1) (PAINT TO MATCH) (FITS .18 HOLE, .7 LG, .43 OD, NYLON) (14.630)
89–96	Y67 AUX RF (CC2)	10123053	LH	36.87	RETAINER, FRT S/D WDO RR W/STR (13.346)
89–96	Y67 AUX RF (CC2)	10123054	RH	36.87	RETAINER, FRT S/D WDO RR W/STR (13.346)
91–95	Y67	08731909	2	DISCON	RETAINER, FRT S/D WDO RR W/STR (LWR) (FULL FLDG) (10.695)
86–96	Y67	14092711	LH	53.10	RETAINER, FRT S/D WDO UPR FRT W/STR (14.060)
86–96	Y67	14092712	RH	53.10	RETAINER, FRT S/D WDO UPR FRT W/STR (14.060)

© 2000 GENERAL MOTORS SERVICE PARTS OPERATIONS

10.710 BOLT – GUARD – RETAINER – SEALING STRIP – WEATHERSTRIP, Front Door Window Glass Channel (Outer & Inner)(Con't)

87–96	Y	20540336	2	.32	RETAINER, FRT S/D WDO UPR FRT W/STR (PAINT TO MATCH) (FITS .18 HOLE, .7 LG, .43 OD, NYLON) (14.630)
89–96	Y67 AUX RF (CC2)	10137751	LH	53.90	RETAINER, FRT S/D WDO UPR FRT W/STR (13.346)
89–96	Y67 AUX RF (CC2)	10137752	RH	53.90	RETAINER, FRT S/D WDO UPR FRT W/STR (13.346)
84–96	Y07	14049245	LH	20.01	RETAINER, FRT S/D WDO UPR W/STR (12.810)
84–96	Y07	14049246	RH	20.01	RETAINER, FRT S/D WDO UPR W/STR (12.810)
86–96	Y67	10269867	LH	40.30	WEATHERSTRIP, FRT S/D WDO UPR RR
86–96	Y67	10269868	RH	40.30	WEATHERSTRIP, FRT S/D WDO UPR RR
86–90	Y67	10123055	LH	152.00	WEATHERSTRIP, FRT S/D WDO RR (PART OF REMOVEABLE HARD TOP)
86–90	Y67	10123056	RH	152.00	WEATHERSTRIP, FRT S/D WDO RR (PART OF REMOVEABLE HARD TOP)
86–96	Y67	10273003	LH	45.20	WEATHERSTRIP, FRT S/D WDO RR
86–96	Y67	10273004	RH	45.20	WEATHERSTRIP, FRT S/D WDO RR
91–96	Y67 AUX RF (CC2)	10123055	LH	152.00	WEATHERSTRIP, FRT S/D WDO RR (PART OF REMOVEABLE HARD TOP) (B–PILLAR)
91–96	Y67 AUX RF (CC2)	10123056	RH	152.00	WEATHERSTRIP, FRT S/D WDO RR (PART OF REMOVEABLE HARD TOP) (B–PILLAR)
86–88	Y67	10123051	LH	207.50	WEATHERSTRIP, FRT S/D WDO UPR FRT (PART OF REMOVEABLE HARD TOP) (13.346)
86–88	Y67	10123052	RH	207.50	WEATHERSTRIP, FRT S/D WDO UPR FRT (PART OF REMOVEABLE HARD TOP) (13.346)
86–96	Y67	17987731	LH	42.10	WEATHERSTRIP, FRT S/D WDO UPR FRT (14.120)
86–96	Y67	17987732	RH	42.10	WEATHERSTRIP, FRT S/D WDO UPR FRT (14.120)
89–96	Y67 AUX RF (CC2)	10123051	LH	207.50	WEATHERSTRIP, FRT S/D WDO UPR FRT (PART OF REMOVEABLE HARD TOP) (13.346)
89–96	Y67 AUX RF (CC2)	10123052	RH	207.50	WEATHERSTRIP, FRT S/D WDO UPR FRT (PART OF REMOVEABLE HARD TOP) (13.346)
	*EXPORT*********EXPORT*********EXPORT*********EXPORT*********EXPORT*				
94–96	Y67 EUROPEAN PROVISIONS (VD1) (EXPORT)	12512656	2	1.10	GUARD, FRT S/D WDO UPR FRT W/STR RET EDGE (10.695)
94–96	Y67 EUROPEAN PROVISIONS (VD1) (EXPORT)	12512656	2	1.10	GUARD, FRT S/D WDO UPR RR W/STR RET EDGE (10.695)

11.175 BOLT – MAT – PLATE, Front Door Sill

84–87	Y	14047499	LH	DISCON	MAT, FRT S/D STEP (PAINT TO MATCH)
84–87	Y	14047500	RH	23.05	MAT, FRT S/D STEP (PAINT TO MATCH)
92	Y (64I)	10175667	LH	DISCON	PLATE, FRT S/D SILL (BEIGE)
92	Y (64I)	10175668	RH	DISCON	PLATE, FRT S/D SILL (BEIGE)
92	Y (14I)	10175673	LH	DISCON	PLATE, FRT S/D SILL (GRAY)
92	Y (14I)	10175674	RH	DISCON	PLATE, FRT S/D SILL (GRAY)
88–90	Y (73I)	10149254	RH	11.24	PLATE, FRT S/D SILL RR TR (RED) (CUT TO FIT FOR CONV)
88–91	Y (19I)	10175773	LH	10.90	PLATE, FRT S/D SILL RR TR (BLACK)

© 2000 GENERAL MOTORS SERVICE PARTS OPERATIONS

11.175 BOLT – MAT – PLATE, Front Door Sill(Con't)

88–92	Y (73I)	10175773	LH	10.90	PLATE, FRT S/D SILL RR TR (PAINT TO MATCH) (BLACK)
88–91	Y (19I)	10175774	RH	10.90	PLATE, FRT S/D SILL RR TR (BLACK)
88–92	Y (73I)	10175774	RH	10.90	PLATE, FRT S/D SILL RR TR (PAINT TO MATCH) (BLACK)
88–91	Y (60I)	10175775	LH	DISCON	PLATE, FRT S/D SILL RR TR (COGNAC)
88–90	Y (60I)	10175776	RH	DISCON	PLATE, FRT S/D SILL RR TR (COGNAC)
88–90	Y (90I)	10175779	LH	DISCON	PLATE, FRT S/D SILL RR TR (SMOKE GRAY) (CUT TO FIT FOR CONV)
88–91	Y (90I)	10175780	RH	11.24	PLATE, FRT S/D SILL RR TR (GRAY)
88–89	Y (22I)	10175781	LH	DISCON	PLATE, FRT S/D SILL RR TR (CUT TO FIT CONV) (STEEL BLUE)
88–89	Y (21I)	10175782	RH	DISCON	PLATE, FRT S/D SILL RR TR (BLUE) (CUT TO FIT FOR CONV)
90	Y (22I)	10175781	LH	DISCON	PLATE, FRT S/D SILL RR TR (STEEL BLUE)
90–91	Y (22I)	10175782	RH	DISCON	PLATE, FRT S/D SILL RR TR (BLUE)
91	Y (60I)	10175776	RH	DISCON	PLATE, FRT S/D SILL RR TR (COGNAC)
91	Y (90I)	10175779	LH	DISCON	PLATE, FRT S/D SILL RR TR (GRAY)
91	Y (22I)	10175781	LH	DISCON	PLATE, FRT S/D SILL RR TR (BLUE)
92–96	Y (64I)	10175614	RH	10.90	PLATE, FRT S/D SILL RR TR (BEIGE)
92–96	Y (64I)	10175615	LH	10.90	PLATE, FRT S/D SILL RR TR (BEIGE)
92–96	Y (14I)	10175616	RH	10.90	PLATE, FRT S/D SILL RR TR (GRAY)
92–96	Y (14I)	10175617	LH	10.90	PLATE, FRT S/D SILL RR TR (GRAY)
92–93	Y (10I), (19I)	10175773	LH	10.90	PLATE, FRT S/D SILL RR TR (BLACK)
92–93	Y (10I), (19I)	10175774	RH	10.90	PLATE, FRT S/D SILL RR TR (BLACK)
93	Y (79I)	10199552	RH	11.24	PLATE, FRT S/D SILL RR TR (RED)
93	Y (79I)	10199553	LH	11.24	PLATE, FRT S/D SILL RR TR (RED)
93–95	Y (70I)	10199718	RH	10.90	PLATE, FRT S/D SILL RR TR (RED)
93–95	Y (70I)	10199719	LH	10.90	PLATE, FRT S/D SILL RR TR (RED)
94–96	Y (19I)	10175773	LH	10.90	PLATE, FRT S/D SILL RR TR (BLACK)
94–96	Y (19I)	10175774	RH	10.90	PLATE, FRT S/D SILL RR TR (BLACK)
96	Y (70I), (EXC GRAND SPORT EDITION (Z16)	10199718	RH	10.90	PLATE, FRT S/D SILL RR TR (RED)
96	Y (70I), (EXC GRAND SPORT EDITION (Z16)	10199719	LH	10.90	PLATE, FRT S/D SILL RR TR (RED)
84–87	Y (15I)	14058256	RH	DISCON	PLATE, FRT S/D SILL TR (GRAY)
84–85	Y (28I)	14058258	RH	DISCON	PLATE, FRT S/D SILL TR (BLUE)
84–87	Y (65I)	14058260	RH	DISCON	PLATE, FRT S/D SILL TR (BRONZE)
84–87	Y (62I)	14058262	RH	DISCON	PLATE, FRT S/D SILL TR (SADDLE)
84–85	Y (74I)	14058264	RH	DISCON	PLATE, FRT S/D SILL TR (CARMINE)
84–87	Y (15I)	14089603	LH	DISCON	PLATE, FRT S/D SILL TR (GRAY) (FOR 1985 VEH, MAY NEED TO USE CVR, P/N 14088497)
84–85	Y (28I)	14089605	LH	DISCON	PLATE, FRT S/D SILL TR (BLUE) (FOR 1985, MAY NEED TO USE CVR, P/N 14088497)
84–87	Y (65I)	14089607	LH	DISCON	PLATE, FRT S/D SILL TR (BRONZE) (FOR 1985 VEH, MAY NEED TO USE CVR P/N 14088497)
84–87	Y (62I)	14089609	LH	DISCON	PLATE, FRT S/D SILL TR (SADDLE) (FOR 1985 VEH, MAY NEED TO USE CVR, P/N 14088497)
86–87	Y (21I)	14094225	LH	DISCON	PLATE, FRT S/D SILL TR (BLUE)
86–87	Y (21I)	14094226	RH	DISCON	PLATE, FRT S/D SILL TR (BLUE)
86–87	Y (73I)	14094227	LH	DISCON	PLATE, FRT S/D SILL TR (RED)

© 2000 GENERAL MOTORS SERVICE PARTS OPERATIONS

11.175 BOLT – MAT – PLATE, Front Door Sill(Con't)

86–87	Y (73I)	14094228	RH	DISCON	PLATE, FRT S/D SILL TR (RED)
88–89	Y (19I)	10095141	LH	66.94	PLATE, FRT S/D SILL TR (BLACK)
88–89	Y (19I)	10095142	RH	DISCON	PLATE, FRT S/D SILL TR (BLACK)
88–89	Y (21I)	10095143	LH	DISCON	PLATE, FRT S/D SILL TR (BLUE)
88–89	Y (21I)	10095144	RH	DISCON	PLATE, FRT S/D SILL TR (BLUE)
88–89	Y (60I)	10095145	LH	DISCON	PLATE, FRT S/D SILL TR (COGNAC)
88–89	Y (60I)	10095146	RH	DISCON	PLATE, FRT S/D SILL TR (COGNAC)
88–89	Y (73I)	10095147	LH	DISCON	PLATE, FRT S/D SILL TR (RED)
88–89	Y (73I)	10095148	RH	DISCON	PLATE, FRT S/D SILL TR (RED)
88–89	Y (90I)	10095149	LH	DISCON	PLATE, FRT S/D SILL TR (GRAY)
90	Y (19I)	10172437	LH	DISCON	PLATE, FRT S/D SILL TR (MUST ALSO ORDER SPEAKER GRILLE 10220615 FOR VIN PRIOR TO 116467 (L98) OR VIN PRIOR TO 800158 (LT5))
90	Y (19I)	10172438	RH	DISCON	PLATE, FRT S/D SILL TR (MUST ALSO ORDER SPEAKER GRILLE 10220616 FOR VIN PRIOR TO 116467 (L98) OR VIN PRIOR TO 800158 (LT5))
90	Y (22I)	10172439	LH	DISCON	PLATE, FRT S/D SILL TR (MUST ALSO ORDER SPEAKER GRILLE 10172449 FOR VIN PRIOR TO 116467 (L98) OR VIN PRIOR TO 800158 (LT5))
90	Y (22I)	10172440	RH	DISCON	PLATE, FRT S/D SILL TR (MUST ALSO ORDER SPEAKER GRILLE 10172450 FOR VIN PRIOR TO 116467 (L98) OR VIN PRIOR TO 800158 (LT5))
90	Y (60I)	10172441	LH	DISCON	PLATE, FRT S/D SILL TR (MUST ALSO ORDER SPEAKER GRILLE 10172451 FOR VIN PRIOR TO 116467 (L98) OR VIN PRIOR TO 800158 (LT5))
90	Y (60I)	10172442	RH	DISCON	PLATE, FRT S/D SILL TR (MUST ALSO ORDER SPEAKER GRILLE 10172452 FOR VIN PRIOR TO 116467 (L98) OR VIN PRIOR TO 800158 (LT5))
90	Y (73I)	10172443	LH	148.05	PLATE, FRT S/D SILL TR (MUST ALSO ORDER SPEAKER GRILLE 10172453 FOR VIN PRIOR TO 116467 (L98) OR VIN PRIOR TO 800158 (LT5))
90	Y (73I)	10172444	RH	148.05	PLATE, FRT S/D SILL TR (MUST ALSO ORDER SPEAKER GRILLE 10172454 FOR VIN PRIOR TO 116467 (L98) OR VIN PRIOR TO 800158 (LT5))
90	Y (90I)	10172445	LH	DISCON	PLATE, FRT S/D SILL TR (MUST ALSO ORDER SPEAKER GRILLE 10172455 FOR VIN PRIOR TO 116467 (L98) OR VIN PRIOR TO 800158 (LT5))
90	Y (90I)	10172446	RH	DISCON	PLATE, FRT S/D SILL TR (MUST ALSO ORDER SPEAKER GRILLE 10172456 FOR VIN PRIOR TO 116467 (L98) OR VIN PRIOR TO 800158 (LT5))
91	Y (19I)	10172437	LH	DISCON	PLATE, FRT S/D SILL TR (BLACK)
91	Y (19I)	10172438	RH	DISCON	PLATE, FRT S/D SILL TR (BLACK)
91	Y (22I)	10172439	LH	DISCON	PLATE, FRT S/D SILL TR (BLUE)
91	Y (22I)	10172440	RH	DISCON	PLATE, FRT S/D SILL TR (BLUE)
91	Y (60I)	10172441	LH	DISCON	PLATE, FRT S/D SILL TR (COGNAC)
91	Y (60I)	10172442	RH	DISCON	PLATE, FRT S/D SILL TR (COGNAC)
91–92	Y (73I)	10172443	LH	148.05	PLATE, FRT S/D SILL TR (RED)
91–92	Y (73I)	10172444	RH	148.05	PLATE, FRT S/D SILL TR (RED)
91	Y (90I)	10172445	LH	DISCON	PLATE, FRT S/D SILL TR (GRAY)
91	Y (90I)	10172446	RH	DISCON	PLATE, FRT S/D SILL TR (GRAY)

© 2000 GENERAL MOTORS SERVICE PARTS OPERATIONS

11.175 BOLT – MAT – PLATE, Front Door Sill(Con't)

92	Y (10I), (19I)	10172437	LH	DISCON	PLATE, FRT S/D SILL TR (BLACK)
92	Y (10I), (19I)	10172438	RH	DISCON	PLATE, FRT S/D SILL TR (BLACK)
93	Y (10I), (19I)	10211921	LH	148.05	PLATE, FRT S/D SILL TR (BLACK)
93	Y (10I), (19I)	10211922	RH	DISCON	PLATE, FRT S/D SILL TR (BLACK)
93	Y (64I)	10211923	LH	DISCON	PLATE, FRT S/D SILL TR (BEIGE)
93	Y (64I)	10211924	RH	DISCON	PLATE, FRT S/D SILL TR (BEIGE)
93	Y (14I)	10211925	LH	148.05	PLATE, FRT S/D SILL TR (GRAY)
93	Y (14I)	10211926	RH	DISCON	PLATE, FRT S/D SILL TR (GRAY)
93	Y (79I)	10211947	LH	148.05	PLATE, FRT S/D SILL TR (RED)
93	Y (79I)	10211948	RH	DISCON	PLATE, FRT S/D SILL TR (RED)
93	Y (70I)	10211949	LH	DISCON	PLATE, FRT S/D SILL TR (RED)
93	Y (70I)	10211950	RH	148.05	PLATE, FRT S/D SILL TR (RED)
94–96	Y (19I), (EXC MAN RST SYS (AX4) (EXPORT)	10238577	LH	143.00	PLATE, FRT S/D SILL TR (BLACK)
94–96	Y (19I), (EXC MAN RST SYS (AX4) (EXPORT)	10238578	RH	143.00	PLATE, FRT S/D SILL TR (BLACK)
94–96	Y (64I), (EXC MAN RST SYS (AX4) (EXPORT)	10238579	LH	143.00	PLATE, FRT S/D SILL TR (BEIGE)
94–96	Y (64I), (EXC MAN RST SYS (AX4) (EXPORT)	10238580	RH	143.00	PLATE, FRT S/D SILL TR (BEIGE)
94–96	Y (14I), (EXC MAN RST SYS (AX4) (EXPORT)	10238581	LH	143.00	PLATE, FRT S/D SILL TR (GRAY)
94–96	Y (14I), (EXC MAN RST SYS (AX4) (EXPORT)	10238582	RH	143.00	PLATE, FRT S/D SILL TR (GRAY)
94–95	Y (70I), (EXC MAN RST SYS (AX4) (EXPORT)	10238583	LH	143.00	PLATE, FRT S/D SILL TR (RED)
94–95	Y (70I), (EXC MAN RST SYS (AX4) (EXPORT)	10238584	RH	143.00	PLATE, FRT S/D SILL TR (RED)
96	Y (70I), (EXC MAN RST SYS (AX4) (EXPORT), GRAND SPORT EDITION (Z16)	10238583	LH	143.00	PLATE, FRT S/D SILL TR (RED)
96	Y (70I), (EXC MAN RST SYS (AX4) (EXPORT), GRAND SPORT EDITION (Z16)	10238584	RH	143.00	PLATE, FRT S/D SILL TR (RED)
	*EXPORT**********EXPORT**********EXPORT**********EXPORT**********EXPORT*				
94–96	Y MAN RST SYS (AX4) (EXPORT), (19I)	10239063	LH	143.00	PLATE, FRT S/D SILL TR (BLACK)
94–96	Y MAN RST SYS (AX4) (EXPORT), (19I)	10239064	RH	143.00	PLATE, FRT S/D SILL TR (BLACK)
94–96	Y MAN RST SYS (AX4) (EXPORT), (64I)	10239065	LH	143.00	PLATE, FRT S/D SILL TR (BEIGE)
94–96	Y MAN RST SYS (AX4) (EXPORT), (64I)	10239066	RH	143.00	PLATE, FRT S/D SILL TR (BEIGE)
94–96	Y MAN RST SYS (AX4) (EXPORT), (14I)	10239067	LH	143.00	PLATE, FRT S/D SILL TR (GRAY)
94–96	Y MAN RST SYS (AX4) (EXPORT), (14I)	10239068	RH	143.00	PLATE, FRT S/D SILL TR (GRAY)
94–95	Y MAN RST SYS (AX4) (EXPORT), (70I)	10239069	LH	143.00	PLATE, FRT S/D SILL TR (RED)
94–95	Y MAN RST SYS (AX4) (EXPORT), (70I)	10239070	RH	143.00	PLATE, FRT S/D SILL TR (RED)
96	Y07 MAN RST SYS (AX4) (EXPORT), (70I)	10239069	LH	143.00	PLATE, FRT S/D SILL TR (RED)
96	Y07 MAN RST SYS (AX4) (EXPORT), (70I)	10239070	RH	143.00	PLATE, FRT S/D SILL TR (RED)
96	Y67 MAN RST SYS (AX4) (EXPORT), GRAND SPORT EDITION (Z16), (70I)	10239063	LH	143.00	PLATE, FRT S/D SILL TR (BLACK)

© 2000 GENERAL MOTORS SERVICE PARTS OPERATIONS

11.175 BOLT – MAT – PLATE, Front Door Sill(Con't)

96	Y67 MAN RST SYS (AX4) (EXPORT), GRAND SPORT EDITION (Z16), (70I)	10239064	RH	143.00	PLATE, FRT S/D SILL TR (BLACK)
96	Y67 MAN RST SYS (AX4) (EXPORT), (70I), (EXC GRAND SPORT EDITION (Z16)	10239069	LH	143.00	PLATE, FRT S/D SILL TR (RED)
96	Y67 MAN RST SYS (AX4) (EXPORT), (70I), (EXC GRAND SPORT EDITION (Z16)	10239070	RH	143.00	PLATE, FRT S/D SILL TR (RED)

12.170 ACTUATOR – BOLT – BRACKET – BUMPER – CONNECTOR – COVER – GUIDE – HINGE – INSULATOR – LATCH – LEVER – LID – PANEL – PLATE – PROTECTOR – RELAY – RETAINER – ROD – SHIM – SPACER – STOP – STRAP – STRIKER – STRIPE – WASHER – WEATHERSTRIP, Folding Top Compartment

86–91	Y67	14092646	2	107.10	ACTUATOR, F/TOP STOW COMPT LID LAT REL
92–96	Y67	10193606	1	56.70	ACTUATOR, F/TOP STOW COMPT LID LAT REL
86	Y67	14081021	4	*1.25	BOLT, F/TOP STOW COMPT LID HGE (08.913)
92	Y67 (2ND DES)	10198719	1	2.95	BOLT, F/TOP STOW COMPT LID HGE (HINGE HAS SQUARE ARM)
93–96	Y67	10198719	4	2.95	BOLT, F/TOP STOW COMPT LID HGE
86–90	Y	14100340	6	2.00	BOLT, F/TOP STOW COMPT LID LAT ACTR
91–96	Y67	14100340	6	2.00	BOLT, F/TOP STOW COMPT LID LAT ACTR
86–91	Y	14092733	LH	38.25	BRACKET, F/TOP STOW COMPT LID LAT
86–91	Y	14092734	RH	38.25	BRACKET, F/TOP STOW COMPT LID LAT
92–96	Y67	14092733	LH	38.25	BRACKET, F/TOP STOW COMPT LID LAT
92–96	Y67	14092734	RH	38.25	BRACKET, F/TOP STOW COMPT LID LAT
86–91	Y67	14105153	LH	DISCON	BRACKET, F/TOP STOW COMPT LID LAT REL ACTR LVR
86–91	Y67	14105154	RH	DISCON	BRACKET, F/TOP STOW COMPT LID LAT REL ACTR LVR
92–96	Y67	10193607	LH	36.75	BRACKET, F/TOP STOW COMPT LID LAT REL ACTR LVR
92–96	Y67	10193608	RH	36.75	BRACKET, F/TOP STOW COMPT LID LAT REL ACTR LVR
92	Y67 (2ND DES)	10198703	2	2.65	BRACKET, F/TOP STOW COMPT LID LAT REL ACTR LVR (HINGE HAS SQUARE ARM)
93–96	Y67	10198703	2	2.65	BRACKET, F/TOP STOW COMPT LID LAT REL ACTR LVR
86–96	Y67	10175549	LH	372.00	HINGE, F/TOP STOW COMPT LID
86–96	Y67	10175550	RH	372.00	HINGE, F/TOP STOW COMPT LID
86–91	Y67	14092656	RH	DISCON	HINGE, F/TOP STOW COMPT LID
92	Y67	14092656	RH	DISCON	HINGE, F/TOP STOW COMPT LID (HAS A FLAT HINGE ARM)
91–96	Y67	03999572	1	4.98	INSULATOR, F/TOP STOW COMPT LID HGE ROD (09.260)
89–91	Y	10265173	2	1.20	INSULATOR, F/TOP STOW FRT
92–96	Y67	10265173	2	1.20	INSULATOR, F/TOP STOW FRT
86–96	Y67	14092743	LH	40.50	LATCH, F/TOP STOW COMPT LID
86–96	Y67	14092744	RH	40.50	LATCH, F/TOP STOW COMPT LID

© 2000 GENERAL MOTORS SERVICE PARTS OPERATIONS

12.170 ACTUATOR – BOLT – BRACKET – BUMPER – CONNECTOR – COVER – GUIDE – HINGE – INSULATOR – LATCH – LEVER – LID – PANEL – PLATE – PROTECTOR – RELAY – RETAINER – ROD – SHIM – SPACER – STOP – STRAP – STRIKER – STRIPE – WASHER – WEATHERSTRIP, Folding Top Compartment(Con't)

86–88	Y67	14092661	LH	DISCON	LATCH, F/TOP STOW COMPT LID PRIM
86–88	Y67	14092662	RH	DISCON	LATCH, F/TOP STOW COMPT LID PRIM
86–91	Y67	14105151	LH	21.84	LEVER, F/TOP STOW COMPT LID LAT REL
86–91	Y67	14105152	RH	DISCON	LEVER, F/TOP STOW COMPT LID LAT REL
92–96	Y67	10175507	LH	5.92	LEVER, F/TOP STOW COMPT LID LAT REL ACTR (12.187)
92–96	Y67	10175508	RH	5.92	LEVER, F/TOP STOW COMPT LID LAT REL ACTR (12.187)
86–88	Y	14092653	1	DISCON	LID, F/TOP STOW COMPT
89–92	Y67	10276994	1	771.90	LID, F/TOP STOW COMPT (IF SERVICE 1992 & PRIOR MODELS, MUST USE 10193665 T/W 10198642 RELEASE CABLE ASM)
93–96	Y67	10276994	1	771.90	LID, F/TOP STOW COMPT
86–88	Y	14092671	1	DISCON	PANEL, F/TOP STOW COMPT LID
89–92	Y67 (19I)	10281070	1	368.00	PANEL, F/TOP STOW COMPT LID TR (BLACK)
90–91	Y67 (60I)	10123062	1	DISCON	PANEL, F/TOP STOW COMPT LID TR (COGNAC)
90–92	Y67 (73I)	10123063	1	DISCON	PANEL, F/TOP STOW COMPT LID TR (RED)
90–91	Y67 (90I)	10123064	1	DISCON	PANEL, F/TOP STOW COMPT LID TR (GRAY)
90–91	Y67 (22I)	10123065	1	DISCON	PANEL, F/TOP STOW COMPT LID TR (BLUE)
92–93	Y67 (10I)	10198711	1	DISCON	PANEL, F/TOP STOW COMPT LID TR (WHITE)
92–96	Y67 (14I)	10281069	1	368.00	PANEL, F/TOP STOW COMPT LID TR (GRAY)
92–96	Y67 (64I)	10281071	1	368.00	PANEL, F/TOP STOW COMPT LID TR (BEIGE)
93	Y67 (79I)	10198716	1	DISCON	PANEL, F/TOP STOW COMPT LID TR (RED)
93–96	Y67 (19I)	10281070	1	368.00	PANEL, F/TOP STOW COMPT LID TR (BLACK)
93–96	Y67 (70I)	10281072	1	368.00	PANEL, F/TOP STOW COMPT LID TR (RED)
86–94	Y67	12524512	1	76.25	PROTECTOR, F/TOP STOW COMPT LID (W/CLEAR STRIPS)
95–96	Y67	12524512	1	76.25	PROTECTOR, F/TOP STOW COMPT LID (W/CLEAR STRIPS)
86–91	Y	14100345	2	.52	RETAINER, F/TOP STOW COMPT LID HGE GDE
92–96	Y67	14100345	2	.52	RETAINER, F/TOP STOW COMPT LID HGE GDE
86–91	Y67	10077491	1	.11	RETAINER, F/TOP STOW COMPT LID LAT REL ACTR LVR (PUSH ON)
92–96	Y67	10175798	1	2 14	RETAINER, F/TOP STOW COMPT LID LAT REL ACTR LVR (PUSH ON)
86–92	Y67 (1ST DES)	14092663	2	DISCON	ROD, F/TOP STOW COMPT LID HGE (USE WITH HINGE WITH FLAT ARM)

© 2000 GENERAL MOTORS SERVICE PARTS OPERATIONS

12.170 ACTUATOR – BOLT – BRACKET – BUMPER – CONNECTOR – COVER – GUIDE – HINGE – INSULATOR – LATCH – LEVER – LID – PANEL – PLATE – PROTECTOR – RELAY – RETAINER – ROD – SHIM – SPACER – STOP – STRAP – STRIKER – STRIPE – WASHER – WEATHERSTRIP, Folding Top Compartment(Con't)

92	Y67 (2ND DES)	10175551	2	23.29	ROD, F/TOP STOW COMPT LID HGE TORQ (USE WITH SQUARE HINGE ARM)
93–94	Y67	10175551	2	23.29	ROD, F/TOP STOW COMPT LID HGE TORQ (USE WITH SQUARE HINGE ARM)
95	Y67	10175551	2	23.29	ROD, F/TOP STOW COMPT LID HGE TORQ
96	Y (2ND DES)	10283724	2	23.29	ROD, F/TOP STOW COMPT LID HGE TORQ (POS #1) (41MM ROD LENGTH W/OUT HOLE)
96	Y67 (1ST DES)	10175551	2	23.29	ROD, F/TOP STOW COMPT LID HGE TORQ (W/2MM HOLE AT 31MM ROD LENGTH)
86–90	Y67	10051895	4	9.45	SHIM, F/TOP STOW COMPT LID (0.5 THK)
86–88	Y	10051897	9	DISCON	SPACER, F/TOP STOW COMPT LID
89–91	Y67	10181383	2	7.61	SPACER, F/TOP STOW COMPT LID
92–94	Y67	14038397	2	*1.00	SPACER, F/TOP STOW COMPT LID HGE TORQ ROD (M8.6X20X2.50) (08.929)
86–88	Y67	10181383	2	7.61	SPACER, SOLENOID ASM F/TOP S/COMP
86–96	Y67	10285920	LH	12.70	STRIKER, F/TOP STOW COMPT LID LAT
86–96	Y67	10285921	RH	12.70	STRIKER, F/TOP STOW COMPT LID LAT
86	Y67	14100339	1	DISCON	WASHER, F/TOP RR AT LAT LVR
86–87	Y67	14038397	AR	*1.00	WASHER, F/TOP STOW COMPT LID HGE GDE (08.929)
92–96	Y67	10175796	1	1.30	WASHER, F/TOP STOW COMPT LID LAT REL ACTR LVR
86–96	Y67	14092675	1	114.00	WEATHERSTRIP, F/TOP STOW COMPT LID

12.810 BOLT – BRACKET – BUMPER – BUSHING – CLIP – COVER – FASTENER – HANDLE – HARDWARE KIT – INSULATOR – LATCH – LOCATOR – NUT – PAD – PANEL PKG – PIN – PLATE – PLUG – PROTECTOR – REINFORCEMENT – REPAIR KIT – RETAINER – SCREW – SEAL – SHIM – WASHER – WEATHERSTRIP – WINDOW PKG – WRENCH, Roof Panel

87–96	Y	14090607	2	4.15	BOLT, RF LIFT OFF PNL/WDO
86–95	Y07	14081021	4	*1.25	BOLT, RF LIFT OFF PNL/WDO FRT MT PLT (M8X1.25X20) (TORX HD 8X1.25X20) (08.913)
92–95	Y07 DUAL REM RF (C2L)	14081021	AR	*1.25	BOLT, RF LIFT OFF PNL/WDO FRT MT PLT (TORX HD 8X1.25X20) (08.913)
94	Y07 DUAL REM RF (C2L), CLEAR RF PNL (CC3), REMOVABLE SUNROOF (CF7)	14081021	AR	*1.25	BOLT, RF LIFT OFF PNL/WDO FRT MT PLT (M8X1.25X20) (TORX HD 8X1.25X20) (08.913)
96	Y07 DUAL REM RF (C2L), CLEAR RF PNL (CC3), REMOVABLE SUNROOF (CF7)	14081021	AR	*1.25	BOLT, RF LIFT OFF PNL/WDO FRT MT PLT (TORX HD 8X1.25X20) (08.913)
89–95	Y07 DUAL REM RF (C2L), CLEAR RF PNL (CC3), REMOVABLE SUNROOF (CF7)	14084506	8	.67	BOLT, RF LIFT OFF PNL/WDO RR LOCR (PAN HE TORX 8X1.5X16, 9.8 PEOR FULL THD W/NYLOC)

© 2000 GENERAL MOTORS SERVICE PARTS OPERATIONS

12.810 BOLT – BRACKET – BUMPER – BUSHING – CLIP – COVER – FASTENER – HANDLE – HARDWARE KIT – INSULATOR – LATCH – LOCATOR – NUT – PAD – PANEL PKG – PIN – PLATE – PLUG – PROTECTOR – REINFORCEMENT – REPAIR KIT – RETAINER – SCREW – SEAL – SHIM – WASHER – WEATHERSTRIP – WINDOW PKG – WRENCH, Roof Panel(Con't)

92–96	Y CLEAR RF PNL (CC3), REMOVABLE SUNROOF (CF7), DUAL REM RF (C2L)	14051183	2	3.20	BOLT, RF LIFT OFF PNL/WDO RR LOCR (M8X1.25X37) (12.815)
86	Y07 (2ND DES)	14090607	2	4.15	BOLT, RF PNL FRT HOLDN (NO COMPARABLE 1ST DES) (W/RF PNL, ATCH BOLT IN CTR OF BRKT BETWEEN TWO LRG CLEARANCE HOLES)
90–96	Y	10086148	1	4.15	CLIP, RF LIFT OFF PNL/WDO WRENCH
91–92	Y07 (73I)	10132951	LH	6.50	COVER, RF LIFT OFF PNL/WDO STOW FRT BRKT (RED)
91–92	Y07 (73I)	10132952	RH	6.50	COVER, RF LIFT OFF PNL/WDO STOW FRT BRKT (RED)
91	Y07 (19I)	10132961	LH	6.50	COVER, RF LIFT OFF PNL/WDO STOW FRT BRKT (BLACK)
91	Y07 (19I)	10132962	RH	6.50	COVER, RF LIFT OFF PNL/WDO STOW FRT BRKT (BLACK)
92–93	Y07 (10I), (19I)	10132961	LH	6.50	COVER, RF LIFT OFF PNL/WDO STOW FRT BRKT (BLACK)
92–93	Y07 (10I), (19I)	10132962	RH	6.50	COVER, RF LIFT OFF PNL/WDO STOW FRT BRKT (BLACK)
92–96	Y07 (64I)	10175677	LH	6.50	COVER, RF LIFT OFF PNL/WDO STOW FRT BRKT (BEIGE)
92–96	Y07 (64I)	10175678	RH	6.50	COVER, RF LIFT OFF PNL/WDO STOW FRT BRKT (BEIGE)
92–96	Y07 (14I)	10175679	LH	6.50	COVER, RF LIFT OFF PNL/WDO STOW FRT BRKT (GRAY)
92–96	Y07 (14I)	10175680	RH	6.50	COVER, RF LIFT OFF PNL/WDO STOW FRT BRKT (GRAY)
93	Y07 (79I)	10199532	RH	DISCON	COVER, RF LIFT OFF PNL/WDO STOW FRT BRKT (RED)
93	Y07 (79I)	10199533	LH	6.50	COVER, RF LIFT OFF PNL/WDO STOW FRT BRKT (RED)
93–95	Y07 (70I)	10199701	LH	6.50	COVER, RF LIFT OFF PNL/WDO STOW FRT BRKT (RED)
93–95	Y07 (70I)	10199702	RH	DISCON	COVER, RF LIFT OFF PNL/WDO STOW FRT BRKT (RED)
94–96	Y07 (19I)	10132961	LH	6.50	COVER, RF LIFT OFF PNL/WDO STOW FRT BRKT (BLACK)
94–96	Y07 (19I)	10132962	RH	6.50	COVER, RF LIFT OFF PNL/WDO STOW FRT BRKT (BLACK)
96	Y07 (70I), (EXC GRAND SPORT EDITION (Z16)	10199701	LH	6.50	COVER, RF LIFT OFF PNL/WDO STOW FRT BRKT (RED)
96	Y07 (70I), (EXC GRAND SPORT EDITION (Z16)	10199702	RH	DISCON	COVER, RF LIFT OFF PNL/WDO STOW FRT BRKT (RED)
84–85	Y	14049299	LH	DISCON	COVER, RF PNL FRT LAT
84–85	Y	14049300	RH	DISCON	COVER, RF PNL FRT LAT
86	Y (1ST DES)	14049299	LH	DISCON	COVER, RF PNL FRT LAT (W/RF PNL, ATCH BOLT NEAR INSIDE EDGE OF BRACKET)
86	Y (1ST DES)	14049300	RH	DISCON	COVER, RF PNL FRT LAT (W/RF PNL, ATCH BOLT NEAR INSIDE EDGE OF BRACKET)

12.810 BOLT – BRACKET – BUMPER – BUSHING – CLIP – COVER – FASTENER – HANDLE – HARDWARE KIT – INSULATOR – LATCH – LOCATOR – NUT – PAD – PANEL PKG – PIN – PLATE – PLUG – PROTECTOR – REINFORCEMENT – REPAIR KIT – RETAINER – SCREW – SEAL – SHIM – WASHER – WEATHERSTRIP – WINDOW PKG – WRENCH, Roof Panel(Con't)

86–87	Y07 (EXC CLEAR RF PNL (CC3) (2ND DES)	14089665	LH	DISCON	COVER, RF PNL FRT LAT (W/RF PNL, ATCH BOLT IN CTR OF BRKT BETWEEN 2 LRG CLEARANCE HOLES)
86–87	Y07 (EXC CLEAR RF PNL (CC3) (2ND DES)	14089666	RH	DISCON	COVER, RF PNL FRT LAT (W/RF PNL, ATCH BOLT IN CTR OF BRKT BETWEEN 2 LRG CLEARANCE HOLES)
86–88	Y67	14092641	LH	30.00	COVER, RF PNL FRT LAT
86–88	Y67	14092642	RH	DISCON	COVER, RF PNL FRT LAT
88	Y07	14089665	LH	DISCON	COVER, RF PNL FRT LAT
88	Y07	14089666	RH	DISCON	COVER, RF PNL FRT LAT
84–89	Y07	10074267	LH	7.88	COVER, RF PNL STOR FRT BRKT
84–89	Y07	10074268	RH	7.88	COVER, RF PNL STOR FRT BRKT
89	Y Z5Z	10132962	RH	6.50	COVER, RF PNL STOR FRT BRKT (BLACK)
90–91	Y07 (22I)	10132947	LH	DISCON	COVER, RF PNL STOR FRT BRKT (BLUE)
90–91	Y07 (22I)	10132948	RH	DISCON	COVER, RF PNL STOR FRT BRKT (BLUE)
90–91	Y07 (60I)	10132949	LH	DISCON	COVER, RF PNL STOR FRT BRKT (COGNAC)
90–91	Y07 (60I)	10132950	RH	DISCON	COVER, RF PNL STOR FRT BRKT (COGNAC)
90	Y07 (73I)	10132951	LH	6.50	COVER, RF PNL STOR FRT BRKT (RED)
90	Y07 (73I)	10132952	RH	6.50	COVER, RF PNL STOR FRT BRKT (RED)
90–91	Y07 (90I)	10132953	LH	DISCON	COVER, RF PNL STOR FRT BRKT (GRAY)
90–91	Y07 (90I)	10132954	RH	DISCON	COVER, RF PNL STOR FRT BRKT (GRAY)
90	Y07 (19I)	10132961	LH	6.50	COVER, RF PNL STOR FRT BRKT (BLACK)
90	Y07 (19I)	10132962	RH	6.50	COVER, RF PNL STOR FRT BRKT (BLACK)
84–91	Y	10217223	LH	16.13	PROTECTOR, FRT S/D WDO W/STR UPR FRT
84–90	Y	10217224	RH	16.13	PROTECTOR, FRT S/D WDO W/STR UPR FRT
91	Y07 DUAL REM RF (C2L), CLEAR RF PNL (CC3), REMOVABLE SUNROOF (CF7)	10217224	RH	16.13	PROTECTOR, FRT S/D WDO W/STR UPR FRT
91–96	Y67 AUX RF (CC2)	10217223	LH	16.13	PROTECTOR, FRT S/D WDO W/STR UPR FRT
91–96	Y67 AUX RF (CC2)	10217224	RH	16.13	PROTECTOR, FRT S/D WDO W/STR UPR FRT
92–96	Y07	10217223	LH	16.13	PROTECTOR, FRT S/D WDO W/STR UPR FRT
92–96	Y07	10217224	RH	16.13	PROTECTOR, FRT S/D WDO W/STR UPR FRT
86–89	Y	20292751	3	2.15	RETAINER, LUG STOW STRAP

© 2000 GENERAL MOTORS SERVICE PARTS OPERATIONS

12.810 BOLT – BRACKET – BUMPER – BUSHING – CLIP – COVER – FASTENER – HANDLE – HARDWARE KIT – INSULATOR – LATCH – LOCATOR – NUT – PAD – PANEL PKG – PIN – PLATE – PLUG – PROTECTOR – REINFORCEMENT – REPAIR KIT – RETAINER – SCREW – SEAL – SHIM – WASHER – WEATHERSTRIP – WINDOW PKG – WRENCH, Roof Panel(Con't)

86	Y07 (2ND DES)	10193699	2	3.46	**RETAINER**, RF LIFT OFF PNL/WDO BOLT (NO COMPARABLE 1ST DES) (W/RF PNL, ATCH BOLT IN CTR OF BRKT BETWEEN TWO LRG CLEARANCE HOLES.)
87–96	Y	10193699	2	3.46	**RETAINER**, RF LIFT OFF PNL/WDO BOLT
84–96	Y07 CLEAR RF PNL (CC3), REMOVABLE SUNROOF (CF7), DUAL REM RF (C2L)	14051184	2	4.64	**RETAINER**, RF LIFT OFF PNL/WDO RR LOCR BOLT
84–96	Y07	08731909	2	*.40	**RETAINER**, RF LIFT OFF PNL/WDO RR W/STR (PUSH IN) (FULL FLDG) (10.695)
84–96	Y07	14049242	1	24.14	**RETAINER**, RF LIFT OFF PNL/WDO RR W/STR (TOP SI)
84–96	Y07	14049247	LH	15.91	**RETAINER**, RF LIFT OFF PNL/WDO RR W/STR (TO W/STR MLDG) (W/SEAL STRP)
84–96	Y07	14049248	RH	15.91	**RETAINER**, RF LIFT OFF PNL/WDO RR W/STR (TO W/STR MLDG) (W/SEAL STRP)
84–85	Y	14060215	2	.70	**RETAINER**, RF PNL FRT LOCATOR (10.219)
84–90	Y	14049243	LH	28.73	**RETAINER**, RF PNL FRT W/STR
84–90	Y	14049244	RH	28.73	**RETAINER**, RF PNL FRT W/STR
84–94	Y07	10283997	1	219.30	**WEATHERSTRIP**, RF LIFT OFF PNL/WDO RR
95–96	Y07	10283997	1	219.30	**WEATHERSTRIP**, RF LIFT OFF PNL/WDO RR (W/DEPRESSED SURFACE AT TOP CORNER)
84–96	Y07	22112053	LH	79.60	**WEATHERSTRIP**, RF LIFT OFF PNL/WDO SI BODY (10.710)
84–96	Y07	22112054	RH	79.60	**WEATHERSTRIP**, RF LIFT OFF PNL/WDO SI BODY (10.710)
	*EXPORT**********EXPORT**********EXPORT**********EXPORT**********EXPORT*				
94–96	Y07 DUAL REM RF (C2L), EUROPEAN PROVISIONS (VD1) (EXPORT), VE1 (EXPORT)	10215333	LH	22.70	**PROTECTOR**, FRT S/D WDO W/STR UPR FRT
94–96	Y07 CLEAR RF PNL (CC3), REMOVABLE SUNROOF (CF7), EUROPEAN PROVISIONS (VD1) (EXPORT), VE1 (EXPORT)	10215333	LH	22.70	**PROTECTOR**, FRT S/D WDO W/STR UPR FRT
94–96	Y07 DUAL REM RF (C2L), EUROPEAN PROVISIONS (VD1) (EXPORT), VE1 (EXPORT)	10215334	RH	22.70	**PROTECTOR**, FRT S/D WDO W/STR UPR FRT
94–96	Y07 CLEAR RF PNL (CC3), REMOVABLE SUNROOF (CF7), EUROPEAN PROVISIONS (VD1) (EXPORT), VE1 (EXPORT)	10215334	RH	22.70	**PROTECTOR**, FRT S/D WDO W/STR UPR FRT
94–96	Y67 EUROPEAN PROVISIONS (VD1) (EXPORT), VE1 (EXPORT)	10215333	LH	22.70	**PROTECTOR**, FRT S/D WDO W/STR UPR FRT
94–96	Y67 EUROPEAN PROVISIONS (VD1) (EXPORT), VE1 (EXPORT)	10215334	RH	22.70	**PROTECTOR**, FRT S/D WDO W/STR UPR FRT

© 2000 GENERAL MOTORS SERVICE PARTS OPERATIONS

12.940 PANEL – RETAINER, Rear Quarter Outer

84–89	Y07	12522020	RH	646.81	PANEL, BODY UPR RR (HOLES FOR BUMPER FASCIA ATTACHMENT MUST BE LOCATED & DRILLED BY DLR)
84–89	Y07	12522021	LH	646.81	PANEL, BODY UPR RR (HOLES FOR BUMPER FASCIA ATTACHMENT MUST BE LOCATED & DRILLED BY DLR)
84–89	Y07	14104977	1	1347.53	PANEL, BODY UPR RR
86–96	Y67	14092651	1	1774.67	PANEL, BODY UPR RR (12.986)
90–95	Y07 (EXC SPECIAL PERFORMANCE PKG (ZR1)	12522020	RH	646.81	PANEL, BODY UPR RR (HOLES FOR BUMPER FASCIA ATTACHMENT MUST BE LOCATED & DRILLED BY DLR)
90–95	Y07 (EXC SPECIAL PERFORMANCE PKG (ZR1)	12522021	LH	646.81	PANEL, BODY UPR RR (HOLES FOR BUMPER FASCIA ATTACHMENT MUST BE LOCATED & DRILLED BY DLR)
90–95	Y07 (EXC SPECIAL PERFORMANCE PKG (ZR1)	14104977	1	1347.53	PANEL, BODY UPR RR
90–95	Y07 SPECIAL PERFORMANCE PKG (ZR1)	14104978	1	1347.53	PANEL, BODY UPR RR
96	Y07	12522020	RH	646.81	PANEL, BODY UPR RR (HOLES FOR BUMPER FASCIA ATTACHMENT MUST BE LOCATED & DRILLED BY DLR)
96	Y07	12522021	LH	646.81	PANEL, BODY UPR RR
96	Y07	14104977	1	1347.53	PANEL, BODY UPR RR

12.942 DEFLECTOR – FILLER – INSULATOR – PANEL – PILLAR – PLATE – PLUG – REINFORCEMENT – RETAINER – SEAL – VALVE, Rear Body Lock Pillar

84–91	Y07 SOFT RIDE SUSP (FE1), HVY DUTY SUSP (FE7)	14043123	LH	11.32	FILLER, BODY L/PLR LWR
84–91	Y07 SOFT RIDE SUSP (FE1), HVY DUTY SUSP (FE7)	14043124	RH	11.32	FILLER, BODY L/PLR LWR
86–96	Y67	14092647	LH	25.68	FILLER, BODY L/PLR LWR
86–96	Y67	14092648	RH	25.68	FILLER, BODY L/PLR LWR
92–96	Y07	14043123	LH	11.32	FILLER, BODY L/PLR LWR
92–96	Y07	14043124	RH	11.32	FILLER, BODY L/PLR LWR
84–96	Y07	10208618	RH	40.43	PANEL, BODY L/PLR INR
84–96	Y07	10208619	LH	40.43	PANEL, BODY L/PLR INR
86–96	Y67	10208620	RH	89.50	PANEL, BODY L/PLR INR
86–96	Y67	10208621	LH	81.11	PANEL, BODY L/PLR INR
86–93	Y67	14092637	LH	108.15	PANEL, BODY L/PLR OTR UPR
86–93	Y67	14092638	RH	DISCON	PANEL, BODY L/PLR OTR UPR
94–96	Y67	10250367	LH	96.11	PANEL, BODY L/PLR OTR UPR
94–96	Y67	10250368	RH	96.11	PANEL, BODY L/PLR OTR UPR
84–87	Y	14091023	LH	55.43	PILLAR, FRT S/D OTR LK
84–87	Y	14091024	RH	55.43	PILLAR, FRT S/D OTR LK
88–96	Y07	10051827	LH	55.43	PILLAR, FRT S/D OTR LK
88–96	Y07	10051828	RH	55.43	PILLAR, FRT S/D OTR LK
88–96	Y67	14091023	LH	55.43	PILLAR, FRT S/D OTR LK
88–96	Y67	14091024	RH	55.43	PILLAR, FRT S/D OTR LK
90–96	Y67	08731909	AR	*.40	RETAINER, FRT S/D L/PLR UPR SEAL (FULL FLDG) (10.695)
93–95	Y67	08731909	4	*.40	RETAINER, FRT S/D L/PLR UPR SEAL (FULL FLDG) (10.695)
86–96	Y67	14092663	LH	47.25	SEAL, FRT S/D L/PLR UPR (FRT)

© 2000 GENERAL MOTORS SERVICE PARTS OPERATIONS

12.942 DEFLECTOR – FILLER – INSULATOR – PANEL – PILLAR – PLATE – PLUG – REINFORCEMENT – RETAINER – SEAL – VALVE, Rear Body Lock Pillar(Con't)

86–96	Y67	14092684	RH	47.25	SEAL, FRT S/D L/PLR UPR (FRT)
86–96	Y67	14100365	LH	38.00	SEAL, FRT S/D L/PLR UPR (RR)
86–96	Y67	14100366	RH	41.70	SEAL, FRT S/D L/PLR UPR (RR)
88–96	Y07	10054609	2	8.54	VALVE, FRT S/D PRESS RLF

12.981 BOLT – BRACKET – COMPARTMENT – CYLINDER – CYLINDER KIT – DOOR – DOOR & FRAME – FILLER – GASKET – HANDLE – INSULATOR – PANEL – PLATE – REINFORCEMENT – RETAINER – SPRING – STRIKER – STRIP – TRAY – TUMBLER, Rear Compartment Floor

86–96	Y07	14100206	2	2.85	BRACKET, FLR RR PNL CTR CPT
86–89	Y67	14064526	2	.70	BRACKET, FLR RR PNL CTR CPT (10.230)
90–96	Y67	14064526	3	.70	BRACKET, FLR RR PNL CTR CPT (10.230)
86–96	Y67	14092735	LH	38.75	BRACKET, R/FLR PNL UPR FRT
86–96	Y67	14092736	RH	38.75	BRACKET, R/FLR PNL UPR FRT
89–92	Y67	10123005	LH	65.85	BRACKET, R/FLR PNL UPR FRT (14.310)
86–96	Y67	14100357	LH	25.32	FILLER, R/FLR PNL INTER
86–96	Y67	14100358	RH	25.32	FILLER, R/FLR PNL INTER
86–96	Y67	14092725	LH	38.65	FILLER, R/FLR PNL LWR
86–96	Y67	14092726	RH	38.65	FILLER, R/FLR PNL LWR
86–96	Y67	14092723	LH	26.70	FILLER, R/FLR PNL UPR
86–96	Y67	14092724	RH	26.70	FILLER, R/FLR PNL UPR
84–87	Y	14064513	LH	DISCON	INSULATOR, INR INTER SI MBR
84–96	Y	14064514	RH	3.10	INSULATOR, INR INTER SI MBR
88	Y	10094902	LH	DISCON	INSULATOR, INR INTER SI MBR
89–96	Y	10137253	LH	1.05	INSULATOR, INR INTER SI MBR
86–96	Y67	14092737	1	12.92	INSULATOR, R/FLR PNL (UPR)
86–93	Y67	14092738	1	13.34	INSULATOR, R/FLR PNL (LWR)
88–95	Y07	10054603	LH	26.00	INSULATOR, R/FLR PNL (12.980)
88–96	Y07	10054604	RH	26.00	INSULATOR, R/FLR PNL (12.980)
90–96	Y67	10193758	RH	11.44	INSULATOR, R/FLR PNL
92–95	Y67	10193757	LH	11.44	INSULATOR, R/FLR PNL
93–96	Y67	11515174	2	*1.50	INSULATOR, R/FLR PNL (POSN #1) (4 1/4"X7 1/2") (TRIM AS REQ'D) (15.492)
96	Y07	10282261	LH	26.00	INSULATOR, R/FLR PNL
96	Y67	10282262	LH	11.44	INSULATOR, R/FLR PNL
86–96	Y07	10175524	1	29.24	INSULATOR, R/FLR PNL CTR
90–96	Y67	10146480	1	29.24	INSULATOR, R/FLR PNL CTR
90–96	Y67	10146449	1	13.63	PANEL, FLR RR FIL
84–87	Y	10067390	1	DISCON	PANEL, INTER FLR (DEALER TO REMOVE EXTENSION ASM WHEN INSTALLING ON Y07 (COUPE) CARS
89–96	Y	10198704	1	147.47	PANEL, INTER FLR
84–85	Y07	14104866	1	DISCON	PANEL, R/FLR (MUST ALSO ORDER (1) 14105595, (2) 14088454, (8) 2495701, (8) 11508426, (1) 14088439, (1) 14088442, (8) 1646714)
86–89	Y07	14104866	1	DISCON	PANEL, R/FLR
86–91	Y67	10193727	1	370.65	PANEL, R/FLR
92–96	Y07	10280990	1	381.38	PANEL, R/FLR

© 2000 GENERAL MOTORS SERVICE PARTS OPERATIONS

12.981 BOLT – BRACKET – COMPARTMENT – CYLINDER – CYLINDER KIT – DOOR – DOOR & FRAME – FILLER – GASKET – HANDLE – INSULATOR – PANEL – PLATE – REINFORCEMENT – RETAINER – SPRING – STRIKER – STRIP – TRAY – TUMBLER, Rear Compartment Floor(Con't)

92–96	Y67	10280989	1	381.38	PANEL, R/FLR (PANEL HAS A SQUARE ARM, (DEALER TO CUT HOLE OUT ON INSIDE MARKED BY ETCHING WHEN USING ON 1992 AND PRIOR) .
84–89	Y	14104991	LH	DISCON	PANEL, R/FLR CLOSEOUT
84–89	Y	14104992	RH	DISCON	PANEL, R/FLR CLOSEOUT
84–96	Y07	14043111	LH	12.87	PANEL, R/FLR PNL UPR FRT CLOSEOUT
84–96	Y07	14043112	RH	12.87	PANEL, R/FLR PNL UPR FRT CLOSEOUT
84–89	Y07	14043113	LH	DISCON	PANEL, RR COMPT CLOSEOUT
84–89	Y07	14043114	RH	DISCON	PANEL, RR COMPT CLOSEOUT

13.090 BRACKET – CLIP – HARNESS – MODULE – RETAINER – STRAP – TAPE – WIRE, Body Wiring

86–89	Y67	14100354	1	DISCON	BRACKET, BODY WRG HARN
84–90	Y	14066514	2	DISCON	BRACKET, DR ELEC WRG LWR RR
84–96	Y	14073415	2	.70	BRACKET, P/W DR WRG HARN
89	Y07 STEREO (UU8)	12085454	1	DISCON	HARNESS, BODY FRT WRG
89	Y67 STEREO (UM6)	12080872	1	DISCON	HARNESS, BODY FRT WRG
89	Y67 STEREO (UU8)	12080873	1	DISCON	HARNESS, BODY FRT WRG
90	Y STEREO (UU8)	12101487	1	DISCON	HARNESS, BODY FRT WRG
90	Y STEREO (UM6)	12101488	1	DISCON	HARNESS, BODY FRT WRG
90	Y67 STEREO (UM6)	12073787	1	DISCON	HARNESS, BODY FRT WRG
90	Y67 STEREO (UU8, U1F)	12073788	1	DISCON	HARNESS, BODY FRT WRG
91	Y07 STEREO CASSETTE (UM6)	12112416	1	DISCON	HARNESS, BODY FRT WRG
91	Y07 CASSETTE STEREO (UU8), CASSETTE/CD PLAYER (U1F)	12112460	1	DISCON	HARNESS, BODY FRT WRG
91	Y67 STEREO CASSETTE (UM6)	12090311	1	DISCON	HARNESS, BODY FRT WRG
91	Y67 CASSETTE STEREO (UU8), CASSETTE/CD PLAYER (U1F)	12090312	1	DISCON	HARNESS, BODY FRT WRG
92	Y07 CASSETTE STEREO (UU8), CASSETTE/CD PLAYER (U1F)	12125811	1	DISCON	HARNESS, BODY FRT WRG
92	Y07 STEREO CASSETTE (UM6)	12125812	1	DISCON	HARNESS, BODY FRT WRG
92	Y67 STEREO CASSETTE (UM6)	12106537	1	DISCON	HARNESS, BODY FRT WRG
92	Y67 CASSETTE STEREO (UU8), CASSETTE/CD PLAYER (U1F)	12106538	1	DISCON	HARNESS, BODY FRT WRG
93	Y07	12141786	1	780.00	HARNESS, BODY FRT WRG
93	Y67	12130341	1	244.62	HARNESS, BODY FRT WRG
94	Y07 SIG & MKR LP (T90) (EXPORT)	12141786	1	780.00	HARNESS, BODY FRT WRG
94	Y07 (EXC SIG & MKR LP (T90) (EXPORT)	12141796	1	244.62	HARNESS, BODY FRT WRG
94	Y67 (EXC SIG & MKR LP (T90) (EXPORT)	12130355	1	361.50	HARNESS, BODY FRT WRG
95	Y07 (EXC SIG & MKR LP (T90) (EXPORT), SPECIAL PERFORMANCE PKG (ZR1)	12130403	1	244.62	HARNESS, BODY FRT WRG
95	Y07 SPECIAL PERFORMANCE PKG (ZR1)	12141796	1	244.62	HARNESS, BODY FRT WRG
95	Y67 (EXC SIG & MKR LP (T90) (EXPORT)	12130478	1	244.62	HARNESS, BODY FRT WRG
96	Y07 (EXC SIG & MKR LP (T90) (EXPORT)	12130458	1	361.50	HARNESS, BODY FRT WRG
96	Y67 (EXC SIG & MKR LP (T90) (EXPORT)	12130456	1	244.62	HARNESS, BODY FRT WRG

© 2000 GENERAL MOTORS SERVICE PARTS OPERATIONS

13.090 BRACKET – CLIP – HARNESS – MODULE – RETAINER – STRAP – TAPE – WIRE, Body Wiring(Con't)

86–88	Y67 (EXC EXPORT T89, T90)	12073839	1	DISCON	HARNESS, BODY RR WRG (WHEN SERVICING 1986–87 VEH, MUST ALSO USE (4) CONN 8918527) .....
87–88	Y07 (EXC TAIL & S/LP (T89) (EXPORT), SIG & MKR LP (T90) (EXPORT)	12067493	1	DISCON	HARNESS, BODY RR WRG (WHEN USED ON 1987 MODELS MUST USE 4 OF 8918527 SOCKETS) .....
87	Y67 STEREO (UM6, UM7) (EXC T89, T90 EXPORT)	12080872	1	DISCON	HARNESS, BODY RR WRG (MAY NEED TO USE CONN 12126015 & 12085482) .....
88	Y67 (EXC RDO, EXPORT T89, T90) .	12080872	1	DISCON	HARNESS, BODY RR WRG (MAY NEED TO USE CONN 12126015 & 12085482) .....
88	Y67 STEREO (UM6) (EXC EXPORT T89, T90)	12080872	1	DISCON	HARNESS, BODY RR WRG (MAY NEED TO USE CONN 12126015 & 12085482) .....
89–90	Y07	12067493	1	DISCON	HARNESS, BODY RR WRG .....
89–92	Y67	12073839	1	DISCON	HARNESS, BODY RR WRG .....
91–92	Y07 SPECIAL PERFORMANCE PKG (ZR1)	12067493	1	DISCON	HARNESS, BODY RR WRG .....
91–92	Y07 (EXC SPECIAL PERFORMANCE PKG (ZR1)	12090341	1	DISCON	HARNESS, BODY RR WRG .....
93	Y (EXC SIG & MKR LP (T90) (EXPORT)	12130377	1	527.80	HARNESS, BODY RR WRG .....
94–95	Y07 (EXC SIG & MKR LP (T90) (EXPORT), SPECIAL PERFORMANCE PKG (ZR1)	12130357	1	244.62	HARNESS, BODY RR WRG .....
94–95	Y07 SPECIAL PERFORMANCE PKG (ZR1), (EXC SIG & MKR LP (T90) (EXPORT)	12130377	1	527.80	HARNESS, BODY RR WRG .....
94–96	Y67 (EXC SIG & MKR LP (T90) (EXPORT)	12130356	1	527.80	HARNESS, BODY RR WRG .....
96	Y07 (EXC SIG & MKR LP (T90) (EXPORT)	12130357	1	244.62	HARNESS, BODY RR WRG .....
84	Y STEREO (UU8)	12036116	1	DISCON	HARNESS, BODY WRG .....
84	Y STEREO (UM6, UM7), RDO UL5 (EXC EXPORT)	12036117	1	DISCON	HARNESS, BODY WRG .....
85	Y STEREO (UU8)	12049881	1	DISCON	HARNESS, BODY WRG .....
86	Y STEREO (UM6, UM7 (EXC EXPORT)	12048813	1	DISCON	HARNESS, BODY WRG .....
86	Y07 STEREO (UU8)	12048812	1	DISCON	HARNESS, BODY WRG .....
86	Y67 (EXC STEREO UU8)	12055600	1	DISCON	HARNESS, BODY WRG .....
86	Y67 STEREO (UU8)	12055601	1	DISCON	HARNESS, BODY WRG .....
87–88	Y07 STEREO (UU8)	12073831	1	DISCON	HARNESS, BODY WRG .....
87	Y07 STEREO (UM6, UM7) (EXC EXPORT T89, T90)	12085453	1	DISCON	HARNESS, BODY WRG .....
87–88	Y67 STEREO (UU8)	12073830	1	DISCON	HARNESS, BODY WRG .....
88	Y STEREO (UM6) (EXC EXPORT T89, T90)	12085453	1	DISCON	HARNESS, BODY WRG .....
89	Y07 STEREO (UM6)	12085453	1	DISCON	HARNESS, BODY WRG .....
84–90	Y AQ9	14079490	2	DISCON	HARNESS, CUSH WRG .....
91	Y RECL FRT BKT ST (AQ9)	12506477	1	DISCON	HARNESS, D/SEAT ADJR WRG .....
91	Y RECL FRT BKT ST (AQ9)	14079481	2	DISCON	HARNESS, D/SEAT ADJR WRG .....
92–93	Y RECL FRT BKT ST (AQ9)	12520129	1	52.27	HARNESS, D/SEAT ADJR WRG .....
88	Y	12055829	LH	DISCON	HARNESS, ELEC DR WRG .....
88	Y	12055831	RH	DISCON	HARNESS, ELEC DR WRG .....
94–96	Y RECL FRT BKT ST (AQ9)	12141781	1	477.00	HARNESS, P/SEAT ADJR & LUMBAR CONT WRG (INCLUDES RELAY CTR)
84–91	Y RECL FRT BKT ST (AQ9)	14079481	2	DISCON	HARNESS, P/SEAT ADJR & RECL WRG
91	Y RECL FRT BKT ST (AQ9)	12506477	1	DISCON	HARNESS, P/SEAT ADJR WRG .....

© 2000 GENERAL MOTORS SERVICE PARTS OPERATIONS

13.090 BRACKET – CLIP – HARNESS – MODULE – RETAINER – STRAP – TAPE – WIRE, Body Wiring(Con't)

92–93	Y RECL FRT BKT ST (AQ9)	12520129	1	52.27	HARNESS, P/SEAT ADJR WRG
84–85	Y (EXC ELEC DR LK AU3)	12016810	RH	DISCON	HARNESS, PWR WDO DR WRG
84–85	Y (EXC ELEC DR LK AU3)	12016811	LH	DISCON	HARNESS, PWR WDO DR WRG
84–85	Y ELEC DR LK (AU3)	12028821	LH	DISCON	HARNESS, PWR WDO DR WRG
84–85	Y ELEC DR LK (AU3)	12028822	RH	DISCON	HARNESS, PWR WDO DR WRG
86–87	Y	12069840	LH	DISCON	HARNESS, PWR WDO DR WRG
86–87	Y	12069841	RH	DISCON	HARNESS, PWR WDO DR WRG
93	Y67	12106561	1	34.26	HARNESS, R/CON DR LK RCVR ANT WRG
94–96	Y67 (EXC EUROPEAN PROVISIONS (VD1) (EXPORT), VE1 (EXPORT)	12106561	1	34.26	HARNESS, R/CON DR LK RCVR ANT WRG
88–96	Y	12073639	1	25.27	HARNESS, WSW & WSWA WRG
84–87	Y	12016892	1	DISCON	HARNESS, WSW MTR AND WSWA PUMP WRG
84–91	Y	12088529	1	22.29	MODULE, BODY WRG HARN (02.510) (IF USE IN PLC OF MDL W/DBL 4–WAY CONN, MUST ALSO ORDER 1–12116930 SINGLE ROW 4–WAY CONN)
91–92	Y07 STEREO CASSETTE (UM6), CASSETTE STEREO (UU8), CASSETTE/CD PLAYER (U1F)	12088529	1	22.29	MODULE, BODY WRG HARN (3 DIODE ARRAY) (02.510)
93	Y07	12088529	1	22.29	MODULE, BODY WRG HARN (3 DIODE ARRAY) (02.510)
94	Y	12088529	1	22.29	MODULE, BODY WRG HARN (3 DIODE ARRAY) (02.510)
84–96	Y	14073416	1	1.94	RETAINER, BODY WRG HARN
93–96	Y67	11515174	1	*1.50	RETAINER, BODY WRG HARN (4 1/4"X7 1/2") (TRIM AS REQ'D) (15.492)
89–96	Y	12020833	1	*.73	RETAINER, BODY WRG HARN CONN (GRAY) (1" LONG) (PUSH–IN) (02.559)
94	Y	20664092	2	*.40	RETAINER, F/TOP WRG HARN STRP (BLACK) (PUSH–IN) (01.276)
95–96	Y RECL FRT BKT ST (AQ9)	20664092	1	*.40	RETAINER, F/TOP WRG HARN STRP (BLACK) (PUSH–IN) (01.276)
94–95	Y RECL FRT BKT ST (AQ9)	11515174		*1.50	RETAINER, P/SEAT LUMBAR CONT WRG HARN (4 1/4"X7 1/2") (TRIM AS REQ'D) (15.492)
88–89	Y07	03816659	1	*.87	STRAP, BODY FRT WRG HARN (08.965)
94–96	Y RECL FRT BKT ST (AQ9), IL3	10250231	1	6.32	STRAP, ST INFLR FEED WRG HARN (DRVR SEAT)
91–92	Y	12090348	1	DISCON	WIRE, CONV TOP
93	Y67	12106597	LH	DISCON	WIRE, CONV TOP
94–96	Y67	12130363	LH	59.12	WIRE, CONV TOP
91	Y	12106563	1	DISCON	WIRE, PWR ST DIODE JPR
90–92	Y67	12080875	1	DISCON	WIRE, R/CMPT LID LID REL
89	Y67	12080874	1	DISCON	WIRE, R/COMPT LID LK REL
	*EXPORT**********EXPORT**********EXPORT**********EXPORT**********EXPORT*				
94	Y67 SIG & MKR LP (T90) (EXPORT)	12130341	1	244.62	HARNESS, BODY FRT WRG
95	Y07 SIG & MKR LP (T90) (EXPORT)	12130402	1	244.62	HARNESS, BODY FRT WRG
95	Y67 SIG & MKR LP (T90) (EXPORT)	12130477	1	244.62	HARNESS, BODY FRT WRG
96	Y07 SIG & MKR LP (T90) (EXPORT)	12130457	1	244.62	HARNESS, BODY FRT WRG
96	Y67 SIG & MKR LP (T90) (EXPORT)	12130455	1	244.62	HARNESS, BODY FRT WRG
87–88	Y07 T89, T90 (EXPORT)	12055823	1	137.03	HARNESS, BODY RR WRG
93	Y07 SIG & MKR LP (T90) (EXPORT)	12130379	1	DISCON	HARNESS, BODY RR WRG

© 2000 GENERAL MOTORS SERVICE PARTS OPERATIONS

13.090 BRACKET – CLIP – HARNESS – MODULE – RETAINER – STRAP – TAPE – WIRE, Body Wiring(Con't)

93	Y67 SIG & MKR LP (T90) (EXPORT)	12130380	1	526.79	HARNESS, BODY RR WRG .....
94–96	Y07 SIG & MKR LP (T90) (EXPORT)	12130335	1	526.79	HARNESS, BODY RR WRG .....
94–96	Y67 SIG & MKR LP (T90) (EXPORT)	12130336	1	527.80	HARNESS, BODY RR WRG .....
84–85	Y VB4, VD1, VE1, VT7 (EXPORT) ...	12043419	1	DISCON	HARNESS, BODY WRG .....
86	Y EXPORT (VB4, VD1, VE1, VT7) ...	12048814	1	DISCON	HARNESS, BODY WRG .....
87–88	Y07 T39, T90 (EXPORT)	12068375	1	DISCON	HARNESS, BODY WRG .....
94–96	Y RH RULE OF ROAD HDLP (T84) (EXPORT), LH RULE OF ROAD HDLP (T85) (EXPORT), SIG & MKR LP (T90) (EXPORT)	11515174	2	*1.50	RETAINER, BODY RR WRG HARN (4 1/4"X7 1/2") (TRIM AS REQ'D) (15.492) .....

13.095 BREAKER – CONNECTOR – RELAY, Body Wiring

85–90	Y ELEC R/CON HTD MIR (DL	14103366	1	4.04	BREAKER, R/WDO DEFG CIRC (12.5V) (30 AMP) (AC–DELCO #14103366) ..
91–92	Y ELEC R/CON HTD MIR (DL6)	14103366	1	4.04	BREAKER, R/WDO DEFG CIRC (12.5V) (30 AMP) (AC–DELCO #14103366) ..
94	Y RECL FRT BKT ST (AQ9)	12065125	1	16.73	RELAY, BODY WRG HARN (AC–DELCO #D1703A) .....
90–94	Y	14100455	1	16.26	RELAY, C/LP (BLACK) (5–WAY) (09.277) (AC–DELCO #15–8426) ...
94–95	Y	12065125	1	16.73	RELAY, C/LP (AC–DELCO #D1703A) ..
95	Y 5.7P (LT1), 6–SPD M/TRANS (ML9), A/C MAN CONT (C60), A/C AUTO ELEC CONT (C68)	12135084	1	9.55	RELAY, C/LP (02.815) (AC–DELCO #D1719A) .....
96	Y	12135034	1	9.55	RELAY, C/LP (02.815) (AC–DELCO #D1719A) .....
84–85	Y ELEC S/D LK (AU3)	22544850	1	18.97	RELAY, DR LK (AC–DELCO #D1707A) .
86–90	Y	22570060	1	16.26	RELAY, F/TOP RR LAT REL ACTR (POWER) (1 BOLT HOLE) (04.720) (AC–DELCO #15–8736) .....
86–96	Y67	12167112	1	51.50	RELAY, F/TOP RR LAT REL ACTR (POWER) (RELAY & CONN W/LEADS) (09.277) (AC–DELCO #15–8264) .....
86–96	Y67	22570060	1	16.26	RELAY, F/TOP RR LAT REL ACTR (POWER) (MATES W/CONNECTOR 12101882) (04.720) (AC–DELCO #15–8736) .....
87	Y	12167112	1	51.50	RELAY, F/TOP RR LAT REL ACTR (POWER) (1 BOLT HOLE) (W/CONN & LEADS) (09.277) (AC–DELCO #15–8264) .....

13.346 BAG – BOLT – BRACKET – ESCUTCHEON – GUIDE – HEADLINER – NUT – PLATE – PROTECTOR – RETAINER – RIVET – SPACER – STRIP – TAPE – TOP – WASHER – WEATHERSTRIP – WRENCH, Convertible and Hard Top

86–88	Y67	10137770	1	4.12	BOLT, HARDTOP RR (M6X1.0X65.0 HEX HD) .....
89–96	Y67 AUX RF (CC2)	10175552	2	4.53	BOLT, R/TOP BODY L/PLR UPR BRKT (M8X1.25X24.25, 19OD) .....
91–96	Y67 AUX RF (CC2)	10175553	2	4.53	BOLT, R/TOP BODY L/PLR UPR BRKT (M8X1.25X24.25;25.5OD) .....
89–96	Y67 AUX RF (CC2)	14060161	4	*.86	BOLT, R/TOP NUT PLT (M8X1.25X15 POR) (03.023) .....
89–91	Y67 AUX RF (CC2)	10137770	1	4.12	BOLT, REMOVABLE TOP (M6X1.0X65.0 HEX HD) .....
89–91	Y67 AUX RF (CC2)	10175553	6	4.53	BOLT, REMOVABLE TOP (M8X1.25X24.25;25.5OD) .....

© 2000 GENERAL MOTORS SERVICE PARTS OPERATIONS

13.346 BAG – BOLT – BRACKET – ESCUTCHEON – GUIDE – HEADLINER – NUT – PLATE – PROTECTOR – RETAINER – RIVET – SPACER – STRIP – TAPE – TOP – WASHER – WEATHERSTRIP – WRENCH, Convertible and Hard Top(Con't)

92–96	Y67 AUX RF (CC2)	10137770	2	4.12	BOLT, REMOVABLE TOP
86–88	Y67	10137785	LH	46.78	BRACKET, "B" PLR
86–88	Y67	10137786	RH	46.78	BRACKET, "B" PLR
89–96	Y67 AUX RF (CC2)	10137785	LH	46.78	BRACKET, R/TOP BODY L/PLR UPR
89–96	Y67 AUX RF (CC2)	10137786	RH	46.78	BRACKET, R/TOP BODY L/PLR UPR
89–96	Y67 AUX RF (CC2)	10123047	LH	13.07	BRACKET, R/TOP RR
89–96	Y67 AUX RF (CC2)	10123048	RH	13.07	BRACKET, R/TOP RR
86–88	Y67	10123047	LH	13.07	BRACKET, RR PIN HT
86–88	Y67	10123048	RH	13.07	BRACKET, RR PIN HT
86–93	Y67 CONV RF (C05)	10048841	1	8.60	ESCUTCHEON, F/TOP CVR LWR RR MLDG RR (BLACK) (10.219)
86–94	Y67 CONV RF (C05)	10048843	1	8.60	ESCUTCHEON, F/TOP CVR LWR RR MLDG RR (SADDLE) (10.219)
86–88	Y67	10137774	2	92.04	GUIDE, R/TOP BOLT
89–96	Y67 AUX RF (CC2)	10137774	2	92.04	GUIDE, R/TOP BOLT
86–90	Y67	10051856	2	1.70	NUT, F/TOP FRT LAT LVR
89–91	Y AUX RF (CC2)	10137771	AR	6.12	NUT, R/TOP BOLT GDE (M14X2.0–7.0 HEX JAM RR PIN MTG)
92–96	Y67 AUX RF (CC2)	10137771	2	6.12	NUT, R/TOP BOLT GDE (M14X2.0–7.0 HEX JAM RR PIN MTG)
91–96	Y67 AUX RF (CC2)	14105190	2	6.46	PLATE, R/TOP NUT (12.810)
86–88	Y67	10123053	LH	36.87	RETAINER, "B" PLR
86–88	Y67	10123054	RH	36.87	RETAINER, "B" PLR
86–93	Y67 CONV RF (C05)	10051858	1	DISCON	RETAINER, F/TOP HDLNG TR FIN PNL #1 BOW
94–96	Y67 CONV RF (C05)	10242136	1	60.51	RETAINER, F/TOP HDLNG TR FIN PNL #1 BOW
86–88	Y67	10137751	LH	53.90	RETAINER, W/STR DR RAIL
86–88	Y67	10137752	RH	53.90	RETAINER, W/STR DR RAIL
86–90	Y67 CONV RF (C05)	10064339	4	2.15	RIVET, F/TOP RR LAT STKR BRKT
91–96	Y67 CONV RF (C05)	10064339	10	2.15	RIVET, F/TOP RR LAT STKR BRKT
89–96	Y67 AUX RF (CC2)	10137775	8	2.20	RIVET, R/TOP RR BRKT
89–96	Y67 AUX RF (CC2)	10137776	2	3.56	SPACER, R/TOP BOLT GDE
86–90	Y67 (67T)	10153053	1	DISCON	TOP, FLDG (SADDLE)
86–93	Y67 CONV RF (C05), (10T)	10198721	1	DISCON	TOP, FLDG (WHITE)
86–90	Y67 (19T)	10198725	1	3890.00	TOP, FLDG (BLACK)
86–87	Y67 (19T)	14100301	1	3890.00	TOP, FLDG (BLACK)
91	Y67 CONV RF (C05), (29T)	10198723	1	DISCON	TOP, FLDG (SAPPHIRE)
91–93	Y67 CONV RF (C05), (41T)	10198725	1	3890.00	TOP, FLDG (BLACK)
91–96	Y67 CONV RF (C05), (16T)	10276976	1	3930.00	TOP, FLDG (WHITE)
92	Y67 CONV RF (C05), (29T)	10198723	1	DISCON	TOP, FLDG (SAPPHIRE)
92–93	Y67 CONV RF (C05), (68T)	10198724	1	3890.00	TOP, FLDG (BEIGE)
93	Y67 CONV RF (C05), (71T)	10208329	1	3890.00	TOP, FLDG (RED)
94–96	Y67 CONV RF (C05) (41T)	10276972	1	3930.00	TOP, FLDG (BLACK)
94	Y67 CONV RF (C05)	10276973	1	3930.00	TOP, FLDG (BEIGE)
95–96	Y67 CONV RF (C05)	10276973	1	3930.00	TOP, FLDG (BEIGE)
86–88	Y67	12508700	1	3930.00	TOP, REMOVABLE (PAINT TO MATCH) (RETROFIT PKG 12341183 USED TO COMPLETE INSTALLATION ON 1986–88 Y67 CONVERTIBLE MODELS, RR DEFG TO BE USED AS REQ)
89–96	Y67 AUX RF (CC2)	12508700	1	3930.00	TOP, REMOVABLE (PAINT TO MATCH) (RR DEFG TO BE USED AS REQ)

© 2000 GENERAL MOTORS SERVICE PARTS OPERATIONS

13.346 BAG – BOLT – BRACKET – ESCUTCHEON – GUIDE – HEADLINER – NUT – PLATE – PROTECTOR – RETAINER – RIVET – SPACER – STRIP – TAPE – TOP – WASHER – WEATHERSTRIP – WRENCH, Convertible and Hard Top(Con't)

89–91	Y AUX RF (CC2)	10137772	AR	5.00	WASHER, R/TOP BOLT GDE (1.635X.661X.085)
92–96	Y67 AUX RF (CC2)	10137772	2	5.00	WASHER, R/TOP BOLT GDE (1.635X.661X.085)
86–91	Y67	14092676	1	59.90	WEATHERSTRIP, F/TOP RR
92–96	Y67 CONV RF (C05)	14092676	1	59.90	WEATHERSTRIP, F/TOP RR
89–96	Y67 AUX RF (CC2)	10123058	1	241.80	WEATHERSTRIP, R/TOP RR
86–88	Y67	10137741	1	37.00	WRENCH, HARDTOP REMOVAL
84–88	Y67	10172311	1	66.30	WRENCH, R/TOP (12.810)
89–96	Y67 AUX RF (CC2)	10137741	1	37.00	WRENCH, R/TOP (REMOVAL) (BOX END)
89–96	Y67 AUX RF (CC2)	10172311	1	66.30	WRENCH, R/TOP (RATCHET) (12.810)

13.347 COVER – COVER KIT – GUIDE – PAD – PANEL – RETAINER – TAPE, Convertible Top Cover

86–96	Y67 CONV RF (C05), (41T)	12529077	1	1150.00	COVER KIT, F/TOP (W/GLASS BACKLITE, ON INITIAL INSTALL MUST BE USED W/HARDWARE KIT 12522961) (BLACK)
86–96	Y67 CONV RF (C05), (10T), (16T)	12529079	1	1150.00	COVER KIT, F/TOP (W/GLS BACKLITE, ON INITIAL INSTALL MUST USE T/W HARDWARE KIT 12522961) (WHITE)
91–94	Y67 CONV RF (C05), (68T)	12529078	1	1150.00	COVER KIT, F/TOP (W/GLASS BACKLITE, ON INITIAL INSTALL MUST BE USED W/HARDWARE KIT 12522961) (BEIGE)
95–96	Y67 CONV RF (C05)	12529078	1	1150.00	COVER KIT, F/TOP (BEIGE)
86–90	Y67 (67T)	10153656	1	DISCON	COVER, F/TOP
86–90	Y67	10198656	1	954.00	COVER, F/TOP (W/PLASTIC BACKLITE) (WHITE)
86–90	Y67	10198659	1	954.00	COVER, F/TOP (W/PLASTIC BACKLITE) (BLACK)
91–93	Y67 CONV RF (C05), (10T)	10198656	1	954.00	COVER, F/TOP (W/PLASTIC BACKLITE) (WHITE)
91–92	Y67 CONV RF (C05), (29T)	10198656	1	DISCON	COVER, F/TOP (SAPPHIRE)
91–93	Y67 CONV RF (C05), (41T)	10198659	1	954.00	COVER, F/TOP (W/PLASTIC BACKLITE) (BLACK)
91–93	Y67 CONV RF (C05), (68T)	10198660	1	954.00	COVER, F/TOP (W/PLASTIC BACKLITE) (BEIGE)
93	Y67 CONV RF (C05), (71T)	10210167	1	DISCON	COVER, F/TOP (RED)
86–96	Y67 CONV RF (C05)	10048844	2	56.14	PAD, F/TOP #1, #2, #3, #4 BOW POSN
86–90	Y67 CONV RF (C05)	10248379	1	200.00	PANEL, F/TOP HDLNG TR FIN (BLACK)
91–96	Y67 CONV RF (C05)	10248379	1	200.00	PANEL, F/TOP HDLNG TR FIN (BLACK)
86–90	Y67	10048847	1	27.50	RETAINER, F/TOP CVR #1 BOW
91–96	Y67 CONV RF (C05)	10048847	1	27.50	RETAINER, F/TOP CVR #1 BOW
86–94	Y67 CONV RF (C05)	10048848	2	DISCON	RETAINER, F/TOP CVR #2 BOW
86–94	Y67 CONV RF (C05)	10048845	LH	5.00	RETAINER, F/TOP CVR OTR ARM
86–94	Y67 CONV RF (C05)	10048846	RH	5.00	RETAINER, F/TOP CVR OTR ARM
86–96	Y67 CONV RF (C05)	20498745	3	1.20	TAPE, F/TOP HDLNG TR FIN PNL FSTN (VELCRO TAPE, HOOK) (14.640)

13.349 RETAINER, Folding Top Side Pad

86–96	Y67 CONV RF (C05)	10248370	1	26.00	RETAINER, F/TOP HDLNG TR FIN PNL #4 BOW

© 2000 GENERAL MOTORS SERVICE PARTS OPERATIONS

13.365 FRAME, Folding Top

86–90	Y67	14100304	1	2623.00	FRAME, F/TOP (LESS TR & HEADLINER)
91–93	Y67 CONV RF (C05)	14100304	1	2623.00	FRAME, F/TOP (LESS TR & HEADLINER)
94	Y67 CONV RF (C05)	10276983	1	4006.00	FRAME, F/TOP
95–96	Y67 CONV RF (C05)	10276983	1	4006.00	FRAME, F/TOP

13.395 GUIDE – HARDWARE KIT – PAD – PROTECTOR – SPACER – SUPPORT, Folding Top Back Window

86–93	Y67	10248381	LH	31.50	PAD, F/TOP #4 & #5 BOW POSN
86–90	Y67	10248382	RH	30.67	PAD, F/TOP #4 & #5 BOW POSN
91–96	Y67 CONV RF (C05)	10248382	RH	30.67	PAD, F/TOP #4 & #5 BOW POSN
94–96	Y67 CONV RF (C05)	10248381	LH	31.50	PAD, F/TOP #4 & #5 BOW POSN
86–96	Y67 CONV RF (C05)	10051886	1	148.48	PROTECTOR, F/TOP R/WDO

© 2000 GENERAL MOTORS SERVICE PARTS OPERATIONS